Department of Transportation

Office of Project Development

700 E Broadway Avenue
Pierre, South Dakota 57501-2586 605/773-3268
FAX: 605/773-2614

October 28, 2016

ADDENDUM NO. 1

RE: Item #2, November 16, 2016 Letting - IM 0904(50)189, PCN 00GL, Jones County - PCC Overlay, PCC Surfacing, Asphalt Concrete Surfacing, Culvert Repair, & Edge Drains

TO WHOM IT MAY CONCERN:

The following addenda to the plans shall be inserted and made a part of your proposal for the referenced project.

SPECIAL PROVISIONS: NO CHANGE

BID ITEM FILE: NO CHANGE

PLANS: Section L was added.

Sincerely,

Sam Weisgram
Engineering Supervisor

SW/cj

CC: John Forman, Pierre Region Engineer
Doug Sherman, Winner Area Engineer

SECTION L: LIGHTING PLANS

STATE OF SOUTH DAKOTA	PROJECT	SHEET	TOTAL SHEETS
	IM 0904(50)189	L1	L12

Plotting Date: 08/05/2016

INDEX OF SHEETS

L1	General Layout with Index
L2 to L3	Estimate with General Notes and Tables
L4 to L7	Conduit Layouts
L8 to L9	Wire Diagrams
L10 to L12	Standard Plates

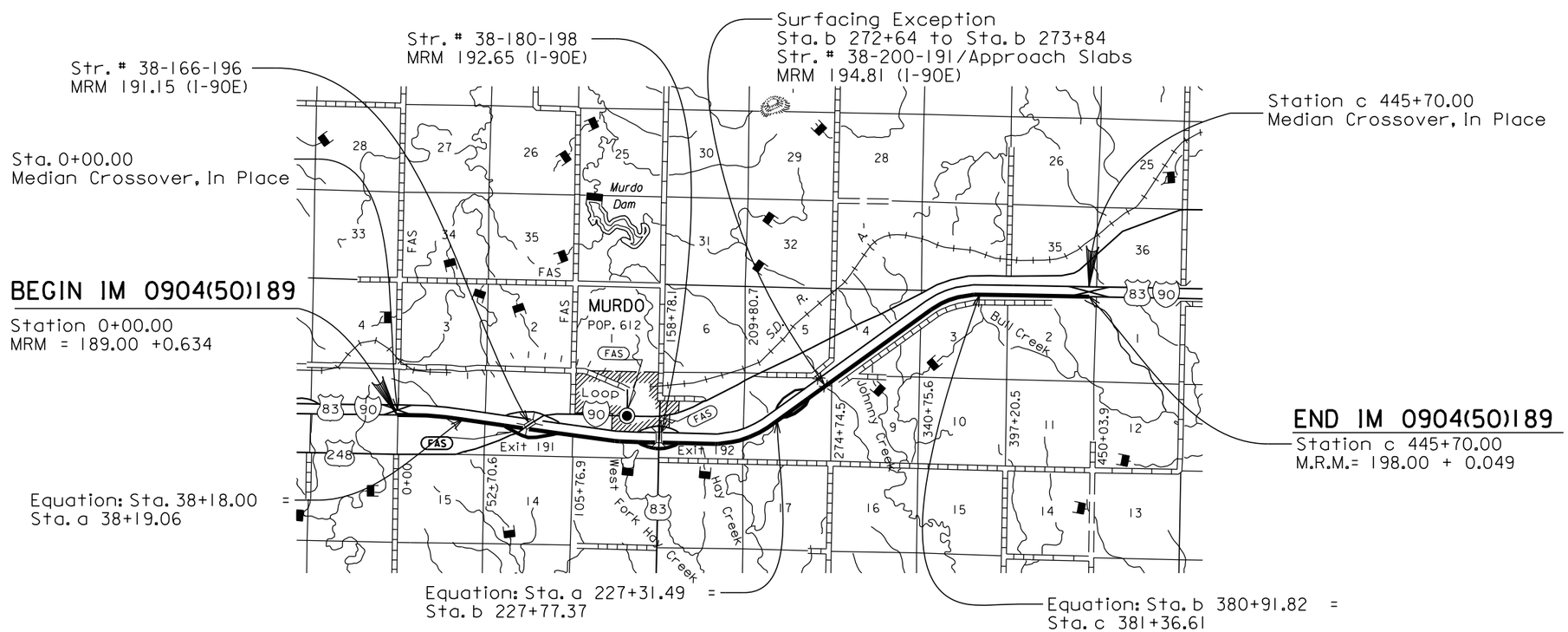

Plot Scale - 1:7920

Plotted From - trpr14341

File - U:\rd\prj\jons00GL\TitleL.dgn

SECTION L ESTIMATE OF QUANTITIES

BID ITEM NUMBER	ITEM	QUANTITY	UNIT
110E1540	Remove Luminaire Pole Footing	8	Each
635E5020	2' Diameter Footing	56.0	Ft
635E5301	Type 1 Electrical Junction Box	2	Each
635E7500	Remove and Reset Luminaire Pole	8	Each
635E8015	1.5" Rigid Galvanized Steel Conduit	15	Ft
635E8120	2" Rigid Conduit, Schedule 40	1,510	Ft
635E9016	1/C #6 AWG Copper Wire	4,680	Ft
635E9020	1/C #10 AWG Copper Wire	50	Ft

SUPPLYING AS BUILT PLANS

If the roadway lighting systems are constructed differently than what is stated in the plans, the Contractor shall supply as built plans to the Engineer and a copy shall be sent to the Traffic Design Engineer. The as built plans may include conduit layouts, wiring diagrams, or other drawings depicting the changes from the original plans.

SHOP DRAWING AND CATALOG CUTS SUBMITTALS

The Contractor shall submit shop drawings and catalog cuts in accordance with Section 985 of the Specifications.

Adobe PDF submittals shall be sent to the following email addresses:

Nick.Rezac@state.sd.us
Pete.Longman@state.sd.us

REMOVE LUMINAIRE POLE FOOTING

The footings of existing luminaire poles EA1, EA2, EA7, EA8, EC1, EC2, ED1, and ED2 shall be removed by the Contractor to a minimum of 2' below the ground surface. Restoration of the disturbed area shall be to the satisfaction of the Engineer.

All costs for removing the footings of the existing luminaire poles shall be incidental to the contract unit price per each for "Remove Luminaire Pole Footing".

Existing direct bury wire between luminaires that are being removed shall be removed. All costs for removing direct bury wire shall be incidental to the contract unit price per each for "Remove Luminaire Pole Footing".

REMOVE AND RESET LUMINAIRE POLE

Existing luminaire poles EA1, EA2, EA7, EA8, EC1, EC2, ED1, and ED2 shall be removed and reset as REA1, REA2, REA7, REA8, REC1, REC2, RED1, and RED2 as shown on the plan sheets. The existing anchor bolts were a j-hook style which are no longer acceptable. A recommendation from the manufacturer will be required to be supplied to the Engineer for the design of the anchor bolts.

It shall be the Contractor's responsibility to obtain the bolt circle pattern and anchor bolts for the relocated poles from the pole manufacturer listed below. The poles were originally installed under Project IR90-4(45)191, Drawing No. 41878-89.

Valmont Industries, Inc.
P.O. Box 358
Valley, NE 68064
Phone (402) 359-2201

Luminaire poles and luminaires damaged during relocation shall be repaired or replaced by the Contractor at no cost to the State.

All costs involved with removing and resetting the existing luminaire poles including new anchor bolts with associated hardware, shall be incidental to the contract unit price per each for "Remove and Reset Luminaire Pole".

TABLE OF FOOTING DATA

Site Designation	Footing Diameter	* Footing Depth	**Spiral Diameter	**Spiral Length	Vertical Reinforcement
REA1, REA2, REA7, REA8, REC1, REC2, RED1, RED2,	2' - 0"	7' - 0"	1' - 8"	49' - 6"	8-#7 x 6' - 6"

* Footing depth shall be below ground level.
** The size of all spirals shall be #3.

SUBSURFACE

During construction of the cylindrical footings, concrete placement operations should closely follow excavation procedures. The longer the excavations are left open the more likely caving may occur. If caving soils are encountered during excavation, casing may be required to construct the cylindrical footings.

Concrete shall not be dropped through standing water. If water is present in the excavation it shall be removed prior to concrete placement or the concrete shall be tremied. If caving occurs during dewatering the concrete shall be placed through a tremie or by means of a casing.

If the location, mounting height and/or mast arm length is changed, these recommendations may become invalid. Any questions about these recommendations may be directed to the Geotechnical Engineering Activity.

JUNCTION BOXES

The junction boxes EJB2 and EJC14 shall be removed and replaced with JL1 and JL2. All costs with the removal and installation costs shall be incidental to the contract unit price per each for "Type 1 Electrical Junction Box".

WIRE SPLICING FOR LIGHTING

All lighting splices shall be made using TE Connectivity™ GTAP™ connectors, nsi Industries© Polaris Blue™ connectors, or approved equivalent.

Plot Scale - 1:200
Plotted From - tnpr14341
File - ...\proj\ons00GLINotesSectionL.dgn

CONDUIT AND CABLE QUANTITIES

STATE OF SOUTH DAKOTA	PROJECT	SHEET	TOTAL SHEETS
	IM 0904(50)189	L3	L12

Plotting Date: 08/10/2016

Location to Location		Rigid Conduit Schedule 40 2" Ft		Rigid Conduit Steel 1.5" Ft			Copper Wire 1/C #6 AWG Ft	Copper Wire 1/C #10 AWG Ft
LIGHTING								
EA1	EA2	210					650	
EA2	JL1	210					650	
EJB5	EA7	195					605	
EA7	EA8	195					605	
JL2	RECE3			15				50
REC1	REC2	205					635	
REC2	EJB8	245					760	
EJB11	RED2	40					125	
RED2	RED1	210					650	
Total:		1,510		15			4,680	50

Plot Scale - 1:200

Plotted From - tmpr14341

File - ...\prj\jons00GL\TableConduit.dgn

STATE OF SOUTH DAKOTA	PROJECT	SHEET	TOTAL SHEETS
	IM 0904(50)189	L4	L12

Plotting Date: 08/10/2016

CONDUIT LAYOUT
I-90 EASTBOUND EXIT 191

ESTIMATE OF QUANTITIES

KEY	ITEM	EST QUANT	UNIT
	REMOVE LUMINAIRE POLE FOOTING (EA1,EA2)	2	EACH
	2' DIAMETER FOOTING (REA1,REA2)	14	FT
	REMOVE AND RESET LUMINAIRE POLE (REA1,REA2)	2	EACH
	TYPE 1 ELECTRICAL JUNCTION BOX (JL1)	1	EACH
2" SCH 40	2" RIGID CONDUIT, SCHEDULE 40	420	FT
#6	1/C #6 AWG COPPER WIRE	1,300	FT

SCALE
1" = 40'

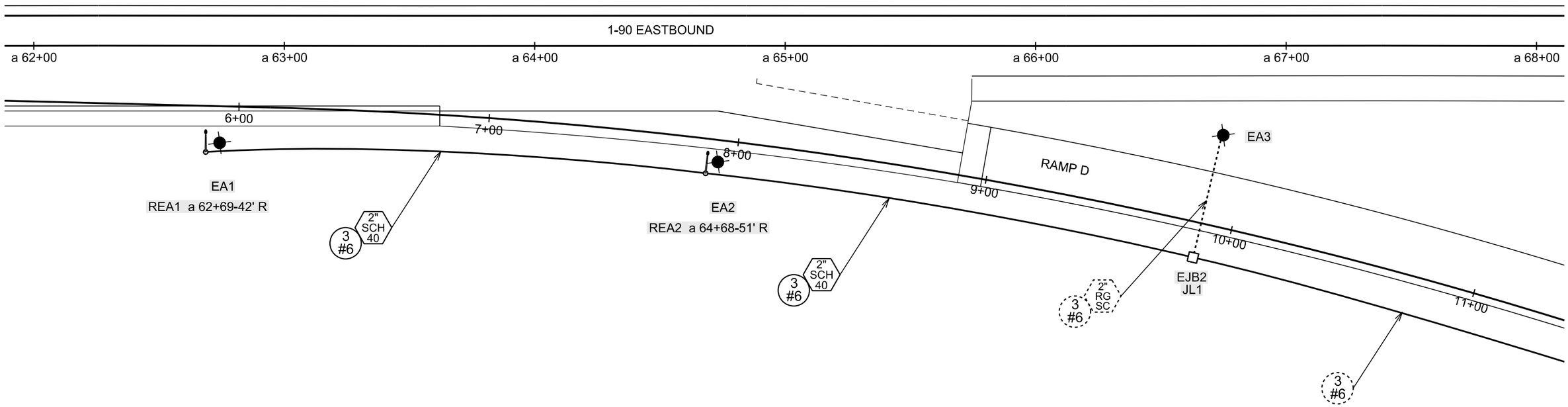

Plot Scale - 1:40
Plotted From - trpr14341
File - U:\rdprj\jons00GL\a062c.dgn

STATE OF SOUTH DAKOTA	PROJECT	SHEET	TOTAL SHEETS
	IM 0904(50)189	L5	L12

Plotting Date: 08/05/2016

CONDUIT LAYOUT
I-90 EASTBOUND EXIT 191

ESTIMATE OF QUANTITIES

KEY	ITEM	EST QUANT	UNIT
	REMOVE LUMINAIRE POLE FOOTING (EA7,EA8)	2	EACH
	2' DIAMETER FOOTING (REA7,REA8)	14	FT
	REMOVE AND RESET LUMINAIRE POLE (REA7,REA8)	2	EACH
2" SCH 40	2" RIGID CONDUIT, SCHEDULE 40	390	FT
#6	1/C #6 AWG COPPER WIRE	1,210	FT

SCALE
1" = 40'

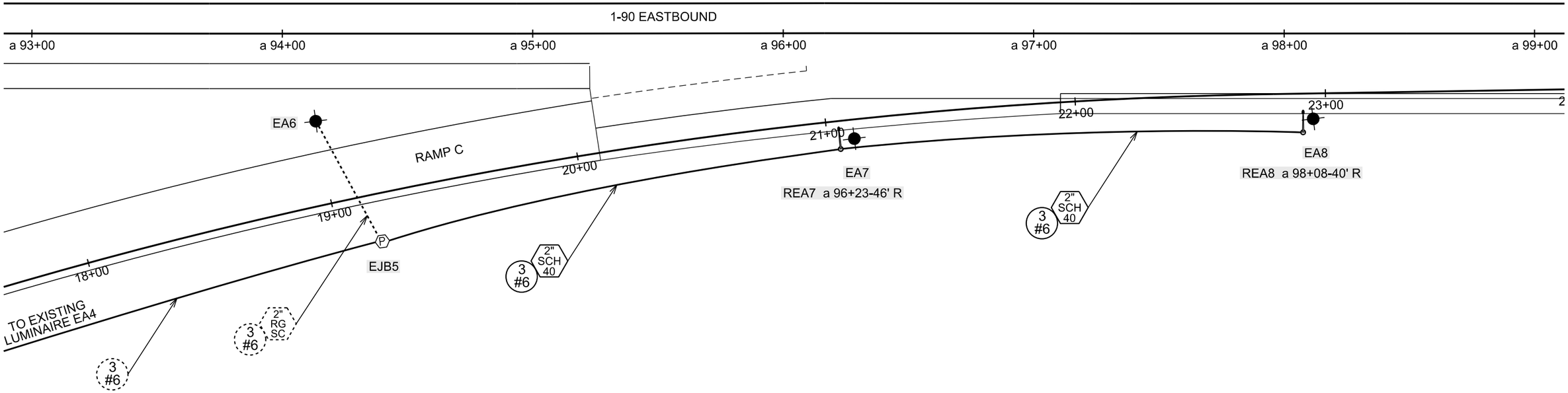

Plot Scale - 1:40
Plotted From - trpr14341
File - U:\rdproj\jons00GL\ta093c.dgn

STATE OF SOUTH DAKOTA	PROJECT	SHEET	TOTAL SHEETS
	IM 0904(50)189	L6	L12

Plotting Date: 08/10/2016

CONDUIT LAYOUT
I-90 EASTBOUND EXIT 192

ESTIMATE OF QUANTITIES

KEY	ITEM	EST QUANT	UNIT
	REMOVE LUMINAIRE POLE FOOTING (EC1,EC2)	2	EACH
	2' DIAMETER FOOTING (REC1,REC2)	14	FT
	TYPE 1 ELECTRICAL JUNCTION BOX (JL2)	1	EACH
	REMOVE AND RESET LUMINAIRE POLE (REC1,REC2)	2	EACH
2" SCH 40	2" RIGID CONDUIT, SCHEDULE 40	450	FT
1.5" RG SC	1.5" RIGID GALVANIZED STEEL CONDUIT	15	FT
#6	1/C #6 AWG COPPER WIRE	1,395	FT
#10	1/C #10 AWG COPPER WIRE	50	FT

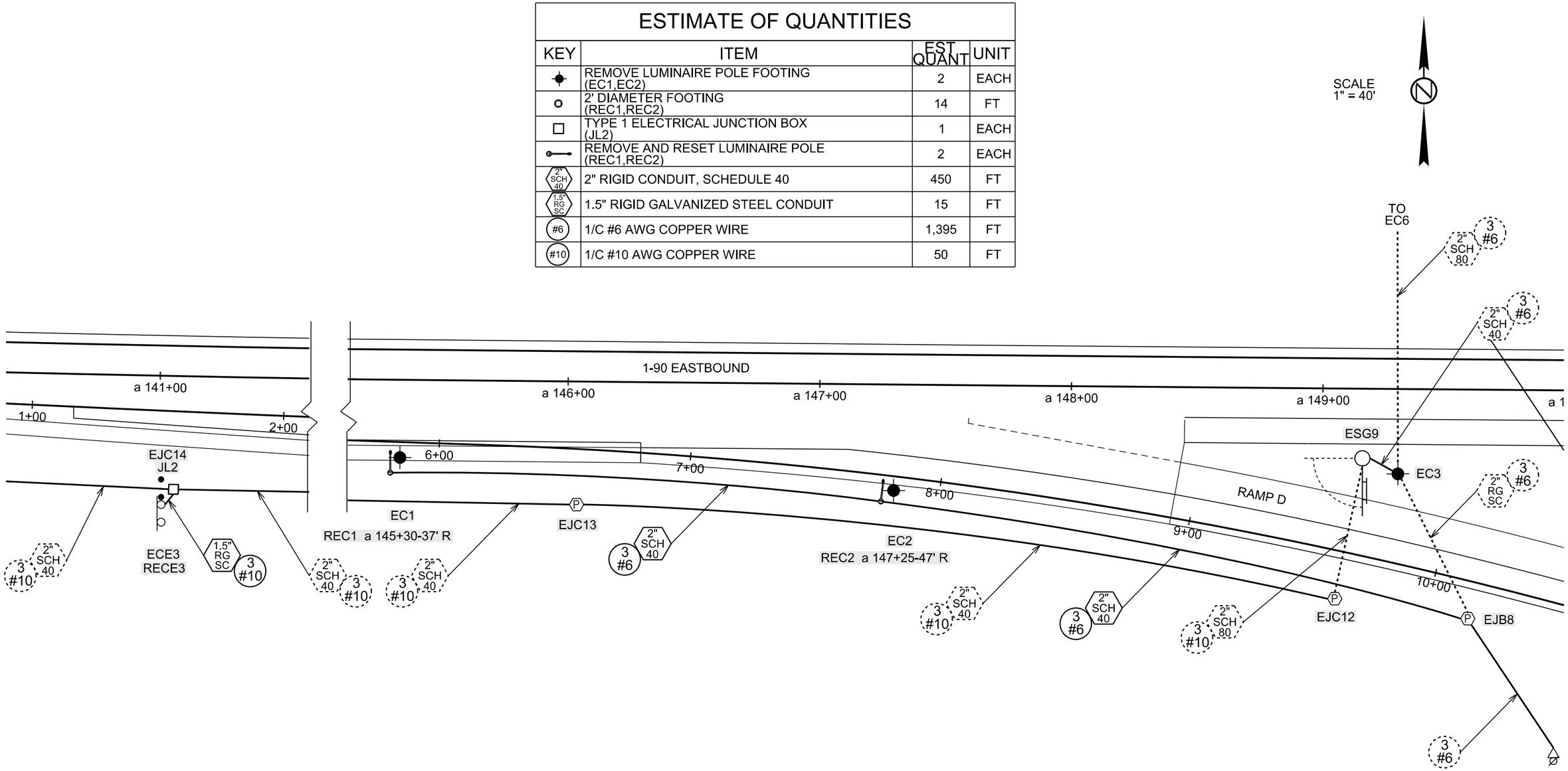

EXISTING POWER SOURCE
120/240 v.a.c., 60 hz.,
1 Phase, 3 Wire Service
By West Central Electric

Plot Scale - 1:40
Plotted From - trpr14341
File - U:\rdprijjons00\GLa141c.dgn

STATE OF SOUTH DAKOTA	PROJECT	SHEET	TOTAL SHEETS
	IM 0904(50)189	L7	L12

Plotting Date: 08/05/2016

CONDUIT LAYOUT
I-90 EASTBOUND EXIT 192

ESTIMATE OF QUANTITIES

KEY	ITEM	EST QUANT	UNIT
	REMOVE LUMINAIRE POLE FOOTING (ED1,ED2)	2	EACH
	2' DIAMETER FOOTING (RED1,RED2)	14	FT
	REMOVE AND RESET LUMINAIRE POLE (RED1,RED2)	2	EACH
2" SCH 40	2" RIGID CONDUIT, SCHEDULE 40	250	FT
#6	1/C #6 AWG COPPER WIRE	775	FT

SCALE
1" = 40'

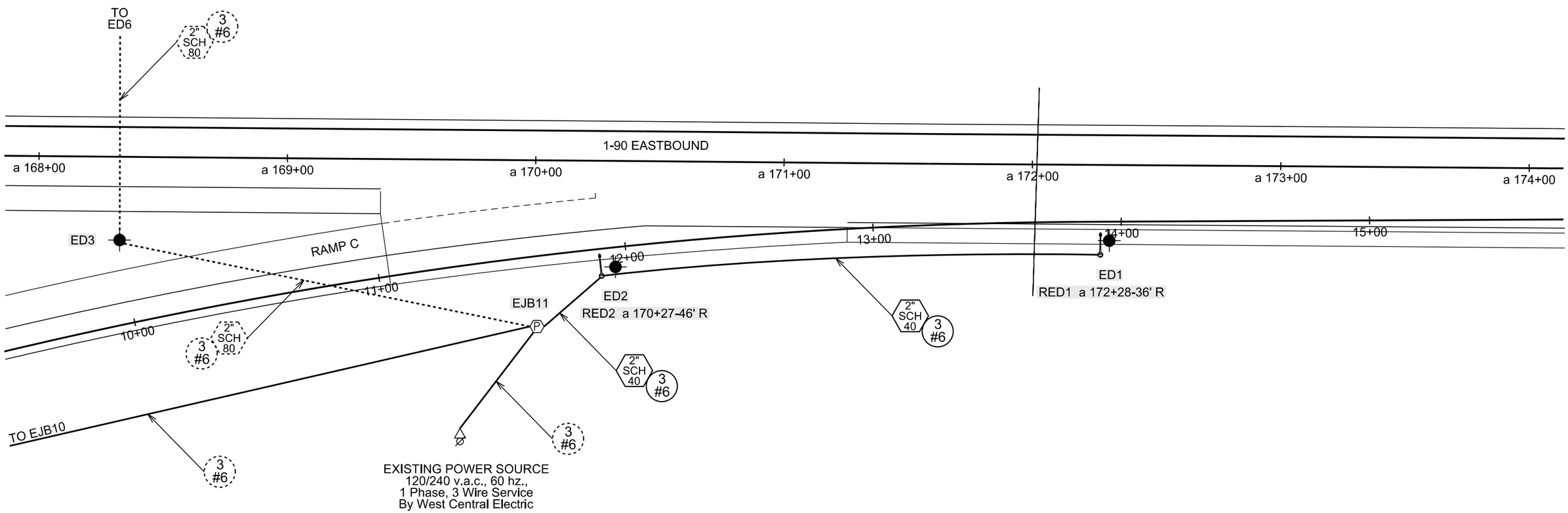

Plot Scale - 1:40

Plotted From - trpr14341

File - U:\rdprj\jons00GL\a168c.dgn

WIRING DIAGRAM
I-90 EASTBOUND EXIT 191

STATE OF SOUTH DAKOTA	PROJECT	SHEET	TOTAL SHEETS
	IM 0904(50)189	L8	L12

Plotting Date: 08/05/2016

LEGEND:

FUSE: 4 amp. Non-Time Delay
or
2 amp. Dual Element

LUMINAIRE: 250 watt High Pressure Sodium Lamp

NOTE:
All circuits shall be bonded in accordance with the NATIONAL ELECTRICAL CODE. Quantities for bonding conductors are not included in these plans.

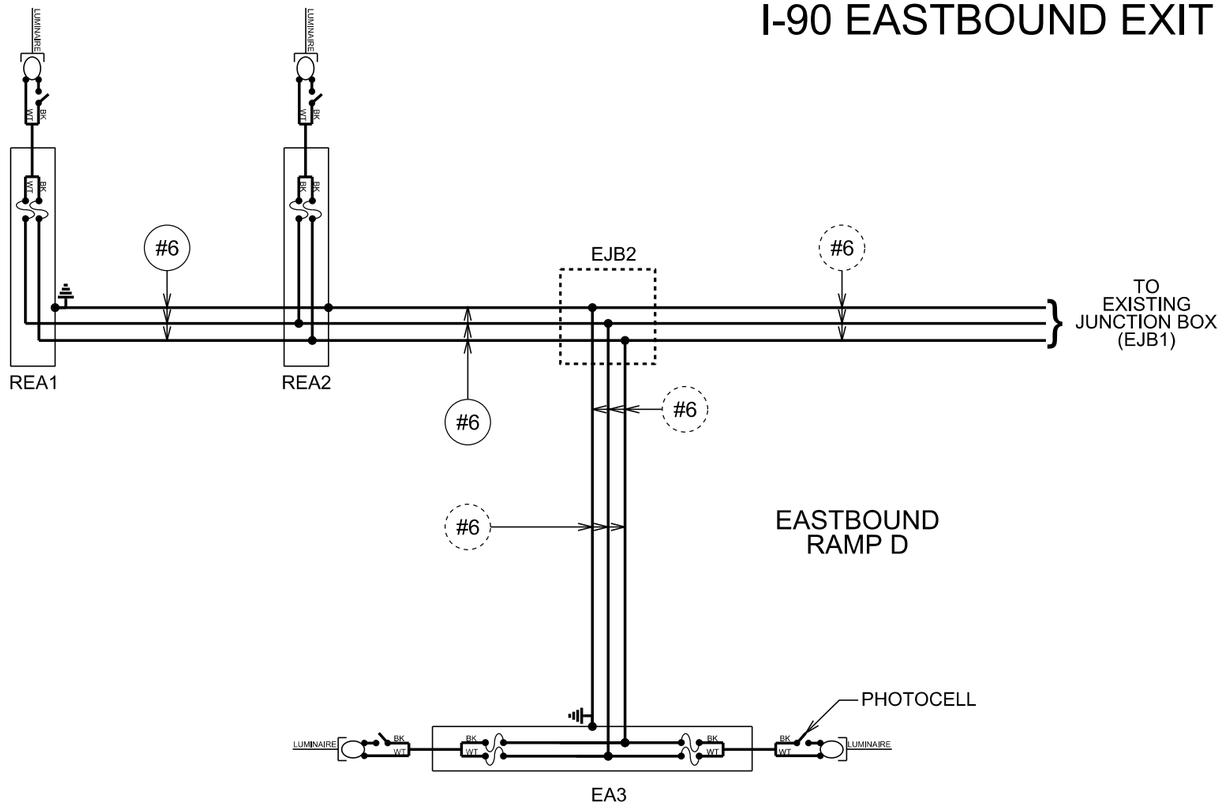

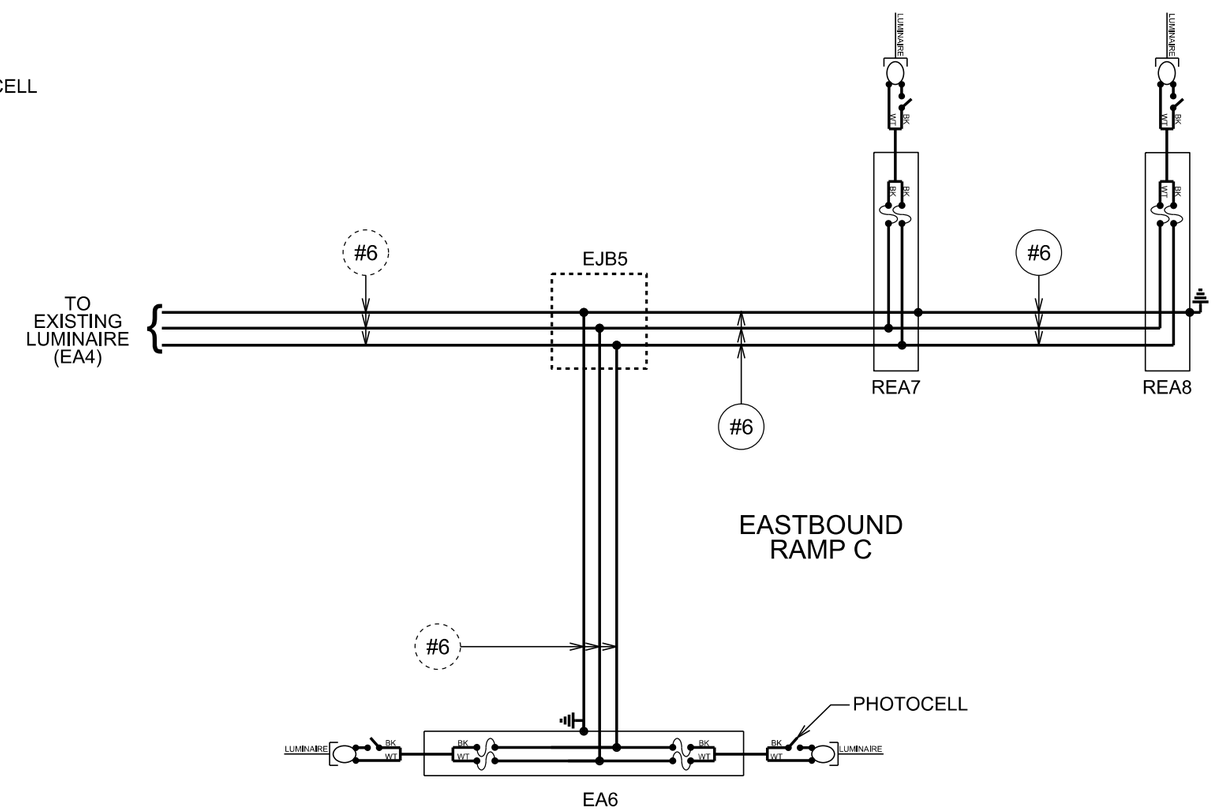

Plot Scale - 1:80

Plotted From - trpr14341

File - U:\rdprj\ons00GL\062099w.dgn

WIRING DIAGRAM
I-90 EASTBOUND EXIT 192

STATE OF SOUTH DAKOTA	PROJECT	SHEET	TOTAL SHEETS
	IM 0904(50)189	L9	L12

Plotting Date: 08/05/2016

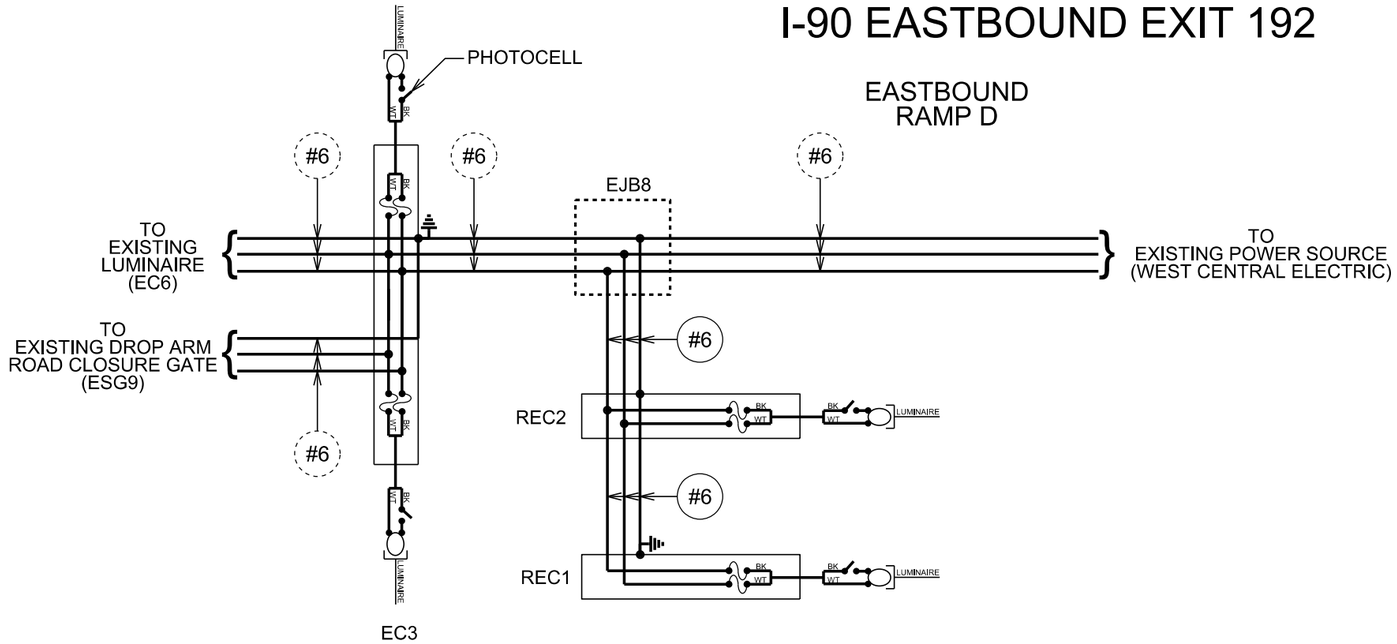

LEGEND:

FUSE: 4 amp. Non-Time Delay
or
2 amp. Dual Element

LUMINAIRE: 250 watt High Pressure Sodium Lamp

NOTE:
All circuits shall be bonded in accordance with the NATIONAL ELECTRICAL CODE. Quantities for bonding conductors are not included in these plans.

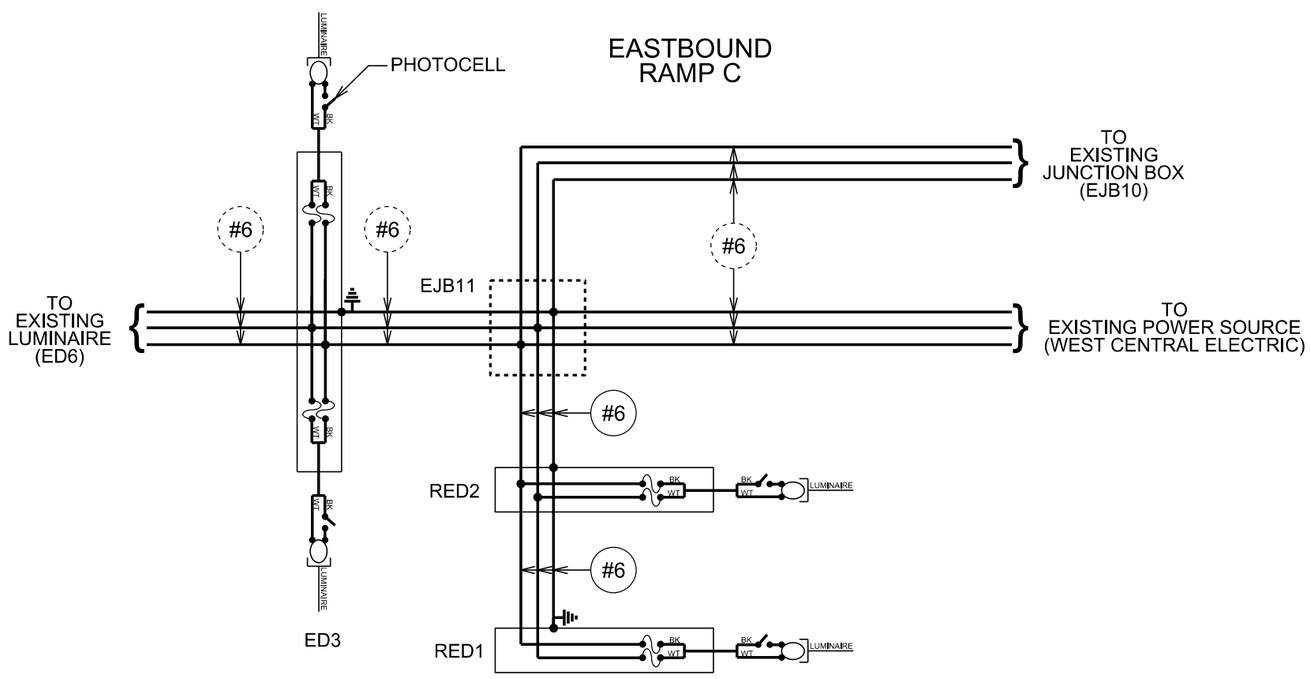

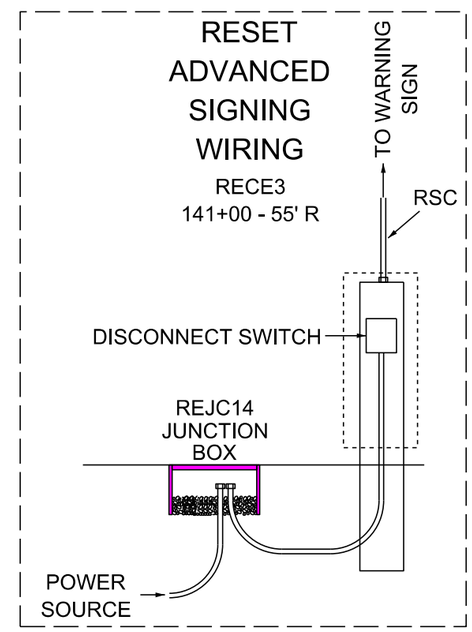

Plot Scale - 1:80

Plotted From - trpr14341

File - U:\rdprj\jons00GL\1451172w.dgn

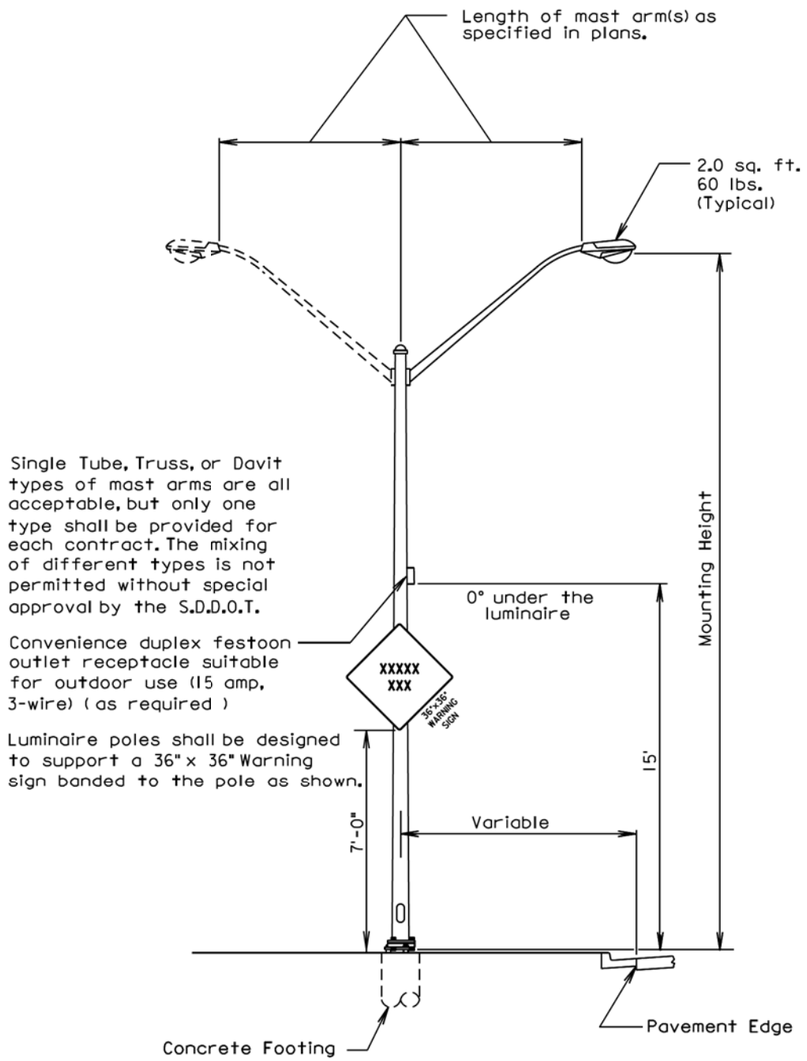

March 31, 2000

Published Date: 3rd Qtr. 2016	SDDOT	STEEL ROADWAY LUMINAIRE POLE WITH MAST ARM(S)	PLATE NUMBER 635.01
			Sheet 1 of 1

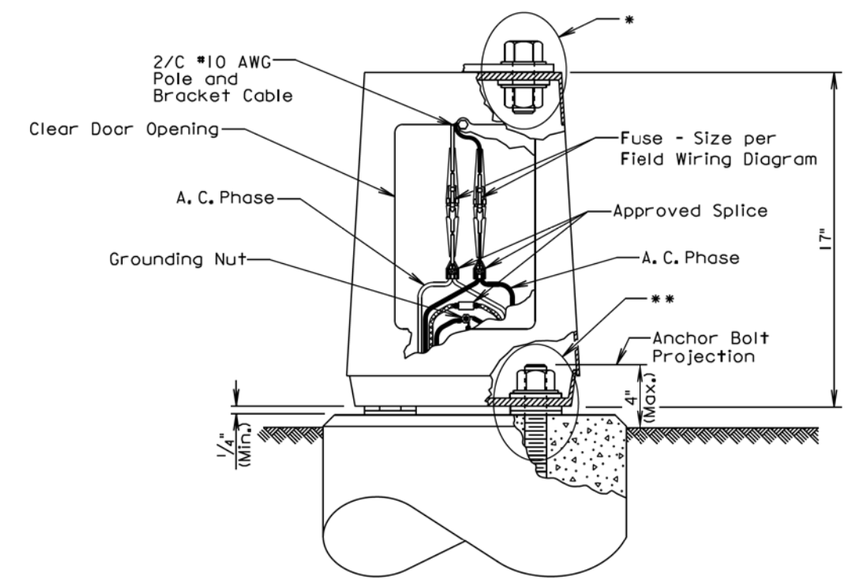

GENERAL NOTES:

Base details are provided for example only and are not intended to be a complete design.

Fused connectors shall be breakaway type.

*Hardware connecting the pole to the base shall be installed in accordance with the manufacturer's recommendation.

**Hardware connecting the base to the footing shall be installed in accordance with the manufacturer's recommendation. The Contractor shall install leveling devices in accordance with the manufacturer's recommendation if shimming is necessary to install the light poles plumb and level. The washers and shims shall be installed around the anchor bolts.

September 6, 2015

Published Date: 3rd Qtr. 2016	SDDOT	ROADWAY LUMINAIRE POLE BREAKAWAY TRANSFORMER BASE	PLATE NUMBER 635.21
			Sheet 1 of 1

Plot Scale - 1:200
- Plotted From - trpr14341
File - ...\prj\jons00GL\s63501s63521.dgn

STATE OF SOUTH DAKOTA	PROJECT	SHEET	TOTAL SHEETS
	IM 0904(50)189	L11	L12

Plotting Date: 08/05/2016

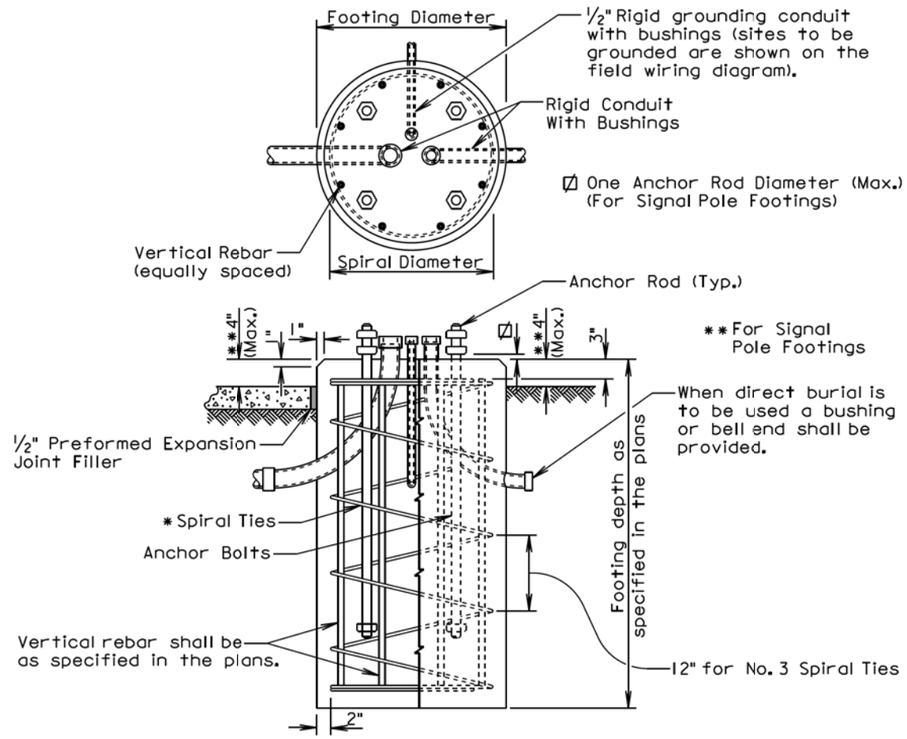

GENERAL NOTES:

* Circular ties may be used in lieu of the spiral ties. The No. 3 ties shall be spaced 12 inches apart except for the top two which shall be spaced 6 inches apart. The ties shall be lapped 18 inches and the laps shall be staggered around the cage.

Spiral ties shall have 1-1/2 extra turns at each end.

See Section 985 of the Specifications for footing materials.

Conduits and bushings may project 2½ inches to 6 inches above footing for fixed base poles but shall not project above the slip plane or fracture plane for breakaway poles.

Conduits shall be sealed water-tight during all phases of construction until poles are in place.

The anchor rods shall fit inside the reinforcing steel cage. If the anchor rods designed by the Pole Manufacturer do not fit, contact the Office of Bridge Design for footing redesign. No additional payment will be made for the redesigned footing.

Costs of conduit and conduit bushings shown on footing detail shall be incidental to the footing bid item(s).

The pole shall not be installed until the concrete has attained design strength (4000 psi).

The contour of the area surrounding the breakaway pole shall be flat, though not necessarily level for a distance of 5 feet in all directions. The Contractor may be required to provide finish grading at some breakaway pole locations.

June 26, 2015

Published Date: 3rd Qtr. 2016	SDDOT	POLE FOOTING	PLATE NUMBER 635.55
			Sheet 1 of 1

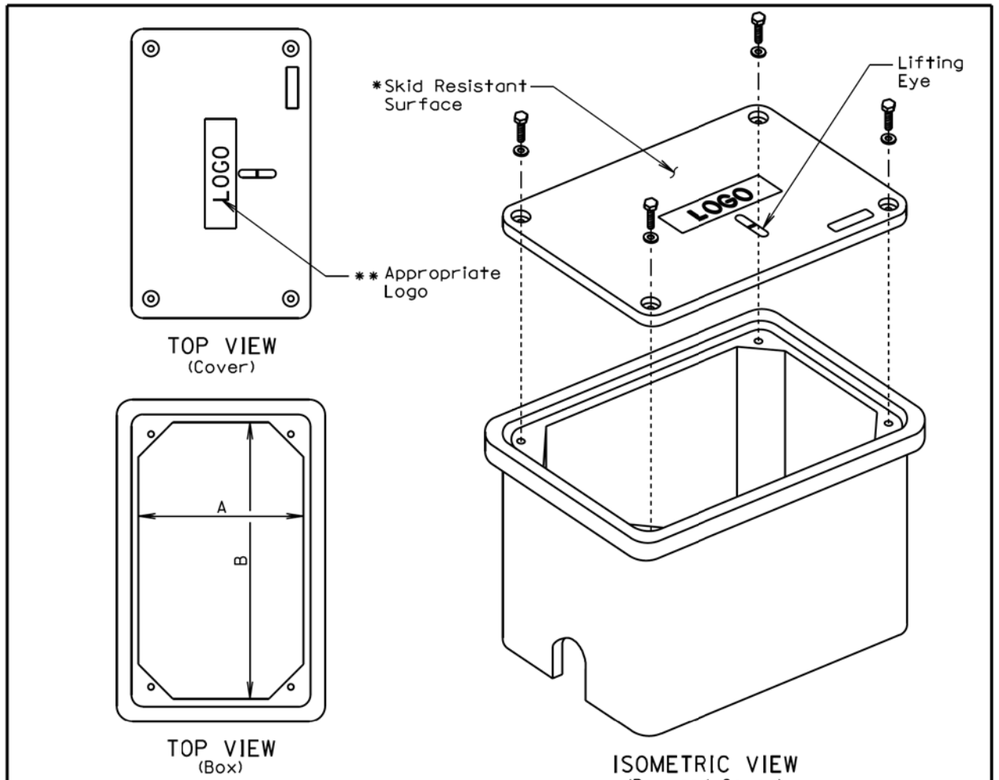

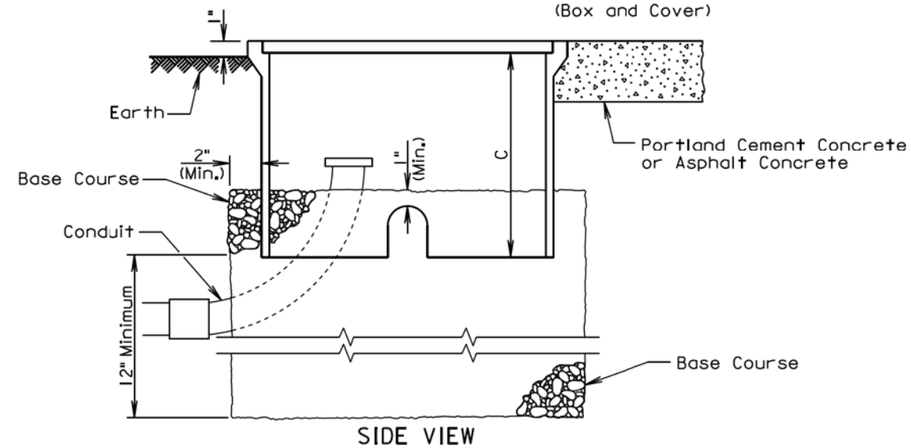

SIDE VIEW
(Electrical Junction Box Installation Details)

June 26, 2015

Published Date: 3rd Qtr. 2016	SDDOT	ELECTRICAL JUNCTION BOXES TYPE 1 THROUGH TYPE 4	PLATE NUMBER 635.65
			Sheet 1 of 2

Plot Scale - 1:200
- Plotted From - trpr14341
File - ...\prjjons00GL\s63555s63565.dgn

ELECTRICAL JUNCTION BOX

TYPE	DESCRIPTION	DIMENSIONS		
		A	B	C
1	Open Bottom with Gasket	11"-15"	18"-21"	18" (Min.)
2	Open Bottom with Gasket	13"-18"	23"-28"	18" (Min.)
3	Open Bottom with Gasket	17"-22"	24"-30"	18" (Min.)
4	Open Bottom with Gasket	28"-33"	36"-48"	24" (Min.)

GENERAL NOTES:

The cover shall be gasketed with a minimum of two stainless steel bolts and washers.

The cover shall have a lifting eye.

* The surface of the cover shall have a minimum wet and dry coefficient of friction value of 0.5 as determined by ASTM F 609.

** The cover of the junction box shall have the appropriate logo in one inch size letters and shall be recessed. When the junction box contains cables or wires for a traffic signal then the logo shall be "Signal". When the junction box contains lighting conductors then the logo shall be "Lighting".

The electrical junction boxes shall comply with the American National Standards Institute (ANSI)/Society of Cable Telecommunications Engineers (SCTE) 77 2007 Specification for Underground Enclosure Integrity. The loading requirement for all the electrical junction boxes shall be Tier 8 of ANSI/SCTE 77 2007.

The electrical junction boxes shall be UL listed.

June 26, 2015

Published Date: 3rd Qtr. 2016	SDDOT	ELECTRICAL JUNCTION BOXES TYPE 1 THROUGH TYPE 4	PLATE NUMBER 635.65
			Sheet 2 of 2

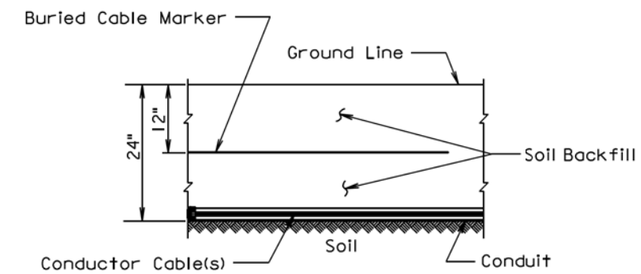

SECTION VIEW

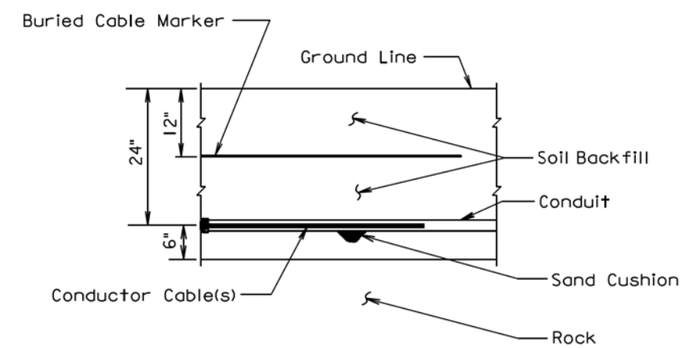

SECTION VIEW

GENERAL NOTE:

The Buried Cable Marker shall be plastic, approximately 6" wide, and shall be capable of sustaining a minimum of a 350% tolerance of elongation without tearing. The Buried Cable Marker shall have a life expectancy approximately equal to that of the conductor(s) beneath it. A phrase indicating the presence of a buried electric circuit below shall be printed in a contrasting color on the cable marker. The Buried Cable Marker shall be subject to approval by the Engineer. All costs associated with furnishing and installing the Buried Cable Marker shall be incidental to the contract unit price per Foot for the bid item used for the electrical conductor.

March 31, 2000

Published Date: 3rd Qtr. 2016	SDDOT	CONDUIT INSTALLATION	PLATE NUMBER 635.76
			Sheet 1 of 1

Plot Scale - 1:200
- Plotted From - trpr14341
File - ...\prj\jons00GL\s63565s63576.dgn