Department of Transportation

Office of Project Development

700 E Broadway Avenue
Pierre, South Dakota 57501-2586 605/773-3268
FAX: 605/773-6608

March 28, 2014

ADDENDUM NO. 1

RE: Item #3, April 2, 2014 Letting - P 0085(72)23, PCN 028L, Lawrence County - Urban Grading, Curb & Gutter, PCC Pavement, Pavement Restoration, & Lighting

TO WHOM IT MAY CONCERN:

The following addenda to the plans shall be inserted and made a part of your proposal for the referenced project.

SPECIAL PROVISIONS: Please remove the Special Provisions checklist and replace with attached Special Provisions checklist revised 3/28/14.

Please remove the "Special Provision for Cost + Time Bidding Procedure", dated 2/10/14 and replace with the "Special Provision for Cost + Bidding Procedure", dated 3/28/14.

BID ITEM FILE: **Bid Item was added:**
Bid Item 009E3010 "Public Information"

Quantities for Bid Items were changed:
Bid Item 380E6000 "Dowel Bar" changed from 3,645 to 6,534 Each

PLANS: Please destroy sheets A1, B2, A4, C3, E3, E34, E35, E36, and F2 and replace with the enclosed sheets, dated 3/27/14, 3/28/14.

Sheet A1: Quantities for Bid Item 380E6000 "Dowel Bar" changed from 3,645 to 6,534 Each and Bid Item 009E3010 "Public Information" was added.

Sheet A4: COMMITMENT M1: SECTION 4(f) PROPERTY/ Action Taken/Required note was revised.

Sheet B2: Bid Item 009E3010 "Public Information" was added.

Sheet C3: US 85 MAIN STREET PHASE 1A – BLUE ST TO GALENA ST note was revised.

Sheet E3: STONE AND MASONRY RETAINING WALLS note was revised.

Sheets E34 - E36: STANDARD PLATES 460.02 & 460.03 were removed. STANDARD PLATE 460.20 and 460.30 were added.

Sheet F2: Quantities for Bid Item 380E6000 “Dowel Bar” changed from 3,645 to 6,534 Each.

Sincerely,

Brace Prouty, P.E.
Engineering Supervisor

BP/cj

CC: Todd Seaman, Rapid City Region Engineer
Gary Engel, Rapid City Area Engineer

REV. 3/28/14

SPECIAL PROVISIONS

PROJECT NUMBER(S): P 0085(72)23 PCN: 028L

TYPE OF WORK: URBAN REGRADING, CURB & GUTTER, PCC PAVEMENT, PAVEMENT RESTORATION, & LIGHTING

COUNTY: LAWRENCE

The following clauses have been prepared subsequent to the Standard Specifications for Roads and Bridges and refer only to the above described improvement, for which the following Proposal is made. In case of any discrepancy or conflict between said specifications and these Special Provisions, the latter are to govern.

The Contractor's attention is directed to the need for securing from the Department of Environment & Natural Resources, Foss Building, Pierre, South Dakota, permission to remove water from public sources (lakes, rivers, streams, etc.). The Contractor should make his request as early as possible after receiving his contract, and insofar as possible at least 30 days prior to the date that the water is to be used.

Lisa Johnson is the official in charge of the Spearfish Career Center for Lawrence County.

THE FOLLOWING ITEMS ARE INCLUDED IN THIS PROPOSAL FORM:

Special Provision for Cost + Time Bidding Procedure, dated 3/28/14.

Special Provision Regarding Combination Bids, dated 2/12/14.

Special Provision for Subletting of Contract, dated 12/4/13.

Special Provision for Public Information / Public Relations, dated 1/13/14.

Special Provision for On-The-Job Training Program, dated 7/10/12.

Special Provision for PCC Pavement Smoothness, dated 9/20/05.

Special Provision for Contractor Staking, dated 12/3/13.

Special Provision Regarding Fire Preventative Measures, dated 4/2/02.

List of Utilities.

Special Provision for Contractor Administered Preconstruction Meeting, dated 4/18/13.
Special Provision for Electronic Bidding Requirements, dated 12/18/13.
Special Provision for Fuel Cost Adjustment, dated 7/13/06.

Special Provision for Differing Site Conditions, dated 12/19/13.
Special Provision for Suspension of Work, dated 2/13/04.
Standard Title VI Assurance, dated 7/14/08.
Special Provision For Disadvantaged Business Enterprise, dated 12/19/12.
Special Provision For EEO Affirmative Action Requirements on Federal and Federal-aid Construction Contracts, dated 9/1/97.
Special Provision For Required Contract Provisions Federal-aid Construction Contracts, Form FHWA 1273 (Rev. May/1/12), dated 4/30/13.
Required Contract Provisions Federal-aid Construction Contracts, Form FHWA 1273 (Rev. 5/1/12).
Special Provision Regarding Minimum Wage on Federal-Aid Projects, dated 4/30/13.
Wage and Hour Division US Department of Labor Washington DC.
- US Dept. of Labor Decision Number SD100010, dated 8/30/13.
Supplemental Specification for Errata, dated 3/3/10.
Supplemental Specification to Standard Specifications for Roads and Bridges, dated 3/3/10.
Special Provision for Price Schedule for Miscellaneous Items, dated 9/26/13.

Special Provision Regarding Storm Water Discharge, dated 5/3/13.
General Permit for Storm Water Discharges Associated with Construction Activities, dated 2/1/10. http://denr.sd.gov/des/sw/IPermits/ConstructionGeneralPermit2010.pdf

*** * * ***

STATE OF SOUTH DAKOTA
DEPARTMENT OF TRANSPORTATION

SPECIAL PROVISION
FOR
COST + TIME BIDDING PROCEDURE

PROJECT P 0085(72)23, PCN 028L
LAWRENCE COUNTY

MARCH 28, 2014

The Department is using a contract time special provision with the combination of working day count closure period requirements for the completion of part of Phase 1 and part of Phase 2; working day count closure period requirement with incentive/disincentive for the completion of all of Phase 1A; cost + time (A+B) bidding procedures for all of Phase 1, all of Phase 2, and all of Phase 1A; interim completion date requirements for work done in 2014 and 2015; Sturgis Motorcycle Rally work restrictions in 2014 and 2015; substantial completion date requirement in 2015, and an overall completion date requirement in 2016 to minimize the delay and inconvenience to the traveling public caused by roadway closures. The Contractor is encouraged to use innovative construction or staging techniques to minimize the number and duration of roadway closures.

The contract time will be the working day period proposed by the Contractor in part B of the bid and the working day count requirements, interim completion requirement, substantial completion requirement, and overall completion requirement.

In accordance with the provisions outlined below, the Department will assess a working day (or a portion thereof) whenever US 85/Main is closed or obstructed until the Contractor fully restores traffic to the roadway, intersecting streets, and approaches; restores pedestrian traffic to the sidewalk; and completes all work, except work limited by seasonal restrictions.

Ancillary work limited by seasonal restrictions may be completed in 2015 and 2016. Unless otherwise approved by the Engineer, The Contractor may not divert traffic from US 85/Main Street for this work. If the Engineer allows the Contractor to divert traffic from US 85/Main Street for this work, all contract time provisions (day counts and A+B) provisions will apply.

The Engineer, in his or her sole discretion will determine which days will be charged as working days, when each phase of the project is complete, when the project is substantially complete, and when the project is complete.

The Contractor will complete all work on the project, including final cleaning up, by the May 27, 2016 overall completion date.

The Contractor will not begin work on the project in 2014 prior to May 5, 2014.

The Contractor will not begin work on the project in 2015 prior to May 4, 2015.

A. Sturgis Motorcycle Rally

The Contractor will open all lanes outside the grading limits shown in the plans (PCC Pavement Repair work will not be allowed) to unimpeded traffic and the Department will not allow work on the project from July 24, 2014 to August 10, 2014 (inclusive) and from July 23, 2015 to August 9, 2015 (inclusive) due to the Sturgis Motorcycle Rally.

The Contractor will not expose traffic to milled surfaces, grooved surfaces, uneven lanes, or graveled surfaces during this time.

The Department will assess liquidated damages in the amount of $2000 per calendar day for the Contractor's failure to comply with the Sturgis Motorcycle Rally restrictions. The Department will not grant time extensions for the Sturgis Motorcycle Rally restrictions for any reason.

B. PCC Pavement Repair Work Completion Requirement

The Contractor will complete all PCC Pavement repair work by the October 16, 2015 substantial completion date.

C. Closure Period Requirements

In addition to the requirements specified above and the Cost + Time bidding procedure specified below, the Contractor will adhere to the following closure periods for portions of Phase 1, portions of Phase 2, and all of Phase 1A.

<u>US 85/Main Street and Julius Street Intersection in Phase 1</u>

The Contractor will complete all work in the US 85/Main Street and Julius Street intersection in Phase 1 required to provide access for two-way traffic through the intersection to Julius Street within 15 working days.

The Department will begin charging working days when the Contractor begins work in the US 85/Main Street and Julius Street intersection. The Department will continue charging working days until the Contractor restores two-way traffic through the intersection to Julius Street. The Department will charge working days in accordance with Section 8.6 A. except working days will be defined as

any calendar day between January 1 and December 31 (inclusive) except holidays.

If the Contractor does not complete the work within the working day completion requirement, the Department will assess liquidated damages in the amount of $500 per working day.

US 85/Main Street and Blatt Street Intersection in Phase 2

The Contractor will complete all work in the US 85/Main Street and Blatt Street intersection in Phase 2 required to provide access for two-way traffic through the intersection to Blatt Street within 15 working days.

The Department will begin charging working days when the Contractor begins work in the US 85/Main Street and Blatt Street intersection. The Department will continue charging working days until the Contractor restores two-way traffic through the intersection to Blatt Street. The Department will charge working days in accordance with Section 8.6 A. except working days will be defined as any calendar day between January 1 and December 31 (inclusive) except holidays.

If the Contractor does not complete the work within the working day completion requirement, the Department will assess liquidated damages in the amount of $500 per working day.

US 85/Main Street Phase 1A

The Contractor may elect to complete work in Phase 1A concurrently with either Phase 1 or Phase 2. Depending on when the Contractor chooses to complete Phase 1A, the following will apply:

US 85/Main Street Phase 1A Completed Concurrently With Phase 1

If the Contractor elects to complete Phase 1A concurrently with Phase 1, the Contractor will complete the work within the Phase 1A work area within 35 working days, including all of the US 85/Main Street and Galena Street intersection, with the exception of ancillary work as limited by seasonal restrictions. In order for the Department to consider the Phase 1A work complete, the Contractor must complete all work included required to provide new permanent pavement and pavement markings for vehicular and pedestrian access between Blue Street and Galena Street including the entire intersections of Blue Street and Galena Street.

The Department will begin charging working days when the Contractor closes US/85Main Street to traffic in the Phase 1A work area. The Department will continue charging working days until the Contractor completes the required work in Phase 1A. The Department will charge working days in accordance

with Section 8.6 A. except working days will be defined as any calendar day between January 1 and December 31 (inclusive) except holidays.

The Department wants to accelerate the completion of Phase 1A by offering an incentive to the Contractor. The Department will make an incentive payment in the amount of $2,900 per working day to the contract for each working day the Contractor completes the required Phase 1A work prior to the allowed working day count requirement. The Department will make a disincentive assessment in the amount of $2,900 per working day to the contract for each working day the required Phase 1A work is not completed beyond allowed working day count requirement.

The maximum incentive for this portion of the project is limited to $29,000. There is no maximum disincentive.

US 85/Main Street Phase 1A Completed Concurrently With Phase 2

If the Contractor elects to complete Phase 1A concurrently with Phase 2, the Contractor will complete the work within the Phase 1A work area within 35 working days, including all of the US 85/Main Street and Galena Street intersection, with the exception of ancillary work as limited by seasonal restrictions. In order for the Department to consider the Phase 1A work complete, the Contractor must complete all work included required to provide new permanent pavement and pavement markings for vehicular and pedestrian access between Blue Street and Galena Street, including the entire intersections of Blue Street.

The Department will begin charging working days when the Contractor closes US/85Main Street to traffic in the Phase 1A work area. The Department will continue charging working days until the Contractor completes the required work in Phase 1A. The Department will charge working days in accordance with Section 8.6 A. except working days will be defined as any calendar day between January 1 and December 31 (inclusive) except holidays.

The Department wants to accelerate the completion of Phase 1A by offering an incentive to the Contractor. The Department will make an incentive payment in the amount of $2,900 per working day to the contract for each working day the Contractor completes the required Phase 1A work prior to the allowed working day count requirement. The Department will make a disincentive assessment in the amount of $2,900 per working day to the contract for each working day the required Phase 1A work is not completed beyond allowed working day count requirement.

The maximum incentive for this portion of the project is limited to $29,000. There is no maximum disincentive.

In addition to this option as part of the 35 working day count completion requirement for Phase 1A, the Contractor will complete all work within the Galena Street intersection required to provide access for two-way traffic and access for pedestrian traffic on one north/south leg and one east/west leg of the Galena Street intersection on new concrete pavement and sidewalk within 15 working days. If the Contractor does not complete the work within the allowed working day completion requirement, the Department will assess liquidated damages in the amount of $650 per working day. The Department will charge working days in accordance with Section 8.6 A. except working days will be defined as any calendar day between January 1 and December 31 (inclusive) except holidays.

The Department will begin charging working days when the Contractor's operations force the closure of the Galena Street intersection with US 85/Main Street. The Department will continue charging working days until the Contractor completes the work required to provide access for two-way traffic and access for pedestrian traffic on one north/south leg and one east/west leg of the Galena Street intersection.

D. A+B General Requirements

The Department will use a Cost + Time Bidding Procedure to select the bidder that will be awarded the contract for this project. The selection process will take into account the price offering and the time in which the Contractor proposes to substantially complete the construction of all of Phase 1, all of Phase 2, and all of Phase 1A.

Unless otherwise approved by the Engineer, the Contractor will complete the Phase 1 work in 2014 and the Phase 2 work in 2015.

There is a 185 working day maximum amount of time for construction of all of Phase 1, all of Phase 2, and all of Phase 1A.

The Department will begin charging working days for the A+B portion of the project when the Contractor diverts traffic from US 85/Main Street at any point or on May 5, 2014, whichever occurs earlier. The Department will charge working days in accordance with Section 8.6 A. except working days will be defined as any calendar day between January 1 and December 31 (inclusive) except holidays if the Contractor does not meet the interim or substantial completion date requirements below.

In addition, the Contractor will substantially complete all work started in 2014, excluding ancillary work as limited by seasonal restrictions by the October 17, 2014 interim completion date.

The Department will temporarily stop the working day count when the Contractor restores traffic to US 85/Main Street in the fall of 2014 in accordance with the October 17, 2014 interim completion date requirement.

If the Contractor does not meet the October 17, 2014 interim completion date requirement for work started in 2014, the Contractor will provide a hard surfaced roadway on the entire project by the October 17, 2014 interim completion date. Depending on weather conditions and forecast, the Engineer may grant the Contractor permission to complete remaining items of work after the October 17, 2014 interim completion date. The Department will continue to charge working days during this time period.

A hard surfaced roadway will be either the existing permanent surfacing or temporary surfacing consisting of granular material and at least 3” of asphalt concrete surfacing bringing the temporary surface to the final grade elevation providing proper drainage throughout the project and leaving no bumps, dips, or vertical drop offs at gutters, curb ramps, utility access points, and pavement transitions throughout the project including side roads.

The Department will count the number of working days available to the Contractor between the date the working day count begins for the A+B portion of the project in 2014 and the October 17, 2014 interim completion date. The Department will compare the number of working days available to the expected number of working days using the information provided in the table in Attachment 1. The Department will base the determination of Contractor’s control on the comparison of available working days and expected working days.

If for reasons within the Contractor's control the work is not completed prior to the October 17, 2014 interim completion date as specified or as extended according to the requirements of this special provision, the Department will not make separate payment for the temporary surfacing required to tie uncompleted work with partially completed work and the existing pavement, temporary pavement markings, or the removal of temporary surfacing and temporary pavement markings.

If for reasons outside the Contractor's control, as determined by the Department, the work is not completed prior to the October 17, 2014 interim completion date as specified or as extended according to the requirements of this special provision, the Department will make separate payment at established contract unit prices, prices established in the price schedule for miscellaneous items, or negotiated prices for items not included in the contract or price schedule for miscellaneous items for the temporary surfacing required to tie uncompleted work with partially completed work and the existing pavement, temporary pavement markings, and the removal of temporary surfacing and temporary pavement markings.

The Department will resume the working day count for the A+B portion of the project in the spring of 2015 when the Contractor diverts traffic from US 85/Main Street at any point or on May 4, 2015, whichever occurs earlier.

In addition, the Contractor will substantially complete the project excluding ancillary work as limited by seasonal restrictions by the October 16, 2015 substantial completion date.

The Department will stop the working day count when unimpeded traffic is placed back onto the full roadway and the project is substantially complete.

If the Contractor does not meet the October 16, 2015 substantial completion date requirement, the Contractor will provide a hard surfaced roadway on the entire project by the October 16, 2015 substantial completion date. Depending on weather conditions and forecast, the Engineer may grant the Contractor permission to complete remaining items of work after the October 16, 2015 substantial completion date. The Department will continue to charge working days during this time period.

A hard surfaced roadway will be either the existing permanent surfacing or temporary surfacing consisting of granular material and at least 3” of asphalt concrete surfacing bringing the temporary surface to the final grade elevation providing proper drainage throughout the project and leaving no bumps, dips, or vertical drop offs at gutters, curb ramps, utility access points, and pavement transitions throughout the project including side roads.

The Department will count the number of working days available to the Contractor between the date the working day count begins for the A+B portion of the project in 2015 and the October 16, 2015 substantial completion date. The Department will compare the number of working days available to the expected number of working days using the information provided in the table in Attachment 1. The Department will base the determination of Contractor’s control on the comparison of available working days and expected working days.

If for reasons within the Contractor's control the work is not completed prior to the October 16, 2015 substantial completion date as specified or as extended according to the requirements of this special provision, the Department will not make separate payment for the temporary surfacing required to tie uncompleted work with partially completed work and the existing pavement, temporary pavement markings, or the removal of temporary surfacing and temporary pavement markings.

If for reasons outside the Contractor's control, as determined by the Department, the work is not completed prior to the October 16, 2015 interim completion date as specified or as extended according to the requirements of this special provision, the Department will make separate payment at established contract unit prices, prices established in the price schedule for miscellaneous items, or negotiated prices for items not included in the contract or price schedule for miscellaneous items for the

temporary surfacing required to tie uncompleted work with partially completed work and the existing pavement, temporary pavement markings, and the removal of temporary surfacing and temporary pavement markings.

E. Preparation of Proposal

The bidder must submit a complete bid proposal consisting of two parts. Part A will be the total dollar amount of the contract unit prices in the Bid Schedule. Part B will be the number of working days the Bidder proposes to substantially complete the construction of all of Phase 1, all of Phase 2, and all of Phase 1A multiplied by the Daily User Cost.

The bidder will enter the number of working days in the proposal. The number of working days may not exceed 185 working days or the Department will consider the bid proposal as irregular and the bid proposal will be rejected. If the Contractor leaves the number of working days blank or inserts a zero or negative quantity, the Department will consider the bid proposal to be irregular.

F. Consideration of Proposals

After the bid proposals are opened and read, the Department will compare the bid proposals based on the following:

Each bid proposal submitted shall consist of two parts:

A = The total dollar amount for all of the unit price items of work to be performed under this proposal.

B = The total number of working days proposed by the Bidder to substantially complete the project multiplied by the Daily User Cost.

The Daily User Cost for this project will be $2,250 per working day.

The successful bid will then be determined by the lowest combined sum of parts A and B according to the following formula:

A + B = Bid Amount for evaluation purposes.

The Department will make the contract award in the amount bid for Part A. The Contractor will be required to bond (proposal guarantee and performance bond) only Part A of the bid.

G. Early Opening of the Project with Incentive

The Department seeks to accelerate the project by offering an incentive to the Contractor. The Department will make an incentive payment of $2,250 per working

day to the contract for each working day that the Contractor substantially completes the work before the contract time bid (Part B) for the project. The maximum incentive for the project is $45,000.

H. Failure to Complete on Time

The Contractor will substantially complete the work started in 2014 by the October 17, 2014 interim completion date. If the Contractor does not substantially complete the work started in 2014 by the October 17, 2014 interim completion date, the Department will assess liquidated damages according to Section 8.7 from the contract for each working day that the work (project) is late until the Contractor has substantially completed the work started in 2014. In the event the Contractor does not substantially complete the work started in 2014 by the interim completion date, the Department will charge working days in accordance with Section 8.6 B. except working days will be defined as any calendar day (including Saturdays) except holidays.

In addition, The Contractor will substantially complete the project within the contract time (Part B) as bid. If the Contractor does not substantially complete the project within the contract time (Part B) as bid, the Department will deduct $2,250 and liquidated damages according to Section 8.7 from the contract for each working day that the work (project) is late until the Contractor has substantially completed the work. In the event the Contractor does not substantially complete the project within the contract time (Part B) as bid, the Department will charge working days in accordance with Section 8.6 B. except working days will be defined as any calendar day (including Saturdays) except holidays.

In addition, the Contractor will substantially complete the project by the October 16, 2015 substantial completion date. If the Contractor does not substantially complete the project by the October 16, 2015 substantial completion date, the Contractor will lose all incentive that has been accumulated and the Department will deduct $2,250 and liquidated damages according to Section 8.7 from the contract for each working day that the work (project) is late until the Contractor has substantially completed the work. In the event the Contractor does not substantially complete the project by the substantial completion date, the Department will charge working days in accordance with Section 8.6 B. except working days will be defined as any calendar day (including Saturdays) except holidays.

In addition, the Contractor will complete all work on the project, including final cleaning up, prior to the overall completion date or the overall completion date as amended by formally approved time extension. If the Contractor does not complete all work, including final cleaning up, by the overall completion date or the overall completion date as amended by formally approved time extension, the Department will assess liquidated damages in accordance with Section 8.7. The Department will assess liquidated damages for each working day the work (project) is late until the Contractor completes all contract work, including final cleaning up. In the event the

Contractor does not complete the work (project) on time, the Department will charge working days in accordance with Section 8.6 B except that 8.6 B.7 will not apply and working days will be defined as any calendar day (including Saturdays) except holidays.

I. Time Extensions

In order to avoid or reduce liquidated damage assessments, the Contractor may request a time extension for the working day count, working day interim completion requirements, interim completion date, substantial completion date, and overall completion date (excluding the Sturgis Motorcycle Rally restriction). The Department will consider these time extension requests using the same considerations that apply when granting an extension of Contract Time under Section 8.6, except extra work or an increase in quantities will not qualify for an automatic extension of time based on a proportional increase in the contract amount.

J. Expected Adverse Weather Days

The Department has provided Attachment 1 for information purposes only as a guide to bidders. This table depicts the typical number of adverse weather days expected for any given month, based on historical records. The Department will consider this project a grading project in Zone 3.

The Department will consider expected adverse weather days cumulative in nature over the total time available for contract completion. When considering a time extension for the overall completion date, the Engineer will compare the total number of expected adverse weather days against the total number of actual adverse weather days for the entire period during which the work was to be completed.

* * * * *

ATTACHMENT 1

Figure A. Expected Adverse Weather Days for South Dakota

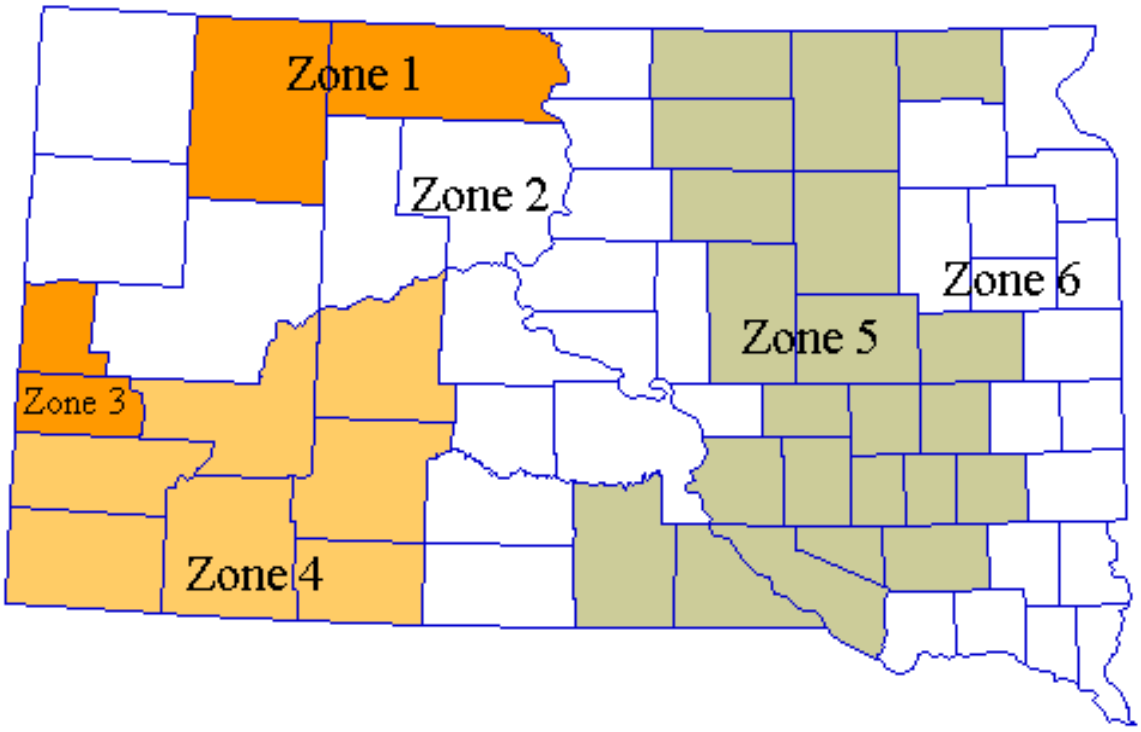

Table 1. Expected Adverse Weather Days for South Dakota

	Grading Projects						Surfacing and Structural Projects					
	Zone 1	Zone 2	Zone 3	Zone 4	Zone 5	Zone 6	Zone 1	Zone 2	Zone 3	Zone 4	Zone 5	Zone 6
Jan	18	18	16	16	22	24	18	18	15	16	21	23
Feb	19	18	12	14	19	21	19	18	12	14	19	21
Mar	12	10	9	8	11	13	12	10	9	8	10	12
Apr	6	5	8	5	6	6	5	4	6	4	4	4
May	6	6	8	6	6	6	5	5	6	4	4	5
Jun	7	6	7	6	7	8	5	5	5	4	5	6
Jul	5	5	6	5	6	7	4	4	5	3	4	5
Aug	4	4	5	4	5	6	3	3	4	3	4	4
Sep	3	3	4	3	4	5	2	2	3	2	3	4
Oct	4	3	5	3	4	4	3	3	4	2	3	3
Nov	11	9	8	7	10	12	11	9	8	7	10	11
Dec	21	19	15	14	20	22	21	19	15	14	20	22

NOTE: Includes Holidays and Weekends.

ESTIMATE OF QUANTITIES AND ENVIRONMENTAL COMMITMENTS

STATE OF SOUTH DAKOTA	PROJECT	SHEET NO.	TOTAL SHEETS
	P 0085(72)23	A1	A4
FILE: Section A Notes PLOTTING DATE: 3/27/2014	REV DATE: 3/27/2014 INITIAL: SS		

Grading – Section B

Bid Item Number	Item	Quantity	Unit
009E0010	Mobilization	Lump Sum	LS
009E3010	Public Information	Lump Sum	LS
009E3230	Grade Staking	1.595	Mile
009E3250	Miscellaneous Staking	0.471	Mile
009E3280	Slope Staking	0.471	Mile
009E3290	Structure Staking	23	Each
009E3300	Three Man Survey Crew	100	Hour
100E0100	Clearing	Lump Sum	LS
110E0300	Remove Concrete Curb and Gutter	25	Ft
110E0400	Remove Drop Inlet	22	Each
110E0460	Remove Manhole	4	Each
110E0500	Remove Pipe Culvert	697	Ft
110E0600	Remove Fence	434	Ft
110E1010	Remove Asphalt Concrete Pavement	127.9	SqYd
110E1100	Remove Concrete Pavement	11102.2	SqYd
110E1110	Remove Concrete Approach Pavement	308.9	SqYd
110E1140	Remove Concrete Sidewalk	2970	SqYd
110E7802	Remove Fence for Reset	90	Ft
120E0010	Unclassified Excavation	3965	CuYd
120E0900	Contaminated Material Excavation	100	CuYd
250E0020	Incidental Work, Grading	Lump Sum	LS
380E3540	8" PCC Approach Pavement	411.1	SqYd
380E4050	8" PCC Fillet Section	85.3	SqYd
450E0104	12" RCP Class 4, Furnish	4	Ft
450E0110	12" RCP, Install	4	Ft
450E0123	18" RCP Class 3, Furnish	724	Ft
450E0130	18" RCP, Install	724	Ft
450E0143	24" RCP Class 3, Furnish	410	Ft
450E0150	24" RCP, Install	410	Ft
450E1400	RCP Reducer, Furnish	1	Each
450E1401	RCP Reducer, Install	1	Each
451E3458	18" Pipe Plug	1	Each
462E0100	Class M6 Concrete	101.3	CuYd
470E0020	Pipe Handrail	514	Ft
480E0100	Reinforcing Steel	19733	Lb
600E0200	Type **II** Field Laboratory	1	Each
620E0300	Special Right-of-Way Fence	273	Ft
620E4100	Reset Fence	90	Ft
650E0080	Type B68 Concrete Curb and Gutter	4363	Ft
650E2100	Special Concrete Curb and Gutter	498	Ft
650E4680	Type P8 Concrete Gutter	404	Ft
650E6080	8" Concrete Valley Gutter	138	Ft
651E0060	6" Concrete Sidewalk	30789	SqFt
651E5000	Sidewalk Drain	20.5	Ft
651E7000	Type 1 Detectable Warnings	430	SqFt
670E1200	Type B Frame and Gate Assembly	7	Each
670E5200	Special Frame and Grate Assembly	19	Each
671E6008	Type A8 Manhole Frame and Lid	7	Each
831E1010	Geogrid Reinforcement	2897	SqYd

SPECIFICATIONS

Standard Specifications for Roads & Bridges, 2004 Edition and Required Provisions, Supplemental Specifications and/or Special Provisions as included in the Proposal.

Traffic Control – Section C

Bid item Number	Item	Quantity	Unit
004E0030	Maintenance of Traffic Diversions	Lump Sum	LS
260E6010	Granular Material	500.0	Ton
632E3600	Temporary Signing	360	SqFt
634E0010	Flagging	300	Hour
634E0020	Pilot Car	600	Hour
634E0100	Traffic Control	1942	Unit
634E0120	Traffic Control, Miscellaneous	Lump Sum	LS
634E0420	Type C Advance Warning Arrow Panel	2	Each
634E0640	Temporary Pavement Marking	13200	Ft
634E1002	Detour Signing	971	SqFt
634E1215	Contractor Furnished Portable Changeable Message Sign	4	Each
634E2010	Temporary Pedestrian Facility(s)	Lump Sum	LS

Erosion and Sediment Control – Section D

Bid item Number	Item	Quantity	Unit
110E1690	Remove Sediment	5.0	CuYd
110E1693	Remove Erosion Control Wattle	178	Ft
110E1695	Remove Sediment Filter Bag	532	Ft
110E1700	Remove Silt Fence	418	Ft
120E6300	Water for Vegetation	18.0	MGal
230E0020	Placing Contractor Furnished Topsoil	150	CuYd
730E0210	Type F Permanent Seed Mixture	10	Lb
731E0100	Fertilizing	12	Lb
732E0100	Mulching	5.0	Ton
733E0100	Sodding	422	SqYd
734E0154	12" Diameter Erosion Control Wattle	702	Ft
734E0165	Remove and Reset Erosion Control Wattle	178	Ft
734E0180	Sediment Filter Bag	532	Ft
734E0604	High Flow Silt Fence	418	Ft
734E0845	Sediment Control at Inlet with Frame and Grate	27	Each
734E3100	Portable Sediment Containment System	1	Each
734E5010	Sweeping	100	Hour
831E0300	MSE Geotextile Fabric	276	SqYd
900E1300	Granular Material for Construction Entrance	170.0	Ton

REGISTERED PROFESSIONAL ENGINEER
REG. NO. 8328
JODY W. PAGE
SOUTH DAKOTA
27 MAR 14

Structure – Section E

Bid Item Number	Item	Quantity	Unit
110E1300	Remove Concrete Retaining Wall	780	Ft
260E6010	Granular Material	74.1	Ton
420E0300	Structure Excavation, Retaining Wall	1549	CuYd
420E0400	Structure Excavation, Miscellaneous	82.7	CuYd
421E1000	Footing Undercut	157.8	CuYd
460E0100	Class A45 Concrete, Miscellaneous	332.6	CuYd
460E0205	Architectural Surface Finish	464	SqFt
460E0206	Architectural Surface Finish Test Panel	2	Each
462E0100	Class M6 Concrete	35.5	CuYd
462E0200	Controlled Density Fill	187.2	CuYd
470E0020	Pipe Handrail	319	Ft
480E0100	Reinforcing Steel	24419	Lb
480E0200	Epoxy Coated Reinforcing Steel	18419	Lb
530E0300	Type C Concrete Retaining Wall	798	SqFt
530E0470	Gravity Large Concrete Block Wall	1429	SqFt
530E0810	Repair Retaining Wall	95	SqFt
530E0820	Reconstruct Stone and Masonry Retaining Wall	92	SqFt
680E0240	4" Corrugated Polyethylene Drainage Tubing	283	Ft

Surfacing – Section F

Bid item Number	Item	Quantity	Unit
120E6200	Water for Granular Material	132.1	MGal
260E2060	Gravel Cushion, Modified	3691.4	Ton
260E0010	Subbase	8440.0	Ton
320E1200	Asphalt Concrete Composite	49.2	Ton
380E0050	8" Nonreinforced PCC Pavement	8723.9	SqYd
380E5010	Fast Track Concrete	300.0	SqYd
380E5030	Nonreinforced PCC Pavement Repair	138.0	SqYd
380E6000	Dowel Bar	6534	Each
380E6110	Insert Steel Bar in PCC Pavement	224	Each
380E6302	Reseal PCC Pavement Joint - Hot Pour	2416	Ft
390E0200	Repair Type A Spall	41.0	SqFt

INDEX OF SHEETS

A1 and A2 — Estimate of Quantities for Sections B,C,D,E,F,L,M, and S
A3 and A4 — Environmental Commitments

PLANS BY: HDR RAPID CITY, SD

ESTIMATE OF QUANTITIES AND ENVIRONMENTAL COMMITMENTS

STATE OF SOUTH DAKOTA	PROJECT	SHEET NO.	TOTAL SHEETS
	P 0085(72)23	A4	A4
FILE: Section A Notes PLOTTING DATE: 3/28/2014	REV DATE: 3/28/2014 INITIAL: SS		

COMMITMENT I: HISTORICAL PRESERVATION OFFICE CLEARANCES

The SDDOT has obtained concurrence with the State Historical Preservation Office (SHPO or THPO) for all work included within the project limits and all designated option borrow sites provided within the plans.

Action Taken/Required:

All earth disturbing activities not designated within the plans require review of cultural resources impacts. This work includes, but is not limited to: staging areas, borrow sites, waste disposal sites, and all material processing sites. The Contractor shall contact SARC & arrange to have an archaeologist on site before any stripping of pavement begins so that any buried cultural resources that might be exposed can be documented.

The Contractor shall arrange and pay for a cultural resource survey and/or records search. The Contractor has the option to contact the state Archaeological Research Center (ARC) at 605-394-1936 or another qualified archaeologist, to obtain either a records search or a cultural resources survey. A record search might be sufficient for review; however, a cultural resources survey may need to be conducted by a qualified archaeologist.

The Contractor shall provide ARC with the following: a topographical map or aerial view on which the site is clearly outlined, site dimensions, project number, and PCN. If applicable, provide evidence that the site has been previously disturbed by farming, mining, or construction activities with a landowner statement that artifacts have not been found on the site.

The Contractor shall submit the records search or cultural resources survey report and if the location of the site is within the current geographical or historic boundaries of any South Dakota reservation to SDDOT Environmental Engineer, 700 East Broadway Avenue, Pierre, SD 57501-2586 (605-773-3180). SDDOT will submit the information to the appropriate SHPO/THPO. Allow **30 Days** from the date this information is submitted to the Environmental Engineer for SHPO/THPO review.

If evidence for cultural resources is uncovered during project construction activities, then such activities shall cease and the Project Engineer shall be immediately notified. The Project Engineer will contact the SDDOT Environmental Engineer in order to determine an appropriate course of action.

SHPO/THPO review does not relieve the Contractor of the responsibility for obtaining any additional permits and clearances for staging areas, borrow sites, waste disposal sites, or material processing sites that affect wetlands, threatened and endangered species, or waterways. The Contractor shall provide the required permits and clearances to the Project Engineer at the preconstruction meeting.

REGISTERED PROFESSIONAL ENGINEER
REG. NO. 8328
JODY W. PAGE
SOUTH DAKOTA
27 MAR 14

COMMITMENT L: CONTAMINATED MATERIAL

Contaminated soil and/or known gas stations, undergrounds storage tanks, etc. are located within the project limits. Petroleum contaminated soil may be located at the following sites:

Description	Material	Status	Station	L / R
Abandoned Tank Project – Lead City Hall, 801 West Main Street (Hwy 85 & Alert)	Clean	Closed	16+00	R
ATP – Lead City Hall, 801 West Main	Diesel	No Further Action	16+00	R
Former Terra Industries, 322 West Main	Petroleum	No Further Action	28+80	L
Transformer Fire – Black Hills Power, Behind West Main	PCB Oil	Closed	30+55	L

Action Taken/Required:

The Contractor shall give written notice, with a copy to the Area Engineer and the Department of Environment and Natural Resources (DENR), 30 days prior to the start of work. In addition, the Contractor shall give written notice to the Engineer 7 days prior to the commencement of the work so the Engineer may notify DENR of the day work will start.

The Contractor shall give notice to the Engineer when contaminated soil is encountered on the project. The Engineer will contact the SDDOT Environmental Engineer, at 605-773-3180, so that contact with the Department of Environment and Natural Resources (DENR) and consultant to inspect and monitor removal of any contaminated soil can be initiated.

The Contractor shall be responsible for having the existing underground utilities located in the construction area. Underground utilities damaged by the Contractor due to negligence shall be repaired at the Contractor's expense.

Petroleum contaminated soil may be disposed of at the Rapid City Landfill (phone 605-355-3496). Measurement of "Contaminated Material Excavation" shall be in accordance with Section 120.4 of the Standard Specifications. All costs for excavating and transporting the contaminated materials to the disposal site and all fees charged per cubic yard by the disposal site shall be incidental to the contract unit price per cubic yard for "Contaminated Material Excavation".

The estimated quantity of "Contaminated Material Excavation" is 100 cubic yards. The quantity of "Contaminated Material Excavation" may vary from the plans. No adjustment will be made to the contract unit price for variations in the quantity of "Contaminated Material Excavation". The estimated quantity of "Contaminated Material Excavation" is provided in Section B – Grading plans.

COMMITMENT M1: SECTION 4(f) PROPERTY

A Section 4(f) Evaluation has concluded that no feasible and prudent alternative to the use of Section 4(f) land occurs with the project.

Approximate Station	Section 4(f) Property
13+29L to 13+64L	Stone Retaining Wall N4
13+68L to 13+78L	Stone Retaining Wall N5
19+09L to 19+31L	Stone Retaining Wall N8
19+35L to 19+47L	Stone Retaining Wall N9
20+61L to 20+75L	Stone Retaining Wall N12
20+75L to 20+97L	Stone Retaining Wall N13
21+02L to 21+21L	Stone Retaining Wall N14
21+27L to 21+43L	Stone Retaining Wall N15

Action Taken/Required:

The following measures are required to minimize harm to the above Section 4(f) property:

Walls N4 & N5 will be replaced with Concrete Type C walls with formliners and stain to look similar to existing walls.

Walls N8 & N9 will be replaced with Large Concrete Block Walls and stained.

Walls N12 & N13 will not be disturbed.

The east half of wall N14 & the longitudinal portion of wall N15 will be replaced with Type C walls and the masonry and stone walls will be reconstructed in front of the Type C walls using salvaged stone from the existing walls and the original cap stones. The walls will be rebuilt in the same general stone configuration and mortar pointing style of the original walls.

The Contractor shall notify the Project Engineer if additional easement is needed to complete the work adjacent to any Section 4(f) property. The Project Engineer shall obtain an appropriate course of action from the Environmental Office before proceeding with construction activities that affect any Section 4(f) property.

PLANS BY: HDR
RAPID CITY, SD

SECTION B ESTIMATE OF QUANTITIES

BID ITEM NUMBER	ITEM	QUANTITY	UNIT
009E0010	Mobilization	Lump Sum	LS
009E3010	Public Information	Lump Sum	LS
009E3230	Grade Staking	1.595	Mile
009E3250	Miscellaneous Staking	0.471	Mile
009E3280	Slope Staking	0.471	Mile
009E3290	Structure Staking	23	Each
009E3300	Three Man Survey Crew	100	Hour
100E0100	Clearing	Lump Sum	LS
110E0300	Remove Concrete Curb and Gutter	25	Ft
110E0400	Remove Drop Inlet	22	Each
110E0460	Remove Manhole	4	Each
110E0500	Remove Pipe Culvert	697	Ft
110E0600	Remove Fence	434	Ft
110E1010	Remove Asphalt Concrete Pavement	127.9	SqYd
110E1100	Remove Concrete Pavement	11102.2	SqYd
110E1110	Remove Concrete Approach Pavement	308.9	SqYd
110E1140	Remove Concrete Sidewalk	2970	SqYd
110E7802	Remove Fence for Reset	90	Ft
120E0010	Unclassified Excavation	3965	CuYd
120E0900	Contaminated Material Excavation	100	CuYd
250E0020	Incidental Work, Grading	Lump Sum	LS
380E3540	8" PCC Approach Pavement	411.1	SqYd
380E4050	8" PCC Fillet Section	85.3	SqYd
450E0104	12" RCP Class 4, Furnish	4	Ft
450E0110	12" RCP, Install	4	Ft
450E0123	18" RCP Class 3, Furnish	724	Ft
450E0130	18" RCP, Install	724	Ft
450E0143	24" RCP Class 3, Furnish	410	Ft
450E0150	24" RCP, Install	410	Ft
450E1400	RCP Reducer, Furnish	1	Each
450E1401	RCP Reducer, Install	1	Each
451E3458	18" Pipe Plug	1	Each
462E0100	Class M6 Concrete	101.3	CuYd
470E0020	Pipe Handrail	514	Ft
480E0100	Reinforcing Steel	19733	Lb
600E0200	Type II Field Laboratory	1	Each
620E0300	Special Right-of-Way Fence	273	Ft
620E4100	Reset Fence	90	Ft
650E0080	Type B68 Concrete Curb and Gutter	4363	Ft
650E2100	Special Concrete Curb and Gutter	498	Ft
650E4680	Type P8 Concrete Gutter	404	Ft
650E6080	8" Concrete Valley Gutter	138	Ft
651E0060	6" Concrete Sidewalk	30789	SqFt
651E5000	Sidewalk Drain	20.5	Ft
651E7000	Type 1 Detectable Warnings	430	SqFt
670E1200	Type B Frame and Gate Assembly	7	Each
670E5200	Special Frame and Grate Assembly	19	Each
671E6008	Type A8 Manhole Frame and Lid	7	Each
831E1010	Geogrid Reinforcement	2897	SqYd

ADJACENT PROPERTY

Care shall be taken by the Contractor such that private property located adjacent to construction limits is not damaged during construction operations. Damage to private property caused by the carelessness of the Contractor shall be repaired or replaced at the Contractor's expense and to the satisfaction of the Engineer.

GRADING OPERATIONS

Water for Embankment is estimated at the rate of 10 gallons of water per cubic yard of Embankment minus Waste. The estimated quantity of Water for Embankment is 9.7 MGal. No separate payment will be made for the Water for Embankment and all costs associated shall be incidental to the contract unit price per cubic yard of "Unclassified Excavation".

TYPE II FIELD LABORATORY

The lab shall be equipped with an internet connection such as DSL, cable modem, or other approved service. The internet connection shall be provided with a multi-port wireless router. The internet connection shall be a minimum speed of 512 Kb unless limited by job location and approved by the DOT. Prior to installing the wireless router the Contractor shall submit the wireless router's technical data to the Area Office to check for compatibility with the state's computer equipment. The internet connection is intended for state personnel usage only. The Contractor's personnel are prohibited from using the internet connection unless pre-approved by the Project Engineer.

The Contractor shall submit a copy of each monthly bill for calls charged to this phone at the end of each month. The Project Engineer will then audit the bills to ensure all calls are legitimate and then initiate a Construction Change Order (CCO) to reimburse the Contractor for the actual phone calls made, including local and long distance calls. Reimbursement will not be made for fees associated with the purchase, installation, disconnection, monthly line charges, and incidentals involved in the installation, maintenance, and disconnection of the phone (including attachments). These items shall be incidental to the contract unit price per each for "Type II Field Laboratory".

UTILITIES

The Contractor shall be aware that the existing utilities shown in the plans were surveyed prior to the design of this project and might have been relocated or replaced by a new utility facility prior to construction of this project, might be relocated or replaced by a new utility facility during the construction of this project, or might not require adjustment and may remain in its current location. The Contractor shall contact each utility owner and confirm the status of all existing and new utility facilities. The utility contact information is provided below.

Century Link
Attn: Keith Nelson
605-394-4720

WOW!
Attn: Tim Erickson
605-431-3632

Montana-Dakota Utilities
Attn: Toby Bordewyk
605-355-4054

Midcontinent
Attn: Terry Hofer
605-791-7123

Black Hills Power
Attn: Ken Meirose
605-390-3731

City of Lead Water
Attn: Mike Stahl
605-584-1401

City of Lead Sewer
Attn: Mike Stahl
605-584-1401

SUBSURFACE UTILITIES EXPLORATION

Subsurface utility explorations were done for this project. The findings can be found in the tables below. The tables are provided to aid the Contractor during construction. All information in the table is approximate and shall be verified by the Contractor prior to construction in those areas.
All Century Link lines/manholes/vaults running along Main street are to be abandoned/removed. Manholes and vaults shall be completely removed or abandoned. If the contractor chooses to abandon them they shall be removed to 1' below subgrade and all resultant voids filled with sand backfill. All costs shall be included in the bid item for "Incidental Work/Grading".

REGISTERED PROFESSIONAL ENGINEER
REG. NO. 8328
JODY W. PAGE
SOUTH DAKOTA
27 MAR 14

PLANS BY: HDR
RAPID CITY, SD

TRAFFIC CONTROL NOTES (Continued)

The Contractor shall take extreme care to protect and restrict all pedestrians from work areas. Safety fence shall be installed as needed along the sidewalks and around work areas that are adjacent to pedestrian traffic and at other locations as designated by the Engineer. Payment for all work and materials associated shall be incidental to contract lump sum price for "Traffic Control, Miscellaneous". Installation, maintenance, relocation and removal of cones, drums, barricade warning lights, and flags shall also be included in the lump sum price bid for "Traffic Control, Miscellaneous".

SEQUENCE OF OPERATIONS

The following sequence of operation for construction shall be followed unless an alternate plan is submitted by the Contractor and approved by the Engineer a minimum of one week prior to potential implementation.

Construction activities shall be restricted to the work area limits as detailed in the traffic control plans and described below. Work in this area consists of removals, the installation of water & sewer main, the installation of storm sewer, concrete sidewalk and fillets, curb and gutter, retaining walls, landscaping, and roadway surfacing.

GENERAL

1. The Contractor shall coordinate with the Engineer to keep all businesses and residents informed on the progression and prosecution of work in areas which have a direct effect on their access.
2. The Contractor shall take the necessary precautions to ensure temporary sidewalk access paths meet ADA sidewalk requirements during construction. All discrepancies shall be reported to the Engineer for review.
3. Owners shall have access to their driveways during construction unless the Contractor obtains written permission from both the landowner and the Engineer to make other accommodations. This may require grading and temporary gravel surfacing.
4. Owners shall have pedestrian access to their businesses during construction unless written permission is obtained and approved by the business owner and the Engineer. The Contractor shall coordinate with the Engineer prior to any sidewalk or utility replacements that will affect pedestrian access and shall minimize disruptions.
5. The Contractor will have to coordinate with the business owners in the project area and provide temporary access for delivery trucks as needed throughout construction.
6. Erosion Control measures and Inlet Protection shall be in place and approved by the Engineer after pavement removals have been completed and prior to commencement of any other activity on the site.
7. The Contractor shall perform sawing and removal operations consistent with the removal notes.
8. Street closures will be limited as shown in the traffic phasing sheets and as needed for utility installation and surfacing operations
9. Installation of water main, sewer main, and storm sewer shall be performed as detailed in the appropriate sections of the plans. The Contractor shall be responsible for coordinating all water & sewer service interruptions with the Engineer and City Water Department Staff. The connections will only be allowed after an approved plan for valve closings is in place.
10. At the end of each working day the adjacent roadway pavements and areas will be cleaned and left in a condition approved by the Engineer.
11. Additional traffic control setups details are shown in the standard plate section of Section C. Upon approval from the Engineer, these plates shall also be used as necessary by the Contractor to complete the Joint Sealing, Spall Repair, and Panel Repair operations throughout the project. Signs installed for these setups shall be paid at the contract unit price per unit for "Traffic Control".

US 85/MAIN STREET PHASE 1 – GALENA ST TO JULIUS ST

1. Install traffic control devices in accordance with the traffic control sheets for US 85/Main Street Phase 1. The roadway will be completely closed off and traffic detoured on to GALENA and JULIUS Streets. Two way traffic on side streets shall be maintained at all times.
2. Access to the City Parking Ramp and adjacent parking lot shall be maintained at all times.
3. Access to the Post Office driveway and Prospect Park Parking Lot shall be maintained through this phase except when utility & surfacing construction is taking place directly in front of these locations.
4. Remove and salvage street light poles to the City for painting.
5. Install inlet sediment control devices per plans and as needed in the locations determined by the Engineer.
6. Remove the existing pavement and curb and gutter in the project area as shown in the plan sheets.
7. Remove sewer main piping as shown in the plan sheets.
8. Install new sewer main piping as shown in the plan sheets.
9. Install hydrants & water main as shown in the plan sheets.
10. Remove storm sewer piping and inlets as shown in the plan sheets.
11. Install new storm sewer inlets and piping as shown in the plan sheets.
12. Remove and replace retaining walls as shown in the plan sheets.
13. Install conduit & street lighting.
14. Complete grading and base course placement within the work limits.
15. Install concrete curb and gutter and fillets, PCC pavement, and asphalt concrete pavement.
16. Remove and replace sidewalks adjacent to businesses as shown in the plan sheets. The sidewalk in front of Wells Fargo will need to be removed and replaced after 3 pm or on the weekend as this their only public access point.
17. Install landscaping, pavement marking, and permanent signing.
18. Remove traffic control devices and open the roadway to traffic.

REGISTERED PROFESSIONAL ENGINEER
8328
JODY W. PAGE
SOUTH DAKOTA
27 MAR 14

US 85 MAIN STREET PHASE 1A – BLUE ST TO GALENA ST.

1. The Contractor may elect to complete work in Phase 1A concurrently with either Phase 1 or Phase 2 in accordance with the special provision for contract time.
2. Install traffic control devices in accordance with the traffic control sheets for US 85/Main Street Phase 1A. The roadway will be completely closed off and traffic detoured on to BLATT and JULIUS Streets. Two way traffic on side streets shall be maintained at all times.
3. Remove and salvage street light poles to the City for painting.
4. Install inlet sediment control devices per plans and as needed in the locations determined by the Engineer.
5. Remove the existing asphalt pavement and curb and gutter in the project area as shown in the plan sheets.
6. Remove sewer main piping as shown in the plan sheets.
7. Install new sewer main piping as shown in the plan sheets.
8. Install hydrants & water main as shown in the plan sheets.
9. Remove storm sewer piping and inlets as shown in the plan sheets.
10. Install new storm sewer inlets and piping as shown in the plan sheets.
11. Complete grading and base course placement within the work limits.
12. Install concrete curb and gutter and fillets, PCC pavement, and asphalt concrete pavement.
13. Install conduit & street lighting.
14. Remove and replace sidewalks and retaining walls adjacent to businesses as shown in the plan sheets.
15. Install landscaping, pavement marking, and permanent signing.
16. Remove traffic control devices and open the roadway to traffic.

US 85/MAIN STREET PHASE 2 – BLATT ST TO BLUE ST

1. Install traffic control devices in accordance with the traffic control sheets for US 85/Main Street Phase 2. The roadway will be completely closed off and traffic detoured around to BLATT, JULIUS, and GALENA Streets. Two way traffic on side streets shall be maintained whenever possible.
2. Remove and salvage street light poles to the City for painting.
3. Install inlet sediment control devices per plans and as needed in the locations determined by the Engineer.
4. Remove the existing pavement and curb and gutter in the project area as shown in the plan sheets.
5. Remove sewer main piping as shown in the plan sheets.
6. Install new sewer main piping as shown in the plan sheets.
7. Install hydrants & water main as shown in the plan sheets.
8. Remove storm sewer piping and inlets as shown in the plan sheets.
9. Install new storm sewer inlets and piping as shown in the plan sheets.
10. Remove and replace retaining walls as shown in the plan sheets.
11. Install conduit & street lighting.
12. Complete grading and base course placement within the work limits.
13. Install concrete curb and gutter and fillets, PCC pavement, and asphalt concrete pavement.

PLANS BY: HDR RAPID CITY, SD

ARCHITECTURAL SURFACE FINISH AND ARCHITECTURALSURFACE FINISH TEST PANEL (Continued)

B. Architectural Surface Finish: The surfaces to receive architectural surface finish shall be prepared by water blasting or other means as per the manufacturer's recommendations to break the surface film and to remove all laitance detrimental to the color staining system performance. The surface preparation shall not expose the coarse aggregate. The concrete to receive the architectural surface finish shall be allowed to cure for a minimum of 28 days, or as per the manufacturer's recommendations, whichever is more stringent, prior to application of the surface coloring.

The surface coloring shall be performed using approved stains applied in a manner to provide an aesthetically pleasing surface. Rock formed concrete surfaces shall be stained with the stains listed in the table of Retaining Walls.

Stain shall be designed for concrete and masonry surfaces. Acceptable products shall allow moisture and vapor transmission, be formulated for exterior application with resistance to freeze/thaw, moisture, alkali, acid, mildew, mold, fungus, discoloration, degradation, and shall meet weathering requirements of 1000 hours when subjected to the accelerated weathering test ASTM G155.

Subject to compliance with requirements stated above, provide colored concrete finishing products from one of the following manufacturers:

1. Kemiko Stone Tone Concrete Stain. www.kemiko.com

2. Other manufacturers approved by the Engineer.

All concrete finishing products shall be obtained from a single source. All materials shall be stored, prepared, applied, and cured according to product manufacturer directions, with special attention given to recommended temperature range.

The architectural surface finish shall be completed by or under the direct supervision of the manufacturer or the manufacturer's authorized representative. The installer shall be trained in the manufacturer's special techniques in order to achieve realistic surfaces.

Concrete finisher must have five years experience finishing simulated stone masonry textured concrete.

Coordination and sequencing shall be done so other project operations do not interfere with the application and cure of the architectural surface finish or damage the finished product. Where color finishing operations are adjacent to exposed soil, pavement, sidewalks, etc., the Contractor shall provide temporary covering protection from overspray and splatter.

REGISTERED PROFESSIONAL ENGINEER
8328
JODY W. PAGE
SOUTH DAKOTA
27 MAR 14

C. Test Panel: The architectural surface finisher shall demonstrate their workmanship by completely finishing an architectural surface finish test panel using approved concrete stain products, materials, methods and workmanship including, but not limited to, concrete mix, forming system, form release agents, joint sealing, vibrating and form stripping practices. The test panel shall be unreinforced, vertically cast and of concrete construction to determine the surface texture resulting from the use of form liner products. The minimum size of concrete test panel shall be 8 inch thick, 6 foot wide and 6 foot high. The test panel shall include one form liner joint to verify that joints will not be visible after casting.

The finished effect shall closely duplicate the appearance of natural stone indigenous to the project area. An unsatisfactory test panel shall be replaced or may be blasted to completely remove the finish coating and refinished to produce a satisfactory panel. Final color selections will be based upon completion of the test panel.

D. Submittals: The Contractor shall submit the following to the Engineer for approval a minimum of 30 calendar days prior to pouring the test panel.

1. Product data including manufacturer's technical information, label analysis, and application instructions for each material proposed for use.
2. Laboratory test reports showing that materials meet physical or performance property requirements proposed for use.
3. Shop drawings indicating form liner layout and termination details. Indicate backup, rustication, reveal, and chamfer strip locations. Include jointing, form tie location, pattern placement, pattern match details, and end, edge and other special conditions. Indicate tolerances and procedure of installation and separation.
4. Qualifications of the architectural surface finisher including a list of completed projects with project name and location and architect/engineer/owner of record, including phone number.

METHOD OF MEASUREMENT

A. Architectural Surface Finish: Architectural surface finish will be measured to the nearest square foot.

B. Architectural Surface Finish Test Panel: Measurement of the test panel will be per each.

BASIS OF PAYMENT

A. Architectural Surface Finish: Architectural surface finish will be paid for at the contract unit price per square foot. Payment will be full compensation for furnishing and placing form liners, labor, equipment, materials, and all incidentals necessary to finish the concrete surface including surface preparation, grouting, and the color coating application procedure.

B. Architectural Surface Finish Test Panel: Payment for the Test Panel will be made for each panel furnished and installed. Payment will be full compensation for furnishing and placing forms and form liners, concrete, labor, equipment, materials, and all incidentals to color the concrete surface including surface preparation, grouting, and the multiple color coating application procedure. Payment will also include removal and disposal of the test panel after project completion.

STONE AND MASONRY RETAINING WALLS

Walls N14 and N15 on Parcel A6 shall be replaced with Type C retaining walls set back 2' behind the existing walls. The existing masonry and stone walls shall be reconstructed in front of the Type C wall on top of the sidewalk slab. The Contractor shall salvage the existing stones and reinstall in the same general stone configuration and mortar point style of the original walls. If additional stone is required to complete the walls, the Contractor shall submit a rock sample to the Engineer for approval. The existing cap stones shall be salvaged and reset. The contractor shall submit their plan for reconstructing these walls to the Engineer for approval prior to removing the existing walls. All items necessary to install the masonry and stone walls shall be incidental to the unit price per square foot for "Reconstruct Stone and Masonry Retaining Walls".

GRAVITY LARGE CONCRETE BLOCK RETAINING WALLS

Walls N8, N9, and S1003 shall be installed per the details shown on the plan sheets and shall be stained with the color listed in the Table of Retaining Walls. All costs associated with the staining of these walls shall be incidental to the unit price per square foot for "Gravity Large Concrete Block Wall".

SLIP RESISTANT COATING FOR CONCRETE STAIRWAY

Curing compounds shall not be utilized on concrete stairway treads during the concrete curing process. Curing shall be accomplished with a double layer of burlap mats and polyethylene sheeting.

The Contractor shall apply a 2" wide slip resistant coating at the front of each stairway tread for the full width of the tread.

The slip resistant coating shall be a brick red color. The coating shall be a single component epoxy and have a minimum coefficient of friction value of 0.9 for dry and 0.9 for wet as determined by ASTM F 609.

The slip resistant coating shall be applied in accordance with the manufacturer's recommendations.

All cost for furnishing and applying the slip resistant epoxy coating including equipment, labor, and materials shall be incidental to various contract items.

GENERAL NOTES:

1. All concrete shall be Class M6 in accordance with Section 462.
2. All reinforcing steel shall be epoxy coated and shall conform to ASTM A615, Grade 60. Epoxy coating shall conform to AASHTO M284.
3. Use 2 inch clear cover on all reinforcing steel except as shown.
4. All concrete shall be thoroughly tamped and spaded against forms to leave a smooth surface without honeycomb. Finish of step treads to be steel troweled and then brush finished with brush strokes on treads at right angles to width. All exposed edges shall be chamfered 3/4 inch except as shown.
5. Place concrete on undisturbed soil. If backfilling is necessary, compact with mechanical tampers to the satisfaction of the Engineer.
6. The concrete sidewalk shall be constructed in accordance with Section 651.
7. Cost of the double thickness of ½ inch Preformed Expansion Joint Filler shall be incidental to the contract unit price per cubic yard for "Class M6 Concrete".

SPECIAL NOTE:

Details for construction of the concrete stairway and handrails shown on sheet 2 of 2 are typical only, and are not intended to depict specific installations. Adjust the length of the stairway as required to fit specific site requirements. Use the formulas given on this sheet to adjust the unit price bid quantities to the required length of the stairway. Refer to project plans for requirements of individual locations. Alternate design details may be submitted through proper channels to the Office of Bridge Design for approval, including aluminum handrail installation.

REINFORCING SCHEDULE

Mk.	△No.	Size	△ Length	Type
b1	★	4	2h + 5	Str.
b2	6	4	h + 1.67	17A
b3	⌖	4	h + 4.67	17A
e	7	4	5' - 8"	S12
g1	7	4	1.12w + 2.0	19B
g2	2	4	1.12w + 3.7	19B
p	2w + 7	4	6' - 2"	Str.

Bending Details

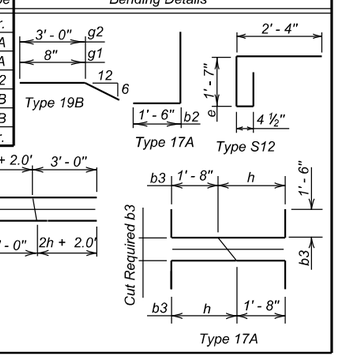

★2 bars for h = 0 - 2.0'
3 bars for h = 2.1' - 3.5'
4 bars for h = 3.6' - 5.0'

⌖2.67h - 3.33

ESTIMATED QUANTITIES

ITEM	UNIT	△QUANTITY
Class M6 Concrete	Cu. Yd.	$0.87 + 0.23w + 0.04h^2$
Structure Excavation, Miscellaneous	Cu. Yd.	$1.79 + 0.59w + 0.15h^2$
Epoxy Coated Reinforcing Steel	Lb.	⌀
Pipe Handrail	Ft.	6.22 + 2.24w
Sidewalk	Sq. Ft.	33

⌀ $72.62 + 14.97w + 1.78h^2 + 12.78h$ for h = 0 - 2.0'
$75.96 + 14.97w + 1.78h^2 + 14.12h$ for h = 2.1' - 3. 5'
$79.30 + 14.97w + 1.78h^2 + 15.46h$ for h = 3.6' - 5.0'

△ w = Number of steps NOT including landings (i. e. w = 9 in Sec. A - A).

September 6, 2013

Published Date: 1st Qtr. 2014

SDDOT

CONCRETE STAIRWAY FOR TYPE C CONCRETE RETAINING WALL

PLATE NUMBER 460.20

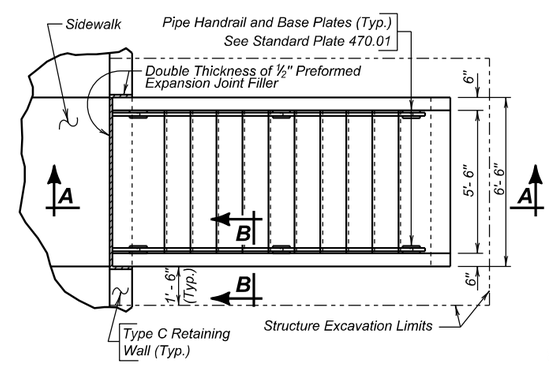

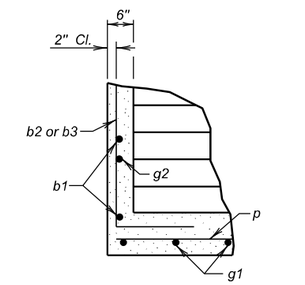

SEC. B - B

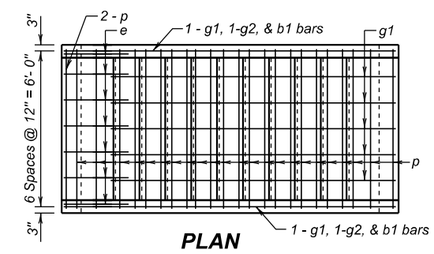

PLAN

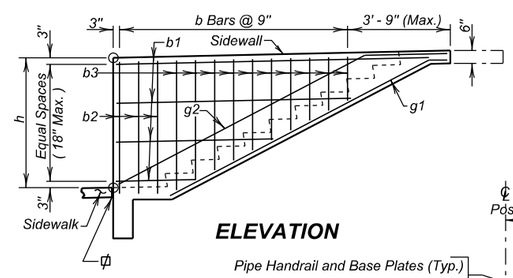

ELEVATION

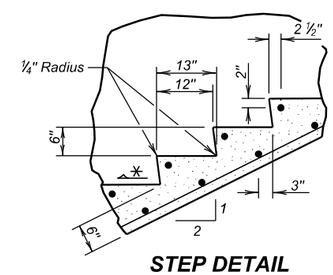

STEP DETAIL

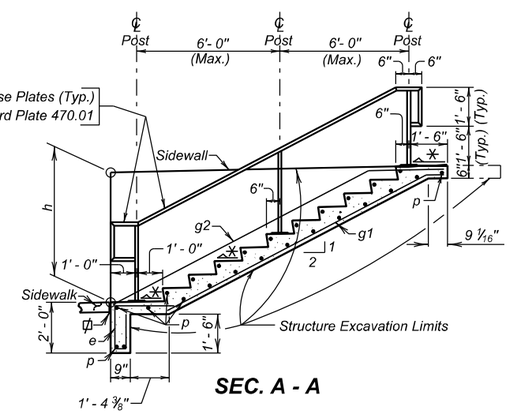

SEC. A - A

⌀ Double Thickness of ½" Preformed Expansion Joint Filler
✳ Slope ¼" per foot.

September 6, 2013

Published Date: 1st Qtr. 2014

SDDOT

CONCRETE STAIRWAY FOR TYPE C CONCRETE RETAINING WALL

PLATE NUMBER 460.20

PLANS BY: HDR RAPID CITY, SD

STATE OF SOUTH DAKOTA	PROJECT	SHEET NO.	TOTAL SHEETS
	P 0085(72)23	E35	E36

FILE: Standard Plates.dgn
PLOTTING DATE: 10/23/2013
REV DATE:
INITIAL:

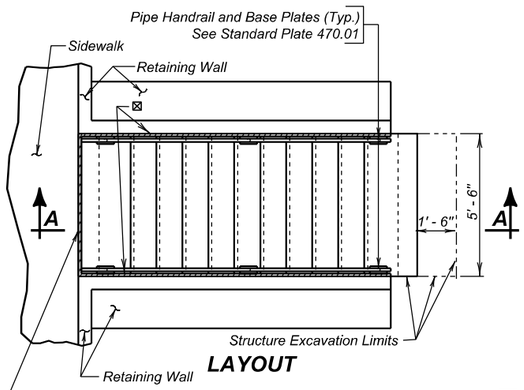

LAYOUT

✱ Slope ¼" per foot.

⊠ ½" Preformed Expansion Joint Filler or Double Thickness of ½" Preformed Expansion Joint Filler

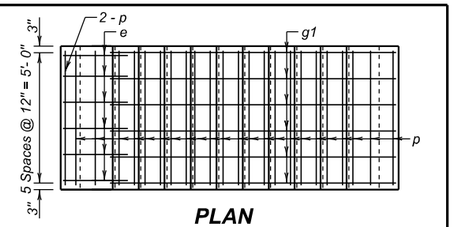

PLAN

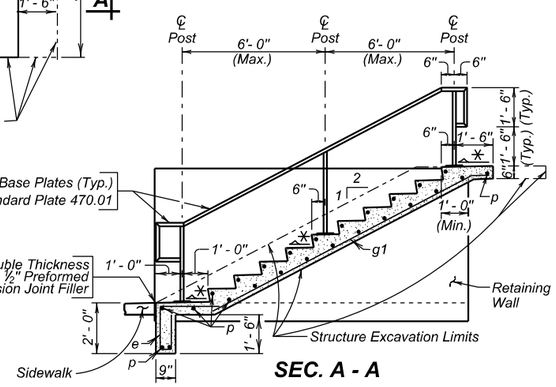

SEC. A - A

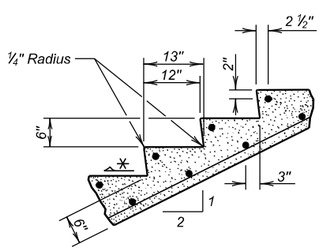

STEP DETAIL

REINFORCING SCHEDULE

MK	△No.	Size	△Length	Type
e	6	4	5' - 8"	S12
g1	6	4	1.12w + 2.0	19B
p	2w + 7	4	5' - 2"	Str.

Bending Details

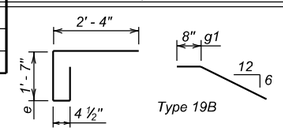

Type S12

Type 19B

ESTIMATED QUANTITIES

ITEM	UNIT	△QUANTITY
Class M6 Concrete	Cu. Yd.	0.71 + 0.17w
Structure Excavation (Misc.)	Cu. Yd.	1.02 + 0.31w
Epoxy Coated Reinforcing Steel	Lb.	54.89 + 11.39w
Pipe Handrail	Ft.	6.22 + 2.24w

△ w = Number of steps NOT including landings (i. e. w = 9 in Sec. A-A).

GENERAL NOTES:

1. All concrete shall be Class M6 in accordance with Section 462.
2. All reinforcing steel shall be epoxy coated and shall conform to ASTM A615, Grade 60. Epoxy coating shall conform to AASHTO M284.
3. Use 2 inch clear cover on all reinforcing steel except as shown.
4. All concrete shall be thoroughly tamped and spaded against forms to leave a smooth surface without honeycomb. Finish of step treads to be steel troweled and then brush finished with brush strokes on treads at right angles to width. All exposed edges shall be chamfered ¾ inch except as shown.
5. Place concrete on undisturbed soil. If backfilling is necessary, compact with mechanical tampers to the satisfaction of the Engineer.
6. The concrete sidewalk shall be constructed in accordance with Section 651.
7. Cost of the ½ inch Preformed Expansion Joint Filler shall be incidental to the contract unit price per cubic yard for "Class M6 Concrete".

⊠ 8. Use double thickness of ½ inch Preformed Expansion Joint Filler if retaining wall parallel to sidewalk is longer than 75 feet.

SPECIAL NOTE:

Details for construction of the concrete stairway and handrails shown on this sheet are typical only, and are not intended to depict specific installations. Adjust the length of the stairway as required to fit specific site requirements. Use the formulas given on this sheet to adjust the unit price bid quantities to the required length of the stairway. Refer to project plans for requirements of individual locations. Alternate design details may be submitted through proper channels to the Office of Bridge Design for approval, including aluminum handrail installation.

September 6, 2013

Published Date: 1st Qtr. 2014	SDDOT	CONCRETE STAIRWAY IN RETAINING WALL	PLATE NUMBER 460.30	Sheet 1 of 1

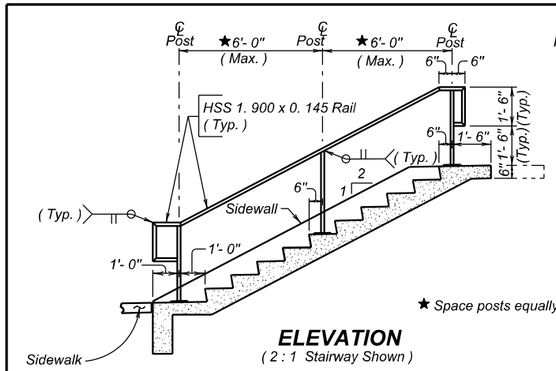

ELEVATION

(2 : 1 Stairway Shown)

★ Space posts equally.

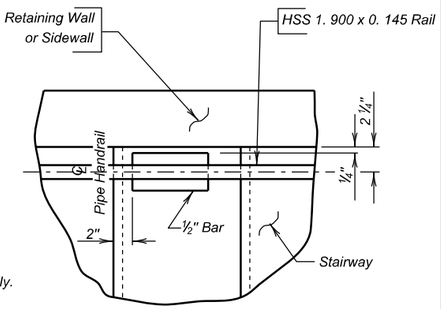

VIEW F - F

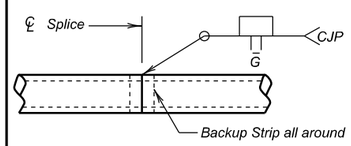

RAIL SPLICE DETAILS

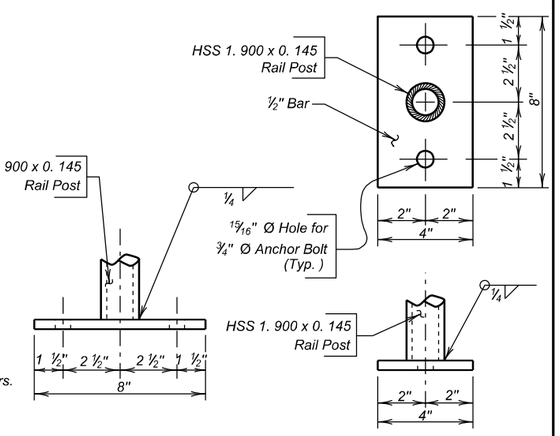

BASE PLATE DETAILS

GENERAL NOTES:

1. All rail posts shall be built vertical.
2. Steel pipe for railing and posts shall conform to ASTM A500, Grade B. Railpost base plates shall conform to ASTM A709, Grade 36.
3. Anchor Bolts and nuts shall conform to ASTM A307. Washers shall be in accordance with ASTM F436. Hardware shall be galvanized in accordance with ASTM A153. Bolts shall be hex head Structural type with heavy hex lock nuts and round washers.
4. All anchor bolts shall be tightened to a Torque of 120 ft-lbs (approximated without the use of a calibrated torque wrench).
5. Painting of steel railing shall be done in accordance with Section 411 of the Standard Specifications. The finish color shall be Federal Standard 595B, color 27038 (semi-gloss black) unless stated otherwise in the plans.
6. Welding and weld inspection shall be done in accordance with AWS D1. 1-(Current Year) Structural Welding Code - Steel.
7. The cost of structural steel, anchor bolts, painting, galvanizing, fabrication and installation of the Pipe Handrail shall be incidental to welding, weld inspection and that which is incidental to the the contract unit price per foot for "Pipe Handrail".
8. Alternate rail designs, including aluminum rail, may be submitted through proper channels to the Office of Bridge Design for approval.

SHOP PLANS

The fabricator shall initially submit 2 copies of the shop plans to the Office of Bridge Design for review. One reviewed copy will be sent back to the fabricator who will then make changes, if any, and then send the Office of Bridge Design 7 final approved copies for distribution. Include design and check design, if applicable, with initial submittal.

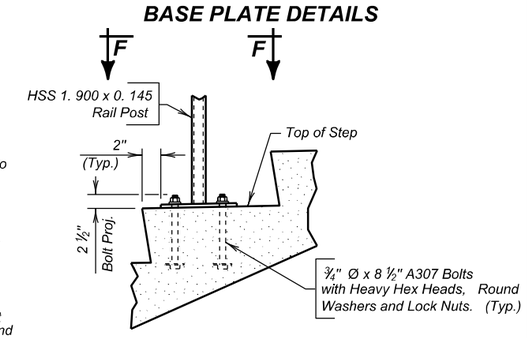

ANCHOR BOLT DETAIL

December 23, 2012

Published Date: 4th Qtr. 2013	SDDOT	STAIRWAY HANDRAIL	PLATE NUMBER 470.01	Sheet 1 of 1

PLANS BY: HDR RAPID CITY, SD

STATE OF SOUTH DAKOTA	PROJECT	SHEET NO.	TOTAL SHEETS
	P 0085(72)23	E36	E36

FILE: Standard Plates.dgn
PLOTTING DATE: 10/23/2013

REV DATE:
INITIAL:

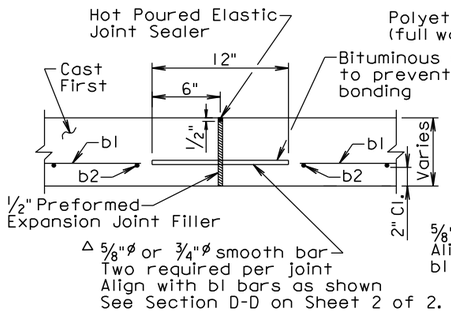

ELEVATION VIEW
EXPANSION JOINT FOR FOOTING

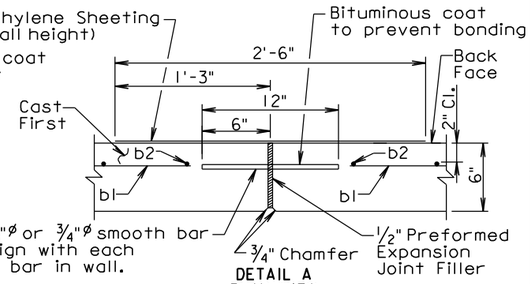

DETAIL A
PLAN VIEW
EXPANSION JOINT FOR WALL

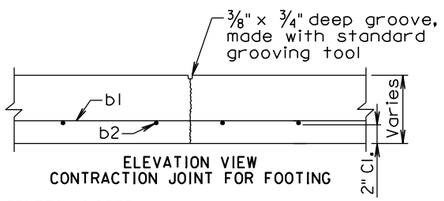

ELEVATION VIEW
CONTRACTION JOINT FOR FOOTING

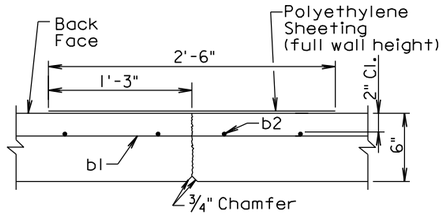

PLAN VIEW
CONTRACTION JOINT FOR WALL

GENERAL NOTES:

The Type C Concrete Retaining Wall shall be placed adjacent to pavement or curb and gutter as shown in Section D-D on sheet 2 of 2.

* The sidewalk width of the Type C Concrete Retaining Wall shall not be wider than 8 feet or narrower than 5 feet. See plans for specified width.

In the areas where the retaining wall footing is to be placed, a 2 inch thickness of cushion material shall be placed and compacted. The cushion material shall conform to Section 651.2 C. of the Standard Specifications.

All concrete shall be Class M6 and conform to Section 462 of the Standard Specifications.

All reinforcing steel shall be epoxy coated and shall conform to ASTM A615, Grade 60. The epoxy coating shall conform to AASHTO M284.

For variable height walls, the top b1 bar shall be placed parallel to the top of the wall.

The b1 bars shall be lapped a minimum of 12 inches.

A 3/4 inch chamfer shall be provided on all exposed retaining wall edges.

Use Detail B on sheet 2 of 2 for constructing corners in the retaining wall.

The maximum expansion joint spacing shall be 90 feet and the maximum contraction joint spacing shall be 30 feet. The contraction and expansion joints shall be placed to match pavement or curb joints where possible.

The exposed retaining wall surfaces shall receive a finish in accordance with 460.3 M. of the Standard Specifications. The exposed surface of the retaining wall footing, when used as a sidewalk, shall receive a broom finish.

The Type C Concrete Retaining Wall shall be measured to the nearest square foot of front face area.

All costs for excavation, furnishing and placing backfill and cushion material, labor, equipment, preformed expansion joint filler, all reinforcing steel including the smooth bars, and all concrete except in the areas of PCC driveway and approach pavement, shall be incidental to the contract unit price per square foot for "Type C Concrete Retaining Wall".

The concrete used for the retaining wall footing that extends into the approach and/or driveway pavement shall be paid for at the contract unit price per square yard for the corresponding "PCC Approach Pavement" and/or "PCC Driveway Pavement" bid items.

September 6, 2013

Published Date: 4th Qtr. 2013	SDDOT	TYPE C CONCRETE RETAINING WALL	PLATE NUMBER 530.01
			Sheet 1 of 2

Use No. 4 bars for all reinforcing steel unless specified otherwise.

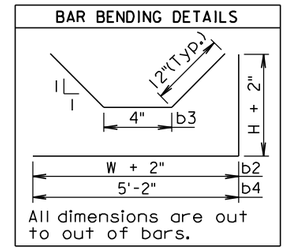

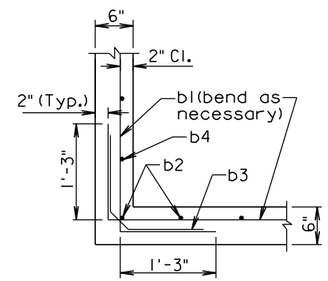

DETAIL B
PLAN VIEW OF WALL CORNER DETAIL

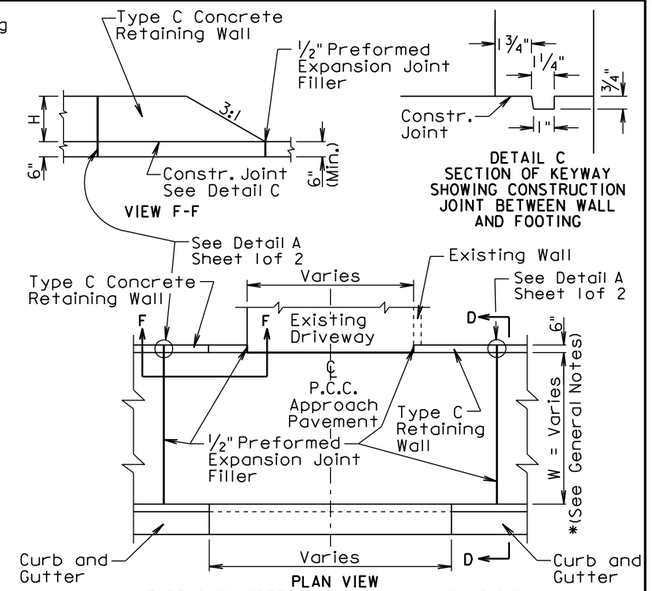

DETAIL C
SECTION OF KEYWAY SHOWING CONSTRUCTION JOINT BETWEEN WALL AND FOOTING

PLAN VIEW
TYPE C CONCRETE RETAINING WALL ON P.C.C. APPROACH PAVEMENT

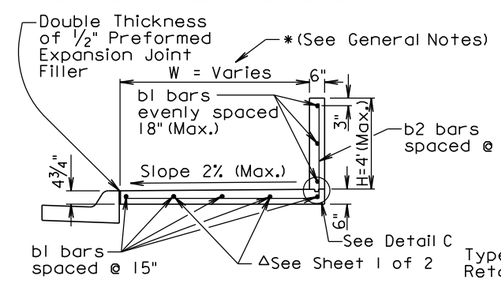

SECTION D-D

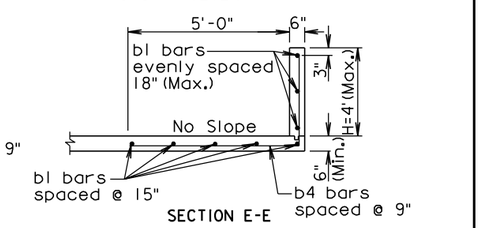

SECTION E-E

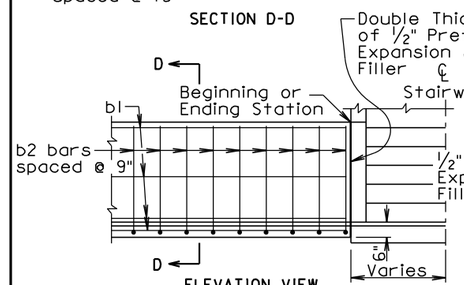

ELEVATION VIEW
TYPE C CONCRETE RETAINING WALL ADJACENT TO CURB & GUTTER AND STAIRWAY
(Curb and Gutter not shown)

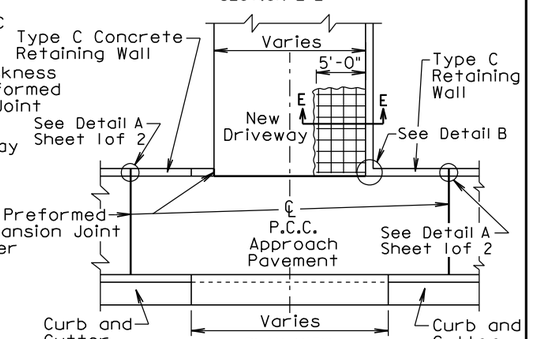

PLAN VIEW
TYPE C CONCRETE RETAINING WALL ON P.C.C. DRIVEWAY AND APPROACH PAVEMENT

September 6, 2013

Published Date: 4th Qtr. 2013	SDDOT	TYPE C CONCRETE RETAINING WALL	PLATE NUMBER 530.01
			Sheet 2 of 2

PLANS BY: HDR RAPID CITY, SD

SECTION F- ESTIMATE OF QUANTITIES

BID ITEM NUMBER	ITEM	QUANTITY	UNIT
120E6200	Water for Granular Material	132.1	MGal
260E2060	Gravel Cushion, Modified	3691.4	Ton
260E0010	Subbase	8440.0	Ton
320E1200	Asphalt Concrete Composite	49.2	Ton
380E0050	8" Nonreinforced PCC Pavement	8723.9	SqYd
380E5010	Fast Track Concrete	300.0	SqYd
380E5030	Nonreinforced PCC Pavement Repair	138.0	SqYd
380E6000	Dowel Bar	6534	Each
380E6110	Insert Steel Bar in PCC Pavement	224	Each
380E6302	Reseal PCC Pavement Joint - Hot Pour	2416	Ft
390E0200	Repair Type A Spall	41.0	SqFt

SURFACING NOTES

8" NONREINFORCED PCC PAVEMENT

The fine aggregate may require screening as determined by the Engineer.

Fine aggregate shall conform to Section 800.2.D Alkali Silica Reactivity (ASR) Requirements of the Standard Specifications.

The concrete used shall conform to Section 380 and shall contain a minimum of 600 lbs of cement and fly ash at 20%. The concrete shall contain at least 55% coarse aggregate. The use of a water reducer at manufacturer's recommendations will be required. The concrete must obtain a minimum of 4,000 psi at 28 days. The contractor is responsible for the mix design used. The contractor shall submit a mix design for approval at least two weeks before use.

In lieu of an automatic subgrader operating from a preset line, a motor grader or other suitable equipment may be used to bring the Gravel Cushion, Modified to final grade prior to placement of concrete.

A minimum of 5 pavement blockouts may be required at various locations on this project to facilitate traffic during the paving activity.

The surface of the mainline paving shall be tined to within 2 or 3 feet of the face of the curb. A self-propelled mechanical tiner will not be required.

Automatic dowel bar inserters will not be allowed on this project.

A construction joint will be sawed whenever new concrete pavement is placed adjacent to existing concrete pavement.

The transverse contraction joints shall be perpendicular to the centerline as detailed in the standard plates 380.01 and 380.08. In multilane areas the transverse contraction joints shall be perpendicular to the centerline and be in a straight line across the width of the pavement. In special situations the Engineer may pre-approve transverse contraction joints that do not meet these requirements. All nonconforming transverse contraction joints that are not pre-approved shall be removed at the Contractor's expense. Any method of placement that cannot produce these requirements shall not be allowed to continue.

In addition to traditional field inspection of reinforcement, a Ground Penetrating Radar (GPR) unit may be used to verify reinforcement locations in the hardened concrete. The GPR may be used anytime prior to the Acceptance of Field Work being issued. All costs related to corrective measures, including but not limited to concrete removal or cutting of reinforcement, price deducts, and delays to the project schedule shall be the responsibility of the Contractor.

The surface of the mainline paving shall be transversely tined. All other areas shall be tined as directed by the Engineer.

The PCC Pavement within the grading limits shall meet the requirements of the special provision for PCCP Smoothness. The pavement repair areas will not be required to meet the special provision but will be checked with a 10' straight edge.

TABLE FOR 8" NONREINFORCED PCC PAVEMENT

Station to	Station	L/R	Quantity (SqYd)	Gravel Cushion, Modified (Ton)
12+27	14+65	L/R	677.2	190.5
14+65	16+05	L/R	472.6	132.9
16+05	19+05	L/R	1115.3	313.7
19+05	23+65	L/R	1702.5	478.8
23+65	26+05	L/R	747	210.1
26+05	28+40	L/R	757.9	213.2
28+40	33+35	L/R	1708.3	480.4
33+35	38+02	L/R	1543.1	434.0
		Totals:	8723.9	2453.6

REGISTERED PROFESSIONAL ENGINEER
REG. NO. 8328
JODY W. PAGE
SOUTH DAKOTA
27MAR14

PLANS BY: HDR RAPID CITY, SD