Department of Transportation

Office of Project Development

700 E Broadway Avenue
Pierre, South Dakota 57501-2586 605/773-3268
FAX: 605/773-2614

April 1, 2016

ADDENDUM NO. 1

RE: Item #11, April 6, 2016 Letting - NH 0016(88)0, NH 0079(76)58, NH 0212(185)13, PCN 05ML, 05MM, 05MN, Butte, Custer County - Asphalt Concrete Shoulder Repair

TO WHOM IT MAY CONCERN:

The following addenda to the plans shall be inserted and made a part of your proposal for the referenced project.

SPECIAL PROVISIONS: NO CHANGE

BID ITEM FILE: *Bidders must log in to retrieve the addendum bid item file that must be loaded into the SDEBS to incorporate the revisions listed here.*

Bid Items were added:

Bid Item 110E6000 “Remove 3 Cable Guardrail for Reset”
Bid Item 110E6200 “Remove Double Thrie Beam Guardrail for Reset”
Bid Item 110E6230 “Remove W Beam Guardrail for Reset”
Bid Item 110E6240 “Remove W Beam to Thrie Beam Guardrail Transition for Reset”
Bid Item 110E6260 “Remove W Beam Guardrail Breakaway Cable Terminal for Reset”
Bid Item 110E6280 “Remove W Beam Guardrail Tangent End Terminal for Reset”
Bid Item 629E0200 “Reset 3 Cable Guardrail”
Bid Item 630E2110 “Beam Guardrail Post and Block”
Bid Item 630E5130 “Reset Double Thrie Beam Rail”
Bid Item 630E5160 “Reset W Beam Rail”
Bid Item 630E5180 “Reset W Beam Guardrail Breakaway Cable Terminal”
Bid Item 630E5190 “Reset W Beam to Thrie Beam Guardrail Transition”
Bid Item 630E5208 “Reset W Beam Guardrail Tangent End Terminal”

Quantities for Bid Items were changed:

Alternate A for PCN 05MN
Bid Item 320E0004 “PG 58-28 Asphalt Binder” changed from 82.0 to 71.4 Ton
Bid Item 320E1070 “Class HR Asphalt Concrete” changed from 2,047.6 to 1,783.4 Ton

Alternate B for PCN 05MN
Bid Item 320E0004 “PG 58-28 Asphalt Binder” changed from 76.0 to 66.2 Ton
Bid Item 320E1070 “Class HR Asphalt Concrete” changed from 2,102.2 to 1,831.0 Ton

Bid Item 120E0010 “Unclassified Excavation” changed from 3,055 to 2,885 CuYd
Bid Item 120E0100 “Unclassified Excavation, Digouts” changed from 323 to 318 CuYd
Bid Item 120E6200 “Water for Granular Material” changed from 149.7 to 147.5 MGal
Bid Item 210E2000 “Shoulder Shaping” changed from 25.8 to 25.4 Mile
Bid Item 260E1010 “Base Course” changed from 645.9 to 636.1 Ton
Bid Item 260E6000 “Granular Material, Furnish” changed from 1,609.2 to 667.6 Ton
Bid Item 270E0200 “Blend, Haul, and Stockpile Granular Material” changed from 3,218.4 to 1,335.2 Ton
Bid Item 320E5010 “Saw and Seal Shoulder Joint’ changed from 136,372 to 134,302 Ft
Bid Item 330E0010 “MC-70 Asphalt for Prime” changed from 161.2 to 158.6 Ton
Bid Item 330E0210 “SS-1h or CSS-1h Asphalt for Flush Seal” changed from 30.3 to 29.9 Ton
Bid Item 332E0010 “Cold Milling Asphalt Concrete” changed from 107,630 to 105,974 SqYd

PLANS: Please destroy sheets 1, 2, 5, 7, 8, and 12 and replace with the enclosed sheets, dated 3/30/16.

Sheet 1: Revised starting MRM for PCN 05MN from 13.82 + 0.047 to MRM 14.00 + 0.097

Sheet 2: **Bid Items were added for PCN 05MN:**
Bid Item 110E6230 “Remove W Beam Guardrail for Reset”
Bid Item 110E6240 “Remove W Beam to Thrie Beam Guardrail Transition for Reset”
Bid Item 110E6260 “Remove W Beam Guardrail Breakaway Cable Terminal for Reset”
Bid Item 110E6280 “Remove W Beam Guardrail Tangent End Terminal for Reset”
Bid Item 110E6000 “Remove 3 Cable Guardrail for Reset”
Bid Item 110E6200 “Remove Double Thrie Beam Guardrail for Reset”
Bid Item 630E5160 “Reset W Beam Rail”
Bid Item 630E5180 “Reset W Beam Guardrail Breakaway Cable Terminal”
Bid Item 630E5190 “Reset W Beam to Thrie Beam Guardrail Transition”
Bid Item 630E5208 “Reset W Beam Guardrail Tangent End Terminal”
Bid Item 629E0200 “Reset 3 Cable Guardrail”
Bid Item 630E5130 “Reset Double Thrie Beam Rail”
Bid Item 630E2110 “Beam Guardrail Post and Block”

Quantities for Bid Items were changed for PCN 05MN:
Alternate A
Bid Item 320E0004 “PG 58-28 Asphalt Binder” changed from 82.0 to 71.4 Ton
Bid Item 320E1070 “Class HR Asphalt Concrete” changed from 2,047.6 to 1,783.4 Ton

Alternate B

Bid Item 320E0004 “PG 58-28 Asphalt Binder” changed from 76.0 to 66.2 Ton

Bid Item 320E1070 “Class HR Asphalt Concrete” changed from 2,102.2 to 1,831.0 Ton

Bid Item 120E0010 “Unclassified Excavation” changed from 368 to 198 CuYd

Bid Item 120E0100 “Unclassified Excavation, Digouts” changed from 38 to 33 CuYd

Bid Item 120E6200 “Water for Granular Material” changed from 17.6 to 15.4 MGal

Bid Item 210E2000 “Shoulder Shaping” changed from 3.000 to 2.600 Mile

Bid Item 260E1010 “Base Course” changed from 76.0 to 66.2 Ton

Bid Item 260E6000 “Granular Material, Furnish” changed from 1,609.2 to 667.6 Ton

Bid Item 270E0200 “Blend, Haul, and Stockpile Granular Material” changed from 3,218.4 to 1,335.2 Ton

Bid Item 320E5010 “Saw and Seal Shoulder Joint’ changed from 16,041 to 13,971 Ft

Bid Item 330E0010 “MC-70 Asphalt for Prime” changed from 19.2 to 16.6 Ton

Bid Item 330E0210 “SS-1h or CSS-1h Asphalt for Flush Seal” changed from 3.6 to 3.2 Ton

Bid Item 332E0010 “Cold Milling Asphalt Concrete” changed from 12,833 to 11,177 SqYd

Sheet 5: COLD MILLING ASPHALT CONCRETE; GRANULAR MATERIAL, FURNISH; BLEND, HAUL,& STOCKPILE GRANULAR MATERIAL; AND CLASS HR ASPHALT CONCRETE notes were revised.

Sheet 7: RATES OF MATERIALS, SURFACING table for PCN 05MN was revised.

Sheet 8: TABLE OF MATERIAL QUANTITIES for PCN 05MN was revised.

TABLE OF GUARDRAIL – PCN 05MN – HIGHWAY US 212 was added.

Sheet 12: The beginning MRM for the Typical Section for PCN 05MN was revised.

Sincerely,

Sam Weisgram
Engineering Supervisor

SW/cj

CC: Todd Seaman, Rapid City Region Engineer
Rich Zacher, Custer Area Engineer

STATE OF SOUTH DAKOTA	PROJECT	SHEET	TOTAL SHEETS
	NH 0016(88)0, NH0212(185)13, & NH 0079(76)58	1	17

Plotting Date: 03/30/2016
Revise Date: - -
Initials:

Revised 3/30/2016 GDS

STATE OF SOUTH DAKOTA
DEPARTMENT OF TRANSPORTATION
PLANS FOR PROPOSED

PROJECT NO. NH 0016(88)0, NH 0212(185)13, & NH 0079(76)58
US HIGHWAYS 16, & 212, & SD HIGHWAY 79
CUSTER & BUTTE COUNTIES

ASPHALT CONCRETE SHOULDER REPAIR

PCN 05ML, 05MN, & 05MM

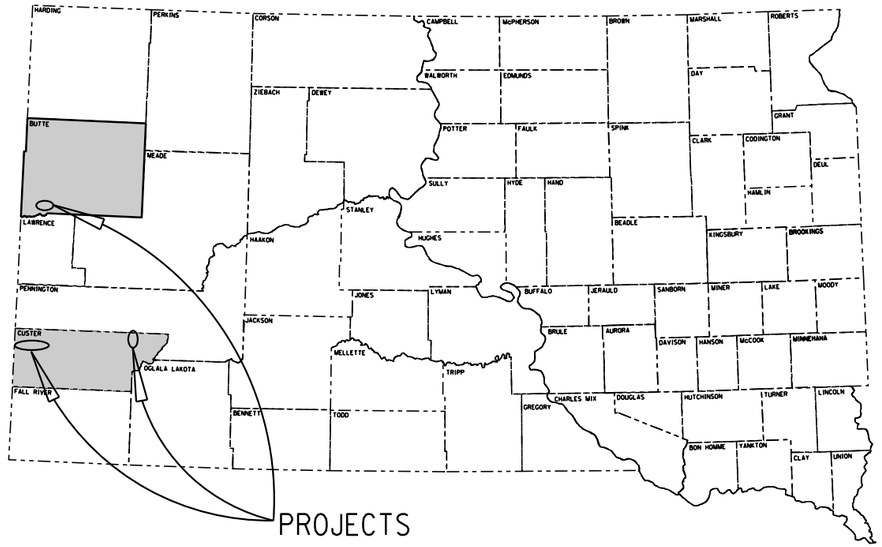

INDEX OF SHEETS

Sheet	1	Title and Index
Sheets	2- 9	Plan Estimate, Notes, and Tables
Sheets	10-12	Typical Sections
Sheets	13-17	Standard Plates

BEGIN PROJECT
NH 016(88)0
MRM 0.00 +0.000

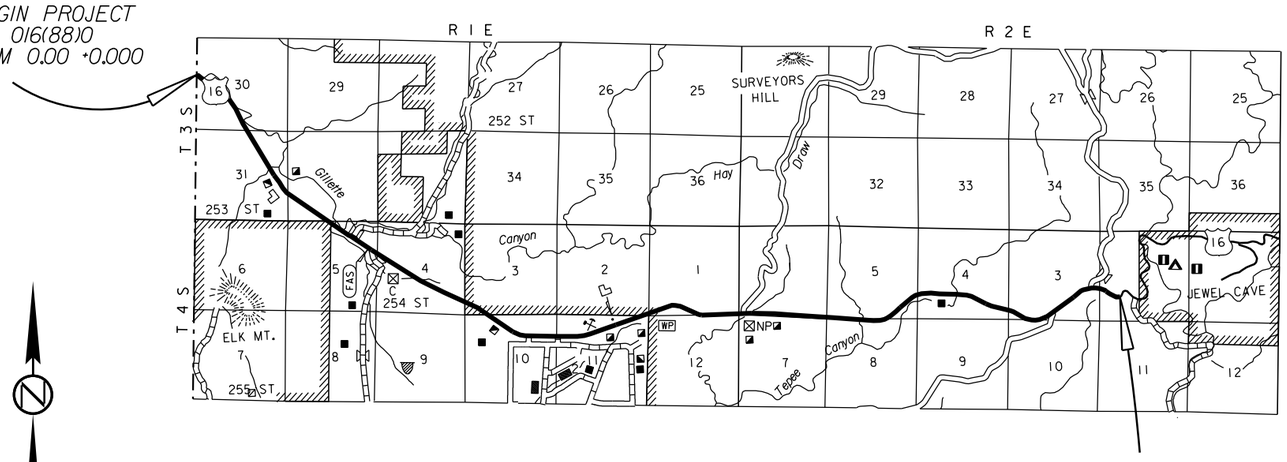

END PROJECT
NH 016(88)0
MRM 11.00 +0.117

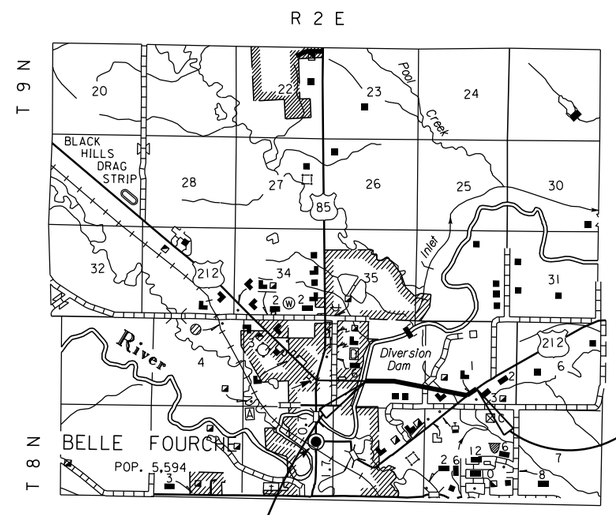

END PROJECT
NH 0212(185)13
MRM 15.32 +0.100

BEGIN PROJECT
NH 0212(185)13
MRM 14.00 + 0.097

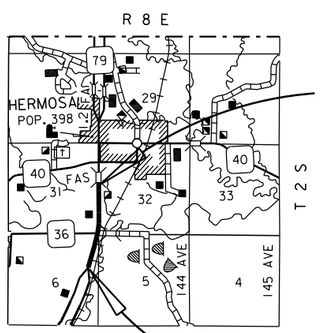

END PROJECT
NH 0079(76)58
MRM 59.00 + 0.740

BEGIN PROJECT
NH 0079(76)58
MRM 59.00 + 0.298

DESIGN DESIGNATION PCN 05ML

ADT (2014)	1095
ADT (2034)	1330
DHV	260.7
D	53%
T DHV	4.4%
T ADT	9.7%
V	65 MPH

DESIGN DESIGNATION PCN 05MM

ADT (2014)	4995
ADT (2034)	6069
DHV	752.5
D	50%
T DHV	6.9%
T ADT	15.1%
V	65 MPH

DESIGN DESIGNATION PCN 05MN

ADT (2014)	2033
ADT (2034)	2290
DHV	352.6
D	51%
T DHV	6.6%
T ADT	14.6%
V	65 MPH

PCN 05ML

Gross Length	58697.76	Feet	11.117 Miles
Length of Exceptions	0.00	Feet	0.000 Miles
Net Length	58697.76	Feet	11.117 Miles

PCN 05MM

Gross Length	1108.80	Feet	0.210 Miles
Length of Exceptions	0.00	Feet	0.000 Miles
Net Length	1108.80	Feet	0.210 Miles

PCN 05MN

Gross Length	6985.44.00	Feet	1.323 Miles
Length of Exceptions	0.00	Feet	0.000 Miles
Net Length	6985.44	Feet	1.323 Miles

PLOT SCALE - 1:200
PLOTTED FROM - TRRC12608
PLOT NAME - 1
FILE - ...\PRJ\CUST05ML\05ML TITLE.DGN
SHEET OF SHEETS

ESTIMATE OF QUANTITIES

PCN 05ML - US Highway 16

Alternate A

BID ITEM NUMBER	ITEM	QUANTITY	UNIT
320E0004	PG 58-28 Asphalt Binder	586.9	Ton
320E1070	Class HR Asphalt Concrete	14,648.4	Ton

Alternate B

BID ITEM NUMBER	ITEM	QUANTITY	UNIT
320E0004	PG 58-28 Asphalt Binder	543.5	Ton
320E1070	Class HR Asphalt Concrete	15,039.9	Ton

BID ITEM NUMBER	ITEM	QUANTITY	UNIT
009E0010	Mobilization	Lump Sum	LS
009E3320	Checker	Lump Sum	LS
120E0010	Unclassified Excavation	2,687	CuYd
120E0100	Unclassified Excavation, Digouts	277	CuYd
120E6200	Water for Granular Material	128.5	MGal
210E2000	Shoulder Shaping	22.200	Mile
250E0010	Incidental Work	Lump Sum	LS
260E1010	Base Course	554.3	Ton
320E3000	Compaction Sample	3	Each
320E5010	Saw and Seal Shoulder Joint	117,047	Ft
330E0010	MC-70 Asphalt for Prime	138.0	Ton
330E0210	SS-1h or CSS-1h Asphalt for Flush Seal	26.1	Ton
332E0010	Cold Milling Asphalt Concrete	91,878	SqYd
600E0200	Type II Field Laboratory	1	Each
634E0010	Flagging	500.0	Hour
634E0020	Pilot Car	100.0	Hour
634E0110	Traffic Control Signs	208	SqFt
634E0120	Traffic Control, Miscellaneous	Lump Sum	LS

PCN 05MM - US Highway 79

Alternate A

BID ITEM NUMBER	ITEM	QUANTITY	UNIT
320E0004	PG 58-28 Asphalt Binder	17.1	Ton
320E1070	Class HR Asphalt Concrete	426.1	Ton

Alternate B

BID ITEM NUMBER	ITEM	QUANTITY	UNIT
320E0004	PG 58-28 Asphalt Binder	15.8	Ton
320E1070	Class HR Asphalt Concrete	437.9	Ton

BID ITEM NUMBER	ITEM	QUANTITY	UNIT
009E0010	Mobilization	Lump Sum	LS
009E3320	Checker	Lump Sum	LS
120E0100	Unclassified Excavation, Digouts	8	CuYd
120E6200	Water for Granular Material	3.6	MGal
210E2000	Shoulder Shaping	0.600	Mile
250E0010	Incidental Work	Lump Sum	LS
260E1010	Base Course	15.6	Ton
320E3000	Compaction Sample	3	Each
320E5010	Saw and Seal Shoulder Joint	3,284	Ft
330E0010	MC-70 Asphalt for Prime	4.0	Ton
330E0210	SS-1h or CSS-1h Asphalt for Flush Seal	0.6	Ton
332E0010	Cold Milling Asphalt Concrete	2,919	SqYd
600E0200	Type II Field Laboratory	1	Each
634E0010	Flagging	300.0	Hour
634E0110	Traffic Control Signs	297	SqFt
634E0120	Traffic Control, Miscellaneous	Lump Sum	LS
634E0420	Type C Advance Warning Arrow Board	1	Each

PCN 05MN - US Highway 212

Alternate A

BID ITEM NUMBER	ITEM	QUANTITY	UNIT
320E0004	PG 58-28 Asphalt Binder	71.4	Ton
320E1070	Class HR Asphalt Concrete	1,783.4	Ton

Alternate B

BID ITEM NUMBER	ITEM	QUANTITY	UNIT
320E0004	PG 58-28 Asphalt Binder	66.2	Ton
320E1070	Class HR Asphalt Concrete	1,831.0	Ton

BID ITEM NUMBER	ITEM	QUANTITY	UNIT
009E0010	Mobilization	Lump Sum	LS
009E3320	Checker	Lump Sum	LS
110E6000	Remove 3 Cable Guardrail for Reset	122	Ft
110E6200	Remove Double Thrie Beam Guardrail for Reset	25.0	Ft
110E6230	Remove W Beam Guardrail for Reset	137.5	Ft
110E6240	Remove W Beam to Thrie Beam Guardrail Transition for Reset	2	Each
110E6260	Remove W Beam Guardrail Breakaway Cable Terminal for Reset	1	Each
110E6280	Remove W Beam Guardrail Tangent End Terminal for Reset	1	Each
120E0010	Unclassified Excavation	198	CuYd
120E0100	Unclassified Excavation, Digouts	33	CuYd
120E6200	Water for Granular Material	15.4	MGal
210E2000	Shoulder Shaping	2.600	Mile
250E0010	Incidental Work	Lump Sum	LS
260E1010	Base Course	66.2	Ton
* 260E6000	Granular Material, Furnish	667.6	Ton
* 270E0200	Blend, Haul, and Stockpile Granular Material	1,335.2	Ton
320E3000	Compaction Sample	3	Each
320E5010	Saw and Seal Shoulder Joint	13,971	Ft
330E0010	MC-70 Asphalt for Prime	16.6	Ton
330E0210	SS-1h or CSS-1h Asphalt for Flush Seal	3.2	Ton
332E0010	Cold Milling Asphalt Concrete	11,177	SqYd
600E0200	Type II Field Laboratory	1	Each
629E0200	Reset 3 Cable Guardrail	122	Ft
630E2110	Beam Guardrail Post and Block	36	Each
630E5130	Reset Double Thrie Beam Rail	25.0	Ft
630E5160	Reset W Beam Rail	137.5	Ft
630E5180	Reset W Beam Guardrail Breakaway Cable Terminal	1	Each
630E5190	Reset W Beam to Thrie Beam Guardrail Transition	2	Each
630E5208	Reset W Beam Guardrail Tangent End Terminal	1	Each
634E0010	Flagging	300.0	Hour
634E0020	Pilot Car	150.0	Hour
634E0110	Traffic Control Signs	208.0	SqFt
634E0120	Traffic Control, Miscellaneous	Lump Sum	LS
900E0010	Refurbish Single Mailbox	1	Each

*** - Denotes Non-Participating**

COLD MILLING ASPHALT CONCRETE

The work consists of cold milling the existing asphalt concrete surface course.

The Los Angeles Abrasion Loss value on the aggregate used for the in place asphalt concrete could not be determined.

Prior to allowing traffic on the milled surface, the surface shall be thoroughly broomed free of remaining loose material.

The work shall be performed only during daylight hours.

Granular material shall be bladed up against the PCCP to eliminate the 3" drop off prior to asphalt for prime operations.

05ML - US Highway 16

Cold milling asphalt is estimated to produce 16109.5 tons of RAP. An estimated 4648.2 tons of RAP will be used on this project in the Class HR Asphalt Concrete mixture. An additional 124.7 tons of RAP from this project shall be used for PCN 05MM - US Highway 79.

Excess Millings shall become the property of the Contractor.

05MM - US Highway 79

The millings required for the RAP on this project shall be sourced from PCN 05ML – US Highway 16. All costs associated with loading, transporting and stockpiling the millings from the Highway 16 project for use on this project shall be incidental to the contract unit price per ton foe Class HR Asphalt Concrete

Cold milling asphalt is estimated to produce 457.3 tons of millings.

Excess Millings shall become the property of the Contractor.

05MN - US Highway 212

Cold milling asphalt is estimated to produce 1188.9 tons of RAP. An estimated 521.3 tons of RAP will be used on this project in the Class HR Asphalt Concrete mixture.

Excess Millings shall be Blended with Granular Material, Furnish and hauled to the Belle Fourche DOT yard as directed by the Engineer.

The physical address of the Belle Fourche yard is:

SDDOT Belle Fourche Area Office
10921 West Hwy 34
Belle Fourche, SD 57717

The Contractor is responsible to assure enough RAP is available for the Class HR Asphalt Concrete. The remainder of the salvaged asphalt concrete material shall be stockpiled or disposed of as directed by the Engineer.

GRANULAR MATERIAL, FURNISH

Granular Material shall be furnished by the Contractor for use in blending with the salvaged asphalt mix material from this project.

The Granular Material shall be Base Course meeting the requirements of Section 882.

BLEND, HAUL & STOCKPILE GRANULAR MATERIAL

05MN - US Highway 212

An Estimated 667.6 tons (for informational purposes only) of RAP material shall be blended with 667.6 tons of Granular Material, Furnish and hauled and stockpiled at the Belle Fourche DOT facility yard as directed by the Engineer.

The Contractor shall use a portable platform scale, stationary commercial scale, stationary commercial plant, portable plant scale, or a belt scale to control the blending and weighing of the salvage material with Contractor furnished granular material.

The RAP shall be crushed to meet the requirements of Section 884.2C.1 prior to blending into the stockpile.

RAP shall be blended with Granular Material, Furnished at a rate of 50% RAP material and 50% Granular Material, Furnished to obtain stockpile material. The use of a pugmill to blend the materials will be accepted.

Screening or scalping of the RAP stockpile(s) will not be allowed.

Calibrated conveyor(s) shall be used to provide a uniform blending of the materials. Material shall be blended prior to incorporation into the pile.

No further testing of the blended material will be required.

All costs for crushing the salvaged asphalt mix material, hauling, stockpiling, and blending asphalt mix material and Granular Material, Furnish shall be incidental to the contract unit price per ton for Blend, Haul & Stockpile Granular Material.

CLASS HR ASPHALT CONCRETE

Virgin mineral aggregate for Class HR Asphalt Concrete Alternate A shall conform to the requirements for Class E, Type 1.

Virgin mineral aggregate for Class HR Asphalt Concrete Alternate B shall consist of a minimum of 80 percent crushed limestone ledgerock and shall conform to the requirements for Class E, Type 1.

The RAP shall be crushed so the particle size in the cold feed will meet the requirements specified in Section 884.2 C.1.

Screening or scalping of the RAP stockpile(s) will not be allowed.

05ML - US Highway 16

An estimated 4648.2 tons of RAP is needed for the Class HR mixture.

05MM - US Highway 79

An estimated 124.7 tons of RAP is needed for the Class HR mixture.

05MN - US Highway 212

An estimated 521.3 tons of RAP is needed for the Class HR mixture.

The Class HR Asphalt Concrete shall include 30 percent RAP in the mixture.

SHOULDER SHAPING

Shoulder Shaping shall be performed on US16, SD79, & US212 as shown in the typical sections.

Prior to placing the asphalt concrete overlay, the upper portion of shoulders shall be scarified, reworked and shaped as detailed on the typical sections.

Compaction of the reworked shoulders shall be according to Section 260.3D of the Specifications.

Water for Granular Material, for shaping and compaction, shall be applied at a rate of 5.8 M gallons per mile per shoulder.

After completion of the shoulder shaping the shoulders shall be primed as provided in the Rates of Materials.

Provide for shoulder shaping on US16, SD79, & US212 as shown in the typical sections. Shoulder shaping shall be accomplished prior to Asphalt Concrete Surfacing. After completion of the shoulder shaping the shoulders shall be primed as provided in the Rates of Materials.

RATES OF MATERIALS, SURFACING (CONTINUED)

PCN 05MM
US Highway 79
Northbound Shoulder
MRM 59.318 to MRM 59.740
Southbound Shoulder
MRM 59.298 to MRM 59.498

All quantities per station

Class HR Concrete - 3" Lift (One Shoulder Only)		Alt A	Alt B
Crushed Aggregate	=	8.70 Ton	8.98 Ton
RAP	=	3.73 Ton	3.85 Ton
PG 58-28 Asphalt Binder	=	0.52 Ton	0.48 Ton
TOTAL MIX	=	12.95 Ton	13.31 Ton

The exact proportions of these materials will be determined on construction

MC-70 asphalt for Prime at the rate of 0.12 tons
applied 9 feet wide (Rate = 0.30 gallons per square yard)

Emulsified Asphalt for Flush Seal SS-1h or CSS-1h at the rate
of 0.02 tons applied 8 feet wide (Rate = 0.05 gallons per square yard)

PCN 05MN
US Highway 212
MRM 14.10 to MRM 15.42

All quantities per mile

The exact proportions of these materials will be determined on construction

Class HR Concrete - 3" Lift (One Shoulder Only)		Alt A	Alt B
Crushed Aggregate	=	453.0 Ton	467.0 Ton
RAP	=	194.0 Ton	200.0 Ton
PG 58-28 Asphalt Binder	=	27.0 Ton	25.0 Ton
TOTAL MIX	=	674.0 Ton	692.0 Ton

MC-70 asphalt for Prime at the rate of 6.3 tons
applied 9 feet wide (Rate = 0.30 gallons per square yard)

Emulsified Asphalt for Flush Seal SS-1h or CSS-1h at the rate
of 1.2 tons applied 8 feet wide (Rate = 0.05 gallons per square yard)

Table of Material Quantities

Route	L/R	MRM	to MRM	Length (Miles)	Cold Milling Asphalt Concrete (SqYd)	Unclassified Excavation (CuYd)	Unclassified Excavation Digouts (CuYd)	Base Course (Ton)	Shoulder Shaping (Mile)	Water for Granular Material (Mgal)	Alt A Class HR Asphalt Concrete (Ton)	Alt A PG 58-28 Asphalt Binder (Ton)	Alt B Class HR Asphalt Concrete (Ton)	Alt B PG 58-28 Asphalt Binder (Ton)	MC-70 Asphalt for Prime (Ton)	SS-1h or CSS-1h Asphalt for Flush Seal (Ton)	Saw and Seal Shoulder Joint (Ft)	Granular Material, Furnish (Ton)	Blend Haul and Stockpile Granular Material (Ton)
PCN 05ML - US Highway 16																			
16	**L**	0.000	11.117	11.084	46818.8	1343.7	138.6	277.1	11.1	64.3	7470.6	299.3	7670.1	277.1	69.8	13.3	58523.5		
16	**R**	0.000	0.900	0.900	3801.6	109.1	11.3	22.5	0.9	5.2	606.6	24.3	622.8	22.5	5.7	1.1	4752.0		
		0.900	1.400	0.500	1525.3	60.6	6.3	12.5	0.5	2.9	239.4	9.6	245.9	8.9	2.6	0.4	2640.0		
		1.400	4.730	3.330	14065.9	403.7	41.6	83.3	3.3	19.3	2244.4	89.9	2304.4	83.3	21.0	4.0	17582.4		
		4.730	5.330	0.500	1525.3	60.6	6.3	12.5	0.5	2.9	239.4	9.6	245.9	8.9	2.6	0.4	2640.0		
		5.330	10.300	4.970	20993.3	602.5	62.1	124.3	5.0	28.8	3349.8	134.2	3439.2	124.3	31.3	6.0	26241.6		
		10.300	10.800	0.500	1525.3	60.6	6.3	12.5	0.5	2.9	239.4	9.6	245.9	8.9	2.6	0.4	2640.0		
		10.800	11.117	0.384	1622.0	46.6	4.8	9.6	0.4	2.2	258.8	10.4	265.7	9.6	2.4	0.5	2027.5		
Total					91877.5	2687.4	277.3	554.3	22.2	128.5	14648.4	586.9	15039.9	543.5	138.0	26.1	117047.0		
PCN 05MM - US Highway 79																			
79	**L**	59.298	59.498	0.200	938.7		2.5	5.0	0.2	1.2	137.3	5.5	141.1	5.1	1.3	0.2	1056.0		
79	**R**	59.318	59.740	0.422	1980.6		5.3	10.6	0.4	2.4	288.8	11.6	296.8	10.7	2.7	0.4	2228.2		
Total					2919.3		7.8	15.6	0.6	3.6	426.1	17.1	437.9	15.8	4.0	0.6	3284.2		
PCN 05MN - US Highway 212																			
212	**L**	14.097	15.420	1.323	5588.4	99.2	16.5	33.1	1.3	7.7	891.7	35.7	915.5	33.1	8.3	1.6	6985.4	333.8	667.6
212	**R**	14.097	15.420	1.323	5588.4	99.2	16.5	33.1	1.3	7.7	891.7	35.7	915.5	33.1	8.3	1.6	6985.4	333.8	667.6
Total					11176.8	198.4	33.0	66.2	2.6	15.4	1783.4	71.4	1831.0	66.2	16.6	3.2	13970.9	667.6	1335.2

Table of Guardrail - PCN 05MN - Highway US 212

Str. No.	Remove W Beam Guardrail for Reset	Remove W Beam to Thrie Beam Guardrail Transition for Reset	Remove W Beam Guardrail Breakaway Cable Terminal for Reset	Remove W Beam Guardrail Tangent End Terminal for Reset	Remove 3 Cable Guardrail for Reset	Remove Double Thrie Beam Guardrail for Reset	Reset W Beam Rail	Reset W Beam Guardrail Breakaway Cable Terminal	Reset W Beam to Thrie Beam Transition	Reset W Beam Guardrail Tangent End Terminal	Reset 3 Cable Guardrail	Reset Double Thrie Beam Rail	Beam Guardrail Post and Block
	Ft	Each	Each	Each	Ft	Ft	Ft	Each	Each	Each	Ft	Ft	Each
10-103-367													
Off-end Left	62.5	1	1		122.5	12.5	62.5	1	1		122.5	12.5	12
Off-end right	75	1		1		12.5	75		1	1		12.5	24
Total	137.5	2	1	1	122.5	25	137.5	1	2	1	122.5	25	36

STATE OF SOUTH DAKOTA	PROJECT	SHEET NO.	TOTAL SHEETS
	NH 0016(88)0, NH 0212(185)13 & NH 0079(76)58	12	17

Plotting Date: 03/30/2016
Revised 3/30/2016 GDS

TYPICAL SECTION

US Highway 212
MRM 14.00+0.097 to MRM 15.32+0.100
In Place, Cold Milling and Excavation Section

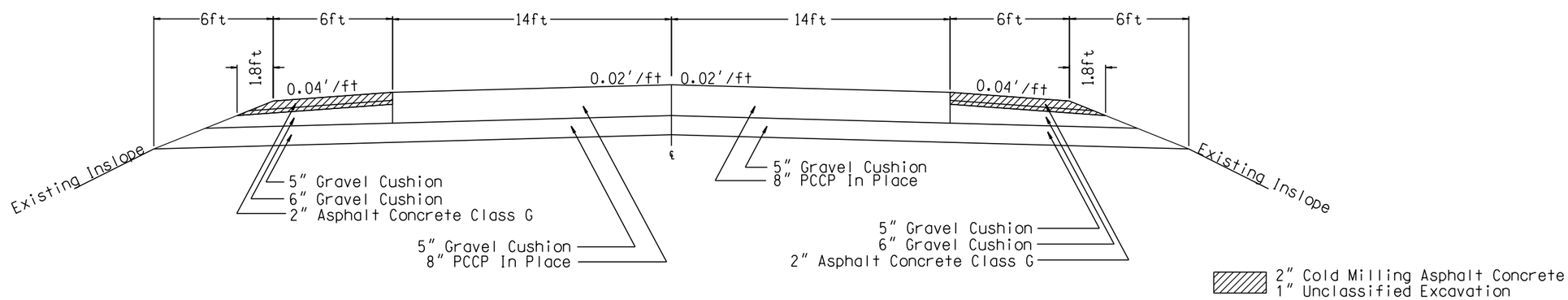

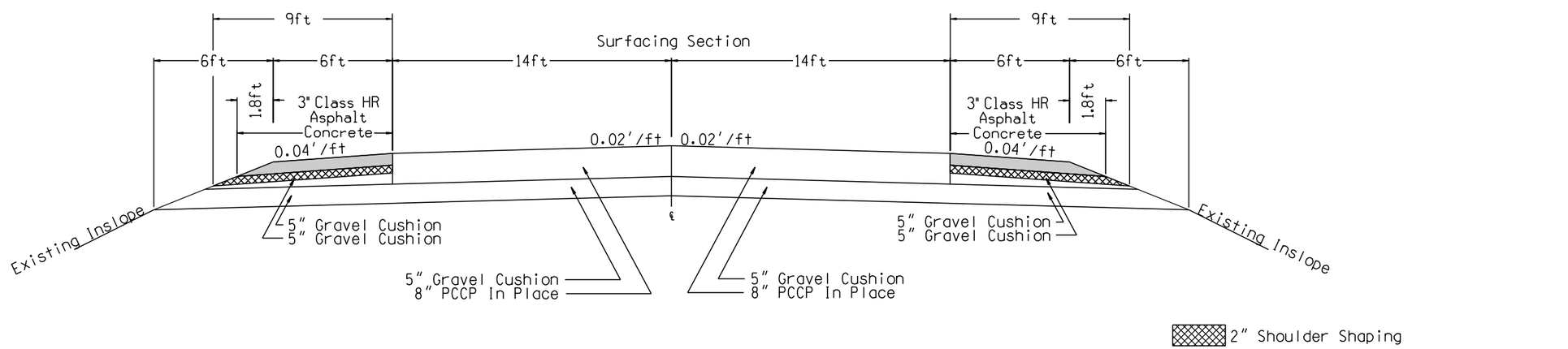

PLOT SCALE - 1:6.1875
PLOTTED FROM - TRRC12608
PLOT NAME - 4
FILE - ...\PRJ\CUST05ML\02ML TYP.DGN