Department of Transportation

Office of Project Development

700 E Broadway Avenue
Pierre, South Dakota 57501-2586 605/773-3268
FAX: 605/773-2614

July 9, 2015

ADDENDUM NO. 1

RE: Item #1, July 15, 2015 Letting - IM 1902(61)0, PCN 1162, Pennington County - Interchange Replacement - Grading, PCCP & Str, Remove & Replace PCCP, AC Surfacing

TO WHOM IT MAY CONCERN:

The following addenda to the plans shall be inserted and made a part of your proposal for the referenced project.

SPECIAL PROVISIONS: NO CHANGE

BID ITEM FILE: *Bidders must log in to retrieve the addendum bid item file that must be loaded into the SDEBS to incorporate the revisions listed here.*

Bid Items were added:
Bid Item 670E4325 "Barrier Drop Inlet Double Unit Frame and Grate Assembly"

Quantities for Bid Items were changed:
Bid Item 421E0100 "Pipe Culvert Undercut" changed from 2,968 to 2,069 CuYd

PLANS: Please destroy sheets A1, A2, B2, B10, E2, E68, E72, and F4 and replace with the enclosed sheets, dated 6/24/15, 6/26/15, and 7/9/15.

Sheet A1: **Quantities for Bid Items were changed:**
Bid Item 421E0100 "Pipe Culvert Undercut" changed from 2,968 to 2,069 CuYd

Sheet A2: **Bid Items were added:**
Bid Item 670E4325 "Barrier Drop Inlet Double Unit Frame and Grate Assembly"

Sheet B2: **Quantities for Bid Items were changed:**
Bid Item 421E0100 "Pipe Culvert Undercut" changed from 2,968 to 2,069 CuYd

Sheet B10: Undercut quantity in the table under FOUNDATION PREPARATION FOR LARGE DIAMETER STORM SEWER, CONTINUED heading was revised.

Sheet B11: REMOVE BUILDINGS note was revised.

<u>Sheets E2, E68, and E72</u>: **Bid Items were added:**

Bid Item 670E4325 “Barrier Drop Inlet Double Unit Frame and Grate Assembly”

<u>Sheet F4</u>: GRAVEL CUSHION, MODIFIED gradation table was revised.

Sincerely,

Sam Weisgram
Engineering Supervisor

SW/cj

CC: Todd Seaman, Rapid City Region Engineer
Mike Carlson, Rapid City Area Engineer

ESTIMATE OF QUANTITIES AND ENVIRONMENTAL COMMITMENTS

STATE OF SOUTH DAKOTA	PROJECT	SHEET	TOTAL SHEETS
	IM 1902(61)0	A1	A5

Rev. 07-09-15 by NAS

Grading – Section B

	Bid Item Number	Item	Quantity	Unit
	009E0010	Mobilization	Lump Sum	LS
	009E3230	Grade Staking	6.165	Mile
	009E3250	Miscellaneous Staking	3.449	Mile
	009E3280	Slope Staking	3.449	Mile
	009E3290	Structure Staking	8	Each
	009E3300	Three Man Survey Crew	100.0	Hour
	009E4300	Construction Schedule, Category III	Lump Sum	LS
	100E0010	Clear and Grub Stump	31	Each
	100E0020	Clear and Grub Tree	161	Each
	110E0210	Remove Building(s)	Lump Sum	LS
	110E0300	Remove Concrete Curb and Gutter	20,134	Ft
*	110E0300	Remove Concrete Curb and Gutter	57	Ft
	110E0400	Remove Drop Inlet	42	Each
	110E0460	Remove Manhole	5	Each
	110E0530	Remove Storm Sewer Pipe	5,831	Ft
	110E0600	Remove Fence	223	Ft
	110E0730	Remove Beam Guardrail	7,140.0	Ft
*	110E1010	Remove Asphalt Concrete Pavement	172.0	SqYd
	110E1010	Remove Asphalt Concrete Pavement	12,611.0	SqYd
	110E1100	Remove Concrete Pavement	36,471.0	SqYd
	110E1140	Remove Concrete Sidewalk	2,228.0	SqYd
	110E1150	Remove Concrete Median Barrier	3,721	Ft
	110E1300	Remove Concrete Retaining Wall	1,950.0	Ft
	110E5800	Salvage Fence	7,824	Ft
	110E7802	Remove Fence for Reset	66	Ft
	120E0010	Unclassified Excavation	400,125	CuYd
	120E0400	Select Subgrade Topping	118,707	CuYd
	120E6100	Water for Embankment	2,787.3	MGal
	240E0010	Obliterate Old Road	5	Sta
	250E0020	Incidental Work, Grading	Lump Sum	LS
	260E1010	Base Course	6,910.0	Ton
	260E5000	Shot Rock	13,560.0	Ton
	270E0040	Salvage and Stockpile Asphalt Mix and Granular Base Material	38,819.0	Ton
	380E3520	6" PCC Approach Pavement	72.0	SqYd
	380E3525	6" Reinforced PCC Approach Pavement	109.0	SqYd
	380E4070	9" PCC Fillet Section	133.0	SqYd
	420E0400	Structure Excavation, Miscellaneous	60	CuYd
	421E0100	Pipe Culvert Undercut	2,069	CuYd
	450E0123	18" RCP Class 3, Furnish	6,164	Ft
	450E0124	18" RCP Class 4, Furnish	116	Ft
	450E0130	18" RCP, Install	6,280	Ft
	450E0143	24" RCP Class 3, Furnish	1,522	Ft
	450E0144	24" RCP Class 4, Furnish	324	Ft
	450E0150	24" RCP, Install	1,846	Ft
	450E0163	30" RCP Class 3, Furnish	1,000	Ft
	450E0170	30" RCP, Install	1,000	Ft
	450E0183	36" RCP Class 3, Furnish	510	Ft
	450E0184	36" RCP Class 4, Furnish	8	Ft
	450E0190	36" RCP, Install	518	Ft
	450E0193	42" RCP Class 3, Furnish	824	Ft
	450E0194	42" RCP Class 4, Furnish	578	Ft
	450E0200	42" RCP, Install	1,402	Ft
	450E0203	48" RCP Class 3, Furnish	56	Ft
	450E0205	48" RCP Class 5, Furnish	228	Ft
	450E0210	48" RCP, Install	284	Ft
	450E0263	84" RCP Class 3, Furnish	200	Ft
	450E0270	84" RCP, Install	200	Ft
	450E0273	90" RCP Class 3, Furnish	630	Ft
	450E0274	90" RCP Class 4, Furnish	480	Ft
	450E0280	90" RCP, Install	1,110	Ft
	450E0283	96" RCP Class 3, Furnish	114	Ft
	450E0284	96" RCP Class 4, Furnish	260	Ft

Grading – Section B (Continued)

	Bid Item Number	Item	Quantity	Unit
	450E0290	96" RCP, Install	374	Ft
	450E0416	24" RCP Bend, Furnish	2	Each
	450E0417	24" RCP Bend, Install	2	Each
	450E0424	30" RCP Bend, Furnish	1	Each
	450E0425	30" RCP Bend, Install	1	Each
	450E0464	90" RCP Bend, Furnish	1	Each
	450E0465	90" RCP Bend, Install	1	Each
	450E0466	96" RCP Bend, Furnish	4	Each
	450E0467	96" RCP Bend, Install	4	Each
	450E0700	RCP Tee, Furnish	11	Each
	450E0701	RCP Tee, Install	11	Each
	450E1200	RCP Increaser, Furnish	1	Each
	450E1201	RCP Increaser, Install	1	Each
	450E2008	18" RCP Flared End, Furnish	4	Each
	450E2009	18" RCP Flared End, Install	4	Each
	450E2024	30" RCP Flared End, Furnish	1	Each
	450E2025	30" RCP Flared End, Install	1	Each
	450E2032	42" RCP Flared End, Furnish	3	Each
	450E2033	42" RCP Flared End, Install	3	Each
	450E2036	48" RCP Flared End, Furnish	2	Each
	450E2037	48" RCP Flared End, Install	2	Each
	450E3003	18" RCP Arch Class 3, Furnish	104	Ft
	450E3010	18" RCP Arch, Install	104	Ft
	450E3043	42" RCP Arch Class 3, Furnish	74	Ft
	450E3050	42" RCP Arch, Install	74	Ft
	450E4739	12" CMP 16 Gauge, Furnish	16	Ft
	450E4740	12" CMP, Install	16	Ft
	450E5000	12" CMP Elbow, Furnish	5	Each
	450E5001	12" CMP Elbow, Install	5	Each
	450E6109	12" Slotted CMP 16 Gauge, Furnish	940	Ft
	450E6110	12" Slotted CMP, Install	940	Ft
	462E0100	Class M6 Concrete	451.6	CuYd
	462E0200	Controlled Density Fill	62.5	CuYd
	470E0025	Cable Handrail	362.0	Ft
	480E0100	Reinforcing Steel	75,597	Lb
	600E0300	Type III Field Laboratory	1	Each
	620E4100	Reset Fence	66	Ft
	621E0160	6' Chain Link Fence with Tension Wired Top	10,145	Ft
	621E0420	Single Vehicular Swing Gate	3	Each
	628E1500	Concrete Barrier End Protection	1	Each
	630E0110	Straight Double Class A Thrie Beam Guardrail with Wood Posts	75.0	Ft
	630E1010	Straight Class A W Beam Guardrail with Wood Posts	1,187.5	Ft
	630E1020	Curved Class A W Beam Guardrail with Wood Posts	77.0	Ft
	630E1140	Straight Double Class A W Beam Guardrail with Wood Posts	2,237.5	Ft
	630E2000	W Beam to Thrie Beam Guardrail Transition	6	Each
	630E2020	W Beam Guardrail Tangent End Terminal	9	Each
	630E2035	W Beam Guardrail Special Anchor Assembly	1	Each
	630E2050	Beam Guardrail Trailing End Terminal	6	Each
	632E2220	Guardrail Delineator	86	Each
	650E0060	Type B66 Concrete Curb and Gutter	9,450	Ft
*	650E0060	Type B66 Concrete Curb and Gutter	56	Ft
	650E0090	Type B69 Concrete Curb and Gutter	2,525	Ft
	650E0360	Type BL66 Concrete Curb and Gutter	627	Ft
	650E1060	Type F66 Concrete Curb and Gutter	8,690	Ft
	650E1090	Type F69 Concrete Curb and Gutter	596	Ft
	650E1110	Type F611 Concrete Curb and Gutter	4,428	Ft
	650E4360	Type D46 Concrete Curb and Gutter	1,369	Ft
	650E4390	Type D49 Concrete Curb and Gutter	454	Ft
	650E4410	Type D411 Concrete Curb and Gutter	919	Ft

INDEX OF SHEETS

A1, A2 and A3	Estimate of Quantities for Sections B, C, D, E, F, L, M, and S
A4 and A5	Environmental Commitments

SPECIFICATIONS

Standard Specifications for Roads and Bridges, 2004 Edition and Required Provisions, Supplemental Specifications, and Special Provisions as included in the Proposal.

Grading – Section B (Continued)

Bid Item Number	Item	Quantity	Unit
650E4460	Type DL46 Concrete Curb and Gutter	67	Ft
650E4660	Type P6 Concrete Gutter	520	Ft
650E4690	Type P9 Concrete Gutter	690	Ft
650E4710	Type P11 Concrete Gutter	300	Ft
651E0040	4" Concrete Sidewalk	15,552	SqFt
651E0050	5" Concrete Sidewalk	24,631	SqFt
651E0060	6" Concrete Sidewalk	2,697	SqFt
651E0140	4" Reinforced Concrete Sidewalk	234	SqFt
651E0150	5" Reinforced Concrete Sidewalk	101	SqFt
651E0540	4" Colored Concrete Sidewalk	3,330	SqFt
651E0550	5" Colored Concrete Sidewalk	964	SqFt
651E7000	Type 1 Detectable Warnings	543	SqFt
670E1200	Type B Frame and Grate Assembly	76	Each
670E2200	Type C Frame and Grate	1	Each
670E3200	Type D Frame and Grate	15	Each
670E5200	Special Frame and Grate Assembly	28	Each
670E5340	4' x 11' Precast Concrete Type S Drop Inlet Lid	18	Each
670E5342	4' x 6' Precast Concrete Type S Drop Inlet Lid	1	Each
670E5400	Precast Drop Inlet Collar	120	Each
671E0550	Special Manhole	1	Each
671E4048	48" Manhole Riser Section	3.0	Ft
671E4548	48" Manhole Cone Section	12.0	Ft
671E6009	Type A9 Manhole Frame and Lid	10	Each
680E0440	4" Slotted Corrugated Polyethylene Drainage Tubing	1,632	Ft
680E2500	Porous Backfill	53.0	Ton
700E0110	Class A Riprap	410.0	Ton
700E0310	Class C Riprap	2,068.0	Ton
831E0110	Type B Drainage Fabric	1,949	SqYd
831E0210	Non-woven Geotextile Separator	7,760	SqYd
831E0300	MSE Geotextile Fabric	6,920	SqYd
831E1010	Geogrid Reinforcement	990	SqYd
900E0010	Refurbish Single Mailbox	5	Each

* - Denotes Non-Participating

REGISTERED PROFESSIONAL ENGINEER
REG. NO. 8328
JODY W. PAGE
SOUTH DAKOTA
9 JUL 15

ESTIMATE OF QUANTITIES AND ENVIRONMENTAL COMMITMENTS

STATE OF SOUTH DAKOTA	PROJECT	SHEET	TOTAL SHEETS
	IM 1902(61)0	A2	A5

Rev. 07-09-15 by NAS

Traffic Control – Section C

Bid Item Number	Item	Quantity	Unit
110E1400	Remove Pavement Marking, 4" or Equivalent	31,500	Ft
260E6010	Granular Material	1,500.0	Ton
380E9010	Temporary Gravel Crossing	1	Each
621E0060	6' Chain Link Fence with Top Rail	1,300	Ft
634E0010	Flagging	2,000.0	Hour
634E0100	Traffic Control	15,550	Unit
634E0120	Traffic Control, Miscellaneous	Lump Sum	LS
634E0330	Raised Pavement Markers	31,500	Ft
634E0380	Tubular Marker	400	Each
634E0420	Type C Advance Warning Arrow Panel	6	Each
634E0430	Vertical Panel	70	Each
634E0525	Linear Delineation System Panel, Barrier Mounted	816	Each
634E0640	Temporary Pavement Marking	31,500	Ft
634E0700	Traffic Control Movable Concrete Barrier	408	Each
634E0705	Remove and Reset Traffic Control Movable Concrete Barrier	408	Each
634E0750	Temporary Concrete Barrier End Protection	8	Each
634E0755	Remove and Reset Temporary Concrete Barrier End Protection	8	Each
634E0760	Temporary Concrete Barrier End Protection Module Set or Repair Kit	2	Each
634E1215	Contractor Furnished Portable Changeable Message Sign	4	Each
634E2000	Longitudinal Pedestrian Barricade	8,100	Ft
634E2020	Temporary Curb Ramp	12	Each
634E2050	Temporary Sidewalk	19,905	SqFt

Erosion and Sediment Control – Section D

Bid Item Number	Item	Quantity	Unit
110E1690	Remove Sediment	38.0	CuYd
110E1695	Remove Sediment Filter Bag	6,181	Ft
110E1700	Remove Silt Fence	1,093	Ft
120E6300	Water for Vegetation	1,620.0	MGal
205E0010	Dust Control Chloride	1,500	Lb
230E0010	Placing Topsoil	3,623	CuYd
230E0020	Placing Contractor Furnished Topsoil	6,031	CuYd
230E0100	Remove and Replace Topsoil	Lump Sum	LS
730E0100	Cover Crop Seeding	7.0	Bu
730E0206	Type D Permanent Seed Mixture	23	Lb
730E0210	Type F Permanent Seed Mixture	484	Lb
730E0251	Special Permanent Seed Mixture 1	40	Lb
731E0200	Fertilizing	16.40	Ton
732E0200	Fiber Mulching	29.8	Ton
734E0044	Soil Stabilizer	3.6	Acre
734E0103	Type 3 Erosion Control Blanket	8,930	SqYd
734E0132	Type 2 Turf Reinforcement Mat	778.0	SqYd
734E0170	Temporary Sediment Barrier	9,650	Ft
734E0180	Sediment Filter Bag	6,181	Ft
734E0325	Surface Roughening	19.8	Acre
734E0604	High Flow Silt Fence	4,372	Ft
734E0610	Mucking Silt Fence	303	CuYd
734E0620	Repair Silt Fence	1,093	Ft
734E0845	Sediment Control at Inlet with Frame and Grate	192	Each
734E0847	Sediment Control at Type S Reinforced Concrete Drop Inlet	235	Ft
734E3100	Portable Sediment Containment System	1	Each
734E5010	Sweeping	200	Hour
735E1360	6' Coniferous Evergreen, Furnish and Plant	6	Each
735E1510	1 Gallon Coniferous Shrub, Furnish and Plant	52	Each
900E1320	Construction Entrance	6	Each
900E5152	Weed Barrier Fabric	796	SqYd
900E5153	Mulch Ring	6	Each
900E5157	4" Depth Shredded Bark Mulch	796.0	SqYd

Structure – Section E

Str. No. 52-409-294
208'-7" Composite Steel Girder Bridge

Bid Item Number	Item	Quantity	Unit
009E3310	Bridge Elevation Survey	Lump Sum	LS
009E5000	Concrete Penetrating Sealer	1,891.0	SqYd
250E0030	Incidental Work, Structure	Lump Sum	LS
260E1010	Base Course	5,123.0	Ton
410E0020	Structural Steel	Lump Sum	LS
410E2600	Membrane Sealant Expansion Joint	171.8	Ft
411E0100	Bridge Painting	Lump Sum	LS
430E0300	Granular Bridge End Backfill	204.0	CuYd
460E0030	Class A45 Concrete, Bridge Deck	513.7	CuYd
460E0050	Class A45 Concrete, Bridge	211.5	CuYd
460E0150	Concrete Approach Slab for Bridge	515.4	SqYd
460E0160	Concrete Approach Sleeper Slab for Bridge	138.4	SqYd
460E0380	Install Dowel in Concrete	18	Each
480E0100	Reinforcing Steel	16,486	Lb
480E0507	No. 7 Rebar Splice	224	Each
510E3531	HP 14x89 Steel Test Pile, Furnish and Drive	126	Ft
510E3535	HP 14x89 Steel Bearing Pile, Furnish and Drive	2,477	Ft
734E2020	Bridge Berm Slope Protection, Crushed Aggregate	168.0	SqYd
831E1010	Geogrid Reinforcement	4,271	SqYd

REGISTERED PROFESSIONAL ENGINEER
REG. NO. 8328
CODY W. PAGE
SOUTH DAKOTA
9 JUL 15

Structure – Section E (Continued)

Str. No. 52-409-294
208'-7" Composite Steel Girder Bridge
Alternate A

Bid Item Number	Item	Quantity	Unit
480E0300	Stainless Reinforcing Steel	98,807	Lb

Str. No. 52-409-294
208'-7" Composite Steel Girder Bridge
Alternate B

Bid Item Number	Item	Quantity	Unit
480E0250	Zinc and Epoxy Dual-Coated Reinforcing Steel	98,807	Lb

Median Barrier

Bid Item Number	Item	Quantity	Unit
410E0030	Structural Steel, Miscellaneous	Lump Sum	LS
460E0100	Class A45 Concrete, Miscellaneous	152.9	CuYd
462E0100	Class M6 Concrete	57.9	CuYd
480E0100	Reinforcing Steel	11,671	Lb
480E0200	Epoxy Coated Reinforcing Steel	29,269	Lb
628E1000	Straight Concrete Barrier	2,793	Ft
628E1010	Curved Concrete Barrier	536	Ft
628E1100	Movable F Shape Concrete Barrier, Interior Section	3	Each
628E1300	Straight Glare Screen for Concrete Barrier	2,793	Ft
628E1310	Curved Glare Screen for Concrete Barrier	536	Ft
634E0700	Traffic Control Movable Concrete Barrier	35	Each
634E0775	Temporary Concrete Barrier Glare Screen	458	Ft
670E4325	Barrier Drop Inlet Double Unit Frame and Grate Assembly	26	Each

Retaining Walls

Bid Item Number	Item	Quantity	Unit
120E7052	Granular Material for Reinforced Embankment	3,950.0	Ton
230E0020	Placing Contractor Furnished Topsoil	290	CuYd
420E0300	Structure Excavation, Retaining Wall	12,665	CuYd
421E1000	Footing Undercut	985	CuYd
530E0310	Special Type C Concrete Retaining Wall	1,619	SqFt
530E0360	1.5' x 1.5' Welded Wire Form	3,640.0	Ft
530E0420	MSE Large Panel Wall, Furnish	20,261	SqFt
530E0422	MSE Large Panel Wall, Install	20,261	SqFt
530E0602	Soil Nail	8,410.0	Ft
530E0603	Soil Nail Verification Test	2	Each
530E0702	Granular Backfill for MSE Large Panel Wall	17,252.0	CuYd
530E2010	Shotcrete Flashcoat/Leveling Course	140.0	CuYd
530E2020	Reinforced Shotcrete Face	6,040	SqFt
734E0103	Type 3 Erosion Control Blanket	3,110	SqYd
831E1010	Geogrid Reinforcement	3,151	SqYd
831E2010	Slope Reinforcement Geogrid	7,300	SqYd
900E2030	Miscellaneous Work	1	Site

Rev. 07/09/2015 AJF

SECTION B ESTIMATE OF QUANTITIES

Bid Item Number	Item	Quantity	Unit
009E0010	Mobilization	Lump Sum	LS
009E3230	Grade Staking	6.165	Mile
009E3250	Miscellaneous Staking	3.449	Mile
009E3280	Slope Staking	3.449	Mile
009E3290	Structure Staking	8	Each
009E3300	Three Man Survey Crew	100.0	Hour
009E4300	Construction Schedule, Category III	Lump Sum	LS
100E0010	Clear and Grub Stump	31	Each
100E0020	Clear and Grub Tree	161	Each
110E0210	Remove Building(s)	Lump Sum	LS
110E0300	Remove Concrete Curb and Gutter	20,134	Ft
* 110E0300	Remove Concrete Curb and Gutter	57	Ft
110E0400	Remove Drop Inlet	42	Each
110E0460	Remove Manhole	5	Each
110E0530	Remove Storm Sewer Pipe	5,831	Ft
110E0600	Remove Fence	223	Ft
110E0730	Remove Beam Guardrail	7,140.0	Ft
* 110E1010	Remove Asphalt Concrete Pavement	172.0	SqYd
110E1010	Remove Asphalt Concrete Pavement	12,611.0	SqYd
110E1100	Remove Concrete Pavement	36,471.0	SqYd
110E1140	Remove Concrete Sidewalk	2,228.0	SqYd
110E1150	Remove Concrete Median Barrier	3,721	Ft
110E1300	Remove Concrete Retaining Wall	1,950.0	Ft
110E5800	Salvage Fence	7,824	Ft
110E7802	Remove Fence for Reset	66	Ft
120E0010	Unclassified Excavation	400,125	CuYd
120E0400	Select Subgrade Topping	118,707	CuYd
120E6100	Water for Embankment	2,787.3	MGal
240E0010	Obliterate Old Road	5	Sta
250E0020	Incidental Work, Grading	Lump Sum	LS
260E1010	Base Course	6,910.0	Ton
260E5000	Shot Rock	13,560.0	Ton
270E0040	Salvage and Stockpile Asphalt Mix and Granular Base Material	38,819.0	Ton
380E3520	6" PCC Approach Pavement	72.0	SqYd
380E3525	6" Reinforced PCC Approach Pavement	109.0	SqYd
380E4070	9" PCC Fillet Section	133.0	SqYd
420E0400	Structure Excavation, Miscellaneous	60	CuYd
421E0100	Pipe Culvert Undercut	2,069	CuYd
450E0123	18" RCP Class 3, Furnish	6,164	Ft
450E0124	18" RCP Class 4, Furnish	116	Ft
450E0130	18" RCP, Install	6,280	Ft
450E0143	24" RCP Class 3, Furnish	1,522	Ft
450E0144	24" RCP Class 4, Furnish	324	Ft
450E0150	24" RCP, Install	1,846	Ft
450E0163	30" RCP Class 3, Furnish	1,000	Ft
450E0170	30" RCP, Install	1,000	Ft
450E0183	36" RCP Class 3, Furnish	510	Ft
450E0184	36" RCP Class 4, Furnish	8	Ft
450E0190	36" RCP, Install	518	Ft
450E0193	42" RCP Class 3, Furnish	824	Ft
450E0194	42" RCP Class 4, Furnish	578	Ft
450E0200	42" RCP, Install	1,402	Ft
450E0203	48" RCP Class 3, Furnish	56	Ft
450E0205	48" RCP Class 5, Furnish	228	Ft
450E0210	48" RCP, Install	284	Ft
450E0263	84" RCP Class 3, Furnish	200	Ft
450E0270	84" RCP, Install	200	Ft
450E0273	90" RCP Class 3, Furnish	630	Ft
450E0274	90" RCP Class 4, Furnish	480	Ft
450E0280	90" RCP, Install	1,110	Ft
450E0283	96" RCP Class 3, Furnish	114	Ft
450E0284	96" RCP Class 4, Furnish	260	Ft

Bid Item Number	Item	Quantity	Unit
450E0290	96" RCP, Install	374	Ft
450E0416	24" RCP Bend, Furnish	2	Each
450E0417	24" RCP Bend, Install	2	Each
450E0424	30" RCP Bend, Furnish	1	Each
450E0425	30" RCP Bend, Install	1	Each
450E0464	90" RCP Bend, Furnish	1	Each
450E0465	90" RCP Bend, Install	1	Each
450E0466	96" RCP Bend, Furnish	4	Each
450E0467	96" RCP Bend, Install	4	Each
450E0700	RCP Tee, Furnish	11	Each
450E0701	RCP Tee, Install	11	Each
450E1200	RCP Increaser, Furnish	1	Each
450E1201	RCP Increaser, Install	1	Each
450E2008	18" RCP Flared End, Furnish	4	Each
450E2009	18" RCP Flared End, Install	4	Each
450E2024	30" RCP Flared End, Furnish	1	Each
450E2025	30" RCP Flared End, Install	1	Each
450E2032	42" RCP Flared End, Furnish	3	Each
450E2033	42" RCP Flared End, Install	3	Each
450E2036	48" RCP Flared End, Furnish	2	Each
450E2037	48" RCP Flared End, Install	2	Each
450E3003	18" RCP Arch Class 3, Furnish	104	Ft
450E3010	18" RCP Arch, Install	104	Ft
450E3043	42" RCP Arch Class 3, Furnish	74	Ft
450E3050	42" RCP Arch, Install	74	Ft
450E4739	12" CMP 16 Gauge, Furnish	16	Ft
450E4740	12" CMP, Install	16	Ft
450E5000	12" CMP Elbow, Furnish	5	Each
450E5001	12" CMP Elbow, Install	5	Each
450E6109	12" Slotted CMP 16 Gauge, Furnish	940	Ft
450E6110	12" Slotted CMP, Install	940	Ft
462E0100	Class M6 Concrete	451.6	CuYd
462E0200	Controlled Density Fill	62.5	CuYd
470E0025	Cable Handrail	362.0	Ft
480E0100	Reinforcing Steel	75,597	Lb
600E0300	Type III Field Laboratory	1	Each
620E4100	Reset Fence	66	Ft
621E0160	6' Chain Link Fence with Tension Wired Top	10,145	Ft
621E0420	Single Vehicular Swing Gate	3	Each
628E1500	Concrete Barrier End Protection	1	Each
630E0110	Straight Double Class A Thrie Beam Guardrail with Wood Posts	75.0	Ft
630E1010	Straight Class A W Beam Guardrail with Wood Posts	1,187.5	Ft
630E1020	Curved Class A W Beam Guardrail with Wood Posts	77.0	Ft
630E1140	Straight Double Class A W Beam Guardrail with Wood Posts	2,237.5	Ft
630E2000	W Beam to Thrie Beam Guardrail Transition	6	Each
630E2020	W Beam Guardrail Tangent End Terminal	9	Each
630E2035	W Beam Guardrail Special Anchor Assembly	1	Each
630E2050	Beam Guardrail Trailing End Terminal	6	Each
632E2220	Guardrail Delineator	86	Each
650E0060	Type B66 Concrete Curb and Gutter	9,450	Ft
* 650E0060	Type B66 Concrete Curb and Gutter	56	Ft
650E0090	Type B69 Concrete Curb and Gutter	2,525	Ft
650E0360	Type BL66 Concrete Curb and Gutter	627	Ft
650E1060	Type F66 Concrete Curb and Gutter	8,690	Ft
650E1090	Type F69 Concrete Curb and Gutter	596	Ft
650E1110	Type F611 Concrete Curb and Gutter	4,428	Ft
650E4360	Type D46 Concrete Curb and Gutter	1,369	Ft
650E4390	Type D49 Concrete Curb and Gutter	454	Ft
650E4410	Type D411 Concrete Curb and Gutter	919	Ft

Bid Item Number	Item	Quantity	Unit
650E4460	Type DL46 Concrete Curb and Gutter	67	Ft
650E4660	Type P6 Concrete Gutter	520	Ft
650E4690	Type P9 Concrete Gutter	690	Ft
650E4710	Type P11 Concrete Gutter	300	Ft
651E0040	4" Concrete Sidewalk	15,552	SqFt
651E0050	5" Concrete Sidewalk	24,631	SqFt
651E0060	6" Concrete Sidewalk	2,697	SqFt
651E0140	4" Reinforced Concrete Sidewalk	234	SqFt
651E0150	5" Reinforced Concrete Sidewalk	101	SqFt
651E0540	4" Colored Concrete Sidewalk	3,330	SqFt
651E0550	5" Colored Concrete Sidewalk	964	SqFt
651E7000	Type 1 Detectable Warnings	543	SqFt
670E1200	Type B Frame and Grate Assembly	76	Each
670E2200	Type C Frame and Grate	1	Each
670E3200	Type D Frame and Grate	15	Each
670E5200	Special Frame and Grate Assembly	28	Each
670E5340	4' x 11' Precast Concrete Type S Drop Inlet Lid	18	Each
670E5342	4' x 6' Precast Concrete Type S Drop Inlet Lid	1	Each
670E5400	Precast Drop Inlet Collar	120	Each
671E0550	Special Manhole	1	Each
671E4048	48" Manhole Riser Section	3.0	Ft
671E4548	48" Manhole Cone Section	12.0	Ft
671E6009	Type A9 Manhole Frame and Lid	10	Each
680E0440	4" Slotted Corrugated Polyethylene Drainage Tubing	1,632	Ft
680E2500	Porous Backfill	53.0	Ton
700E0110	Class A Riprap	410.0	Ton
700E0310	Class C Riprap	2,068.0	Ton
831E0110	Type B Drainage Fabric	1,949	SqYd
831E0210	Non-woven Geotextile Separator	7,760	SqYd
831E0300	MSE Geotextile Fabric	6,920	SqYd
831E1010	Geogrid Reinforcement	990	SqYd
900E0010	Refurbish Single Mailbox	5	Each

* - Denotes Non-Participating

REGISTERED PROFESSIONAL ENGINEER
REG. NO. 8328
JODY W. PAGE
SOUTH DAKOTA
9 JUL 15

FOUNDATION PREPARATION FOR LARGE DIAMETER STORM SEWER, CONTINUED

An estimated quantity of 3,480 tons of Aggregate Base Course, 882 feet of 4" diameter slotted corrugated polyethylene tubing, and 53 tons of porous backfill will be required for the special undercut. The 4" diameter slotted corrugated polyethylene tubing and all materials, fittings, and incidentals required to install the underdrain shall be incidental to the contract unit price for 4" Slotted Corrugated Polyethylene Drainage Tubing.

Station	Undercut Depth (Ft)	Undercut Quantity (CuYd)	Geogrid (SqYd)	Granular Material (ton)	Under-drain (Ft)
Large Diameter Storm Pipe					
496+89 to 500+68	1	190		761	
500+68 to 504+00	2	318		667	
504+00 to 509+50	3	790	990	1,104	332
509+50 to 512+17	1	128		536	550
512+17 to 514.22	1	94		412	
	Total:	**1,520**	**990**	**3,480**	**882**

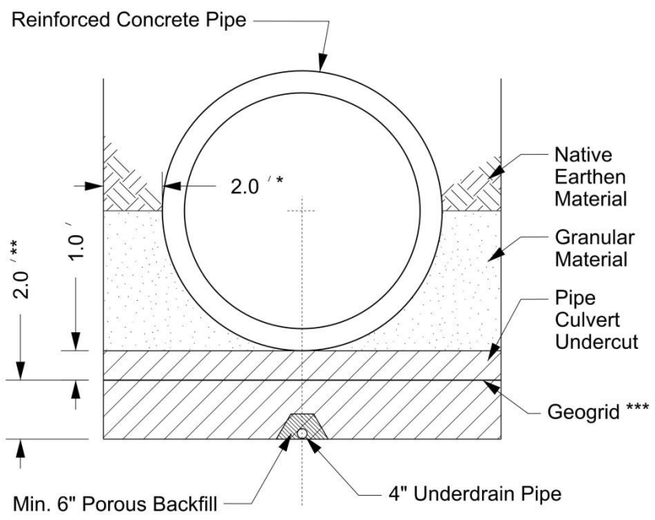

* At lateral pipe connections extend pipe culvert undercut and granular material a distance of one pipe length along the lateral pipe.

** 0.0' from Sta 496+89 to Sta 500+68; transition from 0.0' at Sta 500+68 to 2.0' at Sta 504+00.

*** Geogrid installed from Sta 504+00 to Sta 509+50

Undercut Detail for 84", 90", and 96" RCP

INCIDENTAL WORK, GRADING

Station	Remarks
West Blvd	
11+41-136 L	Remove Concrete Fdn. (81 SqYd)
11+44-191 L	Remove Concrete Fdn. (126 SqYd)
18+42-114 L	Remove Mailbox
19+86-29 L to 20+28-76 L	Remove Retaining Wall (63 Ft)
20+36-45 L to 20+42-53 L	Remove & Reset Block Wall
20+38-46 L to 20+93-37 L	Remove Retaining Wall (95 Ft)
20+76-2 L to 21+31-20 L	Remove Retaining Wall (92 Ft)
I-190 Mainline	
104+76-194 L	Remove Concrete Fdn. (24 SqYd)
104+82-148 L	Remove Concrete Fdn. (355 SqYd)
106+41 L	Remove Mailbox
106+87-120 L	Remove Concrete Fdn. (298 SqYd)
107+25 L	Remove Mailbox
107+39-183 L	Remove Concrete Fdn. (117 SqYd)
108+28 L	Remove Mailbox
108+41-92 L	Remove Concrete Fdn. (233 SqYd)
110+07-224 L	Remove Concrete Fdn. (117 SqYd)
110+13-157 L	Remove Concrete Fdn. (43 Ft)
110+57-224 L	Remove Concrete Fdn. (12 SqYd)
111+08-119 L	Remove Concrete Fdn. (25 SqYd)
111+11-137 L	Remove Concrete Fdn. (13 SqYd)
111+19-144 L to 111+76-1 R	Remove Retaining Wall (196 Ft)
111+48-122 L	Remove Concrete Fdn. (93 SqYd)
112+36-10 R to 113+07-20 R	Remove Retaining Wall (65 Ft)
112+84-64 L	Remove Concrete Fdn. (38 SqYd)
113+55-37 L	Remove Concrete Fdn. (38 Ft)
113+56-58 L	Remove Concrete Fdn. (33 SqYd)
113+74-92 L	Remove Concrete Fdn. (40 SqYd)
113+97-44 L	Remove Concrete Fdn. (32 SqYd)
114+37-106 L	Remove Concrete Fdn. (68 Ft)
114+85-89 L	Remove Concrete Fdn. (90 Ft)
114+90-17 L	Remove Concrete Fdn. (29 SqYd)
114+98-157 L to 115+34-111 L	Remove Retaining Wall (58 Ft)
115+02-77 L	Remove Concrete Fdn. (32 SqYd)
115+12-48 L	Remove Concrete Fdn. (9 SqYd)
115+16-134 L	Remove Concrete Fdn. (57 Ft)
115+68-146 L	Remove Concrete Fdn. (41 SqYd)
115+70-105 L	Remove Concrete Fdn. (41 Ft)
115+95-189 L	Remove Concrete Fdn. (3 SqYd)
116+36-191 L	Remove Concrete Fdn. (36 SqYd)
116+55-198 L	Remove Concrete Fdn. (5 SqYd)
116+55-119 L	Remove Concrete Fdn. (3 SqYd)
116+63-251 L	Remove Concrete Fdn. (29 Ft)
117+54-256 L	Remove Concrete Fdn. (200 SqYd)
117+64-57 L	Clear Shrubs (117 SqYd)
118+51-70 L	Clear Shrubs (280 SqYd)
119+71-75 L	Clear Shrubs (319 SqYd)
120+77-67 L	Remove 18" End Section
120+77-67 L	Temporary Drainage Connection
121+60-120 L	Clear Shrubs (2003 SqYd)
126+34-56 L	Clear Shrubs (135 SqYd)
126+85-77 R	Clear Shrubs (127 SqYd)
127+29-66 L	Clear Shrubs (127 SqYd)
128+03-75 R	Clear Shrubs (79 SqYd)
130+14-66 R	Clear Shrubs (80 SqYd)
130+16-252 L	Remove 24" End Section
130+92-67 L	Clear Shrubs (51 SqYd)
131+90-72 R	Clear Shrubs (99 SqYd)
132+59-67 L	Clear Shrubs (135 SqYd)
133+34-77 R	Clear Shrubs (159 SqYd)
136+05-81 L	Clear Shrubs (202 SqYd)
137+09-77 L	Clear Shrubs (366 SqYd)
137+79-73 R	Clear Shrubs (248 SqYd)
140+43-74 L	Clear Shrubs (328 SqYd)
140+95-90 R	Clear Shrubs (320 SqYd)
141+51-72 L	Clear Shrubs (164 SqYd)
144+57-92 L to 144+88-79 L	Remove Concrete Apron
144+74-65 L	Remove 24" End Section
146+55-70 R	Remove 24" End Section
North Street	
224+50-48 L to 224+62-54 L	Remove Landscaping

Remove Concrete Foundation

A number of house and garage structures have been removed or relocated prior to the project. The Contractor will be required to remove the remaining foundations, generally consisting of concrete slab on-grade foundations. Any below-grade concrete foundations shall be removed along with any miscellaneous concrete and rubble adjacent to the structures. The Contractor is advised to visit the site to properly gage the level of effort that will be required to remove the old foundations. The plan area of slab on-grade foundations is indicated in the table in Square Yards. Foundations that are below grade with footings are described in Feet.

Special care shall be taken when removing the below-grade foundation at West Boulevard Station 11+44-191 L. This foundation lies in close proximity to a newly relocated structure. The section of foundation lying within the temporary easement area shall be sawn and removed to a depth of 1 foot (minimum) below finished grade. The remaining portion of foundation lying within the permanent easement and right-of-way shall be removed.

Remove Retaining Wall

All concrete block retaining walls lying within the project limits shall be removed unless otherwise noted.

INCIDENTAL WORK, GRADING, CONTINUED

Parcel 23 – Sta 19+86-29 L to 20+28-76 L
An existing retaining wall and chain link fence adjacent to the alley shall be removed in its entirety along the back lot line. The retaining wall is constructed of concrete cylinders and mortar. The vegetation around the wall and fence shall be removed and trimmed as necessary in order to access the wall. The disturbed area from which the wall was removed shall be left in a neat, workmanlike condition and seeded to grass. Prior to removing the wall, the Contractor shall furnish and install a temporary 4' high chain link fence along the entire length of the backyard so as to retain the landowner's pets. The temporary fence shall remain in place until grading is complete and the homeowner installs a permanent fence.

Parcel 30 – Sta 22+25-49 L to 22+64-83 L
A large existing tree is to be removed at Sta 22+15-50 L, which will be paid for separately at the contract unit price per each for Clear and Grub Tree. The Contractor is allowed to remove the easterly 12' of the concrete block retaining wall if necessary to accommodate the tree removal. Removal and disposal of the wall will be paid for at the contract unit price for Incidental Work, Grading. Any damage to the wall beyond the easterly 12' will be repaired or replaced as necessary at the Contractor's expense.

Shotrock Subgrade Stabilization Material
I-190 traverses a spring area near Anamosa Street. Three feet of undercut is required from Station 130+00± to Station 149+50± to excavate unstable and possibly saturated subgrade material as part of the I-190 resurfacing. An unknown thickness of shot rock was used to stabilize the subgrade as part of a past surfacing project in the vicinity of Anamosa Street. All shot rock encountered within the subgrade shall be excavated and wasted as part of the proposed undercut. The exact depth and length of shot rock stabilized subgrade is unknown. The additional effort required to excavate and remove the shot rock shall be incidental to the contract unit price for Incidental Work, Grading.

Existing Underdrain Systems
The proposed undercut and resurfacing will eliminate the existing underdrain and edgedrain systems installed to mitigate known springs near the Anamosa Bridge Crossing. The existing edgedrain system consists of 12" stripdrains installed along the exterior and interior shoulders from Station 130+20± to Station 145+20±. The outside edgedrains outlet into the existing drop inlets at Station 130+20± and Station 138+10±, Lt. & Rt. The median edgedrains outlet into the existing median drop inlets at Station 130+20± and 134+20±, Lt. & Rt.
Underlying plans indicate two underdrain systems parallel I-190 from Station 130+20± to Station 143+20±, 36' Rt. and Station 130+20± to Station 143+70±, 36' Lt. The exact configuration of the underdrains is unknown but is believed to consist of 4-6" Polyethylene Drainage Tubing placed in a trench of variable depth and width backfilled with porous backfill.
A third underdrain system was installed approximately 1 foot behind the existing curb from Station 138+10± to Station 140+20±, Lt. & Rt. The underdrains outlet into the drop inlets at 138+10±, Lt. & Rt. Both underdrains consist of 6" Polyethylene Drainage Tubing placed in 1 foot deep by 2 ½ foot deep trench backfilled with porous backfill.
All existing underdrain systems shall be excavated and eliminated to prevent collection of water in abandoned tubing and/or porous backfilled trenches. All excavated drainage tubing shall be disposed of by the contractor. All labor, materials, equipment, and incidentals necessary to remove the existing underdrain system shall be incidental to the contract unit price for Incidental Work, Grading.

Lawn Irrigation System
A city owned lawn irrigation system exists within the I-190 corridor. The exact location and extent of the irrigation distribution pipe is not known. The irrigation system has been inactive for several years. The existing irrigation system has been capped. Removal of irrigation tubing, fittings, and equipment may be necessary to complete the work described in these plans. A concrete vault with metal housing is located at 177+66-183 R. The vault, housing, equipment, and piping shall be removed as necessary to complete grading operations. All material that is removed shall become the property of the Contractor to dispose of at an approved waste site. All labor, materials, equipment, and incidentals necessary to remove the existing irrigation system as needed shall be incidental to the contract unit price for Incidental Work, Grading.

Temporary Drainage Connection
A temporary drainage connection will be required for the 18" RCP culvert that discharges to the I-190 ditch at 120+77-67'L. The temporary connection will remain in place during Phase 1A. Approximately 30 Ft of 18" RCP, Class 3, shall be installed between the existing culvert and the 60" RCP Arch storm sewer on the west side of the SB Exit Ramp. The connection to the existing 60" RCP Arch shall be made by creating an opening in the pipe wall, inserting the temporary 18" RCP, and forming a concrete collar around the connection. An 18" RCP bend or concrete collar will also be required at the connection to the existing 18" RCP. Additional temporary drainage connections between new and existing storm sewer will be required at locations shown in the Storm Sewer Construction Sequencing Layout provided in Section C. All costs for furnishing, installing, removal, labor, materials, and incidentals for the temporary drainage connections shall be incidental to the contract unit price for Incidental Work, Grading.

There may also be instances where temporary drainage facilities are necessary to accommodate the Contractor's schedule. All materials, labor, and incidentals required to install, maintain and remove temporary drainage facilities to accommodate the Contractor's sequencing schedule shall be incidental to the contract unit price for Incidental Work, Grading. All temporary drainage plans shall be submitted to the Engineer at least 2 weeks prior to installation.

Salvaged Items
The metal frames with grates and lids that are being removed with drop inlets and manhole structures on the project shall be salvaged. These items shall be carefully removed, hauled, and delivered to the location identified in the "Salvaged Items" note below. Payment for this work shall be incidental to the contract unit price for Incidental Work, Grading.

The existing CAT-350 Crash Attenuator located at Sta 110+98-85 R shall be salvaged. All associated guardrail, posts, terminals, transitions, and hardware shall be carefully removed, hauled, and neatly stacked at the location identified in "Salvaged Items" note below. Payment for this work shall be incidental to the contract unit price for Incidental Work, Grading.

REMOVE BUILDINGS

There are two structures located on Parcel 22 at Station 20+67-37'L and 21+45-42'L, also known as 725 and 727 Gold Street. The structures shall be demolished and all debris removed from the site. Any basements, wells, cisterns, or holes shall be broken up and removed to 1 foot below finished ground. Basements, wells, cisterns, and holes shall be filled and the site shall be graded to properly drain. All site improvements such as landscaping, retaining walls, fencing, sheds, sidewalks, driveways, and concrete floors located on the property shall be removed. Vegetation shall be re-established as described in Section D of the plans. All work associated with demolishing and removing the structures, removing and filling below-grade features, removal of miscellaneous site improvements, and final grading of the site shall be incidental to the contract lump sum price for Remove Building(s). Any required coordination with local utility providers for disconnection and closure of public or private utilities shall be incidental to the contract lump sum price for Remove Building(s).

These buildings shall be removed in accordance with Section 110 of the Specifications and all local codes. The buildings have been inspected for asbestos and were found to have regulated amounts of asbestos containing materials. The Contractor is required to remove the asbestos containing materials in accordance with applicable State and Federal Regulations. The following materials were found to contain regulated amounts of asbestos at 725 Gold Street: 9"x9" floor tile & mastic, furnace paper, and plaster. The following materials were found to contain regulated amounts of asbestos at 727 Gold Street: vinyl flooring, 9"x9" floor tile, and transite siding. A copy of the inspection report is available for review at the Rapid City Region Office or the Rapid City Area Office.

SALVAGED ITEMS

All salvaged items noted on the plans shall be salvaged for future highway use and hauled to the Department of Transportation's South Maintenance Yard on South Highway 79 in Rapid City as directed by the Engineer. Care shall be taken not to damage the structural properties of the items during dismantling and transporting. All broken concrete and materials not salvaged shall be disposed of in accordance with the Specifications. All costs for salvaging and transporting the items shall be incidental to the contract lump sum price for "Incidental Work, Grading". Before preparing his/her bid, the Contractor shall make a visual inspection of the project to verify the extent of the work and material involved.

REMOVAL OF EXISTING CONCRETE PAVEMENT
STA. 100+20.00 to STA. 155+33.00

Existing asphalt concrete and/or existing asphalt concrete patch work that was placed above the existing concrete pavement is included in the quantity for "Remove Concrete Pavement". The Contractor shall dispose of the concrete pavement and asphalt concrete at a site approved by the Engineer. The existing 9 inch P.C.C. Pavement is typically 24 feet wide and is reinforced with welded wire fabric. The welded wire fabric weighs not less than 60 pounds per 100 square feet. The longitudinal wires are No. 1 gauge and are spaced 6 inches center to center and the transverse wires are No. 4 gauge and are spaced 12 inches center to center. The existing pavement on North Street is 7" Non Reinforced PCC pavement.

REGISTERED PROFESSIONAL ENGINEER
REG. NO. 8328
JODY W. PAGE
SOUTH DAKOTA
24 JUN 15

Revised June 9, 2015 PW
Revised July 9, 2015 PW

SECTION E - ESTIMATE OF STRUCTURE QUANTITIES

IM 1902(61)0
Str. No. 52-409-294
208' - 7" Composite Steel Girder Bridge

Bid Item Number	Item	Quantity	Unit
009E3310	Bridge Elevation Survey	Lump Sum	LS
009E5000	Concrete Penetrating Sealer	1,891.0	SqYd
250E0030	Incidental Work, Structure	Lump Sum	LS
260E1010	Base Course	5,123.0	Ton
410E0020	Structural Steel	Lump Sum	LS
410E2600	Membrane Sealant Expansion Joint	171.8	Ft
411E0100	Bridge Painting	Lump Sum	LS
430E0300	Granular Bridge End Backfill	204.0	CuYd
460E0030	Class A45 Concrete, Bridge Deck	513.7	CuYd
460E0050	Class A45 Concrete, Bridge	211.5	CuYd
460E0150	Concrete Approach Slab for Bridge	515.4	SqYd
460E0160	Concrete Approach Sleeper Slab for Bridge	138.4	SqYd
460E0380	Install Dowel in Concrete	18	Each
480E0100	Reinforcing Steel	16,486	Lb
480E0507	No. 7 Rebar Splice	224	Each
510E3531	HP 14x89 Steel Test Pile, Furnish and Drive	126	Ft
510E3535	HP 14x89 Steel Bearing Pile, Furnish and Drive	2,477	Ft
734E2020	Bridge Berm Slope Protection, Crushed Aggregate	168.0	SqYd
831E1010	Geogrid Reinforcement	4,271	SqYd

IM 1902(61)0
Str. No. 52-409-294
208' - 7" Composite Steel Girder Bridge
Alternate A

Bid Item Number	Item	Quantity	Unit
480E0300	Stainless Reinforcing Steel	98,807	Lb

IM 1902(61)0
Str. No. 52-409-294
208' - 7" Composite Steel Girder Bridge
Alternate B

Bid Item Number	Item	Quantity	Unit
480E0250	Zinc and Epoxy Dual-Coated Reinforcing Steel	98,807	Lb

IM 1902(61)0
Retaining Walls

Bid Item Number	Item	Quantity	Unit
120E7052	Granular Material for Reinforced Embankment	3,950.0	Ton
230E0020	Placing Contractor Furnished Topsoil	290	CuYd
420E0300	Structure Excavation, Retaining Wall	12,665	CuYd
421E1000	Footing Undercut	985	CuYd
530E0310	Special Type C Concrete Retaining Wall	1,619	SqFt
530E0360	1.5' x 1.5' Welded Wire Form	3,640.0	Ft
530E0420	MSE Large Panel Wall, Furnish	20,261	SqFt
530E0422	MSE Large Panel Wall, Install	20,261	SqFt
530E0602	Soil Nail	8,410.0	Ft
530E0603	Soil Nail Verification Test	2	Each
530E0702	Granular Backfill for MSE Large Panel Wall	17,252.0	CuYd
530E2010	Shotcrete Flashcoat/Leveling Course	140.0	CuYd
530E2020	Reinforced Shotcrete Face	6,040	SqFt
734E0103	Type 3 Erosion Control Blanket	3,110	SqYd
831E1010	Geogrid Reinforcement	3,151	SqYd
831E2010	Slope Reinforcement Geogrid	7,300	SqYd
900E2030	Miscellaneous Work	1	Site

IM 1902(61)0
Median Barrier

Bid Item Number	Item	Quantity	Unit
410E0030	Structural Steel, Miscellaneous	Lump Sum	LS
460E0100	Class A45 Concrete, Miscellaneous	152.9	CuYd
462E0100	Class M6 Concrete	57.9	CuYd
480E0100	Reinforcing Steel	11,671	Lb
480E0200	Epoxy Coated Reinforcing Steel	29,269	Lb
628E1000	Straight Concrete Barrier	2,793	Ft
628E1010	Curved Concrete Barrier	536	Ft
628E1100	Movable F Shape Concrete Barrier, Interior Section	3	Each
628E1300	Straight Glare Screen for Concrete Barrier	2,793	Ft
628E1310	Curved Glare Screen for Concrete Barrier	536	Ft
634E0700	Traffic Control Movable Concrete Barrier	35	Each
634E0775	Temporary Concrete Barrier Glare Screen	458	Ft
670E4325	Barrier Drop Inlet Double Unit Frame and Grate Assembly	26	Each

Revised July 9, 2015 PW Revised May 27, 2015 PW

ESTIMATE OF STRUCTURE QUANTITIES

DESCRIPTION	QUANTITY	UNIT	REMARKS
Straight Concrete Barrier	2,793	Ft	
Curved Concrete Barrier	536	Ft	
Straight Glare Screen for Concrete Barrier	2,793	Ft	
Curved Glare Screen for Concrete Barrier	536	Ft	
Class A45 Concrete, Miscellaneous	152.9	C.Y.	
Class M6 Concrete	57.9	C.Y.	
Epoxy Coated Reinforcing Steel	29,269	LB	
Reinforcing Steel	11,671	LB	
Structural Steel, Miscellaneous	Lump Sum	L.S.	
Traffic Control Movable Concrete Barrier	35	Ea.	
Movable F Shape Concrete Barrier, Interior Section	3	Ea.	
Temporary Concrete Barrier Glare Screen	458	Ft	
Barrier Drop Inlet Double Unit Frame and Grate Assembly	26	Ea.	

SPECIFICATIONS FOR BRIDGE

1. Design Specifications: AASHTO LRFD Bridge Design Specifications, 2014.

2. Construction Specifications: South Dakota Standard Specifications for Roads and Bridges, 2004 Edition and required provisions, supplemental specifications and special provisions as included in the proposal.

DESIGN MATERIAL STRENGTHS

Class A45 Concrete	f'c = 4,500 psi
Class M6 Concrete	f'c = 4,000 psi
Reinforcing Steel	fy = 60,000 psi

DESIGN MIX OF CONCRETE

1. All concrete shall be Class A45, except concrete in the Concrete Barrier Drop Inlet – Double shall be Class M6.

2. Type II cement is required.

3. Mix shall be designed to produce a concrete having a minimum 28 day compressive strength of 4,500 psi for Class A45 and 4,000 psi for Class M6.

4. Coarse aggregate to be used in concrete shall consist of either crushed quartzite or other crushed ledge rock. If crushed ledge rock other than quartzite is to be used, it shall be from a source approved by the Engineer.

GENERAL CONSTRUCTION

1. All mild reinforcing steel shall conform to ASTM A615, Grade 60.

2. All exposed concrete corners and edges shall be chamfered 3/4" unless noted otherwise.

3. Use 1" clear cover on all reinforcing steel except as shown.

4. Median barrier and glare screen shall be built normal to the grade.

5. Structural steel shall conform to AASHTO M183 and shall be coal tar epoxy coated.

6. All welding and weld inspection shall be done in accordance with the current edition of the ANSI/AASHTO/AWS D1.5 Bridge Welding code.

7. 8 – 5/8" dia. x 5 ½" or 6" long type 303 stainless steel wedge anchors with stainless steel nuts and washers are required for each barrier drop inlet. Stainless steel wedge anchors shall be Wej-it or Red Head brand or approved equal. Low Modulus Silicon Joint Sealer shall be used to seal around the wedge anchors after installation.

8. 4 – ½" dia. x 2" stainless steel A307 bolts with hex head nuts and 2 circular washers/bolt are required for each barrier drop inlet.

CONCRETE MEDIAN BARRIER AND GLARE SCREEN

1. The Concrete Median Barrier may be cast-in-place by using stationary forms, slipforming or a combination of the two construction methods. The glare screen shall be constructed using stationary forms only. See notes for STATIONARY FORM CONSTRUCTION or SLIPFORM CONSTRUCTION.

2. Payment for Straight Concrete Barrier, Curved Concrete Barrier, Straight Glare Screen for Concrete Barrier, and Curved Glare Screen for Concrete Barrier shall be full compensation for all materials, labor, equipment and incidentals necessary to satisfactorily complete the work required.

CONTRACTION JOINTS

1. Contraction joints are required at spacing of 30 ft. (maximum). Match joints in adjacent concrete pavement. Joints are required in both the concrete barrier and the concrete glare screen.

2. The contraction joints may be either sawed or formed. If sawed, the concrete must have reached a strength of 2,000 psi prior to sawing.

3. End of day joints or construction joints shall be roughened to provide aggregate interlock and shall have 24" of resteel extending beyond the joint to provide a 21" lap. These joints shall be located at a pavement joint or contraction joint location.

INSTALLING DOWELS IN CONCRETE

1. Holes drilled in the existing concrete shall be true and normal or as shown in the plans. Concrete shall have attained a strength of 2,000 psi before drilling dowel holes.

2. The epoxy resin mixture shall be of a type for bonding steel to hardened concrete and shall conform to AASHTO M235 Type IV, Grade 3 (Equivalent to ASTM C881, Type IV, Grade 3).

3. The diameter of the drilled holes shall not be less than 1/8 inch greater nor more than 3/8 inch greater than the diameter of the dowels or as per the Manufacturer's recommendations. Use compressed air or other techniques to ensure that the hole is free of any loose material before epoxy resin is applied.

4. Mix epoxy resin as recommended by the Manufacturer and apply by an injection method as approved by the Engineer. Beginning at the bottom/back of the drilled holes, fill the holes 1/3 to 1/2 full of epoxy, or as recommended by the Manufacturer, prior to insertion of the steel bar. Holes shall not be drilled using core bits. The drilled holes shall be blown out with compressed air using a device that will reach the back of the hole to ensure that all debris or loose material has been removed prior to epoxy injection. Rotate the steel bar during installation to eliminate voids and ensure complete bonding of the bar. Insertion of the bars by the dipping or painting method will not be allowed.

5. No loads shall be applied to the epoxy grouted dowel bars until the epoxy resin has had sufficient time to cure as specified by the epoxy resin manufacturer.

6. Include the cost of epoxy resin, dowels, installation and other incidental items in the contract unit price per foot for Straight Glare Screen for Concrete Barrier or Curved Glare Screen for Concrete Barrier, as applicable.

STATIONARY FORM CONSTRUCTION

1. Forms shall be maintained in a true position during the placement of concrete. External bracing for aligning and holding of the forms shall be required unless other methods are approved by the Engineer.

2. Snap ties, if used in concrete median barrier or glare screen formwork, shall be epoxy coated. The epoxy coating shall be inert in concrete and compatible with the coating applied to the new epoxy coated reinforcing steel.

3. Chords up to 20 ft. long may be used to accomplish horizontal curvature in lieu of using curved forms.

TRAFFIC CONTROL MOVABLE CONCRETE BARRIER

The Traffic Control Movable Concrete Barriers will be available for pickup at the SDDOT South Maintenance Yard at 5801 South Highway 79 in Rapid City, SD. Coordinate pickup with Maintenance Supervisor, Bob Smith (605) 394-1646.

ESTIMATE OF STRUCTURE QUANTITIES AND NOTES

FOR

CONCRETE MEDIAN BARRIER
& CONCRETE GLARE SCREEN

DECEMBER 2014

DESIGNED BY	CK. DES. BY	DRAFTED BY	
PW	BB	BT	Kevin N. Goeden
PENN1162	1162TA02		BRIDGE ENGINEER

STATE OF	PROJECT	SHEET NO.	TOTAL SHEETS
S.D.	IM 1902(61)0	E72	E74

Revised July 9, 2015 PW

REINFORCING SCHEDULE

	Mk.	No.	Size	Length	Type
H = 3'- 0"	h1	26	4	4' - 4"	17A
	k1	44	5	4' - 11"	17A
	m1	7	6	6' - 9"	Str.
	m2	9	6	5' - 9"	Str.
	p1	10	4	5' - 0"	Str.
	p2	11	4	4' - 0"	Str.
	q1	12	4	3' - 6"	17A
H = 3'- 6"	h2	26	4	4' - 10"	17A
	k2	44	5	5' - 5"	17A
	m1	7	6	6' - 9"	Str.
	m2	9	6	5' - 9"	Str.
	p1	16	4	5' - 0"	Str.
	p2	17	4	4' - 0"	Str.
	q1	12	4	3' - 6"	17A
H = 4'- 0"	h3	26	4	5' - 4"	17A
	k3	44	5	5' - 11"	17A
	m1	7	6	6' - 9"	Str.
	m2	9	6	5' - 9"	Str.
	p1	20	4	5' - 0"	Str.
	p2	21	4	4' - 0"	Str.
	q1	12	4	3' - 6"	17A
H = 4'- 6"	h4	26	4	5' - 10"	17A
	k4	44	5	6' - 5"	17A
	m1	7	6	6' - 9"	Str.
	m2	9	6	5' - 9"	Str.
	p1	20	4	5' - 0"	Str.
	p2	21	4	4' - 0"	Str.
	q1	12	4	3' - 6"	17A
H = 5'- 0"	h5	26	4	6' - 4"	17A
	k5	44	5	6' - 11"	17A
	m1	7	6	6' - 9"	Str.
	m2	9	6	5' - 9"	Str.
	p1	20	4	5' - 0"	Str.
	p2	21	4	4' - 0"	Str.
	q1	12	4	3' - 6"	17A
H = 5'- 6"	h6	26	4	6' - 10"	17A
	k6	44	5	7' - 5"	17A
	m1	7	6	6' - 9"	Str.
	m2	9	6	5' - 9"	Str.
	p1	24	4	5' - 0"	Str.
	p2	25	4	4' - 0"	Str.
	q1	16	4	3' - 6"	17A
H = 6'- 0"	h7	26	4	7'- 4"	17A
	k7	44	5	7'- 11 "	17A
	m1	7	6	6' - 9"	Str.
	m2	9	6	5' - 9"	Str.
	p1	24	4	5' - 0"	Str.
	p2	25	4	4' - 0"	Str.
	q1	16	4	3' - 6"	17A
H = 6'- 6"	h8	26	4	7' - 10"	17A
	k8	44	5	8' - 5"	17A
	m1	7	6	6' - 9"	Str.
	m2	9	6	5' - 9"	Str.
	p1	24	4	5' - 0"	Str.
	p2	25	4	4' - 0"	Str.
	q1	16	4	3' - 6"	17A
H = 7'- 0"	h9	26	4	8' - 4"	17A
	k9	44	5	8' - 11"	17A
	m1	7	6	6' - 9"	Str.
	m2	9	6	5' - 9"	Str.
	p1	28	4	5' - 0"	Str.
	p2	29	4	4' - 0"	Str.
	q1	20	4	3' - 6"	17A

	Mk.	No.	Size	Length	Type
H = 7'- 6"	h10	26	4	8' - 10"	17A
	k10	44	5	9' - 5"	17A
	m1	7	6	6' - 9"	Str.
	m2	9	6	5' - 9"	Str.
	p1	28	4	5' - 0"	Str.
	p2	29	4	4' - 0"	Str.
	q1	20	4	3' - 6"	17A
H = 8'- 0"	h11	26	4	9' - 4"	17A
	k11	44	5	9' - 11"	17A
	m1	7	6	6' - 9"	Str.
	m2	9	6	5' - 9"	Str.
	p1	28	4	5' - 0"	Str.
	p2	29	4	4' - 0"	Str.
	q1	20	4	3' - 6"	17A
★	a1	11	5	7' - 6"	Str.
	e	9	4	4' - 9"	S11A
	e1	9	4	3' - 3"	17B

★ Epoxy Coated Reinforcement Steel (For one drop inlet)

Bending Details

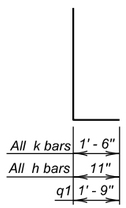

Type 17A

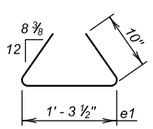

Type 17B

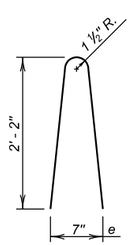

Type S11A

All dimensions are out to out of bars.

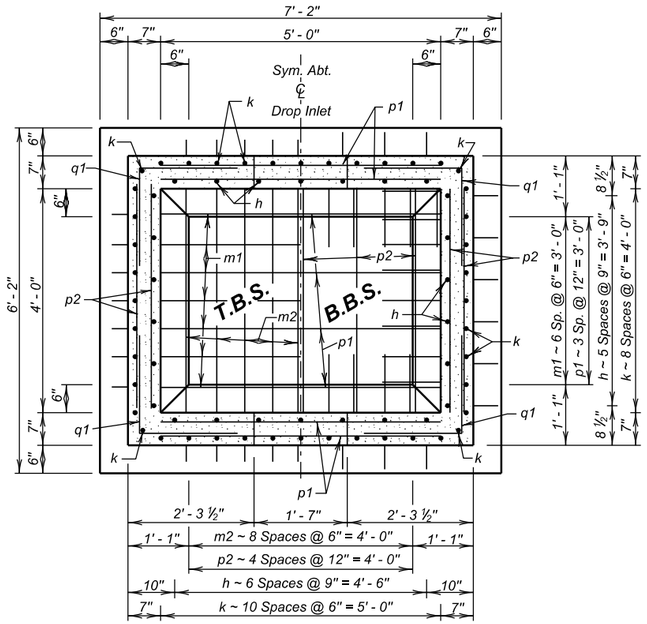

PLAN

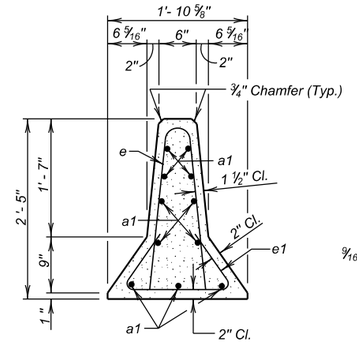

SEC. A - A

(Glare Section not Shown)

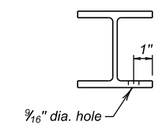

VIEW B - B

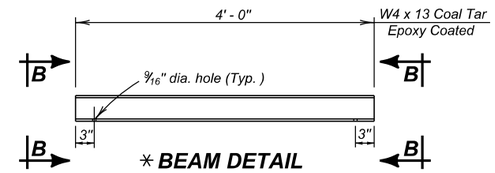

✳ BEAM DETAIL

NOTE -

For informational purposes only, the estimated quantities for Drop Inlet heights ("H") are given below.

"H"	Class "M6" Concrete	Re-steel
3 '- 0"	2.8 Cu. Yd.	540 Lb.
3' - 6"	3.0 Cu. Yd.	608 Lb.
4' - 0"	3.2 Cu. Yd.	664 Lb.
4' - 6"	3.4 Cu. Yd.	695 Lb.
5' - 0"	3.6 Cu. Yd.	727 Lb.
5' - 6"	3.9 Cu. Yd.	792 Lb.
6' - 0"	4.1 Cu. Yd.	824 Lb.
6' - 6"	4.3 Cu. Yd.	855 Lb.
7' - 0"	4.5 Cu. Yd.	920 Lb.
7' - 6"	4.8 Cu. Yd.	952 Lb.
8' - 0"	5.0 Cu. Yd.	984 Lb.

For informational purposes only, the estimated quantitiies for epoxy coated reinforcing steel and structural steel, misc. is 134 lbs. and 158 lbs. respectively; typical each drop inlet.

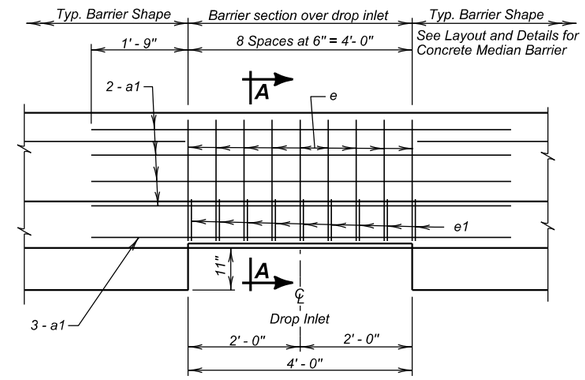

ELEVATION

CONCRETE BARRIER OVER DROP INLET

(Glare Section not Shown)

DROP INLET LOCATIONS

⊛Station	Class "M6" Concrete	Re-steel
121+54	4.1 Cu. Yd.	824 Lb.
125+14	4.5 Cu. Yd.	920 Lb.
126+99	4.5 Cu. Yd.	920 Lb.
128+50	4.5 Cu. Yd.	920 Lb.
130+24	5.0 Cu. Yd.	984 Lb.
131+96	5.0 Cu. Yd.	984 Lb.
134+22	5.0 Cu. Yd.	984 Lb.
136+12	4.5 Cu. Yd.	920 Lb.
138+11	4.1 Cu. Yd.	824 Lb.
140+21	3.6 Cu. Yd.	727 Lb.
142+46	4.5 Cu. Yd.	920 Lb.
144+73	4.1 Cu. Yd.	824 Lb.
148+24	4.5 Cu. Yd.	920 Lb.

⊛ Locations shown in SECTION B.

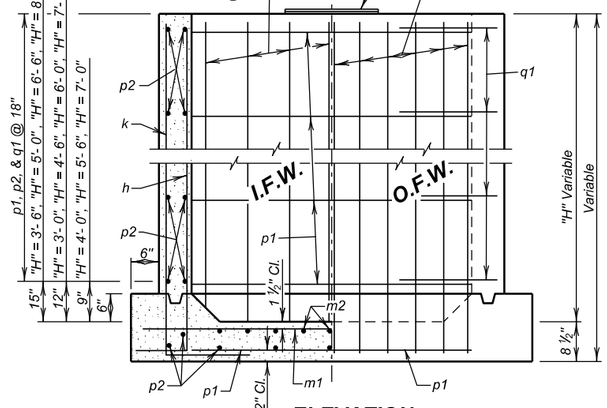

ELEVATION

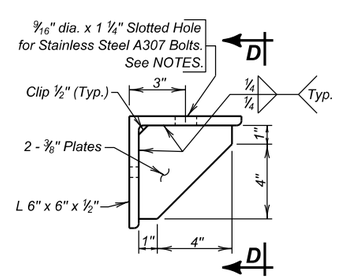

△ BEAM SEAT DETAIL

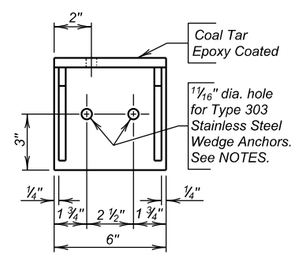

VIEW D - D

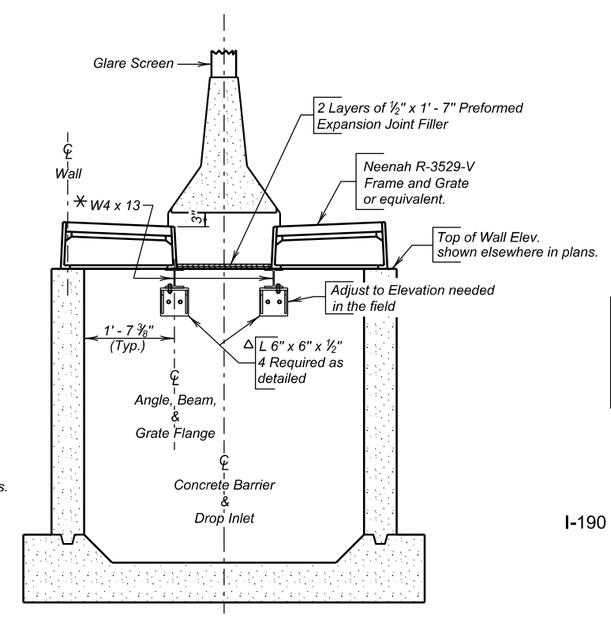

TYPICAL SECTION

ESTIMATED QUANTITIES

ITEM	UNIT	QUANTITY
Class M6 Concrete	Cu. Yd.	57.9
Reinforcing Steel	Lb.	11671
Epoxy Coated Reinforcing Steel	Lb.	1742
Structural Steel, Miscellaneous	L.S.	Lump Sum
Barrier Drop Inlet Double Unit Frame and Grate Assembly	Each	26

LEGEND FOR PLACING RE-STEEL

T.B.S. - Top of Bottom Slab
B.B.S. - Bottom of Bottom Slab
O.F.W. - Outside Face of Wall
I.F.W. - Inside Face of Wall

DETAILS FOR CONCRETE MEDIAN BARRIER DROP INLET - DOUBLE

I-190 IM 1902(61)0

PENNINGTON COUNTY

S. D. DEPT. OF TRANSPORTATION

DECEMBER 2014

DESIGNED BY	CK. DES. BY	DRAFTED BY	
PW	BB	BT	Kevin N. Goeden BRIDGE ENGINEER
PENN1162	1162TA06		

Revised 06-26-2015 LLA

SUMMARY OF CLASS Q5R HOT MIXED ASPHALT CONCRETE – ALTERNATE B

Location	Class Q5R Hot Mixed Asphalt Concrete with Specified Density Compaction	Class Q5R Hot Mixed Asphalt Concrete without Specified Density Compaction
	(Tons)	(Tons)
I-190 Mainline		
Sta. 100+20 to Sta. 112+56.04 SB	2,504.8	---
Sta. 100+20 to Sta. 112+56.04 NB	2,529.0	---
Sta. 115+20.10 to Sta. 120+00 SB	962.3	---
Sta. 115+20.10 to Sta. 120+00 NB	962.3	---
I-190 Ramps		
Ramp A	1,019.8	---
Ramp B	686.8	---
Ramp C	756.2	---
Ramp D	310.8	---
Ramp E	197.4	---
Ramp F	122.4	---
Ramp G	199.8	---
Ramp H	276.4	---
Streets, Parking Areas, Approaches and Driveways		
North Street	1,572.0	---
West Boulevard	1,964.2	---
West Boulevard North	1,016.2	---
Howard Johnson's Entrance & Parking	---	43.4
Central High School Parking	---	727.6
Entrance to Central HS	---	67.4
West Alley	---	142.4
Philadelphia Street	---	43.4
Silver Street	---	195.8
Boegel Street	---	156.6
Adams Street	---	102.0
West Blvd. – Sta. 130+52 L	---	70.2
West Blvd N – Sta. 130+38 R	---	11.2
West Blvd N – Sta. 142+67 R	---	17.4
West Blvd N – Sta. 144+65 L	---	18.6
Additional City Pavement Areas	---	58.8
Median Crossovers	---	214.9
Guardrail Embankment	---	183.3
Totals:	15,080.4	2,053.0

BASE COURSE, SALVAGED

The Base Course, Salvaged shall be obtained from the stockpile site(s) provided by the Contractor from the material salvaged on this project and may be used without further quality and gradation testing.

Base Course, Salvaged taken from stockpile sites other than from the shoulder and inslope sites, shall be run over a 1 1/2 inch screen prior to placement.

All other requirements for Base Course, Salvaged shall apply.

ALKALI SILICA REACTIVITY -
Fine aggregate shall conform to Section 800.2 D. Alkali Silica Reactivity (ASR) Requirements.

Below is a list of known fine aggregate sources and the average corresponding 14 day expansion values:

Source	Location	Expansion Value
Bachman	Winner, SD	0.335*
Bitterman	Delmont, SD	0.316*
Concrete Materials	Corson, SD	0.170
Croell	Hot Springs, SD	0.089
Croell	Wasta, SD	0.212
Emme Sand & Gravel	Oneil, NE	0.217
Fisher S&G – Mickelson Pit	E. of Nisland, SD	0.129
Fisher S&G - Vallery Pit	Nisland, SD	0.110
Fisher S&G	Rapid City, SD	0.092
Fisher S&G	Spearfish, SD	0.053
Fisher S&G	Wasta, SD	0.159
Fuchs	Pickstown, SD	0.275*
Higman	Akron, IA	0.203
Higman	Hudson, SD	0.187
Hilde	Madison, SD	0.116
Jensen	Herried, SD	0.276*
L.G. Everist	Brookings, SD	0.186
L.G. Everist	Hawarden, IA	0.166
L.G. Everist	Summit, SD	0.178
Morris	Blunt, SD	0.192
Morris - Richards Pit	Onida, SD	0.188
Myrl & Roys - East Sioux Quarry	NE Sioux Falls, SD	0.214
Myrl & Roys - Nelson Pit	Sioux Falls, SD	0.156
Northern Concrete Agg.	Rauville, SD	0.113
Northern Concrete Agg.	Luverne, MN	0.133
Opperman - Gunvordahl Pit	Burke, SD	0.362*
Opperman - Cahoy Pit	Herrick, SD	0.307*
Opperman - Jones Pit	Burke, SD	0.321*
Opperman - Randall Pit	Pickstown, SD	0.239
Pete Lien & Sons	Creston, SD	0.158
Pete Lien & Sons	Oral, SD	0.129
Pete Lien & Sons	Wasta, SD	0.192
Thorpe Pit	Britton, SD	0.098
Wagner Building Supplies	Pickstown (Wagner), SD	0.241
Winter Brothers- Whitehead Pit	Brookings, SD	0.197

* These sources will require Type V cement in the concrete mix design and Class F (Modified) fly ash as specified.

The Department will use the running average of the last three known expansion test results or less for determining acceptability of source and the required Type of cement. These expansion results are reported in the preceding table. Additional testing, when requested by the Contractor, will be performed by the Department at the Contractor's expense.

The values listed in the table are intended for use in bidding. If a previously tested pit by SDDOT with acceptable test values (less than 0.250) is discovered after letting to require Type V cement (greater than 0.250) the Department will accept financial responsibility for the change from Type II to Type V cement.

Type II or Type V cement will not change the requirement for the fly ash. The cost for either type of cement shall be subsidiary to the contract item.

GRAVEL CUSHION, MODIFIED

Gravel Cushion, Modified shall be furnished by the Contractor and/or may be produced from the material removed from the project per the plan note requirements.

If the asphalt concrete removed from the project is used, the Contractor shall establish a percentage (± 5% tolerance) for each material to be blended during production of the Gravel Cushion, Modified. The stockpile(s) shall be uniformly blended at a Contractor furnished site.

Gravel Cushion, Modified shall conform to the following gradation:

Sieve	Gravel Cushion Modified	Limestone Ledge Rock Gravel Cushion Modified
Passing 1"	100%	100%
Passing 3/4"	80-100%	80-100%
Passing 1/2"	68-91%	68-90%
Passing No. 4	46-70%	42-70%
Passing No. 8	34-58%	29-53%
Passing No. 40	13-35%	10-28%
Passing No. 200	3.0-12.0%	3.0-12.0%

All other requirements for Gravel Cushion shall apply.

8", 9" & 11" NONREINFORCED CONCRETE PAVEMENT

The fine aggregate shall be screened over a 1 inch square opening screen just prior to introduction into the concrete paving mix. The Contractor will screen all of the aggregate to prevent the incorporation of foreign materials (ie: mud balls) into the concrete mix.

Fine aggregate shall conform to Section 800.2 D., Alkali Silica Reactivity (ASR) Requirements, of the Specifications.

The transverse contraction joints shall be perpendicular to the centerline as detailed in the standard plates for PCC Pavement Dowel Bar Assembly for Transverse Contraction Joints and PCC Pavement Transverse Contraction Joint Spacing. In multilane areas the transverse contraction joints shall be perpendicular to the centerline and be in a straight line across the width of the pavement. In special situations the Engineer may pre-approve transverse contraction joints that do not meet these requirements. All nonconforming transverse contraction joints shall be removed at the Contractor's expense. Any method of placement that cannot produce these requirements shall not be allowed to continue.

There will be no direct payment for trimming of the Gravel Cushion, Modified. The trimming will be considered incidental to the related items required for PCC Pavement. Trimming shall be performed as required by Section 380.3 C. of the Specifications.

Automatic dowel bar inserters will not be allowed on this project.

A construction joint will be sawed whenever new concrete pavement is placed adjacent to existing concrete pavement.

Concrete used in Portland cement concrete pavement shall conform to the Special Provision for Contractor Furnished Mix Design for PCC Pavement.