Department of Transportation

Office of Project Development

700 E Broadway Avenue
Pierre, South Dakota 57501-2586 605/773-3268
FAX: 605/773-2614

August 25, 2015

ADDENDUM NO. 1

RE: Item #1, September 2, 2015 Letting - NH 0050(99)383, PCN 6926, Yankton County - Grading, PCC Pavement, Roadway Lighting, Storm Sewer, Curb & Gutter, Sidewalk, Traffic Signals, & Permanent Signing

TO WHOM IT MAY CONCERN:

The following addenda to the plans shall be inserted and made a part of your proposal for the referenced project.

SPECIAL PROVISIONS: NO CHANGE

BID ITEM FILE: *Bidders must log in to retrieve the addendum bid item file that must be loaded into the SDEBS to incorporate the revisions listed here.*

Bid Items were added:
Bid Item 633E1445 "Pavement Marking Paint, Arrow"
Bid Item 635E9021 "2/C#12 AWG Copper Wire"

Quantities for Bid Items were changed:
Bid Item 634E0640 "Temporary Pavement Marking" changed from 12,236 to 53,476 Ft

Bid Items were removed:
Bid Item 635E7600 "Maintenance of Traffic Signal(s)"

PLANS: Please destroy sheets 1, A1, A2, C2, C15, C16, C18, C20, C21, L2, L8-L12, L18, L33-L36, and M2 and replace with the enclosed sheets, dated 8/7/15, 8/21/15, and 8/24/15.

Sheet 1: Project number was revised.

Sheet A1: Traffic Control – Section C:
Bid Items were removed:
Bid Item 635E7600 "Maintenance of Traffic Signal(s)"

Sheet A2: Signal and Lighting – Section L:
Bid Items were added:
Bid Item 635E9021 "2/C#12 AWG Copper Wire"

Pavement Marking – Section M:
Bid Items were added:
Bid Item 633E1445 "Pavement Marking Paint, Arrow"

Quantities for Bid Items were changed:
Bid Item 634E0640 “Temporary Pavement Marking” changed from 1,750 to 42,990 Ft

Sheet C2: SECTION C-ESTIMATE OF QUANTITIES:
Bid Items were removed:
Bid Item 635E7600 “Maintenance of Traffic Signal(s)”

Sheet C15: SHORT TERM TEMPORARY TRAFFIC SIGNAL SYSTEM, SHORT TERM TEMPORARY TRAFFIC SIGNAL SYSTEM OPERATION AND MAINTENANCE, and SIGNAL HEADS AND BACKPLATES notes were removed.

SHORT TERM TEMPORARY TRAFFIC CONTROL SIGNAL, SHORT TERM TEMPORARY TRAFFIC CONTROL SIGNAL INDICATIONS, LIGHTNING PROTECTION, RUBBER INSULATING HOSE, and SIGNAL HEADS notes were added.

TRAFFIC SIGNAL EQUIPMENT, POWER, CONTROLLER CABINET, POLE MOUNTED JUNCTION BOXES, and SPAN WIRE AND SUPPORTS notes were revised.

Sheet C16: VEHICLE DETECTION, MULTICONDUCTOR CONTROL CABLE FOR SIGNAL CIRCUITS, TRAFFIC SIGNAL CONTROLLER, ON-SITE INSPECTION, and UTILITIES notes were revised and moved to Sheet C15.

TRAFFIC SIGNAL PROGRAMMING note was revised.

Sheet C18: Note regarding preferred support pole location for S6 was added.

Sheet C20: WOOD POLE AND SPAN WIRE MOUNTED TRAFFIC SIGNALS detail was revised to remove emergency vehicle pre-emption equipment.

Sheet C21: Luminaire and Matrix Radar Vehicle Detector were removed from WIRING DIAGRAM.

Sheet L2: SECTION L ESTIMATE OF QUANTITIES:
Bid Items were added:
Bid Item 635E9021 “2/C#12 AWG Copper Wire”

Sheets L8-L12: Revised TABLE OF CONDUIT AND CABLE QUANTITIES to include 2/C #12 AWG COPPER WIRE.

Sheet L18: Revised ESTIMATE OF QUANTITIES table to include 2/C #12 AWG COPPER WIRE.

Sheets L33-L36: Revised WIRING DIAGRAM.

Sheet M2: SECTION M ESTIMATE OF QUANTITIES
Bid Items were added:
Bid Item 633E1445 “Pavement Marking Paint, Arrow”

Quantities for Bid Items were changed:
Bid Item 634E0640 “Temporary Pavement Marking” changed from 1,750 to 42,990 Ft

PAVEMENT MARKING AFTER OCTOBER 15TH note was added.

REPAIR PAVEMENT MARKINGS AT END OF PROJECT note was revised.

Notes were rearranged on sheet.

Sincerely,

Sam Weisgram
Engineering Supervisor

SW/cj

CC: Craig Smith, Mitchell Region Engineer
Rod Gall, Yankton Area Engineer

STATE OF SOUTH DAKOTA	PROJECT	SHEET	TOTAL SHEETS
	NH 0050(99)383	1	287

Plotting Date: 7/03/2015 Rev 07/30/15 JDL

STATE OF SOUTH DAKOTA
DEPARTMENT OF TRANSPORTATION

PLANS FOR PROPOSED

PROJECT NH 0050(99)383
SD HIGHWAY 50
YANKTON COUNTY

Grading, PCC Pavement, Curb & Gutter,
Storm Sewer, Roadway Lighting, Traffic Signals,
& Permanent Signing
PCN 6926

INDEX OF SECTIONS

Section A: Estimate of Quantities
Section B: Grading
Section C: Traffic Control
Section D: Erosion Control
Section F: Surfacing
Section L: Lighting & Signals
Section M: Pavement Marking
Section S: Permanent Signing
Section X: Cross Sections

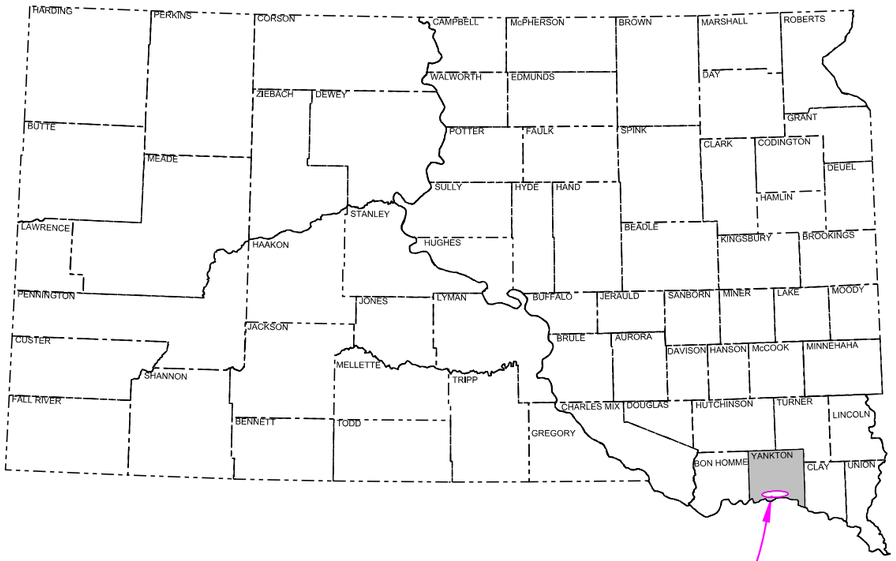

R 55 W

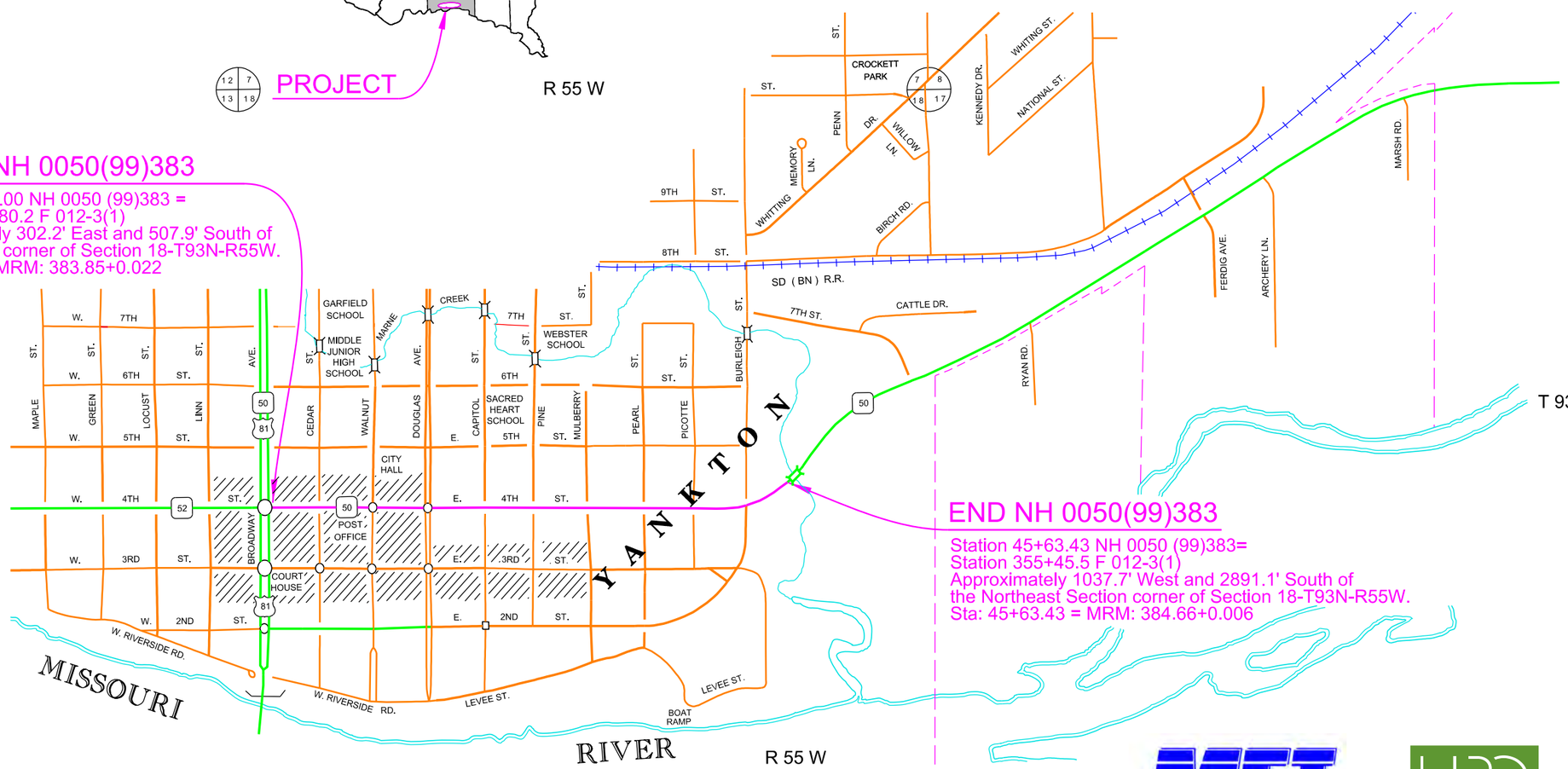

BEGIN NH 0050(99)383

Station 4+00.00 NH 0050 (99)383 =
Station 313+80.2 F 012-3(1)
Approximately 302.2' East and 507.9' South of
the West 1/4 corner of Section 18-T93N-R55W.
Sta: 4+00 = MRM: 383.85+0.022

END NH 0050(99)383

Station 45+63.43 NH 0050 (99)383=
Station 355+45.5 F 012-3(1)
Approximately 1037.7' West and 2891.1' South of
the Northeast Section corner of Section 18-T93N-R55W.
Sta: 45+63.43 = MRM: 384.66+0.006

REGISTERED PROFESSIONAL ENGINEER
REG NO.
8161
JOSH
LARSON
7-30-15
SOUTH DAKOTA

DESIGN DESIGNATION

HWY 50

ADT (2013)	9321
ADT (2033)	11717
DHV	1523
D	50%
T DHV	2.0%
T ADT	4.3%
V	40 MPH

STORM WATER PERMIT

Major Receiving
Body of Water: Marne Creek
Area Disturbed: 9.3 Acres
Total Project Area: 8.1 Acres
Approx. Begin Lat/Long: 42.871153, -97.396203

GROSS LENGTH	4163.43	FEET	0.789	MILES
LENGTH OF EXCEPTIONS	0.00	FEET	0.000	MILES
NET LENGTH	4163.43	FEET	0.789	MILES

MEI Professional Engineers and Land Surveyors

Plans Prepared by:
McLaury Engineering, Inc.
Sioux Falls, South Dakota

HRGreen

HR Green, Inc.
Sioux Falls, South Dakota

ESTIMATE OF QUANTITIES AND ENVIRONMENTAL COMMITMENTS

STATE OF SOUTH DAKOTA	PROJECT	SHEET	TOTAL SHEETS
	NH 0050(99)381	A1	A4

Rev 07/30/15 JDL

Grading – Section B

BID ITEM NUMBER	ITEM	QUANTITY	UNIT
009E0010	Mobilization	Lump Sum	LS
009E3220	Reestablish Property Corner	10	Each
009E3230	Grade Staking	2.710	Mile
009E3250	Miscellaneous Staking	0.542	Mile
009E3280	Slope Staking	0.542	Mile
009E3290	Structure Staking	13	Each
009E3300	Three Man Survey Crew	20.0	Hour
009E4300	Construction Schedule, Category III	Lump Sum	LS
100E0020	Clear and Grub Tree	12	Each
100E0100	Clearing	Lump Sum	LS
110E0300	Remove Concrete Curb and Gutter	218	Ft
110E0320	Remove Concrete Gutter	29	Ft
110E0400	Remove Drop Inlet	27	Each
110E0460	Remove Manhole	10	Each
110E0605	Remove Chain Link Fence	109	Ft
110E1010	Remove Asphalt Concrete Pavement	2,168.9	SqYd
110E1100	Remove Concrete Pavement	24,929.9	SqYd
110E1110	Remove Concrete Approach Pavement	1,494.5	SqYd
110E1130	Remove Concrete Driveway Pavement	1,657.8	SqYd
110E1140	Remove Concrete Sidewalk	4,656.9	SqYd
110E1300	Remove Concrete Retaining Wall	795.1	Ft
120E0010	Unclassified Excavation	16,337	CuYd
120E0900	Contaminated Material Excavation	100	CuYd
120E2000	Undercutting	9,870	CuYd
120E6100	Water for Embankment	118.4	MGal
250E0020	Incidental Work, Grading	Lump Sum	LS
260E2010	Gravel Cushion	2,321.9	Ton
380E3520	6" PCC Approach Pavement	214.1	SqYd
380E3540	8" PCC Approach Pavement	1,230.7	SqYd
380E3545	8" Reinforced PCC Approach Pavement	12.4	SqYd
380E4070	9" PCC Fillet Section	472.7	SqYd
420E0400	Structure Excavation, Miscellaneous	18	CuYd
450E0102	12" RCP Class 2, Furnish	20	Ft
450E0110	12" RCP, Install	20	Ft
450E0122	18" RCP Class 2, Furnish	1,498	Ft
450E0130	18" RCP, Install	1,498	Ft
450E0142	24" RCP Class 2, Furnish	392	Ft
450E0150	24" RCP, Install	392	Ft
450E0162	30" RCP Class 2, Furnish	2,530	Ft
450E0170	30" RCP, Install	2,530	Ft
450E0182	36" RCP Class 2, Furnish	50	Ft
450E0190	36" RCP, Install	50	Ft
450E0192	42" RCP Class 2, Furnish	858	Ft
450E0200	42" RCP, Install	858	Ft
450E0202	48" RCP Class 2, Furnish	266	Ft
450E0210	48" RCP, Install	266	Ft
450E2204	30" RCP Sloped End, Furnish	1	Each
450E2205	30" RCP Sloped End, Install	1	Each
451E6080	Adjust Water Valve Box	2	Each
462E0100	Class M6 Concrete	184.4	CuYd
464E0100	Controlled Density Fill	4.4	CuYd
470E0020	Pipe Handrail	69.2	Ft
480E0100	Reinforcing Steel	32,700	Lb
480E0200	Epoxy Coated Reinforcing Steel	576	Lb

Grading – Section B (Continued)

BID ITEM NUMBER	ITEM	QUANTITY	UNIT
530E0300	Type C Concrete Retaining Wall	858	SqFt
530E0410	MSE Segmental Block Wall	1,883	SqFt
530E0820	Reconstruct Stone and Masonry Retaining Wall	858	SqFt
600E0300	Type III Field Laboratory	1	Each
621E0040	4' Chain Link Fence with Top Rail	101	Ft
621E0410	Pedestrian Swing Gate	1	Each
650E0090	Type B69 Concrete Curb and Gutter	5,832	Ft
650E0390	Type BL69 Concrete Curb and Gutter	107	Ft
650E4690	Type P9 Concrete Gutter	936	Ft
651E0040	4" Concrete Sidewalk	21,875	SqFt
651E0060	6" Concrete Sidewalk	17,676	SqFt
651E0140	4" Reinforced Concrete Sidewalk	609	SqFt
651E0160	6" Reinforced Concrete Sidewalk	104	SqFt
651E0540	4" Colored Concrete Sidewalk	14,645	SqFt
651E0560	6" Colored Concrete Sidewalk	1,729	SqFt
651E0740	4" Reinforced Colored Concrete Sidewalk	230	SqFt
651E0760	6" Reinforced Colored Concrete Sidewalk	348	SqFt
651E3000	Grinding Miscellaneous Concrete	57.0	SqFt
651E5000	Sidewalk Drain	18.4	Ft
651E7000	Type 1 Detectable Warnings	780	SqFt
670E1200	Type B Frame and Grate Assembly	38	Each
670E5200	Special Frame and Grate Assembly	6	Each
670E5340	4' x 11' Precast Concrete Type S Drop Inlet Lid	9	Each
670E5400	Precast Drop Inlet Collar	44	Each
671E4548	48" Manhole Cone Section	10.0	Ft
671E5502	2" Adjusting Ring for Manhole	41	Each
671E6009	Type A9 Manhole Frame and Lid	16	Each
720E1015	Bank and Channel Protection Gabion	36.0	CuYd
831E0300	Reinforcement Fabric (MSE)	4,239	SqYd
900E1085	Ornamental Metal Fence	32	Ft

Traffic Control – Section C

BID ITEM NUMBER	ITEM	QUANTITY	UNIT
260E2010	Gravel Cushion	142.0	Ton
320E1200	Asphalt Concrete Composite	13.0	Ton
634E0010	Flagging	200.0	Hour
634E0110	Traffic Control Signs	2,129	SqFt
634E0120	Traffic Control, Miscellaneous	Lump Sum	LS
634E0280	Type 3 Barricade, 8' Single Sided	60	Each
634E0330	Temporary Raised Pavement Markers	16,992	Ft
634E0380	Tubular Marker	140	Each
634E0390	Replace Tubular Marker	70	Each
634E0420	Type C Advance Warning Arrow Board	2	Each
634E0560	Remove Pavement Marking, 4" or Equivalent	3,770	Ft
634E0600	4" Temporary Pavement Marking Tape Type I	1,152	Ft
634E0640	Temporary Pavement Marking	10,486	Ft
634E0915	Short Term Temporary Traffic Control Signal	1	Site
634E1002	Detour Signing	252.9	SqFt
634E2000	Longitudinal Pedestrian Barricade	400	Ft
634E2010	Temporary Pedestrian Facility(s)	Lump Sum	LS
634E2020	Temporary Curb Ramp	16	Each
634E2025	Longitudinal Pedestrian Channelizer	400	Ft
634E2030	Audible Message Device	10	Each
900E1080	Orange Plastic Safety Fence	800	Ft

Erosion and Sediment Control – Section D

BID ITEM NUMBER	ITEM	QUANTITY	UNIT
110E1690	Remove Sediment	7.0	CuYd
110E1695	Remove Sediment Filter Bag	2,737	Ft
110E1700	Remove Silt Fence	567	Ft
230E0010	Placing Topsoil	517	CuYd
730E0206	Type D Permanent Seed Mixture	294	Lb
731E0200	Fertilizing	0.70	Ton
732E0200	Fiber Mulching	1.0	Ton
734E0042	Soil Stabilizer	1,500.0	SqYd
734E0103	Type 3 Erosion Control Blanket	1,524	SqYd
734E0180	Sediment Filter Bag	2,737	Ft
734E0602	Low Flow Silt Fence	265	Ft
734E0604	High Flow Silt Fence	2,001	Ft
734E0610	Mucking Silt Fence	158	CuYd
734E0620	Repair Silt Fence	567	Ft
734E0680	Flocculent Housing Unit	1	Each
734E0683	500K Gallon Treatment Flocculent Bag	1	Each
734E0845	Sediment Control at Inlet with Frame and Grate	44	Each
734E0847	Sediment Control at Type S Reinforced Concrete Drop Inlet	108	Ft
734E5000	Dewatering	12	Hour
734E5010	Sweeping	12	Hour
900E1310	Concrete Washout Facility	2	Each
900E1320	Construction Entrance	4	Each

INDEX OF SHEETS

A1 and A2 — Estimate of Quantities for Sections B,C,D, F, L, M, and S

A3 to A4 — Environmental Commitments

SPECIFICATIONS

Standard Specifications for Roads and Bridges, 2015 Edition and Required Provisions, Supplemental Specifications, and Special Provisions as included in the Proposal.

ESTIMATE OF QUANTITIES AND ENVIRONMENTAL COMMITMENTS

STATE OF SOUTH DAKOTA	PROJECT	SHEET	TOTAL SHEETS
	NH 0050(99)381	A2	A4

Rev 08/24/15 JDL

Surfacing – Section F

BID ITEM NUMBER	ITEM	QUANTITY	UNIT
120E6200	Water for Granular Material	101.1	MGal
260E2010	Gravel Cushion	8,419.4	Ton
320E1200	Asphalt Concrete Composite	149.0	Ton
380E0050	8" Nonreinforced PCC Pavement	251.7	SqYd
380E0070	9" Nonreinforced PCC Pavement	23,932.1	SqYd
380E3020	6" PCC Driveway Pavement	189.9	SqYd
380E3040	8" PCC Driveway Pavement	1,122.9	SqYd
380E6000	Dowel Bar	15,204	Each
380E6110	Insert Steel Bar in PCC Pavement	640	Each

Signal and Lighting – Section L

BID ITEM NUMBER	ITEM	QUANTITY	UNIT
110E1520	Remove Signal Equipment	Lump Sum	LS
110E1530	Remove Signal Pole Footing	8	Each
110E1540	Remove Luminaire Pole Footing	32	Each
110E5100	Salvage Luminaire Pole	32	Each
420E0400	Structure Excavation, Miscellaneous	22	CuYd
462E0100	Class M6 Concrete	6.3	CuYd
480E0200	Epoxy Coated Reinforcing Steel	651	Lb
635E0040	Breakaway Base Luminaire Pole with Arm, 40' Mounting Height	1	Each
635E0900	Decorative Luminaire Pole	54	Each
635E2130	Signal Pole with 30' Mast Arm and Luminaire Arm	2	Each
635E2140	Signal Pole with 40' Mast Arm and Luminaire Arm	2	Each
635E3410	Decorative Luminaire, 400 Watt	54	Each
635E3800	Roadway Luminaire, LED	5	Each
635E4030	3 Section Vehicle Signal Head	16	Each
635E5020	2' Diameter Footing	196.0	Ft
635E5030	3' Diameter Footing	44.0	Ft
635E5302	Type 2 Electrical Junction Box	70	Each
635E5303	Type 3 Electrical Junction Box	1	Each
635E5304	Type 4 Electrical Junction Box	14	Each
635E5400	Electrical Service Cabinet	2	Each
635E5420	Circuit Control Center	2	Each
635E5515	Signal Head Battery Backup and Flash System	2	Each
635E5530	Preformed Detector Loop	8	Each
635E5550	Detector Unit	4	Each
635E5560	Emergency Vehicle Preemption Unit	1	Each
635E5570	Optical Detector	4	Each
635E5900	Pedestrian Push Button	16	Each
635E5910	Pedestrian Push Button Pole	16	Each
635E5922	Pedestrian Signal Head with Countdown Timer	16	Each
635E5930	Pedestrian Crossing Sign	16	Each
635E7530	Relocate Signal Equipment	Lump Sum	LS
635E8115	1.5" Rigid Conduit, Schedule 40	340	Ft
635E8120	2" Rigid Conduit, Schedule 40	10,070	Ft
635E8125	2.5" Rigid Conduit, Schedule 40	215	Ft
635E8130	3" Rigid Conduit, Schedule 40	50	Ft
635E8150	5" Rigid Conduit, Schedule 40	30	Ft
635E8220	2" Rigid Conduit, Schedule 80	2,800	Ft
635E8225	2.5" Rigid Conduit, Schedule 80	150	Ft
635E8230	3" Rigid Conduit, Schedule 80	505	Ft
635E9001	1/C #000 AWG Copper Wire	745	Ft
635E9013	1/C #3 AWG Copper Wire	250	Ft
635E9014	1/C #4 AWG Copper Wire	1,050	Ft
635E9016	1/C #6 AWG Copper Wire	43,395	Ft
635E9018	1/C #8 AWG Copper Wire	9,195	Ft
635E9020	1/C #10 AWG Copper Wire	1,635	Ft
635E9021	2/C #12 AWG Copper Wire	1,100	Ft
635E9504	4/C #14 AWG Copper Tray Cable, K2	3,865	Ft
635E9507	7/C #14 AWG Copper Tray Cable, K2	700	Ft
635E9519	19/C #14 AWG Copper Tray Cable, K2	700	Ft
635E9600	#16 AWG Copper Twisted Shielded Pair	750	Ft
635E9710	2/C #10 AWG Copper Pole and Bracket Cable	1,625	Ft
635E9800	Preemption Cable	1,730	Ft
635E9948	48 Strand Fiber Optic Cable	4,560	Ft

Pavement Marking – Section M

BID ITEM NUMBER	ITEM	QUANTITY	UNIT
633E0030	Cold Applied Plastic Pavement Marking, 24"	1,550	Ft
633E0040	Cold Applied Plastic Pavement Marking, Arrow	38	Each
633E1445	Pavement Marking Paint, Arrow	76	Each
633E3000	Durable Pavement Marking, 4" White	2,855	Ft
633E3005	Durable Pavement Marking, 4" Yellow	8,465	Ft
633E5015	Grooving for Cold Applied Plastic Pavement Marking, 24"	1,550	Ft
633E5025	Grooving for Cold Applied Plastic Pavement Marking, Arrow	38	Each
633E5100	Grooving for Durable Pavement Marking, 4"	11,320	Ft
634E0560	Remove Pavement Marking, 4" or Equivalent	7,635	Ft
634E0565	Remove Pavement Marking, Arrow	11	Each
634E0640	Temporary Pavement Marking	42,990	Ft

Permanent Signing – Section S

BID ITEM NUMBER	ITEM	QUANTITY	UNIT
110E0100	Remove Concrete Footing(s)	Lump Sum	LS
110E5020	Salvage Traffic Sign	78	Each
632E0010	1.25' Diameter Breakaway Support Concrete Footing	72.0	Ft
632E1320	2.0"x2.0" Perforated Tube Post	114.0	Ft
632E1340	2.5"x2.5" Perforated Tube Post	212.0	Ft
632E3203	Flat Aluminum Sign, Nonremovable Copy High Intensity	414.4	SqFt
632E3205	Flat Aluminum Sign, Nonremovable Copy Super/Very High Intensity	109.2	SqFt
632E3520	Remove, Salvage, Relocate, and Reset Traffic Sign	4	Each
900E0030	Remove and Reset Historical Marker	3	Each

SECTION C-ESTIMATE OF QUANTITIES

BID ITEM NUMBER	ITEM	QUANTITY	UNIT
260E2010	Gravel Cushion	142.0	Ton
320E1200	Asphalt Concrete Composite	13.0	Ton
634E0010	Flagging	200.0	Hour
634E0110	Traffic Control Signs	2,129	SqFt
634E0120	Traffic Control, Miscellaneous	Lump Sum	LS
634E0280	Type 3 Barricade, 8' Single Sided	60	Each
634E0330	Temporary Raised Pavement Markers	16,992	Ft
634E0380	Tubular Marker	140	Each
634E0390	Replace Tubular Marker	70	Each
634E0420	Type C Advance Warning Arrow Board	2	Each
634E0560	Remove Pavement Marking, 4" or Equivalent	3,770	Ft
634E0600	4" Temporary Pavement Marking Tape Type I	1,152	Ft
634E0640	Temporary Pavement Marking	10,486	Ft
634E0915	Short Term Temporary Traffic Control Signal	1	Site
634E1002	Detour Signing	252.9	SqFt
634E2000	Longitudinal Pedestrian Barricade	400	Ft
634E2010	Temporary Pedestrian Facility(s)	Lump Sum	LS
634E2020	Temporary Curb Ramp	16	Each
634E2025	Longitudinal Pedestrian Channelizer	400	Ft
634E2030	Audible Message Device	10	Each
900E1080	Orange Plastic Safety Fence	800	Ft

SEQUENCE OF OPERATIONS

The Contractor shall follow the following Sequence of Operations unless an alternate Sequence of Operations is submitted in writing two weeks prior to the pre-construction meeting and approved by the Engineer prior to the start of work.

No work will be allowed on Friday, Saturday and Sunday during Riverboat Days which is typically the third weekend in August.

1. Detailed description of sequence of operation is as follows:
    1. Install fixed location signs.
    2. Close Burleigh Street on the south side of SD HWY 50.
    3. Grade, install storm sewer, curb & gutter and surface Burleigh Street.
    4. Open Burleigh Street to traffic.
    5. Install a 4-Way Stop at the intersection of SD HWY 50 & Burleigh Street. Cover existing traffic signal heads.
    6. Move two way traffic to the westbound lanes.
    7. Grade, install storm sewer, curb & gutter, sidewalk and surface the eastbound lanes with PCC Pavement.
    8. Move traffic back to the eastbound and westbound lanes, and close the turn lane from Sta. 4+00 to Sta. 5+50 and from Sta. 37+12 to Sta. 38+62.03.
    9. Grade and surface the turn lane from Sta. 4+00 to Sta. 5+50 and from Sta. 37+12 to Sta. 38+62.03.
    10. Move two way traffic to the eastbound lanes.
    11. Grade, install storm sewer, curb & gutter, sidewalk and surface the westbound lanes with PCC Pavement.
    12. Install permanent signing and pavement marking.
2. The placement of the new storm sewer from Marne Creek to just west of Burleigh Street and set up for the temporary traffic control signals can be completed in 2015. All other work must be completed in 2016.
3. Construction shall be completed one-half roadway width at a time, with traffic being maintained at all times.

SEQUENCE OF OPERATIONS cont:

4. Closure time of all intersecting streets along the project shall be kept to a minimum and shall not exceed 2 consecutive intersections closed at any time.
5. Left & Right turns will be prohibited as directed by the Engineer.
6. Mail service and emergency vehicle access shall be maintained at all times.
7. Existing street lighting shall be maintained as much as practical. The Contractor shall supply a plan for approval on how street lighting shall be maintained.
8. The Contractor shall hold weekly public meetings. Also, prior to the start of any work on the project, the Contractor shall hold an initial public meeting to discuss project sequences, traffic control, goals, etc. The Contractor will be responsible for securing a time and location for these meetings.
9. When work begins on the project, the Contractor shall be responsible for maintaining the entire project. This shall include, but is not limited to, all surface maintenance, drainage, weed control and traffic signs.
10. Overwidth vehicles and trucks shall be detoured around work areas as detailed in the Traffic Control Plans.

MAINTENANCE OF TRAFFIC

Removing, relocating, covering, salvaging and resetting of permanent traffic control devices, including delineation, shall be the responsibility of the Contractor. It is anticipated that numerous route markers, directional arrows and other signs will require covering for the detour. Cost for this work shall be incidental to the contract unit prices for the various items unless otherwise specified in the plans. Any delineators and signs damaged or lost shall be replaced by the Contractor at no cost to the State.

Indiscriminate driving and parking of vehicles within the right-of-way will not be permitted. Any damage to the vegetation, surfacing, embankment, delineators and existing signs resulting from such indiscriminate use shall be repaired and/or restored by the Contractor, at no expense to the State, and to the satisfaction of the Engineer.

The Contractor shall provide documentation that all breakaway sign supports comply with NCHRP 350 or MASH crash-worthy requirements. The Contractor shall provide installation details at the preconstruction meeting for all breakaway sign support assemblies.

Existing STOP signs that are temporarily removed shall be reset prior to the end of each day's work. A stop sign on portable supports must be used whenever a permanent ground mounted stop sign is removed. Cost for this work shall be incidental to the contract unit price per square foot for Traffic Control Signs.

The Contractor will be required to maintain drainage on the project during the course of construction. This work will include the installation of Contractor

MAINTENANCE OF TRAFFIC cont:

furnished pipe to temporarily connect the old storm sewer to the new storm sewer system, performing the necessary shaping, and all other needed miscellaneous work. No separate payment will be made for this work. All costs of maintaining the drainage shall be incidental to the contract unit prices for the various items.

Where phased construction of the intersections is indicated it should be understood that the pouring sequence shall correspond with the joint details shown on the pavement layout. Each phase may require two or more individual pours.

The Contractor shall notify the County Dispatcher and the Yankton Police Department prior to the closure of and upon reopening of any intersection.

Throughout the project, the Contractor must maintain local traffic and access to businesses and residences at all times. Adequate passage and ramping shall be provided. The Contractor shall keep businesses and residents informed of construction sequences in areas which have a direct effect on their access.

Construction signs shall not obscure existing signs and be a minimum of 50' to 100' from any existing signs.

The bottom of signs on portable or temporary supports shall not be less than seven feet above the pavement in urban areas. Portable sign supports may be used as long as the duration is less than 3 days. If duration is more than 3 days, the signs shall be mounted on fixed location, ground mounted, breakaway supports.

Placement of temporary R1-1 STOP signs, as directed by the Engineer, will also be required where major business approaches enter the project. R1-1 STOP signs will be measured and paid for by the square foot.

PEDESTRIAN TRAFFIC

The Contractor shall accommodate pedestrian traffic, including those with disabilities. Bicycle traffic shall also be accommodated.

The Contractor shall submit a detailed plan to the Engineer on how pedestrian and bicycle traffic will be accommodated during the various phases of the work at the affected locations. This plan should be in conformance with the details contained in these plans for pedestrian accommodation. The plan may be submitted at the Preconstruction Meeting, but shall be submitted no later than two weeks prior to the start of work.

Some options for consideration to accommodate the pedestrian traffic include:

The use of various approved traffic control devices to maintain the pedestrians through or past the immediate work area.

Detouring pedestrians and bicycles to the opposite side of the street, alternate route(s) or around a city block.

Manned crossing assistance (crossing guards) combined with an accessible path.

Orange safety fence shall be used to protect pedestrian traffic from open excavations. A detectable edging shall be used with the safety fence to protect pedestrian traffic . This edging shall protrude at least 6 inches above the surface of the sidewalk or pathway, with the bottom of the edging a maximum of 2.5 inches above the surface. Examples of detectable edging for pedestrians are given in Section 6F.74 of the MUTCD. All costs to

SHORT TERM TEMPORARY TRAFFIC CONTROL SIGNAL

The Contractor shall furnish, install, program and maintain a Short Term Temporary Traffic Control Signal at the intersection of US 81 and 2nd Street.

TRAFFIC SIGNAL CONTROLLER

1. Vehicle detectors shall operate in the presence (non-locking) mode and shall have call delay timing capability. The call delay feature shall be inhibited by the controller. Set the detectors for the northbound and southbound lefts to 6 second delay, and the remaining detectors to 3 seconds delay.
2. The Contractor is responsible for programming the controller.
3. The controller shall dwell on US 81, northbound and southbound.

TRAFFIC SIGNAL EQUIPMENT

The short term temporary traffic control signal shall conform to the 2015 Standard Specifications for Roads and Bridges Sections 634, 635, and 985.

The Contractor shall furnish all traffic signal equipment as no equipment currently exists at the intersection to salvage and reuse.

The Contractor shall furnish a traffic signal cabinet and controller.

The Contractor shall furnish Detector Units as necessary to connect existing detector loops.

SHORT TERM TEMPORARY TRAFFIC CONTROL SIGNAL INDICATIONS

The signal indications shall be covered or removed during shut down or a period of discontinued use.

POWER

The Contractor shall contact Northwestern Public Service for power connection. See Conductor/Conduit Layout sheet.

The Contractor shall be responsible for providing backup power if the main power source fails. The backup power supply shall be able to operate the traffic signals for a minimum of 48 hours.

METER SOCKET

The meter sockets provided for traffic control signal shall be a 200 amp, positive by-pass.

CONTROLLER CABINET

The controller cabinet is to be attached to pole S4 at a height of 30”-36” from bottom of cabinet to ground. The controller cabinet door shall face southeast.

The controller cabinet shall be NEMA Type P-44 or alternate approved by the Engineer.

LIGHTNING PROTECTION

All service cabinets shall be equipped with industrial lightning arrestors compliant with current NEMA and UL Standards for lightning arrestors.

Cost for the lightening arrestors shall be incidental to the contract unit price per site for Short Term Temporary Traffic Control Signal.

POLE MOUNTED JUNCTION BOXES

The Contractor shall furnish and install pole mounted junction boxes as necessary. Pole mounted junction boxes shall be NEMA Type 3R with screw covers. Upper pole mounted junction boxes shall be 18"H x 12"W x 8"D min. in size, lower pole mounted junction boxes shall be 6"H x 6"W x 4"D min. in size. The Contractor shall determine the appropriate size and may increase the size if necessary.

Cost for pole mounted junction boxes and miscellaneous hardware shall be incidental to the contract unit price per site for Short Term Temporary Traffic Control Signal.

++

SPAN WIRE AND SUPPORTS

A minimum clear zone distance of 6’ shall be maintained from the edge of the traveled way to the location of traffic signal support poles or guy wire anchors unless otherwise detailed or approved by the Engineer.

The height of the span wire support poles and the sag in the span wire shall be designed to provide the minimum 17’ clearance from the bottom of the traffic signal indications to the roadway and a minimum clearance of 4’ between the span wire and the neutral overhead power conductor.

The Contractor shall field verify support lengths prior to installation.

After the support poles are removed, the Contractor shall restore and seed disturbed areas to the satisfaction of the Engineer. Cost for restoration of disturbed areas shall be incidental to the contract unit price per site for Short Term Temporary Traffic Control Signal.

UTILITIES

The following minimum clearances to the overhead power lines shall be maintained:

4 foot clearance to the neutral,
10 foot clearance to worker,
20 foot clearance to equipment.

Underground utilities exist and will likely conflict with some pole and guy wire locations. The locations of traffic signal poles, guy anchors, and other traffic signal appurtenances are to be expected by the Contractor. Field adjustment shall be approved by the Engineer. The Contractor shall be responsible for locating underground utilities. Any damage to utilities shall be the responsibility of the Contractor.

RUBBER INSULATING HOSE

A 6’ length of rubber insulating line hose shall be installed to cover the span wire and traffic signal conductors directly below the neutral overhead power conductor. It is anticipated two 6’ lengths of rubber insulating line hose will be required.

Cost for the rubber insulating line hose(s) shall be incidental to the contract unit price per site for Short Term Temporary Traffic Control Signal.

SIGNAL HEADS

Backplates and tunnel visors shall be installed and maintained on all signal indications.

The traffic signal heads shall be installed above their respective driving lanes and centered to be adequately visible. The bottom of the overhead traffic signal heads shall be mounted a minimum of 17’ and a maximum of 19’ above the roadway. The top of the traffic signal head shall not be more than 22’ above the roadway surface.

Signal heads shall be polycarbonate. Signal backplates shall extend not less than 5 inches at the top, bottom, and sides. All backplates shall have a dull black finish.

3-section polycarbonate signal heads and 5 section polycarbonate signal heads (“dog house” style configuration), all with 12” diameter signal indications shall be provided as detailed.

LED indications shall be provided.

VEHICLE DETECTION

Detector loops and twisted shielded pair conductor exist in the southbound left turn lane and on the approach lanes on 2nd Street.

The Contractor shall furnish and install any additional twisted shielded pair conductor, vehicle detector units in the controller cabinet, and other necessary materials or work to make the in place detector loops operational. A field review of the existing junction boxes and conductor is recommended.

Cost for labor and materials to connect the existing detector loops and make the detector loops operational shall be incidental to the contract unit price per site for Short Term Temporary Traffic Control Signal.

MULTICONDUCTOR CONTROL CABLE FOR SIGNAL CIRCUITS

Traffic signal cable shall be ISMA 19-1, Table K-1.

ON-SITE INSPECTION

Once the Short Term Temporary Traffic control signal is complete and operational, an on-site inspection of the traffic signals shall be conducted. The Contractor, Region Traffic Engineer, City Engineer, City traffic signal maintenance person and the Engineer will conduct the on-site inspection.

Revised 8/7/15

TRAFFIC SIGNAL PROGRAMMING

The controller shall be programmed by a qualified technician to use the patterns and timings specified.

As project conditions or traffic needs change, the Contractor will adjust the traffic signal programming as directed by the Engineer after consultation with the Department of Transportation's Region Traffic Engineer.

The minimum yellow time shall be 3.5 seconds and the all red time shall be a minimum of two (2) seconds unless the Department approves of an alternate.

Traffic signal interconnect will not be required.

SHORT TERM TEMPORARY TRAFFIC CONTROL SIGNAL

US 81 and 2nd Street, Yankton, SD

PROGRAMMING

SIGNAL HEAD \ INTERVAL	1	2	3	4	5	6	7	9	10	17	19	20	FLASH DISPLAY
12	G/<G	G/<Y			R/<G	R/<Y	G	Y					Y
13,14,1	G	G					G	Y					Y
5			G/<G	G/<Y	R/<G	R/<Y	G	Y					Y
6,7,8			G	G			G	Y					Y
3,4,2										G	Y		R
9,10,11										G	Y		R

CYCLE	TIME	CYCLE LENGTH	OFFSET = 0	FLASH TIME
1	6:00 AM to 11:00	90		11:00 PM to 6:00 AM

PHASES	ϕA						ϕB			ϕC		
MOVEMENTS	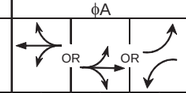						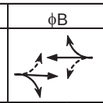			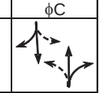		
MINIMUM INITIAL	12		12		7		30			12		
PASSAGE	3		3		3					3		
MAXIMUM	30		30		20					25		
VEHICLE CLEARANCES		4		4		3		4	2		4	2

STATE OF SOUTH DAKOTA	PROJECT	SHEET	TOTAL SHEETS
	NH 0081(99)381	C18	C28

Revised 8/7/15

CONDUIT / CONDUCTOR LAYOUT

US 81 & 2ND STREET

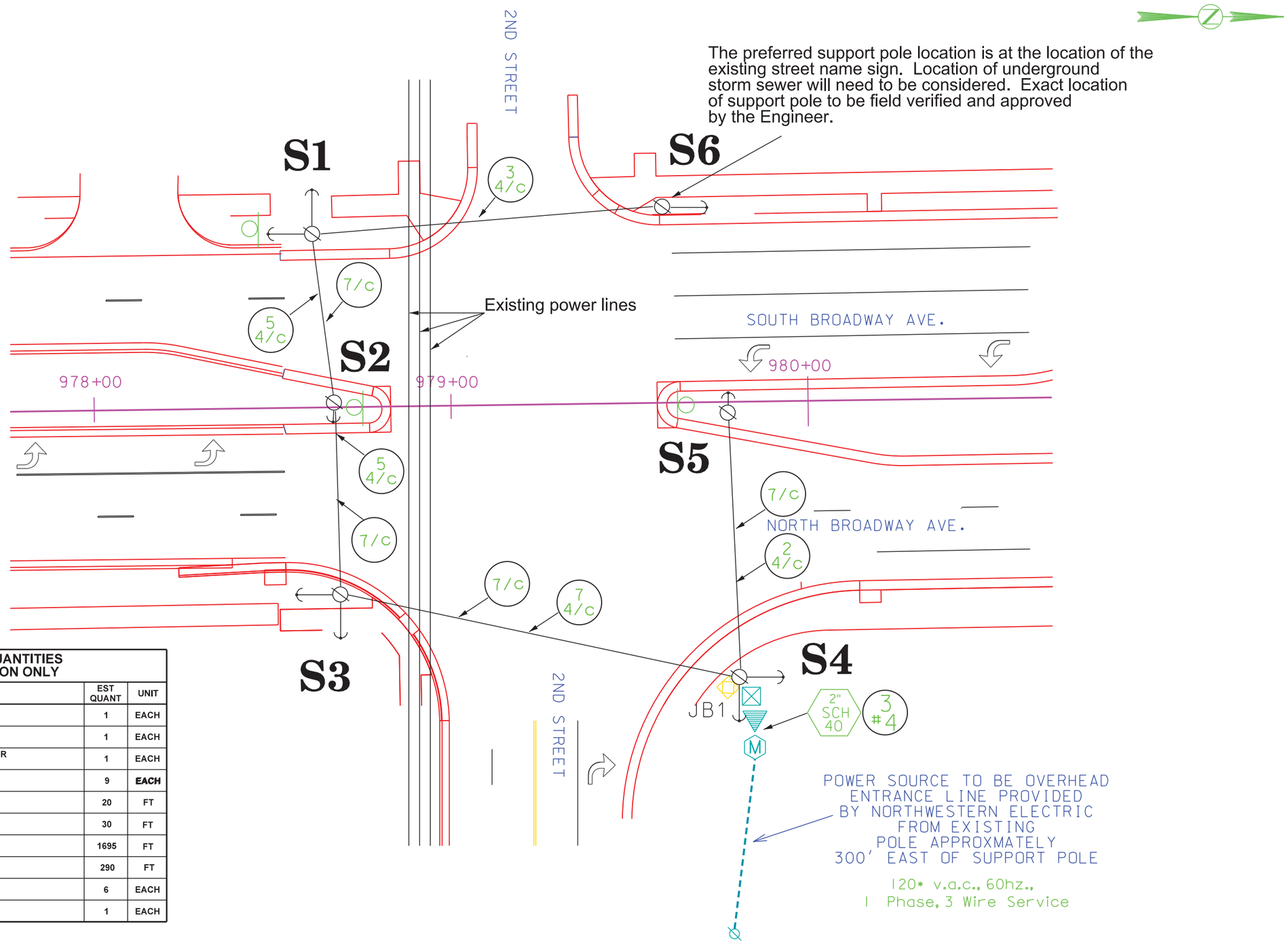

ESTIMATE OF QUANTITIES FOR INFORMATION ONLY

KEY	ITEM	EST QUANT	UNIT
	POLE MOUNTED JUNCTION BOX (JB1)	1	EACH
	ELECTRICAL SERVICE CABINET	1	EACH
	INSTALL TRAFFIC SIGNAL CONTROLLER (STATE FURNISHED)	1	EACH
	POLE ANCHOR	9	EACH
2" SCH 40	2" RIGID CONDUIT, SCHEDULE 40	20	FT
#4	1/C #4 AWG COPPER WIRE	30	FT
4/c	4/C #12 AWG IMSA COPPER WIRE (K1)	1695	FT
7/c	7/C #12 AWG IMSA COPPER WIRE (K1)	290	FT
	WOOD UTILITY POLE	6	EACH
M	METER SOCKET	1	EACH

Revised 8/7/15

WOOD POLE AND SPAN WIRE MOUNTED TRAFFIC SIGNALS

(TYPICAL)

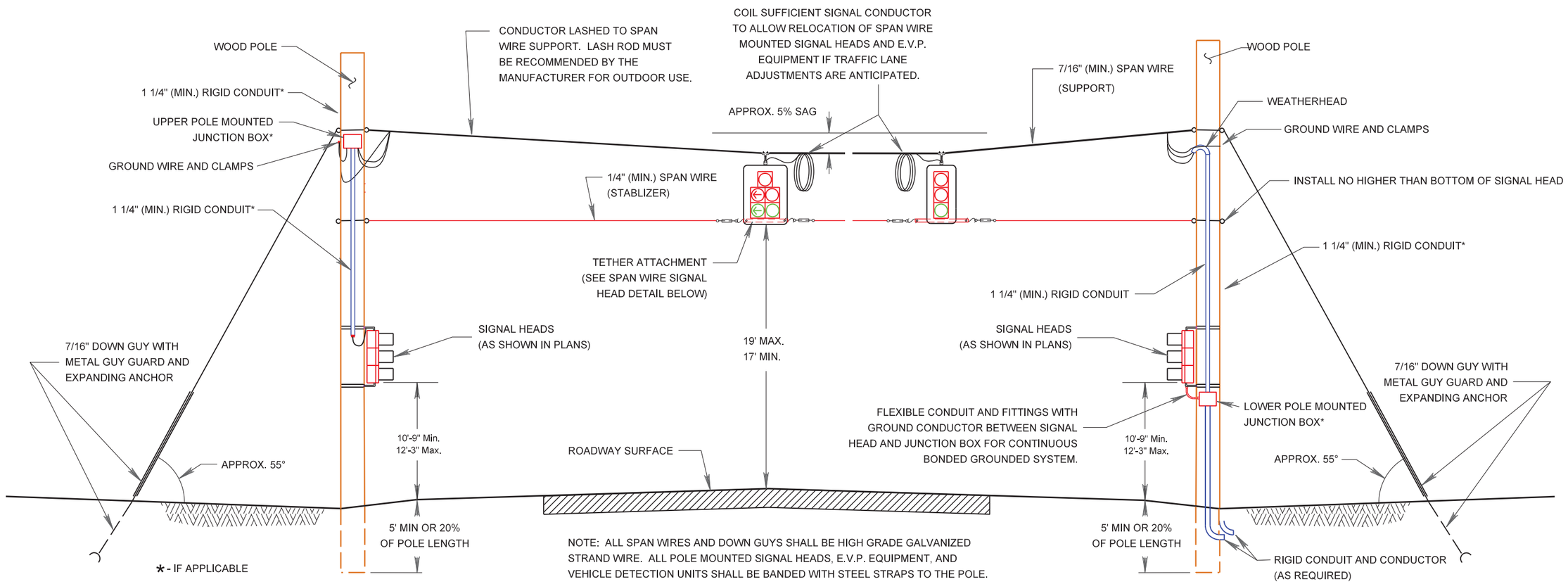

SPAN WIRE SIGNAL HEAD DETAILS (TYPICAL)

3-SECTION HEAD

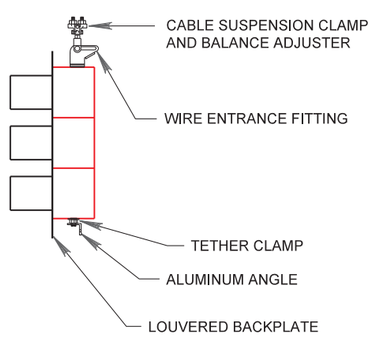

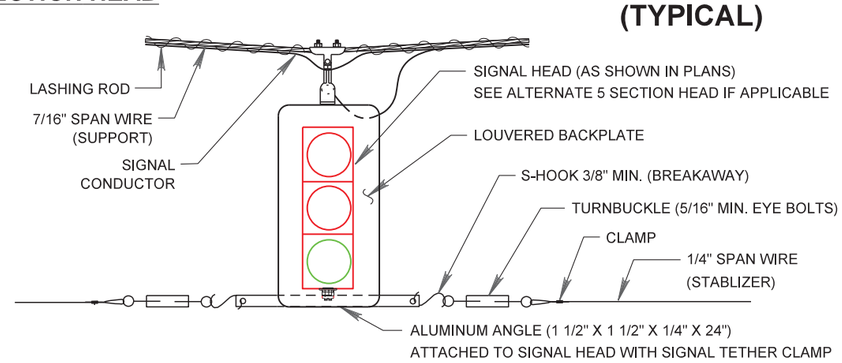

5-SECTION HEAD

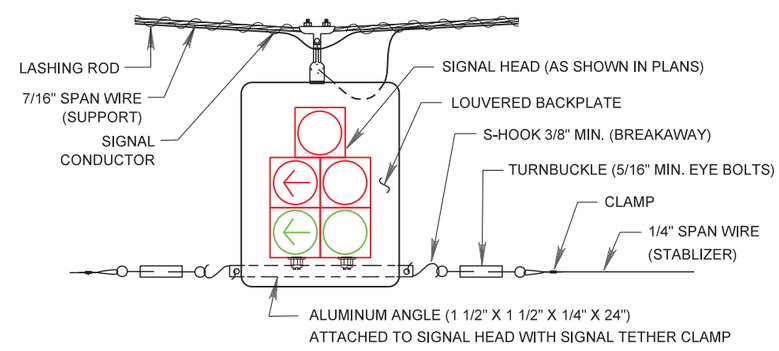

STATE OF SOUTH DAKOTA	PROJECT	SHEET	TOTAL SHEETS
	NH 0081(99)381	C21	C28

Revised 8/7/15

WIRING DIAGRAM

US 81 & 2nd Street

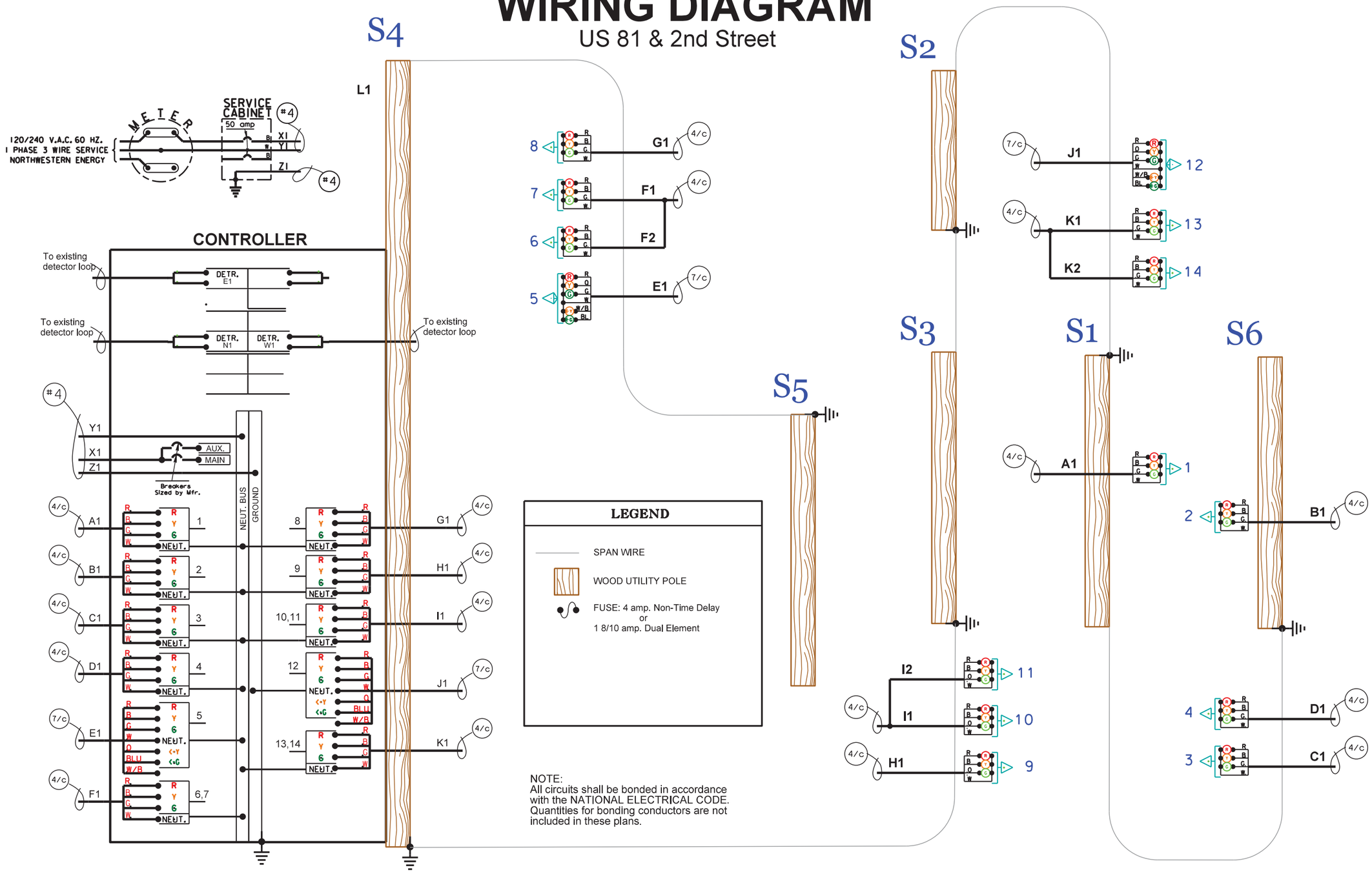

NOTE:
All circuits shall be bonded in accordance with the NATIONAL ELECTRICAL CODE. Quantities for bonding conductors are not included in these plans.

Revised 8/21/15 JDW

SECTION L ESTIMATE OF QUANTITIES

BID ITEM NUMBER	ITEM	QUANTITY	UNIT
110E1520	Remove Signal Equipment	Lump Sum	LS
110E1530	Remove Signal Pole Footing	8	Each
110E1540	Remove Luminaire Pole Footing	32	Each
110E5100	Salvage Luminaire Pole	32	Each
420E0400	Structure Excavation, Miscellaneous	22	Cu Yd
462E0100	Class M6 Concrete	6.3	Cu Yd
480E0200	Epoxy Coated Reinforcing Steel	651	Lb
635E0040	Breakaway Base Luminaire Pole with Arm, 40' Mounting Height	1	Each
635E0900	Decorative Luminaire Pole	54	Each
635E2130	Signal Pole with 30' Mast Arm and Luminaire Arm	2	Each
635E2140	Signal Pole with 40' Mast Arm and Luminaire Arm	2	Each
635E3410	Decorative Luminaire, 400 Watt	54	Each
635E3800	Roadway Luminaire, LED	5	Each
635E4030	3 Section Vehicle Signal Head	16	Each
635E5020	2' Diameter Footing	196	Ft
635E5030	3' Diameter Footing	44	Ft
635E5302	Type 2 Electrical Junction Box	70	Each
635E5303	Type 3 Electrical Junction Box	1	Each
635E5304	Type 4 Electrical Junction Box	14	Each
635E5400	Electrical Service Cabinet	2	Each
635E5420	Circuit Control Center	2	Each
635E5515	Signal Head Battery Backup and Flash System	2	Each
635E5530	Preformed Detector Loop	8	Each
635E5550	Detector Unit	4	Each
635E5560	Emergency Vehicle Preemption Unit	1	Each
635E5570	Optical Detector	4	Each
635E5900	Pedestrian Push Button	16	Each
635E5910	Pedestrian Push Button Pole	16	Each
635E5922	Pedestrian Signal Head with Countdown Timer	16	Each
635E5930	Pedestrian Crossing Sign	16	Each
635E7530	Relocate Signal Equipment	Lump Sum	LS
635E8115	1.5" Rigid Conduit, Schedule 40	340	Ft
635E8120	2" Rigid Conduit, Schedule 40	10,070	Ft
635E8125	2.5" Rigid Conduit, Schedule 40	215	Ft
635E8130	3" Rigid Conduit, Schedule 40	50	Ft
635E8150	5" Rigid Conduit, Schedule 40	30	Ft
635E8220	2" Rigid Conduit, Schedule 80	2,800	Ft
635E8225	2.5" Rigid Conduit, Schedule 80	150	Ft
635E8230	3" Rigid Conduit, Schedule 80	505	Ft
635E9001	1/C #000 AWG Copper Wire	745	Ft
635E9013	1/C #3 AWG Copper Wire	250	Ft
635E9014	1/C #4 AWG Copper Wire	1,050	Ft
635E9016	1/C #6 AWG Copper Wire	43,395	Ft
635E9018	1/C #8 AWG Copper Wire	9,195	Ft
635E9020	1/C #10 AWG Copper Wire	1,635	Ft
635E9021	2/C #12 AWG Copper Wire	1,100	Ft
635E9504	4/C #14 AWG Copper Tray Cable, K2	3,865	Ft
635E9507	7/C #14 AWG Copper Tray Cable, K2	700	Ft
635E9519	19/C #14 AWG Copper Tray Cable, K2	700	Ft
635E9600	#16 AWG Copper Twisted Shielded Pair	750	Ft
635E9710	2/C #10 AWG Copper Pole and Bracket Cable	1,625	Ft
635E9800	Preemption Cable	1,730	Ft
635E9948	48 Strand Fiber Optic Cable	4,560	Ft

SUPPLYING AS BUILT PLANS

If the traffic signal systems or roadway lighting systems are constructed differently than what is stated in the plans, the Contractor shall supply as built plans to the Engineer and a copy shall be sent to the Traffic Design Engineer. The as built plans may include conduit layouts, wiring diagrams, or other drawings depicting the changes from the original plans.

SHOP DRAWING AND CATALOG CUTS SUBMITTALS

The Contractor shall submit shop drawings and catalog cuts in accordance with Section 985 of the Specifications.

Adobe PDF submittals shall be sent to the following email addresses:

Norris.Leone@state.sd.us
John.Less@state.sd.us
Tallon.Cazer@state.sd.us
Pete.Longman@state.sd.us

SALVAGE LUMINAIRE POLE

Existing luminaire poles SEL1-SEL29 AND SEL50 shall be salvaged and delivered to the City of Yankton by the Contractor. The Contractor shall notify the City 5 days before the delivery of the salvaged luminaire poles. The City contact is Brad Moser at (605) 668-5255.

Existing luminaire poles SEL51-SEL52 shall be salvaged and placed on adjoining property (Parcel A33) by the Contractor. The Contractor shall contact the property owner at least 5 days before the removal and placement of salvaged poles on property.

All costs for work involved in the salvage and delivery of the existing luminaire poles shall be incidental to the contract unit price per each for "Salvage Luminaire Pole".

REMOVE SIGNAL EQUIPMENT

All existing signal equipment removed and not relocated as part of this project or salvaged by the SDDOT or City of Yankton shall become the property of the Contractor.

All costs for work involved in the removal of existing signal equipment shall be incidental to the contract lump sum price for "Remove Signal Equipment".

REMOVE LUMINAIRE POLE FOOTING

The footings of existing luminaire poles SEL1-SEL29 AND SEL50-52 shall be removed by the Contractor to a minimum of 2' below the ground surface. Restoration of the disturbed area shall be to the satisfaction of the Engineer.

All costs for removing the footings of the existing luminaire poles shall be incidental to the contract unit price per each for "Remove Luminaire Pole Footing".

ON-SITE INSPECTION

An on-site inspection of the traffic signals shall be conducted before acceptance of the project, once the traffic signals are completed and operational. The on-site inspection shall be conducted by the Project Engineer or Region Traffic Engineer with the Contractor, City Traffic Engineer, and the Traffic Design Engineer present.

TABLE OF FOOTING DATA

Site Designation	Footing Diameter	* Footing Depth	**Spiral Diameter	**Spiral Length	Vertical Reinforcement
L1, L2, L4, L6, L8, L10, L12-L47, L49, L51-L54	2' - 0"	4' - 0"	1' - 8"	33' - 9"	8-#7 x 3' - 6"
L61	2' - 0"	8' - 0"	1' - 8"	54' - 9"	8-#7 x 7' - 6"
B1-B4	3' - 0"	11' - 0"	2' - 8"	112' - 6"	14-#8 x 10' -6"

* Footing depth shall be below ground level.
** The size of all spirals shall be #3.

Decorative Luminaire Poles L3, L5, L7, L9, L11, L48, and L50 have been identified as locations that will require spread footings. Estimate of Quantities has been based on the following design, per each spread footing:

Structure Excavation, Miscellaneous: 3.1 Cu Yd
Class M6 Concrete: 0.9 Cu Yd
Epoxy Coated Reinforcing Steel: 93 Lb

The spread footings for Decorative Luminaire Poles L3, L5, L7, L9, and L11 shall be colored Class M6 Concrete. The concrete shall be integrally colored per manufacturer recommendations. The color shall be Solomon 242 – Sandalwood SRI 24 or equivalent and shall match the color used for the colored concrete sidewalk. The Contractor shall submit a sample piece of colored concrete to the Field Engineer for approval before placing the colored concrete. All costs for coloring shall be incidental to the contract unit price per cubic yard for "Class M6 Concrete".

Two coats of a non-yellowing acrylic curing and sealing compound shall be applied to the surface of the colored concrete. The curing and sealing compound shall be the product listed below or an equal approved by the Engineer.

DECRA-SEAL
W.R. Meadows, Inc.
1-800-342-5976
www.wrmeadows.com

All cost for furnishing, handling, and applying the curing and sealing compound, including the materials, equipment, labor and incidentals necessary shall be incidental to the contract unit price per cubic yard for "Class M6 Concrete".

REGISTERED PROFESSIONAL ENGINEER
REG. NO. 14769
JONATHAN D. WIEGAND
SOUTH DAKOTA
8/24/15

TABLE OF CONDUIT AND CABLE QUANTITIES

STATE OF SOUTH DAKOTA	PROJECT	SHEET	TOTAL SHEETS
	NH 0050(99)381	L8	L49

Revised: 8/21/15 JDW

Location to Location		Rigid Conduit												Copper Wire								Pole and Bracket Cable	
					Schedule 40					Schedule 80													
					1.5" Ft	2" Ft	2.5" Ft	3" Ft		2" Ft	2.5" Ft	3" Ft		1/C #000 AWG Ft	1/C #3 AWG Ft	1/C #4 AWG Ft	1/C #6 AWG Ft	1/C #8 AWG Ft	1/C #10 AWG Ft	2/C #12 AWG Ft		2/C #10 AWG Ft	
Lighting: CCC1 - West																							
JL1	L1				5													10	25				
JL1	JL3					135											700						
JL3	L3				5													10	25				
JL3	JL5					60				100							990						
JL5	L5				5													10	25				
JL5	JL7					175											1085						
JL7	L7				5													10	25				
JL7	JL9					125											775						
JL9	L9				5													10	25				
JL9	JL11									115							715						
JL11	L11				5													10	25				
JL11	JL13					155											960						
JL13	L13				5													10	25				
JL13	JL15					145											900						
JL15	L15				5													10	25				
JL15	JL17					70											435						
JL2	L2				10													15	45				
JL2	JL4					85											450						
JL4	L4				5													10	25				
JL4	JL6					35				100							835						
JL6	L6				40													45	165				
JL6	L61				20													25	85				
JL6	JL8					235											1455						
JL8	L8				5													10	25				
JL8	JL10					100											620						
JL10	L10				5													10	25				
JL10	JL12									115							715						
JL12	L12				5													10	25				
JL12	JL14					145											900						
JL14	L14				5													10	25				
JL14	JL16					160											990						
JL16	L16				5													10	25				
JL16	JL18					50																	
JL18	JL17											100				310	825						
JL17	CCC1							25								80	515						
Service Cabinet	CCC1					240								745	250								
JL17	JB1					25											80						
Subtotal:					140	1940	0	25		430	0	100		745	250	390	13945	225	645			0	

TABLE OF CONDUIT AND CABLE QUANTITIES

STATE OF SOUTH DAKOTA	PROJECT	SHEET	TOTAL SHEETS
	NH 0050(99)381	L9	L49

Revised: 8/21/15 JDW

Location to Location		Rigid Conduit												Copper Wire								Pole and Bracket Cable	
					Schedule 40					Schedule 80													
					1.5" Ft	2" Ft	2.5" Ft	3" Ft		2" Ft	2.5" Ft	3" Ft		1/C #000 AWG Ft	1/C #3 AWG Ft	1/C #4 AWG Ft	1/C #6 AWG Ft	1/C #8 AWG Ft	1/C #10 AWG Ft	2/C #12 AWG Ft		2/C #10 AWG Ft	
Lighting: CCC1 - East																							
JL17	JL19									100							620						
JL19	JL20					75											465						
JL20	L17				5													10	25				
JL20	JL22					160											990						
JL22	L19				5													10	25				
JL22	JL24					135											835						
JL24	L21				5													10	25				
JL24	JL26					35				110							900						
JL26	L23				5													10	25				
JL26	JL28					175											1085						
JL28	L25				5													10	25				
JL28	JL30					135											835						
JL30	L27				5													10	25				
JL30	JL32					55				90							750						
JL32	L29				5													10	25				
JL18	JL21									160							990						
JL21	L18				5													10	25				
JL21	JL23					175											1085						
JL23	L20				5													10	25				
JL23	JL25					105											650						
JL25	L22				5													10	25				
JL25	JL27					70				110							1115						
JL27	L24				5													10	25				
JL27	JL29					175											1085						
JL29	L26				5													10	25				
JL29	JL31					125											775						
JL31	L28				5													10	25				
JL31	JL33					75				85							825						
JL33	L30				5													10	25				
Lighting: CCC2 - West																							
JL34	L31				5													10	25				
JL34	JL36					135											700						
JL36	L33				5													10	25				
JL36	JL38					70				80							930						
JL38	L35				5													10	25				
JL38	JL40					175											1085						
JL40	L37				5													10	25				
JL40	JL42					110											680						
JL42	L39				5													10	25				
JL42	JL44					65				90							960						
JL44	L41				5													10	25				
JL44	JL46					165											1020						
JL46	L43				5													10	25				
JL46	JL48					135											835						
Subtotal:					105	2350	0	0		825	0	0		0	0	0	19215	210	525			0	

TABLE OF CONDUIT AND CABLE QUANTITIES

STATE OF SOUTH DAKOTA	PROJECT	SHEET	TOTAL SHEETS
	NH 0050(99)381	L10	L49

Revised: 8/21/15 JDW

Location to Location		Rigid Conduit												Copper Wire								Pole and Bracket Cable	
					Schedule 40					Schedule 80													
					1.5"	2"	2.5"	3"		2"	2.5"	3"		1/C #000 AWG	1/C #3 AWG	1/C #4 AWG	1/C #6 AWG	1/C #8 AWG	1/C #10 AWG	2/C #12 AWG		2/C #10 AWG	
					Ft	Ft	Ft	Ft		Ft	Ft	Ft		Ft	Ft	Ft	Ft	Ft	Ft	Ft		Ft	
Lighting: CCC2 - West (cont)																							
JL48	L45				5													10	25				
JL48	JL50									95							590						
JL50	JL51											95					590	490					
JL35	L32				5													10	25				
JL35	JL37					115											595						
JL37	L34				5													10	25				
JL37	JL39					80				80							990						
JL39	L36				5													10	25				
JL39	JL41					180											1115						
JL41	L38				5													10	25				
JL41	JL43					115											715						
JL43	L40				5													10	25				
JL43	JL45					85				80							90						
JL45	L42				5													10	25				
JL45	JL47					175											1085						
JL47	L44				5													10	25				
JL47	JL49					115											715						
JL49	L46				5													10	25				
JL49	JL51					50				80							805						
Power Feed	JL100										85												
JL100	JL101						175																
JL101	JL102										65												
JL102	CCC2/Meter						40																
CCC2	JL51							25									285	260					
Lighting: CCC2 - East																							
JL50	JL52					65											70	335					
JL52	L47				5													10	25				
JL52	JL54					170											180	880					
JL54	L49				10													15	45				
JL54	JL56					80											85	415					
JL56	JL59									180							190	930					
JL59	L51				10													15	45				
JL59	JL61					145											150	750					
JL61	L53				5													10	25				
JL61	JL63					105											110	440					
JL51	JL53					90											95	465					
JL53	L48				5													10	25				
JL53	JL55					160											165	825					
JL55	L50				5													10	25				
JL55	JL57					80											85	415					
JL57	JL58									140							145	725					
	Subtotal:				85	1810	215	25		655	150	95		0	0	0	8850	7090	415			0	

TABLE OF CONDUIT AND CABLE QUANTITIES

STATE OF SOUTH DAKOTA	PROJECT	SHEET	TOTAL SHEETS
	NH 0050(99)381	L11	L49

Revised: 8/21/15 JDW

Location to Location		Rigid Conduit												Copper Wire								Pole and Bracket Cable	
					Schedule 40					Schedule 80													
					1.5"	2"	2.5"	3"		2"	2.5"	3"		1/C #000 AWG	1/C #3 AWG	1/C #4 AWG	1/C #6 AWG	1/C #8 AWG	1/C #10 AWG	2/C #12 AWG		2/C #10 AWG	
					Ft	Ft	Ft	Ft		Ft	Ft	Ft		Ft	Ft	Ft	Ft	Ft	Ft	Ft		Ft	
Lighting: LC2 - East (cont)																							
JL58	JL60					85											90	440					
JL60	L52				5													10	25				
JL60	JL62					145											150	750					
JL62	L54				5													10	25				
JL62	JL64					110											115	460					
Luminaire Pole																							
Luminaire Pole	L1																			20		25	
Luminaire Pole	L2																			20		25	
Luminaire Pole	L3																			20		25	
Luminaire Pole	L4																			20		25	
Luminaire Pole	L5																			20		25	
Luminaire Pole	L6																			20		25	
Luminaire Pole	L7																			20		25	
Luminaire Pole	L8																			20		25	
Luminaire Pole	L9																			20		25	
Luminaire Pole	L10																			20		25	
Luminaire Pole	L11																			20		25	
Luminaire Pole	L12																			20		25	
Luminaire Pole	L13																			20		25	
Luminaire Pole	L14																			20		25	
Luminaire Pole	L15																			20		25	
Luminaire Pole	L16																			20		25	
Luminaire Pole	L17																			20		25	
Luminaire Pole	L18																			20		25	
Luminaire Pole	L19																			20		25	
Luminaire Pole	L20																			20		25	
Luminaire Pole	L21																			20		25	
Luminaire Pole	L22																			20		25	
Luminaire Pole	L23																			20		25	
Luminaire Pole	L24																			20		25	
Luminaire Pole	L25																			20		25	
Luminaire Pole	L26																			20		25	
Luminaire Pole	L27																			20		25	
Luminaire Pole	L28																			20		25	
Luminaire Pole	L29																			20		25	
Luminaire Pole	L30																			20		25	
Luminaire Pole	L31																			20		25	
Luminaire Pole	L32																			20		25	
Luminaire Pole	L33																			20		25	
Luminaire Pole	L34																			20		25	
Luminaire Pole	L35																			20		25	
Luminaire Pole	L36																			20		25	
Luminaire Pole	L37																			20		25	
Luminaire Pole	L38																			20		25	
	Subtotal:				10	340	0	0		0	0	0		0	0	0	355	1670	50	760		950	

TABLE OF CONDUIT AND CABLE QUANTITIES

STATE OF SOUTH DAKOTA	PROJECT	SHEET	TOTAL SHEETS
	NH 0050(99)381	L12	L49

Revised: 8/21/15 JDW

Location to Location		Rigid Conduit												Copper Wire								Pole and Bracket Cable	
					Schedule 40					Schedule 80													
					1.5"	2"	2.5"	3"		2"	2.5"	3"		1/C #000 AWG	1/C #3 AWG	1/C #4 AWG	1/C #6 AWG	1/C #8 AWG	1/C #10 AWG	2/C #12 AWG		2/C #10 AWG	
					Ft	Ft	Ft	Ft		Ft	Ft	Ft		Ft	Ft	Ft	Ft	Ft	Ft	Ft		Ft	
Luminaire Pole	L39																			20		25	
Luminaire Pole	L40																			20		25	
Luminaire Pole	L41																			20		25	
Luminaire Pole	L42																			20		25	
Luminaire Pole	L43																			20		25	
Luminaire Pole	L44																			20		25	
Luminaire Pole	L45																			20		25	
Luminaire Pole	L46																			20		25	
Luminaire Pole	L47																			20		25	
Luminaire Pole	L48																			20		25	
Luminaire Pole	L49																			20		25	
Luminaire Pole	L50																			20		25	
Luminaire Pole	L51																			20		25	
Luminaire Pole	L52																			20		25	
Luminaire Pole	L53																			20		25	
Luminaire Pole	L54																			20		25	
Luminaire Pole	L61																			20		55	
Subtotal:					0	0	0	0		0	0	0		0	0	0	0	0	0	340		455	
Lighting Total:					340	6,440	215	50		1,910	150	195		745	250	390	42,365	9,195	1,635	1,100		1,405	

STATE OF SOUTH DAKOTA	PROJECT	SHEET	TOTAL SHEETS
	NH 0050(99)381	L18	L49

Plotting Date: 8/24/2015 Revised by: JDW

CONDUIT LAYOUT

SD HWY 50 / 4TH STREET

LEGEND	
KEY	ITEM
2" SCH 40 / 12/C	EXISTING CONDUIT AND CABLE
2" SCH 40 / 12/C	NEW CONDUIT AND CABLE
REFER TO PROJECT NH-PH0081(23)0 FOR ADDITIONAL INFORMATION REGARDING EXISTING CABLES AND CONDUIT	

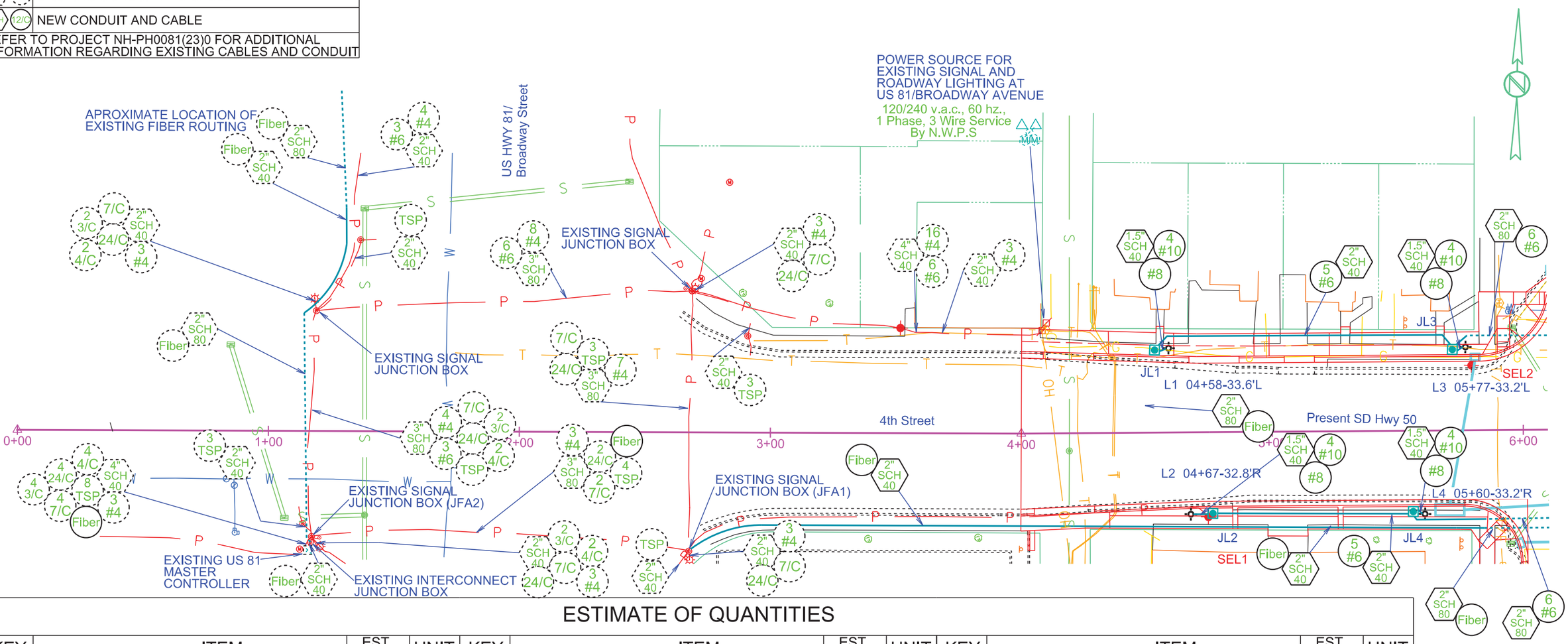

ESTIMATE OF QUANTITIES

KEY	ITEM	EST QUANT	UNIT	KEY	ITEM	EST QUANT	UNIT	KEY	ITEM	EST QUANT	UNIT
	REMOVE LUMINAIRE POLE FOOTING	32	EACH		TYPE 2 ELECTRICAL JUNCTION BOX (JL1-16, JL18-JL50, JL52-JL64, JL100-JL102)	65	EACH	2.5" SCH 80	2.5" RIGID CONDUIT, SCHEDULE 80	150	FT
	SALVAGE LUMINAIRE POLE (SEL1-SEL29, SEL50-SEL52)	32	EACH		TYPE 4 ELECTRICAL JUNCTION BOX (JF1-JF12, JL17, JL51)	14	EACH	3" SCH 80	3" RIGID CONDUIT, SCHEDULE 80	195	FT
	BREAKAWAY BASE LUMINAIRE POLE WITH ARM, 40' MOUNTING HT (L61)	1	EACH		ELECTRICAL SERVICE CABINET	1	EACH	3 #3/0	1/C #000 AWG COPPER WIRE	745	FT
	DECORATIVE LUMINAIRE POLE (L1-L54)	54	EACH		CIRCUIT CONTROL CENTER (CCC1 - CCC2)	2	EACH	#3	1/C #3 AWG COPPER WIRE	250	FT
	DECORATIVE LUMINAIRE, 400 WATT (L1-L54)	54	EACH	M	METER SOCKET (NOT A BID ITEM)	2	EACH	#4	1/C #4 AWG COPPER WIRE	390	FT
	ROADWAY LUMINAIRE, LED (L61)	1	EACH	1.5" SCH 40	1.5" RIGID CONDUIT, SCHEDULE 40	340	FT	#6	1/C #6 AWG COPPER WIRE	42,365	FT
	2' DIAMETER FOOTING (L1, L2, L4, L6, L8, L10, L12-L47, L49, L51-L54)	196	FT	2" SCH 40	2" RIGID CONDUIT, SCHEDULE 40	9,555	FT	#8	1/C #8 AWG COPPER WIRE	9,195	FT
	STRUCTURE EXCAVATION, MISCELLANEOUS (L3, L5, L7, L9, L11, L48, L50)	22	Cu Yd	2.5" SCH 40	2.5" RIGID CONDUIT, SCHEDULE 40	215	FT	#10	1/C #10 AWG COPPER WIRE	1,635	FT
	CLASS M6 CONCRETE (L3, L5, L7, L9, L11, L48, L50)	6.3	Cu Yd	3" SCH 40	3" RIGID CONDUIT, SCHEDULE 40	50	FT	Fiber	48 STRAND FIBER OPTIC CABLE	4,560	FT
	EPOXY COATED REINFORCING STEEL (L3, L5, L7, L9, L11, L48, L50)	651	Lb	2" SCH 80	2" RIGID CONDUIT, SCHEDULE 80	2,800	FT		POLE AND BRACKET CABLE	1,405	FT
									2/C #12 AWG COPPER WIRE	1,100	FT

REGISTERED PROFESSIONAL ENGINEER
JONATHAN D. WIEGAND
14769
SOUTH DAKOTA
8/24/15

STATE OF SOUTH DAKOTA	PROJECT	SHEET	TOTAL SHEETS
	NH 0050(99)381	L33	L49

Plotting Date: 8/24/2015 Revised by: JDW

WIRING DIAGRAM

SD HWY 50 / 4TH STREET

LEGEND:

- LUMINAIRE: 400 watt Metal Halide Post-top
- LUMINAIRE: 284 watt LED Cobrahead
- FUSE: 5 amp. Dual Element
- OUTLET

NOTES

1. See Sheet L37 for equipment list and elementary control diagram for lighting controller.
2. All circuits shall be bonded in accordance with the NATIONAL ELECTRICAL CODE. Quantities for bonding conductors are not included in these plans.

REGISTERED PROFESSIONAL ENGINEER REG. NO. 6540 STEVEN R. JUNOD SOUTH DAKOTA 8/24/15

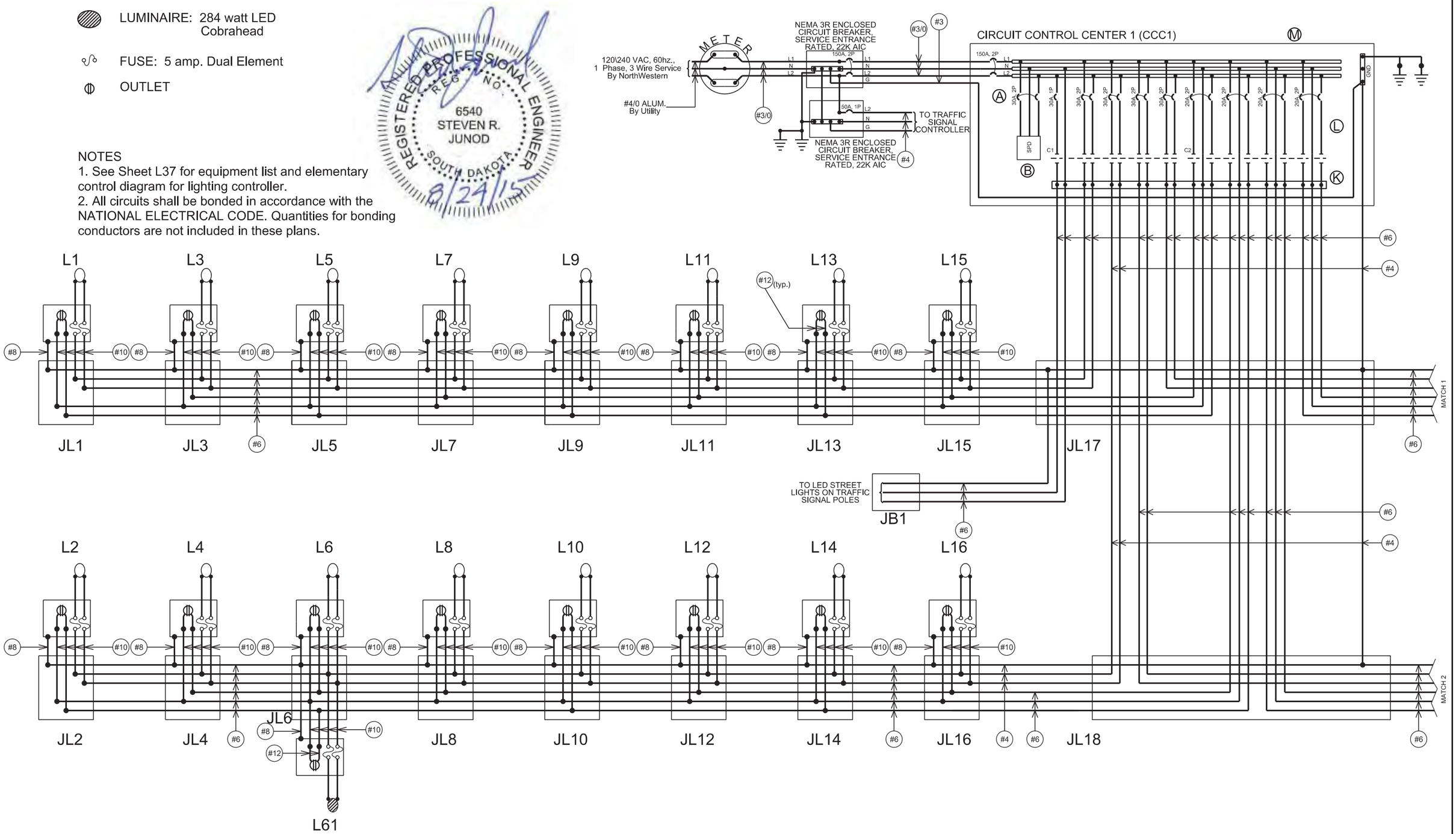

STATE OF SOUTH DAKOTA	PROJECT	SHEET	TOTAL SHEETS
	NH 0050(99)381	L34	L49

Plotting Date: 8/24/2015 Revised by: JDW

WIRING DIAGRAM

SD HWY 50 / 4TH STREET

LEGEND:

- LUMINAIRE: 400 watt Metal Halide Post-top
- LUMINAIRE: 284 watt LED Cobrahead
- FUSE: 5 amp. Dual Element
- OUTLET

REGISTERED PROFESSIONAL ENGINEER
REG. NO. 6540
STEVEN R. JUNOD
SOUTH DAKOTA
8/24/15

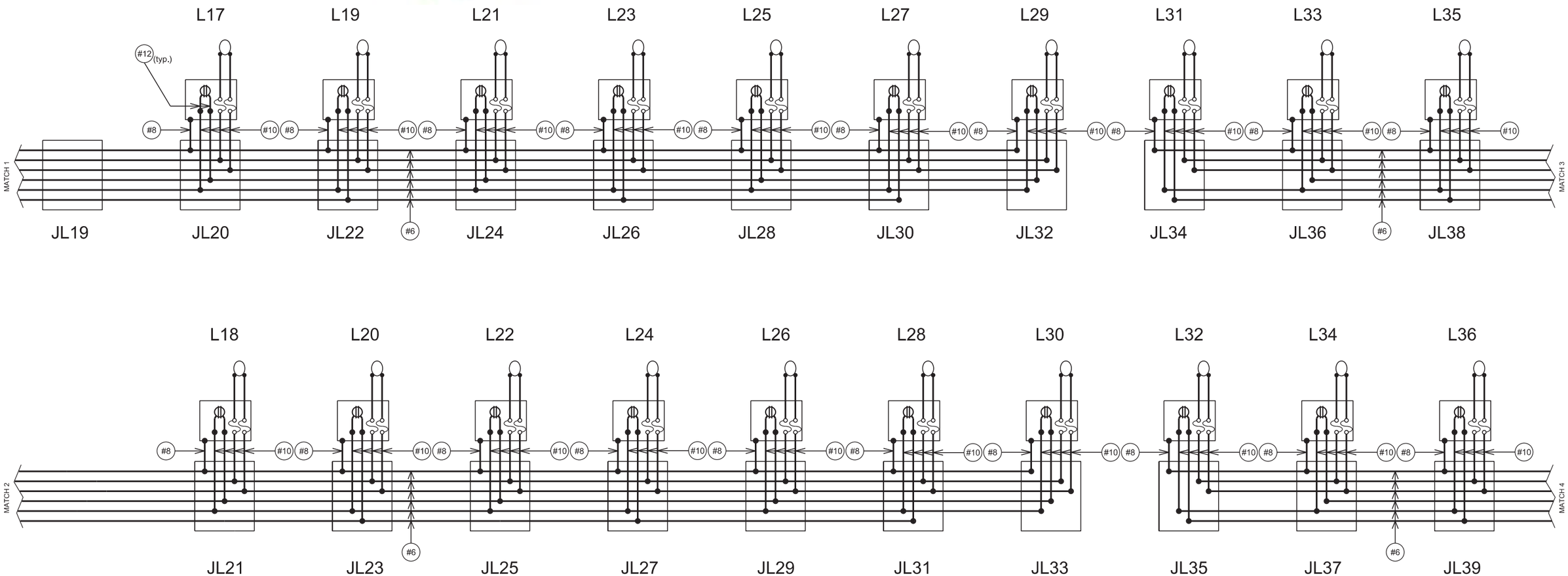

NOTES

1. All circuits shall be bonded in accordance with the NATIONAL ELECTRICAL CODE. Quantities for bonding conductors are not included in these plans.

STATE OF SOUTH DAKOTA	PROJECT	SHEET	TOTAL SHEETS
	NH 0050(99)381	L35	L49

Plotting Date: 8/24/2015 Revised by: JDW

WIRING DIAGRAM

SD HWY 50 / 4TH STREET

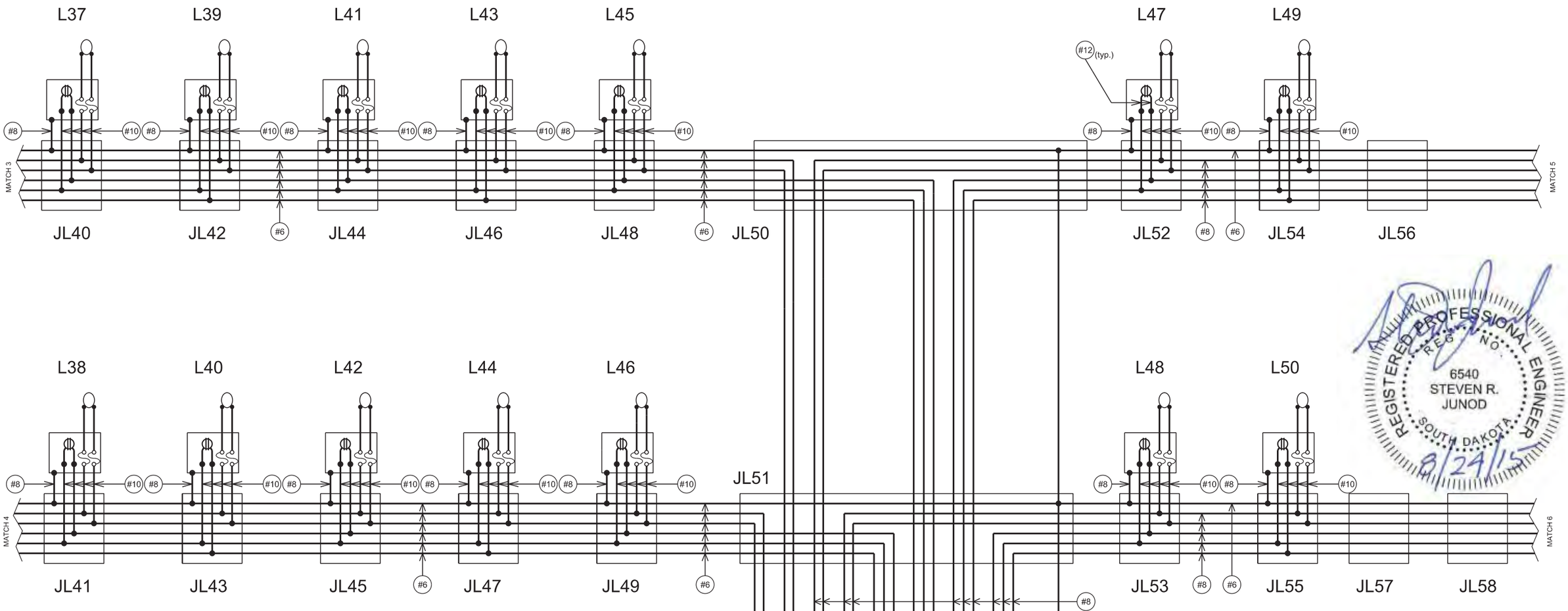

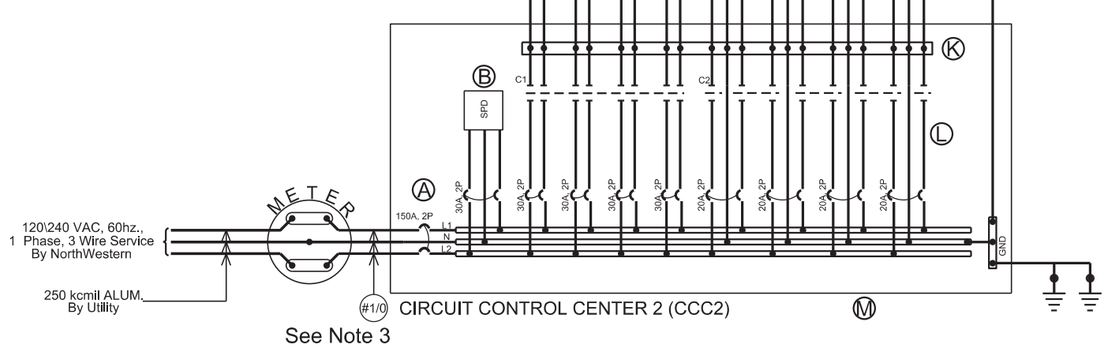

See Note 3

LEGEND:

- LUMINAIRE: 400 watt Metal Halide Post-top
- LUMINAIRE: 284 watt LED Cobrahead
- FUSE: 5 amp. Dual Element
- OUTLET

NOTES

1. See Sheet L37 for equipment list and elementary control diagram for lighting controller.
2. All circuits shall be bonded in accordance with the NATIONAL ELECTRICAL CODE. Quantities for bonding conductors are not included in these plans.
3. Service entrance conductors #1/0, conduit, and fittings are incidental to the installation of Circuit Control Center 2.

STATE OF SOUTH DAKOTA	PROJECT	SHEET	TOTAL SHEETS
	NH 0050(99)381	L36	L49

Plotting Date: 8/24/2015 Revised by: JDW

WIRING DIAGRAM

SD HWY 50 / 4TH STREET

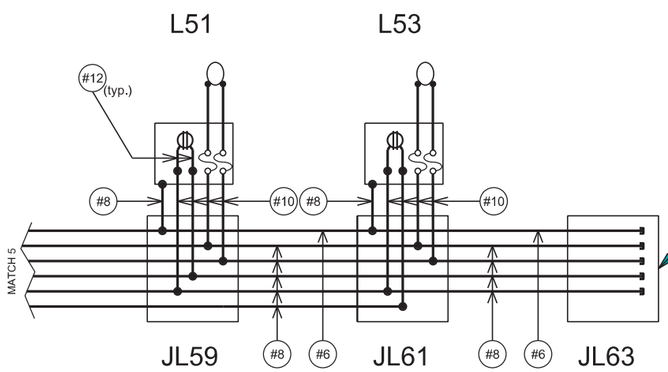

PROVIDE 10' OF LEAD LENGTH FOR EACH CONDUCTOR, WATERPROOF WIRE-NUT EACH CONDUCTOR END, COIL CONDUCTORS IN JUNCTION BOX FOR FUTURE EXTENSION.

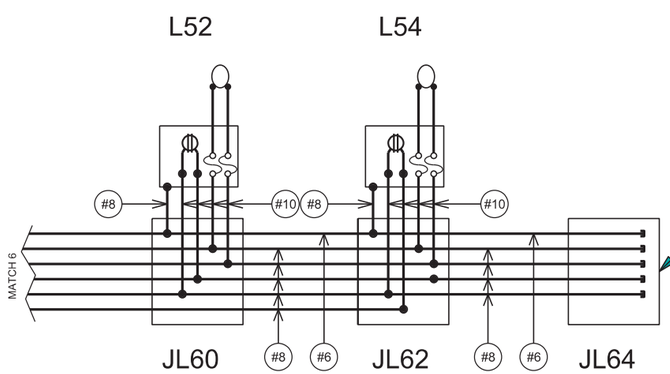

PROVIDE 10' OF LEAD LENGTH FOR EACH CONDUCTOR, WATERPROOF WIRE-NUT EACH CONDUCTOR END, COIL CONDUCTORS IN JUNCTION BOX FOR FUTURE EXTENSION.

LEGEND:

- LUMINAIRE: 400 watt Metal Halide Post-top
- LUMINAIRE: 284 watt LED Cobrahead
- FUSE: 5 amp. Dual Element
- OUTLET

NOTES

1. All circuits shall be bonded in accordance with the NATIONAL ELECTRICAL CODE. Quantities for bonding conductors are not included in these plans.

Revised 08/21/2015 JDW

SECTION M ESTIMATE OF QUANTITIES

BID ITEM NUMBER	ITEM	QUANTITY	UNIT
633E0030	Cold Applied Plastic Pavement Marking, 24" *(White 1,510', Yellow 40')*	1,550	Ft
633E0040	Cold Applied Plastic Pavement Marking, Arrow *(Left 38, Right 0)*	38	Each
633E1445	Pavement Marking Paint, Arrow	76	Each
633E3000	Durable Pavement Marking, 4" White	2,855	Ft
633E3005	Durable Pavement Marking, 4" Yellow	8,465	Ft
633E5015	Grooving for Cold Applied Plastic Pavement Marking, 24"	1,550	Ft
633E5025	Grooving for Cold Applied Plastic Pavement Marking, Arrow	38	Each
633E5100	Grooving for Durable Pavement Marking, 4"	11,320	Ft
634E0560	Remove Pavement Marking, 4" or Equivalent	7,635	Ft
634E0565	Remove Pavement Marking, Arrow	11	Each
634E0640	Temporary Pavement Marking	42,990	Ft

GROOVE PAVEMENT FOR PAVEMENT MARKING

The Contractor should not use water for the grooving for pavement markings. If water is used, then there shall be adequate time for the concrete pavement to completely dry prior to the installation of pavement markings.

The Contractor shall establish a positive means for the removal of the grinding and/or grooving residue. The Contractor shall use a vacuum attachment to collect dust and residue created by the grooving of pavement. Solid residue shall be removed from the pavement surfaces before being blown by traffic action or wind. Residue shall not be permitted to flow across lanes being used by public traffic or into gutter or drainage facilities. Residue, whether in solid or slurry form, shall be disposed of in a manner that will prevent it from reaching any waterway in a concentrated state.

COLD WEATHER WATERBORNE PAINT

Waterborne paint applied after October 15 shall be formulated as cold weather, waterborne paint, and shall be applied in accordance with manufacturer's recommendations, including minimum temperature requirements.

Cold weather, waterborne paint shall conform to Section 980 of the Specifications except for the following:

980.1: Resin Binder shall be Fastrack™ XSR manufactured by Dow, or approved equal.

980.1 A. Quantitative Requirements:

Pigment, percent by weight: 60.0 – 63.0 for white and 58.5 – 61.5 for yellow.

Pigment, percent by weight; Tested in accordance with ASTM D3723: 60.0 – 63.0 for white and 56.1 – 59.2 for yellow.

Non-volatile Vehicle, percent by weight; Tested in accordance with NIST 141C (Method 4051.1): 41.5 minimum for white and 51.5 minimum for yellow.

REMOVE PAVEMENT MARKING

The Contractor shall remove all existing pavement markings for crosswalks, stop bars, lane lines, arrows, and railroad crossing before placing new pavement markings on existing pavement. The locations and respective quantities for the removal and replacement of pavement markings on existing pavement to remain in-place at cross-street intersections have been identified in the plan sheets and accounted for in the estimate of quantities. The removal and replacement of the existing pavement markings shall be at the discretion of the Project Engineer.

All work involved in removing the existing crosswalk, stop bar, and lane line pavement markings for the placement of new pavement markings shall be incidental to the contract unit price per foot for "Remove Pavement Marking, 4" or Equivalent".

All work involved in removing the existing arrow pavement markings for the placement of new pavement markings shall be incidental to the contract unit price each for "Remove Pavement Marking, Arrow".

Removal quantities broken out per intersection, as follows:

Remove Pavement Marking, 4" or Equivalent:
- 565 Ft between US81/Broadway Street and STA 4+00
- 90 Ft at Douglas Avenue
- 6,980 Ft at Burleigh Street and from Burleigh Street through the Marne Creek Bridge

Remove Pavement Marking, Arrow
- 2 each between US81/Broadway Street and STA 4+00
- 1 each at Walnut Street
- 2 each at Douglas Avenue
- 6 each at Burleigh Street

EXISTING PAVEMENT MARKINGS ON PAVEMENT LEFT IN-PLACE

For pavement markings that replace existing pavement markings on pavement left in-place extending from the intersections with US81/Broadway Street, Douglas Avenue, and Burleigh Street as noted in the plans, the following notes apply:

Match existing lane channelization pavement markings unless indicated on the plan sheets. New pavement markings on in-place pavement shall tie into new pavement markings on new pavement.

Plan sheet lane width dimensions marked with an (*) indicates lane width is approximate and reflects record drawing layout.

Stationing of pavement markings on pavement left in-place is approximate and used as basis for estimate of quantities.

Unless specifically noted, estimate of quantities accounts for the removal of existing pavement markings on pavement to remain in-place, grooving for new pavement marking layout, and placement of new pavement markings.

REPAIR PAVEMENT MARKINGS AT END OF PROJECT

A quantity of "Temporary Pavement Marking" is included in the plans to repair pavement markings at the east end of the project from approximately STA 43+66 to east end of construction tapers near 50+50. The Contractor shall apply 2 separate applications of paint, with the second being a minimum of 2 weeks after the first application.

Estimate of Quantities
1. Temporary Pavement Marking: 1,750 Ft

PAVEMENT MARKING AFTER OCTOBER 15TH

Should the Engineer determine that the application guidelines of the Special Provision for Durable Pavement Marking (Section III, D) will not be able to be met, durable pavement marking application shall be delayed until next construction season and pavement marking paint shall be applied as interim pavement markings. All pavement markings as shown in the details in these plans, including 4" lines, 24" lines and arrows, shall be painted. Quantities of pavement marking paint for 2 applications are included. One application will be painted before the roadway is opened to traffic. The second application will be painted in April the following year if the Engineer determines it is necessary. Paint and glass bead rates are included in the table below.

Cost for this work for the 4" and 24" lines will be included in the contract unit price per Foot for Temporary Pavement Marking. The length included will be a 4" equivalent, therefore the length of 24" painted lines will be multiplied by 6 for payment purposes. Cost for painting the arrows will be included in the contract unit price per Each for Pavement Marking Paint, Arrow.

TEMPORARY PAINT RATES (Rates for one 4" line)
Solid Yellow line Rate = 16.9 Gals/Mile
Dashed Yellow line Rate = 4.6 Gals/Mile
Solid White line Rate = 16.9 Gals/Mile
Dashed White line Rate = 4.6 Gals/Mile
Glass Beads = 8Lbs/Gal

Estimate of Quantities
2. Temporary Pavement Marking: 41,240 Ft
3. Pavement Marking Paint, Arrow: 76 each

REGISTERED PROFESSIONAL ENGINEER
REG. NO. 14759
JONATHAN D. WIEGAND
SOUTH DAKOTA
6/24/15