FOR BIDDING PURPOSES ONLY

STATE OF SOUTH DAKOTA	PROJECT	SHEET	TOTAL SHEETS
	NH 0100(103)417	L1	L39

FILE: L01 Title.dgn
PLOTTING DATE: 12-30-2014

REV DATE:
INITIAL:

Section L: Lighting and Signal Plans

INDEX OF SHEETS

L1	General Layout with Index
L2-L9	Estimate with General Notes & Tables
L10	Signal Layouts
L11-L25	Conduit Layouts
L26-L28	Wiring Diagrams
L29-L39	Standard Plates & Details

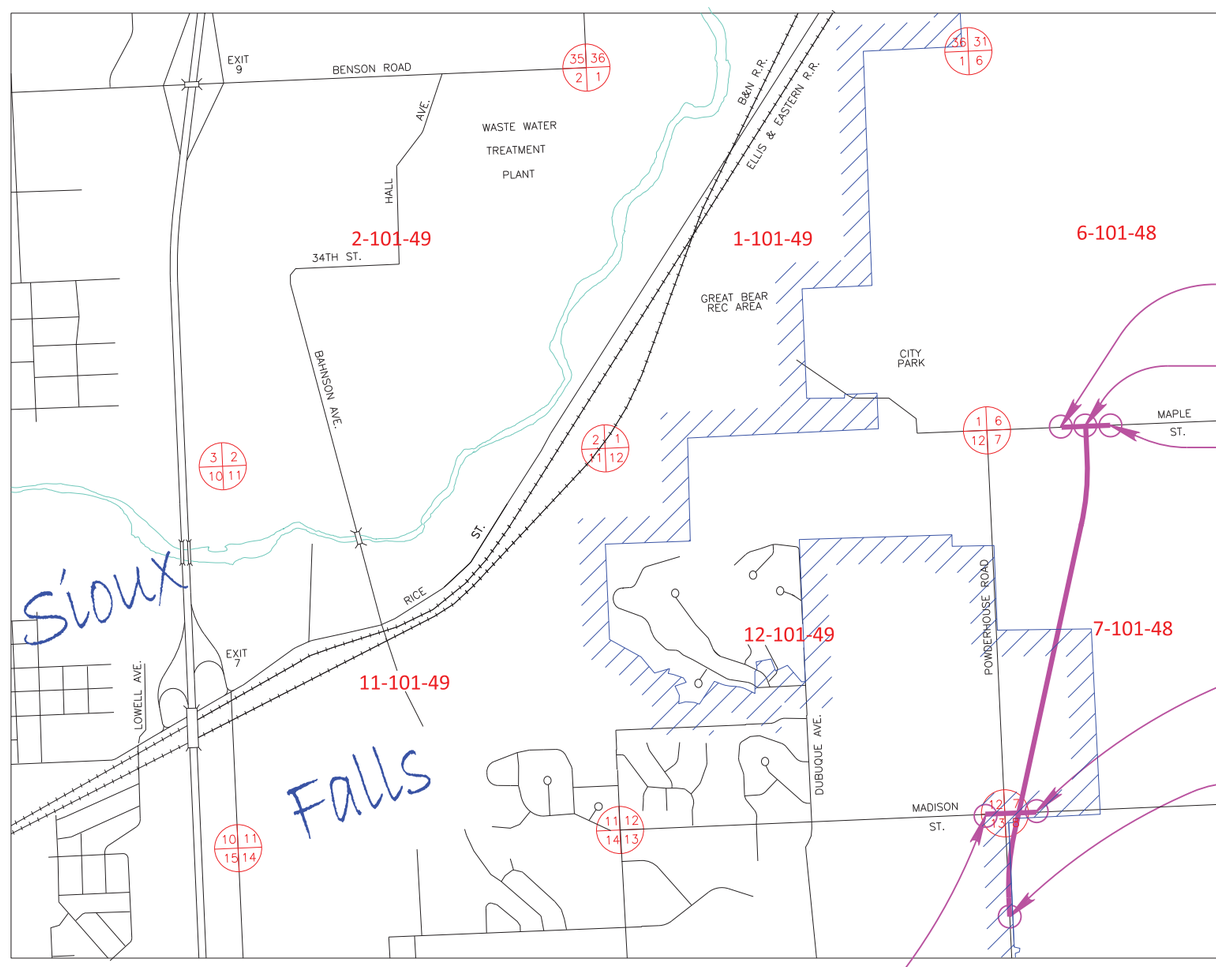

BEGIN NH 0100(103)
Maple Street
Station 42+61.15

END NH 0100(103)
Hwy 100
Station 786+00.00

END NH 0100(103)
Maple Street
Station 49+34.39

END NH 0100(103)
Madison Street
Station 24+45.63

BEGIN NH 0100(103)
Hwy 100
Station 717+07.63

BEGIN NH 0100(103)
Madison Street
Station 19+38.13

REGISTERED PROFESSIONAL ENGINEER
REG. NO. 8324
LANCE R. MCQUEEN
SOUTH DAKOTA
1-6-15

HDR

SECTION L ESTIMATE OF QUANTITIES

Bid Item Number	Item	Quantity	Unit
110E1540	Remove Luminaire Pole Footing	5	Each
110E5100	Salvage Luminaire Pole	5	Each
635E0050	Breakaway Base Luminaire Pole with Arm, 50' Mounting Height	50	Each
635E0150	Breakaway Base Luminaire Pole with Twin Arms, 50' Mounting Height	2	Each
635E2035	Signal Pole with 35' Mast Arm	1	Each
635E2065	Signal Pole with 65' Mast Arm	2	Each
635E2140	Signal Pole with 40' Mast Arm and Luminaire Arm	1	Each
635E3340	Roadway Luminaire, 400 Watt with Photoelectric Cell	55	Each
635E3550	Tunnel Luminaire, 70 Watt	14	Each
635E4030	3 Section Vehicle Signal Head	8	Each
635E4040	4 Section Vehicle Signal Head	8	Each
635E4050	5 Section Vehicle Signal Head	4	Each
635E5020	2' Diameter Footing	458.0	Ft
635E5030	3' Diameter Footing	52.0	Ft
635E5310	Special Electrical Junction Box	49	Each
635E5400	Electrical Service Cabinet	4	Each
635E5430	Traffic Signal Controller	1	Each
635E5450	Side Mounted Cabinet	1	Each
635E5515	Signal Head Battery Backup and Flash System	1	Each
635E5545	Wireless In Pavement Traffic Sensor	51	Each
635E5555	Wireless Access Point	2	Each
635E5558	Wireless Repeater	6	Each
635E5560	Emergency Vehicle Preemption Unit	2	Each
635E5570	Optical Detector	4	Each
635E5900	Pedestrian Push Button	2	Each
635E5910	Pedestrian Push Button Pole	2	Each
635E5922	Pedestrian Signal Head with Countdown Timer	2	Each
635E5930	Pedestrian Crossing Sign	2	Each
635E6200	Miscellaneous, Electrical	Lump Sum	LS
635E7000	Install Luminaire Pole	5	Each
635E8025	2.5" Rigid Galvanized Steel Conduit	1,590	Ft
635E8030	3" Rigid Galvanized Steel Conduit	775	Ft
635E8040	4" Rigid Galvanized Steel Conduit	1,190	Ft
635E8050	5" Rigid Galvanized Steel Conduit	10	Ft
635E8108	0.75" Rigid Conduit, Schedule 40	70	Ft
635E8115	1.5" Rigid Conduit, Schedule 40	280	Ft
635E8120	2" Rigid Conduit, Schedule 40	11,640	Ft
635E8130	3" Rigid Conduit, Schedule 40	1,560	Ft
635E8140	4" Rigid Conduit, Schedule 40	50	Ft
635E8215	1.5" Rigid Conduit, Schedule 80	20	Ft
635E8220	2" Rigid Conduit, Schedule 80	70	Ft
635E8230	3" Rigid Conduit, Schedule 80	2,090	Ft
635E8410	1/2" Innerduct, SDR 13.5	22,320	Ft
635E8420	1.5" Innerduct, SDR 13.5	120	Ft
635E8830	2/2/2/4 Aluminum Wire	17,660	Ft
635E9012	1/C #2 AWG Copper Wire	1,055	Ft
635E9014	1/C #4 AWG Copper Wire	240	Ft
635E9020	1/C #10 AWG Copper Wire	7,460	Ft
635E9302	2/C #14 AWG IMSA Copper Cable, K1	85	Ft
635E9304	4/C #14 AWG IMSA Copper Cable, K1	425	Ft
635E9305	5/C #14 AWG IMSA Copper Cable, K1	355	Ft
635E9307	7/C #14 AWG IMSA Copper Cable, K1	120	Ft
635E9325	25/C #14 AWG IMSA Copper Cable, K1	1,400	Ft
635E9710	2/C #10 AWG Copper Pole and Bracket Cable	4,040	Ft
635E9800	Preemption Cable	2,790	Ft

SUPPLYING AS BUILT PLANS

If the traffic signal systems or roadway lighting systems are constructed differently than what is stated in the plans, the Contractor shall supply as built plans to the Engineer and a copy shall be sent to the Traffic Design Engineer. The as built plans may include conduit layouts, wiring diagrams, or other drawings depicting the changes from the original plans.

SHOP DRAWING AND CATALOG CUTS SUBMITTAL

The Contractor shall submit shop drawings and catalog cuts in accordance with Section 985 of the Specifications or in Adobe PDF format. PDF submittals shall be sent to the following email address:

Lance.McQueen@hdrinc.com

Upon review of the submittals, they will be sent by the Engineer to the following email addresses for concurrence of approvals or remarks:

Norris.Leone@state.sd.us
John.Less@state.sd.us
Pete.Longman@state.sd.us
HHoftiezer@siouxfalls.org

ON-SITE INSPECTION

An on-site inspection of the traffic signals shall be conducted before acceptance of the project, once the traffic signals are completed and operational. The on-site inspection shall be conducted by the Contractor, Region Traffic Engineer, City Traffic Engineer and Consultant Design Engineer.

MISCELLANEOUS, ELECTRICAL

"Miscellaneous, Electrical" work includes, but is not limited to:

- Connecting / tying to existing conduits and junction boxes
- Removal of existing traffic and lighting junction boxes
- Removal of existing detector loops
- Removal/abandonment of existing lighting and traffic conduits and cables

LIGHTNING PROTECTION

All luminaire poles and service cabinets shall be equipped with industrial lightning arrestors compliant with current NEMA and UL Standards for lightning arrestors. Cost for ground rods and lightning arrestors shall be incidental to the contract unit price for the corresponding luminaire pole and service cabinet bid item.

TRAFFIC SIGNAL CONTROL CABLE LABELS

Traffic signal cable shall be identified in hand holes, junction boxes, pedestal bases, electrical service cabinets, and controller cabinets as indicated on the Wiring Diagram. Labels shall be wrapped around traffic signal cable to indicate the signal pole and signal head that it is connected to. Labels shall be self-adhesive vinyl cloth with a preprinted legend. Traffic signal control cables to the poles shall be marked with a legend and shall be color coded as follows; northwest (blue), northeast (red), southeast (green), and southwest (orange).

SALVAGE LUMINAIRE POLE

Existing luminaire poles and luminaires shall be salvaged at the locations shown on the plans. The salvaged poles and luminaires shall be stored on-site until they are reinstalled at the location shown on the plans.

All costs for work involved in the salvaging and storing of the existing luminaire poles and luminaires shall be incidental to the contract unit price per each for "Salvage Luminaire Pole".

REMOVE LUMINAIRE POLE FOOTING

The footings of salvaged luminaire poles shall be removed by the Contractor to a minimum of 2' below the ground surface. Restoration of the disturbed area shall be to the satisfaction of the Engineer.

All costs for removing the footings of the salvaged luminaire poles shall be incidental to the contract unit price per each for "Remove Luminaire Pole Footing".

INSTALL LUMINAIRE POLE

Luminaire poles and the luminaires salvaged from the site shall be reinstalled at the locations shown on the plans. Luminaire poles and luminaires damaged during relocation shall be repaired or replaced by the Contractor at no cost to the State.

It shall be the Contractor's responsibility to obtain the bolt circle pattern and anchor bolts for the relocated poles from the pole manufacturer listed below. The poles were originally installed under Project EM-P 1157(01) PCN H017, Powderhouse Road, 10th Street to Madison Street.

Millerbernd Manufacturing
P.O. Box 98
Winsted, MN 55395
(320) 485-2111

All costs involved with installing the salvaged luminaire poles and luminaires shall be incidental to the contract unit price per each for "Install Luminaire Pole".

REGISTERED PROFESSIONAL ENGINEER
REG. NO. 8324
LANCE R. MCQUEEN
SOUTH DAKOTA
1-6-15

HDR

TABLE OF FOOTING DATA FOR LUMINAIRE POLES

Site Designation	Footing Diameter	*Footing Depth	**Spiral Diameter	**Spiral Length	Vertical Reinforcement
L1-L23, L26-L57	2' - 0"	8' - 0"	1' - 8"	54' - 9"	8-#7 x 7' - 6"
L24, L25	2' - 0"	9' - 0"	1' - 8"	60' - 0"	8-#7 x 8' - 6"
S1, S3	3' - 0"	14' - 0"	2' - 8"	137' - 6"	14-#8 x 13' -6"
S2	3' - 0"	13' - 0"	2' - 8"	129' - 3"	14-#8 x 12' -6"
S4	3' - 0"	11' - 0"	2' - 8"	112' - 6"	14-#8 x 10' -6"

*Footing depth shall be below ground level.
**The size of all spirals shall be #3.

SOILS INFORMATION

The subsurface conditions within the limits of the project consist of brown silt-clay to clay-silt with occasional gravel layers throughout. At the time of the investigation in November and December of 2013 groundwater was measured between 15.2 and 19.4 feet below the surface initially after drilling in three of the borings south of Station 761+25. All of the borings caved between 16.9 and 28.8 feet below the surface initially after drilling. These depths generally corresponded to water bearing gravel layers encountered throughout the project.

The subsurface conditions near the intersection of SD100 and Madison Street consist of brown silt-clay to clay-silt with a 6 inch gravel layer encountered between 18 and 20 feet below the surface. At the time of the investigation in November and December of 2013 groundwater was measured at 15.2 and 18.2 feet below the surface initially after drilling in the two borings closest to the new intersection location. The borings caved at 18.1 and 28.8 feet below the surface initially after drilling.

During construction of the cylindrical footings, concrete placement operations should closely follow excavation procedures. The longer the excavations are left open the more likely caving may occur. If caving soils are encountered during excavation, casing may be required to construct the cylindrical footings. All costs for the casings shall be incidental to the footing costs.

Concrete shall not be dropped through standing water. If water is present in the excavation it shall be removed prior to concrete placement or the concrete shall be tremied. If caving occurs during dewatering the concrete shall be placed through a tremie or by means of a casing.

The boring logs and laboratory tests are available for review at the Central Office in Pierre. If questions arise or additional information is needed concerning the cylindrical footings contact the Geotechnical Engineering Activity in Pierre at 605.773.3401.

SPECIAL ELECTRICAL JUNCTION BOX

The proposed electrical junction boxes for traffic, innerduct and lighting shall be the 12", 24", or 30" diameter junction boxes as shown on City of Sioux Falls standard plates #635.31, 635.33 and 635.70.

All costs for the electrical junction boxes, regardless of the type or size, shall be included in the contract unit price per each for "Special Electrical Junction Box".

BREAKAWAY BASES

A statement is required, signed by a Professional Engineer registered in the State of South Dakota, certifying that the breakaway base devices meet the design requirements, including breakaway and structural adequacy, of the "AASHTO Specifications for Structural Supports for Highway Signs, Luminaires, and Traffic Signals". The physical testing procedures outlined in Section 8 of the Fifth Edition of the Aluminum Association's "Specifications for Aluminum Structures" may be used to establish service limits for structural adequacy certification of aluminum breakaway transformer bases and frangible couplings. If requested, test data of production samples to support the certification shall be provided.

POLES

New poles shall be galvanized steel. Galvanizing shall be in accordance with AASHTO Specification M111 (ASTM A123). Steel pole material shall be in accordance with ASTM A36, A242, A570, A572, A607 or A595 Grade A or B. A595 material shall be limited to a 3/8 inch maximum thickness. Steel pole material with a thickness of 1/2 inch to 2 inches, shall satisfy Charpy V-Notch toughness test requirements of 15 ft. lb. at 40 degrees F. The SDDOT Office of Bridge Design shall be contacted for Charpy impact requirements for steel pole material thickness greater than 2 inches.

The steel pole-to-base-plate connection shall be a full-penetration groove-welded connection with a backing ring as described in Table 11.9.3.1-1, Section 4.5 of the current edition of the AASHTO Standard Specifications for Structural Supports for Highway Signs, Luminaires, and Traffic Signals.

Cantilever traffic signal supports, including anchor bolts, shall be designed for fatigue in accordance with Fatigue Importance Category II without galloping and truck induced gusts.

Signal poles shall have rotatable mast arms.

LUMINAIRES

The accepted design for the roadway luminaires shall provide 1.2 and greater average maintained foot-candles and a uniformity ratio (average maintained to minimum maintained foot-candles) of 3:1 and less using the following parameters:

Setback:	6 Ft.
Lamp Loss Factor (LLF):	0.7
Width of Lighted Area:	104 Ft.
Spacing:	234 Ft.
Configuration:	Opposite
Mounting Height:	50 Ft.
Lamp:	400W HPS

The following luminaires meet the requirements for this design:

a.) Hubbell: HP03019.IES High Pressure Sodium, Medium, semi-cutoff, Type III

b.) Cooper Lighting: Test No. OVY40S3E High Pressure Sodium, Medium, semi-cutoff, Type III

The accepted design for the tunnel (pedestrian underpass) luminaires shall provide 1.2 and greater average maintained foot-candles and a uniformity ratio (average maintained to minimum maintained foot-candles) of 3:1 and less using the following parameters:

Setback:	0 Ft.
Lamp Loss Factor (LLF):	0.7
Width of Lighted Area:	12 Ft.
Spacing:	15 Ft.
Configuration:	One-Sided
Mounting Height:	11.5 Ft.
Lamp:	70W HPS

a.) Kenall: Series MS11FD High Pressure Sodium, Clear Starburst Polycarbonate

Three copies of the isofootcandle charts and utilization curves shall be furnished to the Engineer for approval. The Contractor must get approval from the Engineer prior to installation of the luminaires.

The approved isofootcandle data for each case shall be used to determine the correct socket position at each site. Each luminaire shall be installed with its lamp socket in the proper position and in a level attitude.

REGISTERED PROFESSIONAL ENGINEER
REG. NO. 8324
LANCE R. MCQUEEN
SOUTH DAKOTA
1-6-15

HDR

ELECTRICAL SERVICE CABINET

All costs to furnish and install the Electrical Service Cabinets as shown on the plans and as discussed below shall be incidental to the contract unit price per each for “Electrical Service Cabinet”.

The Contractor shall follow the City of Sioux Falls standard plates #635.41 and 635.42 as provided in the plans.

- For the lighting service cabinets, a dual meter pedestal shall be installed, with each side of the dual meter pedestal being used for the lighting system. Both sides of the dual pedestal shall be connected to this meter, therefore, only one meter needs to be installed for the lighting service cabinet.
- For the traffic signal service cabinet, a single meter pedestal shall be installed, with the cabinet only serving the signals at the nearby intersection. A meter separate from the lighting cabinet shall be installed for the traffic signal service cabinet.

Contact Jerry Jongeling (#605-373-6979) at the City Lighting Shop to verify the field location of the service cabinets.

MULTICONDUCTOR CONTROL CABLE FOR SIGNAL CIRCUITS

The cable furnished for signal circuits shall be furnished with the number and size of the conductors shown in the plans and shall meet the specifications for either of the two types specified below.

1. General Purpose Control Cable with stranded copper conductors, ICEA S-61-402, PE-PV Insulated (20-10), 600 volts.

2. General Purpose Control Cable, with standard copper conductors, Aerial and Duct., IMSA 20-1, 600 volts.

The Conductor Jackets for the above cables shall be color coded in accordance with ICEA S-61-402 Appendix K, Table K-1 or IMSA 19-1 Table II.

TRAFFIC SIGNAL WIRING

The Contractor shall use Buchanan crimp connectors and insulating caps, or approved equal, on all wire terminations in the signal bases.

All costs for this work shall be incidental to the signal bid items.

TRAFFIC SIGNAL HEADS

Traffic signal heads for vehicle and pedestrian traffic signal heads shall be furnished and installed by the Contractor, as specified in the special provisions. See the special provisions for measurement and payment.

CONTROLLER CABINET

Controller cabinets shall be furnished and installed by the Contractor to meet the specifications discussed below and in the special provisions. See the special provisions for measurement and payment.

Controller cabinets shall be Size P Cabinet, Catalog No. EL712, Base Mount as manufactured by Siemens or approved equal. The cabinet dimensions shall be 56”H, 44”W, 25.5”D. The cabinet shall have four anchor points, one per corner at a 40 3/4" Width and 18 1/2" Depth. Anchor points shall be internal to the cabinet housing.

The controller cabinets shall be mounted on a concrete footing. The proposed footing is shown in the standard details. A 100% silicone caulk shall be used to seal the cabinet flange to the concrete footing to prevent the incursion of water and shall be placed around the total distance of the flange.

All costs to furnish and install the controller cabinet footing shall be incidental to the contract unit price per each for “Traffic Signal Controller”.

- The Contractor shall provide a 3’x4’x 4” thick concrete pad in front of the controller cabinet door, against the footing base. All costs to furnish and install this concrete pad shall be incidental to the contract unit price per each for “Traffic Signal Controller”.

SIDE MOUNTED CABINET

The side mounted cabinets shall be mounted on the side of the proposed controller cabinets at the locations shown on the plans.

The side mounted cabinet:

- shall meet standards for a NEMA Traffic Enclosure for fiber optic cable
- shall have dimensions of 32”H, 20”W, 14”D or 34”H, 20”W, 14”D
- shall be furnished with a plain door
- shall not have ventilation louvers
- shall be DT-34 Enclosure Type 2 as manufactured by Brown Traffic Products Inc.; 32H20W14D cabinet as manufactured by Southern Manufacturing; or approved equal

The side mounted cabinet shall be plumb and level in reference to the back side of the controller cabinet. The Contractor must take precautions when positioning the side mounted cabinet to avoid damaging wire or equipment within the controller cabinet while drilling the mounting holes and the access hole. The access hole shall be two inch diameter and shall be drilled through the side mounted cabinet into the controller cabinet. A grommet or bushing shall be installed in the two inch diameter hole to prevent damage during pull through of the fiber optic cable.

The side mounted cabinets shall be mounted and tightened securely to the controller cabinet using a minimum of four bolts. A bead of clear silicon caulking shall be placed in all gaps between the side mounted cabinet and controller cabinet to prevent water intrusion into either cabinet.

All costs to furnish and install the side mounted cabinets as discussed above shall be incidental to the contract unit price per each for “Side Mounted Cabinet”.

TRAFFIC SIGNAL CONTROLLER

The traffic signal controller shall be furnished and installed by the Contractor to meet the specifications discussed below and in the special provisions. See the special provisions for measurement and payment.

Two sets of wiring diagrams and one maintenance and operation manual shall be supplied for the controller. The Contractor shall place all diagrams and manuals in the controller cabinet.

The traffic signal controller shall be compatible with existing control equipment in the City of Sioux Falls. Contact Heath Hoftiezer (#605-367-8634) of the City of Sioux Falls for further information.

The Contractor shall deliver the traffic signal controller to the City of Sioux Falls for programming. The City will program the controller and contact the Contractor for controller pick-up. The Contractor shall install the programmed controller in the controller cabinet. Contact Gary Styke (#605-367-6133) of the City of Sioux Falls for drop-off information.

OPTICAL ACTIVATED EMERGENCY VEHICLE PRE-EMPTION SYSTEM

Optical Activated Emergency Vehicle Preemption (EVP) Systems shall be furnished and installed by the Contractor to meet the specifications discussed below and in the special provisions. See the special provisions for measurement and payment.

The Contractor shall furnish and install the EVP Systems on the mast arms at the intersections as shown on the plans.

The EVP detector heads and confirmation lights shall be mounted to the signal mast arm using 3/4-inch NPT electrical pipe materials including a malleable Iron “T” approved for rain-tight locations, threaded nipples, and single lamp holder approved for outdoor use. The use of a PELCO AB-0155-42 Band Mount Mini-Brac, or approved, equal shall be used where no integrated threaded outlet exists on the mast arm. All equipment shall be securely mounted to be level/plumb and retain its alignment.

The interface card and card cage for the EVP system shall be installed within the controller cabinet’s rack mount. Two 2-channel cards shall be installed in the controller cabinet.

The preemption and conductor cables for the detector heads shall be installed without splices from the heads to the controller cabinets.

REGISTERED PROFESSIONAL ENGINEER
REG. NO. 8324
LANCE R. MCQUEEN
SOUTH DAKOTA
1-6-15

HDR

SIGNAL HEAD BATTERY BACKUP AND FLASH SYSTEM

The signal head battery backup and flash system shall be furnished and installed by the Contractor. The signal head battery backup and flash system shall be Alpha Backup Power System—2000 VA Power Module as manufactured by Alpha Technologies or approved equal.

The backup battery power system shall be sized to accommodate the operation of the signal as shown on the plans for a minimum of four hours. The signal head battery backup and flash system shall meet the following specifications:

Standard Features
Hot-swappable Input/Output Surge Protection
Intelligent boost operation for brownout protection
Hot-swappable UPS and batteries
Noise suppression, FCC Class A
Multiple mounting configurations
Rugged, outdoor weather resistant construction
Lockable enclosure
NRTL/CSA approved

General Specifications

Output:	
Output Voltage Regulation	+/-5%
Waveform	sine
Typical Efficiency	>95%
Typical Output Voltage THD	<5%
Typical Transfer Time	2 ms typical
Audible Noise at 1m	<55 dbA
Environment:	
Operating Temperature	-35°C to +50°C
Agency Compliance:	
Lightning/Surge Protection: C.62.41/C.62.45 Cat A&B	Passes ANSI/IEEE
Safety:	EN50091-1
Low Voltage:	EN50091-2
Power Modules	
2000VA Power Module	**60Hz**
Input/Output Voltage nominal	208/240VAC
Input/Output Frequency nominal	60Hz
Input Current	15A
Input Voltage Variation	150-300VAC
Output Power	2000VA
Active Output Power	1500W
Typical Efficiency	>95%
Max Charge Current	10 Amps
Battery Backup Time*	2–16 hrs

Communications and Alarms
DB-9 compatible connector/RS-232 interface capable of monitoring, controlling, and calibrating the UPS, using ASCII commands with terminal emulation software. External Alarm Signal with relay contacts for a) line fail, b) low battery warning, c) UPS needs service.

Brownout Protection
Boost mode increases voltage by 12% of nominal line voltage if input voltage falls below 12% of nominal.

The Contractor shall supply riser units for housing the battery backups. The riser unit shall be compatible with the furnished controller cabinet. The riser units shall be AQC11186P003 P-Riser Base as manufactured by Siemens or approved equal. The riser shall have dimensions of 18"H, 44"W, 25.5"D.

All costs to furnish and install signal head battery backup and flash system within the controller cabinet shall be incidental to the contract unit price per each for "Signal Head Battery Backup and Flash System". This bid item shall also include all costs to furnish and install the riser unit.

INNERDUCT

The innerduct conduit shall be orange in color and longitudinally ribbed on the inside wall.

The innerduct bid items shall include furnishing and installing the innerduct, as well as all work to seal the traffic interconnect conduit within the junction boxes. Innerduct ends shall be sealed using a mastic style tape wrapped around the end of the innerduct and fiber optic cable. If innerduct is empty, a heat shrinkable cap shall be installed over the end of the innerduct.

Innerduct conduit shall be sleeved in a rigid steel conduit (RGSC) under all roadways (from back of curb to back of curb) or as shown in the plans. The RGSC conduit shall be paid under its respective bid item.

When installing the innerduct into the side mounted cabinets, the Contractor shall install the innerduct within RGSC. The RGSC shall extend from the 90 degree bend in the ground to the side mounted cabinet. Quantity has been included in the plans for this RGSC. The RGSC shall be fully sealed at the side mounted cabinet. RGSC shall be 5" diameter for the three1.5" diameter innerducts being installed into the proposed side mounted cabinet.

All costs for the innerduct shall be included in the appropriate size bid item of "x" Innerduct, SDR 13.5".

WIRELESS IN PAVEMENT TRAFFIC SENSORS

The Wireless In Pavement Traffic Sensors, Wireless Access Points and Wireless Repeaters shall be furnished and installed in accordance to the manufacturer's specifications. See the special provisions for additional specifications and measurement and payment. The wireless access points and repeaters shall be mounted at least 30 feet high where possible.

All costs to furnish and install the wireless access points and repeaters shall be included in the contract unit price per each for "Wireless Access Point" or "Wireless Repeater". These bid items shall include, but not be limited to:

- mounting brackets and hardware
- Contact Closure Interface (CCI) cards required in the controller cabinet
- all equipment required in the controller cabinet to provide a fully functioning wireless vehicle detection system

The Cat5 cable for the Wireless Access Point shall be installed from the controller cabinet to the Wireless Access Point without splices. The cable shall be rated for outdoor use and installed according to the manufacturer's recommendations. All costs for the Cat5 cable shall be incidental the contract unit price per each for "Wireless Access Point".

PEDESTRIAN PUSH BUTTON

The pedestrian push button shall meet the following requirements:

General Requirements:
1. Shall be pressure activated with essentially no moving parts.
2. Shall be vandal resistant.
3. Shall activate with 3 lbs. force or less.
4. Shall have an LED that illuminates when the button is being pushed and remains illuminated until the pedestrian call is served.
5. Shall give a toned beep verification of button being pushed.
6. Shall have an operating life of 1 million actuations.
7. Shall be compatible with NEMA TS1 and TS2 controllers.

Housing:
1. Button housing shall be high impact cast or machined aluminum.
2. All switch electronics shall be sealed within the high impact cast or machined aluminum housing.
3. Shall have a gasket between the button housing and the mounting cup.

Electrical:
1. Operating Voltage: 15 to 24V DC or 12 to 24V AC.
2. On Resistance 10 Ohms (When the button is activated and placing a call).
3. Standby Current 10 micro amps typical.
4. Shall have built in surge protection.
5. Shall have a solid state electronic piezo switch rated for 1 million cycles with no moving plunger or moving electrical contacts.
6. Shall hold the call for a minimum of 5 seconds.
7. Requires only two conductors be run from the traffic signal cabinet to the push button to operate.
8. Six units wired in parallel on a single pedestrian isolator input shall not pull the input voltage of the pedestrian isolator down such that a false pedestrian call is placed in the controller.

For the pedestrian push button posts, an 8" diameter Schedule 40 PVC pipe shall be used to create a hole in the concrete surfacing where the post will be installed. The post shall be centered in the pipe opening. The PVC pipe length shall be adequate according to proposed concrete depth. The PVC pipe shall permanently remain in the concrete. The top of the PVC pipe shall be recessed 1/4" into the concrete. Upon installing the post, the hole within the PVC pipe shall be filled with concrete and shall be blended into the surrounding concrete surface to be flush with the surface. All costs for this work shall be incidental to the post bid item.

REGISTERED PROFESSIONAL ENGINEER
REG. NO. 8324
LANCE R. MCQUEEN
SOUTH DAKOTA
1-19-15

HDR

FOR BIDDING PURPOSES ONLY

STATE OF SOUTH DAKOTA	PROJECT	SHEET	TOTAL SHEETS
	NH 0100(103)417	L6	L39

Plotting Date: 12/31/2014

TABLE FOR CONDUIT & CABLE QUANTITIES

		Steel Conduit				PVC Conduit								Innerduct		Cable										
		RGSC				Sch 40					Sch 80			SDR 13.5												
		2.5"	3"	4"	5"	0.75"	1.5"	2"	3"	4"	1.5"	2"	3"	0.5"	1.5"	2/2/2/4	1C #2	1C #4	1C #10	2C #14	4C #14	5C #14	7C #14	25C #14	Pole & Bracket	PC
Location to Location		(Ft)	(Ft)	(Ft)	(Ft)	(Ft)	(Ft)	(Ft)	(Ft)	(Ft)	(Ft)	(Ft)	(Ft)	(Ft)	(Ft)	(Ft)	(Ft)	(Ft)	(Ft)	(Ft)	(Ft)	(Ft)	(Ft)	(Ft)	2C #10 AWG (Ft)	(Ft)
Lighting																										
EL20	L4							220								250									65	
L4	L6							235								245									65	
L6	L8							255								265									65	
L8	L10							240								250									65	
L10	JL2							10								20										
JL2	JL4							100								110										
JL4	S2											70				80									65	
JL2	JL5												285			295										
JL2	JL3												140			250										
JL1	L1							130								140									65	
L1	L2							250								260									65	
L2	L3							235								245									65	
L3	L5							225								235									65	
L5	L7							245								255									65	
L7	L9							240								250									65	
L9	JL3							30								40										
JL3	LC									25						140										
LC	JL3A								20								90									
JL3A	Transformer								120								410									
JL3	L11							160								165									65	
JL3	JL6												300			620										
JL6	L12							30								40									65	
JL6	JL5												145			150										
JL6	L14								160							330									65	
L14	L16								240							500									65	
L16	L18								240							500									65	
L18	L20								240							500									65	
L20	L22								240							500									65	
L22	JL7								65							300										
JL7	JL8															45										
JL8	T1										20					25									10	
T1	T2						20									20									10	
T2	T3						20									20									10	
T3	T4						20									20									10	
T4	T5						20									20									10	
T5	T6						20									20									10	
T6	T7						20									20									10	
T7	T8						20									20									10	
T8	T9						20									20									10	
T9	T10						20									20									10	
T10	T11						20									20									10	
T11	T12						20									20									10	
T12	T13						20									20									10	
T12	T13						20									20									10	
T13	T14						20																			

REGISTERED PROFESSIONAL ENGINEER
REG. NO. 8324
LANCE R. MCQUEEN
SOUTH DAKOTA
1-6-15

FDR

FOR BIDDING PURPOSES ONLY

STATE OF SOUTH DAKOTA	PROJECT	SHEET	TOTAL SHEETS
	NH 0100(103)417	L7	L39

Plotting Date: 12/31/2014

TABLE FOR CONDUIT & CABLE QUANTITIES

		Steel Conduit				PVC Conduit								Innerduct		Cable										
		RGSC				Sch 40					Sch 80			SDR 13.5												
		2.5"	3"	4"	5"	0.75"	1.5"	2"	3"	4"	1.5"	2"	3"	0.5"	1.5"	2/2/2/4	1C #2	1C #4	1C #10	2C #14	4C #14	5C #14	7C #14	25C #14	Pole & Bracket	PC
Location to Location		(Ft)	(Ft)	(Ft)	(Ft)	(Ft)	(Ft)	(Ft)	(Ft)	(Ft)	(Ft)	(Ft)	(Ft)	(Ft)	(Ft)	(Ft)	(Ft)	(Ft)	(Ft)	(Ft)	(Ft)	(Ft)	(Ft)	(Ft)	2C #10 AWG (Ft)	(Ft)
JL7	L24							180								190									130	
L24	L26							240								250									65	
L26	L28							240								250									65	
L28	L30							240								250									65	
L30	L32							260								270									65	
L32	L34							220								230									65	
L34	JL9							90								100										
JL9	JL10												140			150										
JL9	JL12												195			205										
JL5	L13							20								30									65	
L13	L15							180								190									65	
L15	L17							240								250									65	
L17	L19							240								250									65	
L19	L21							240								250									65	
L21	L23							240								250									65	
L23	L25							240								250									130	
L25	L27							240								250									65	
L27	L29							240								250									65	
L29	L31							240								250									65	
L31	L33							260								270									65	
L33	L35							220								230									65	
L35	JL10							90								100										
JL10	JL11												195			210										
JL12	JL11												140			150										
JL12	L36							30								40									65	
JL12	L38							200								210									65	
L38	L40							245								255									65	
L40	L42							240								250									65	
L42	L44							240								250									65	
L44	L46							240								250									65	
L46	L48							245								255									65	
L48	L50							245								255									65	
L50	L52							245								255									65	
L52	L54							245								255									65	
L54	L56							245								255									65	
L56	JL13							30								40										
JL13	JL14												140			150										
JL13	JL16												205						215							
JL13	LC									25						80										
LC	JL15								30								135									
JL15	Transformer								130								420									

REGISTERED PROFESSIONAL ENGINEER
REG. NO. 8324
LANCE R. MCQUEEN
SOUTH DAKOTA
1-6-15

HDR

FOR BIDDING PURPOSES ONLY

STATE OF SOUTH DAKOTA	PROJECT	SHEET	TOTAL SHEETS
	NH 0100(103)417	L8	L39

Plotting Date: 12/31/2014

TABLE FOR CONDUIT & CABLE QUANTITIES

		Steel Conduit				PVC Conduit								Innerduct		Cable										
		RGSC				Sch 40					Sch 80			SDR 13.5												
		2.5"	3"	4"	5"	0.75"	1.5"	2"	3"	4"	1.5"	2"	3"	0.5"	1.5"	2/2/2/4	1C #2	1C #4	1C #10	2C #14	4C #14	5C #14	7C #14	25C #14	Pole & Bracket	PC
Location to Location		(Ft)	(Ft)	(Ft)	(Ft)	(Ft)	(Ft)	(Ft)	(Ft)	(Ft)	(Ft)	(Ft)	(Ft)	(Ft)	(Ft)	(Ft)	(Ft)	(Ft)	(Ft)	(Ft)	(Ft)	(Ft)	(Ft)	(Ft)	2C #10 AWG (Ft)	(Ft)
JL11	L37							30								40									65	
JL11	L39							200								210									65	
L39	L41							245								255									65	
L41	L43							240								250									65	
L43	L45							240								250									65	
L45	L47							240								250									65	
L47	L49							235								245									65	
L49	L51							235								245									65	
L51	L53							235								245									65	
L53	L55							215								225									65	
L55	L57							255								265									65	
L57	JL14							30								40										
JL14	JL17												205						215							
Innerduct																										
JF1	JF2													1260					425							
JF2	JF3													1395					470							
JF3	JF4	140												435					150							
JF4	JF6	300												900												
JF4	CC				10										120											
JF6	JF5	145												435					150							
JF6	JF7													1515					510							
JF7	JF8													1785					600							
JF8	JF9													1785					600							
JF9	JF10													1815					610							
JF10	JF11													870					295							
JF11	JF12	140												420					145							
JF12	JF13	195												600					205							
JF11	JF14	195												600					205							
JF14	JF13	140												420					145							
JF14	JF15													1590					535							
JF15	JF16													1815					610							
JF16	JF17													1845					610							
JF17	JF18													1830					620							
JF18	JF19	140												420					145							
JF18	JF20	195												585												

REGISTERED PROFESSIONAL ENGINEER
REG. NO. 8324
LANCE R. MCQUEEN
SOUTH DAKOTA
1-6-15

HDR

FOR BIDDING PURPOSES ONLY

STATE OF SOUTH DAKOTA	PROJECT	SHEET	TOTAL SHEETS
	NH 0100(103)417	L9	L39

Plotting Date: 12/31/2014

TABLE FOR CONDUIT & CABLE QUANTITIES

		Steel Conduit				PVC Conduit								Innerduct		Cable										
		RGSC				Sch 40					Sch 80			SDR 13.5												
		2.5"	3"	4"	5"	0.75"	1.5"	2"	3"	4"	1.5"	2"	3"	0.5"	1.5"	2/2/2/4	1C #2	1C #4	1C #10	2C #14	4C #14	5C #14	7C #14	25C #14	Pole & Bracket	PC
Location to Location		(Ft)	(Ft)	(Ft)	(Ft)	(Ft)	(Ft)	(Ft)	(Ft)	(Ft)	(Ft)	(Ft)	(Ft)	(Ft)	(Ft)	(Ft)	(Ft)	(Ft)	(Ft)	(Ft)	(Ft)	(Ft)	(Ft)	(Ft)	2C #10 AWG (Ft)	(Ft)
Signals																										
Madison St int.																										
conduit																										
JL3A	SC								20																	
SC	CC								30																	
CC	JS2			70																						
JS2	S4		105																							
JS2	JS1		135																							
JS1	JL2							15																		
JS2	S1		30																							
S1	PB1					50																				
JS2	JS4			285																						
JS4	JL4							10																		
JS4	S3		100																							
JS4	JS3		140																							
JS3	S2		130																							
S2	PB2					20																				
cable																										
JL3A	SC																	90								
SC	CC																	150								
CC	S1																							215		550
S1	PB1																			60						
CC	S2																							610		1340
S2	PB2																			25						
CC	S3																							430		500
CC	S4																							145		400
	S1																				145	100	60			
	S2																				85	80				
	S3																				130	100	60			
	S4																				65	75				
Rosemary St int.																										
JS5	JS6			135																						
JS5	JS8			185																						
JS6	JS7			185																						
JS7	JS8			135																						
Maple St int.																										
SC	JL15								25																	
JS9	JS10		135																							
JS9	JS11			195																						
	Total:	1590	775	1190	10	70	280	11640	1560	50	20	70	2090	22320	120	17660	1055	240	7460	85	425	355	120	1400	4040	2790

REGISTERED PROFESSIONAL ENGINEER
REG. NO. 8324
LANCE R. MCQUEEN
SOUTH DAKOTA
1-6-15

FDR

FOR BIDDING PURPOSES ONLY

STATE OF SOUTH DAKOTA	PROJECT	SHEET	TOTAL SHEETS
	NH 0100(103)417	L10	L39

FILE: L10.dgn
PLOTTING DATE: 12-30-2014

REV DATE:
INITIAL:

Signal Plan- Hwy 100

Hwy 100 & Madison Street

ESTIMATE OF QUANTITIES

KEY	ITEM	QUANTITY	UNIT
	SIGNAL POLE WITH 35' MAST ARM (S4)	1	EACH
	SIGNAL POLE WITH 40' MAST ARM & 8' LUMIN ARM, 50' MT HT (S2)	1	EACH
	SIGNAL POLE WITH 65' MAST ARM (S1, S3)	2	EACH
	ROADWAY LUMINAIRE, 400 WATT WITH PHOTOELECTRIC CELL (S2)	1	EACH
	3 SECTION VEHICLE SIGNAL HEAD (2,3,6,7,12,13,16,17)	8	EACH
	4 SECTION VEHICLE SIGNAL HEAD (1,4,5,10,11,14,15,20)	8	EACH
	5 SECTION VEHICLE SIGNAL HEAD (8,9,18,19)	4	EACH
	3' DIAMETER FOOTING (S1-S4)	52	FT
	SIGNAL HEAD BATTERY BACKUP & FLASH SYSTEM	1	EACH
	EMERGENCY VEHICLE PREEMPTION UNIT 2 CHANNEL	2	EACH
	OPTICAL DETECTOR	4	EACH
PB	PEDESTRIAN PUSH BUTTON	2	EACH
	PEDESTRIAN PUSH BUTTON POLE (PB1-PB2)	2	EACH
	PEDESTRIAN SIGNAL HEAD W/ COUNTDOWN TIMER (21,22)	2	EACH
START CROSSING WATCH FOR VEHICLES / DON'T START FINISH CROSSING IF STARTED / TIME REMAINING TO FINISH CROSSING / DON'T CROSS / TO CROSS PUSH BUTTON	PEDESTRIAN CROSSING SIGN R10-3e (LEFT-2) (RIGHT-0)	2	EACH

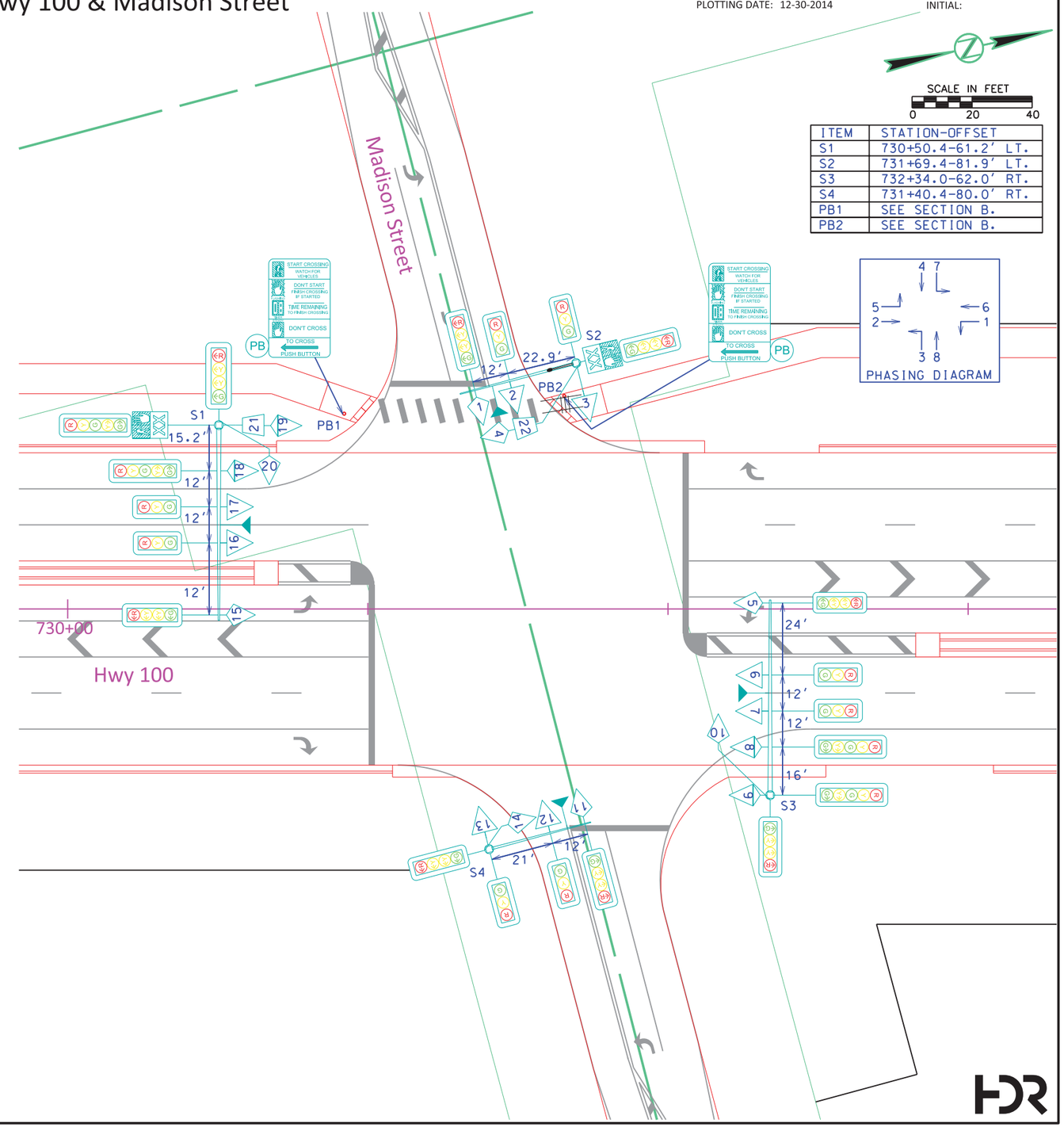

ITEM	STATION-OFFSET
S1	730+50.4-61.2' LT.
S2	731+69.4-81.9' LT.
S3	732+34.0-62.0' RT.
S4	731+40.4-80.0' RT.
PB1	SEE SECTION B.
PB2	SEE SECTION B.

REGISTERED PROFESSIONAL ENGINEER
REG. NO. 8324
LANCE R. MCQUEEN
SOUTH DAKOTA
1-6-15

FOR BIDDING PURPOSES ONLY

Conduit Plan - Hwy 100

STATE OF SOUTH DAKOTA	PROJECT	SHEET	TOTAL SHEETS
	NH 0100(103)417	L11	L39

FILE: L11.dgn
PLOTTING DATE: 12-30-2014

REV DATE:
INITIAL:

SCALE IN FEET
0 20 40

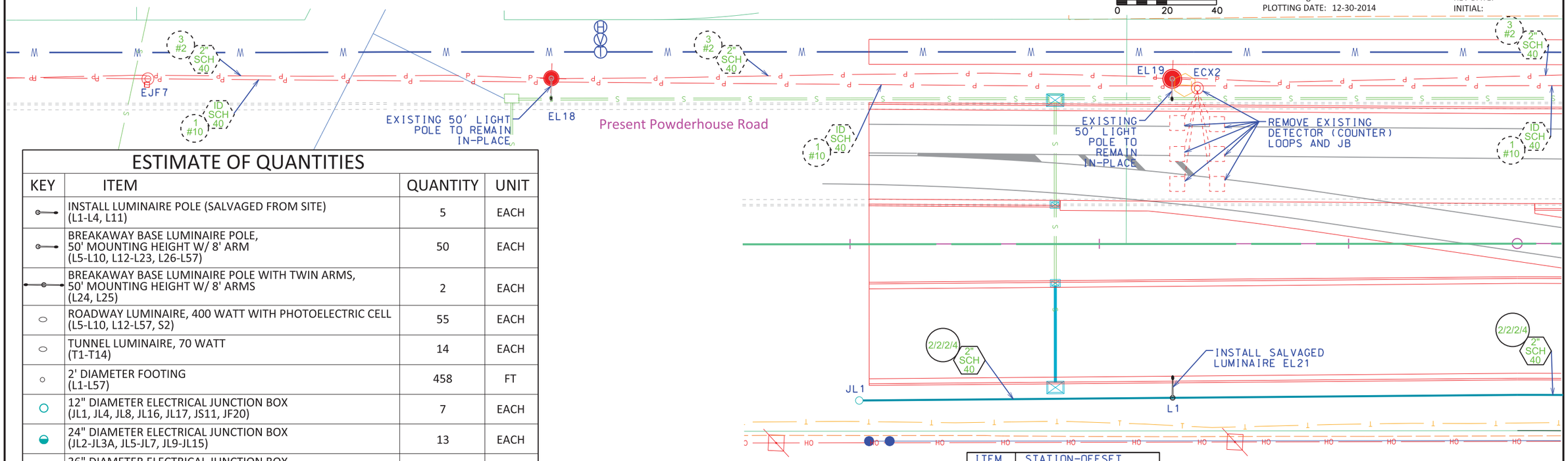

ITEM	STATION-OFFSET
L1	718+29.4-61.7' RT
JL1	717+03.6-62.7' RT.

ESTIMATE OF QUANTITIES

KEY	ITEM	QUANTITY	UNIT
	INSTALL LUMINAIRE POLE (SALVAGED FROM SITE) (L1-L4, L11)	5	EACH
	BREAKAWAY BASE LUMINAIRE POLE, 50' MOUNTING HEIGHT W/ 8' ARM (L5-L10, L12-L23, L26-L57)	50	EACH
	BREAKAWAY BASE LUMINAIRE POLE WITH TWIN ARMS, 50' MOUNTING HEIGHT W/ 8' ARMS (L24, L25)	2	EACH
	ROADWAY LUMINAIRE, 400 WATT WITH PHOTOELECTRIC CELL (L5-L10, L12-L57, S2)	55	EACH
	TUNNEL LUMINAIRE, 70 WATT (T1-T14)	14	EACH
	2' DIAMETER FOOTING (L1-L57)	458	FT
	12" DIAMETER ELECTRICAL JUNCTION BOX (JL1, JL4, JL8, JL16, JL17, JS11, JF20)	7	EACH
	24" DIAMETER ELECTRICAL JUNCTION BOX (JL2-JL3A, JL5-JL7, JL9-JL15)	13	EACH
	36" DIAMETER ELECTRICAL JUNCTION BOX (JS1-JS10, JF1-JF19)	29	EACH
	ELECTRICAL SERVICE CABINET	4	EACH
	METER SOCKET (NOT A BID ITEM)	4	EACH
2.5" RG SG	2.5" RIGID GALVANIZED STEEL CONDUIT	1590	FT
3" RG SG	3" RIGID GALVANIZED STEEL CONDUIT	775	FT
4" RG SG	4" RIGID GALVANIZED STEEL CONDUIT	1190	FT
5" RG SG	5" RIGID GALVANIZED STEEL CONDUIT	10	FT
.75" SCH 40	0.75" RIGID CONDUIT, SCHEDULE 40	70	FT
1.5" SCH 40	1.5" RIGID CONDUIT, SCHEDULE 40	280	FT
2" SCH 40	2" RIGID CONDUIT, SCHEDULE 40	11640	FT
3" SCH 40	3" RIGID CONDUIT, SCHEDULE 40	1560	FT
4" SCH 40	4" RIGID CONDUIT, SCHEDULE 40	50	FT
1.5" SCH 80	1.5" RIGID CONDUIT, SCHEDULE 80	20	FT
2" SCH 80	2" RIGID CONDUIT, SCHEDULE 80	70	FT
3" SCH 80	3" RIGID CONDUIT, SCHEDULE 80	2090	FT
ID 0.5"	0.5" INNERDUCT, SDR 13.5	22320	FT
ID 1.5"	1.5" INNERDUCT, SDR 13.5	120	FT
2/2/2/4	2/2/2/4 ALUMINUM WIRE	17660	FT
#2	1/C #2 AWG COPPER WIRE	1055	FT
#4	1/C #4 AWG COPPER WIRE	240	FT
#10	1/C #10 AWG COPPER WIRE	7460	FT
#10	2/C #10 AWG COPPER POLE AND BRACKET CABLE	4040	FT

REMOVAL ITEMS

KEY	ITEM	QUANTITY	UNIT
	SALVAGE EXISTING LUMINAIRE POLE (50' MOUNTING HEIGHT W/ 8' ARM AND 400W LUMINAIRE) (EL21-EL24, EL26)	5	EACH
	REMOVE EXISTING 2' DIAMETER FOOTING (EL21-EL24, EL26)	5	EACH
	REMOVE EXISTING ELECTRICAL JUNCTION BOX (ECX2, EJF8, EJF9, EJL6, EJL7, EJL9)	LUMP SUM*	LS
2" SCH 40	REMOVE EXISTING 2" RIGID CONDUIT, SCHEDULE 40	LUMP SUM*	LS
1" SCH 40	REMOVE EXISTING 1" INNERDUCT, SDR 40	LUMP SUM*	LS
#2	REMOVE EXISTING 1/C #2 AWG COPPER WIRE	LUMP SUM*	LS
#10	REMOVE EXISTING 1/C #10 AWG COPPER WIRE	LUMP SUM*	LS
	REMOVE EXISTING DETECTOR LOOP	LUMP SUM*	LS

*INCLUDED IN THE BID ITEM "MISCELLANEOUS, ELECTRICAL"

EXISTING ITEMS

KEY	ITEM
	EXISTING BREAKAWAY BASE LUMINAIRE POLE (50' MOUNTING HEIGHT W/ 8' ARM)
	EXISTING ELECTRICAL JUNCTION BOX
2" SCH 40	2" RIGID CONDUIT, SCHEDULE 40
2" SCH 80	2" RIGID CONDUIT, SCHEDULE 80
1" SCH 40	1" INNERDUCT, SDR 40
#2	1/C #2 AWG COPPER WIRE
#10	1/C #10 AWG COPPER WIRE
	EXISTING DETECTOR LOOP

REGISTERED PROFESSIONAL ENGINEER
REG. NO. 8324
LANCE R. MCQUEEN
SOUTH DAKOTA
1-6-15

FDR

FOR BIDDING PURPOSES ONLY

Conduit Plan - Hwy 100

STATE OF SOUTH DAKOTA	PROJECT	SHEET	TOTAL SHEETS
	NH 0100(103)417	L12	L39

FILE: L12.dgn
PLOTTING DATE: 12-30-2014

REV DATE:
INITIAL:

SCALE IN FEET
0 20 40

REGISTERED PROFESSIONAL ENGINEER
REG. NO. 8324
LANCE R. MCQUEEN
SOUTH DAKOTA
1-6-15

ITEM	STATION-OFFSET
L2	720+77.1-60.7' RT.
L3	723+11.1-60.7' RT
L4	723+11.1-60.7' LT.
L5	725+34.1-65.2' RT.
L6	725+35.5-60.5' LT.
JF1	721+61.7-68.7' LT.
JF2	725+66.1-62.7' LT.
SW17	725+45.4-22.0' RT.
SW18	725+45.5-34.0' RT.

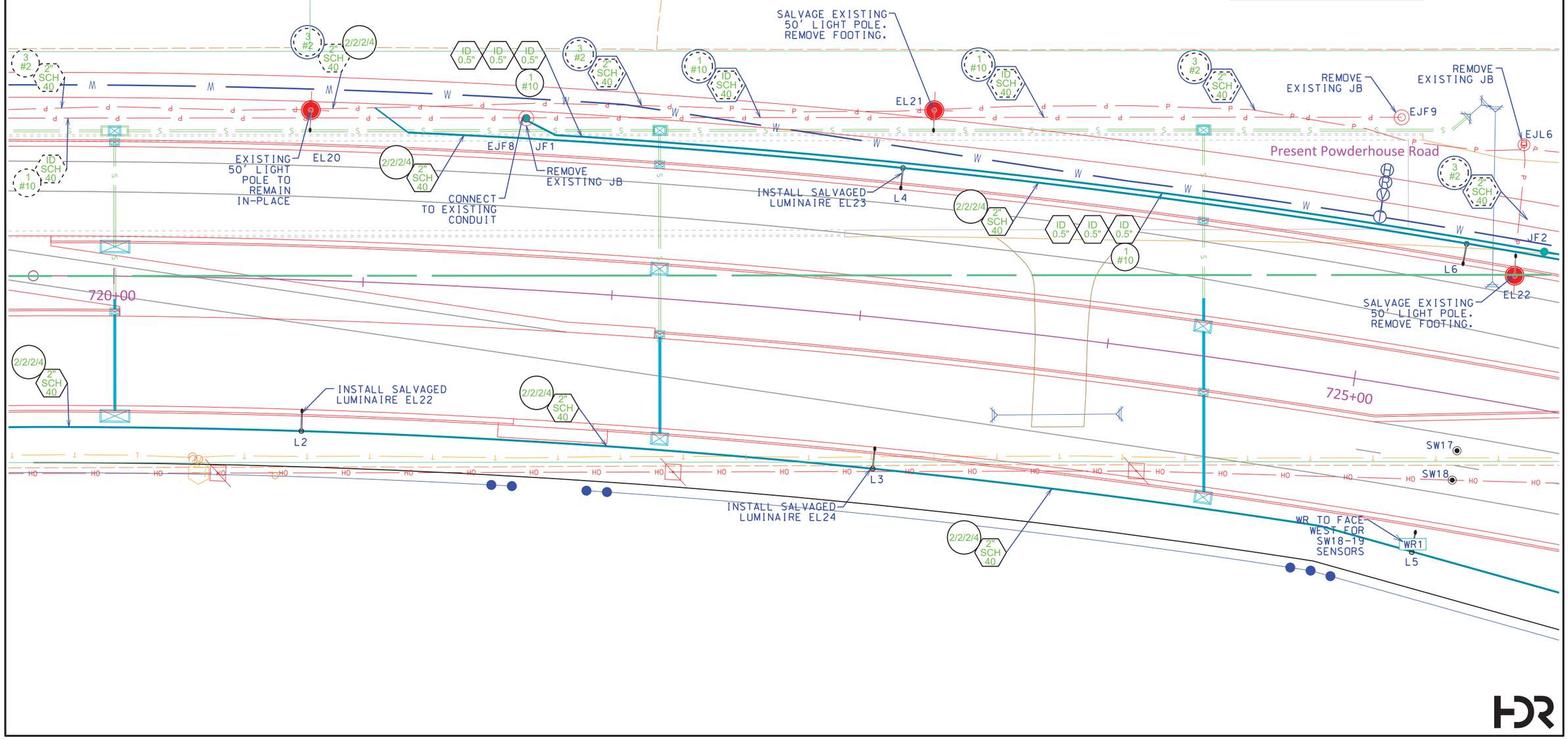

FOR BIDDING PURPOSES ONLY

STATE OF SOUTH DAKOTA	PROJECT	SHEET	TOTAL SHEETS
	NH 0100(103)417	L13	L39

FILE: L13.dgn
PLOTTING DATE: 12-30-2014

REV DATE:
INITIAL:

Conduit Plan - Hwy 100

SCALE IN FEET
0 20 40

ITEM	STATION-OFFSET	ITEM	STATION-OFFSET
L7	727+79.1-72.7' RT.	LIGHT (LC) CABINET	730+41.3-83.0' RT.
L8	727+79.1-60.7' LT.		
L9	730+13.1-72.7' RT.	SIGNAL (SC) CABINET	730+45.8-83.0' RT.
L10	730+13.1-60.7' LT.		
JL2	730+17.3-60.7' LT.	TRAFFIC SIGNAL CONTROLLER (CC)	730+57.9-82.7' RT.
JL3	730+37.9-72.7' RT.		
JL3A	730+43.6-78.3' RT.	SW10	729+45.2-34.0' RT.
JL4	731+06.2-85.5' LT.	SW11	729+45.2-46.0' RT.
JS1	730+26.5-58.7' LT.	SW12	727+45.3-2.0' LT.
JS2	730+45.6-70.6' RT.	SW13	727+44.9-10.0' RT.
JF3	730+21.4-62.7' LT.	SW14	727+44.5-22.0' RT.
JF4	730+42.6-74.6' RT.	SW15	727+44.1-34.0' RT.
SW1	730+97.2-2.0' LT.	SW16	727+43.8-46.0' RT.
SW2	730+85.2-2.0' LT.	WW1	731+33.0-79.0' LT.
SW3	730+72.2-2.0' LT.	WW2	731+29.8-91.0' LT.
SW4	730+97.2-10.0' RT.	WW3	731+26.4-104.0' LT.
SW5	730+85.2-10.0' RT.	WW4	731+20.5-79.0' LT.
SW6	730+72.2-10.0' RT.	WW5	731+17.4-91.0' LT.
SW7	729+45.2-2.0' LT.	WW6	731+14.0-104.0' LT.
SW8	729+45.2-10.0' RT.		
SW9	729+45.2-22.0' RT.		

REGISTERED PROFESSIONAL ENGINEER
REG. NO. 8324
LANCE R. MCQUEEN
SOUTH DAKOTA
1-6-15

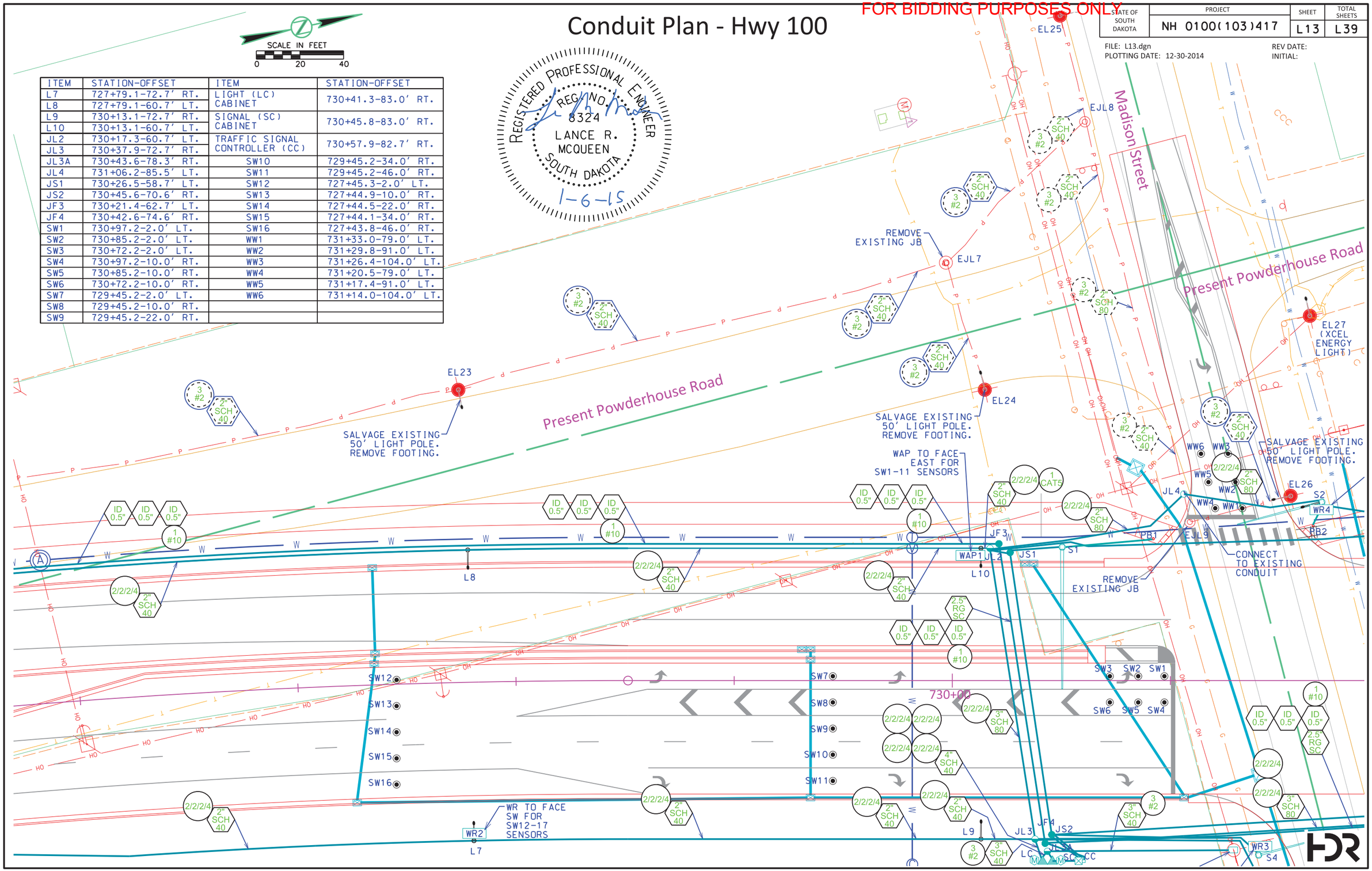

Conduit Plan - Hwy 100

FOR BIDDING PURPOSES ONLY

STATE OF SOUTH DAKOTA	PROJECT	SHEET	TOTAL SHEETS
	NH 0100(103)417	L14	L39

FILE: L14.dgn
PLOTTING DATE: 12-30-2014

REV DATE:
INITIAL:

REGISTERED PROFESSIONAL ENGINEER
REG. NO. 8324
LANCE R. MCQUEEN
SOUTH DAKOTA
1-6-15

SCALE IN FEET
0 20 40

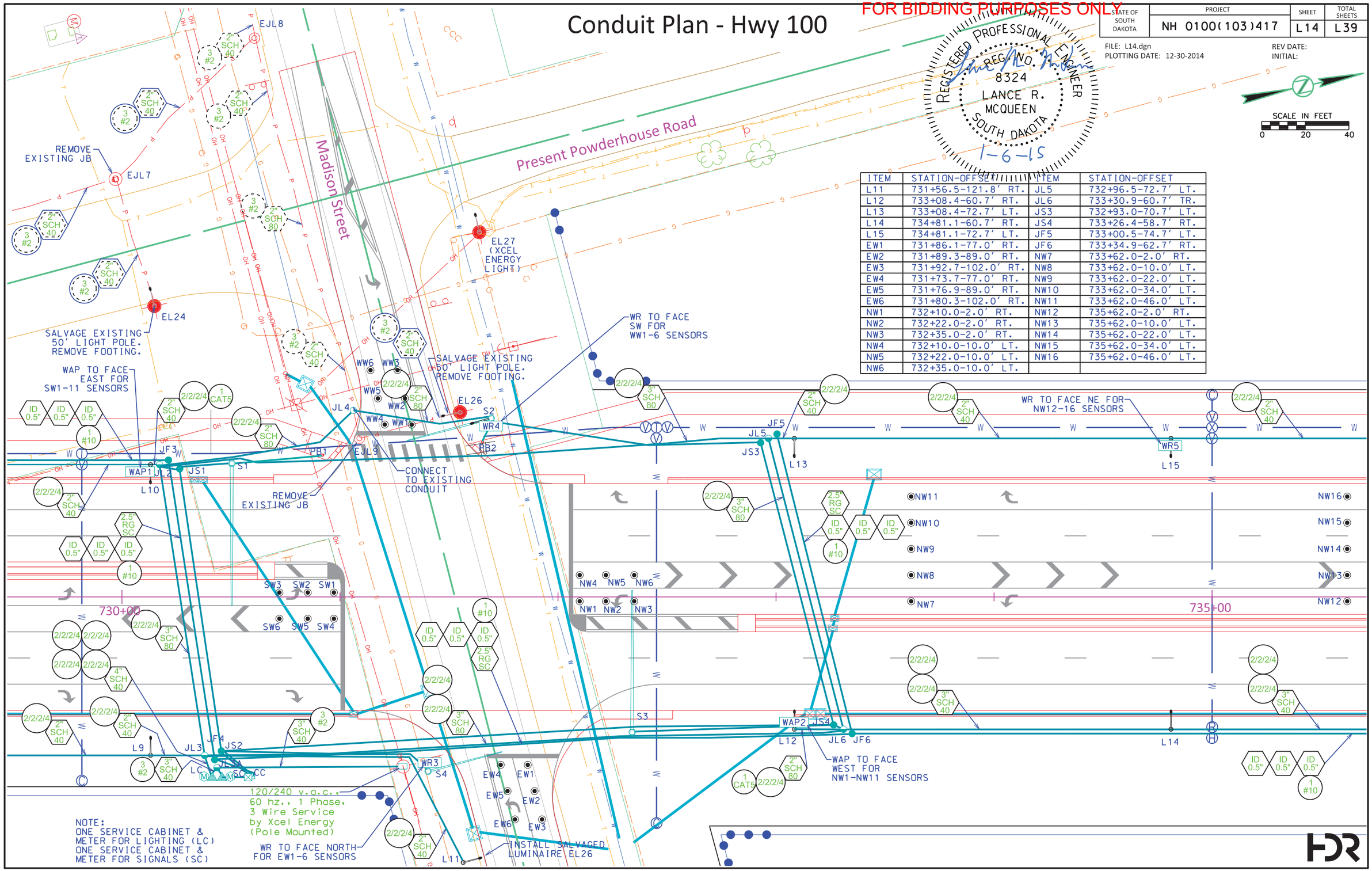

ITEM	STATION-OFFSET	ITEM	STATION-OFFSET
L11	731+56.5-121.8' RT.	JL5	732+96.5-72.7' LT.
L12	733+08.4-60.7' RT.	JL6	733+30.9-60.7' TR.
L13	733+08.4-72.7' LT.	JS3	732+93.0-70.7' LT.
L14	734+81.1-60.7' RT.	JS4	733+26.4-58.7' RT.
L15	734+81.1-72.7' LT.	JF5	733+00.5-74.7' LT.
EW1	731+86.1-77.0' RT.	JF6	733+34.9-62.7' RT.
EW2	731+89.3-89.0' RT.	NW7	733+62.0-2.0' RT.
EW3	731+92.7-102.0' RT.	NW8	733+62.0-10.0' LT.
EW4	731+73.7-77.0' RT.	NW9	733+62.0-22.0' LT.
EW5	731+76.9-89.0' RT.	NW10	733+62.0-34.0' LT.
EW6	731+80.3-102.0' RT.	NW11	733+62.0-46.0' LT.
NW1	732+10.0-2.0' RT.	NW12	735+62.0-2.0' RT.
NW2	732+22.0-2.0' RT.	NW13	735+62.0-10.0' LT.
NW3	732+35.0-2.0' RT.	NW14	735+62.0-22.0' LT.
NW4	732+10.0-10.0' LT.	NW15	735+62.0-34.0' LT.
NW5	732+22.0-10.0' LT.	NW16	735+62.0-46.0' LT.
NW6	732+35.0-10.0' LT.		

FOR BIDDING PURPOSES ONLY

STATE OF SOUTH DAKOTA	PROJECT	SHEET	TOTAL SHEETS
	NH 0100(103)417	L15	L39

FILE: L15.dgn
PLOTTING DATE: 12-30-2014

REV DATE:
INITIAL:

Signal Conduit Plan - Hwy 100
Hwy 100 & Madison Street

ESTIMATE OF QUANTITIES

KEY	ITEM	QUANTITY	UNIT
☒	TRAFFIC SIGNAL CONTROLLER	1	EACH
▫	SIDE MOUNTED CABINET	1	EACH
◉	WIRELESS IN PAVEMENT TRAFFIC SENSOR	51	EACH
WAP	WIRELESS ACCESS POINT (WAP1-WAP2) (SIGNAL OR LIGHT POLE MOUNTED) (MOUNT 30' HIGH WHERE POSSIBLE)	2	EACH
WR	WIRELESS REPEATOR (WR1-WR6) (SIGNAL OR LIGHT POLE MOUNTED) (MOUNT 30' HIGH WHERE POSSIBLE)	6	EACH
2C	2/C #14 AWG IMSA COPPER CABLE, K1 (TO PED. PUSH BUTTONS)	85	FT
4C	4/C #14 AWG IMSA COPPER CABLE, K1 (TO 3 SECTION AND PED SIGNAL HEADS)	425	FT
5C	5/C #14 AWG IMSA COPPER CABLE, K1 (TO 4 SECTION SIGNAL HEADS)	355	FT
7C	7/C #14 AWG IMSA COPPER CABLE, K1 (TO 5 SECTION SIGNAL HEADS)	120	FT
25C	25/C #14 AWG IMSA COPPER CABLE, K1 (TO SIGNAL BASES)	1400	FT
PC	PREEMPTION CABLE (TO OPTICAL DETECTORS) (1 PC FOR THE PREEMPTION UNIT) (1 PC FOR THE CONFIRMATION LIGHT)	2790	FT
CAT5	OUTDOOR RATED CAT5 CABLE (TO WIRELESS ACCESS POINTS)	NOT A BID ITEM	

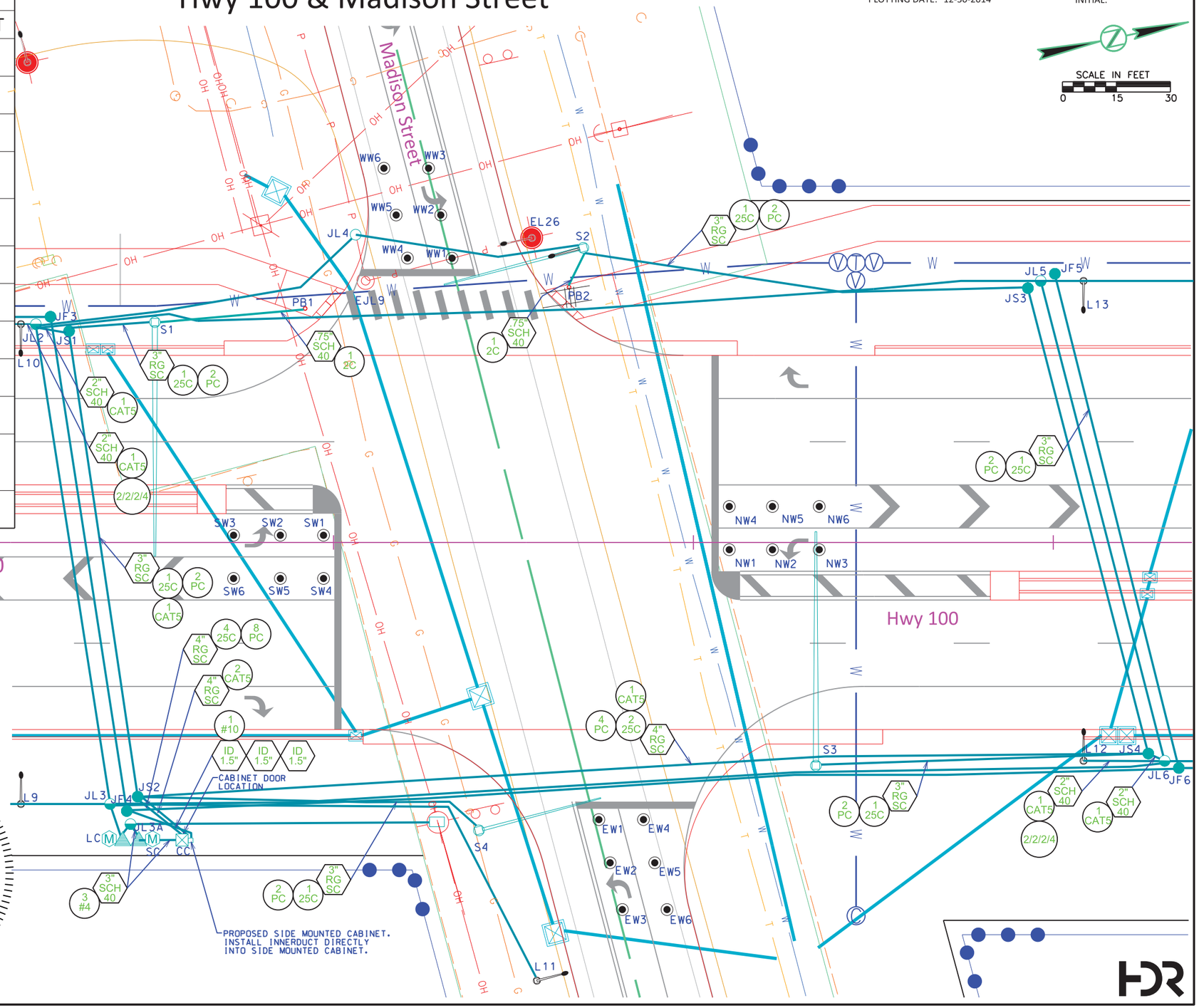

FOR BIDDING PURPOSES ONLY

Conduit Plan - Hwy 100

STATE OF SOUTH DAKOTA	PROJECT	SHEET	TOTAL SHEETS
	NH 0100(103)417	L16	L39

FILE: L16.dgn
PLOTTING DATE: 12-30-2014

REV DATE:
INITIAL:

SCALE IN FEET
0 20 40

ITEM	STATION-OFFSET
L16	737+15.1-60.7' RT.
L17	737+15.1-72.7' LT.
L18	739+49.1-60.7' RT.
L19	739+49.1-62.5' LT.
JF7	738+36.6-62.7' RT.
NW17	737+62.0-2.0' RT.
NW18	737+62.0-10.0' LT.
NW19	737+62.0-22.0' LT.
NW20	737+62.0-34.0' LT.
NW21	737+62.0-46.0' LT.

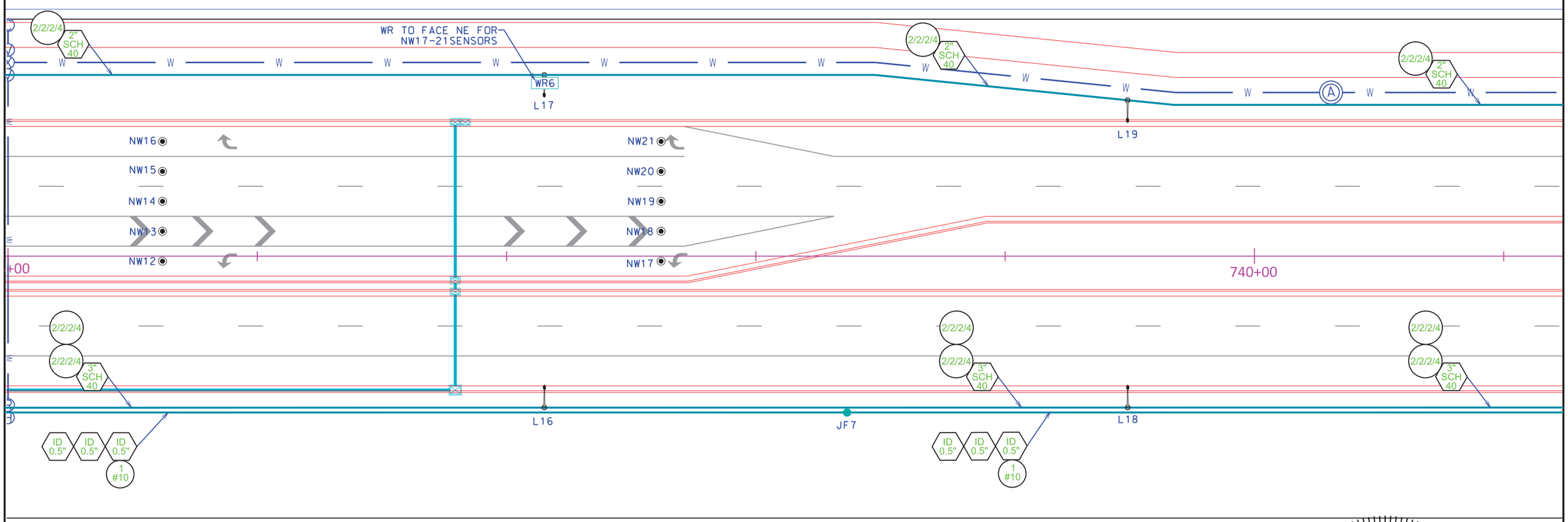

REGISTERED PROFESSIONAL ENGINEER
REG. NO. 8324
LANCE R. MCQUEEN
SOUTH DAKOTA
1-6-15

HDR

FOR BIDDING PURPOSES ONLY

Conduit Plan - Hwy 100

STATE OF SOUTH DAKOTA	PROJECT	SHEET	TOTAL SHEETS
	NH 0100(103)417	L17	L39

FILE: L17.dgn
PLOTTING DATE: 12-30-2014

REV DATE:
INITIAL:

SCALE IN FEET
0 20 40

ITEM	STATION-OFFSET
L20	741+83.1-60.7' RT.
L21	741+83.1-60.7' LT.
L22	744+17.1-60.7' RT.
L23	744+17.1-58.7' LT.
L24	746+51.1-60.7' RT.
L25	746+51.1-58.7' LT.
JF8	744+27.6-62.7' RT.
JL7	744+74.8-60.7' RT.
JL8	744+88.4-85.4' RT.

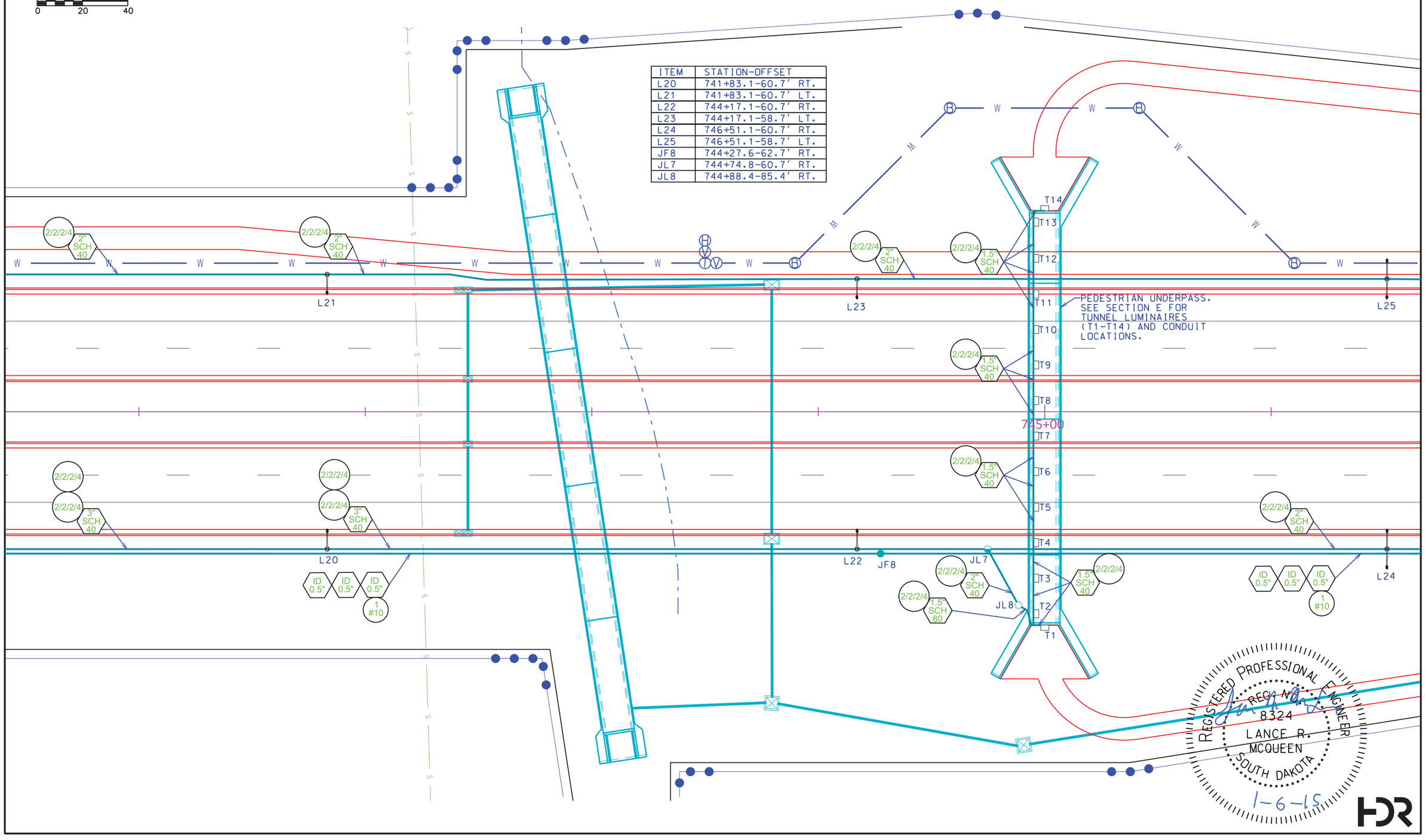

FOR BIDDING PURPOSES ONLY

Conduit Plan - Hwy 100

STATE OF SOUTH DAKOTA	PROJECT	SHEET	TOTAL SHEETS
	NH 0100(103)417	L18	L39

FILE: L18.dgn
PLOTTING DATE: 12-30-2014

REV DATE:
INITIAL:

SCALE IN FEET
0 20 40

ITEM	STATION-OFFSET
L26	748+85.1-60.7' RT.
L27	748+85.1-60.7' LT.
L28	751+19.1-60.7' RT.
L29	751+19.1-60.7' LT.
JF9	750+18.1-62.7' RT.

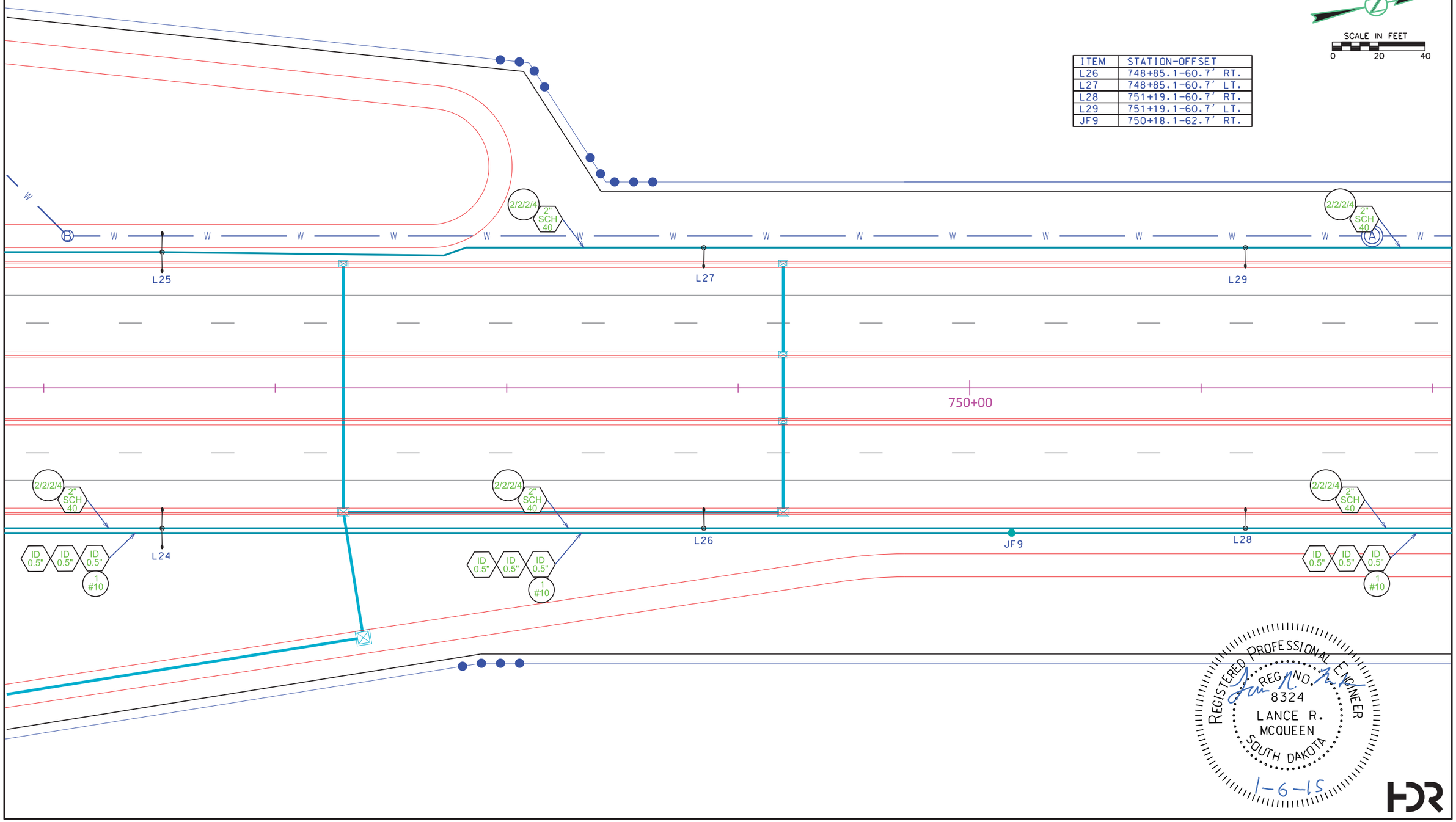

REGISTERED PROFESSIONAL ENGINEER
REG. NO. 8324
LANCE R. MCQUEEN
SOUTH DAKOTA
1-6-15

FOR BIDDING PURPOSES ONLY

Conduit Plan - Hwy 100

STATE OF SOUTH DAKOTA	PROJECT	SHEET	TOTAL SHEETS
	NH 0100(103)417	L19	L39

FILE: L19.dgn
PLOTTING DATE: 12-30-2014

REV DATE:
INITIAL:

SCALE IN FEET
0 20 40

ITEM	STATION-OFFSET
L30	753+53.1-60.7' RT.
L31	753+53.1-60.7' LT.
L32	755+82.1-72.7' RT.
L33	755+82.1-60.7' LT.
JF10	756+18.1-74.7' RT.

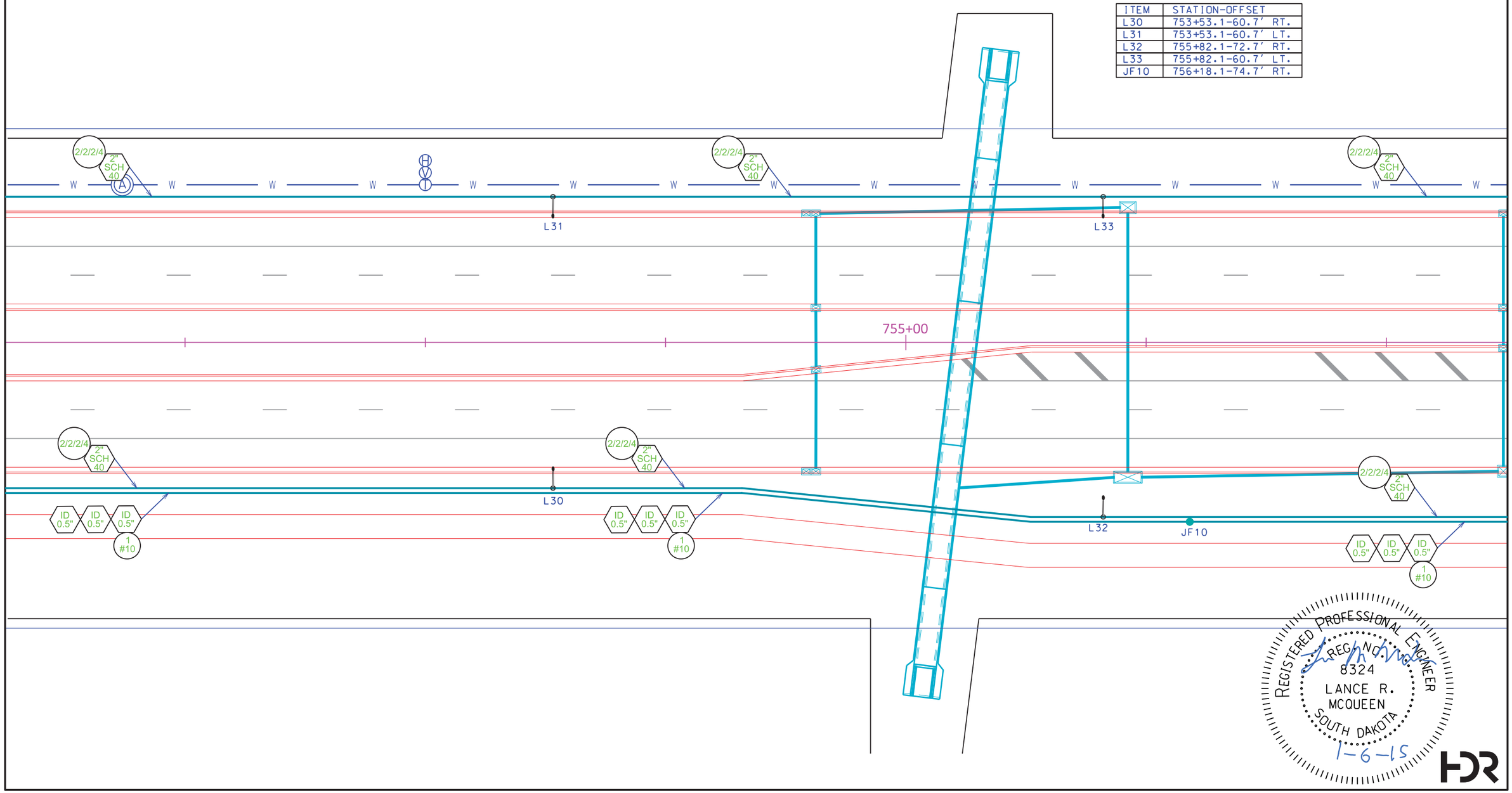

REGISTERED PROFESSIONAL ENGINEER
REG. NO. 8324
LANCE R. MCQUEEN
SOUTH DAKOTA
1-6-15

HDR

FOR BIDDING PURPOSES ONLY

Conduit Plan - Hwy 100

STATE OF SOUTH DAKOTA	PROJECT	SHEET	TOTAL SHEETS
	NH 0100(103)417	L20	L39

FILE: L20.dgn
PLOTTING DATE: 12-30-2014

REV DATE:
INITIAL:

SCALE IN FEET
0 20 40

ITEM	STATION-OFFSET	ITEM	STATION-OFFSET
L34	758+21.1-72.7' RT.	JS5	759+09.7-70.7' RT.
L35	758+21.1-60.7' LT.	JS6	759+09.7-58.7' LT.
L36	760+70.0-60.7' RT.	JS7	760+88.3-70.7' LT.
L37	760+70.0-72.7' LT.	JS8	760+88.2-58.7' RT.
L38	762+84.1-60.7' RT.	JF11	759+01.7-74.7' RT.
L39	762+84.1-72.7' LT.	JF12	759+01.7-63.0' LT.
JL9	759+05.7-72.7' RT.	JF13	760+96.1-74.6' LT.
JL10	759+05.7-60.7' LT.	JF14	760+96.2-62.7' RT.
JL11	760+92.1-72.7' LT.		
JL12	760+92.2-60.7' RT.		

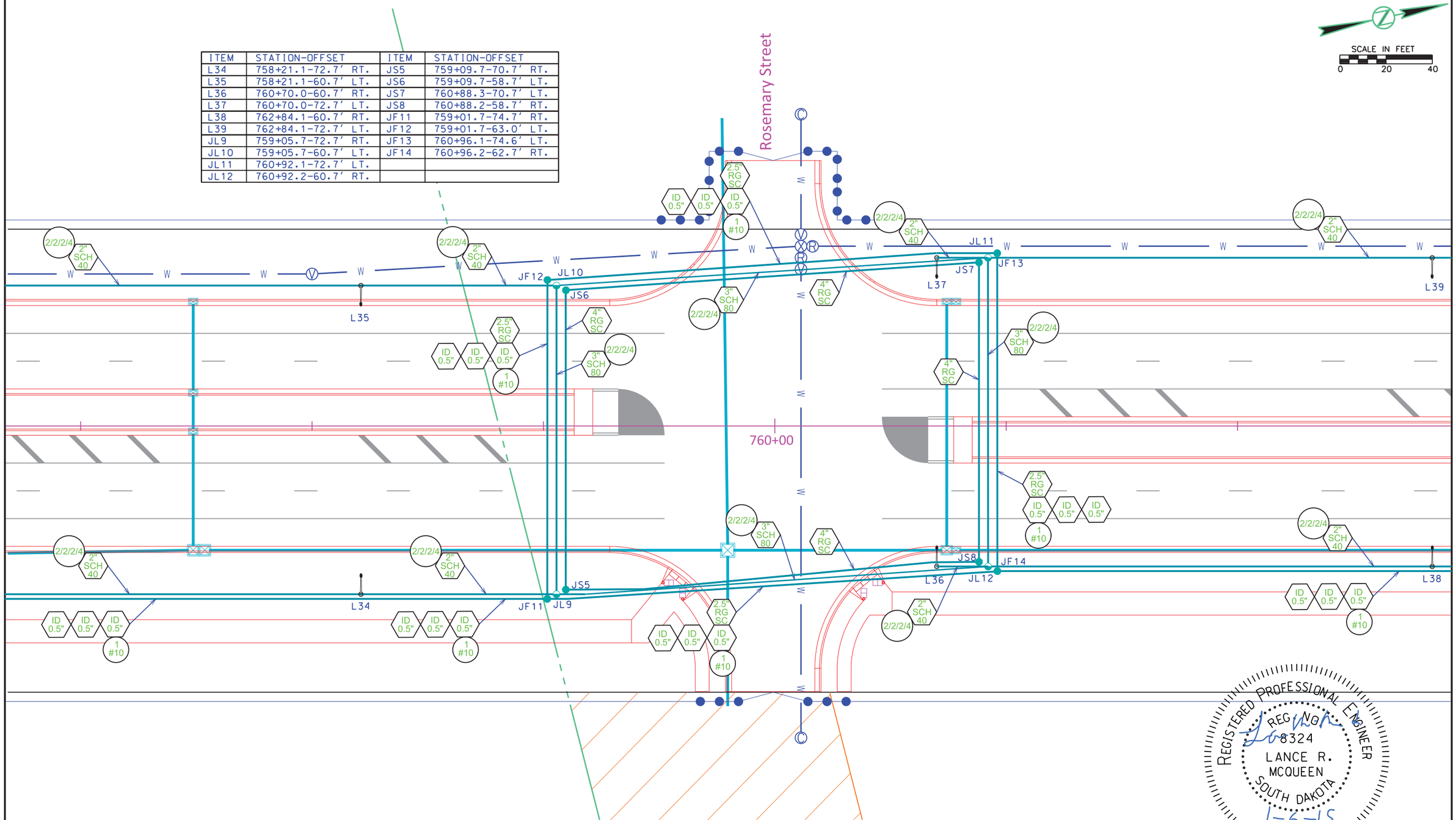

REGISTERED PROFESSIONAL ENGINEER
REG. NO. 8324
LANCE R. MCQUEEN
SOUTH DAKOTA
1-6-15

HDR

FOR BIDDING PURPOSES ONLY

Conduit Plan - Hwy 100

STATE OF SOUTH DAKOTA	PROJECT	SHEET	TOTAL SHEETS
	NH 0100(103)417	L21	L39

FILE: L21.dgn
PLOTTING DATE: 12-30-2014

REV DATE:
INITIAL:

SCALE IN FEET
0 20 40

ITEM	STATION-OFFSET
L40	765+23.1-60.7' RT.
L41	765+23.1-61.3' LT.
L42	767+57.1-60.7' RT.
L43	767+57.1-60.7' LT.
JF15	766+19.6-62.7' RT.

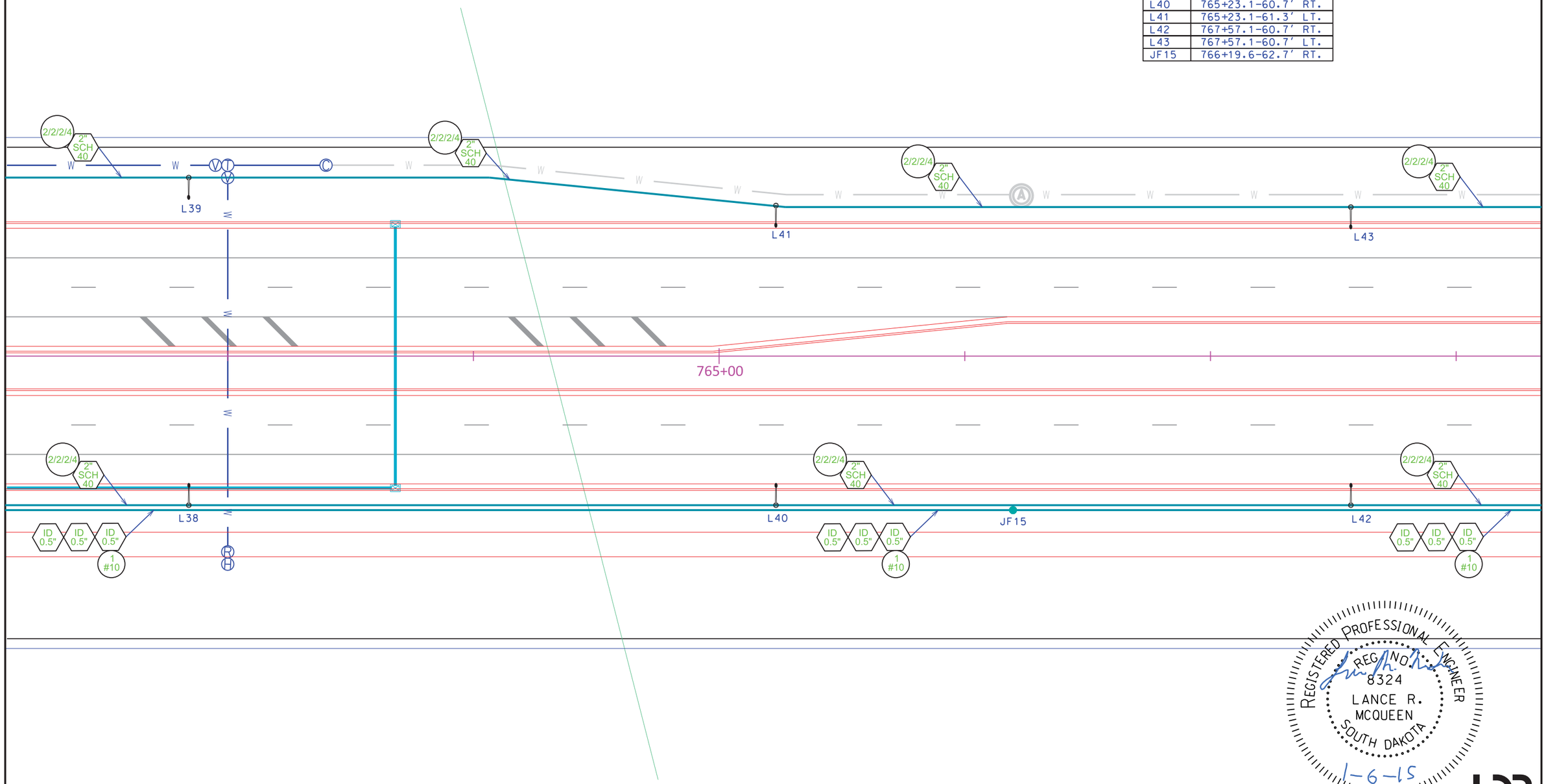

REGISTERED PROFESSIONAL ENGINEER
REG. NO. 8324
LANCE R. MCQUEEN
SOUTH DAKOTA
1-6-15

HDR

FOR BIDDING PURPOSES ONLY

Conduit Plan - Hwy 100

STATE OF SOUTH DAKOTA	PROJECT	SHEET	TOTAL SHEETS
	NH 0100(103)417	L22	L39

FILE: L22.dgn
PLOTTING DATE: 12-30-2014

REV DATE:
INITIAL:

SCALE IN FEET
0 20 40

ITEM	STATION-OFFSET
L44	769+91.1-60.7' RT.
L45	769+91.1-60.7' LT.
L46	772+25.1-60.7' RT.
L47	772+25.1-60.7' LT.
JF16	772+19.6-62.7' RT.

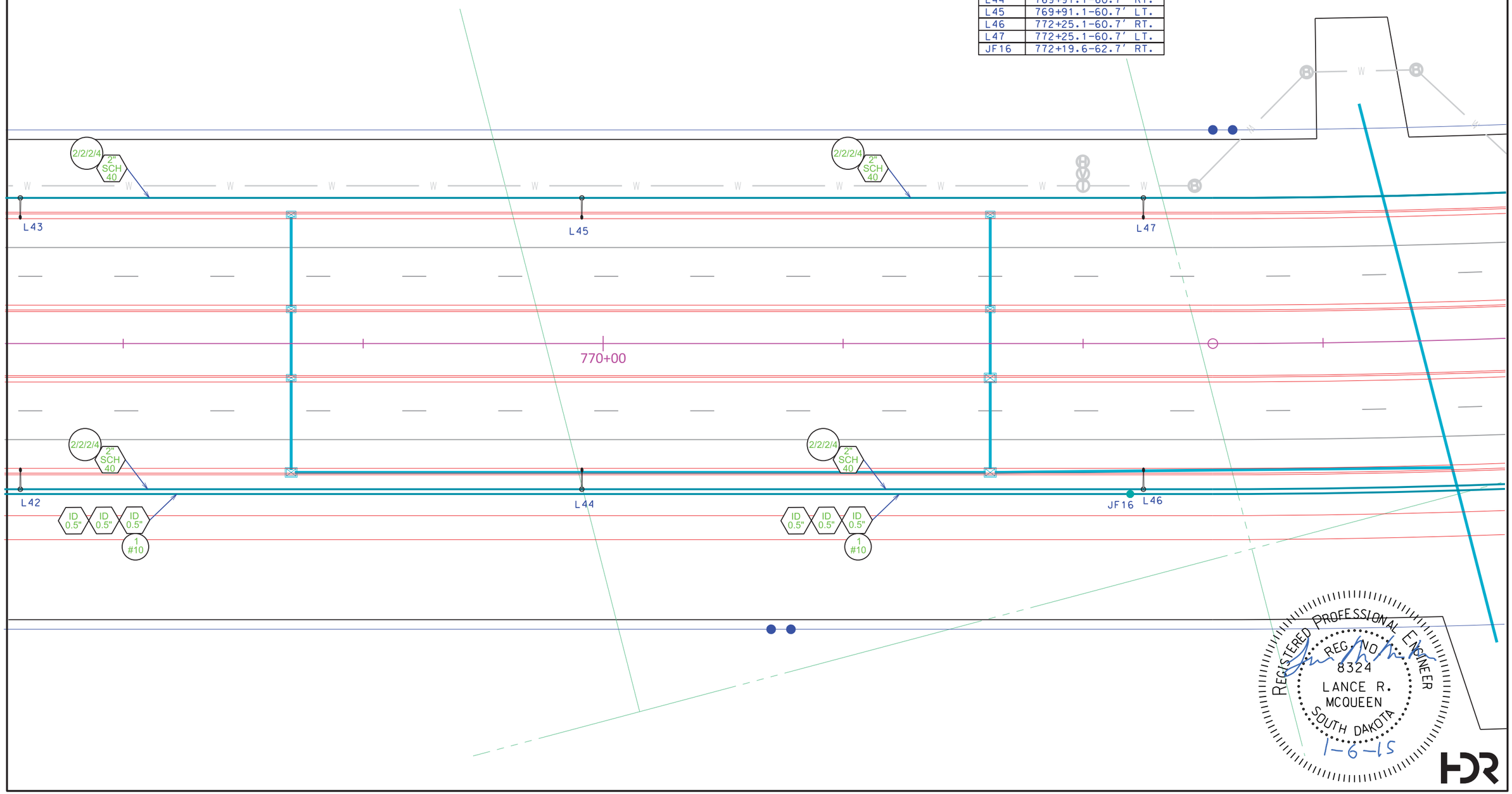

FOR BIDDING PURPOSES ONLY

Conduit Plan - Hwy 100

STATE OF SOUTH DAKOTA	PROJECT	SHEET	TOTAL SHEETS
	NH 0100(103)417	L23	L39

FILE: L23.dgn
PLOTTING DATE: 12-30-2014

REV DATE:
INITIAL:

SCALE IN FEET
0 20 40

ITEM	STATION-OFFSET
L48	774+59.1-60.7' RT.
L49	774+59.1-60.7' LT.
L50	776+93.1-60.7' RT.
L51	776+93.1-60.7' LT.
JF17	778+19.6-74.6' RT.

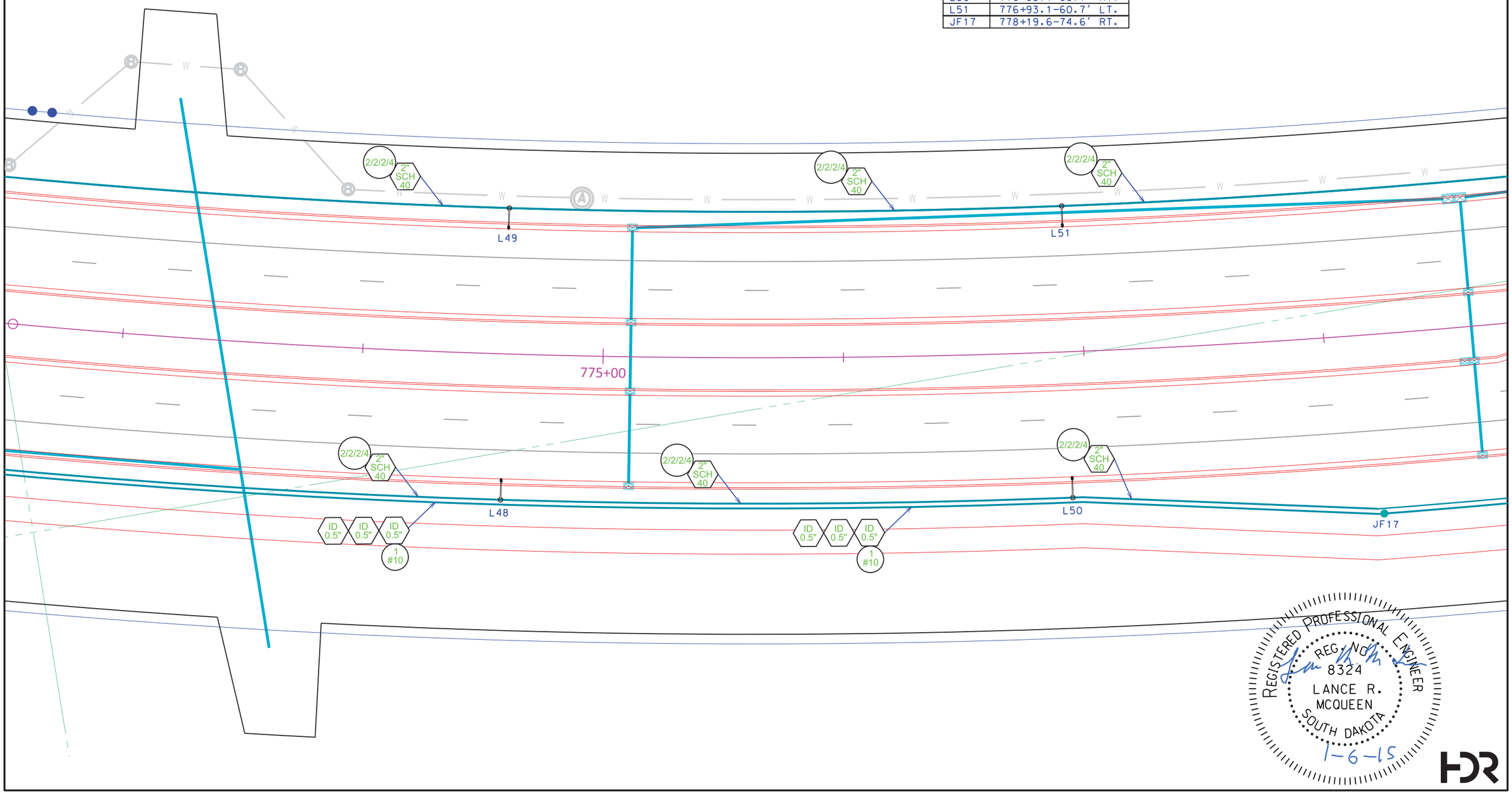

REGISTERED PROFESSIONAL ENGINEER
REG. NO. 8324
LANCE R. MCQUEEN
SOUTH DAKOTA
1-6-15

HDR

FOR BIDDING PURPOSES ONLY

Conduit Plan - Hwy 100

STATE OF SOUTH DAKOTA	PROJECT	SHEET	TOTAL SHEETS
	NH 0100(103)417	L24	L39

FILE: L24.dgn
PLOTTING DATE: 12-30-2014

REV DATE:
INITIAL:

SCALE IN FEET
0 20 40

ITEM	STATION-OFFSET
L52	779+27.1-72.7' RT.
L53	779+27.1-60.7' LT.
L54	781+56.1-84.7' RT.
L55	781+56.1-60.7' LT.

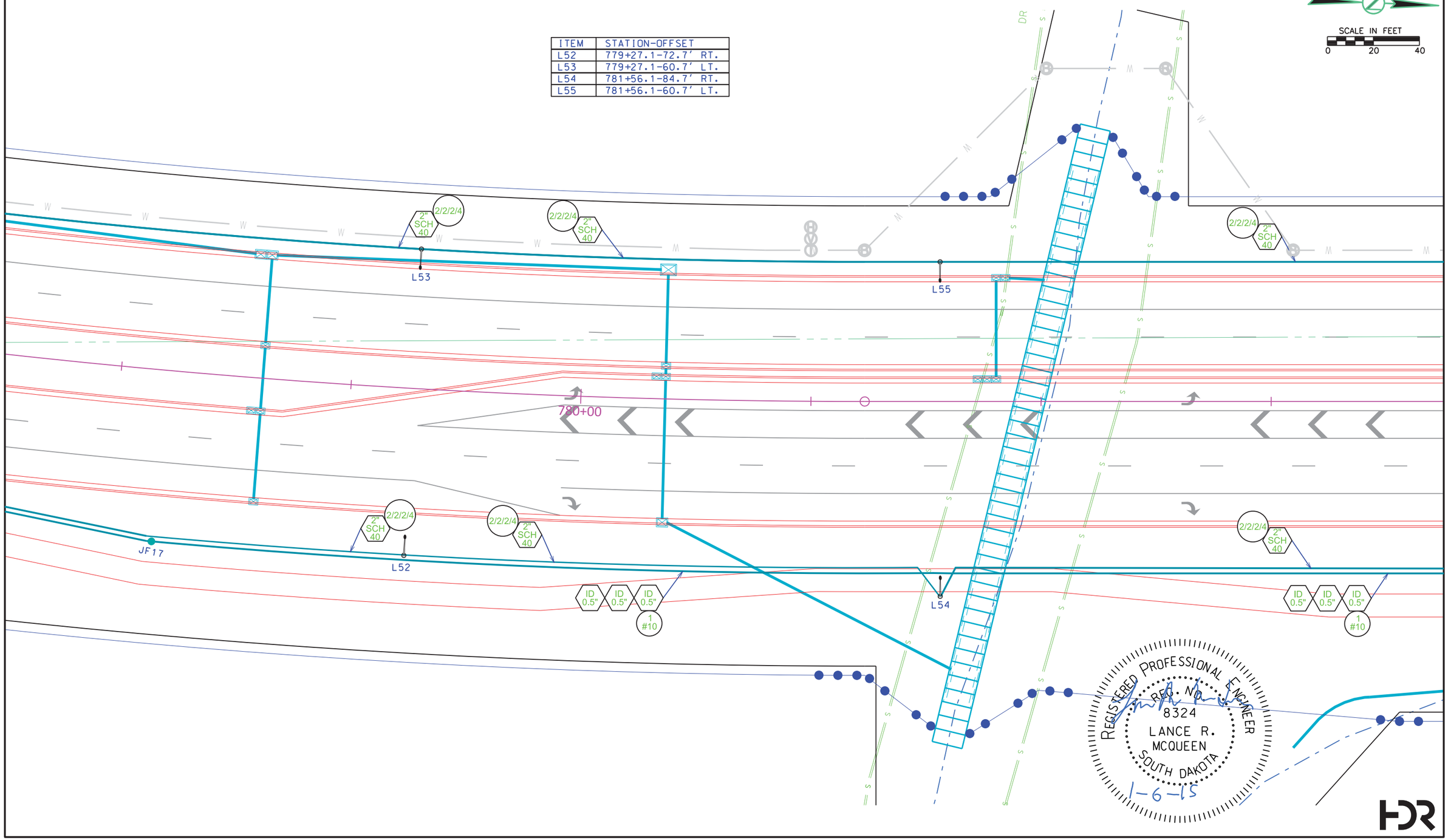

FOR BIDDING PURPOSES ONLY

Conduit Plan - Hwy 100

STATE OF SOUTH DAKOTA	PROJECT	SHEET	TOTAL SHEETS
	NH 0100(103)417	L25	L39

FILE: L25.dgn
PLOTTING DATE: 12-30-2014

REV DATE:
INITIAL:

SCALE IN FEET
0 20 40

ITEM	STATION-OFFSET
L56	783+90.1-72.7' RT.
L57	783+90.1-60.7' LT.
JL13	784+13.2-72.7' RT.
JL14	784+13.2-60.6' LT.
JL15	784+22.5-81.2' RT.
JL16	786+11.3-60.7' RT.
JL17	786+12.0-72.7' LT.
JS9	784+21.3-70.7' RT.
JS10	784+21.2-58.7' LT.
JS11	786+07.6-59.0' RT.
JF18	784+17.3-74.7' RT.
JF19	784+17.2-62.7' LT.
JF20	786+07.5-63.0' RT.
LIGHT (LC) CABINET	784+10.0-80.5' RT.
SIGNAL (SC) CABINET	784+14.5-80.5' RT.

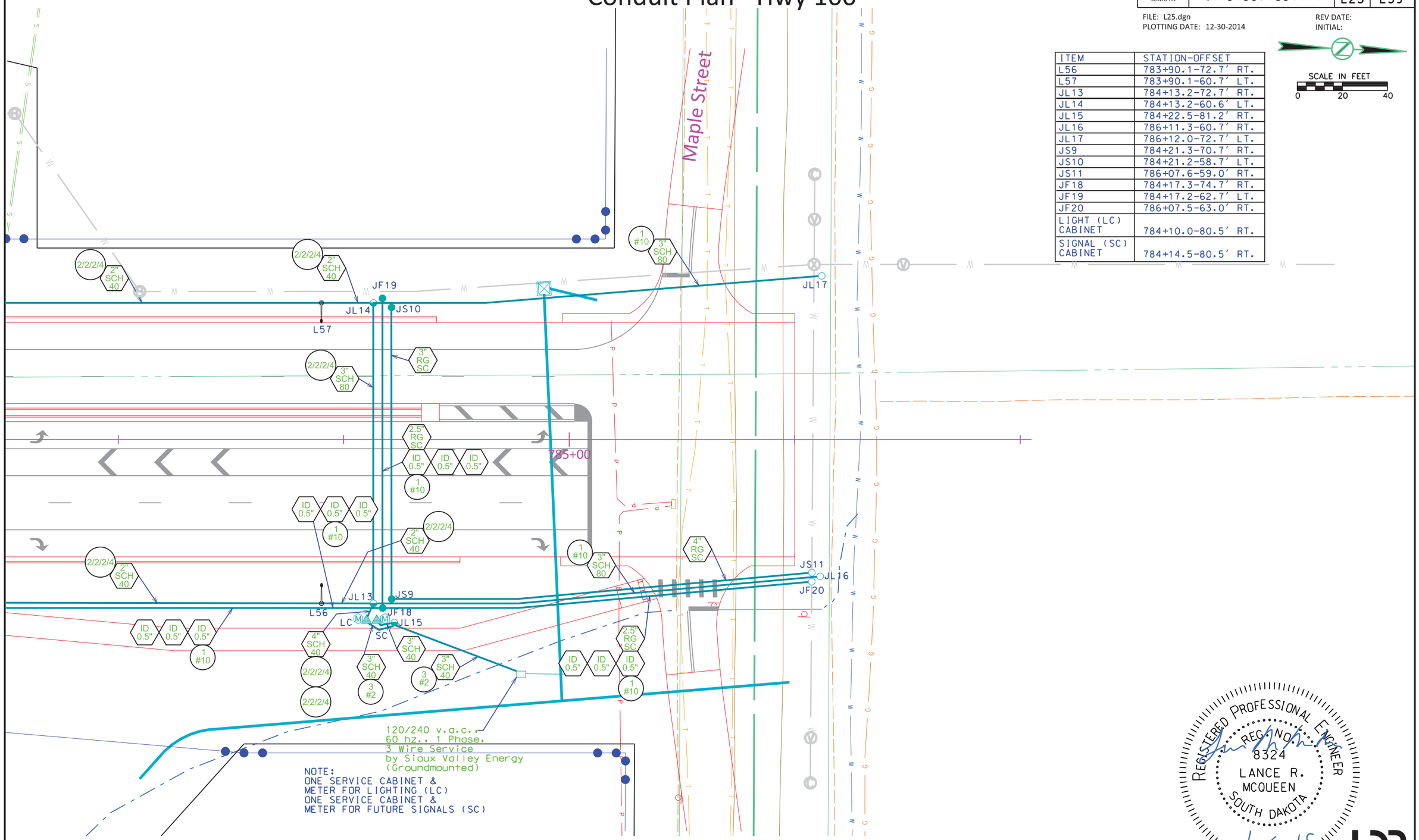

NOTE:
ONE SERVICE CABINET &
METER FOR LIGHTING (LC)
ONE SERVICE CABINET &
METER FOR FUTURE SIGNALS (SC)

REGISTERED PROFESSIONAL ENGINEER
REG. NO. 8324
LANCE R. MCQUEEN
SOUTH DAKOTA
1-6-15

HDR

FOR BIDDING PURPOSES ONLY

STATE OF SOUTH DAKOTA	PROJECT	SHEET	TOTAL SHEETS
	NH 0100(103)417	L26	L39

FILE: L26-L28.dgn
PLOTTING DATE: 12-30-2014
REV DATE:
INITIAL:

Signal Wiring Diagram - Hwy 100

Hwy 100 & Madison Street

POLE S1		Cable # or color	Controller Terminal Designation
Phase # 6			
Head No.	**Wire Color**	**Head Color**	
16,17,18,19	Red	Red	6 R
	Orange	Amber	6 Y
	Green	Green	6 G
	White	Ground/neutral	CB
Phase # 1			
Head No.			
15	Red/Black	<< Red <<	1 R
	Orange/Black	<< Amber <<	1 Y
	Green/Black	<< Green <<	9 Y
	Black/Red	<FL Amber <-	1 G
	White	Ground/neutral	CB
Phase # 6 Ped			
Head No.			
21	Black	Don't Walk	11 R
	Blue	Walk	11 G
	White/Black	Ground/neutral	CB
Phase # 3			
Head No.			
20	Red/Green	<< Red <<	3 R
	Orange/Red	<< Amber <<	3 Y
	Green/White	<< Green <<	10 Y
	Blue/White	<FL Amber <-	3 G
	White	Ground/neutral	CB
Phase # 3			
Head No.			
18,19	Red	See Phase #6, Head No. 18,19 above	
	Orange		
	Green		
	Black/Red	<< Amber <<	7 Y
	Blue/White	<<Green<<	7 G
	White	Ground/neutral	CB
PED. P.B.' s			
	Blue/Red	Phase 2	L 11
	Red/white	Phase 4	L 9
	Blue/Red	Phase 6	Q 11
	Red/white	Phase 8	Q 9
	White/Red	P.B. common	R 9 ~12

POLE S2		Cable # or color	Controller Terminal Designation
Phase # 8			
Head No.			
2,3	Red	Red	8 R
	Orange	Amber	8 Y
	Green	Green	8 G
	White	Ground/neutral	CB
Phase # 3			
Head No.			
1	Red/Black	<< Red <<	3R
	Orange/Black	<< Amber <<	3Y
	Green/Black	<< Green <<	10Y
	Black/Red	<FL Amber <-	3G
	White	Ground/neutral	CB
Phase # 6 Ped			
Head No.			
22	Black/White	Don't Walk	11 R
	Blue/Black	Walk	11 G
	White/Black	Ground/neutral	CB
Phase # 5			
Head No.			
4	Red/Green	<< Red <<	5 R
	Orange/Red	<< Amber <<	5 Y
	Green/White	<< Green <<	11 Y
	Blue/White	<FL Amber <-	5 G
	White	Ground/neutral	CB
PED. P.B.' s			
	Blue/Red	Phase 2	L 11
	Red/white	Phase 4	L 9
	Blue/Red	Phase 6	Q 11
	Red/white	Phase 8	Q 9
	White/Red	P.B. common	R 9 ~12

POLE S3		Cable # or color	Controller Terminal Designation
Phase # 2			
Head No.	**Wire Color**	**Head Color**	
6,7,8,9	Red	Red	2 R
	Orange	Amber	2 Y
	Green	Green	2 G
	White	Ground/neutral	CB
Phase # 5			
Head No.			
5	Red/Black	<< Red <<	5 R
	Orange/Black	<< Amber <<	5 Y
	Green/Black	<< Green <<	11 Y
	Black/Red	<FL Amber <-	5 G
	White	Ground/neutral	CB
Phase # 7			
Head No.			
10	Red/Green	<< Red <<	7 R
	Orange/Red	<< Amber <<	7 Y
	Green/White	<< Green <<	12 Y
	Blue/White	<FL Amber <-	7 G
	White	Ground/neutral	CB
Phase # 7			
Head No.			
5	Red	See Phase #2, Head No. 8,9 above	
	Orange		
	Green		
	Black/Red	<< Amber <<	3 Y
	Blue/White	<<Green<<	3 G
	White	Ground/neutral	CB

POLE S4		Cable # or color	Controller Terminal Designation
Phase # 4			
Head No.	**Wire Color**	**Head Color**	
12,13	Red	Red	4 R
	Orange	Amber	4 Y
	Green	Green	4 G
	White	Ground/neutral	CB
Phase # 7			
Head No.			
11	Red/Black	<< Red <<	7 R
	Orange/Black	<< Amber <<	7 Y
	Green/Black	<< Green <<	12 Y
	Black/Red	<FL Amber <-	7 G
	White	Ground/neutral	CB
Phase # 1			
Head No.			
14	Red/Green	<< Red <<	1 R
	Orange/Red	<< Amber <<	1 Y
	Green/White	<< Green <<	9 Y
	Blue/White	<FL Amber <-	1 G
	White	Ground/neutral	CB

REGISTERED PROFESSIONAL ENGINEER
REG. NO. 8324
LANCE R. MCQUEEN
SOUTH DAKOTA
1-6-15

HDR

FOR BIDDING PURPOSES ONLY

Lighting Wiring Diagram - Hwy 100

STATE OF SOUTH DAKOTA	PROJECT	SHEET	TOTAL SHEETS
	NH 0100(103)417	L27	L39

FILE: L26-L28.dgn
PLOTTING DATE: 12-30-2014
REV DATE:
INITIAL:

LEGEND:
- LUMINAIRE: 400 WATT HPS LAMP
- LUMINAIRE: 70 WATT HPS LAMP
- FUSE: 6 AMP. NON-TIME DELAY OR 2 8/10 AMP. DUAL ELEMENT
- FUSE: 1 1/2 AMP. NON-TIME DELAY OR 1 1/8 AMP. DUAL ELEMENT

NOTE:
1. LUMINAIRES FED FROM MADISON ST & HWY 100 TRANSFORMER SHALL USE 240V.
2. ALL CIRCUITS SHALL BE BONDED IN ACCORDANCE WITH THE NATIONAL ELECTRICAL CODE. QUANTITIES FOR BONDIING CONDUCTORS ARE NOT INCLUDED IN THESE PLANS.

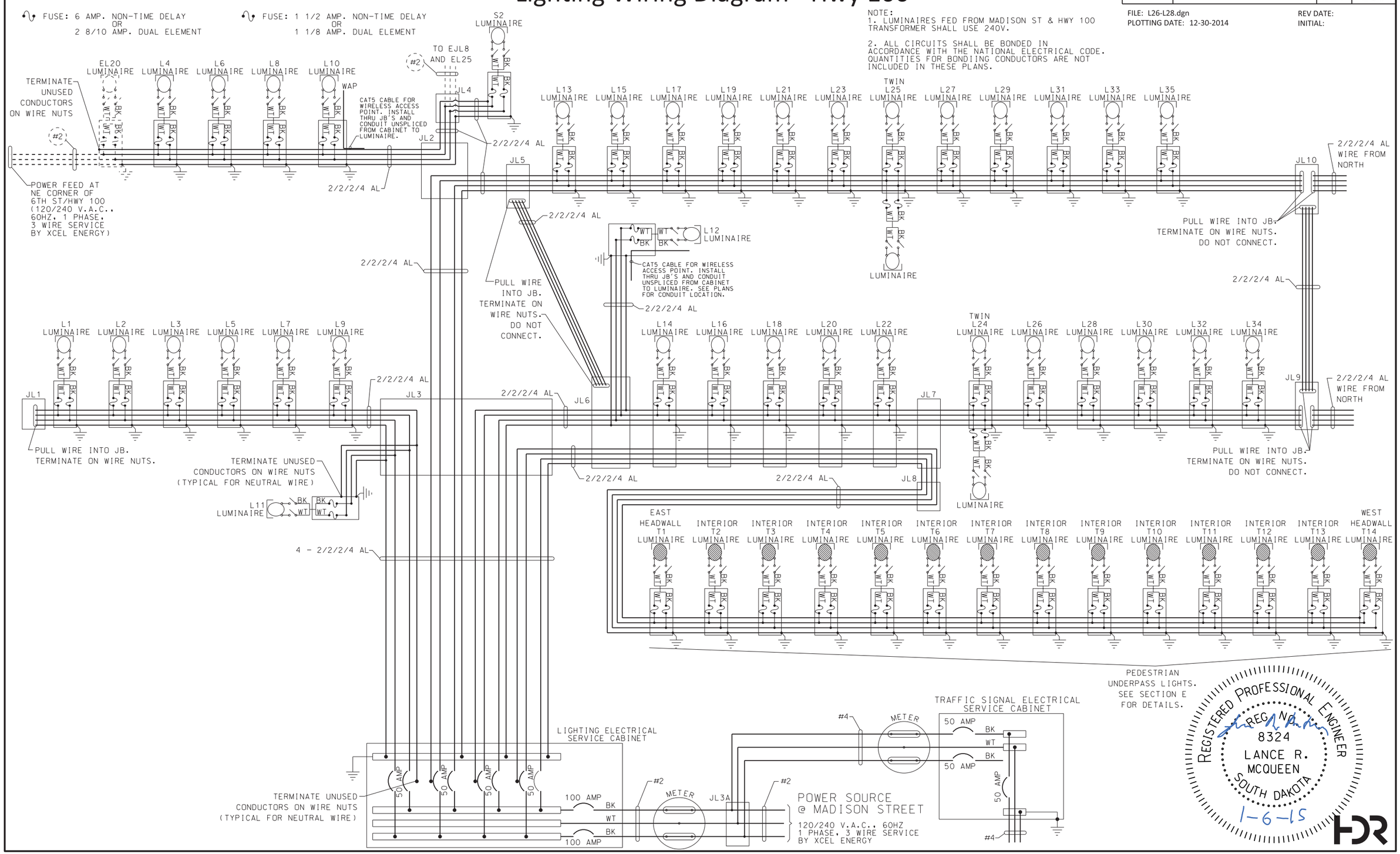

REGISTERED PROFESSIONAL ENGINEER
REG. NO. 8324
LANCE R. MCQUEEN
SOUTH DAKOTA
1-6-15

FOR BIDDING PURPOSES ONLY

Lighting Wiring Diagram - Hwy 100

STATE OF SOUTH DAKOTA	PROJECT	SHEET	TOTAL SHEETS
	NH 0100(103)417	L28	L39

FILE: L26-L28.dgn
PLOTTING DATE: 12-30-2014
REV DATE:
INITIAL:

LEGEND:

LUMINAIRE: 400 WATT HPS LAMP

FUSE: 6 AMP. NON-TIME DELAY
OR
2 8/10 AMP. DUAL ELEMENT

NOTE:
1. LUMINAIRES FED FROM MAPLE ST & HWY 100 TRANSFORMER SHALL USE 240V.

2. ALL CIRCUITS SHALL BE BONDED IN ACCORDANCE WITH THE NATIONAL ELECTRICAL CODE. QUANTITIES FOR BONDIING CONDUCTORS ARE NOT INCLUDED IN THESE PLANS.

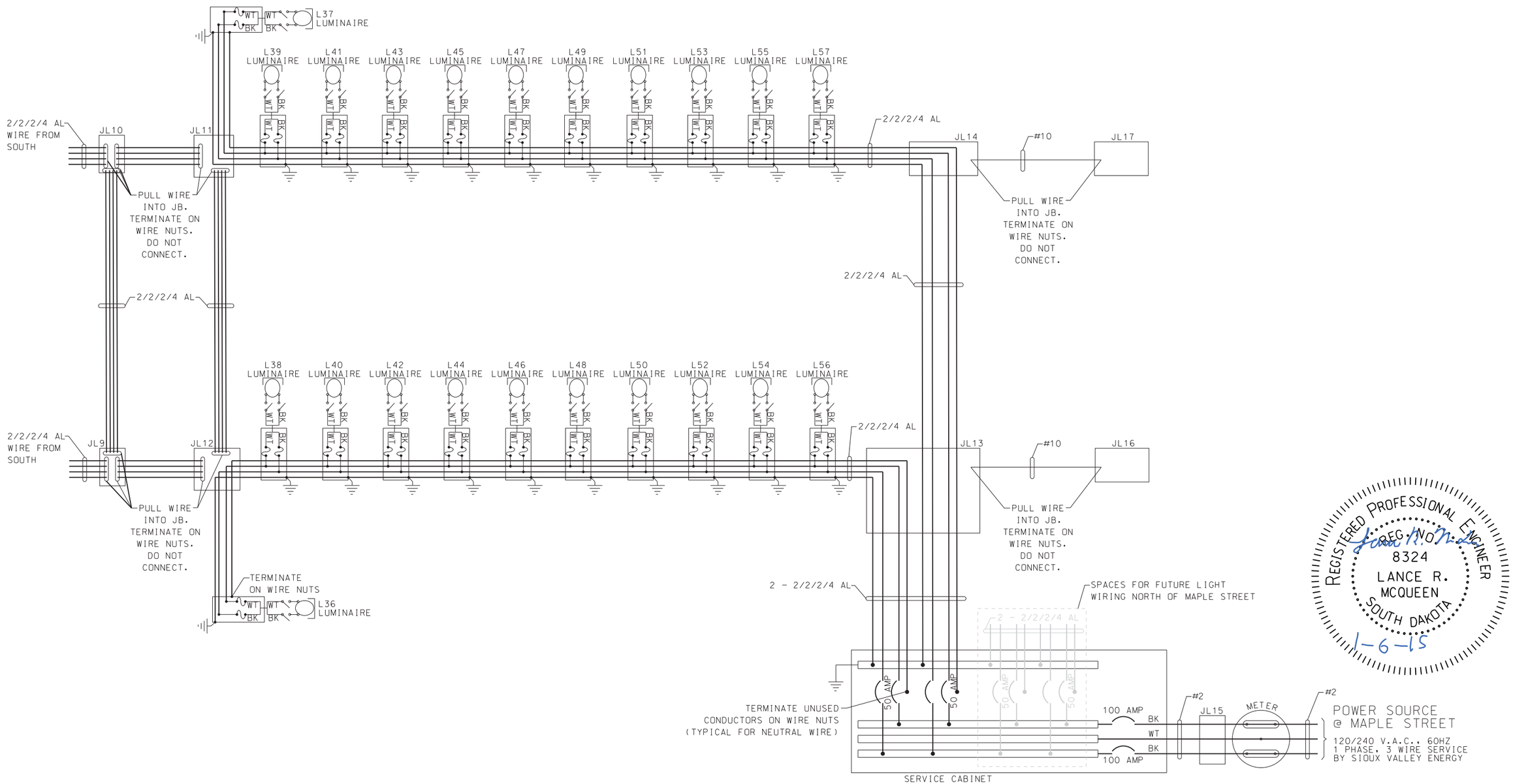

REGISTERED PROFESSIONAL ENGINEER
REG. NO. 8324
LANCE R. MCQUEEN
SOUTH DAKOTA
1-6-15

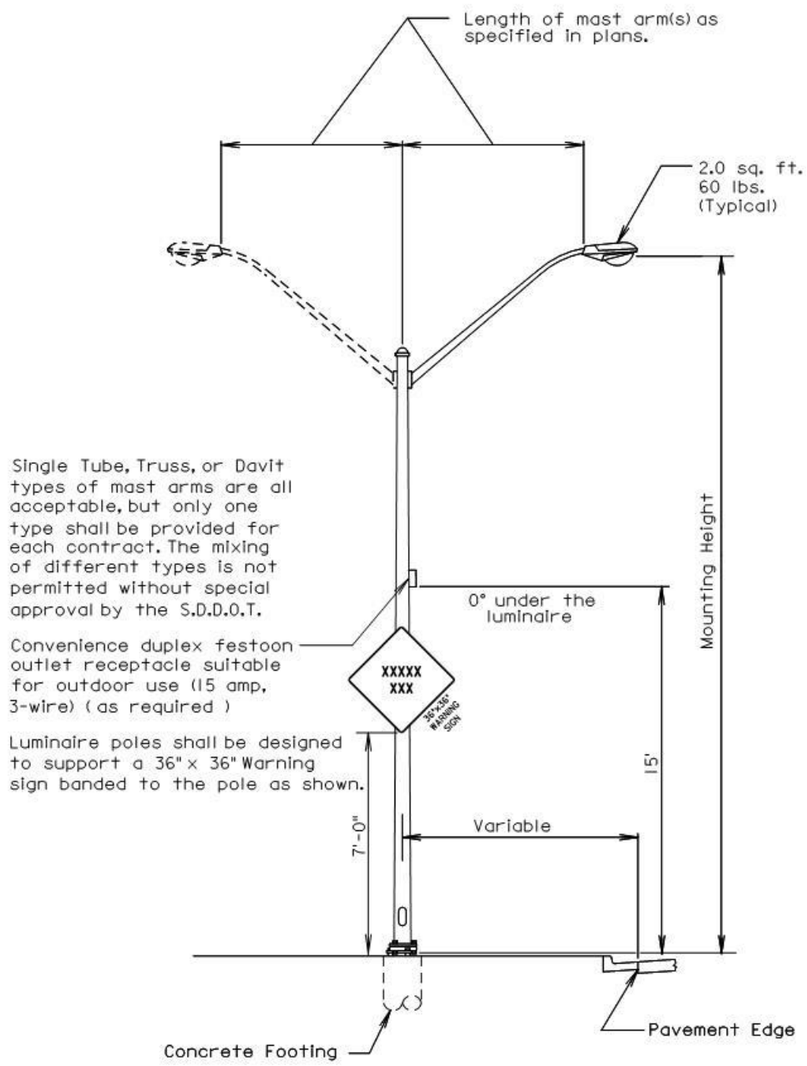

March 31, 2000

Published Date: 4th Qtr. 2014	SDDOT	STEEL ROADWAY LUMINAIRE POLE WITH MAST ARM(S)	PLATE NUMBER 635.01
			Sheet 1 of 1

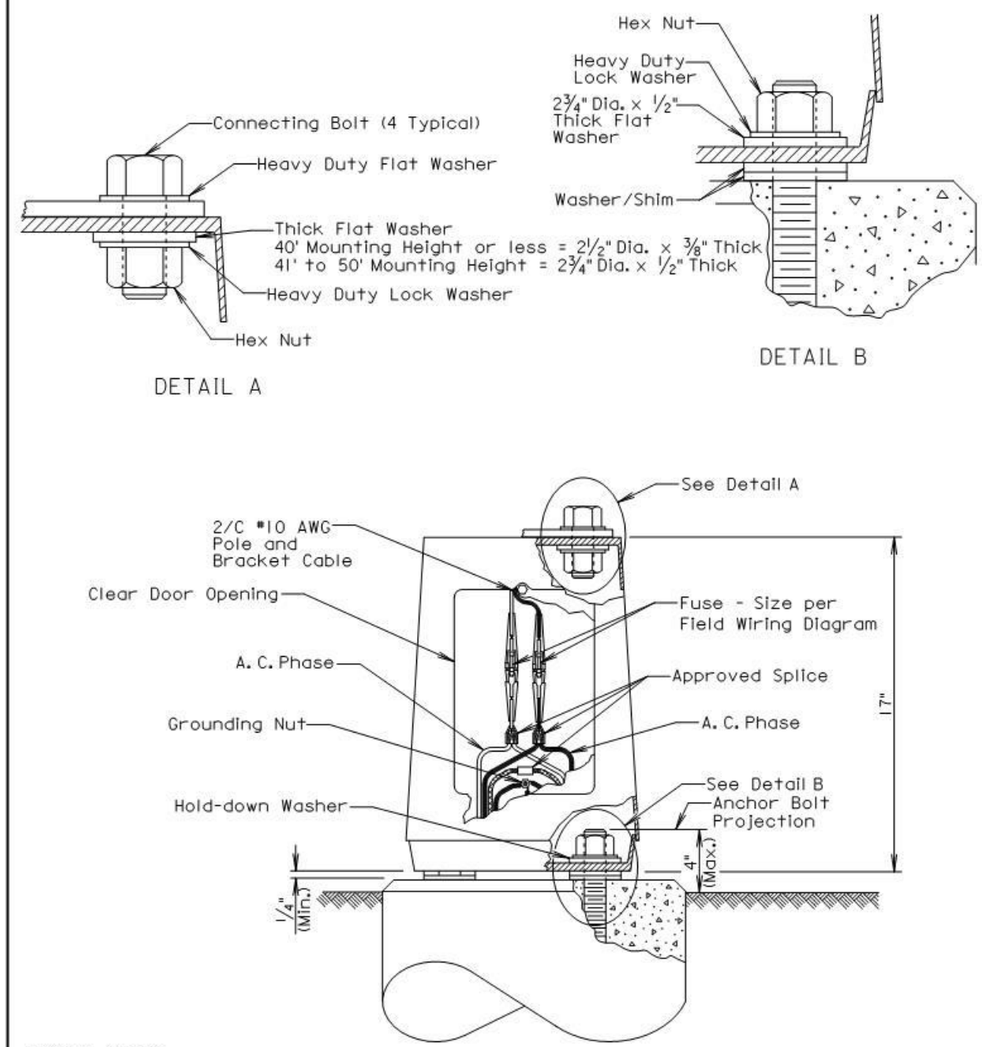

GENERAL NOTES:

Base details are provided for example only and are not intended to be a complete design.

Connectors shall be breakaway type.

The Contractor shall install "U" shaped shims or round flat washers if shimming is necessary to install the light poles plumb and level. The washers and shims shall be installed around the anchor bolts.

June 26, 2013

Published Date: 4th Qtr. 2014	SDDOT	ROADWAY LUMINAIRE POLE BREAKAWAY TRANSFORMER BASE	PLATE NUMBER 635.21
			Sheet 1 of 1

HDR

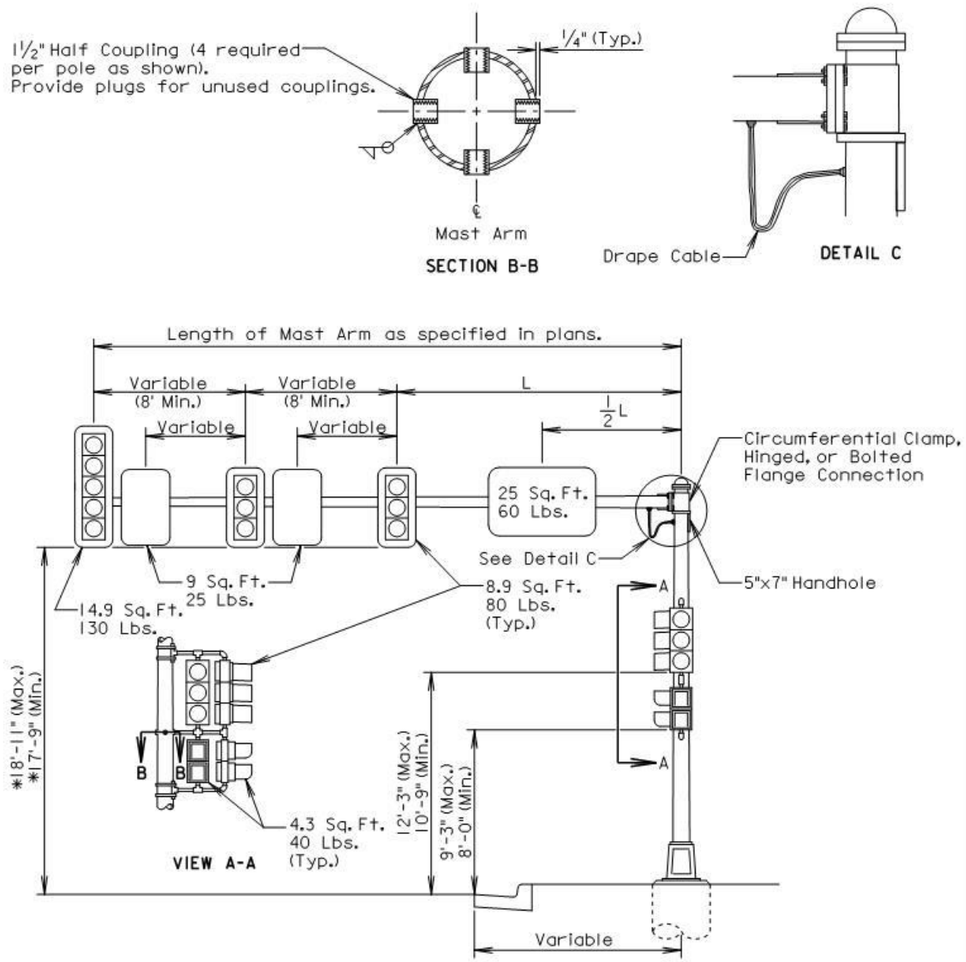

GENERAL NOTES:

Some of the signal heads are shown with backplates removed so that the mounting hardware is visible.

* The signal height allowances shown above are based on a horizontal distance greater than 53' between the signals and stop line. For horizontal distance of 53' and less between the signals and the stop line, the height allowances shall be as specified in Section 4D.15 of the MUTCD.

December 23, 2008

Published Date: 4th Qtr. 2014	SDDOT	SIGNAL POLE (WITH MAST ARM)	PLATE NUMBER 635.31 Sheet 1 of 1

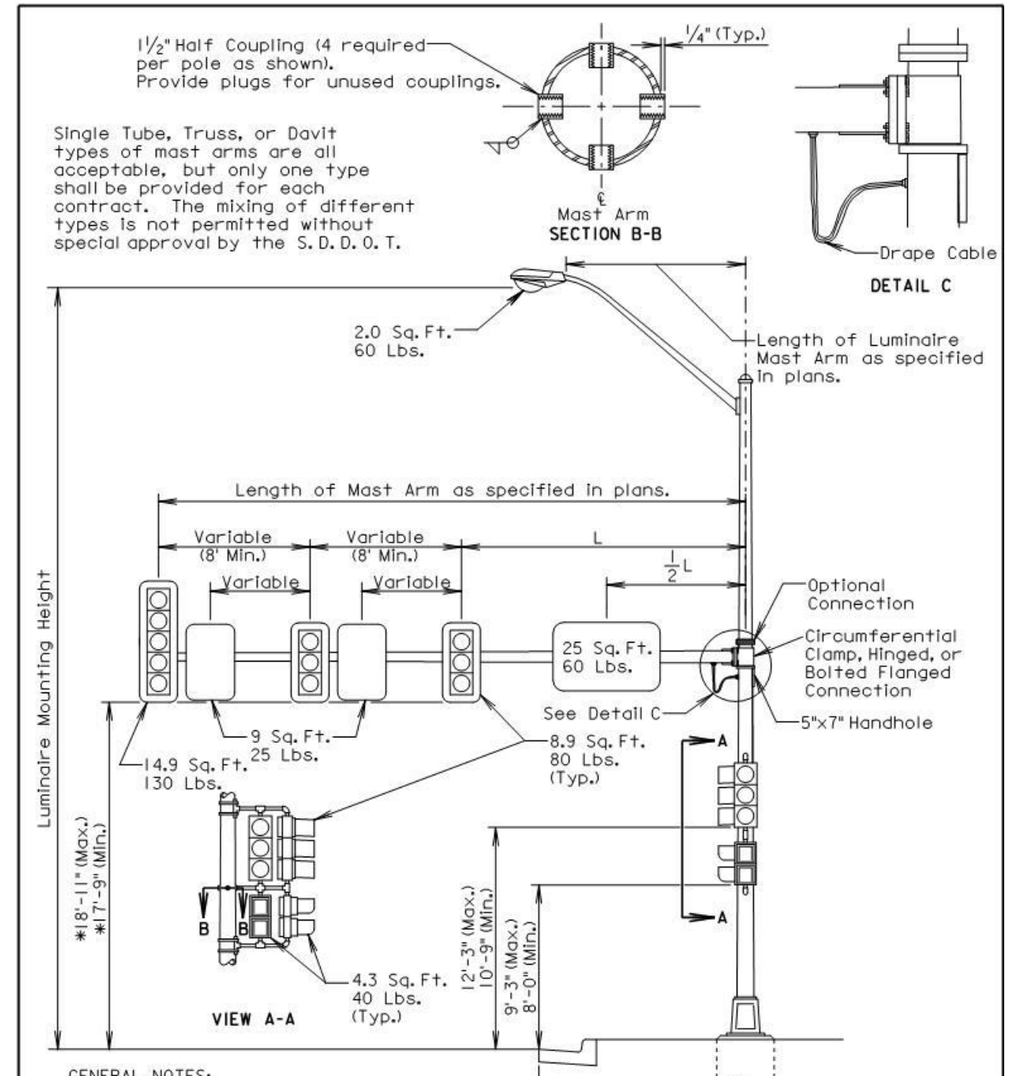

GENERAL NOTES:

Some of the signal heads are shown with backplates removed so that the mounting hardware is visible.

* The signal height allowances shown above are based on a horizontal distance greater than 53' between the signals and stop line. For horizontal distance of 53' and less between the signals and the stop line, the height allowances shall be as specified in Section 4D.15 of the MUTCD.

December 23, 2008

Published Date: 4th Qtr. 2014	SDDOT	SIGNAL POLE (WITH MAST ARM AND LUMINAIRE EXTENSION)	PLATE NUMBER 635.32 Sheet 1 of 1

HDR

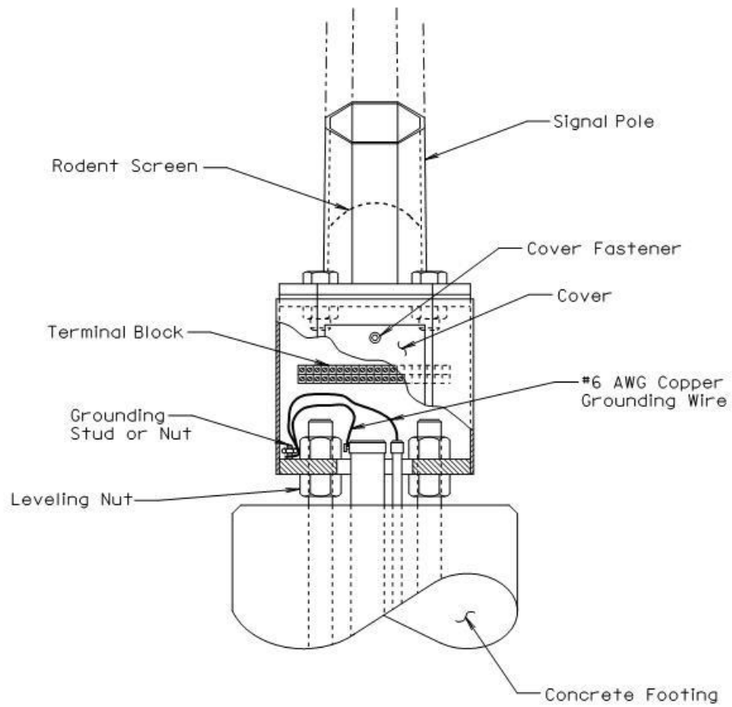

GENERAL NOTES:

Base details are provided for example only and are not intended to be a complete design.

The Contractor shall furnish and install a rodent screen in the signal pole above the tranformer base. The rodent screen shall be a galvanized steel mesh with a maximum opening size of 1/4 inch. The rodent screen shall be friction fitted or installed by other methods approved by the Engineer.

All costs for furnishing and installing the rodent screen including labor, equipment, and materials shall be incidental to the contract unit price per each for the corresponding signal pole bid item.

December 23, 2008

Published Date: 4th Qtr. 2014	SDDOT	TRANSFORMER SIGNAL POLE BASE	PLATE NUMBER 635.50
			Sheet 1 of 1

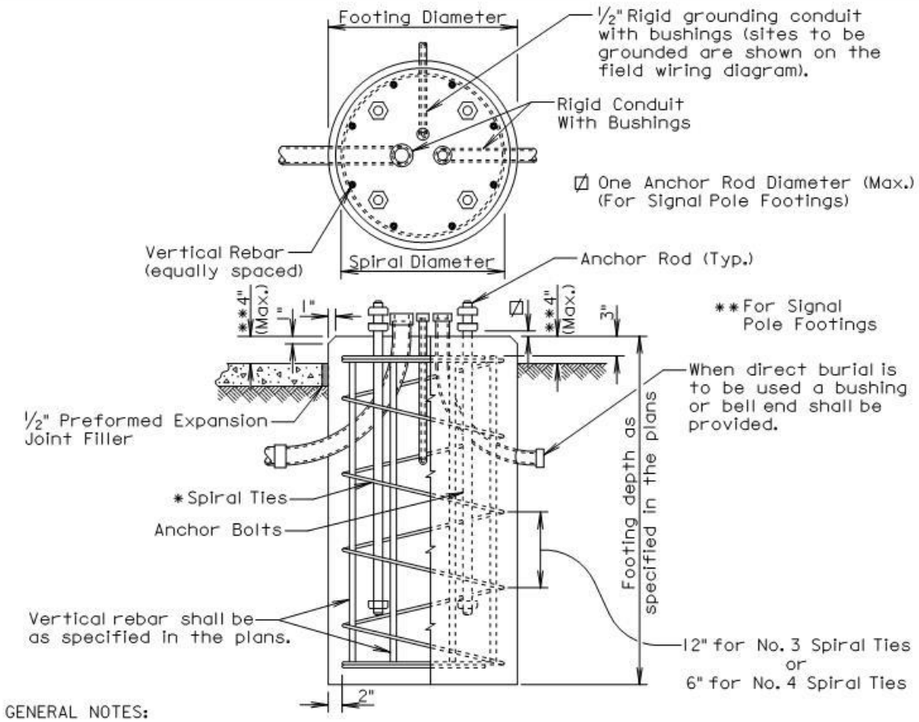

GENERAL NOTES:

* The tie sizes are specified in the plans. Circular ties may be used in lieu of the spiral ties. The No. 3 ties shall be spaced 12 inches apart except for the top two which shall be spaced 6 inches apart. The No. 4 ties shall be spaced 6 inches apart except for the top two which shall be spaced 3 inches apart. The ties shall be lapped 18 inches and the laps shall be staggered around the cage.

Spiral ties shall have 1-1/2 extra turns at each end.

See section 985 of the Standard Specifications for footing materials.

Conduits and bushings may project 2 1/2 inches to 6 inches above footing for fixed base poles but shall not project above the slip plane or fracture plane for breakaway poles.

Conduits shall be sealed water-tight during all phases of construction until poles are in place.

The anchor rods shall fit inside the reinforcing steel cage. If the anchor rods designed by the Pole Manufacturer do not fit, contact the Office of Bridge Design for footing redesign. No additional payment will be made for the redesigned footing.

Costs of conduit and conduit bushings shown on footing detail shall be incidental to the footing bid item(s).

The pole shall not be installed until the concrete has attained design strength (4000 psi).

The contour of the area surrounding the breakaway pole shall be flat, though not necessarily level for a distance of 5 feet in all directions. The Contractor may be required to provide finish grading at some breakaway pole locations.

September 6, 2013

Published Date: 4th Qtr. 2014	SDDOT	POLE FOOTING	PLATE NUMBER 635.55
			Sheet 1 of 1

HDR

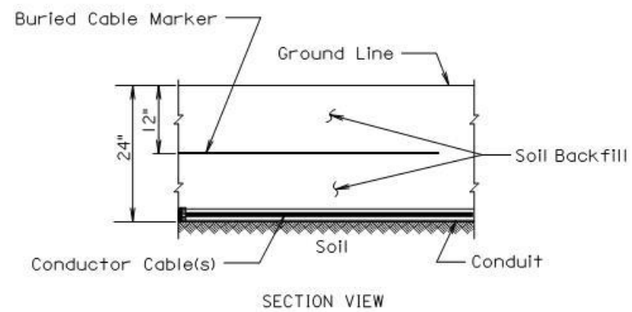

SECTION VIEW

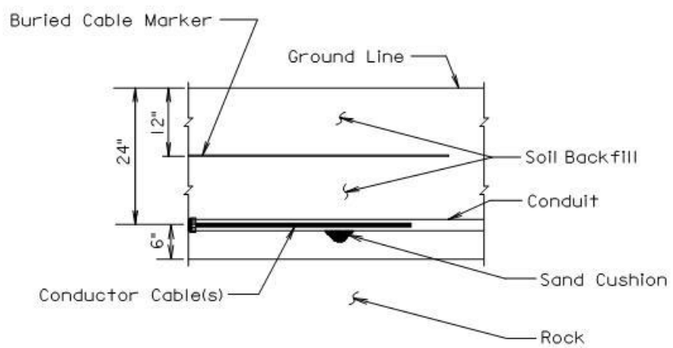

SECTION VIEW

GENERAL NOTE:

The Buried Cable Marker shall be plastic, approximately 6" wide, and shall be capable of sustaining a minimum of a 350% tolerance of elongation without tearing. The Buried Cable Marker shall have a life expectancy approximately equal to that of the conductor(s) beneath it. A phrase indicating the presence of a buried electric circuit below shall be printed in a contrasting color on the cable marker. The Buried Cable Marker shall be subject to approval by the Engineer. All costs associated with furnishing and installing the Buried Cable Marker shall be incidental to the contract unit price per Foot for the bid item used for the electrical conductor.

March 31, 2000

Published Date: 4th Qtr. 2014	SDDOT	CONDUIT INSTALLATION	PLATE NUMBER 635.76
			Sheet 1 of 1

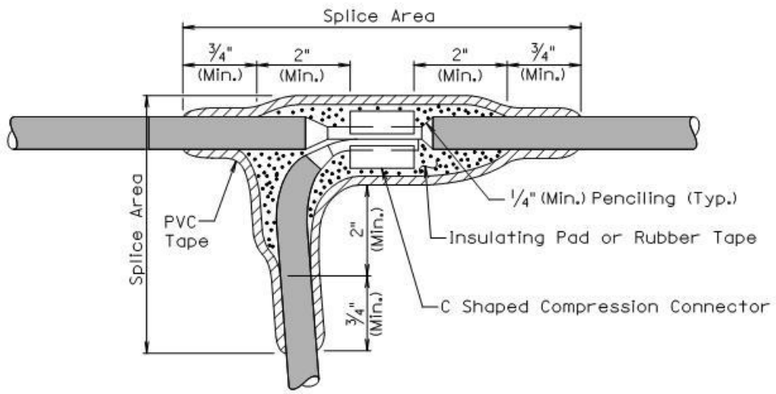

TYPE C SPLICE
(Between 1 free end and 1 through conductor)

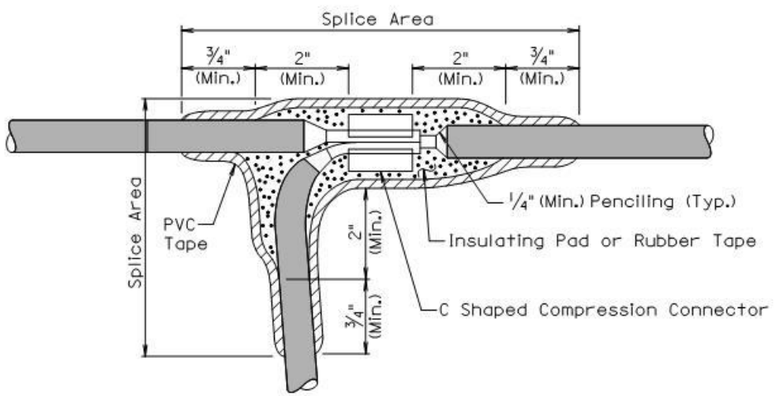

TYPE T SPLICE
(For 3 free ends)

February 14, 2010

Published Date: 4th Qtr. 2014	SDDOT	WIRE SPLICING FOR LIGHTING (LOW VOLTAGE CIRCUITS (0 to 600 V))	PLATE NUMBER 635.80 Sheet 1 of 2

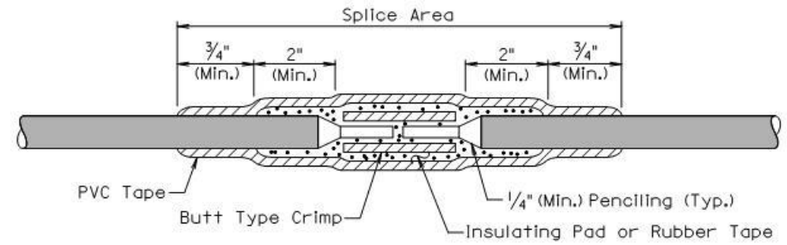

TYPE S SPLICE
(Between 2 free ends)

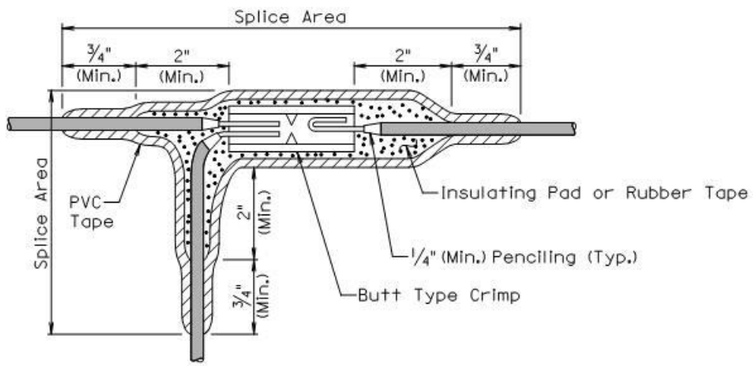

TYPE ST SPLICE
(For 3 free ends)

GENERAL NOTES:

The splice shall be environmentally sealed for protection from weather, moisture, and abrasion in accordance with the method stated below.

The rubber tapes shall be rolled after application.

Method for insulating splice area:

1. The splice area shall be completely covered with electrical insulating coating and dried.
2. Apply two layers of 1/8" minimum thickness electrical insulating pad or two layers of half lapped synthetic oil resistant self fusing rubber tape.
3. Three layers of half lapped polyvinyl chloride tape shall be applied.
4. The entire splice area shall be covered with electrical insulating coating and dried.

February 14, 2010

Published Date: 4th Qtr. 2014	SDDOT	WIRE SPLICING FOR LIGHTING (LOW VOLTAGE CIRCUITS (0 to 600 V))	PLATE NUMBER 635.80 Sheet 2 of 2

HDR

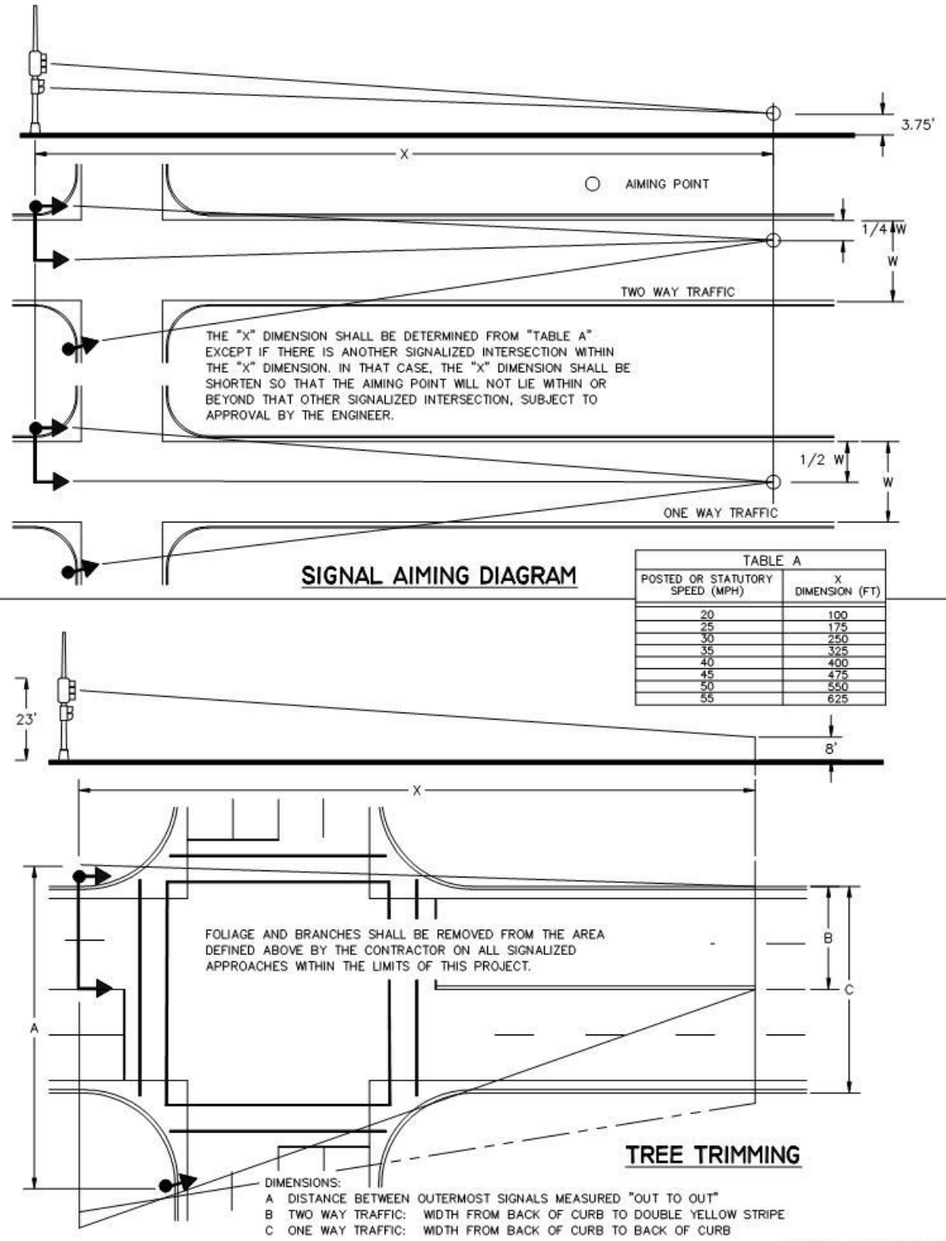

SIGNAL AIMING DIAGRAM

TABLE A

POSTED OR STATUTORY SPEED (MPH)	X DIMENSION (FT)
20	100
25	175
30	250
35	325
40	400
45	475
50	550
55	625

TREE TRIMMING

DIMENSIONS:
A DISTANCE BETWEEN OUTERMOST SIGNALS MEASURED "OUT TO OUT"
B TWO WAY TRAFFIC: WIDTH FROM BACK OF CURB TO DOUBLE YELLOW STRIPE
C ONE WAY TRAFFIC: WIDTH FROM BACK OF CURB TO BACK OF CURB

REVISED: DECEMBER 2007

SPECIFICATION REFERENCE NO.		CITY OF SIOUX FALLS ENGINEERING DIVISION	PLATE NUMBER
635A		TRAFFIC SIGNAL HEAD ALIGNMENT	635.08

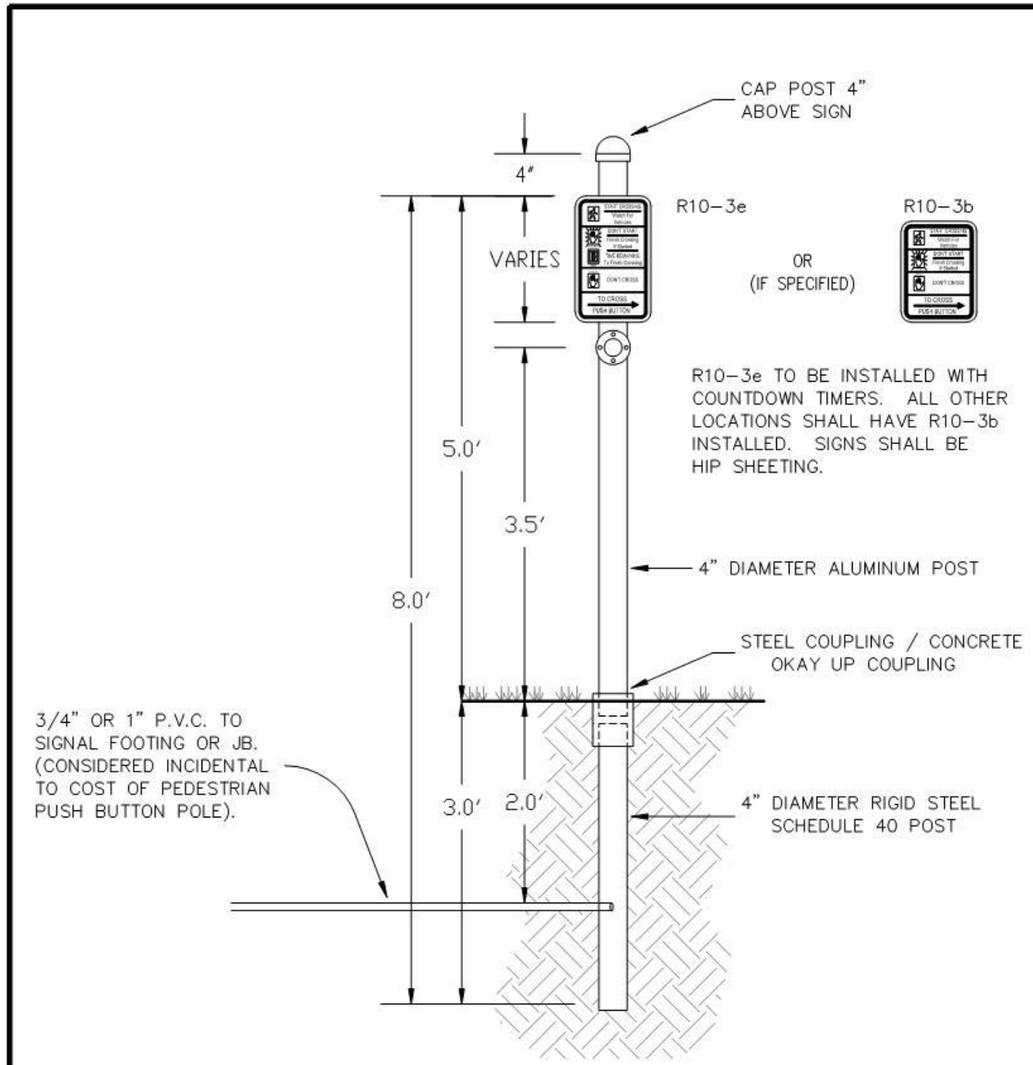

REVISED: NOVEMBER 2013

SPECIFICATION REFERENCE NO.		CITY OF SIOUX FALLS ENGINEERING DIVISION	PLATE NUMBER
635A		PEDESTRIAN PUSH BUTTON AND SIGN ON POST	635.09

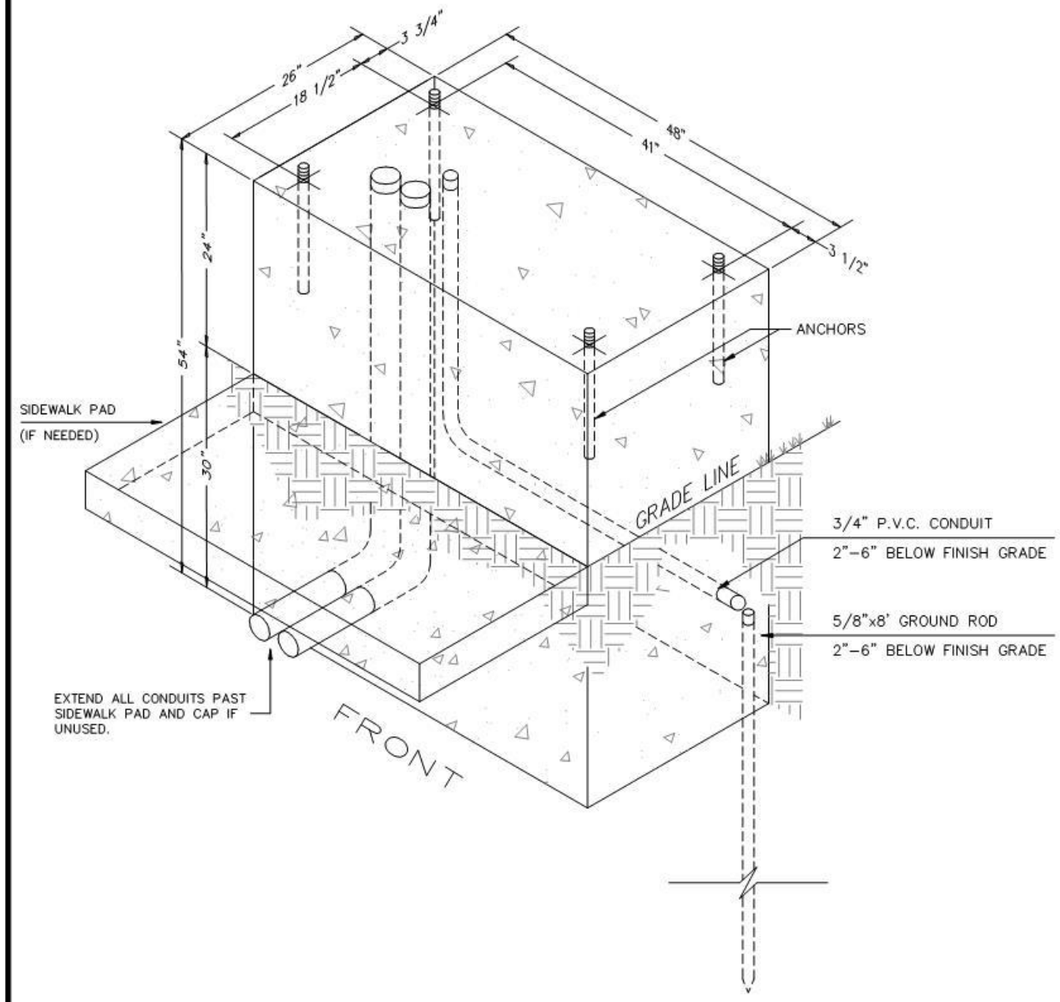

GENERAL NOTES:

1. 5/8" DIA. x 18" GALVANIZED ANCHORS SHALL BE 2" ABOVE FINISHED CONCRETE.
2. CONDUITS SHALL BE 2" TO 3" ABOVE FINISHED CONCRETE.
3. CONDUIT TO BE RIGID STEEL AND HAVE THREADS SO THE GROUNDING BUSHINGS CAN BE INSTALLED.
4. CONCRETE SHALL BE LEVEL AND STEEL TROWEL FINISHED.
5. 5/8"x8' GROUND ROD SHALL BE INSTALLED 2"–6" BELOW FINISHED GRADE.
6. 3/4" P.V.C. CONDUIT SHALL END ADJACENT TO THE GROUND ROD.

REVISED: NOVEMBER 2013

SPECIFICATION REFERENCE NO. 635A	CITY OF SIOUX FALLS ENGINEERING DIVISION CONTROLLER CABINET FOOTING FOR EIGHT PHASE SIGNAL	PLATE NUMBER 635.17

TOP VIEW FOUR-PHASE CONTROLLER CABINETS:

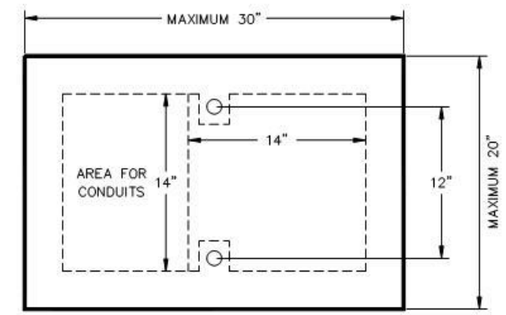

TOP VIEW EIGHT-PHASE CONTROLLER CABINETS:

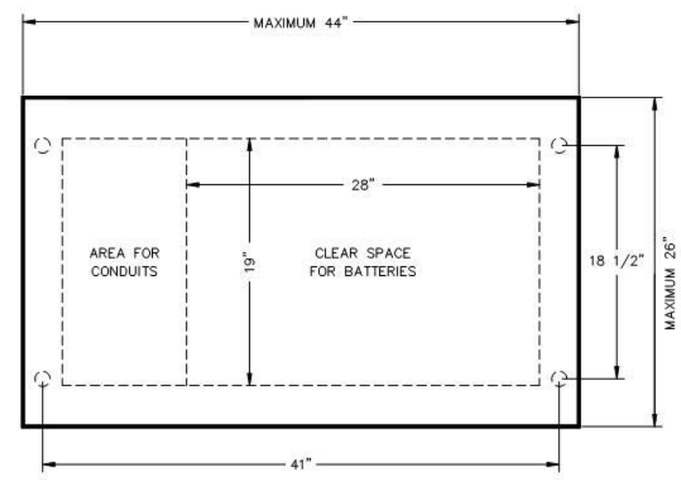

FRONT

REVISED: NOVEMBER 2013

SPECIFICATION REFERENCE NO. 635A	CITY OF SIOUX FALLS ENGINEERING DIVISION TRAFFIC SIGNAL CONTROLLER CABINET SIZE AND BOLT HOLE REQUIREMENTS	PLATE NUMBER 635.19

CAST IRON COVER

12" JB – NEENAH FOUNDRY CO. R-5900-A SERIES OR ENGINEER APPROVED.

18" JB – NEENAH FOUNDRY CO. R-5900-C SERIES OR ENGINEER APPROVED.

24" JB – NEENAH FOUNDRY CO. R-5900-E SERIES OR ENGINEER APPROVED.

30" JB – NEENAH FOUNDRY CO. R-5900-G SERIES OR ENGINEER APPROVED.

NOTES:

ALLOW SUFFICIENT SLACK SO THAT CABLE ENDS CAN BE PULLED TO 30" ABOVE JUNCTION BOX.

NUMBER OF CONDUIT ENTRANCES VARIES WITH LOCATION OF JUNCTION BOX.

ANCHOR FRAME TO PIPE AS APPROVED BY THE ENGINEER.

COVER SHALL BE STAMPED TRAFFIC.

ALL CONDUITS COMING INTO AND LEAVING THE JUNCTION BOX WILL BE RIGID STEEL AND FOR AT LEAST (5) FEET OUTSIDE OF THE JUNCTION BOX. THESE CONDUIT WILL HAVE A GROUNDING BUSHING ATTACHED AND A GROUNDING WIRE INSTALLED TO BOND ALL CONDUITS TO THE JUNCTION BOX USING AN APPROPRIATELY SIZED TERMINAL LUG BOLTED TO THE WALL OF THE JUNCTION BOX.

SLOTS CUT IN CULVERT MUST BE REPAIRED. PERMANENTLY FASTENED FROM THE OUTSIDE AND MADE OUT OF CULVERT MATERIAL. INFILTRATION POINT SHALL BE SPRAYED WITH FOAM FROM THE OUTSIDE.

THE JUNCTION BOX SIZES AND QUANTITIES ARE SHOWN ON THE PLAN SHEETS.

(*) WHEN JUNCTION BOX IS USED FOR TRAFFIC SIGNAL CONDUIT A GROUND ROD WILL BE INSTALLED IN THE BOTTOM OF THE JUNCTION BOX. IT SHALL NOT PROTRUDE MORE THAN (6) INCHES OUT OF THE CRUSHED ROCK.

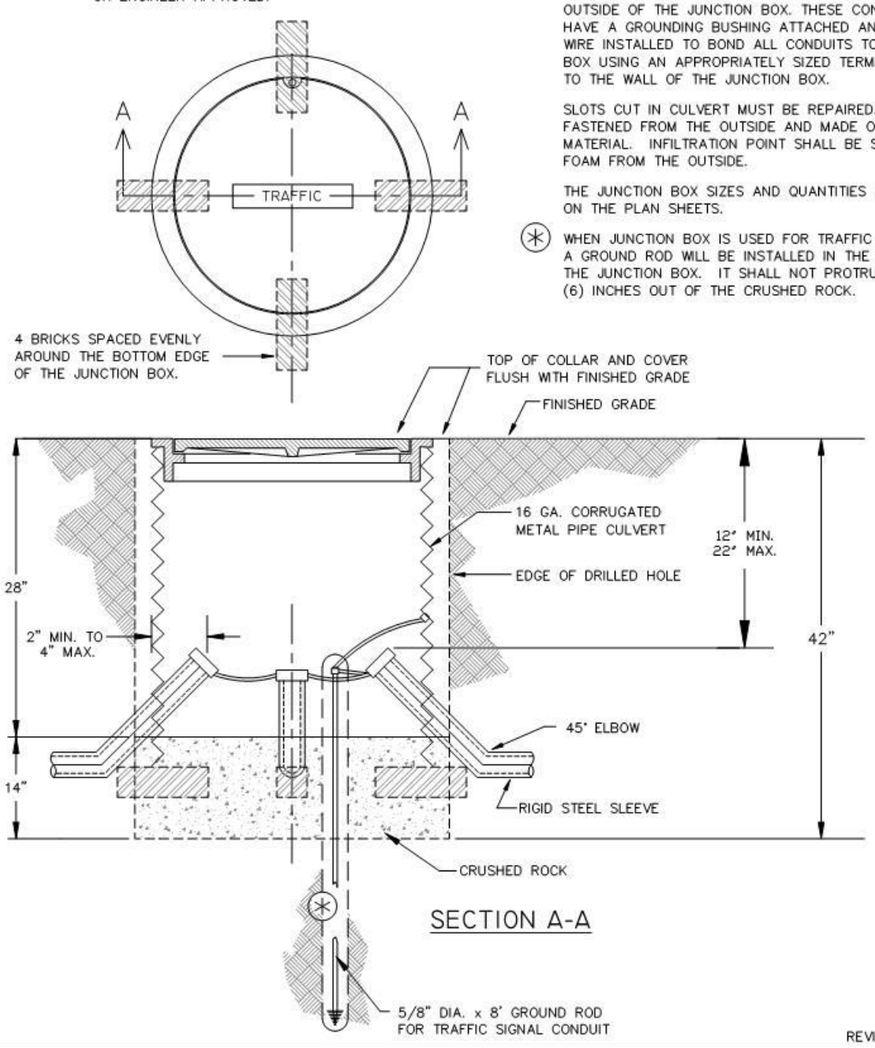

SECTION A-A

REVISED: NOVEMBER 2013

SPECIFICATION REFERENCE NO. 635A	CITY OF SIOUX FALLS ENGINEERING DIVISION	PLATE NUMBER
	JUNCTION BOX – TRAFFIC	635.31

CAST IRON COVER

18" JB – NEENAH FOUNDRY CO. R-5900-C SERIES OR ENGINEER APPROVED.

24" JB – NEENAH FOUNDRY CO. R-5900-E SERIES OR ENGINEER APPROVED.

30" JB – NEENAH FOUNDRY CO. R-5900-G SERIES OR ENGINEER APPROVED.

NOTES:

ALLOW SUFFICIENT SLACK SO THAT CABLE ENDS CAN BE PULLED TO 30" ABOVE JUNCTION BOX.

NUMBER OF CONDUIT ENTRANCES VARIES WITH LOCATION OF JUNCTION BOX.

ANCHOR FRAME TO PIPE AS APPROVED BY THE ENGINEER.

COVER SHALL BE STAMPED TRAFFIC.

THE ENDS OF THE INNERDUCT CONDUIT IN THE JUNCTION BOX SHALL BE SEALED WITH A WATER PROOF SEALANT TO PREVENT WATER INFILTRATION INTO THE CONDUIT.

SLOTS CUT IN CULVERT MUST BE REPAIRED. PERMANENTLY FASTENED FROM THE OUTSIDE AND MADE OUT OF CULVERT MATERIAL. INFILTRATION POINT SHALL BE SPRAYED WITH FOAM FROM THE OUTSIDE.

THE JUNCTION BOX SIZES AND QUANTITIES ARE SHOWN ON THE PLAN SHEETS.

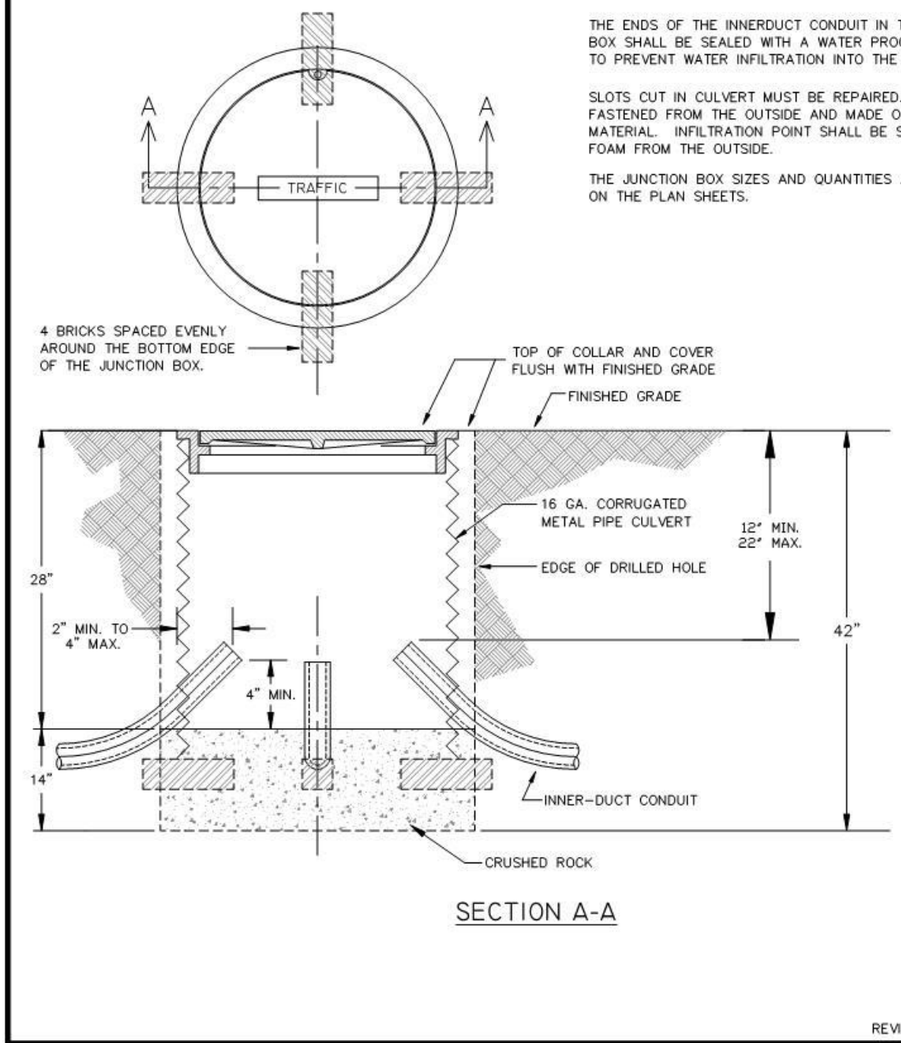

SECTION A-A

REVISED: NOVEMBER 2013

SPECIFICATION REFERENCE NO. 635A	CITY OF SIOUX FALLS ENGINEERING DIVISION	PLATE NUMBER
	JUNCTION BOX – INNERDUCTS	635.33

POST TOP MOUNTED

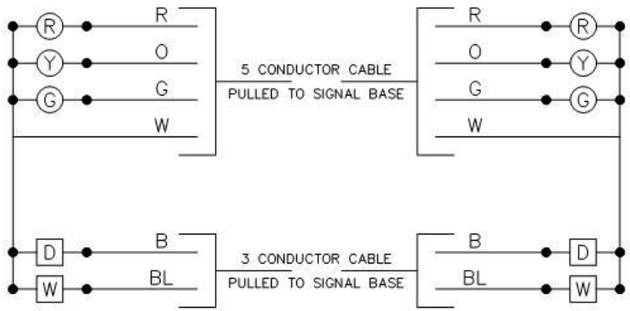

3 SEC. TRAFFIC & 2 SEC. PEDESTRIAN HEADS

MAST ARM MOUNTED

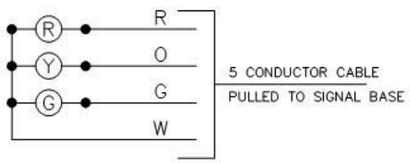

3 SECTION TRAFFIC SIGNAL HEAD

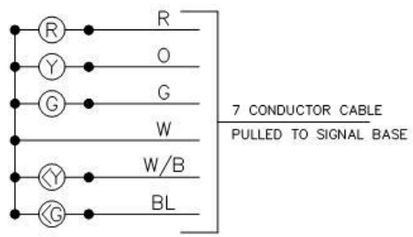

5 SECTION TRAFFIC SIGNAL HEAD

SIDE OF POST MOUNTED

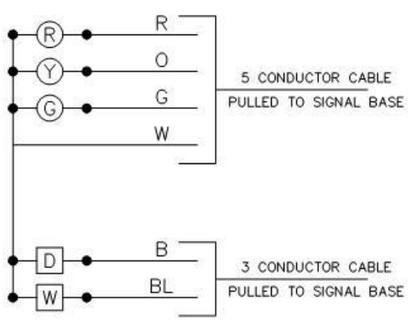

3 SEC. TRAFFIC & 2 SEC. PEDESTRIAN HEADS

REVISED: NOVEMBER 2013

SPECIFICATION REFERENCE NO. 635A	CITY OF SIOUX FALLS ENGINEERING DIVISION TRAFFIC SIGNAL HEAD WIRING DIAGRAM	PLATE NUMBER 635.39

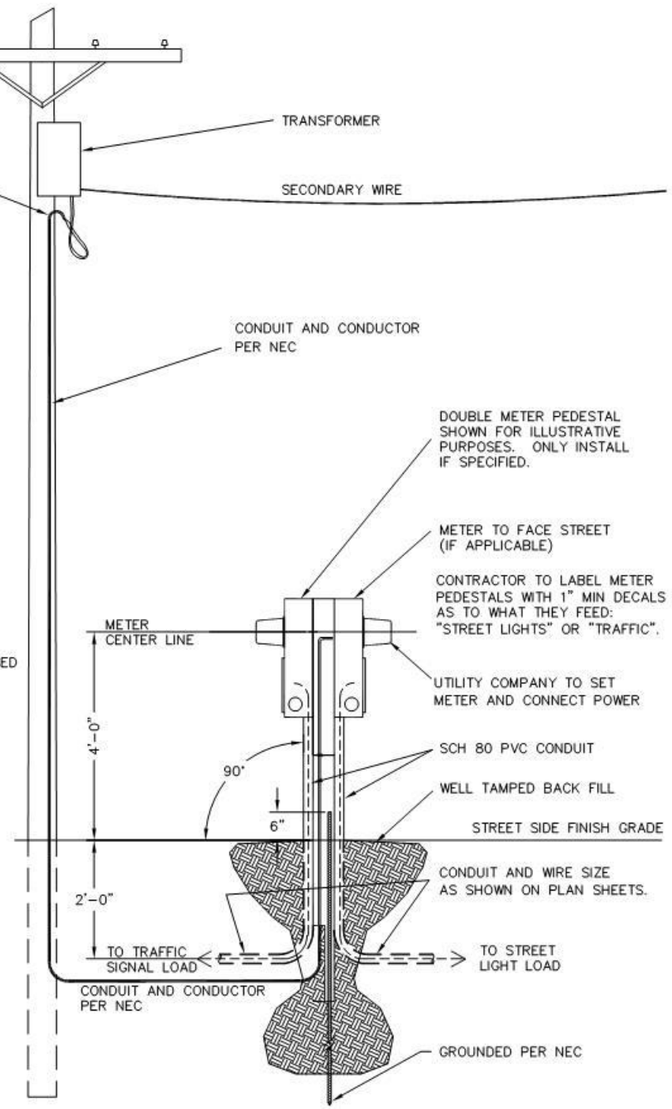

PLAN VIEW

NOTES:

ALL POWER OUTLET PANELS MUST BE FULLY BUSSED

MUST BE AN OUTDOOR ENCLOSURE (TYPE 3R)

MUST MEET ALL CONSTRUCTION SITE GROUND FAULT PROTECTION REQUIREMENTS

GROUNDING ROD FURNISHED BY CONTRACTOR

METER PEDESTAL FURNISHED BY CONTRACTOR

MILBANK U4322-0-5T95 TERMINAL, SINGLE METER PEDESTAL, OR EQUAL

MILBANK U4323-0-5T95 TERMINAL, DOUBLE METER PEDESTAL, OR EQUAL

TRAFFIC SIGNAL POWER FEEDS SHALL INCLUDE ONE (1) 50 AMP SINGLE POLE BREAKER.

LIGHTING POWER FEEDS SHALL INCLUDE TWO (2) 50 AMP DOUBLE POLE BREAKERS.

ALL MATERIALS AND LABOR ON SECONDARY SIDE OF TRANSFORMER SHALL BE SUPPLIED BY THE CONTRACTOR.

ALL WORK TO CONFORM WITH NATIONAL ELECTRIC CODE

REVISED: SEPTEMBER 2012

SPECIFICATION REFERENCE NO. 635A/B	CITY OF SIOUX FALLS ENGINEERING DIVISION POWER FEED FROM ELEVATED TRANSFORMER	PLATE NUMBER 635.41

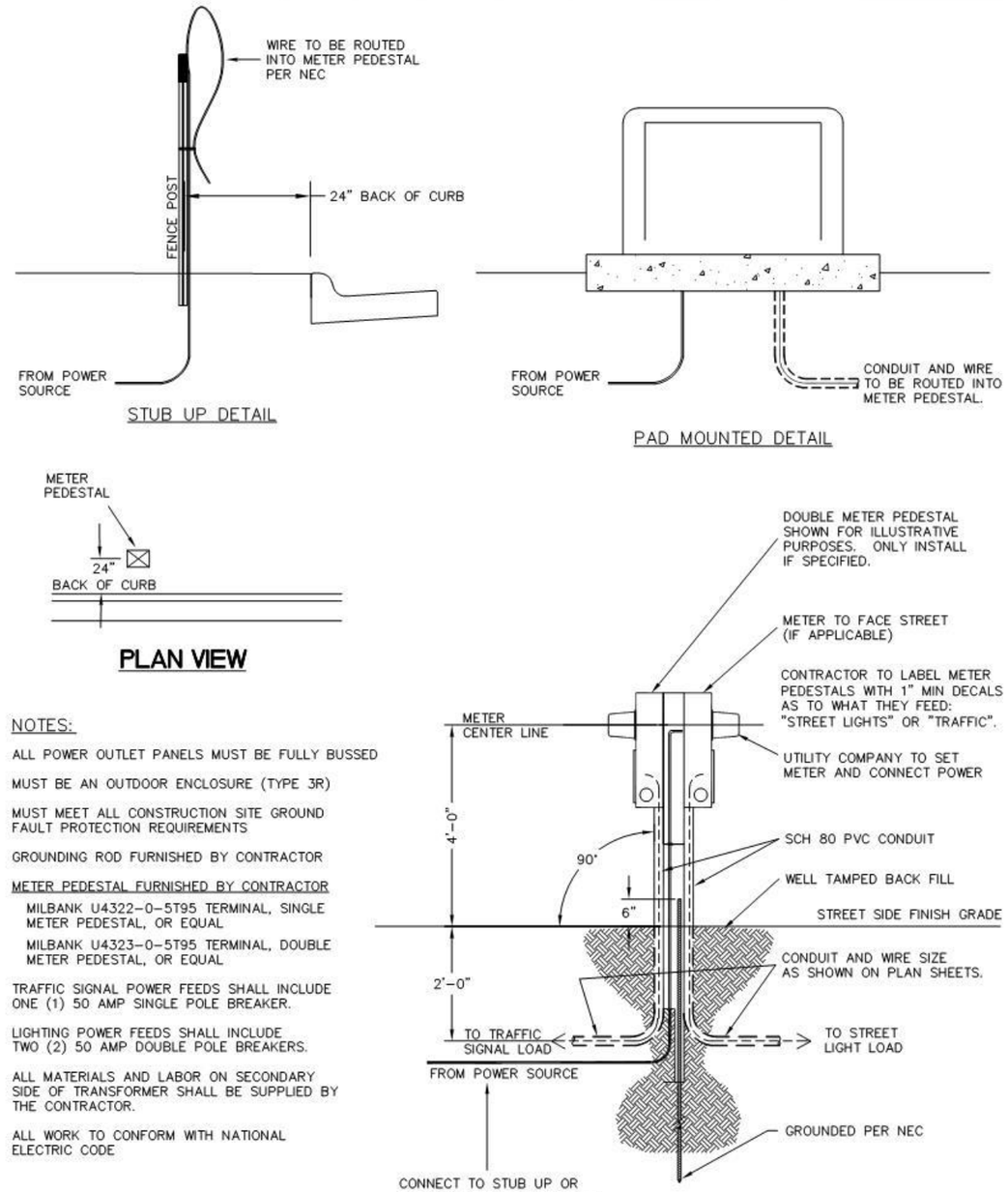

PLAN VIEW

NOTES:

ALL POWER OUTLET PANELS MUST BE FULLY BUSSED

MUST BE AN OUTDOOR ENCLOSURE (TYPE 3R)

MUST MEET ALL CONSTRUCTION SITE GROUND FAULT PROTECTION REQUIREMENTS

GROUNDING ROD FURNISHED BY CONTRACTOR

METER PEDESTAL FURNISHED BY CONTRACTOR

MILBANK U4322-0-5T95 TERMINAL, SINGLE METER PEDESTAL, OR EQUAL

MILBANK U4323-0-5T95 TERMINAL, DOUBLE METER PEDESTAL, OR EQUAL

TRAFFIC SIGNAL POWER FEEDS SHALL INCLUDE ONE (1) 50 AMP SINGLE POLE BREAKER.

LIGHTING POWER FEEDS SHALL INCLUDE TWO (2) 50 AMP DOUBLE POLE BREAKERS.

ALL MATERIALS AND LABOR ON SECONDARY SIDE OF TRANSFORMER SHALL BE SUPPLIED BY THE CONTRACTOR.

ALL WORK TO CONFORM WITH NATIONAL ELECTRIC CODE

REVISED: SEPTEMBER 2012

SPECIFICATION REFERENCE NO. 635A/B	CITY OF SIOUX FALLS ENGINEERING DIVISION POWER FEED FROM GROUND POWER SOURCE	PLATE NUMBER 635.42

HDR

CAST IRON COVER

18" DIA JB – NEENAH FOUNDRY COMPANY
R-5900-C SERIES OR ENGINEER APPROVED.

24" DIA JB – NEENAH FOUNDRY COMPANY
R-5900-E SERIES OR ENGINEER APPROVED.

NOTES:

ALLOW SUFFICIENT SLACK SO THAT CABLE ENDS CAN BE PULLED TO 18" ABOVE JUNCTION BOX.

NUMBER OF CONDUIT ENTRANCES VARIES WITH LOCATION OF JUNCTION BOX.

COVER SHALL BE STAMPED ELECTRIC.

THE JUNCTION BOX SIZES AND QUANTITIES ARE SHOWN ON PLAN SHEETS.

ELECTRICAL GROUNDING AND BONDING CONTRACTOR SHALL FURNISH AND INSTALL COPPER GROUND ROD, #6 STRANDED COPPER WIRE, GROUND ROD CLAMP AND APPROPRIATELY SIZE COPPER TERMINAL LUG BOLTED TO THE INSIDE WALL OF THE JUNCTION BOX.

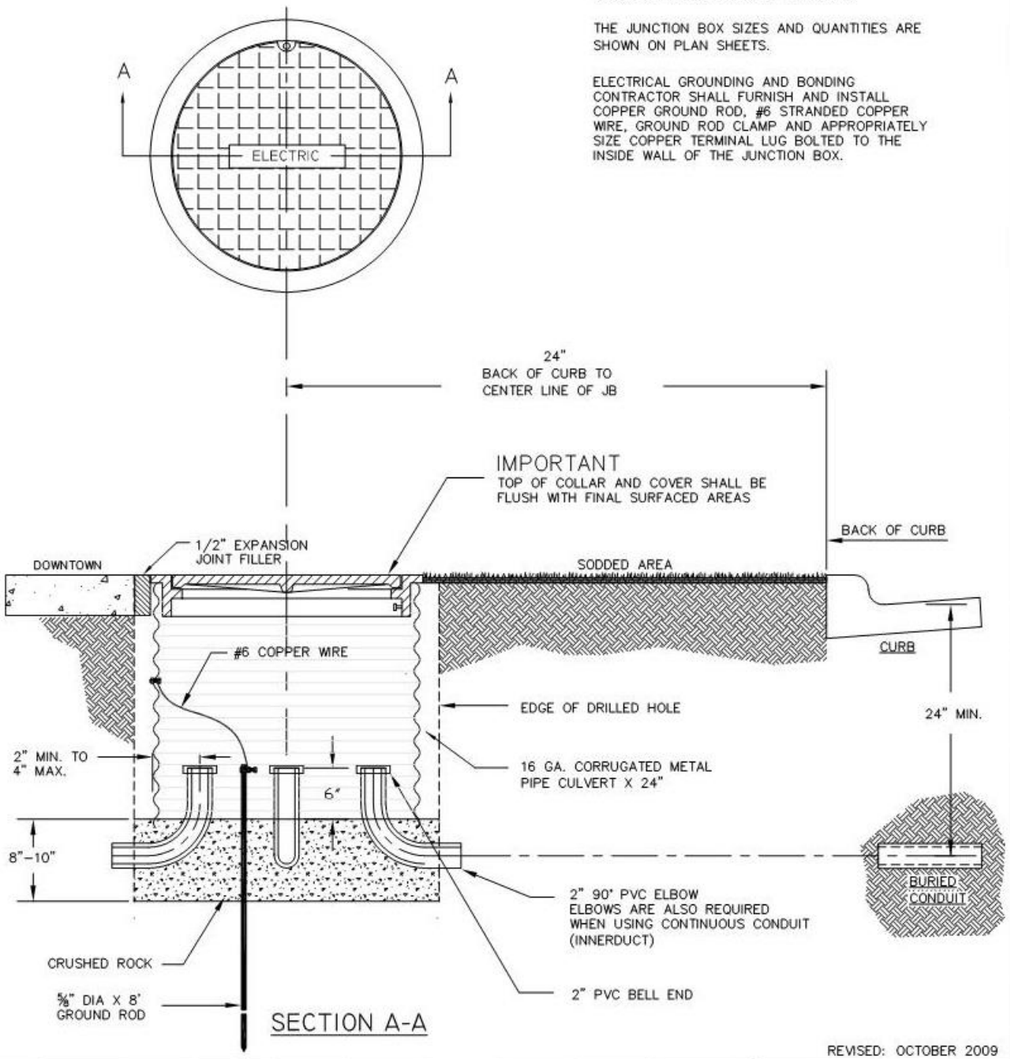

SECTION A-A

REVISED: OCTOBER 2009

SPECIFICATION REFERENCE		CITY OF SIOUX FALLS ENGINEERING DIVISION	PLATE NUMBER
635B		JUNCTION BOX - LIGHTING	635.70

TREE TRIMMING FOR STREET LIGHTS

NOTES:

TREE TRIMMING SHALL BE DONE IN ACCORDANCE WITH PROPER TREE TRIMMING PRACTICES. THE UNDERSIDE OF EACH BRANCH TO BE REMOVED SHALL HAVE A GROOVE SAWED THROUGH THE BARK (½"MIN. DEPTH) BEFORE ANY SAWING IS STARTED ON THE TOP SIDE OF THE BRANCH.

TREE TRIMMING SHALL BE APPLIED AROUND EACH LIGHT SOURCE INSTALLED.

THE TREE TRIMMING LIMITS AS SHOWN ON THE SHEET REPRESENTS THE MINIMUM AMOUNT OF TRIMMING REQUIRED. ADDITIONAL TREE TRIMMING REQUIRED SHALL BE AS DIRECTED BY THE CITY FORESTRY.

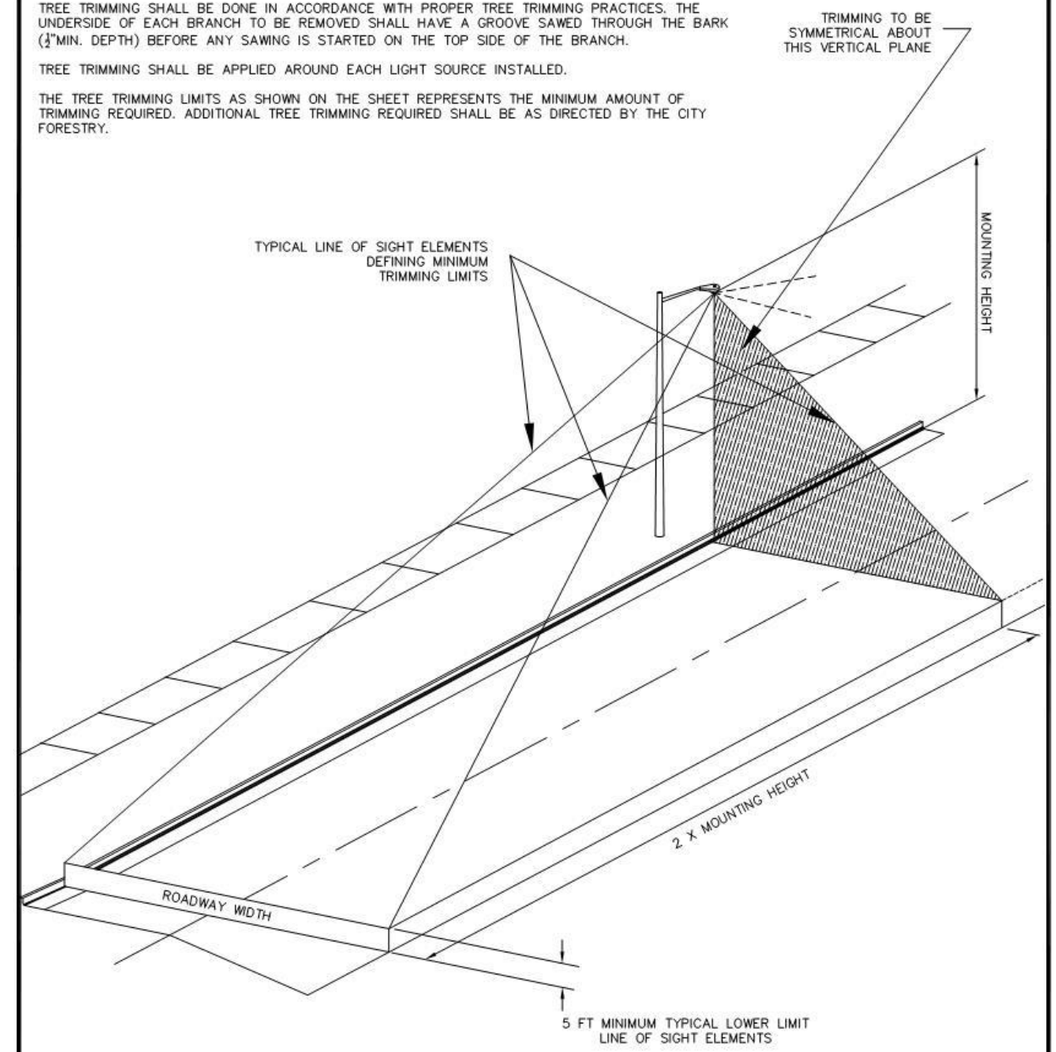

ISSUED: DECEMBER 2007

SPECIFICATION REFERENCE NO.		CITY OF SIOUX FALLS ENGINEERING DIVISION	PLATE NUMBER
635B		TREE TRIMMING FOR STREET LIGHTS	635.84

HDR