Section B: Grading Plans

FOR BIDDING PURPOSES ONLY

STATE OF SOUTH DAKOTA	PROJECT	SHEET NO.	TOTAL SHEETS
	P 3699(01)	B1	B88

INDEX OF SHEETS

B1:	General Layout W/Index
B2 – B9:	Estimate of Quantities With General Notes and Tables
B10 – B12:	Estimate Pipe Quantities
B13:	Table of Fence Quantities
B14:	Typical Sections
B15:	Horizontal Alignment and Control Data
B16:	Existing Topography Symbology Legend
B17 – B42:	Plan and Profile Sheet
B43 – B64:	Curb and Gutter Layout Sheets
B65 – B72::	Special Details
B73 – B99:	DOT Standard Plates

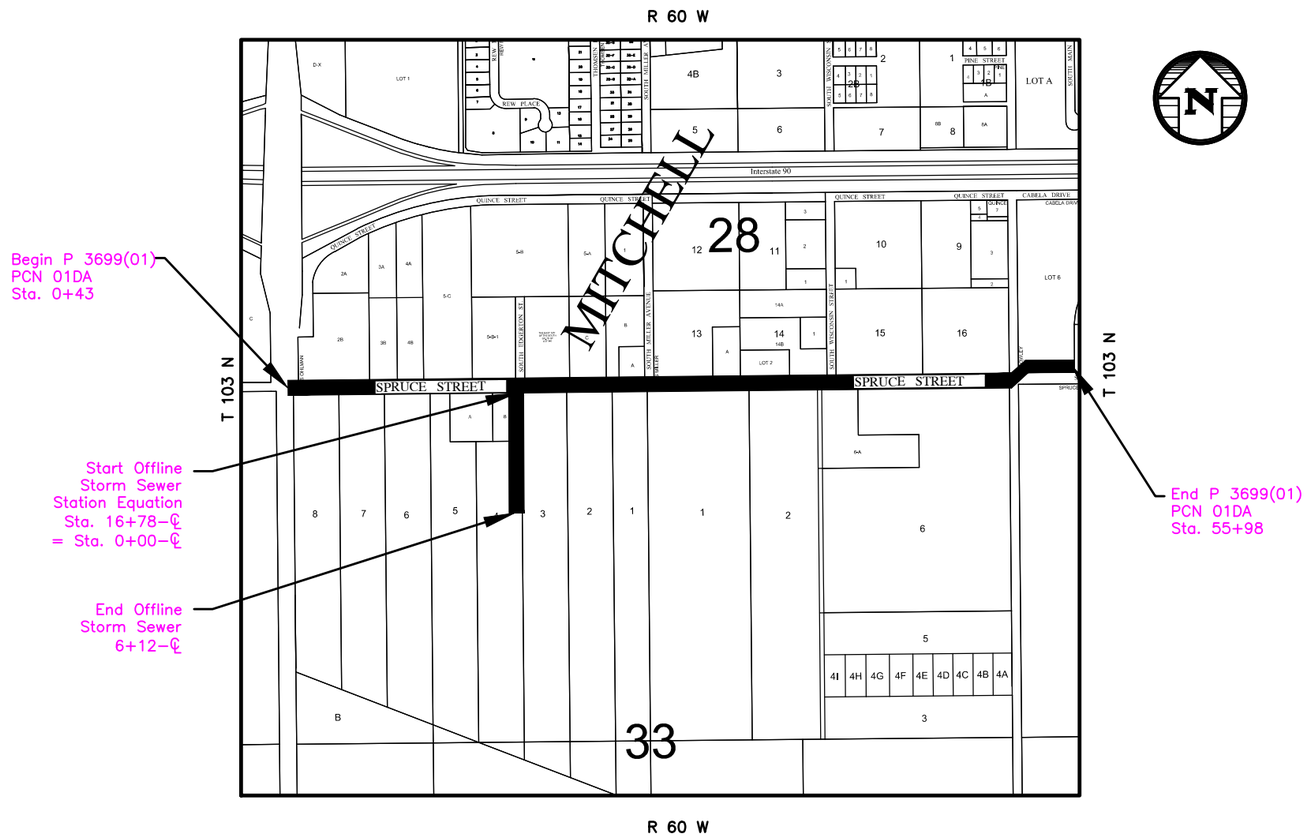

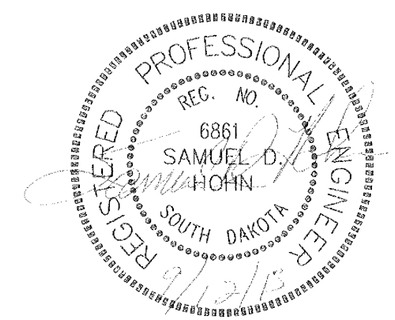

SPN & Associates
Engineers, Planners and Surveyors
2100 North Sanborn Blvd. - P.O. Box 398 Mitchell, South Dakota 57301
Phone: (605) 996-7761 Fax: (605) 996-0015 Project No. 08-13101

G:\Files\CAD\land projects R2\13405 Spruce Street\13405-Spruce Cover Street-Details.9 12.dwg, 2/18/2014 10:13:49 AM, DWG To PDF.pc3

Section B-Estimate of Quantities

BID ITEM NUMBER	DESCRIPTION	QUANTITY	UNIT
009E0010	Mobilization	Lump Sum	LS
100E0020	Clear and Grub Tree	106	Each
110E0300	Remove Concrete Curb and Gutter	58	Ft
110E0600	Remove Fence	3226	Ft
110E1050	Remove Asphalt Concrete Approach Pavement	593	SqYd
110E1130	Remove Concrete Driveway Pavement	22.8	SqYd
110E1140	Remove Concrete Sidewalk	44	SqYd
110E7802	Remove Fence for Reset	75	Ft
120E0010	Unclassified Excavation	43520	CuYd
120E2000	Undercutting	16296	CuYd
120E6000	Water for Dust Control	35	Mgal
120E6100	Water for Embankment	275	Mgal
250E0020	Incidental Work, Grading	Lump Sum	LS
270E0040	Salvage and Stockpile Asphalt Mix and Granular Base Material	14124	Ton
380E3020	6" PCC Driveway Pavement	22.8	SqYd
380E3520	6" PCC Approach Pavement	451.1	SqYd
380E3540	8" PCC Approach Pavement	473.4	SqYd
380E4010	6" PCC Fillet Section	89	SqYd
450E0122	18" RCP Class 2 , Furnish	3640	Ft
450E0130	18" RCP, Install	3640	Ft
450E0142	24" RCP Class 2 , Furnish	1190	Ft
450E0150	24" RCP, Install	1190	Ft
450E0162	30" RCP Class 2, Furnish	926	Ft
450E0170	30" RCP, Install	926	Ft
450E0182	36" RCP Class 2, Furnish	338	Ft
450E0190	36" RCP, Install	338	Ft
450E0192	42" RCP Class 2, Furnish	472	Ft
450E0200	42" RCP, Install	472	Ft
450E0416	24" RCP Bend, Furnish	1	Each
450E0417	24" RCP Bend, Install	1	Each
450E0432	42" RCP Bend, Furnish	1	Each
450E0433	42" RCP Bend, Install	1	Each
450E2008	18" RCP Flared End, Furnish	2	Each
450E2009	18" RCP Flared End, Install	2	Each
450E2016	24" RCP Flared End, Furnish	1	Each
450E2017	24" RCP Flared End, Install	1	Each
450E2032	42" RCP Flared End, Furnish	1	Each
450E2033	42" RCP Flared End, Install	1	Each
450E3052	48" RCP Arch Class 2, Furnish	348	Ft
450E3060	48" RCP Arch, Install	348	Ft
450E3332	48" RCP Arch Bend, Furnish	2	Each
450E3333	48" RCP Arch Bend, Install	2	Each
450E4520	48" RCP Arch Flared End, Furnish	1	Each
450E4521	48" RCP Arch Flared End, Install	1	Each
462E0100	Class M6 Concrete	165.6	CuYd

Section B-Estimate of Quantities (Continued)

BID ITEM NUMBER	DESCRIPTION	QUANTITY	UNIT
480E0100	Reinforcing Steel	27698	LB
600E0200	Type II Field Laboratory	1	Each
620E0020	Type 2 Right-of-Way Fence	1153	Ft
620E0160	Type 6S Right-of-Way Fence	1054	Ft
620E0510	Type 1 Temporary Fence	2763	Ft
620E1020	2 Post Panel	16	Each
620E1030	3 Post Panel	4	Each
620E2012	12' Tubular Gate	4	Each
620E2016	16' Tubular Gate	2	Each
620E4100	Reset Fence	75	Ft
650E0060	Type B66 Concrete Curb and Gutter	9370	Ft
650E4660	Type P6 Concrete Gutter	1274	Ft
651E0040	4" Concrete Sidewalk	24038	SqFt
651E0060	6" Concrete Sidewalk	2591	SqFt
651E0080	8" Concrete Sidewalk	4848	SqFt
651E7000	Type I Detectable Warnings	96	Sqft
670E1200	Type B Frame and Grate Assembly	34	Each
670E2200	Type C Frame and Grate Assembly	3	Each
670E5202	Special Frame and Grate	4	Each
670E5340	4' x 11' Precast Concrete Type S Drop Inlet Lid	11	Each
670E5342	4' x 6' Precast Concrete Type S Drop Inlet Lid	25	Each
671E6007	Type A7 Manhole Frame and Lid	2	Each
671E6008	Type A8 Manhole Frame and Lid	3	Each
720E1015	Bank and Channel Protection Gabions	10	CuYd
900E0010	Refurbish Single Mailbox	12	Each

GRADING OPERATIONS

A copy of the soils profile is available for review at the Mitchell Region and Mitchell Area offices.

Water for Embankment is estimated at the rate of 10 gallons of water per cubic yard of embankment minus waste. The estimated quantity of Water for Embankment is 275 MGal. Payment will be made at the contract unit price per MGal for "Water for Embankment".

The estimated cubic yards of excavation and/or embankment required to construct outlet ditches, ditch blocks, and approaches are included in the earthwork balance notes on the profile sheets.

Special ditch grades and other sections of the roadway different than the typical sections shall be constructed to the limits shown on the cross sections. If significant changes to the cross sections are necessary during construction, the Engineer shall contact the Designer for the proposed change.

Temporary fence and/or permanent fence shall be placed ahead of the grading operation unless otherwise directed by the Engineer.

Existing drain tile may be encountered during grading operation. Approximate locations of the drain tile are shown on plans. Exact locations are unknown. If drain tile is cut or broken during construction the contractor shall mark the location and contact Jeff Bathke, Davison County Director of Planning and Zoning, at (605) 995–8615. Davison County will be responsible for repairing or replacing the broken drain tile.

TYPE II FIELD LABORATORY

The lab shall be equipped with an internet connection such as DSL, cable modem, or other approved service. The internet connection shall be provided with a multi–port wireless router. The internet connection shall be a minimum speed of 512 Kb unless limited by job location and approved by the DOT. Prior to installing the wireless router the Contractor shall submit the wireless router's technical data to the Area Office to check for compatibility with the state's computer equipment. The internet connection is intended for state personnel usage only. The Contractor's personnel are prohibited from using the internet connection unless pre–approved by the Project Engineer.

The Contractor shall submit a copy of each monthly bill for calls charged to this phone at the end of each month. The Project Engineer will then audit the bills to ensure all calls are legitimate and then initiate a Construction Change Order (CCO) to reimburse the Contractor for the actual phone calls made, including local and long distance calls. Reimbursement will not be made for fees associated with the purchase, installation, disconnection, monthly line charges, and incidentals involved in the installation, maintenance, and disconnection of the phone (including attachments). These items shall be incidental to the contract unit price per each for "Type II Field Laboratory".

REGISTERED PROFESSIONAL ENGINEER
REG. NO. 8471
JEFFREY P. McCORMICK
SOUTH DAKOTA
4/2/14
#12705

G:\Files\CAD\land projects R2\13405 Spruce Street\13405 Spruce W&E Section B DMK.dwg, B 2, 4/3/2014 8:29:33 AM, nparpke

UTILITIES

The Contractor shall be aware that the existing utilities shown in the plans were surveyed prior to the design of this project and might have been relocated or replaced by a new utility facility prior to construction of this project, might be relocated or replaced by a new utility facility during the construction of this project, or might not require adjustment and may remain in its current location. The Contractor shall contact each utility owner and confirm the status of all existing and new utility facilities. The utility contact information is provided elsewhere in the plans or bidding documents.

Utilities that require relocation will be relocated prior to construction.

CLEARING

Before clearing activities begin, the Contractor shall contact the Engineer to determine the limits of clearing for the project. If the trees or shrubs that are supposed to remain within the limits of work are damaged or destroyed by the Contractor, the Contractor shall replace them with the same size and type at the Contractor's expense.

TABLE OF CLEAR AND GRUB TREE

Station	Offset (Ft)	L/R	Station	Offset (Ft)	L/R
5+33	25	R	40+38	30	R
11+47	30	R	40+48	24	R
11+57	31	R	40+48	27	R
12+18	28	R	40+69	25	R
13+76	32	L	40+81	30	R
14+21	31	R	40+82	31	R
14+50	31	R	41+39	29	R
15+31	27	R	41+47	23	R
15+88	29	R	41+47	25	R
17+67	29	R	43+03	24	R
17+82	29	R	43+07	31	L
23+33	31	R	43+19	24	R
23+40	31	R	43+19	25	R
23+61	29	R	43+23	27	R
23+79	29	R	43+27	32	R
23+81	28	R	43+35	26	R
27+80	24	R	43+47	24	R
28+06	29	R	43+50	31	R
28+36	29	R	43+52	24	R
31+74	30	R	43+52	25	R
31+78	27	R	43+55	29	R
31+94	28	R	43+70	31	R
32+00	27	R	43+70	32	R
32+03	31	R	43+71	31	R
34+80	30	L	43+78	24	R
34+80	35	L	43+88	31	R
35+12	34	L	44+03	24	R
35+21	35	L	44+14	24	R
35+34	34	L	44+21	26	R
38+47	32	R	44+21	30	R
38+65	30	R	44+23	32	R
39+08	30	R	44+31	30	R
39+20	26	R	44+32	25	R
39+36	31	R	44+35	23	R
39+63	29	R	44+50	23	R
39+63	33	R	44+57	24	R
39+75	29	R	44+59	28	R
39+91	31	R	44+70	24	R
40+15	31	R	44+73	24	R
40+30	30	R	44+75	28	R
40+37	33	R	44+83	22	R

TABLE OF CLEAR AND GRUB TREE (CONTINUED)

Station	Offset (Ft)	L/R	Station	Offset (Ft)	L/R
44+86	24	R	46+06	31	R
44+94	28	R	46+08	31	R
44+96	28	R	48+75	29	R
45+05	23	R	49+42	30	R
45+12	27	R	49+52	28	R
45+20	28	R	49+85	45	R
45+27	25	R	50+15	45	R
45+27	26	R	50+54	40	R
45+27	27	R	50+91	30	R
45+41	27	R	51+91	41	R
45+45	27	R	51+94	28	R
45+51	25	R	51+95	39	R
				Total	106

EXCAVATION

SHRINKAGE FACTOR: Backfill +15% Embankment +35%

TABLE OF EXCAVATION QUANTITIES BY BALANCES

Station to Station		Excavation (CuYd)	* Undercut (CuYd)	Total Excavation (CuYd)	**Waste (CuYd)
0+43	27+00	9338	8230	17568	5991
27+00	40+00	4559	3948	8507	2724
40+00	53+34	3735	3938	7673	881
Offline		384	180	564	357
	Totals	18016	16296	34312	9953

* The quantities for these items are in the Estimate of Quantities under their respective bid items.

** The quantities for these items are for information only.

TABLE OF UNCLASSIFIED EXCAVATION

Excavation	18016
Undercut	16296
Topsoil	1600
Salvaged Asphalt Mix and Granular Base Material (from cut sections)	7473
Salvaged Asphalt Mix and Granular Base Material (from off-alignment roadways or from obliterated roads, Sta. 26+23 to 27+05	135
Total	43520

STOCKPILING

The Contractor shall be responsible for providing stockpile areas for stockpiling materials for later use on this project. All costs related to securing areas for stockpiling shall be considered incidental to the project with no separate measurement or payment being made.

PROCEDURES FOR DETERMINING UNCLASSIFIED EXCAVATION QUANTITY

When plan quantities are used for payment, the Unclassified Excavation quantity shall be used for final payment. If final cross sections are taken in the field, add all of the items in the Table of Unclassified Excavation using the following procedures:

The Topsoil quantity in the Table of Unclassified Excavation is an estimate. When finaling a project, the total quantity of field measured Topsoil shall be used in place of the estimated Topsoil quantity. The quantity of Topsoil from the cuts will be paid for twice as Unclassified Excavation as it will be in both the Excavation and Topsoil quantities. This will be full compensation for Excavation which includes necessary undercutting to provide space for placement of topsoil.

The Excavation quantities from individual balances and the Table of Unclassified Excavation have been reduced by the volume of in-place surfacing that will be removed.

The quantity of Salvaged Asphalt Mix and Granular Base Material from cut sections will not be added to the Excavation quantity as it is already in the cuts on the final cross sections.

UNDERCUTTING

In all cut sections the earthen subgrade shall be undercut 2.0 feet below the earthen subgrade surface. The undercut material or other suitable material, as directed by the Engineer, shall then be replaced and compacted to the density specified for the section being constructed.

Shallow embankment sections, fills less than 2.0 feet in height measured at the finished subgrade shoulders, shall be undercut to ensure a minimum 2.0 foot height of earth embankment for the entire width of roadbed. The upper six inches of undercut material that consists of topsoil with a high humus content shall be used as topsoil, placed in the fill slopes outside the shoulders of the earthen subgrade, or placed in the lower portion (below four-foot depth) in fills which are greater than four feet in height. The remaining undercut soil and soil obtained from adjacent excavation (excluding the upper six inches) shall then be replaced and compacted to the density specified for the section being constructed.

G:\Files\CAD\land projects R2\13405 Spruce Street\13405-Spruce W&E Section B DMK.dwg, 2/18/2014 10:42:39 AM, DWG To PDF.pc3

UNDERCUTTING (CONTINUED)

The plan shown quantity will be the basis of payment. However, if there are additional areas of undercut other than what is shown in the plans, the Engineer shall direct removal of these areas and the additional areas will be measured according to the Engineer.

A disk designed and constructed for construction purposes shall be in use as per Section 120.3, Standard Specifications.

TABLE OF UNDERCUTTING

Station to Station		Quantity (CuYd)
0+43	27+00	8230
27+00	40+00	3948
40+00	53+34	3938
	Total	16116

TABLE OF UNDERCUTTING (Off Alignment Roadway)

Station to Station		Quantity (CuYd)
26+30	26+84	120
39+60	40+01	60
	Total	180

SALVAGE AND STOCKPILE ASPHALT MIX AND GRANULAR BASE MATERIAL

An estimated 14,124 tons (7,473 Cubic Yards) of asphalt mix and granular base material shall be salvaged from the entire length of the existing roadway and stockpiled at a site furnished by the Contractor and satisfactory to the Engineer.

The quantity of salvage asphalt mix and granular base material may vary from the plans. No adjustment will be made to the contract unit price for variations of the quantity of "Salvage and Stockpile Asphalt Mix and Granular Base Material."

It is estimated that there are 137 cubic yards of salvageable material per station. This rate was used to compute the unclassified excavation quantities. The rate of salvageable material is based on a 24–foot width.

SALVAGE AND STOCKPILE ASPHALT MIX AND GRANULAR BASE MATERIAL

Station	Distance from Centerline (Feet) Lt	Rt	Thickness of Asphalt Mix Material (inches)	Thickness of Granular Material (inches)
1+00		10	5.5	15.5
8+00		10	5.75	14.75
11+50		10	5	12
18+00		10	5.25	17.75
24+50		10	5	14.5
30+00		10	5.25	14.25
37+00		8	4	15
42+00		10	4.5	14
48+00		8	5	12.75
		Average Thickness	5	14.50

TABLE OF SALVAGE AND STOCKPILE ASPHALT MIX AND GRANULAR BASE MATERIAL

Station to Station		Location	Quantity (CuYd)
0+43	27+50	Main line	3865
26+21.5	27+06	Miller Street	86
27+50	32+00	Main line	617
32+00	50+00	Main line	2466
50+00	52+55	Main line	349
52+55	52+85	Main line	41
52+85	53+35	Rowley Street	49
		Total	7473

TABLE OF ASPHALT CONCRETE APPROACH PAVEMENT REMOVAL

Station to Station		L/R	Quantity (SqYd)
2+09	2+67	L	98.5
6+02	6+60	L	138
18+25	18+60	L	60.5
36+85	38+15	L	236
38+65	39+00	L	60
		Total	593

TABLE OF CONCRETE DRIVEWAY PAVEMENT REMOVAL

Station	Offset	Quantity (SqYd)
4+08	23.5' to 33.0' R	22.8
	Total	22.80

TABLE OF CONCRETE SIDEWALK REMOVAL

Station to Station		L/R	Quantity (SqYd)
53+23	53+73	L	44
		Total	44

TABLE OF CONCRETE CURB AND GUTTER REMOVAL

Station to Station		L/R	Quantity (SqYd)
53+20	53+56	L	58
		Total	58

INCIDENTAL WORK, GRADING

Station	L/R	Remarks
1+70	R	Remove 40 Ft Pipe Culvert
2+19	L	Remove 40 Ft Pipe Culvert
4+94	R	Remove 45 Ft Pipe Culvert
6+05	L	Remove 52 Ft Pipe Culvert
6+57	L	Plug Pipe Culvert End
8+22	L	Remove 60 Ft Pipe Culvert
8+75	L	Remove Steel Post
9+96	R	Remove 38 Ft Pipe Culvert
13+64	R	Remove 32 Ft Pipe Culbert
13+95	R	Remove/Salvage Newspaper Box
14+18	R	Remove 38 Ft Pipe Culvert
15+97	L/R	Remove 42 Ft Pipe Culvert
16+66	L	Remove 74 Ft Pipe Culvert
18+29	L	Remove 30 Ft Pipe Culvert
19+86	L	Remove 40 Ft Pipe Culvert
22+93	L	Remove/Salvage Newspaper Box
24+13 to 24.42	L	Remove Landscape Curb and Rock
24+42	L	Remove/Salvage Newspaper Box
25+19 to 25+28	L	Remove Landscape Curb and Rock
25+46 to 25+56	L	Remove Landscape Curb and Rock
27+53	R	Remove/Salvage Newspaper Box
28+60	L	Remove 40 Ft Pipe Culvert
29+28	L	Remove/Salvage Newspaper Box
30+43	L	Remove 18 Ft Pipe Culvert
32+32	L	Remove 82 Ft Pipe Culvert
33+32	L	Remove 42 Ft Pipe Culvert
36+61	L	Remove 50 Ft Pipe Culvert
36+80	L	Remove 34 Ft Pipe Culvert
38+64	L	Remove 34 Ft Pipe Culvert
39+62	L	Remove 50 Ft Pipe Culvert
40+70	L	Remove/Salvage Newspaper Box
43+76	L	Remove 28 Ft Pipe Culvert
43+79	R	Remove/Salvage Newspaper Box
44+45	L	Remove 30 Ft Pipe Culvert
52+71	L/R	Remove 46 Ft Pipe Culvert

REGISTERED PROFESSIONAL ENGINEER
REG. NO. 6861
SAMUEL D. HOHN
SOUTH DAKOTA

G:\Files\CAD\land projects R2\13405 Spruce Street\13405-Spruce W&E Section B DMK.dwg, 2/18/2014 10:42:44 AM, DWG To PDF.pc3

CONCRETE PIPE CONNECTIONS

Pipe connections to existing pipes, manholes, junction boxes, and drop inlets shall be done by breaking a hole into the existing structure and inserting the pipe. A concrete collar shall then be poured around the pipe in the area of the connection.

When it is not possible to use a normal pipe joint (male–female ends), connections to existing pipe shall be made by placing a 2' wide by 6" thick
M6 concrete collar around the outside of the connection. The concrete collar shall be reinforced with 6 x 6 W2.9 x W2.9 wire mesh.

All costs for constructing the concrete collars including materials and labor shall be incidental to the contract unit price per foot for the corresponding pipe bid item.

STORM SEWER

Reinforced concrete pipe may be either bell and spigot or tongue and groove. The pipe sections shall be adjoined such that the ends are fully entered and the inner surfaces are reasonably flush and even.

Lift holes in the reinforced concrete pipe shall be plugged with grout.

Watertight joints are required for reinforced concrete pipe, drop inlets, manholes, and junction boxes where storm sewers run parallel to and within 10 feet horizontally from existing or proposed water mains. Watertight joints are required where reinforced concrete pipes, drop inlets, manholes, or junction boxes cross water mains and are separated a distance of 18 inches or less, above or below, the water main.

If watertight joints are required, then the watertight joints shall extend for a distance of 10 feet beyond the water main. This measurement shall be from the sealed concrete joint to the outermost surface of the water main.
Watertight joint seals shall conform to the following requirements:

1. Reinforced Concrete Pipe (Circular): Gasketed pipe shall conform to the requirements of ASTM C443. Non–gasketed concrete pipe shall be sealed with a mastic joint seal conforming to the requirements of ASTM C990 and encased with a minimum 2' wide by 6" thick M6 concrete collar reinforced with 6 x 6 W2.9 x W2.9 wire mesh.
2. Reinforced Concrete Pipe (Arch): Joints shall be sealed with a waterstop seal meeting the requirements of ASTM C990. Waterstop seals shall consist of hydrophilic compounds such as Waterstop–RX or ConSeal CS–231.
3. Drop Inlets, Manholes, and Junction Boxes: Joints shall be sealed with a waterstop seal or seal wrap meeting the requirements of ASTM C990 or encased with a minimum 2' wide by 6" thick M6 concrete collar reinforced with 6 x 6 W2.9 x W2.9 wire mesh. Waterstop seal shall contain hydrophilic compounds such as Waterstop–RX or ConSeal CS–231. Seal wrap shall be a self adhesive external joint wrap such as ConWrap CS–217 or Mar Mac Seal Wrap.

Gaskets and seals (mastic, waterstop, and seal wraps) shall be installed in accordance with the manufacturer's recommendations.

The contractor should be prepared to dewater the trench during installation of the storm sewer. Proper installation methods possibly including the use of trench boxes should be utilized.

The cost for furnishing and installing all gaskets, mastic joint seal, waterstop seal, seal wrap, concrete collars, and for plugging the lift holes shall be incidental to the contract unit price per foot for the corresponding pipe bid item.

DROP INLETS

Where drop inlets are constructed within areas of curb and gutter, the Contractor shall construct weep holes of at least three inches in diameter in the drop inlet walls. The weep holes shall be constructed at the same elevation as the adjacent top of the earthen subgrade and shall be maintained clean and open at all times until the permanent surfacing is placed. The drop inlets shall be covered throughout construction operations as necessary with an Engineer–approved cover to provide safe travel for motorists and to prevent materials from entering the storm sewer system. After the permanent surfacing has been placed, the Contractor shall seal the weep holes with grout and remove all debris from the drop inlet.
All costs involved with the coverings, weep holes, and removing debris from the drop inlets shall be incidental to the contract unit price per cubic yard for "Class M6 Concrete". Payment will be made at the contract unit prices per cubic yard for "Class M6 Concrete" and per pound for "Reinforcing Steel" and shall be full compensation for all labor, equipment and materials necessary for installation of each drop inlet. Frames and grates/lids will be measured and paid for on a per each basis complete in place.

TABLE OF DROP INLETS AND QUANTITIES

Station	L/R	Drop Inlet Size	Drop Inlet Type	Class M6 Concrete (CuYd)	Reinforced Steel (Lb)	Frame and Grae/Lid Type
0+83	R	4'X6'	S	1.57	354	S
0+84.4	L	4'X6'	S	1.52	348	S
1+72	R	2'X3'	B	0.75	91	B
1+72	L	2'X3'	B	0.8	90	B
4+85	L	4'X6'	S	2.15	405	S
4+85	R	2'X3'	B	1.05	105	B
5+75	R	2'X3'	B	1.05	122	B
5+75	L	4'X6'	S	1.86	371	S
6+65	L	4'X6'	S	1.45	324	S
6+65	R	2'X3'	B	1.17	133	B
8+00	R	2'X3'	B	1.28	144	B
8+00	L	4'X11'	S	3.1	570	S
8+80	R	2'X3'	B	1.34	149	B
8+80	L	4'X11'	S	3.1	570	S
9+62	L	4'X11'	S	3.21	583	S
9+92	L	4'X11'	S	3.12	578	S
9+92	R	4'X3'	B	1.95	227	B
10+18	L	4'X6'	S	1.86	371	S
10+35	L	4'X11'	S	3.05	570	S
10+35	R	4'X3'	B	1.74	210	B
10+90	R	4'X3'	B	1.56	194	B
10+90	L	4'X11'	S	2.95	553	S
11+65	R	4'X3'	B	1.59	202	B
11+65	L	4'X11'	S	3.1	570	S
12+50	R	4'X3'	B	1.77	223	B
12+50	L	4'X11'	S	3.1	570	S
14+65	L	4'X6'	S	1.95	371	S
14+65	R	4'X3'	B	2.15	258	B

TABLE OF DROP INLETS AND QUANTITIES (CONTINUED)

Station	L/R	Drop Inlet Size	Drop Inlet Type	Class M6 Concrete (CuYd)	Reinforced Steel (Lb)	Frame and Grae/Lid Type
16+00	L	4'X6'	S	2.06	394	S
16+00	R	4'X6'	S	2.71	494	S
17+40	R	2'X3'	B	1.13	134	B
17+40	L	4'X6'	S	1.72	371	S
17+40	L	3'X4'	C	1.2	130	C
19+00	R	2'X3'	B	1.11	128	B
19+00	L	4'X11'	S	3.1	570	S
20+40	R	2'X3'	B	1.2	136	B
20+40	L	2'X3'	B	0.76	87	B
23+00	L	4'X6'	S	1.95	371	S
23+00	R	4'X6'	S	2.28	415	S
24+95	L	2'X3'	B	0.93	102	Special
24+95	R	2'X3'	B	0.95	109	B
30+00	R	2'X3'	B	1.14	130	B
30+00	L	2'X3'	B	0.87	97	B
32+00	R	2'X3'	B	0.95	113	B
32+00	L	4'X6'	S	2.14	393	S
33+35	L	4'X6'	S	2.47	431	S
33+35	R	2'X3'	B	0.72	93	Special
33+92	L	4'X6'	S	1.95	372	S
33+92	L	4'X6	S	3.12	510	S
36+50	L	2'X3'	B	0.76	87	B
36+50	R	4'X3'	B	1.54	188	B
37+50	R	4'X3'	B	1.39	178	B
37+50	L	2'X3'	B	0.7	81	Special
38+90	L	2'X3'	B	0.76	87	B
39+25	L	4'X6'	S	1.95	371	S
39+25	R	4'X6'	S	2.15	394	S
39+58	L	3'X4'	C	1.39	147	C
40+01	L	3'X4'	C	1.49	161	C
41+15	L	2'X3'	B	0.76	87	Special
41+65	R	4'X3'	B	2.26	260	B
41+65	L	4'X6'	S	1.9	371	S
43+25	R	4'X3'	B	2.15	249	B
43+25	L	4'X11'	S	3.1	570	S
45+00	R	4'X3'	B	2.32	270	B
45+00	L	4'X11'	S	3.1	570	S
46+25	R	4'X3'	B	1.92	237	B
46+25	L	4'X6'	S	2.26	406	S
47+25	R	4'X3'	B	1.69	216	B
47+25	L	4'X6'	S	1.94	370	S

REGISTERED PROFESSIONAL ENGINEER
REG. NO. 6861
SAMUEL D. HOHN
SOUTH DAKOTA

G:\Files\CAD\land projects R2\13405 Spruce Street\13405-Spruce W&E Section B DMK.dwg, 2/18/2014 10:42:49 AM, DWG To PDF.pc3

TABLE OF DROP INLETS AND QUANTITIES (CONTINUED)

Station	L/R	Drop Inlet Size	Drop Inlet Type	Class M6 Concrete (CuYd)	Reinforced Steel (Lb)	Frame and Grae/Lid Type
48+20	R	4'X3'	B	1.56	203	B
48+20	L	4'X6'	S	2.43	436	S
49+15	R	4'X3'	B	1.65	217	B
49+15	L	4'X6'	S	1.95	371	S
51+25	L	2'X3'	B	0.86	97	B
51+25	R	4'X3'	B	1.72	229	B
52+50	L	4'X6'	S	2.08	407	S
52+50	R	4'X6'	S	2.21	441	S
			Total	139.7	22537	

Total Type B Frame and Grate Assembly	34
Total Type C Frame and Grate	3
Total Type S Manhole Frame and Lid	36
Total Special Frame and Grate	4

JUNCTION BOXES

Measurement and payment for junction boxes will be made at the contract unit price per each for the size specified. Payment shall be full compensation for all labor equipment and materials necessary to furnish and install each junction box. Frames and lids will be paid for at the contract unit price bid for the various types and sizes specified. For information only the estimated quantities of materials for the junction boxes are shown in the table below.

TABLE OF JUNCTION BOXES AND QUANTITIES

Station	L/R	Size L'xW'xH'	Frame and Lid (Type)	Class M6 Concrete (CuYd)	Reinforcing Steel (Lb)
16+78	R	5'x5'x6'	A8	4.90	1020
27+25	R	5'x5'x4'	A8	4.51	846
40+00	R	5'x5'x5'	A8	4.62	908
52+50	R	7'x7'x4'	A7	7.08	1541
OFFLINE STORM SEWER TO KIBEE DITCH					
4+00	C	5'x5'x4'	A7	4.82	846
			Total	25.93	5161

Total Class M6 Concrete	25.93
Total Reinforcing Steel	5161.00
Total Type A7 Manhole Frame and Lid	2
Total Type A8 Manhole Frame and Lid	3

GUTTER SLOPE FOR TYPE B CONCRETE CURB AND GUTTER AND TYPE P CONCRETE GUTTER

The Contractor shall be aware of the new standard gutter slope required for this project. The new standard gutter slope shall be 5% as detailed on standard plates 650.01 (Type B Concrete Curb and Gutter) and 650.30 (Type P Concrete Gutter).

TABLE OF TYPE P6 CONCRETE GUTTER

Station to Station		L/R	Quantity (Ft)
1+80	2+10	R	30
2+21	2+57	L	36
3+55	3+81	R	26
3+97	4+19	R	22
4+24	4+64	L	40
4+96	5+20	R	24
6+12	6+52	L	40
8+16	8+66	L	50
10+00	10+24	R	24
13+66	13+90	R	24
14+19	14+51	R	32
16+85	17+25	L	40
18+28	18+58	L	30
19+86	20+26	L	40
22+63	22+83	L	20
23+55	23+85	L	30
24+66	25+00	L	34
25+16	25+40	R	24
26+44	26+80	R	36
27+55	27+79	R	24
28+67	28+91	L	24
28+96	29+36	R	40
29+50	29+74	L	24
30+42	30+62	L	20
32+25	32+65	L	40
33+16	33+52	R	36
33+45	33+81	L	36
34+28	34+68	L	40
34+72	35+02	R	30
36+13	36+37	L	24
36+78	37+08	R	30
36+73	37+13	L	40
37+65	38+05	L	40
38+60	39+00	L	40
40+77	41+01	L	24
41+35	41+55	L	20
43+77	44+07	L	30
43+82	44+02	L	20
44+46	44+76	L	30
44+51	44+71	L	20
49+30	49+70	L	40
		Total	1274

G:\Files\CAD\land projects R2\13405 Spruce Street\13405-Spruce W&E Section B DMK.dwg, 4/2/2014 11:21:42 AM, DWG To PDF.pc3

TABLE OF TYPE B66 CONCRETE CURB AND GUTTER

Station to Station		L/R	Straight Quantity (Ft)	Curved Quantity (Ft)
00+44.80	00+44.70	L	6.0	
00+43.50	00+43.50	R	6.0	
00+43.50	00+80.17	R		56.2
00+44.70	00+81.40	L		57.8
00+80.17	01+80.00	R	99.8	
00+81.40	02+21.00	L	139.6	
02+10.00	03+55.00	R	145.0	
03+81.00	03+91.00	R	10.0	
02+57.00	04+24.00	L	167.0	
04+19.00	04+96.00	R	77.0	
04+64.00	06+12.00	L	148.0	
05+20.00	10+00.00	R	480.0	
06+52.00	08+16.00	L	164.0	
08+66.00	16+85.00	L	819.0	
10+24.00	13+66.00	R	342.0	
13+90.00	14+19.00	R	29.0	
14+51.00	25+16.00	R	1065.0	
17+25.00	18+28.00	L	103.0	
18+58.00	19+96.00	L	138.0	
20+26.00	22+63.00	L	237.0	
22+83.00	23+55.00	L	72.0	
23+85.00	24+66.00	L	81.0	
25+00.00	26+21.00	L	121.0	
25+40.00	26+44.00	R	104.0	
26+80.00	27+55.00	R	75.0	
26+44.40	26+44.40	L	6.0	
26+74.30	26+74.40	L	6.0	
26+80.00	27+55.00	R	75.0	
26+96.00	28+67.00	L	171.0	
27+79.00	28+96.00	R	117.0	
29+36.00	33+16.00	R	380.0	
28+91.00	29+50.00	L	59.0	
29+74.00	30+42.00	L	68.0	
30+62.00	32+25.00	L	163.0	
32+65.00	33+45.00	L	80.0	
33+52.00	34+72.00	R	120.0	
33+81.00	34+28.00	L	47.0	
34+68.00	36+13.00	L	145.0	
35+02.00	36+78.00	R	176.0	
36+37.00	36+73.00	L	36.0	
37+08.00	52+51.00	R	1543.0	
37+13.00	37+65.00	L	52.0	
38+05.00	38+60.00	L	55.0	
39+00.00	39+44.00	L	44.0	
39+67.00	39+67.00	L	6.0	
39+95.60	39+95.50	L	6.0	
40+18.00	40+77.00	L	59.0	
41+01.00	41+35.00	L	34.0	

TABLE OF TYPE B66 CONCRETE CURB AND GUTTER (CONTINUED)

Station to Station		L/R	Straight Quantity (Ft)	Curved Quantity (Ft)
41+55.00	43+77.00	L	222.0	
44+07.00	44+46.00	L	39.0	
44+76.00	49+30.00	L	454.0	
49+70.00	52+52.60	L	282.6	
52+52.60	52+85.30	L		50.9
52+51.40	52+84.10	R		51.6
52+85.00	52+85.00	L	8.0	
52+84.00	52+84.00	R	6.0	
53+22.00	53+23.00	L	10.0	
53+23.00	53+54.00	L		55.1
		Total	9098.0	271.6
			Total for both	9369.6

6" PCC FILLET SECTIONS

Payment for "6" PCC Fillet Section" shall be based on plans quantity. If additions or reductions to the area of PCC fillet sections are ordered by the Engineer, payment will be made in accordance with the contract unit price per square yard for "6" PCC Fillet Section".

TABLE OF 6" PCC FILLET SECTION

Station to Station		L/R	Radius (Ft)	Quantity (SqYd)
26+21.67	26+44.41	L	22.67	22.2
26+74.33	26+96	L	22.67	22.2
39+44.38	29+67.04	L	22.67	22.2
39+95.48	40+18.16	L	22.67	22.2
			Total	88.80

TYPE 1 DETECTABLE WARNINGS

Detectable warnings shall be in compliance with the Americans with Disability Act regulations.

The detectable warnings shall be installed according to the manufacturer's installation instructions.

A concrete thickness equal to the adjacent concrete sidewalk thickness and two inches of granular cushion material shall be placed below the Type 1
Detectable Warnings, When concrete is placed below the detectable warnings then the concrete thickness shall be transitioned at the rate of 1" per foot to match the adjacent concrete sidewalk thickness.

The detectable warnings shall be a brick red color for application in concrete curb ramps. Cast iron plates may be a natural patina (weathered steel).

When Type 1 Detectable Warnings are specified, the Contractor shall furnish and install only one of the products listed in the Type 1 Detectable Warnings table.

Type 1 Detectable Warnings

Product	Manufacturer
Detectable Warning Plate Cast Iron Plate	Neenah Foundry Company Neenah, WI 800-558-5075 http://www.neenahfoundry.com/
Detectable Warning Plate Cast Iron Plate	Deeter Foundry Lincoln, NE 800-234-7466 http://www.deeter.com/
Detectable Warning Plate Cast Iron Plate	East Jordan Iron Works, Inc. 301 Spring Street East Jordan, MI 49727 800-626-4653 http://www.ejiw.com

TABLE OF TYPE I DETECTABLE WARNINGS

Station	L/R	Quantity (SqFt)
00+58.00	L	16
26+34.94	L	12
26+83.85	L	12
39+57.64	L	12
40+04.94	L	12
52+81.51	L	16
53+32.64	L	16
	Total	96

G:\Files\CAD\land projects R2\13405 Spruce Street\13405-Spruce W&E Section B DMK.dwg, 2/18/2014 10:42:59 AM, DWG To PDF.pc3

GRAVEL CUSHION

Gravel cushion shall be placed under sidewalks, PCC approach pavements and PCC driveway pavements as shown in the plans,. The cushion shall conform to all the requirements of the Standard Specifications for Gravel Cushion.

Gravel cushion shall be considered incidental to the contract unit price per square foot for Concrete Sidewalk and to the contract unit price per square yard for Concrete Approach Pavement and Concrete Driveway Pavement.

TABLE OF 8" PCC APPROACH PAVEMENT

Station	L/R	Opening (Ft)	Type	Quantity (SqYd)
2+39.00	L	36	A	26.7
4+44.00	L	40	A	28.9
6+32.00	L	40	A	28.9
8+41.00	L	50	A	34.4
17+05.00	L	40	A	28.9
18+43.00	L	30	A	23.3
20+06.00	L	40	A	28.9
23+70.00	L	30	A	23.3
24+83.00	L	34	A	26.7
32+45.00	L	40	A	28.9
33+63.00	L	36	A	26.7
34+48.00	L	40	A	28.9
36+93.00	R	30	A	23.3
36+93.00	L	40	A	28.9
37+85.00	L	40	A	28.9
38+80.00	L	40	A	28.9
49+50.00	L	40	A	28.9
			Total	473.4

TABLE OF 6" PCC APPROACH PAVEMENT

Station	L/R	Opening (Ft)	Type	Quantity (SqYd)
1+95.00	R	30	A	23.3
3+68.00	R	26	A	21.1
4+08.00	R	22	A	18.9
5+08.00	R	24	A	20.0
10+12.00	R	24	A	20.0
13+78.00	R	24	A	20.0
14+29.00	R	32	A	24.4
22+73.00	L	20	A	17.8
25+28.00	R	24	A	20.0
26+62.00	R	36	A	26.7
27+67.00	R	24	A	20.0
28+79.00	L	24	A	20.0
29+16.00	R	36	A	26.7
29+62.00	L	24	A	20.0
30+52.00	L	20	A	17.8
33+34.00	R	36	A	26.7
34+87.00	R	30	A	23.3
40+89.00	L	24	A	20.0
41+45.00	L	20	A	17.8
43+92.00	L	30	A	23.3
44+61.00	L	30	A	23.3
			Total	451.1

CONCRETE DRIVEWAY PAVEMENT

The concrete for "Concrete Driveway Pavement" shall be Class M6.

TABLE OF 6" CONCRETE DRIVEWAY PAVEMENT

Station	Offset	Quantity (SqYd)
4+08	23.5' to 33.0' R	22.8
	Total	22.80

CONCRETE SIDEWALK

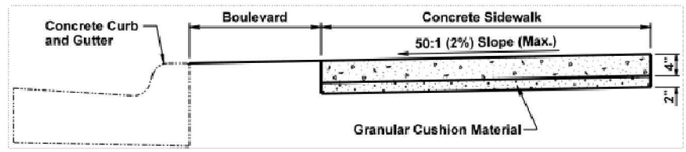

The concrete sidewalk shall be constructed in accordance with Section 651 of the Standard Specifications. The sidewalk details shown above are typical of this project; however, the sidewalk widths, boulevard widths, and other special details are shown on the Curb and Gutter Layout sheets.

TABLE OF 4" CONCRETE SIDEWALK

Station to Station		L/R	Quantity (SqFt)
00+74.00	02+15.00	L	846.0
02+63.00	04+08.00	L	870.0
04+70.00	06+06.00	L	816.0
06+85.00	08+10.00	L	750.0
08+72.00	16+79.00	L	4842.0
17+31.00	18+22.00	L	546.0
18+64.00	19+80.00	L	696.0
20+32.00	22+57.00	L	1350.0
22+89.00	23+49.00	L	360.0
23+91.00	24+60.00	L	414.0
25+06.00	26+28.00	L	732.0
26+90.80	28+61.00	L	1021.2
28+97.00	29+44.00	L	282.0
29+80.00	30+36.00	L	336.0
30+68.00	32+19.00	L	906.0
32+71.00	33+39.00	L	408.0
33+87.00	34+22.00	L	210.0
34+74.00	36+07.00	L	798.0
36+43.00	36+67.00	L	144.0
37+19.00	37+59.00	L	240.0
38+11.00	38+54.00	L	258.0
39+06.00	39+50.70	L	268.2
40+12.00	40+71.00	L	354.0
41+07.00	41+29.00	L	132.0
41+61.00	43+71.00	L	1260.0
44+13.00	44+40.00	L	162.0
44+82.00	49+24.00	L	2652.0
49+76.00	53+32.60		2139.6
53+32.60	53+73.50	L	245.4
		Total	24038.4

TABLE OF 6" CONCRETE SIDEWALK

Station to Station		L/R	Quantity (SqFt)
00+49.00	00+74.00	L	150.0
22+57.00	22+89.00	L	192.0
26+28.00	26+41.40	L	80.4
26+77.40	26+90.80	L	80.4
28+61.00	28+97.00	L	216.0
29+44.00	29+80.00	L	216.0
30+36.00	30+68.00	L	192.0
36+07.00	36+43.00	L	216.0
39+50.70	39+64.10	L	80.4
39+98.50	40+12.00	L	81.0
40+71.00	41+07.00	L	216.0
41+29.00	41+61.00	L	192.0
43+71.00	44+13.00	L	252.0
44+40.00	44+82.00	L	252.0
52+63.50	52+82.70	L	115.2
53+22.70	53+32.60	L	59.4
		Total	2590.8

Six inch sidewalk shall be placed adjacent to six inch approach pavement and at all curb ramp locations.

TABLE OF 8" CONCRETE SIDEWALK

Station to Station		L/R	Quantity (SqFt)
02+15.00	02+63.00	L	288.0
04+18.00	04+70.00	L	312.0
06+06.00	06+58.00	L	312.0
08+10.00	08+72.00	L	372.0
16+79.00	17+31.00	L	312.0
18+22.00	18+64.00	L	252.0
19+80.00	20+32.00	L	312.0
23+49.00	23+91.00	L	252.0
24+60.00	25+06.00	L	276.0
32+19.00	32+71.00	L	312.0
33+39.00	33+87.00	L	288.0
34+22.00	34+74.00	L	312.0
36+67.00	37+19.00	L	312.0
37+59.00	38+11.00	L	312.0
38+54.00	39+06.00	L	312.0
49+24.00	49+76.00	L	312.0
		Total	4848.0

Eight inch sidewalk shall be placed adjacent to all eight inch approach pavement.

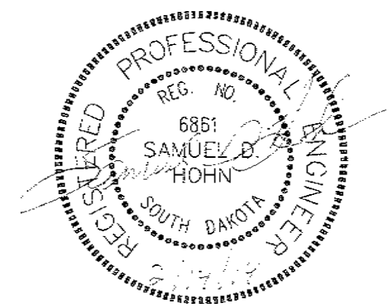

G:\Files\CAD\land projects R2\13405 Spruce Street\13405-Spruce W&E Section B DMK.dwg, 2/18/2014 10:43:04 AM, DWG To PDF.pc3

MAILBOXES

The Contractor shall reset the existing mailboxes on new posts with the necessary support hardware for single or double mailbox assemblies. The local Postmaster will determine the recommended mounting height of the mailboxes throughout the project. The Contractor shall coordinate with the Engineer on the proper postal representative to contact.

All costs for removing existing mailboxes, providing temporary mailboxes, and resetting mailboxes with new posts and necessary support hardware shall be incidental to the contract unit price per each for "Refurbish Single Mailbox". The Contractor shall work with the local postal representative to determine the location to be used for temporary mailboxes.

TABLE OF REFURBISH MAILBOX

Station	L/R	Single (Each)
4+27	R	1
13+95	R	1
18+69	L	1
22+93	L	1
24+42	L	1
27+53	R	1
29+28	L	1
32+28	L	1
35+13	R	1
40+70	L	1
41+01	R	1
43+79	R	1
	Total	12

NEWSPAPER RECEPTACLES

All newspaper receptacles shall be removed by the Contractor and salvaged for the property owner. This work shall be considered incidental work.

BRACE PANELS FOR R.O.W. FENCE

The E–Z Brace or an approved equal may be utilized as an alternate horizontal brace in the brace panels if approved by the Engineer. The E–Z Brace shall be attached to each wood post utilizing two 5/16" x 3" lag screws. Holes of appropriate diameter, based on wood post condition, shall be drilled before placement of lag screws. The following are contacts regarding the E–Z Brace:

Roger Papka
E–Z Brace
1160 Karen St.
Watertown, SD 57201
605–881–6142

Dennis Mack
E–Z Brace
108 18th St. NE
Watertown, SD 57201
605–881–4990

G:\Files\CAD\land projects R2\13405 Spruce Street\13405-Spruce W&E Section B DMK.dwg, 2/18/2014 10:43:09 AM, DWG To PDF.pc3

FOR BIDDING PURPOSES ONLY

STATE OF SOUTH DAKOTA	PROJECT	SHEET NO.	TOTAL SHEETS
	P 3699(01)	B10	B88

ESTIMATE OF PIPE QUANTITIES

	Reinforced Concrete																							
	Circular					Circular Gasketed			Arch		Gasketed Arch		Circular Bend			Arch Bend		Flared End			Arch Flared End		
	18" CL2	24" CL2	30" CL2	36" CL2	42" CL2	18" CL2	24" CL2	30" CL2	48" CL2		48" CL2		24" 45°	36" 11°		48" 27°	48" 45°	18"	24"	36"		48"	
Station Offset (L/R)	Ft	Ft	Ft	Ft	Ft	Ft	Ft	Ft	Ft		Ft		Each	Each		Each	Each	Each	Each	Each		Each	
0+77-35.27' L to 0+84.4-17.67' L	18																	1					
0+83- 17.67' R to 0+84.4 - 17.67' L						38																	
0+83-17.67' R to 1+72-17.67' R	86																						
1+72-17.67' L to 1+72-17.67' R						34																	
4+85-20.67' L to 4+85-17.67' R						36																	
4+85-17.67' R to 5+75-17.67' R	88																						
5+75-20.67' L to 5+75-17.67' R						36																	
5+75-17.67' R to 6+65-17.67' R	88																						
6+65-20.67' L to 6+65-17.67' R						36																	
6+65-17.67' R to 8+00-17.67' R	132																						
8+00-20.67' L to 8+00-17.67' R						36																	
8+00-17.67' R to 8+80-17.67' R	78																						
8+80-20.67' L to 8+80-17.67' R						36																	
8+80-17.67' R to 9+92-17.67' R	110																						
9+62-20.67' L to 9+92-20.67' L						20																	
9+92-20.67' L to 9+92-17.67' R						36																	
9+92-17.67' R to 10+35-17.67' R		40																					
10+18-20.67' L to 10+35-20.67' L						10																	
10+35-20.67' L to 10+35-17.67' R						36																	
10+35-17.67' R to 10+90-17.67' R		52																					
10+90-20.67' L to10+90-17.67' R						36																	
10+90-17.67' R to 11+65-17.67' R		72																					
11+65-20.67' L to 11+65-17.67' R						36																	
11+65-17.67' R to 12+50-17.67' R			82																				
12+50-20.67' L to 12+50-17.67' R						36																	
12+50-17.67' R to 14+65-17.67' R			212																				
14+65-20.67' L to 14+65-17.67' R						36																	
14+65-17.67' R to 16+00-20.67' R			130																				
16+00-42.67' L to 16+00-20.67' L	14																	1					
16+00-20.67' L to 16+00-20.67' R							38																
16+00-20.67' R to 16+78-8.00' R			74																				
16+78-8.00' R to 17+40-17.67' R		58																					
17+40-34.67' L to 17+40-20.67' L		12																					
17+40-20.67' L to 17+40-17.67' R						36																	
17+40-17.67' R to 19+00-17.67' R	158																						
19+00-20.67' L to 19+00-17.67' R						36																	
19+00-17.67' R to 20+40-17.67' R	138																						
Subtotal:	910	234	498			570	38											2					

REGISTERED PROFESSIONAL ENGINEER
REG. NO. 6861
SAMUEL D. HOHN
SOUTH DAKOTA
9/12/13

G:\Files\CAD\land projects R2\13405 Spruce Street\13405-Spruce W&E Section B DMK.dwg, 2/18/2014 10:43:14 AM, DWG To PDF.pc3

FOR BIDDING PURPOSES ONLY

STATE OF SOUTH DAKOTA	PROJECT	SHEET NO.	TOTAL SHEETS
	P 3699(01)	B11	B88

ESTIMATE OF PIPE QUANTITIES

	Reinforced Concrete																							
	Circular					Circular Gasketed			Arch		Gasketed Arch		Circular Bend			Arch Bend		Flared End				Arch Flared End		
	18" CL2	24" CL2	30" CL2	36" CL2	42" CL2	18" CL2	24" CL2	30" CL2	48" CL2		48" CL2		24" 45°	36" 11°		48" 27°	48" 45°	18"	24"	36"		48"	
Station Offset (L/R)	Ft	Ft	Ft	Ft	Ft	Ft	Ft	Ft	Ft		Ft		Each	Each		Each	Each	Each	Each	Each		Each	
20+40-17.67' L to 20+40-17.67' R						34																		
20+40-17.67' R to 23+00-20.67' R	256																							
23+00-20.67' L to 23+00-20.67' R						38																		
24+95-17.67' L to 24+95-17.67' R						34																		
24+95-17.67' R to 27+25-8.00' R	226																							
27+25-8.00' R to 30+00-17.67' R	272																							
30+00-17.67' L to 30+00-17.67' R						34																		
30+00-17.67' R to 32+00-17.67' R	198																							
32+00-20.67' L to 32+00-17.67' R						36																		
32+00-17.67' R to 33+35-17.67' R	132																							
33+35-20.67' L to 33+35-17.67' R						36																		
33+35-17.67' R to 33+92-20.67' R	54																							
33+92-20.67' L to 33+92-20.67' R						38																		
33+92-20.67' R to 36+50-17.67' R	254																							
36+50-17.67' L to 36+50-17.67' R						34																		
36+50-17.67' R to 37+50-17.67' R		98																						
37+50-17.67 'L to 37+50-17.67' R						34																		
37+50-17.67 ' R to 39+25-20.67' R		172																						
38+90-17.67'L to 39+25-20.67' L						32																		
39+25-20.67 ' L to 39+25-20.67' R						38																		
39+25-20.67' R to 40+00-8.00' R		70																						
39+58-50.00' L to 40+01-50.00' L						40																		
40+00-8.00' R to 40+01-50.00' L						54																		
40+00-8.00' R to 41+65-17.67' R		162																						
41+15-17.67'L to 41+65-20.67' L							46																	
41+65-20.67' L to 41+65-17.67' R						36																		
41+65-17.67' R to 43+25-17.67' R		158																						
43+25-20.67' L to 43+25-17.67' R						36																		
43+25-17.67' R to 45+00-17.67' R		172																						
45+00-20.67' L to 45+00-17.67' R						36																		
45+00-17.67' R to 46+25-17.67' R			122																					
46+25-20.67' L to 46+25-17.67' R						36																		
46+25-17.67' R to 47+25-17.67' R			98																					
47+25-20.67' L to 47+25-17.67' R						36																		
47+25-17.67' R to 48+20-17.67' R			92																					
48+20-20.67' L to 48+20-17.67' R						36																		
48+20-17.67' R to 49+15-17.67'R			92																					
49+15-20.67' L to 49+15-17.67' R						36																		
49+15-17.67' R to 51+25-17.67' R				208																				
Subtotal:	1392	832	404	208		734	46																	

REGISTERED PROFESSIONAL ENGINEER
REG. NO. 6861
SAMUEL D. HOHN
SOUTH DAKOTA
9/12/18

G:\Files\CAD\land projects R2\13405 Spruce Street\13405-Spruce W&E Section B DMK.dwg, 2/18/2014 10:43:19 AM, DWG To PDF.pc3

ESTIMATE OF PIPE QUANTITIES

	Reinforced Concrete																						
	Circular					Circular Gasketed			Arch	Gasketed Arch			Circular Bend			Arch Bend		Flared End			Arch Flared End		
	18" CL2	24" CL2	30" CL2	36" CL2	42" CL2	18" CL2	24" CL2	30" CL2	48" CL2		48" CL2		24" 45°	42" 11°		48" 27°	48" 45°	18"	24"	42"		48"	
Station Offset (L/R)					Ft																		
51+25-17.67' L to 51+25-17.67' R						34																	
51+25-17.67' R to 52+50-20.67' R				122																			
52+50-20.67' R to 52+50-8.00' R				8																			
52+50-8.00' R to 52+50-20.67' L								24															
52+50-20.67' L to 52+71.76-42.00' L		28																					
52+71.76-42.00' L													1										
52+71.76-42.00' L to 52+72.05-59.0' L		12																	1				
52+50-8.00' R to 53+79-57.05' L											140					1							
53+79-57.05' L to 55+72.70-56.20' L									190								1						
55+73-56.20' L to 55+91.37 - 74.17' L									18													1	
STORM SEWER TO KIBBEE DITCH																							
0+08 TO 4+00					388																		
4+00 TO 4+95					84									1						1			
Subtotal:		40		130	472	34		24	208		140		1	1		1	1		1	1		1	
Total:	2302	1106	902	338	472	1338	84	24	208		140		1	1		1	1	2	1	1		1	

G:\Files\CAD\land projects R2\13405 Spruce Street\13405-Spruce W&E Section B DMK.dwg, 2/18/2014 10:43:24 AM, DWG To PDF.pc3

TABLE OF FENCE QUANTITIES

Station to Station		Side (L/R)	Right of Way Fence Type 6S (Ft)	Right of Way Fence Type 2 (Ft)	Temporary Fence Type 1 (Ft)	Post Panels 2-Post Panel (Each)	Post Panels 3-Post Panel (Each)	Tubular Gates 12' Tubular Gate	Tubular Gates 16' Tubular Gate	Remove Fence (Ft)	Remove Fence for Reset (Ft)	Reset Fence (Ft)
14+56		R								4		
14+56	26-80	R								1224		
16+63	22-63	R	600			1	1					
17+17	26-80	R			963							
20+82		L				1						
22+25	22-64	L								39		
22+75		R				1	1	2				
22+87	25-16	R	229			3						
22+88	23-48	L								60		
25+40	26-44	R	104			4						
26+92		L								10		
26+80	27-55	R									75	75
26+92	28-66	L								174		
27+55	33-17	R								562		
27+79	29-00	R	121									
27+67		R				3		2				
29+16		R				2			2			
41+07	52-50	R		1143	1143		2			1143		
52+50		R		10		1				10		
Offset Alignment Station to Station		Side (L/R)										
0-43	6+10	L			567							
6-10		L/R			90							
		TOTALS:	**1054**	**1153**	**2763**	**16**	**4**	**4**	**2**	**3226**	**75**	**75**

Post Type and Sequence
Right-of-way fence shall be constructed using all steel posts except for the 2-post and 3-post panels where the new fence connects to the existing fence.

G:\Files\CAD\land projects R2\13405 Spruce Street\13405-Spruce W&E Section B DMK.dwg, 4/2/2014 3:39:15 PM, DWG To PDF.pc3

TYPICAL GRADING SECTION

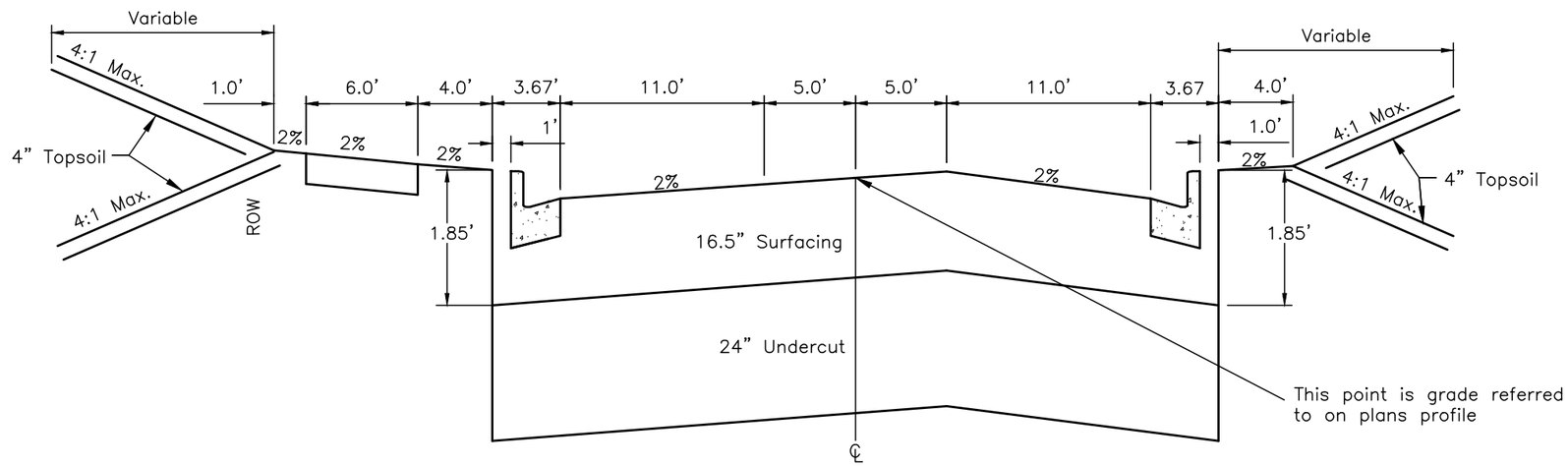

SPRUCE STREET
0+43 to 55+98
SCALE: NONE

G:\Files\CAD\land projects R2\13405 Spruce Street\13405-Spruce Cover Street-Details.9 12.dwg, 2/18/2014 10:13:52 AM, DWG To PDF.pc3

HORIZONTAL ALIGNMENT DATA

MAIN LINE SPRUCE STREET

TYPE	STATION			NORTHING	EASTING
POB	0+00			501819.551	2573221.910
		TL=2658.62'	N 87°39'49" E		
PI	27+08.54			501927.797	2575877.878
		TL=2939.38'	N 87°41'02" E		
POE	55+98			502046.689	2578815.299

STORM SEWER LINE at STA 16+78–R

TYPE	STATION			NORTHING	EASTING
POB	0+00			501887.938	2574898.516
		TL=400.00'	S 02°19'29" E		
PI	4+00			501488.263	2574914.741
		TL=86.89'	S 13°21'12" E		
PI	4+86.89			501403.719	2574934.810
		TL=125.11'	S 02°36'37" E		
POE	6+12			501290.730	2574939.961

STORM SEWER LINE at STA 52+50–R to 55+91.3–L

TYPE	STATION	OFFSET			NORTHING	EASTING
POB	52+50	8.00' R			502022.942	2578467.976
			TL=145.41'	N 60°20'09" E		
PI	53+79	57.10' L			502094.907	2578594.907
			TL=193.53'	N 87°59'00" E		
PI	55+72.7	59.20' L			502101.717	2578787.737
			TL=26.00'	N 43°24'20" E		
POE	55+91.3	74.24' L			502118.985	2578804.070

The coordinates shown on this sheet are based on the South Dakota State Plane Coordinate System. South Zone (NAD 83/96) SF=0.99990811

CONTROL DATA

HORIZONTAL AND VERTICAL CONTROL POINTS

POINT	STATION	OFFSET	DESCRIPTION	NORTHING	EASTING	ELEVATION
BM1	12+86	31' L	Nail in Power Pole	501902.751	2574506.245	1334.50
BM2	16+69	32' L	Nail in Power Pole	501919.266	2574888.182	1333.75
BM3	31+46	31' L	Nail in Power Pole	501978.512	2576363.590	1339.01
BM4	41+11	30' L	Nail in Power Pole	502017.689	2577328.194	1337.44
BM5	44+21	31' L	Nail in Power Pole	502030.426	2577638.040	1335.46
BM6	45+71	31' L	Nail in Power Pole	502036.222	2577788.120	1332.24
BM7	52+66	30' L	Nail in Power Pole	502064.217	2578482.4312	1324.33

The coordinates shown on this sheet are based on the South Dakota State Plane Coordinate System.
South Zone (NAD 83/96) SF=0.99990811
The elevations shown on this sheet are based on NAVD/88.

REGISTERED PROFESSIONAL ENGINEER
REG. NO. 6861
SAMUEL D. HOHN
SOUTH DAKOTA
9/12/13

G:\Files\CAD\land projects R2\13405 Spruce Street\13405-Spruce Cover Street-Details 9 12.dwg, 2/18/2014 10:13:57 AM, DWG To PDF.pc3

Existing Topography Symbology and Legend

Anchor
Antenna
Approach
Assumed Corner
Azimuth Marker
Bbq Grill/ Fireplace
Bearing Tree
Bench Mark
Box Culvert
Bridge
Brush
Buildings
Bulk Tank
Cattle Guard
Cemetery
Centerline
Cistern
Clothes Line
Commercial Sign Double Face
Commercial Sign One Post
Commercial Sign Overhead
Commercial Sign Two Post
Concrete Symbol
Creek Edge
Curb/Gutter
Curb
Dam Grade/Dike/Levee
Ditch Block
Drainage Profile
Drop Inlet
Edge Of Asphalt
Edge Of Concrete
Edge Of Gravel
Edge Of Other
Edge Of Shoulder
Elec. Trans./Power Jct. Box
Fence Barbwire
Fence Chainlink
Fence Electric
Fence Misc.
Fence Rock
Fence Snow
Fence Wood
Fence Woven
Fire Hydrant
Flag Pole
Flower Bed
Gas Valve Or Meter
Gas Pump Island
Grain Bin
Guardrail
Gutter
Guy Pole
Haystack
Hedge
Highway R.O.W. Marker

Information Sign One Post
Information Sign Two Post
Interstate Close Gate
Iron Pin
Irrigation Ditch
Lake Edge
Lawn Sprinkler
Mailbox
Manhole Electric
Manhole Gas
Manhole Misc
Manhole Sanitary Sewer
Manhole Storm Sewer
Manhole Telephone
Manhole Water
Merry-Go-Round
Microwave Radio Tower
Misc. Property Corner
Misc. Post
Overhang Or Encroachment
Overhead Utility Line — OH —
Parking Meter
Pipe With End Section
Pipe With Headwall
Pipe Without End Section
Playground Slide
Playground Swing
Power And Light Pole
Power And Telephone Pole
Power Meter
Power Pole
Power Pole And Transformer
Power Tower Structure
Propane Tank
Property Pipe
Property Pipe With Cap
Property Stone
Public Telephone
Railroad Crossing Signal
Railroad Milepost Marker
Railroad Profile
Railroad R.O.W. Marker
Railroad Signs
Railroad Switch
Railroad Track
Railroad Trestle
Rebar
Rebar With Cap
Reference Mark
Retaining Wall
Riprap
River Edge
Rock And Wire Baskets
Rockpiles
Route Sign One Post
Route Sign Two Post

Satellite Dish
Septic Tank
Shrub Tree
Sidewalk
Sign Face
Sign Post
Slough Or Marsh
Spring
Stream Gauge
Street Marker
Telephone Fiber Optics — T/F —
Telephone Junction Box
Telephone Pole
Television Cable Jct Box
Television Tower
Test Wells/Bore Holes
Traffic Signal
Trash Barrel
Tree Belt
Tree Coniferous
Tree Deciduous
Tree Stumps
Triangulation Station
Underground Electric Line — P —
Underground Gas Line — G —
Underground Sanitary Sewer — S —
Underground Storm Sewer — S —
Underground Tank
Underground Telephone Line — T —
Underground Television Cable — TV —
Underground Water Line — W —
Warning Sign One Post
Warning Sign Two Post
Water Fountain
Water Hydrant
Water Meter
Water Tower
Water Valve
Water Well
Weir Rock
Windmill
Wingwall
Witness Corner

State and National Line
County Line
Section Line
Quarter Line
Sixteenth Line
Property Line
Construction Line
R. O. W. Line
New R. O. W. Line
Cut and Fill Limits
Control of Access
New Control of Access

G:\Files\CAD\land projects R2\13405 Spruce Street\13405-Spruce Cover Street-Details 9 12.dwg, 2/18/2014 10:14:02 AM, DWG To PDF.pc3

FOR BIDDING PURPOSES ONLY

REV 2-18-14 SDN

STATE OF SOUTH DAKOTA	PROJECT	SHEET NO.	TOTAL SHEETS
	P 3699(01)	B17	B88

1+70 to 2+10–18' R
Take Out 12"–40' CMP
(Incidental Work, Grading)

2+19 to 2+59–23' L
Take Out 24"–40' HDPE
(Incidental Work, Grading)

4+94 to 5+39–23' R
Take Out 12" –45' RCP
(Incidental Work, Grading)

2+09 to 2+67– 12' to 34.5' L
Take Out and Replace Asphalt Concrete Approach

3+97 to 4+19– 21' R to 33' R
Take Out and Replace Concrete Driveway

Take Out & Reset Sy Objects
1+43 L Power Pole
3+25 L Power Pole
0+71 L Elec. Telepads
1+38 L Elec. Telepads
0+63 R Elec. Telepads
3+80 L Fire Hydrants

Take Out Sign for Reset
0+70 L Stop
3+16 R Speed Limit

Refurbish single mailbox at the following location:
4+27 R

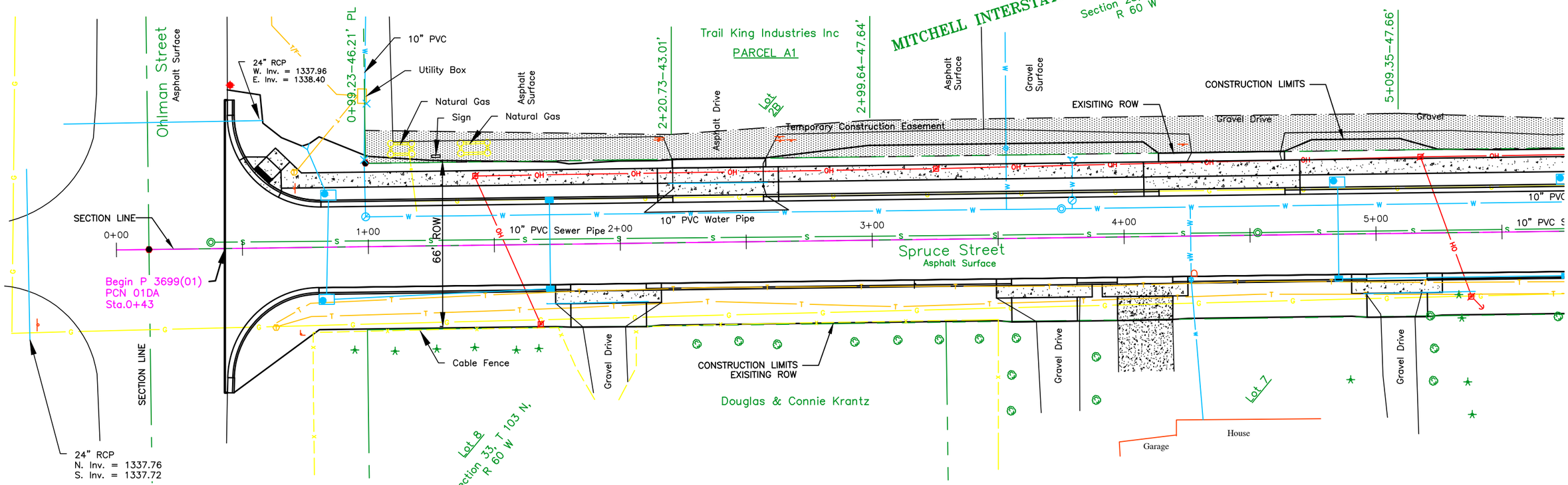

0+77–35.27' L to 0+84.4' L
Install 18"–18' RCP
(Between Drop Inlet and Flared End)

0+84.4–20.67' L to 0+83–20.67' R
Install 18"–38' RCP
(Between Drop Inlets)

0+83–20.67' R to 1+72–17.67' R
Install 18"–86' RCP
(Between Drop Inlets)

1+72–17.67' L to 1+72–17.67' R
Install 18"–34' RCP
(Between Drop Inlets)

4+85–20.67' L to 4+85–17.67' R
Install 18"–36' RCP
(Between Drop Inlets)

Install 2' x 3' Type B Drop Inlet with Type B Frame and Grate at the following Locations:
1+72–17.67' L
1+72–17.67' R
4+85–17.67' R

Install 4' x 6' Type S Drop Inlet with Type S Manhole Frame and Lid at the following locations:
0+84.4–20.67' L
0+83–20.67' R
4+85–20.67' L

Do Not Disturb
1+13 – L Natural Gas Structures
1+28 – L Sign
1+43 – L Natural Gas Structures

Do Not Disturb Signs
2+15.76–40.90' – L No Tractor Trailer
2+16.08–41.74' – L Stop
2+63.74–41.64' – L Stop
2+63.91–41.13' – L No Tractor Trailer
2+68.42–40.25' – L Think Safety

REGISTERED PROFESSIONAL ENGINEER
REG. NO. 6861
SAMUEL D. HOHN
SOUTH DAKOTA

Table of Right–of–Way Easements

	Station to Station	Side	Type	Purpose	Area Req'd (SqFt)	Owner	Legal Description
Parcel A1	0+99.23 to 10+23.99	L	Temporary	Grading	15861 ±	Trail King Industries Inc.	Lots 2B, 3B, 4B and 5C, A Replat of lots 2, 3 and 4 of Mitchell Interstate Industrial Park, in the SW 1/4 of Section 28, T 103 N, R 60 W of the 5th P.M., in the City of Mitchell, Davison County, South Dakota.

G:\Files\CAD\land projects R2\13405 Spruce Street\13405-Spruce St-2.dwg, B-17, 2/18/2014 10:09:01 AM, rpuepke

STATE OF SOUTH DAKOTA	PROJECT	SHEET NO.	TOTAL SHEETS
	P 3699(01)	B18	B88

FOR BIDDING PURPOSES ONLY

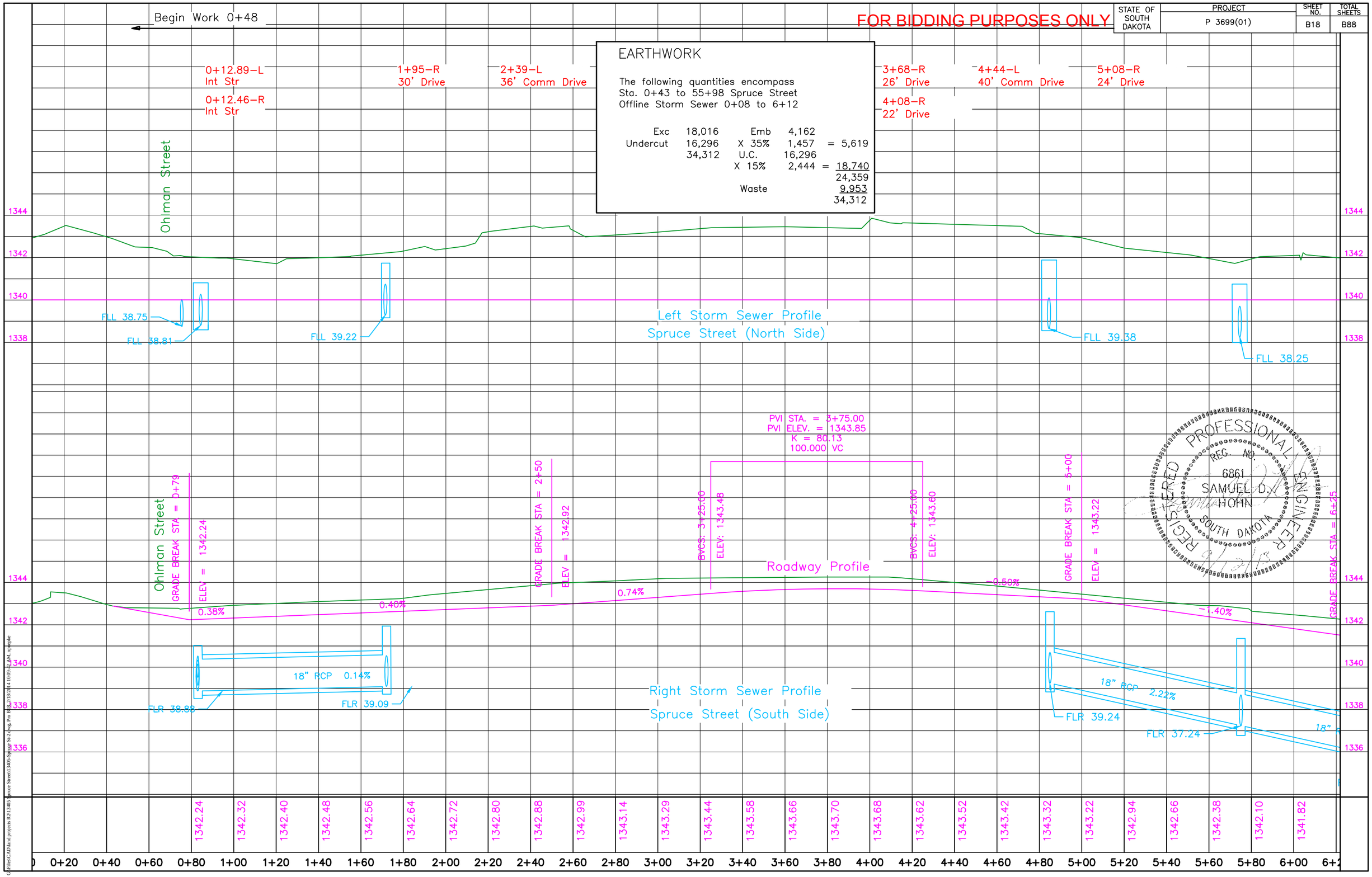

EARTHWORK

The following quantities encompass
Sta. 0+43 to 55+98 Spruce Street
Offline Storm Sewer 0+08 to 6+12

Exc	18,016	Emb	4,162		
Undercut	16,296	X 35%	1,457	=	5,619
	34,312	U.C.	16,296		
		X 15%	2,444	=	18,740
					24,359
		Waste			9,953
					34,312

G:\Files\CAD\land projects R2\13405-Spruce Street\13405-Spruce St-2.dwg, Pro Bldr 2/18/2014 10:09:22 AM, rpiepke

STATE OF SOUTH DAKOTA	PROJECT	SHEET NO.	TOTAL SHEETS
	P 3699(01)	B19	B88

FOR BIDDING PURPOSES ONLY

REV 2-14-14 SDN

6+05 to 6+57– 23' L to 36' L
Take Out 12"–52' RCP
(Incidental Work, Grading)

6+57– 36' L
Plug 12" RCP
(Incidental Work, Grading)

8+22 to 8+52– 23.5' L
Take Out 12"–30' RCP
(Incidental Work, Grading)

6+02 to 6+60– 12' to 40' L
Take Out Asphalt Concrete Approach

Take Out Sign Post
6+66 32' L

Take Out Steel Fence Post
8+75 32' L
(Incidental Work, Grading)

Clear and Grub Trees
at the following location:
5+33 – 25' R

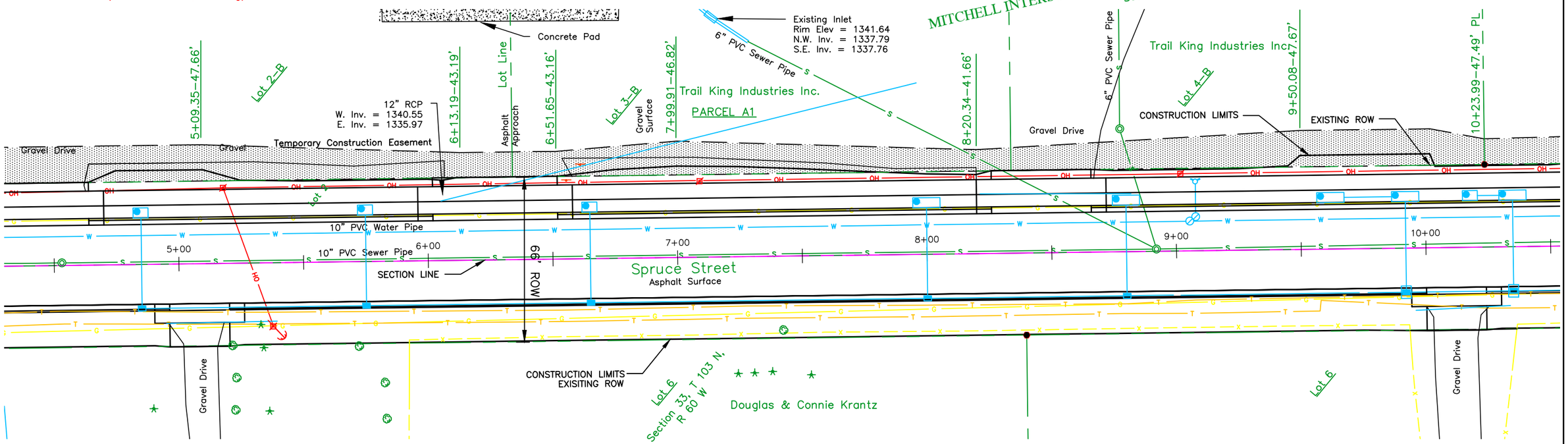

Install 2' x 3' Type B Drop Inlet
with Type B Frame and Grate
at the following locations:
5+75–17.67' R
6+65–17.67' R
8+00–17.67' R
8+80–17.67' R

Install 4' x 3' Type B Drop Inlet
with Type B Frame and Grate
at the following locations:
9+92–17.67' R

Install 4' x 6' Type S Drop Inlet
with Type S Manhole Frame and
Lid at the following locations:
5+75–20.67' L
6+65–20.67' L

Install 4' x 11' Type S Drop Inlet
with Type S Manhole Frame and
Lid at the following locations:
8+00–20.67' L
8+80–20.67' L
9+62–20.67' L
9+92–20.67' L

Do Not Disturb
5+21 – 32' R Tree
5+37 – 30' R Guy Wire & Anchor
5+72 – 33' R Tree
7+42 – 31' R Tree

4+85–17.67' R to 5+75–17.67' R
Install 18"–88' RCP
(Between Drop Inlets)

5+75–20.67' L to 5+75–17.67' R
Install 18"–36' RCP
(Between Drop Inlets)

5+75–17.67' R to 6+65–17.67' R
Install 18"–88' RCP
(Between Drop Inlets)

6+65–20.67' L to 6+65–17.67' R
Install 18"–36' RCP
(Between Drop Inlets)

6+65–17.67' R to 8+00–17.67' R
Install 18"–132' RCP
(Between Drop Inlets)

8+00–20.67' L to 8+00–17.67' R
Install 18"–36' RCP
(Between Drop Inlets)

8+00–17.67' R to 8+80–17.67' R
Install 18"–78' RCP
(Between Drop Inlets)

8+80–20.67' L to 8+80–17.67' R
Install 18"–36' RCP
(Between Drop Inlets)

8+80–17.67' R to 9+92–17.67' R
Install 18"–110' RCP
(Between Drop Inlets)

9+62–20.67' L to 9+92–20.67' L
Install 18"–20' RCP
(Between Drop Inlets)

9+92–20.67' L to 9+92–17.67' R
Install 18"–36' RCP
(Between Drop Inlets)

REGISTERED PROFESSIONAL ENGINEER
REG. NO. 6861
SAMUEL D. HOHN
SOUTH DAKOTA

G:\Files\CAD\land projects R2\13405 Spruce Street\13405-Spruce St-2.dwg, B-19, 2/18/2014 10:09:57 AM, rpuepke

STATE OF SOUTH DAKOTA	PROJECT	SHEET NO.	TOTAL SHEETS
	P 3699(01)	B20	B88

FOR BIDDING PURPOSES ONLY

REV 2-18-14 SDH

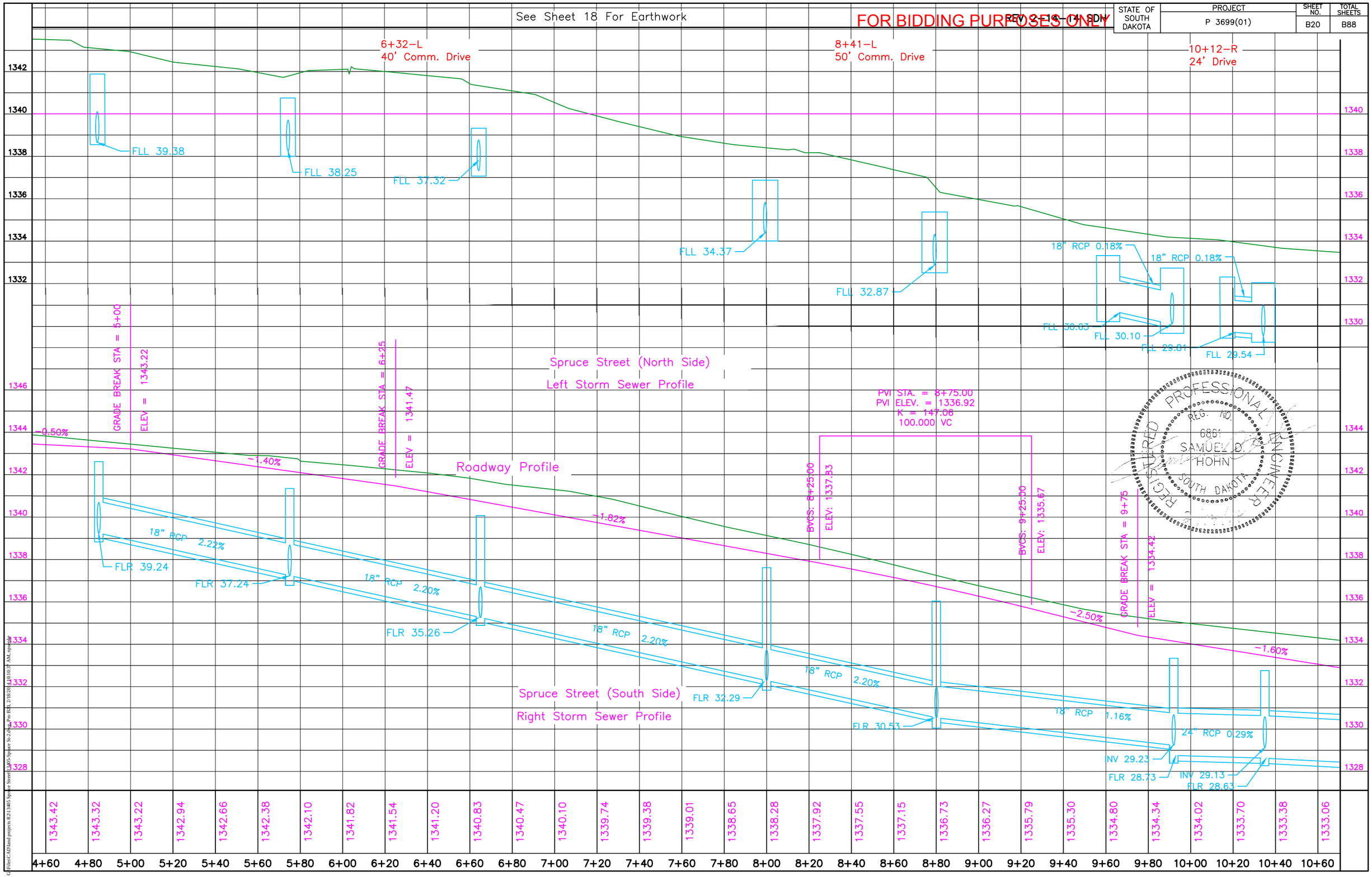

G:\Files\CAD\land projects R2\13405 Spruce Street\13405-Spruce St-Zahn.Pro B20, 2/18/2014 10:10:37 AM, npuplis

STATE OF SOUTH DAKOTA	PROJECT	SHEET NO.	TOTAL SHEETS
	P 3699(01)	B21	B88

FOR BIDDING PURPOSES ONLY

REV 3-18-14 SDN

9+96 to 10+34–23' R
Take Out 12"–38' CMP
(Incidental Work, Grading)

13+64 to 13+96–24' R
Take Out 18"–32' RCP
(Incidental Work, Grading)

Clear and Grub Trees
at the following locations:
11+47 – 30' R
11+57 – 31' R
12+18 – 28' R
13+76 – 32' L
14+21–31' R Tree
14+50–31' R Tree

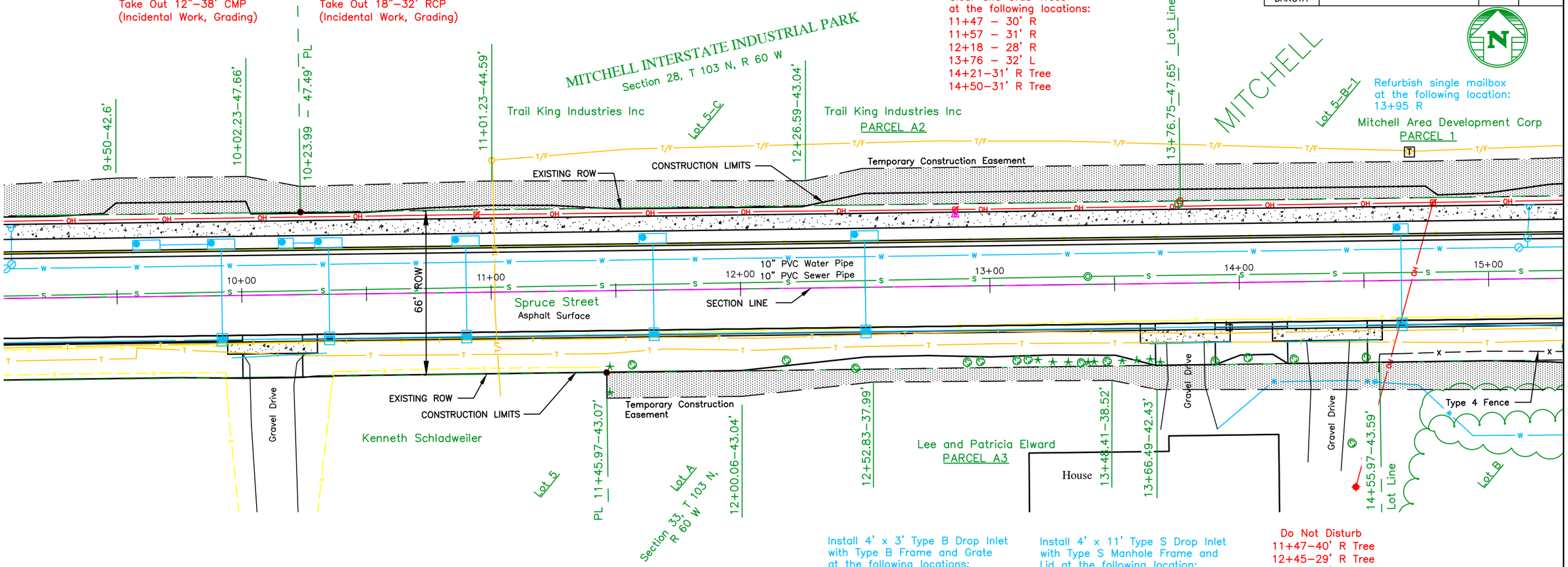

Refurbish single mailbox
at the following location:
13+95 R

Do Not Disturb
11+47–40' R Tree
12+45–29' R Tree
12+86–29' R Tree
12+92–30' R Tree
12+97–31' R Tree
13+10 to 13+68–30' R Trees & Shrubs
13+89–30' R Tree
14+02–30' R Tree
14+03–29' R Tree

9+92–17.67' R to 10+35–17.67' R
Install 24"–40' RCP
(Between Drop Inlets)

10+18–20.67' L to 10+35–20.67' L
Install 18"–10' RCP
(Between Drop Inlets)

10+35–20.67' L to 10+35–17.67' R
Install 18"–36' RCP
(Between Drop Inlets)

10+35–17.67' R to 10+90–17.67' R
Install 24"–52' RCP
(Between Inlets)

10+90–20.67' L to 10+90–17.67' R
Install 18"–36' RCP
(Between Drop Inlets)

10+90–17.67' R to 11+65–17.67' R
Install 24"–72' RCP
(Between Drop Inlets)

11+65–20.67' L to 11+65–17.67' R
Install 18"–36' RCP
(Between Drop Inlets)

11+65–17.67' R to 12+50–17.67' R
Install 30"–82' RCP
(Between Drop Inlets)

12+50–20.67' R to 12+50–17.67' L
Install 18"–36' RCP
(Between Drop Inlets)

12+50–17.67' R to 14+65–17.67' R
Install 30"–212' RCP
(Between Drop Inlets)

14+65–20.67' L to 14+65–17.67' R
Install 18"–36' RCP
(Between Drop Inlets)

Install 4' x 3' Type B Drop Inlet
with Type B Frame and Grate
at the following locations:
10+35–17.67' R
10+90–17.67' R
11+65–17.67' R
12+50–17.67' R
14+65–17.67' R

Install 4' x 11' Type S Drop Inlet
with Type S Manhole Frame and
Lid at the following location:
10+35–20.67' L
10+90–20.67' L
11+65–20.67' L
12+50–20.67' L

Install 4' x 6' Type S Drop Inlet
with Type S Manhole Frame and
Lid at the following locations:
10+18–20.67' L
14+65–20.67' L

Table of Right–of–Way Easements

	Station to Station	Side	Type	Purpose	Area Req'd (SqFt)	Owner	Legal Description
Parcel A2	10+23.99 to 13+76.75	L	Temporary	Grading	4514 ±	Trail King Industries Inc	Lot 5–C of Mitchell Interstate Industrial Park in the SW 1/4 of Section 28, T 103 N, R 60 W of the 5th P.M., in the City of Mitchell, Davison County, South Dakota.
Parcel A3	11+45.97 to 16+62.97	R	Temporary	Grading	1333 ±	Lee Elward and Patricia Elward	Lot A, a portion of Lots 4 and 5, and Lot B, a portion of Lot 4, all in the NW 1/4 of Section 33, T 103 N, R 60 W of the 5th P.M., Davison County, South Dakota

REGISTERED PROFESSIONAL ENGINEER
REG. NO. 6861
SAMUEL D. HOHN
SOUTH DAKOTA

G:\Files\CAD\land projects R2\13405 Spruce Street\13405-Spruce St-2.dwg, B-21, 2/18/2014 10:10:52 AM, rpuepke

FOR BIDDING PURPOSES ONLY

REV 2-18-14 SDH

STATE OF SOUTH DAKOTA	PROJECT	SHEET NO.	TOTAL SHEETS
	P 3699(01)	B22	B88

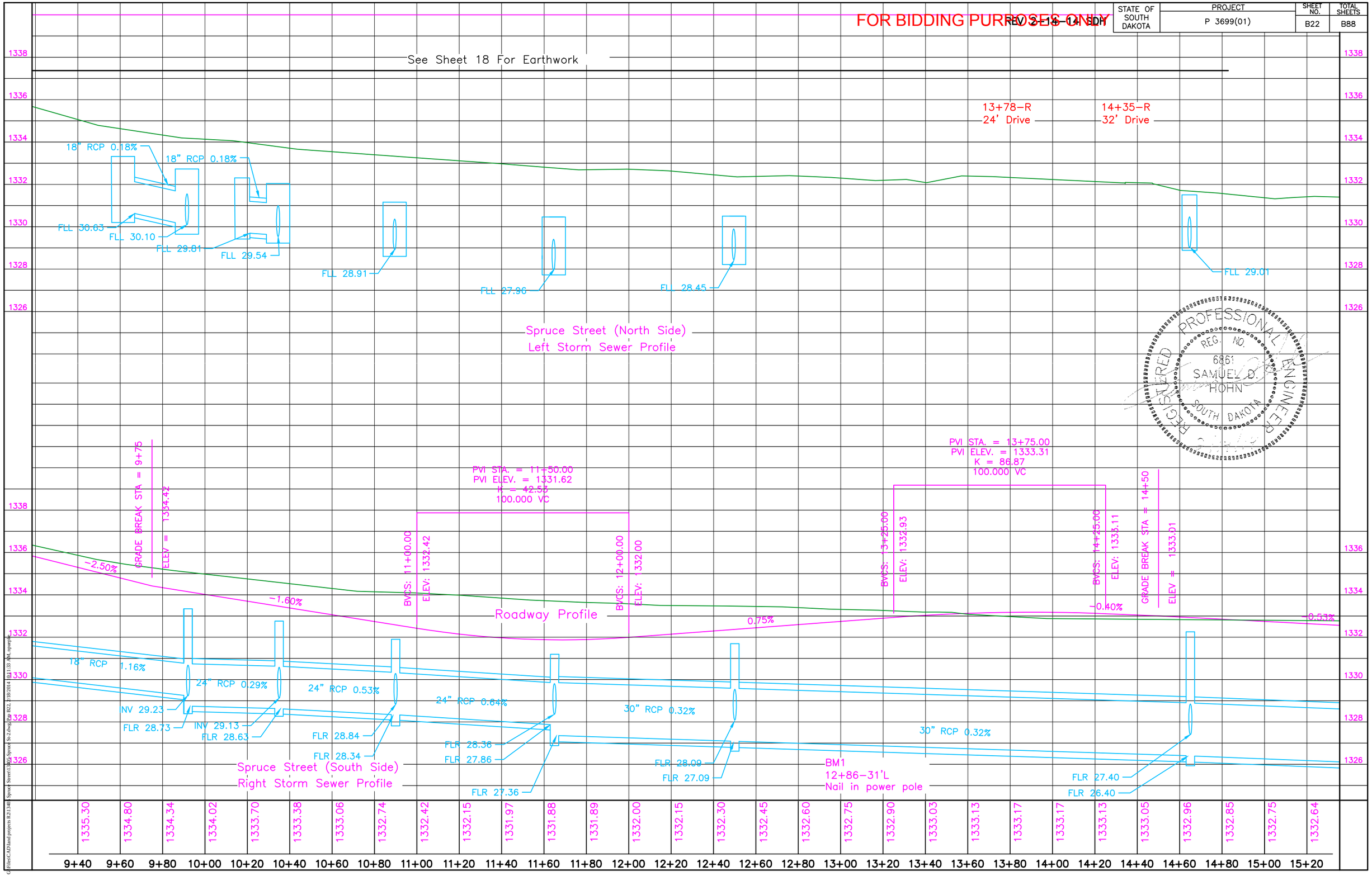

G:\Files\CAD\land projects R2\1340_Spruce Street\3699_Spruce St-2-6wg.dgn B22, 2/18/2014 11:33 AM, rpuepke

STATE OF SOUTH DAKOTA	PROJECT	SHEET NO.	TOTAL SHEETS
	P 3699(01)	B23	B88

FOR BIDDING PURPOSES ONLY

REV 4-2-14 NAP

14+18 to 14+56–23' R
Take Out 18"–38' RCP
(Incidental Work, Grading)

15+97–22' L to 20' R
Take Out 30"–42' Arch RCP
(Incidental Work, Grading)

16+66 to 17+40–24' L
Take Out 18"–74' CMP
(Incidental Work, Grading)

18+29 to 18+59–26' L
Take Out 18"–30' CMP
(Incidental Work, Grading)

14+56–29' to 33' R
Take Out Fence

14+56 to 19+50–29' R
Take Out Fence

18+25 to 18+60–12' L to 33' L
Take Out Asphalt Concrete Approach

Clear and Grub Trees
at the following locations:
15+31–27' R
15+88–29' R
17+67–29' R
17+82–29' R

16+63 to 19+50–33' R
Install 287' Type 6S R–O–W Fence

17+17 to 19+50 R
Install 233' Type 1 Temporary Fence

Refurbish single mailbox
at the following location:
18+69 L

Take Out & Reset by Others
16+13 R Telephone Pedestal

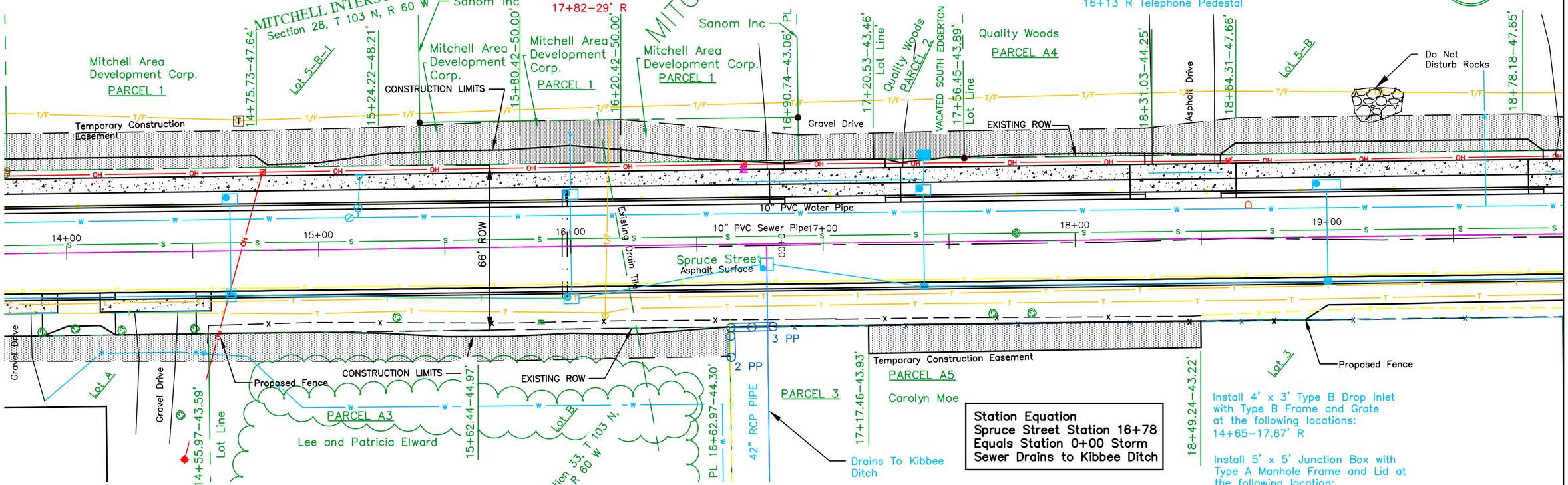

Station Equation
Spruce Street Station 16+78
Equals Station 0+00 Storm
Sewer Drains to Kibbee Ditch

Install 4' x 3' Type B Drop Inlet
with Type B Frame and Grate
at the following locations:
14+65–17.67' R

Install 5' x 5' Junction Box with
Type A Manhole Frame and Lid at
the following location:
16+78–8.00' R

Install 4' x 6' Type S Drop Inlet
with Type S Manhole Frame and
Lid at the following locations:
14+65–20.67' L
16+00–20.67' L
16+00–20.67' R
17+40–20.67' L

Install 3' x 4' Type C Drop Inlet
with Type C Frame and Grate
at the following location:
17+40–34.67' L

14+65–17.67' R to 16+00–20.67' R
Install 30"–130' RCP
(Between Drop Inlets)

16+00–42.67' L to 16+00–20.67' R
Install 18"–14' RCP and 1 Flared End

16+00–20.67' L to 16+00–20.67' R
Install 24"–38' RCP
(Between Drop Inlets)

16+00–20.67' R to 16+78–8.00' R
Install 30"–74' RCP
(Between Drop Inlet and Junction Box)

16+78–8.00' R to 17+40–17.67' R
Install 24"–58' RCP
(Between Junction Box and Drop Inlet)

17+40–20.67' L to 17+40–34.67' L
Install 18"–12' RCP
(Between Drop Inlets)

17+40–20.67' L to 17+40–17.67' R
Install 18"–36' RCP
(Between Drop Inlets)

17+40–17.67' R to 19+00–17.67' R
Install 18"–158' RCP
(Between Drop Inlets)

19+00–20.67' L to 19+00–17.67' R
Install 18"–36' RCP
(Between Drop Inlets)

19+00–17.67' R to 20+40–17.67' R
Install 18"–138' RCP
(Between Drop Inlets)

Install 2' x 3' Type B Drop Inlet
with Type B Frame and Grate
at the following locations:
17+40–17.67' R
19+00–17.67' R

Install 4' x 11' Type S Drop Inlet
with Type S Manhole Frame and
Lid at the following locations:
19+00–20.67' L

Table of Right–of–Way Easements

	Station to Station	Side	Type	Purpose	Area Req'd (SqFt)	Owner	Legal Description
Parcel A5	17+17.46 to 18+49.24	R	Temporary	Grading	1426 ±	Carolyn Moe	Lot 3 in the NW 1/4 of Section 33, T 103 N, R 60 W of the 5th P.M., Davison County, South Dakota.
Parcel 1	13+76.75 to 15+80.42 15+80.42 to 16+20.42 16+20.42 to 16+90.74	L L L	Temporary Permanent Temporary	Grading Culvert Grading	3090 ± 680 ± 949 ±	Mitchell Area Development Corp	Lot 5–B–1 except the North 300' of the South 317' of the East 150', of Mitchell Interstate Industrial Park in the SW 1/4 of Section 28, T 103 N, R 60 W of the 5th P.M., in the City of Mitchell, Davison County, South Dakota.
Parcel A4	16+90.74 to 17+20.53 17+56.45 to 20+81.45	L	Temporary	Grading	4422 ±	Quality Woods	The East 325' of the South 601.76' of Lot 5–B and the Portion of Vacated South Edgerton Street abutting said Property, Mitchell Interstate Industrial Park, of Section 28, T 103 N, R 60 W of the 5th P.M, in the City of Mitchell, Davison County, South Dakota.
Parcel 2	17+20.53 to 17+56.45	L	Permanent	Drainage	380 ±	Quality Woods	Portion of Vacated South Edgerton Street, Mitchell Industrial Park, in the SW 1/4 Section 28, T 103 N, R 60 W of the 5th P.M, in the City of Mithell, Davison County, South Dakota.

REGISTERED PROFESSIONAL ENGINEER
REG. NO. 8471
JEFFREY P. MCCORMICK
SOUTH DAKOTA
4/2/14

G:\Files\CAD\land projects R2\13405 Spruce Street\13405-Spruce St-2.dwg, 4/2/2014 3:55:32 PM, DWG To PDF.pc3

FOR BIDDING PURPOSES ONLY

STATE OF SOUTH DAKOTA	PROJECT	SHEET NO.	TOTAL SHEETS
	P 3699(01)	B24	B88

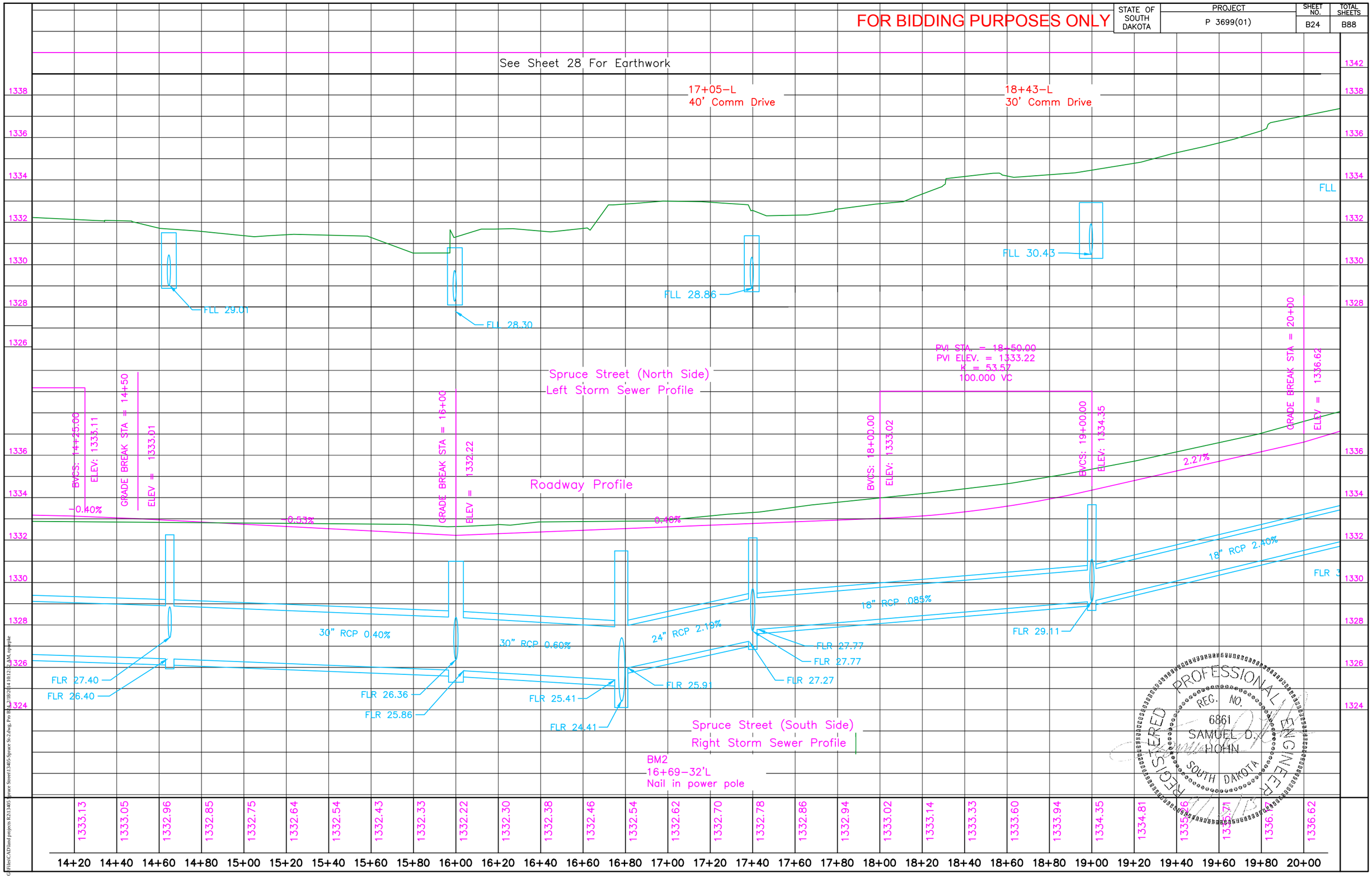

G:\Files\CAD\land projects R2\13405-Spruce Street\13405-Spruce St-2.dwg, Pro B24, 7/18/2014 10:12:22 AM, rpiepke

STATE OF SOUTH DAKOTA	PROJECT	SHEET NO.	TOTAL SHEETS
	P 3699(01)	B25	B88

FOR BIDDING PURPOSES ONLY

REV 4-2-14 NAP

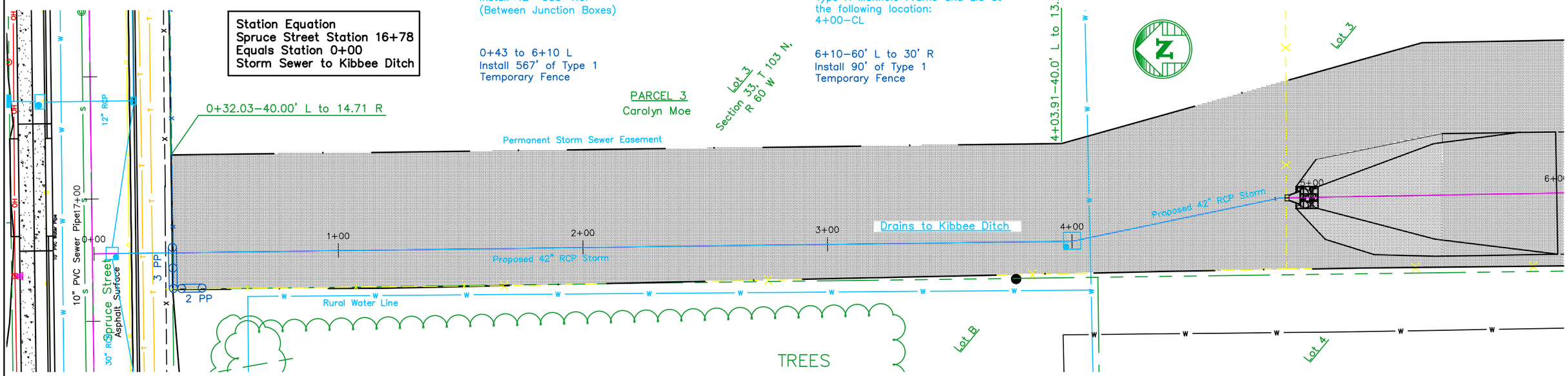

Table of Right–of–Way Easements

	Station to Station	Side	Type	Purpose	Area Req'd (SqFt)	Owner	Legal Description
Parcel 3	0+33 to 6+12	L/R	Permanent	Storm Sewer	36640 ±	Carolyn Moe	Lot 3, in the NW 1/4 of Section 33, T 103 N, R 60 W of the 5th P.M., Davison County, South Dakota.

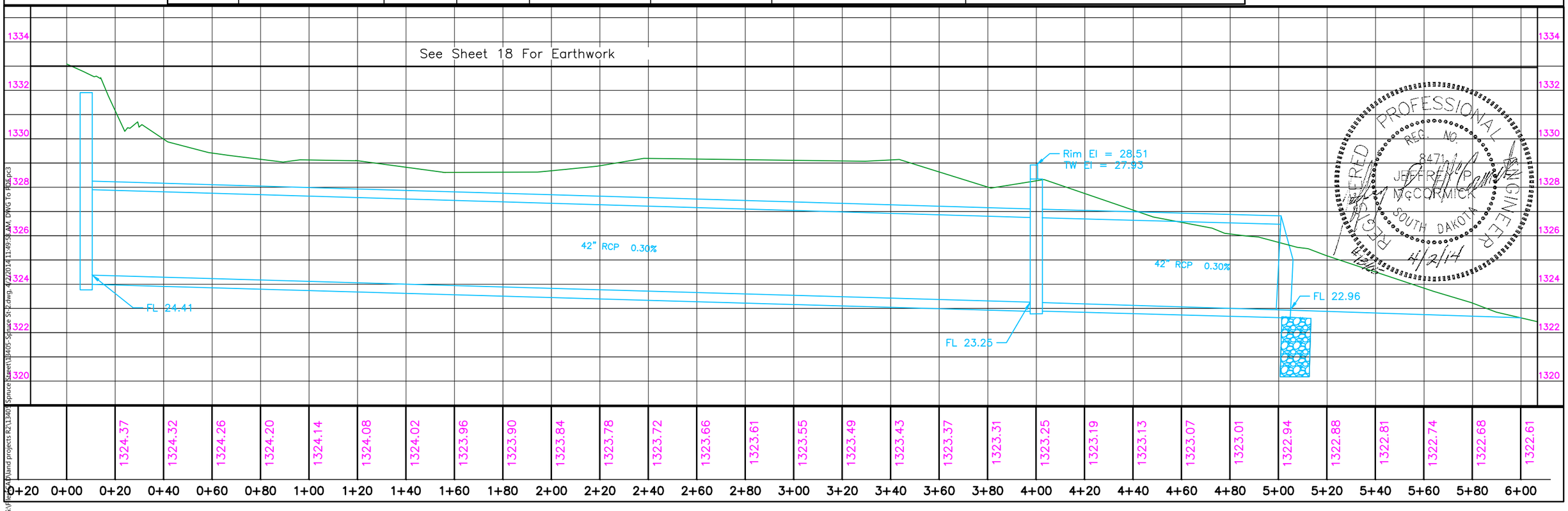

PROFESSIONAL ENGINEER
REG. NO. 8471
JEFFREY P. MCCORMICK
SOUTH DAKOTA
REGISTERED
4/2/14

G:\Flex CAD\land projects R2\13405 Spruce Street\13405-Spruce St-2.dwg, 4/2/2014 11:49:58 AM, DWG To PDF.pc3

STATE OF SOUTH DAKOTA	PROJECT	SHEET NO.	TOTAL SHEETS
	P 3699(01)	B26	B88

FOR BIDDING PURPOSES ONLY

Note: The contractor shall not excavate material, place fill material or drive vehicles or equipment at any location within the boundaries of the Wetland Area as designated by SDDOT.

Note: The contractor shall use tie bolts to connect the flared end, bend and one 8' section of the 42" RCP.

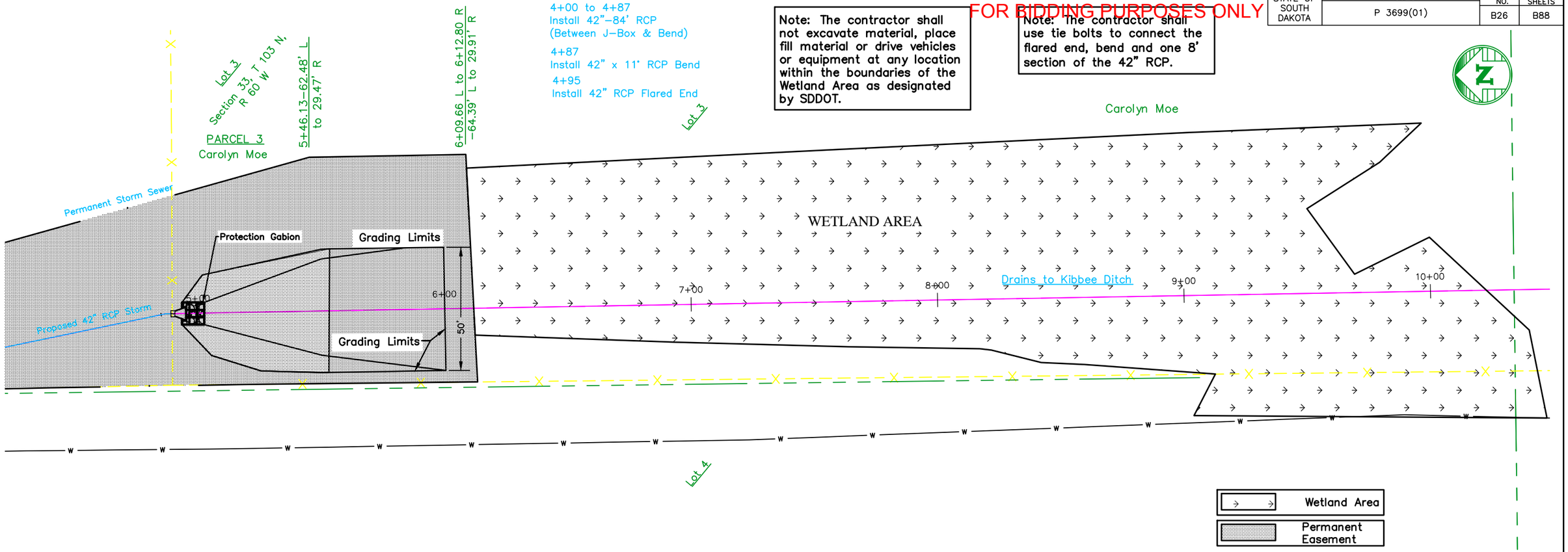

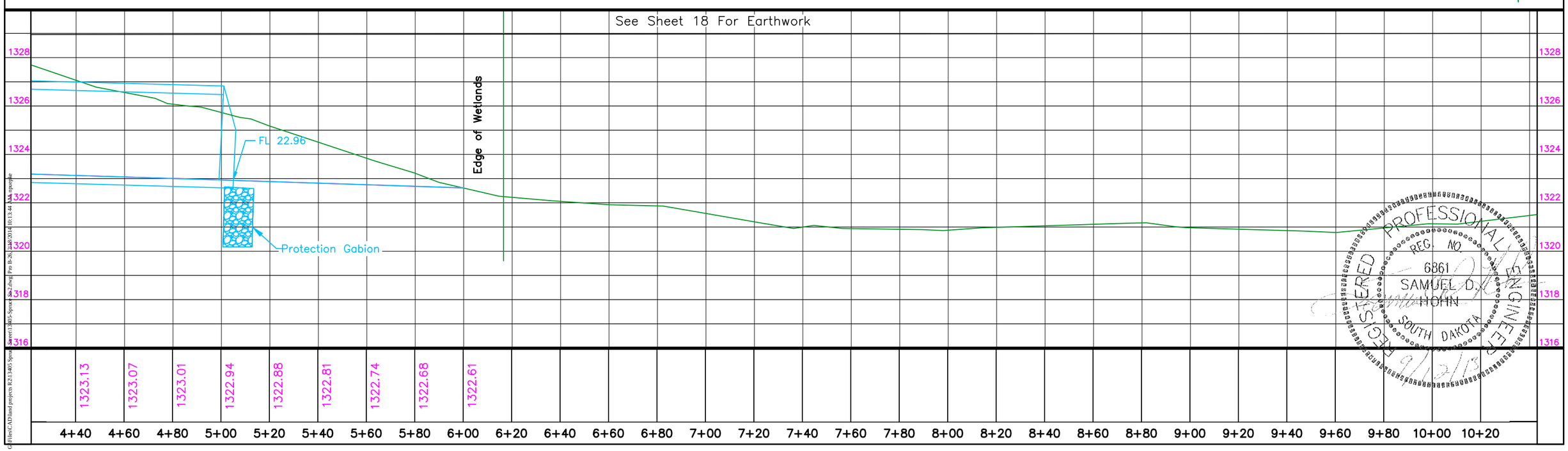

REGISTERED PROFESSIONAL ENGINEER
REG. NO. 6861
SAMUEL D. HOHN
SOUTH DAKOTA
9/12/13

G:\Files\CAD\land projects R2\13405 Spruce Street\13405-Spruce-Sht2.dwg Pro B-26, 2/10/2014 10:13:44 AM, rpurpke

STATE OF SOUTH DAKOTA	PROJECT	SHEET NO.	TOTAL SHEETS
	P 3699(01)	B27	B88

FOR BIDDING PURPOSES ONLY

REV 4-2-14 NAP

19+86 to 20+26–24' L
Take Out 15"–40' CMP
(Incidental Work, Grading)

Take Out Fence at these locations:
(Split Rail– Stockpile for Owner)
22+25 to 22+64–31' L
22+88 to 23+48–31' L

Take Out Fence
at these locations:
19+50 to 24+00–31' R

22+75–33' R
Install 2–12'
Tubular Gates

19+50 to 24+00– R
Install 450' of Type 1
Temporary Fence

19+50 to 22+63–33' R
Install 313' of Type 6S
R–O–W Fence

22+87 to 24+00–33' R
Install 113' of Type 6S
R–O–W Fence

Clear and Grub Trees
at the following locations:
23+33–31' R
23+40–31' R
23+61–29' R
23+79–29' R
23+81–28' R

Do Not Disturb Trees
at this location:
23+35 44' L

Refurbish single mailbox
at the following location:
22+93 L

Take Out & Reset by Others
20+53 L Telephone Pedestal

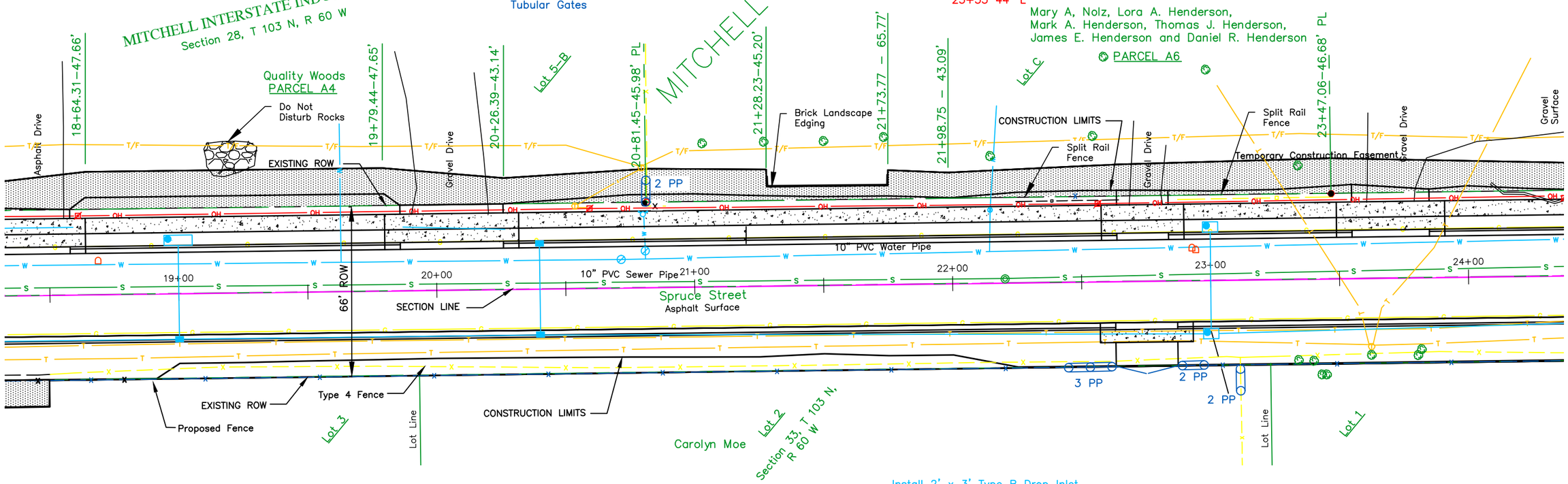

20+40–17.67' L to 20+40–17.67' R
Install 18"–34' RCP
(Between Drop Inlets)

20+40–17.67' R to 23+00–20.67' R
Install 18"–256' RCP
(Between Drop Inlets)

23+00–20.67' L to 23+00–20.67' R
Install 18"–38' RCP
(Between Drop Inlets)

Install 2' x 3' Type B Drop Inlet
with Type B Frame and Grate
at the following locations:
20+40–17.67' L
20+40–17.67' R

Install 4' x 6' Type S Drop Inlet
with Type S Manhole Frame and
Lid at the following locations:
23+00–20.67' L
23+00–20.67' R

Table of Right–of–Way Easements

	Station to Station	Side	Type	Purpose	Area Req'd (SqFt)	Owner	Legal Description
Parcel A6	20+81.45 to 23+47.06	L	Temporary	Grading	2877	Mary A. Nolz, Lora A. Henderson, Mark A. Henderson, Thomas J. Henderson, James E. Henderson and Daniel R. Henderson	Lot C, Thomsen's 1st Addition in the SE 1/4 of the SW 1/4 of Section 28, T 103 N, R 60 W of the 5th P.M., in the City Mitchell, Davison County, South Dakota.

REGISTERED PROFESSIONAL ENGINEER
REG. NO. 8471
JEFFREY P. McCORMICK
SOUTH DAKOTA
4/2/14
4/30/15

G:\Files\CAD\land projects R2\13405 Spruce St\13405-Spruce St-2.dwg, 4/2/2014 11:50:22 AM, DWG To PDF.pc3

FOR BIDDING PURPOSES ONLY

REV 2-18-14 SDN

STATE OF SOUTH DAKOTA	PROJECT	SHEET NO.	TOTAL SHEETS
	P 3699(01)	B28	B88

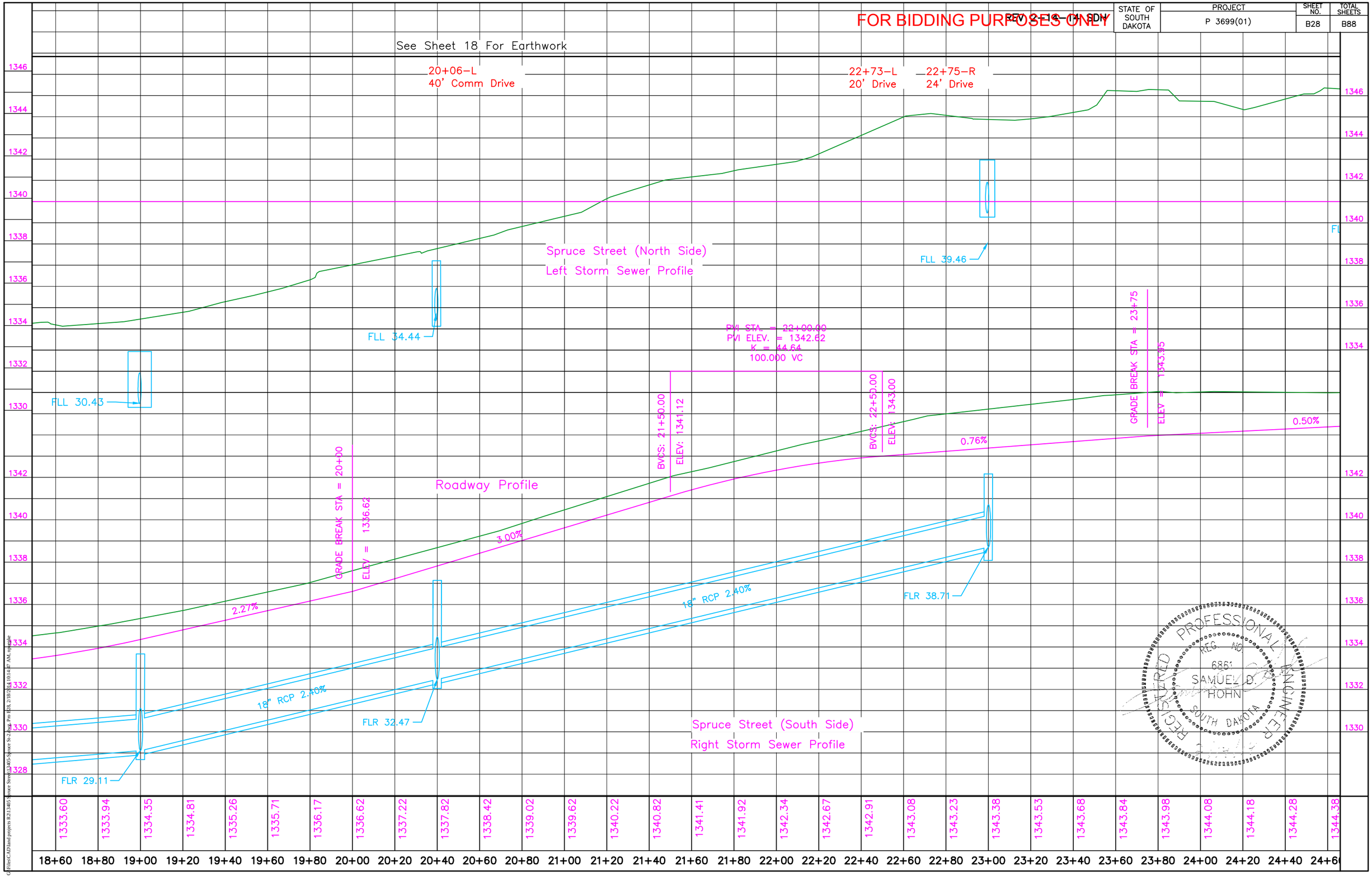

REGISTERED PROFESSIONAL ENGINEER
REG. NO. 6851
SAMUEL D. HOHN
SOUTH DAKOTA

G:\Files\CAD\land projects\R213405 Spruce St-2\dgn Pro E28, 2/18/2014 10:14:47 AM, nptaylor

STATE OF SOUTH DAKOTA	PROJECT	SHEET NO.	TOTAL SHEETS
	P 3699(01)	B29	B88

REV 4-2-14 NAP

FOR BIDDING PURPOSES ONLY

Take Out Fence
at these locations:
24+00 to 26+80 R
26+92–37' L to 47' L
26+92 to 28+66 40' L
27+55 to 29+00 R

Take Out Fence For Reset
at the following location:
26+80 to 27+55 32' R

Reset Fence
at the following location:
26+80 to 27+55 33' R

24+00 to 25+16– 33' R
Install 116' Type 6S
R–O–W Fence

24+00 to 26+80
Install 280' of Type 1
Temporary Fence

25+40 to 26+44– 33' R
Install 104' Type 6S
R–O–W Fence

27+79 to 29+00– 33' R
Install 121' Type 6S
R–O–W Fence

Take Out Sign for Reset
at the following locations:
26+33 37' L
26+39 38' L

Take Out Guywire
(By Others)
at the following location:
24+44 21' L

Take Out Bushes (Clearing)
27+00 to 28+66–37' L
(Incidental Work, Grading)

27+67– 33' R
Install 2–12'
Tubular Gates

Take Out & Reset Signs
(By Others)
at these locations:
26+32–32' L Gas Line

Take Out Sign for Reset
at these locations:
26+31–38' L Street Sign
26+41–40' L Stop

Take Out Landscape Curb and
Rock at these locations:
24+13 to 24+42 L
25+19 to 25+28 L
25+46 to 25+56 L
(Incidental Work, Grading)

Clear and Grub Trees
at the following locations:
27+80–24' R
28+06–29' R
28+36–29' R

Do Not Disturb Trees
24+85– 31' R
24+98– 32' R
26+03– 32' R

Refurbish single mailbox
at the following locations:
24+42 L Mail Box
27+53 R Mail Box

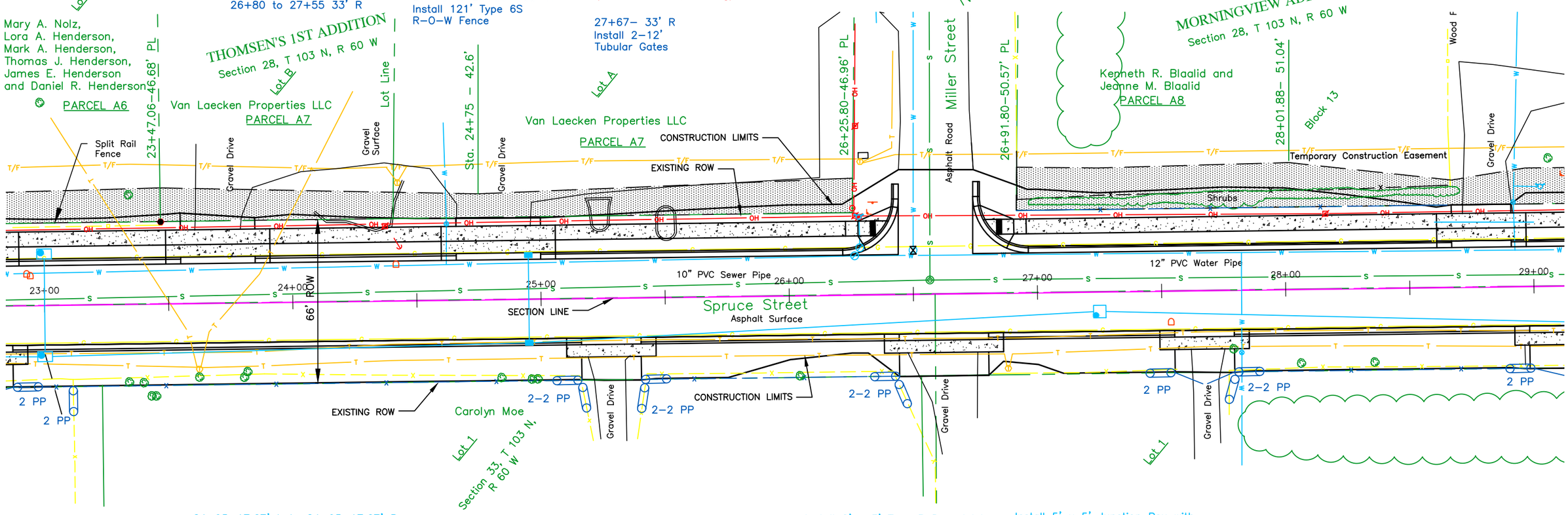

24+95–17.67' L to 24+95–17.67' R
Install 18"–34' RCP
(Between Drop Inlets)

24+95–17.67' R to 27+25–8.00' R
Install 18"–226' RCP
(Between Drop Inlet and Manhole)

27+25–8.00' R to 30+00–17.67' R
Install 18"–272' RCP
(Between Manhole and Drop Inlet)

Install 2' x 3' Type B Drop Inlet
with Type B Frame and Grate
at the following location:
24+95–17.67' R

Install 2' x 3' Type B Drop Inlet
with Special Frame and Grate
at the following location:
24+95–17.67' L

Install 5' x 5' Junction Box with
Type A Manhole Frame and Lid at
the following location:
27+25–8.00' R

Table of Right–of–Way Easements

	Station to Station	Side	Type	Purpose	Area Req'd (SqFt)	Owner	Legal Description
Parcel A7	23+47.06 to 26+25.80	L	Temporary	Grading	3238 ±	Van Laecken Properties LLC	Lots A & B Except the North 312.7' Thereof Lot B, Thomsen's 1st Addition, of Section 28, T 103 N, R 60 W of the 5th P.M., in the City of Mitchell, Davison County, South Dakota.
Parcel A8	26+91.80 to 31+18.80	L	Temporary	Grading	5309 ±	Kenneth R. Blaalid and Jeanne M. Blaalid	Block 13 Except Lot A of Block 13, Morningview Addition to the City of Mitchell, Davison County, South Dakota.

REGISTERED PROFESSIONAL ENGINEER
REG. NO. 8471
JEFFREY P. McCORMICK
SOUTH DAKOTA
4/2/14

G:\Files\CAD\land projects R2\13405 Spruce Street\13405-Spruce St-2.dwg, 4/2/2014 3:55:50 PM, DWG To PDF.pc3

FOR BIDDING PURPOSES ONLY

STATE OF SOUTH DAKOTA	PROJECT	SHEET NO.	TOTAL SHEETS
	P 3699(01)	B30	B88

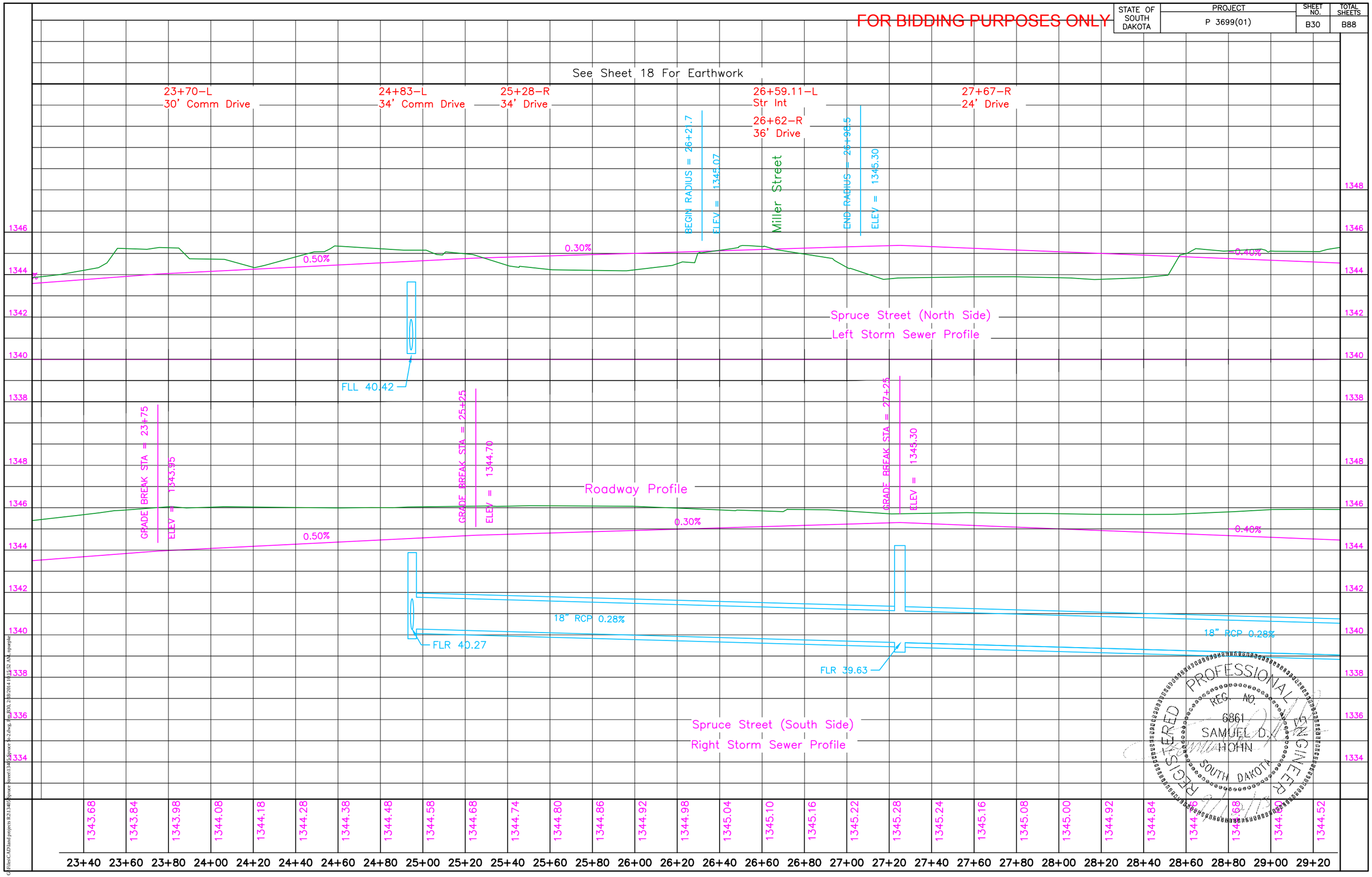

REGISTERED PROFESSIONAL ENGINEER
REG. NO. 6861
SAMUEL D. HOHN
SOUTH DAKOTA

G:\Files\CAD\land projects R2\13405\Spruce Street\13405-Spruce St-2.dwg, Plan530, 2/8/2014 10:15:52 AM, mpaquin

FOR BIDDING PURPOSES ONLY

REV 4-2-14 NAP

STATE OF SOUTH DAKOTA	PROJECT	SHEET NO.	TOTAL SHEETS
	P 3699(01)	B31	B88

28+60 to 29+00–25' L
Take Out 12"–40' CMP
(Incidental Work, Grading)

30+43 to 30+61–25' L
Take Out 6"–18' PVC
(Incidental Work, Grading)

32+32 to 33+14– 24' L
Take Out 12"–82' CMP
(Incidental Work, Grading)

Take Out Sign for Reset at
the following location:
31+42– L Speed Limit (35)

Take Out & Reset Sign
(By Others)
31+19– L Gas Line

Clear and Grub Trees
at the following locations:
31+74–30' R
31+78–27' R
31+94–28' R
32+00–27' R
32+03–31' R

Do Not Disturb Trees
at the following locations:
32+50– 32' R
32+63– 32' R
32+64– 32' R

Refurbish single mailbox
at the following locations:
29+28– L
32+28– L

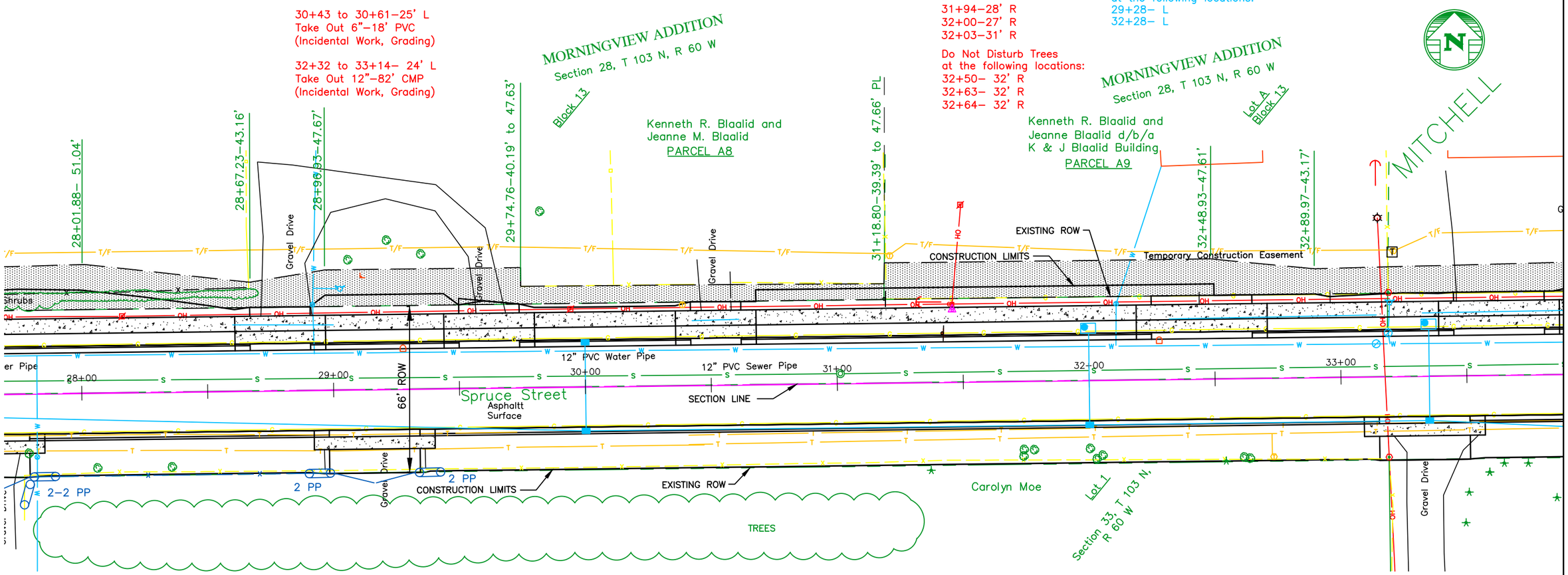

29+16–33' R
Install 2–16'
Tubular Gates

Take Out Fence
at the following location:
29+00 to 33+17 R

30+00–17.67' L to 30+00–17.67' R
Install 18"–34' RCP
(Between Drop Inlets)

30+00–17.67' R to 32+00–17.67' R
Install 18"–198' RCP
(Between Drop Inlets)

32+00–20.67' L to 32+00–17.67' R
Install 18"–36' RCP
(Between Drop Inlets)

32+00–17.67' R to 33+35–17.67' R
Install 18"–132' RCP
(Between Drop Inlets)

Install 2' x 3' Type B Drop Inlet
with Type B Frame and Grate
at the following Locations:
30+00–17.67' L
30+00–17.67' R
32+00–17.67' R

Install 4' x 6' Type S Drop Inlet
with Type S Manhole Frame and
Lid at the following locations:
32+00–20.67' L

Table of Right–of–Way Easements

	Station to Station	Side	Type	Purpose	Area Req'd (Acre)	Owner	Legal Description
Parcel A9	31+18.80 to 33+18.80	L	Temporary	Grading	2679 ±	Kenneth R. Blaalid and Jeanne Blaalid d/b/a K&J Blaalid Building	Lot A, Block 13, Morningview Addition to Mitchell, Davison County, South Dakota.

REGISTERED PROFESSIONAL ENGINEER
REG. NO. 8471
JEFFREY P. McCORMICK
SOUTH DAKOTA
4/2/14
4/23/15

G:\Files\CAD\land projects R2\13405 Spruce Str-2.dwg, 4/2/2014 3:56:11 PM, DWG To PDF.pc3

FOR BIDDING PURPOSES ONLY

REV 2-19-14 SDN

STATE OF SOUTH DAKOTA	PROJECT	SHEET NO.	TOTAL SHEETS
	P 3699(01)	B32	B88

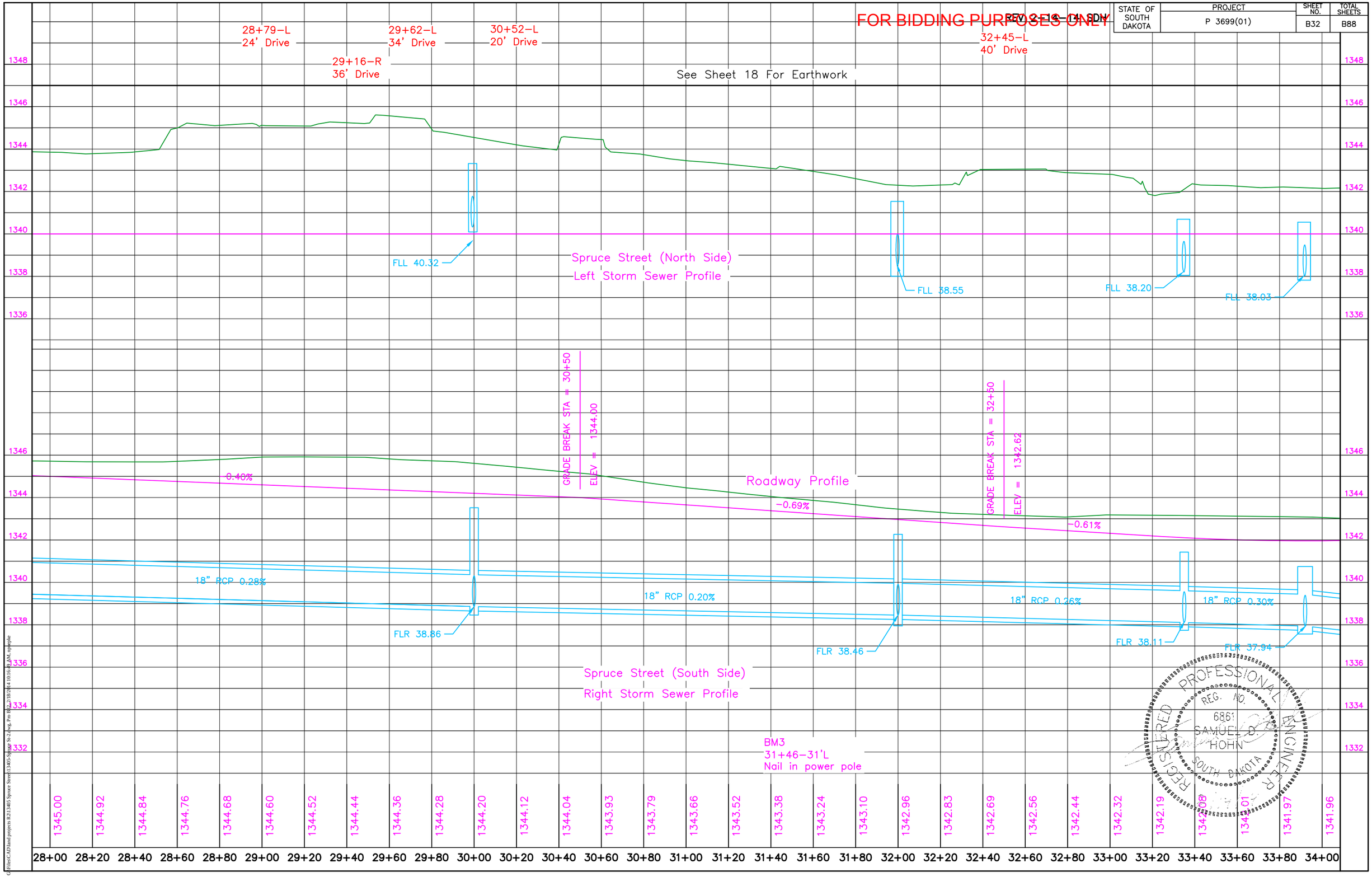

G:\Files\CAD\land projects\2013\05 Spruce St-2.dwg, Pro B32, 2/18/2014 10:16:29 AM, rpiepke

STATE OF SOUTH DAKOTA	PROJECT	SHEET NO.	TOTAL SHEETS
	P 3699(01)	B33	B88

REV 2-18-14 SDN

FOR BIDDING PURPOSES ONLY

33+32 to 34+74 L
Take Out 12"–42' CMP
(Incidental Work, Grading)

36+61 to 37+11 L
Take Out 12"–50' CMP
(Incidental Work, Grading)

36+80 to 38+14–18' L
Take Out 12"–34' PVC
(Incidental Work, Grading)

Clear & Grub Trees at the following locations:
34+80–30' L
34+80–35' L
35+12–34' L
35+21–35' L
35+34–34' L

Refurbish single mailbox at the following location:
35+13 R

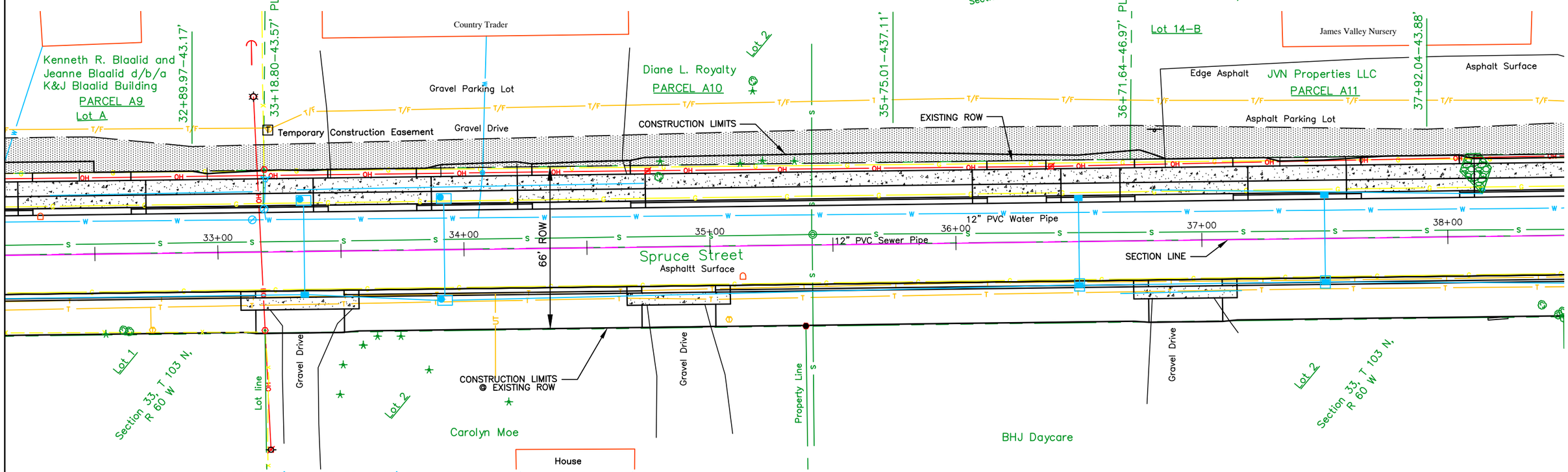

33+35–20.67' L to 33+35–17.67' R
Install 18"–36' RCP
(Between Drop Inlets)

33+35–17.67' R to 33+92–20.67' R
Install 18"–54' RCP
(Between Drop Inlets)

33+92–20.67' L to 33+92–20.67' R
Install 18"–38' RCP
(Between Drop Inlets)

33+92–20.67' R to 36+50–17.67' R
Install 18"–254' RCP
(Between Drop Inlets)

36+50–17.67' L to 36+50–17.67' R
Install 18"–34' RCP
(Between Drop Inlets)

36+50–17.67' R to 37+50'–17.67' R
Install 24"–98' RCP
(Between Drop Inlets)

37+50–17.67' L to 37+50–17.67' R
Install 18"–34' RCP
(Between Drop Inlets)

37+50–17.67' R to 39+25–20.67' R
Install 24"–172' RCP
(Between Drop Inlets)

Install 2' x 3' Type B Drop Inlet with Special Inlet Frame and Grate at the following location:
33+35–17.67' R
37+50–17.67' L

Install 2' x 3' Type B Drop Inlet with Type B Frame and Grate at the following locations:
36+50–17.67' L

Install 4' x 3' Type B Drop Inlet with Type B Frame and Grate at the following locations:
36+50–17.67' R
37+50–17.67' R

Install 4' x 6' Type S Drop Inlet with Type S Manhole Frame and Lid at the following locations:
33+35–20.67' L
33+92–20.67' L
33+92–20.67' R

Table of Right–of–Way Easements

	Station to Station	Side	Type	Purpose	Area Req'd (SqFt)	Owner	Legal Description
Parcel A10	33+18.80 to 36+71.64	L	Temporary	Grading	5058 ±	Diane L. Royalty	Lot 14–B Except the East 272 feet of Lot 14–B, All in Block 14, Morningview Addition to the City of Mitchell, Davison County, South Dakota.
Parcel A11	36+71.64 to 39+46.06	L	Temporary	Grading	4458 ±	JVN Properties LLC	East 272' of Lot 14–B, Except Lot 1, Therein Block 14, Morningview Addition to the City of Mitchell in the SE 1/4 of Section 28, T 103 N, R 60 W of the 5th P.M., in the City of Mitchell, Davison County, South Dakota.

REGISTERED PROFESSIONAL ENGINEER
REG. NO. 6861
SAMUEL D. HOHN
SOUTH DAKOTA

G:\Files\CADland projects R2\13405 Spruce Street\13405-Spruce St-2.dwg, B-33, 2/18/2014 10:17:02 AM, rpuepke

FOR BIDDING PURPOSES ONLY

REV 2-19-14 SDH

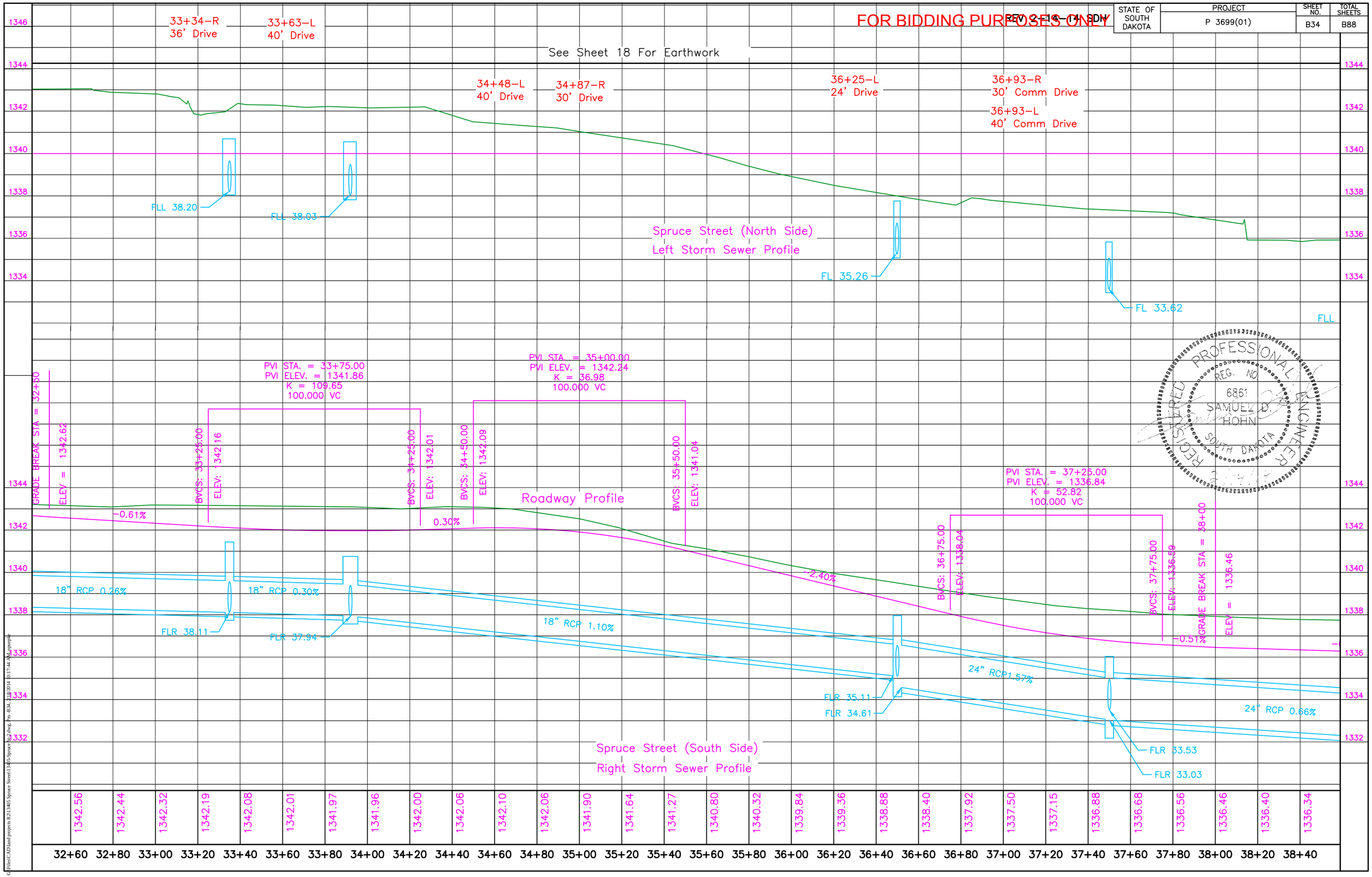

G:\Files\CAD\land projects R2\13405 Spruce Street\13405-Spruce Sc2.dwg, Pro-B34, 2/18/2014 10:17:44 AM, mjprople

STATE OF SOUTH DAKOTA	PROJECT	SHEET NO.	TOTAL SHEETS
	P 3699(01)	B35	B88

FOR BIDDING PURPOSES ONLY

REV 4-2-14 JMP

36+85 to 38+15– 16' to 34.5' L
Take Out Asphalt Concrete Approach

38+65 to 39+00– 16' to 35' L
Take Out Asphalt Concrete Approach

38+64 to 38+98–20' L
Take Out 12"–34' HDPE
(Incidental Work, Grading)

39+62 to 40+12–24' L
Take Out 18"–50' CMP
(Incidental Work, Grading)

40+68 to 41+62–24' L
Take Out 18"–94' CMP
(Incidental Work, Grading)

41+07 to 43+00–32' R
Take Out Fence

Clear and Grub Trees
at the following locations:
38+47–32' R
38+65–30' R
39+08–30' R
39+20–26' R
39+36–32' R
39+63–29' R
39+63–33' R
39+75–29' R
39+91–31' R
40+15–31' R
40+30–30' R
40+37–33' R
40+38–30' R
40+48–24' R
40+48–27' R
40+69–25' R
40+81–30' R
40+82–31' R
41+39–29' R
41+47–23' R
41+47–25' R

Do Not Disturb Trees
40+13– 47' L
40+32– 39' L
40+46– 39' L
40+57– 40' L
40+57– 45' L
41+14– 41' L
41+31– 41' L
41+57– 34' L
41+61– 32' L
41+69– 39' L
41+85– 40' L
42+06– 39' L
42+27– 39' L
42+44– 41' L
42+58– 40' L
42+71– 39' L
42+88– 39' L

Take Out Sign for Reset
at following locations:
39+51 L Street
39+61 L Stop
42+08 R Speed Limit

Relocate (By Others)
at these locations:
38+56 R Telephone Pedestal
40+09 L Telephone Pedestal
40+10 L Gas Sign

41+07 to 43+00–33' R
Install 193' Type 1
Temporary Fence

41+07 to 43+00–33' R
Install 193' Type 2
R–O–W Fence

Refurbish single mailbox
at the following location:
40+70 L
41+01 R

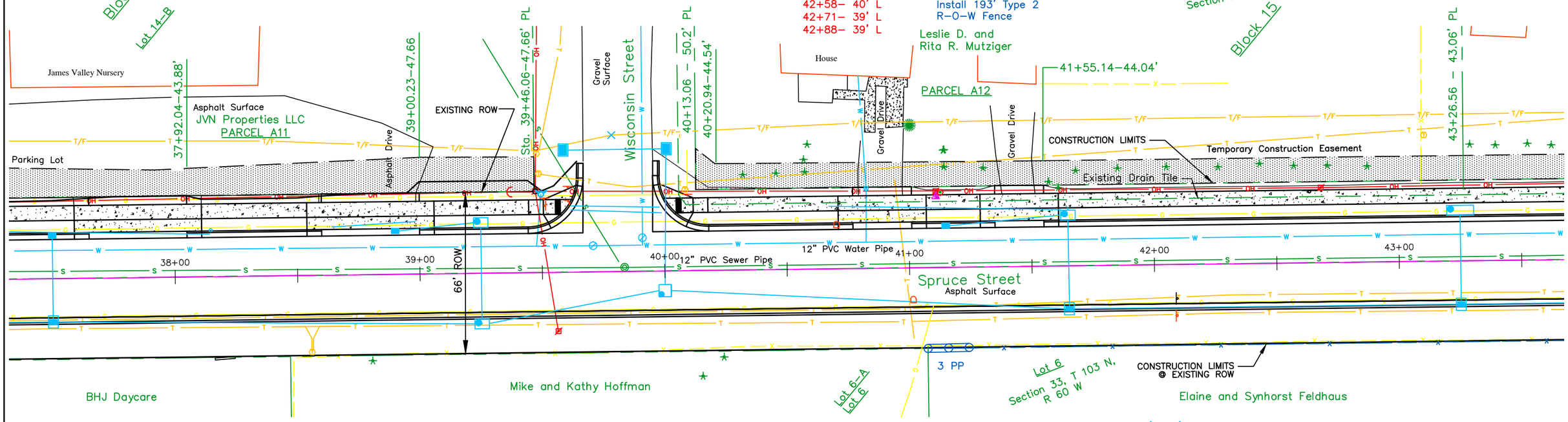

38+90–17.67' L to 39+25–20.67' L
Install 18"–32' RCP
(Between Drop Inlets)

39+25–20.67' L to 39+25–20.67' R
Install 18"–38' RCP
(Between Drop Inlets)

39+25–20.67' R to 40+00–8.00' R
Install 24"–70' RCP
(Between Drop Inlet and Junction Box)

39+58–50.00' L to 40+01–50.00' L
Install 18"–40' RCP
(Between Type C Inlets)

40+00–8.00' R to 40+01'–50.00' L
Install 18"–54' RCP
(Between Junction Box and Drop Inlet)

40+00–8.00' R to 41+65–17.67' R
Install 24"–162' RCP
(Between Junction Box and Drop Inlet)

41+15–17.67' L to 41+65–17.67' L
Install 24"–46' RCP
(Between Drop Inlets)

41+65–20.67' L to 41+65–17.67' R
Install 18"–36' RCP
(Between Drop Inlets)

41+65–17.67' R to 43+25–17.67' R
Install 24"–158' RCP
(Between Drop Inlets)

Install 2' x 3' Type B Drop Inlet
with Special Frame and Grate
at the following locations:
38+90–17.67' L

Install 4' x 3' Type B Drop Inlet
with Type B Frame and Grate
at the following locations:
41+65–17.67' R

Install 2' x 3' Type B Drop Inlet
with Special Frame and Grate
at the following location:
41+15–17.67' L

Install 5' x 5' Junction Box with
Type A Manhole Frame and Lid at
the following location:
40+00–8.00' R

Install 4' x 6' Type S Drop Inlet
with Type S Manhole Frame and
Lid at the following locations:
39+25–17.67' L
39+25–20.67' R
41+65–20.67' L

Install 3' x 4' Type C Drop Inlet
W/Type C Frame and Grate at
the following location:
39+58–50.00' L
40+01–50.00' L

REGISTERED PROFESSIONAL ENGINEER
REG. NO. 8471
JEFFREY P. McCORMICK
SOUTH DAKOTA
4/2/14
#13405

Table of Righ–of–Way Easements

	Station to Station	Side	Type	Purpose	Area Req'd (SqFt)	Owner	Legal Description
Parcel A12	40+13.06 to 43+26.56	L	Temporary	Grading	3214 ±	Leslie D. and Rita R. Mutziger	S 1/2 of the W 1/2 of Block 15, Morningview Addition to the City of Mitchell, Davison County, South Dakota.

G:\Files\CAD\land projects R2\13405 Spruce Street\13405-Spruce St-2.dwg, 4/2/2014 11:51:22 AM, DWG To PDF.pc3

FOR BIDDING PURPOSES ONLY

REV 2-19-14 SDH

STATE OF SOUTH DAKOTA	PROJECT	SHEET NO.	TOTAL SHEETS
	P 3699(01)	B36	B88

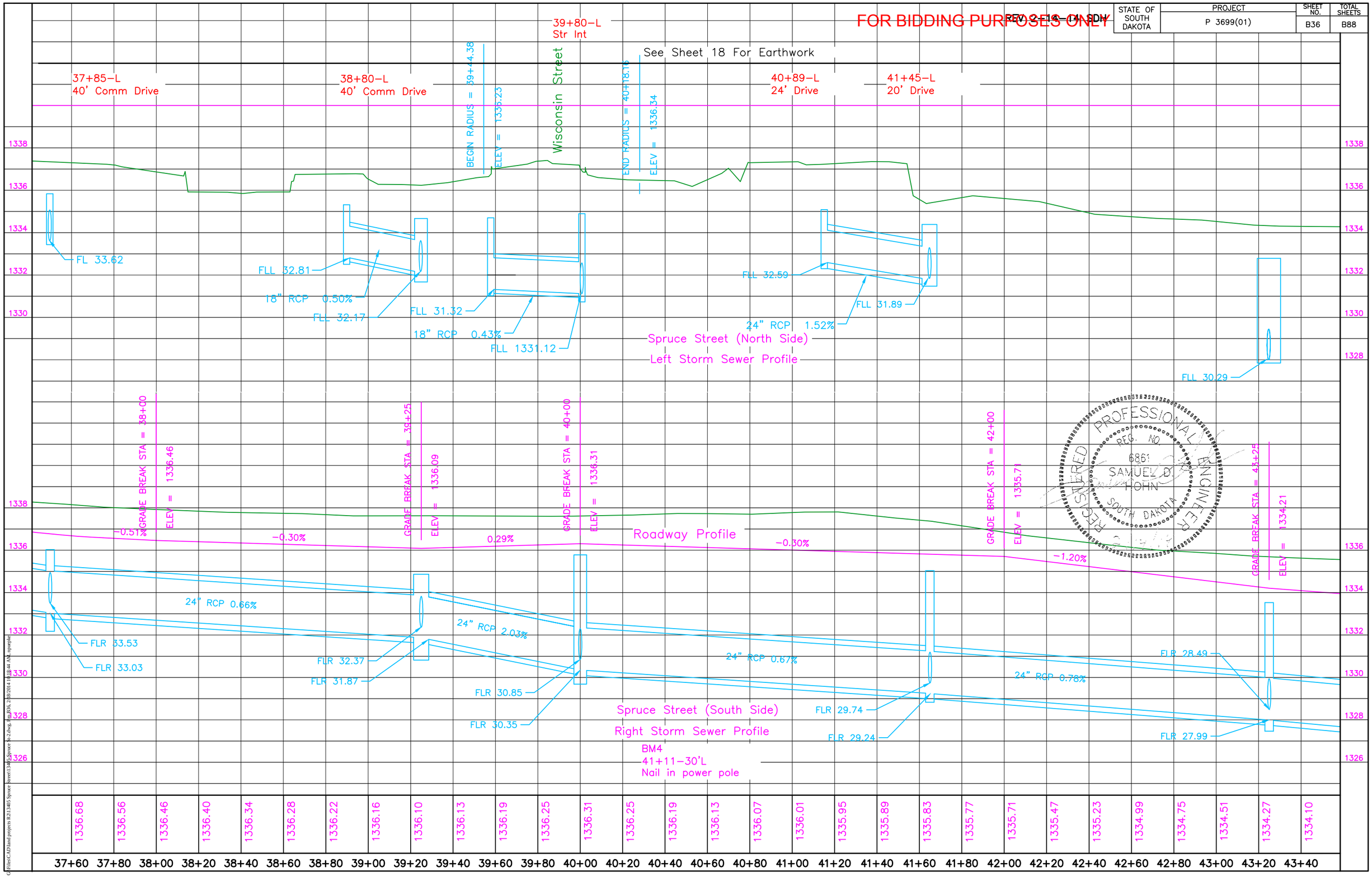

G:\Files\CAD\land projects R2\13405 Spruce Street\13405 Spruce St-2.dwg, Plan B36, 2/18/2014 11:18:44 AM, rpnaple

STATE OF SOUTH DAKOTA	PROJECT	SHEET NO.	TOTAL SHEETS
	P 3699(01)	B37	B88

FOR BIDDING PURPOSES ONLY

REV 2-18-14 SDN

43+76 to 44+04–26' L
Take Out 18"–28' CMP
(Incidental Work, Grading)

44+45 to 45+75–25' L
Take Out 18"–30' CMP
(Incidental Work, Grading)

43+00–32' R to 48+00–35' R
Take Out Fence

43+00 to 48+00–33' R
Install 500' of Type 1
Temporary Fence

43+00 to 48+00–33' R
Install 500' of Type 2
R–O–W Fence

Do Not Disturb Tree
44+35– 41' L

Clear and Grub Trees at following locations:

43+03 24' R	43+78 24' R	44+75 28' R
43+07 31' L	43+88 31' R	44+83 22' R
43+19 24' R	44+03 24' R	44+86 24' R
43+19 25' R	44+14 24' R	44+94 28' R
43+23 27' R	44+21 26' R	44+96 28' R
43+27 32' R	44+21 30' R	45+05 23' R
43+35 26' R	44+23 32' R	45+12 27' R
43+47 24' R	44+31 30' R	45+20 28' R
43+50 31' R	44+32 25' R	45+27 25' R
43+52 24' R	44+35 23' R	45+27 26' R
43+52 25' R	44+50 23' R	45+27 27' R
43+55 29' R	44+57 24' R	45+41 27' R
43+70 31' R	44+59 28' R	45+45 27' R
43+70 32' R	44+70 24' R	45+51 25' R
43+71 31' R	44+73 24' R	46+06 31' R
		46+08 31' R

Refurbish single mailbox
at the following location:
43+79 R

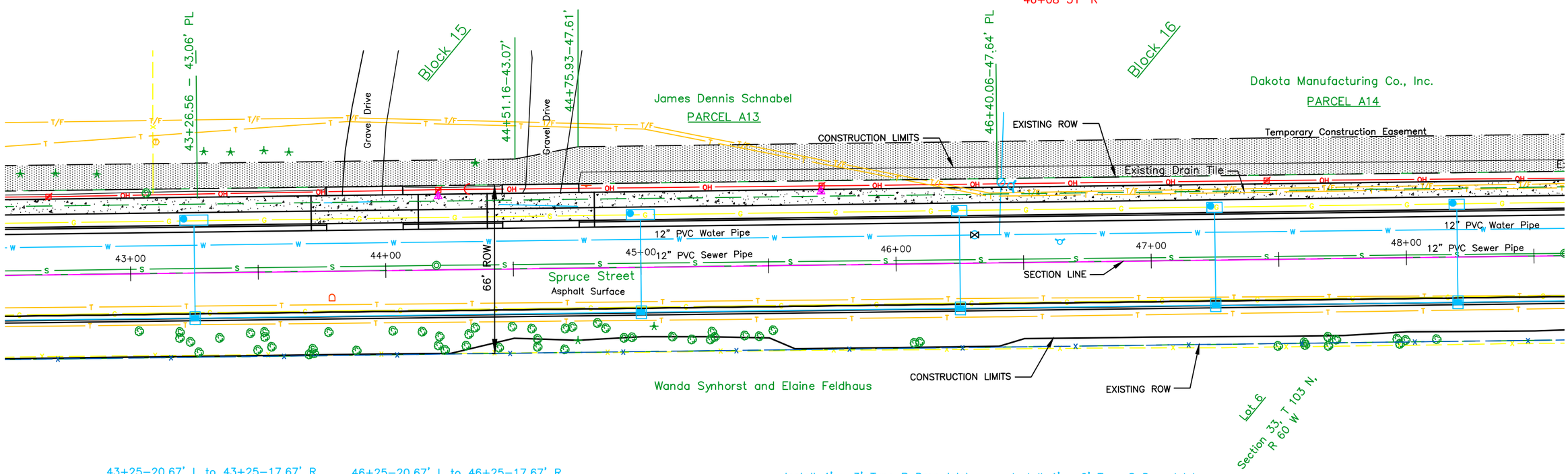

43+25–20.67' L to 43+25–17.67' R
Install 18"–36' RCP
(Between Drop Inlets)

43+25–17.67' R to 45+00–17.67' R
Install 24"–172' RCP
(Between Drop Inlets)

45+00–20.67' L to 45+00–17.67' R
Install 18"–36' RCP
(Between Drop Inlets)

45+00–17.67' R to 46+25–17.67' R
Install 30"–122' RCP
(Between Drop Inlets)

46+25–20.67' L to 46+25–17.67' R
Install 18"–36' RCP
(Between Drop Inlets)

46+25–17.67' R to 47+25–17.67' R
Install 30"–98' RCP
(Between Drop Inlets)

47+25–20.67' L to 47+25–17.67' R
Install 18"–36' RCP
(Between Drop Inlets)

47+25–17.67' R to 48+20–17.67' R
Install 30"–92' RCP
(Between Drop Inlets)

Install 4' x 3' Type B Drop Inlet
with Type B Frame and Grate
at the following locations:
43+25–17.67' R
45+00–17.67' R
46+25–17.67' R
47+25–17.67' R

Install 4' x 6' Type S Drop Inlet
with Type S Manhole Frame and
Lid at the following locations:
46+25–20.67' L
47+25–20.67' L

Install 4' x 11' Type S Drop Inlet
with Type S Manhole Frame and
Lid at the following location:
43+25–20.67' L
45+00–20.67' L

REGISTERED PROFESSIONAL ENGINEER
REG. NO. 6861
SAMUEL D. HOHN
SOUTH DAKOTA

Table of Righ–of–Way Easements

	Station to Station	Side	Type	Purpose	Area Req'd (SqFt)	Owner	Legal Description
Parcel A13	43+26.56 to 46+40.06	L	Temporary	Grading	3937 ±	James Dennis Schnabel	E 1/2 of Block 15, Morningview Addition to the City of Mitchell, Davison County, South Dakota.

G:\Files\CAD\land projects R2\13405 Spruce Street\13405-Spruce St-2.dwg, B-37, 2/18/2014 10:10:57 AM, spurgke

FOR BIDDING PURPOSES ONLY

REV 2-16-14 SDN

STATE OF SOUTH DAKOTA	PROJECT	SHEET NO.	TOTAL SHEETS
	P 3699(01)	B38	B88

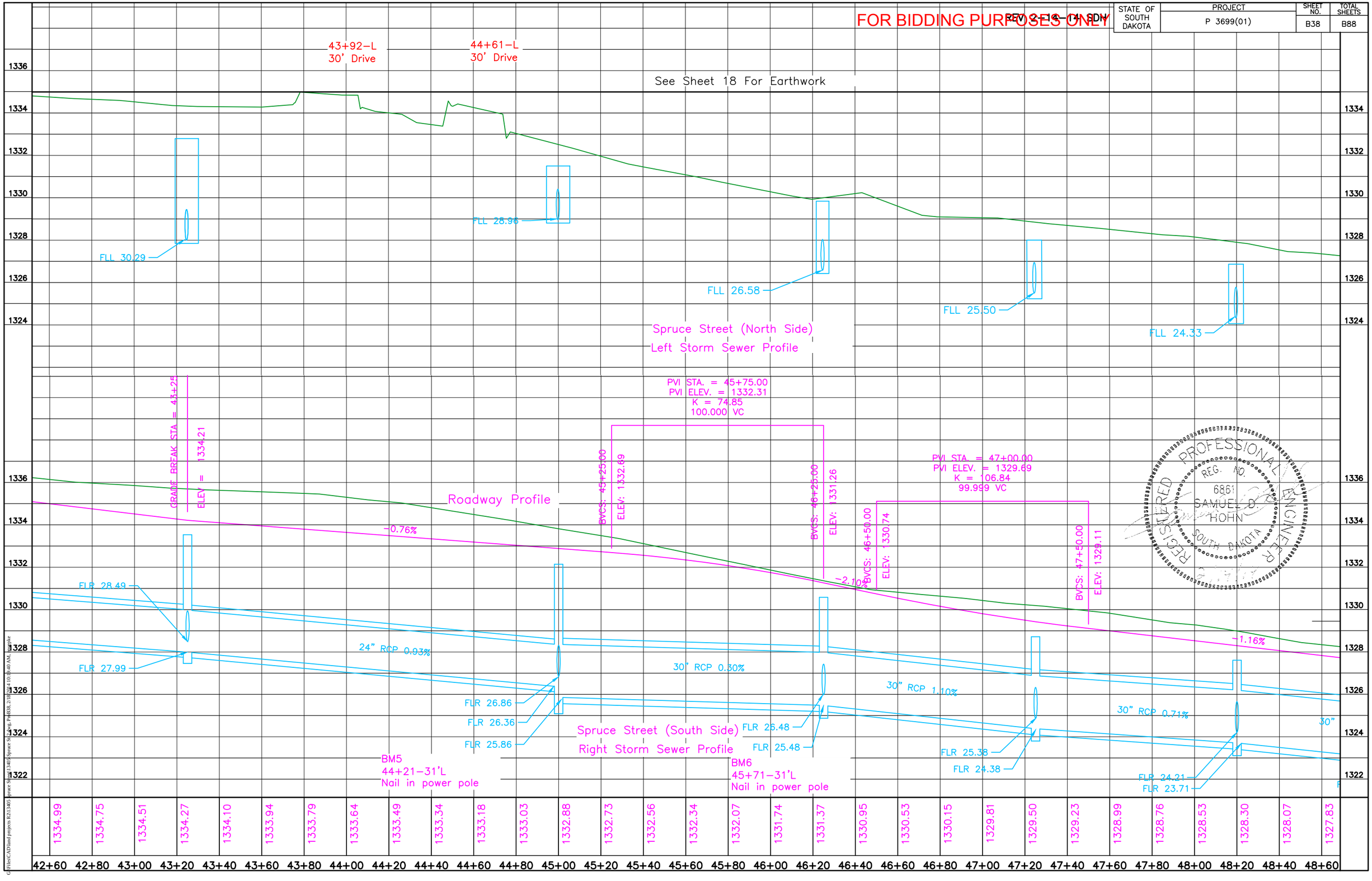

REGISTERED PROFESSIONAL ENGINEER
REG. NO. 6861
SAMUEL D. HOHN
SOUTH DAKOTA

G:\Files\CAD\land projects R2\13405-Spruce St\Dwg. Pub\B38, 2/18/2014 10:39:40 AM, Murpke

FOR BIDDING PURPOSES ONLY

REV 4-2-14 NAP

STATE OF SOUTH DAKOTA	PROJECT	SHEET NO.	TOTAL SHEETS
	P 3699(01)	B39	B88

Take Out Fence
48+00 to 52+50 R
52+50 34' R to 43' R

48+00 to 52+50–33' R
Install 450' of Type 1
Temporary Fence

48+00 to 52+50–33' R
Install 450' of Type 2
R–O–W Fence

52+50–33' to 43' R
Install 10' of Type 2
R–O–W Fence

Take Out Sign [illegible]
49+25–R Stop Ahead

Clear and Grub Trees at
following locations:
48+75 29' R
49+42 30' R
49+52 28' R
49+85 45' R
50+15 40' R
50+54 40' R
50+91 30' R
51+91 41' R
51+94 28' R
51+95 39' R

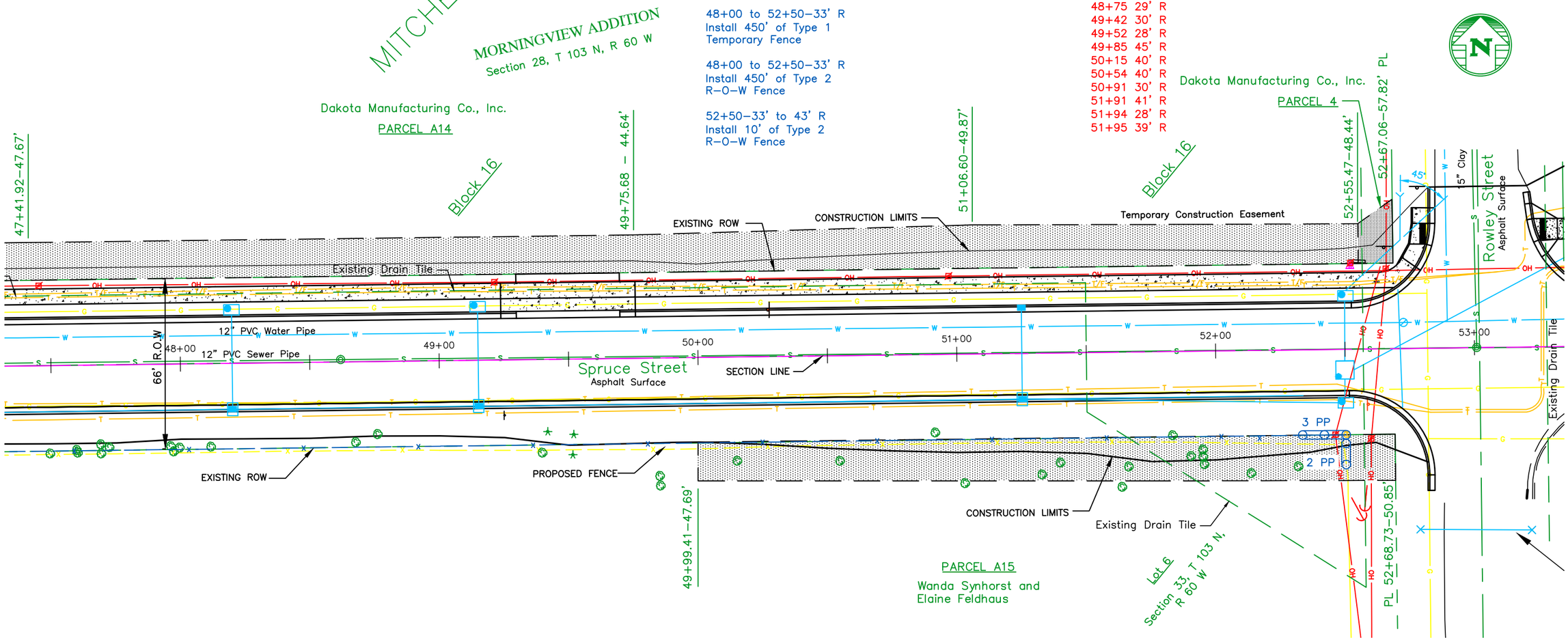

48+20 20.67' L to 48+20 17.67' R
Install 18"–36' RCP
(Between Drop Inlets)

48+20–17.67' R to 49+15–17.67' R
Install 30"–92' RCP
(Between Drop Inlets)

49+15–20.67' L to 49+15–17.67' R
Install 18"–36' RCP
(Between Drop Inlets)

49+15–17.67' R to 51+25–17.67' R
Install 36"–208' RCP
(Between Drop Inlets)

51+25–17.67' L to 51+25–17.67' R
Install 18"–34' RCP
(Between Drop Inlets)

Install 4' x 3' Type B Drop Inlet
with Type B Frame and Grate
at the following locations:
48+20–17.67' R
49+15–17.67' R
51+25–17.67' R

Install 4' x 6' Type S Drop Inlet
with Type S Manhole Frame and
Lid at the following location:
48+20–20.67' L
49+15–20.67' L

Install 2' x 3' Type B Drop Inlet
with Type B Frame and Grate
at the following location:
51+25–17.67' L

Do not Disturb Trees
at these locations:
50+15 40' R
50+54 40' R
51+33 46' R
51+39 42' R
51+67 44' R
51+95 44' R
52+14 48' R
52+32 45' R

Table of Right–of–Way Easements

	Station to Station	Side	Type	Purpose	Area Req'd (SqFt)	Owner	Legal Description
Parcel 4	52+53.63 to 52+67.06	L	Permanent	Culvert Access	268 ±	Dakota Manufacturing Co., Inc.	Block 16, Morningview Addition to the City of Mitchell, Davison County, South Dakota.
Parcel A14	46+40.06 to 52+53.63	L	Temporary	Grading	9326 ±	Dakota Manufacturing Co., Inc.	Block 16, Morningview Addition to the City of Mitchell, Davison County, South Dakota.
Parcel A15	49+99.41 to 52+68.73	R	Temporary	Grading	4449 ±	Wanda Synhorst and Elaine Feldhaus	Lot 6, except Lot 6A of Lot 6, in the NE 1/4, of Section 33, T 103 N, R 60 W of the 5th P.M., Davison County, South Dakota.

REGISTERED PROFESSIONAL ENGINEER
REG. NO. 8471
JEFFREY P. McCORMICK
SOUTH DAKOTA
4/2/14

G:\Files\CAD\land projects R2\13405 Spruce Street\13405-Spruce St-2.dwg, 4/2/2014 11:51:42 AM, DWG To PDF.pc3

FOR BIDDING PURPOSES ONLY

REV 2-14-14 SDN

STATE OF SOUTH DAKOTA	PROJECT	SHEET NO.	TOTAL SHEETS
	P 3699(01)	B40	B88

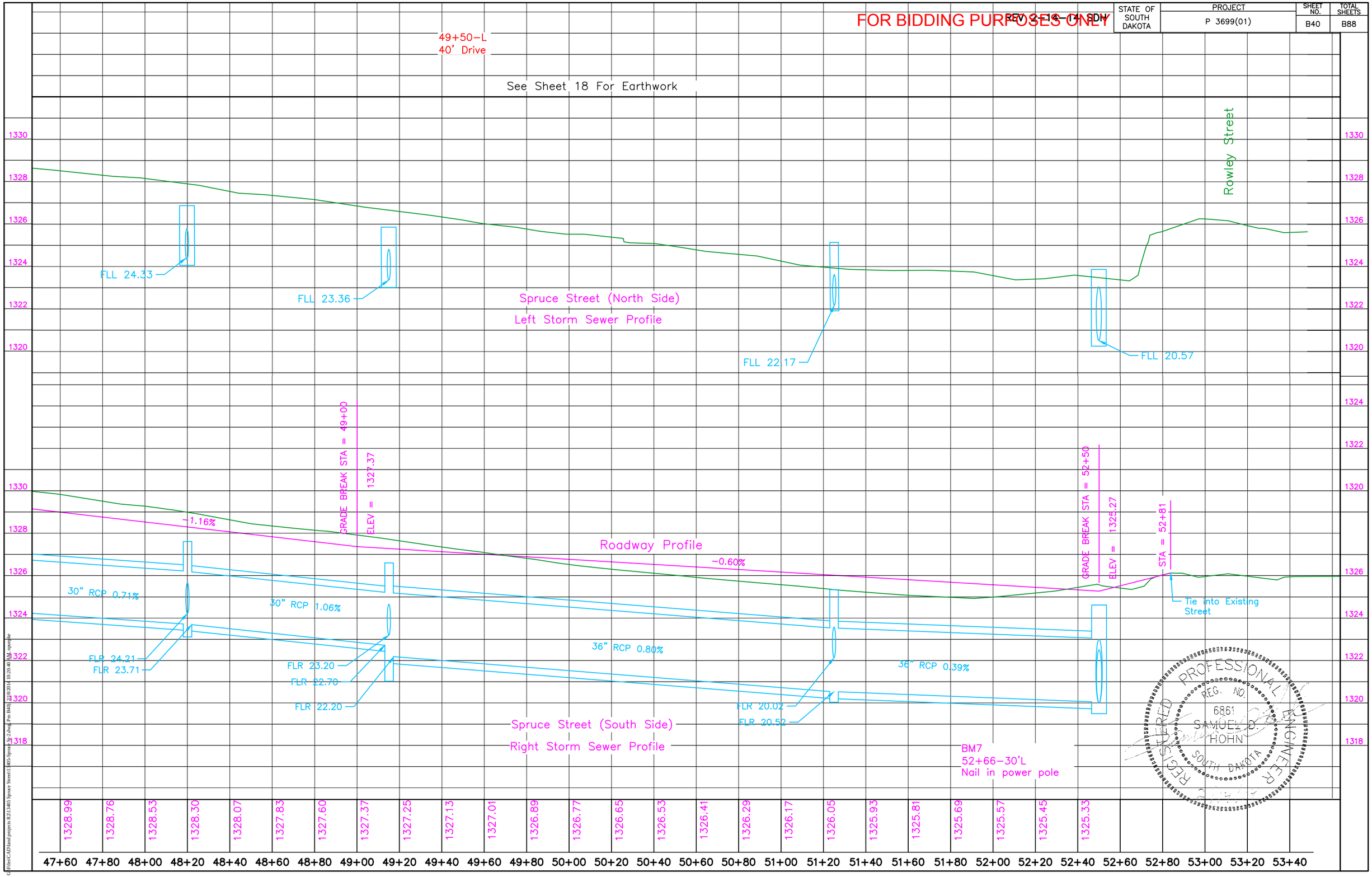

G:\Files\CAD\land projects\R2\13405-Spruce Street\13405-Spruce St-2.dwg Pro B40 2/18/2014 10:20:40 AM rpeplue

FOR BIDDING PURPOSES ONLY

REV 4-2-14 NAP

STATE OF SOUTH DAKOTA	PROJECT	SHEET NO.	TOTAL SHEETS
	P 3699(01)	B41	B88

53+23 to 53+73 – 41' to 51' L
Take Out concrete Sidewalk–44 SqYd

52+71 23' R to 23' L
Take Out 14"–46' PVC

53+20 to 53+56– 17' L to 60' L Take Out Curb and Gutter–58'

Take out Signs for Reset
50+29 L Speed Limit (35)
52+55 L Advertising (JVN)
52+58 R Stop
53+65 L Advertising (Cab)

Do Not Disturb Trees:
54+69 83' L
54+77 80' L

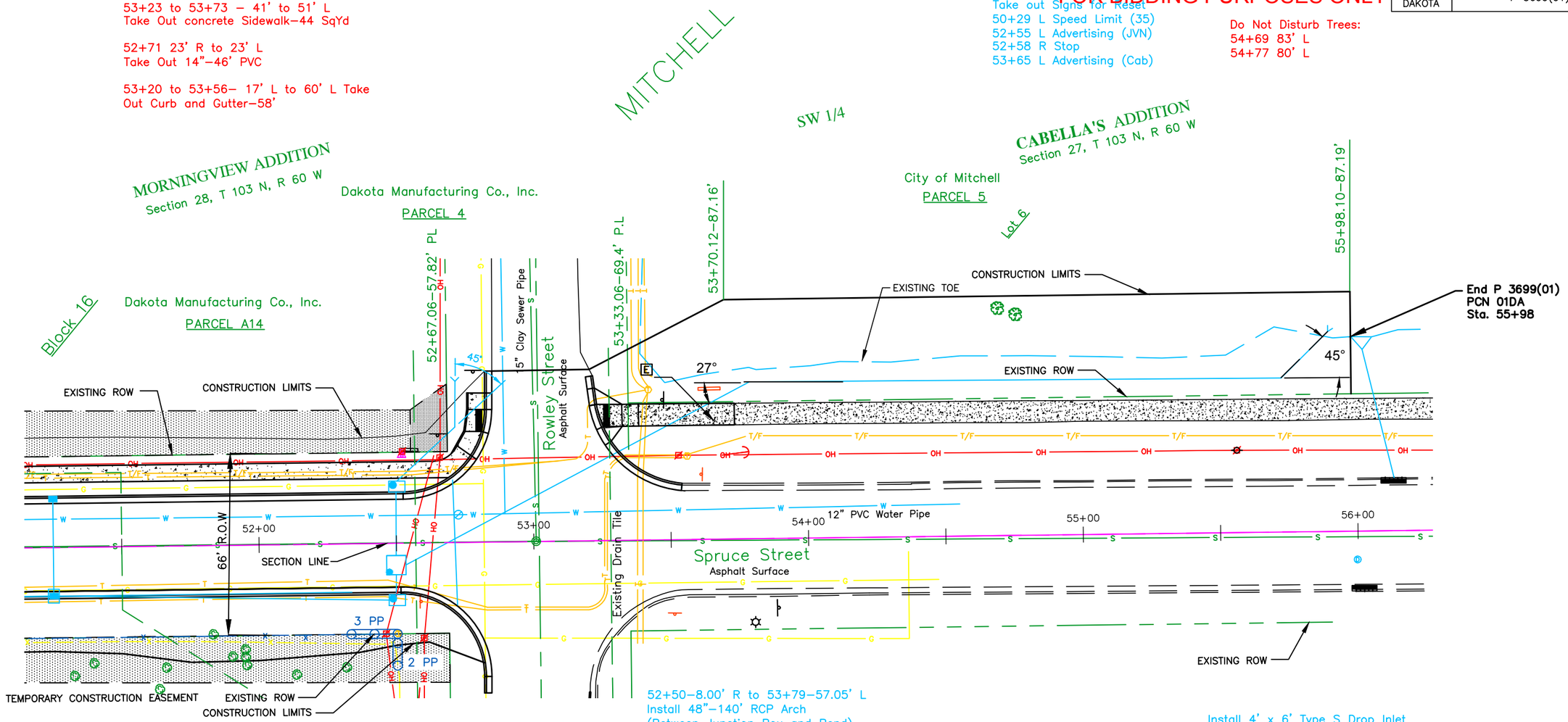

51+25–17.67' R to 52+50–20.67' R
Install 36"–122' RCP
(Between Drop Inlets)

52+50–20.67' R to 52+50–8.00' R
Install 36"–8' RCP
(Between Drop Inlet and Junction Box)

52+50–8.00' R to 52+50–20.67' L
Install 30"–24' RCP
(Between Junction Box and Drop Inlet)

52+50–20.67' L to 52+71.76–42.00' L
Install 24"–28' RCP
(Between Drop Inlet and Bend)

52+71.76–42.00' L
Install 45° RCP Bend

52+71.76–42.00' L to 52+72.05–59.00' L
Install 24"–12' RCP
(Between Bend and Flared End)

52+72.05–59.00' L
Install 24" RCP Flared End

52+50–8.00' R to 53+79–57.05' L
Install 48"–140' RCP Arch
(Between Junction Box and Bend)

53+79–57.05' L
Install 48"–27' RCP Arch Bend

53+79–57.05' L to 55+72.7–56.20' L
Install 48"–190' RCP Arch
(Between Bends)

55+73–56.20' L
Install 48"–45' RCP Arch Bend

55+73–56.20' L to 55+91.37–74.17' L
Install 48"–18' RCP Arch
(Between Bend and 1 Flared End)

55+91.37–71.17' L
Install 48" RCP Arch Flared End

Install 4' x 6' Type S Drop Inlet with Type S Manhole Frame and Lid at the following locations:
52+50–20.67' L
52+50–20.67' R

Install 7' x 7' Junction Box with Type A Manhole Frame and Lid at the following location:
52+50–8.00' R

REGISTERED PROFESSIONAL ENGINEER
REG. NO. 8471
JEFFREY P. McCORMICK
SOUTH DAKOTA
4/2/14
#13405

G:\Files\CAD\land projects R2\13405 Spruce Street\13405-Spruce St-2.dwg, 4/2/2014 11:52:02 AM, DWG To PDF.pc3

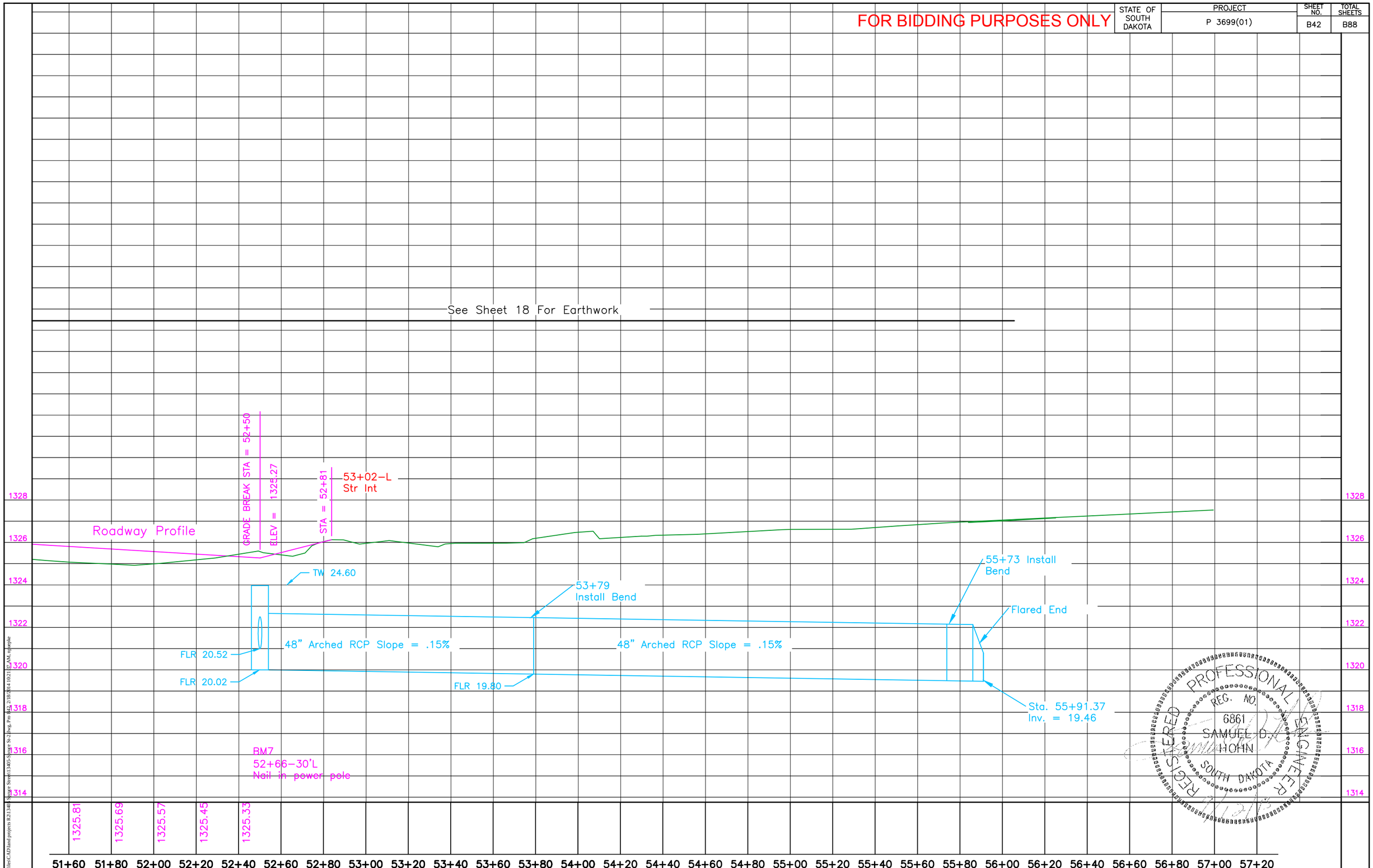

G:\Files\CAD\land projects R2\1340-Spruce Street\1340-Spruce St-2.dwg, Pro H22, 2/18/2014 10:21:17 AM, njpeple

STATE OF SOUTH DAKOTA	PROJECT	SHEET NO.	TOTAL SHEETS
	P 3699(01)	B43	B88

FOR BIDDING PURPOSES ONLY

Curb and Gutter Layout

Note: All Curb & Gutter shown on this sheet is Type B66. All Sidewalk is 6.0' and all Drives are Type A except as noted.

1 0+44.77–58.93' L
Begin Str Taper C & G
TC Elev. 43.50 (Theor)

2 0+44.73–52.92' L
End Str Taper C & G
Begin 36.67' Rad.
TC Elev. 43.45

3 0+57.84–28.49' L
Center of Detectable Warning and Type 1 Curb Ramp

4 0+81.40–16.00' L
End 36.67' Rad.
Begin Str C & G
TC Elev. 42.32

5 2+21–16.00' L
End Str C & G
Begin Str Type P Gutter
TC Elev. 42.88 (Theor)

6 2+57–16.00' L
End Str Type P Gutter
Begin Str C & G
TC Elev. 43.05 (Theor)

7 4+24–16.00' L
End Str C & G
Begin Str Type P Gutter
TC Elev. 43.68 (Theor)

8 4+64–16.00' L
End Str Type P Gutter
Begin Str C & G
TC Elev. 43.48 (Theor)

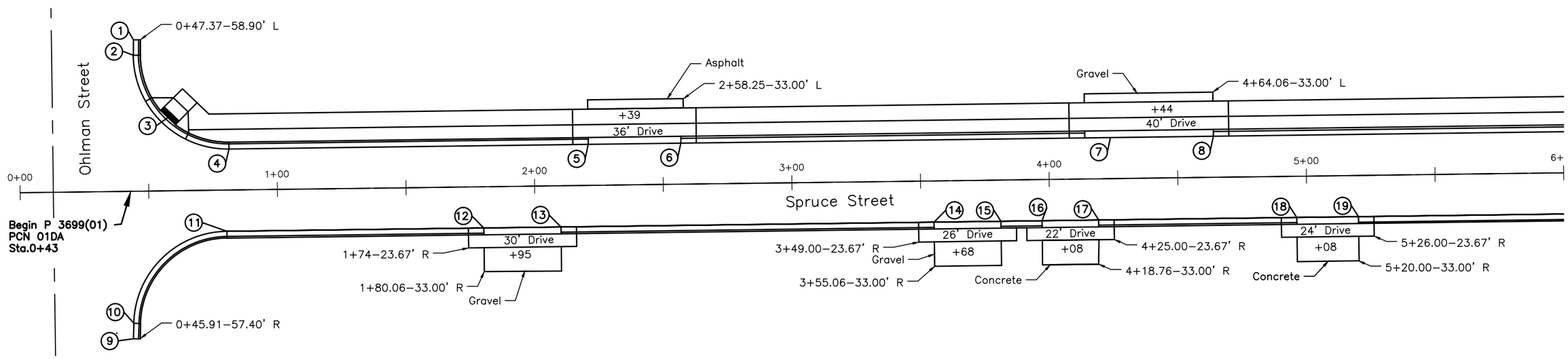

9 0+43.55–57.29' R
Begin Str Taper C & G
TC Elev. 43.50 (Theor)

10 0+43.45–51.31' R
End Str Taper C & G
Begin 36.67' Rad.
TC Elev. 43.45

11 0+80.17–16.00' R
End 36.67' Rad.
Begin Str C & G
TC Elev. 42.52

12 1+80–16.00' R
End Str C & G
Begin Str Type P Gutter
TC Elev. 42.92 (Theor)

13 2+10–16.00' R
End Str Type P Gutter
Begin Str C & G
TC Elev. 43.04 (Theor)

14 3+55–16.00' R
End Str C & G
Begin Str Type P Gutter
TC Elev. 43.97 (Theor)

15 3+81–16.00' R
End Str Type P Gutter
Begin Str C & G
TC Elev. 43.98

16 3+97–16.00' R
End Str C & G
Begin Str Type P Gutter
TC Elev. 43.97 (Theor)

17 4+19–16.00' R
End Str Type P Gutter
Begin Str C & G
TC Elev. 43.91 (Theor)

18 4+96–16.00' R
End Str C & G
Begin Str Type P Gutter
TC Elev. 43.52 (Theor)

19 5+20–16.00' R
End Str Type P Gutter
Begin Str C & G
TC Elev. 43.22 (Theor)

REGISTERED PROFESSIONAL ENGINEER
REG. NO. 6861
SAMUEL D. HOHN
SOUTH DAKOTA
9/12/13

G:\Files\CAD\land projects R2\13405 Spruce Street\13405-Spruce Sc-3.dwg, Plan 43, 2/18/2014 10:41:15 AM, rpuepke

Curb and Gutter Layout

FOR BIDDING PURPOSES ONLY

REV 2-18-14 SDN

STATE OF SOUTH DAKOTA	PROJECT	SHEET NO.	TOTAL SHEETS
	P 3699(01)	B44	B88

Note: All Curb & Gutter shown on this sheet is Type B66. All Sidewalk is 6.0' and all Drives are Type A except as noted.

1 6+12–16.00' L
End Str C & G
Begin Str Type P Gutter
TC Elev. 41.73 (Theor)

2 6+52–16.00' L
End Str Type P Gutter
Begin Str C & G
TC Elev. 41.06 (Theor)

3 8+16–16.00' L
End Str C & G
Begin Str Type P Gutter
TC Elev. 38.07 (Theor)

4 8+66–16.00' L
End Str Type P Gutter
Begin Str C & G
TC Elev. 37.11 (Theor)

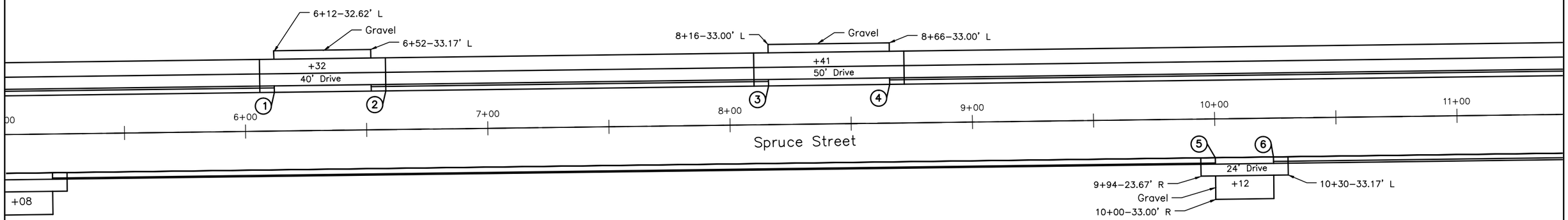

5 10+00–16.00' R
End Str C & G
Begin Str Type P Gutter
TC Elev. 34.30 (Theor)

6 10+24–16.00' R
End Str Type P Gutter
Begin Str C & G
TC Elev. 33.92 (Theor)

REGISTERED PROFESSIONAL ENGINEER
REG. NO. 6851
SAMUEL D. HOHN
SOUTH DAKOTA

G:\Files\CAD\land projects R2\13405 Spruce Street\13405-Spruce St-3.dwg, Plan 44, 2/18/2014 10:41:32 AM, rpuepke

Curb and Gutter Layout

FOR BIDDING PURPOSES ONLY

REV 2-18-14 SDN

STATE OF SOUTH DAKOTA	PROJECT	SHEET NO.	TOTAL SHEETS
	P 3699(01)	B45	B88

Note: All Curb & Gutter shown on this sheet is Type B66. All Sidewalk is 6.0' and all Drives are Type A except as noted.

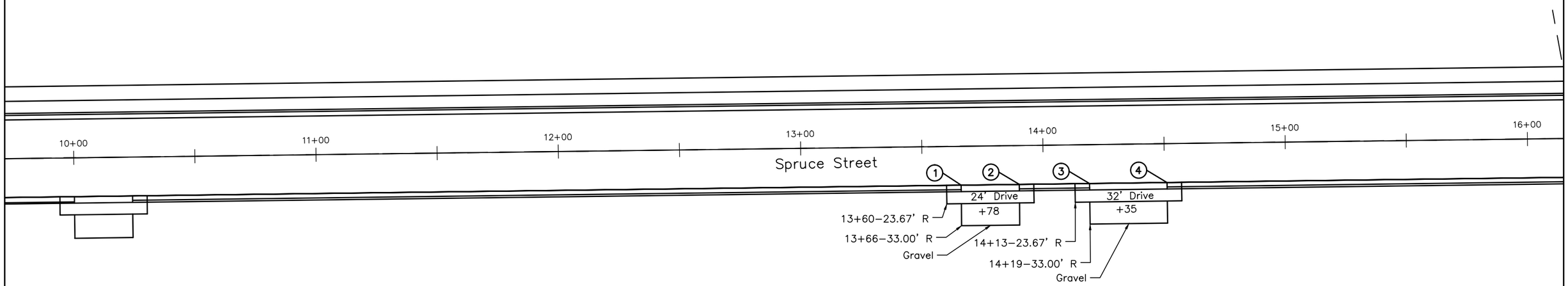

1 13+66-16.00' R
End Str C & G
Begin Str Type P Gutter
TC Elev. 33.42 (Theor)

2 13+90-16.00' R
End Str Type P Gutter
Begin Str C & G
TC Elev. 33.45 (Theor)

3 14+19-16.00' R
End Str C & G
Begin Str Type P Gutter
TC Elev. 33.41 (Theor)

4 14+51-16.00' R
End Str Type P Gutter
Begin Str C & G
TC Elev. 33.28 (Theor)

REGISTERED PROFESSIONAL ENGINEER
REG. NO. 6861
SAMUEL D. HOHN
SOUTH DAKOTA

G:\Files\CAD\land projects R2\13405 Spruce Street\13405-Spruce St-3.dwg, Plan-45, 2/18/2014 10:41:46 AM, rpurple

FOR BIDDING PURPOSES ONLY

STATE OF SOUTH DAKOTA	PROJECT	SHEET NO.	TOTAL SHEETS
	P 3699(01)	B46	B88

Curb and Gutter Layout

Note: All Curb & Gutter shown on this sheet is Type B66. All Sidewalk is 6.0' and all Drives are Type A except as noted.

1 16+85–16.00' L
End Str C & G
Begin Str Type P Gutter
TC Elev. 32.64 (Theor)

2 17+25–16.00' L
End Str Type P Gutter
Begin Str C & G
TC Elev. 32.80 (Theor)

3 18+28–16.00' L
End Str C & G
Begin Str Type P Gutter
TC Elev. 33.29 (Theor)

4 18+58–16.00' L
End Str Type P Gutter
Begin Str C & G
TC Elev. 33.65 (Theor)

5 19+86–16.00' L
End Str C & G
Begin Str Type P Gutter
TC Elev. 36.38 (Theor)

6 20+26–16.00' L
End Str Type P Gutter
Begin Str C & G
TC Elev. 37.48 (Theor)

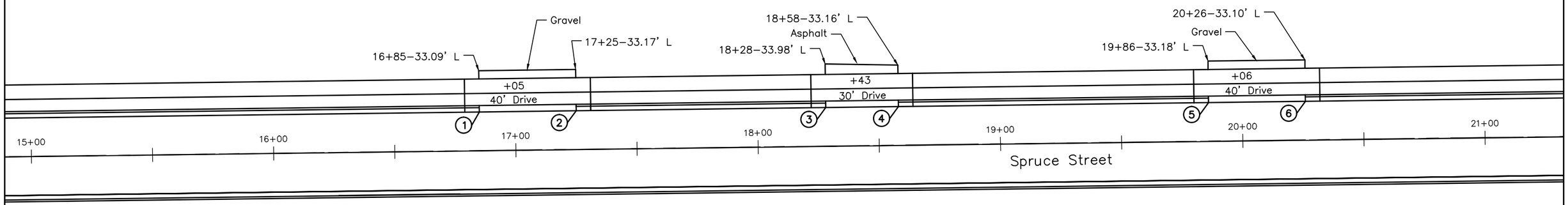

G:\Files\CAD\land projects R2\13405 Spruce Street\13405-Spruce St-3.dwg, Plan 46, 2/18/2014 10:42:02 AM, rpaeple

Curb and Gutter Layout

Note: All Curb & Gutter shown on this sheet is Type B66. All Sidewalk is 6.0' and all Drives are Type A except as noted.

1 22+63–16.00' L
End Str C & G
Begin Str Type P Gutter
TC Elev. 43.18 (Theor)

2 22+83–16.00' L
End Str Type P Gutter
Begin Str C & G
TC Elev. 43.33 (Theor)

3 23+55–16.00' L
End Str C & G
Begin Str Type P Gutter
TC Elev. 43.88 (Theor)

4 23+85–16.00' L
End Str Type P Gutter
Begin Str C & G
TC Elev. 44.08 (Theor)

5 24+66–16.00' L
End Str C & G
Begin Str Type P Gutter
TC Elev. 44.48 (Theor)

6 25+00–16.00' L
End Str Type P Gutter
Begin Str C & G
TC Elev. 44.66 (Theor)

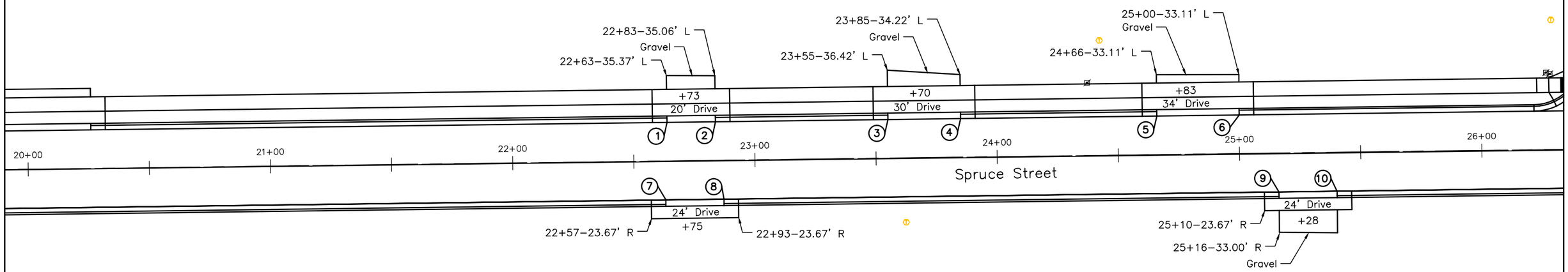

7 22+63–16.00' R
End Str C & G
Begin Str Type P Gutter
TC Elev. 43.38 (Theor)

8 22+87–16.00' R
End Str Type P Gutter
Begin Str C & G
TC Elev. 43.56 (Theor)

9 25+16–16.00' R
End Str C & G
Begin Str Type P Gutter
TC Elev. 44.94 (Theor)

10 25+40–16.00' R
End Str Type P Gutter
Begin Str C & G
TC Elev. 45.03 (Theor)

REGISTERED PROFESSIONAL ENGINEER
REG. NO. 6861
SAMUEL D. HOHN
SOUTH DAKOTA

G:\Files\CAD\land projects R2\13405 Spruce Street\13405-Spruce St-3.dwg, Plan 47, 2/18/2014 10:42:17 AM, rpnepke

Curb and Gutter Layout

FOR BIDDING PURPOSES ONLY

REV 2-18-14 SDH

STATE OF SOUTH DAKOTA	PROJECT	SHEET NO.	TOTAL SHEETS
	P 3699(01)	B48	B88

Note: All Curb & Gutter shown on this sheet is Type B66. All Sidewalk is 6.0' and all Drives are Type A except as noted.

1 26+21.70–16.00' L
End Str C & G
Begin 22.67' Rad.
TC Elev. 45.07

2 26+37.65–26.67' L
Center of Detectable
Warning and Type 2
Curb Ramp

3 26+44.41–38.37' L
End 22.67' Rad.
Begin Str Taper C & G
TC Elev. 44.82

4 26+44.49–44.37' L
End Str Taper C & G
TC Elev. 44.72 (Theor)

5 26+74.48–44.96' L
Begin Str Taper C & G
TC Elev. 44.72 (Theor)

6 26+74.40–38.96' L
End Str Taper C & G
Begin 22.67' Rad.
TC Elev. 44.82

7 26+83.85–26.67' L
Center of Detectable
Warning and Type 2
Curb Ramp

8 26+96.5–16.00' L
End 22.67' Rad.
Begin Str C & G
TC Elev. 45.30

9 28+67–16.00' L
End Str C & G
Begin Str Type P Gutter
TC Elev. 44.81 (Theor)

10 28+91–16.00' L
End Str Type P Gutter
Begin Str C & G
TC Elev. 44.72 (Theor)

11 29+50–16.00' L
End Str C & G
Begin Str Type P Gutter
TC Elev. 44.48 (Theor)

12 29+74–16.00' L
End Str Type P Gutter
Begin Str C & G
TC Elev. 44.38 (Theor)

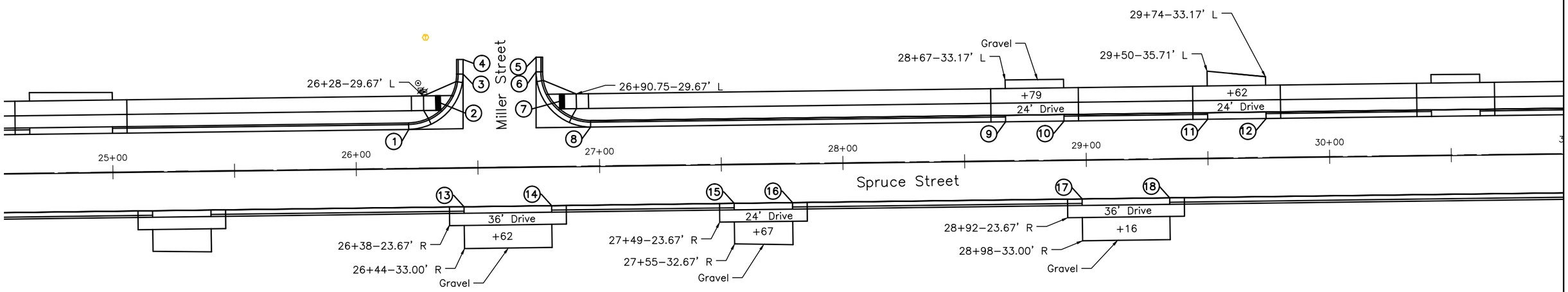

13 26+44–16.00' R
End Str C & G
Begin Str Type P Gutter
TC Elev. 45.34 (Theor)

14 26+80–16.00' R
End Str Type P Gutter
Begin Str C & G
TC Elev. 45.45 (Theor)

15 27+55–16.00' R
End Str C & G
Begin Str Type P Gutter
TC Elev. 45.46 (Theor)

16 27+79–16.00' R
End Str Type P Gutter
Begin Str C & G
TC Elev. 45.36 (Theor)

17 28+98–16.00' R
End Str C & G
Begin Str Type P Gutter
TC Elev. 44.89 (Theor)

18 29+34–16.00' R
End Str Type P Gutter
Begin Str C & G
TC Elev. 44.74 (Theor)

REGISTERED PROFESSIONAL ENGINEER
REG. NO. 6861
SAMUEL D HOHN
SOUTH DAKOTA

G:\Files\CAD\land projects R2\13405 Spruce Street\13405-Spruce St-3.dwg, Plan48, 2/18/2014 10:42:32 AM, rpnarple

Curb and Gutter Layout

FOR BIDDING PURPOSES ONLY

REV 2-10-14 SDH

STATE OF SOUTH DAKOTA	PROJECT	SHEET NO.	TOTAL SHEETS
	P 3699(01)	B49	B88

Note: All Curb & Gutter shown on this sheet is Type B66. All Sidewalk is 6.0' and all Drives are Type A except as noted.

1 30+42–16.00' L
End Str C & G
Begin Str Type P Gutter
TC Elev. 44.11 (Theor)

2 30+62–16.00' L
End Str Type P Gutter
Begin Str C & G
TC Elev. 43.99 (Theor)

3 32+25–16.00' L
End Str C & G
Begin Str Type P Gutter
TC Elev. 42.87 (Theor)

4 32+65–16.00' L
End Str Type P Gutter
Begin Str C & G
TC Elev. 42.61 (Theor)

5 33+45–16.00' L
End Str C & G
Begin Str Type P Gutter
TC Elev. 42.13 (Theor)

6 33+81–16.00' L
End Str Type P Gutter
Begin Str C & G
TC Elev. 42.05 (Theor)

7 34+28–16.00' L
End Str C & G
Begin Str Type P Gutter
TC Elev. 42.10 (Theor)

8 34+68–16.00' L
End Str Type P Gutter
Begin Str C & G
TC Elev. 42.18 (Theor)

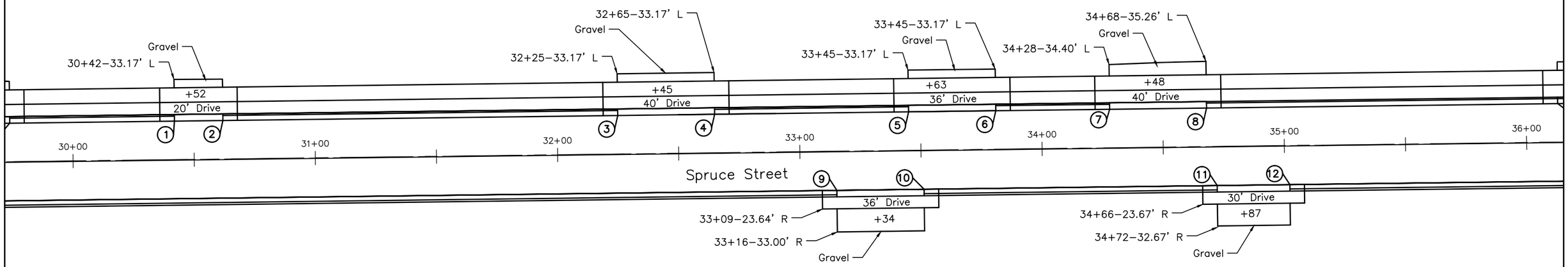

9 33+16–16.00' R
End Str C & G
Begin Str Type P Gutter
TC Elev. 42.51 (Theor)

10 33+52–16.00' R
End Str Type P Gutter
Begin Str C & G
TC Elev. 42.31 (Theor)

11 34+72–16.00' R
End Str C & G
Begin Str Type P Gutter
TC Elev. 42.37 (Theor)

12 35+02–16.00' R
End Str Type P Gutter
Begin Str C & G
TC Elev. 42.16 (Theor)

G:\Files\CAD\land projects R2\13405 Spruce Street\13405-Spruce St-3.dwg, Plan 49, 2/10/2014 10:42:47 AM, rpurple

Curb and Gutter Layout

FOR BIDDING PURPOSES ONLY

REV 2-18-14 SDN

Note: All Curb & Gutter shown on this sheet is Type B66. All Sidewalk is 6.0' and all Drives are Type A except as noted.

1 36+13–16.00' L
End Str C & G
Begin Str Type P Gutter
TC Elev. 39.61 (Theor)

2 36+37–16.00' L
End Str Type P Gutter
Begin Str C & G
TC Elev. 39.03 (Theor)

3 36+73–16.00' L
End Str C & G
Begin Str Type P Gutter
TC Elev. 38.17 (Theor)

4 37+13–16.00' L
End Str Type P Gutter
Begin Str C & G
TC Elev. 37.34 (Theor)

5 37+65–16.00' L
End Str C & G
Begin Str Type P Gutter
TC Elev. 36.72 (Theor)

6 38+05–16.00' L
End Str Type P Gutter
Begin Str C & G
TC Elev. 36.53 (Theor)

7 38+60–16.00' L
End Str C & G
Begin Str Type P Gutter
TC Elev. 36.36 (Theor)

8 39+00–16.00' L
End Str Type P Gutter
Begin Str C & G
TC Elev. 36.24 (Theor)

9 39+44.38–16.00' L
End Str C & G
Begin 22.67' Rad.
TC Elev. 36.23

10 39+57.64–26.72' L
Center of Detectable
Warning and Type 2
Curb Ramp

11 39+67.04–38.39' L
End 22.67' Rad.
Begin Str. Taper C & G
TC Elev. 36.81

12 39+67.13–44.39' L
End Str. Taper C & G
TC Elev. 36.91 (Theor)

13 39+95.56–45.02' L
Begin Str Taper C & G
TC Elev. 37.08 (Theor)

14 39+95.49–39.02' L
End Str Taper C & G
Begin 22.67' Rad.
TC Elev. 37.00

15 40+04.94–26.72' L
Center of Detectable
Warning and Type 2
Curb Ramp

16 40+18.16–16.00' L
End 22.67' Rad.
Begin Str C & G
TC Elev. 36.34

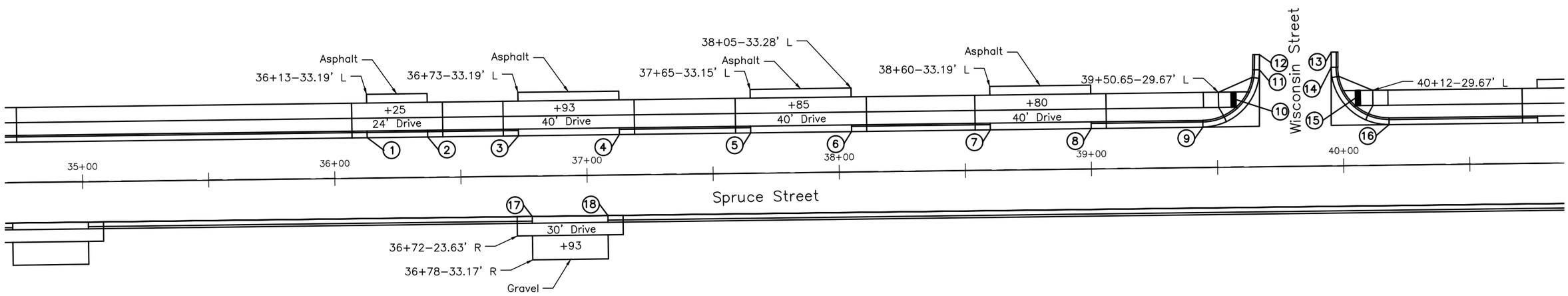

17 36+78–16.00' R
End Str C & G
Begin Str Type P Gutter
TC Elev. 38.25 (Theor)

18 37+08–16.00' R
End Str C & G
Begin Str C & G
TC Elev. 37.63 (Theor)

REGISTERED PROFESSIONAL ENGINEER
REG. NO. 6861
SAMUEL D. HOHN
SOUTH DAKOTA

G:\Files\CAD\land projects R2\13405 Spruce Street\13405-Spruce St-3.dwg, Plan50, 2/18/2014 10:43:02 AM, rpuerjke

Curb and Gutter Layout

FOR BIDDING PURPOSES ONLY

REV 2-18-14 SDH

Note: All Curb & Gutter shown on this sheet is Type B66. All Sidewalk is 6.0' and all Drives are Type A except as noted.

1 40+77–16.00' L
End Str C & G
Begin Str Type P Gutter
TC Elev. 36.10 (Theor)

2 41+01–16.00' L
End Str Type P Gutter
Begin Str C & G
TC Elev. 36.09 (Theor)

3 41+35–16.00' L
End Str C & G
Begin Str Type P Gutter
TC Elev. 35.99 (Theor)

4 41+55–16.00' L
End Str Type P Gutter
Begin Str C & G
TC Elev. 35.92 (Theor)

5 43+77–16.00' L
End Str C & G
Begin Str Type P Gutter
TC Elev. 33.89 (Theor)

6 44+07–16.00' L
End Str Type P Gutter
Begin Str C & G
TC Elev. 33.67 (Theor)

7 44+46–16.00' L
End Str C & G
Begin Str Type P Gutter
TC Elev. 33.37 (Theor)

8 44+76–16.00' L
End Str Type P Gutter
Begin Str C & G
TC Elev. 33.14 (Theor)

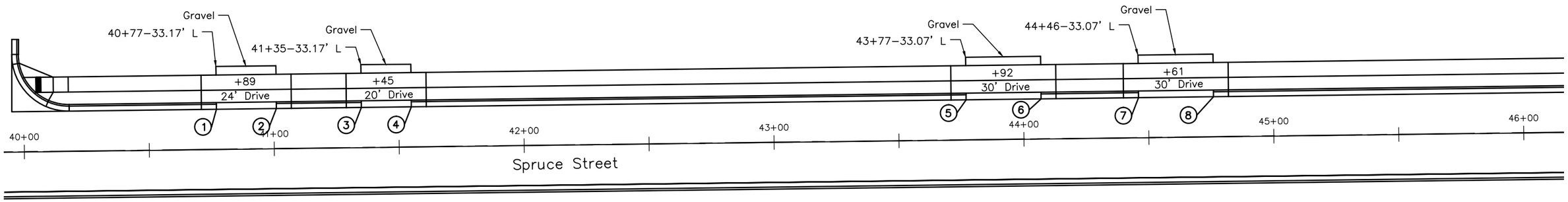

G:\Files\CAD\land projects\R2\13405 Spruce Street\13405-Spruce St-3.dwg, Plan 51, 2/18/2014 10:43:17 AM, rpupple

Curb and Gutter Layout

FOR BIDDING PURPOSES ONLY

REV 2-18-14 SDN

STATE OF SOUTH DAKOTA	PROJECT	SHEET NO.	TOTAL SHEETS
	P 3699(01)	B52	B88

Note: All Curb & Gutter shown on this sheet is Type B66. All Sidewalk is 6.0' and all Drives are Type A except as noted.

1 49+30–16.00' L
End Str C & G
Begin Str Type P Gutter
TC Elev. 27.27 (Theor)

2 49+70–16.00' L
End Str Type P Gutter
Begin Str C & G
TC Elev. 27.03 (Theor)

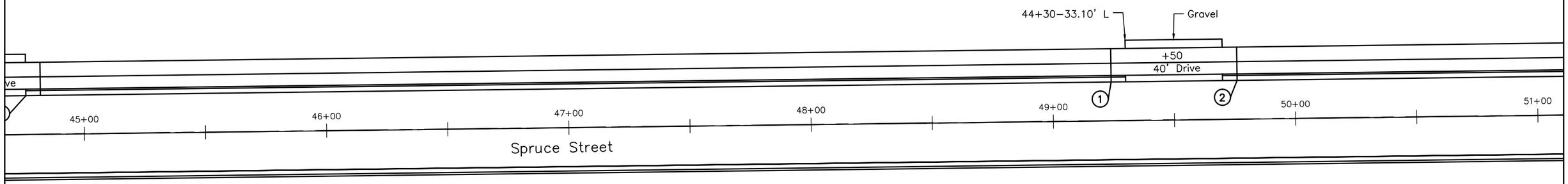

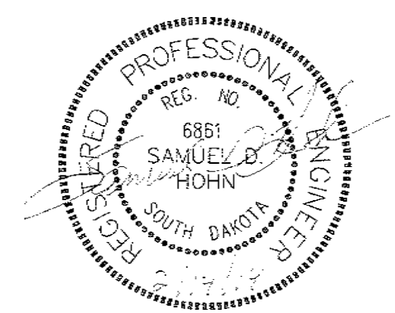

G:\Files\CAD\land projects R2\13405 Spruce Street\13405-Spruce St-3.dwg, Plan 52, 2/18/2014 10:43:32 AM, npaeple

STATE OF SOUTH DAKOTA	PROJECT	SHEET NO.	TOTAL SHEETS
	P 3699(01)	B53	B88

Curb and Gutter Layout

FOR BIDDING PURPOSES ONLY

Note: All Curb & Gutter shown on this sheet is Type B66. All Sidewalk is 6.0' and all Drives are Type A except as noted.

1 52+52.64–16.00' L
End Str C & G
Begin 32.67' Rad.
TC Elev. 25.35

2 52+81.51–44.30' L
Center of Detectable
Warning and Type 3
Curb Ramp

3 52+85.32–54.25' L
End 32.67' Radius
Start Taper C & G
TC Elev. 25.73 (Theor)

4 52+85.49–62.26' L
End Str. Taper C & G
TC Elev. 25.84 (Theor)

5 53+19.49–59.67' L
Begin Str Taper C & G
TC Elev. 25.60 (Theor)

6 53+20.80–49.38' L
Begin 37.67' Rad.
TC Elev. 25.57

7 53+26.04–45.99' L
Center of Detectable
Warning and Type 2
Curb Ramp

8 53+53.94–17.87' L
End 37.67' Rad.
Match Existing

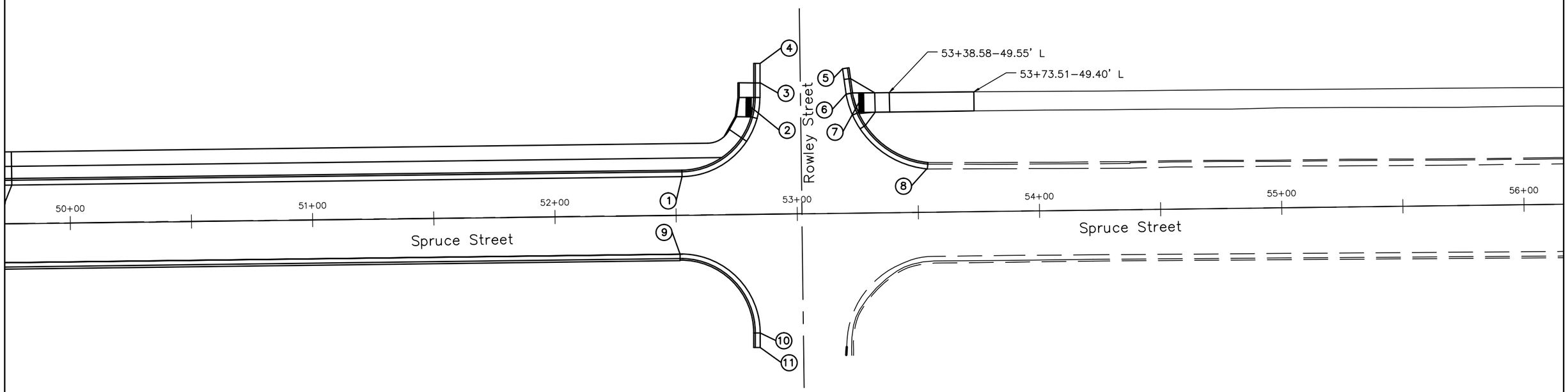

9 52+51.44–16.00' R
End Str C & G
Begin 32.67' Rad.
TC Elev. 25.55

10 52+84.12–48.93' R
End 32.67' Rad.
Begin Str Taper C & G
TC Elev. 25.90

11 52+84.05–54.91' R
End Str. Taper C & G
TC Elev. 25.94 (Theor)

REGISTERED PROFESSIONAL ENGINEER
REG. NO. 6861
SAMUEL D. HOHN
SOUTH DAKOTA
9/12/13

G:\Files\CAD\land projects R2\13405 Spruce Street\13405-Spruce St-3.dwg, Plan 53, 2/18/2014 10:43:47 AM, rpurple

CURB RAMP DETAILS

FOR BIDDING PURPOSES ONLY

STATE OF SOUTH DAKOTA	PROJECT	SHEET NO.	TOTAL SHEETS
	P 3699(01)	B54	B88

Note: All Curb & Gutter shown on this sheet is Type B66.
All sidewalk is 6.0' and all drives are Type A except as noted.

* Landing
** Ramp slopes with 8.3% max. slope
*** Sidewalk with 5% max. long slope
Detectable Warning Surface

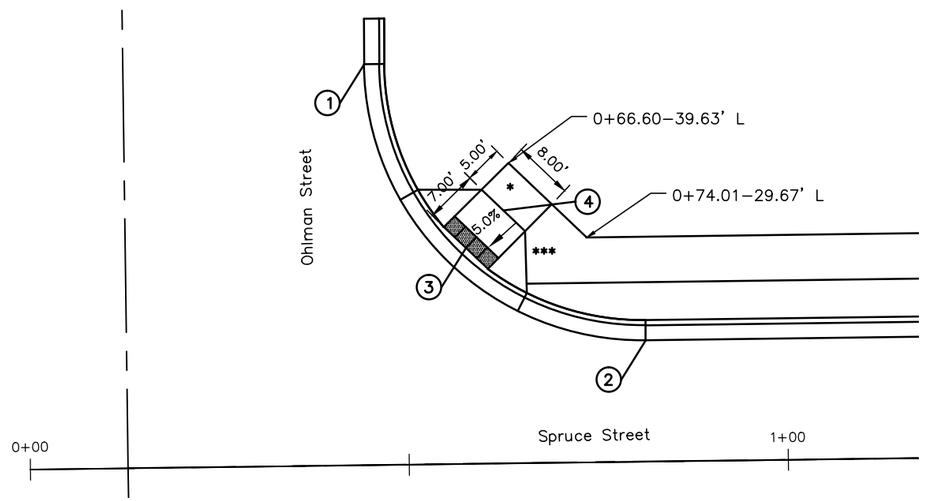

1 0+44.73–52.92' L
Begin 36.67' Rad. C & G
TC Elev. 43.45

2 0+81.40–16.00' L
End 36.67' Rad. C & G
TC Elev. 42.32

3 0+57.84–28.49' L
Begin Type 1 Curb Ramp Slope

4 0+62.84–33.38' L
End Ramp Slope

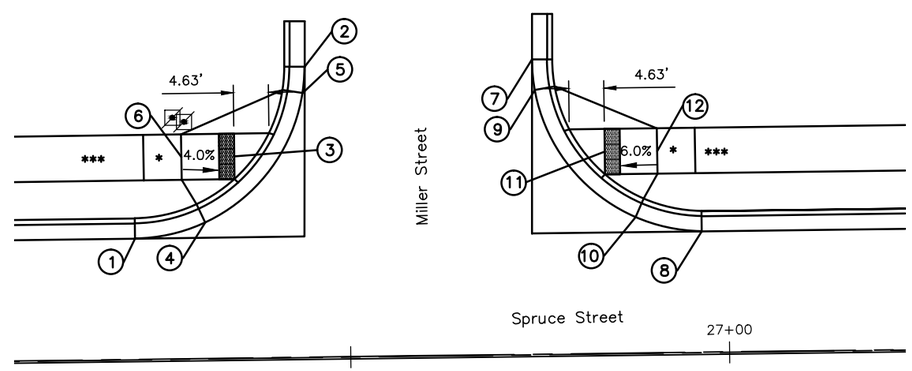

1 26+21.70–16.00' L
Begin 22.67' Rad. C & G
TC Elev. 45.07

2 26+44.41–38.37' L
End 22.67' Rad. C & G
TC Elev. 44.82

3 26+34.97–26.67'L
Begin Type 2 Curb Ramp

4 26+31.02–17.98' L
Grade Break
TC Elev. 45.21

5 26+44.10–34.93' L
TC Elev. 44.86

6 26+28.00–26.67' L
End Ramp Slope

7 26+74.40–38.96' L
Begin 22.67' Rad. C & G
TC Elev. 44.82

8 26+96.5–16.00' L
End 22.67' Rad. C & G
TC Elev. 45.30

9 26+74.71–34.93' L
TC Elev. 44.87

10 26+87.61–17.98' L
TC Elev. 45.20

11 26+83.85–26.67' L
Begin Type 2 Curb Ramp

12 26+90.77–26.67' L
End Ramp Slope

REGISTERED PROFESSIONAL ENGINEER
REG. NO. 6861
SAMUEL D. HOHN
SOUTH DAKOTA
9/12/13

G:\Files\CAD\land projects R2\13405 Spruce Street\13405-Spruce St-1.dwg, B54, 2/18/2014 10:26:21 AM, npiepke

FOR BIDDING PURPOSES ONLY

STATE OF SOUTH DAKOTA	PROJECT	SHEET NO.	TOTAL SHEETS
	P 3699(01)	B55	B88

CURB RAMP DETAILS

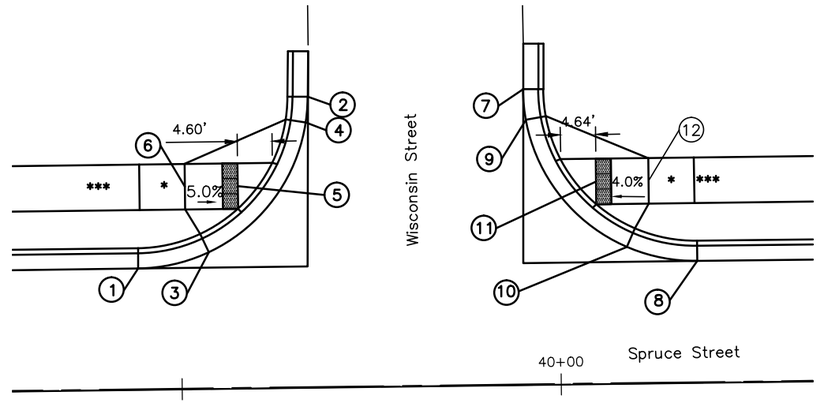

Note: All Curb & Gutter shown on this sheet is Type B66.
All sidewalk is 6.0' and all drives are Type A except as noted.

* Landing
** Ramp slopes with 8.3% max. slope
*** Sidewalk with 5% max. long slope
Detectable Warning Surface

1 39+44.38–16.00' L
Begin 22.67' Rad. C & G
TC Elev. 36.23

2 39+67.04–38.39' L
End 22.67' Rad. C & G
TC Elev. 36.81

3 39+53.73–18.02' L
TC Elev. 36.36

4 39+66.75–35.00' L
TC Elev. 36.76

5 39+57.64–26.72' L
Begin Type 2 Curb Ramp

6 39+50.68–26.72' L
End Ramp Slope

7 39+95.49–39.02' L
Begin 22.67' Rad. C & G
TC Elev. 37.00

8 40+18.16–16.00' L
End 22.67' Rad. C & G
TC Elev. 36.34

9 39+95.80–34.98' L
TC Elev. 36.92

10 40+08.90–18.04' L
TC Elev. 36.48

11 40+04.94–26.72' L
Begin Type 2 Curb Ramp

12 40+11.87–26.72' L
End Ramp Slope

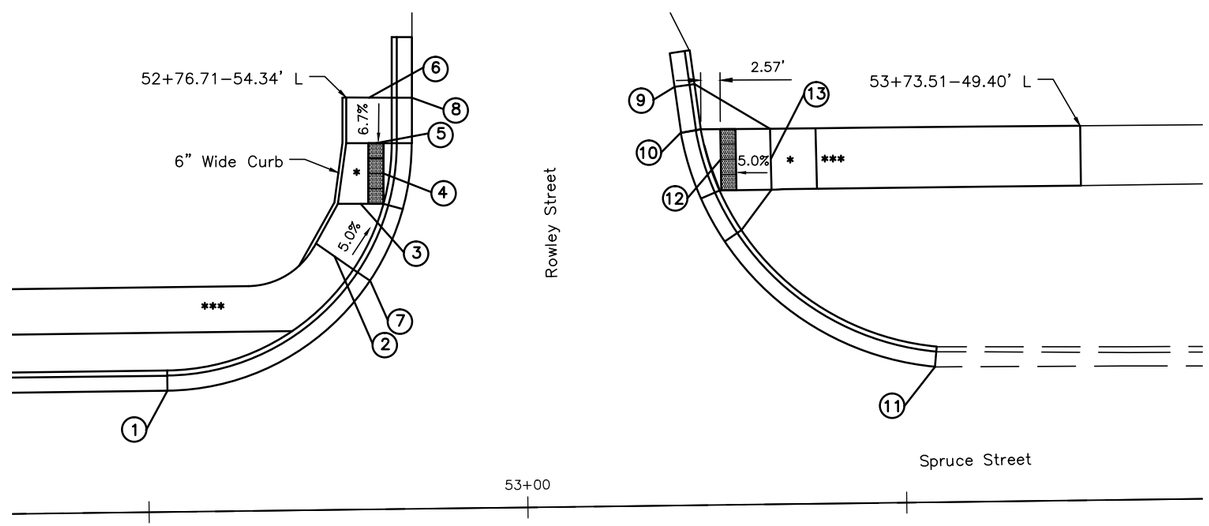

1 52+52.64–16.00' L
Begin 22.67' Rad. C & G
TC Elev. 25.37

2 52+74.92–33.73' L
Begin Ramp Slope

3 52+78.45–40.34' L
End Ramp Slope

4 52+81.51–44.30' L
Begin Type 3 Curb Ramp

5 52+85.30–48.25' L
Begin Ramp Slope

6 52+79.64–48.32' L
End Ramp Slope

7 52+79.56'–30.17' L
TC Elev. 25.59

8 52+85.37–54.25' L
TC Elev. 25.73

9 53+20.06–55.22' L
Begin Str C & G
TC Elev. 25.63

10 53+20.80–49.38' L
Begin 37.67' Rad. C & G
TC Elev. 25.57

11 53+53.94–17.87' L
End 37.67 Rad. C & G
Match Existing

12 53+26.04–45.54' L
Begin Type 2 Curb Ramp

13 53+32.64–45.54' L
End Ramp Slope

REGISTERED PROFESSIONAL ENGINEER
REG. NO. 6861
SAMUEL D. HOHN
SOUTH DAKOTA
9/12/13

G:\Files\CAD\land projects\R213405 Spruce Street\13405-Spruce St-1.dwg, B55, 2/10/2014 10:26:37 AM, rpurpke

FOR BIDDING PURPOSES ONLY

STATE OF SOUTH DAKOTA	PROJECT	SHEET NO.	TOTAL SHEETS
	P 3699(01)	B56	B88

Junction Box Details

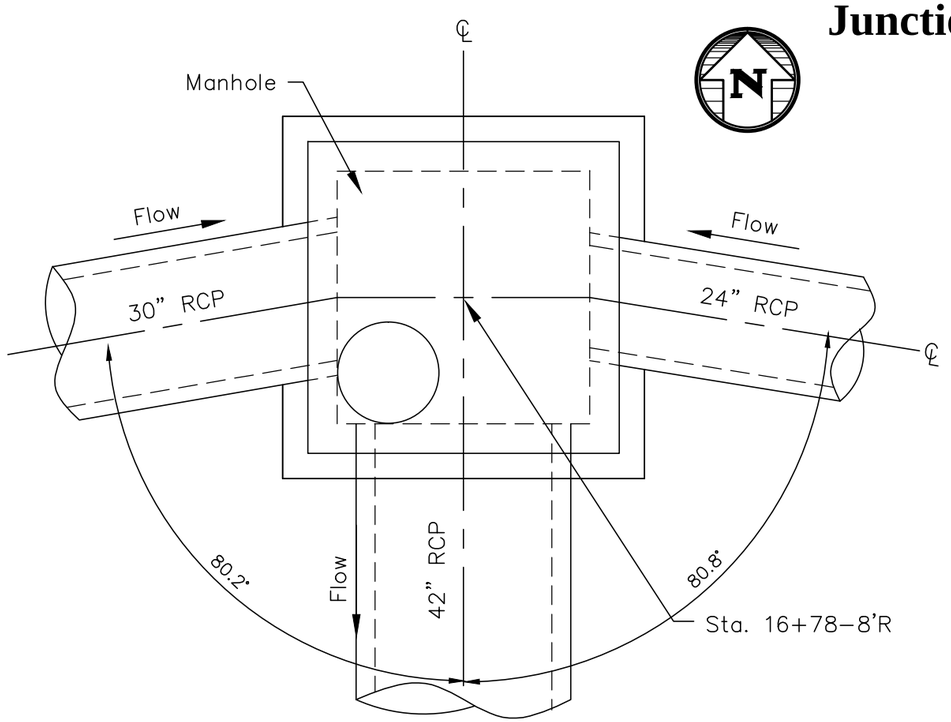

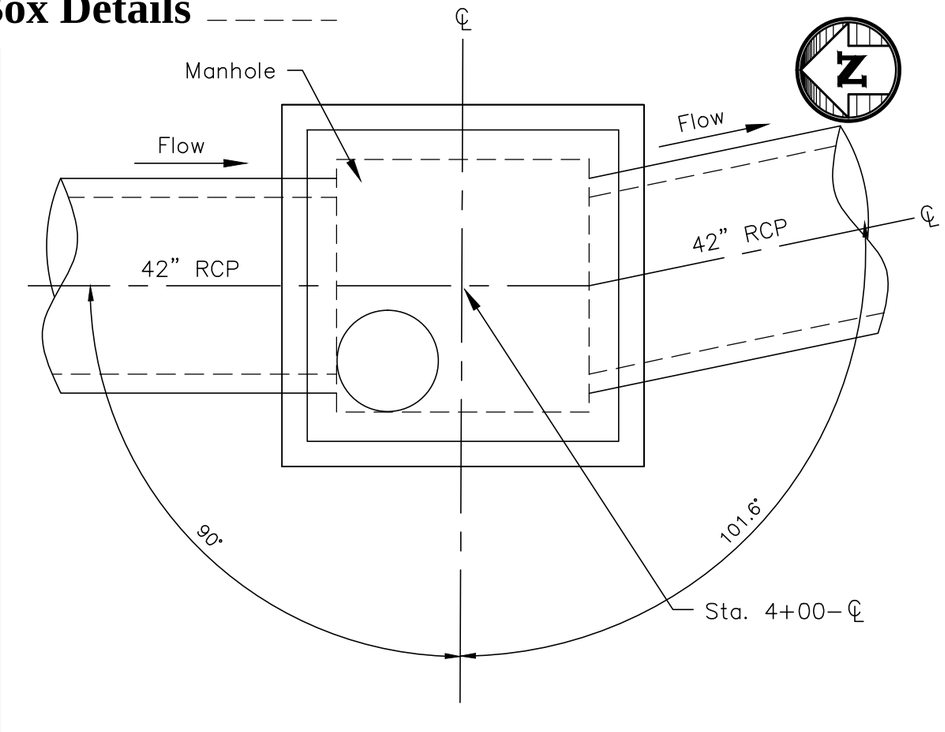

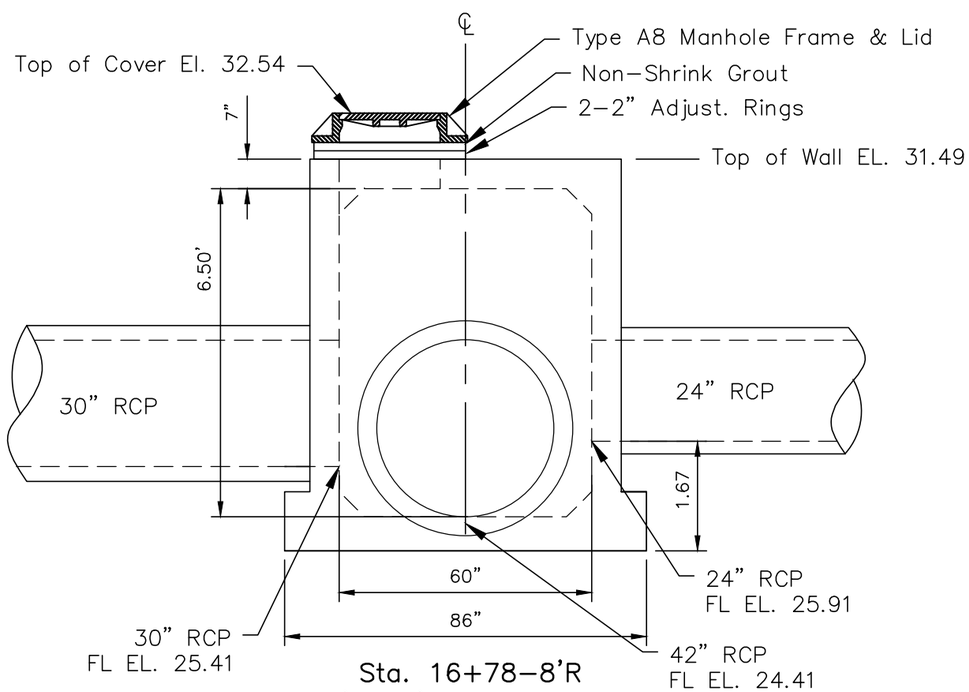

Sta. 16+78–8'R
5' x 5' Junction Box

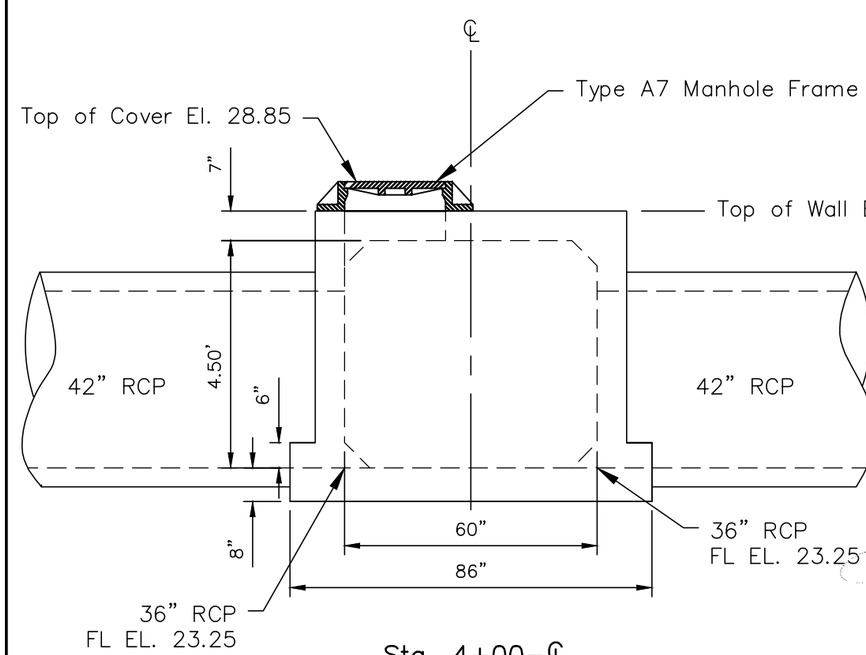

Sta. 4+00–℄
5' x 5' Junction Box
Offline – To Kibbee Ditch

REGISTERED PROFESSIONAL ENGINEER
REG. NO. 6861
SAMUEL D. HOHN
SOUTH DAKOTA
9/12/13

G:\Files\CAD\land projects R2\13405 Spruce Street\13405-Spruce Cover Street-Details 9 12.dwg, 2/18/2014 10:14:09 AM, DWG To PDF.pc3

FOR BIDDING PURPOSES ONLY

STATE OF SOUTH DAKOTA	PROJECT	SHEET NO.	TOTAL SHEETS
	P 3699(01)	B57	B88

Junction Box Details

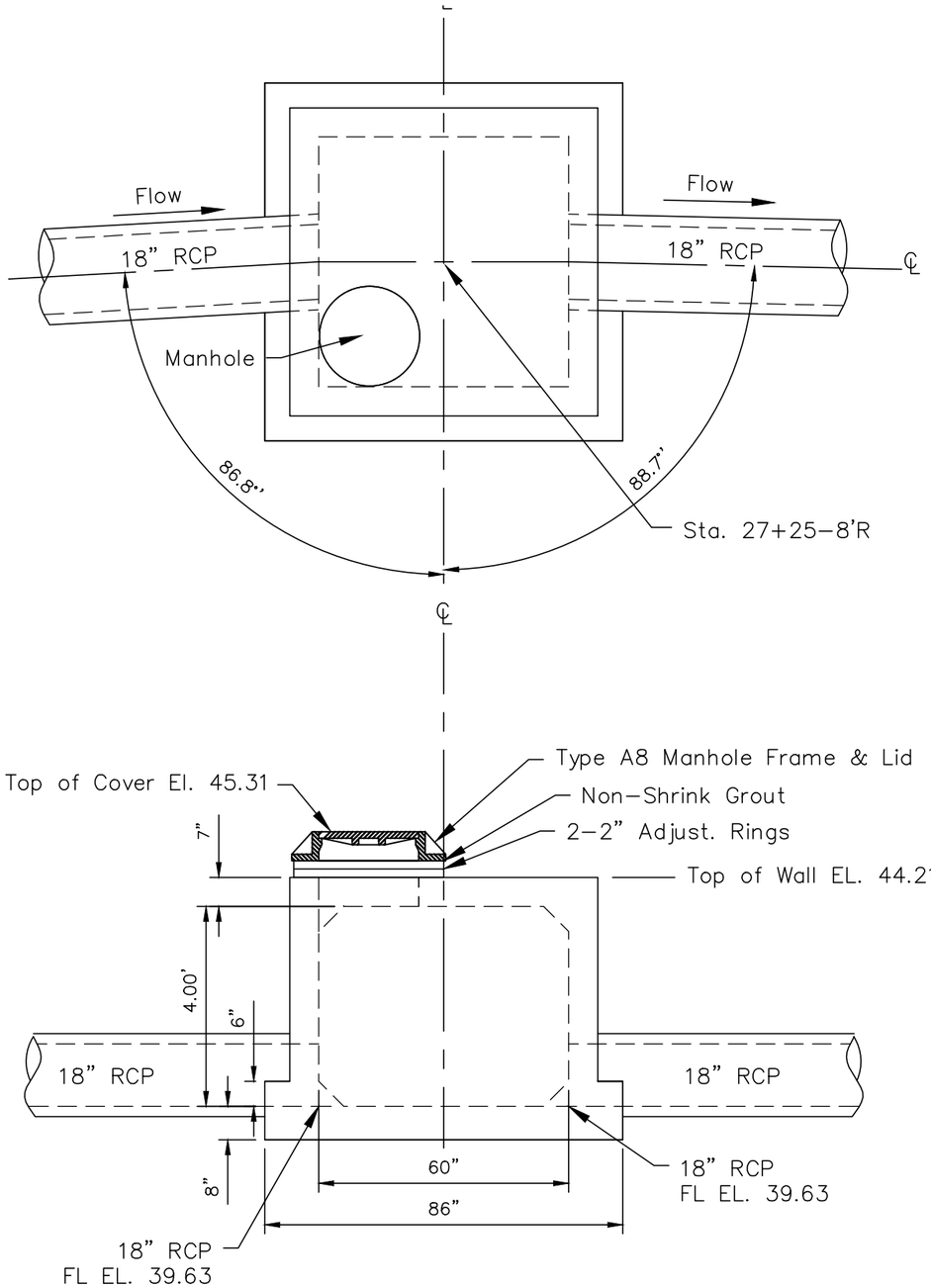

Sta. 27+25–8'R
5' x 5' Junction Box

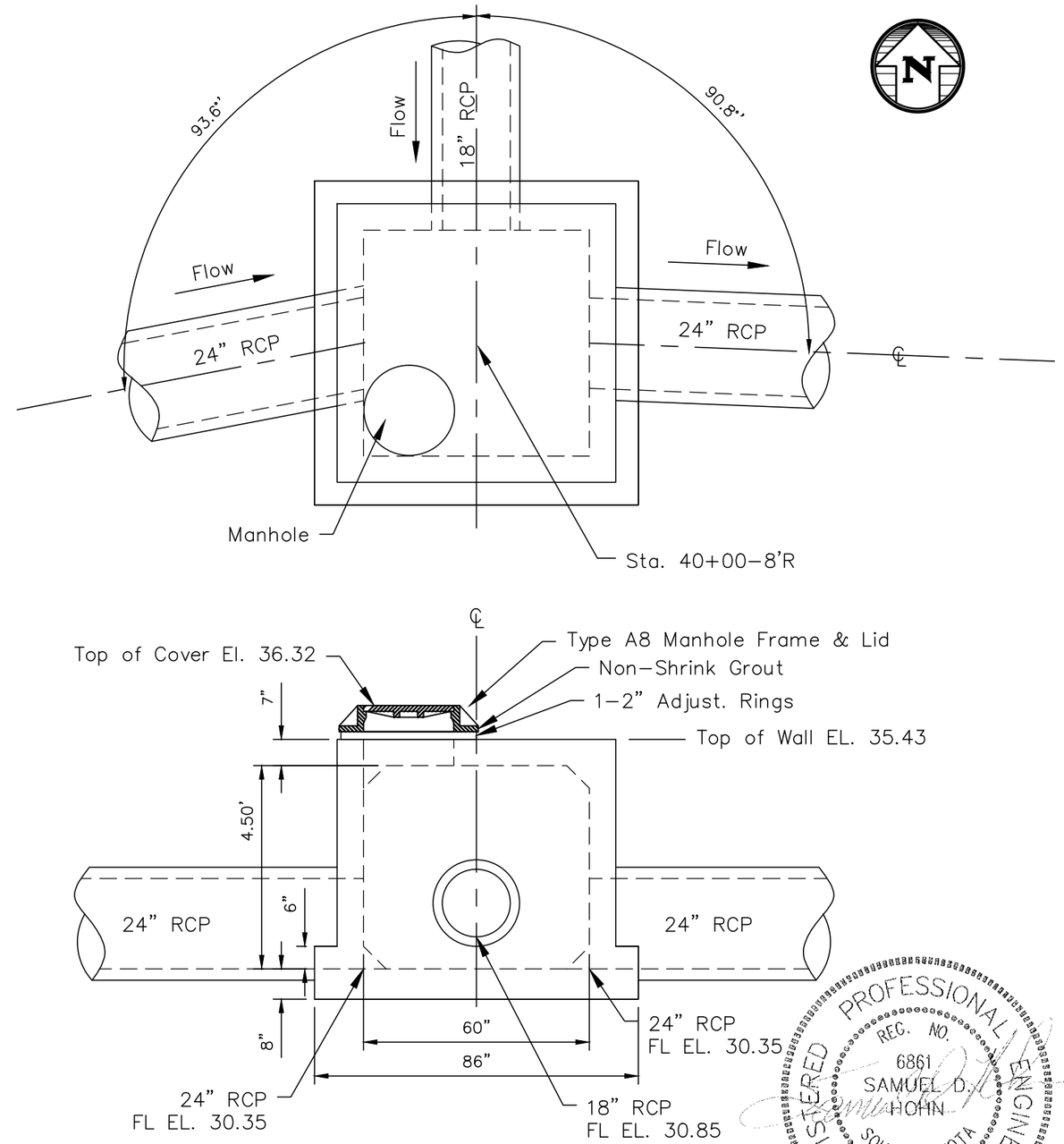

Sta. 40+00–8'R
5' x 5' Junction Box

REGISTERED PROFESSIONAL ENGINEER
REG. NO. 6861
SAMUEL D. HOHN
SOUTH DAKOTA
9/12/13

G:\Files\CAD\land projects R2\13405 Spruce Street\13405-Spruce Cover Street-Details 9 12.dwg, 2/18/2014 10:14:14 AM, DWG To PDF.pc3

FOR BIDDING PURPOSES ONLY

STATE OF SOUTH DAKOTA	PROJECT	SHEET NO.	TOTAL SHEETS
	P 3699(01)	B58	B88

Junction Box Details

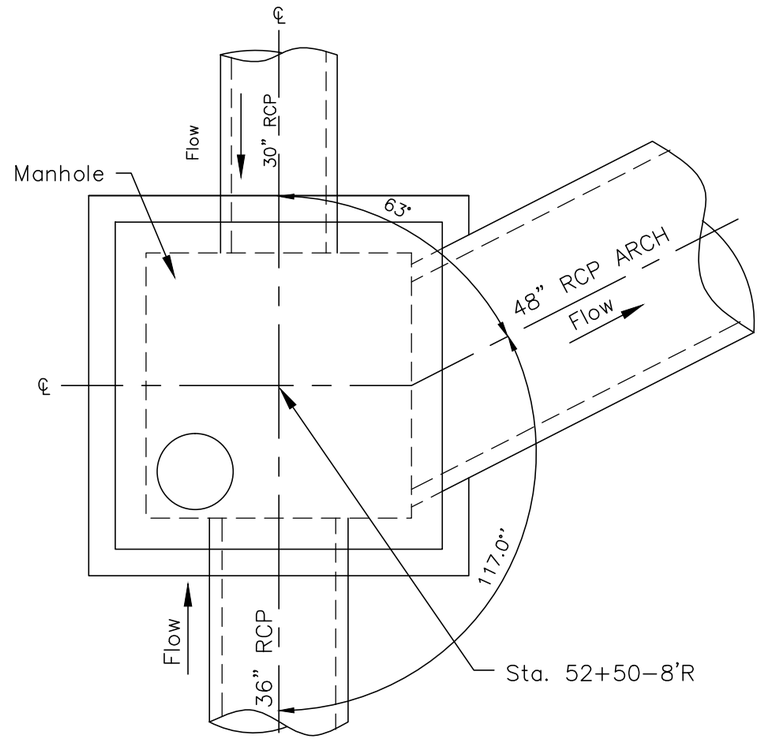

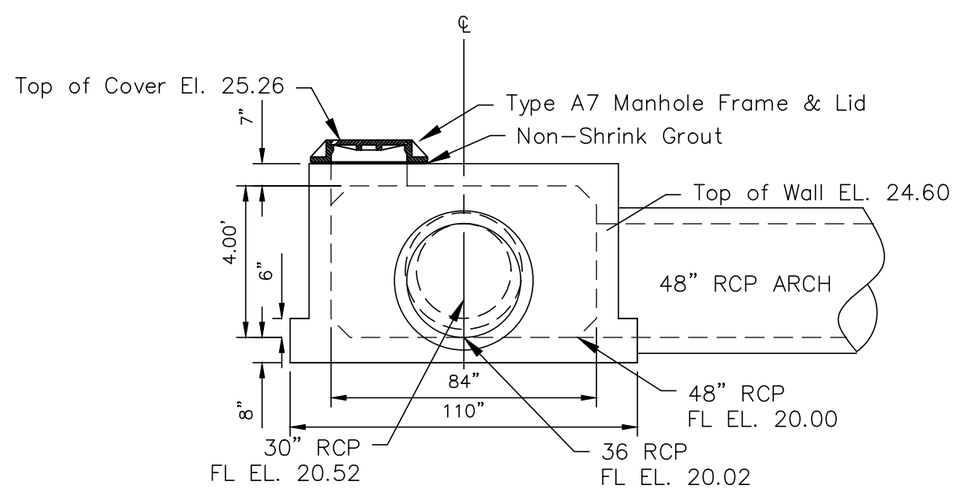

Sta. 52+50–8'R
7' x 7' Junction Box

G:\Files\CAD\land projects R2\13405 Spruce Street\13405-Spruce Cover Street-Details.9 12.dwg, 2/18/2014 10:14:19 AM, DWG To PDF.pc3

Kibbee Ditch Storm Sewer and Ditch

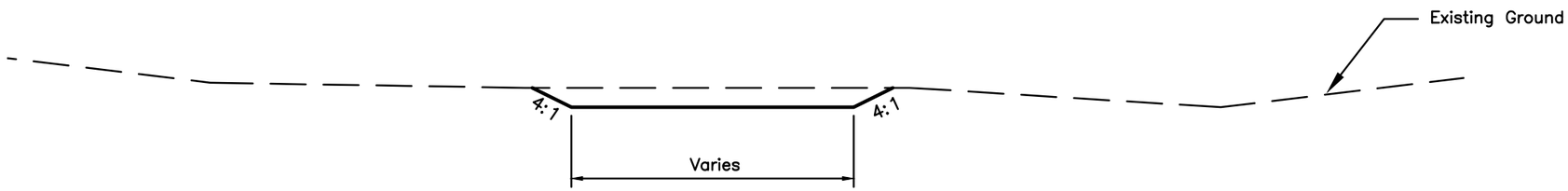

Typical Ditch Section

494' R to 612' R
Not to Scale

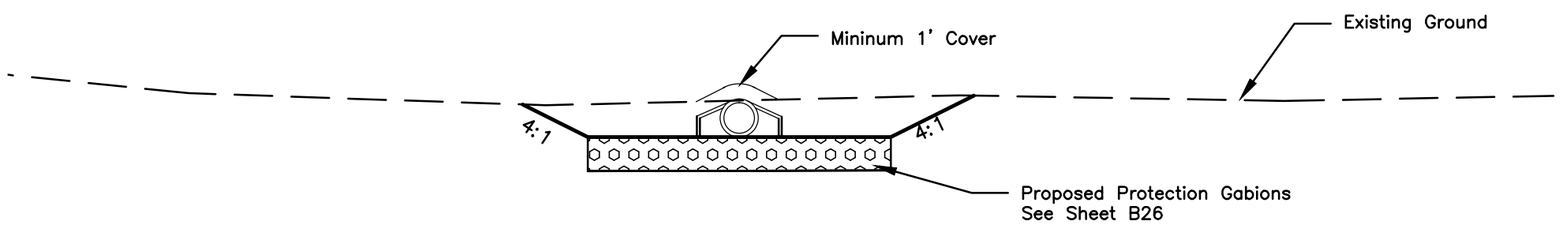

Outlet End of Pipe

495' R
Not to Scale

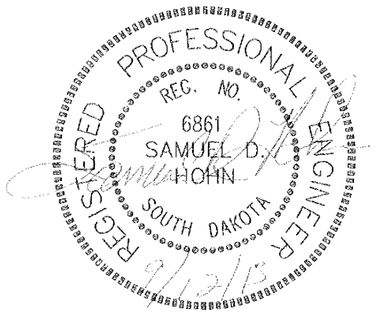

G:\Files\CAD\land projects R2\13405 Spruce Street\13405-Spruce Cover Street-Details 9 12.dwg, 2/18/2014 10:14:24 AM, DWG To PDF.pc3

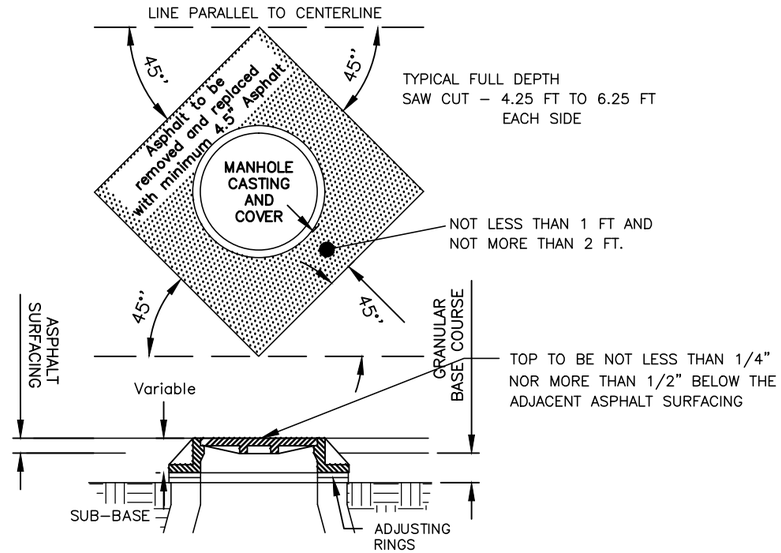

NOTE: THE MANHOLES SHALL BE ADJUSTED SUCH THAT THE TOP OF THE CONCRETE STRUCTURE WILL BE AT AN ELEVATION EQUAL TO THE STREET SUB–BASE. PRIOR TO PLACING THE GRANULAR BASE COURSE MATERIAL, A SUITABLE METAL PLATE SHALL BE PLACED OVER THE MANHOLE ACCESS OPENING. AFTER THE BASE COURSE MATERIAL AND THE ASPHALT SURFACING HAS BEEN PLACED, THE MANHOLE FRAME AND COVER SHALL BE EXPOSED AND RAISED TO AN ELEVATION THAT IS NOT LESS THAN 1/4 INCH NOR MORE THAN 1/2 INCH BELOW THE SURFACES OF THE ADJACENT ASPHALT. THE REMOVAL AND REPLACEMENT OF THE ASPHALT SURFACE SHALL BE IN CONFORMANCE WITH THE REQUIREMENTS OF THE SPECIFICATIONS AND THE DETAILS AS SHOWN IN THESE PLANS.

ADJUST STORM SEWER MANHOLE DETAIL

SCALE: NONE

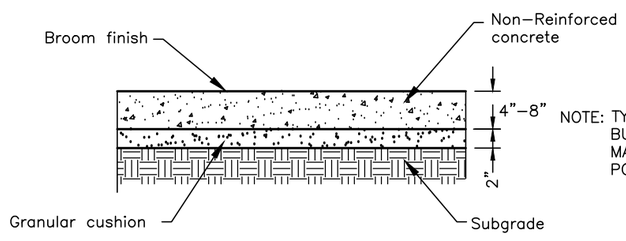

NOTE: TYPICAL SIDEWALK CROSS SLOPE IS 2% BUT MAY VARY. JOINT PATTERNS SHALL MATCH EXISTING PATTERNS AS NEARLY AS POSSIBLE.

TYPICAL SIDEWALK SECTION

SCALE: NONE

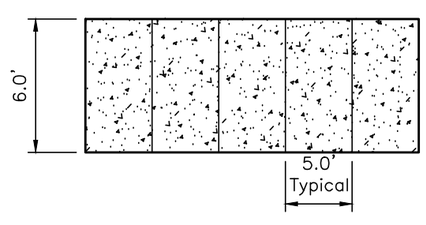

SIDEWALK JOINT DETAIL

SCALE: NONE

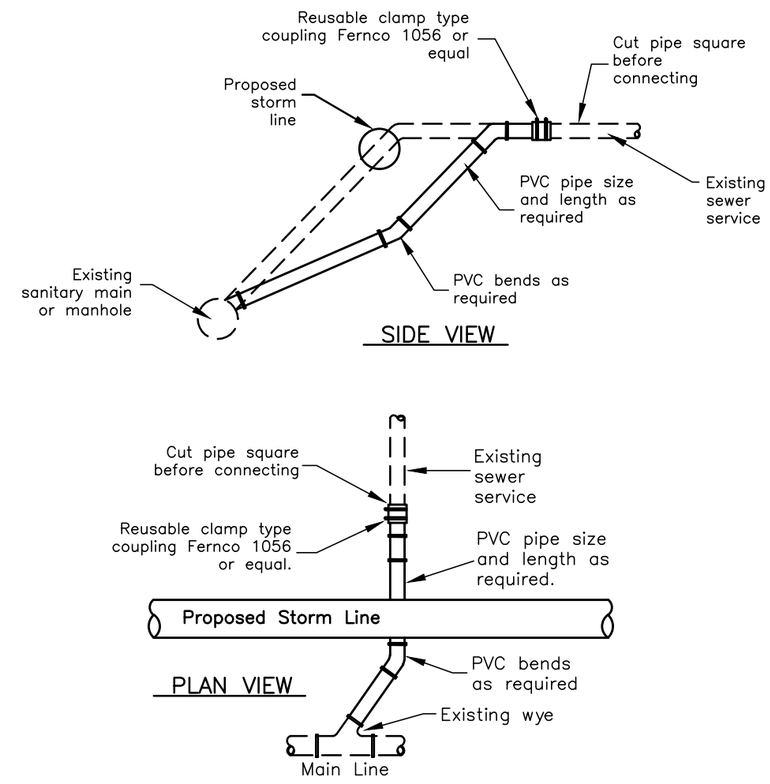

TYPICAL SERVICE LINE LOWERING DETAIL

SCALE: NONE

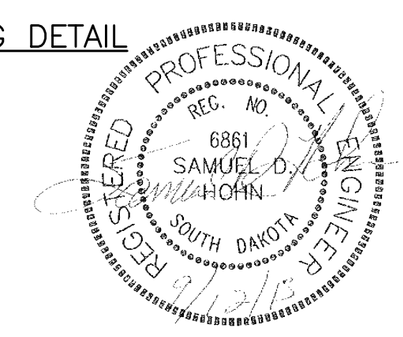

G:\Files\CAD\land projects R2\13405 Spruce Street\13405-Spruce Cover Street-Details-9 12.dwg, 2/18/2014 10:14:27 AM, DWG To PDF.pc3

FOR BIDDING PURPOSES ONLY

STATE OF SOUTH DAKOTA	PROJECT	SHEET NO.	TOTAL SHEETS
	P 3699(01)	B61	B88

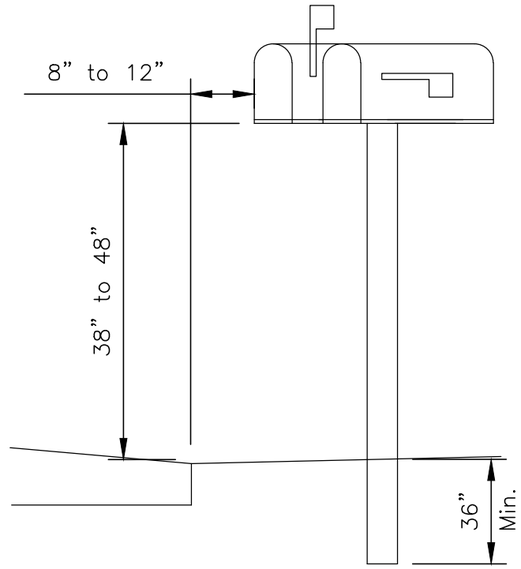

MAILBOX PLACEMENT – NO CURB
(SEE STANDARD PLATE # 900.02)

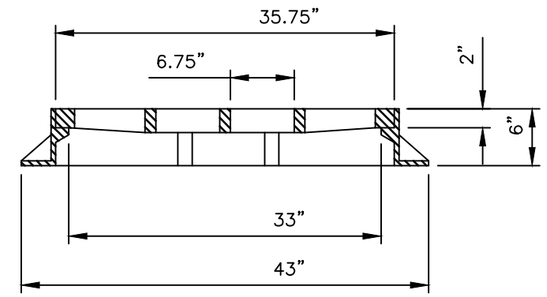

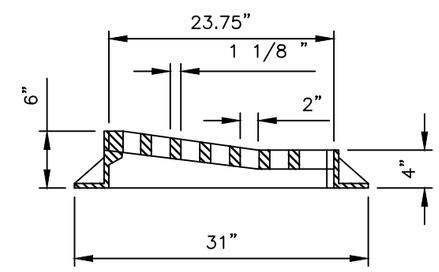

SPECIAL FRAME AND GRATE
SCALE: NONE

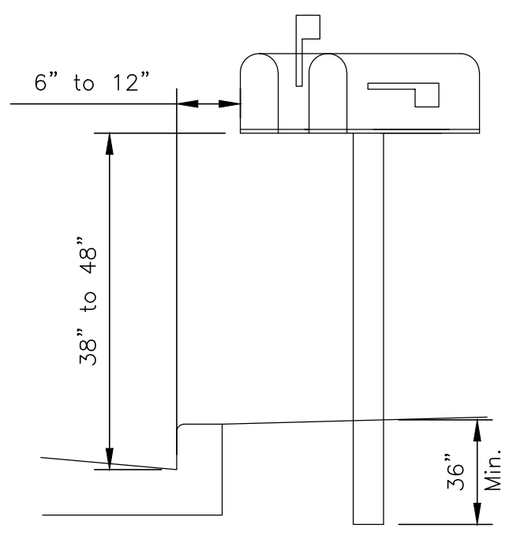

PLACEMENT OF CURBLINE MAILBOXES
(SEE STANDARD PLATE # 900.02)

G:\Files\CAD\land projects R2\13405 Spruce Street\13405-Spruce Cover Street-Details 9 12.dwg, 2/18/2014 10:14:32 AM, DWG To PDF.pc3

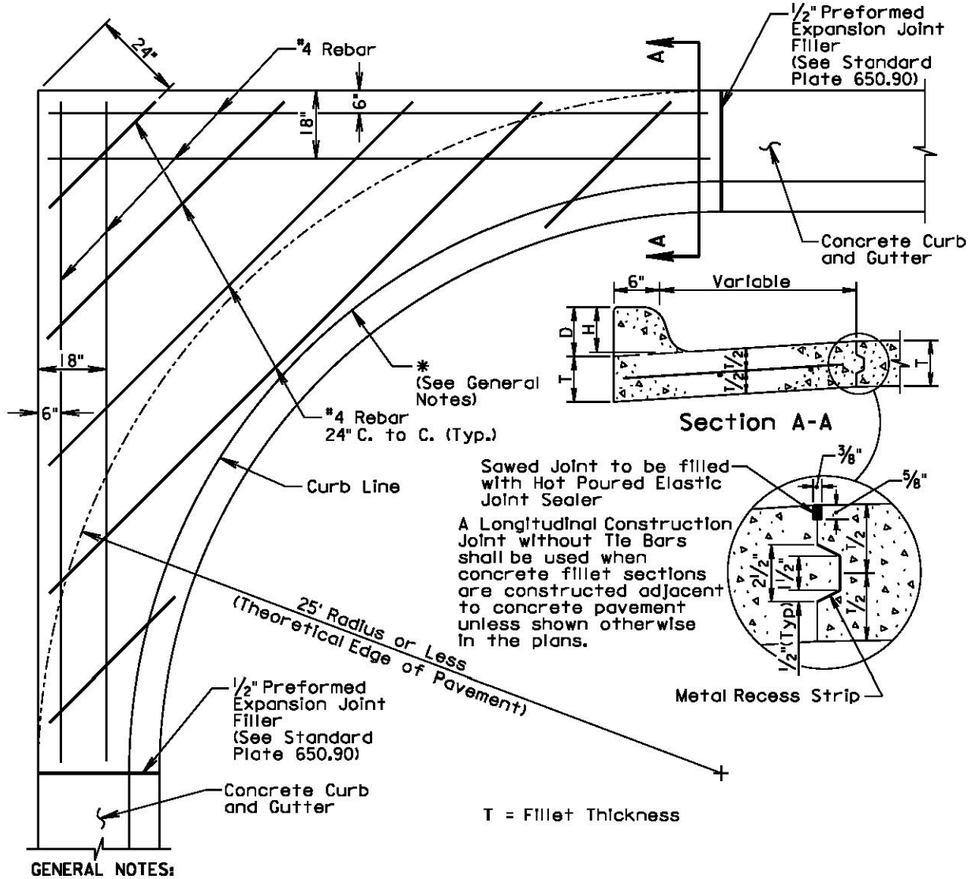

GENERAL NOTES:

* If a curb ramp is constructed adjacent to a PCC fillet section, the curb will need to be modified. Refer to the corresponding curb ramp standard plate or other special details in the plans for modification of the PCC fillet section.

Dimensions D, H, and T shall conform to those shown on the appropriate curb and gutter standard plate.

All rebar shall conform to A.S.T.M. A615 Grade 60 and the Standard Specifications Sections 480 and 1010. All rebar shall have a minimum of 3" clear cover.

Class M6 Concrete shall be used in construction of the fillets.

The concrete curb shall be monolithic with the concrete fillet. No separate payment for this curb will be made as the curb is considered a part of the fillet.

Joints shall be constructed at 10' intervals except when fillets are constructed adjacent to PCC Pavement. If there is adjacent PCC Pavement the joints shall be extended from edge of pavement through the fillet section as directed by the Engineer.

The cost for all materials, labor, and incidentals necessary to construct the PCC fillet section with curb and gutter shall be incidental to the contract unit price per square yard for the corresponding PCC fillet section bid item.

September 6, 2013

Published Date: 1st Qtr. 2014 | SDDOT | **PCC FILLET SECTION WITH TYPE B CURB AND GUTTER** | PLATE NUMBER 380.16 | Sheet 1 of 1

TOLERANCES IN DIMENSIONS

Diameter: ±1.5% for 24" Dia. or less and ±1% or 3/8" whichever is more for 27" Dia. or greater.
Diameters at Joints: ±3/16" for 30" Dia. or less and ±1/4" for 36" or greater.
Length of Joint (J): ±1/4".
Wall thickness (T): not less than design T by more than 5% or 3/16", whichever is greater.
Laying length: shall not underrun by more than 1/2".

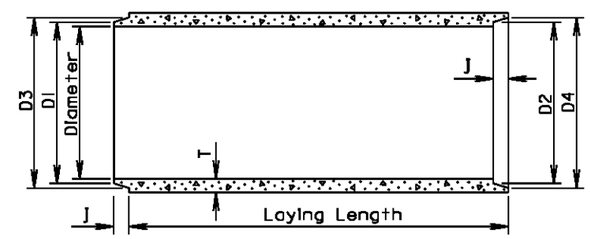

LONGITUDINAL SECTION

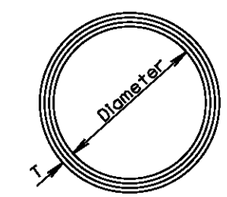

END VIEW

GENERAL NOTES:

Construction of R. C. P. shall conform to the requirements of Section 990 of the Standard Specifications for Roads and Bridges.

Not more than 2 four foot sections shall be permitted near the ends of any culvert. Four foot lengths shall be used only to secure the required length of culvert.

Diam. (In.)	Approx. Wt. /Ft. (lb.)	T (In.)	J (In.)	D1 (In.)	D2 (In.)	D3 (In.)	D4 (In.)
12	92	2	1 3/4	13 1/4	13 5/8	13 7/8	14 1/4
15	127	2 1/4	2	16 1/2	16 7/8	17 1/4	17 5/8
18	168	2 1/2	2 1/4	19 5/8	20	20 3/8	20 3/4
21	214	2 3/4	2 1/2	22 7/8	23 1/4	23 3/4	24 1/8
24	265	3	2 3/4	26	26 3/8	27	27 3/8
27	322	3 1/4	3	29 1/4	29 5/8	30 1/4	30 5/8
30	384	3 1/2	3 1/4	32 3/8	32 3/4	33 1/2	33 7/8
36	524	4	3 3/4	38 3/4	39 1/4	40	40 1/2
42	685	4 1/2	4	45 1/8	45 5/8	46 1/2	47
48	867	5	4 1/2	51 1/2	52	53	53 1/2
54	1070	5 1/2	4 1/2	57 7/8	58 3/8	59 3/8	59 7/8
60	1296	6	5	64 1/4	64 3/4	66	66 1/2
66	1542	6 1/2	5 1/2	70 5/8	71 1/8	72 1/2	73
72	1810	7	6	77	77 1/2	79	79 1/2
78	2098	7 1/2	6 1/2	83 3/8	83 7/8	85 5/8	86 1/8
84	2410	8	7	89 3/4	90 1/4	92 1/8	92 5/8
90	2740	8 1/2	7	95 3/4	96 1/4	98 1/8	98 5/8
96	2950	9	7	102 1/8	102 5/8	104 1/2	105
102	3075	9 1/2	7 1/2	109	109 1/2	111 1/2	112
108	3870	10	7 1/2	115 1/2	116	118	118 1/2

March 31, 2000

Published Date: 1st Qtr. 2014 | SDDOT | **REINFORCED CONCRETE PIPE** | PLATE NUMBER 450.01 | Sheet 1 of 1

G:\Files\CAD\land projects R2\13405 Spruce Street\13405-Spruce Cover Street-Details.9 12.dwg, 2/18/2014 10:29:52 AM, DWG To PDF.pc3

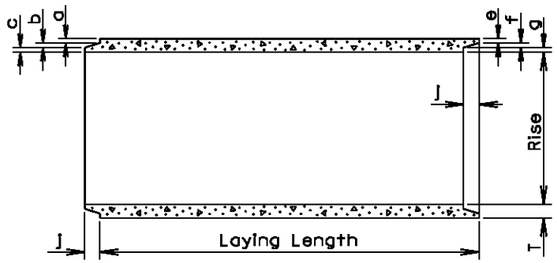

LONGITUDINAL SECTION

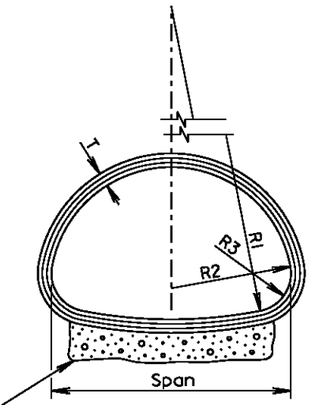

END VIEW

TOLERANCES IN DIMENSIONS

Radial dimensions at joints: ±1/8 " for 65" span or less and ±1/4 " for longer spans.
Rise and Span: ±2% of tabular values.
Length of Joint (J): ±1/4 ".
Wall thickness (T): not less than design T by more than 5% or 3/16", whichever is greater.
Laying length: shall not underrun by more than 1/2".

Gravel Bedding Material shall be supplied for 102" to 169" spans. It shall be placed to a thickness of 6" (min.) x 85% of the Span x Length of culvert and shall conform to the gradation requirements for gravel surfacing except material may be screened or may be plan provided material.

* Size (In.)	Approx. Wt./Ft. (lb.)	Rise (In.)	Span (In.)	T (In.)	a (In.)	b (In.)	c (In.)	J (In.)	e (In.)	f (In.)	g (In.)	R1 (In.)	R2 (In.)	R3 (In.)
18	170	13 1/2	22	2 1/2	1 3/8	3/8	3/4	2	1 1/8	3/8	1	27 1/2	13 3/4	5 1/4
24	320	18	28 1/2	3 1/2	1 5/8	1/2	1 3/8	3	1 3/8	1/2	1 5/8	40 11/16	14 3/4	4 5/8
30	450	22 1/2	36 1/4	4	1 13/16	5/8	1 9/16	3 1/2	1 9/16	5/8	1 13/16	51	18 3/4	6 1/8
36	600	26 5/8	43 3/4	4 1/2	2	3/4	1 3/4	4	1 3/4	3/4	2	62	22 1/2	6 1/2
42	740	31 5/16	51 1/8	4 1/2	2	3/4	1 3/4	4	1 3/4	3/4	2	73	26 1/4	7 3/4
48	890	36	58 1/2	5	2 1/4	3/4	2	5	2	3/4	2 1/4	84	30	8 7/8
54	1100	40	65	5 1/2	2 1/2	3/4	2 1/4	5	2 1/4	3/4	2 1/2	92 1/2	33 3/8	10
60	1400	45	73 1/2	6	3 5/16	3/4	1 15/16	5	2 3/4	3/4	2 1/2	105	37 1/2	11
72	1900	54	88	7	3 13/16	1	2 3/16	6	3 1/4	1	2 3/4	126	45	13 5/16
84	2500	62	102	8	4 1/8	1	2 7/8	6	3 1/2	1	3 1/2	162 1/2	52	14 1/2
96	3300	78	122 3/8	9	4 1/2	1	3 1/2	7	4	1	4	218	62	20
108	4200	88	138 1/2	10	5	1	4	7	4 1/2	1	4 1/2	269	70	22
120	5100	96 7/8	154	11	5 1/2	1	4 1/2	7	5	1	5	301 3/8	78	24
132	5100	106 1/2	168 3/4	10		1	4	7	4 1/2	1	4 1/2	329	85 5/8	26 7/8

* Equivalent Diameter of Circular R. C. P.

GENERAL NOTES:

Construction of R.C.P. Arch shall conform to the requirements of Section 990 of the Standard Specifications for Roads and Bridges. Not more than 2 four foot sections shall be permitted near the ends of any culvert. Four foot lengths shall be used only to secure the required length of culvert.

March 31, 2000

Published Date: 1st Qtr. 2014 | SDDOT | REINFORCED CONCRETE PIPE ARCH | PLATE NUMBER 450.02 | Sheet 1 of 1

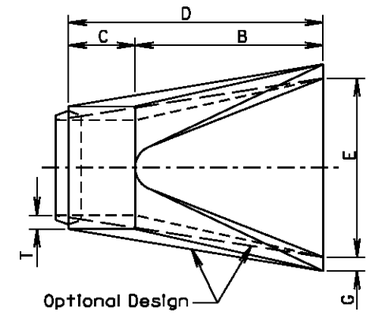

TOP VIEW

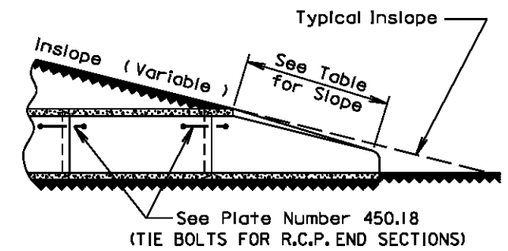

SLOPE DETAIL

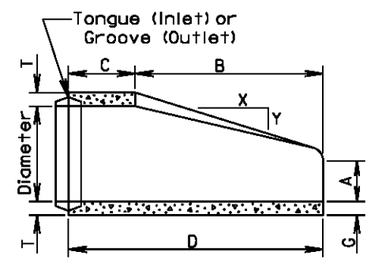

LONGITUDINAL SECTION

GENERAL NOTES:

Lengths of concrete pipe shown on Plan Sheets are between flared Ends only.

Construction of R.C.P. Flared End shall conform to the requirements of Section 990 of the Standard Specifications for Roads and Bridges.

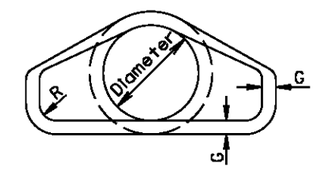

END VIEW

Dia. (In.)	Approx. Wt. of Section (lbs.)	Approx. Slope (X to Y)	T (In.)	A (In.)	B (In.)	C (In.)	D (In.)	E (In.)	G (In.)	R (In.)
12	530	2.4: 1	2	4	24	48 7/8	72 7/8	24	2	1 1/2
15	740	2.4: 1	2 1/4	6	27	46	73	30	2 1/4	1 1/2
18	990	2.3: 1	2 1/2	9	27	46	73	36	2 1/2	1 1/2
21	1280	2.4: 1	2 3/4	9	36	37 1/2	73 1/2	42	2 3/4	1 1/2
24	1520	2.5: 1	3	9 1/2	43 1/2	30	73 1/2	48	3	1 1/2
27	1930	2.5: 1	3 1/4	10 1/2	49 1/2	24	73 1/2	54	3 1/4	1 1/2
30	2190	2.5: 1	3 1/2	12	54	19 3/4	73 3/4	60	3 1/2	1 1/2
36	4100	2.5: 1	4	15	63	34 3/4	97 3/4	72	4	1 1/2
42	5380	2.5: 1	4 1/2	21	63	35	98	78	4 1/2	1 1/2
48	6550	2.5: 1	5	24	72	26	98	84	5	1 1/2
54	8240	2: 1	5 1/2	27	65	33 1/4	98 1/4	90	5 1/2	1 1/2
60	8730	1.9: 1	6	35	60	39	99	96	5	1 1/2
66	10710	1.7: 1	6 1/2	30	72	27	99	102	5 1/2	1 1/2
72	12520	1.8: 1	7	36	78	21	99	108	6	1 1/2
78	14770	1.8: 1	7 1/2	36	90	21	111	114	6 1/2	1 1/2
84	18160	1.6: 1	8	36	90 1/2	21	111 1/2	120	6 1/2	1 1/2
90	20900	1.5: 1	8 1/2	41	87 1/2	24	111 1/2	132	6 1/2	6

March 31, 2000

Published Date: 1st Qtr. 2014 | SDDOT | R. C. P. FLARED ENDS | PLATE NUMBER 450.10 | Sheet 1 of 1

G:\Files\CAD\land projects R2\13405 Spruce Street\13405-Spruce Cover Street-Details 9 12.dwg, 2/18/2014 10:29:58 AM, DWG To PDF.pc3

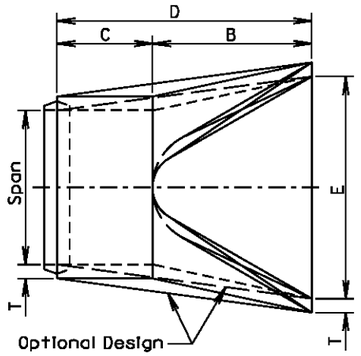

TOP VIEW

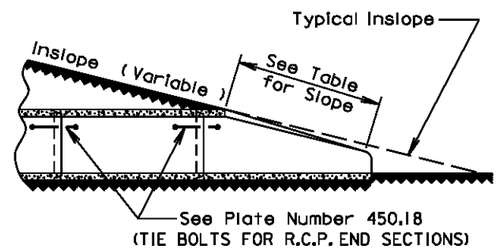

SLOPE DETAIL

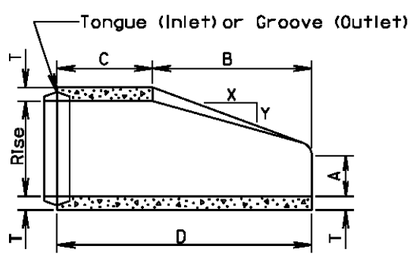

LONGITUDINAL SECTION

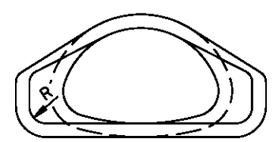

END VIEW

GENERAL NOTES:

Lengths of concrete pipe shown on Plan Sheets are between Flared Ends only.

Construction of R.C.P. Arch Flared End shall conform to the requirements of Section 990 of the Standard Specifications for Roads and Bridges.

* Size (in.)	Approximate Weight of Section (lbs.)	Rise (in.)	Span (in.)	Slope (X:Y)	T (in.)	A (in.)	B (in.)	C (in.)	D (in.)	E (in.)	R (in.)
18	1100	13 1/2	22	3:1	2 1/2	7	27	45	72	36	2
24	1750	18	28 1/2	3:1	3 1/2	8 1/2	39	33	72	48	3
30	3300	22 1/2	36 1/4	3:1	4	9 1/2	50	46	96	60	3
36	4350	26 5/8	43 3/4	3:1	4 1/2	11 1/8	60	36	96	72	6
42	5250	31 5/16	51 1/8	3:1	4 1/2	15 13/16	60	36	96	78	6
48	6400	36	58 1/2	3:1	5	21	60	36	96	84	6
54	7850	40	65	3:1	5 1/2	25 1/2	60	36	96	90	6
60	9500	45	73 1/2	3:1	6	31	60	36	96	96	6
72	13550	54	88	2:1	7	31	60	39	99	120	6
84	17950	62	102	2:1	8	28 1/2	83	19	102	144	6

*Equivalent Diameter of Circular R.C.P.

March 31, 2000

Published Date: 1st Qtr. 2014

SDDOT

R.C.P. ARCH FLARED ENDS

PLATE NUMBER 450.11

Sheet 1 of 1

Wall "t" (in.)	Rod Dia. (in.)	Pipe Sleeve Dia. (nominal)
≤ 3 1/4	5/8	3/4
3 1/2-6 1/2	3/4	1
≥ 7	1	1 1/4

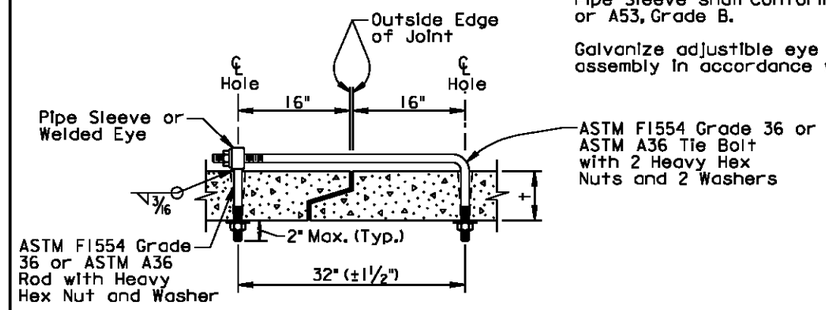

ADJUSTABLE EYE BOLT TIE

GENERAL NOTES:

Tie bolts shall conform to ASTM F1554 Grade 36 or ASTM A36. Nuts shall be heavy hex conforming to ASTM A563. Washers shall conform to ASTM F436.

Pipe Sleeve shall conform to ASTM A500 or A53, Grade B.

Galvanize adjustible eye bolt tie assembly in accordance with ASTM A153.

Pipe Dia. (in.)	"L" (in.)	Bolt Dia. (in.)
≤ 48	4	3/4
> 48	6	1

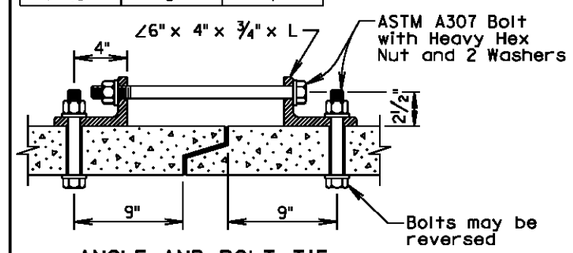

ANGLE AND BOLT TIE

GENERAL NOTES:

Angles shall conform to ASTM A36.

Bolts shall conform to ASTM A307. Nuts shall be heavy hex conforming to ASTM A563. Washers shall conform to ASTM F436.

Galvanize angles, bolts, nuts, and washers in accordance with ASTM A153.

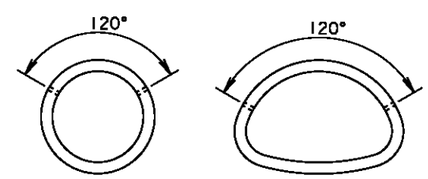

END VIEW "CIRCULAR"

END VIEW "ARCH"

GENERAL NOTES:

In lieu of the tie bolts detailed above other types of tie bolt connections may be installed as approved by the Office of Bridge Design.

All pipe sections of R.C.P. and R.C.P. Arch shall be tied with tie bolts except for pipe located between drop inlets, manholes, and junction boxes. All pipe sections of pipes that only enter or exit drop inlets, manhole, and junction boxes shall be tied with tie bolts.

There will be no separate measurement or payment for the tie bolts. The cost for furnishing and installing the tie bolts shall be incidental to the contract unit price per foot for the corresponding bid item for R.C.P. or R.C.P. Arch.

February 28, 2013

Published Date: 1st Qtr. 2014

SDDOT

TIE BOLTS FOR R.C.P. AND R.C.P. ARCH

PLATE NUMBER 450.18

Sheet 1 of 1

G:\Files\CAD\land projects R2\13405 Spruce Street\13405-Spruce Cover Street-Details 9 12.dwg, 2/18/2014 10:30:03 AM, DWG To PDF.pc3

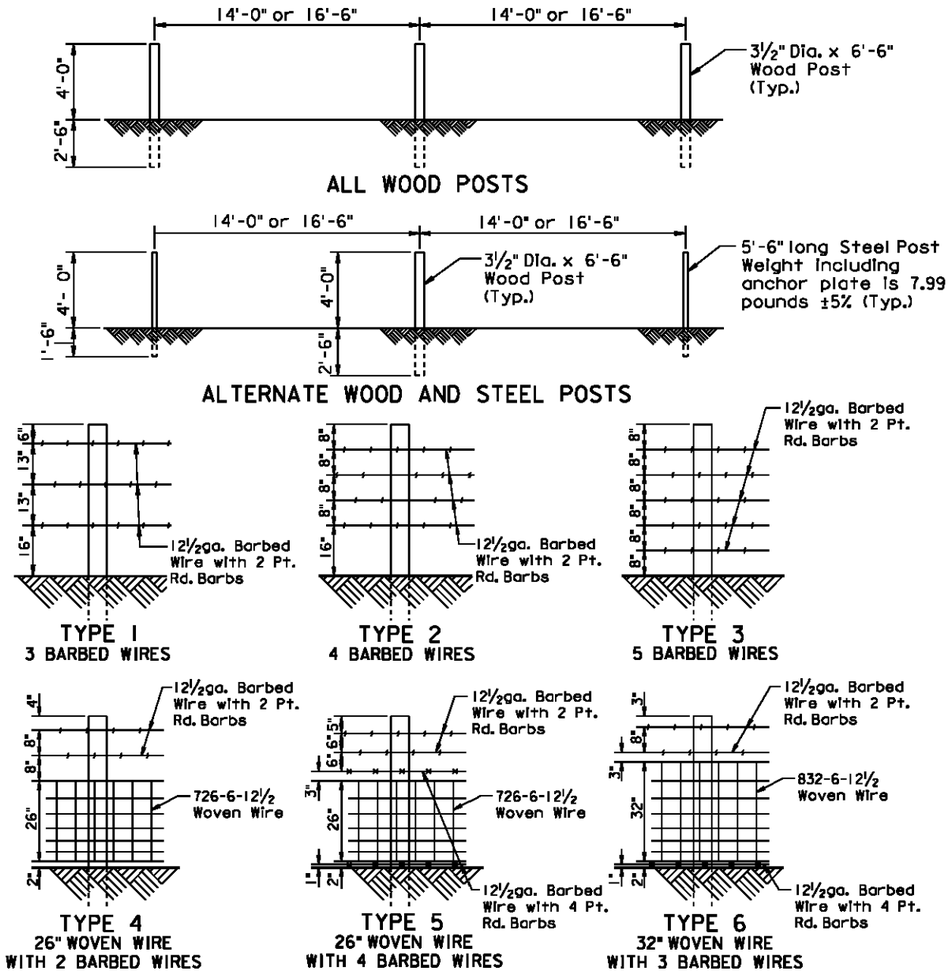

TYPE OF FENCE		LINE POST SPACING	BARBED WIRE		WOVEN WIRE
TYPE	DESCRIPTION		WIRE GAGE	NUMBER AND SHAPE OF BARBS	STYLE OR DESIGN NO.
1	3 Barbed Wires	16'-6"	12½	2 Point Round	—
2	4 Barbed Wires	16'-6"	12½	2 Point Round	—
3	5 Barbed Wires	16'-6"	12½	2 Point Round	—
4	26" Woven Wire with 2 Barbed Wires	14'-0"	12½	2 Point Round	726-6-12½
5	26" Woven Wire with 4 Barbed Wires	14'-0"	12½	2 wires with 2 Pt. Rd. 2 wires with 4 Pt. Rd.	726-6-12½
6	32" Woven Wire with 3 Barbed Wires	14'-0"	12½	2 wires with 2 Pt. Rd. 1 wire with 4 Pt. Rd.	832-6-12½

GENERAL NOTES:

Fence types designated on the plans that are followed by the letter S shall have smooth (barbless) wires.

When type 5S or 6S is designated the bottom wire may be barbed, smooth, or left off.

All degrees of curvature stated for fence are at centerline of roadway.

September 14, 2009

Published Date: 1st Qtr. 2014

SDDOT

RIGHT-OF-WAY FENCE

PLATE NUMBER
620.01

Sheet 1 of 1

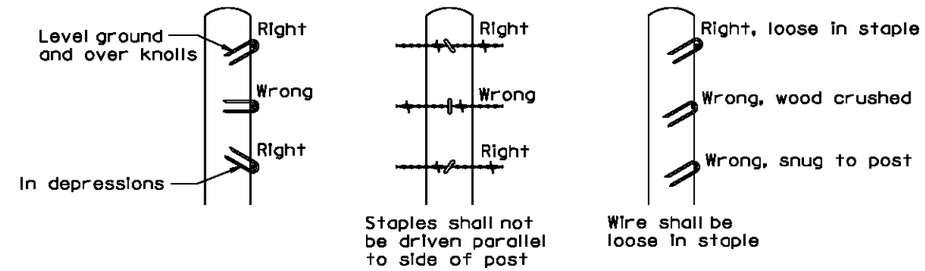

STAPLE INSTALLATION

GENERAL NOTES:

The Right-of-Way fence shall consist of barbed wire or a combination of woven wire and barbed wire. The barbed wire and/or woven wire shall be fastened to all wood posts or fastened to alternating wood and steel posts. Only wood posts shall be used for brace panels. Gates shall be of the type designated in the plans or as otherwise directed by the Engineer. Fence shall be constructed conforming to the details on the standard plates and in the plans unless otherwise directed by the Engineer.

Right-of-Way fence on Interstate Projects shall be constructed one foot within the Interstate Right-of-Way lines except at bridge openings, cattle passes, and as otherwise directed by the Engineer.

Right-of-Way fence other than on Interstate Projects shall be constructed within one foot of the Right-of-Way on the Landowner's side except at bridge openings, cattle passes, and as otherwise directed by the Engineer.

Barbs shall be fabricated from zinc coated 14 ga. wire. Two point barbs shall be wrapped twice around one main strand at 4" spacings and the four point barbs shall be interlocked and wrapped around both main strands at 5" spacings.

The gages of wire and wood post lengths and sizes are the minimum acceptable unless otherwise specified in the plans. The tolerances for steel posts shall be as stated in AASHTO M281. Woven wire shall conform to design and specifications of ASTM A116 and barbed wire shall conform to ASTM A121.

December 23, 2004

Published Date: 1st Qtr. 2014

SDDOT

STAPLE INSTALLATION AND GENERAL RIGHT-OF-WAY FENCE NOTES

PLATE NUMBER
620.02

Sheet 1 of 1

G:\Files\CAD\land projects R2\13405 Spruce Street\13405-Spruce Cover Street-Details.9 12.dwg, 2/18/2014 10:30:08 AM, DWG To PDF.pc3

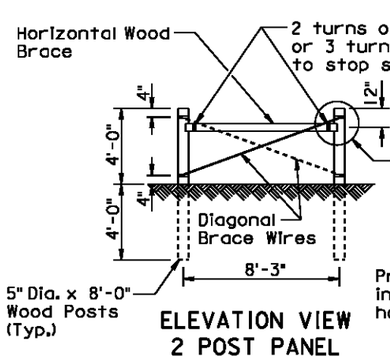

ELEVATION VIEW
2 POST PANEL

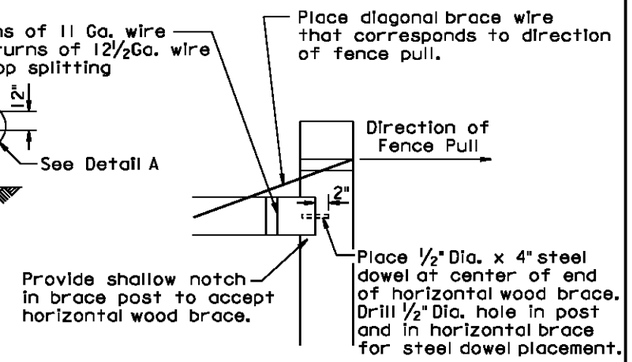

DETAIL A

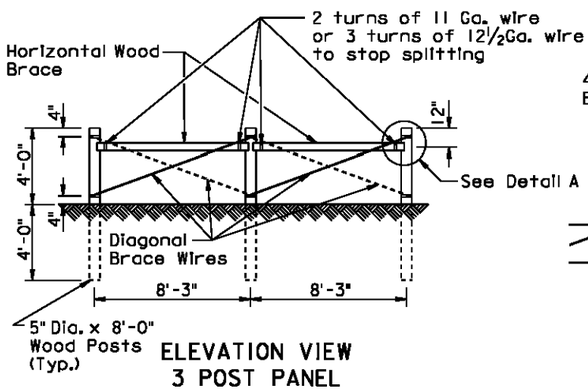

ELEVATION VIEW
3 POST PANEL

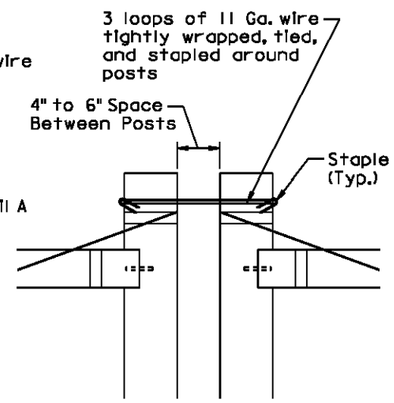

DETAIL B

GENERAL NOTES:

Two Post Panels shall be installed at least every 1320' between corners.

Two Post Panels shall be installed at any sharp vertical angle crest points and as directed by the Engineer.

Horizontal wood braces shall consist of 4" dia. x 8' wood posts or rough 4" x 4" x 8' timbers.

Diagonal brace wires shall be fabricated with 4 strands of 9 Ga. galvanized wire twisted tight. The diagonal brace wires shall be installed in accordance with the direction of the fence pull. Two diagonal brace wires are required if fence pull is in both directions.

December 23, 2004

Published Date: 1st Qtr. 2014	SDDOT	BRACE PANELS AND APPLICATIONS OF BRACE PANELS	PLATE NUMBER 620.03
			Sheet 1 of 3

SPACING OF 2 POST PANELS WITHIN CURVES	
DEGREE OF CURVE	SPACING OF 2 POST PANEL
less than 3°15'	** 1320'
3°15' and greater	**At P.C., P.T., and at every 1320' between P.C. and P.T.

GENERAL NOTE:

All degrees of curvature stated for fence are at centerline of roadway.

* If fence length is less than 600' to next corner use a 2 post panel. If fence length is greater than 600' to next corner use a 3 post panel.

** Fence lengths greater than 1320' and less than 2640' place 2 Post Panel approximately at midpoint.

① See Detail B on Sheet 1 of 3.

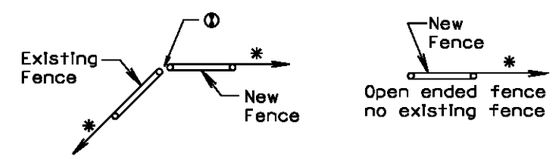

BEGIN OR END FENCE
(where new fence ties into existing fence)

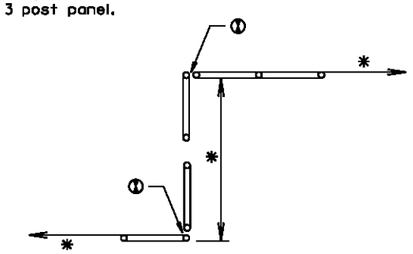

SHORT JOGS IN FENCE

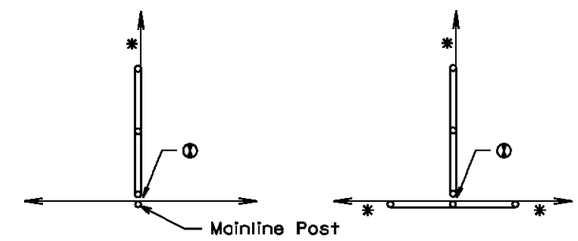

CROSS FENCE

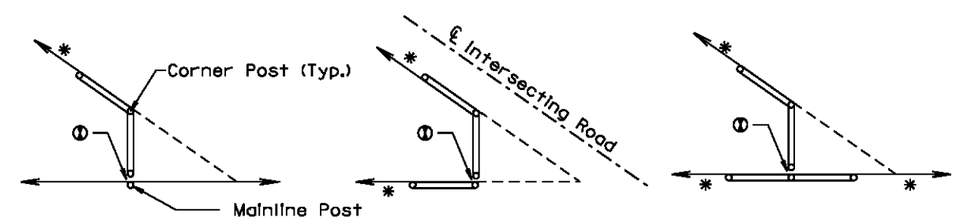

SHARP ANGLES IN CROSS FENCE

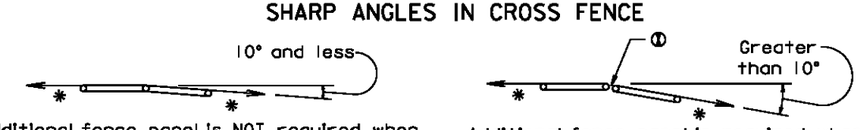

Additional fence panel is NOT required when an angle in the mainline fence is 10° and less.

Additional fence panel is required when an angle in the mainline fence is greater than 10°.

ANGLES IN MAINLINE FENCE

December 23, 2004

Published Date: 1st Qtr. 2014	SDDOT	BRACE PANELS AND APPLICATIONS OF BRACE PANELS	PLATE NUMBER 620.03
			Sheet 2 of 3

G:\Plans\CAD\ard projects\Ke\3805-Spruce Street\3805-Spruce Cover Sheet-Details-2.dwg, 2/18/2014 10:30:13 AM, DWG To PDF.pc3

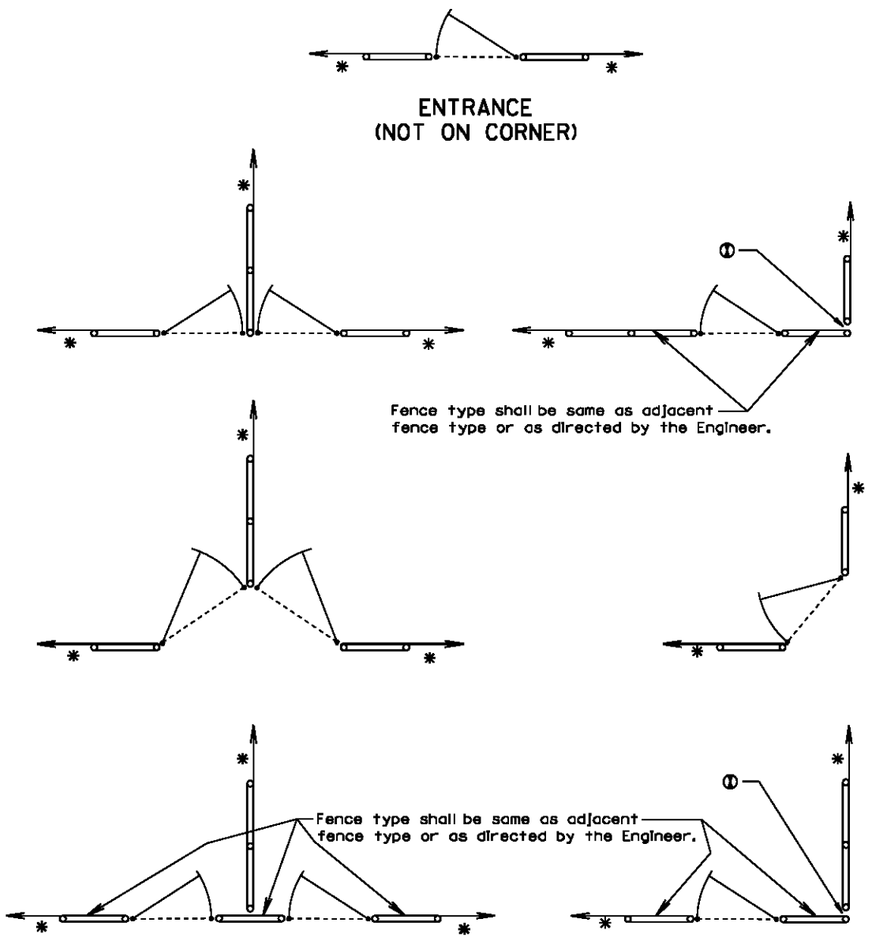

GATES

* If fence length is less than 600' to next corner use a 2 post panel.
If fence length is greater than 600' to next corner use a 3 post panel.

① See Detail B on Sheet 1 of 3.

December 23, 2004

Published Date: 1st Qtr. 2014 | SDDOT | BRACE PANELS AND APPLICATIONS OF BRACE PANELS | PLATE NUMBER 620.03 | Sheet 3 of 3

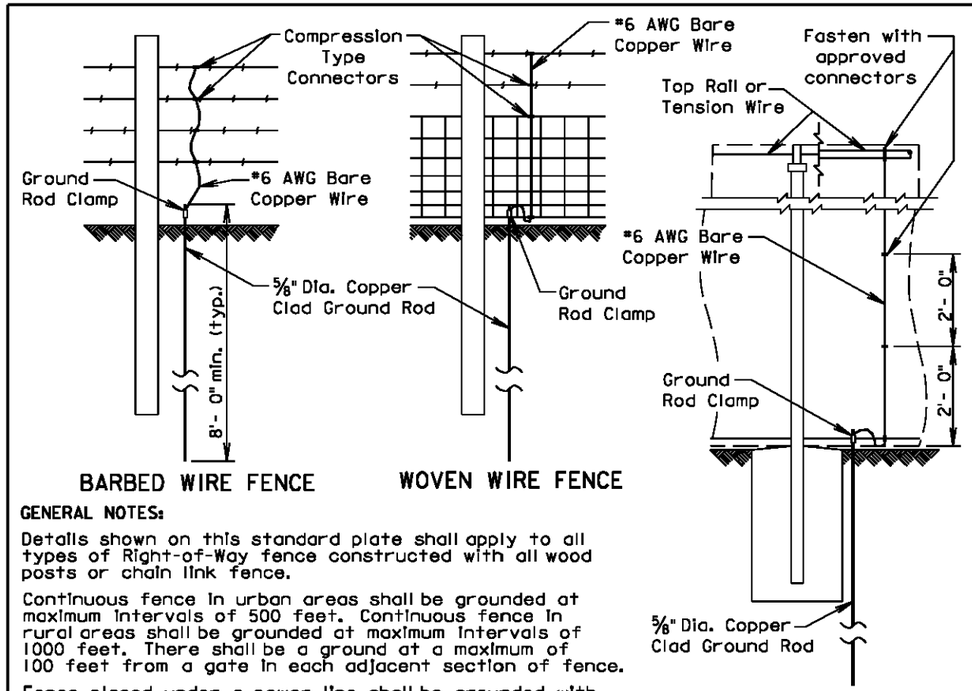

GENERAL NOTES:

Details shown on this standard plate shall apply to all types of Right-of-Way fence constructed with all wood posts or chain link fence.

Continuous fence in urban areas shall be grounded at maximum intervals of 500 feet. Continuous fence in rural areas shall be grounded at maximum intervals of 1000 feet. There shall be a ground at a maximum of 100 feet from a gate in each adjacent section of fence.

Fence placed under a power line shall be grounded with three grounds. One ground shall be placed directly below the crossing and the other two shall be placed 25 feet to 50 feet away, one on each side.

One ground shall be placed directly below each telephone or cable crossing.

Ground rods shall be located on the post side of the fence and shall be as close as possible to the post and fence.

The cost of furnishing and placing all materials for grounding shall be incidental to the contract unit price per Ft for the respective Right-of-Way fence or chain link fence bid item.

The approximate quantites of materials per each installation of a ground are:

- 1 ground rod clamp.
- 1 5/8" dia. X 8' long copper clad ground rod
- 1 #6 AWG bare copper wire; 7' long for Right-of-Way fence or 10' long for chain link fence.

Compression type or other type of connectors:

26" woven wire shall have a total of two connectors, one secured to the top and one secured to the bottom.

32" woven wire shall have a total of three connectors, one secured to the top, one secured to the middle, and one secured to the bottom.

One connector shall be used for each strand of barbed wire.

A minimum of 3 connectors shall be installed on chain link fence, the connectors shall be placed vertically at every two foot increment and connectors shall be placed on the top and bottom tension wires or top rail.

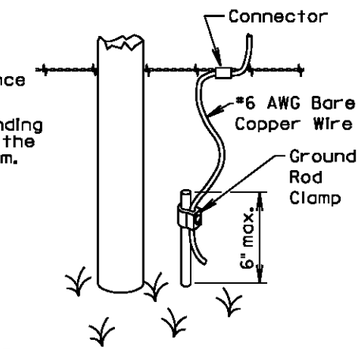

GROUND ROD DETAIL

March 31, 2000

Published Date: 1st Qtr. 2014 | SDDOT | FENCE GROUNDING | PLATE NUMBER 620.11 | Sheet 1 of 1

G:\Files\CAD\land projects R2\13405 Spruce Street\13405-Spruce Cover Street-Details-9 12.dwg, 2/18/2014 10:30:18 AM, DWG To PDF.pc3

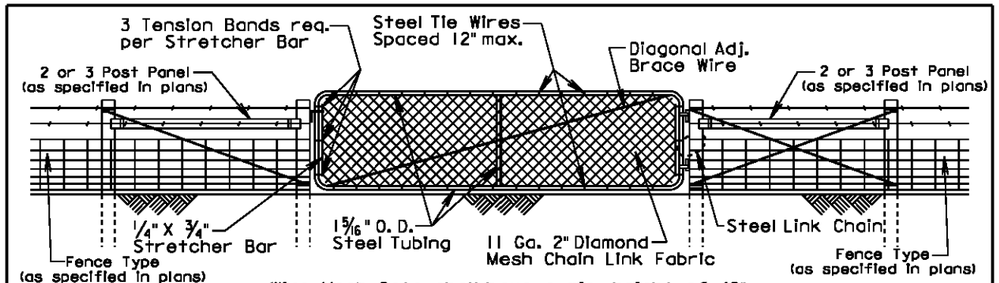

Wire Mesh Gate shall have a min. height of 48".

WIRE MESH GATE

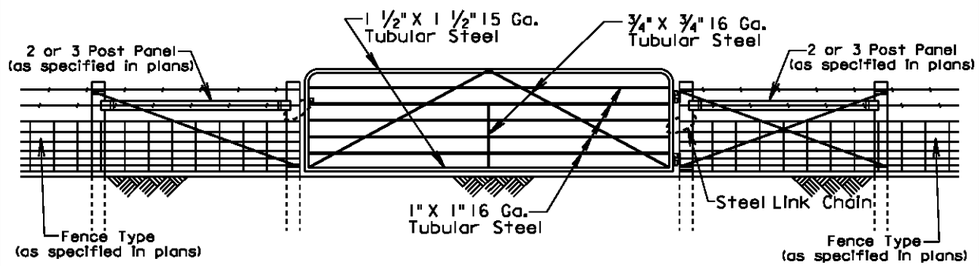

Square Tubular Steel Gate shall have a minimum height of 52".

SQUARE TUBULAR STEEL GATE

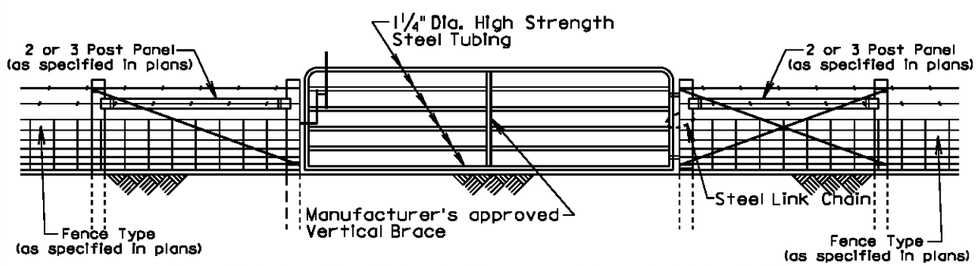

Round Tubular Steel Gate shall have a minimum height of 52".

ROUND TUBULAR STEEL GATE

GENERAL NOTES:

Only single tubular frame gates are shown on this standard plate. If double tubular frame gates are specified, the gates shall be of the same type and materials as shown above. Double tubular gates shall swing toward the middle of the opening and shall be secured by a chain, latch, or other suitable hardware.

Gate hardware shall conform to the specific type of gate installed. The gate and gate hardware shall either be painted or galvanized. The paint on the gates and hardware shall be subject to approval by the Engineer.

The Steel Link Chain shall be a minimum of 1/4", 4' long, rust resistant, and have electrically welded links. The chain shall be wrapped around the gate hinge post and gate frame and the ends of the chain shall be welded together with enough slack in the chain to provide free operation of the gate.

March 31, 2000

Published Date: 1st Qtr. 2014	SDDOT	TUBULAR FRAME GATES	PLATE NUMBER 620.21
			Sheet 1 of 1

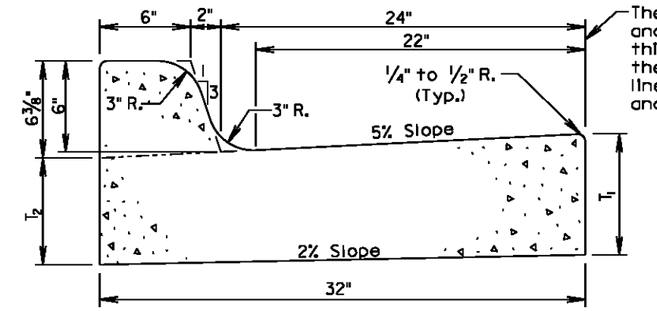

The stated radii on the plans and cross sections refer to this line and it shall also be the basis for horizontal linear foot measurement and payment.

Type	T_1 (Inches)	T_2 (Inches)	Cu. Yd. Per Lin. Ft.	Lin. Ft. Per Cu. Yd.
B66	6	5 1/16	0.057	17.7
B67	7	6 1/16	0.065	15.4
B68	8	7 1/16	0.073	13.7
B68.5	8.5	7 9/16	0.077	13.0
B69	9	8 1/16	0.081	12.3
B69.5	9.5	8 9/16	0.085	11.7
B610	10	9 1/16	0.090	11.2
B610.5	10.5	9 9/16	0.094	10.7
B611	11	10 1/16	0.098	10.2
B611.5	11.5	10 9/16	0.102	9.8
B612	12	11 1/16	0.106	9.4

GENERAL NOTES:

When concrete curb and gutter longitudinally adjoins new concrete pavement, the method of attachment shall be by one of the methods shown on Standard Plate 380.11.

See Standard Plate 650.90 for expansion and contraction joints in the curb and gutter.

September 6, 2008

Published Date: 1st Qtr. 2014	SDDOT	TYPE B CONCRETE CURB AND GUTTER	PLATE NUMBER 650.01
			Sheet 1 of 1

G:\Files\CAD\land projects R2\13405 Spruce Street\13405-Spruce Cover Street-Details.9 12.dwg, 2/18/2014 10:15:07 AM, DWG To PDF.pc3

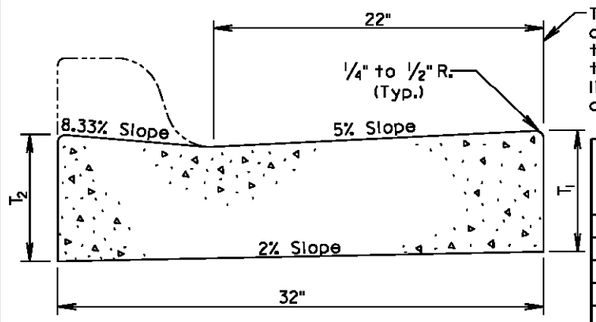

The stated radii on the plans and cross sections refer to this line and it shall also be the basis for horizontal linear foot measurement and payment.

Type	T_1 (Inches)	T_2 (Inches)	Cu. Yd. Per Lin. Ft.	Lin. Ft. Per Cu. Yd.
P6	6	6 3/8	0.047	21.2
P7	7	7 3/8	0.055	18.1
P8	8	8 3/8	0.064	15.7
P8.5	8.5	8 7/8	0.068	14.8
P9	9	9 3/8	0.072	13.9
P9.5	9.5	9 7/8	0.076	13.2
P10	10	10 3/8	0.080	12.5
P10.5	10.5	10 7/8	0.084	11.9
P11	11	11 3/8	0.088	11.3
P11.5	11.5	11 7/8	0.092	10.8
P12	12	12 3/8	0.096	10.4

TRANSVERSE SECTION

Type P Concrete Gutter Limits

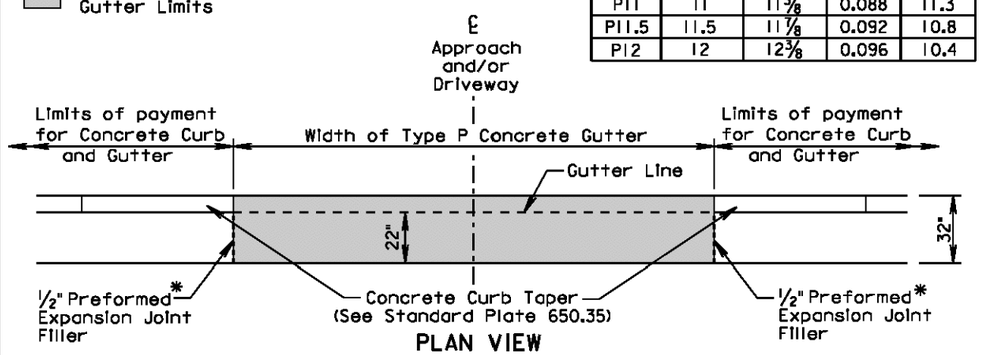

PLAN VIEW

* Joint will not be needed if concrete curb and gutter and type P concrete gutter is placed at the same time. If the 1/2" Preformed Expansion Joint Filler is provided, then the joint shall be sealed in accordance with standard plate 650.90.

GENERAL NOTES:

The concrete for the Type P Concrete Gutter shall comply with the requirements of the Standard Specifications for Class M6 Concrete.

When concrete gutter longitudinally adjoins new concrete pavement, the method of attachment shall be by one of the methods shown on Standard Plate 380.11.

Transverse contraction joints shall be constructed at 10' intervals in the concrete gutter except when concrete gutter is constructed adjacent to mainline PCC pavement. When concrete gutter is constructed adjacent to mainline PCC pavement, a transverse contraction joint shall be constructed in the concrete gutter at each mainline PCC pavement transverse contraction joint location.

When concrete gutter is placed monolithically with mainline PCC pavement, the transverse contraction joints in the concrete gutter shall be sawed and sealed the same as the transverse contraction joints in the mainline PCC pavement.

When concrete gutter is not placed monolithically with the mainline PCC pavement and when the adjacent mainline surfacing is not PCC concrete, the transverse contraction joints in the concrete gutter shall be 1 1/2 inches deep if formed in the fresh concrete using a suitable grooving tool. If a saw is used to cut the contraction joints, then the depth of the joint shall be at least 1/4 the thickness of the concrete.

September 6, 2013

Published Date: 1st Qtr. 2014	SDDOT	TYPE P CONCRETE GUTTER	PLATE NUMBER 650.30
			Sheet 1 of 1

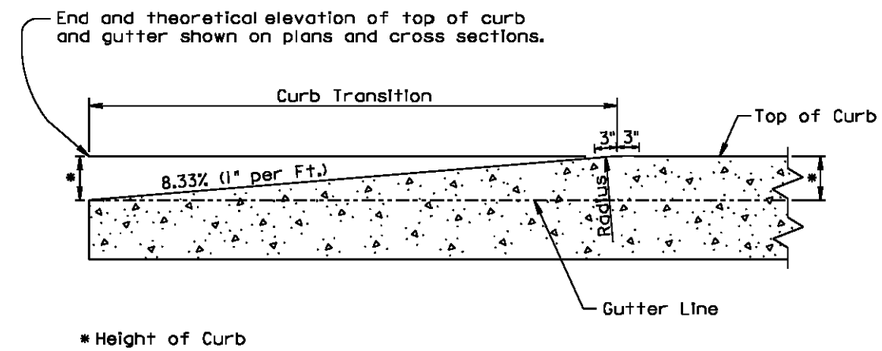

* Height of Curb

LONGITUDINAL SECTION OF CONCRETE CURB TAPER

September 14, 2005

Published Date: 1st Qtr. 2014	SDDOT	CONCRETE CURB TAPER	PLATE NUMBER 650.35
			Sheet 1 of 1

G:\Files\CAD\land projects R2\13405 Spruce Street\13405-Spruce Cover Street-Details 9 12.dwg, 2/18/2014 10:32:16 AM, DWG To PDF.pc3

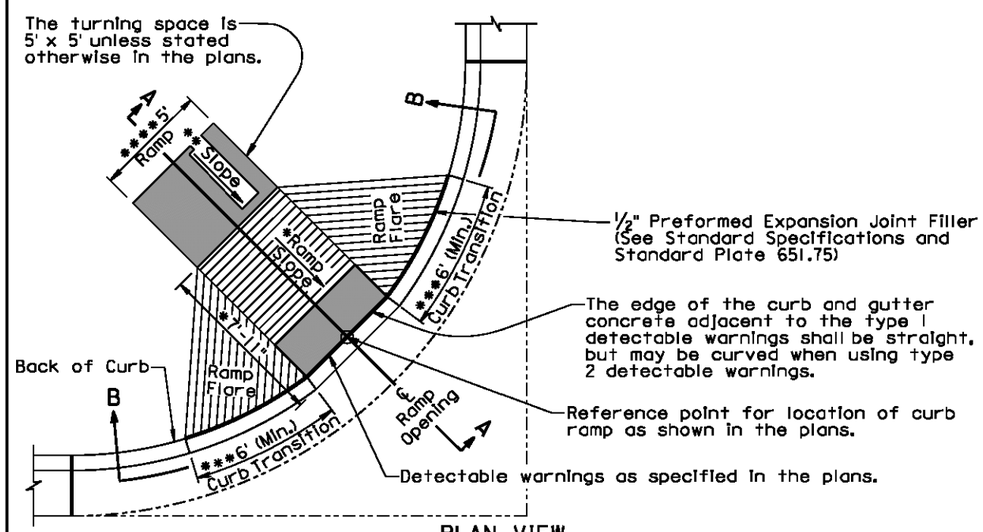

PLAN VIEW
(With 6'+ Curb Transition)

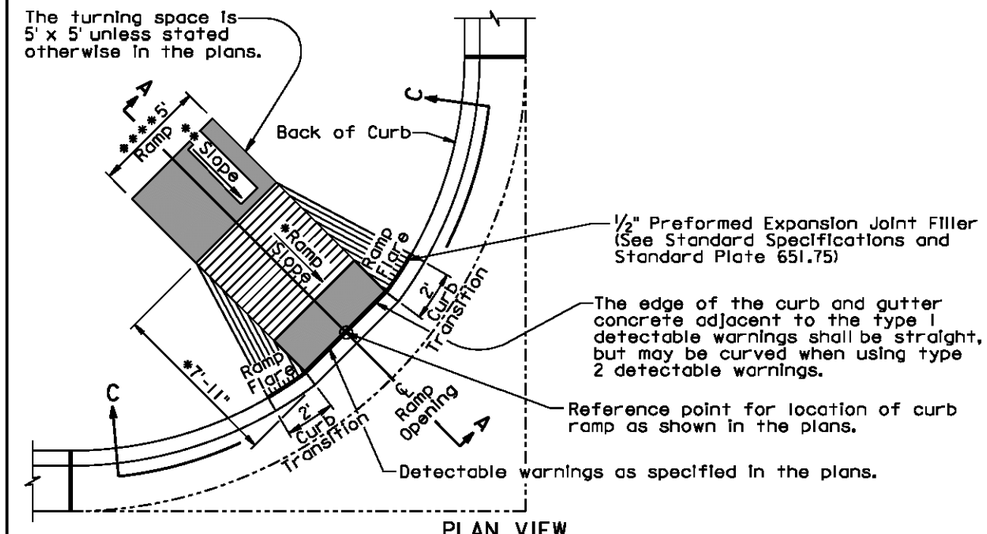

PLAN VIEW
(With 2' Curb Transition)

September 6, 2013

Published Date: 1st Qtr. 2014	SDDOT	TYPE 1 CURB RAMP (PERPENDICULAR CURB RAMP)	PLATE NUMBER 651.01
			Sheet 1 of 3

The ramp slope shall be 12:1 (8.3%) maximum. The ramp length shall not exceed 15' unless stated otherwise in the plans. Ramp slopes are designed at 12:1 (8.3%) unless stated otherwise in the plans.

* The cross slope of the ramp shall not be steeper than 50:1 (2%).

The 7'-11" dimension was computed based on a flat roadway profile, a continuous 2% theoretical slope from top of theoretical curb to the top of ramp, and a 6" high curb. The dimension shall be adjusted based on the curb type shown in the plans, the roadway geometrics, and the sidewalk geometrics.

** The slope in the turning space shall not be steeper than 50:1 (2%) in any direction of pedestrian travel.

*** The curb transition shall be a minimum of 6' long, a maximum of 10' long, and the curb transition slope shall not be steeper than 10:1 (10%) unless stated otherwise in the plans.

**** The ramp width is 5' unless stated otherwise in the plans.

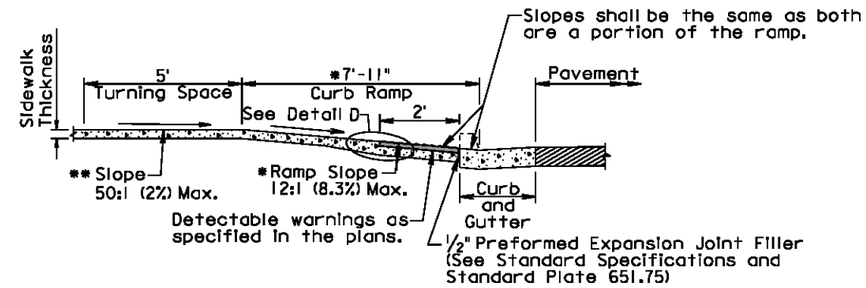

SECTION A-A

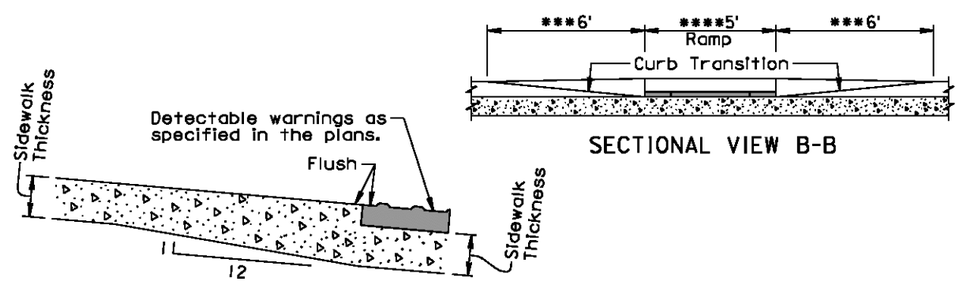

SECTIONAL VIEW B-B

DETAIL D

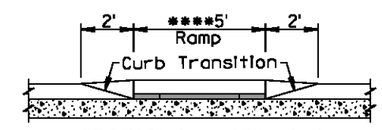

SECTIONAL VIEW C-C

September 6, 2013

Published Date: 1st Qtr. 2014	SDDOT	TYPE 1 CURB RAMP (PERPENDICULAR CURB RAMP)	PLATE NUMBER 651.01
			Sheet 2 of 3

G:\Files\CAD\land projects R2\13405 Spruce Street\13405-Spruce Cover Street-Details 9 12.dwg, 2/18/2014 10:32:17 AM, DWG To PDF.pc3

GENERAL NOTES:

For illustrative purpose only, type 1 detectable warnings are shown in the drawings.

For illustrative purpose only, PCC fillet sections are shown in the drawings. The curb ramp depicted on this standard plate may be used with a PCC fillet section, with curved curb and gutter, or with straight curb and gutter.

For illustrative purpose only, the curb ramp location is shown at the center of a PCC fillet section. The curb ramp shall be placed at the location stated in the plans.

Sidewalk shall not be placed adjacent to the ramp flares when a 2' curb transition is used unless shown otherwise in the plans.

* Care shall be taken to ensure a uniform grade on the ramp, free of sags and short grade changes.

Surface texture of the ramp shall be obtained by coarse brooming transverse to the slope of the ramp.

The normal gutter line profile shall be maintained through the area of the ramp.

Joints shall be sawed or tooled into the concrete adjacent to the detectable warnings to alleviate possible corner cracking.

Care shall be taken to ensure that the surface of the detectable warnings are clean and maintains a uniform color.

The detectectable warnings shall be cut as necessary to fit the plan specified limits of the detectable warnings. Cost for cutting the detectable warnings shall be incidental to the corresponding detectable warning bid item.

There will be no separate payment for curb ramps. The curb ramp shall be measured and paid for at the contract unit price per square foot for the corresponding concrete sidewalk bid item. The square foot area of the detectable warnings shall be included in the measured and paid for quantity of sidewalk.

The curb transitions and ramp opening shall be measured and paid for at the contract unit price per foot for the corresponding curb and gutter bid item when curb and gutter is used. The curb transitions and ramp opening shall be measured and paid for at the contract unit price per square yard for the corresponding PCC fillet section bid item when a PCC fillet section is used.

The type 1 detectable warnings shall be measured to the nearest square foot. All costs for furnishing and installing the type 1 detectable warnings including labor, equipment, materials, and incidentals shall be paid for at the contract unit price per square foot for "Type 1 Detectable Warnings".

The type 2 detectable warnings shall be measured to the nearest square foot. All costs for furnishing and installing the type 2 detectable warnings including labor, equipment, and materials, including adhesive, necessary sealant or grout, and necessary grinding shall be paid for at the contract unit price per square foot for "Type 2 Detectable Warnings".

September 6, 2013

Published Date: 1st Qtr. 2014	SDDOT	TYPE 1 CURB RAMP (PERPENDICULAR CURB RAMP)	PLATE NUMBER 651.01
			Sheet 3 of 3

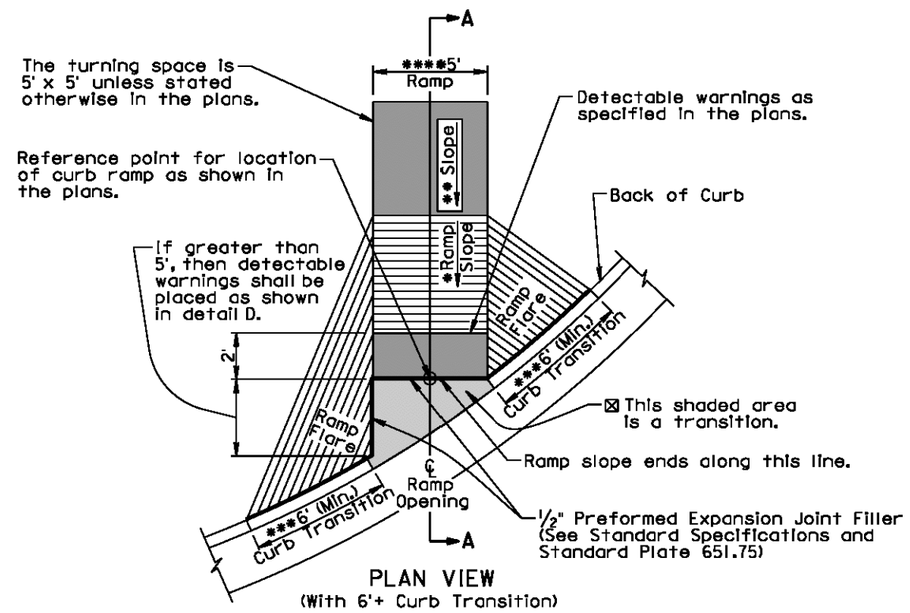

PLAN VIEW
(With 6'+ Curb Transition)

⊠ The slope within the transition area shall not be steeper than a 20:1 (5%). The concrete within the transition shall be placed monolithic with the curb and gutter or fillet section concrete. The concrete thickness within the transition shall be the same as the curb and gutter or fillet section concrete thickness.

*** The curb transition shall be a minimum of 6' long, a maximum of 10' long, and the curb transition slope shall not be steeper than a 10:1 (10%) unless stated otherwise in the plans.

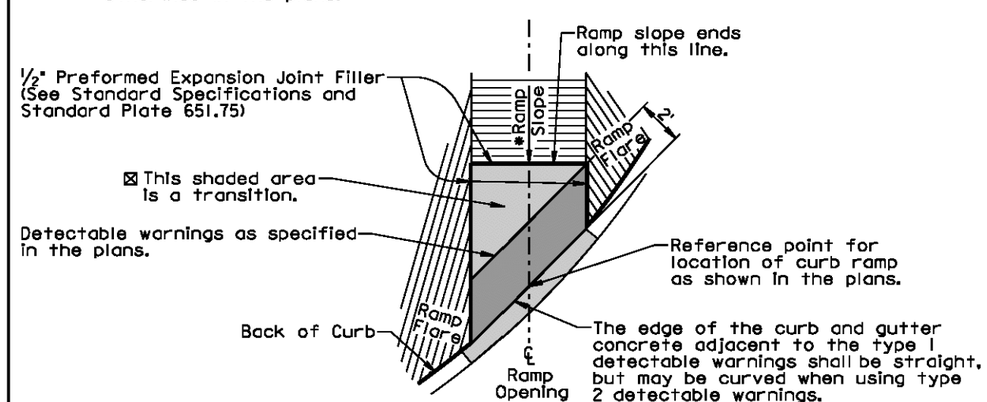

DETAIL D

September 6, 2013

Published Date: 1st Qtr. 2014	SDDOT	TYPE 2 CURB RAMP (DIRECTIONAL CURB RAMP)	PLATE NUMBER 651.02
			Sheet 1 of 3

G:\Files\CAD\land projects\R2\13405 Spruce Street\13405-Spruce Cover Street-Details 9 12.dwg, 2/18/2014 10:32:22 AM, DWG To PDF.pc3

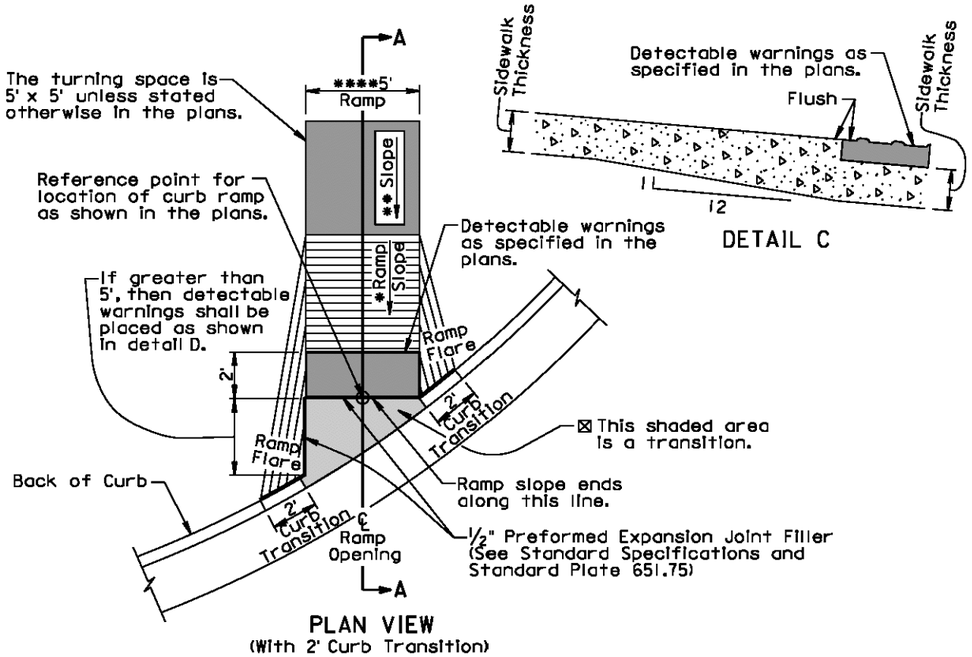

PLAN VIEW
(With 2' Curb Transition)

* The ramp slope shall be 12:1 (8.3%) maximum. The ramp length shall not exceed 15' unless stated otherwise in the plans. Ramp slopes are designed at 12:1 (8.3%) unless stated otherwise in the plans.

The cross slope of the ramp shall not be steeper than 50:1 (2%).

** The slope in the turning space shall not be steeper than a 50:1 (2%) in any direction of pedestrian travel.

**** The ramp width is 5' unless stated otherwise in the plans.

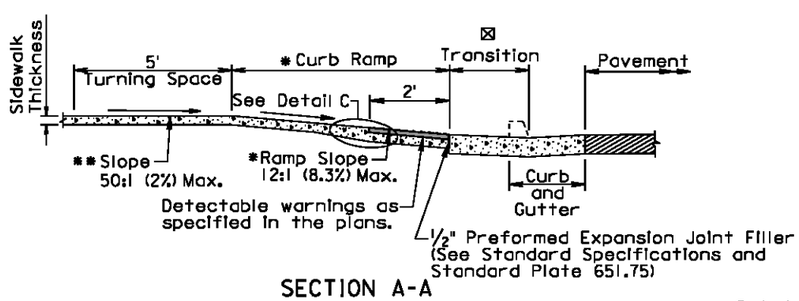

SECTION A-A

September 6, 2013

Published Date: 1st Qtr. 2014	SDDOT	TYPE 2 CURB RAMP (DIRECTIONAL CURB RAMP)	PLATE NUMBER 651.02
			Sheet 2 of 3

GENERAL NOTES:

For illustrative purpose only, type 1 detectable warnings are shown in the drawings.

The curb ramp depicted on this standard plate may be used with a PCC fillet section, with curved curb and gutter, or with straight curb and gutter. The curb ramp shall be placed at the location stated in the plans.

Sidewalk shall not be placed adjacent to the ramp flares when a 2' curb transition is used unless shown otherwise in the plans.

* Care shall be taken to ensure a uniform grade on the ramp, free of sags and short grade changes.

Surface texture of the ramp shall be obtained by coarse brooming transverse to the slope of the ramp.

The normal gutter line profile shall be maintained through the area of the ramp.

Joints shall be sawed or tooled into the concrete adjacent to the detectable warnings to alleviate possible corner cracking.

Care shall be taken to ensure that the surface of the detectable warnings are clean and maintains a uniform color.

The detectectable warnings shall be cut as necessary to fit the plan specified limits of the detectable warnings. Cost for cutting the detectable warnings shall be incidental to the corresponding detectable warning bid item.

There will be no separate payment for curb ramps. The curb ramp shall be measured and paid for at the contract unit price per square foot for the corresponding concrete sidewalk bid item. The square foot area of the detectable warnings shall be included in the measured and paid for quantity of sidewalk.

The curb transitions and ramp opening shall be measured and paid for at the contract unit price per foot for the corresponding curb and gutter bid item when curb and gutter is used. The curb transitions and ramp opening shall be measured and paid for at the contract unit price per square yard for the corresponding PCC fillet section bid item when a PCC fillet section is used.

All costs for furnishing and installing the transition area at the base of the ramp shall be incidental to the contract unit price per foot for the corresponding curb and gutter bid item when curb and gutter is used and shall be incidental to the contract unit price per square yard for the corresponding PCC fillet section bid item when a PCC fillet section is used.

The type 1 detectable warnings shall be measured to the nearest square foot. All costs for furnishing and installing the type 1 detectable warnings including labor, equipment, materials, and incidentals shall be paid for at the contract unit price per square foot for "Type 1 Detectable Warnings".

The type 2 detectable warnings shall be measured to the nearest square foot. All costs for furnishing and installing the type 2 detectable warnings including labor, equipment, and materials, including adhesive, necessary sealant or grout, and necessary grinding shall be paid for at the contract unit price per square foot for "Type 2 Detectable Warnings".

September 6, 2013

Published Date: 1st Qtr. 2014	SDDOT	TYPE 2 CURB RAMP (DIRECTIONAL CURB RAMP)	PLATE NUMBER 651.02
			Sheet 3 of 3

G:\Files\CAD\land projects R2\13405 Spruce Street\13405-Spruce Cover Street-Details 9 12.dwg, 2/18/2014 10:32:27 AM, DWG To PDF.pc3

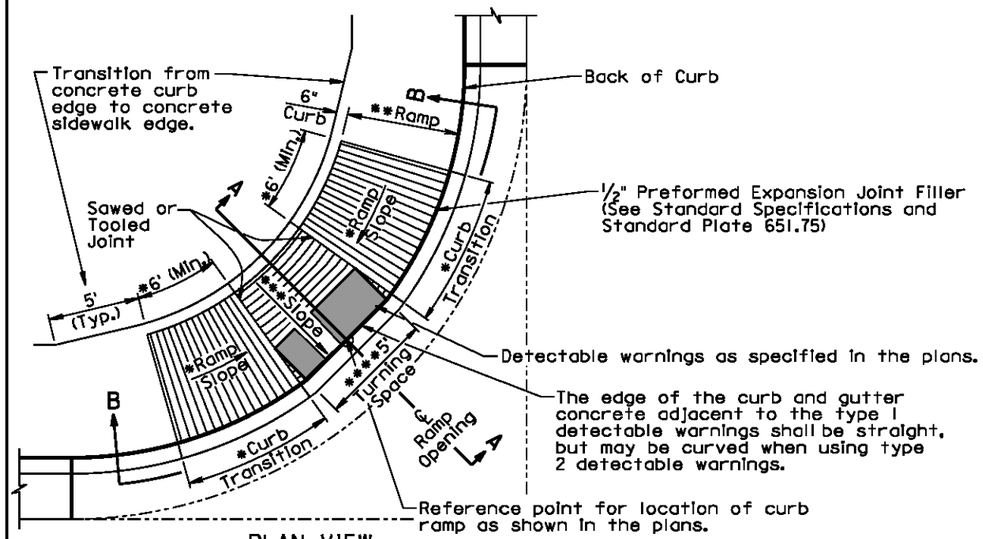

PLAN VIEW
(With Curved Curb and Gutter)

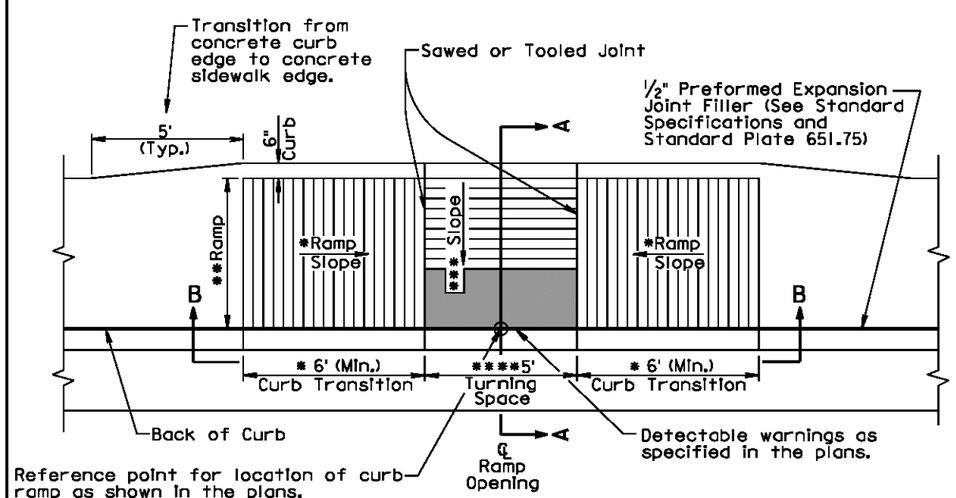

PLAN VIEW
(With Straight Curb and Gutter)

September 6, 2013

Published Date: 1st Qtr. 2014	SDDOT	TYPE 3 CURB RAMP (PARALLEL CURB RAMP)	PLATE NUMBER 651.03
			Sheet 1 of 3

* The curb transition slope shall match the ramp slope. The ramp slope, at any location of the ramp, shall be 12:1 (8.3%) maximum. The ramp length shall not exceed 15' unless stated otherwise in the plans. Ramp slopes are designed at 12:1 (8.3%) unless stated otherwise in the plans. The minimum length of the curb transition shall be 6'.

** The ramp cross slope shall not be steeper than a 50:1 (2%) and the ramp width is 5' unless stated otherwise in the plans.

*** The slope in the turning space shall not be steeper than 50:1 (2%) in any direction of pedestrian travel.

**** The turning space is 5' x 5' unless stated otherwise in the plans.

☒ The curb height shall be 6" unless stated otherwise in the plans.

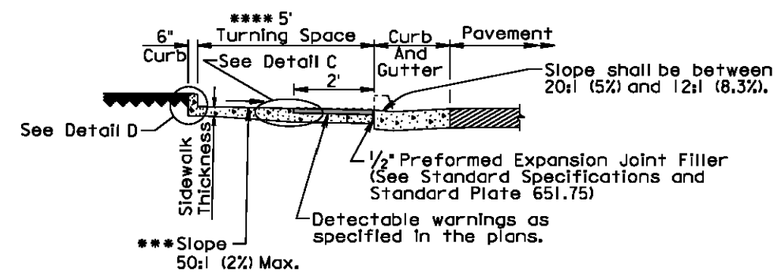

SECTION A-A

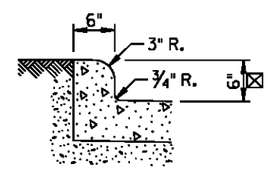

DETAIL D

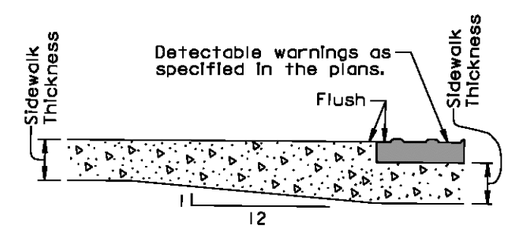

DETAIL C

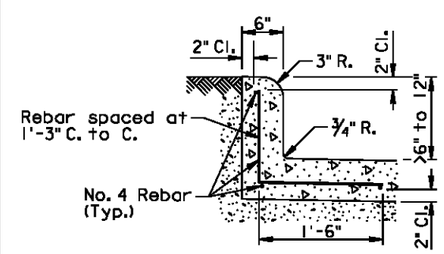

DETAIL D
(Use this detail when the curb height is greater than 6" and less than 12")

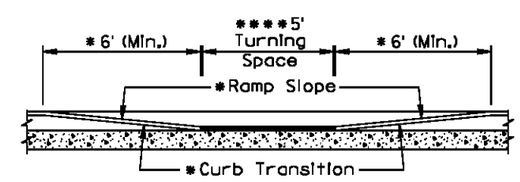

SECTIONAL VIEW B-B

September 6, 2013

Published Date: 1st Qtr. 2014	SDDOT	TYPE 3 CURB RAMP (PARALLEL CURB RAMP)	PLATE NUMBER 651.03
			Sheet 2 of 3

G:\Files\CAD\land projects R2\13405 Spruce Street\13405-Spruce Cover Street-Details 9 12.dwg, 2/18/2014 10:32:32 AM, DWG To PDF.pc3

GENERAL NOTES:

For illustrative purpose only, type I detectable warnings are shown in the drawings.

For illustrative purpose only, a PCC fillet section is shown in one of the drawings. The curb ramp depicted on this standard plate may be used with a PCC fillet section, with curved curb and gutter, or with straight curb and gutter.

The curb ramp shall be placed at the location stated in the plans.

Sidewalk adjacent to the curb ramp shall be as shown in the plans.

Care shall be taken to ensure a uniform grade on the ramp, free of sags and short grade changes.

Surface texture of the ramp shall be obtained by coarse brooming transverse to the slope of the ramp.

The normal gutter line profile shall be maintained through the area of the ramp.

Joints shall be sawed or tooled into the concrete adjacent to the detectable warnings to alleviate possible corner cracking (see plan view for joint location).

Care shall be taken to ensure that the surface of the detectable warnings are clean and maintains a uniform color.

The detectectable warnings shall be cut as necessary to fit the plan specified limits of the detectable warnings. Cost for cutting the detectable warnings shall be incidental to the corresponding detectable warning bid item.

When curb height is greater than 6" and less than 12", reinforcing steel is required in accordance with the detail on sheet 2 of 3. The reinforcing steel shall conform to ASTM A615, Grade 60. Cost for furnishing and installing the reinforcing steel shall be incidental to the contract unit price per square foot for the corresponding concrete sidewalk bid item.

There will be no separate payment for curb ramps. The curb ramp shall be measured and paid for at the contract unit price per square foot for the corresponding concrete sidewalk bid item. The square foot area of the detectable warnings and the curb along the short radius shall be included in the measured and paid for quantity of sidewalk.

The curb transitions and ramp opening shall be measured and paid for at the contract unit price per foot for the corresponding curb and gutter bid item when curb and gutter is used. The curb transitions and ramp opening shall be measured and paid for at the contract unit price per square yard for the corresponding PCC fillet section bid item when a PCC fillet section is used.

The type I detectable warnings shall be measured to the nearest square foot. All costs for furnishing and installing the type I detectable warnings including labor, equipment, materials, and incidentals shall be paid for at the contract unit price per square foot for "Type I Detectable Warnings".

The type 2 detectable warnings shall be measured to the nearest square foot. All costs for furnishing and installing the type 2 detectable warnings including labor, equipment, and materials, including adhesive, necessary sealant or grout, and necessary grinding shall be paid for at the contract unit price per square foot for "Type 2 Detectable Warnings".

September 6, 2013

Published Date: 1st Qtr. 2014	SDDOT	TYPE 3 CURB RAMP (PARALLEL CURB RAMP)	PLATE NUMBER 651.03
			Sheet 3 of 3

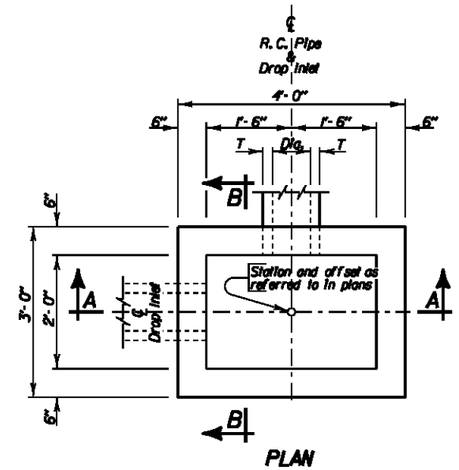

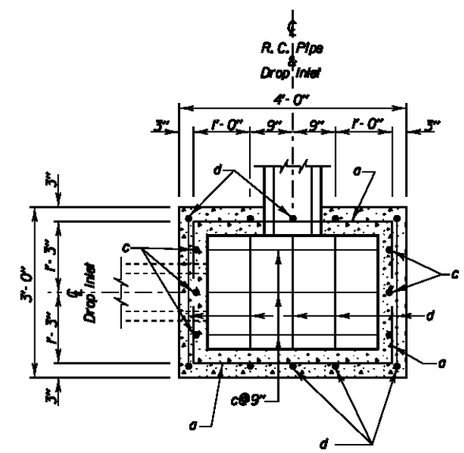

ESTIMATED QUANTITIES			
ITEM	UNIT	CONSTANT QUANTITY	VARIABLE QUANTITY
* Class M6 Concrete	Cu'd	0.26	0.22H
Reinforcing Steel	Lb	37	20.04H
Frame and Grate Assembly	Each	1	———

PIPE DISPLACEMENT REDUCTIONS		
R.C. Pipe Diameter Inches	T Inches	Class M6 Concrete Cu'd
12	2	0.03
15	2 1/4	0.04
18	2 1/2	0.05
24	3	0.09
27	3 1/4	0.11

DROP INLETS FOR 12" TO 27" DIAMETER PIPE

GENERAL NOTES:

* Reduce total quantities of concrete by the amount of concrete displaced by the pipe. The total quantity of concrete shall be computed to the nearest hundredth of a cubic yard. The total quantity of reinforcing steel shall be computed to the nearest pound.

Drop inlets shown may be modified by the addition or omission of connecting pipes as shown on the layouts.

Reinforcing steel shall conform to ASTM A615 Grade 60. The b bars shall be lapped 12 inches. Cut and bend reinforcing steel as required to place pipe(s) through the drop inlet wall.

Pipe shall not enter through a corner of the drop inlet.

Use 2" clear cover on all reinforcing steel unless otherwise noted.

Precasting of reinforced drop inlets will be permissible. Prior to precasting, the Contractor shall submit details to the Engineer for approval.

Maximum pipe diameter shall not exceed 18 inches on the 3 foot wide side and shall not exceed 27 inches on the 4 foot wide side of the drop inlet.

The dimension of H is in feet.

December 23, 2009

Published Date: 1st Qtr. 2014	SDDOT	2'X 3' TYPE B REINFORCED CONCRETE DROP INLET	PLATE NUMBER 670.01
			Sheet 1 of 2

G:\Files\CAD\land projects R2\13405 Spruce Street\13405-Spruce Cover Street-Details 9 12.dwg, 2/18/2014 10:32:37 AM, DWG To PDF.pc3

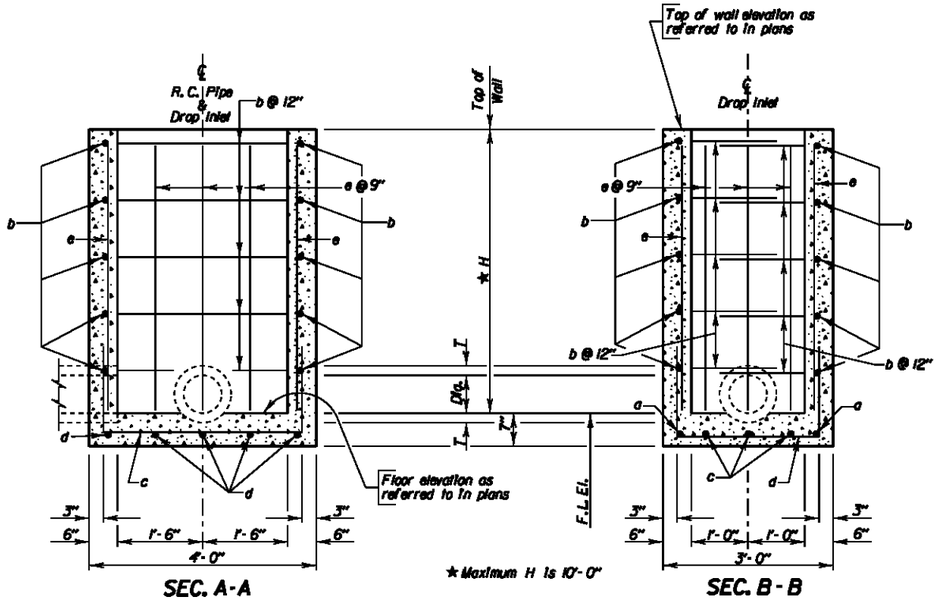

DROP INLETS FOR 12" TO 27" DIAMETER PIPE

REINFORCING SCHEDULE

MK.	No.	Size	Length	Type
a	2	4	5'-6"	17
b	2H	4	7'-0"	17
c	3	4	6'-6"	17
d	5	4	5'-6"	17
e	16	4	H - 2"	Str.

Bending Details

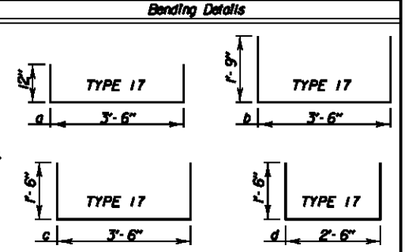

NOTE:
All dimensions are out to out of bars.

December 23, 2009

Published Date: 1st Qtr. 2014

SDDOT

2'X 3' TYPE B
REINFORCED CONCRETE DROP INLET

PLATE NUMBER
670.01

Sheet 2 of 2

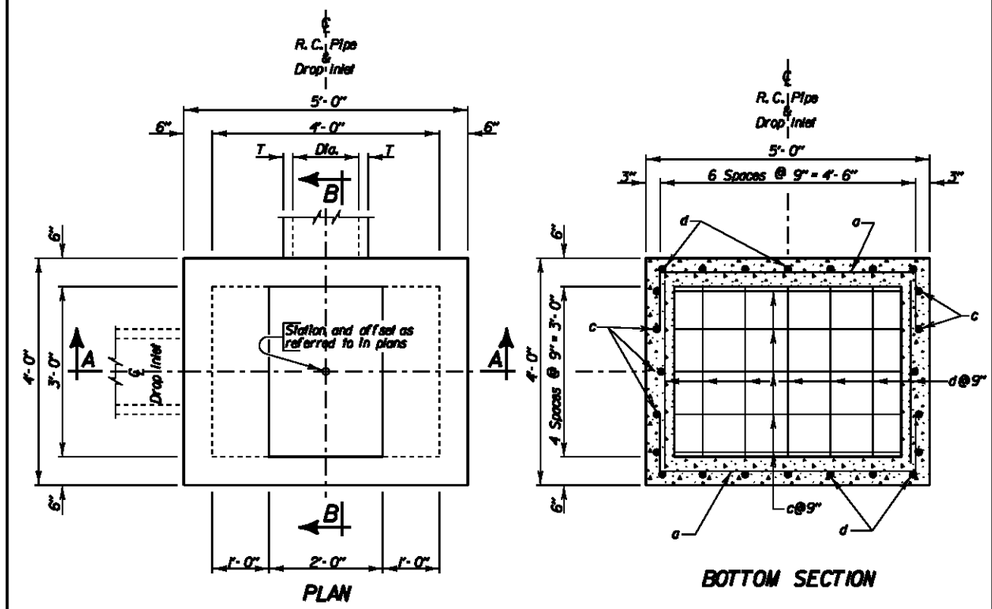

DROP INLETS FOR 12" TO 36" DIAMETER PIPE

ESTIMATED QUANTITIES

ITEM	UNIT	CONSTANT QUANTITY	VARIABLE QUANTITY
✳ Class M6 Concrete	Cu'd	0.72	0.30H
Reinforcing Steel	Lb	94	28.06H
Frame and Grate Assembly	Each	1	———

GENERAL NOTES:

✳ Reduce total quantities of concrete by the amount of concrete displaced by the pipe. The total quantity of concrete shall be computed to the nearest hundredth of a cubic yard. The total quantity of reinforcing steel shall be computed to the nearest pound.

Drop inlets shown may be modified by the addition or omission of connecting pipes as shown on the layouts.

Reinforcing steel shall conform to ASTM A615 Grade 60. The b and f bars shall be lapped 12 inches. Cut and bend reinforcing steel as required to place pipe(s) through the drop inlet wall.

Pipe shall not enter through a corner of the drop inlet.

Use 2" clear cover on all reinforcing steel unless otherwise noted.

Precasting of reinforced drop inlets will be permissible. Prior to precasting, the Contractor shall submit details to the Engineer for approval.

Maximum pipe diameter shall not exceed 27 inches on the 4 foot wide side and shall not exceed 36 inches on the 5 foot wide side of the drop inlet.

The dimension of H is in feet.

PIPE DISPLACEMENT REDUCTIONS

R.C. Pipe Diameter Inches	T Inches	Class M6 Concrete Cu'd
12	2	0.03
15	2 1/4	0.04
18	2 1/2	0.05
24	3	0.09
30	3 1/2	0.14
36	4	0.20

December 23, 2009

Published Date: 1st Qtr. 2014

SDDOT

4'X 3' TYPE B
REINFORCED CONCRETE DROP INLET

PLATE NUMBER
670.07

Sheet 1 of 2

G:\Files\CAD\land projects R2\13405 Spruce Street\13405-Spruce Cover Street-Details 9 12.dwg, 2/18/2014 10:32:42 AM, DWG To PDF.pc3

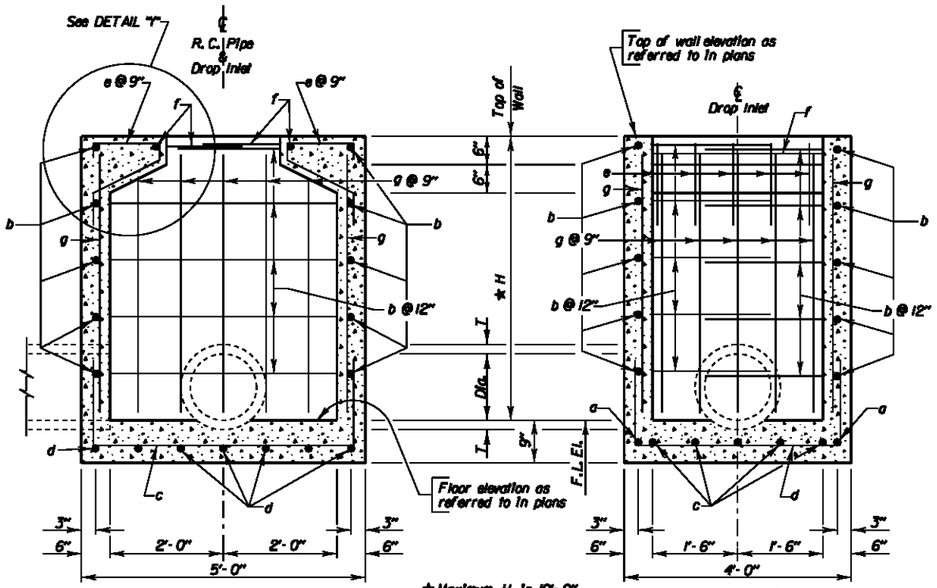

SEC. A-A

SEC. B-B

DROP INLETS FOR 12" TO 36" DIAMETER PIPE

REINFORCING SCHEDULE

MK.	No.	Size	Length	Type
a	2	4	6'-6"	17
b	2H	4	9'-0"	17
c	5	4	7'-6"	17
d	7	4	6'-6"	17
e	10	4	3'-6"	16A
f	2	4	7'-0"	17
g	24	4	H - 2"	Str.

Bending Details

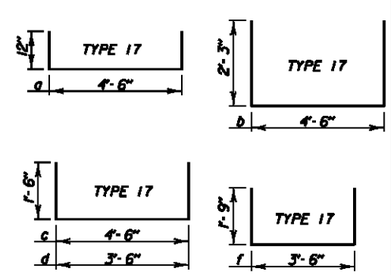

NOTE:
All dimensions are out to out of bars.

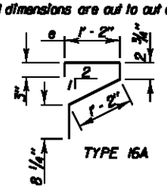

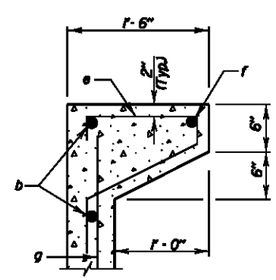

DETAIL "Y"

December 23, 2009

Published Date: 1st Qtr. 2014	SDDOT	4'X 3' TYPE B REINFORCED CONCRETE DROP INLET	PLATE NUMBER 670.07
			Sheet 2 of 2

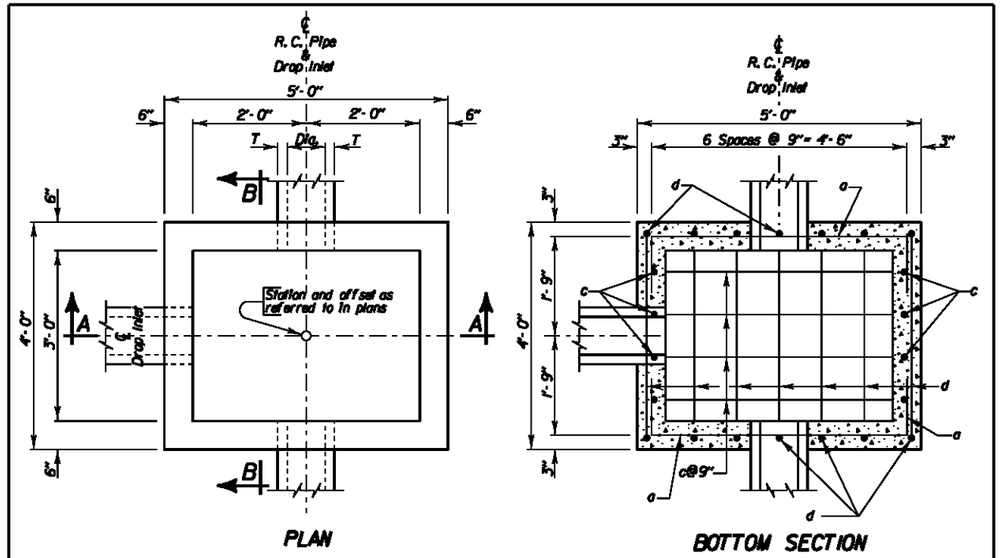

PLAN

BOTTOM SECTION

PIPE DISPLACEMENT REDUCTIONS

R.C. Pipe Diameter Inches	T Inches	Class M6 Concrete Cu/d
12	2	0.03
15	2 1/4	0.04
18	2 1/2	0.05
24	3	0.09
30	3 1/2	0.14
36	4	0.20

ESTIMATED QUANTITIES

ITEM	UNIT	CONSTANT QUANTITY	VARIABLE QUANTITY
* Class M6 Concrete	Cu/d	0.43	0.29H
Reinforcing Steel	Lb	57	26.72H
Frame and Grate	Each	1	——

DROP INLETS FOR 12" TO 36" DIAMETER PIPE

GENERAL NOTES:

* Reduce total quantities of concrete by the amount of concrete displaced by the pipe. The total quantity of concrete shall be computed to the nearest hundredth of a cubic yard. The total quantity of reinforcing steel shall be computed to the nearest pound.

Drop inlets shown may be modified by the addition or omission of connecting pipes as shown on the layouts.

Reinforcing steel shall conform to ASTM A615 Grade 60. The b bars shall be lapped 12 inches. Cut and bend reinforcing steel as required to place pipe(s) through the drop inlet wall.

Pipe shall not enter through a corner of the drop inlet.

Use 2" clear cover on all reinforcing steel unless otherwise noted.

Precasting of reinforced drop inlets will be permissible. Prior to precasting, the Contractor shall submit details to the Engineer for approval.

Maximum pipe diameter shall not exceed 27 inches on the 4 foot wide side and shall not exceed 36 inches on the 5 foot wide side of the drop inlet.

The dimension of H is in feet.

December 23, 2009

Published Date: 1st Qtr. 2014	SDDOT	3'X 4' TYPE C REINFORCED CONCRETE DROP INLET	PLATE NUMBER 670.10
			Sheet 1 of 2

G:\Files\CAD\land projects R2\13405 Spruce Street\13405-Spruce Cover Street-Details-9 12.dwg, 2/18/2014 10:32:47 AM, DWG To PDF.pc3

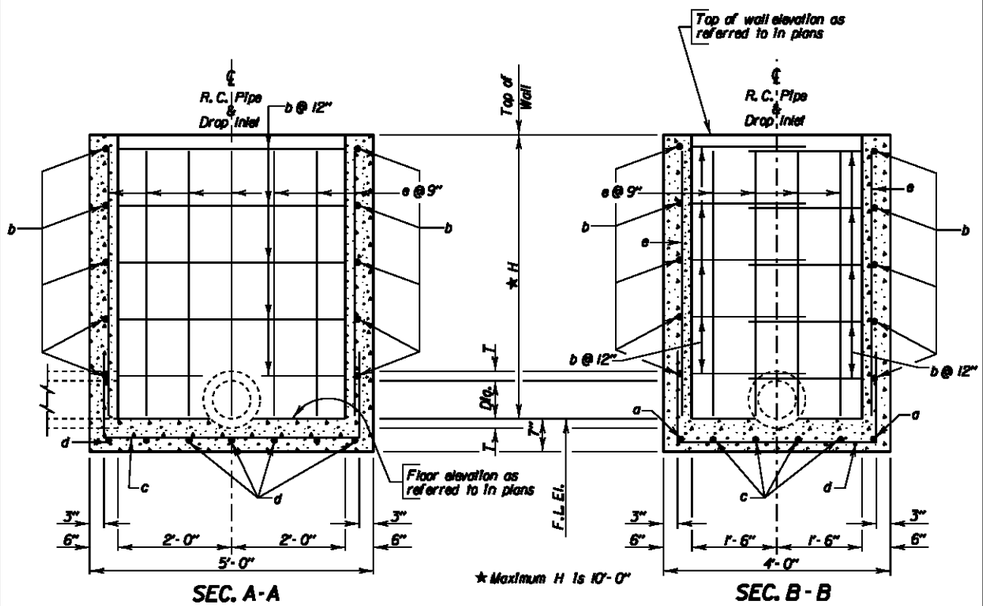

DROP INLETS FOR 12" TO 36" DIAMETER PIPE

REINFORCING SCHEDULE

Mk.	No.	Size	Length	Type	Bending Details
a	2	4	6'-6"	17	
b	2H	4	9'-0"	17	
c	4	4	7'-6"	17	
d	7	4	6'-6"	17	
e	22	4	H - 2"	Str.	

NOTE: All dimensions are out to out of bars.

December 23, 2009

Published Date: 1st Qtr. 2014	SDDOT	3'X 4' TYPE C REINFORCED CONCRETE DROP INLET	PLATE NUMBER 670.10
			Sheet 2 of 2

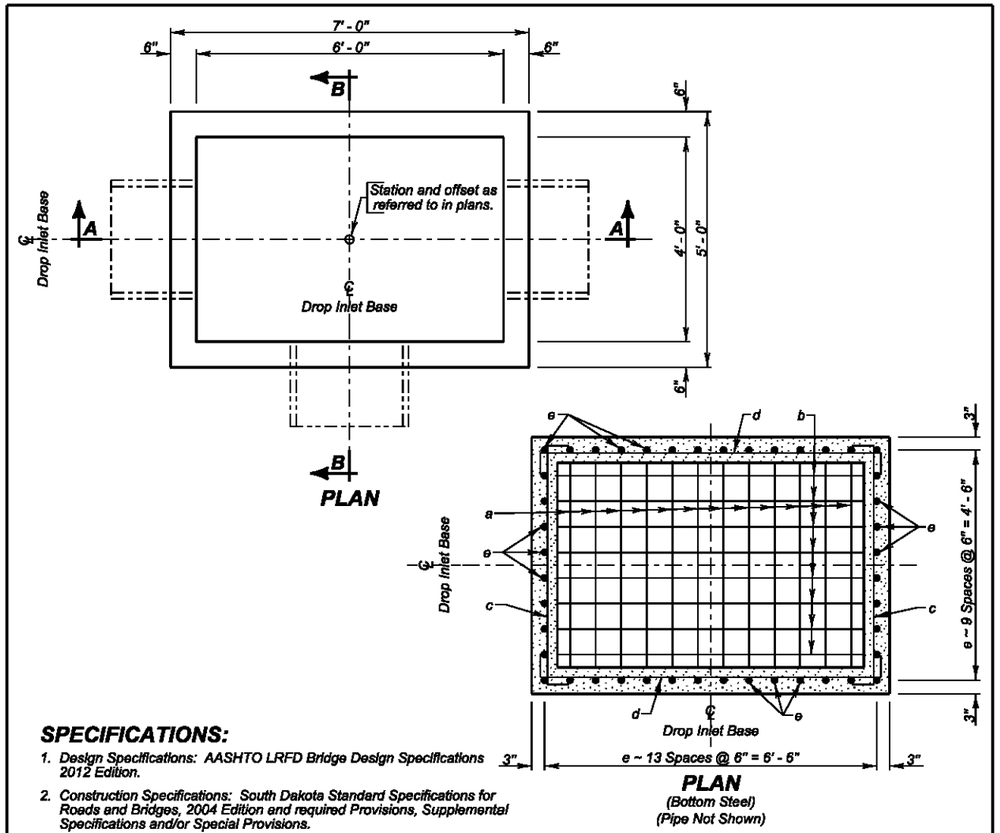

SPECIFICATIONS:

1. Design Specifications: AASHTO LRFD Bridge Design Specifications 2012 Edition.
2. Construction Specifications: South Dakota Standard Specifications for Roads and Bridges, 2004 Edition and required Provisions, Supplemental Specifications and/or Special Provisions.

GENERAL NOTES:

1. Design Live Load: HL-93 loading. No construction loading in excess of legal load was considered.
2. Base is intended for use with a Precast Concrete Type S Drop Inlet Lid, Standard Plate 670.38. Base may be precast. If precast base used, and details differ from that shown, the precast base must be on the current approved list. The current approved list is available through proper channels from the SDDOT Office of Bridge Design.
3. To qualify for addition to the approved list, submit a checked design, by South Dakota Registered Professional Engineers and shop plans to the Office of Bridge Design for approval. Design shall be in accordance with the current edition of the AASHTO LRFD Bridge Design Specifications.
4. ✳ Reduce total quantities of concrete by the amount of concrete displaced by the pipe. The total quantity of concrete shall be computed to the nearest hundredth of a cubic yard. The total quantity of reinforcing steel shall be computed to the nearest pound.
5. Inlets shown may be modified by the addition or omission of connecting pipes as shown on the layouts. Connecting pipes shall not enter the inlet through the corners.
6. Maximum R.C.P. diameter shall not exceed 36 inches (30 inches for R.C. Arch) on the 4-foot wide side and shall not exceed 54 inches (48 inches for R.C. Arch) on the 6-foot wide side of the Drop Inlet.
7. Reinforcing steel shall conform to ASTM A615 Grade 60. Cut and bend reinforcing steel as required to place pipe(s) through the inlet wall.
8. Use 1 inch clear cover on all reinforcing steel unless otherwise noted.
9. The dimension of H is in feet. Maximum H is 8 feet.

December 23, 2012

Published Date: 1st Qtr. 2014	SDDOT	4'X 6' TYPE S DROP INLET BASE	PLATE NUMBER 670.30
			Sheet 1 of 2

G:\Files\CAD\land projects R2\13405 Spruce Street\13405-Spruce Cover Street-Details-9 12.dwg, 2/18/2014 10:32:52 AM, DWG To PDF.pc3

PIPE DISPLACEMENT REDUCTIONS

	Diameter (Inches)	Wall T (Inches)	Class M6 Concrete (Cu. Yd.)
R.C.P.	12	2	0.03
	15	2 ¼	0.04
	18	2 ½	0.05
	24	3	0.09
	30	3 ½	0.14
	36	4	0.20
	42	4 ½	0.26
	48	5	0.34
	54	5 ½	0.43
R.C. ARCH	18	2 ½	0.05
	24	3 ½	0.09
	30	4	0.14
	36	4 ½	0.19
	42	4 ½	0.24
	48	5	0.32

REINFORCING SCHEDULE

Mk.	No.	Size	Length	Type
a	14	5	9' - 6"	17
b	10	5	11' - 6"	17
c	2H	4	5' - 6"	17
d	2H	4	7' - 6"	17
e	44	4	H - 2"	Str.

Bending Details

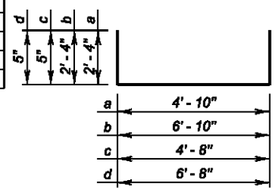

NOTE:
All dimensions are out to out of bars

ESTIMATED QUANTITIES

ITEM	UNIT	CONSTANT QUANTITY	VARIABLE QUANTITY
✳ Class M6 Concrete	Cu.Yd.	0.97	0.41H
Reinforcing Steel	Lb.	253.77	46.76H

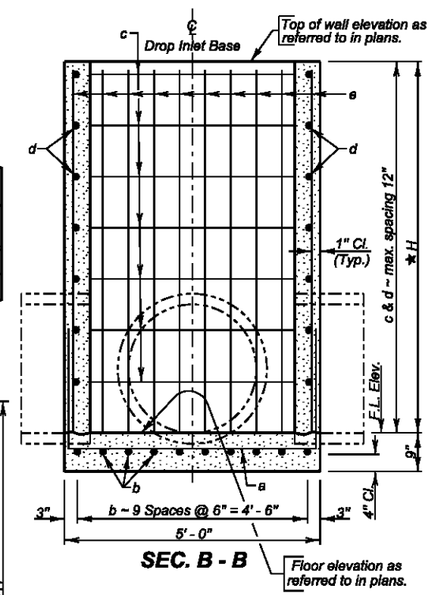

SEC. B - B

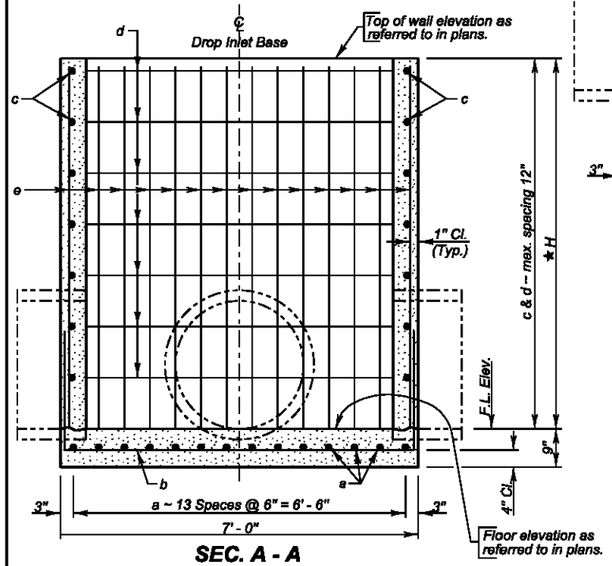

SEC. A - A

✳ Maximum H is 8' - 0"

December 23, 2012

Published Date: 1st Qtr. 2014

SDDOT

4' X 6' TYPE S DROP INLET BASE

PLATE NUMBER 670.30

Sheet 2 of 2

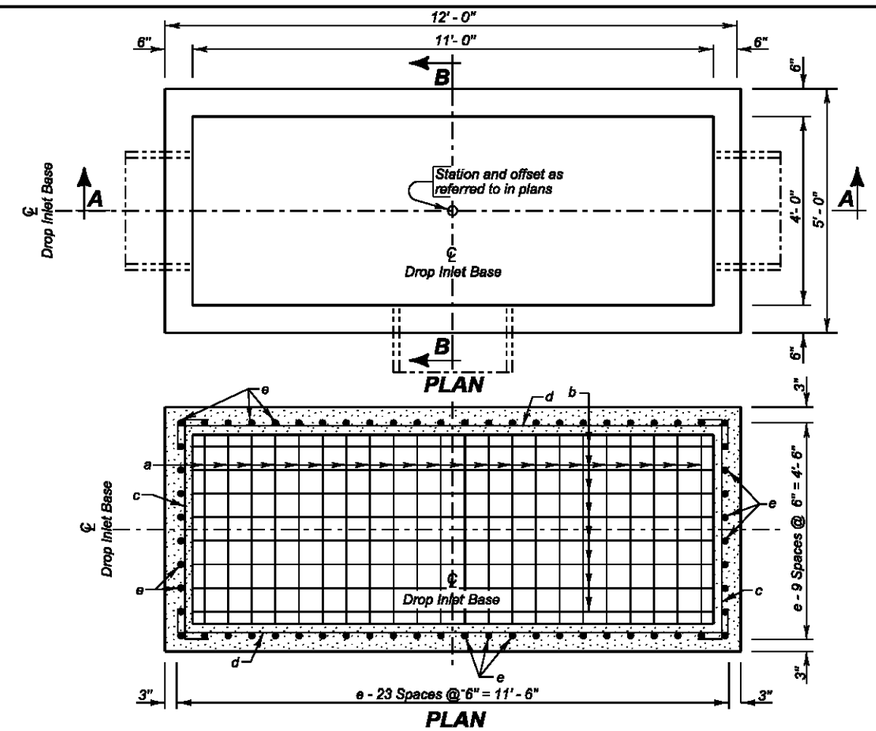

PLAN
(Bottom Steel)
(Pipe Not Shown)

SPECIFICATIONS:

1. Design Specifications: AASHTO LRFD Bridge Design Specifications 2012 Edition.
2. Construction Specifications: South Dakota Standard Specifications for Roads and Bridges, 2004 Edition and required Provisions, Supplemental Specifications and/or Special Provisions.

GENERAL NOTES:

1. Design Live Load: HL-93 loading. No construction loading in excess of legal load was considered.
2. Base is intended for use with a Precast Concrete Type S Drop Inlet Lid, Standard Plate 670.40. Base may be precast. If precast base used, and details differ from that shown, the precast base must be on the current approved list. The current approved list is available through proper channels from the SDDOT Office of Bridge Design.
3. To qualify for addition to the approved list, submit a checked design, by South Dakota Registered Professional Engineers and shop plans to the Office of Bridge Design for approval. Design shall be in accordance with the current edition of the AASHTO LRFD Bridge Design Specifications.
4. ✳ Reduce total quantities of concrete by the amount of concrete displaced by the pipe. The total quantity of concrete shall be computed to the nearest hundredth of a cubic yard. The total quantity of reinforcing steel shall be computed to the nearest pound.
5. Inlets shown may be modified by the addition or omission of connecting pipes as shown on the layouts. Connecting pipes shall not enter the inlet through the corners.
6. Maximum R.C.P. diameter shall not exceed 36 inches (30 inches for R.C. Arch) on the 4-foot wide side of the Drop Inlet.
7. Reinforcing steel shall conform to ASTM A615 Grade 60. Cut and bend reinforcing steel as required to place pipe(s) through the inlet wall.
8. Use 1 inch clear cover on all reinforcing steel unless otherwise noted.
9. The dimension of H is in feet. Maximum H is 8 feet.

December 23, 2012

Published Date: 1st Qtr. 2014

SDDOT

4' X 11' TYPE S DROP INLET BASE

PLATE NUMBER 670.32

Sheet 1 of 2

G:\Files\CAD\land projects R2\13405 Spruce Street\13405-Spruce Cover Street-Details 9 12.dwg, 2/18/2014 10:32:57 AM, DWG To PDF.pc3

PIPE DISPLACEMENT REDUCTIONS

	Diameter (Inches)	Wall T (Inches)	Class M6 Concrete (Cu. Yd.)
R.C.P.	12	2	0.03
	15	2 ¼	0.04
	18	2 ½	0.05
	24	3	0.09
	30	3 ½	0.14
	36	4	0.20
	42	4 ½	0.26
	48	5	0.34
	54	5 ½	0.43
	60	6	0.52
R.C. ARCH	18	2 ½	0.05
	24	3 ½	0.09
	30	4	0.14
	36	4 ½	0.19
	42	4 ½	0.24
	48	5	0.32
	54	5 ½	0.39
	60	6	0.49
	72	7	0.70
	84	8	0.93

REINFORCING SCHEDULE

Mk.	No.	Size	Length	Type
a	24	5	9' - 6"	17
b	10	5	16' - 6"	17
c	2H	4	5' - 6"	17
d	2H	4	12' - 6"	17
e	64	4	H - 2"	Str.

Bending Details

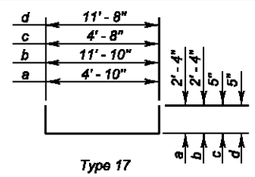

Type 17

NOTE:
All dimensions are out to out of bars.

ESTIMATED QUANTITIES

ITEM	UNIT	CONSTANT QUANTITY	VARIABLE QUANTITY
✱ Class M6 Concrete	Cu. Yd.	1.67	0.59H
Reinforcing Steel	Lb.	402.77	66.80H

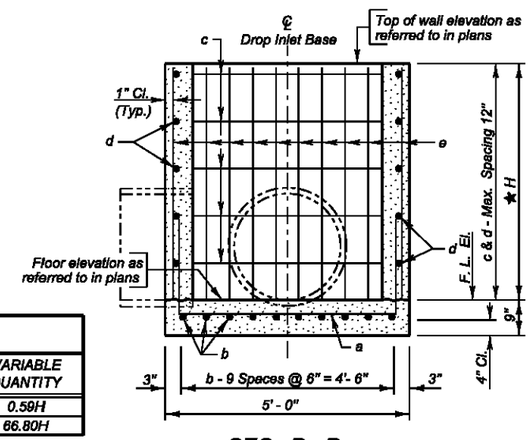

SEC. B - B

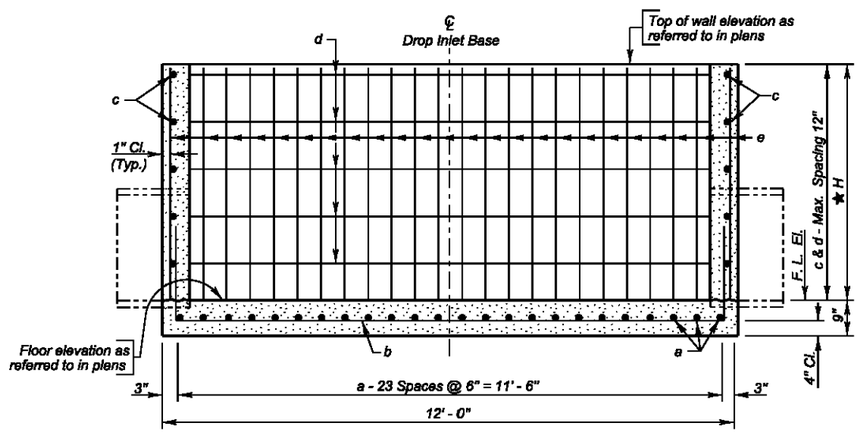

SEC. A - A

✱ Maximum H is 8' - 0"

December 23, 2012

Published Date: 1st Qtr. 2014

SDDOT

4' X 11' TYPE S DROP INLET BASE

PLATE NUMBER 670.32

Sheet 2 of 2

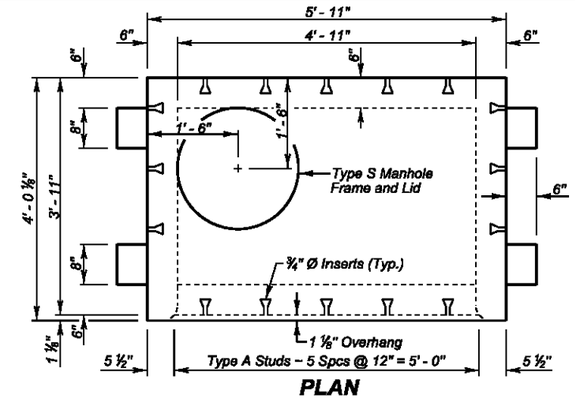

PLAN

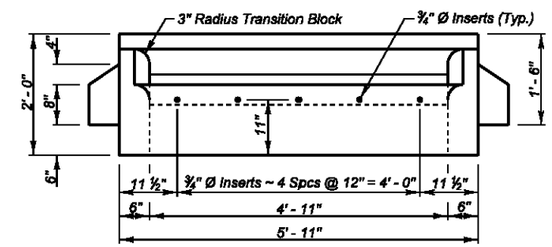

ELEVATION

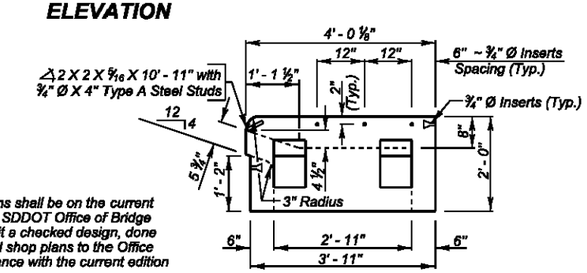

SIDE VIEW
(With Sidewalk Inserts)

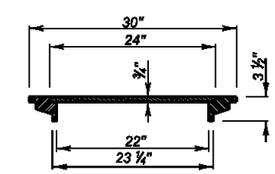

TYPICAL SECTION THROUGH TYPE S MANHOLE FRAME AND LID
(Weight 140 Lbs.)

GENERAL NOTES:

1. The Precast Concrete Type S Drop Inlet Lid and the shims shall be on the current approved list available through proper channels from the SDDOT Office of Bridge Design. To qualify for addition to the approved list, submit a checked design, done by South Dakota Registered Professional Engineers, and shop plans to the Office of Bridge Design for approval. Design shall be in accordance with the current edition of the AASHTO LRFD Bridge Design Specifications.
2. Design Live Load shall be HL - 93.
3. Concrete mix shall be as per fabricators design, however, minimum compressive strength shall not be less than 4500 psi. Type II Cement is required.
4. The Type S Manhole Frame and Lid shall conform to AASHTO M105, Class 30.
5. Structural Steel shall conform to ASTM A36. The ¾ inch diameter Headed Type A Steel Studs shall comform to Section 7 of the current edition of AWS DI. I Structural Steel Welding Code.
6. The ¾ inch diameter Concrete Inserts shall be galvanized or made of a corrosion resistant material. Provide ¾ inch diameter x 1' - 6" long dowels conforming to ASTM A615, Gr. 60 threaded to fit Inserts with each lid.
7. All costs associated with furnishing and installing the Precast Concrete Type S Drop Inlet Lid including the type S manhole frame and lid, shims, inserts, and dowels shall be included in the contract unit price per each for " 4' x 6' Precast Concrete Type S Drop Inlet Lid ".

December 23, 2012

Published Date: 1st Qtr. 2014

SDDOT

4' X 6' PRECAST CONCRETE TYPE S DROP INLET LID

PLATE NUMBER 670.38

Sheet 1 of 1

G:\Files\CAD\land projects R2\13405 Spruce Street\13405-Spruce Cover Street-Details 9 12.dwg, 2/18/2014 10:33:02 AM, DWG To PDF.pc3

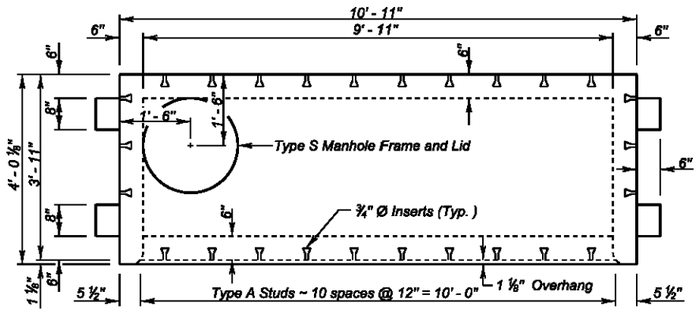

PLAN

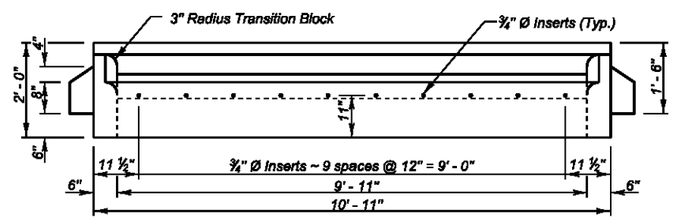

ELEVATION

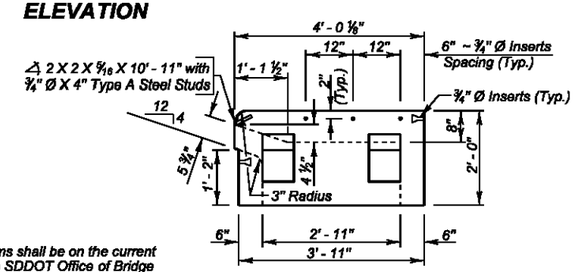

SIDE VIEW
(With Sidewalk Inserts)

GENERAL NOTES:

1. The Precast Concrete Type S Drop Inlet Lid and the shims shall be on the current approved list available through proper channels from the SDDOT Office of Bridge Design. To qualify for addition to the approved list, submit a checked design, done by South Dakota Registered Professional Engineers, and shop plans to the Office of Bridge Design for approval. Design shall be in accordance with the current edition of the AASHTO LRFD Bridge Design Specifications.
2. Design Live Load shall be HL - 93.
3. Concrete mix shall be as per fabricators design, however, minimum compressive strength shall not be less than 4500 psi. Type II Cement is required.
4. The Type S Manhole Frame and Lid shall conform to AASHTO M105, Class 30.
5. Structural Steel shall conform to ASTM A36. The ¾ inch diameter Headed Type A Steel Studs shall conform to Section 7 of the current edition of AWS D1. 1 Structural Steel Welding Code.
6. The ¾ inch diameter Concrete Inserts shall be galvanized or made of a corrosion resistant material. Provide ¾ inch diameter x 1' - 6" long dowels conforming to ASTM A615, Gr. 60 threaded to fit inserts with each lid.
7. All costs associated with furnishing and installing the Precast Concrete Type S Drop Inlet Lid including the type S manhole frame and lid, shims, inserts, and dowels shall be included in the contract unit price per each for " 4' x 11' Precast Concrete Type S Drop Inlet Lid ".

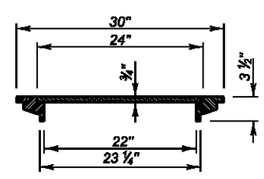

TYPICAL SECTION THROUGH TYPE S MANHOLE FRAME AND LID
(Weight 140 Lbs.)

December 23, 2012

Published Date: 1st Qtr. 2014	SDDOT	4' X 11' PRECAST CONCRETE TYPE S DROP INLET LID	PLATE NUMBER 670.40
			Sheet 1 of 1

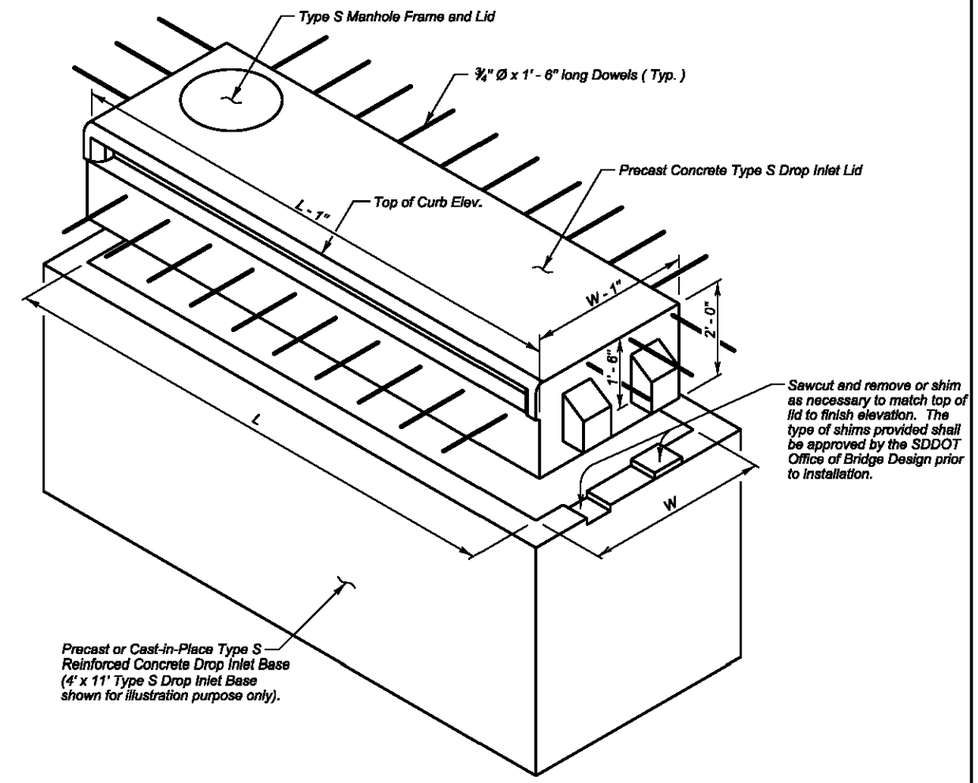

TYPE S DROP INLET

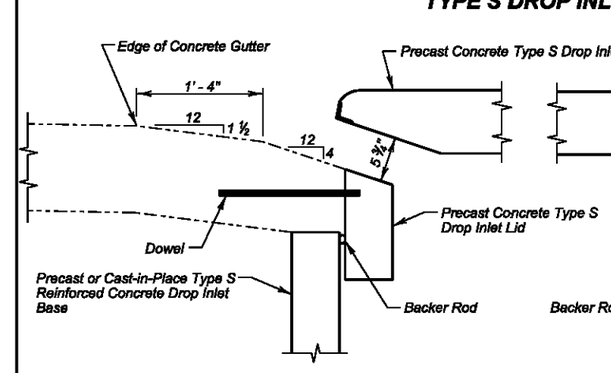

CONCRETE GUTTER DETAIL

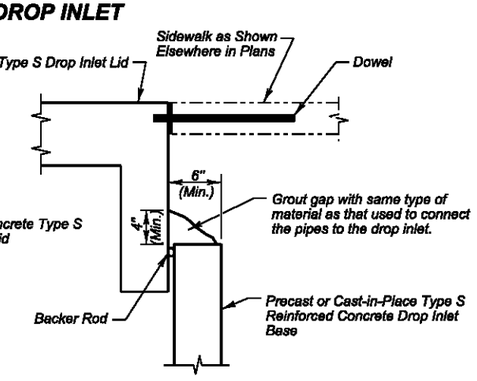

GROUTING DETAIL
(Sides and Back, Adjacent to Sidewalk)

December 23, 2012

Published Date: 1st Qtr. 2014	SDDOT	INSTALLATION DETAILS FOR PRECAST CONCRETE TYPE S DROP INLET LID	PLATE NUMBER 670.45
			Sheet 1 of 2

G:\Files\CAD\land projects R2\13405 Spruce Street\13405-Spruce Cover Street-Details.9 12.dwg, 2/18/2014 10:33:07 AM, DWG To PDF.pc3

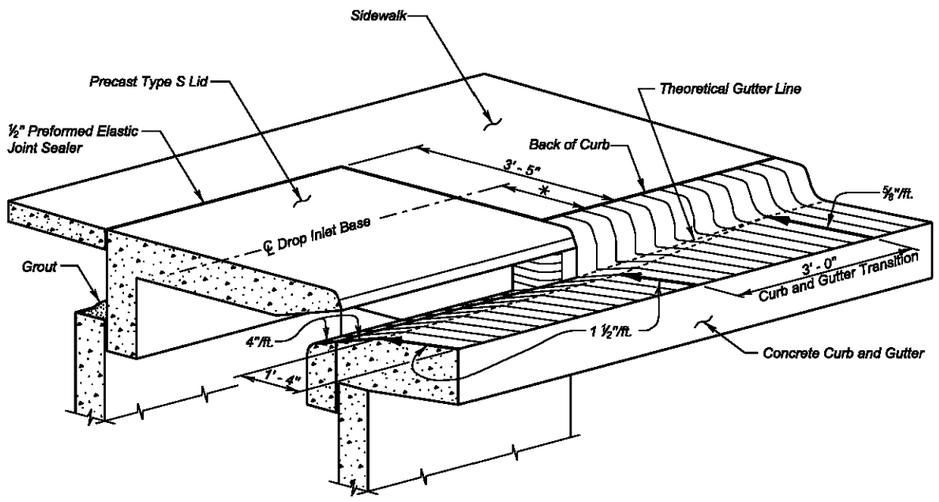

CURB AND GUTTER TRANSITION DETAILS

Drop Inlet Base Unit Size	* Distance
4' x 6'	1' - 5 ½"
4' x 11'	1' - 5 ½"
7' x 11'	2' - 11 ½"

GENERAL NOTES:

1. Dowels shall be used to anchor the precast concrete Type S drop inlet lid to the concrete gutter. See Standard Plate 670.38 or 670.40 as applicable. If there is sidewalk adjacent dowels shall be used to anchor the precast concrete Type S drop inlet lid to the sidewalk. If there is sidewalk adjacent to the drop inlet, the precast lid shall match the finish elevations and cross slopes of the sidewalk.
2. The sidewalk shall be steel reinforced when the sidewalk adjoins the precast lid. Refer to Standard Plate 651.70 for reinforced concrete sidewalk details.

December 23, 2012

Published Date: 1st Qtr. 2014	SDDOT	INSTALLATION DETAILS FOR PRECAST CONCRETE TYPE S DROP INLET LID	PLATE NUMBER 670.45
			Sheet 2 of 2

GENERAL NOTE:

Top of grate elevation shall be 0.04' below theoretical elevation of gutter.

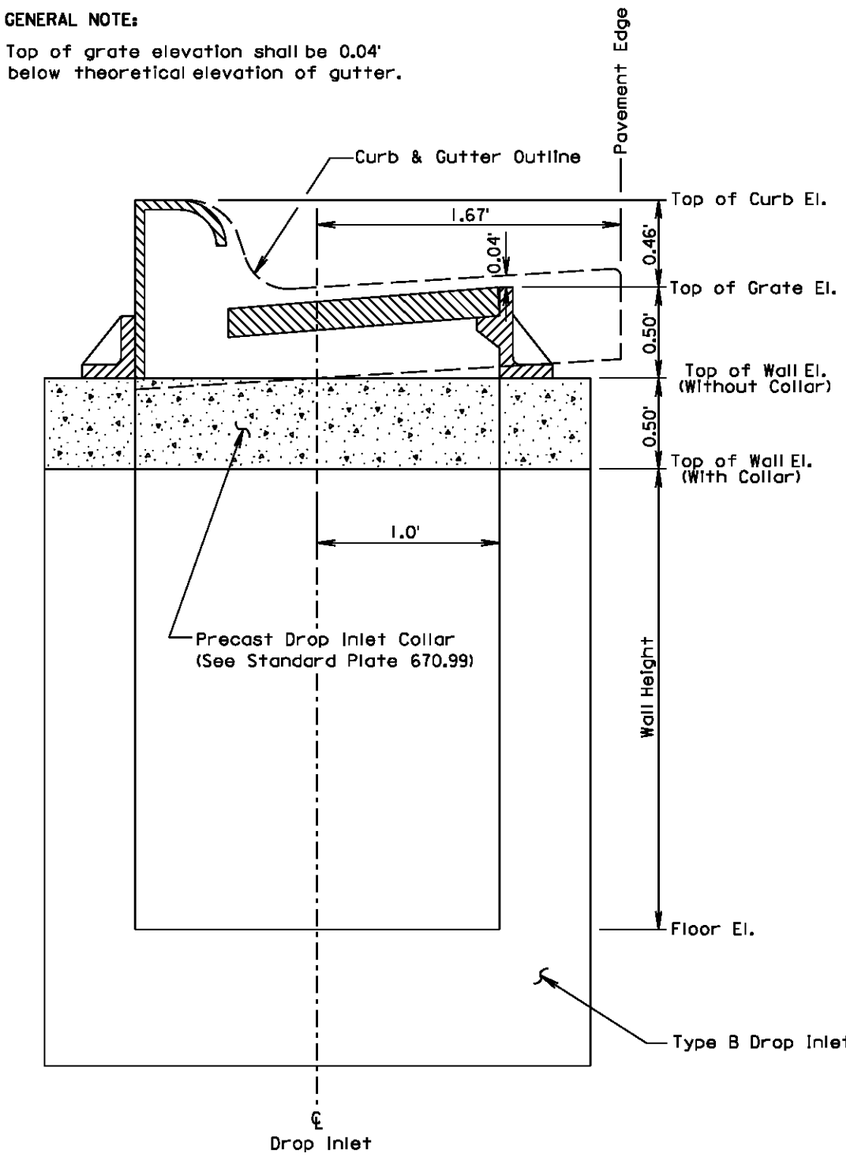

June 26, 2011

Published Date: 1st Qtr. 2014	SDDOT	INSTALLATION OF TYPE B DROP INLET	PLATE NUMBER 670.75
			Sheet 1 of 1

G:\Files\CAD\land projects R2\13405 Spruce Street\13405-Spruce Cover Street-Details 9 12.dwg, 2/18/2014 10:33:12 AM, DWG To PDF.pc3

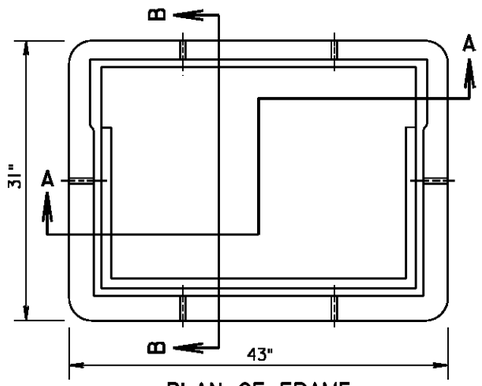

PLAN OF FRAME

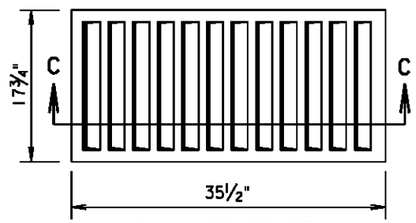

PLAN OF GRATE

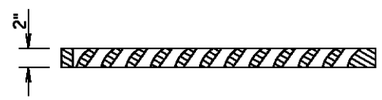

SECTION C-C

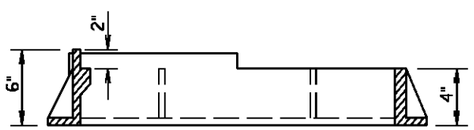

SECTION A-A

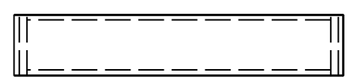

TOP VIEW OF CURB BOX

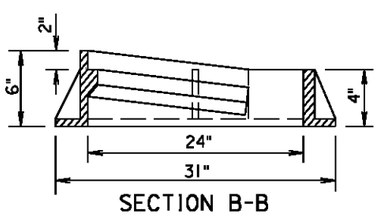

SECTION B-B

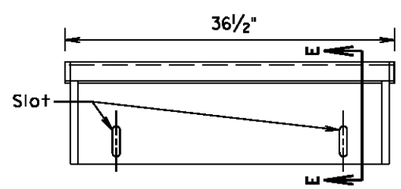

ELEVATION OF CURB BOX

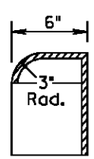

SECTION E-E

GENERAL NOTE:

Total weight of the assembly shall be 490 Lbs. minimum and the curb box shall be adjustable 6" to 9".

March 31, 2000

Published Date: 1st Qtr. 2014	SDDOT	TYPE B FRAME AND GRATE ASSEMBLY	PLATE NUMBER 670.80
			Sheet 1 of 1

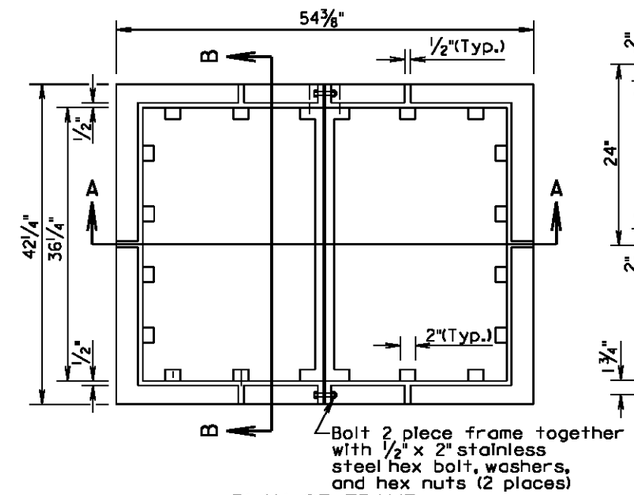

PLAN OF FRAME

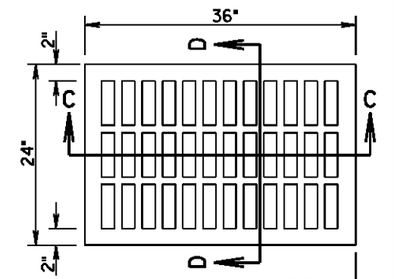

PLAN OF GRATE

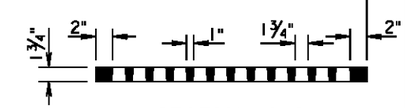

SECTION C-C

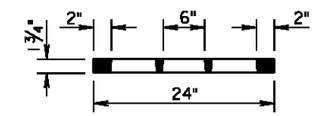

SECTION D-D

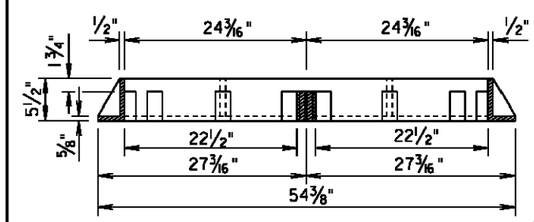

SECTION A-A

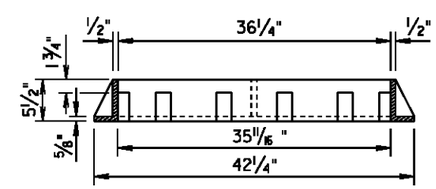

SECTION B-B

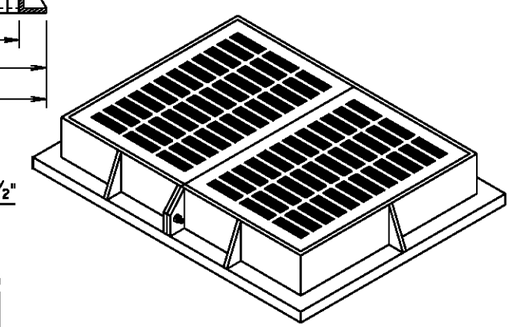

ASSEMBLED VIEW

GENERAL NOTE:

The total weight of the frame and grate shall be 850 pounds minimum.

March 31, 2000

Published Date: 1st Qtr. 2014	SDDOT	TYPE C FRAME AND GRATE	PLATE NUMBER 670.82
			Sheet 1 of 1

G:\Files\CAD\land projects R2\13405 Spruce Street\13405-Spruce Cover Street-Details.9 12.dwg, 2/18/2014 10:33:17 AM, DWG To PDF.pc3

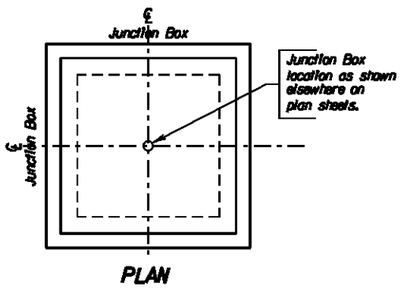

PLAN

△ Location, quantities, and method of payment for precast eccentric manhole cone sections are shown elsewhere on plan sheets.

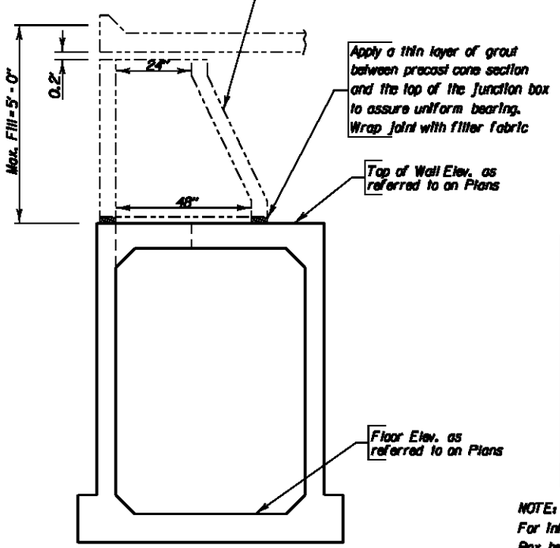

△ DETAIL OF CONNECTION BETWEEN PRECAST ECCENTRIC MANHOLE CONE SECTION AND JUNCTION BOX

SPECIFICATIONS

1. Design Specifications: AASHTO Specifications for Highway Bridges, 1996 Edition (Service Load).
2. Construction Specifications: South Dakota Standard Specifications for Roads and Bridges, Current Edition and required Provisions, Supplemental Specifications and/or Special Provisions as included in the Proposal.

DESIGN MIX OF CONCRETE

1. Mix shall be designed to produce a concrete having a minimum compressive strength of 4000 p.s.i. at 28 days.
2. Type II Cement is required.

GENERAL NOTES

1. Design Live Load: HS 20-44 and Alternate Loading. No construction loading in excess of legal Load was considered.
2. The design of the junction box is based on a maximum fill over the junction box of 5 feet.
3. Unit Stresses: Concrete fc = 1600 p.s.i.
   Reinforcing Steel fs = 24000 p.s.i.
4. All reinforcing steel shall conform to ASTM A615 Grade 60.
5. All exposed edges shall be chamfered ¾".
6. Use 1" clear cover on all reinforcing steel except as shown.
7. The cost of furnishing and installing the manhole steps shall be incidental to the contract unit price per Lb. for "Reinforcing steel".
8. Reinforcing steel shall be cut and bent in field as necessary to fit pipe and manhole openings. (Pipe openings are not shown in these details.) Number, size and location of pipes entering junction box are shown elsewhere on plan sheets.
9. All pipes entering the junction box must fit between the inside faces of the walls.

ITEM	Class M6 Concrete	Reinforcing Steel
UNIT	Cu. Yd.	Lb.
H = 4' - 0"	4.37	821
H = 4' - 6"	4.61	846
H = 5' - 0"	4.85	908
H = 5' - 6"	5.10	933
H = 6' - 0"	5.34	958
H = 6' - 6"	5.58	1020
H = 7' - 0"	5.82	1045
H = 7' - 6"	6.06	1071
H = 8' - 0"	6.30	1132

NOTE:
For informational purposes only, the estimated quantities for Junction Box height H are shown above. These quantities do not include quantity reduction for pipe openings, but do include the reduction for the 24" diameter manhole opening.

March 31, 2000

Published Date: 1st Qtr. 2014 | SDDOT | 5' X 5' JUNCTION BOX | PLATE NUMBER 671.01 | Sheet 1 of 3

REINFORCING SCHEDULE

	Mk.	No.	Size	Length	Type
H = 4' - 0"	Φa1	1	6	9' - 0"	T3
	Φa2	4	-	——	-
	h3	28	4	5' - 9"	17A
	k3	48	4	8' - 6"	17
	m1	18	5	6' - 9"	Str.
	n1	18	5	5' - 9"	Str.
	p1	52	4	5' - 0"	Str.
	q1	8	4	3' - 6"	17A
H = 4' - 6"	Φa1	1	6	9' - 0"	T3
	Φa2	4	-	——	-
	h4	28	4	6' - 3"	17A
	k4	48	4	9' - 0"	17
	m1	18	5	6' - 9"	Str.
	n1	18	5	5' - 9"	Str.
	p1	52	4	5' - 0"	Str.
	q1	8	4	3' - 6"	17A
H = 5' - 0"	Φa1	1	6	9' - 0"	T3
	Φa2	5	-	——	-
	h5	28	4	6' - 9"	17A
	k5	48	4	9' - 6"	17
	m1	18	5	6' - 9"	Str.
	n1	18	5	5' - 9"	Str.
	p1	60	4	5' - 0"	Str.
	q1	12	4	3' - 6"	17A
H = 5' - 6"	Φa1	1	6	9' - 0"	T3
	Φa2	5	-	——	-
	h6	28	4	7' - 3"	17A
	k6	48	4	10' - 0"	17
	m1	18	5	6' - 9"	Str.
	n1	18	5	5' - 9"	Str.
	p1	60	4	5' - 0"	Str.
	q1	12	4	3' - 6"	17A
H = 6' - 0"	Φa1	1	6	9' - 0"	T3
	Φa2	6	-	——	-
	h7	28	4	7' - 9"	17A
	k7	48	4	10' - 6"	17
	m1	18	5	6' - 9"	Str.
	n1	18	5	5' - 9"	Str.
	p1	60	4	5' - 0"	Str.
	q1	12	4	3' - 6"	17A
H = 6' - 6"	Φa1	1	6	9' - 0"	T3
	Φa2	6	-	——	-
	h8	28	4	8' - 3"	17A
	k8	48	4	11' - 0"	17
	m1	18	5	6' - 9"	Str.
	n1	18	5	5' - 9"	Str.
	p1	68	4	5' - 0"	Str.
	q1	16	4	3' - 6"	17A
H = 7' - 0"	Φa1	1	6	9' - 0"	T3
	Φa2	7	-	——	-
	h9	28	4	8' - 9"	17A
	k9	48	4	11' - 6"	17
	m1	18	5	6' - 9"	Str.
	n1	18	5	5' - 9"	Str.
	p1	68	4	5' - 0"	Str.
	q1	16	4	3' - 6"	17A
H = 7' - 6"	Φa1	1	6	9' - 0"	T3
	Φa2	7	-	——	-
	h10	28	4	9' - 3"	17A
	k10	48	4	12' - 0"	17
	m1	18	5	6' - 9"	Str.
	n1	18	5	5' - 9"	Str.
	p1	68	4	5' - 0"	Str.
	q1	16	4	3' - 6"	17A
H = 8' - 0"	Φa1	1	6	9' - 0"	T3
	Φa2	8	-	——	-
	h11	28	4	9' - 9"	17A
	k11	48	4	12' - 6"	17
	m1	18	5	6' - 9"	Str.
	n1	18	5	5' - 9"	Str.
	p1	76	4	5' - 0"	Str.
	q1	20	4	3' - 6"	17A

Bending Details

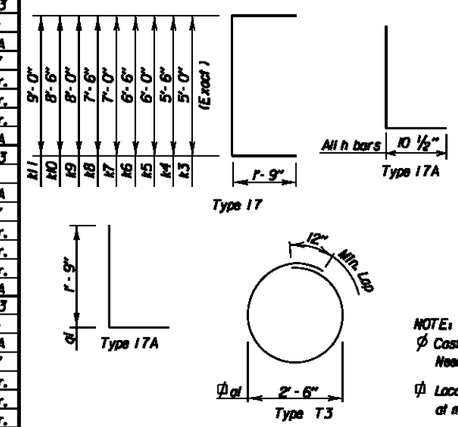

NOTE:
Φ Cast Iron Manhole Steps (R - 1980 - C) from Neenah Foundry or equivalent.

Φa1 Locate in center of top slab with 3" clearance at manhole opening.

All dimensions are out to out of bars.

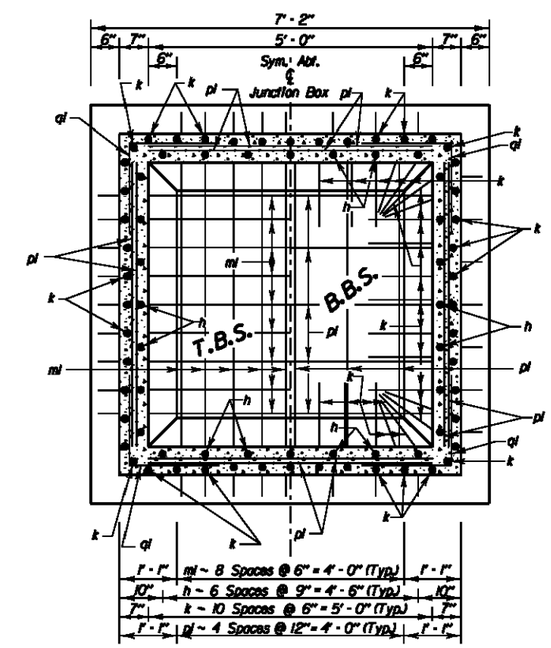

SEC. A-A

March 31, 2000

Published Date: 1st Qtr. 2014 | SDDOT | 5' X 5' JUNCTION BOX | PLATE NUMBER 671.01 | Sheet 2 of 3

G:\Files\CAD\land projects R2\13405 Spruce Street\13405-Spruce Cover Street-Details 9 12.dwg, 2/18/2014 10:33:22 AM, DWG To PDF.pc3

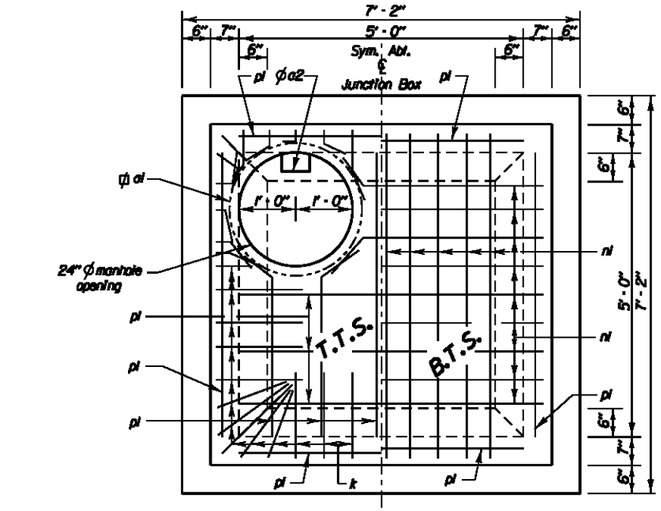

PLAN

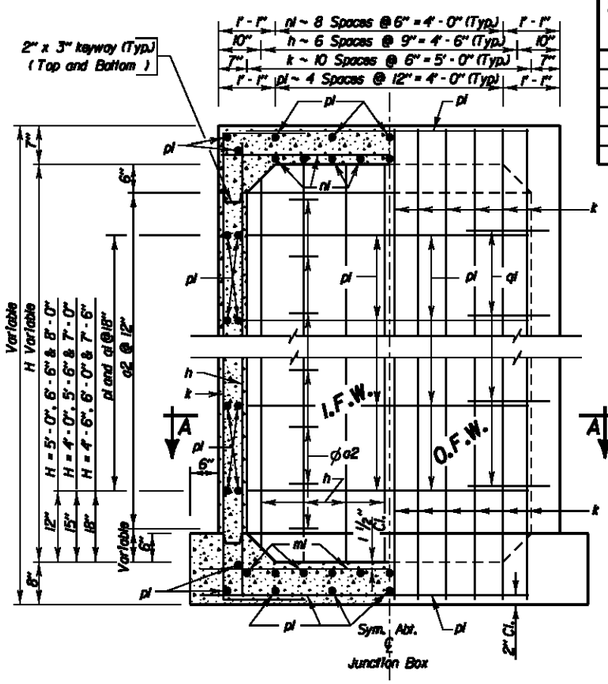

ELEVATION

LEGEND FOR PLACING RE-STEEL

T. T. S. - Top of Top Slab
B. T. S. - Bottom of Top Slab
T. B. S. - Top of Bottom Slab
B. B. S. - Bottom of Bottom Slab
O. F. W. - Outside Face of Wall
I. F. W. - Inside Face of Wall

March 31, 2000

Published Date: 1st Qtr. 2014

SDDOT

5'X 5' JUNCTION BOX

PLATE NUMBER 671.01

Sheet 3 of 3

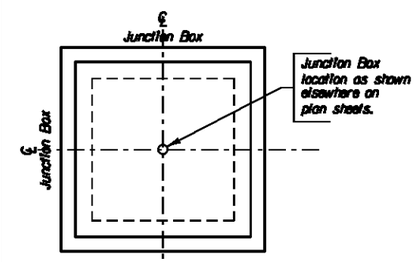

PLAN

SPECIFICATIONS

1. Design Specifications: AASHTO Specifications for Highway Bridges, 1996 Edition (Service Load).
2. Construction Specifications: South Dakota Standard Specifications for Roads and Bridges, Current Edition and required Provisions, Supplemental Specifications and/or Special Provisions as included in the Proposal.

DESIGN MIX OF CONCRETE

1. Mix shall be designed to produce a concrete having a minimum compressive strength of 4000 p.s.i. at 28 days.
2. Type II Cement is required.

GENERAL NOTES

1. Design Live Load: HS 20-44 and Alternate Loading. No construction loading in excess of legal Load was considered.
2. The design of the junction box is based on a maximum fill over the junction box of 5 feet.
3. Unit Stresses: Concrete fc = 1600 p.s.i.
   Reinforcing Steel fs = 24000 p.s.i.
4. All reinforcing steel shall conform to ASTM A615 Grade 60.
5. All exposed edges shall be chamfered ¾".
6. Use 1" clear cover on all reinforcing steel except as shown.
7. The cost of furnishing and installing the manhole steps shall be incidental to the contract unit price per Lb. for "Reinforcing steel".
8. Reinforcing steel shall be cut and bent in field as necessary to fit pipe and manhole openings. (Pipe openings are not shown in these details.) Number, size and location of pipes entering junction box are shown elsewhere on plan sheets.
9. All pipes entering the junction box must fit between the inside faces of the walls.

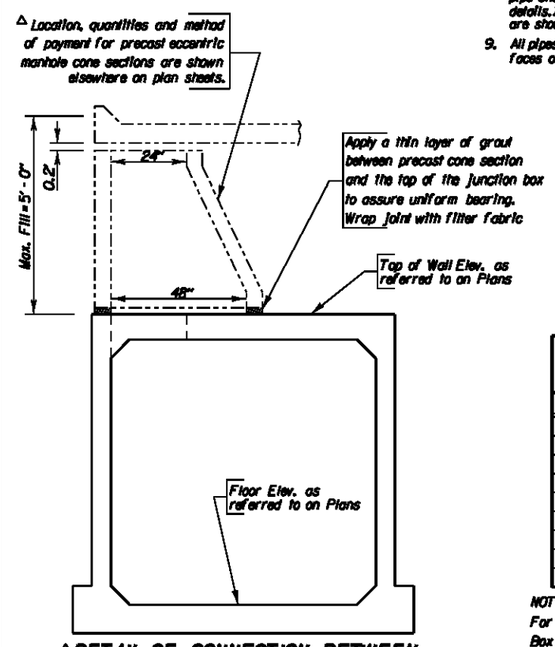

△DETAIL OF CONNECTION BETWEEN PRECAST ECCENTRIC MANHOLE CONE SECTION AND JUNCTION BOX

ITEM	Class M6 Concrete	Reinforcing Steel
UNIT	Cu. Yd.	Lb.
H = 4' - 0"	7.09	1506
H = 4' - 6"	7.42	1541
H = 5' - 0"	7.75	1622
H = 5' - 6"	8.08	1657
H = 6' - 0"	8.40	1692
H = 6' - 6"	8.73	1773
H = 7' - 0"	9.06	1808
H = 7' - 6"	9.39	1843
H = 8' - 0"	9.71	1924

NOTE:
For informational purposes only, the estimated quantities for Junction Box height H are shown above. These quantities do not include quantity reduction for pipe openings, but do include the reduction for the 24" diameter manhole opening.

March 31, 2000

Published Date: 1st Qtr. 2014

SDDOT

7'X 7' JUNCTION BOX

PLATE NUMBER 671.03

Sheet 1 of 3

G:\Files\CAD\land projects R2\13405 Spruce Street\13405-Spruce Cover Street-Details 9 12.dwg, 2/18/2014 10:33:27 AM, DWG To PDF.pc3

REINFORCING SCHEDULE

	Mk.	No.	Size	Length	Type
H = 4'-0"	Φa1	1	6	9'-0"	T3
	Φa2	4	-	——	-
	h25	40	4	5'-9"	17A
	k25	64	4	9'-3"	17
	m3	26	6	8'-9"	Str.
	n3	26	6	7'-9"	Str.
	p3	60	4	7'-0"	Str.
	q1	8	4	3'-6"	17A
H = 4'-6"	Φa1	1	6	9'-0"	T3
	Φa2	4	-	——	-
	h26	40	4	6'-3"	17A
	k26	64	4	9'-9"	17
	m3	26	6	8'-9"	Str.
	n3	26	6	7'-9"	Str.
	p3	60	4	7'-0"	Str.
	q1	8	4	3'-6"	17A
H = 5'-0"	Φa1	1	6	9'-0"	T3
	Φa2	5	-	——	-
	h27	40	4	6'-9"	17A
	k27	64	4	10'-3"	17
	m3	26	6	8'-9"	Str.
	n3	26	6	7'-9"	Str.
	p3	68	4	7'-0"	Str.
	q1	12	4	3'-6"	17A
H = 5'-6"	Φa1	1	6	9'-0"	T3
	Φa2	5	-	——	-
	h28	40	4	7'-3"	17A
	k28	64	4	10'-9"	17
	m3	26	6	8'-9"	Str.
	n3	26	6	7'-9"	Str.
	p3	68	4	7'-0"	Str.
	q1	12	4	3'-6"	17A
H = 6'-0"	Φa1	1	6	9'-0"	T3
	Φa2	6	-	——	-
	h29	40	4	7'-9"	17A
	k29	64	4	11'-3"	17
	m3	26	6	8'-9"	Str.
	n3	26	6	7'-9"	Str.
	p3	68	4	7'-0"	Str.
	q1	12	4	3'-6"	17A
H = 6'-6"	Φa1	1	6	9'-0"	T3
	Φa2	6	-	——	-
	h30	40	4	8'-3"	17A
	k30	64	4	11'-9"	17
	m3	26	6	8'-9"	Str.
	n3	26	6	7'-9"	Str.
	p3	76	4	7'-0"	Str.
	q1	16	4	3'-6"	17A
H = 7'-0"	Φa1	1	6	9'-0"	T3
	Φa2	7	-	——	-
	h31	40	4	8'-9"	17A
	k31	64	4	12'-3"	17
	m3	26	6	8'-9"	Str.
	n3	26	6	7'-9"	Str.
	p3	76	4	7'-0"	Str.
	q1	16	4	3'-6"	17A
H = 7'-6"	Φa1	1	6	9'-0"	T3
	Φa2	7	-	——	-
	h32	40	4	9'-3"	17A
	k32	64	4	12'-9"	17
	m3	26	6	8'-9"	Str.
	n3	26	6	7'-9"	Str.
	p3	76	4	7'-0"	Str.
	q1	16	4	3'-6"	17A
H = 8'-0"	Φa1	1	6	9'-0"	T3
	Φa2	8	-	——	-
	h33	40	4	9'-9"	17A
	k33	64	4	13'-3"	17
	m3	26	6	8'-9"	Str.
	n3	26	6	7'-9"	Str.
	p3	84	4	7'-0"	Str.
	q1	20	4	3'-6"	17A

Bending Details

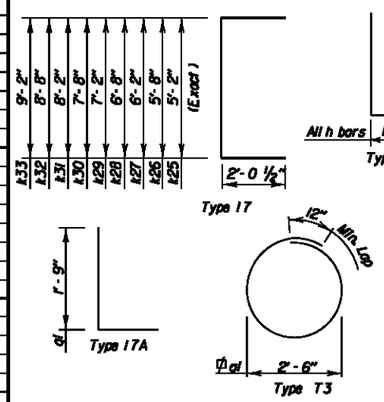

NOTE:

Φ Cast Iron Manhole Steps (R - 1980 - C) from Neenah Foundry or equivalent.

Φ Locate in center of top slab with 3" clearance at manhole opening.

All dimensions are out to out of bars.

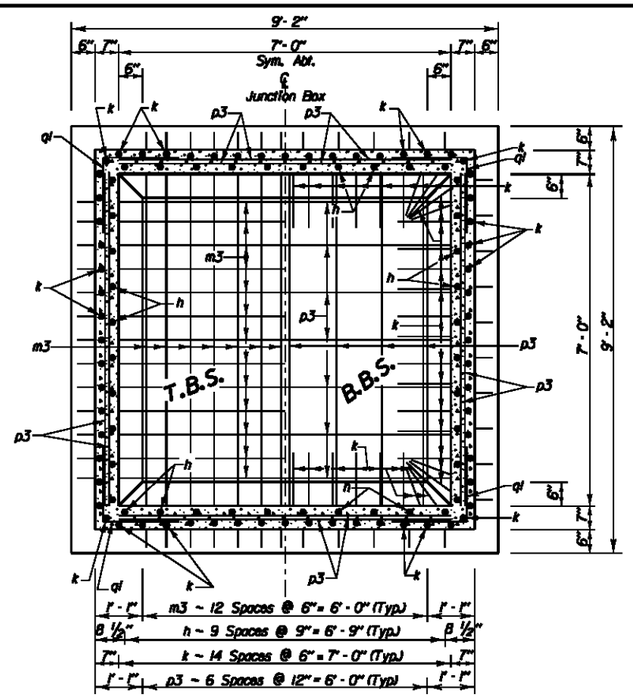

SEC. A-A

March 31, 2000

Published Date: 1st Qtr. 2014

SDDOT

7'X 7' JUNCTION BOX

PLATE NUMBER 671.03

Sheet 2 of 3

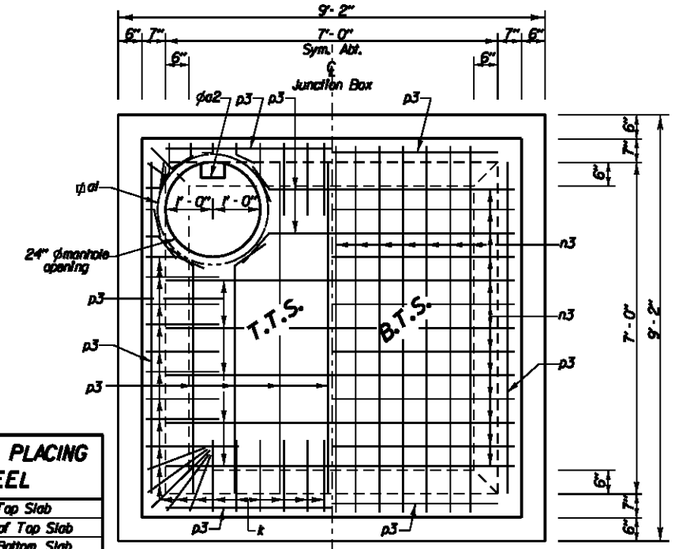

PLAN

LEGEND FOR PLACING RE-STEEL
T. T. S. - Top of Top Slab
B. T. S. - Bottom of Top Slab
T. B. S. - Top of Bottom Slab
B. B. S. - Bottom of Bottom Slab
O. F. W. - Outside Face of Wall
I. F. W. - Inside Face of Wall

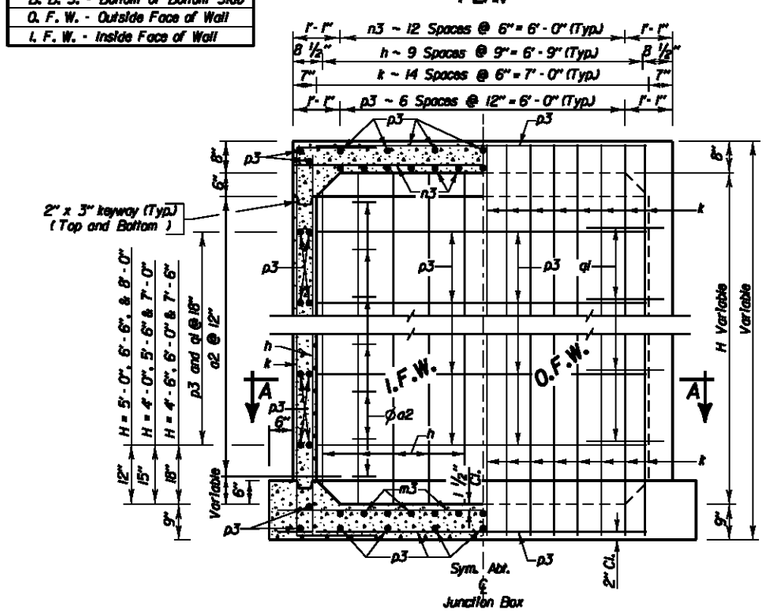

ELEVATION

March 31, 2000

Published Date: 1st Qtr. 2014

SDDOT

7'X 7' JUNCTION BOX

PLATE NUMBER 671.03

Sheet 3 of 3

G:\Files\CAD\land projects R2\13405 Spruce Street\13405-Spruce Cover Street-Details 9.12.dwg, 2/18/2014 10:33:32 AM, DWG To PDF.pc3

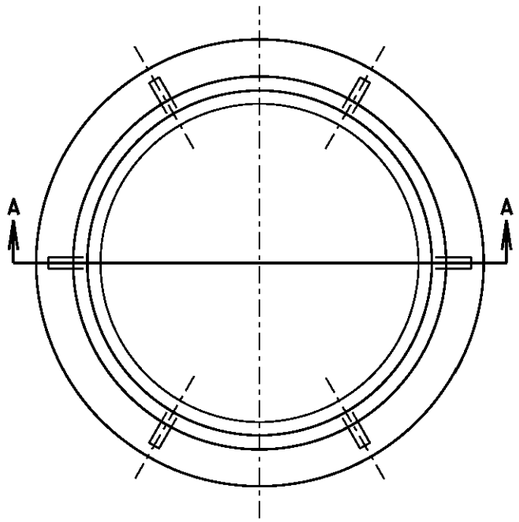

PLAN OF FRAME

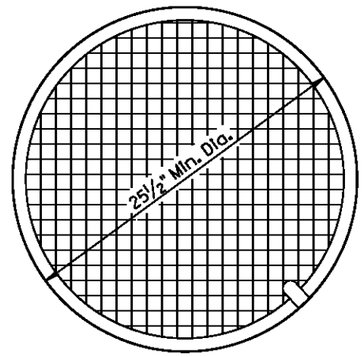

PLAN OF LID

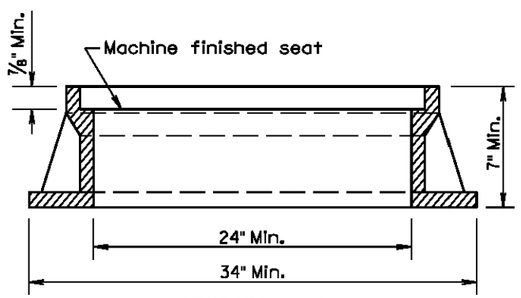

SECTION A-A

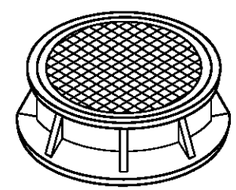

ASSEMBLED VIEW

TYPE	HEIGHT	MIN. WEIGHT
A7	7"	400Lbs.
A8	8"	440Lbs.
A9	9"	470Lbs.
A10	10"	480Lbs.

GENERAL NOTE:

Geometric pattern on top of lid other than that shown shall be approved by the Engineer.

March 31, 2000

Published Date: 1st Qtr. 2014	SDDOT	TYPE A MANHOLE FRAME AND LID	PLATE NUMBER 671.10 Sheet 1 of 1

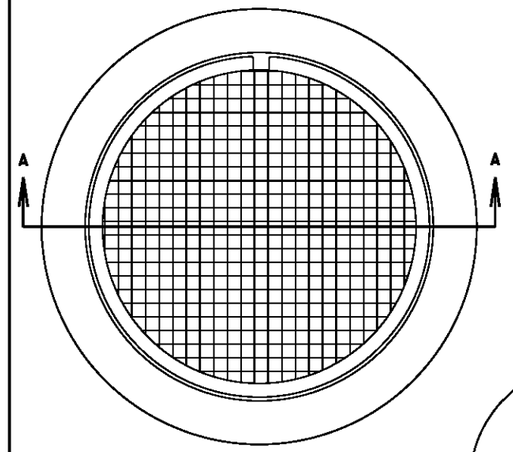

PLAN VIEW

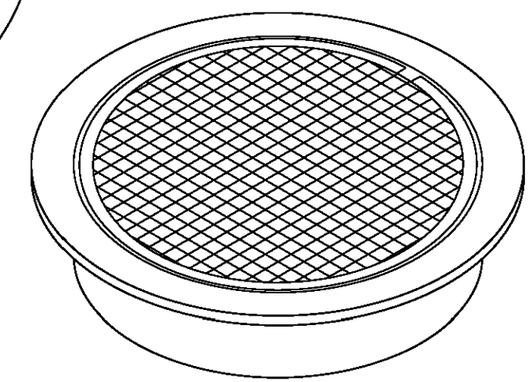

ASSEMBLED VIEW

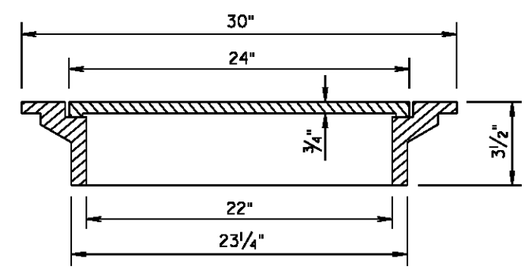

SECTION A-A

GENERAL NOTE:

Total weight of the frame and lid shall be 140 Lbs. minimum.

March 31, 2000

Published Date: 1st Qtr. 2014	SDDOT	TYPE S MANHOLE FRAME AND LID	PLATE NUMBER 671.30 Sheet 1 of 1

G:\Files\CAD\land projects R2\13405 Spruce Street\13405-Spruce Cover Street-Details 9 12.dwg, 2/18/2014 10:33:37 AM, DWG To PDF.pc3

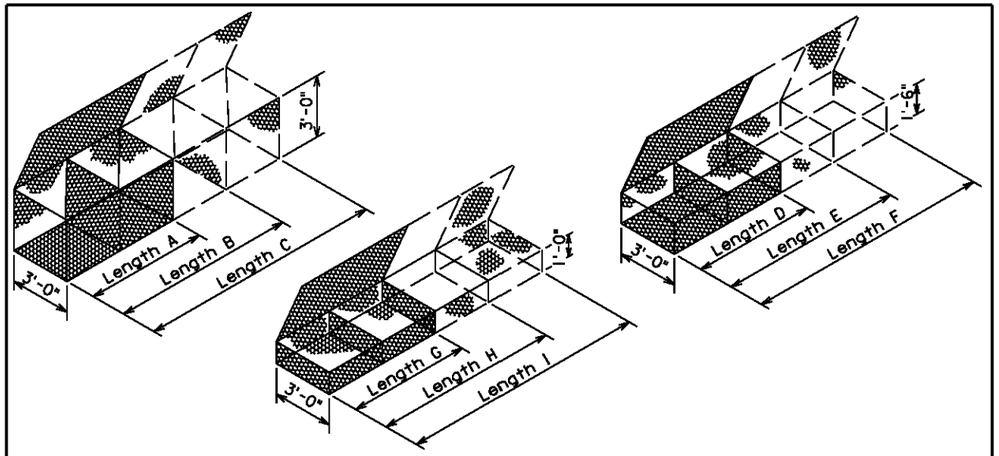

GABION DETAILS

STANDARD SIZES

SIZE	LENGTH	WIDTH	HEIGHT	NUMBER OF CELLS	CAPACITY, Cu. Yd.
A	6'-0"	3'-0"	3'-0"	2	2.0
B	9'-0"	3'-0"	3'-0"	3	3.0
C	12'-0"	3'-0"	3'-0"	4	4.0
D	6'-0"	3'-0"	1'-6"	2	1.0
E	9'-0"	3'-0"	1'-6"	3	1.5
F	12'-0"	3'-0"	1'-6"	4	2.0
G	6'-0"	3'-0"	1'-0"	2	0.7
H	9'-0"	3'-0"	1'-0"	3	1.0
I	12'-0"	3'-0"	1'-0"	4	1.3

Above Dimensions subject to mill tolerances.

GENERAL NOTES:

Lacing and internal connecting wire shall be 0.0866 inch diameter steel wire ASTM A641 Class 3 soft temper measured after galvanizing and for PVC coated gabions shall be 0.0866 inch diameter steel wire measured after galvanizing but before PVC coating.

The lacing procedure is as follows:

1. Cut a length of lacing wire approximately 1 ½ times the distance to be laced but not exceeding 5 feet.
2. Secure the wire terminal at the corner by looping and twisting.
3. Proceed lacing with alternating single and double loops at a spacing not to exceed 6 inches.
4. Securely fasten the other lacing wire terminal.

Wire lacing or interlocking type fasteners shall be used for gabion assembly and final construction of gabion structures. Interlocking fasteners for galvanized gabions shall be high tensile 0.120 inch diameter galvanized steel wire measured after galvanizing. The galvanizing shall conform to ASTM A641-92 Class 3 coating. Fasteners shall also be in accordance with ASTM A764, Class II, Type III.

Interlocking fasteners for PVC coated gabions shall be high tensile 0.120 inch diameter stainless steel wire conforming to ASTM A313, Type 302, Class I. The spacing of the interlocking fasteners during all phases of assembly and construction shall not exceed 6 inches.
All fasteners shall be placed where the mesh weaves around the selvage wire at the vertical and horizontal joints.

June 26, 2001

Published Date: 1st Qtr. 2014	SDDOT	BANK AND CHANNEL PROTECTION GABIONS	PLATE NUMBER 720.01
			Sheet 1 of 1

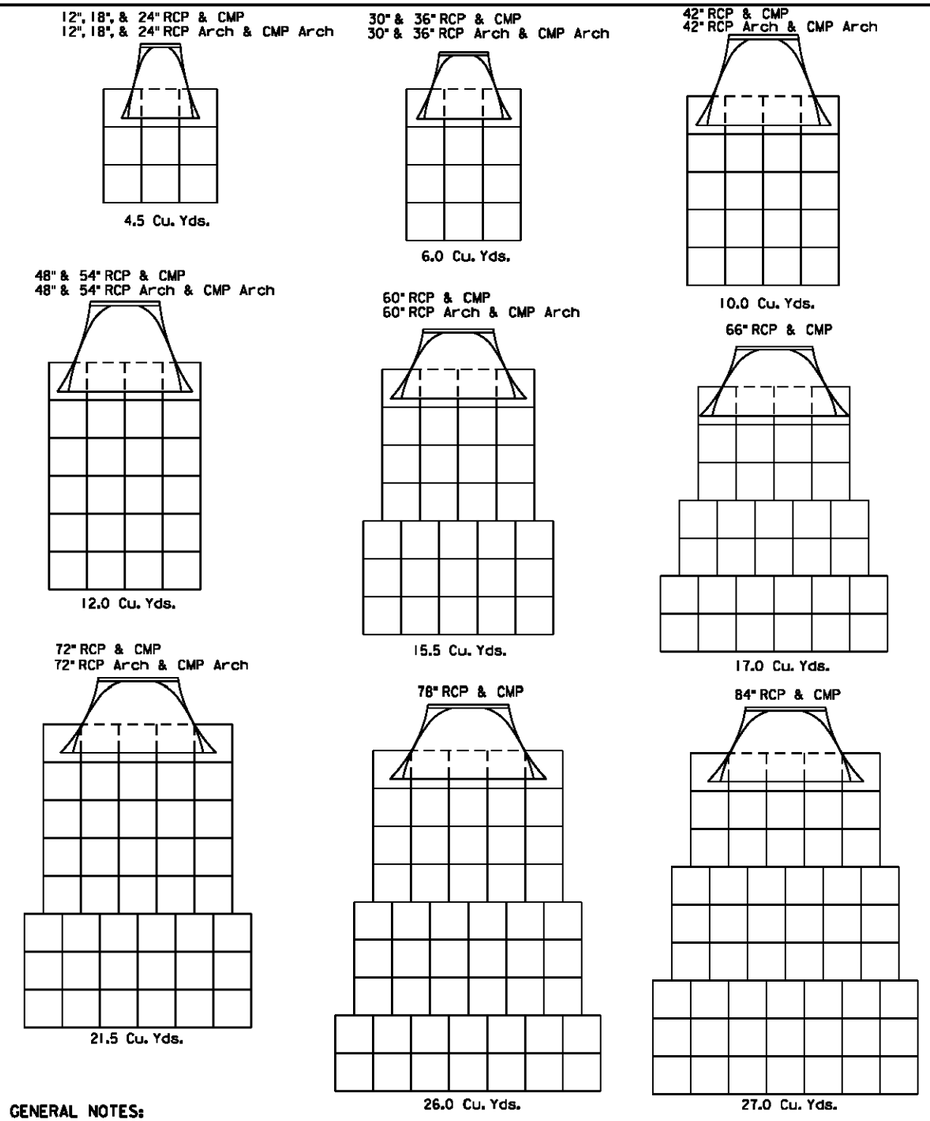

GENERAL NOTES:

Gabions at outlets of C. M. pipe and R. C. pipe shall be placed under the end section a distance of 2' from the outlet end of the section. For C. M. pipe end section installations, the upper fabric of the gabions shall be modified to accommodate the metal end section in a manner approved by the Engineer.

Quantities shown on this standard plate are based on standard gabion sizes D, E, and F (See Standard Plate 720.01).

June 26, 2001

Published Date: 1st Qtr. 2014	SDDOT	BANK AND CHANNEL PROTECTION GABION PLACEMENT UNDER PIPE END SECTIONS	PLATE NUMBER 720.03
			Sheet 1 of 1

G:\Files\CAD\land projects R2\13405 Spruce Street\13405-Spruce Cover Street-Details 9 12.dwg, 2/18/2014 10:33:42 AM, DWG To PDF.pc3

FOR BIDDING PURPOSES ONLY

STATE OF SOUTH DAKOTA	PROJECT	SHEET NO.	TOTAL SHEETS
	P 3699(01)	B88	B88

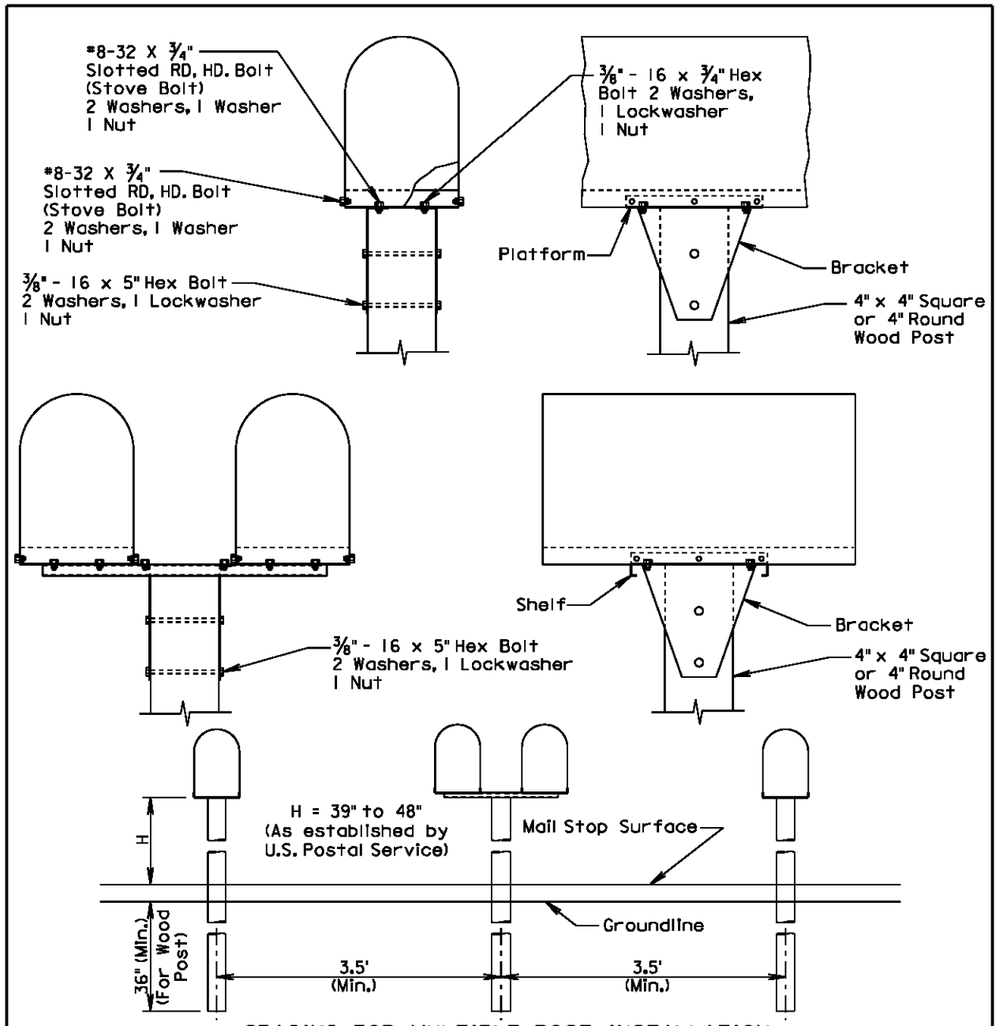

SPACING FOR MULTIPLE POST INSTALLATION

GENERAL NOTES:

The post support assemblies provided should be consistant throughout the project.

Single and double mailboxes may be in any sequence.

Post support assemblies shall be one from the approved products list, a 4"x4" or 4" round wood post, or an alternate post support assembly that meets the test level 3 crash testing requirements of NCHRP 350 or MASH.

Alternate mailbox support assemblies shall be approved by the Engineer prior to installation. The Contractor shall provide the Engineer written certification that the mailbox support assembly has met the crash testing requirements and will be installed in accordance with the manufacturer's installation instructions.

September 6, 2013

Published Date: 1st Qtr. 2014	SDDOT	SINGLE AND DOUBLE MAILBOX ASSEMBLIES	PLATE NUMBER 900.02
			Sheet 1 of 1

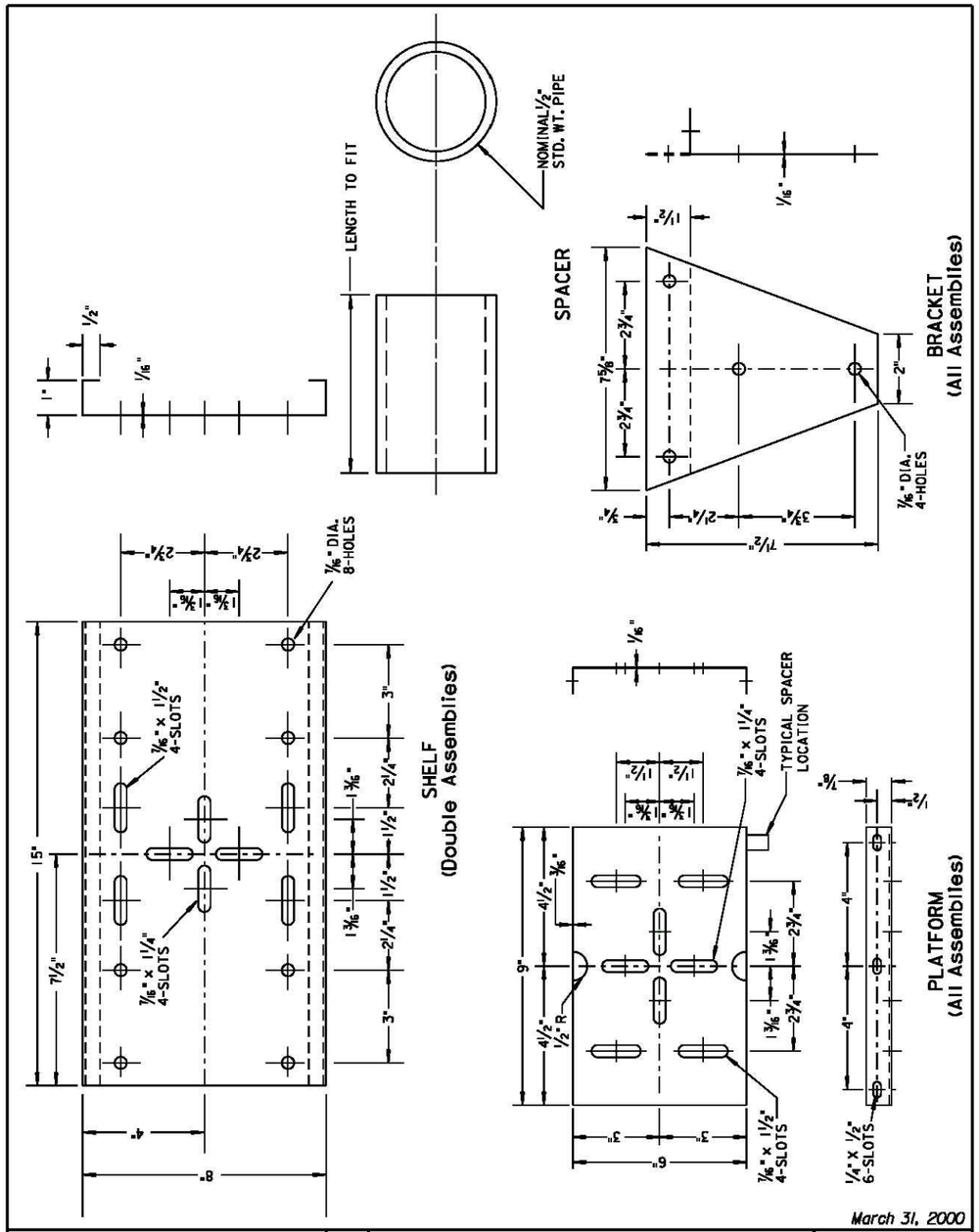

March 31, 2000

Published Date: 1st Qtr. 2014	SDDOT	MAILBOX SUPPORT HARDWARE	PLATE NUMBER 900.03
			Sheet 1 of 1

G:\Files\CAD\land projects R2\13405 Spruce Street\13405-Spruce Cover Street-Details.9 12.dwg, 2/18/2014 10:33:47 AM, DWG To PDF.pc3