FOR BIDDING PURPOSES ONLY

REV 4-2-14 NAP

STATE OF SOUTH DAKOTA	PROJECT	SHEET NO.	TOTAL SHEETS
	P 3699(01)	C1	C8

Section C: Traffic Control Plans

INDEX OF SHEETS

C1:	General Layout W/Index
C2:	Estimate of Quantities & Plan Notes
C3:	Table of Traffic Control Signs
C4:	Signs
C5 – C6:	Traffic Control Layout
C7 – C8:	DOT Standard Plates

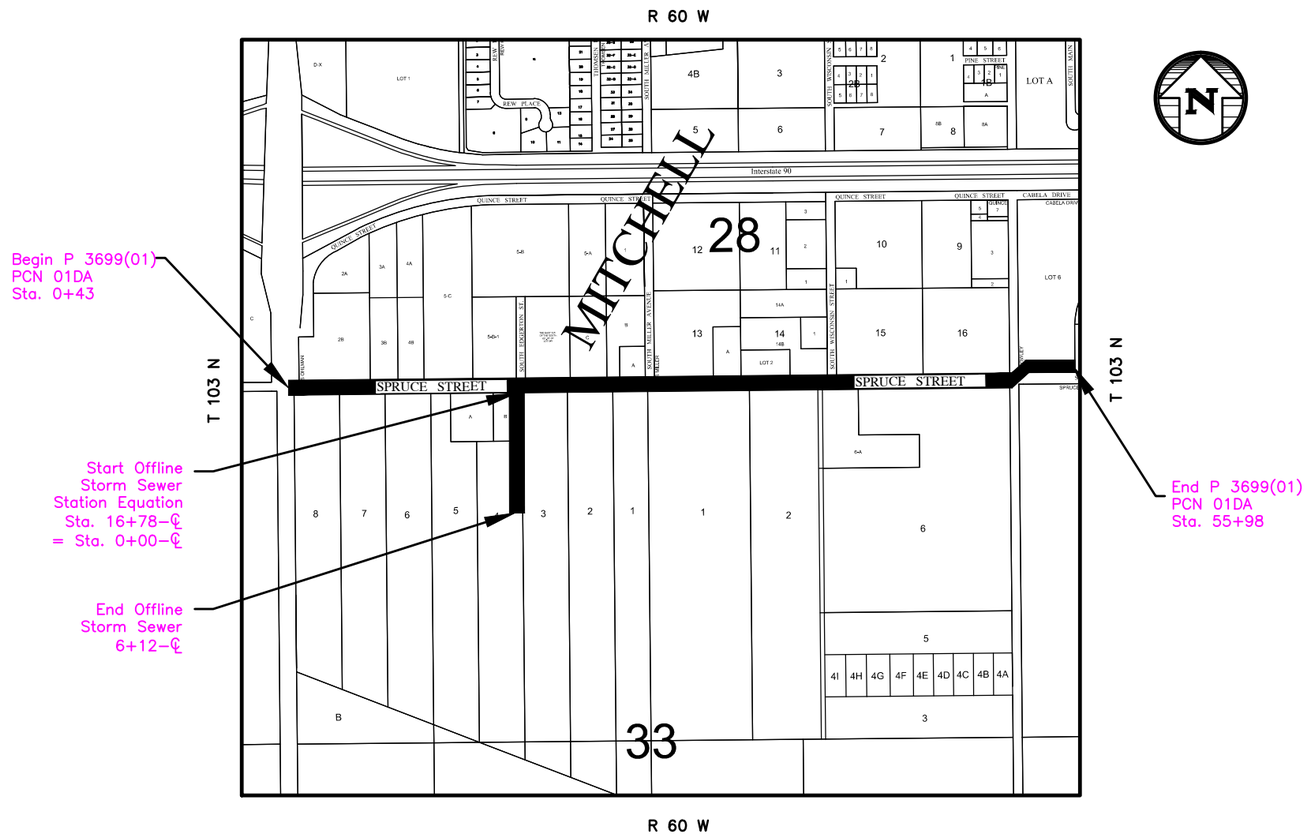

SPN & Associates
Engineers, Planners and Surveyors
2100 North Sanborn Blvd. - P.O. Box 398 Mitchell, South Dakota 57301
Phone: (605) 996-7761 Fax: (605) 996-0015 Project No. 08-13101

G:\Files\CAD\land projects R2\13405 Spruce Street\13405-Spruce Cover Street-Details 9 12.dwg, 4/2/2014 11:59:53 AM, DWG To PDF.pc3

SECTION C ESTIMATE OF QUANTITIES			
BID ITEM NUMBER	DESCRIPTION	QUANTITY	UNIT
634E0010	Flagging	100	Hour
634E0020	Pilot Car	50	Hour
634E0100	Traffic Control	2814	Unit
634E0120	Traffic Control, Miscellaneous	Lump Sum	LS

SEQUENCE OF OPERATIONS

Due to the lack of access to the properties along the construction route, Spruce Street must remain open to one–way traffic during construction. The Contractor, unless otherwise authorized by the Engineer and Owner, shall construct the project in phases in accordance with the following sequence:

PHASE 1

1. Set up traffic control for closure of the intersection of Spruce Street and Rowley Street.
2. Begin topsoil and tree removal, excavation and embankment on the south half of Spruce Street from Rowley Street to Wisconsin Street while installing the storm sewer across the intersection of Spruce Street and Rowley Street.
3. Open the intersection to traffic.
4. Notify the City of Mitchell Public Works Director at least 48 hours in advance as to when traffic control will be set up to allow only one–way traffic (eastbound) on Spruce Street between Rowley and Ohlman.
5. Work done during Phase I can only be performed between Wisconsin Street and Rowley Street and Rowley Street to the end of the storm sewer pipe ending at Station 55+88.

PHASE 2

1. Set up traffic control according to the plans for Phase 2.
2. Replace the curb and gutter and sidewalk that was removed for the storm sewer work east of Rowley Street while continuing excavation and embankment on the south side of Spruce Street. Continue installation of the storm sewer on the south half of Spruce Street.
3. Finish grade the subgrade and place gravel Base Course, Salvaged on the south half of the roadway.
4. Install curb and gutter and approach pavements on the south side of the roadway and complete backfill behind the curb.
5. Complete the installation of gravel base course on the south half of the roadway.
6. Milling, salvaging and stockpiling of the asphalt mix and gravel base may be completed during Phase 2 with appropriate flagging operations. Approximately four inches of the existing gravel base course shall remain on the north half of Spruce Street which is to remain open to traffic while work is being completed on the south half of the street.

PHASE 3

1. Adjust traffic control according to the plans for Phase 3.
2. Salvage and stockpile the remaining gravel base course material from the north half of the street.
3. Excavate and construct embankments on the north half of Spruce Street. Lower the water distribution line, adjust sanitary sewer manholes (see utility plans and specifications) and install the remaining storm sewer inlets and piping to connect into the main line.
4. Final grade the subgrade and place gravel base course on the north half of the roadway.
5. Install curb and gutter, approach pavements and sidewalk on the north side of the roadway and backfill behind the curb.
6. Complete the installation of gravel base course on the north half of the roadway.

PHASE 4

1. The remaining work shall be completed with the street open to the public. The Contractor shall provide flaggers and a pilot car as needed to safely direct traffic during the final grading and paving operations.

This sequence of operations is not meant to include every detail of the construction process and should not be viewed in that respect.

During each phase of the project the Contractor shall provide suitable access to each business and residence located along the route.

Any alternative sequence the Contractor feels would be more efficient and still provide access to the properties along the construction route must be submitted to the Engineer for review in writing at least two weeks prior to beginning construction. The submittals shall be in writing and include drawings showing the proposed traffic control layout and methods of providing access to the businesses and residents.

GENERAL MAINTENANCE OF TRAFFIC

Storage of vehicles and equipment shall be outside the clear zone and as near as possible to the right–o–way line. Contractor's employees should mobilize at a location off the right–of–way and arrive at the work sites in a minimum number of vehicles necessary to perform the work.

Indiscriminate driving and parking of vehicles within the right–of–way will not be permitted. Any damage to the vegetation, surfacing, embankment, delineators and existing signs resulting from such indiscriminate use shall be repaired and/or restored by the contractor, at no expense to the state, and to the satisfaction of the Engineer.

The bottom of signs on portable or temporary supports shall not be less than seven feet above the pavement in urban areas and one foot above the pavement in rural areas. Portable sign supports may be used as long as the duration is less than 3 days. If the duration is more than 3 days the signs shall be on fixed location, ground mounted, breakaway supports.

The Contractor shall provide documentation that all breakaway sign supports comply with FHWA NCHRP Report 350 or MASH crash–worthy requirements. The Contractor shall provide installation details at the preconstruction meeting for all breakaway sign support assemblies.

REGISTERED PROFESSIONAL ENGINEER
REG. NO. 8471
JEFFREY P. McCORMICK
SOUTH DAKOTA
4/2/14

G:\Files\CAD\land projects R2\13405 Spruce Street\13405-Spruce W&E DMK.dwg, C 2, 4/3/2014 8:26:39 AM, rpuerphe

TRAFFIC CONTROL- ESTIMATE OF QUANTITIES

Sign Label	Sign Number	Sign Size	Description	Amount Required	Units Per Amount	Subtotal	Total Quantity
1	W20–3	48" x 48"	ROAD CLOSED AHEAD	3	34	102	
2	R11–2	48" x 30"	ROAD CLOSED	5	28	140	
3	R11–4	60" x 30"	ROAD CLOSED TO THRU TRAFFIC	3	30	90	
4	W20–2	36" x 36"	DETOUR AHEAD	3	27	81	
5	M4–9L	30" x 24"	DETOUR W/ARROW	5	18	90	
6	M4–9R	30" x 24"	DETOUR W/ARROW	3	18	54	
7	M4–10	48" x 18"	DETOUR	1	22	22	
8	M4–8	24" x 12"	DETOUR	10	4	40	
9	M4–8A	24" x 18"	END DETOUR	2	7	14	
10	PLAQUE	30" x 12"	SPRUCE STREET	10	15	150	
11	W20–1	36" x 36"	ROAD WORK AHEAD	4	27	108	
12	M5–1L	21" x 15"	LEFT TURN ARRROW	2	5	10	
13	M5–1R	21" x 15"	RIGHT TURN ARROW	1	5	5	
14	M9–9	24" x 12"	SIDEWALK CLOSED	1	4	4	
15	PLAQUE	30" x 12"	ROWLEY STREET	9	15	135	2814
16	R11–4	60" x 30"	ROAD CLOSED TO THRU TRAFFIC	1	30	30	
17	R5–1	30" X 30"	DO NOT ENTER	1	24	24	
18	R3–1	24" x 24"	NO RIGHT TURN	1	16	16	
19	R3–2	24" x 24"	NO LEFT TURN	1	16	16	
20	R6–2R	18" x 24"	ONE WAY RIGHT	1	4	4	
21	R6–2L	18" x 24"	ONE WAY LEFT	3	4	12	
22	G20–50P	24" x 18"	WORK ZONE	3	7	21	
23	R2–1	24" x 30"	SPEED LIMIT (15)	3	18	54	
24	W8–17	36" x 36"	SHOULDER DROP–OFF	5	27	135	
25	W8–17P	24" x 18"	SHOULDER DROP–OFF	5	7	35	
26	R1–1	30" x 30"	STOP	1	24	24	
27	W20–7a	36" x 36"	FLAGGER	2	27	54	
	–––––	–––––	TYPE III BARRICADES DOUBLE–SIDED	24	7 UNITS/FT	1344	

All traffic control shall be installed in accordance with the latest edition of the Manual on Uniform Traffic Control Devices (MUTCD)

REGISTERED PROFESSIONAL ENGINEER
REG. NO. 8471
JEFFREY P. McCORMICK
SOUTH DAKOTA
4/2/14
4/2/05

G:\Files\CAD\land projects R2\13405 Spruce Street\13405-Spruce Cover Street-Details-9 12.dwg, C3, 4/3/2014 8:33:09 AM, rpurple

FOR BIDDING PURPOSES ONLY

REV 4-2-14 NAP

STATE OF SOUTH DAKOTA	PROJECT	SHEET NO.	TOTAL SHEETS
	P 3699(01)	C4	C8

Where barricades extend entirely across a roadway, the stripes should slope downward in the direction toward which the road users must turn. Where both right and left turns are provided, the stripes should slope downward in both directions from the center of the barricade or barricades. Where no turns are intended, the stripes should be positioned to slope downward toward the center of the barricade or barricades. Type III barricades will be 8' wide and double sided.

Cones, barrels, Type II barricades or fencing shall be used to block driveway entrances as needed during construction. Miscellaneous safety devices shall be incidental to the bid item for "Traffic Control, Miscellaneous."

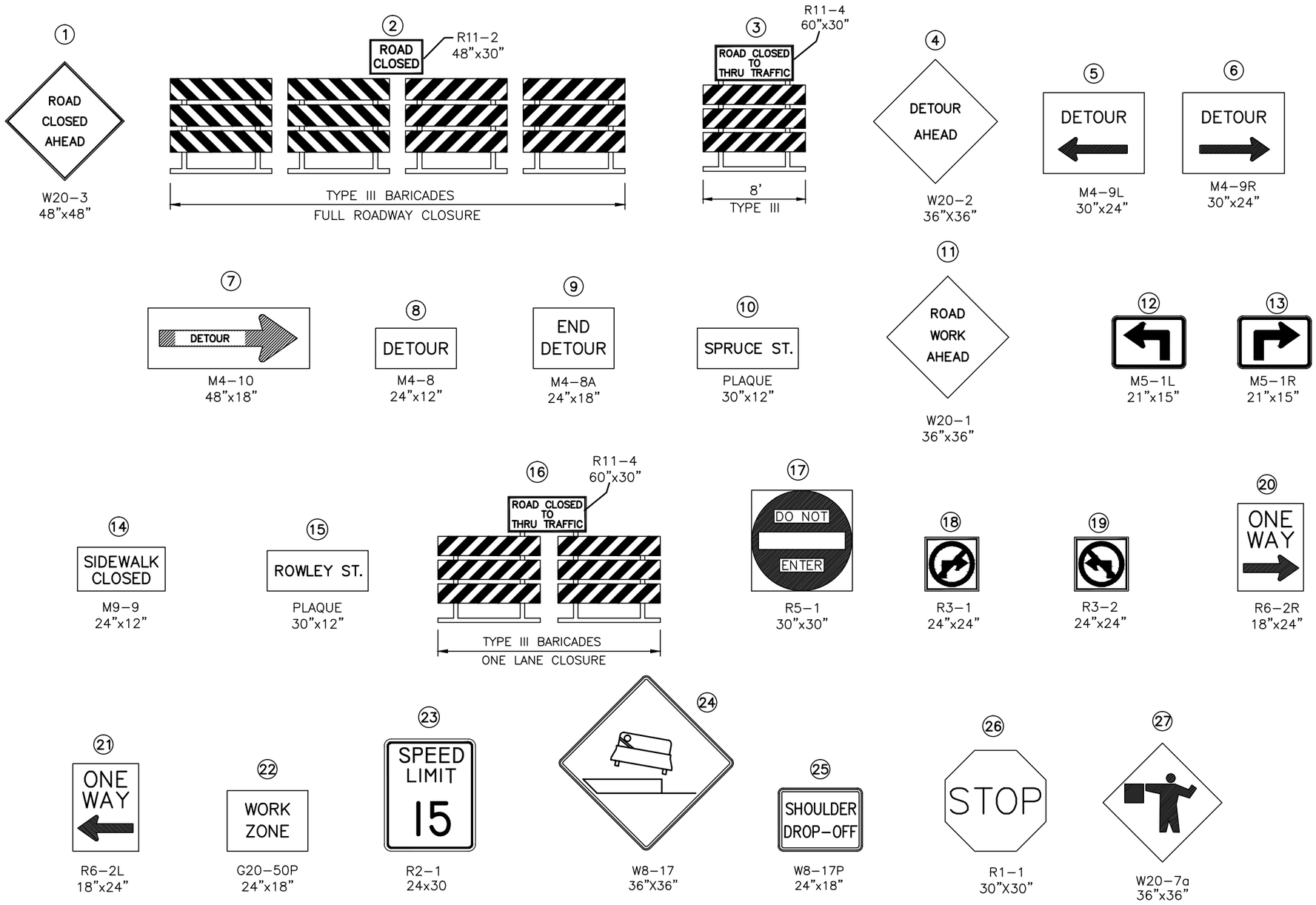

G:\Files\CAD\land projects R2\13405 Spruce Street\13405-Spruce Cover Street-Details 9 12.dwg, 4/2/2014 12:00:01 PM, DWG To PDF.pc3

FOR BIDDING PURPOSES ONLY

REV 4-2-14 NAP

STATE OF SOUTH DAKOTA	PROJECT	SHEET NO.	TOTAL SHEETS
	P 3699(01)	C5	C8

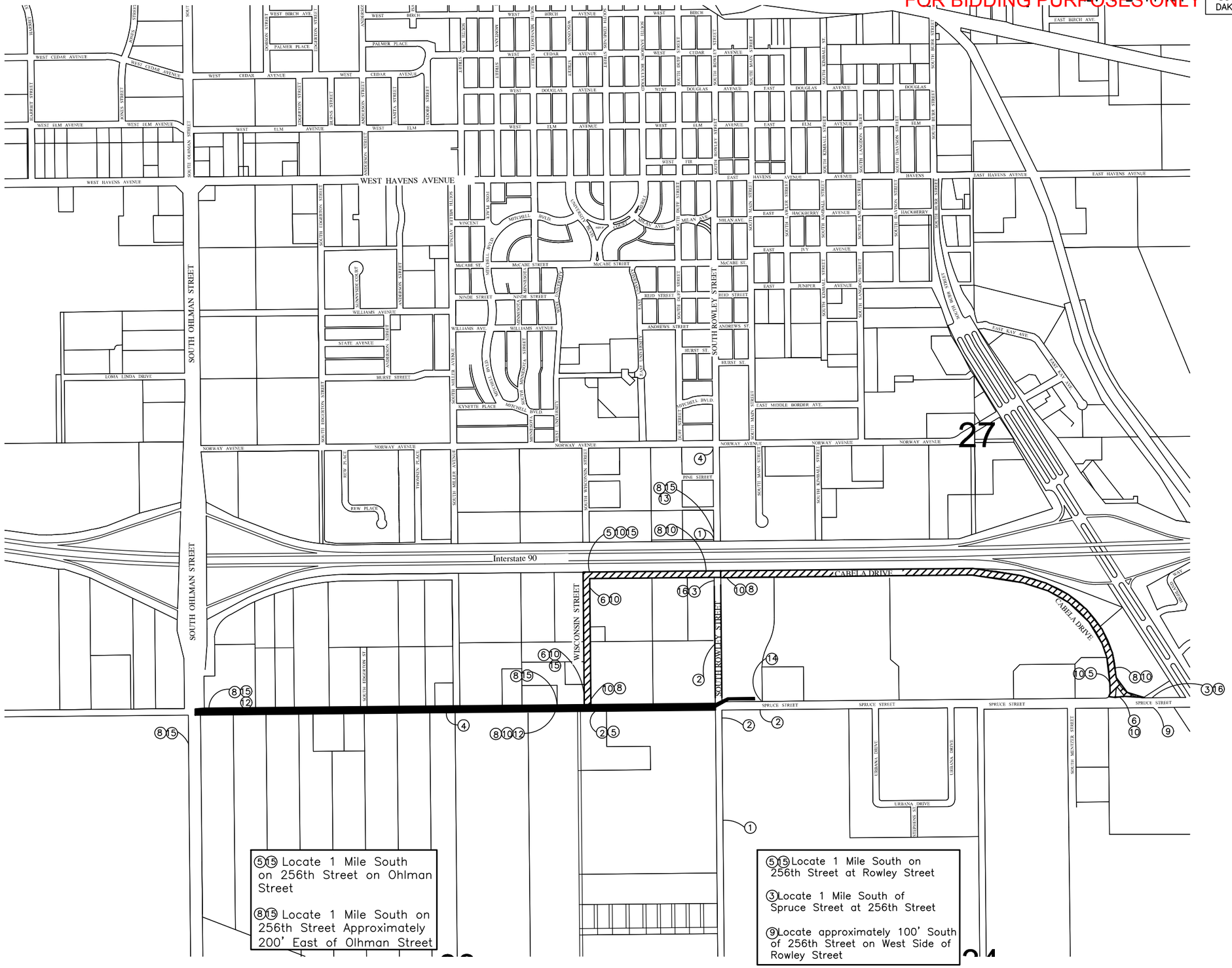

LEGEND

Project Detour

Project Location

PHASE 1

Intersection Closure
@ Spruce Street and Rowley Street

⑤⑮ Locate 1 Mile South on 256th Street on Ohlman Street

⑧⑮ Locate 1 Mile South on 256th Street Approximately 200' East of Olhman Street

⑤⑮ Locate 1 Mile South on 256th Street at Rowley Street

③ Locate 1 Mile South of Spruce Street at 256th Street

⑨ Locate approximately 100' South of 256th Street on West Side of Rowley Street

REGISTERED PROFESSIONAL ENGINEER
REG. NO. 8471
JEFFREY P. McCORMICK
SOUTH DAKOTA
4/2/14
#13405

G:\Files\CAD\land projects R2\13405 Spruce Street\13405-Spruce Utility Cover Street-Details.dwg, 4/2/2014 1:09:47 PM, DWG To PDF.pc3

REV 4-2-14 NAP

FOR BIDDING PURPOSES ONLY

STATE OF SOUTH DAKOTA	PROJECT	SHEET NO.	TOTAL SHEETS
	P 3699(01)	C6	C8

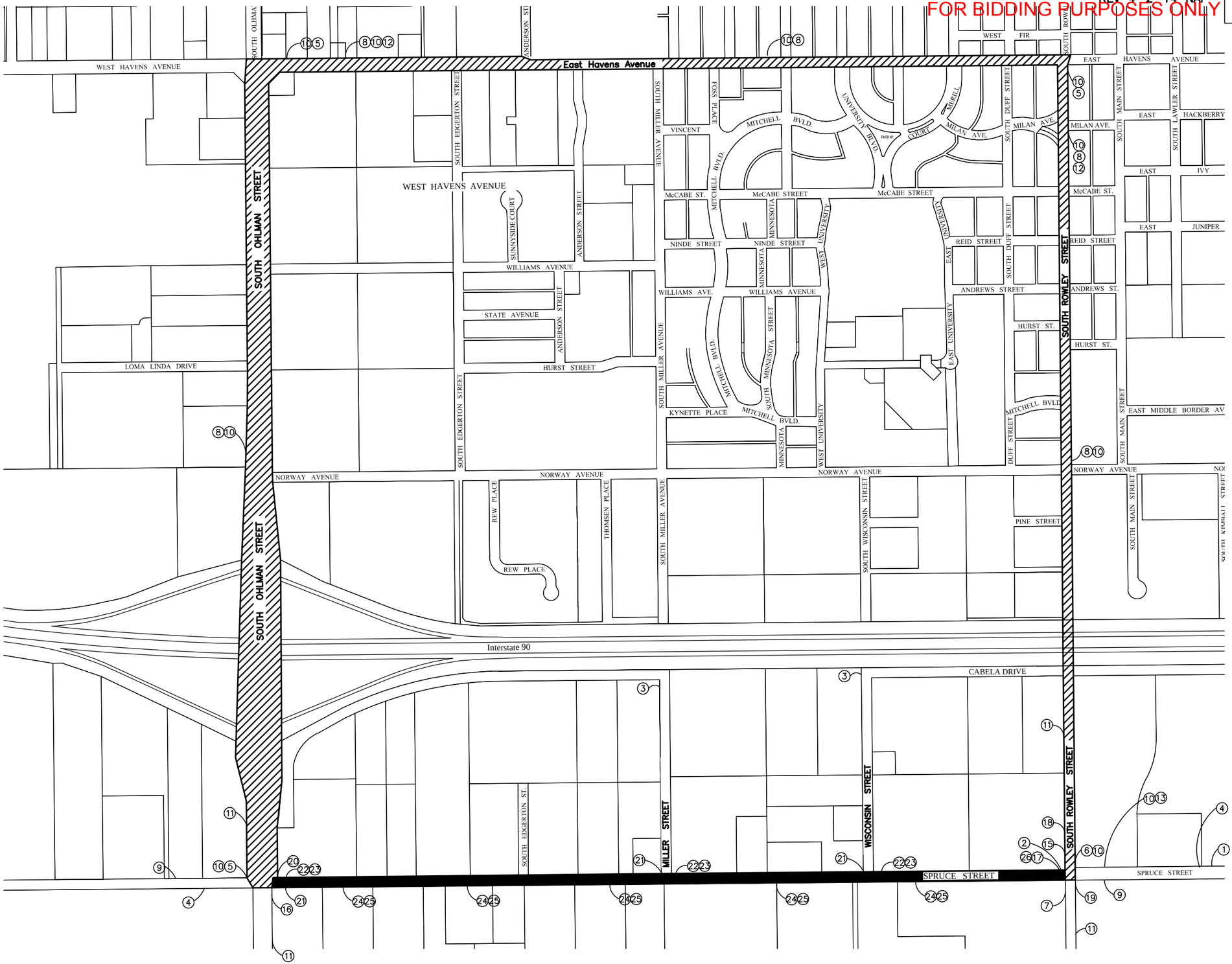

LEGEND

Project Detour

Project Location

PHASE 2 AND PHASE 3

Spruce Street One Lane Closure

To shift from Phase 2 to Phase 3 the Contractor shall relocate traffic signs and centerline delineators as approximate to direct traffic to the south side of the street. Signs that will need to be relocated include, but are not limited to:

- Centerline Delineators
- One Way
- Speed Limit
- Work Zone
- Stop

Signs that will be removed include: Shoulder Drop-Off Symbol and Sign

Centerline delineators shall be 42" stacker cones spaced at 10' intervals, Warning lights are to be attached to the delineators at intervals not greater than 100 feet.

REGISTERED PROFESSIONAL ENGINEER
REG. NO. 8471
JEFFREY P. McCORMICK
SOUTH DAKOTA
4/2/14

C:\Files\CAD\land projects R2\13405 Spruce Street\13405-Spruce Utility Cover Street-Details.dwg, C6, 4/3/2014 8:34:21 AM, rpapple

FOR BIDDING PURPOSES ONLY

REV 4-2-14 NAP

STATE OF SOUTH DAKOTA	PROJECT	SHEET NO.	TOTAL SHEETS
	P 3699(01)	C7	C8

Posted Speed Prior to Work (M.P.H.)	Spacing of Advance Warning Signs (Feet) (A)	Spacing of Channelizing Devices (Feet) (G)
0 - 30	200	25
35 - 40	350	25
45 - 50	500	50
55	750	50
60 - 65	1000	50

Flagger

Channelizing Device

For low-volume traffic situations with short work zones on straight roadways where the flagger is visible to road users approaching from both directions, a single flagger may be used.

The ROAD WORK AHEAD and the END ROAD WORK signs may be omitted for short duration operations (1 hour or less).

For tack and/or flush seal operations, when flaggers are not being used, the FRESH OIL sign (W21-2) shall be displayed in advance of the liquid asphalt areas.

Flashing warning lights and/or flags may be used to call attention to the advance warning signs.

The channelizing devices shall be drums or 42" cones.

Channelizing devices are not required along the centerline adjacent to work area when pilot cars are utilized for escorting traffic through the work area.

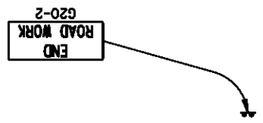

Channelizing devices and flaggers shall be used at intersecting roads to control intersecting road traffic as required.

The buffer space should be extended so that the two-way traffic taper is placed before a horizontal or vertical curve to provide adequate sight distance for the flagger and queue of stopped vehicles.

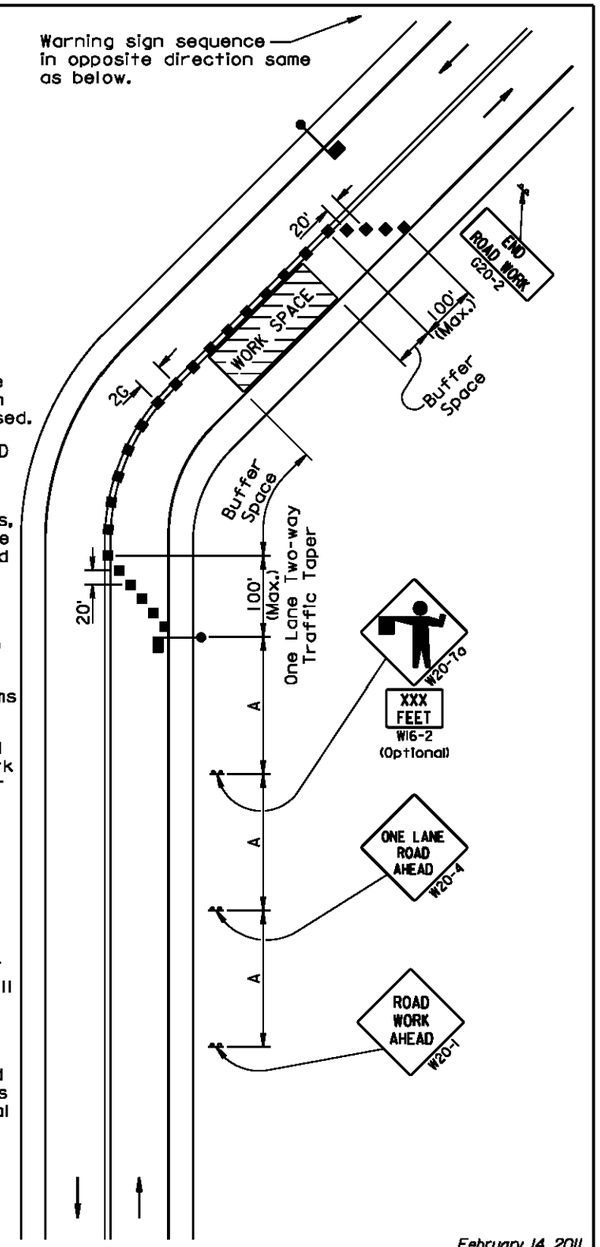

February 14, 2011

Published Date: 1st Qtr. 2014	SDDOT	GUIDES FOR TRAFFIC CONTROL DEVICES LANE CLOSURE WITH FLAGGER PROVIDED	PLATE NUMBER 634.23 Sheet 1 of 1

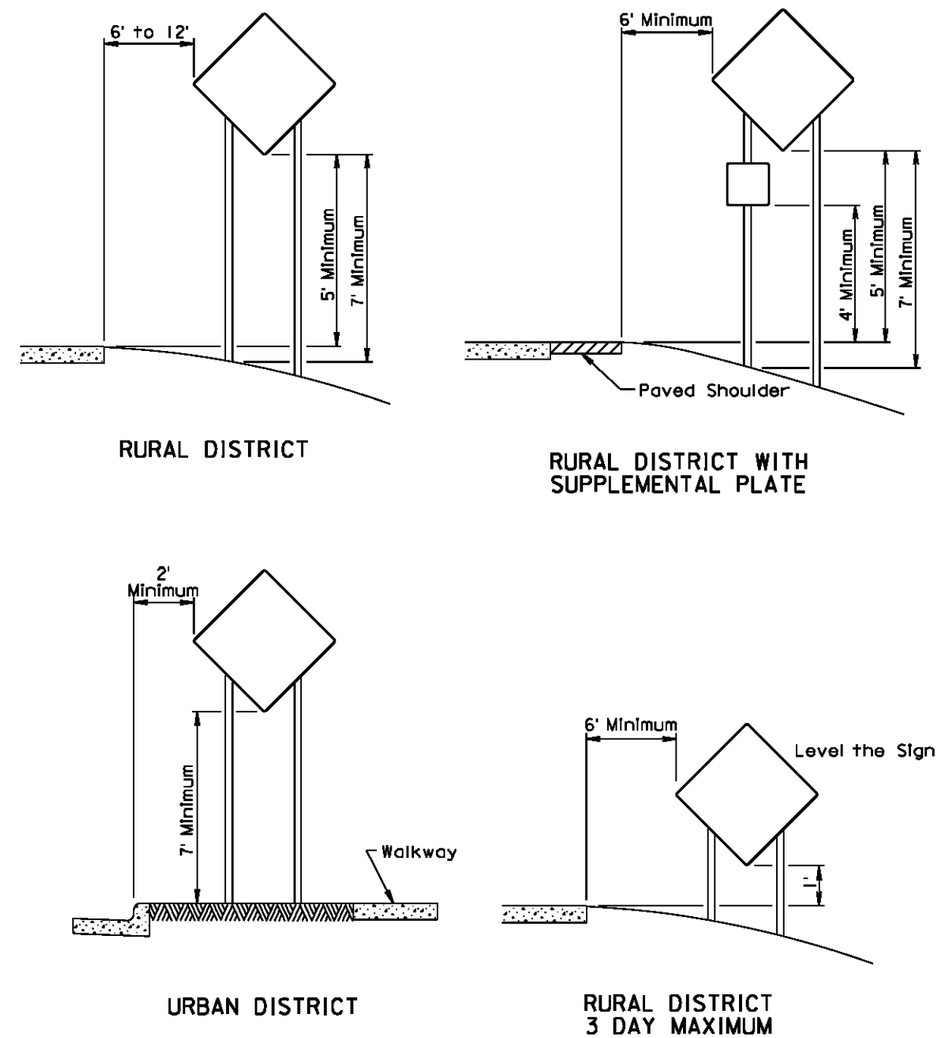

February 14, 2011

Published Date: 1st Qtr. 2014	SDDOT	CRASHWORTHY SIGN SUPPORTS (Typical Construction Signing)	PLATE NUMBER 634.85 Sheet 1 of 1

G:\Files\CAD\land projects R2\13405 Spruce Street\13405-Spruce Cover Street-Details 9 12.dwg, 4/2/2014 4:00:57 PM, DWG To PDF.pc3

FOR BIDDING PURPOSES ONLY

REV 4-2-14 NAP

STATE OF SOUTH DAKOTA	PROJECT	SHEET NO.	TOTAL SHEETS
	P 3699(01)	C8	C8

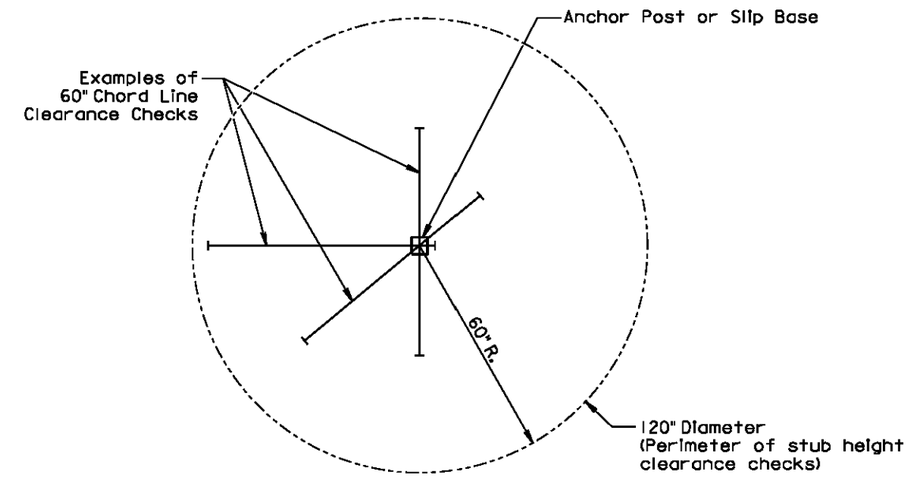

PLAN VIEW
(Examples of stub height clearance checks)

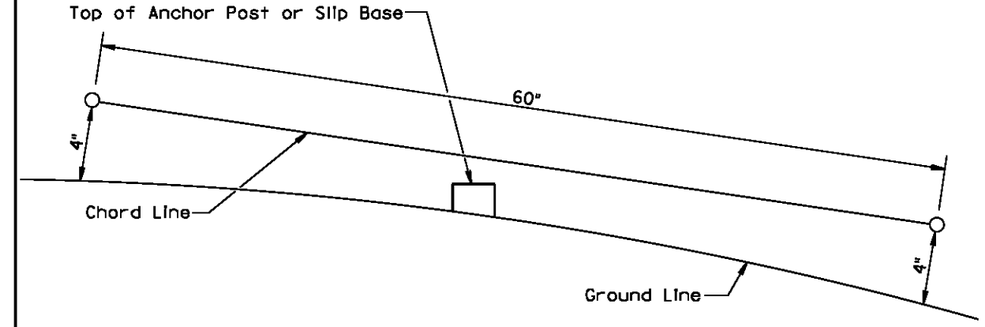

ELEVATION VIEW

GENERAL NOTES:

The top of anchor posts and slip bases SHALL NOT extend above a 60" chord line within a 120" diameter circle around the post with ends 4" above the ground.

At locations where there is curb and gutter adjacent to the breakaway sign support, the stub height shall be a maximum of 4" above the ground line at the localized area adjacent to the breakaway support stub.

The 4" stub height clearance is not necessary for U-channel lap splices where the support is designed to yield (bend) at the base.

July 1, 2005

Published Date: 1st Qtr. 2014	SDDOT	BREAKAWAY SUPPORT STUB CLEARANCE	PLATE NUMBER 634.99
			Sheet 1 of 1

G:\Files\CAD\land projects R2\13405 Spruce Street\13405-Spruce Cover Street-Details 9 12.dwg, 4/2/2014 4:00:58 PM, DWG To PDF.pc3