SECTION F: SURFACING PLANS

FOR BIDDING PURPOSES ONLY

STATE OF SOUTH DAKOTA	PROJECT	SHEET	TOTAL SHEETS
	IM 0293(96)73 & IM 2292(90)0	F1	F98

Plotting Date: 10/23/2015

Revised: 22 OCT 15, RML

INDEX OF SHEETS

F1	General Layout with Index
F2 thru F12	Estimate of Quantities, Notes, Rates and Tables
F13 thru F33	Typical Surfacing Sections
F34 thru F48	PCC Pavement Joint Layouts
F49 thru F62	Pavement Slope Layouts
F63 thru F67	Sleeper Slab Details
F68 thru F72	Surfacing Details at Tea Interchange
F73 thru F74	Guardrail and Additional Surfacing Details
F75 thru F79	Ramp Detour Layouts
F80	Details for Membrane Sealant Expansion Joint
F81 thru F98	Standard Plates

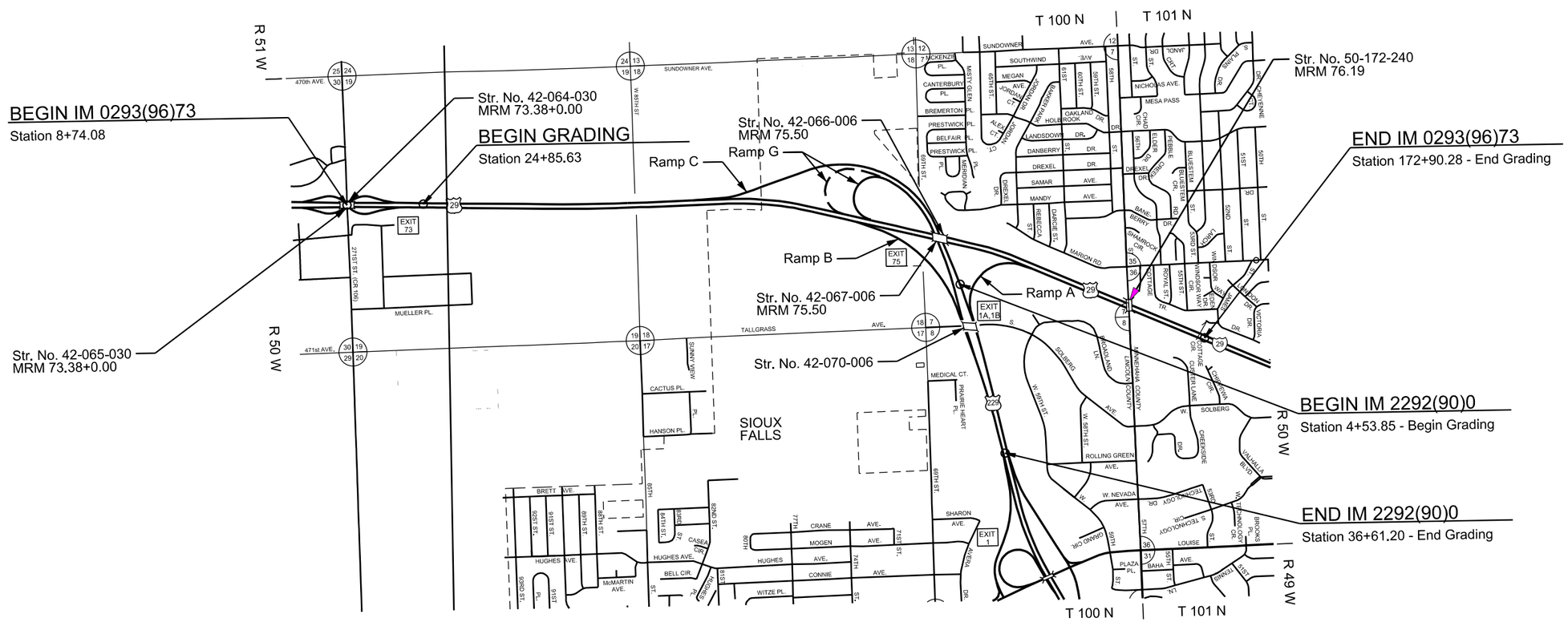

PLOT SCALE - 1:7920.02

PLOT NAME - 1

FILE - ...\PROJLINC01OS\TITLE F 01OS.DGN

PLOTTED FROM - TRPR16032

FOR BIDDING PURPOSES ONLY

Revised: 22 Oct 15, RML

SECTION F ESTIMATE OF QUANTITIES – PCN 01QS

BID ITEM NUMBER	ITEM	QUANTITY	UNIT
110E1020	Remove Asphalt Concrete Pavement	4,499.6	CuYd
110E1640	Remove Granular Material	3,240.9	CuYd
120E6200	Water for Granular Material	1,413.3	MGal
120E9000	Pit Run	7,978.0	Ton
260E1010	Base Course	2,497.2	Ton
260E1030	Base Course, Salvaged	14,432.8	Ton
260E2010	Gravel Cushion	13,718.9	Ton
260E2030	Gravel Cushion, Salvaged	79,288.3	Ton
320E0007	PG 64-28 Asphalt Binder	496.1	Ton
320E1060	Class G Asphalt Concrete	8,783.0	Ton
320E3000	Compaction Sample	3	Each
320E4000	Hydrated Lime	86.7	Ton
330E0010	MC-70 Asphalt for Prime	0.6	Ton
330E0100	SS-1h or CSS-1h Asphalt for Tack	10.4	Ton
330E0210	SS-1h or CSS-1h Asphalt for Flush Seal	3.6	Ton
330E2000	Sand for Flush Seal	65.8	Ton
380E0120	11.5" Nonreinforced PCC Pavement	1,000.0	SqYd
380E0130	12" Nonreinforced PCC Pavement	36,213.6	SqYd
380E0150	13" Nonreinforced PCC Pavement	101,177.2	SqYd
380E0560	11" Continuously Reinforced PCC Pavement	72.0	SqYd
380E0800	PCC Shoulder Pavement	56,500.8	SqYd
380E6000	Dowel Bar	58,409	Each
380E6110	Insert Steel Bar in PCC Pavement	2,258	Each
410E2600	Membrane Sealant Expansion Joint	493.2	Ft
680E0100	Cutoff Drain	2	Each
831E0210	Non-woven Geotextile Separator	3,459	SqYd

SECTION F ESTIMATE OF QUANTITIES – PCN 020Q

BID ITEM NUMBER	ITEM	QUANTITY	UNIT
110E1020	Remove Asphalt Concrete Pavement	984.2	CuYd
120E6200	Water for Granular Material	218.5	MGal
260E1010	Base Course	3,014.2	Ton
260E1030	Base Course, Salvaged	240.6	Ton
260E2010	Gravel Cushion	2,205.4	Ton
260E2030	Gravel Cushion, Salvaged	12,745.9	Ton
320E0007	PG 64-28 Asphalt Binder	106.6	Ton
320E1060	Class G Asphalt Concrete	1,886.4	Ton
320E3000	Compaction Sample	3	Each
320E4000	Hydrated Lime	18.6	Ton
330E0010	MC-70 Asphalt for Prime	0.5	Ton
330E0100	SS-1h or CSS-1h Asphalt for Tack	2.3	Ton
330E0210	SS-1h or CSS-1h Asphalt for Flush Seal	1.0	Ton
330E2000	Sand for Flush Seal	17.5	Ton
380E0130	12" Nonreinforced PCC Pavement	25,594.9	SqYd
380E0800	PCC Shoulder Pavement	8,853.3	SqYd
380E6000	Dowel Bar	11,227	Each
380E6110	Insert Steel Bar in PCC Pavement	72	Each

SURFACING THICKNESS DIMENSIONS

Plans tonnage will be applied even though the thickness may vary from that shown on the plans.

At those locations where material must be placed to achieve a required elevation, plans tonnage may be varied to achieve the required elevation.

SAWING IN EXISTING SURFACING

Where new asphalt concrete or new PCC Pavement is placed adjacent to existing asphalt concrete or existing PCC Pavement (end of project, end of ramps, ramp detours, crossovers), the existing pavement shall be sawed full depth to a true, straight vertical face. No separate payment shall be made for sawing.

DETOURS

Detours required to construct the Phase 1 has been previously constructed during another project.

EXISTING NONREINFORCED P.C.C. PAVEMENT

The existing mainline I-229 SB and Ramp A, C & G pavement is 9.5" Nonreinforced P.C.C. Pavement. The course aggregate in the existing P.C.C. Pavement consist of Crushed Ledge Rock for I-229 SB and ramps A, C and G with 15' joint spacing.

The existing mainline I-29 NB, I-29 SB, I-229 NB and Ramp D pavement is 9" reinforced with welded wire fabric. The welded wire fabric weighs not less than 60 pounds per 100 square feet, the longitudinal wires are No. 1 gauge and spaced 6" center to center and the transverse wires are No. 4 gauge and are spaced 12" center to center. The aggregate in the existing PCC Pavement is quartzite with approximately 61.5' joint spacing.

Longitudinal joints are reinforced with No. 5 deformed bars longitudinal, spaced 30" to 48" center to center and transverse joints are reinforced with 1 ¼" plain round bars and No. 9 deformed tie bars, spaced 12" center to center.

UNCLASSIFIED EXCAVATION

Unclassified Excavation quantity shall be as noted in the following table. Unclassified Excavation will not be measured for payment and the basis of payment will be plans quantity. Unclassified Excavation is salvaged asphalt mix and granular base material and removal of waste material, see typical sections.

The Unclassified Excavation waste material may be used as Contractor Furnished Borrow Excavation for inslope flattening and widening. Stockpiling of material will be at the direction of the Engineer. The Contractor will ensure no asphalt concrete material will be used for inslope flattening and widening.

FOR BIDDING PURPOSES ONLY

TABLE OF UNCLASSIFIED EXCAVATION (For informational purposes only, see Section B)

Station				Station				Salvage and Stockpile Asphalt Mix and Granular Base Material cuyds	Salvage and Stockpile Asphalt Mix and Granular Base Material tons	Salvage and Stockpile Granular Base Material cuyds	Salvage and Stockpile Granular Base Material tons	Unclassified Excavation (Waste Material) cuyds
							PHASE 1					
43	+	50.00	to	117	+	50.50	I-29 SBL	12076.5	22824.6			1307.4
121	+	56.50	to	172	+	95.00	I-29 SBL	8385.3	15848.2			907.8
151	+	56.30	to	181	+	05.20	I-229 NBL, north 1/2	2351.5	4444.3			261.0
71	+	87.00	to	101	+	23.82	I-229 SBL, north 1/2	708.1	1338.3			187.1
22	+	69.00	to	28	+	50.00	Ramp B, north 1/2	344.3	650.7			46.3
28	+	50.00	to	44	+	00.00	Ramp B	1837.0	3471.9			229.6
13	+	00.00	to	42	+	00.00	Ramp C	1616.5	3055.2			366.3
4	+	93.00	to	16	+	00.00	Ramp G	718.7	1358.3			142.3
16	+	00.00	to	51	+	70.00	Ramp G	2163.2	4088.4			415.2
							Phase 3					
43	+	50.00	to	113	+	59.60	I-29 NBL	6887.6	13017.6			841.2
113	+	59.60	to	118	+	12.50	I-29 NBL	739.1	1396.9			80.0
122	+	18.50	to	128	+	05.20	I-29 NBL	957.4	1809.5			103.7
128	+	05.00	to	172	+	95.00	I-29 NBL	4411.8	8338.3			538.8
151	+	56.30	to	181	+	05.20	I-229 NBL, south 1/2	2351.5	4444.3			261.0
71	+	87.00	to	101	+	23.82	I-229 SBL, south 1/2	708.1	1338.3			187.1
12	+	40.00	to	25	+	30.30	Ramp A	895.1	1691.7			169.7
22	+	69.00	to	28	+	50.00	Ramp B, south 1/2	344.3	650.7			46.3
64	+	00.00	to	71	+	87.00	Ramp C	438.7	829.1			99.4
							*** Tea Interchange**					
47	+	74.00	to	48	+	74.00	I-29 SBL	99.7	188.4			17.0
51	+	26.00	to	52	+	26.00	I-29 SBL	89.6	169.3			17.0
47	+	74.00	to	48	+	74.00	I-29 NBL	99.7	188.4			17.0
51	+	26.00	to	52	+	26.00	I-29 NBL	89.6	169.3			17.0
							PHASE 1 Traffic Control					
41	+	08.60	to	113	+	59.60	I-29 NBL Sh. Widening	15276.7	28873.0			
113	+	59.60	to	128	+	40.70	I-29 NBL Diversion	3886.6	7345.7			
128	+	40.70	to	177	+	62.70	I-29 NBL Sh. Widening	10369.8	19599.0			
Ramp C to I-29 NB Detour, Sta. 75+00 I-29								1610.6	3044.0	949.9	1795.3	
Ramp G to I-29 NB Detour, Sta. 105+00 I-29								1374.8	2598.4	799.2	1510.4	
Ramp C to Ramp G Detour, Sta. 38+00 Ramp C								1023.4	1934.2			
Ramp C to Ramp G Detour, Sta. 63+00 Ramp C								759.8	1436.0			
							*** PHASE 3 Traffic Control**					
43	+	50.00	to	79	+	10.00	I-29 SBL Sh. Widening	2784.7	5263.1			
80	+	38.00	to	105	+	34.00	I-29 SBL Sh. Widening	3851.0	7278.3			
113	+	33.00	to	117	+	71.00	I-29 SBL Sh. Widening	342.6	647.5			
120	+	93.00	to	172	+	95.00	I-29 SBL Sh. Widening	4069.2	7690.7			
I-29 SB to Ramp B Detour, Sta. 105+00 I-29								539.4	1019.5			
Ramp G to Ramp C Detour, Sta. 54+00 Ramp C								750.2	1417.9			
Ramp A to I29 SB Detour, Sta. 140+00 I-29								887.2	1676.9			
							TOTAL =	95839.3	181135.9	1749.1	3305.7	6258.2

For informational purposes only, total Unclassified Excavation equals 103,846.6 cu.yds (see Section B). This quantity is based on a unit weight of 1.89 tons per cubic yard for the asphalt and granular aggregate. Refer to typical sections for location and depth of material to be salvaged.

* Material will be removed near the completion of the project.

REMOVE ASPHALT CONCRETE PAVEMENT OVERLAY

Station				Station				* Remove Asphalt Concrete Pavement cuyds	tons
							PHASE 1		
43	+	50.00	to	117	+	50.50	I-29 SBL	1186.8	2243.1
121	+	56.50	to	172	+	95.00	I-29 SBL	824.1	1557.5
151	+	56.30	to	176	+	22.00	I-229 NBL, north 1/2	243.8	460.8
71	+	87.00	to	96	+	98.00	I-229 SBL, north 1/2	248.3	469.3
22	+	69.00	to	28	+	50.00	Ramp B, north 1/2	42.4	80.1
28	+	50.00	to	44	+	00.00	Ramp B	226.2	427.5
							Phase 3		
43	+	50.00	to	113	+	59.60	I-29 NBL	1124.1	2124.5
113	+	59.60	to	118	+	12.50	I-29 NBL	72.6	137.2
122	+	18.50	to	128	+	05.20	I-29 NBL	94.1	177.8
128	+	05.00	to	172	+	95.00	I-29 NBL	720.1	1361.0
151	+	56.30	to	176	+	22.00	I-229 NBL, south 1/2	243.8	460.8
71	+	87.00	to	96	+	98.00	I-229 SBL, south 1/2	248.3	469.3
12	+	40.00	to	25	+	30.30	Ramp A	166.8	315.3
22	+	69.00	to	28	+	50.00	Ramp B, south 1/2	42.4	80.1
							TOTAL =	5483.8	10364.3

* Plans quantity will be the basis of measurement and payment for the above mentioned work. This quantity is based on a unit weight of 1.89 tons per cubic yard for the reclaimed asphalt concrete aggregate. Refer to typical sections for location and depth of Remove Asphalt Concrete Pavement.

The Los Angeles Abrasion Loss value on the aggregate used for the in place asphalt concrete was 19 percent. These values were obtained from testing during construction of the in place asphalt concrete.

The removed asphalt concrete material will become the property of the Contractor for disposal.

All cost to remove, haul, and dispose of the asphalt concrete material shall be incidental to the contract unit price per cubic yard for Remove Asphalt Concrete Pavement.

REMOVE GRANULAR MATERIAL

Location	* Remove Granular Material cuyds	tons
PHASE 1 Traffic Control		
Ramp C to Ramp G Detour, Sta. 38+00 Ramp C	439.9	831.4
Ramp C to Ramp G Detour, Sta. 63+00 Ramp C	190.3	359.6
PHASE 3 Traffic Control		
I-29 SB to Ramp B Detour, Sta. 105+00 I-29	651.2	1230.8
Ramp G to Ramp C Detour, Sta. 54+00 Ramp C	896.2	1693.8
Ramp A to I29 SB Detour, Sta. 140+00 I-29	1063.3	2009.6
TOTAL =	3240.9	6125.2

* Plans quantity will be the basis of measurement and payment for the above mentioned work. The material being removed is Pit Run, refer to the typical sections for location of material. This quantity is based on a unit weight of 1.89 tons per cubic yard for the reclaimed granular aggregate.

The removed Pit Run will become the property of the Contractor for disposal when no longer needed.

All cost to remove, haul and dispose of the Pit Run shall be incidental to the contract unit price per cubic yard for Remove Granular Material.

SALVAGED MATERIAL

Salvaged Asphalt Mix and Granular Base Material removed from within the project limits will be reused as Base Course, Salvage or Gravel Cushion, Salvage.

Salvaged material to be used as Base Course, Salvage or Gravel Cushion, Salvage on this project must meet plan note requirements and the Engineer's approval.

GRAVEL CUSHION, SALVAGED

Gravel Cushion, Salvaged shall be obtained from the stockpile site(s) provided by the Contractor from the material salvaged on this project and may be used without further quality testing.

All other requirements for Gravel Cushion, Salvaged shall apply.

BASE COURSE, SALVAGED

The Base Course, Salvaged shall be obtained from the stockpile site(s) provided by the Contractor from the material salvaged on this project and may be used without further quality testing.

All other requirements for Base Course, Salvaged shall apply.

CLASS G ASPHALT CONCRETE

Mineral Aggregate for Class G Asphalt Concrete shall conform to the requirements for Class G, Type 1.

All other requirements for Class G Asphalt Concrete shall apply.

TRIM MATERIAL

Material removed during the trimming operation may be hauled ahead to be placed on the grade, or hauled from the roadbed. Material hauled from the roadbed may be placed on shoulders after completion of the Nonreinforced Concrete Pavement. No additional payment will be made for handling, stockpiling, processing, or placement of trim material. Water added by road mix or plant mix methods will be paid at the contract unit price per MGal for Water for Granular Material.

CUTOFF DRAIN

The Contractor will install 2 cutoff drains per the Sleeper Slab Underdrain detail sheets. The Contractor will ensure proper drainage to all transverse culverts.

Cost for this work shall be incidental to the contract unit price per each for CUTOFF DRAIN.

PIT RUN MATERIAL

Minimum compaction testing requirements will be one test per crossover location.

Pit Run will be paid for at the contract unit price per ton. Payment will be full compensation for furnishing and placing materials, labor, equipment, test strips (if required), and all incidentals required.

An estimated 3,305.7 tons of salvaged and stockpiled granular material will be reused as Pit Run (see typical sections and Section B). The quantity of salvaged granular material may vary from the plans. The Contractor will be required to use all the salvaged granular material on this project by decreasing or increasing the quantity of virgin Pit Run as necessary, or as directed by the Engineer.

Non-woven Geotextile Separator has been included in the Estimate of Quantities. This fabric is to be used as a separator between the Pit Run and the Base Course, Salvaged to prevent migration of fines from the Base Course, Salvaged into the Pit Run. If the Pit Run Material contains enough fines as placed to prevent the loss of material from the Base Course, Salvaged, the separator fabric may be eliminated by CCO. Non-woven Geotextile Separator shall conform to Section 831 of the Specifications.

Table of Non-woven Geotextile Separator

Detour Location	Non-woven Geotextile Separator Sq. Yds.
I-29 SB to Ramp B, Sta. 105+00 I-29	922.9
Ramp G to Ramp C, Sta. 54+00 Ramp C	1,016.8
Ramp A to I-29 SB, Sta. 140+00 I-29	1,519.6
TOTAL	3,459.3

ALKALI SILICA REACTIVITY

Fine aggregate shall conform to Section 800.2.D, Alkali Silica Reactivity (ASR) Requirements, of the Specifications.

The Department will use the running average of the last three known expansion test results or less for determining acceptability of source and the required type of cement. These expansion results are reported in the preceding table. Additional testing, when requested by the Contractor, will be performed by the Department at the Contractor's expense.

The following is a list of known fine aggregate sources and the average corresponding 14 day expansion values:

The values listed in the table are intended for use in bidding. If a previously tested pit by SDDOT with acceptable test values (less than 0.250) is discovered after letting and Type V cement is required (values greater than 0.250), the Department will accept financial responsibility for the change from Type II to Type V cement.

Type II or Type V cement will not change the requirement for the fly ash. The cost for either type of cement shall be subsidiary to the contract item.

TABLE OF KNOWN FINE AGGREGATE SOURCES

Source	Location	Expansion Value
Bachman	Winner, SD	0.335*
Birdsall S&G	Creston, SD	0.158
Birdsall S&G	Oral, SD	0.131
Birdsall S&G	Wasta, SD	0.170
Bitterman	Delmont, SD	0.314*
Concrete Materials	Corson, SD	0.170
Croell	Quinn, SD	0.089
Emme Sand & Gravel	Oneil, NE	0.217
Fischer S&G	Rapid City, SD	0.092
Fischer S&G	Spearfish, SD	0.053
Fuchs	Pickstown, SD	0.275*
Higman	Akron, IA	0.198
Higman	Hudson, SD	0.187
Hilde	Madison, SD	0.116
Jensen	Herried, SD	0.276*
L.G. Everist	Brookings, SD	0.186
L.G. Everist	Hawarden, IA	0.166
L.G. Everist	Summit, SD	0.141
Morris	Blunt, SD	0.192
Morris – Richards pit	Onida, SD	0.188
Myrl & Roys Paving-Nelson Pit	Sioux Falls, SD	0.156
Northern Concrete Agg.	Rauville, SD	0.113
Northern Concrete Agg.	Luverne, MN	0.124
Opperman - Gunvordahl Pit	Burke, SD	0.337*
Opperman - Cahoy Pit	Herrick, SD	0.307*
Opperman - Jones Pit	Burke, SD	0.321*
Opperman – Randall Pit	Pickstown, SD	0.239
Thorpe Pit	Britton, SD	0.098
Wagner Building Supplies	Wagner, SD	0.241
Wasta Sand & Gravel	Wasta, SD	0.159

* These sources will require Type V cement in the concrete mix design and Class F (Modified) fly ash as specified.

13", 12", 11.5" MAINLINE, 8" SHOULDER NONREINFORCED CONCRETE PAVEMENT and 11" CONTINUOUSLY REINFORCED PCC PAVEMENT

The fine aggregate shall be screened over a 1 inch square opening screen just prior to introduction into the concrete paving mix. The Contractor will screen all of the aggregate to prevent the incorporation of foreign materials (ie: mud balls) into the concrete mix.

The transverse contraction joints shall be perpendicular to the centerline as detailed in the standard plate for PCC Pavement Dowel Bar Assembly for Transverse Contraction Joints and special detail PCC Pavement Transverse Contraction Joint Spacing. In multilane areas the transverse contraction joints shall be perpendicular to the centerline and be in a straight line across the width of the pavement. In special situations the Engineer may pre-approve transverse contraction joints that do not meet these requirements. All nonconforming transverse contraction joints shall be removed at the Contractor's expense. Any method of placement that cannot produce these requirements shall not be allowed to continue.

There will be no direct payment for trimming of the Gravel Cushion or Gravel Cushion, Salvaged. The trimming will be considered incidental to the related items required for PCC Pavement. Trimming shall be performed as required by Section 380.3 C. of the Specifications.

Automatic dowel bar inserters will not be allowed on this project.

A construction joint will be sawed whenever new concrete pavement is placed adjacent to existing concrete pavement.

Concrete used in Portland cement concrete pavement shall conform to the Special Provision for Contractor Furnished Mix Design for PCC Pavement.

The following locations shall be tested for smoothness in accordance with the Special Provision for IRI PCC Pavement Smoothness:

I 29 - Sta. 43+50 to Sta. 172+90.3 NB/SB All Driving Lanes
I 229 - Sta. 149+69.4 to Sta. 181+05.2 NB All Driving Lanes
I 229 - Sta. 73+57.4 to Sta. 101+23.9 SB All Driving Lanes

Sta. 11+79.9 to Sta. 26+16.1 Ramp A
Sta. 22+07.7 to Sta. 41+38.4 Ramp B
Sta. 12+80.7 to Sta. 42+00.0 Ramp C
Sta. 64+00.0 to Sta. 73+57.4 Ramp C
Sta. 10+80.3 to Sta. 49+69.4 Ramp G

The concrete shall be placed with equipment operating from a preset grade line.

In addition to traditional field inspection of reinforcement, a Ground Penetrating Radar (GPR) unit may be used to verify reinforcement locations in the hardened concrete. The GPR may be used any time prior to the Acceptance of Field Work being issued. All costs related to corrective measures, including but not limited to concrete removal or cutting of reinforcement, price deducts, and delays to the project schedule shall be the responsibility of the Contractor.

11" CONTINUOUSLY REINFORCED PCC PAVEMENT

LOCATION	11" CONTINUOUSLY REINFORCED PCC PAVEMENT SQ.YDS.
I-29 Mainline	
Sta. 43+46 to Sta. 43+55 SBL	36.0
Sta. 43+46 to Sta. 43+55 NBL	36.0
TOTAL	72.0

13" NONREINFORCED PCC PAVEMENT

LOCATION	13" NONREINFORCED PCC PAVEMENT SQ.YDS.
I-29 SB Mainline	
Sta. 43+50.0 to Sta. 76+34.2 SB	13,116.8
Sta. 76+34.2 to Sta. 80+38.1 SB, includes Ramp C gore area	2,803.8
Sta. 80+38.1 to Sta. 106+33.8 SB	6,921.9
Sta. 106+33.8 to Sta. 114+96.6 SB, Include Ramp G gore area	5,661.5
Sta. 114+93.6 to Sta. 117+65.0 SB	1,085.6
Sta. 121+37.5 to Sta. 172+90.3 SB	20,611.2
I-29 NB Mainline	
Sta. 43+50.0 to Sta. 95+21.3 NB	20,665.2
Sta. 95+21.3 to Sta. 108+79.1 NB, includes Ramp B gore area	8,491.5
Sta. 108+79.1 to Sta. 118+26.2 NB	2,525.6
Sta. 122+03.4 to Sta. 135+88.8 NB	3,694.4
Sta. 135+88.8 to Sta. 138+95.0 NB, Include Ramp A gore area	2,018.5
Sta. 138+95.0 to Sta. 172+90.3 NB	13,581.2
TOTAL	101,177.2

12" NONREINFORCED PCC PAVEMENT

LOCATION	12" NONREINFORCED PCC PAVEMENT SQ.YDS.
I-29 Ramps	
Sta. 11+91.2 to Sta. 26+16.1 Ramp A	3,958.1
Sta. 22+07.7 to Sta. 41+63.8 Ramp B	6,085.6
Sta. 12+80.7 to Sta. 42+00.0 Ramp C	11,436.6
Sta. 64+00.0 to Sta. 73+57.4 Ramp C	4,042.4
Sta. 10+80.3 to Sta. 49+00.0 Ramp G	10,575.3
I-29 Mainline	
Sleeper Slab at Sta. 43+55 SBL	57.8
Sleeper Slab at Sta. 43+55 NBL	57.8
I-229 SB Mainline	
Sta. 73+57.3 to Sta. 76+77.0 SB, Include Ramp A/C gore area	2,157.5
Sta. 76+77.0 to Sta. 97+13.9 SB	8,147.6
Sta. 97+13.9 to Sta. 101+23.8 SB	2,186.1
I-229 NB Mainline	
Sta. 149+00.0 to Sta. 152+77.3 NB, includes Ramp B/G gore area	1,792.1
Sta. 152+77.3 to Sta. 181+05.2 NB	11,311.6
TOTAL	61,808.5

11.5" NONREINFORCED PCC PAVEMENT

LOCATION	11.5" NONREINFORCED PCC PAVEMENT SQ.YDS.
I-29 Tea Interchange Mainline	
Sta. 47+84 to Sta. 48+74 SB	260.0
Sta. 51+26 to Sta. 52+16 SB	240.0
Sta. 47+84 to Sta. 48+74 NB	260.0
Sta. 51+26 to Sta. 52+16 NB	240.0
TOTAL	1,000.0

FOR BIDDING PURPOSES ONLY

8" PCC SHOULDER PAVEMENT	
LOCATION	8" PCC SHOULDER PAVEMENT SQ.YDS.
I-29 Shoulders	
Sta. 24+85.6 to Sta. 76+34.2 I-29 SB Outside Shoulder	5,720.7
Sta. 80+38.1 to Sta. 106+33.8 I-29 SB Outside Shoulder	2,884.1
Sta. 108+53.6 to Sta. 117+65.0 I-29 SB Outside Shoulder	1,012.7
Sta. 121+37.5 to Sta. 155+95.2 I-29 SB Outside Shoulder	3,841.9
Sta. 155+95.2 to Sta. 157+75.2 I-29 SB Outside Shoulder	520.0
Sta. 157+75.2 to Sta. 172+90.3 I-29 SB Outside Shoulder	1,683.4
Sta. 43+50.0 to Sta. 117+65.0 I-29 SB Median Shoulder	8,195.5
Sta. 121+37.5 to Sta. 169+04.5 I-29 SB Median Shoulder	5,296.7
Sta. 43+50.0 to Sta. 105+75.6 I-29 NB Outside Shoulder	6,917.3
Sta. 108+79.1 to Sta. 118+26.2 I-29 NB Outside Shoulder	1,052.3
Sta. 122+03.4 to Sta. 135+88.8 I-29 NB Outside Shoulder	1,539.3
Sta. 138+95.0 to Sta. 157+06.3 I-29 NB Outside Shoulder	2,012.6
Sta. 157+06.3 to Sta. 158+96.1 I-29 NB Outside Shoulder	548.3
Sta. 158+96.1 to Sta. 172+90.3 I-29 NB Outside Shoulder	1,549.1
Sta. 43+50.0 to Sta. 118+26.2 I-29 NB Median Shoulder	8,263.5
Sta. 122+03.4 to Sta. 169+04.5 I-29 NB Median Shoulder	5,223.4
I-29 Tea Interchange Median Shoulder	
Sta. 47+84 to Sta. 48+74 SB	60.0
Sta. 51+26 to Sta. 52+16 SB	60.0
Sta. 47+84 to Sta. 48+74 NB	60.0
Sta. 51+26 to Sta. 52+16 NB	60.0
I-229 Shoulders	
Sta. 74+28.0 to Sta. 101+23.8 I-29 SB Median Shoulder	2,995.3
Sta. 76+77.0 to Sta. 97+13.9 I-29 SB Outside Shoulder	2,715.9
Sta. 152+77.3 to Sta. 181+05.2 I-29 NB Median Shoulder	3,142.1
TOTAL	65,354.1

TRANSVERSE CONTRACTION JOINTS

See PCC Pavement Layouts sheets and standard plate for PCC Pavement Transverse Contraction Joint Spacing for joint spacing in Nonreinforced PCC Pavement.

TABLE OF DOWEL BARS

Location	1 ½" Bars Each
I-29 Mainline	
Sta. 43+50.0 to Sta. 172+90.3 SB	21,024
Sta. 43+50.0 to Sta. 172+90.3 NB	21,222
I-29 Ramp Gore Areas	
Ramp A	375
Ramp B	580
Ramp C	498
Ramp G	378
Ramps	
Ramp A	1,775
Ramp B	2,744
Ramp C	4,694
Ramp G	4,735
I-29 Tea Interchange Mainline	
Sta. 47+84 to Sta. 48+74 SB	96
Sta. 51+26 to Sta. 52+16 SB	96
Sta. 47+84 to Sta. 48+74 NB	96
Sta. 51+26 to Sta. 52+16 NB	96
I-229 Mainline	
Sta. 76+77.0 to Sta. 101+23.8 SB	4,392
Sta. 152+77.3 to Sta. 181+05.2 NB	5,076
I-229 Ramp Gore Areas	
Ramp A/C	988
Ramp B/G	771
TOTAL	69,636

LOCATION OF CONCRETE PAVEMENT JOINTS

The location of joints, as shown on the "PCC Pavement Layout" sheets, are only approximate locations to be used as a guide in the final location of joints and to afford bidders a basis for estimating the construction costs of the joints. The final locations of the joints are to be designated by the Engineer during construction.

TINING

All PCC Pavement will receive a heavy carpet drag.

STEEL BAR INSTALLATION

The Contractor shall install the Steel Bars (1¼ inch x 18 inch epoxy coated plain round dowel bar and No. 5 x 24 inch epoxy coated deformed tie bar) into drilled holes in the existing concrete pavement.

The steel bars shall be cut to the specified length by sawing and shall be free from burring or other deformations. Shearing will not be permitted.

Epoxy coated plain round steel bars shall be installed on 12 inch centers in the transverse joint. The first steel bar shall be placed a minimum of 3 inches and a maximum of 6 inches from the outside edge of the slab.

Epoxy coated deformed steel bars adjacent to Nonreinforced PCC Pavement shall be inserted on 30 inch centers in the longitudinal joint and shall be placed a minimum of 15 inches from the existing transverse contraction joint.

Epoxy coated deformed steel bars adjacent Continuously Reinforced PCC Pavement shall be inserted on 15 inch centers in the longitudinal joint and shall be placed a minimum of 7.5 inches from the existing transverse contraction joint.

Cost for the epoxy resin adhesive, steel bars, drilling of holes, applying the adhesive, installing the steel bars into the drilled holes and all other items incidental to the installation of the steel bars shall be incidental to the contract unit price per each for Insert Steel Bar in PCC Pavement.

TABLE OF STEEL BAR INSTALLATION

LOCATION*	No. 5 x 24" Deformed Tie Bar each	1-1/4" x 18" Plain Round Dowel Bars each
I-29		
Sta. 24+85.6 to Sta. 43+46.0 Lt. SB (15" C-C)	1,492	
Sta. 169+04.5 to Sta. 172+90.3 Rt. SB (30" C-C)	309	
Sta. 172+90.3 SB (12" C-C)		36
Sta. 169+04.5 to Sta. 172+90.3 Lt. NB (30" C-C)	309	
Sta. 172+90.3 NB (12" C-C)		36
RAMPS		
Sta. 42+00.0 Ramp C (12" C-C)		38
Sta. 64+00.0 Ramp C (12" C-C)		38
I-229		
Sta. 101+23.8 SB (12" C-C)		36
Sta. 181+05.2 NB (12" C-C)		36
Subtotal	2,110	220
TOTAL	2,330	

I-29 RATES OF MATERIALS

The Estimate of Surfacing Quantities is based on the following quantities of materials per **mile**.

I-29 MAINLINE

Sta. 45+45.0 to Sta. 76+34.2 I-29 SB
Sta. 114+93.6 to Sta. 117+65.0 I-29 SB
Sta. 121+37.5 to Sta. 172+90.3 I-29 SB
Sta. 45+45.0 to Sta. 95+21.3 I-29 NB
Sta. 138+95.0 to Sta. 172+90.3 I-29 NB

GRAVEL CUSHION OR GRAVEL CUSHION, SALVAGED (5" depth)

Crushed or Salvaged Material 10,973 Tons.

Water for Granular Material at the rate of 132 M. Gallons.

I-29 SHOULDERS – 10' wide

Sta. 24+85.6 to Sta. 76+34.2 I-29 SB Outside Shoulder
Sta. 80+38.1 to Sta. 106+33.8 I-29 SB Outside Shoulder
Sta. 108+53.6 to Sta. 117+65.0 I-29 SB Outside Shoulder
Sta. 121+37.5 to Sta. 172+90.3 I-29 SB Outside Shoulder
Sta. 45+45.0 to Sta. 117+65.0 I-29 SB Median Shoulder
Sta. 121+37.5 to Sta. 169+04.5 I-29 SB Median Shoulder
Sta. 43+50.0 to Sta. 105+75.6 I-29 NB Outside Shoulder
Sta. 108+79.1 to Sta. 118+26.2 I-29 NB Outside Shoulder
Sta. 122+03.4 to Sta. 135+88.8 I-29 NB Outside Shoulder
Sta. 138+95.0 to Sta. 172+90.3 I-29 NB Outside Shoulder
Sta. 45+45.0 to Sta. 118+26.2 I-29 NB Median Shoulder
Sta. 122+03.4 to Sta. 169+04.5 I-29 NB Median Shoulder

GRAVEL CUSHION OR GRAVEL CUSHION, SALVAGED

Crushed or Salvaged Material 1,514 Tons.

Water for Granular Material at the rate of 18 M. Gallons.

I-29 SHOULDERS –wedge adjacent 8" PCCP Shoulder

Sta. 24+85.6 to Sta. 76+34.2 I-29 SB Outside Shoulder
Sta. 80+38.1 to Sta. 106+33.8 I-29 SB Outside Shoulder
Sta. 108+53.6 to Sta. 117+65.0 I-29 SB Outside Shoulder
Sta. 121+37.5 to Sta. 172+90.3 I-29 SB Outside Shoulder
Sta. 45+45.0 to Sta. 117+65.0 I-29 SB Median Shoulder
Sta. 121+37.5 to Sta. 169+04.5 I-29 SB Median Shoulder
Sta. 43+50.0 to Sta. 105+75.6 I-29 NB Outside Shoulder
Sta. 108+79.1 to Sta. 118+26.2 I-29 NB Outside Shoulder
Sta. 122+03.4 to Sta. 135+88.8 I-29 NB Outside Shoulder
Sta. 138+95.0 to Sta. 172+90.3 I-29 NB Outside Shoulder
Sta. 45+45.0 to Sta. 118+26.2 I-29 NB Median Shoulder
Sta. 122+03.4 to Sta. 169+04.5 I-29 NB Median Shoulder

GRAVEL CUSHION OR GRAVEL CUSHION, SALVAGED

Crushed or Salvaged Material 678 Tons.

Water for Granular Material at the rate of 8 M. Gallons.

I-229 RATES OF MATERIALS

The Estimate of Surfacing Quantities is based on the following quantities of materials per **mile**.

I-229 SHOULDERS – 10' wide

Sta. 74+28.0 to Sta. 101+23.8 I-229 SB Median Shoulder
Sta. 76+77.0 to Sta. 97+13.9 I-229 SB Outside Shoulder
Sta. 152+77.3 to Sta. 181+05.2 I-229 NB Median Shoulder

GRAVEL CUSHION OR GRAVEL CUSHION, SALVAGED

Crushed or Salvaged Material 1,024 Tons.

Water for Granular Material at the rate of 12 M. Gallons.

I-229 SHOULDERS –wedge adjacent 8" PCCP Shoulder

Sta. 74+28.0 to Sta. 101+23.8 I-229 SB Median Shoulder
Sta. 76+77.0 to Sta. 97+13.9 I-229 SB Outside Shoulder
Sta. 152+77.3 to Sta. 181+05.2 I-229 NB Median Shoulder

GRAVEL CUSHION OR GRAVEL CUSHION, SALVAGED

Crushed or Salvaged Material 727 Tons.

Water for Granular Material at the rate of 9 M. Gallons.

I-29 RATES OF MATERIALS

The Estimate of Surfacing Quantities is based on the following quantities of materials per **station**.

I-29 MAINLINE

Sta. 80+38.1 to Sta. 106+33.8 I-29 SB
Sta. 108+79.1 to Sta. 118+26.2 I-29 NB
Sta. 122+03.4 to Sta. 135+88.8 I-29 NB

GRAVEL CUSHION OR GRAVEL CUSHION, SALVAGED (5" depth)

Crushed or Salvaged Material 172.81 Tons.

Water for Granular Material at the rate of 2.07 M. Gallons.

RAMP MAINLINE

Sta. 11+91.2 to Sta. 26+16.1 Ramp A
Sta. 12+80.7 to Sta. 19+40.0 Ramp C
Sta. 39+00.0 to Sta. 49+69.4 Ramp G

GRAVEL CUSHION OR GRAVEL CUSHION, SALVAGED (5" depth)

Crushed or Salvaged Material 115.21 Tons.

Water for Granular Material at the rate of 1.38 M. Gallons.

RAMP MAINLINE

Sta. 22+07.7 to Sta. 41+38.4 Ramp B

GRAVEL CUSHION OR GRAVEL CUSHION, SALVAGED (5" depth)

Crushed or Salvaged Material 131.25 Tons.

Water for Granular Material at the rate of 1.58 M. Gallons.

RAMP MAINLINE

Sta. 25+22.1 to Sta. 42+00.0 Ramp C
Sta. 64+00.0 to Sta. 73+27.8 Ramp C

GRAVEL CUSHION OR GRAVEL CUSHION, SALVAGED (5" depth)

Crushed or Salvaged Material 156.04 Tons.

Water for Granular Material at the rate of 1.87 M. Gallons.

RAMP MAINLINE

Sta. 10+79.9 to Sta. 39+00.0 Ramp G

GRAVEL CUSHION OR GRAVEL CUSHION, SALVAGED (5" depth)

Crushed or Salvaged Material 125.42 Tons.

Water for Granular Material at the rate of 1.51 M. Gallons.

I-29 SHOULDERS –wedge adjacent 13" PCCP

Sta. 76+34.2 to Sta. 80+38.1 I-29 SB Outside Shoulder
Sta. 106+33.8 to Sta. 108+53.6 I-29 SB Outside Shoulder
Sta. 105+75.6 to Sta. 108+79.1 I-29 NB Outside Shoulder
Sta. 135+88.8 to Sta. 138+95.0 I-29 NB Outside Shoulder

GRAVEL CUSHION OR GRAVEL CUSHION, SALVAGED

Crushed or Salvaged Material 23.70 Tons.

Water for Granular Material at the rate of 0.28 M. Gallons.

I-29 SHOULDERS –wedge adjacent 12" PCCP

Sta. 22+07.7 to Sta. 41+38.4 Rt. Ramp B

GRAVEL CUSHION OR GRAVEL CUSHION, SALVAGED

Crushed or Salvaged Material 31.50 Tons.

Water for Granular Material at the rate of 0.38M. Gallons.

I-29 SHOULDERS –wedge adjacent 12" PCCP

Sta. 22+07.7 to Sta. 41+38.4 Lt. Ramp B
Sta. 10+79.9 to Sta. 39+00.0 Lt. Ramp G

GRAVEL CUSHION OR GRAVEL CUSHION, SALVAGED

Crushed or Salvaged Material 17.50 Tons.

Water for Granular Material at the rate of 0.21M. Gallons.

I-29 SHOULDERS –wedge adjacent 12" PCCP

Sta. 8+69.2 to Sta. 26+16.1 Rt. Ramp A
Sta. 12+80.7 to Sta. 42+00.0 Lt. Ramp C
Sta. 25+22.1 to Sta. 42+00.0 Rt. Ramp C
Sta. 64+00.0 to Sta. 73+57.2 Lt. Ramp C
Sta. 64+00.0 to Sta. 74+28.0 Rt. Ramp C
Sta. 39+00.0 to Sta. 49+69.4 Rt. Ramp G

GRAVEL CUSHION OR GRAVEL CUSHION, SALVAGED

Crushed or Salvaged Material 22.75 Tons.

Water for Granular Material at the rate of 0.27M. Gallons.

I-29 SHOULDERS –wedge adjacent 12" PCCP

Sta. 11+91.2 to Sta. 26+16.1 Lt. Ramp A
Sta. 12+80.7 to Sta. 25+22.1 Rt. Ramp C
Sta. 39+00.0 to Sta. 49+69.4 Lt. Ramp G

GRAVEL CUSHION OR GRAVEL CUSHION, SALVAGED

Crushed or Salvaged Material 19.25 Tons.

Water for Granular Material at the rate of 0.23M. Gallons.

I-29 SHOULDERS –wedge adjacent 12" PCCP

Sta. 10+79.9 to Sta. 39+00.0 Rt. Ramp G

GRAVEL CUSHION OR GRAVEL CUSHION, SALVAGED

Crushed or Salvaged Material 35+00 Tons.

Water for Granular Material at the rate of 0.42M. Gallons.

FOR BIDDING PURPOSES ONLY

I-29 RATES OF MATERIALS

The Estimate of Surfacing Quantities is based on the following quantities of materials per **station**.

I-29 SB Shoulder Widening for Traffic Control (8')

Sta. 43+50 to Sta. 79+10
Sta. 113+33 to Sta. 117+71
Sta. 120+93 to Sta. 172+95

BASE COURSE OR BASE COURSE, SALVAGED

Crushed or Salvaged Material 98.00 tons

Water for Granular Material at the rate of 1.18 M Gallons

CLASS G ASPHALT CONCRETE – 1ST LIFT

Crushed Aggregate	19.63 tons
PG 64-28 Asphalt Binder	1.19 tons
Total Mix	20.82 tons
Hydrated Lime	0.21 tons
Total Mix with Hydrated Lime	21.03 tons

The exact proportions of these materials will be determined on construction.

SS-1h or CSS-1h Asphalt for Tack at the rate of 0.03 ton applied 11 feet wide (Rate = 0.06 gallon per square yard).

CLASS G ASPHALT CONCRETE – 2ND LIFT

Crushed Aggregate	17.01 tons
PG 64-28 Asphalt Binder	1.03 tons
Total Mix	18.04 tons
Hydrated Lime	0.18 tons
Total Mix with Hydrated Lime	18.22 tons

The exact proportions of these materials will be determined on construction.

SS-1h or CSS-1h Asphalt for Tack at the rate of 0.03 ton applied 9.5 feet wide (Rate = 0.06 gallon per square yard).

CLASS G ASPHALT CONCRETE – 3RD LIFT

Crushed Aggregate	9.89 tons
PG 64-28 Asphalt Binder	0.60 tons
Total Mix	10.49 tons
Hydrated Lime	0.10 tons
Total Mix with Hydrated Lime	10.59 tons

The exact proportions of these materials will be determined on construction.

FLUSH SEAL

SS-1h or CSS-1h Asphalt for Flush Seal at the rate of 0.2 ton applied 9.0 feet wide (Rate = 0.05 gallon per square yard).

Sand for Flush Seal at the rate of 0.36 tons applied 8.0 feet wide (Rate = 8.00 lbs. per square yard).

I-29 SB Shoulder Widening for Traffic Control (20')

Sta. 80+38 to Sta. 105+34

BASE COURSE OR BASE COURSE, SALVAGED

Crushed or Salvaged Material 182.00 tons

Water for Granular Material at the rate of 2.18 M Gallons

CLASS G ASPHALT CONCRETE – 1ST LIFT

Crushed Aggregate	40.56 tons
PG 64-28 Asphalt Binder	2.45 tons
Total Mix	43.01 tons
Hydrated Lime	0.43 tons
Total Mix with Hydrated Lime	43.44 tons

The exact proportions of these materials will be determined on construction.

SS-1h or CSS-1h Asphalt for Tack at the rate of 0.07 ton applied 23 feet wide (Rate = 0.06 gallon per square yard).

CLASS G ASPHALT CONCRETE – 2ND LIFT

Crushed Aggregate	37.94 tons
PG 64-28 Asphalt Binder	2.29 tons
Total Mix	40.23 tons
Hydrated Lime	0.40 tons
Total Mix with Hydrated Lime	40.63 tons

The exact proportions of these materials will be determined on construction.

SS-1h or CSS-1h Asphalt for Tack at the rate of 0.06 ton applied 21.5 feet wide (Rate = 0.06 gallon per square yard).

CLASS G ASPHALT CONCRETE – 3RD LIFT

Crushed Aggregate	23.84 tons
PG 64-28 Asphalt Binder	1.44 tons
Total Mix	25.28 tons
Hydrated Lime	0.25 tons
Total Mix with Hydrated Lime	25.53 tons

The exact proportions of these materials will be determined on construction.

FLUSH SEAL

SS-1h or CSS-1h Asphalt for Flush Seal at the rate of 0.5 ton applied 21.0 feet wide (Rate = 0.05 gallon per square yard).

Sand for Flush Seal at the rate of 0.89 tons applied 20.0 feet wide (Rate = 8.00 lbs. per square yard).

FOR BIDDING PURPOSES ONLY

I-229 RATES OF MATERIALS

The Estimate of Surfacing Quantities is based on the following quantities of materials per **station**.

I-229 MAINLINE

Sta. 76+77.0 to Sta. 101+23.8 I-229 SB

GRAVEL CUSHION OR GRAVEL CUSHION, SALVAGED (5" depth)

Crushed or Salvaged Material 212.92 Tons.

Water for Granular Material at the rate of 2.56 M. Gallons.

I-229 MAINLINE

Sta. 152+77.3 to Sta. 181+05.2 I-229 NB

GRAVEL CUSHION OR GRAVEL CUSHION, SALVAGED (5" depth)

Crushed or Salvaged Material 177.92 Tons.

Water for Granular Material at the rate of 2.14 M. Gallons.

I-229 SHOULDERS –wedge adjacent 12" PCCP

Sta. 97+13.9 to Sta. 101+23.8 I-229 SB Outside Shoulder
Sta. 149+69.4 to Sta. 152+77.3 I-229 NB Median Shoulder
Sta. 149+72.8 to Sta. 181+05.2 I-229 NB Outside Shoulder

GRAVEL CUSHION OR GRAVEL CUSHION, SALVAGED

Crushed or Salvaged Material 22.75 Tons.

Water for Granular Material at the rate of 0.27M. Gallons.

TABLE OF ADDITIONAL QUANTITIES

Revised: 22 Oct 15, RML

Location-Description	Water for Granular Material	Gravel Cushion or Gravel Cushion, Salvaged	Base Course or Base Course, Salvaged	Pit Run	Class G Asphalt Concrete	PG 64-28 Asphalt Binder	Hydrated Lime	MC-70 Asphalt for Prime	SS-1h or CSS-1h Asphalt for Tack	SS-1h or CSS-1h Asphalt for Flush Seal	Sand for Flush Seal
	MGal	Ton	Ton	Ton	Ton	Ton	Ton	Ton	Ton	Ton	Ton
I-29 Mainline											
Sta. 43+46.0 to Sta. 45+45.0 SB	4.3	356.6									
Sta. 76+34.2 to Sta. 80+38.1 SB	11.0	914.9									
Sta. 106+33.8 to Sta. 114+93.6 SB	24.7	2,054.3									
Sta. 43+46.0 to Sta. 45+45.0 NB	4.3	356.6									
Sta. 95+21.3 to Sta. 108+79.1 NB	37.7	3,139.5									
Sta. 135+88.8 to Sta. 138+95.0 NB	8.0	665.1									
I-29 Outside Shoulder adjacent Concrete Barrier											
Sta. 155+95.2 to Sta. 157+75.2 SB	1.5	126.8									
Sta. 157+06.3 to Sta. 158+96.1 NB	1.6	133.7									
Ramp Mainline											
Sta. 19+40.0 to Sta. 25+22.1 Ramp C	9.8	814.9									
I-29 Tea Interchange Mainline											
Sta. 47+84 to Sta. 48+74 SB	1.9	155.5									
Sta. 47+84 to Sta. 48+74 NB	1.9	155.5									
Sta. 51+26 to Sta. 51+16 SB	1.9	155.5									
Sta. 51+26 to Sta. 51+16 NB	1.9	155.5									
I-29 Tea Interchange Shoulders											
Sta. 47+84 to Sta. 48+74 SB – Outside / Median	0.6	27.7 / 20.9									
Sta. 47+84 to Sta. 48+74 NB – Outside / Median	0.6	27.7 / 20.9									
Sta. 51+26 to Sta. 51+16 SB – Outside / Median	0.3	--- / 20.9									
Sta. 51+26 to Sta. 51+16 NB – Outside / Median	0.3	--- / 20.9									
I-29 Tea Interchange Wedges adjacent PCCP											
Sta. 47+84 to Sta. 48+74 SB – Outside / Median	0.2	8.2 / 8.2									
Sta. 47+84 to Sta. 48+74 NB – Outside / Median	0.2	8.2 / 8.2									
Sta. 51+26 to Sta. 51+16 SB – Outside / Median	0.3	16.8 / 8.2									
Sta. 51+26 to Sta. 51+16 NB – Outside / Median	0.3	16.8 / 8.2									
I-29 Additional Surfacing for Guardrail											
Str. # 42-065-030, Begin Bridge Lt.	3.0		252.0		7.9	0.4	0.1	0.1			
Str. # 42-064-030, End Bridge Rt.	3.0		252.0		7.9	0.4	0.1	0.1			
Str. # 42-067-006, Begin Bridge Rt.	0.5		42.8		5.7	0.3	0.1	0.1			
Str. # 42-067-006, Begin Bridge Lt.	0.5		45.5		6.1	0.3	0.1	0.1			
Str. # 42-066-006, End Bridge Rt.	0.5		45.5		6.1	0.3	0.1	0.1			
Str. # 42-066-006, End Bridge Lt.	0.5		42.1		5.6	0.3	0.1	0.1			
Detours											
I-29 SBL to Ramp B, Sta. 105+00 I-29	32.0		671.4	1,992.1	145.9 / 127.5 / 74.5	8.2 / 7.2 / 4.2	1.4 / 1.3 / 0.7		--- / 0.2 / 0.2	0.1	2.5
Ramp G to Ramp C, Sta. 54+00 Ramp C	44.0		923.9	2,741.3	203.1 / 181.8 / 109.2	11.5 / 10.3 / 6.2	2.0 / 1.8 / 1.1		--- / 0.3 / 0.3	0.2	3.7
I-29 SBL to Ramp B, Sta. 140+00 I-29	52.1		1,096.1	3,244.6	241.4 / 213.1 / 126.3	13.6 / 12.0 / 7.1	2.4 / 2.1 / 1.3		--- / 0.3 / 0.3	0.3	4.3
I-229 Mainline											
Sta. 73+27.8 to Sta. 76+77.0 SB	9.0	749.8									
Sta. 149+69.4 to Sta. 152+77.3 NB	6.9	577.0									
I-229 Shoulder, from PCCP Shoulder to Retaining Wall											
Sta. 75+26.8 to Sta. 77+99.2 SB Outside Sh.	3.4		282.2		75.3	4.3	0.7	0.5	0.1	0.1	
I-229 NB, Left Shoulder Traffic Control Widening											
Sta. 149+20.2 to Sta. 167+55	29.9		2,495.1		580.2 / 546.0 / 344.9	32.7 / 30.8 / 19.5	5.7 / 5.4 / 3.4		--- / 0.9 / 0.8	0.6	12.0
Sta. 167+55 to Sta. 176+22 (Median Crossover)					109.2	6.2	1.1		0.3	0.2	3.8
Sta. 176+22 to Sta. 182+79.6	5.7		477.5		96.8 / 84.5 / 49.5	5.5 / 4.8 / 2.8	1.0 / 0.8 / 0.5		--- / 0.1 / 0.1	0.1	1.7
TOTAL	304.3	10,733.0	6,626.1	7,978.0	3,348.5	188.9	33.3	1.1	3.9	1.6	28.0

IN PLACE TYPICAL SECTIONS

FOR BIDDING PURPOSES ONLY

STATE OF SOUTH DAKOTA	PROJECT	SHEET	TOTAL SHEETS
	IM 0293(96)73 & IM 2292(90)0	F13	F98

Plotting Date: 10/23/2015

PCC Pavement Removal

Remove Asphalt Concrete Pavement

Salvage and stockpile Asphalt Mix and Granular Base Material

Unclassified Excavation (Waste Material)

I29 NB LANES
Sta. 43+50 to Sta. 118+12.5
Sta. 122+18.5 to Sta. 172+95

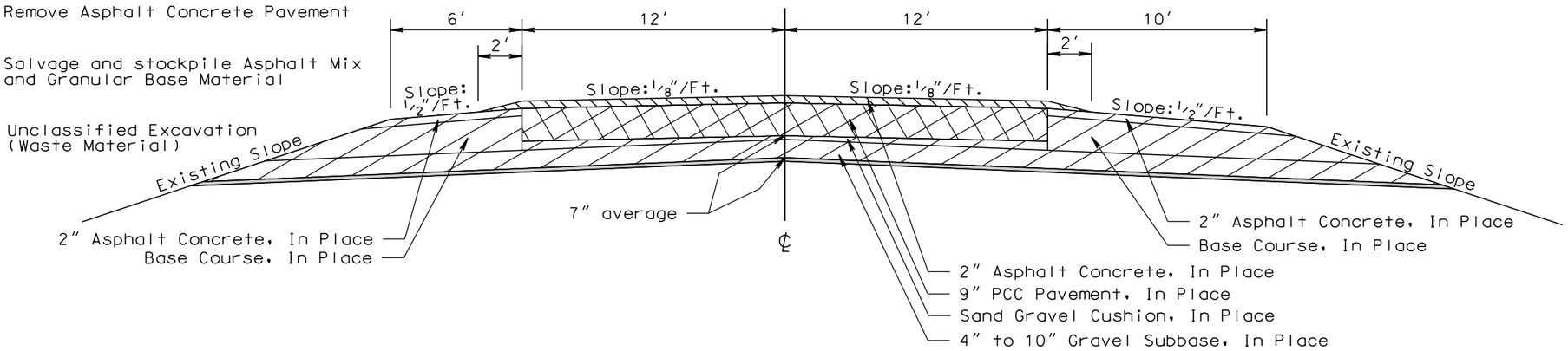

I29 SB LANES
Sta. 43+50 to Sta. 117+50.5
Sta. 121+56.5 to Sta. 172+95

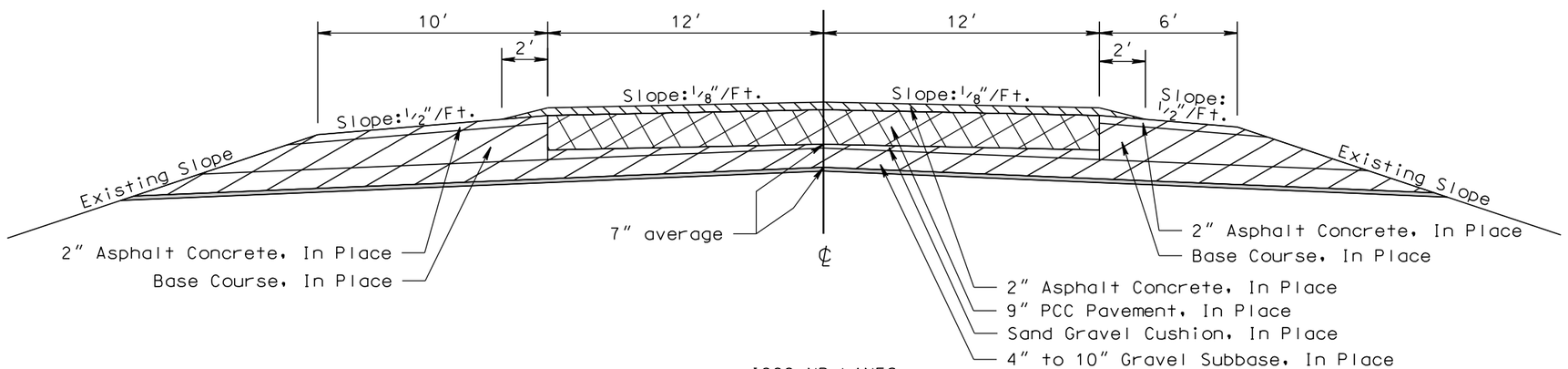

I229 NB LANES
Sta. 151+56.3 to Sta. 176+22

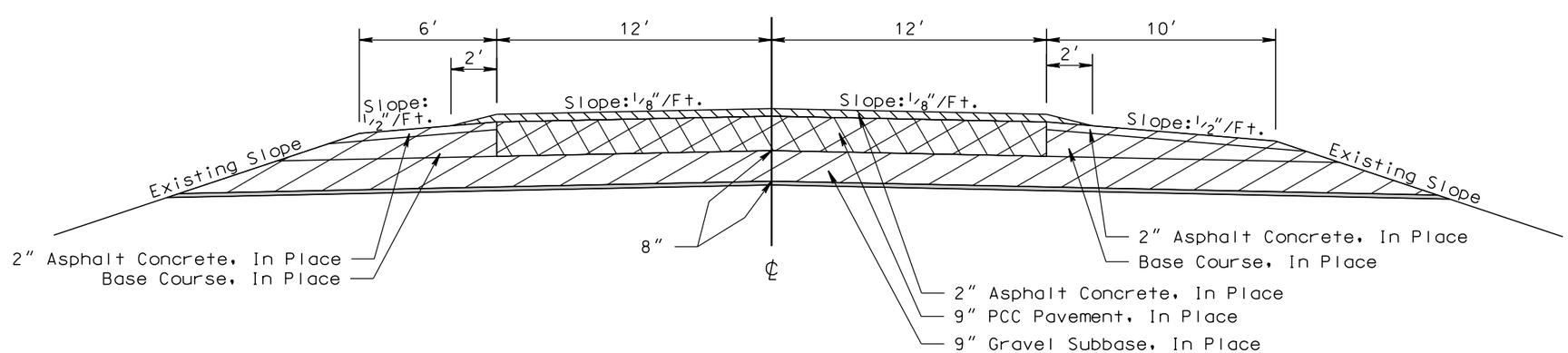

PLOT SCALE - 1:6.00001

PLOT NAME - 2

FILE -...\TYPICAL SECTIONS IN PLACE.DGN

PLOTTED FROM - TRPR16032

FOR BIDDING PURPOSES ONLY

IN PLACE TYPICAL SECTIONS

PCC Pavement Removal

Remove Asphalt Concrete Pavement

Salvage and stockpile Asphalt Mix and Granular Base Material

Unclassified Excavation (Waste Material)

I229 NB LANES
Sta. 176+22 to Sta. 181+05.2

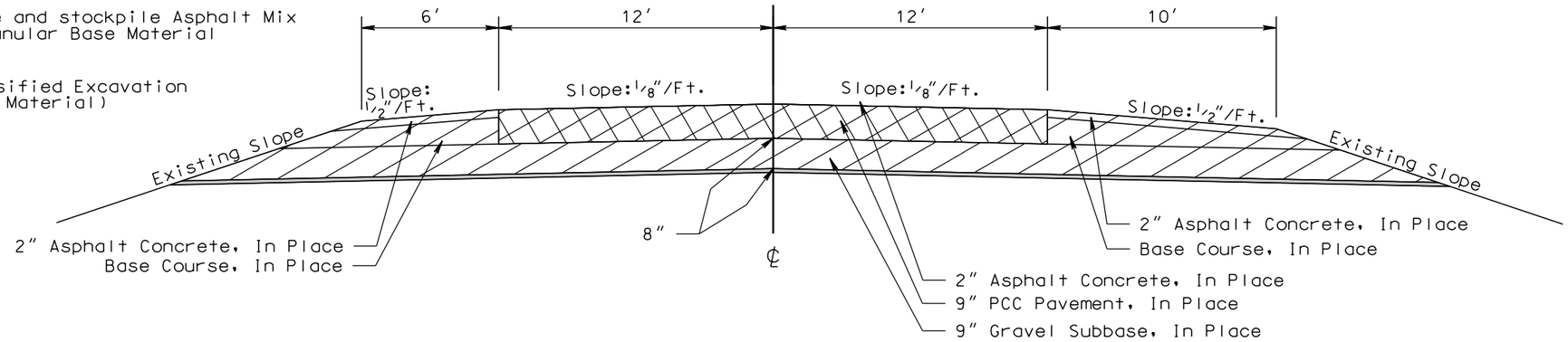

I229 SB LANES
Sta. 71+87 to Sta. 96+98

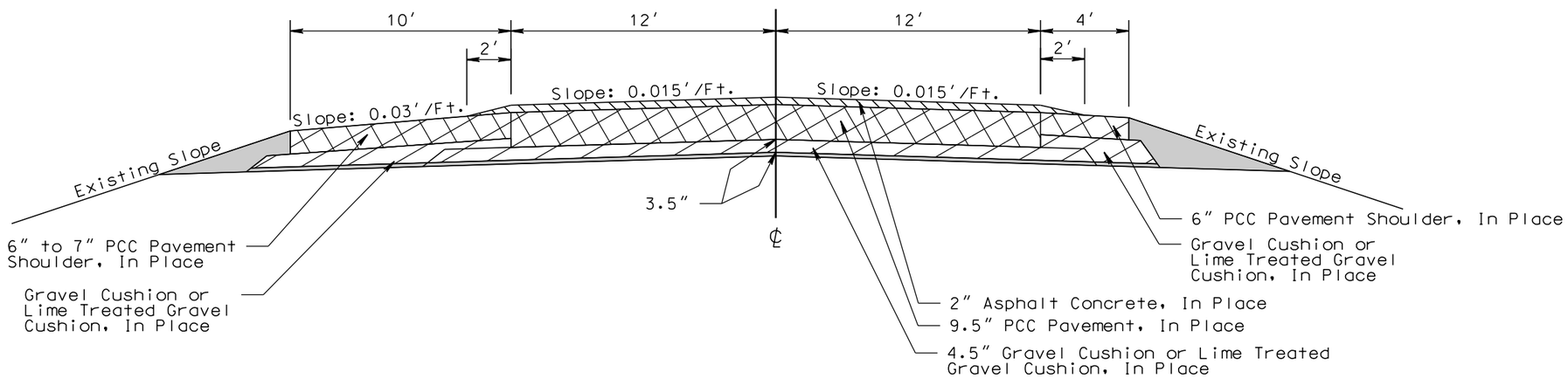

I229 SB LANES
Sta. 96+98 to Sta. 101+23.8

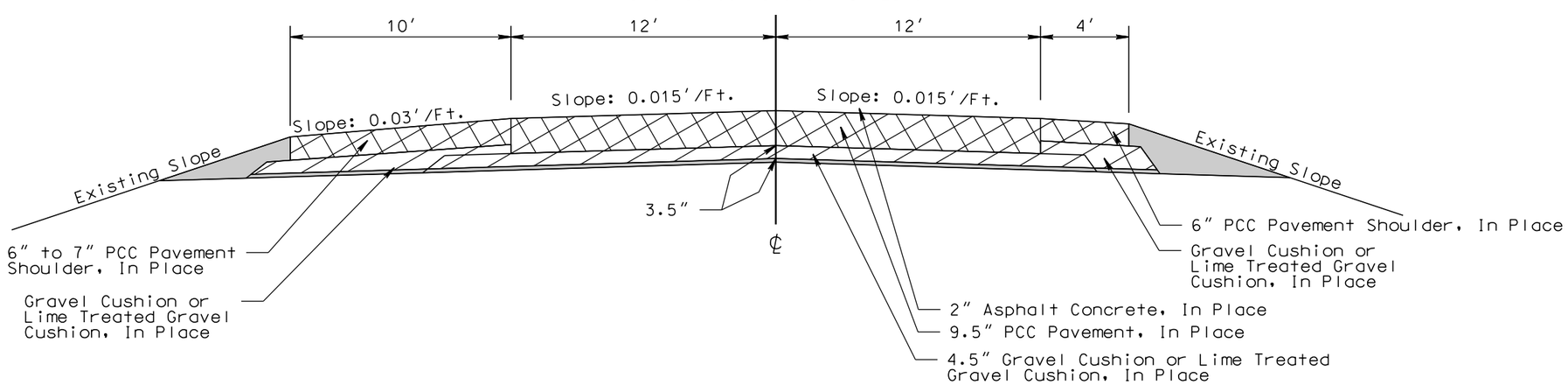

PLOT SCALE - 1:6.00001
PLOTTED FROM - TRPR16032
PLOT NAME - 3
FILE - ...\TYPICAL SECTIONS IN PLACE.DGN

IN PLACE TYPICAL SECTIONS

FOR BIDDING PURPOSES ONLY

PCC Pavement Removal

Remove Asphalt Concrete Pavement

Salvage and stockpile Asphalt Mix and Granular Base Material

Unclassified Excavation (Waste Material)

RAMP A
(I229 SB to I29 NB)
Sta. 12+40 to Sta. 25+303

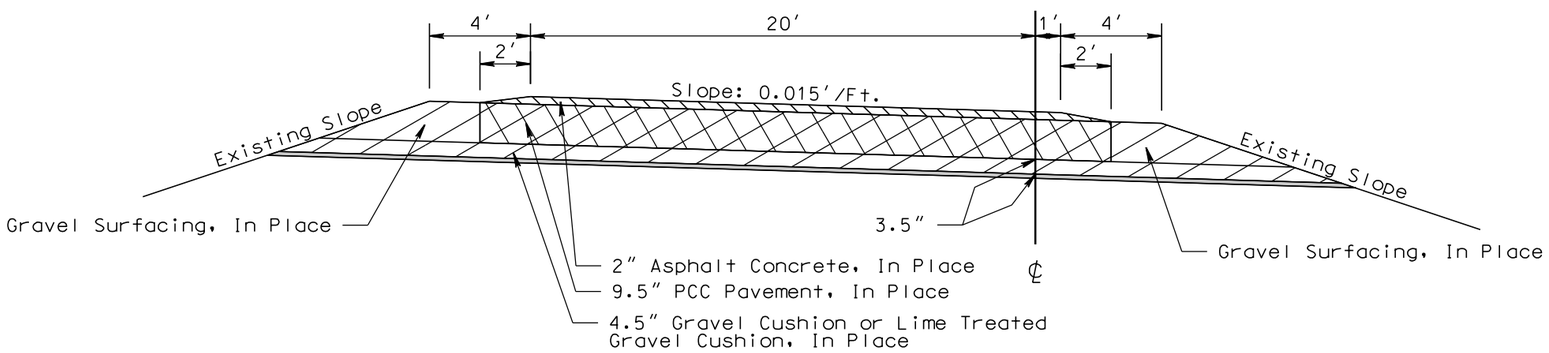

RAMP B
(I229 SB to I29 NB)
Sta. 22+69 to Sta. 44+00

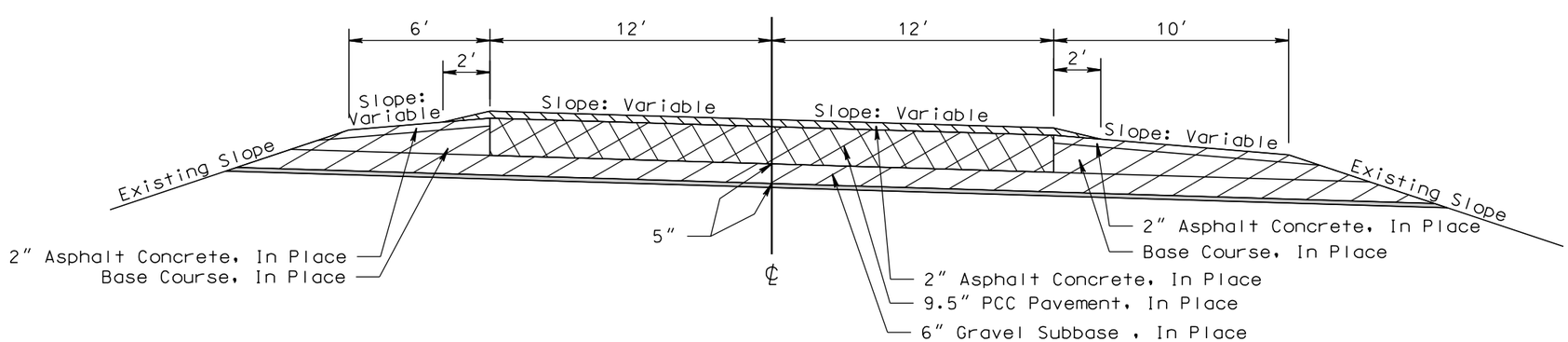

PLOT SCALE - 1:6.00001
PLOTTED FROM - TRPR16032
PLOT NAME - 4
FILE - ...\TYPICAL SECTIONS IN PLACE.DGN

FOR BIDDING PURPOSES ONLY

Plotting Date: 10/23/2015

IN PLACE TYPICAL SECTIONS

PCC Pavement Removal

Salvage and stockpile Asphalt Mix and Granular Base Material

Unclassified Excavation (Waste Material)

RAMP C
Sta. 13+00 to Sta. 42+00
Sta. 64+00 to Sta. 71+87

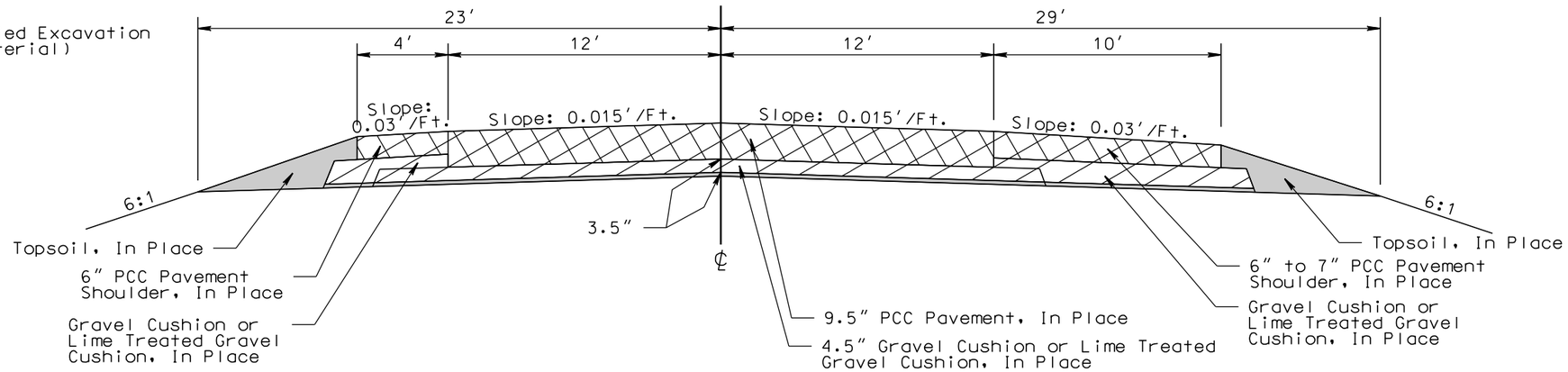

RAMP G
Sta. 4+93 to Sta. 16+00

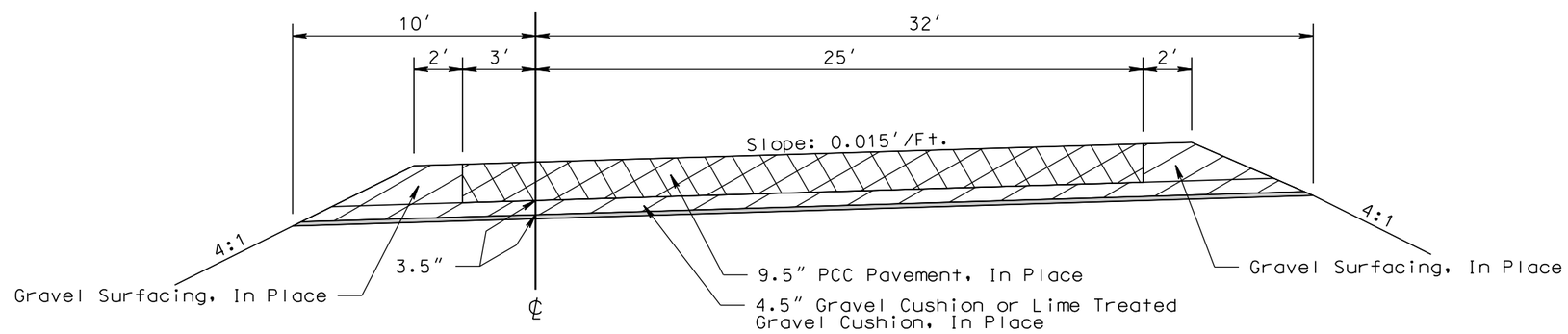

RAMP G
Sta. 16+00 to Sta. 51+70

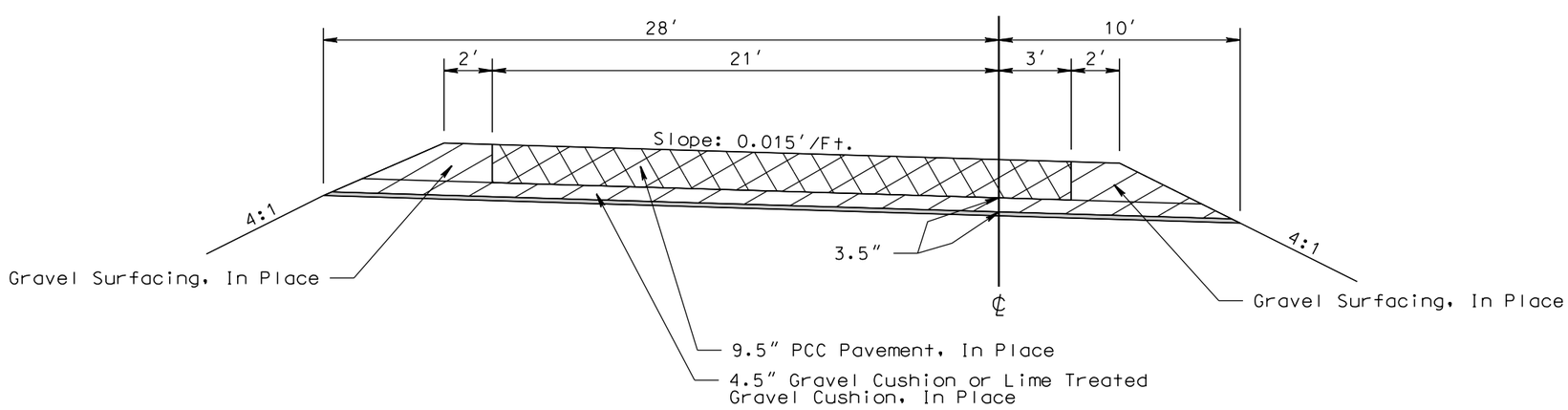

PLOT SCALE - 1:6.00001

PLOTTED FROM - TRPR16032

PLOT NAME - 5

FILE - ...\TYPICAL SECTIONS IN PLACE.DGN

IN PLACE TYPICAL SECTIONS

FOR BIDDING PURPOSES ONLY

STATE OF SOUTH DAKOTA	PROJECT	SHEET	TOTAL SHEETS
	IM 0293(96)73 & IM 2292(90)0	F17	F98

Plotting Date: 10/23/2015

PCC Pavement Removal

Salvage and stockpile Asphalt Mix and Granular Base Material

Unclassified Excavation (Waste Material)

I29
Sta. 47+74 to Sta. 48+74 SB & NB
(Tea Interchange)

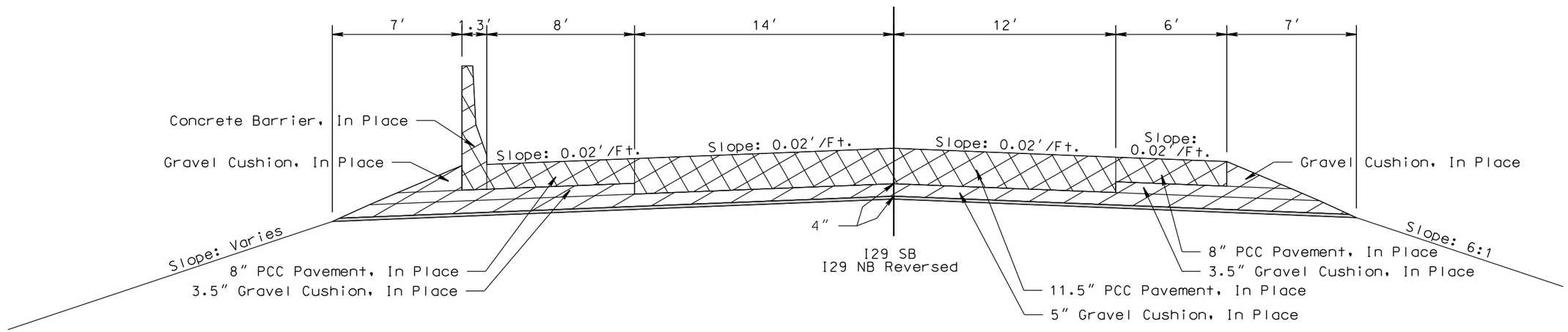

I29
Sta. 51+26 to Sta. 52+26 SB & NB
(Tea Interchange)

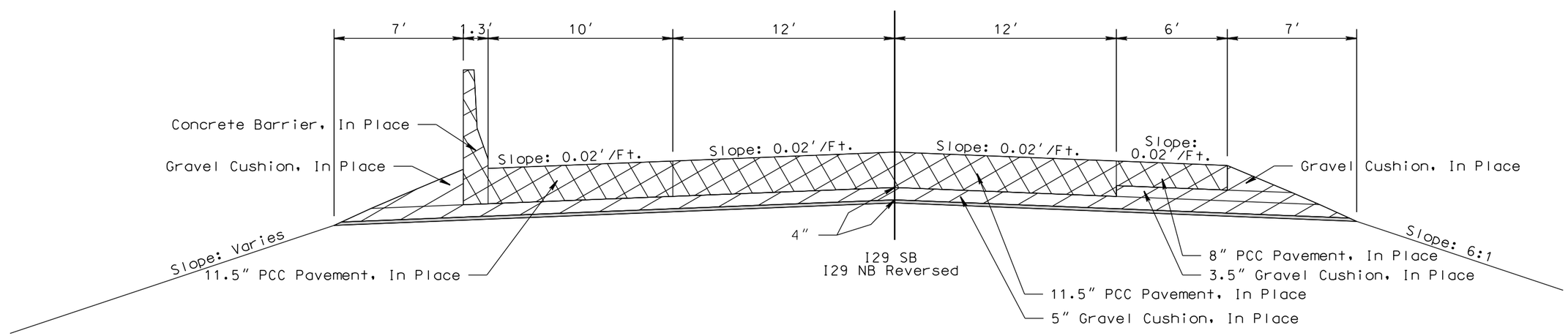

PLOT SCALE - 1:6.00001

PLOTTED FROM - TRPR16032

PLOT NAME - 6

FILE - ...\LINC01GS\TYPICAL SECTIONS.DGN

IN PLACE TYPICAL SECTIONS

FOR BIDDING PURPOSES ONLY

STATE OF SOUTH DAKOTA	PROJECT	SHEET	TOTAL SHEETS
	IM 0293(96)73 & IM 2292(90)0	F18	F98

Plotting Date: 10/23/2015

Unclassified Excavation (Waste Material)

Sta. 149+20.2 to Sta. 165+50 (I-229 NB)
Shoulder Widening for Traffic Control

Revised: 22 Oct 15, RML

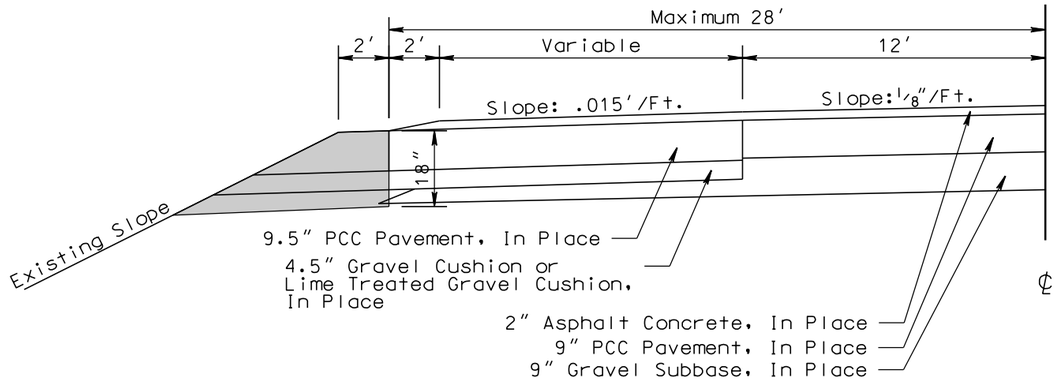

Sta. 165+50 to Sta. 167+55 (I-229 NB)
Shoulder Widening for Traffic Control

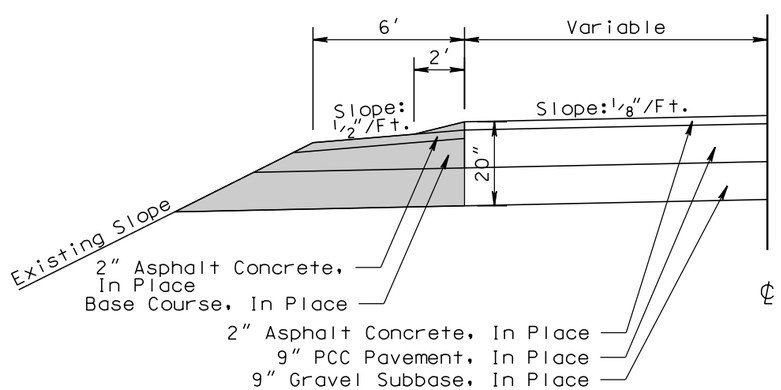

PLOT SCALE - 1:6.00001

PLOTTED FROM - TRPR16032

PLOT NAME - 7

FILE -...\TYPICAL SECTIONS IN PLACE.DGN

IN PLACE TYPICAL SECTIONS

FOR BIDDING PURPOSES ONLY

STATE OF SOUTH DAKOTA	PROJECT	SHEET	TOTAL SHEETS
	IM 0293(96)73 & IM 2292(90)0	F19	F98

Plotting Date: 10/23/2015

Revised: 22 Oct 15, RML

Sta. 167+55 to Sta. 176+22 (I-229 NB)
Shoulder Widening for Traffic Control

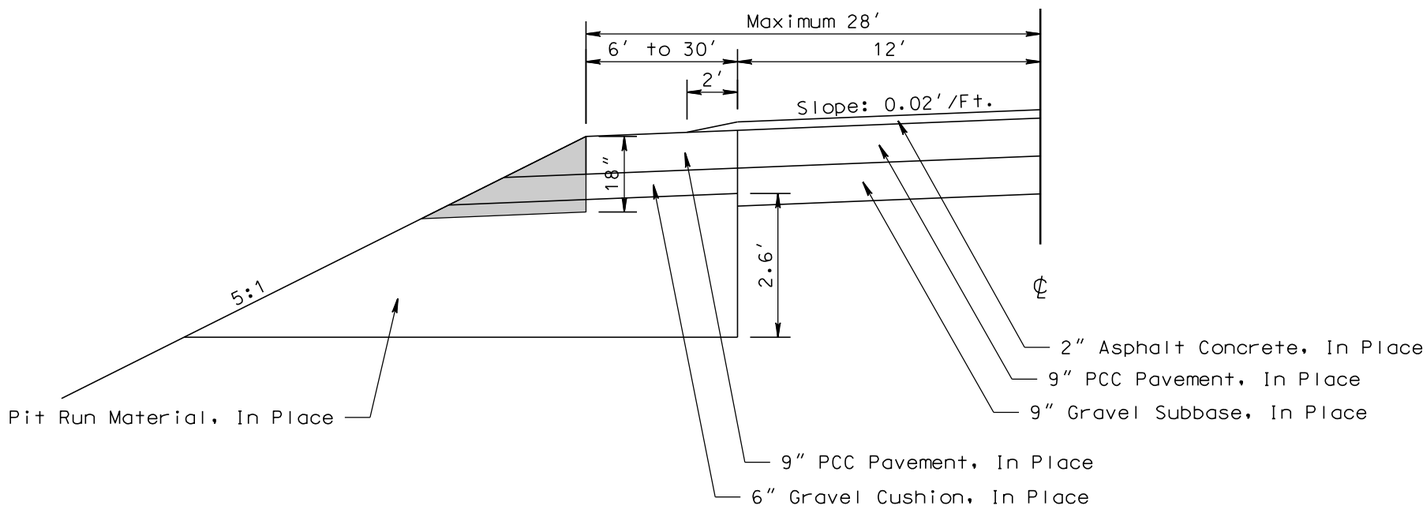

Sta. 176+22 to Sta. 182+79.6 (I-229 NB)
Shoulder Widening for Traffic Control

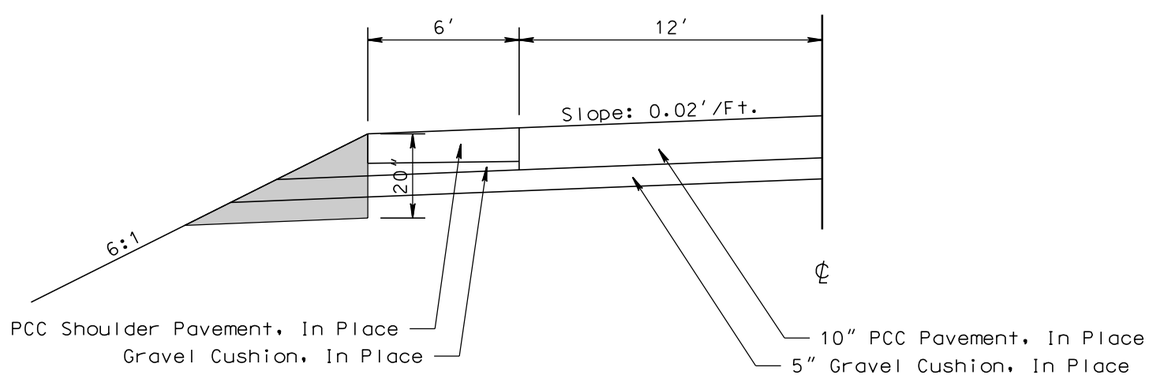

PLOT SCALE - 1:6.00001

PLOTTED FROM - TRPR16032

PLOT NAME - 8

FILE -...\TYPICAL SECTIONS IN PLACE.DGN

TYPICAL SURFACING SECTIONS

FOR BIDDING PURPOSES ONLY

STATE OF SOUTH DAKOTA	PROJECT	SHEET	TOTAL SHEETS
	IM 0293(96)73 & IM 2292(90)0	F20	F98

Plotting Date: 10/23/2015

I29 SB
Sta. 24+85.63 to Sta. 43+50.00 SB

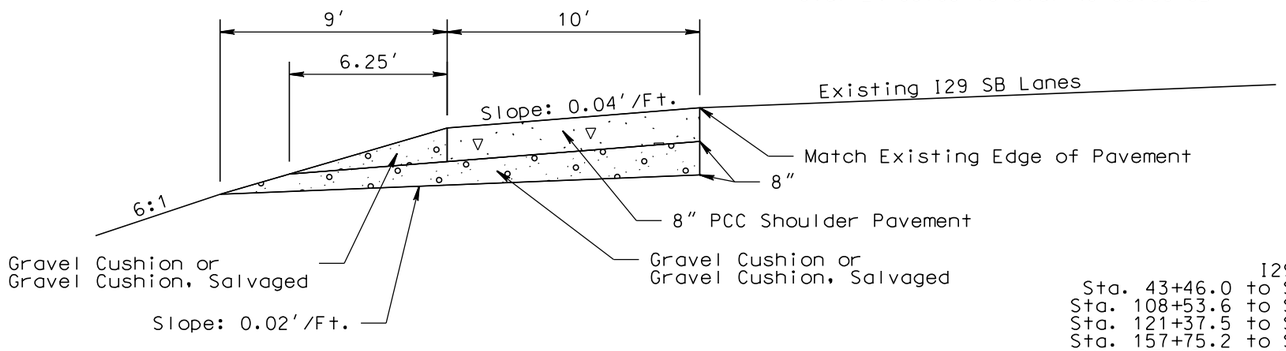

Transitions:

Sta. 43+46 to Sta. 43+55 SB & NB
* 11″ Continuously Reinforced Concrete

Sta. 43+46 to Sta. 45+45 SB & NB
*** 6′ to 10′

Sta. 108+53.6 to Sta. 112+53.6 SB
** 24′

Sta. 112+53.6 to Sta. 114+93.6 SB
** 24′ to 12′

Sta. 95+21.6 to Sta. 105+75.6 NB
** 12′ to 24′

I29
Sta. 43+46.0 to Sta. 76+34.2 SB
Sta. 108+53.6 to Sta. 117+65.0 SB
Sta. 121+37.5 to Sta. 155+95.2 SB
Sta. 157+75.2 to Sta. 172+90.3 SB
Sta. 43+46.0 to Sta. 105+75.6 NB
Sta. 138+95.0 to Sta. 157+06.3 NB
Sta. 158+96.1 to Sta. 172+90.3 NB

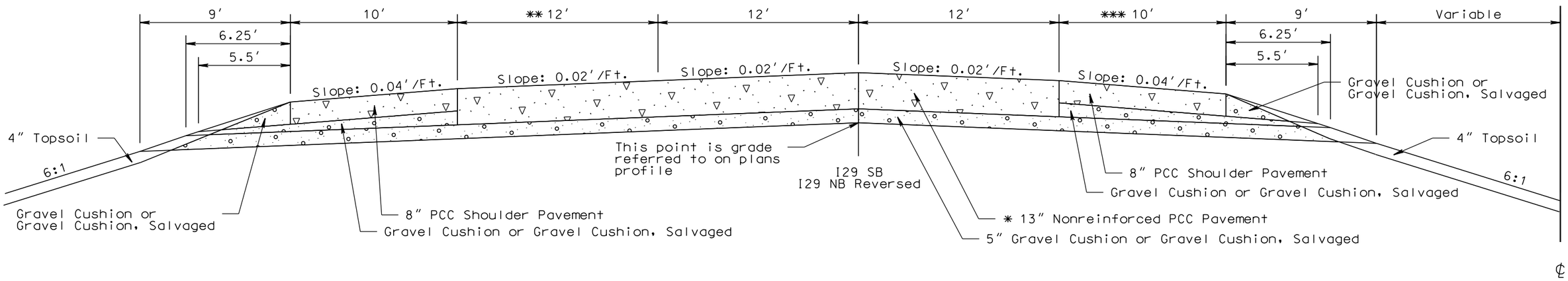

I29
Sta. 155+95.2 to Sta. 157+75.2 SB
Sta. 157+06.3 to Sta. 158+96.1 NB

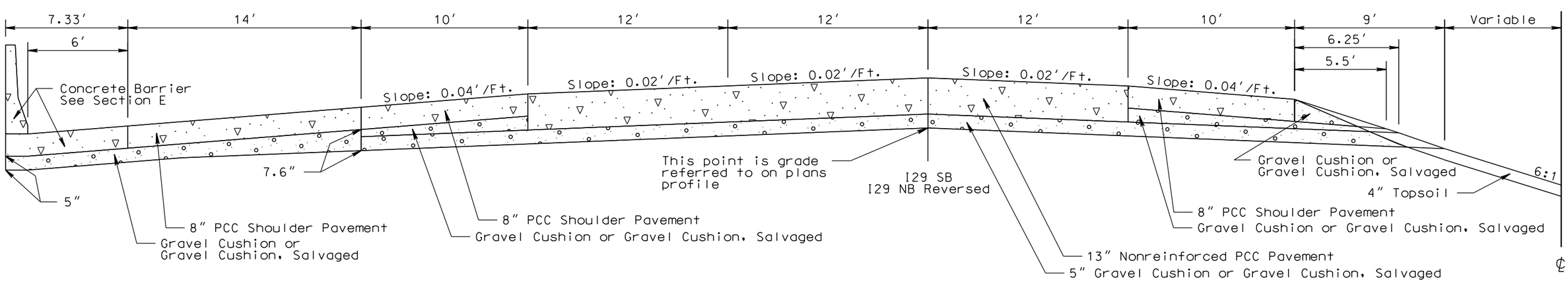

PLOT SCALE - 1:6.00001

PLOTTED FROM - TRPRIG032

PLOT NAME - 9

FILE - ...\LINC010S\TYPICAL SECTIONS.DGN

TYPICAL SURFACING SECTIONS

FOR BIDDING PURPOSES ONLY

STATE OF SOUTH DAKOTA	PROJECT	SHEET	TOTAL SHEETS
	IM 0293(96)73 & IM 2292(90)0	F21	F98

Plotting Date: 10/23/2015

Transitions:

Sta. 76+34.2 to Sta. 80+37.9 SB
* 22' to 42.7'

Sta. 106+33.8 to Sta. 107+33.37 SB
* 42.5' to 34'

Sta. 107+33.7 to Sta. 108+53.6 SB
* 34'

Transitions:

Sta. 105+75.6 to Sta. 108+79.1 NB
* 34' to 45.9'

Sta. 135+88.0 to Sta. 138+95.0 NB
* 38.5' to 22'

I29
Sta. 76+34.2 to Sta. 80+37.9 SB
Sta. 106+33.8 to Sta. 108+53.6 SB
Sta. 105+75.6 to Sta. 108+79.1 NB
Sta. 135+88.8 to Sta. 138+95.0 NB

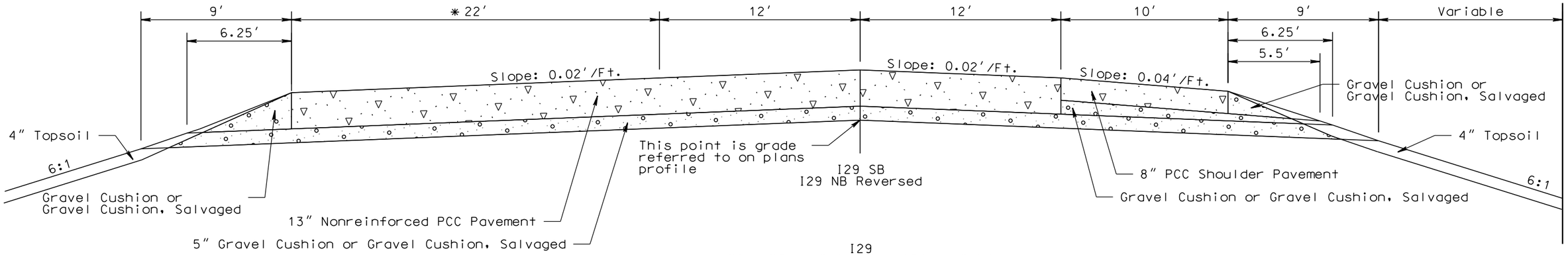

I29
Sta. 80+37.9 to Sta. 106+33.8 SB
Sta. 108+79.1 to Sta. 118+26.2 NB
Sta. 122+03.4 to Sta. 135+88.8 NB

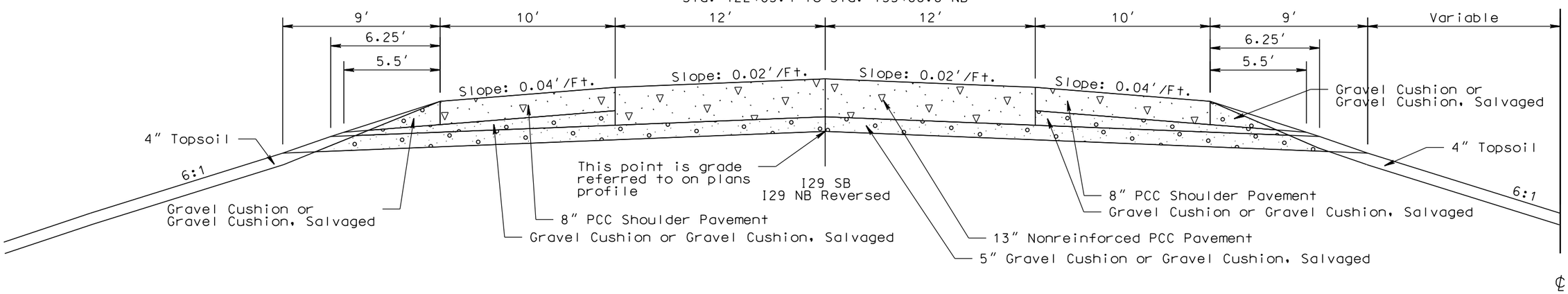

Transition:

Sta. 74+28.0 to Sta. 74+89.6 I229 SB
* 42' to 36'

I229 SB
Sta. 74+28.0 to Sta. 76+77.0 SB

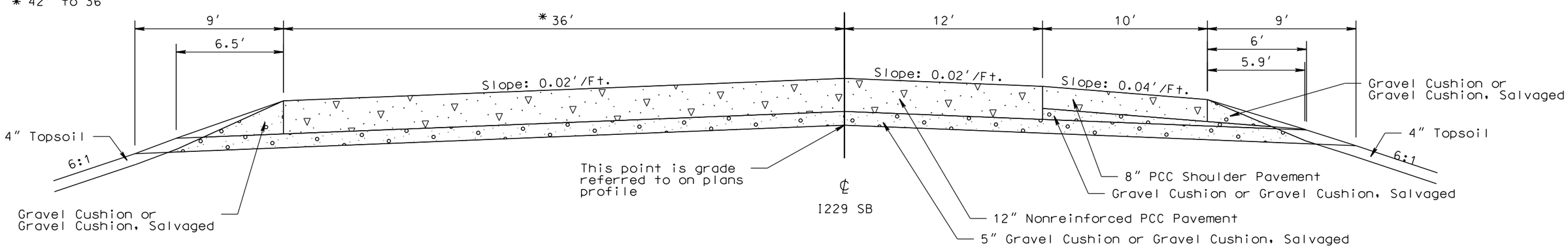

PLOT SCALE - 1:6.00001

PLOT NAME - 10

FILE - ...\LINC0103\TYPICAL SECTIONS.DGN

PLOTTED FROM - TRPR16032

TYPICAL SURFACING SECTIONS

FOR BIDDING PURPOSES ONLY

STATE OF SOUTH DAKOTA	PROJECT	SHEET	TOTAL SHEETS
	IM 0293(96)73 & IM 2292(90)0	F22	F98

Plotting Date: 10/23/2015

I229 SB
Sta. 76+77.0 to Sta. 97+13.9 SB

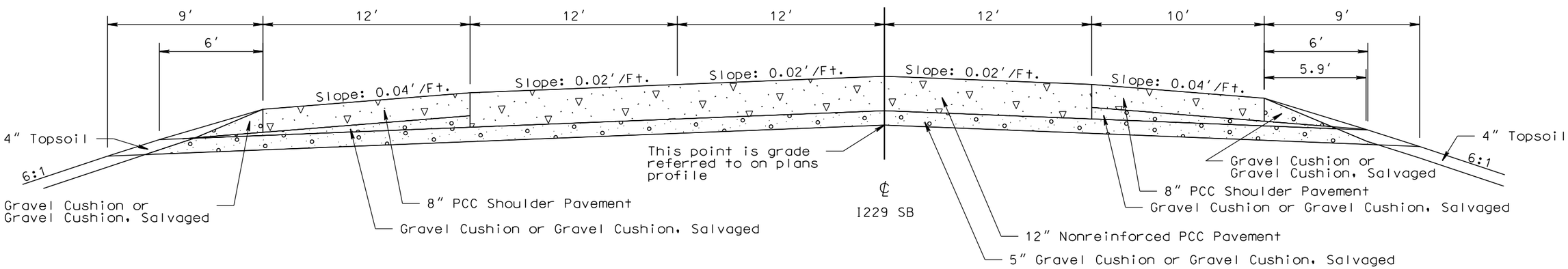

I229 SB
Sta. 97+13.9 to Sta. 101+23.8 SB

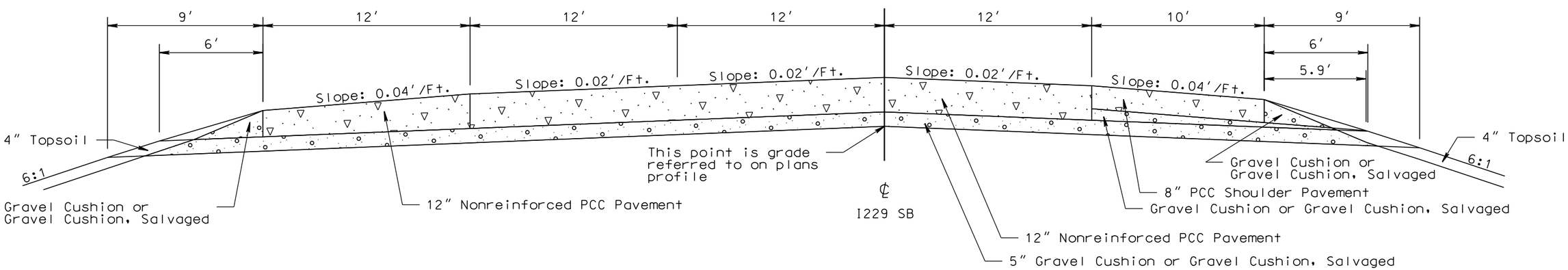

I229 NB
Sta. 149+69.4 to Sta. 152+77.3 NB

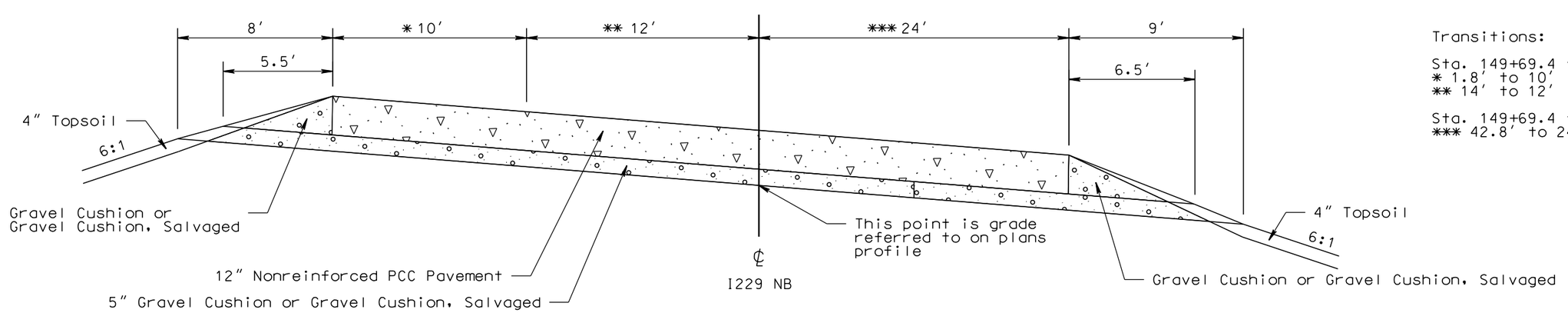

Transitions:

Sta. 149+69.4 to Sta. 152+08.4 I229 NB
* 1.8′ to 10′
** 14′ to 12′

Sta. 149+69.4 to Sta. 152+77.3 I229 NB
*** 42.8′ to 24′

PLOT SCALE - 1:6.00001

PLOTTED FROM - TRPR16032

PLOT NAME - 11

FILE - ...\LINC01OS\TYPICAL SECTIONS.DGN

TYPICAL SURFACING SECTIONS

FOR BIDDING PURPOSES ONLY

STATE OF SOUTH DAKOTA	PROJECT	SHEET	TOTAL SHEETS
	IM 0293(96)73 & IM 2292(90)0	F23	F98

Plotting Date: 10/23/2015

I229 NB
Sta. 152+77.3 to Sta. 181+05.17

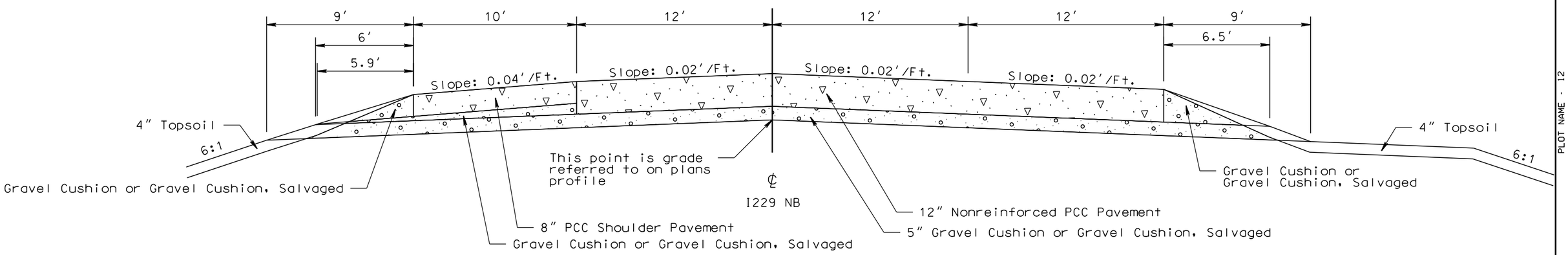

Sta. 11+91.2 to Sta. 26+16.1 Ramp A
Sta. 39+00.0 to Sta. 49+69.4 Ramp G

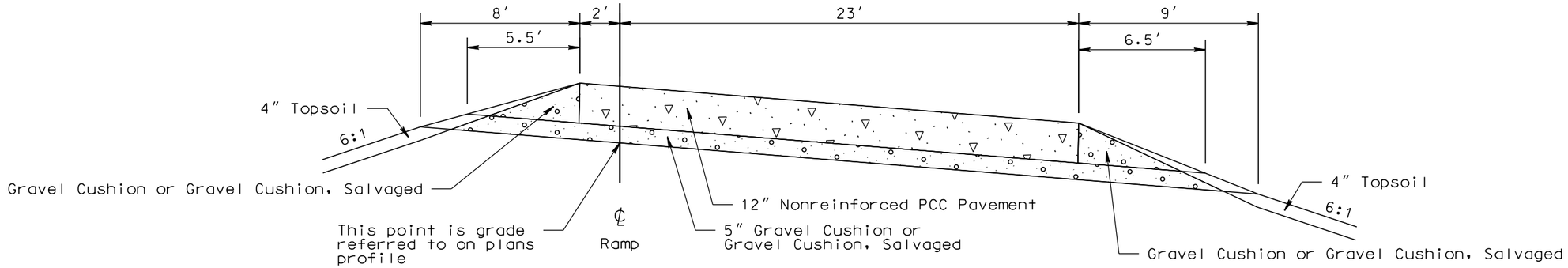

Sta. 10+80.3 to Sta. 39+00.0 Ramp G

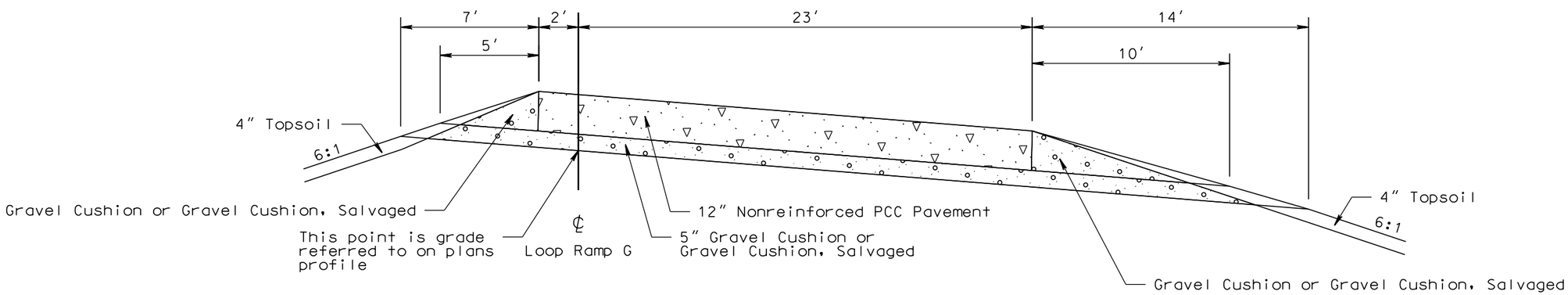

PLOT SCALE - 1:6.00001
PLOT NAME - 12
FILE - ...\LINC01GS\TYPICAL SECTIONS.DGN
PLOTTED FROM - TRPR16032

TYPICAL SURFACING SECTIONS

FOR BIDDING PURPOSES ONLY

STATE OF SOUTH DAKOTA	PROJECT	SHEET	TOTAL SHEETS
	IM 0293(96)73 & IM 2292(90)0	F24	F98

Plotting Date: 10/23/2015

Sta. 22+07.7 to Sta. 41+38.4 Ramp B

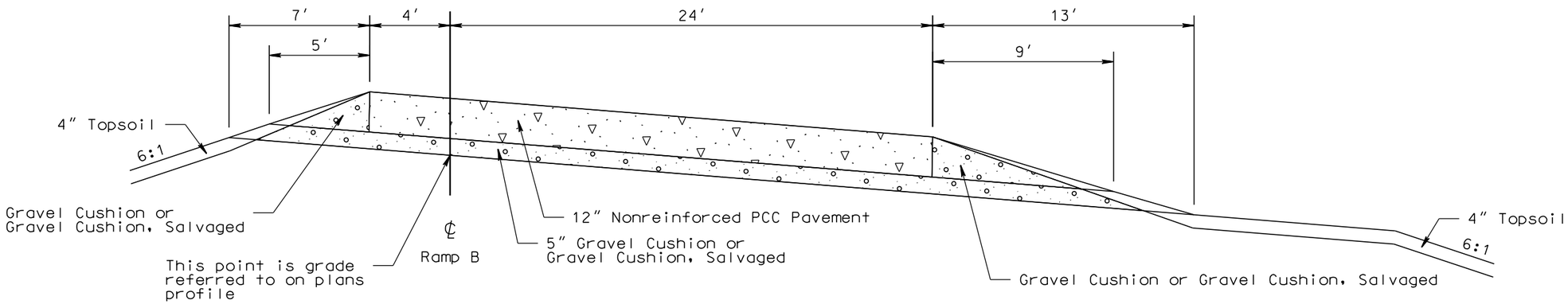

Sta. 12+80.7 to Sta. 25+22.0 Ramp C

Transition:

Sta. 19+40 to Sta. 19+99
* 25′ to 26′

Sta. 19+99 to Sta. 25+22
* 28′ to 34′

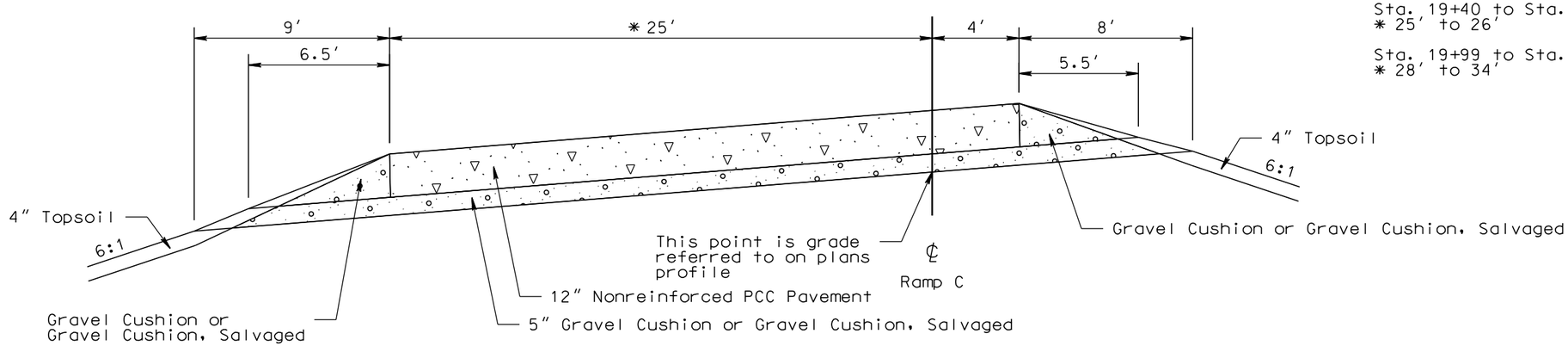

Sta. 25+22.0 to Sta. 42+00.0 Ramp C
Sta. 64+00.0 to Sta. 74+28.0 Ramp C

Transition:

Sta. 73+27.8 to Sta. 74+28.0 Ramp C
* 4′ to 10′

Sta. 73+57.4 to Sta. 74+28.0 Ramp C
** 54.3′ to 41.4′

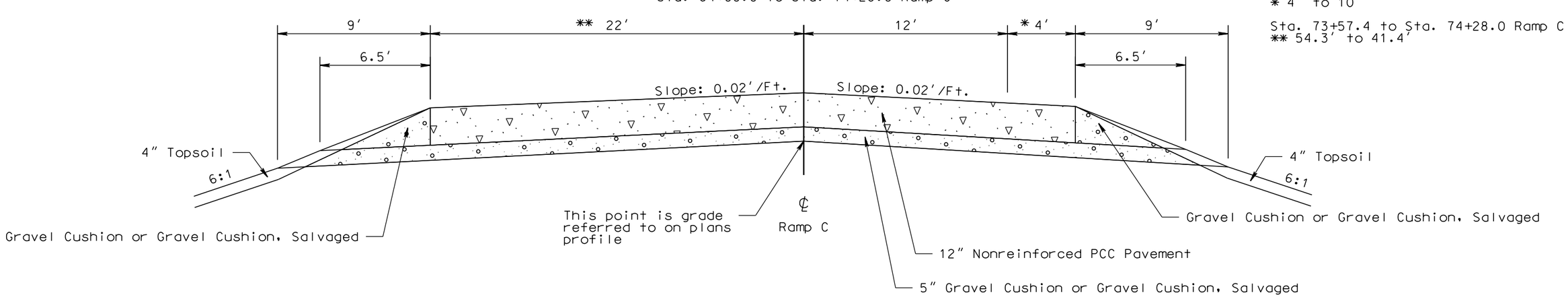

PLOT SCALE - 1:6.00001

PLOTTED FROM - TRPR16032

PLOT NAME - 13

FILE - ...\LINC010S\TYPICAL SECTIONS.DGN

TYPICAL SURFACING SECTIONS

FOR BIDDING PURPOSES ONLY

STATE OF SOUTH DAKOTA	PROJECT	SHEET	TOTAL SHEETS
	IM 0293(96)73 & IM 2292(90)0	F25	F98

Plotting Date: 10/23/2015

I29
Sta. 47+74 to Sta. 48+74 SB & NB
(Tea Interchange)

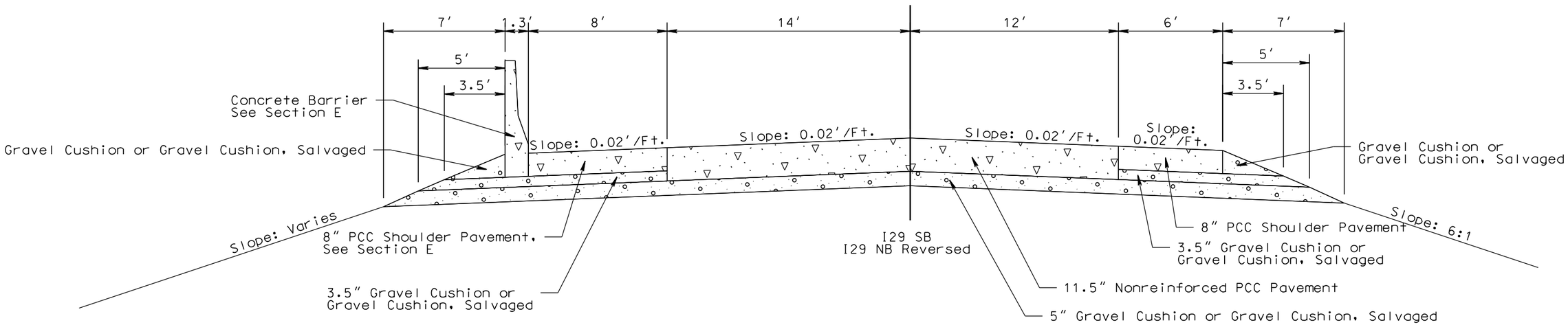

I29
Sta. 51+26 to Sta. 52+26 SB & NB
(Tea Interchange)

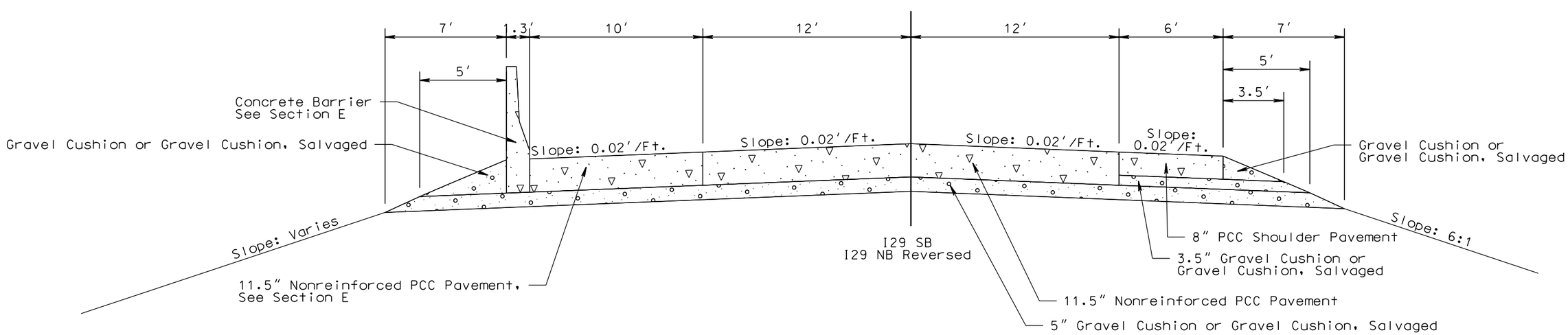

PLOT SCALE - 1:6.00001

PLOTTED FROM - TRPR16032

PLOT NAME - 14

FILE - ...\LINC01GS\TYPICAL SECTIONS.DGN

SHOULDER WIDENING TYPICALS

FOR BIDDING PURPOSES ONLY

STATE OF SOUTH DAKOTA	PROJECT	SHEET	TOTAL SHEETS
	IM 0293(96)73 & IM 2292(90)0	F26	F98

Plotting Date: 10/23/2015

Transition:

Sta. 80+38 to Sta. 105+34
* 20'

I-29
Sta. 43+50 to Sta. 79+10 SBL
Sta. 80+38 to Sta. 105+34 SBL
Sta. 113+33 to Sta. 117+71 SBL
Sta. 120+93 to Sta. 172+95 SBL

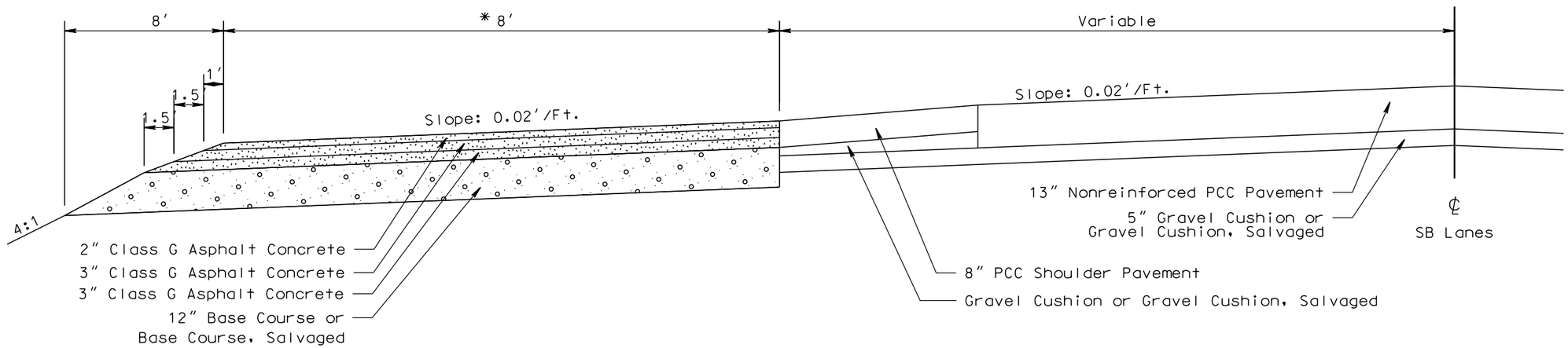

Salvage and Stockpile Asphalt Mix
and Granular Base Material

Transition:

Sta. 80+38 to Sta. 105+34
* 20'

I-29
Sta. 43+50 to Sta. 79+10 SBL
Sta. 80+38 to Sta. 105+34 SBL
Sta. 113+33 to Sta. 117+71 SBL
Sta. 120+93 to Sta. 172+95 SBL

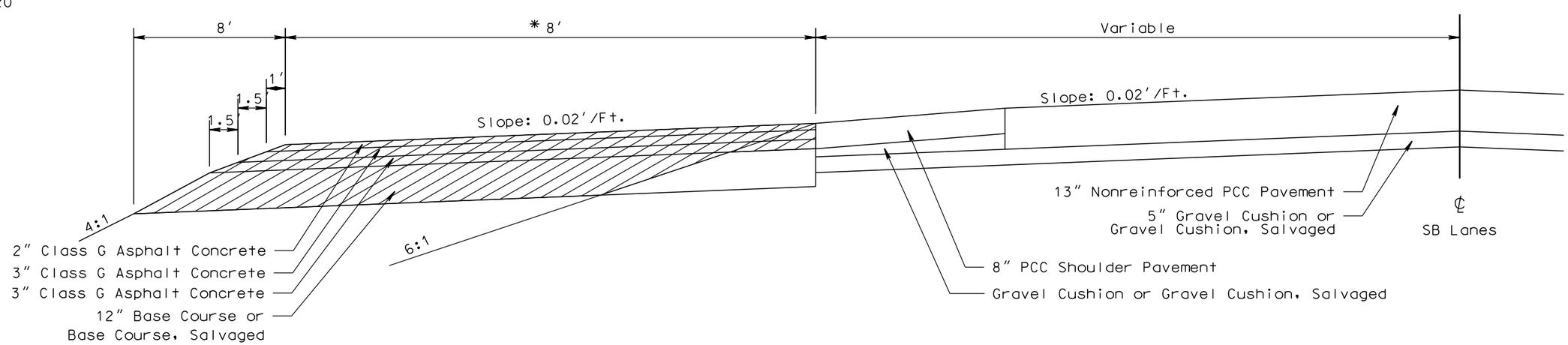

PLOT SCALE - 1:6.00001

PLOTTED FROM - TRPR16032

PLOT NAME - 15

FILE - ...\LINC01QS\TYPICAL SECTIONS.DGN

TYPICAL SURFACING SECTIONS

FOR BIDDING PURPOSES ONLY

STATE OF SOUTH DAKOTA	PROJECT	SHEET	TOTAL SHEETS
	IM 0293(96)73 & IM 2292(90)0	F27	F98

Plotting Date: 10/23/2015

Revised: 22 Oct 15, RML

Sta. 149+20.2 to Sta. 165+50 (I-229 NB)
Shoulder Widening for Traffic Control

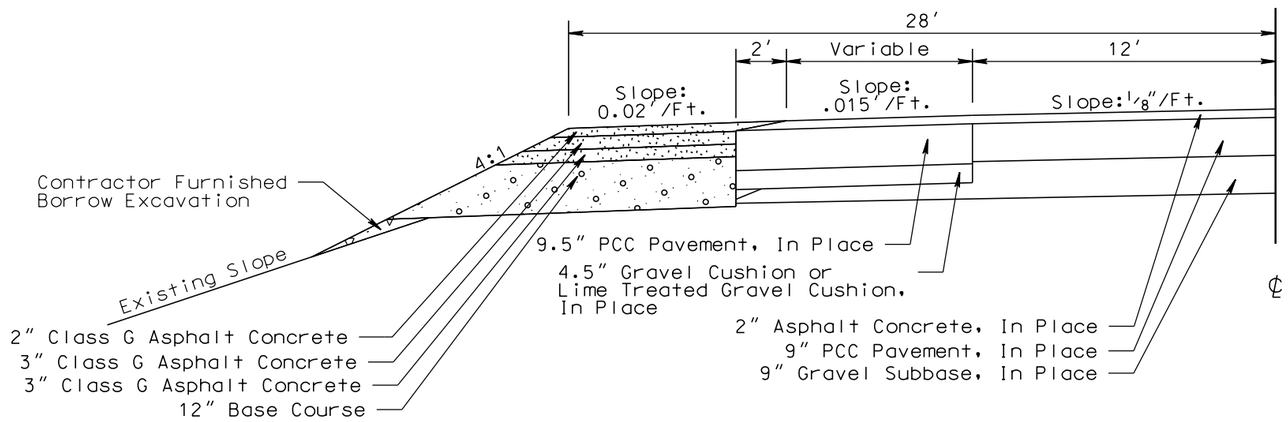

Sta. 165+50 to Sta. 167+55 (I-229 NB)
Shoulder Widening for Traffic Control

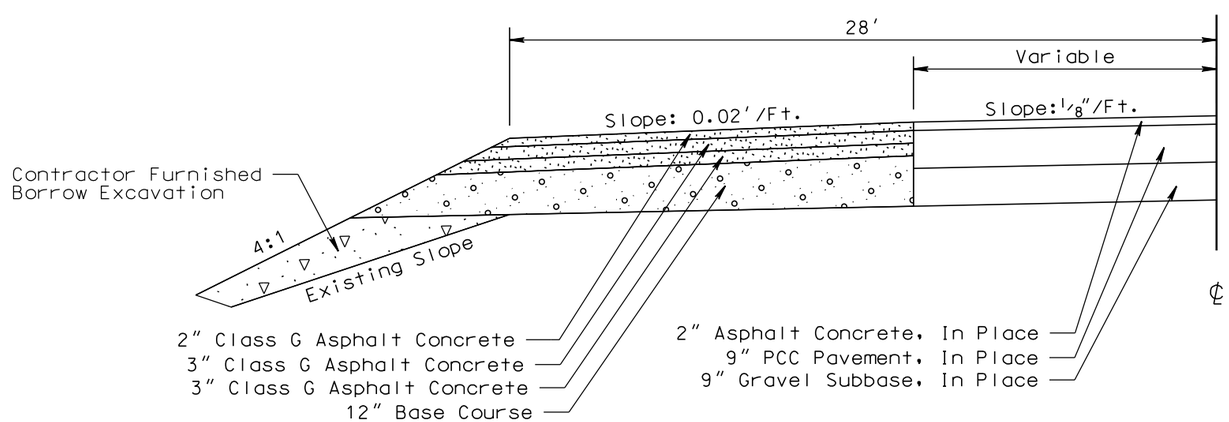

PLOT SCALE - 1:6.00001

PLOT NAME - 16

FILE -...\LINC01GS\TYPICAL SECTIONS.DGN

PLOTTED FROM - TRPR16032

TYPICAL SURFACING SECTIONS

FOR BIDDING PURPOSES ONLY

STATE OF SOUTH DAKOTA	PROJECT	SHEET	TOTAL SHEETS
	IM 0293(96)73 & IM 2292(90)0	F28	F98

Plotting Date: 10/23/2015

Revised: 22 Oct 15, RML

Sta. 167+55 to Sta. 176+22 (I-229 NB)
Shoulder Widening for Traffic Control

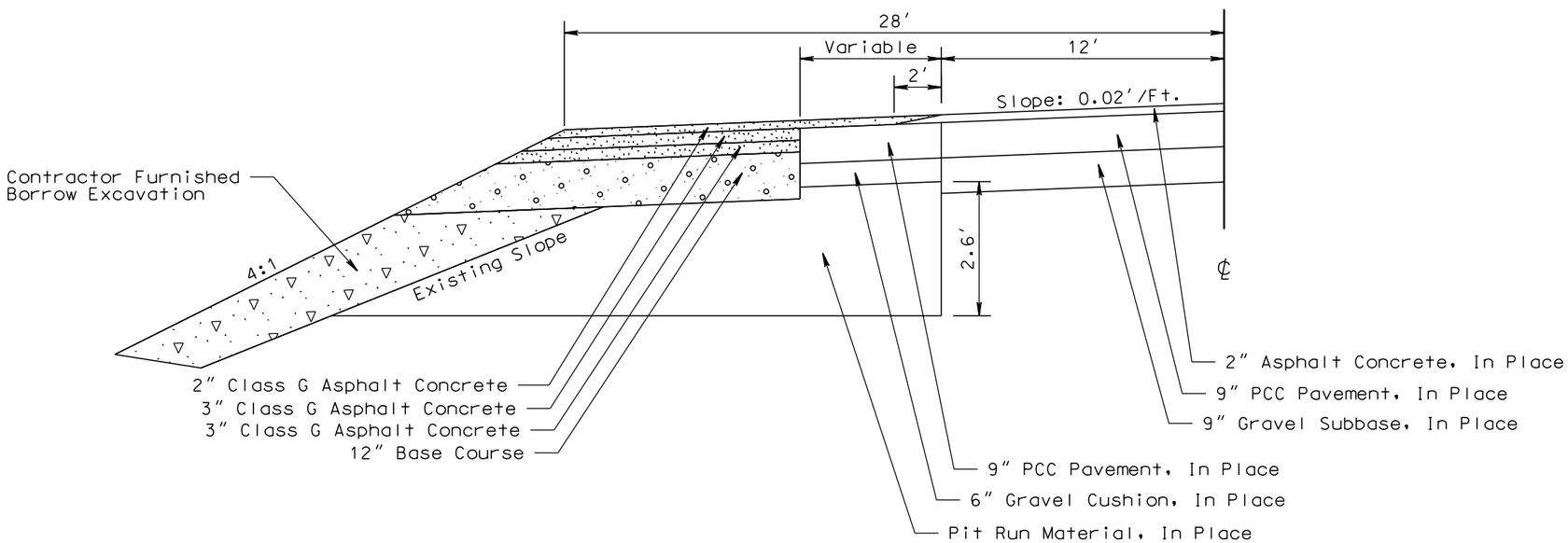

Sta. 176+22 to Sta. 182+79.6 (I-229 NB)
Shoulder Widening for Traffic Control

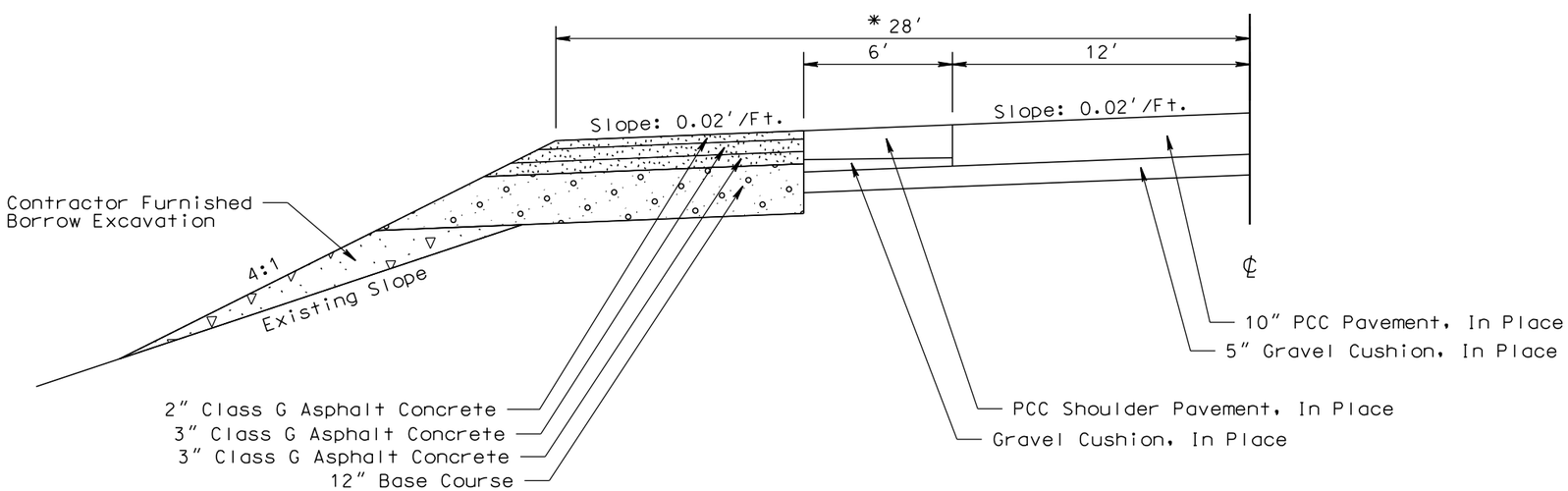

Transition:

Sta. 181+05.2 to Sta. 182+79.6
* 28' to 18'

PLOT SCALE - 1:6.00001

PLOT NAME - 17

FILE - ...\LINC01GS\TYPICAL SECTIONS.DGN

PLOTTED FROM - TRPR16032

SHOULDER WIDENING REMOVAL

FOR BIDDING PURPOSES ONLY

STATE OF SOUTH DAKOTA	PROJECT	SHEET	TOTAL SHEETS
	IM 0293(96)73 & IM 2292(90)0	F29	F98

Plotting Date: 10/23/2015

Salvage and Stockpile Asphalt Mix and Granular Base Material

I-29
Sta. 41+08.6 to Sta. 43+55.3 NBL
(Constructed during previous project)

Transition:

Sta. 41+08.6 to Sta. 43+55.3
* 1' to 6'

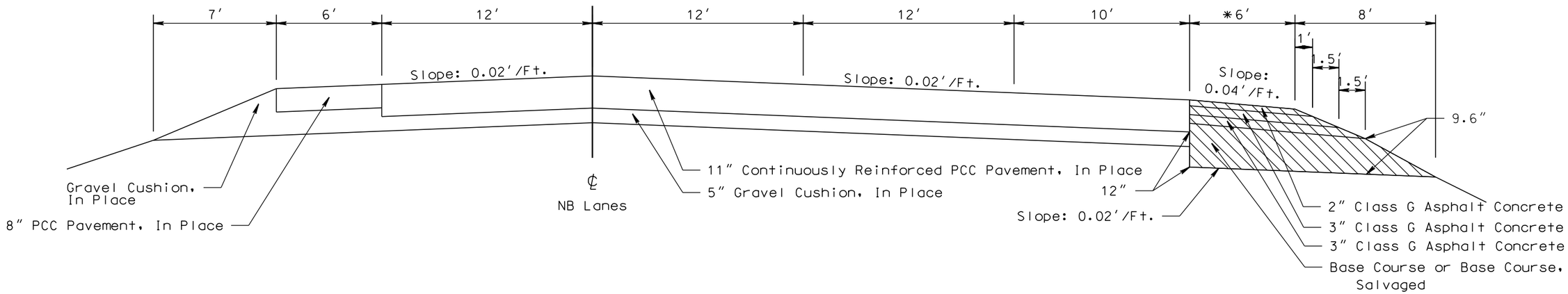

Transitions:

Sta. 43+55.3 to Sta. 46+45.0
* 22' to 28'

Sta. 110+00 to Sta. 113+59.6
* 28' to 36'
** 6' to 12'

Sta. 128+40.7 to Sta. 131+69.2
* 36' to 28'
** 12' to 6'

Sta. 169+81.0 to Sta. 172+95.0
* 28' to 22'

I-29
Sta. 43+55.3 to Sta. 113+59.6 NBL
Sta. 128+40.7 to Sta. 133+81.9 NBL
Sta. 146+49.2 to Sta. 172+95.0 NBL
(Constructed during previous project)

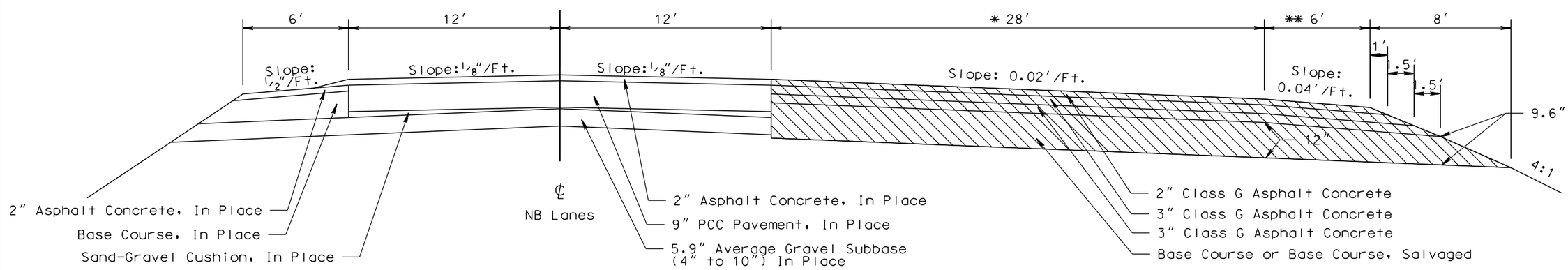

PLOT SCALE - 1:6.00001

PLOT NAME - 18

FILE -...\LINC01GS\TYPICAL SECTIONS.DGN

PLOTTED FROM - TRPR16032

SHOULDER WIDENING REMOVAL

FOR BIDDING PURPOSES ONLY

STATE OF SOUTH DAKOTA	PROJECT	SHEET	TOTAL SHEETS
	IM 0293(96)73 & IM 2292(90)0	F30	F98

Plotting Date: 10/23/2015

Salvage and Stockpile Asphalt Mix and Granular Base Material

Transitions:

Sta. 134+64.2 to Sta. 141+82.3
* 45' to 10'

Sta. 134+64.2 to Sta. 146+50.4
** 0' to 12'

I-29
Sta. 133+81.9 to Sta. 146+49.2 NBL
(Constructed during previous project)

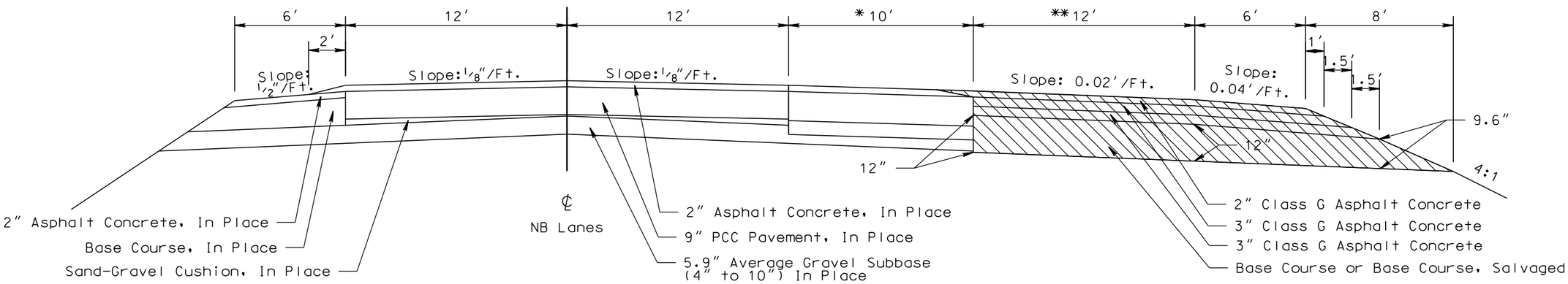

I-29
Sta. 172+95.0 to Sta. 177+62.7 NBL
(Constructed during previous project)

Transition

Sta. 172+95.0 to Sta. 177+62.7
* 6' to 1'

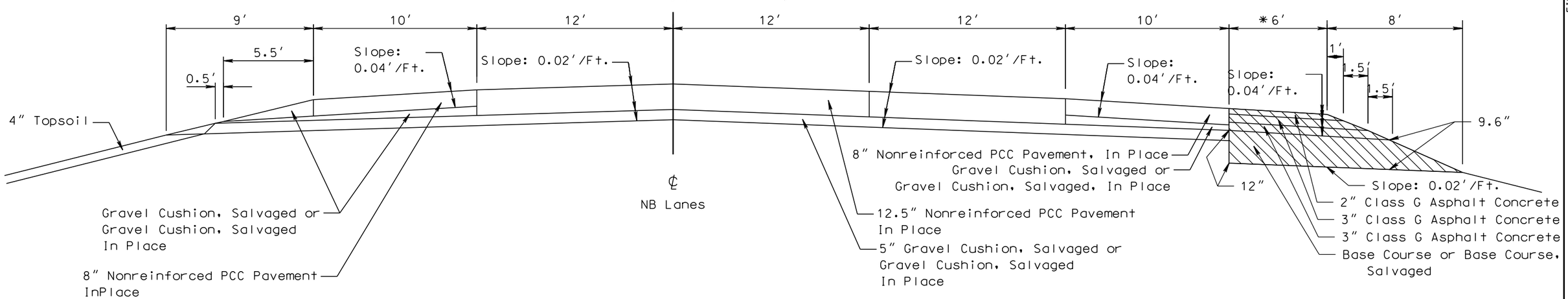

PLOT SCALE - 1:6.00001

PLOT NAME - 19

FILE -...\LINC01GS\TYPICAL SECTIONS.DGN

PLOTTED FROM - TRPR16032

RAMP DETOUR SURFACING

FOR BIDDING PURPOSES ONLY

STATE OF SOUTH DAKOTA	PROJECT	SHEET	TOTAL SHEETS
	IM 0293(96)73 & IM 2292(90)0	F31	F98

Plotting Date: 10/23/2015

RAMP DETOURS
I-29 SBL to Ramp B Detour, Sta. 105+00 I-29
Ramp G to Ramp C Detour, Sta. 54+00 Ramp C
Ramp A to I-29 SB Detour, Sta. 140+00 I-29

RAMP DETOUR TYPICAL NEXT TO PCC PAVEMENT

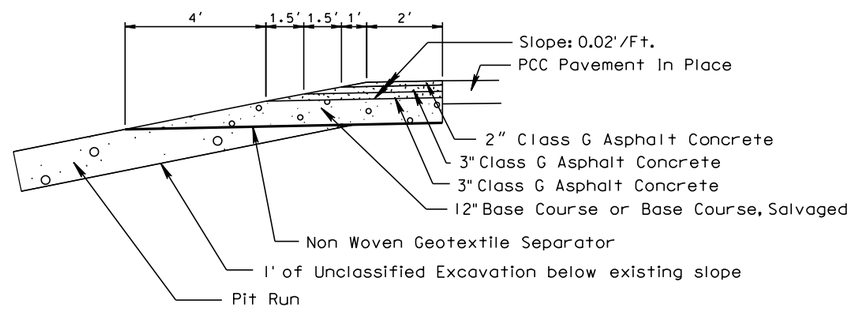

RAMP DETOUR TYPICAL SECTION

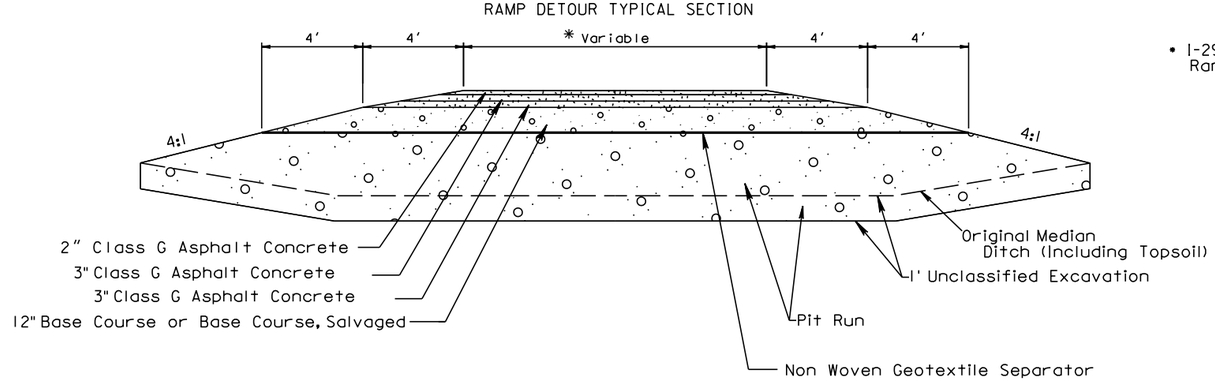

- I-29 SBL to Ramp B = 14'
  Ramp G to Ramp C = 25'

PLOT SCALE - 1:6.00001

PLOTTED FROM - TRPR16032

PLOT NAME - 20

FILE - ...\LINC010S\TYPICAL SECTIONS.DGN

RAMP DETOUR REMOVAL

FOR BIDDING PURPOSES ONLY

STATE OF SOUTH DAKOTA	PROJECT	SHEET	TOTAL SHEETS
	IM 0293(96)73 & IM 2292(90)0	F32	F98

Plotting Date: 10/23/2015

PLOT SCALE - 1:6.00001

PLOT NAME - 21

FILE - ...\LINC01GS\TYPICAL SECTIONS.DGN

RAMP DETOURS
I-29 SBL to Ramp B Detour, Sta. 105+00 I-29
Ramp G to Ramp C Detour, Sta. 54+00 Ramp C
Ramp A to I-29 SB Detour, Sta. 140+00 I-29

Salvage and Stockpile Asphalt Mix and Granular Base Material

Remove Granular Material

RAMP DETOUR TYPICAL NEXT TO PCC PAVEMENT

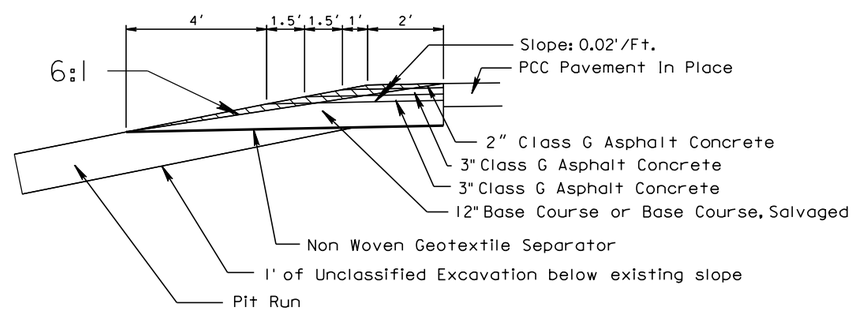

RAMP DETOUR TYPICAL SECTION

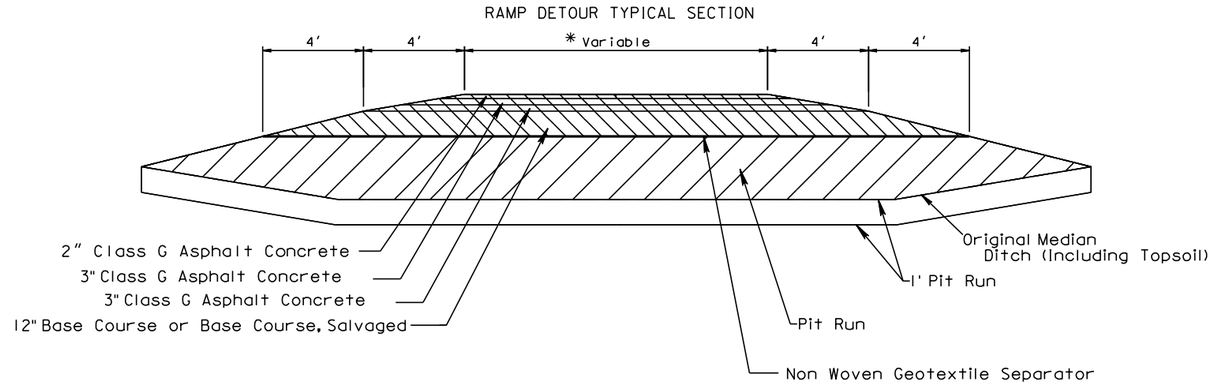

* I-29 SBL to Ramp B = 14'
Ramp G to Ramp C = 25'

PLOTTED FROM - TRPR16032

FOR BIDDING PURPOSES ONLY

Plotting Date: 10/23/2015

RAMP DETOUR REMOVAL

IN PLACE RAMP DETOURS
(constructed during previous project)

Ramp C to I-29 NB Detour, Sta. 75+00 I-29
Ramp G to I-29 NB Detour, Sta. 105+00 I-29
Ramp C to Ramp G Detour, Sta. 38+00 Ramp C
Ramp C to Ramp G Detour, Sta. 63+00 Ramp C

Salvage and Stockpile Asphalt Mix and Granular Base Material

Salvage and Stockpile Granular Material
or
Remove Granular Material

RAMP DETOUR TYPICAL NEXT TO PCC PAVEMENT MAINLINE OR PCC PAVEMENT SHOULDER

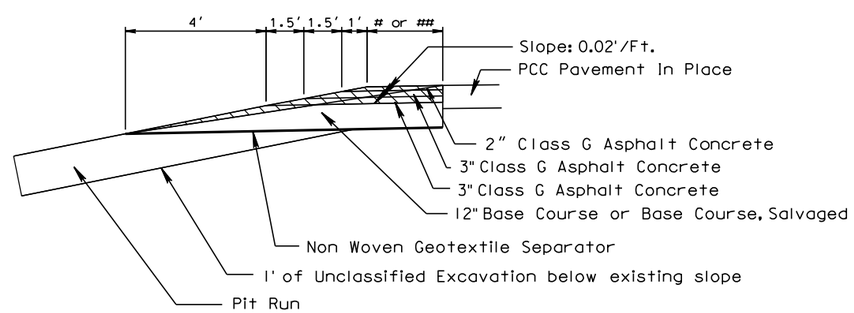

6' pavement to replace Asphalt Concrete shoulder
3' pavement along PCC Pavement shoulder

RAMP DETOUR TYPICAL SECTION

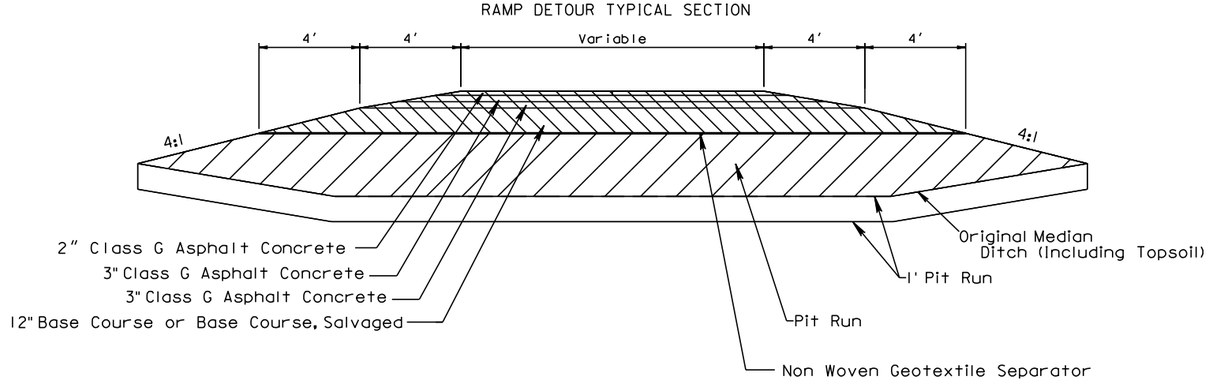

PLOT SCALE - 1:6.00001
PLOTTED FROM - TRPR16032
PLOT NAME - 22
FILE - ...\LINC010S\TYPICAL SECTIONS.DGN

PCC PAVEMENT JOINT LAYOUT

FOR BIDDING PURPOSES ONLY

STATE OF SOUTH DAKOTA	PROJECT	SHEET	TOTAL SHEETS
	IM 0293(96)73 & IM 2292(90)0	F34	F98

Plotting Date: 10/23/2015

Scale 1 Inch = 40 Feet
Sheet 1 of 15 Sheets

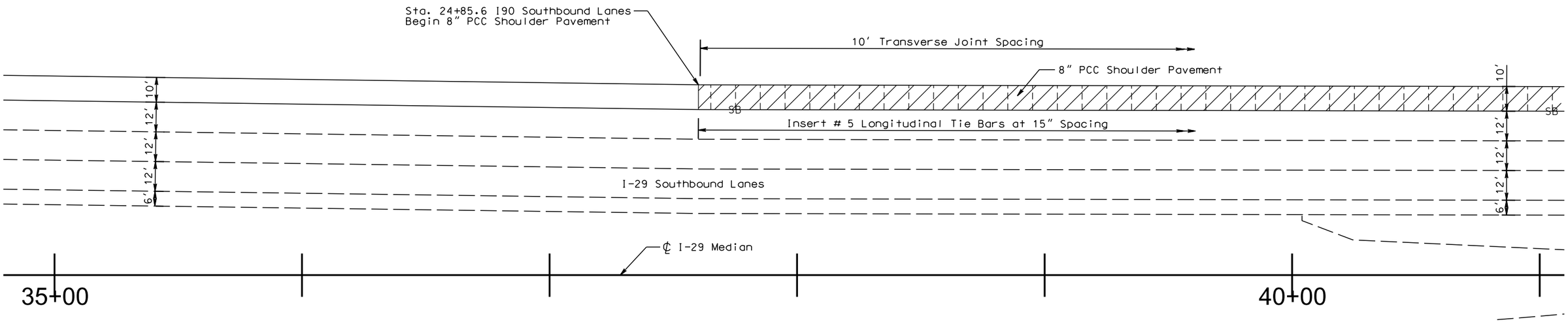

LEGEND:

Longitudinal Joint Without Tie Bars (Construction or Sawed) ——L——L——
Longitudinal Joint With Tie Bars (Construction or Sawed) ——LT——LT——
Transverse Contraction Joint —
Steel Bar Installation in Longitudinal or Transverse Joint ——SB——SB——
Areas to be poured monolithically with adjacent slab (See Detail A)

Transverse contraction joints within these areas shall not have dowel bar assemblies. All other transverse contraction joints shall have dowel bar assemblies.

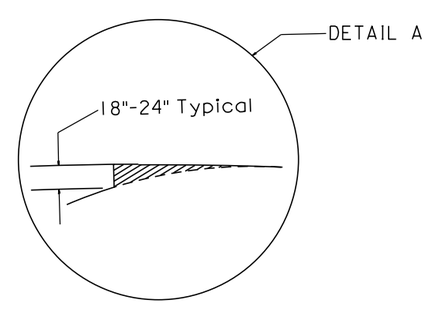

PLOT SCALE - 1:40

PLOT NAME - 23

FILE - ...\PCC PAVEMENT LAYOUT.DGN

PLOTTED FROM - TRPR16032

PCC PAVEMENT JOINT LAYOUT

FOR BIDDING PURPOSES ONLY

STATE OF SOUTH DAKOTA	PROJECT	SHEET	TOTAL SHEETS
	IM 0293(96)73 & IM 2292(90)0	F35	F98

Plotting Date: 10/23/2015

Scale 1 Inch = 40 Feet
Sheet 2 of 15 Sheets

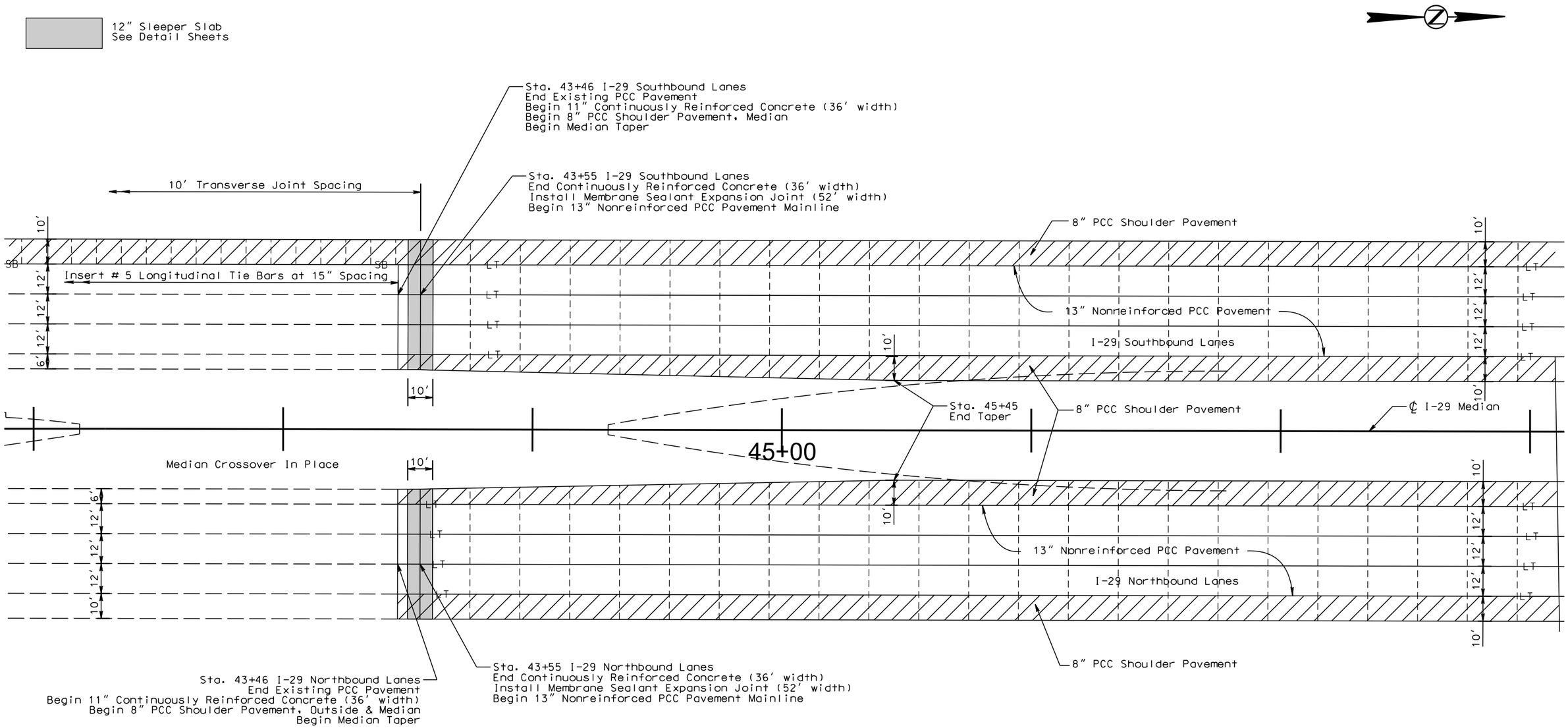

PLOT SCALE - 1:40

PLOT NAME - 24

FILE - ...\PCC PAVEMENT LAYOUT.DGN

PLOTTED FROM - TRPR16032

PCC PAVEMENT JOINT LAYOUT

FOR BIDDING PURPOSES ONLY

STATE OF SOUTH DAKOTA	PROJECT	SHEET	TOTAL SHEETS
	IM 0293(96)73 & IM 2292(90)0	F36	F98

Plotting Date: 10/23/2015

Scale 1 Inch = 40 Feet
Sheet 3 of 15 Sheets

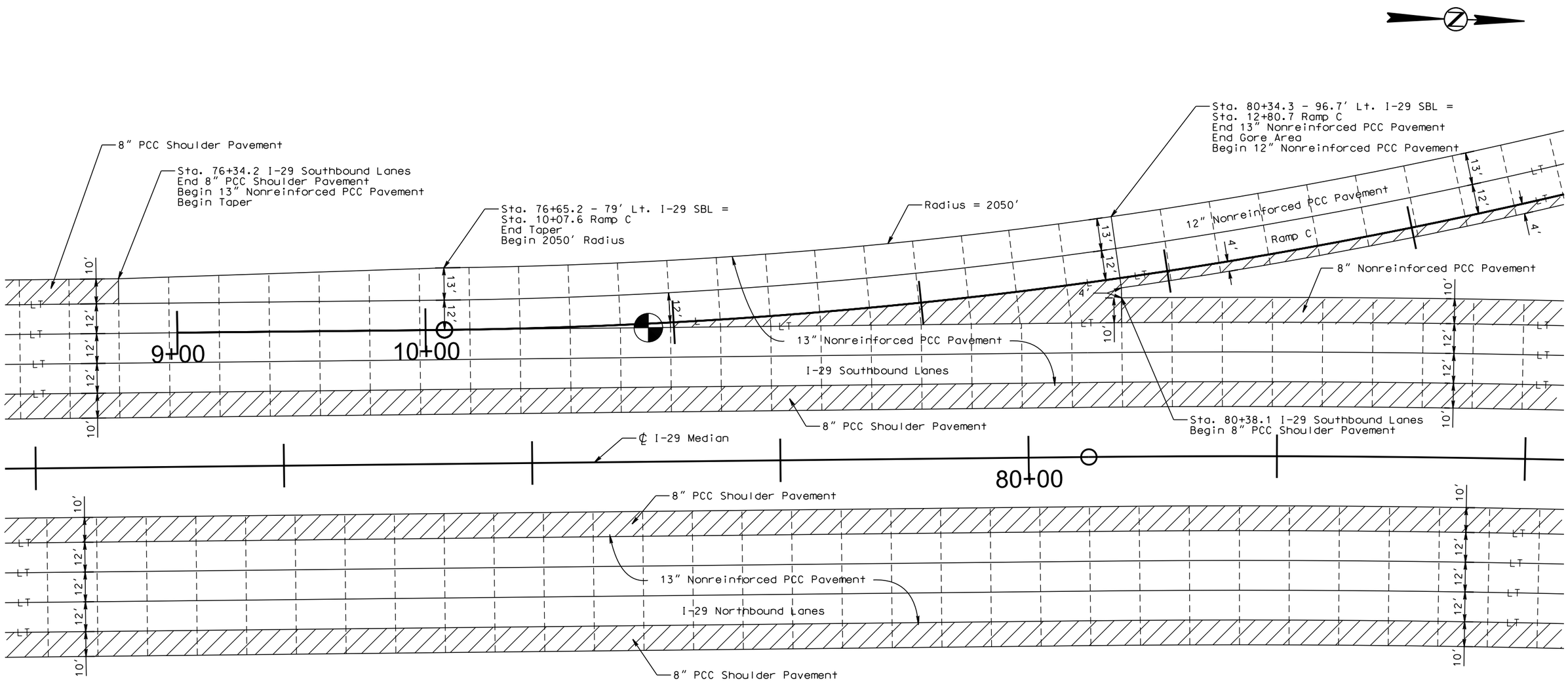

PLOT SCALE - 1:40
PLOTTED FROM - TRPR16032
PLOT NAME - 25
FILE - ...\PCC PAVEMENT LAYOUT.DGN

PCC PAVEMENT JOINT LAYOUT

FOR BIDDING PURPOSES ONLY

STATE OF SOUTH DAKOTA	PROJECT	SHEET	TOTAL SHEETS
	IM 0293(96)73 & IM 2292(90)0	F37	F98

Plotting Date: 10/23/2015

Scale 1 Inch = 40 Feet
Sheet 4 of 15 Sheets

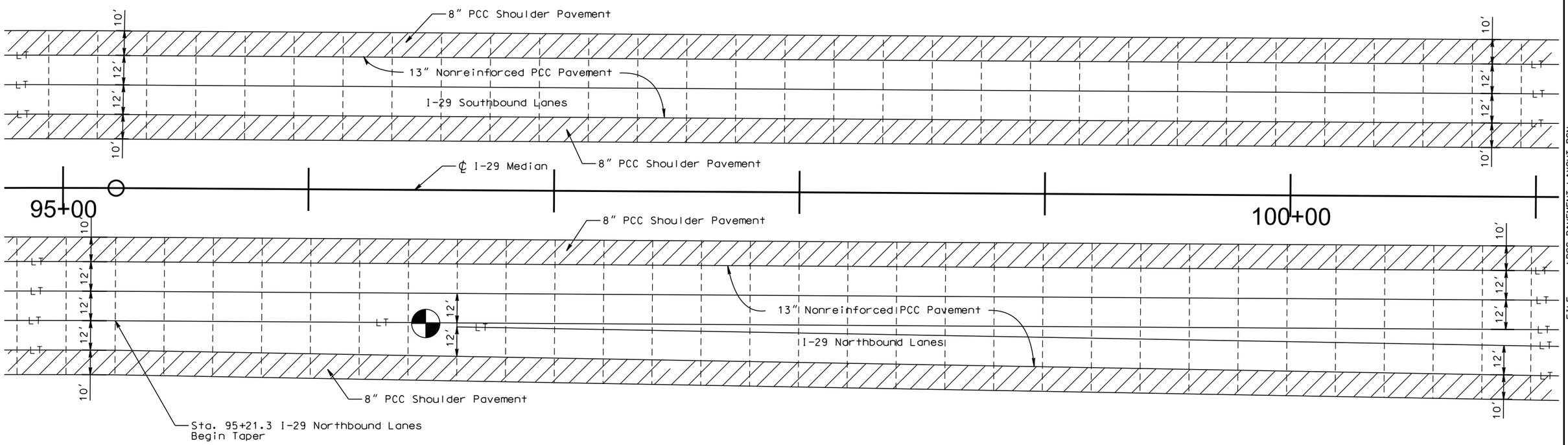

PLOT SCALE - 1:40

PLOTTED FROM - TRPR16032

PLOT NAME - 26

FILE - ...\PCC PAVEMENT LAYOUT.DGN

PCC PAVEMENT JOINT LAYOUT

FOR BIDDING PURPOSES ONLY

STATE OF SOUTH DAKOTA	PROJECT	SHEET	TOTAL SHEETS
	IM 0293(96)73 & IM 2292(90)0	F38	F98

Plotting Date: 10/23/2015

Scale 1 Inch = 40 Feet
Sheet 5 of 15 Sheets

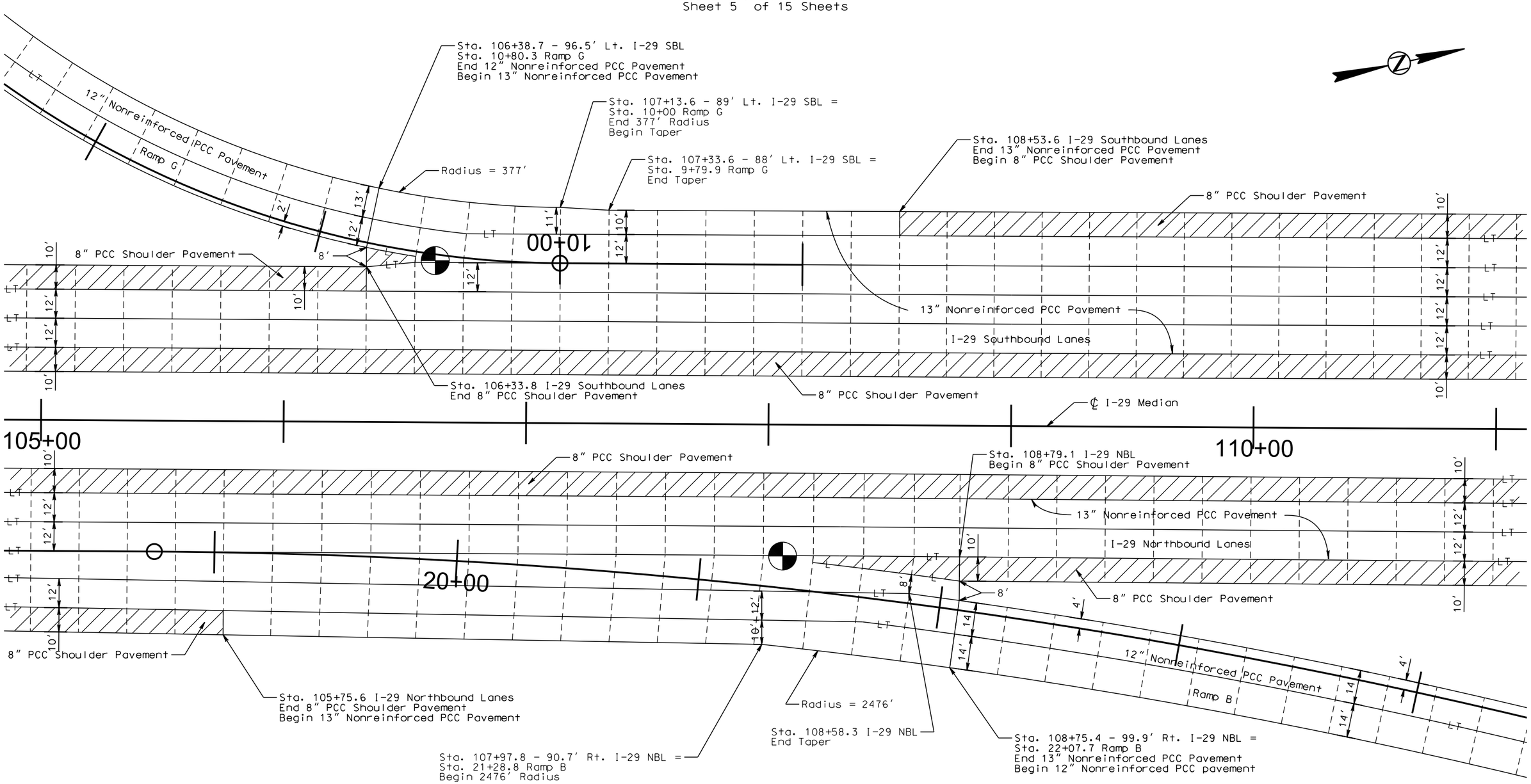

PLOT SCALE - 1:40

PLOT NAME - 27

FILE - ...\PCC PAVEMENT LAYOUT.DGN

PLOTTED FROM - TRPR16032

PCC PAVEMENT JOINT LAYOUT

FOR BIDDING PURPOSES ONLY

STATE OF SOUTH DAKOTA	PROJECT	SHEET	TOTAL SHEETS
	IM 0293(96)73 & IM 2292(90)0	F39	F98

Plotting Date: 10/23/2015

Scale 1 Inch = 40 Feet
Sheet 6 of 15 Sheets

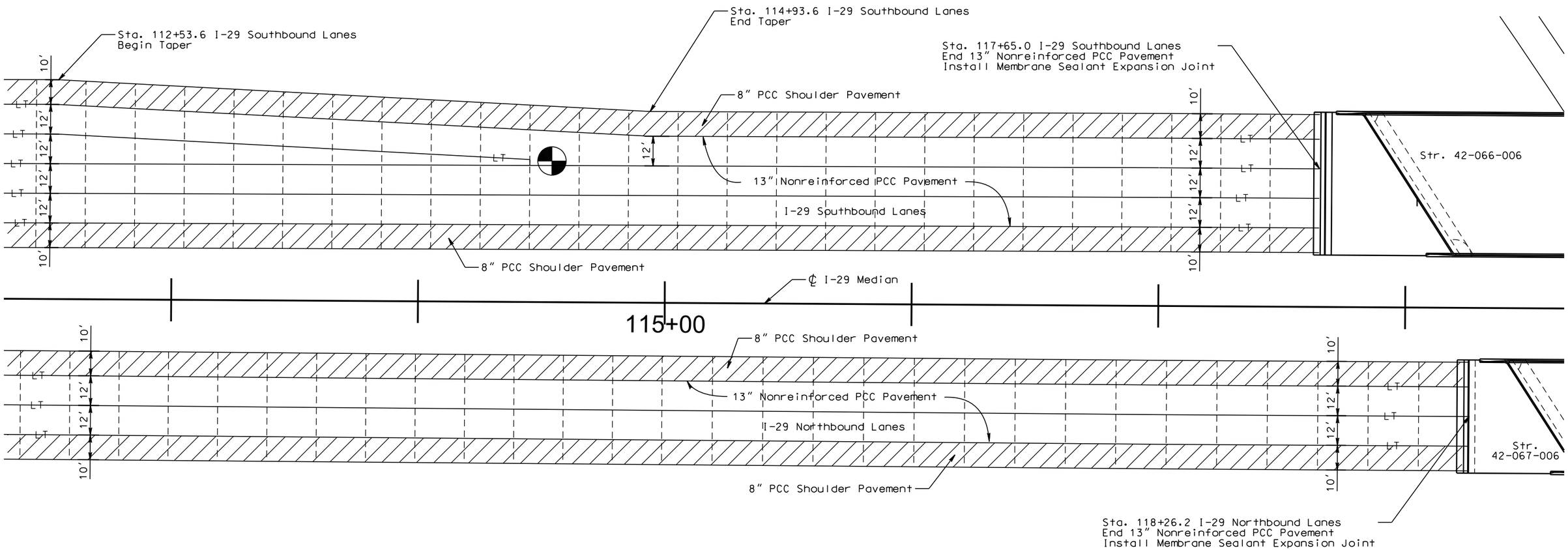

PLOT SCALE - 1:40

PLOT NAME - 28

FILE - ...\PCC PAVEMENT LAYOUT.DGN

PLOTTED FROM - TRPR16032

PCC PAVEMENT JOINT LAYOUT

FOR BIDDING PURPOSES ONLY

STATE OF SOUTH DAKOTA	PROJECT	SHEET	TOTAL SHEETS
	IM 0293(96)73 & IM 2292(90)0	F40	F98

Plotting Date: 10/23/2015

Scale 1 Inch = 40 Feet
Sheet 7 of 15 Sheets

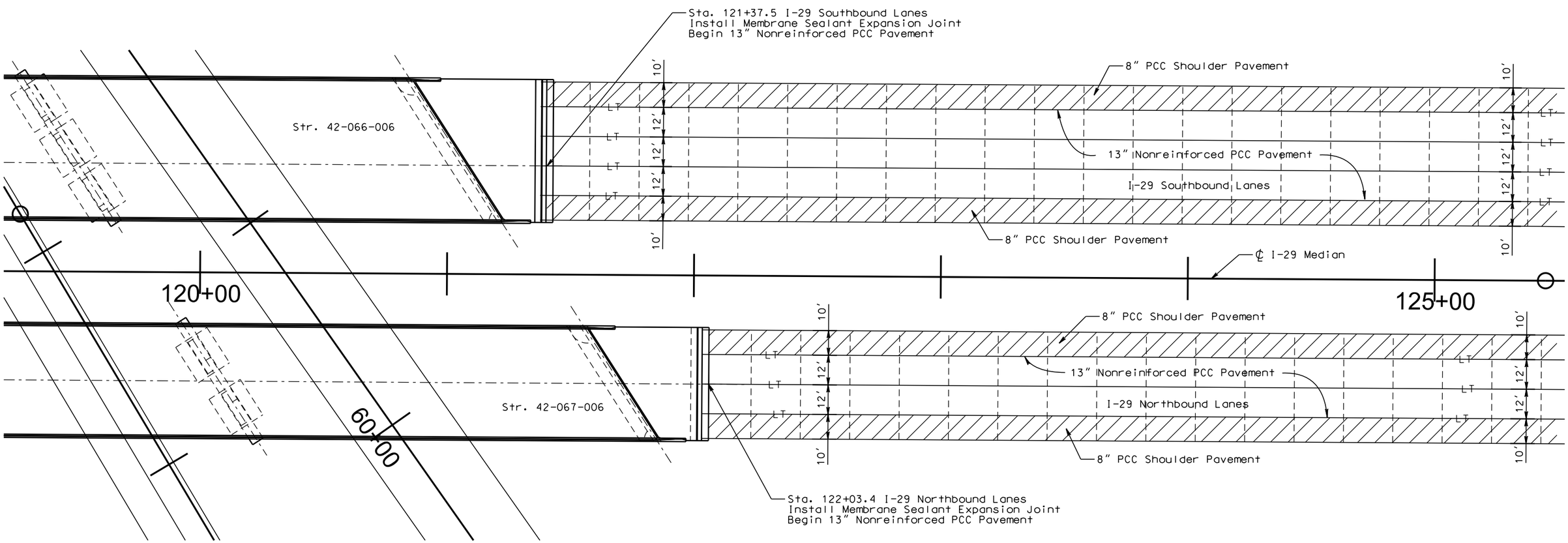

PLOT SCALE - 1:40

PLOT NAME - 29

FILE - ...\PCC PAVEMENT LAYOUT.DGN

PLOTTED FROM - TRPR16032

PCC PAVEMENT JOINT LAYOUT

FOR BIDDING PURPOSES ONLY

STATE OF SOUTH DAKOTA	PROJECT	SHEET	TOTAL SHEETS
	IM 0293(96)73 & IM 2292(90)0	F41	F98

Plotting Date: 10/23/2015

Scale 1 Inch = 40 Feet
Sheet 8 of 15 Sheets

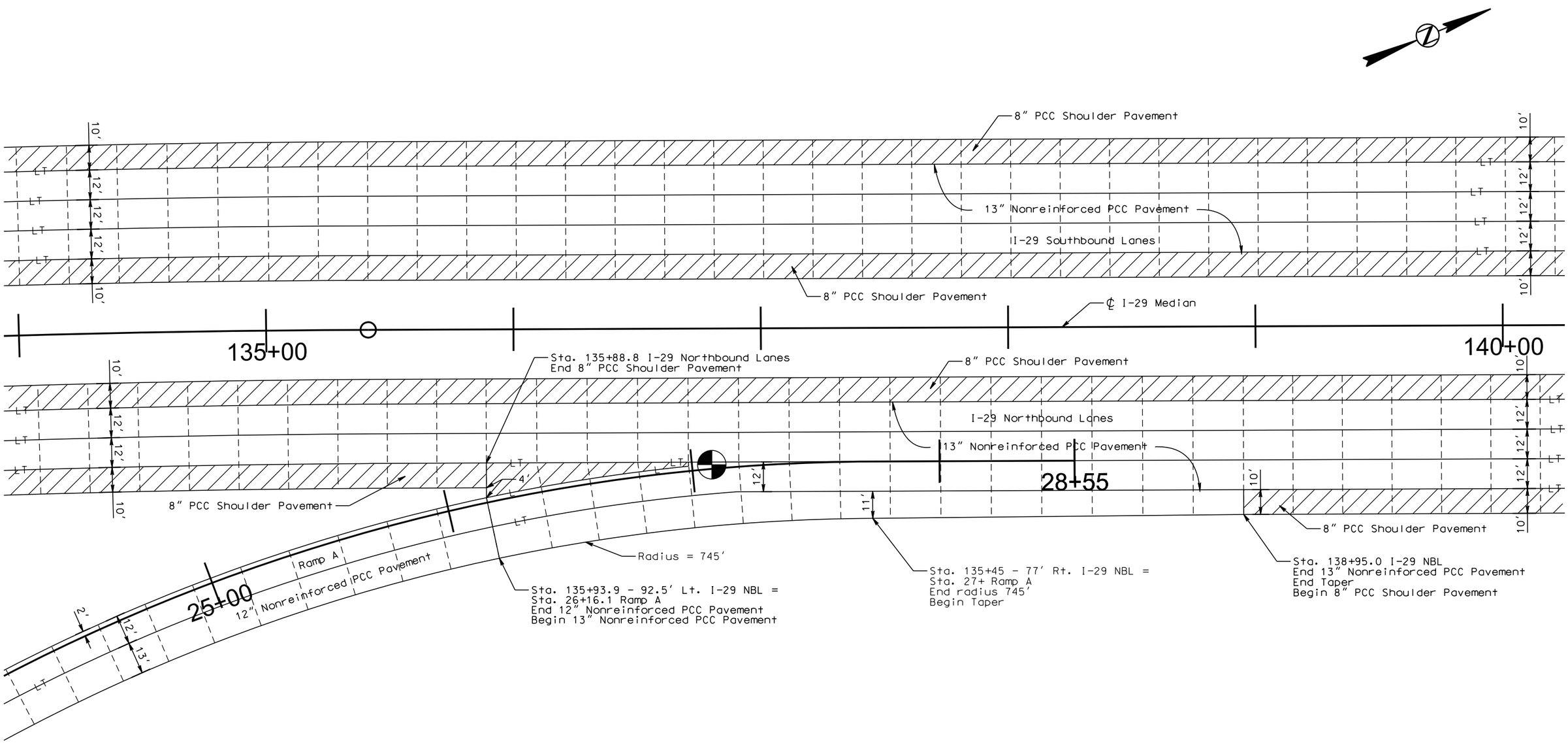

PLOT SCALE - 1:40

PLOT NAME - 30

FILE -...\PCC PAVEMENT LAYOUT.DGN

PLOTTED FROM - TRPR16032

PCC PAVEMENT JOINT LAYOUT

FOR BIDDING PURPOSES ONLY

STATE OF SOUTH DAKOTA	PROJECT	SHEET	TOTAL SHEETS
	IM 0293(96)73 & IM 2292(90)0	F42	F98

Plotting Date: 10/23/2015

Scale 1 Inch = 40 Feet
Sheet 9 of 15 Sheets

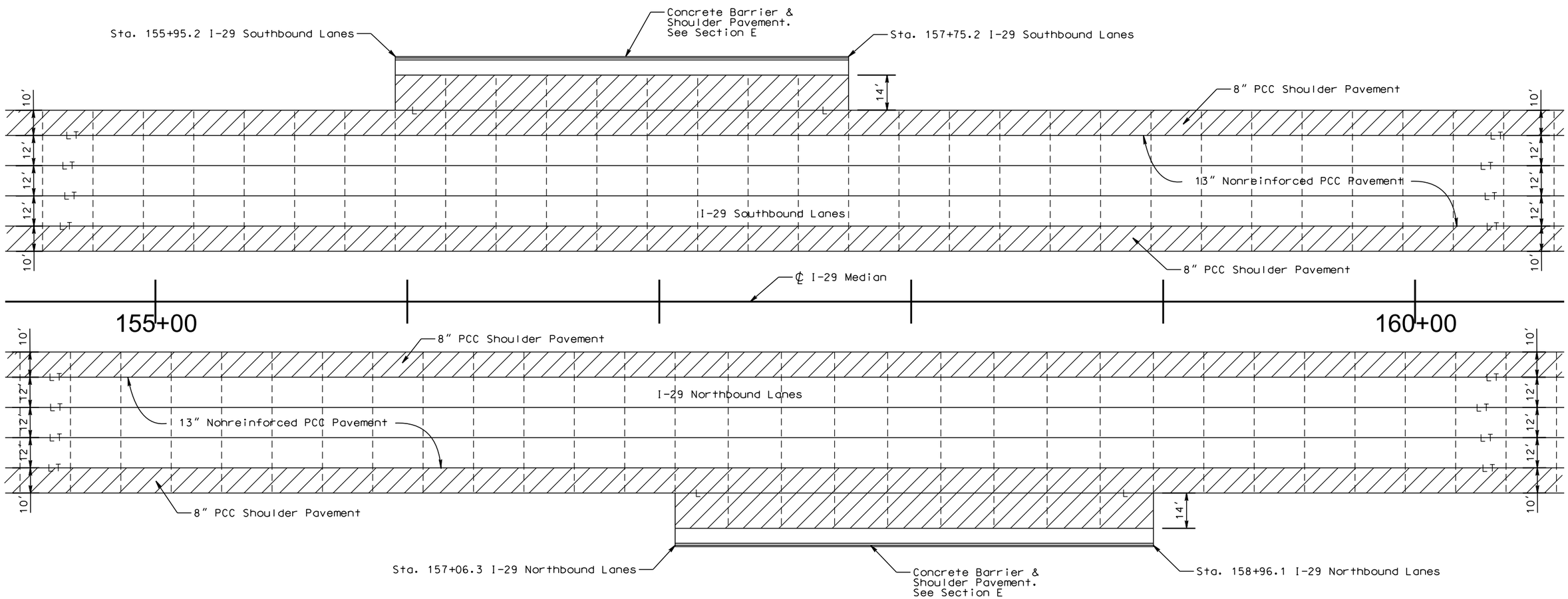

PLOT SCALE - 1:40

PLOTTED FROM - TRPR16032

PLOT NAME - 31

FILE - ...\PCC PAVEMENT LAYOUT.DGN

PCC PAVEMENT JOINT LAYOUT

FOR BIDDING PURPOSES ONLY

STATE OF SOUTH DAKOTA	PROJECT	SHEET	TOTAL SHEETS
	IM 0293(96)73 & IM 2292(90)0	F43	F98

Plotting Date: 10/23/2015

Scale 1 Inch = 40 Feet
Sheet 10 of 15 Sheets

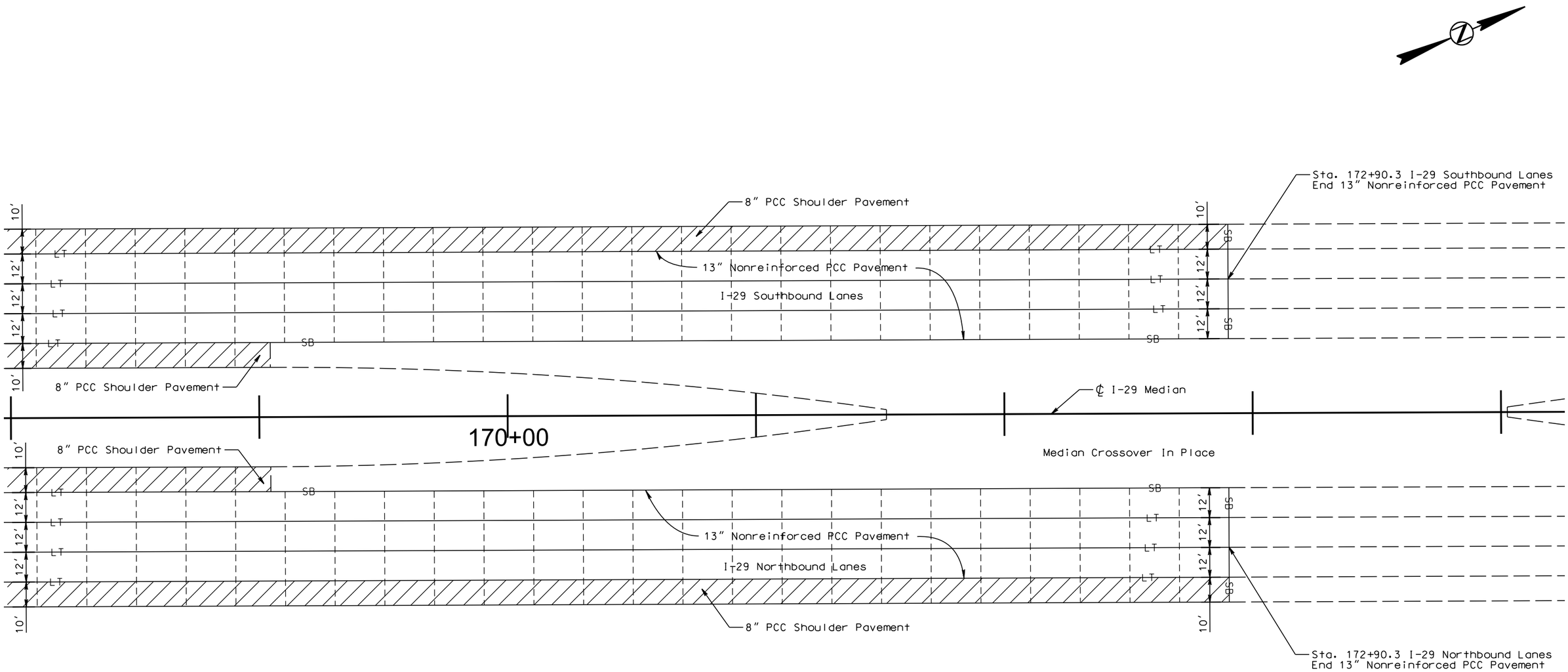

PLOT SCALE - 1:40

PLOT NAME - 32

FILE - ...\PCC PAVEMENT LAYOUT.DGN

PLOTTED FROM - TRPR16032

PCC PAVEMENT JOINT LAYOUT

FOR BIDDING PURPOSES ONLY

STATE OF SOUTH DAKOTA	PROJECT	SHEET	TOTAL SHEETS
	IM 0293(96)73 & IM 2292(90)0	F44	F98

Plotting Date: 10/23/2015

Scale 1 Inch = 40 Feet
Sheet 11 of 15 Sheets

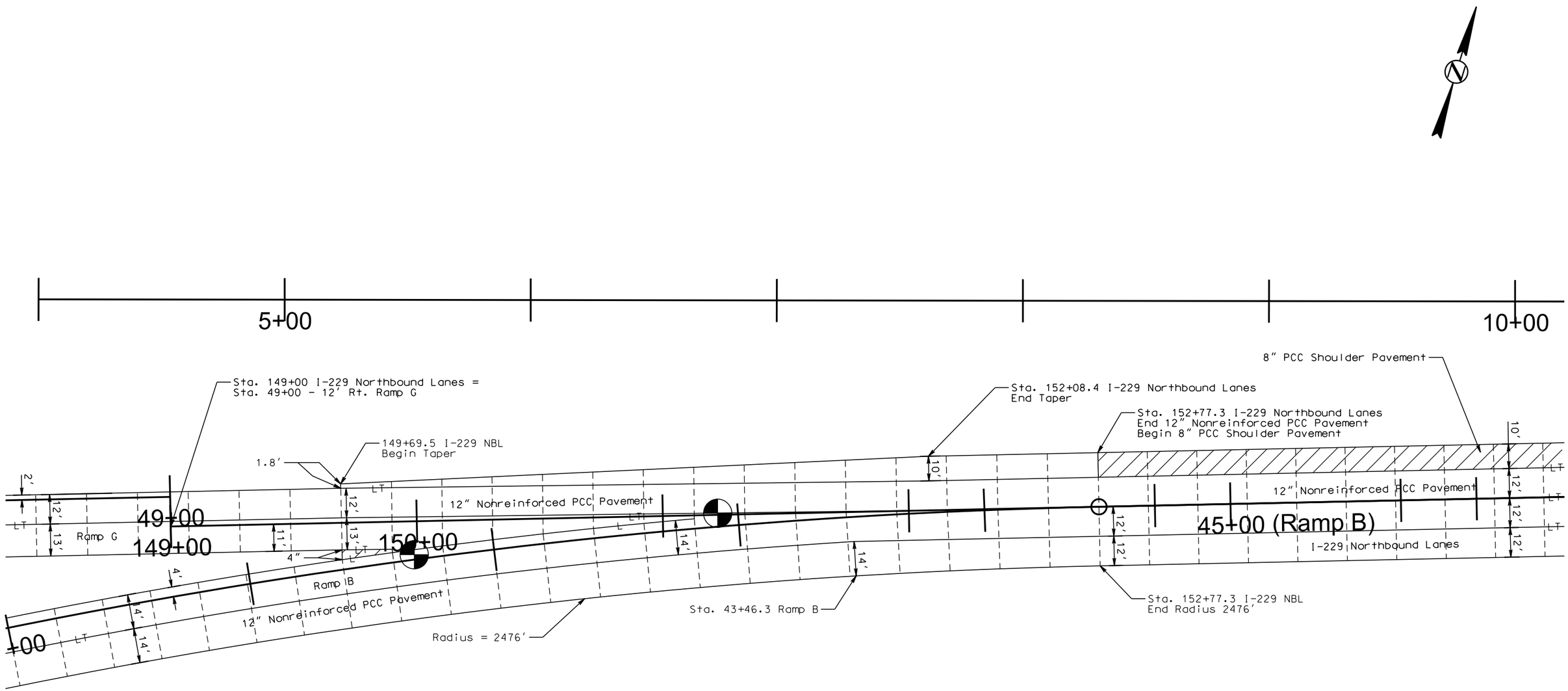

PLOT SCALE - 1:40

PLOTTED FROM - TRPR16032

PLOT NAME - 33

FILE - ...\PCC PAVEMENT LAYOUT.DGN

PCC PAVEMENT JOINT LAYOUT

FOR BIDDING PURPOSES ONLY

STATE OF SOUTH DAKOTA	PROJECT	SHEET	TOTAL SHEETS
	IM 0293(96)73 & IM 2292(90)0	F45	F98

Plotting Date: 10/23/2015

Scale 1 Inch = 40 Feet
Sheet 12 of 15 Sheets

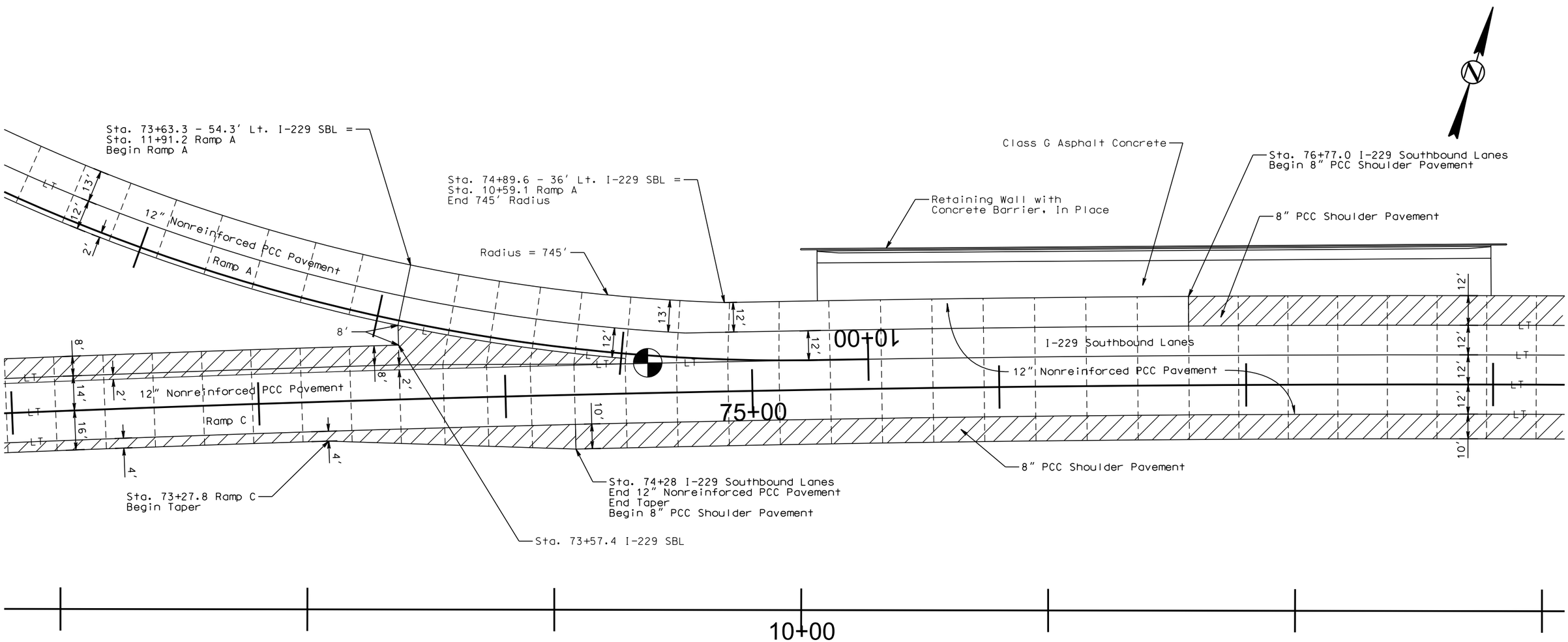

PLOT SCALE - 1:40

PLOTTED FROM - TRPR16032

PLOT NAME - 34

FILE - ...\PCC PAVEMENT LAYOUT.DGN

PCC PAVEMENT JOINT LAYOUT

FOR BIDDING PURPOSES ONLY

STATE OF SOUTH DAKOTA	PROJECT	SHEET	TOTAL SHEETS
	IM 0293(96)73 & IM 2292(90)0	F46	F98

Plotting Date: 10/23/2015

Scale 1 Inch = 40 Feet
Sheet 13 of 15 Sheets

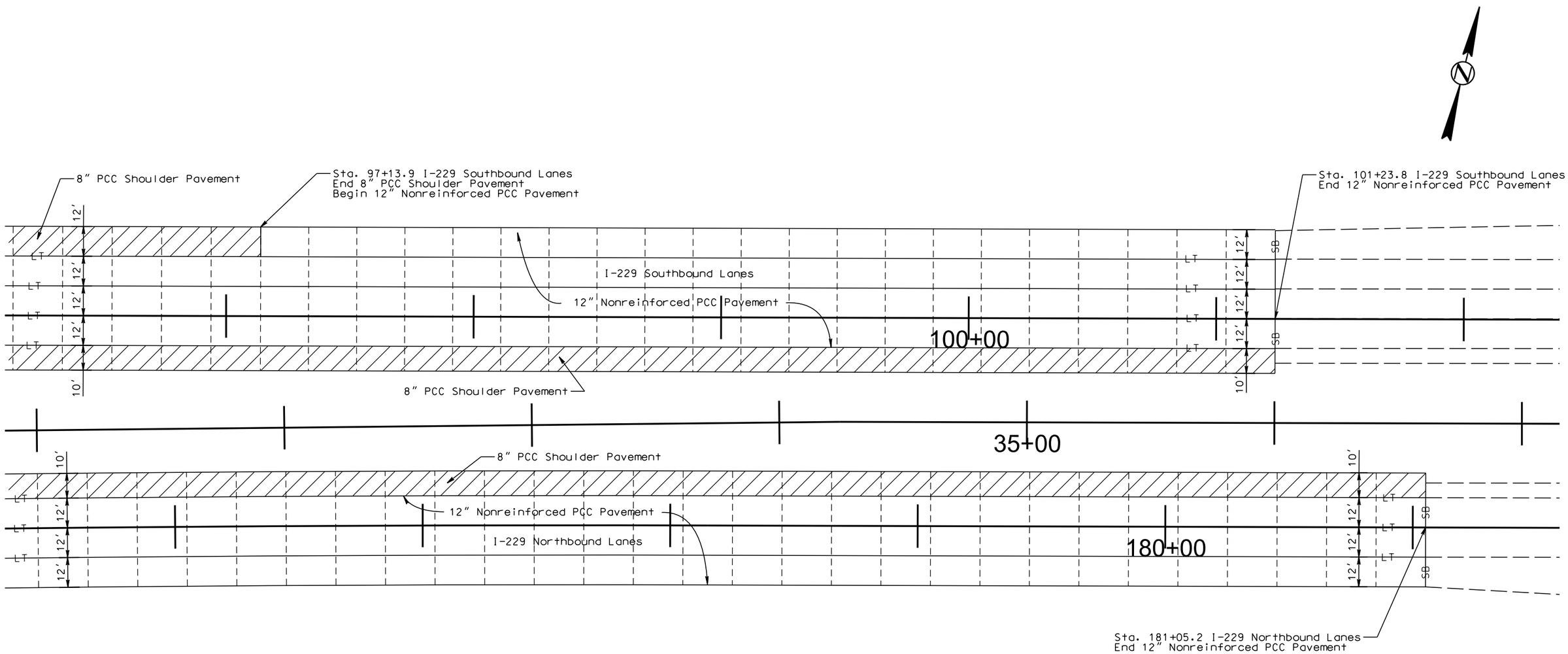

PLOT SCALE - 1:40

PLOT NAME - 35

FILE - ...\PCC PAVEMENT LAYOUT.DGN

PLOTTED FROM - TRPR16032

PCC PAVEMENT JOINT LAYOUT

FOR BIDDING PURPOSES ONLY

STATE OF SOUTH DAKOTA	PROJECT	SHEET	TOTAL SHEETS
	IM 0293(96)73 & IM 2292(90)0	F47	F98

Plotting Date: 10/23/2015

Scale 1 Inch = 40 Feet
Sheet 14 of 15 Sheets

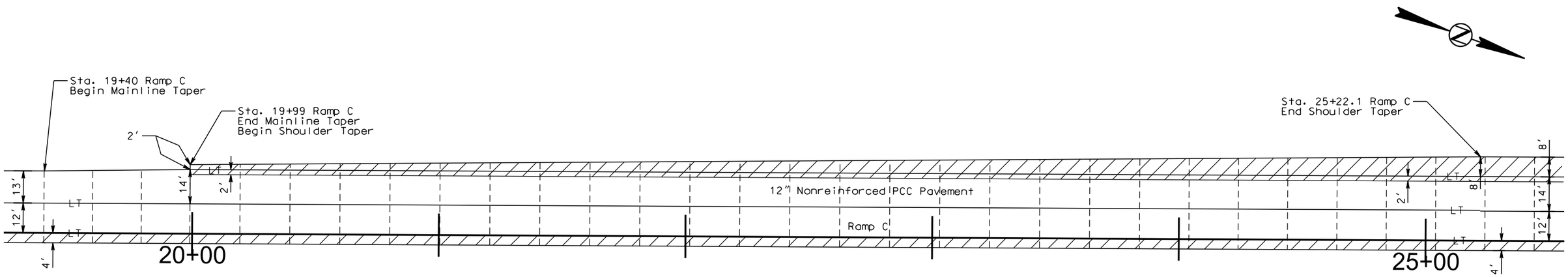

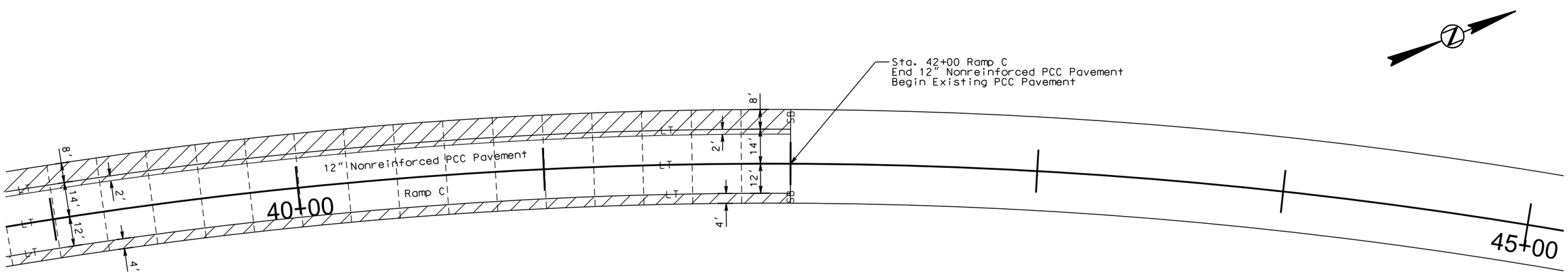

PLOT SCALE - 1:40

PLOTTED FROM - TRPR16032

PLOT NAME - 36

FILE - ...\PCC PAVEMENT LAYOUT.DGN

PCC PAVEMENT JOINT LAYOUT

FOR BIDDING PURPOSES ONLY

STATE OF SOUTH DAKOTA	PROJECT	SHEET	TOTAL SHEETS
	IM 0293(96)73 & IM 2292(90)0	F48	F98

Plotting Date: 10/23/2015

Scale 1 Inch = 40 Feet
Sheet 15 of 15 Sheets

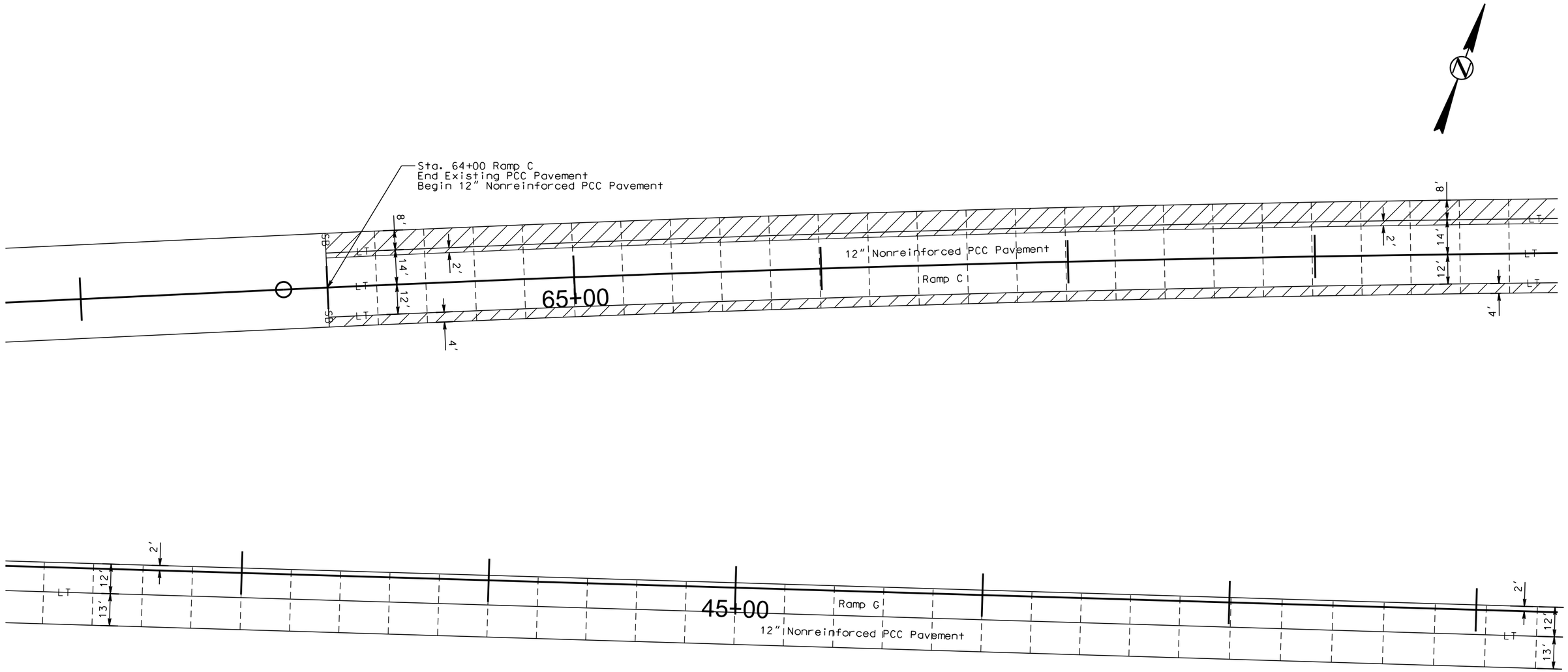

PLOT SCALE - 1:40

PLOT NAME - 37

FILE - ...\PCC PAVEMENT LAYOUT.DGN

PLOTTED FROM - TRPR16032

FOR BIDDING PURPOSES ONLY

STATE OF SOUTH DAKOTA	PROJECT	SHEET	TOTAL SHEETS
	IM 0293(96)73 IM 2292(90)0	F49	F98

Plotting Date: 8/31/2015

PAVEMENT SLOPE LAYOUT
INTERSTATE 29

LEGEND:

PAVEMENT SLOPE TRANSITION

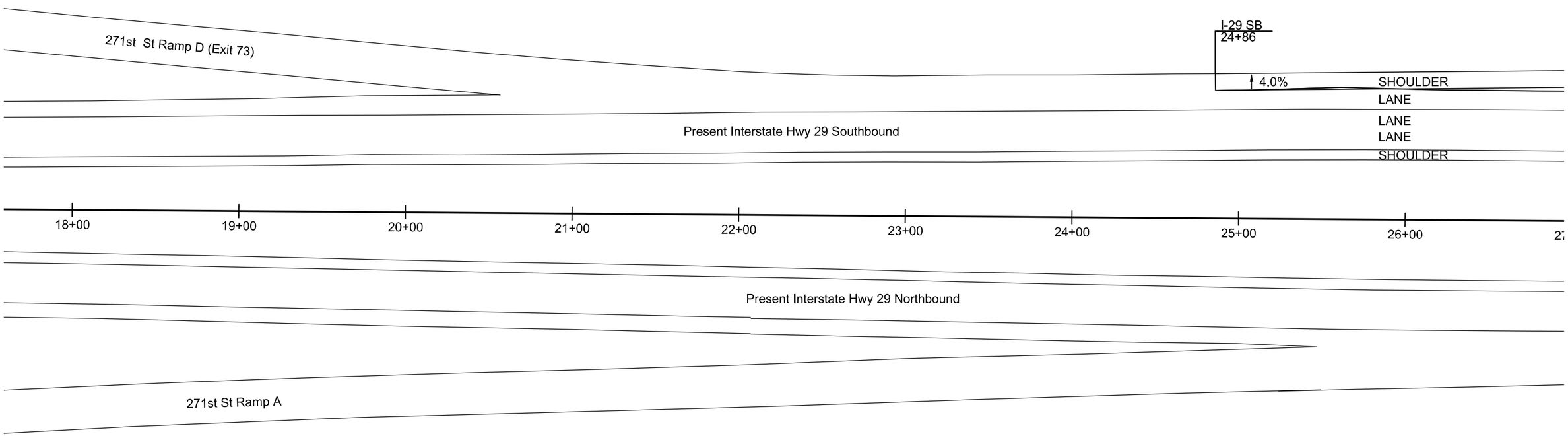

Plot Scale - 1:60

Plotted From - Margie Krell

Plot Name - 148

File - ...\rdprj\LINC01QS\020ps.dgn

FOR BIDDING PURPOSES ONLY

STATE OF SOUTH DAKOTA	PROJECT	SHEET	TOTAL SHEETS
	IM 0293(96)73 IM 2292(90)0	F50	F98

Plotting Date: 8/31/2015

PAVEMENT SLOPE LAYOUT
INTERSTATE 29

LEGEND:

PAVEMENT SLOPE TRANSITION

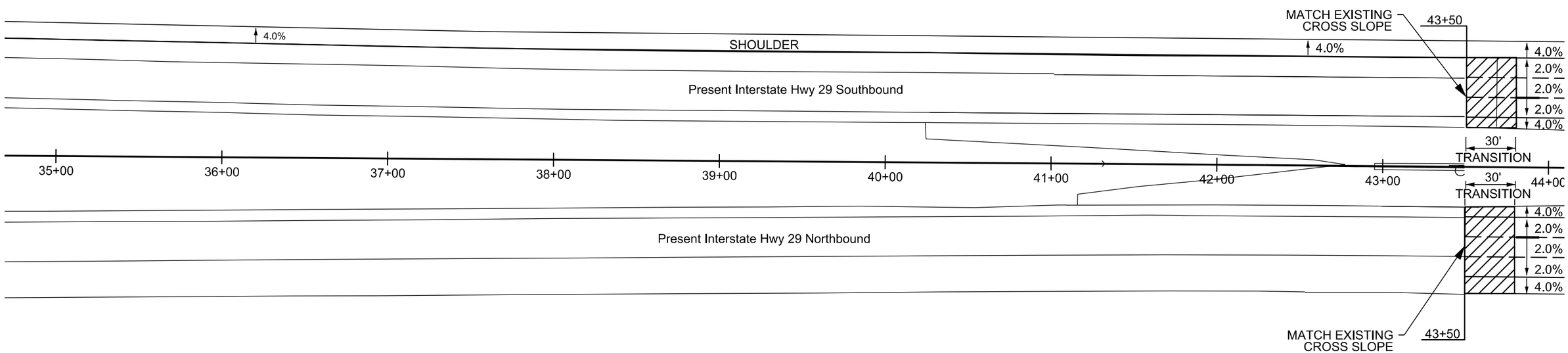

Plot Scale - 1:60

Plot Name - 149

File - ...\rdprj\LINC01QS\035ps.dgn

Plotted From - Margie Krell

FOR BIDDING PURPOSES ONLY

STATE OF SOUTH DAKOTA	PROJECT	SHEET	TOTAL SHEETS
	IM 0293(96)73 IM 2292(90)0	F51	F98

Plotting Date: 8/31/2015

PAVEMENT SLOPE LAYOUT
INTERSTATE 29

LEGEND:

PAVEMENT SLOPE TRANSITION

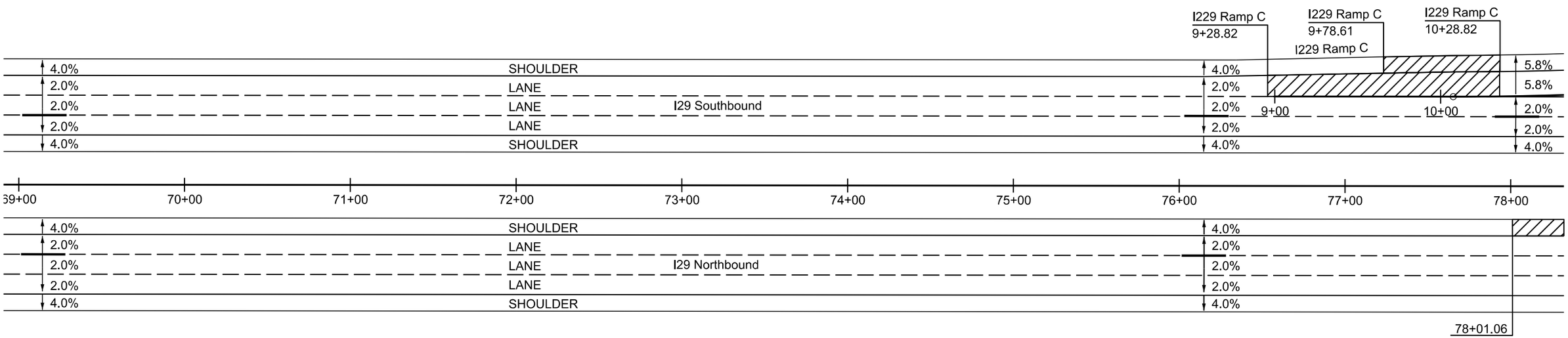

Plot Scale - 1:60

Plotted From - Margie Krell

Plot Name - 150

File - ...\rdprj\LINC01QS\070ps.dgn

FOR BIDDING PURPOSES ONLY

STATE OF SOUTH DAKOTA	PROJECT	SHEET	TOTAL SHEETS
	IM 0293(96)73 IM 2292(90)0	F52	F98

Plotting Date: 8/31/2015

PAVEMENT SLOPE LAYOUT
INTERSTATE 29

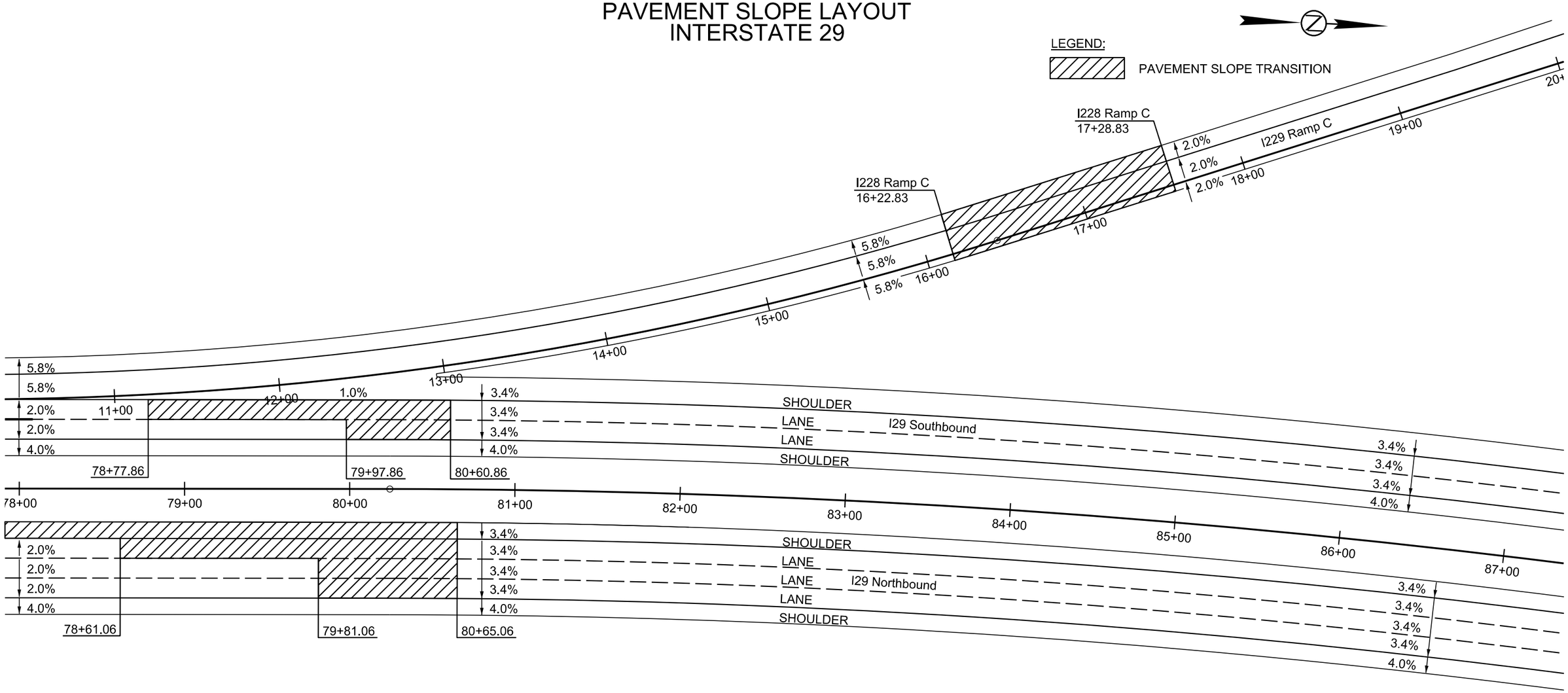

Plot Scale - 1:60

Plotted From - Margie Krell

Plot Name - 151

File - ...\rd\prj\LINC01QS\080ps.dgn

FOR BIDDING PURPOSES ONLY

STATE OF SOUTH DAKOTA	PROJECT	SHEET	TOTAL SHEETS
	IM 0293(96)73 IM 2292(90)0	F53	F98

Plotting Date: 8/31/2015

PAVEMENT SLOPE LAYOUT
INTERSTATE 29

LEGEND:

PAVEMENT SLOPE TRANSITION

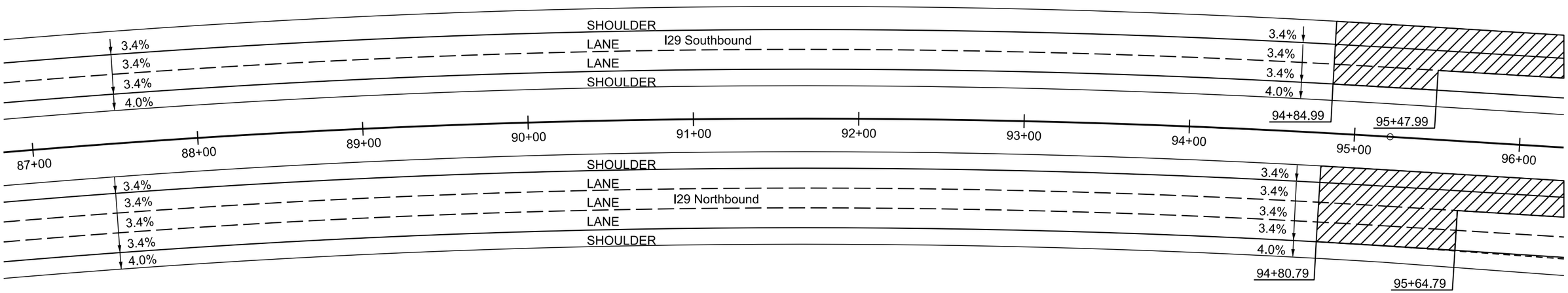

Plot Scale - 1:60

Plotted From - Margie Krell

Plot Name - 152

File - ...\rd\prj\LINC01QS\090ps.dgn

FOR BIDDING PURPOSES ONLY

STATE OF SOUTH DAKOTA	PROJECT	SHEET	TOTAL SHEETS
	IM 0293(96)73 IM 2292(90)0	F54	F98

Plotting Date: 8/31/2015

PAVEMENT SLOPE LAYOUT
INTERSTATE 29

LEGEND:

PAVEMENT SLOPE TRANSITION

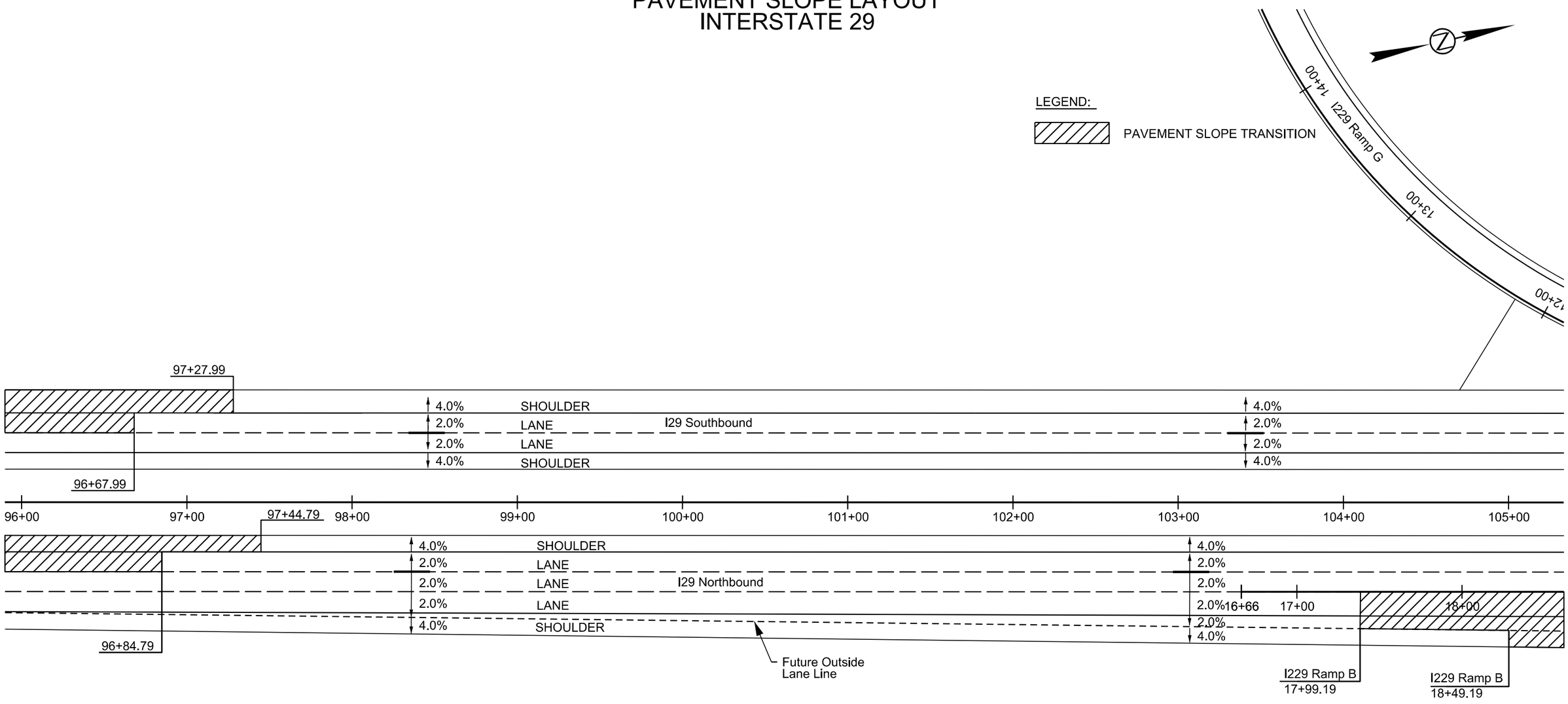

Plot Scale - 1:60

Plotted From - Margie Krell

Plot Name - 153

File - ...\rd\prj\LINC01QS\095ps.dgn

FOR BIDDING PURPOSES ONLY

STATE OF SOUTH DAKOTA	PROJECT	SHEET	TOTAL SHEETS
	IM 0293(96)73 IM 2292(90)0	F55	F98

Plotting Date: 8/31/2015

PAVEMENT SLOPE LAYOUT
INTERSTATE 29

LEGEND:

PAVEMENT SLOPE TRANSITION

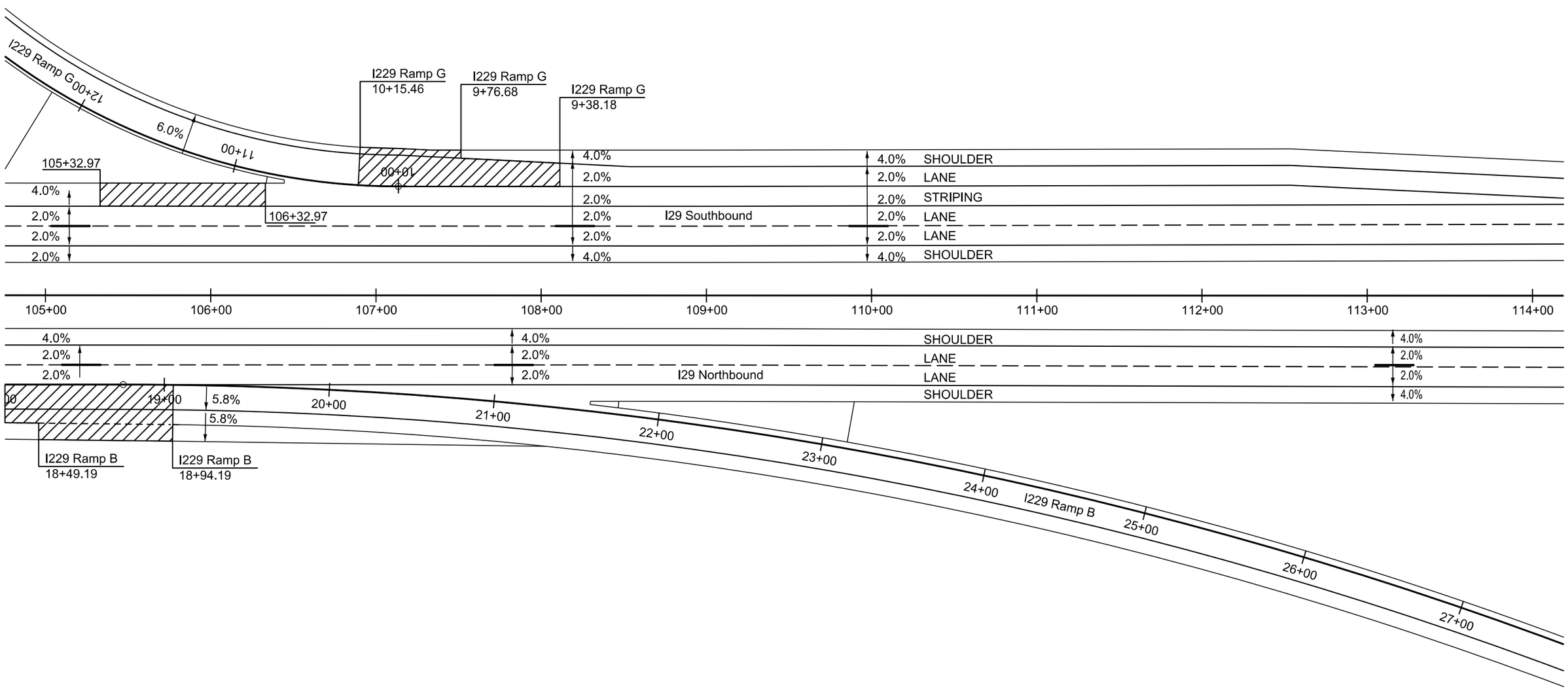

Plot Scale - 1:60

Plotted From - Margie Krell

File - ...\rdprj\LINC01QS\105ps.dgn

Plot Name - 154

FOR BIDDING PURPOSES ONLY

STATE OF SOUTH DAKOTA	PROJECT	SHEET	TOTAL SHEETS
	IM 0293(96)73 IM 2292(90)0	F56	F98

Plotting Date: 8/31/2015

PAVEMENT SLOPE LAYOUT
INTERSTATE 29

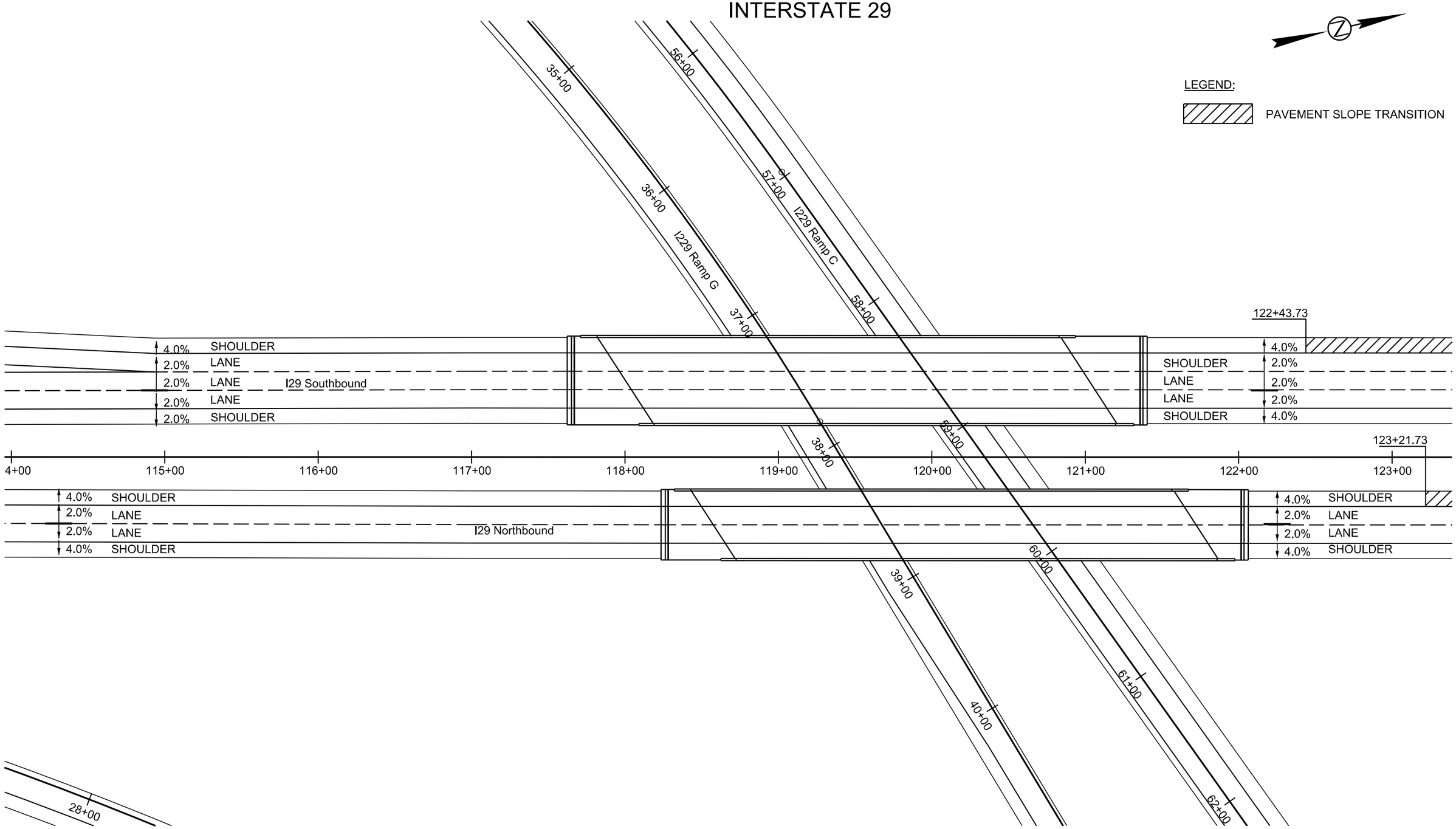

Plot Scale - 1:60

Plotted From - Margie Krell

Plot Name - 155

File - ...\rd\prj\LINC01QS\115ps.dgn

FOR BIDDING PURPOSES ONLY

STATE OF SOUTH DAKOTA	PROJECT	SHEET	TOTAL SHEETS
	IM 0293(96)73 IM 2292(90)0	F57	F98

Plotting Date: 8/31/2015

PAVEMENT SLOPE LAYOUT
INTERSTATE 29

LEGEND:

PAVEMENT SLOPE TRANSITION

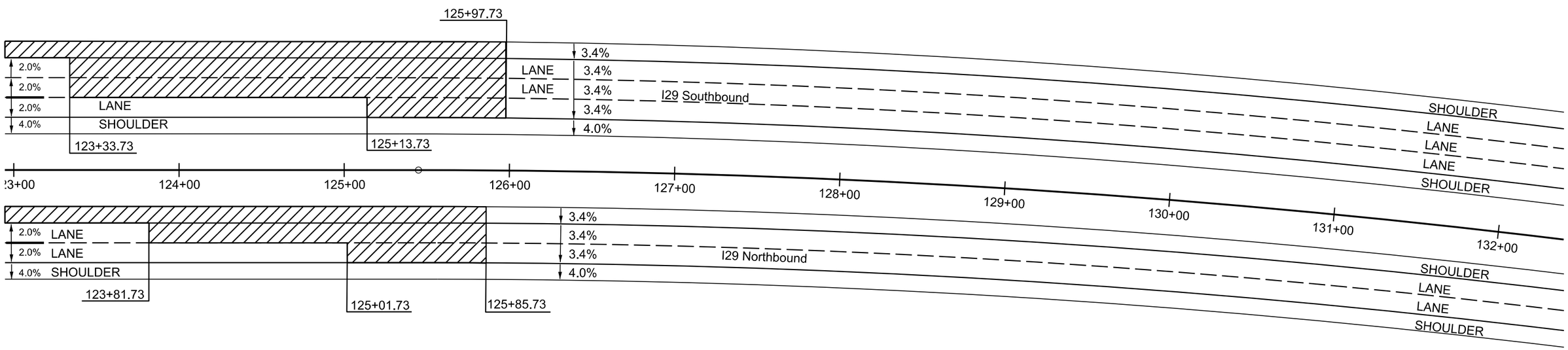

Plot Scale - 1:60

Plotted From - Margie Krell

Plot Name - 156

File - ...\rd\prj\LINC01QS\125ps.dgn

FOR BIDDING PURPOSES ONLY

STATE OF SOUTH DAKOTA	PROJECT	SHEET	TOTAL SHEETS
	IM 0293(96)73 IM 2292(90)0	F58	F98

Plotting Date: 8/31/2015

PAVEMENT SLOPE LAYOUT
INTERSTATE 29

LEGEND:

PAVEMENT SLOPE TRANSITION

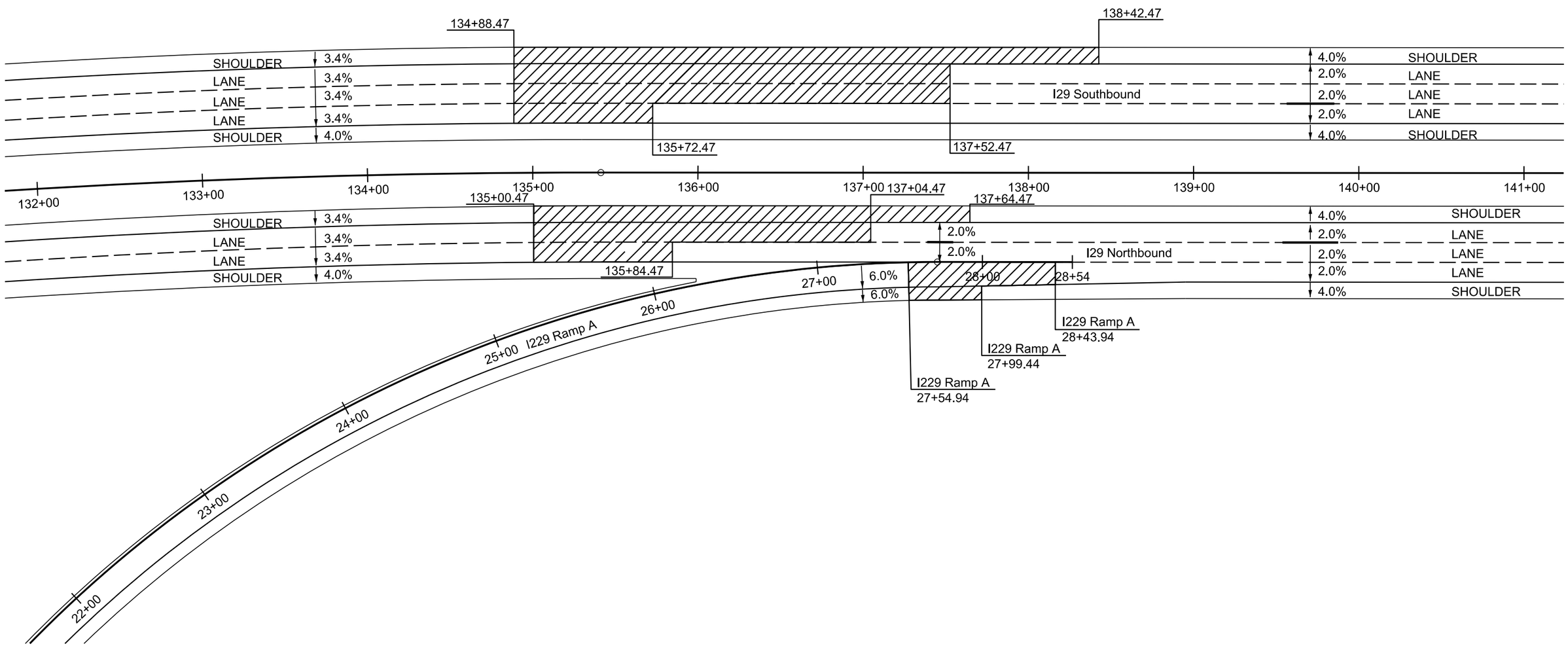

Plot Scale - 1:60

Plotted From - Margie Krell

Plot Name - 157

File - ...\rd\prj\LINC01QS\130ps.dgn

FOR BIDDING PURPOSES ONLY

STATE OF SOUTH DAKOTA	PROJECT	SHEET	TOTAL SHEETS
	IM 0293(96)73 IM 2292(90)0	F59	F98

Plotting Date: 8/31/2015

PAVEMENT SLOPE LAYOUT
INTERSTATE 29

LEGEND:

PAVEMENT SLOPE TRANSITION

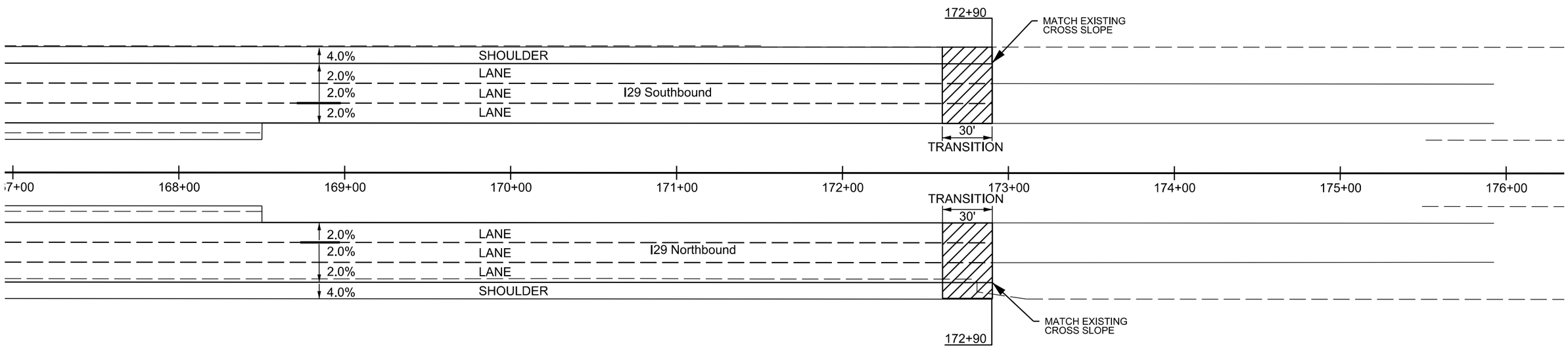

Plot Scale - 1:60

Plotted From - Margie Krell

Plot Name - 158

File - ...\rd\prj\LINC01GS\170ps.dgn

FOR BIDDING PURPOSES ONLY

STATE OF SOUTH DAKOTA	PROJECT	SHEET	TOTAL SHEETS
	IM 0293(96)73 IM 2292(90)0	F60	F98

Plotting Date: 8/31/2015

PAVEMENT SLOPE LAYOUT
I229 NB/SB

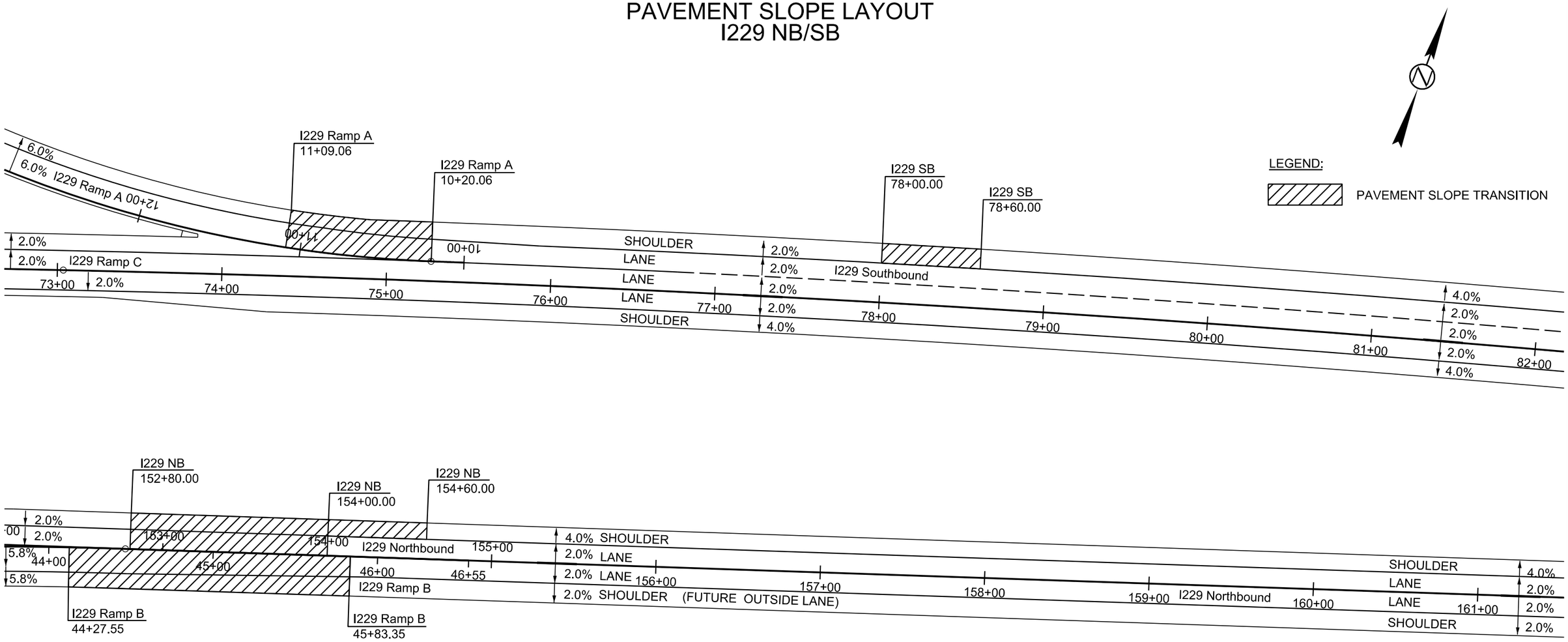

Plot Scale - 1:60

Plotted From - Margie Krell

Plot Name - 159

File - ...\rd\prj\LINC01QS\(229)10ps.dgn

FOR BIDDING PURPOSES ONLY

STATE OF SOUTH DAKOTA	PROJECT	SHEET	TOTAL SHEETS
	IM 0293(96)73 IM 2292(90)0	F61	F98

Plotting Date: 8/31/2015

PAVEMENT SLOPE LAYOUT
I229 Ramp C

LEGEND:

PAVEMENT SLOPE TRANSITION

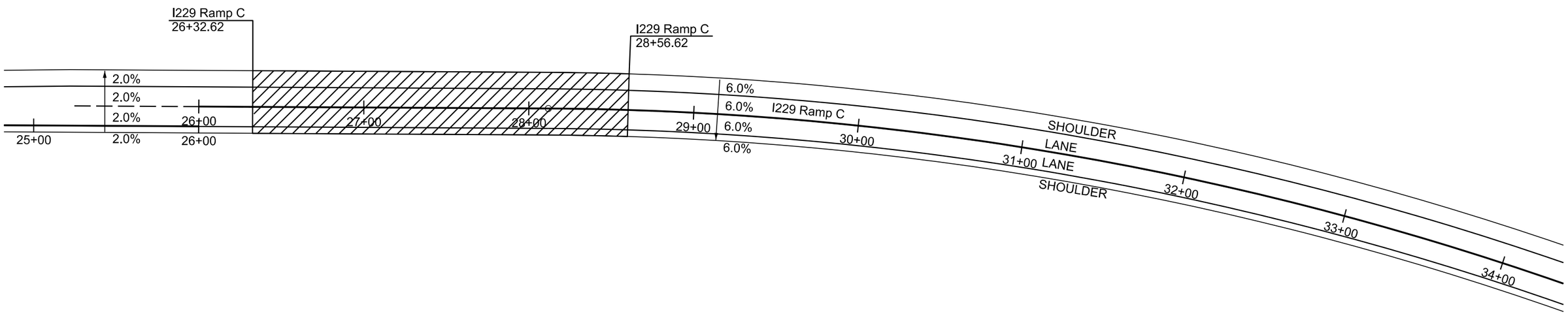

Plot Scale - 1:60

Plot Name - 160

File - ...\LINC01QS\I229 Ramp C\25ps.dgn

Plotted From - Margie Krell

FOR BIDDING PURPOSES ONLY

STATE OF SOUTH DAKOTA	PROJECT	SHEET	TOTAL SHEETS
	IM 0293(96)73 IM 2292(90)0	F62	F98

Plotting Date: 8/31/2015

PAVEMENT SLOPE LAYOUT
I229 Ramp C & G

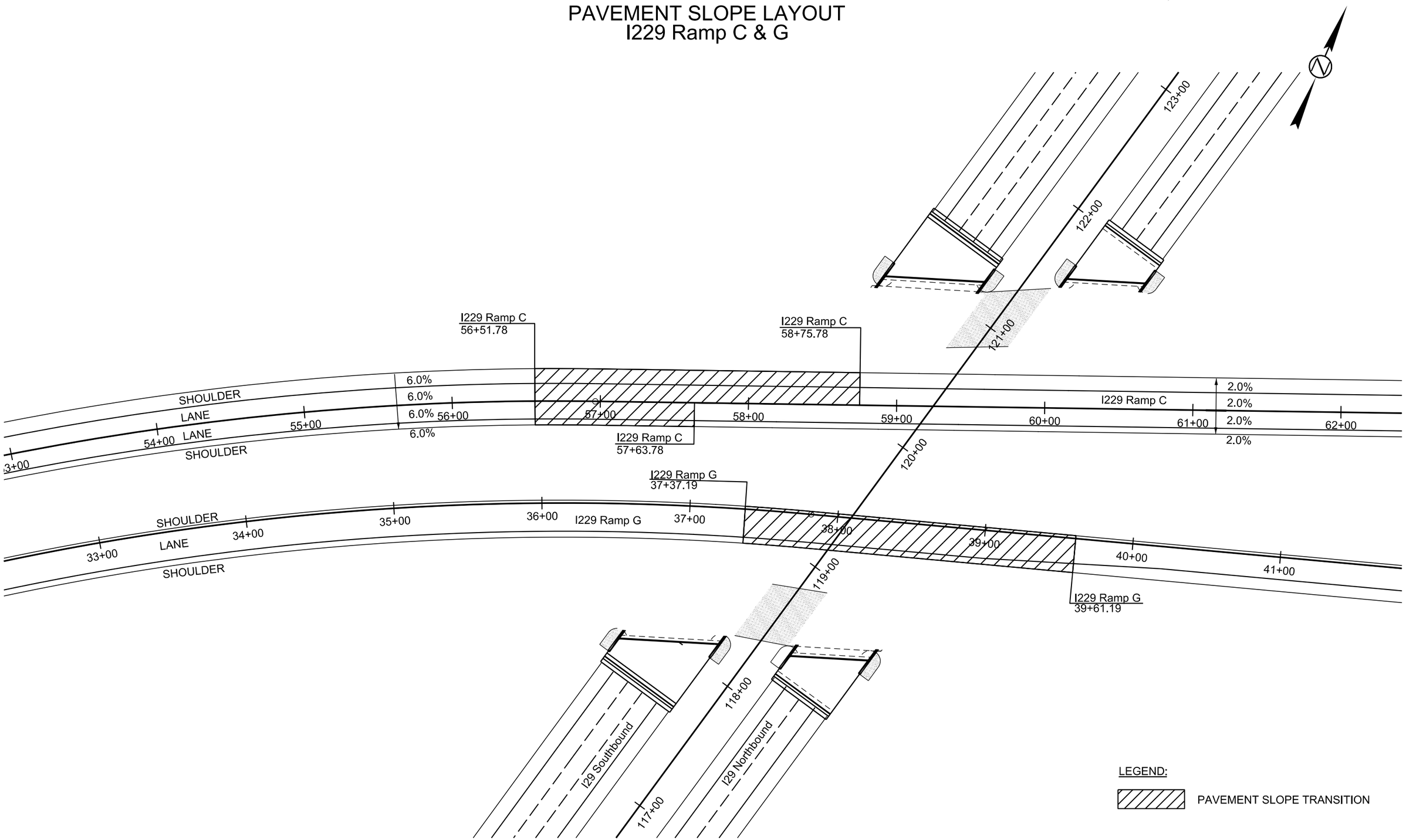

Plot Scale - 1:60

Plotted From - Margie Krell

Plot Name - 161

File - ...\LINC01GS\I229 Ramp C\55ps.dgn

FOR BIDDING PURPOSES ONLY

REMOVAL LIMITS AND PLACEMENT OF NEW SLEEPER SLAB AT STA. 43+55 SBL & NBL

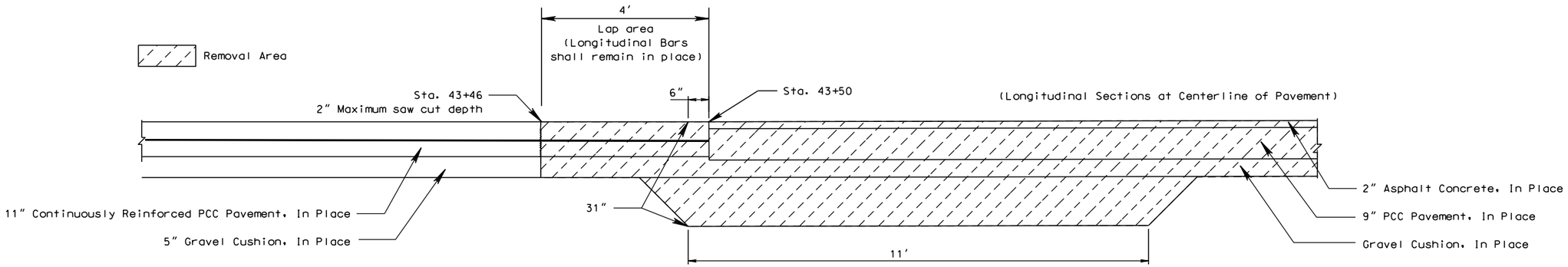

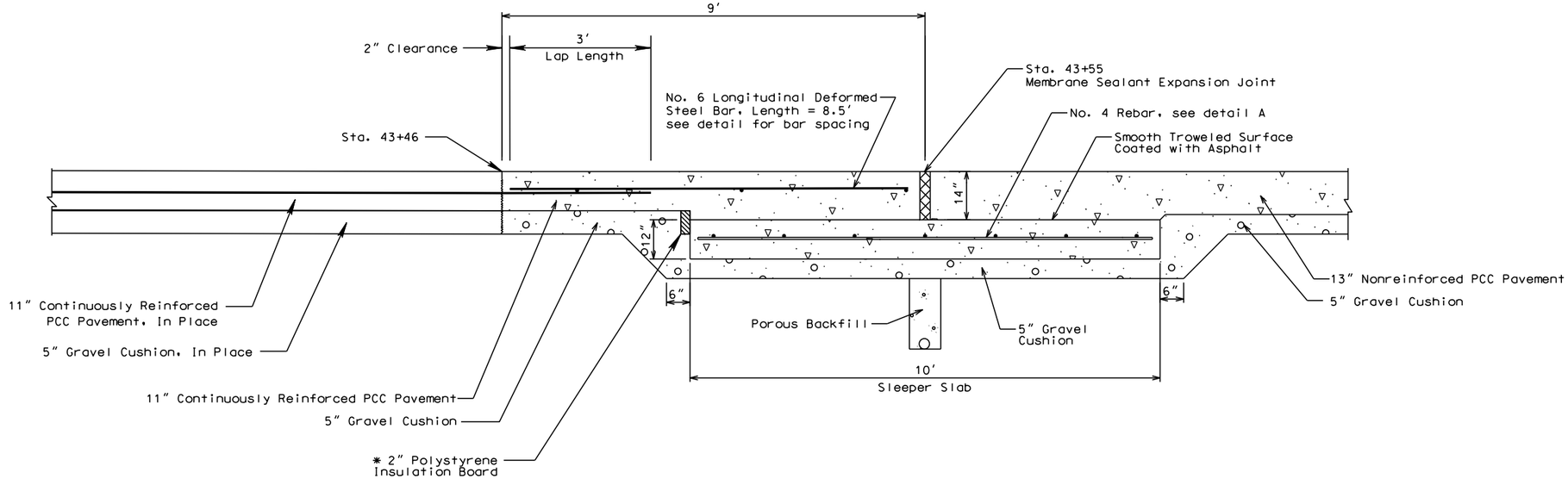

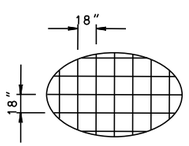

DETAIL A

Sleeper Slab shall be reinforced with #4 rebar 18 inches on center both directions. Rebar depth will be at the center of the Sleeper Slab. Cost for furnishing and placing the rebar shall be incidental to the contract unit price per square yard for 11 INCH NONREINFORCED PCC PAVEMENT

* The Polystyrene Insulation Board shall be firmly attached to the sleeper slab by a method to be approved by the Engineer.

PLOT SCALE - 114.16668
PLOTTED FROM - TRPR16032
PLOT NAME - 38
FILE - ...\LINC01GS\SLEEPER SLAB 01GS.DGN

FOR BIDDING PURPOSES ONLY

Bar Spacing Detail for Continuously Reinforced PCC Pavement

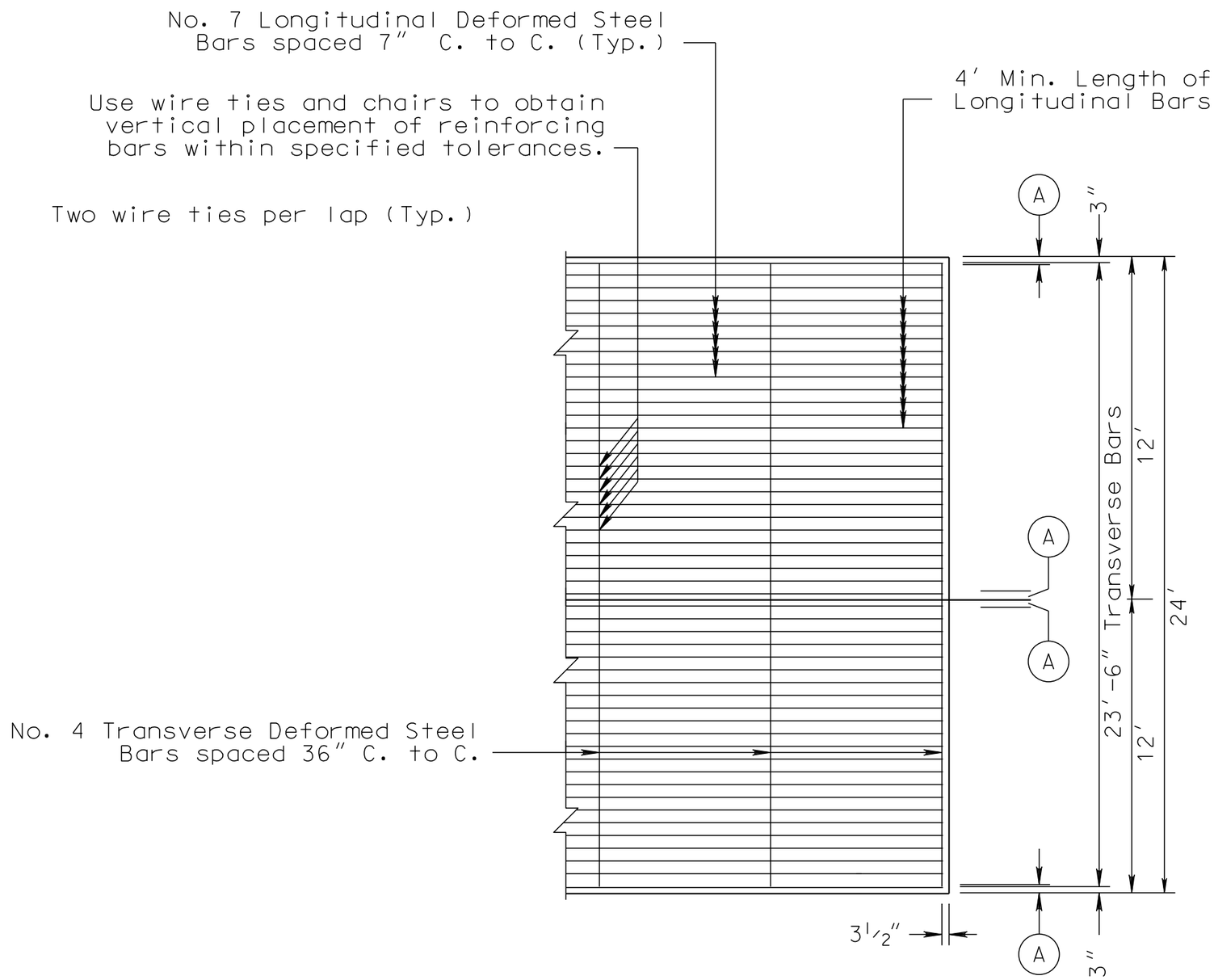

A	Depth of Pavement
6″	11″

PLOT SCALE - 1:5.00001
PLOTTED FROM - TRPR16032
PLOT NAME - 39
FILE -...\LINC010S\SLEEPER SLAB 010S.DGN

FOR BIDDING PURPOSES ONLY

SHEET METAL PLACEMENT DETAIL

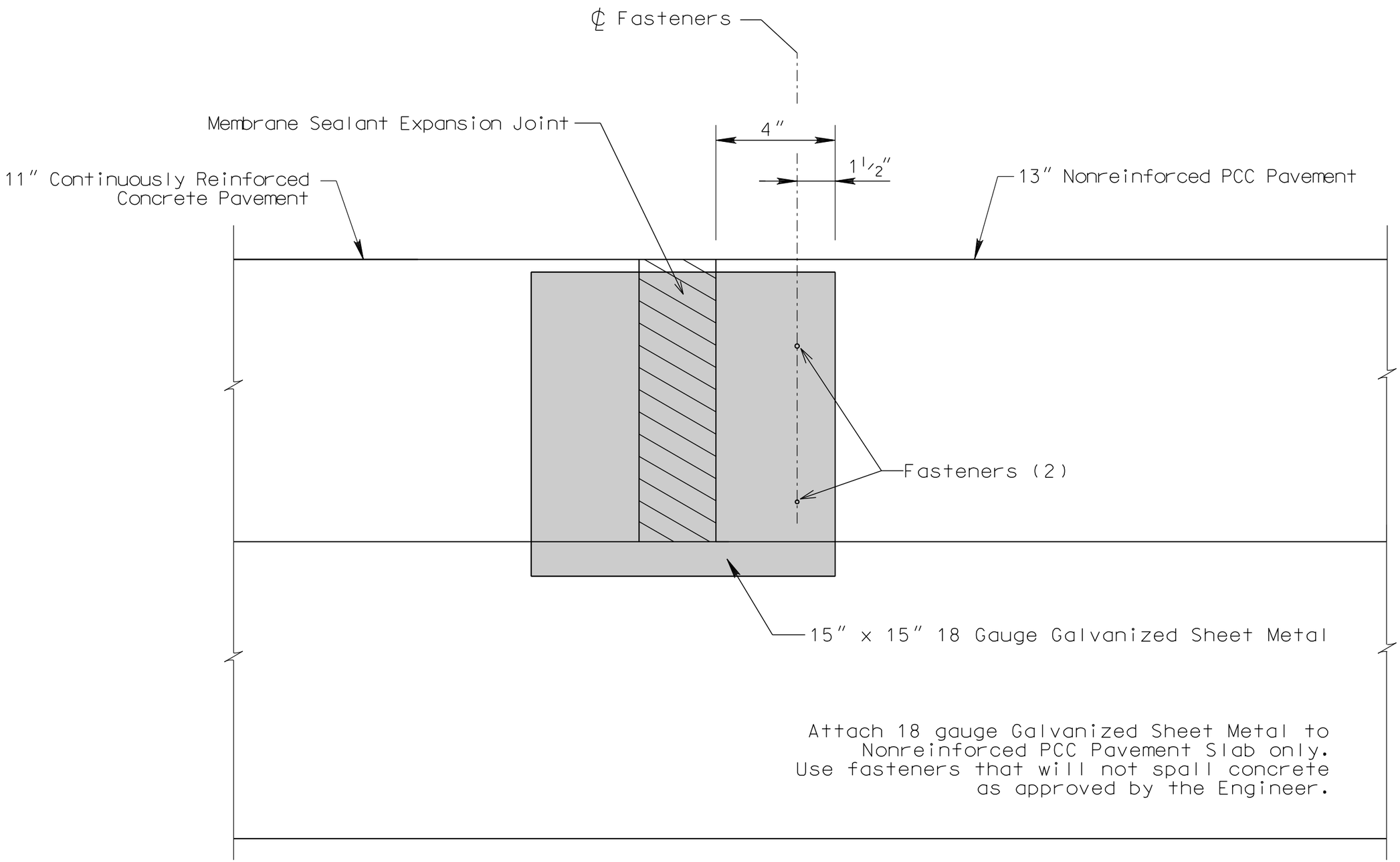

Attach 18 gauge Galvanized Sheet Metal to Nonreinforced PCC Pavement Slab only. Use fasteners that will not spall concrete as approved by the Engineer.

PLOT SCALE - 114.16668
PLOTTED FROM - TRPR16032
PLOT NAME - 40
FILE - ...\LINC010S\SLEEPER SLAB 010S.DGN

FOR BIDDING PURPOSES ONLY

SLEEPER SLAB CUTOFF DRAIN
Sta. 43+55 SBL & NBL

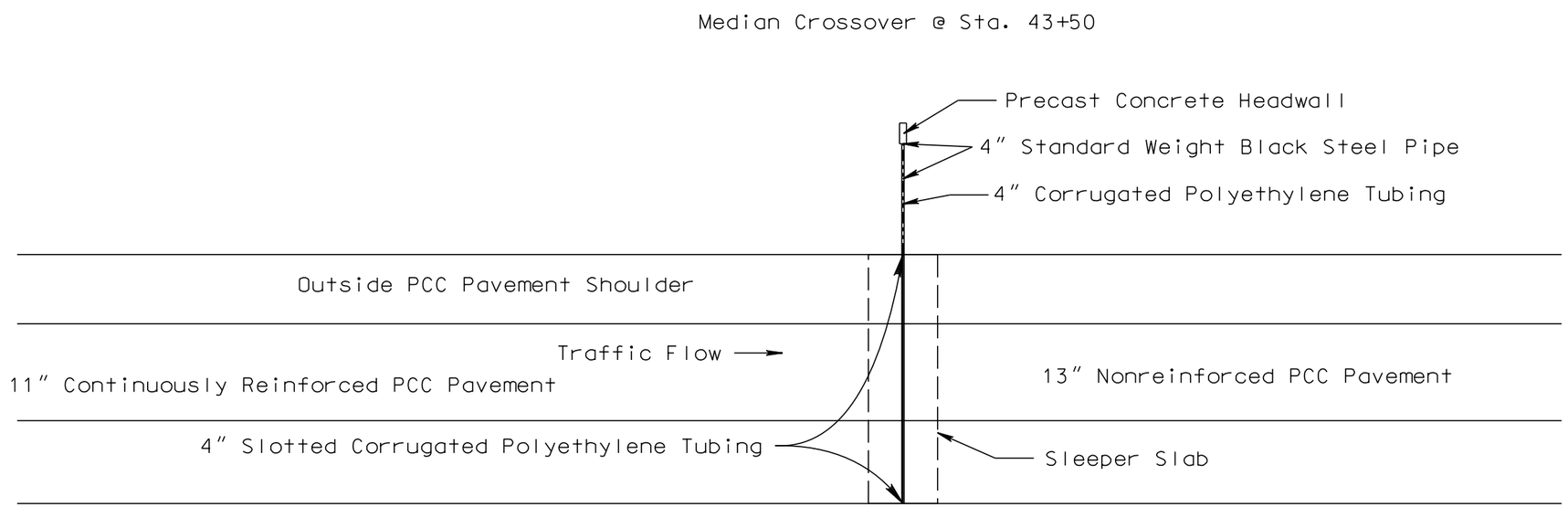

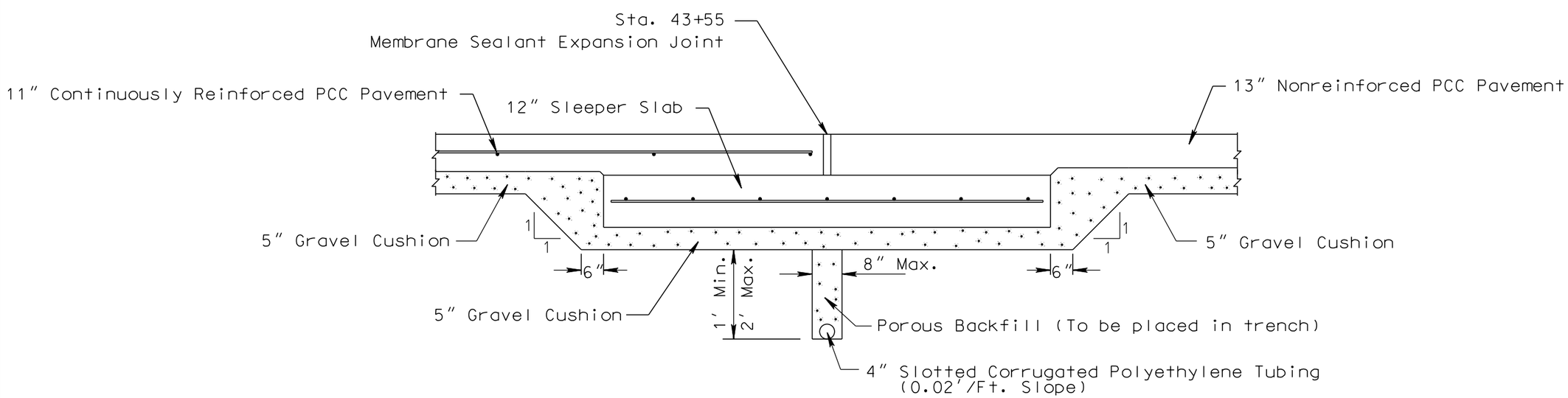

PLOT SCALE - 1:20
PLOTTED FROM - TRPRIG032
PLOT NAME - 41
FILE - ...\SLEEPER SLAB DRAIN 010S.DGN

FOR BIDDING PURPOSES ONLY

SLEEPER SLAB CUTOFF DRAIN
Sta. 43+55 SBL & NBL

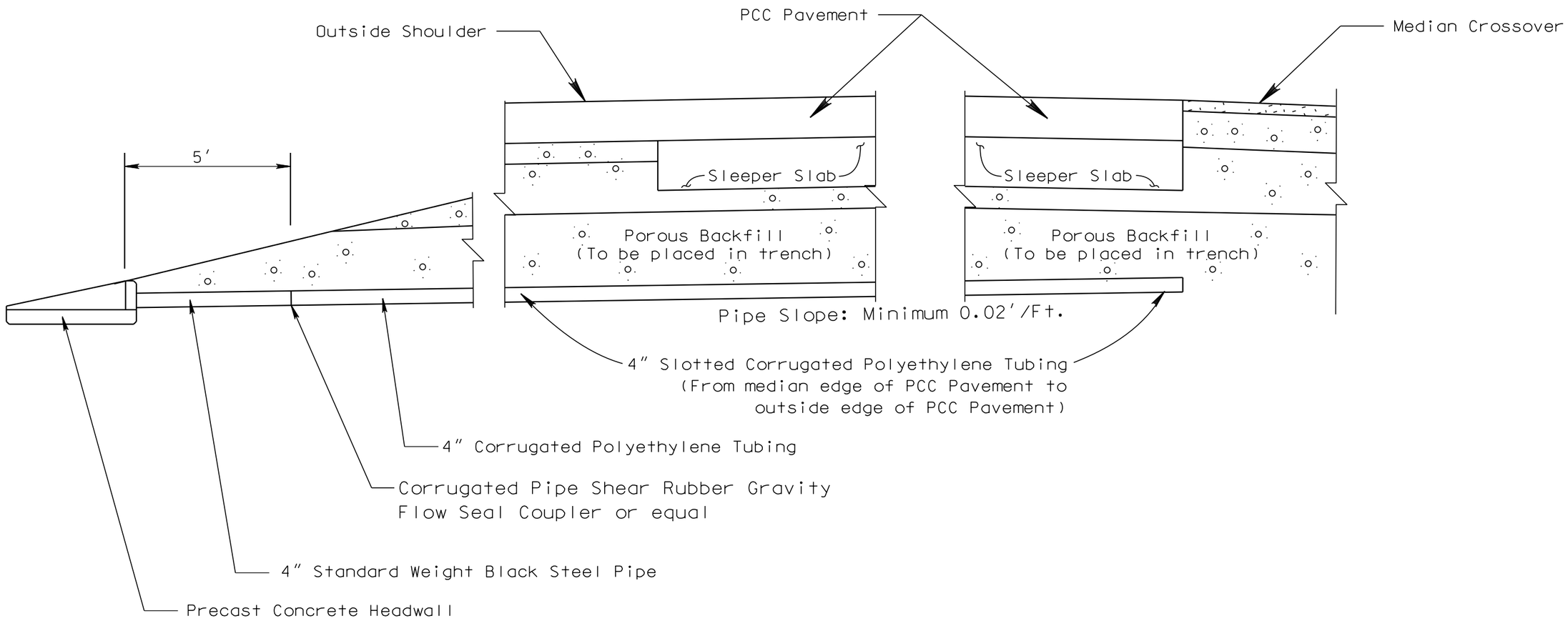

It will be the Contractor's responsibility to determine the amount of Pipe, Gravel Cushion, and Porous Backfill required to be installed at the Sleeper Slab Cutoff Drain. All costs to Furnish and Install Precast Headwall, 4" Standard Weight Black Steel Pipe, Corrugated Pipe Shear Rubber Gasket Gravity Flow Seal Coupler or equal, 4" Corrugated Polyethylene Tubing, 4" Slotted Corrugated Polyethylene Tubing, Gravel Cushion, and Porous Backfill shall be incidental to the bid item Cutoff Drain.

Care must be taken to insure that the cutoff drain and outlet tubing is not damaged during construction. Sufficient cover material is to be placed over the cutoff drain before heavy equipment is allowed to work over the cutoff drain.

PLOT SCALE - 1:20
PLOTTED FROM - TRPR16032
PLOT NAME - 42
FILE - ...\SLEEPER SLAB DRAIN 010S.DGN

FOR BIDDING PURPOSES ONLY

Plotting Date: 10/23/2015

Removal of 8" Nonreinforced PCC Pavement, 11.5" Nonreinforced PCC Pavement, and Concrete Barrier

Remove Concrete Barrier & Shoulder
See Section E

Remove Concrete Pavement
See Section B

Tea Interchange, Exit 73 I-29

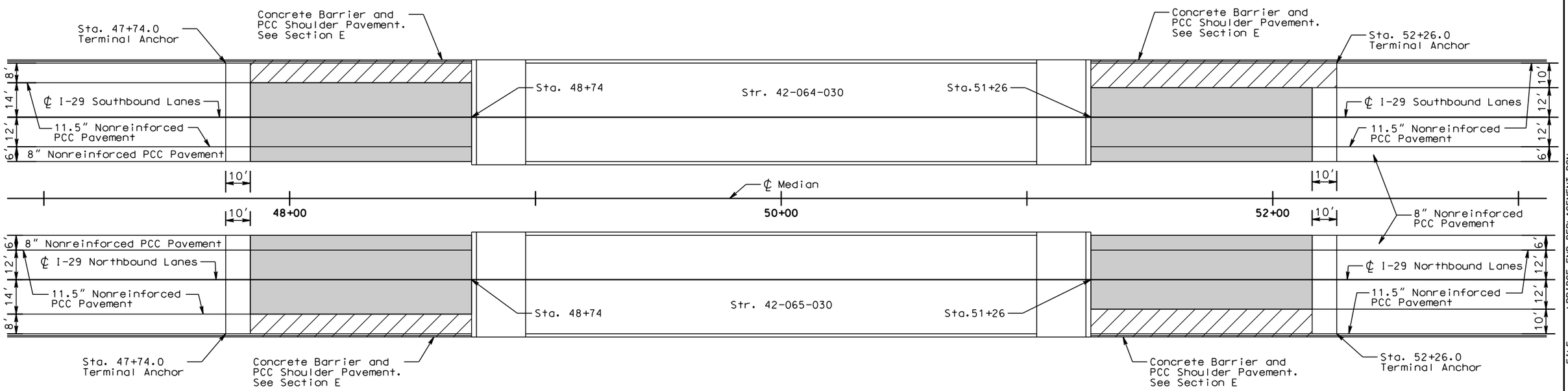

PLOT SCALE - 1:40

PLOT NAME - 43

FILE - ...\BRIDGE END REPLACEMENT.DGN

PLOTTED FROM - TRPR16032

STATE OF SOUTH DAKOTA	PROJECT	SHEET	TOTAL SHEETS
	IM 0293(96)73 & IM 2292(90)0	F69	F98

FOR BIDDING PURPOSES ONLY

Plotting Date: 10/23/2015

Replacement of 8" Nonreinforced PCC Pavement, 11.5" Nonreinforced PCC Pavement, and Concrete Barrier

Section E replacement areas.

PCC Pavement with 20' Transverse Joint Spacing and Special Reinforcing. See Detail.

Tea Interchange, Exit 73 I-29

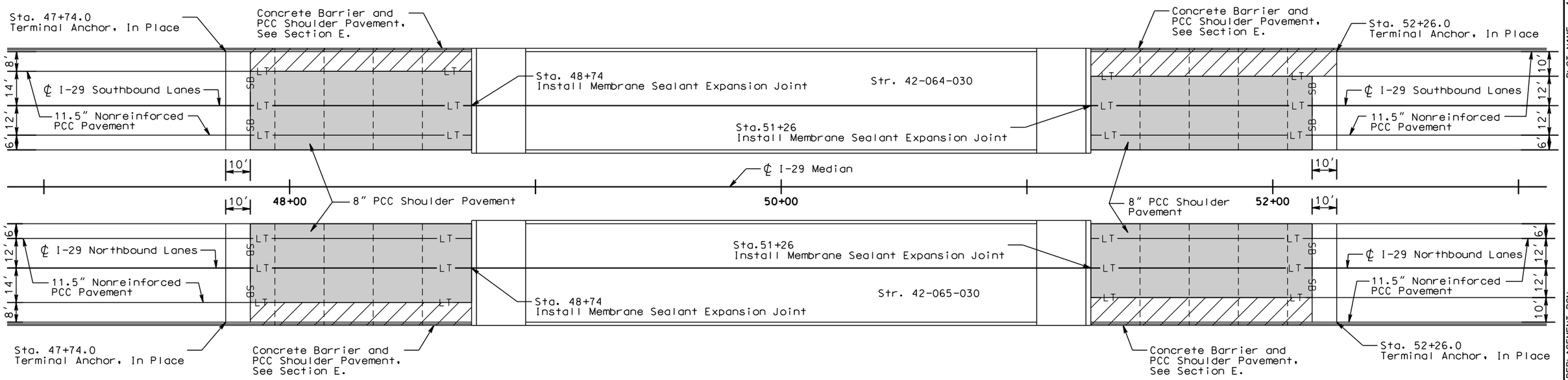

Special Reinforcing Detail

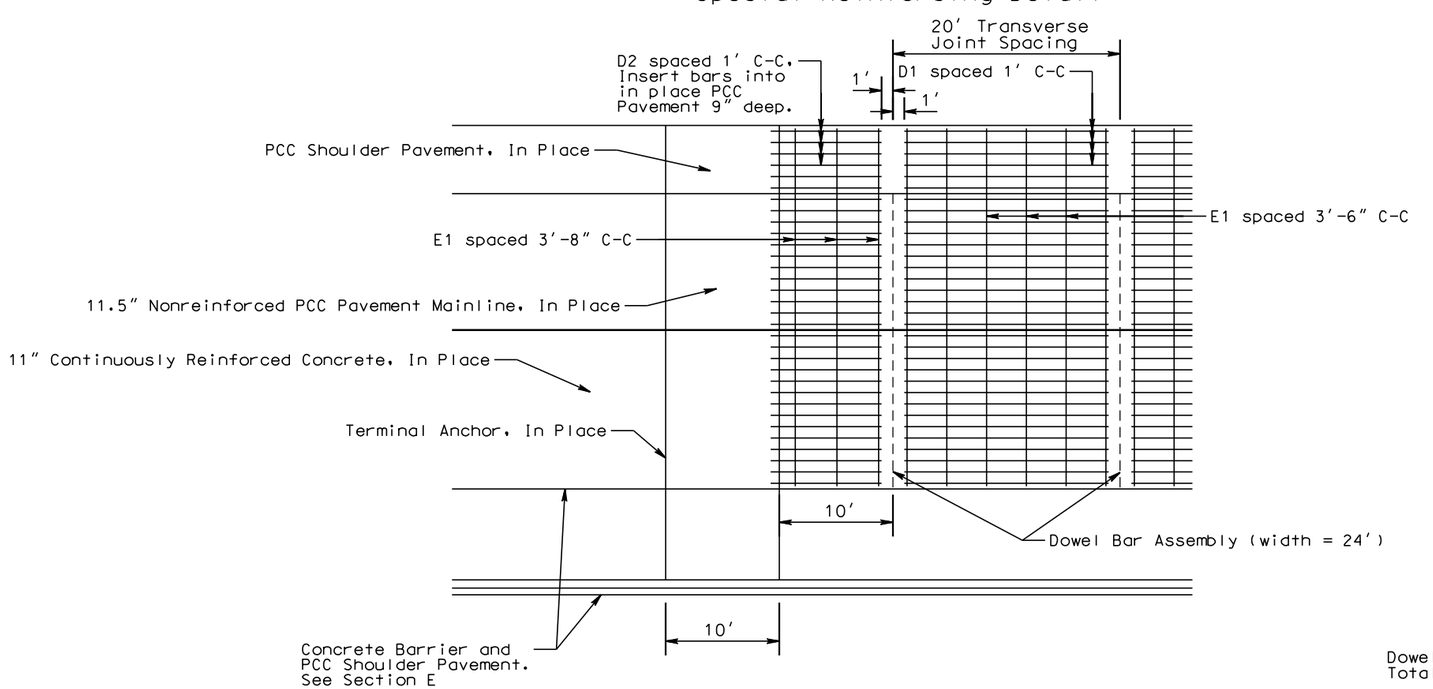

Dowel Bar Assemblies will be installed in mainline pavement only.
Total width of Dowel Bar Assemblies will be 24'.

PLOT SCALE - 1:40

PLOTTED FROM - TRPR16032

PLOT NAME - 44

FILE - ...\BRIDGE END REPLACEMENT.DGN

FOR BIDDING PURPOSES ONLY

Plotting Date: 10/23/2015

PCC PAVEMENT REMOVAL BETWEEN CRC TERMINAL AND BRIDGE SLEEPER SLAB ON 10' OUTSIDE SHOULDER FROM STA. 51+26 TO STA. 52+26 I-29 SBL

PCC Pavement Removal

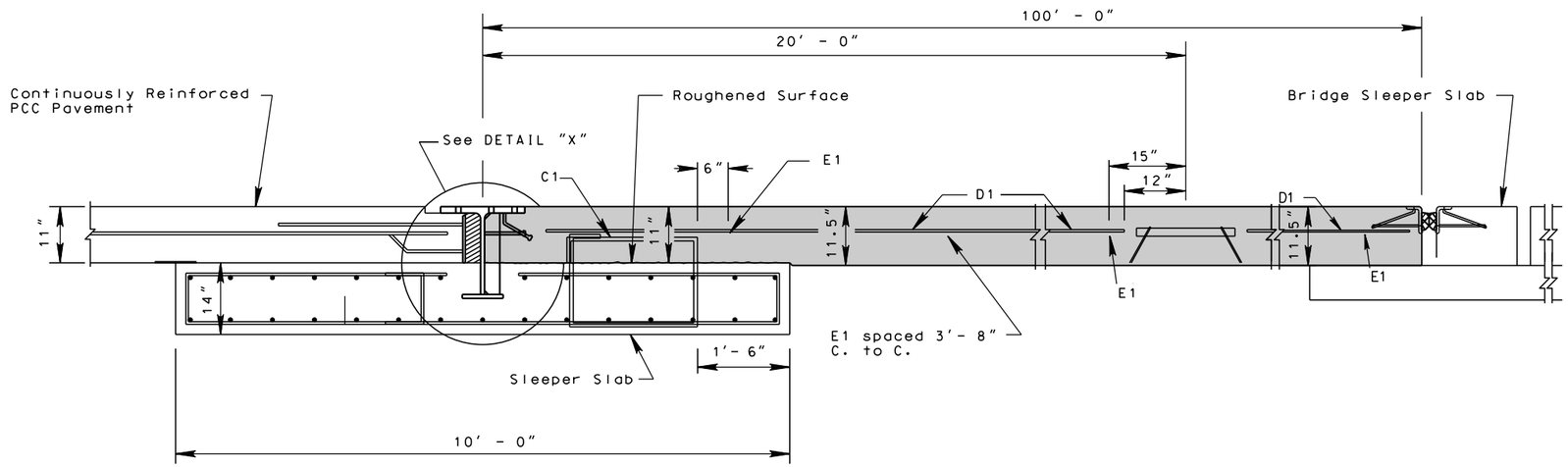

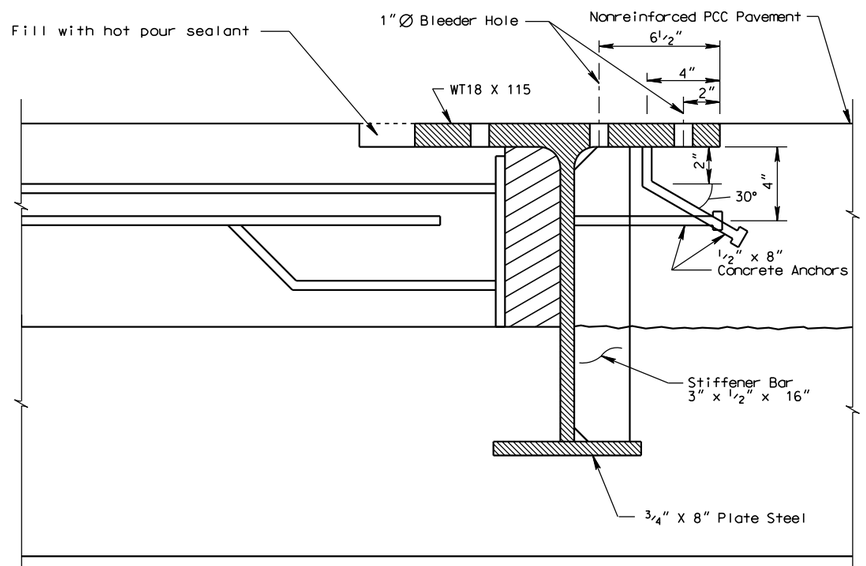

DETAIL "X"

During removal of PCC Pavement, the Contractor will ensure the W beam of the terminal anchor and concrete anchors are not damaged. The Contractor will also ensure the sleeper slab of the terminal anchor and the C1 rebar extending from the sleeper slab are not be damaged. Cost to replace damaged items will be at the Contractor's expense.

PLOT SCALE - 1:7.26001
PLOTTED FROM - TRPR16032
PLOT NAME - 45
FILE -...\TYPICAL SECTIONS IN PLACE.DGN

FOR BIDDING PURPOSES ONLY

PCC PAVEMENT REMOVAL BETWEEN CRC TERMINAL AND BRIDGE SLEEPER SLAB ON MAINLINE AND 6' MEDIAN SHOULDER FROM STA. 47+84 TO STA. 48+74 I-29 SBL/NBL AND STA. 51+26 TO STA. 52+16 I-29 SBL/NBL

PCC Pavement Removal

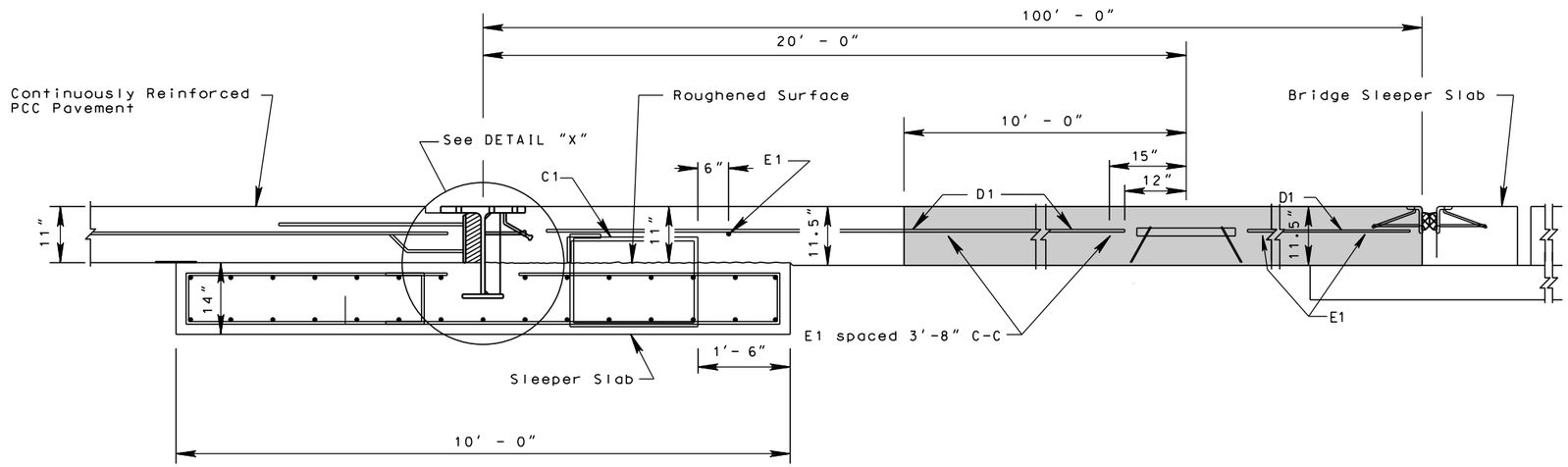

During removal of PCC Pavement, the Contractor will ensure the rebar in the in place PCC Pavement is not be damaged. Cost to replace damaged items will be at the Contractor's expense.

PLOT SCALE - 1:7.26001
PLOTTED FROM - TRPR16032
PLOT NAME - 46
FILE - ...\TYPICAL SECTIONS IN PLACE.DGN

FOR BIDDING PURPOSES ONLY

PCC PAVEMENT PLACEMENT BETWEEN CRC TERMINAL AND BRIDGE SLEEPER SLAB ON MAINLINE AND 6′ MEDIAN SHOULDER FROM STA. 47+84 TO STA. 48+74 I-29 SBL/NBL AND STA. 51+26 TO STA. 52+16 I-29 SBL/NBL

PCC Pavement

REINFORCING SCHEDULE FOR EACH BRIDGE END

Mk.	No.	Size	Length	Type
D1	128	4	18′- 0″	Str
D2	32	4	9′- 9″	Str
E1	27	4	31′- 6″	Str

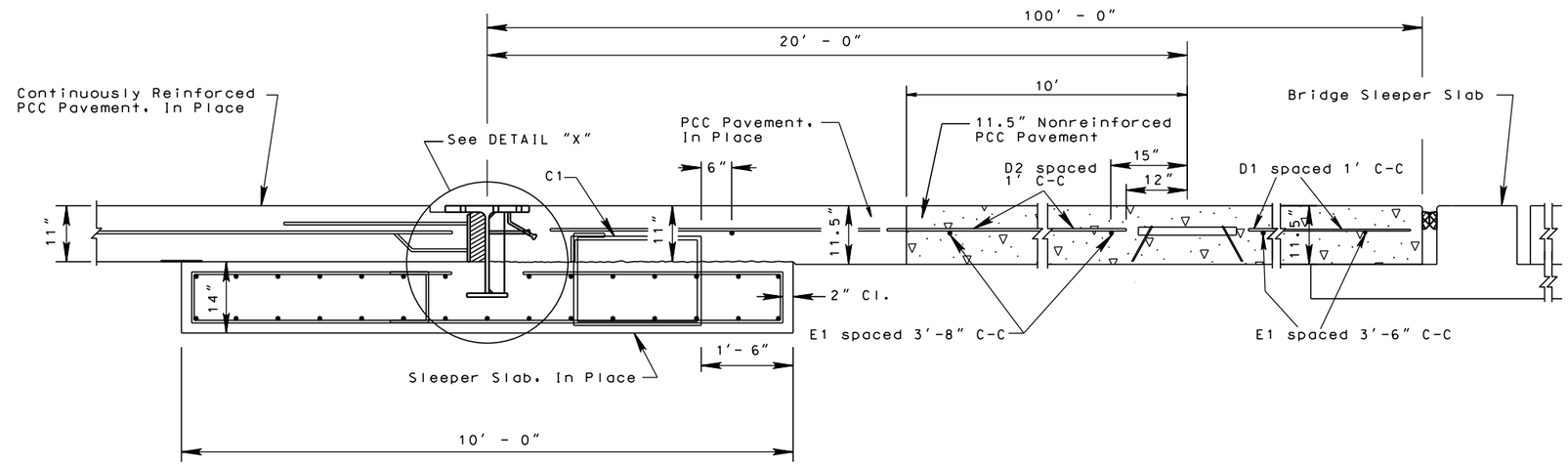

Detail for Terminal Anchor at Sta. 52+26 I-29 SBL Outside Shoulder

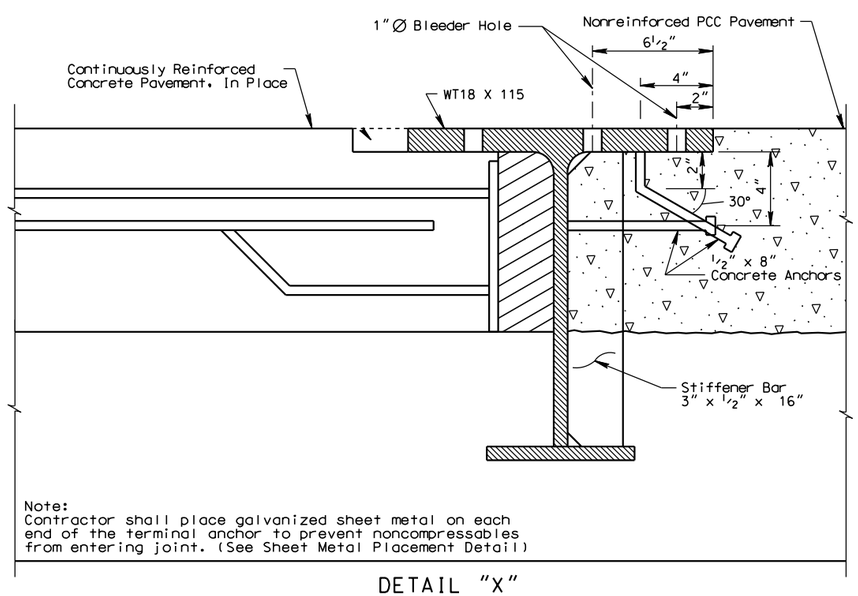

Note:
Contractor shall place galvanized sheet metal on each end of the terminal anchor to prevent noncompressables from entering joint. (See Sheet Metal Placement Detail)

DETAIL "X"

All reinforcing steel shall conform to ASTM A615 Grade 60. Cost for all reinforcing steel shall be incidental to 11.5″ Nonreinforced PCC Pavement.

Detail for Terminal Anchor at Sta. 52+26 I-29 SBL Outside Shoulder

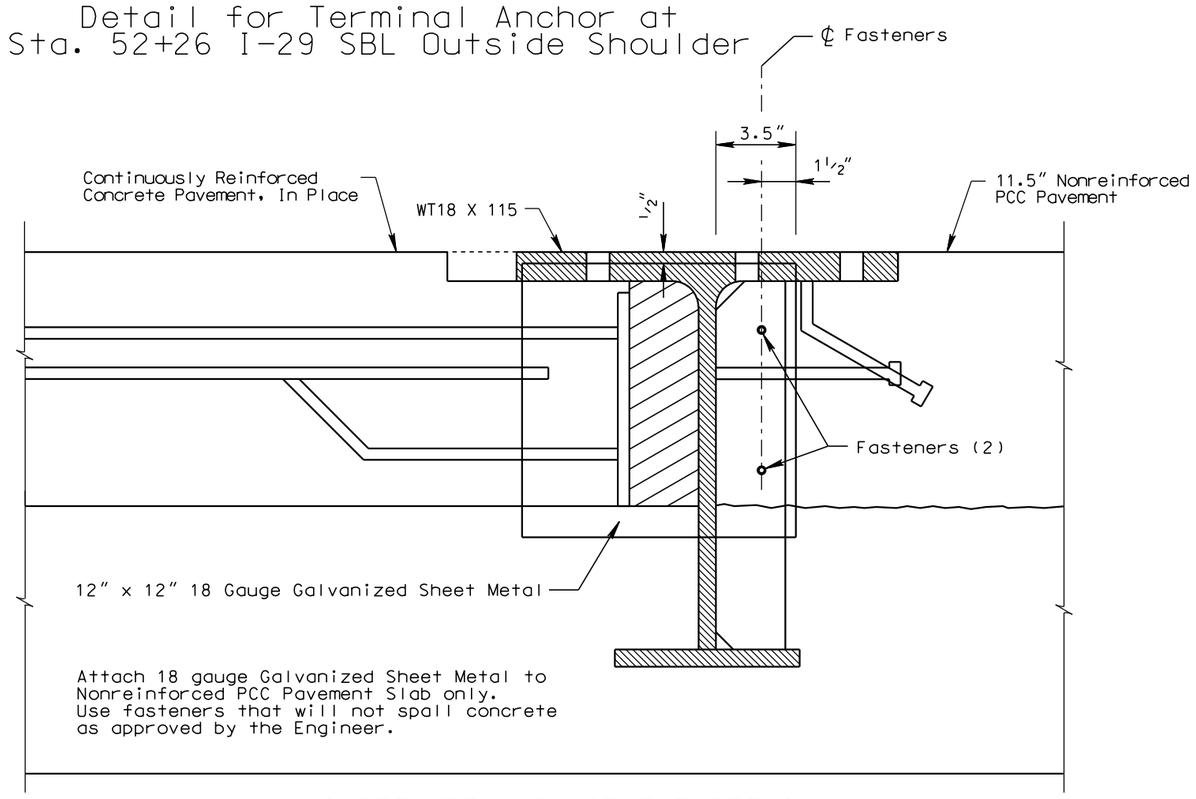

Attach 18 gauge Galvanized Sheet Metal to Nonreinforced PCC Pavement Slab only. Use fasteners that will not spall concrete as approved by the Engineer.

SHEET METAL PLACEMENT DETAIL

PLOT SCALE - 1:7.26001
PLOTTED FROM - TRPR16032
PLOT NAME - 47
FILE - ...\TYPICAL SECTIONS IN PLACE.DGN

GUARDRAIL & SURFACING LAYOUT

FOR BIDDING PURPOSES ONLY

STATE OF SOUTH DAKOTA	PROJECT	SHEET	TOTAL SHEETS
	IM 0293(96)73 & IM 2292(90)0	F73	F98

Plotting Date: 10/23/2015

Scale 1 Inch = 30 Feet
Sheet 1 of 2 Sheets

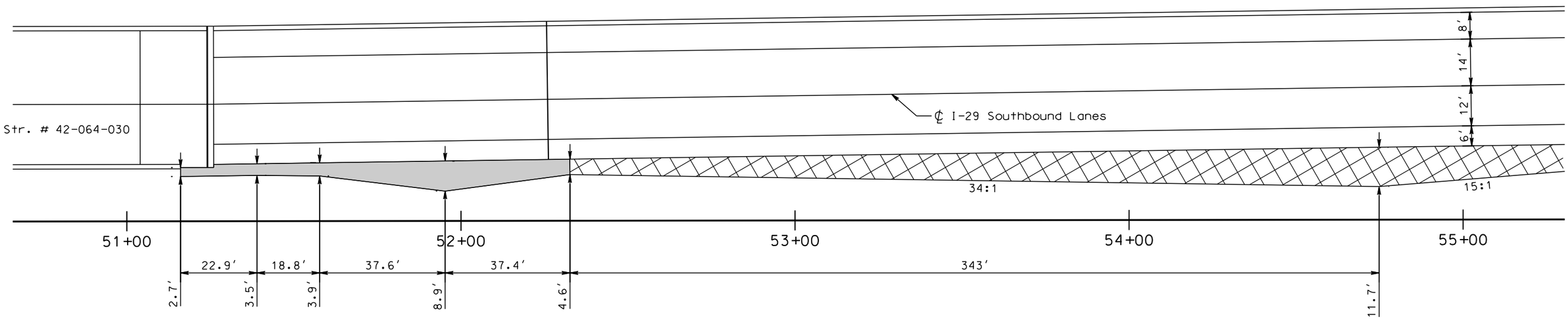

2" Class G Asphalt Concrete and 14.5" Base Course or Base Course, Salvaged

16" Base Course or Base Course, Salvaged adjacent to edge of PCC Pavement

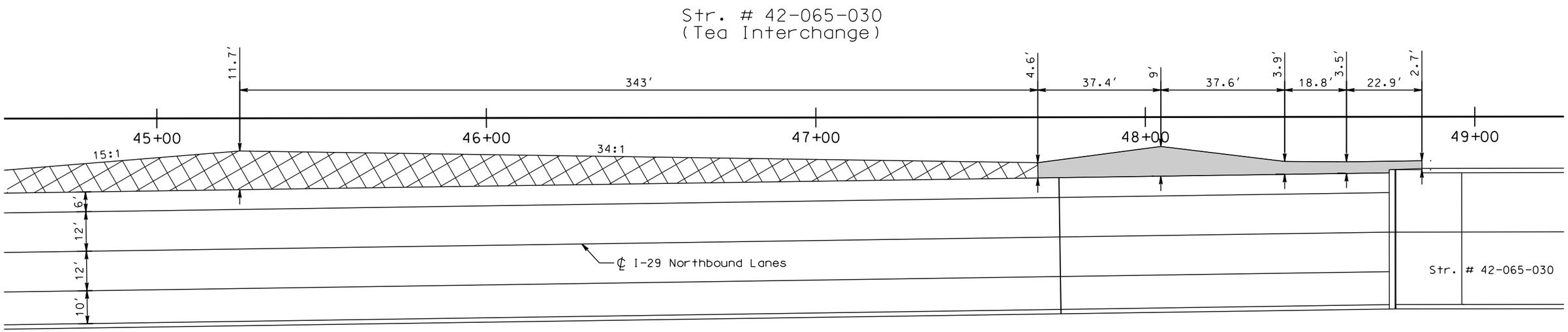

PLOT SCALE - 1:30

PLOT NAME - 48

FILE - ...\ADDT SURFACING GRAIL.DGN

PLOTTED FROM - TRPR16032

GUARDRAIL & SURFACING LAYOUT

FOR BIDDING PURPOSES ONLY

STATE OF SOUTH DAKOTA	PROJECT	SHEET	TOTAL SHEETS
	IM 0293(96)73 & IM 2292(90)0	F74	F98

Plotting Date: 10/23/2015

Scale 1 Inch = 30 Feet
Sheet 2 of 2 Sheets

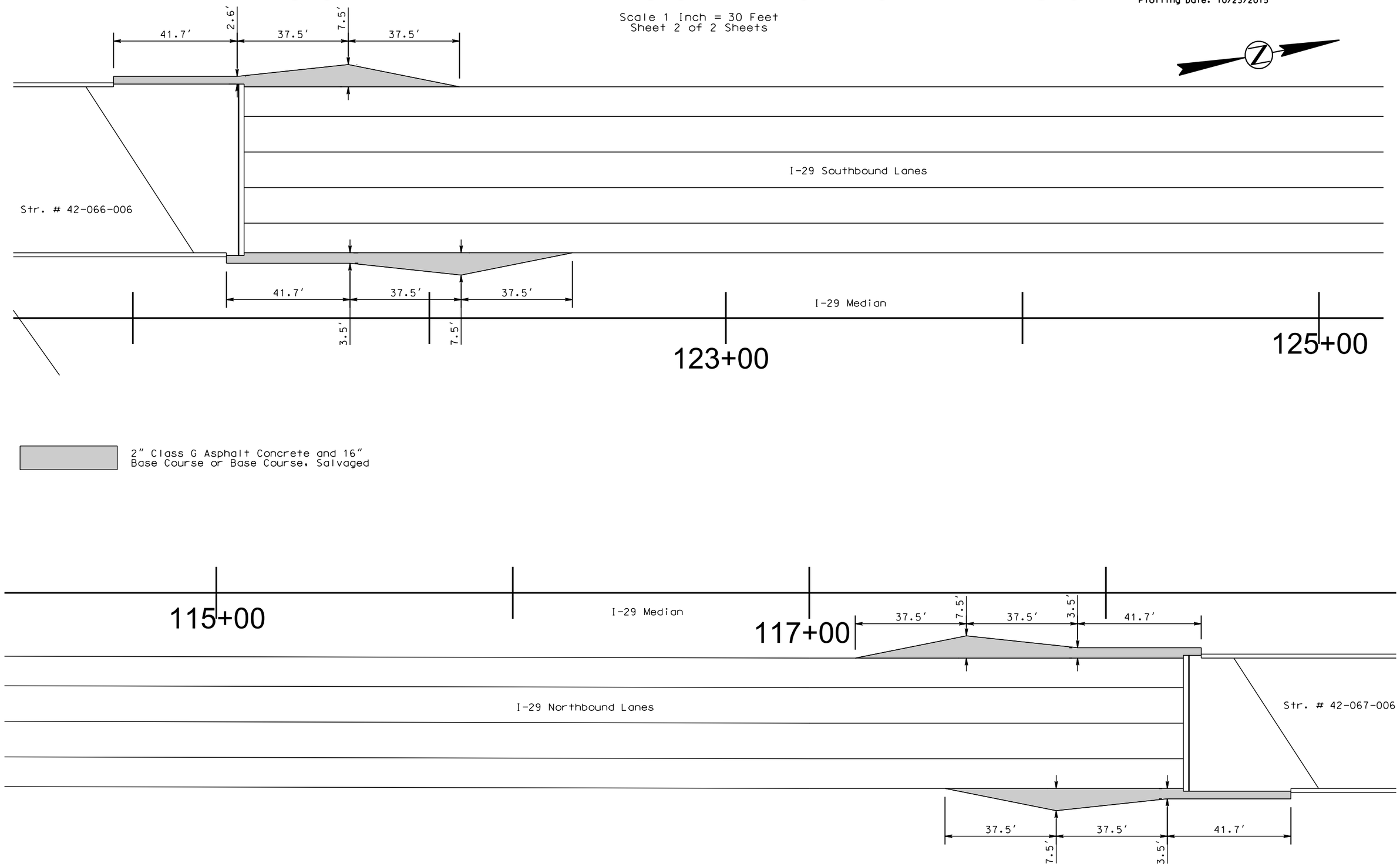

2" Class G Asphalt Concrete and 16" Base Course or Base Course, Salvaged

PLOT SCALE - 1:30

PLOT NAME - 49

FILE - ...\ADOT SURFACING GRAIL.DGN

PLOTTED FROM - TRPR16032

STATE OF SOUTH DAKOTA	PROJECT	SHEET	TOTAL SHEETS
	IM 0293(96)73 & IM 2292(90)0	F75	F98

Plotting Date: 10/23/2015

DETOUR LAYOUT

FOR BIDDING PURPOSES ONLY

Scale 1 Inch = 30 Feet
Sheet 1 of 5 Sheets

Detour Surfacing

I-29 SBL to Ramp B
Sta. 105+00 I-29

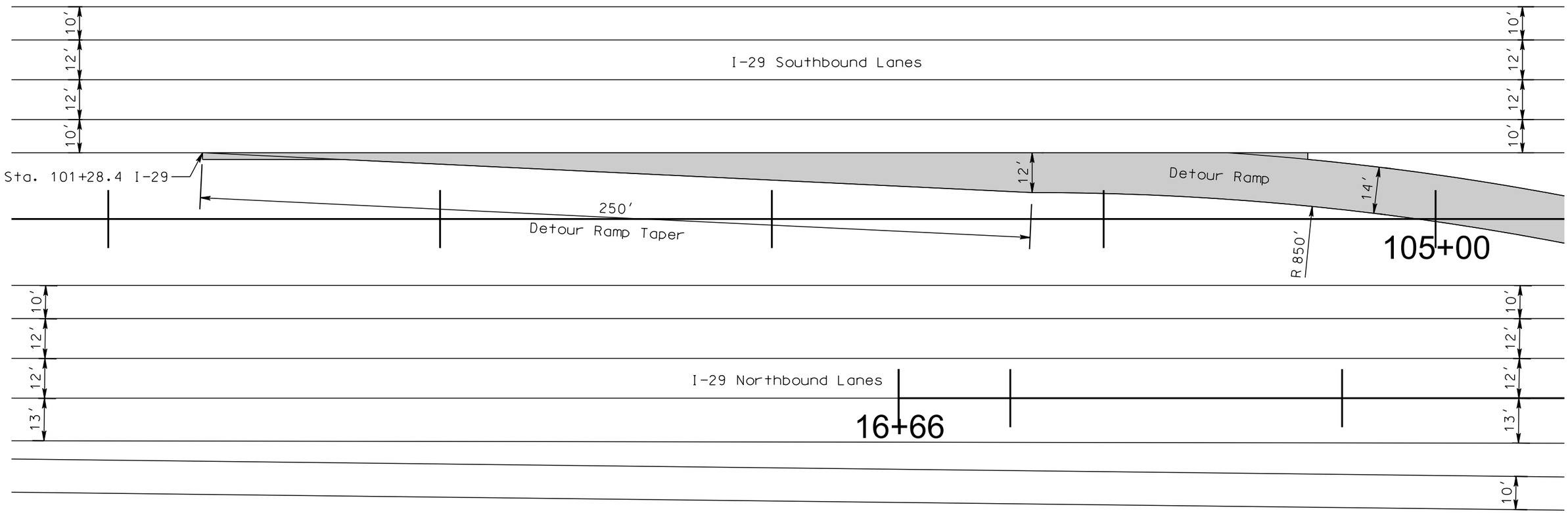

General Notes:

The Ramp Detour shall be constructed with a maximum horizontal degree of curve of 6° 45' and the vertical alignment shall be adequate for stopping sight distance.

If needed, Pipes shall be installed and sized appropriately for adequate drainage. Length, size and type of pipe will be determined in the field by the Project Engineer during construction. Payment for the pipe and installation shall be incidental to the various contract items.

Surfacing for Ramp Detour:
8" Class G Asphalt Concrete
12" Base Course or Base Course, Salvaged Pit Run

PLOT SCALE - 1:30
PLOT NAME - 50
FILE - U:\MS\PRJ\LINC0103\DETOURS.DGN
PLOTTED FROM - TRPR16032

STATE OF SOUTH DAKOTA	PROJECT	SHEET	TOTAL SHEETS
	IM 0293(96)73 & IM 2292(90)0	F76	F98

Plotting Date: 10/23/2015

DETOUR LAYOUT

FOR BIDDING PURPOSES ONLY

Scale 1 Inch = 30 Feet
Sheet 2 of 5 Sheets

I-29 SBL to Ramp B
Sta. 105+00 I-29

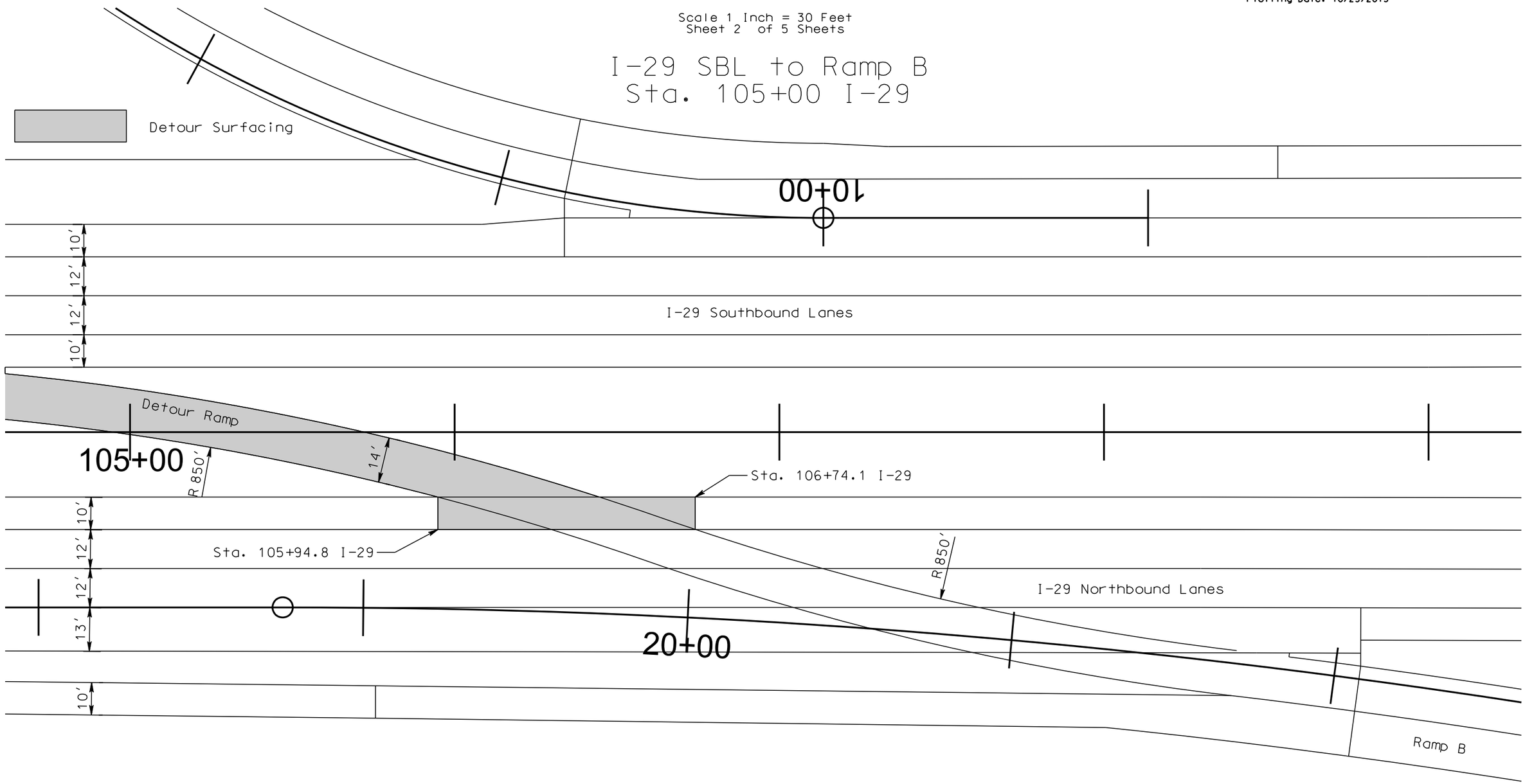

PLOT SCALE - 1:30

PLOTTED FROM - TRPR16032

PLOT NAME - 51

FILE - U:\MS\PRJ\LINC010S\DETOURS.DGN

STATE OF SOUTH DAKOTA	PROJECT	SHEET	TOTAL SHEETS
	IM 0293(96)73 & IM 2292(90)0	F77	F98

Plotting Date: 10/23/2015

DETOUR LAYOUT

FOR BIDDING PURPOSES ONLY

Scale 1 Inch = 50 Feet
Sheet 3 of 5 Sheets

Detour Surfacing

Ramp G to Ramp C Detour
Sta. 54+00 Ramp C

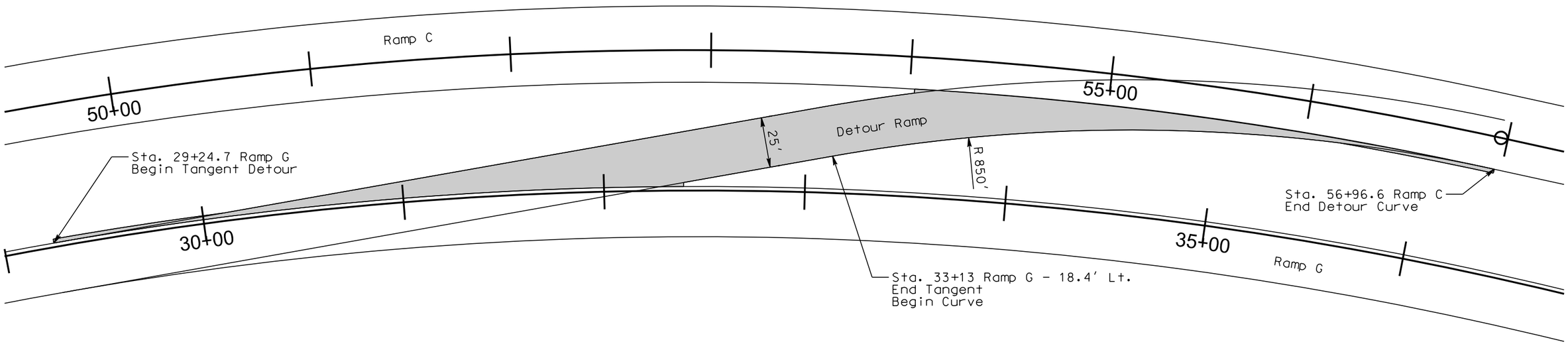

PLOT SCALE - 1:50

PLOT NAME - 52

FILE - U:\MS\PRJ\LINC01OS\DETOURS.DGN

PLOTTED FROM - TRPR16032

STATE OF SOUTH DAKOTA	PROJECT	SHEET	TOTAL SHEETS
	IM 0293(96)73 & IM 2292(90)0	F78	F98

Plotting Date: 10/23/2015

DETOUR LAYOUT

FOR BIDDING PURPOSES ONLY

Detour Surfacing

Scale 1 Inch = 50 Feet
Sheet 4 of 5 Sheets

Ramp A to I-29 SB Detour
Sta. 140+00 I-29

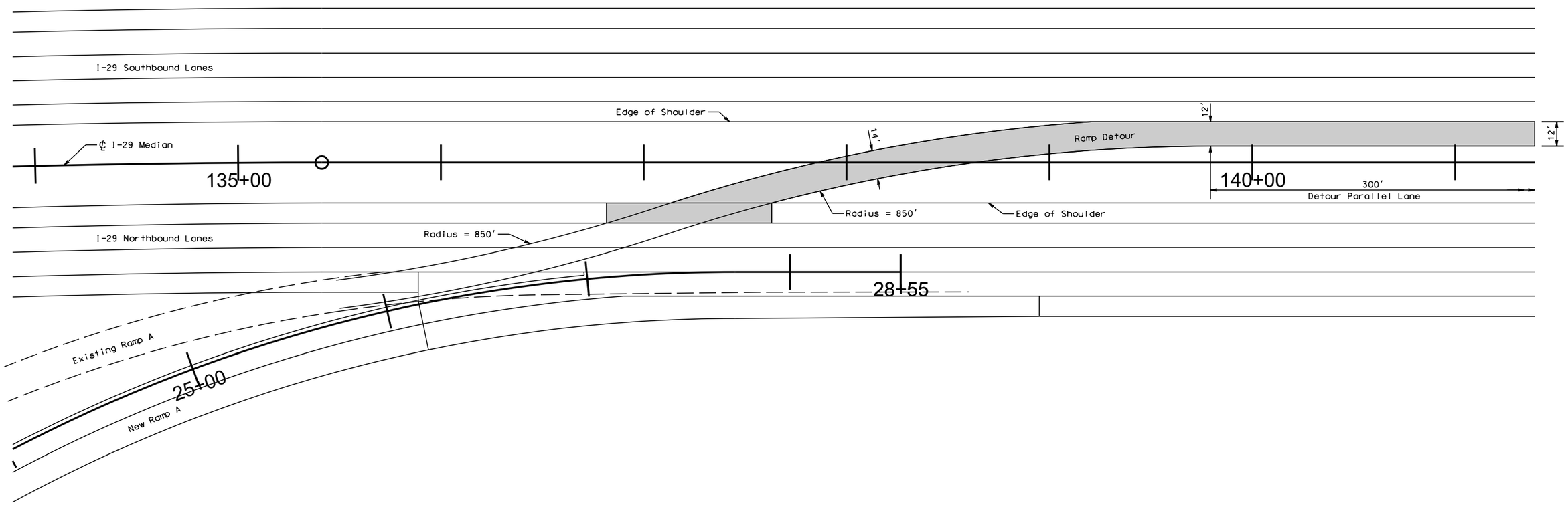

PLOT SCALE - 1:50

PLOTTED FROM - TRPR16032

PLOT NAME - 53

FILE - U:\MS\PRJ\LINC01GS\DETOURS.DGN

STATE OF SOUTH DAKOTA	PROJECT	SHEET	TOTAL SHEETS
	IM 0293(96)73 & IM 2292(90)0	F79	F98

Plotting Date: 10/23/2015

DETOUR LAYOUT

FOR BIDDING PURPOSES ONLY

Detour Surfacing

Scale 1 Inch = 50 Feet
Sheet 5 of 5 Sheets

Ramp A to I-29 SB Detour
Sta. 140+00 I-29

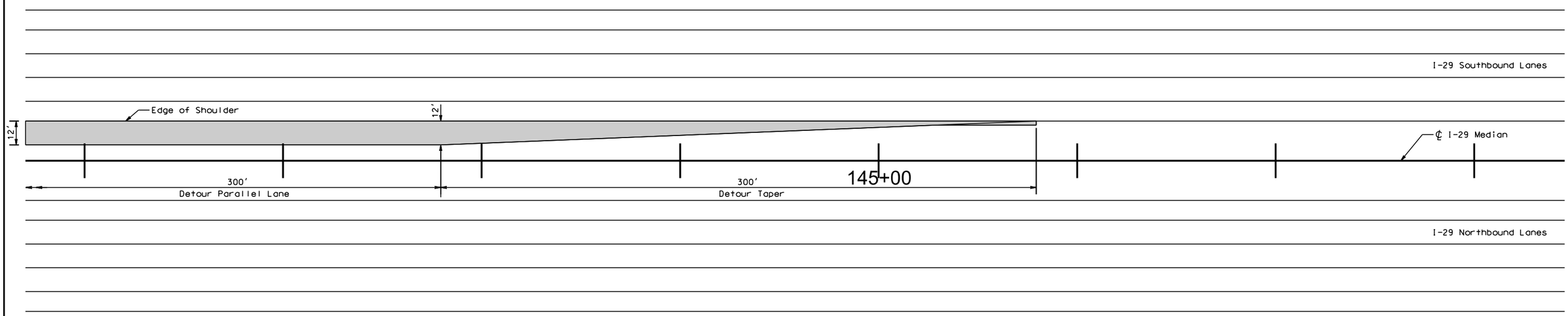

PLOT SCALE - 1:50

PLOTTED FROM - TRPR16032

PLOT NAME - 54

FILE - U:\MS\PRJXLINC01GS\DETOURS.DGN

MEMBRANE EXPANSION SEALANT JOINT

FOR BIDDING PURPOSES ONLY

STATE OF SOUTH DAKOTA	PROJECT	SHEET	TOTAL SHEETS
	IM 0293(96)73 & IM 2292(90)0	F80	F98

Plotting Date: 10/23/2015

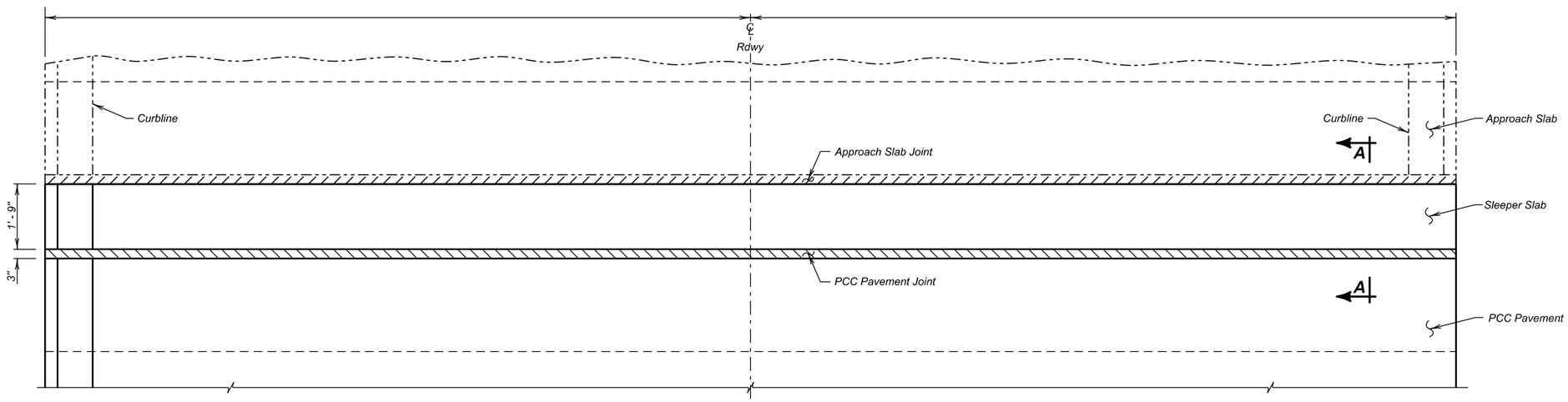

PLAN

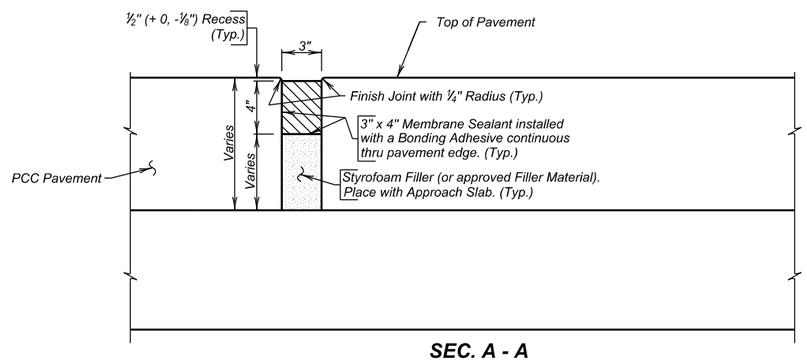

SEC. A - A

GENERAL NOTES

1. The Membrane Sealant shall be on the approved product list for Membrane Sealant Expansion Joints.
2. The manufacturer shall supply the membrane sealant in packaging that precompresses the membrane sealant. The precompressed dimension shall be as recommended by the sealant manufacturer, however, in no case shall the precompressed dimension exceed 75% of the joint opening width. The foam sealant shall be slowly self expanding to permit workers ample time to install the membrane sealant before the membrane sealant exceeds the joint opening width.
3. The membrane sealant shall provide a water tight seal throughout a joint movement range of + 25% (minimum) from the specified joint opening dimension.
4. The membrane sealant shall be supplied in pieces a minimum of 5 feet in length. The foam sealant shall be ultra-violet and ozone resistant.
5. The bonding adhesive used to attach the membrane sealant to the adjacent concrete shall be approved by the membrane sealant manufacturer.
6. Adhesive used to join adjacent pieces of the membrane sealant shall be as recommended by the manufacturer.
7. If Styrofoam filler material is used in the construction, it shall be closed cell and water-tight as approved by the Engineer.
8. The minimum concrete air temperature at the time of joint installation and adhesive curing shall be 40° F.
9. A technical representative of the membrane sealant manufacturer shall be present at the jobsite during installation. The technical representative shall be knowledgeable in the correct procedures for the preparation and installation of the joint material to ensure the Contractor installs the joint to the Manufacturers recommendations.
10. Surfaces that will be in contact with the membrane sealant shall be thoroughly cleaned by abrasive blasting to remove all laitance and contaminants (such as oil, curing compounds, etc.) from the surface. At a minimum, two passes of abrasive blasting with the nozzle held at an angle to within 1 to 2 inches of the surface will be required. Cleaning of the surfaces with solvents, wire brushing, or grinding shall not be permitted.
11. After abrasive blasting, but immediately prior to membrane joint installation, the entire joint contact surface shall be air blasted. The air compressor used for joint cleaning shall be equipped with trap devices capable of providing moisture-free and oil-free air at a recommended pressure of 90 psi. To obtain complete bonding with the adhesive, the adjacent surfaces must be dry and clean. The contact surfaces for the joint shall be visually inspected by the Engineer immediately prior to joint installation to verify the surface is dry and clean.
12. Individual spliced sections shall be installed as per the manufacturers' recommendations. The membrane joint sealant manufacturer shall submit a detailed installation procedure to the Engineer at least 5 days prior to joint installation for his review.
13. Traffic shall not be allowed on the joint until the bonding adhesive has had time to cure, as recommended by the manufacturer.
14. Use plywood or other material to protect concrete adjacent to the joint from spalling before any equipment is moved across the joint. Any spall areas will be repaired at the Contractor's expense by breaking out and replacing adjacent concrete, as approved by the Engineer.
15. The Membrane Sealant Expansion Joint will be measured in feet to the nearest one-tenth foot, complete in place. Measurement will be made of the overall horizontal length. The Membrane Sealant Expansion Joint will be paid for at the contract unit price per foot complete in place. Payment for this item shall be full compensation for furnishing all the required materials in place, including labor, equipment and incidentals necessary to complete the work in accordance with the plans and the foregoing specifications.

Tea Interchange, Exit 73

LOCATION	LENGTH feet
Sta. 48+74 I-29 SB	41.3
Sta. 51+26 I-29 SB	41.3
Sta. 48+74 I-29 NB	41.3
Sta. 51+26 I-29 NB	41.3
TOTAL	165.2

LOCATION	LENGTH feet
Sta. 43+55 I-29 SB	52.0
Sta. 117+65.0 I-29 SB	56.0
Sta. 121+37.5 I-29 SB	56.0
Sta. 43+55 I-29 NB	52.0
Sta. 118+26.0 I-29 NB	56.0
Sta. 122+03.4 I-29 NB	56.0
TOTAL	328.0

PLOT SCALE - 1:0.176
PLOTTED FROM - TRPR16032
PLOT NAME - 55
FILE - ...\MEMBRANE JOINT DETAIL.DGN

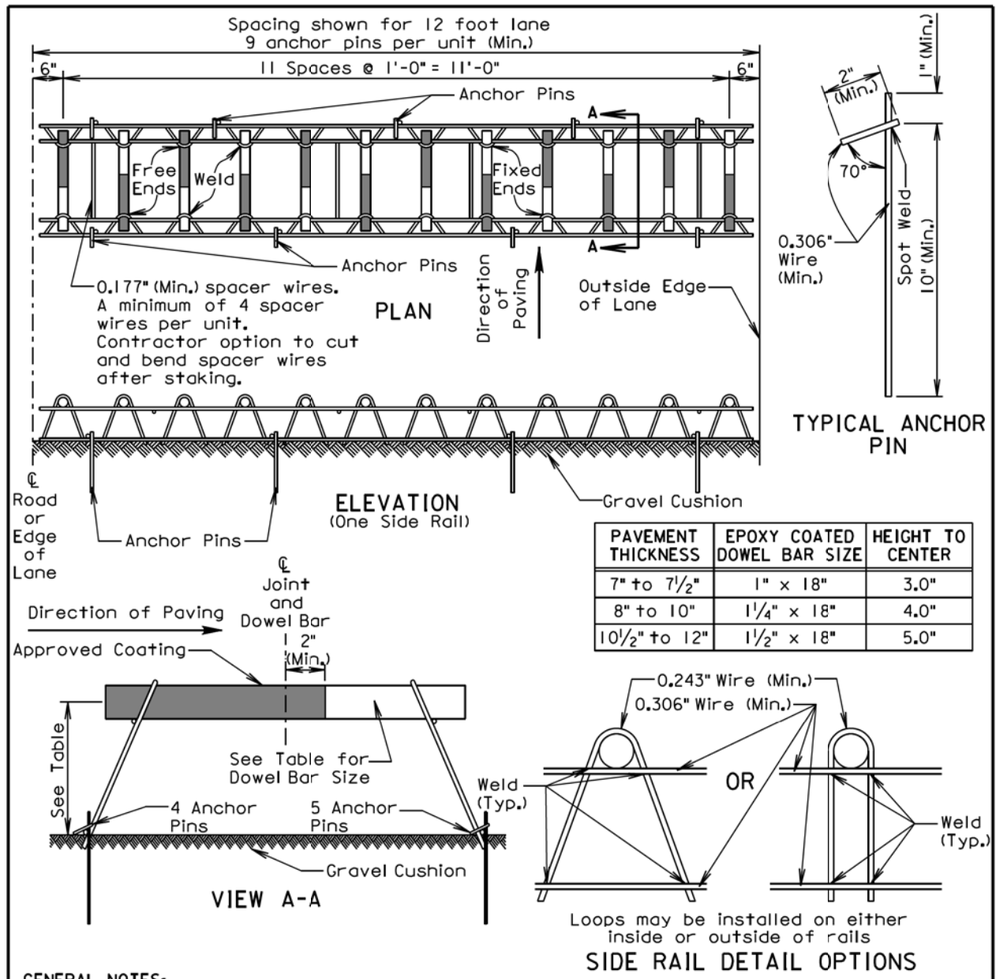

PAVEMENT THICKNESS	EPOXY COATED DOWEL BAR SIZE	HEIGHT TO CENTER
7" to 7½"	1" x 18"	3.0"
8" to 10"	1¼" x 18"	4.0"
10½" to 12"	1½" x 18"	5.0"

GENERAL NOTES:

Longitudinal joint tie bars shall be placed a minimum of 15 inches from the transverse contraction joint.

Centerline of individual dowel bars shall be parallel to top of subgrade ±1/8 inch in 18 inches and to all other dowel bars in the assembly ±1/16 inch in 18 inches.

Centerline of individual dowel bars shall be parallel to the centerline of the roadway ±1/2 inch in 18 inches.

The transverse contraction joints shall be sawed perpendicular to the centerline of the roadway and the dowel bars shall be centered on the sawed joint ±1 inch.

Supporting devices as shown on this sheet, or equivalent as approved by the Engineer, shall be used to maintain proper horizontal and vertical alignment of the dowel bars.

August 30, 2013

Published Date: 3rd Qtr. 2015	SDDOT	PCC PAVEMENT DOWEL BAR ASSEMBLY FOR TRANSVERSE CONTRACTION JOINTS 12 Bar Assembly on Granular Base Material	PLATE NUMBER 380.01 Sheet 1 of 1

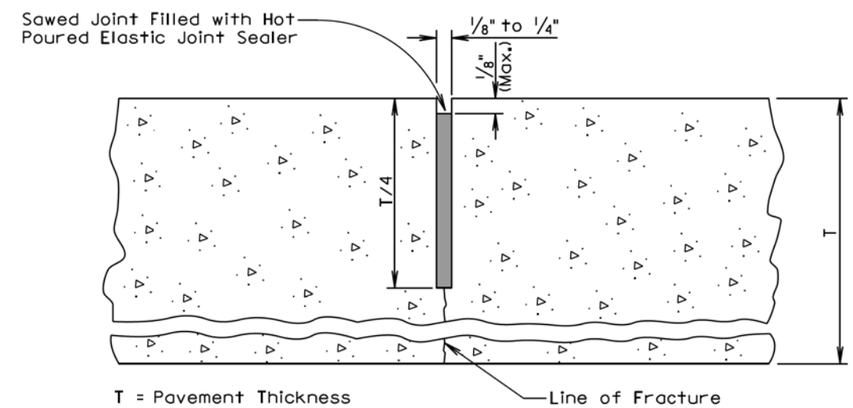

GENERAL NOTES:

If an early entrance sawcut does not develop the full transverse crack, then the saw cut to control cracking shall be a minimum of 1/4 the thickness of the pavement.

All hot poured elastic joint sealer material spilled on the surface of the concrete pavement shall be removed as soon as the material has cooled. The extent of removal of material shall be to the satisfaction of the Engineer. All costs for removal of the spilled joint sealer material shall be borne by the Contractor.

June 26, 2015

Published Date: 3rd Qtr. 2015	SDDOT	PCC PAVEMENT TRANSVERSE CONTRACTION JOINT WITH OR WITHOUT DOWEL BAR ASSEMBLY	PLATE NUMBER 380.05 Sheet 1 of 1

PLOT SCALE - 1:200
PLOT NAME - 56
FILE - ...\MS\PRJNLINC010S\STDPLATE 1.DGN
PLOTTED FROM - TRPR16032

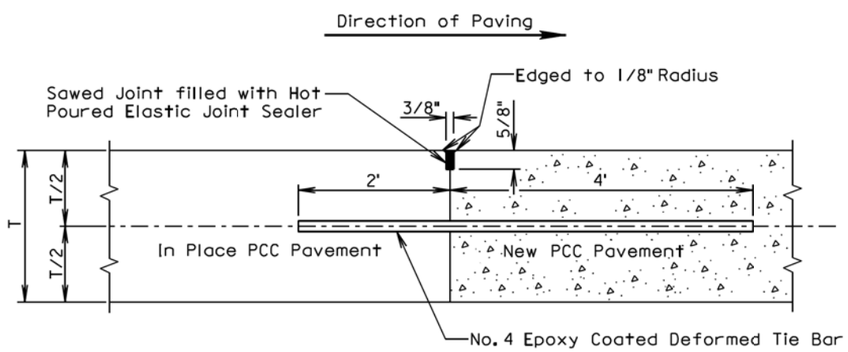

T = Pavement Thickness

GENERAL NOTES:

No. 4 epoxy coated deformed tie bars shall be spaced 12 inches center to center and shall be a minimum of 3 inches and a maximum of 6 inches from the pavement edges.

The minimum distance between a transverse construction joint with tie bars and an adjacent transverse contraction joint shall be 5 feet.

When a transverse construction joint is made, paving will not be allowed in this area for 12 hours.

A transverse construction joint may be placed in lieu of the transverse contraction joint when shown in the plans.

The term "In Place PCC Pavement" in the above drawing indicates that the in place PCC pavement was placed on the current project.

June 26, 2013

Published Date: 3rd Qtr. 2015	SDDOT	PCC PAVEMENT MID PANEL TRANSVERSE CONSTRUCTION JOINT	PLATE NUMBER 380.07 Sheet 1 of 1

DETAIL A
TRANSVERSE CONSTRUCTION JOINT WITH TIE BARS

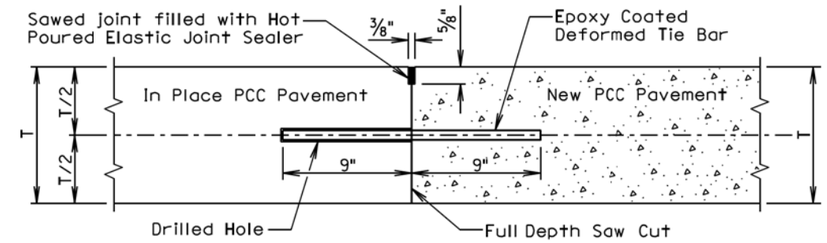

T = In Place PCC Pavement and New PCC Pavement Thickness

GENERAL NOTES:

The term "In Place PCC Pavement" in the above drawing indicates that the in place PCC pavement was placed on a previous project.

See sheet 2 of 2 of this standard plate to determine if Detail A shall be used.

The tie bars shall be embedded a minimum depth of 9 inches into the in place PCC pavement and anchored with an epoxy resin adhesive.

No. 9 epoxy coated deformed tie bars shall be used in 10 inch thickness and less PCC Pavement and No. 11 epoxy coated deformed tie bars shall be used in 10.5 inch thickness and greater PCC Pavement. The tie bar spacing shall be 18 inches center to center and shall be a minimum of 3 inches and a maximum of 9 inches from the pavement edges.

DETAIL B
TRANSVERSE CONSTRUCTION JOINT WITH DOWEL BARS

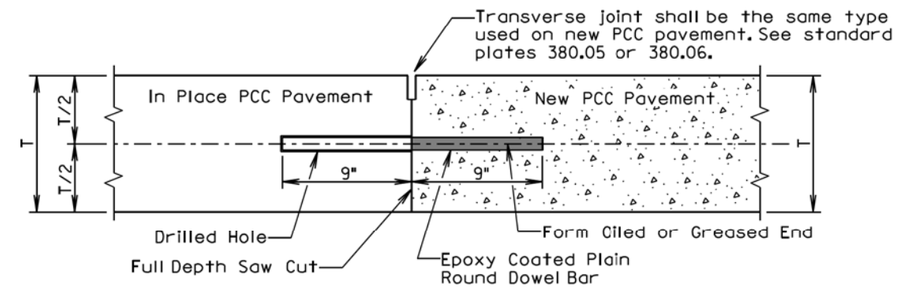

T = In Place PCC Pavement and New PCC Pavement Thickness

GENERAL NOTES:

The term "In Place PCC Pavement" in the above drawing indicates that the in place PCC pavement was placed on a previous project or current project.

See sheet 2 of 2 of this standard plate to determine if Detail B shall be used.

The plain round dowel bars shall be embedded a minimum depth of 9 inches into the in place PCC pavement and anchored with an epoxy resin adhesive.

The epoxy coated plain round dowel bar size, number, and spacing shall be the same as detailed on the corresponding dowel bar assembly standard plate (380.01, 380.02, 380.03, or 380.04). The epoxy coated plain round dowel bars shall be a minimum of 3 inches and a maximum of 6 inches from the pavement edges.

September 6, 2013

Published Date: 3rd Qtr. 2015	SDDOT	PCC PAVEMENT TRANSVERSE CONSTRUCTION JOINTS WITH TIE BARS OR DOWEL BARS	PLATE NUMBER 380.08 Sheet 1 of 2

PLOT SCALE - 1:200
PLOTTED FROM - TRPR16032
PLOT NAME - 57
FILE - ...\MS\PRJ\LINC010S\STDPLATE 2.DGN

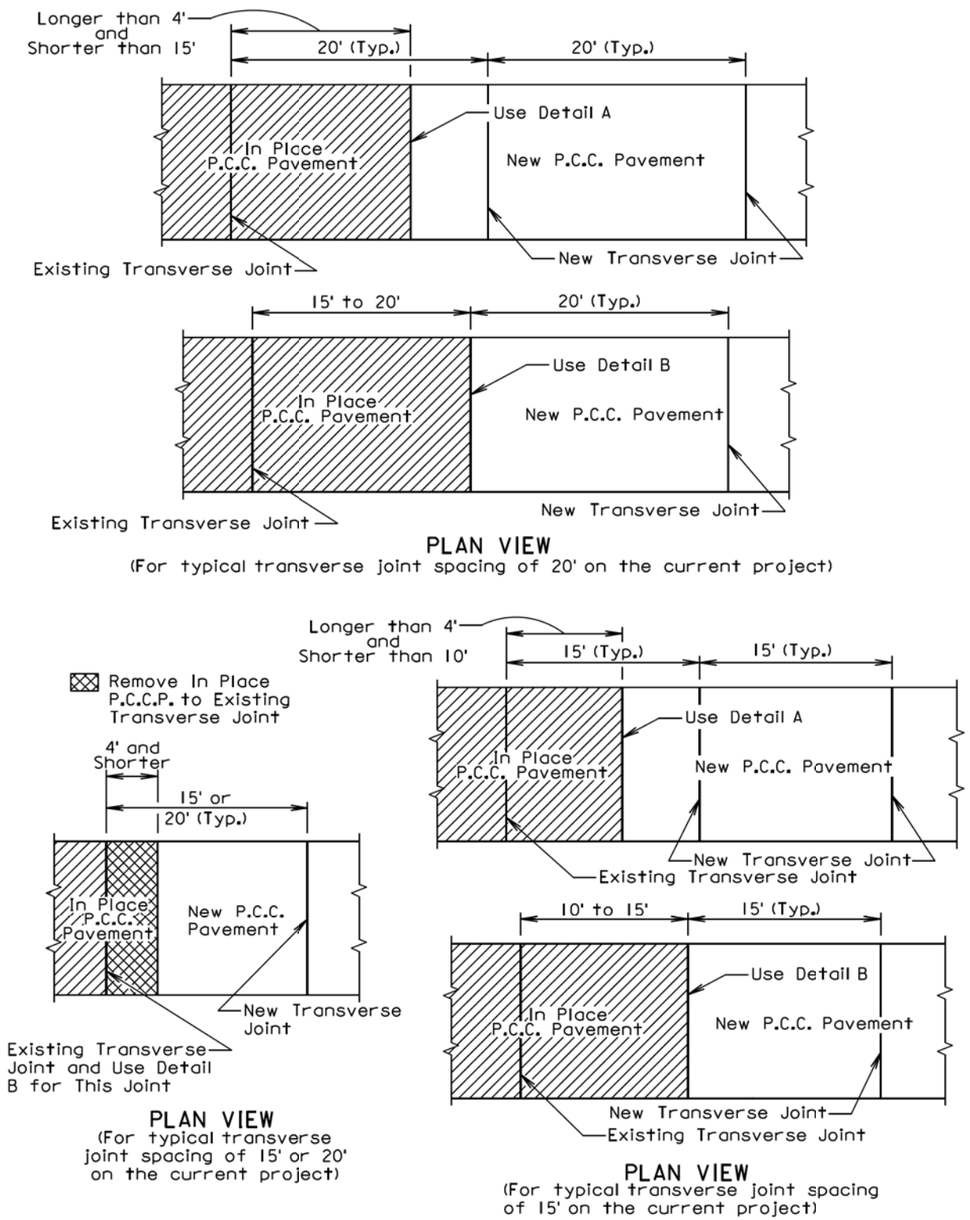

September 6, 2013

Published Date: 3rd Qtr. 2015

SDDOT

PCC PAVEMENT TRANSVERSE CONSTRUCTION JOINTS WITH TIE BARS OR DOWEL BARS

PLATE NUMBER 380.08

Sheet 2 of 2

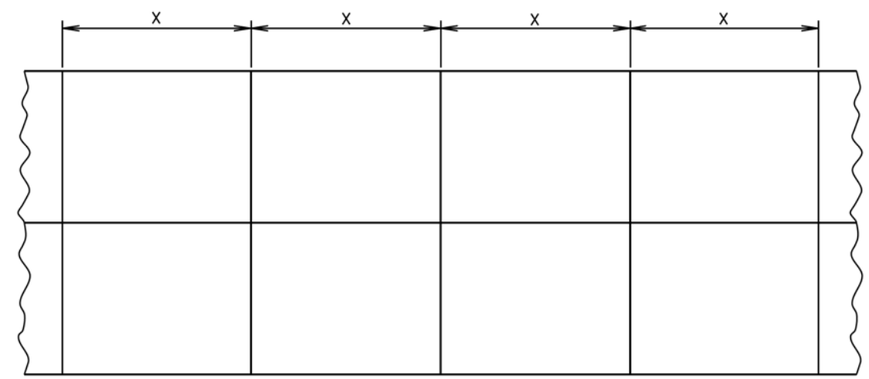

PCCP Thickness	Transverse Contraction Joint Spacing (X)
8" to 9.5"	15'
10" and Thicker	20'

August 31, 2013

Published Date: 3rd Qtr. 2015

SDDOT

PCC PAVEMENT TYPICAL CONTRACTION JOINT SPACING

PLATE NUMBER 380.09

Sheet 1 of 1

LONGITUDINAL CONSTRUCTION JOINT WITH TIE BARS
(DRILLED IN BARS)

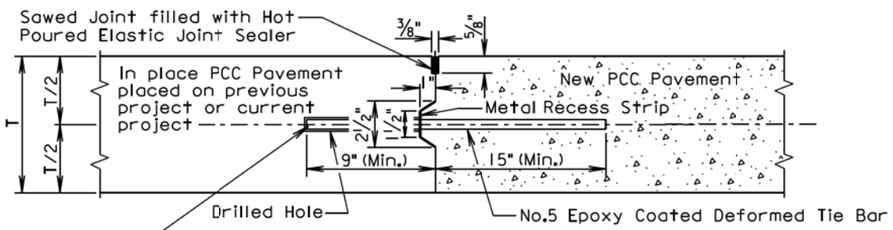

T = Pavement Thickness

The tie bars shall be embedded a minimum depth of 9 inches into the in place PCC pavement and anchored with an epoxy resin adhesive.

LONGITUDINAL CONSTRUCTION JOINT WITH TIE BARS
(INSERTED OR FORMED IN BARS)

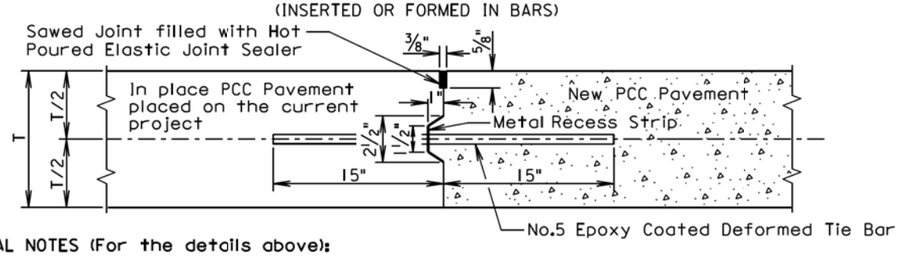

GENERAL NOTES (For the details above):

The epoxy coated deformed tie bars shall be spaced in accordance with the following tables:

Tie Bar Spacing 48" Maximum	
Transverse Contraction Joint Spacing	Number of Tie Bars
6.5' to 10'	2
10.5' to 14'	3
14.5' to 18'	4
18.5' to 22'	5

Tie Bar Spacing 30" Maximum	
Transverse Contraction Joint Spacing	Number of Tie Bars
5' to 7'	2
7.5' to 9.5'	3
10' to 12'	4
12.5' to 14.5'	5
15' to 17'	6
17.5' to 19.5'	7
20' to 22'	8

The tie bars shall be placed a minimum of 15 inches from transverse contraction joints.

The required number of tie bars as shown in the table shall be uniformly spaced within each panel. The uniformly spaced tie bars shall be spaced a maximum of 48 inches center to center for a female keyway and shall be spaced a maximum of 30 inches center to center for a vertical face and male keyway. The maximum tie bar spacing shall apply to tie bars within each panel.

The keyway illustrated in the above details depict a female keyway.

The keyway is optional and is not required. When concrete pavement is formed and a keyway is provided, a metal recess strip shall be used. When concrete pavement is slip formed, a metal recess strip is not required.

August 31, 2013

Published Date: 3rd Qtr. 2015	SDDOT	PCC PAVEMENT LONGITUDINAL JOINTS WITH TIE BARS	PLATE NUMBER 380.10
			Sheet 1 of 2

SAWED LONGITUDINAL JOINT WITH TIE BARS
(POURED MONOLITHICALLY)

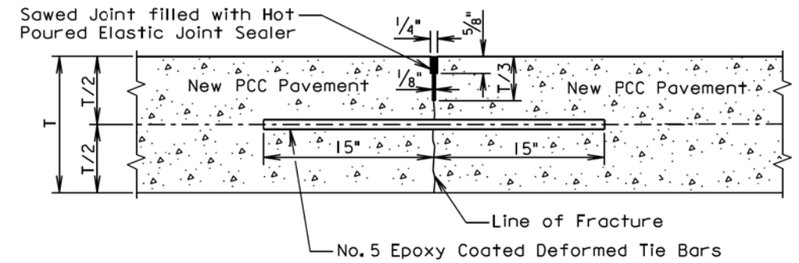

T = Pavement Thickness

GENERAL NOTES (For the detail above):

The epoxy coated deformed tie bars shall be spaced in accordance with the following table:

Tie Bar Spacing 48" Maximum	
Transverse Contraction Joint Spacing	Number of Tie Bars
6.5' to 10'	2
10.5' to 14'	3
14.5' to 18'	4
18.5' to 22'	5

The tie bars shall be placed a minimum of 15 inches from the transverse contraction joints.

The required number of tie bars as shown in the table shall be uniformly spaced within each panel with a maximum space of 48 inches center to center. The maximum tie bar spacing shall apply to tie bars within each panel.

The first saw cut to control cracking shall be a minimum of 1/3 the thickness of the pavement. Additional sawing for widening the saw cut to provide the width for the installation of the hot poured elastic joint sealer is necessary.

August 31, 2013

Published Date: 3rd Qtr. 2015	SDDOT	PCC PAVEMENT LONGITUDINAL JOINTS WITH TIE BARS	PLATE NUMBER 380.10
			Sheet 2 of 2

PLOT SCALE - 1:200
PLOT NAME - 59
FILE - ...\MS\PRJ\LINC010S\STDPLATE 4.DGN
PLOTTED FROM - TRPR16032

LONGITUDINAL CONSTRUCTION JOINT WITHOUT TIE BARS

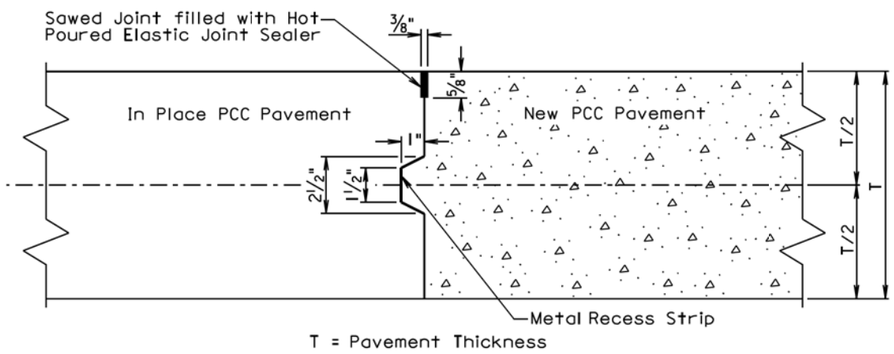

T = Pavement Thickness

GENERAL NOTES:

When concrete pavement is formed and a keyway is provided, a metal recess strip shall be used. When concrete pavement is slip formed, a metal recess strip is not required.

The term "In Place PCC Pavement" in the above drawing indicates that the in place PCC pavement was placed on the current project.

LONGITUDINAL CONSTRUCTION JOINT WITHOUT TIE BARS

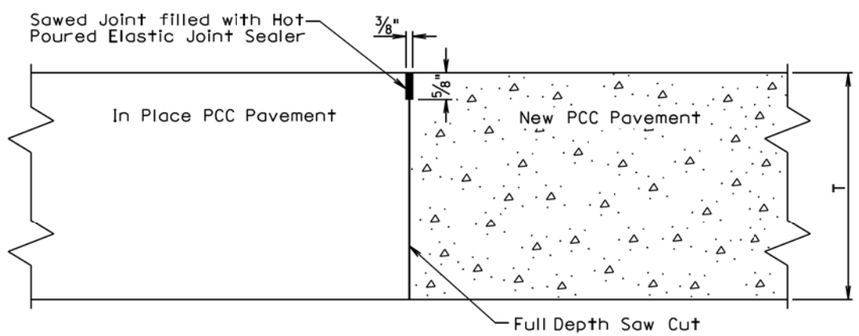

T = Pavement Thickness

GENERAL NOTE:

The term "In Place PCC Pavement" in the above drawing indicates that the in place PCC pavement was placed on a previous project.

September 14, 2001

Published Date: 3rd Qtr. 2015	SDDOT	PCC PAVEMENT LONGITUDINAL JOINTS WITHOUT TIE BARS	PLATE NUMBER 380.12
			Sheet 1 of 2

SAWED LONGITUDINAL JOINT WITHOUT TIE BARS

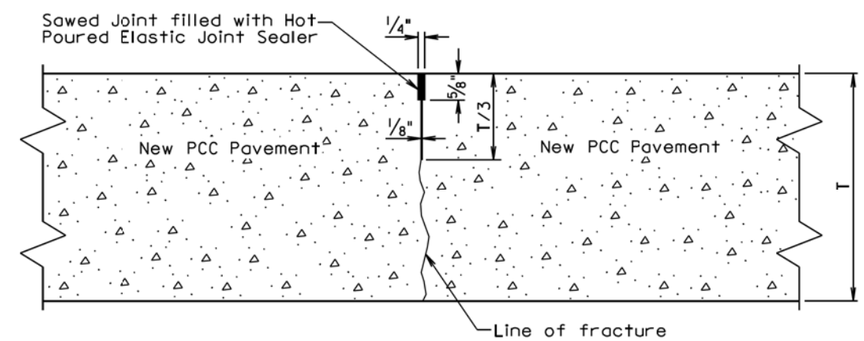

T = Pavement Thickness

GENERAL NOTE:

The first saw cut to control cracking shall be a minimum of 1/3 the thickness of the pavement. Additional sawing for widening the saw cut to provide the width for the installation of the hot poured elastic joint sealer will be necessary.

September 14, 2001

Published Date: 3rd Qtr. 2015	SDDOT	PCC PAVEMENT LONGITUDINAL JOINTS WITHOUT TIE BARS	PLATE NUMBER 380.12
			Sheet 2 of 2

PLOT SCALE - 1:200
PLOT NAME - 60
FILE - ...\MS\PRJXLINC01GS\STDPLATE 5.DGN
-PLOTTED FROM - TRPR16032

GENERAL NOTES:

Either flanged channel steel posts or S3x5.7 steel I beam posts shall be used, but post type shall be consistent thoughout the project. The S3x5.7 Steel I Beam post shall be used for the end posts.

All costs associated with furnishing and constructing the 3 cable guardrail anchor assembly including the concrete anchor, cable anchor bracket, compensating device, steel turnbuckle cable assembly, and necessary hardware shall be incidental to the contract unit price per each for "3 Cable Guardrail Anchor Assembly".

All costs associated with furnishing and constructing the 3 cable guardrail including posts, cable, cable splices, and hardware shall be incidental to the contract unit price per foot for "3 Cable Guardrail".

The following table and criteria shall apply to the arrangement of the Spring Cable End Assemblies (Compensation Devices) and Turnbuckle Cable End Assemblies:

LENGTH OF CABLE RUN	CRITERIA FOR ARRANGEMENT OF THE SPRING CABLE END ASSEMBLIES (COMPENSATION DEVICES) AND TURNBUCKLE CABLE END ASSEMBLIES
Less than 500'	Use turnbuckle on the approaching traffic end and compensating device on the other end of each individual cable, except in the W Beam to 3 Cable Transition where all compensating devices shall be provided at the bridge ends.
Greater than 500' to 1000'	Use compensating device on each end of each individual cable.
Greater than 1000'	Start new run by interlacing at last parallel post as shown on sheet 2 of 6.

All Compensating Devices shall be attached to the cable anchor bracket when one end of the run is attached to a bridge.

Compensating Devices must have a spring rate of 450 ± 50 pounds per inch and shall have a total available travel of 6 inches minimum.

The cable shall be retensioned after the initial 2 week pretension period in accordance with the following table:

CABLE TENSIONING SPECIFICATIONS													
Temperature Range (Degree F)	-20 to -11	-10 to -1	0 to 9	10 to 19	20 to 29	30 to 39	40 to 49	50 to 59	60 to 69	70 to 79	80 to 89	90 to 99	100 to 109	110 to 120
Spring Compression (Inch)	4¼	4	3¾	3½	3¼	3	2¾	2½	2¼	2	1¾	1½	1¼	1

POST SPACING FOR HORIZONTAL CURVES	
Roadway ℄ Curvature	Maximum Post Spacing (Ft)
1° and Less	16'
Greater than 1° to 8°	12'
Greater than 8° to 13°	8'
Greater than 13°	NOT ALLOWED

June 26, 2015

Published Date: 3rd Qtr. 2015

SDDOT

3 CABLE GUARDRAIL (LOW TENSION)

PLATE NUMBER 629.01

Sheet 1 of 6

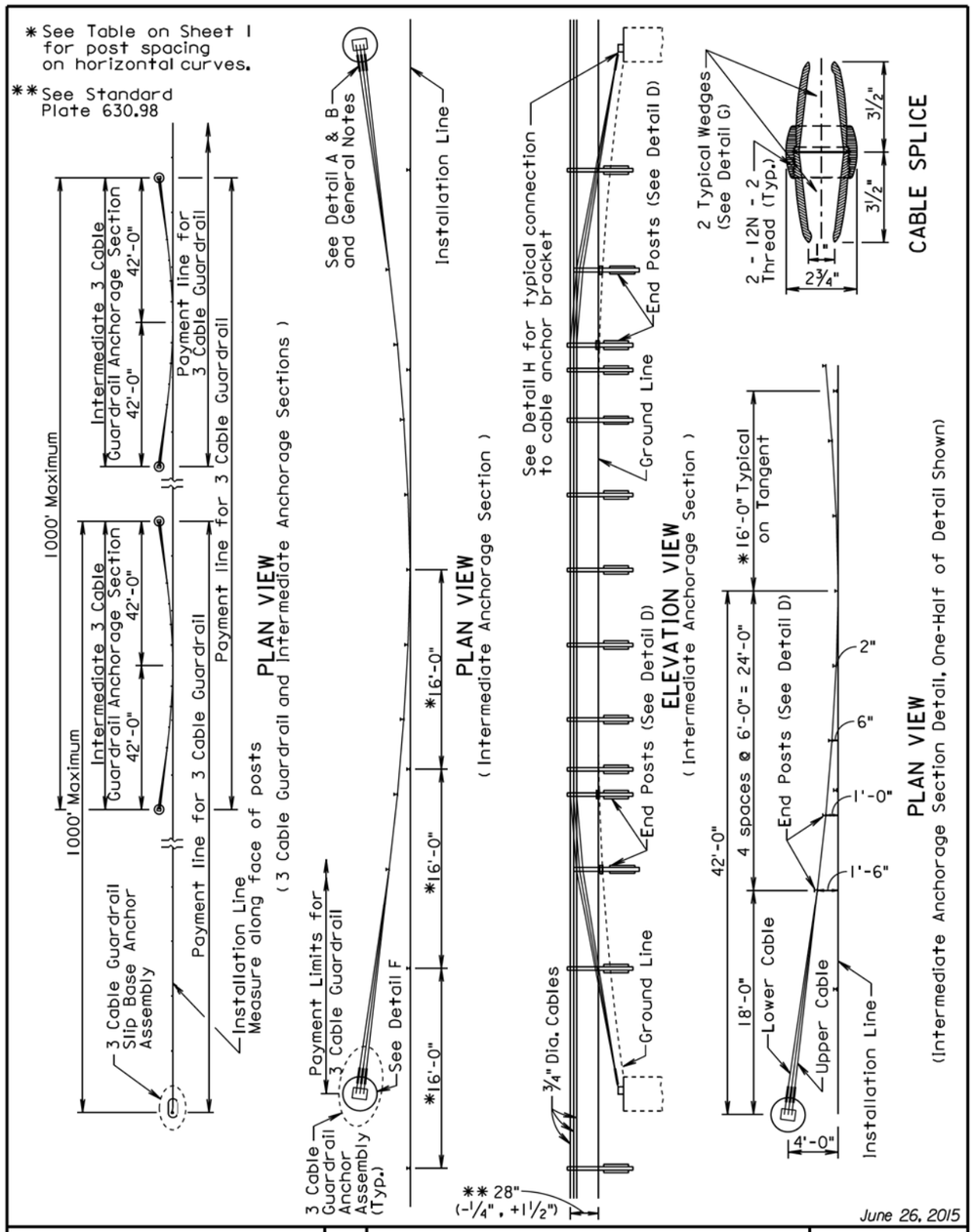

June 26, 2015

Published Date: 3rd Qtr. 2015

SDDOT

3 CABLE GUARDRAIL (LOW TENSION)

PLATE NUMBER 629.01

Sheet 2 of 6

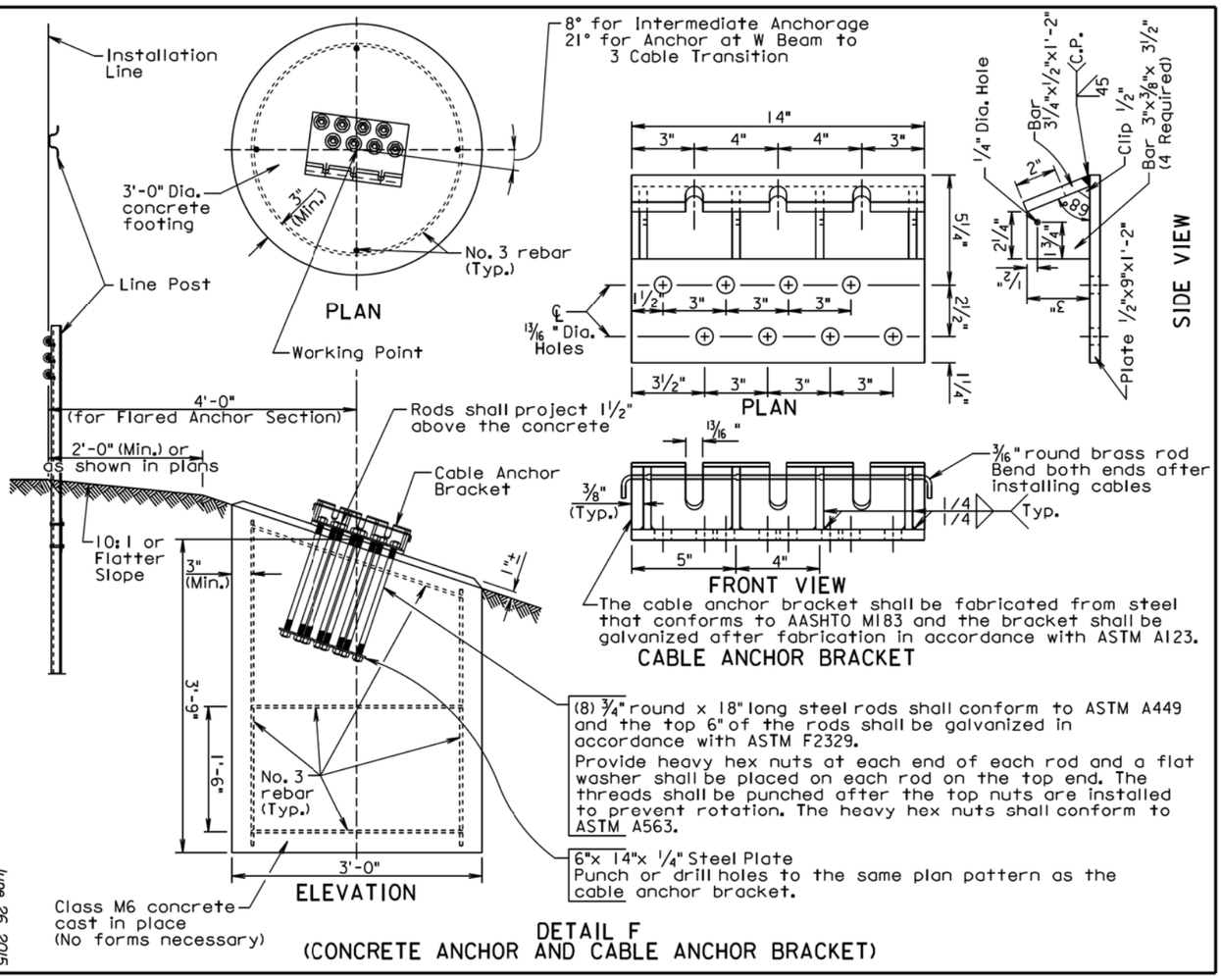

DETAIL F
(CONCRETE ANCHOR AND CABLE ANCHOR BRACKET)

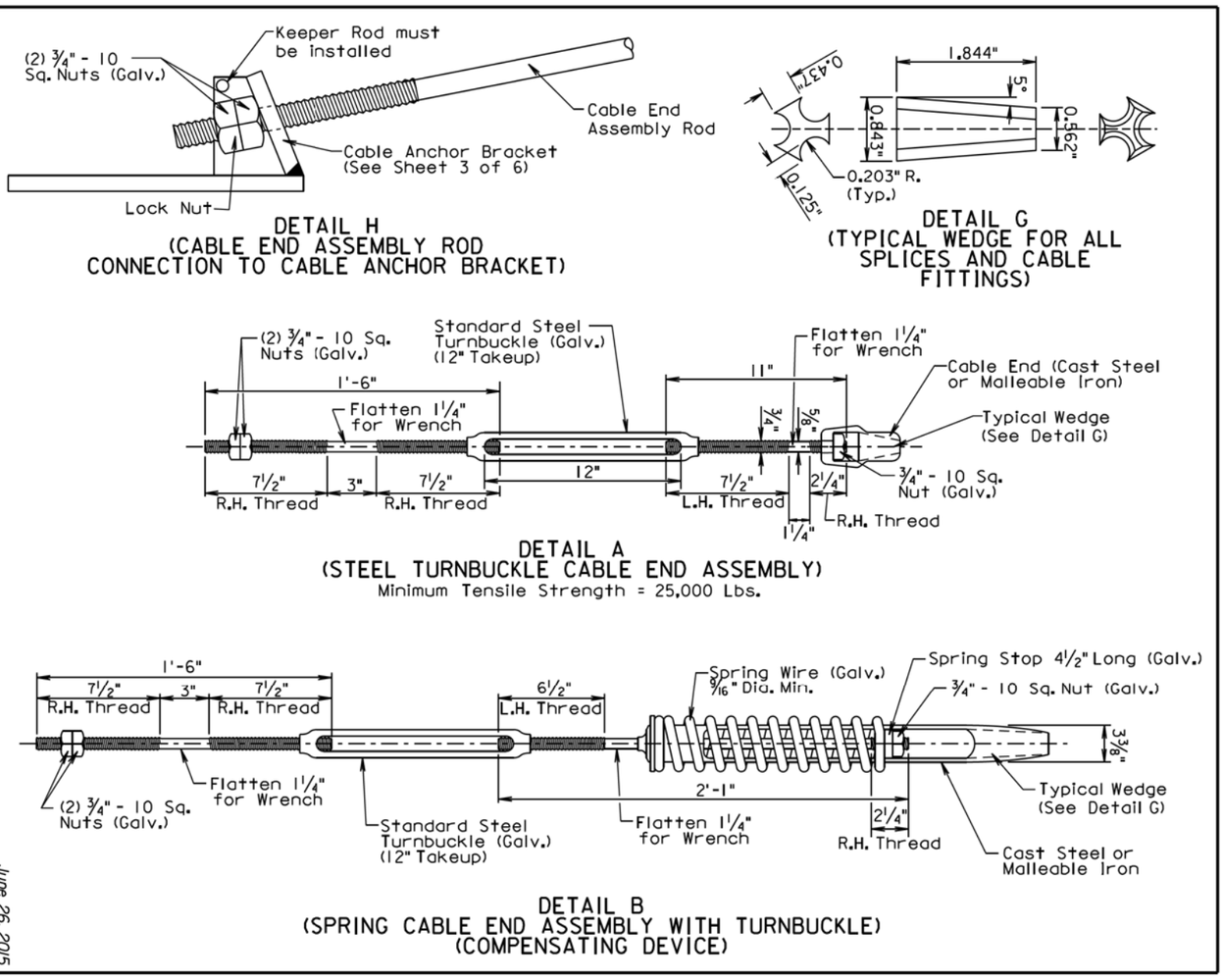

Published Date: 3rd Qtr. 2015

SDDOT

3 CABLE GUARDRAIL (LOW TENSION)

PLATE NUMBER 629.01

Sheet 3 of 6

June 26, 2015

Published Date: 3rd Qtr. 2015

SDDOT

3 CABLE GUARDRAIL (LOW TENSION)

PLATE NUMBER 629.01

Sheet 4 of 6

June 26, 2015

FOR BIDDING PURPOSES ONLY

STATE OF SOUTH DAKOTA

PROJECT IM 0293(96)73 & IM 2292(90)0

SHEET F87

TOTAL SHEETS F98

Plotting Date: 10/23/2015

Published Date: 3rd Qtr. 2015

SDDOT

W BEAM TO 3 CABLE TRANSITION

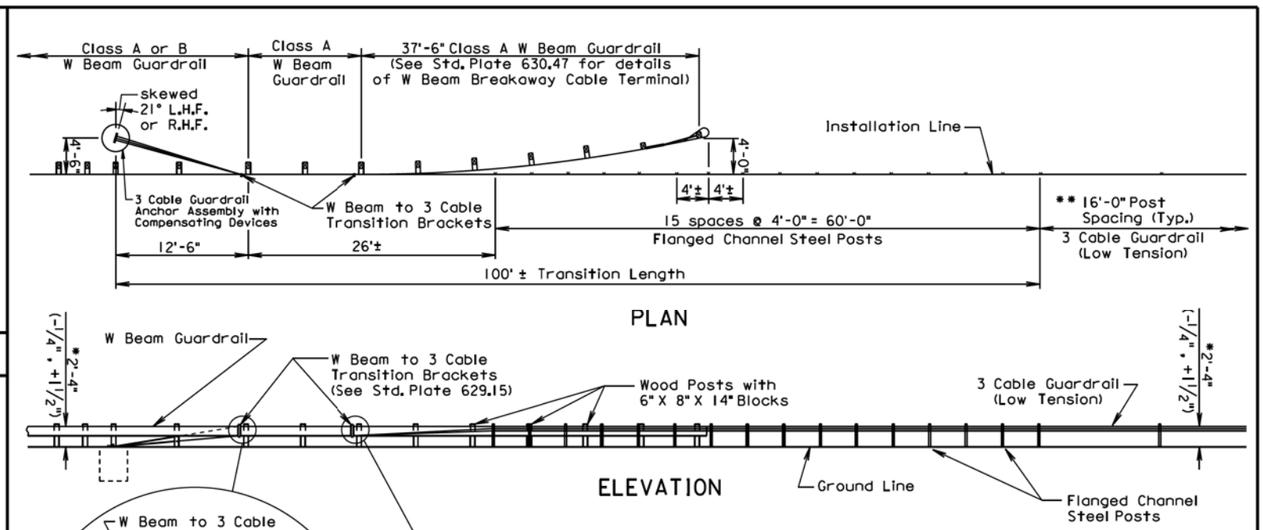

PLAN

ELEVATION

* See Standard Plate 630.98

** or post spacing as specified in the plans

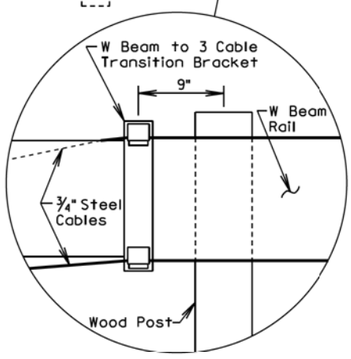

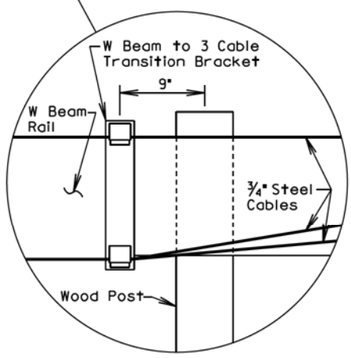

GENERAL NOTES:

Flanged channel steel posts are shown on this standard plate, however, S3 X 5.7 steel I beam posts may be substituted for the flanged channel steel posts.

All costs associated with furnishing and installing the W Beam to 3 Cable Transition Bracket shall be incidental to the contract unit price per Ft. for "3 Cable Guardrail", "Reset 3 Cable Guardrail", or "Reset 3 Cable Guardrail, Cable Only".

See Standard Plates 630.31, 630.32, and 630.33 for details and payment information for W Beam Guardrail.

See Standard Plate 629.01 for details and payment information for 3 Cable Guardrail.

PLATE NUMBER 629.05

Sheet 1 of 1

December 16, 2014

Published Date: 3rd Qtr. 2015

SDDOT

3 CABLE GUARDRAIL SLIP BASE ANCHOR ASSEMBLY

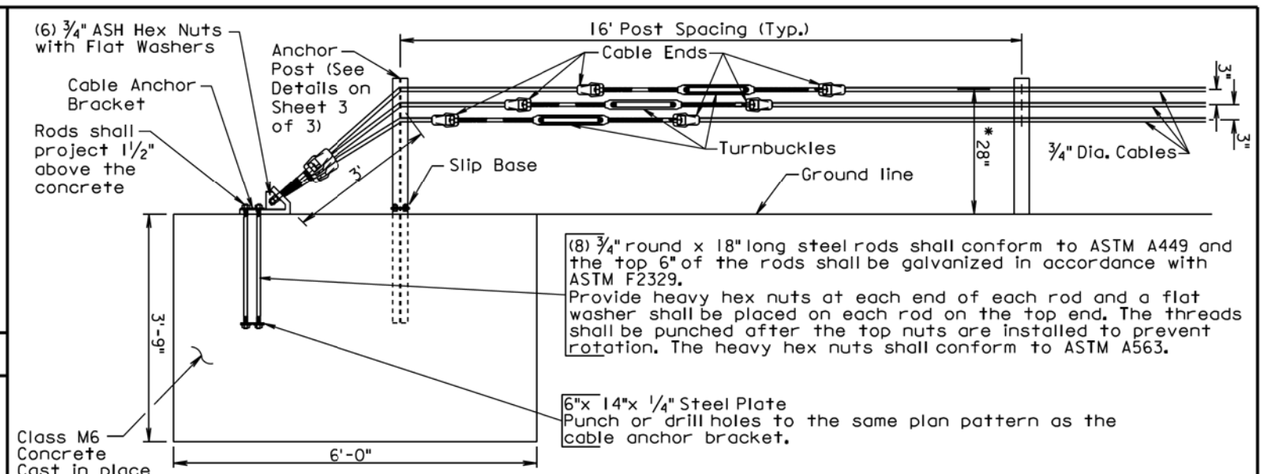

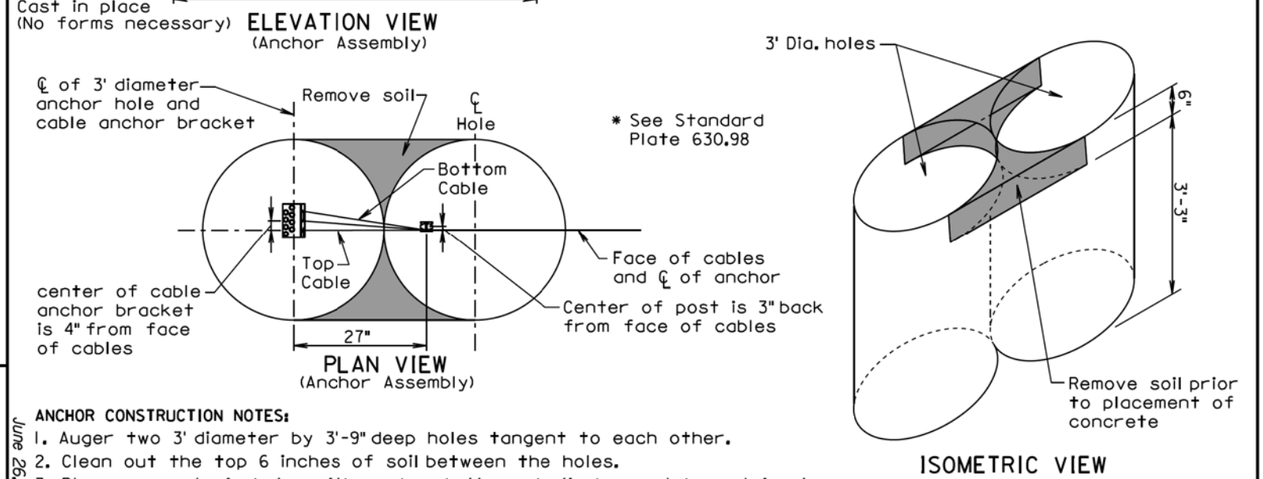

ELEVATION VIEW
(Anchor Assembly)

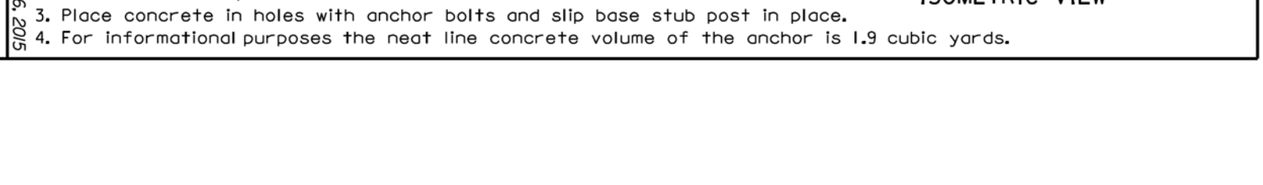

PLAN VIEW
(Anchor Assembly)

* See Standard Plate 630.98

ISOMETRIC VIEW

ANCHOR CONSTRUCTION NOTES:

1. Auger two 3' diameter by 3'-9" deep holes tangent to each other.
2. Clean out the top 6 inches of soil between the holes.
3. Place concrete in holes with anchor bolts and slip base stub post in place.
4. For informational purposes the neat line concrete volume of the anchor is 1.9 cubic yards.

PLATE NUMBER 629.10

Sheet 1 of 3

June 26, 2015

FOR BIDDING PURPOSES ONLY

Plotting Date: 10/23/2015

STATE OF SOUTH DAKOTA	PROJECT	SHEET	TOTAL SHEETS
	IM 0293(96)73 & IM 2292(90)0	F88	F98

Published Date: 3rd Qtr. 2015

SDDOT

3 CABLE GUARDRAIL (LOW TENSION)

PLATE NUMBER 629.01

Sheet 5 of 6

June 26, 2015

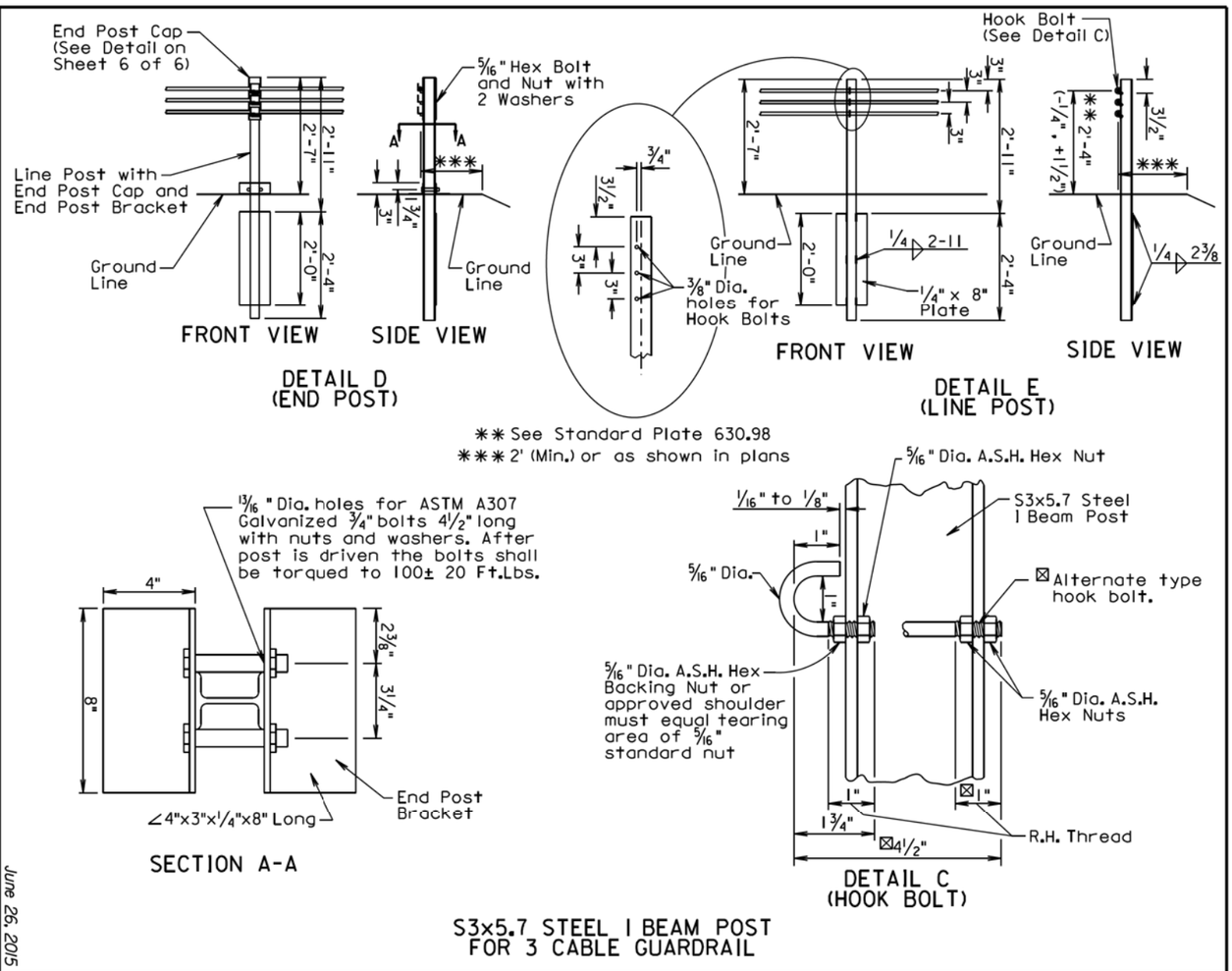

Published Date: 3rd Qtr. 2015

SDDOT

3 CABLE GUARDRAIL (LOW TENSION)

PLATE NUMBER 629.01

Sheet 6 of 6

June 26, 2015

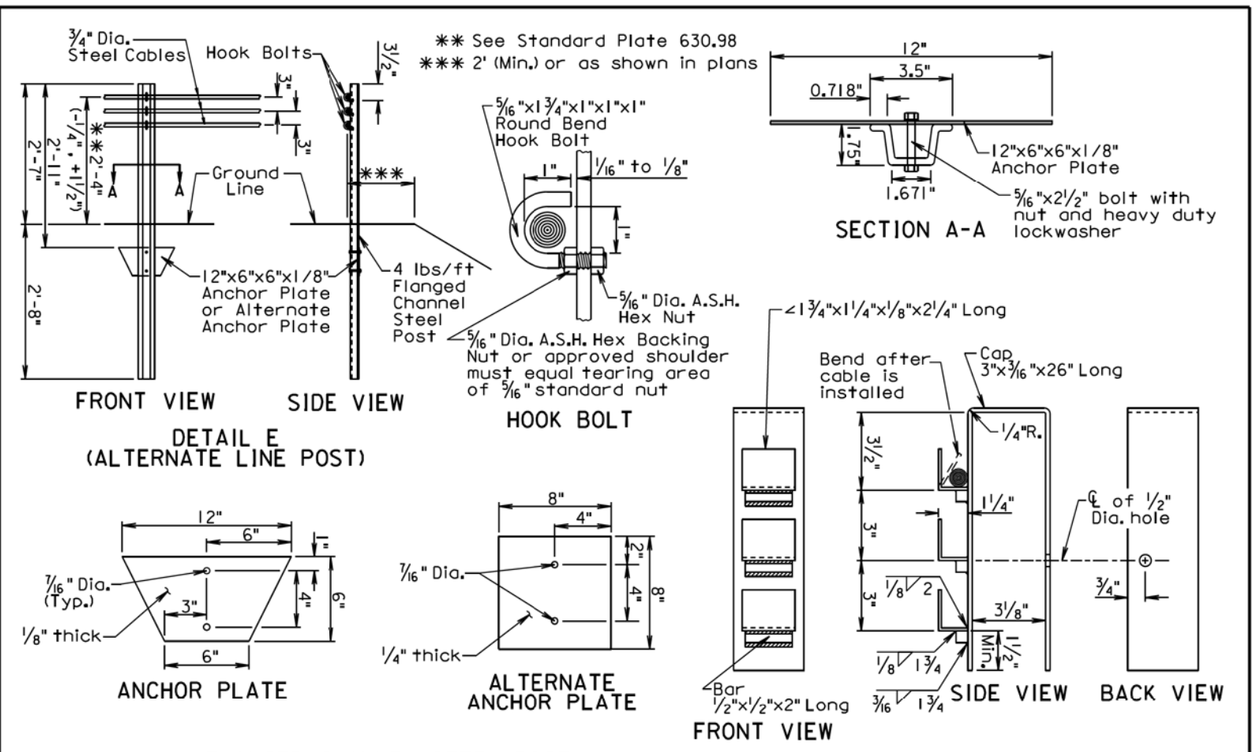

GENERAL NOTES:

Flanged channel steel posts shall be produced from high strength steel in accordance with ASTM A499, Grade 60.

Anchor plates shall be in conformance with ASTM A709, Grade 36.

Bolt shall be in conformance with ASTM A354 Grade BD or BC. Nut shall be in conformance with ASTM A563 Grade DH.

Bolt shall be galvanized in accordance with ASTM F2329.

Finish for the post and anchor plate shall be a baked on high quality dark green enamel.

Alternate anchor plate may be unfinished.

FOR BIDDING PURPOSES ONLY

Plotting Date: 10/23/2015

STATE OF SOUTH DAKOTA	PROJECT IM 0293(96)73 & IM 2292(90)0	SHEET F89	TOTAL SHEETS F98

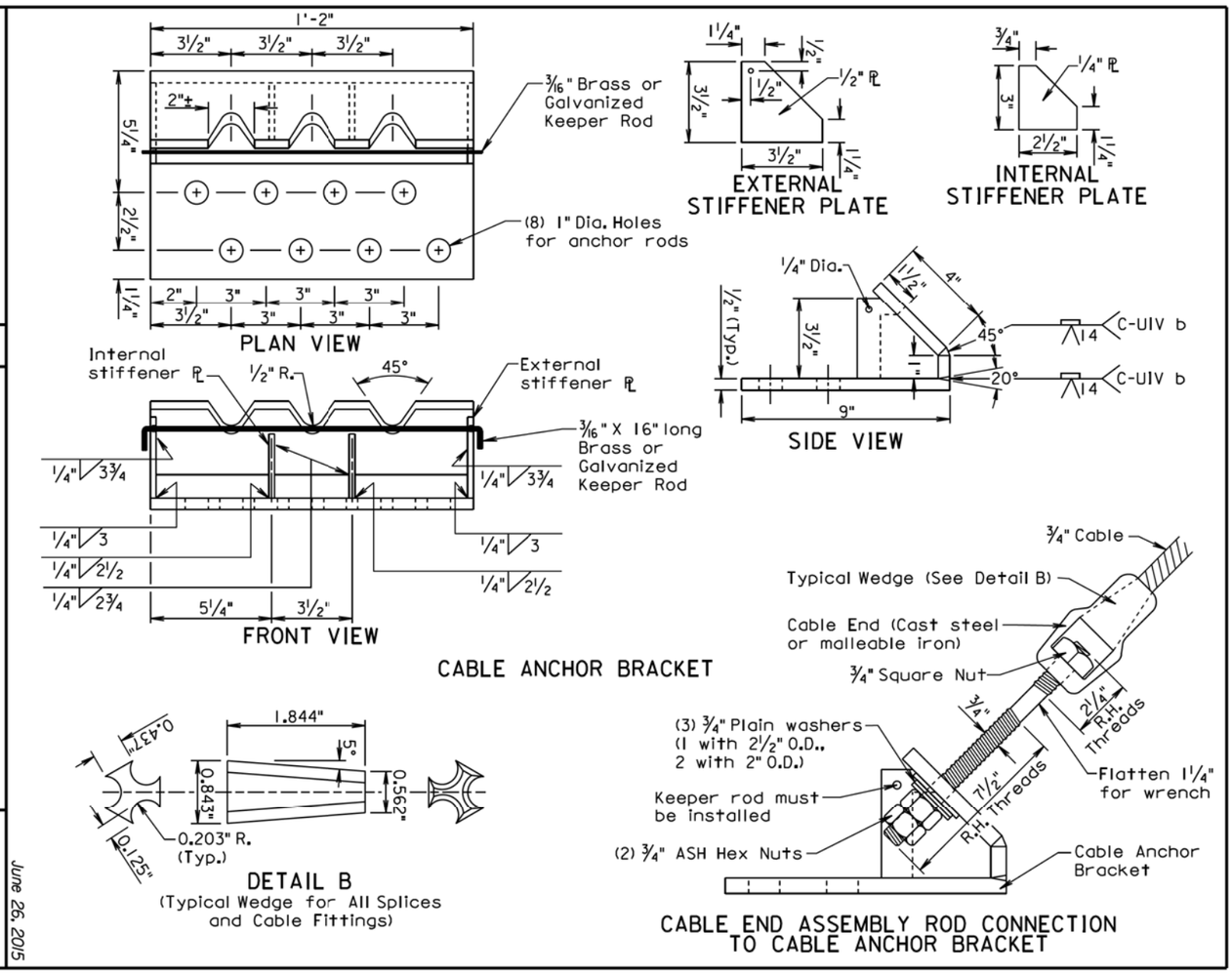

Published Date: 3rd Qtr. 2015

SDDOT

3 CABLE GUARDRAIL SLIP BASE ANCHOR ASSEMBLY

PLATE NUMBER 629.10

Sheet 2 of 3

June 26, 2015

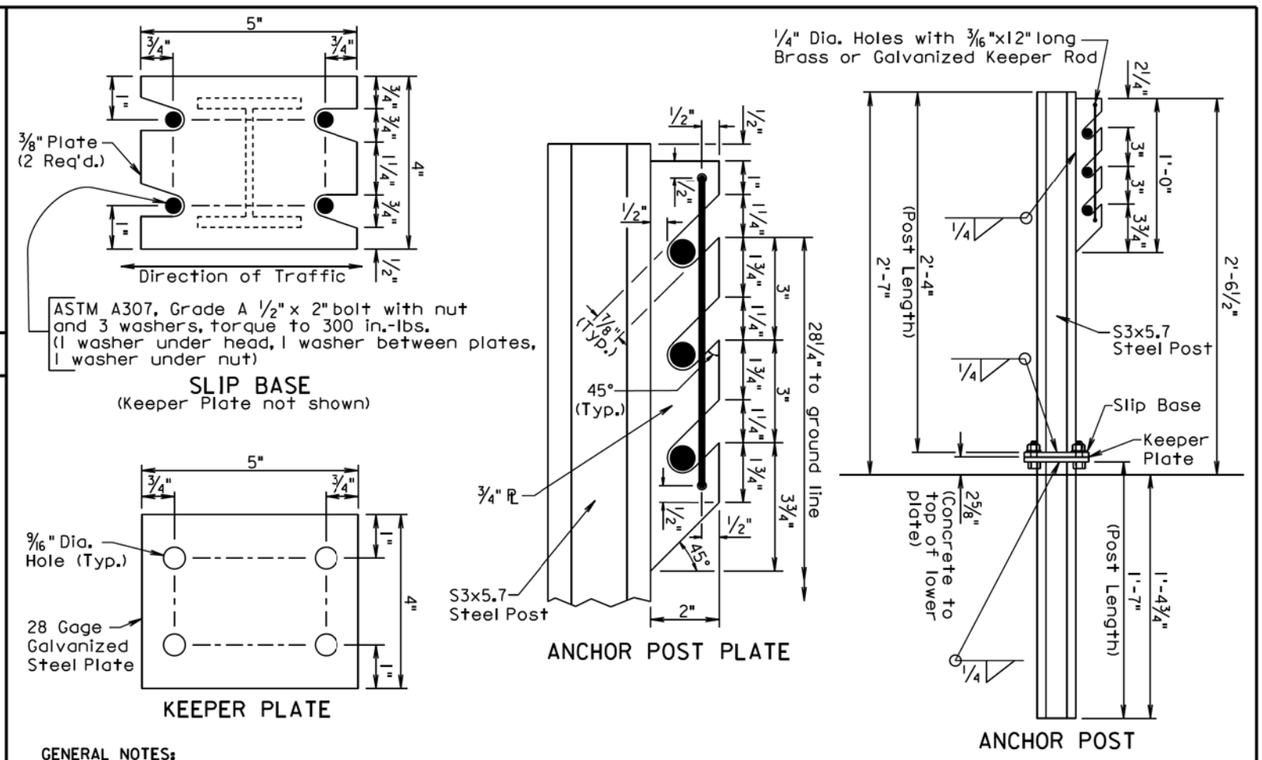

GENERAL NOTES:

Anchor post shall be a S3x5.7 rolled steel section. Post and plates shall conform to ASTM A709, Grade 36 and shall be galvanized in accordance with ASTM A123.

¾" round wire cable shall consist of three strands (7 wires per strand) and have a minimum tensile strength of 25,000 pounds.

Cast steel elements shall conform to AASHTO M103 (ASTM 27-73) grade U-60-30.

All costs associated with furnishing and constructing the 3 cable guardrail slip base anchor assembly including the concrete anchor, cable anchor bracket, anchor bolts, plates, slip base stub post, anchor post, steel turnbuckles, cable ends, U-bolt cable clips, and necessary hardware shall be incidental to the contract unit price per each for "3 Cable Guardrail Slip Base Anchor Assembly".

Published Date: 3rd Qtr. 2015

SDDOT

3 CABLE GUARDRAIL SLIP BASE ANCHOR ASSEMBLY

PLATE NUMBER 629.10

Sheet 3 of 3

June 26, 2015

FOR BIDDING PURPOSES ONLY

STATE OF SOUTH DAKOTA

PROJECT IM 0293(96)73 & IM 2292(90)0

SHEET F90

TOTAL SHEETS F98

Plotting Date: 10/23/2015

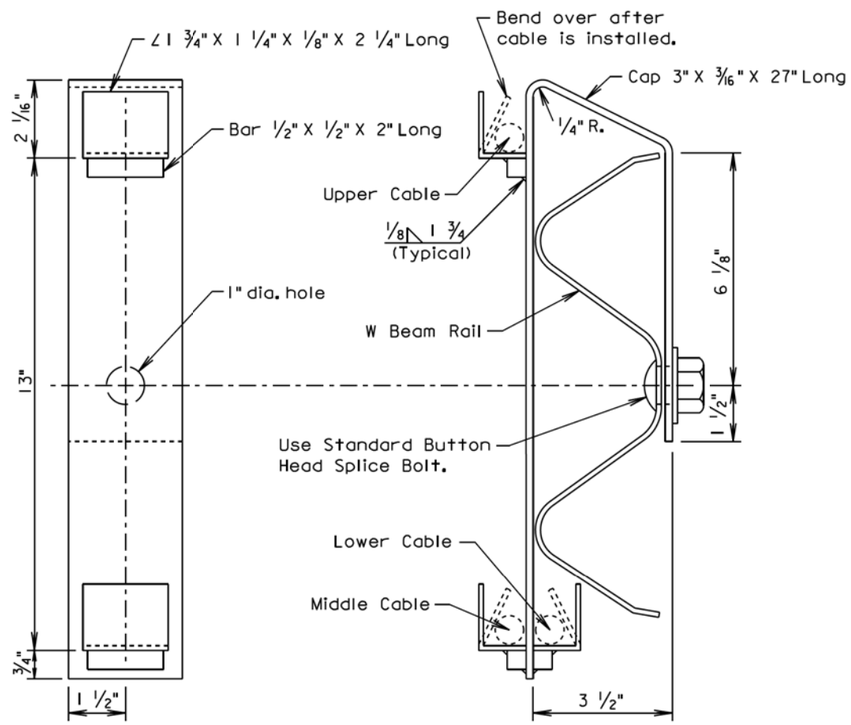

ELEVATION
(TRANSITION BRACKET)

END VIEW
(W BEAM RAIL AND TRANSITION BRACKET)

GENERAL NOTES:

Steel used in the fabrication of the bracket shall conform to ASTM A36 and the bracket shall be galvanized after fabrication in accordance with ASTM A123.

March 31, 2000

Published Date: 3rd Qtr. 2015	SDDOT	W BEAM TO 3 CABLE TRANSITION BRACKET	PLATE NUMBER 629.15
			Sheet 1 of 1

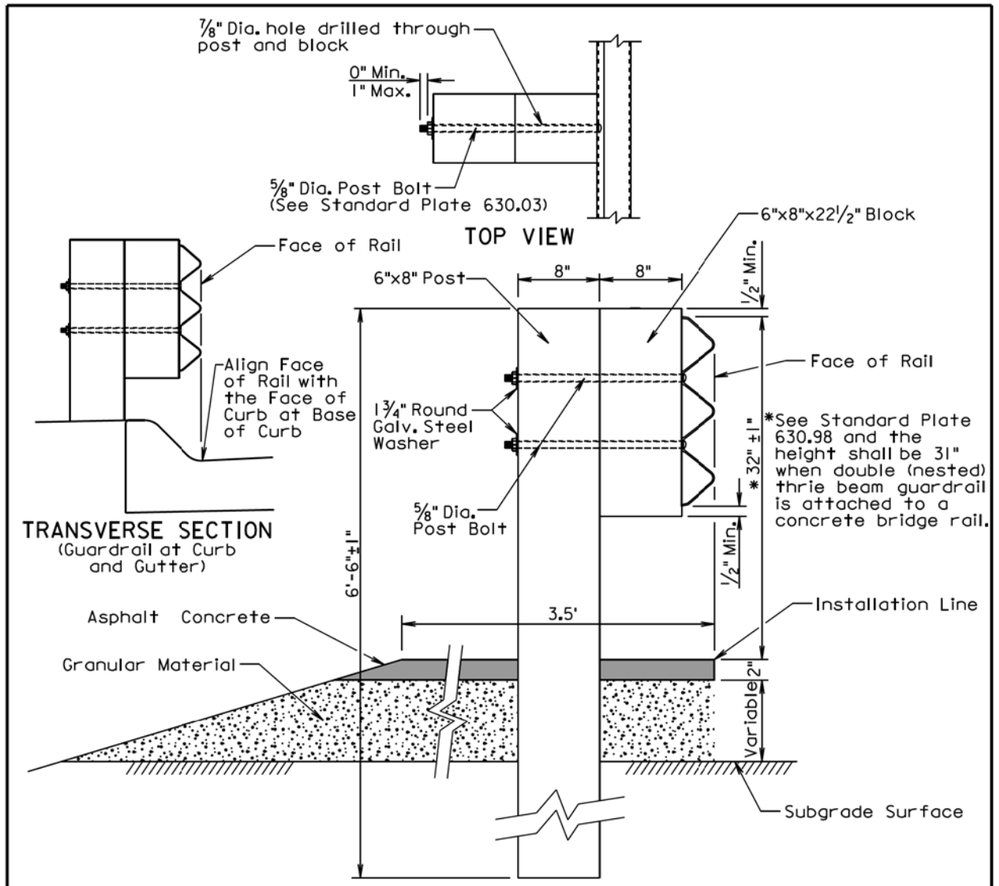

TRANSVERSE SECTION

GENERAL NOTES:

Asphalt concrete shall be the same type used elsewhere on the project or shall be as specified in the plans. If asphalt concrete is not specified in the plans, the asphalt concrete shall conform to the Specifications for "Asphalt Concrete Composite." For informational purposes, the Rate of Materials for the 3.5' wide section of asphalt concrete as shown above shall be 4.80 Tons per Station.

Granular material shall be the same type used elsewhere on the project or shall be as specified in the plans. If granular material type is not specified in the plans, the material shall conform to the Specifications for "Base Course". The granular material shall be placed the same thickness as the mainline surfacing or as specified in the plans.

The cross slope for the surfacing and subgrade surface shall be as specified in the plans (See Typical Sections and/or Cross Sections).

The top of post and top of block shall have a true square cut. The top of block shall be ±1 inch from the top of the post.

June 26, 2015

Published Date: 3rd Qtr. 2015	SDDOT	THRIE BEAM GUARDRAIL POST INSTALLATION	PLATE NUMBER 630.01
			Sheet 1 of 1

PLOT SCALE - 1:200
PLOT NAME - 66
FILE - ...\PRJXLINC0103\STDPLATE 11.DGN
PLOTTED FROM - TRPR16032

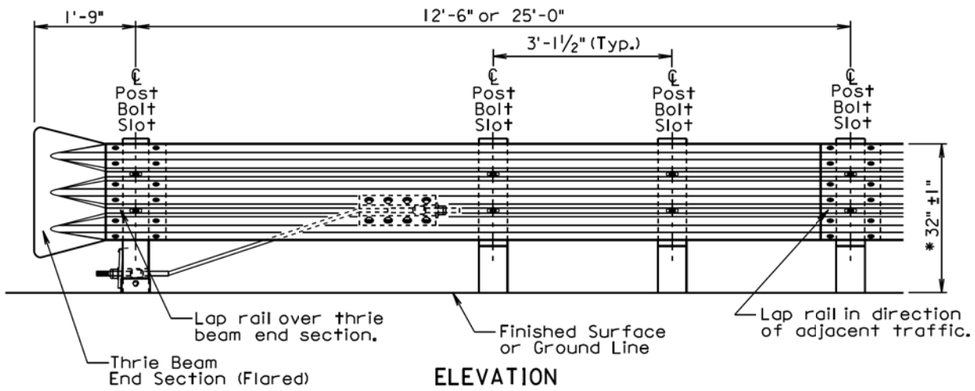

ELEVATION

* See Standard Plate 630.98 and the height shall be 31" when double (nested) thrie beam guardrail is attached to a concrete bridge rail.

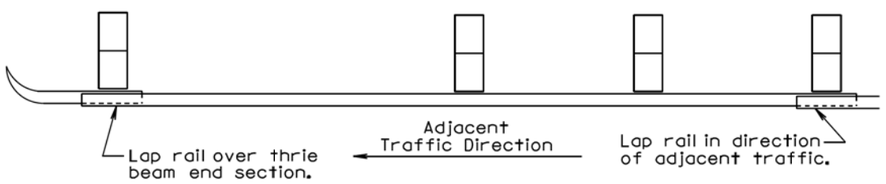

PLAN

THRIE BEAM GUARDRAIL DEFLECTION CRITERIA	
POST SPACING	MAXIMUM DEFLECTION
6'-3"	2'-6"
3'-1½"	1'-9"

For Informational Purposes Only

GENERAL NOTES:

All thrie beam rail shall be Type I.

There will be no separate payment for furnishing and installing Thrie Beam End Sections (Flared) and Thrie Beam Terminal Connectors. All costs for the Thrie Beam End Sections (Flared) and Thrie Beam Terminal Connectors shall be incidental to the contract unit price per foot for the respective "Thrie Beam Guardrail" bid item.

Thrie beam rail section lengths may be 12'-6" and/or 25'-0". The combination of section lengths used shall be compatible with the total length of rail per site as shown in the plans.

Thrie Beam End Sections (Flared) shall only be used in a one-way traffic situation. See Standard Plate 630.80 for Thrie Beam End Section (Flared) in the Beam Guardrail Trailing End Terminal.

All costs for constructing thrie beam guardrail including labor, equipment, and materials including all posts, blocks, steel beam rail, and hardware shall be incidental to the contract unit price per foot for the respective "Thrie Beam Guardrail" bid item.

June 26, 2015

Published Date: 3rd Qtr. 2015 | SDDOT | THRIE BEAM GUARDRAIL INSTALLATION | PLATE NUMBER 630.02 | Sheet 1 of 1

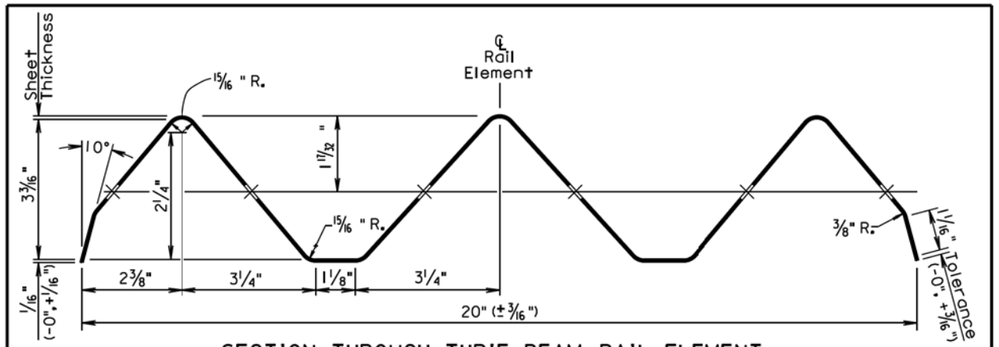

SECTION THROUGH THRIE BEAM RAIL ELEMENT

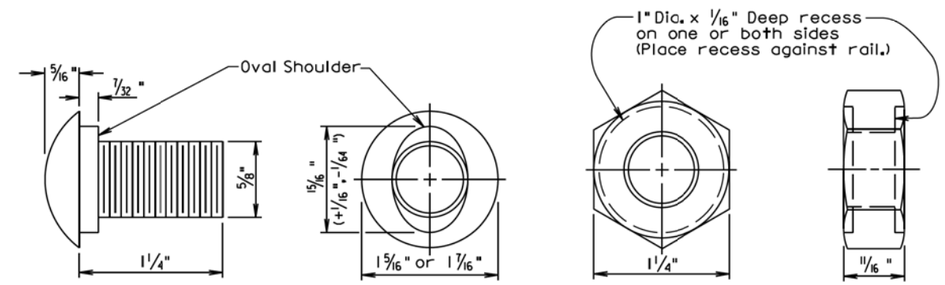

The Post Bolt is similar except the post bolt is 18" long.

SPLICE BOLT
(5/8" BUTTON HEAD BOLT AND RECESS NUT)

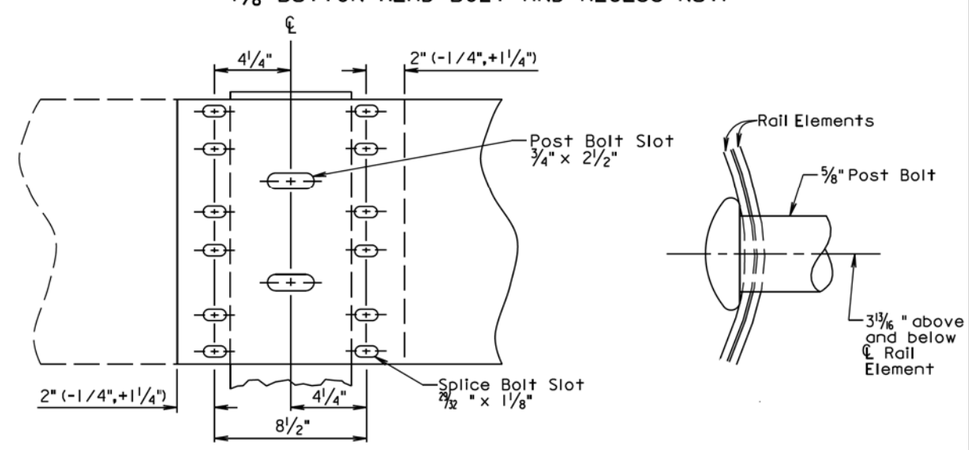

Lap in direction of traffic.

RAIL SPLICE

March 31, 2000

Published Date: 3rd Qtr. 2015 | SDDOT | THRIE BEAM RAIL, RAIL SPLICE, AND HARDWARE | PLATE NUMBER 630.03 | Sheet 1 of 1

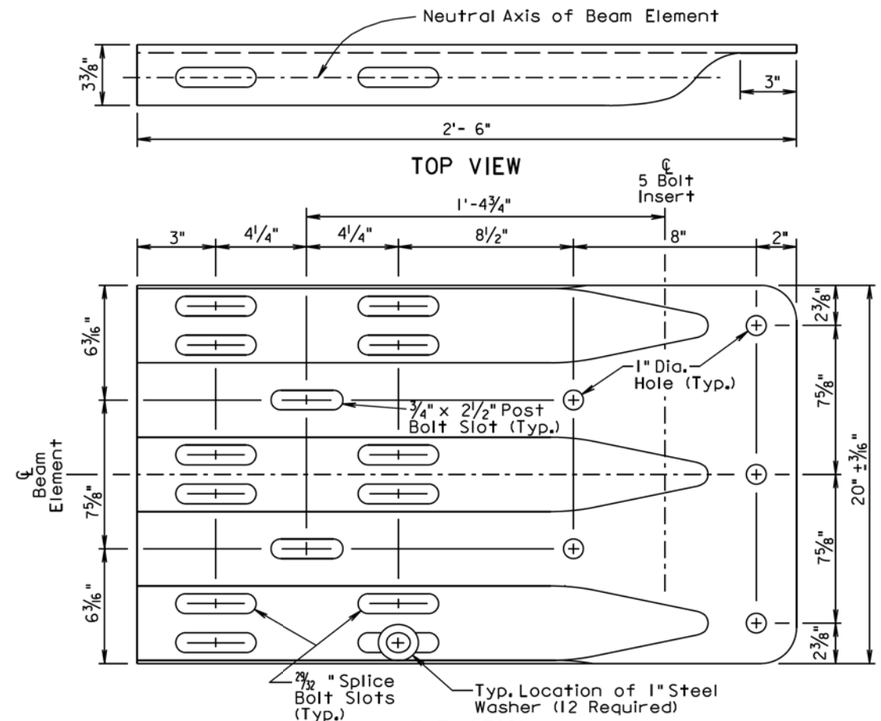

ELEVATION
THRIE BEAM TERMINAL CONNECTOR

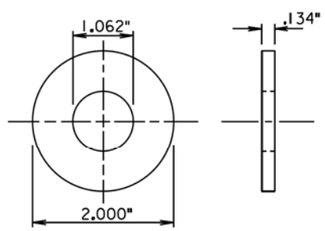

1" STEEL WASHER

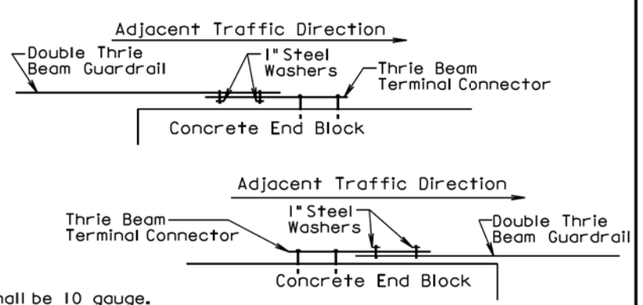

GENERAL NOTES:

Thrie Beam Terminal Connectors shall be 10 gauge.

When the thrie beam terminal connector is used to connect the rail to the bridge, 1" steel washers shall be used at the lap splice and the washers shall be in direct contact with the 3" slots of the thrie beam terminal connector. See the drawings above for the typical locations of the 1" steel washers.

There will be no separate payment for furnishing and installing the Thrie Beam Terminal Connector. All costs for the Thrie Beam Terminal Connector shall be incidental to the contract unit price per foot for the respective "Thrie Beam Guardrail" bid item.

September 14, 2001

Published Date: 3rd Qtr. 2015	SDDOT	THRIE BEAM TERMINAL CONNECTOR AND 1" STEEL WASHER	PLATE NUMBER 630.05 Sheet 1 of 1

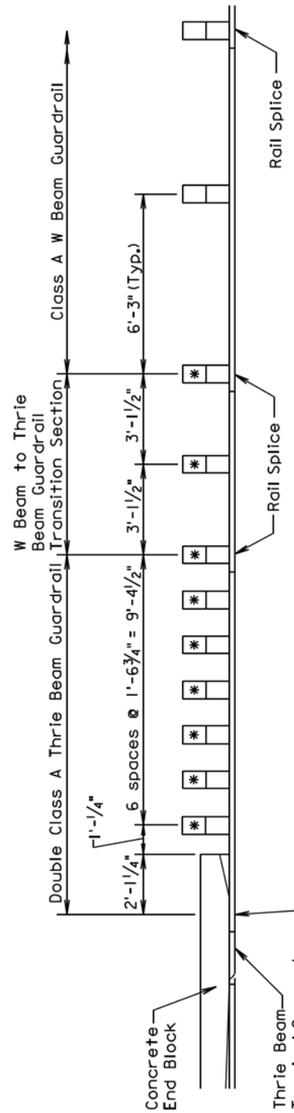

* 6" x 8" x 7' posts shall be used at these locations.

POST SPACING ARRANGEMENT FOR THRIE BEAM GUARDRAIL AT BRIDGE END

December 23, 2002

Published Date: 3rd Qtr. 2015	SDDOT	POST SPACING ARRANGEMENT FOR THRIE BEAM GUARDRAIL AT BRIDGE END	PLATE NUMBER 630.15 Sheet 1 of 1

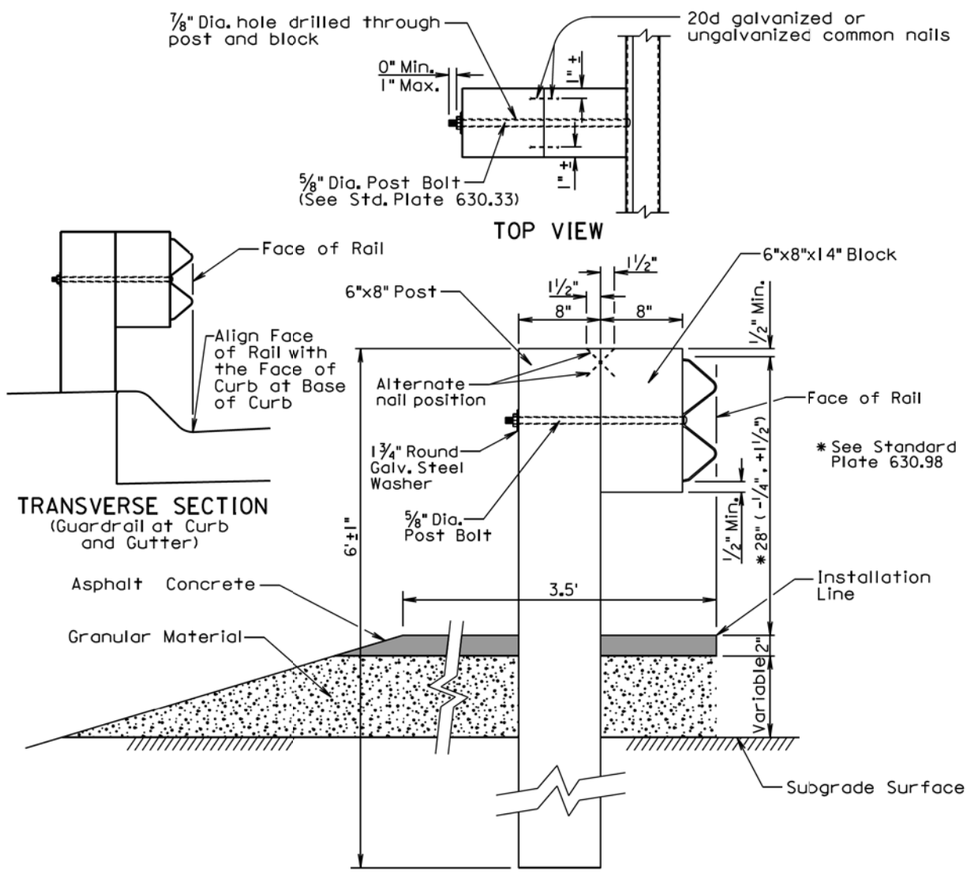

TRANSVERSE SECTION

GENERAL NOTES:

Asphalt concrete shall be the same type used elsewhere on the project or shall be as specified in the plans. If asphalt concrete is not specified in the plans, the asphalt concrete shall conform to the Specifications for "Asphalt Concrete Composite." For informational purposes, the Rate of Materials for the 3.5' wide section of asphalt concrete as shown above shall be 4.80 Tons per Station.

Granular material shall be the same type used elsewhere on the project or shall be as specified in the plans. If granular material type is not specified in the plans, the material shall conform to the Specifications for "Base Course". The granular material shall be placed the same thickness as the mainline surfacing or as specified in the plans.

The cross slope for the surfacing and subgrade surface shall be as specified in the plans (See Typical Sections and/or Cross Sections).

The top of post and top of block shall have a true square cut. The top of block shall be ±1 inch from the top of the post.

June 26, 2015

Published Date: 3rd Qtr. 2015	SDDOT	W BEAM GUARDRAIL POST INSTALLATION	PLATE NUMBER 630.31 Sheet 1 of 1

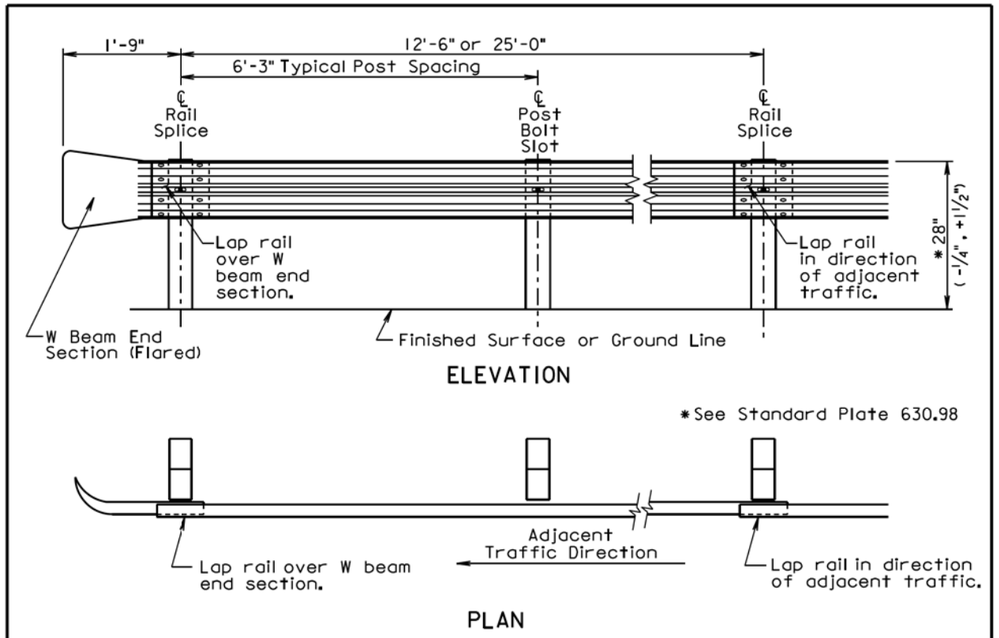

W BEAM GUARDRAIL DEFLECTION CRITERIA	
POST SPACING	MAXIMUM DEFLECTION
6'-3"	5'-0"
3'-1 1/2"	3'-9"

For Informational Purposes Only

GENERAL NOTES:

All W beam rail shall be Type 1.

There will be no separate payment for furnishing and installing W Beam End Sections (Flared) and W Beam Terminal Connectors. All costs for the W Beam End Sections (Flared) and W Beam Terminal Connectors shall be incidental to the contract unit price per foot for the respective "W Beam Guardrail" bid item.

W beam rail section lengths may be 12'-6" and/or 25'-0". The combination of section lengths used shall be compatible with the total length of rail per site as shown in the plans.

W Beam End Sections (Flared) shall only be used in a one way traffic situation. See Standard Plate 630.80 for W Beam End Section (Flared) in the Beam Guardrail Trailing End Terminal.

All costs for constructing W beam guardrail including labor, equipment, and materials including all posts, blocks, steel beam rail, and hardware shall be incidental to the contract unit price per foot for the respective "W Beam Guardrail" bid item.

June 26, 2015

Published Date: 3rd Qtr. 2015	SDDOT	W BEAM GUARDRAIL INSTALLATION	PLATE NUMBER 630.32 Sheet 1 of 1

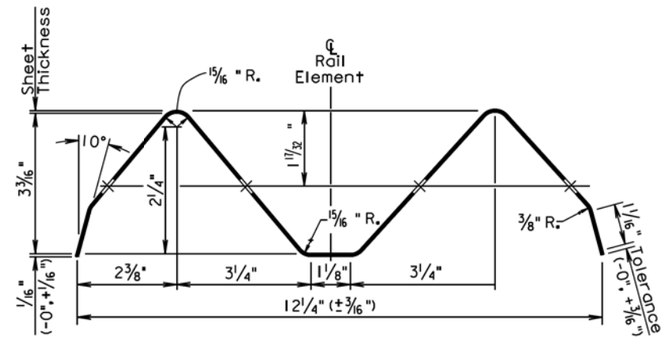

SECTION THROUGH W BEAM RAIL ELEMENT

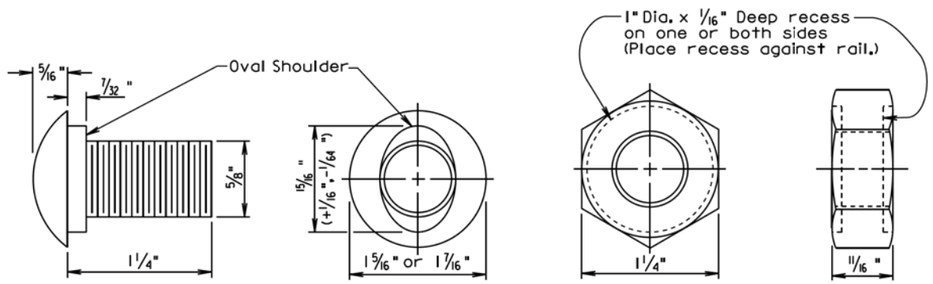

The Post Bolt is similar except the post bolt is 18" long.

SPLICE BOLT
(5/8" BUTTON HEAD BOLT AND RECESS NUT)

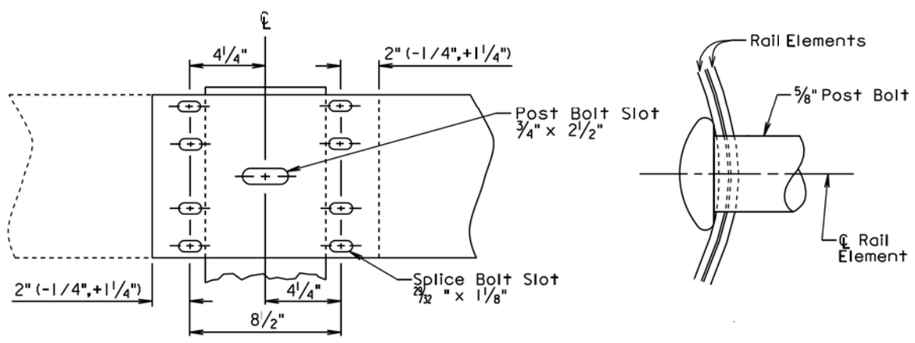

Lap in direction of traffic.

RAIL SPLICE

December 23, 2004

Published Date: 3rd Qtr. 2015	SDDOT	W BEAM RAIL, RAIL SPLICE, AND HARDWARE	PLATE NUMBER 630.33 Sheet 1 of 1

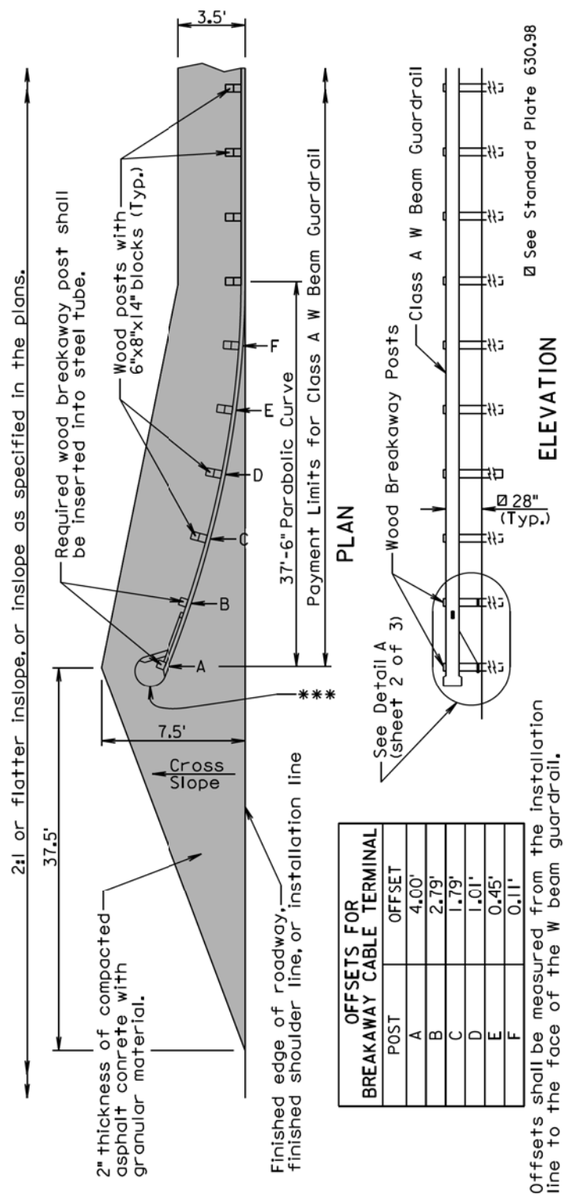

OFFSETS FOR BREAKAWAY CABLE TERMINAL

POST	OFFSET
A	4.00'
B	2.79'
C	1.79'
D	1.01'
E	0.45'
F	0.11'

Offsets shall be measured from the installation line to the face of the W beam guardrail.

GENERAL NOTES:

The finished embankment surfacing cross slope shall match the roadway cross slope; however, if a steeper cross slope is necessary the steepest allowable cross slope is 10:1.

Asphalt concrete shall be the same type used elsewhere on the project or shall be as specified in the plans. If asphalt concrete is not specified in the plans, the asphalt concrete shall conform to the Specifications for "Asphalt Concrete Composite."

Granular material shall be the same type used elsewhere on the project or shall be as specified in the plans. If granular material type is not specified in the plans, the material shall conform to the Specifications for "Base Course". The granular material shall be placed the same thickness as the mainline surfacing or as specified in the plans.

***An adhesive object marker shall be placed on the end section buffer after placement of the end section buffer. The adhesive object marker dimensions may be 16" x 16" or other variation due to the shape of the end section buffer. A minimum of 256 square inches of object marker reflective sheeting area is required. The reflective sheeting shall be fluorescent yellow super or very high intensity. All costs for furnishing and installing the adhesive object marker shall be incidental to various contract items.

Costs for constructing the W Beam Guardrail Breakaway Cable Terminal including labor, equipment, and materials including the anchor bracket, cable assembly, steel tubes, soil plates, bearing plate, pipe sleeve, W beam end section(buffer), modified W beam terminal connector, and all necessary hardware shall be incidental to the contract unit price per each for "W Beam Guardrail Breakaway Cable Terminal".

December 16, 2014

Published Date: 3rd Qtr. 2015	SDDOT	W BEAM GUARDRAIL BREAKAWAY CABLE TERMINAL	PLATE NUMBER 630.47 Sheet 1 of 3

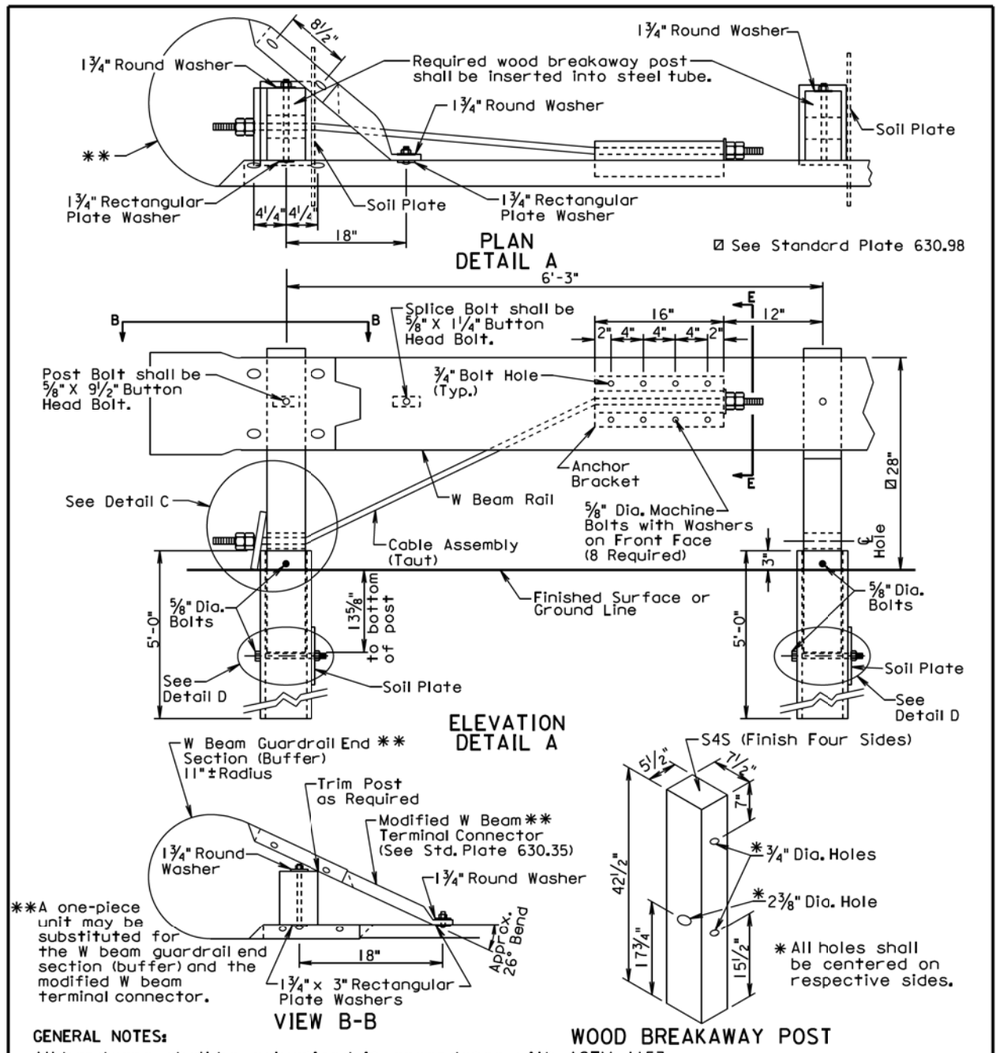

GENERAL NOTES:

All hardware shall be galvanized in accordance with ASTM A153.

The steel tubes shall meet the requirements of ASTM Specification A500, Grade B, and shall be galvanized after fabrication in accordance with the requirements of AASHTO Specification M111.

The anchor bracket, soil plate, and bearing plate shall be fabricated from steel that meets ASTM A36 Specifications. They shall be galvanized after fabrication in accordance with ASTM A123.

The W Beam End Section (Buffer) shall be 12 gage galvanized steel.

The cable shall be ¾", Type II, with Class A coating in conformance with AASHTO M30.

December 16, 2014

Published Date: 3rd Qtr. 2015	SDDOT	W BEAM GUARDRAIL BREAKAWAY CABLE TERMINAL	PLATE NUMBER 630.47
			Sheet 2 of 3

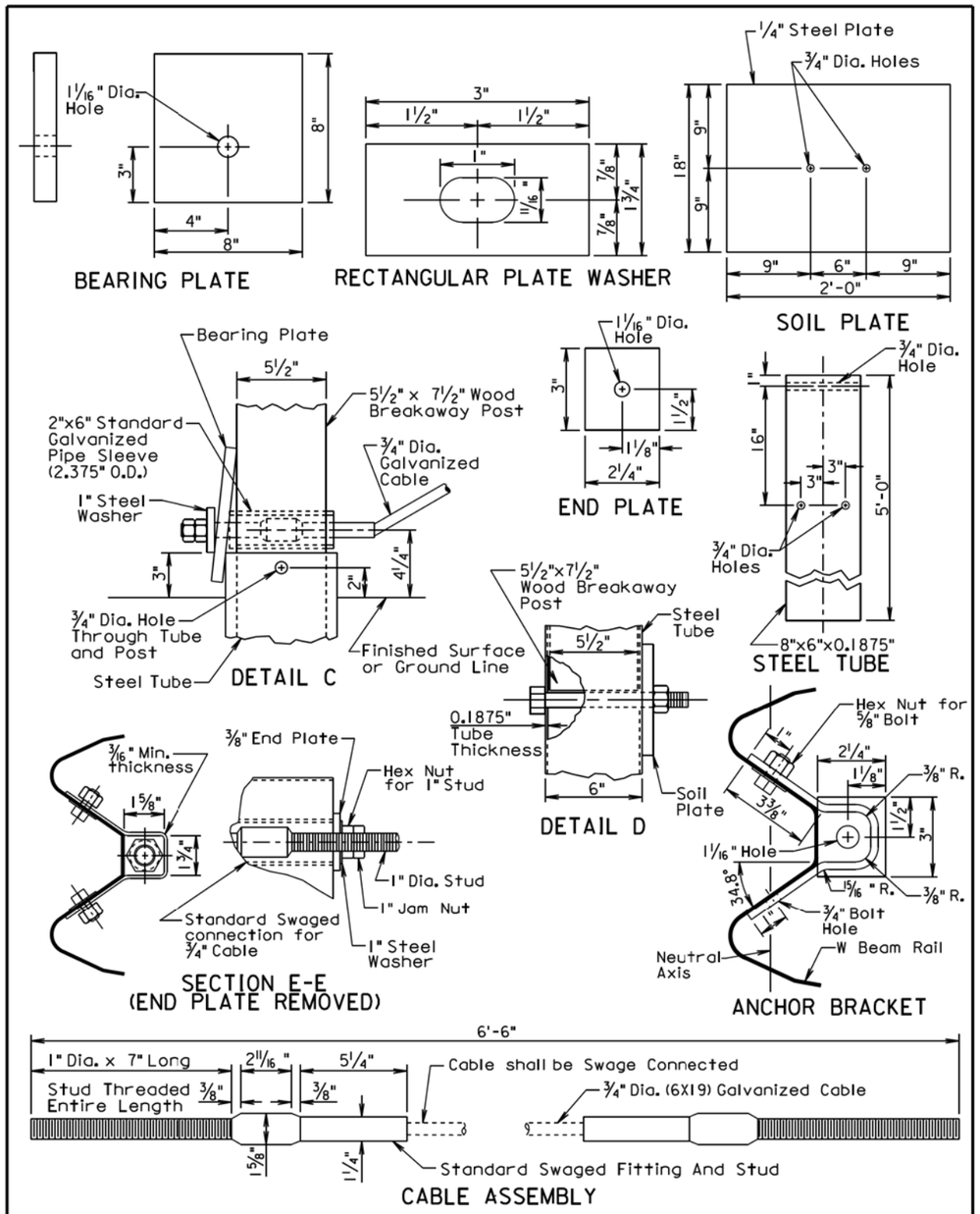

December 16, 2014

Published Date: 3rd Qtr. 2015	SDDOT	W BEAM GUARDRAIL BREAKAWAY CABLE TERMINAL	PLATE NUMBER 630.47
			Sheet 3 of 3

PLOT SCALE - 1:200
PLOT NAME - 71
FILE - ...\PRJXLINC0103S\STDPLATE 16.DGN
PLOTTED FROM - TRPR16032

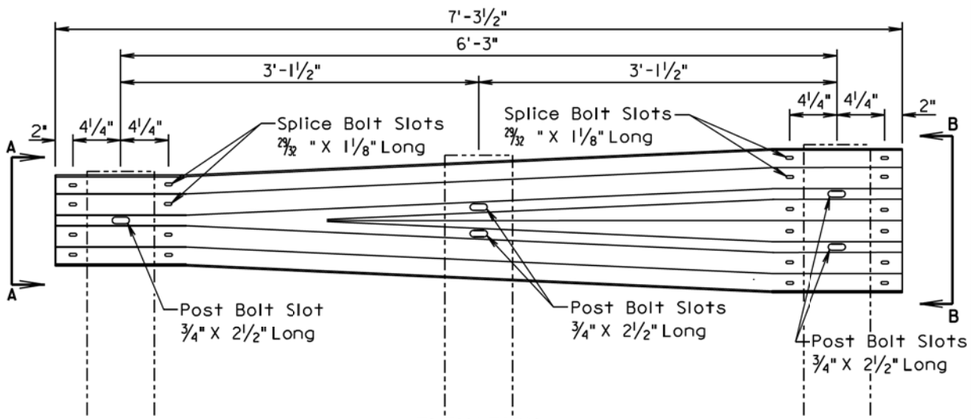

ELEVATION

VIEW A-A

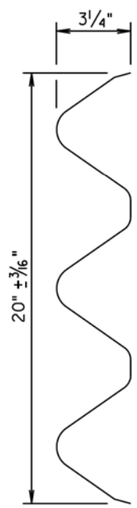

VIEW B-B

GENERAL NOTE:

All costs for constructing the W Beam to Thrie Beam Guardrail Transition including labor, equipment, and materials including two posts, two blocks, W beam to thrie beam transition section, and hardware shall be incidental to the contract unit price per each for "W Beam to Thrie Beam Guardrail Transition".

March 31, 2000

Published Date: 3rd Qtr. 2015	SDDOT	W BEAM TO THRIE BEAM GUARDRAIL TRANSITION SECTION	PLATE NUMBER 630.82
			Sheet 1 of 1

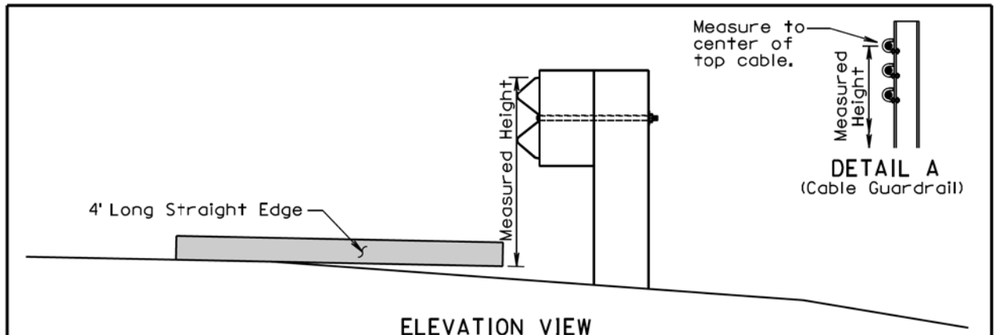

ELEVATION VIEW
(Guardrail Adjacent to Differential Slopes)

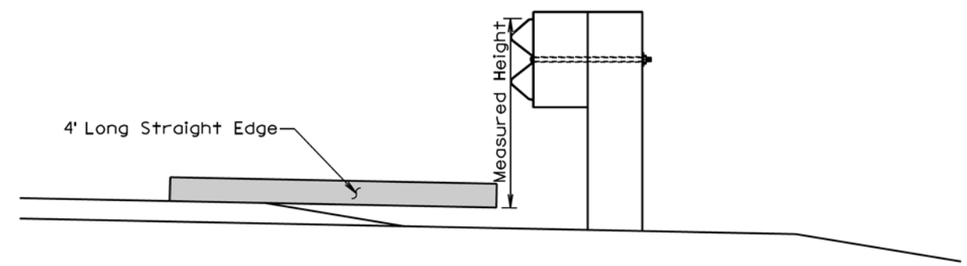

ELEVATION VIEW
(Guardrail Adjacent to Differential Surfacing Elevations)

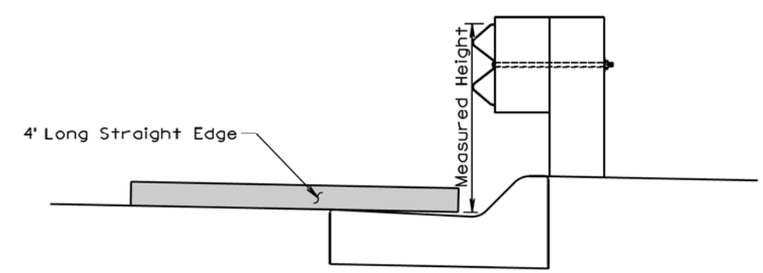

ELEVATION VIEW
(Guardrail at Curb and Gutter)

GENERAL NOTES:

The W Beam guardrail shown is for illustrative purpose. The guardrail height for all types of guardrail systems shall be measured in accordance with this standard plate.

When measuring height of cable guardrail or cable barrier the height shall be measured to the center of the top cable. See Detail A.

June 26, 2010

Published Date: 3rd Qtr. 2015	SDDOT	MEASURING GUARDRAIL HEIGHT	PLATE NUMBER 630.98
			Sheet 1 of 1

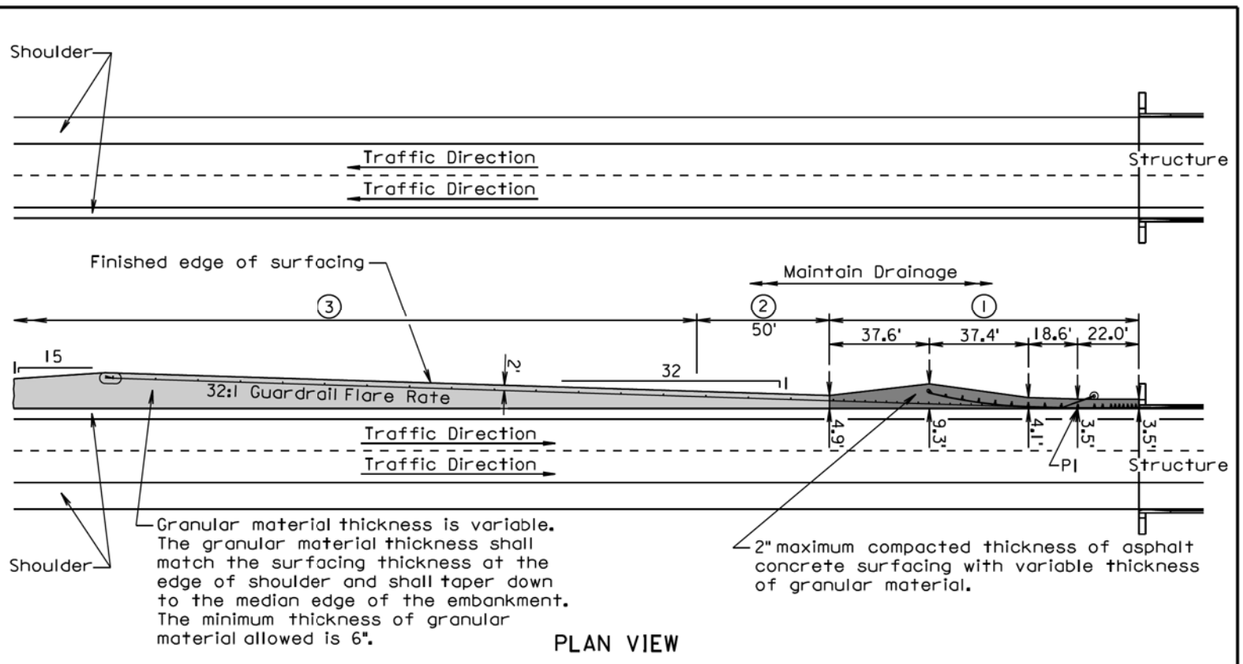

PLAN VIEW

1. Finished embankment surfacing cross slope shall be the same as the roadway cross slope.
2. Finished embankment surfacing cross slope transition.
3. Finished embankment surfacing cross slope shall be 10:1, however, a cross slope flatter than 10:1 may be used to obtain the 6" minimum thickness of granular material.

GENERAL NOTES:

Asphalt concrete shall be the same type used elsewhere on the project or shall be as specified in the plans. If asphalt concrete is not specified in the plans, the asphalt concrete shall conform to the Specifications for "Asphalt Concrete Composite."

Granular material shall be the same type used elsewhere on the project or shall be as specified in the plans. If granular material type is not specified in the plans, the material shall conform to the Specifications for "Base Course".

Published Date: 3rd Qtr. 2015

SDDOT

EMBANKMENT AND SURFACING FOR TYPICAL MEDIAN PROTECTION

February 10, 2014

PLATE NUMBER 630.99

Sheet 1 of 1

FOR BIDDING PURPOSES ONLY

STATE OF SOUTH DAKOTA

PROJECT IM 0293(96)73 & IM 2292(90)0

SHEET F98

TOTAL SHEETS F98

Plotting Date: 10/23/2015