Section L: Lighting Plans

FOR BIDDING PURPOSES ONLY

STATE OF SOUTH DAKOTA	PROJECT	SHEET	TOTAL SHEETS
	IM 0293(96)73 IM 2292(90)0	L1	L42

Plotting Date: 8/25/2015

INDEX OF SHEETS

L1	General Layout W/Index
L2-L3	Estimate of Quantites and Plan Notes
L4-L7	Table of Conduit and Cables
L8-L30	Conduit Layout
L31-L37	Wiring Diagrams
L38-L41	Standard Plates
L42	Details

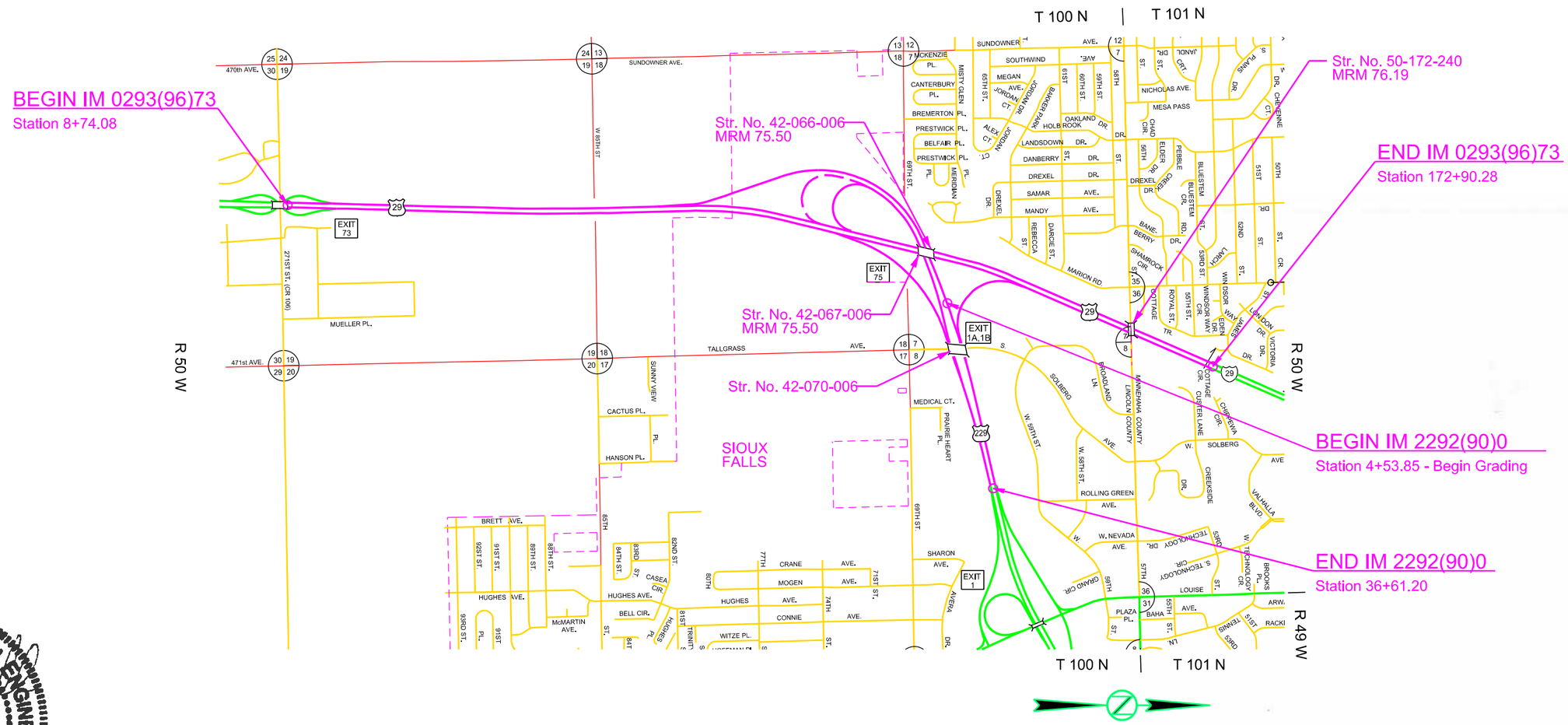

REGISTERED PROFESSIONAL ENGINEER
REG. NO. 12531
MARGARET RUTH KRELL
9/3/15
SOUTH DAKOTA

URS
8181 East Tufts Ave.
Denver, CO 80237
303-694-2770 (Phone)
303-694-3946 (Fax)

Plot Scale - 1:200
Plotted From - Michael Ryan
Plot Name - 160
File - ...\rd\prj\LINC01QSitlleL.dgn

SECTION L ESTIMATE OF QUANTITIES

01QS

BID ITEM NUMBER	ITEM	QUANTITY	UNIT
635E0050	Breakaway Base Luminaire Pole with Arm, 50' Mounting Height	11	Each
635E0350	Breakaway Base Luminaire Pole with Top Twin Mount, 50' Mounting Height	40	Each
635E3150	150' Light Tower with Lowering Device	12	Each
635E3230	Roadway Luminaire, 1000 Watt	62	Each
635E3340	Roadway Luminaire, 400 Watt with Photoelectric Cell	11	Each
635E3384	Post Top Luminaire, 400 Watt with Photoelectric Cell	80	Each
635E3515	Under Bridge Deck Luminaire, 100 Watt	6	Each
635E5020	2' Diameter Footing	408	Ft
635E5302	Type 2 Electrical Junction Box	33	Each
635E5360	Flush Mounted Electrical Junction Box	6	Each
635E5400	Electrical Service Cabinet	6	Each
635E5500	Meter Socket	6	Each
635E8020	2" Rigid Galvanized Steel Conduit	180	Ft
635E8120	2" Rigid Conduit, Schedule 40	26,517	Ft
635E8220	2" Rigid Conduit, Schedule 80	3,050	Ft
635E8230	3" Rigid Conduit, Schedule 80	380	Ft
635E8310	1" Innerduct, Schedule 40	11,855	Ft
635E9011	1/C #1 AWG Copper Wire	5,615	Ft
635E9012	1/C #2 AWG Copper Wire	37,571	Ft
635E9014	1/C #4 AWG Copper Wire	8,720	Ft
635E9016	1/C #6 AWG Copper Wire	3,320	Ft
635E9020	1/C #10 AWG Copper Wire	12,515	Ft
635E9710	2/C #10 AWG Copper Pole and Bracket Cable	5,915	Ft
635E9826	6 #16 AWG TSP Cable	340	Ft
900E2030	Miscellaneous Work	1	Site

020Q

BID ITEM NUMBER	ITEM	QUANTITY	UNIT
635E3150	150' Light Tower with Lowering Device	5	Each
635E3230	Roadway Luminaire, 1000 Watt	18	Each
635E5302	Type 2 Electrical Junction Box	2	Each
635E5400	Electrical Service Cabinet	1	Each
635E5500	Meter Socket	1	Each
635E8120	2" Rigid Conduit, Schedule 40	3,485	Ft
635E8220	2" Rigid Conduit, Schedule 80	250	Ft
635E9011	1/C #1 AWG Copper Wire	10,695	Ft
635E9016	1/C #6 AWG Copper Wire	650	Ft

SUPPLYING AS BUILT PLANS

If the traffic signal systems or roadway lighting systems are constructed differently than what is stated in the plans, the Contractor shall supply as built plans to the Engineer and a copy shall be sent to the Traffic Design Engineer. The as built plans may include conduit layouts, wiring diagrams, or other drawings depicting the changes from the original plans.

SHOP DRAWING AND CATALOG CUTS SUBMITTALS

The Contractor shall submit shop drawings and catalog cuts in accordance with Section 985 of the Specifications.

Adobe PDF submittals shall be sent to the following email addresses:

John.Less@state.sd.us
Pete.Longman@state.sd.us
Dan.Cavanaugh@aecom.com

EXISTING LUMINAIRES

Existing luminaires EL1-EL18 are to remain and are shown for reference only, locations are approximate.

REMOVE AND RESET DYNAMIC MESSAGE SIGN AND SUPPORT POLE

Existing dynamic message sign and support pole shall be relocated as indicated.

Details for the new footing are located in Section E. Wiring for the relocated dynamic message sign is included in this section. All other costs involved with removing and resetting the existing dynamic message sign and support pole shall be incidental to the contract unit price per site for miscellaneous work.

REMOVE DYNAMIC MESSAGE SIGN FOOTING

The footing of existing dynamic message sign shall be removed by the contractor to a minimum of 2' below the ground surface. Restoration of the disturbed area shall be to the satisfaction of the Engineer. All costs involved with removing existing dynamic message sign footing shall be incidental to the contract unit price per site for miscellaneous work.

TABLE OF FOOTING DATA

Site Designation	Footing Diameter	* Footing Depth	**Spiral Diameter	**Spiral Length	Vertical Reinforcement
L1-L40, LC1-LC11	2' - 0"	8' - 0"	1' - 8"	54' - 9"	8-#7 x 7' - 6"

* Footing depth shall be below ground level.
** The size of all spirals shall be #3.

Refer to Section E for High Mast and Sign Footings Data

LUMINAIRE FOOTINGS

Cylindrical footings for the luminaires will be placed primarily into new and existing fills with the bottom few feet of some footings encountering in-situ soils. Classification results of both the existing embankments and in-situ soils consist primarily of sand-clay to silt-clay.

During construction of the cylindrical footings, concrete placement operations should closely follow excavation procedures. The longer the excavations are left open the more likely caving may occur. If caving soils are encountered during excavation, casing may be required to construct the cylindrical footings.

Concrete shall not be dropped through standing water. If water is present in the excavation it shall be removed prior to concrete placement or the concrete shall be tremied. If caving occurs during dewatering the concrete shall be placed through a tremie or by means of a casing.

HIGH MAST TOWER LIGHT FOOTINGS

Subsurface conditions within the project primarily consist of brown sand-clay over gray silt-clay with gray silt-sand or brown sand underlying the gray silt-clay as you move east within the limits of the project. At the time of the investigation for the high mast towers, groundwater was encountered between 13.3 and 38.0 feet below the surface except at T12 where it was measured at 1.3 feet. The borings remained open to at least 32.5 feet except at T17 that caved at 24.3 feet below the surface.

Cylindrical footings for the High Mast Tower Lights shall be constructed in accordance with Section 465 of the Standard Specifications for Roads and Bridges, Drilled Shaft Construction except sections 465.3.A, 465.3.H, 465.3.I, 465.3.J and 465.3.K will not be required.

A representative of the Geotechnical Engineering Activity shall be present during drilling operations to observe the placement of the drilled shafts. The Contractor shall notify the Geotechnical Engineering Activity a minimum of two weeks prior to the commencement of drilled shaft operations.

FLUSH MOUNTED ELECTRICAL JUNCTION BOXES

Flush Mounted Electrical Junction Boxes shall have a fuse holder for underdeck luminaires.

All costs for the surface mounted junction box fuse holders, and terminal blocks shall be incidental to the contract unit price per each for "Flush Mounted Electrical Junction Box".

INNERDUCT

Innerduct shall be non-plenum rated corrugated PVC with a pull string.

All costs for the innerduct and bull string shall be incidental to the contract unit price per foot for "1" Innerduct, Schedule 40".

LUMINAIRES

Three copies of the isofootcandle charts and utilization curves shall be furnished to the Engineer for approval. The Contractor must get approval from the Engineer prior to installation of the luminaires.

The approved isofootcandle data for each case shall be used to determine the correct socket position at each site. Each luminaire shall be installed with its lamp socket in the proper position and in a level attitude.

The accepted design for the roadway luminaires TL1 thru TL17 shall provide 0.7 and greater average maintained foot-candles and a uniformity ratio (average maintained to minimum maintained foot-candles) of 4:1 and less using the following parameters:

Lamp Loss Factor (LLF):	0.7
Luminaire Type:	Medium Cutoff Type II
Mounting Height:	150 Ft.
Lamp:	1000W HPS

The following luminaires meet the requirements for this design:

a.) TL2, TL3, TL8, TL10, TL13:

(6)-1000W High Pressure Sodium, Medium Cutoff Type II
General Electric – HMAA01S3A1GMC2,
Test No. GE177310_TCM201-58318.IES, or approved equal.

b.) TL4, TL6, TL9:

(2)-1000W High Pressure Sodium, Medium Cutoff Type II with 15" Curved House Side Shield
General Electric – HMAA01S3A1GMC2, with ELS-HMAA060,
Test No. GE452629_TCM201-58354.IES, or approved equal.

c.) TL7:

(4)-1000W High Pressure Sodium, Medium Cutoff Type II with 15" Curved House Side Shield
General Electric – HMAA01S3A1GMC2, with ELS-HMAA060,
Test No. GE452629_TCM201-58354.IES, or approved equal.

(4)-1000W High Pressure Sodium, Medium Cutoff Type II
General Electric – HMAA01S3A1GMC2,
Test No. GE177310_TCM201-58318.IES, or approved equal.

d.) TL14, TL15:

(2)-1000W High Pressure Sodium, Medium Cutoff Type II
General Electric – HMAA01S3A1GMC2,
Test No. GE177310_TCM201-58318.IES, or approved equal.

e.) TL1, TL12, TL16, TL17:

(4)-1000W High Pressure Sodium, Medium Cutoff Type II
General Electric – HMAA01S3A1GMC2,
Test No. GE177310_TCM201-58318.IES, or approved equal.

f.) TL5, TL11:

(8)-1000W High Pressure Sodium, Medium Cutoff Type II
General Electric – HMAA01S3A1GMC2,
Test No. GE177310_TCM201-58318.IES, or approved equal.

The accepted design for the roadway luminaires L1 thru L40 shall provide 1.0 and greater average maintained foot-candles and a uniformity ratio (average maintained to minimum maintained foot-candles) of 3:1 and less using the following parameters:

Setback:	20 Ft.
Lamp Loss Factor (LLF):	0.7
Width of Lighted Area:	36 Ft.
Spacing:	200 Ft.
Configuration:	Median, Twin Top Mounted
Mounting Height:	50 Ft.
Lamp:	400W HPS

The following luminaires meet the requirements for this design:

a.) Cooper Lighting: ORL40SXXX High Pressure Sodium, Medium, semi-cutoff, Type III

b.) Holophane: HL2A400HP00M High Pressure Sodium Medium, semi-cutoff, Type III

The accepted design for the roadway luminaires LC1 thru LC11 shall provide 1.0 and greater average maintained foot-candles and a uniformity ratio (average maintained to minimum maintained foot-candles) of 3:1 and less using the following parameters:

Setback:	6 Ft.
Lamp Loss Factor (LLF):	0.7
Width of Lighted Area:	30 Ft.
Spacing:	230 Ft.
Configuration:	Single Side, with 8' mast arm
Mounting Height:	50 Ft.
Lamp:	400W HPS

The following luminaire meets the requirements for this design:

Cooper Lighting: OVY40SXX3D High Pressure Sodium, Medium, semi-cutoff, Type III

The accepted design for the roadway luminaires U1 thru U6 shall provide 0.8 and greater average maintained foot-candles and a uniformity ratio (average maintained to minimum maintained foot-candles) of 4:1 and less using the following parameters:

Setback:	25 Ft.
Lamp Loss Factor (LLF):	0.7
Width of Lighted Area:	36 Ft.
Configuration:	Centered on Bridge Column
Mounting Height:	16 Ft.
Lamp:	100W HPS

The following luminaire meets the requirements for this design:

Holophane: MW100HP24X, High Pressure Sodium Medium, Type IV

LIGHTNING PROTECTION

All luminaire poles, tower lighting poles, and service cabinets shall be equipped with industrial lightning arrestors compliant with current NEMA and UL Standards for lightning arrestors. Cost for ground rods and lightning arrestors shall be incidental to the contract unit price for the corresponding luminaire pole, tower lighting pole, and service cabinet bid item.

LIGHT TOWERS AND LOWERING DEVICES

This work consists of furnishing and installing luminaire supports at the locations specified. These shall be complete units except for footings and luminaires.

Poles for the light towers shall conform to Section 985 of the Specifications except the minimum base plate thickness shall be 3" and the bottom section of the pole shall have a minimum thickness of 3/8".

A minimum of 12 anchor rods shall be used for all light tower poles.

Lowering Devices shall be the latching type.

The Manufacturer shall furnish a factory representative to assist the Contractor with the assembly of the first lowering system into the pole assembly, and they shall furnish the Contractor with written installation and operational instructions.

The warranty time period for the light towers and lowering devices shall be 12 months. One month prior to the end of the warranty time period the Contractor shall notify the Mitchell Region Traffic Engineer to establish a time and date for inspection of the light towers and lowering devices. The inspection is necessary for making sure the light towers and lowering devices are working properly. The inspection includes, but is not limited to, operating the lowering device, engaging the luminaires, checking anchor bolt torque, and re-tensioning the lowering device cables. If the Contractor fails to establish an inspection with the Region Traffic Engineer, the warranty time period will be extended until the light towers and lowering devices are inspected by both the Contractor and Region Traffic Engineer.

All costs to furnish and install the light towers with lowering devices, including labor, materials, and equipment, shall be incidental to the contract unit price per each for "150' Light Tower with Lowering Device".

REGISTERED PROFESSIONAL ENGINEER
REG. NO. 12531
MARGARET RUTH KRELL
10/7/15
SOUTH DAKOTA

TABLE OF CONDUIT AND CABLE QUANTITIES

FOR BIDDING PURPOSES ONLY

STATE OF SOUTH DAKOTA	PROJECT	SHEET	TOTAL SHEETS
	IM 0293(96)75 & IM 2292(90)10	L4	L42

Location to Location		Rigid Conduit						Innerduct		Copper Wire					Pole and Bracket Cable		TSP Cable	
		Schedule 40		Schedule 80		Galvanized Steel		Schedule 40										
		2"		2"	3"	2"		1"		1/C #1 AWG	1/C #2 AWG	1/C #4 AWG	1/C #6 AWG	1/C #10 AWG	2/C #10 AWG		6 #16 AWG	
		Ft		Ft	Ft	Ft		Ft		Ft	Ft	Ft	Ft	Ft	Ft		Ft	
INTERSTATE 29 44+50 to 72+00																		
L1	L2	270									835							
L2	L3	210									650							
L3	L4	210									650							
L4	L5	210									650							
L5	L6	210									650							
L6	L7	110									350							
L7	JB1	110									350							
JB1	ESC1				120						380							
JB1	L8	210									650							
L8	L9	210									650							
L9	L10	310									950							
L10	L11	210									650							
L11	L12	210									650							
L12	L13	210									650							
L13	L14	210									650							
INTERSTATE 29 74+00 to 102+00																		
L15	L16	210									650							
L16	L17	210									650							
L17	L18	210									650							
L18	L19	210								650								
L19	L20	210								650								
L20	L21	210								650								
L21	L22	210								650								
L22	JB2	110								350								
JB2	ESC2				110					20	20							
JB2	L23	110									350							
L23	L24	210									650							
L24	L25	220									680							
L25	L26	210									650							
L26	L27	210									650							
L27	L28	210									650							
L28	L29	210									650							
INTERSTATE 29 RAMP C																		
LC1	LC2	240											740					
LC2	LC3	240											740					
LC3	ESC2	250											770					
ESC2	LC4	350											1070					
LC4	LC5	240									740							
LC5	LC6	240									740							
LC6	LC7	240									740							
LC7	LC8	240									740							
LC8	LC9	240									740							
LC9	LC10	240									740							
LC10	LC11	240									740							
Subtotal:		8620		0	230	0		0		2970	20795	0	3320	0	0		0	

REGISTERED PROFESSIONAL ENGINEER
REG. NO. 12531
MARGARET RUTH KRELL
9/3/15
SOUTH DAKOTA

TABLE OF CONDUIT AND CABLE QUANTITIES

FOR BIDDING PURPOSES ONLY

STATE OF SOUTH DAKOTA	PROJECT	SHEET	TOTAL SHEETS
	IM 0293(96)75 & IM 2292(90)10	L5	L42

Revised: 09/25/2015 (DJC)

Location to Location		Rigid Conduit Schedule 40 2" Ft	Rigid Conduit Schedule 80 2" Ft	Rigid Conduit Schedule 80 3" Ft	Rigid Conduit Galvanized Steel 2" Ft	Innerduct Schedule 40 1" Ft	Copper Wire 1/C #1 AWG Ft	Copper Wire 1/C #2 AWG Ft	Copper Wire 1/C #4 AWG Ft	Copper Wire 1/C #6 AWG Ft	Copper Wire 1/C #10 AWG Ft	Pole and Bracket Cable 2/C #10 AWG Ft	TSP Cable 6 #16 AWG Ft
INTERSTATE 29 136+00 to 156+00													
L30	L31	210							650				
L31	L32	210							650				
L32	L33	210							650				
L33	L34	210							650				
L34	JB3	110							350				
JB3	ESC3			150				470	470				
JB3	L35	110						350					
L35	L36	210						650					
L36	L37	210						650					
L37	L38	210						650					
L38	L39	210						650					
L39	L40	210						650					
I-29 INTERCHANGE LIGHTING													
ESC4	TL5	30							110				
ESC4	TL1		700					2120					
ESC4	TL8	875					2645						
ESC4	TL7	650						1970					
ESC5	TL4	457						1391					
TL4	TL6	525						1595					
ESC5	TL2	500							1520				
ESC5	TL3	125							395				
ESC6	TL10	150						470					
ESC6	TL11	585						1775					
ESC6	TL12		700					2120					
ESC6	JB6		675						2045				
JB6	JB7	100							320				
JB6	U6				50						170		
U6	U5				5						35		
JB7	JB8	115							365				
JB8	U4				65						215		
U4	U3				5						35		
JB8	U2				50						170		
U2	U1				5						35		
JB8	TL9		175						545				
Subtotal:		6222	2250	150	180	0	2645	15511	8720	0	660	0	0

REGISTERED PROFESSIONAL ENGINEER
REG. NO. 12531
MARGARET RUTH KRELL
9/25/15
SOUTH DAKOTA

TABLE OF CONDUIT AND CABLE QUANTITIES

FOR BIDDING PURPOSES ONLY

STATE OF SOUTH DAKOTA	PROJECT	SHEET	TOTAL SHEETS
	IM 0293(96)75 & IM 2292(90)10	L6	L42

Location to Location		Rigid Conduit Schedule 40 2" Ft		Rigid Conduit Schedule 80 2" Ft	Rigid Conduit Schedule 80 3" Ft	Rigid Conduit Galvanized Steel 2" Ft		Innerduct Schedule 40 1" Ft		Copper Wire 1/C #1 AWG Ft	Copper Wire 1/C #2 AWG Ft	Copper Wire 1/C #4 AWG Ft	Copper Wire 1/C #6 AWG Ft	Copper Wire 1/C #10 AWG Ft	Pole and Bracket Cable 2/C #10 AWG Ft		TSP Cable 6 #16 AWG Ft	
INTERSTATE 29 LUMINAIRE POLE																		
LUMINAIRE POLE	L1														130			
LUMINAIRE POLE	L2														130			
LUMINAIRE POLE	L3														130			
LUMINAIRE POLE	L4														130			
LUMINAIRE POLE	L5														130			
LUMINAIRE POLE	L6														130			
LUMINAIRE POLE	L7														130			
LUMINAIRE POLE	L8														130			
LUMINAIRE POLE	L9														130			
LUMINAIRE POLE	L10														130			
LUMINAIRE POLE	L11														130			
LUMINAIRE POLE	L12														130			
LUMINAIRE POLE	L13														130			
LUMINAIRE POLE	L14														130			
LUMINAIRE POLE	L15														130			
LUMINAIRE POLE	L16														130			
LUMINAIRE POLE	L17														130			
LUMINAIRE POLE	L18														130			
LUMINAIRE POLE	L19														130			
LUMINAIRE POLE	L20														130			
LUMINAIRE POLE	L21														130			
LUMINAIRE POLE	L22														130			
LUMINAIRE POLE	L23														130			
LUMINAIRE POLE	L24														130			
LUMINAIRE POLE	L25														130			
LUMINAIRE POLE	L26														130			
LUMINAIRE POLE	L27														130			
LUMINAIRE POLE	L28														130			
LUMINAIRE POLE	L29														130			
LUMINAIRE POLE	L30														130			
LUMINAIRE POLE	L31														130			
LUMINAIRE POLE	L32														130			
LUMINAIRE POLE	L33														130			
LUMINAIRE POLE	L34														130			
LUMINAIRE POLE	L35														130			
LUMINAIRE POLE	L36														130			
LUMINAIRE POLE	L37														130			
LUMINAIRE POLE	L38														130			
LUMINAIRE POLE	L39														130			
LUMINAIRE POLE	L40														130			
LUMINAIRE POLE	LC1														65			
LUMINAIRE POLE	LC2														65			
LUMINAIRE POLE	LC3														65			
LUMINAIRE POLE	LC4														65			
LUMINAIRE POLE	LC5														65			
LUMINAIRE POLE	LC6														65			
	Subtotal:	0		0	0	0		0		0	0	0	0	0	5590		0	

REGISTERED PROFESSIONAL ENGINEER
REG. NO. 12531
MARGARET RUTH KRELL
9/3/15
SOUTH DAKOTA

TABLE OF CONDUIT AND CABLE QUANTITIES

FOR BIDDING PURPOSES ONLY

STATE OF SOUTH DAKOTA	PROJECT	SHEET	TOTAL SHEETS
	IM 0293(96)75 & IM 2292(90)10	L7	L42

Revised: 09/25/2015 (DJC)

Location to Location		Rigid Conduit							Innerduct			Copper Wire						Pole and Bracket Cable			TSP Cable	
		Schedule 40		Schedule 80		Galvanized Steel			Schedule 40													
		2"		2"	3"	2"			1"			1/C #1 AWG	1/C #2 AWG	1/C #4 AWG	1/C #6 AWG	1/C #10 AWG		2/C #10 AWG			6 #16 AWG	
		Ft		Ft	Ft	Ft			Ft			Ft	Ft	Ft	Ft	Ft		Ft			Ft	
LUMINAIRE POLE	LC7																	65				
LUMINAIRE POLE	LC8																	65				
LUMINAIRE POLE	LC9																	65				
LUMINAIRE POLE	LC10																	65				
LUMINAIRE POLE	LC11																	65				
INTERSTATE 29 FIBER CONDUIT																						
JF1	JF2	485							485							485						
JF2	JF3	650							650							650						
JF3	JF4	650							650							650						
JF4	JF5	650							650							650						
JF5	JF6	650							650							650						
JF6	JF7	650							650							650						
JF7	JF8	330							330							330						
JF8	JF9	330							330							330						
JF9	JF10	330							330							330						
JF10	JF11	330							330							330						
JF11	JF12	350							350							350						
JF12	JF13	310							310							310						
JF13	JF14			150					150							150						
JF14	JF15	400							400							400						
JF15	JF16			330					330							330						
JF16	JF17	610							610							610						
JF17	JF18			210					210							210						
JF18	JF19	560							560							560						
JF19	JF20	640							640							640						
JF20	JF21			110					110							110						
JF21	JF22	650							650							650						
JF22	JF23	650							650							650						
JF23	JF24	650							650							650						
JF24	JF25	650							650							650						
JF25	EJF1	530							530							530						
DYNAMIC MESSAGE SIGN																						
DMS SIGN	ESC1	310											1265									
DMS SIGN	PHONE	310																			340	
	Subtotal:	11675		800	0	0			11855			0	1265	0	0	11855		325			340	
	01QS Total:	26517		3050	380	180			11855			5615	37571	8720	3320	12515		5915			340	
INTERSTATE 229 LIGHTING																						
ESC7	TL14	415										1265										
TL14	TL13	535										1625										
ESC7	TL15	210													650							
ESC7	JB4			125								395										
JB4	TL16	825										2495										
ESC7	JB5			125								395										
JB5	TL17	1500										4520										
	Subtotal:	3485		250	0	0			0			10695	0	0	650	0		0			0	
	020Q Total:	3485		250	0	0			0			10695	0	0	650	0		0			0	
	Project Total:	30002		3300	380	180			11855			16310	37571	8720	3970	12515		5915			340	

REGISTERED PROFESSIONAL ENGINEER
REG. NO. 12591
MARGARET RUTH KRELL
9/25/15
SOUTH DAKOTA

STATE OF SOUTH DAKOTA	PROJECT	SHEET	TOTAL SHEETS
	IM 0293(96)73 IM 2292(90)0	L8	L42

Plotting Date: 9/25/2015 Revised: 9/25/2015 (DJC)

FOR BIDDING PURPOSES ONLY

CONDUIT LAYOUT
Interstate 29

EXISTING ITEMS	
KEY	ITEM
	EXISTING HIGHMAST LUMINAIRE (EL-11)
	EXISTING BREAKAWAY BASE LUMINAIRE POLE W/ TWIN TOP MOUNT ARMS, 50' MOUNTING HEIGHT
	EXISTING BREAKAWAY BASE LUMINAIRE POLE (EL-2)
	EXISTING 18" DIAMETER JUNCTION BOX
	EXISTING 4.5' DIAMETER FOOTING; SEE SECTION E FOR DETAILS
#10	EXISTING 1/C # 10 AWG COPPER WIRE
1D SCH 40	EXISTING 2" INTERDUCT, SCHEDULE 40

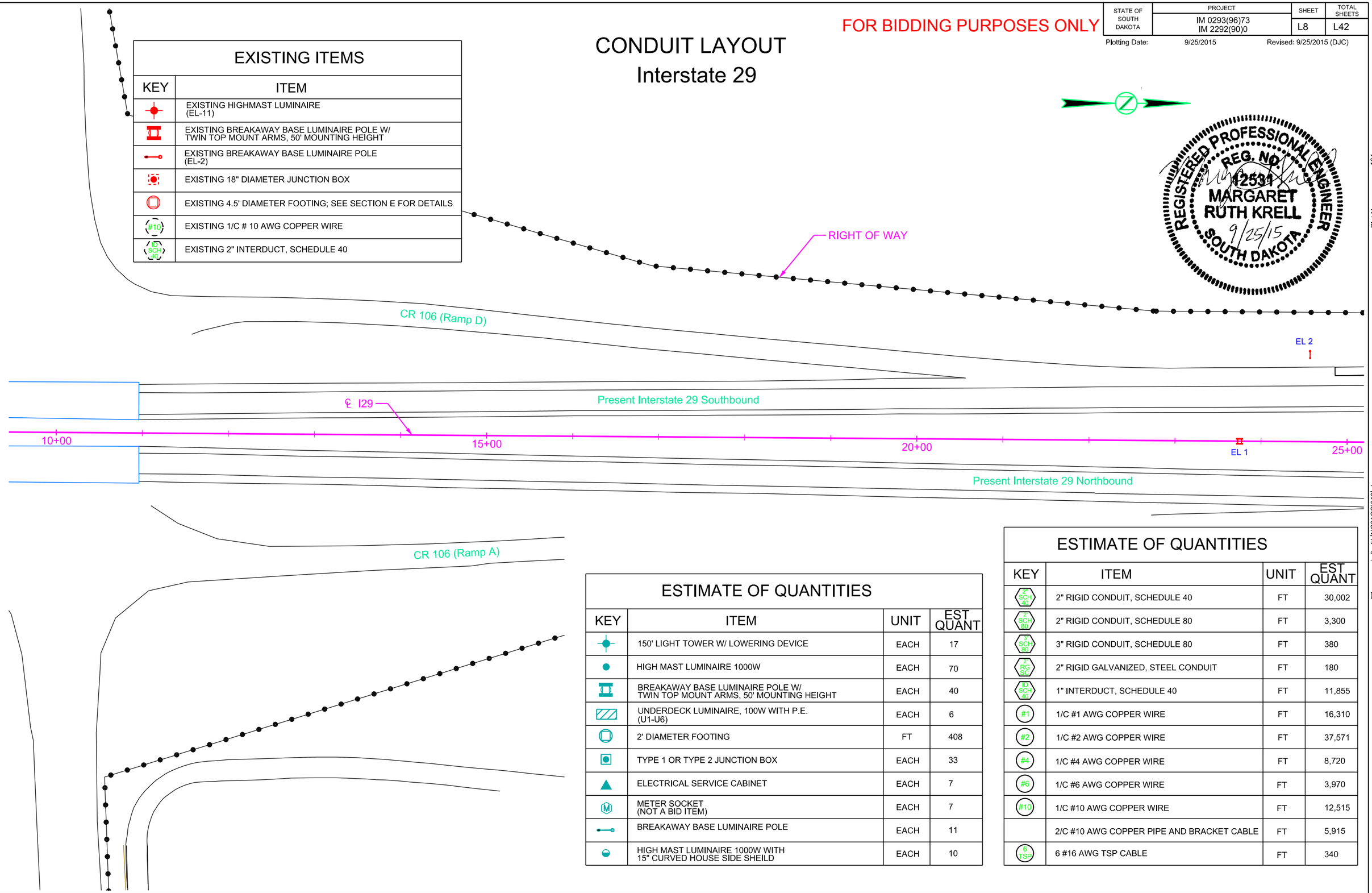

REGISTERED PROFESSIONAL ENGINEER
REG. NO. 12531
MARGARET RUTH KRELL
9/25/15
SOUTH DAKOTA

ESTIMATE OF QUANTITIES			
KEY	ITEM	UNIT	EST QUANT
	150' LIGHT TOWER W/ LOWERING DEVICE	EACH	17
	HIGH MAST LUMINAIRE 1000W	EACH	70
	BREAKAWAY BASE LUMINAIRE POLE W/ TWIN TOP MOUNT ARMS, 50' MOUNTING HEIGHT	EACH	40
	UNDERDECK LUMINAIRE, 100W WITH P.E. (U1-U6)	EACH	6
	2' DIAMETER FOOTING	FT	408
	TYPE 1 OR TYPE 2 JUNCTION BOX	EACH	33
	ELECTRICAL SERVICE CABINET	EACH	7
M	METER SOCKET (NOT A BID ITEM)	EACH	7
	BREAKAWAY BASE LUMINAIRE POLE	EACH	11
	HIGH MAST LUMINAIRE 1000W WITH 15" CURVED HOUSE SIDE SHEILD	EACH	10

ESTIMATE OF QUANTITIES			
KEY	ITEM	UNIT	EST QUANT
2 SCH 40	2" RIGID CONDUIT, SCHEDULE 40	FT	30,002
2 SCH 80	2" RIGID CONDUIT, SCHEDULE 80	FT	3,300
3 SCH 80	3" RIGID CONDUIT, SCHEDULE 80	FT	380
2 RG SC	2" RIGID GALVANIZED, STEEL CONDUIT	FT	180
1D SCH 40	1" INTERDUCT, SCHEDULE 40	FT	11,855
#1	1/C #1 AWG COPPER WIRE	FT	16,310
#2	1/C #2 AWG COPPER WIRE	FT	37,571
#4	1/C #4 AWG COPPER WIRE	FT	8,720
#6	1/C #6 AWG COPPER WIRE	FT	3,970
#10	1/C #10 AWG COPPER WIRE	FT	12,515
	2/C #10 AWG COPPER PIPE AND BRACKET CABLE	FT	5,915
6 TSP	6 #16 AWG TSP CABLE	FT	340

Plot Scale - 1:100
Plotted From - julian_chavez
Plot Name - 164
File - ...\rdprj\LINC01QS\01ll.dgn

FOR BIDDING PURPOSES ONLY

STATE OF SOUTH DAKOTA	PROJECT	SHEET	TOTAL SHEETS
	IM 0293(96)73 IM 2292(90)0	L9	L42

Plotting Date: 8/25/2015

CONDUIT LAYOUT
Interstate 29

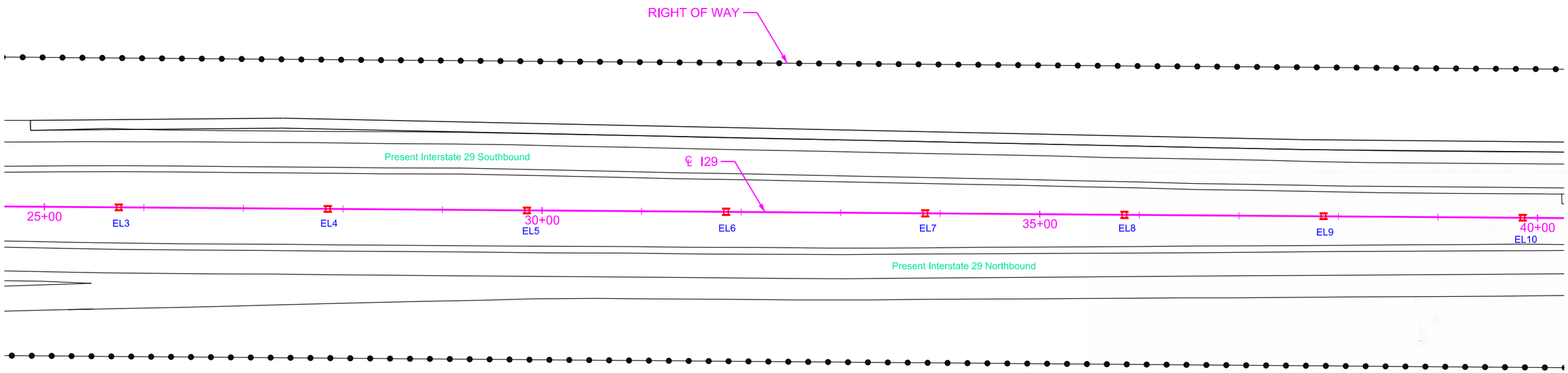

REGISTERED PROFESSIONAL ENGINEER
REG. NO. 12531
MARGARET RUTH KRELL
9/3/15
SOUTH DAKOTA

Plot Scale - 1:100
Plotted From - Michael Ryan
Plot Name - 163
File - ...\rdlprj\LINC01QS\025l.dgn

CONDUIT LAYOUT

Interstate 29

FOR BIDDING PURPOSES ONLY

STATE OF SOUTH DAKOTA	PROJECT	SHEET	TOTAL SHEETS
	IM 0293(96)73 IM 2292(90)0	L10	L42

Plotting Date: 8/25/2015

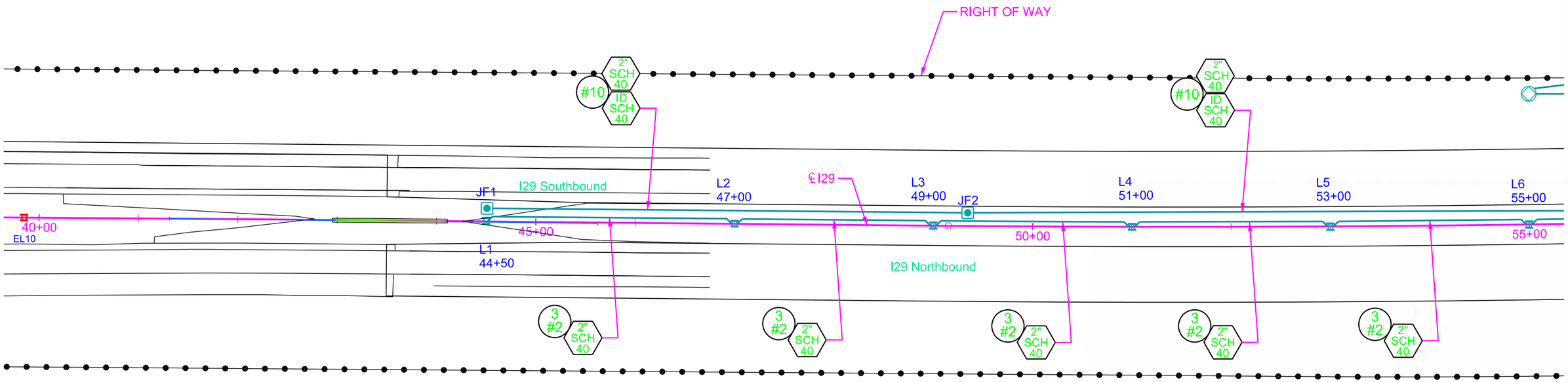

REGISTERED PROFESSIONAL ENGINEER
REG. NO. 12531
MARGARET RUTH KRELL
9/3/15
SOUTH DAKOTA

Plot Scale - 1:100

Plotted From - Michael_Ryan

Plot Name - 164

File - ...\rd\prj\LINC01QS\04l.dgn

FOR BIDDING PURPOSES ONLY

STATE OF SOUTH DAKOTA	PROJECT	SHEET	TOTAL SHEETS
	IM 0293(96)73 IM 2292(90)0	L11	L42

Plotting Date: 8/25/2015

CONDUIT LAYOUT
Interstate 29

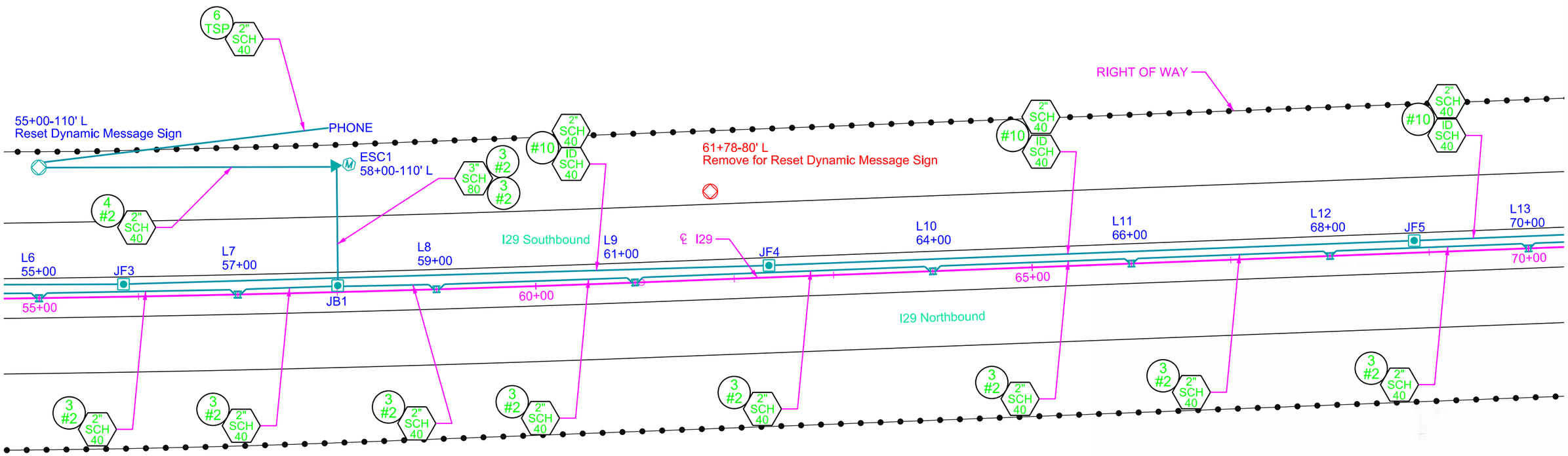

REGISTERED PROFESSIONAL ENGINEER
REG. NO. 12531
MARGARET RUTH KRELL
9/3/15
SOUTH DAKOTA

Plot Scale - 1:100
Plotted From - Michael Ryan
Plot Name - 165
File - ...\rdtprj\LINC01QS055l.dgn

FOR BIDDING PURPOSES ONLY

STATE OF SOUTH DAKOTA	PROJECT	SHEET	TOTAL SHEETS
	IM 0293(96)73 IM 2292(90)0	L12	L42

Plotting Date: 8/25/2015

CONDUIT LAYOUT
Interstate 29

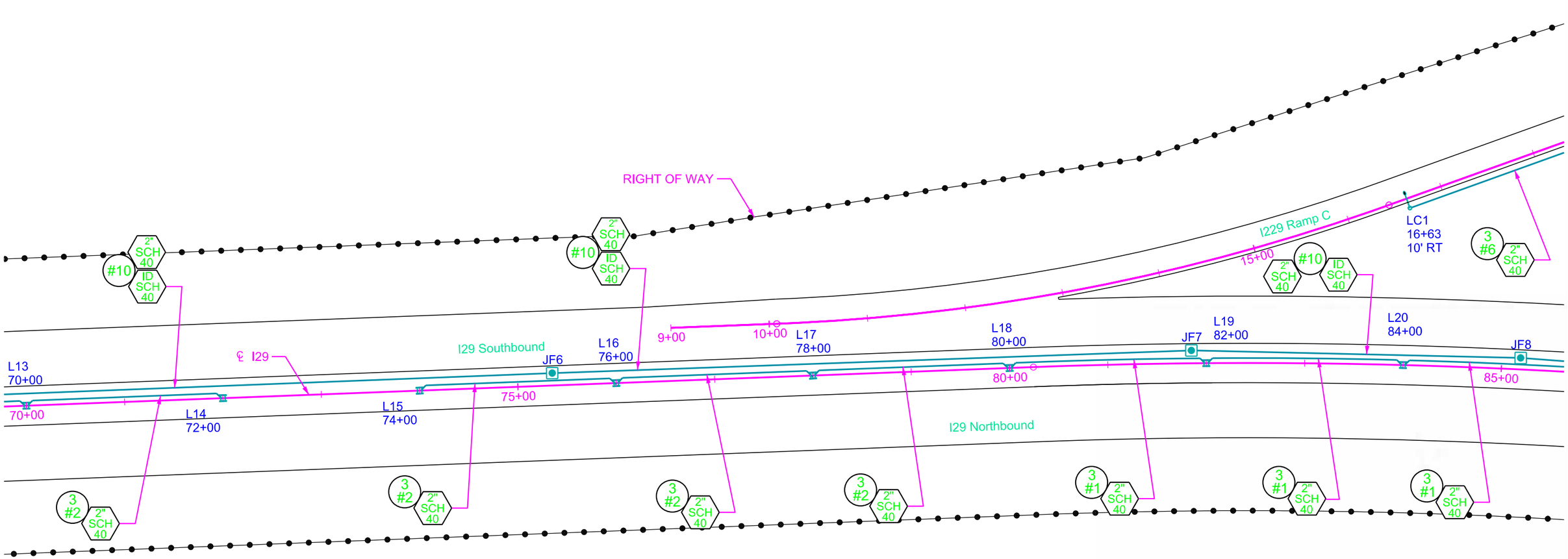

REGISTERED PROFESSIONAL ENGINEER
REG. NO. 12531
MARGARET RUTH KRELL
9/3/15
SOUTH DAKOTA

Plot Scale - 1:100
Plotted From - Michael_Ryan
Plot Name - 166
File - ...\rd\prj\LINC01QS\07ll.dgn

FOR BIDDING PURPOSES ONLY

STATE OF SOUTH DAKOTA	PROJECT	SHEET	TOTAL SHEETS
	IM 0293(96)73 IM 2292(90)0	L13	L42

Plotting Date: 8/25/2015

CONDUIT LAYOUT
Interstate 29

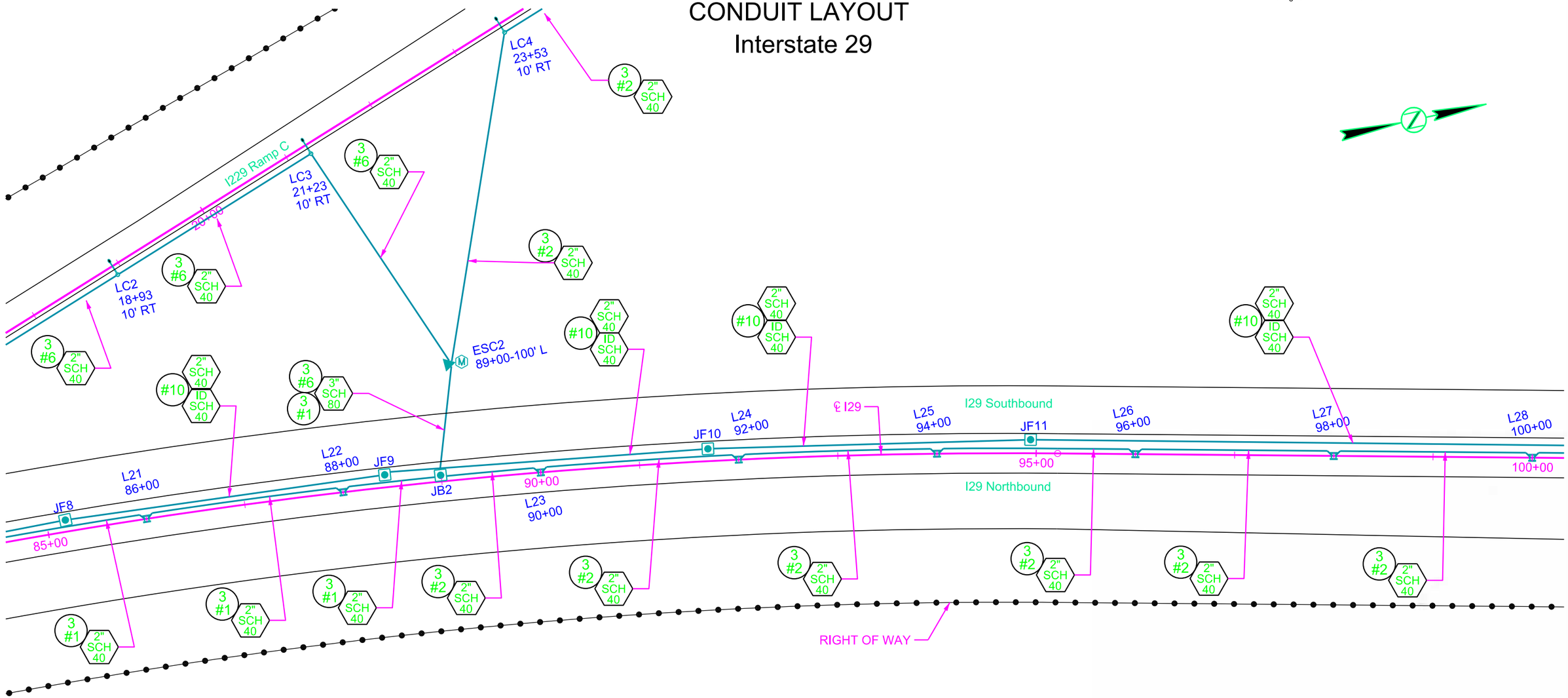

REGISTERED PROFESSIONAL ENGINEER
REG. NO. 12531
MARGARET RUTH KRELL
9/3/15
SOUTH DAKOTA

Plot Scale - 1:100
Plotted From - Michael_Ryan
Plot Name - 167
File - ...\rdprj\LINC01OS085L.dgn

CONDUIT LAYOUT FOR BIDDING PURPOSES ONLY

Interstate 29

STATE OF SOUTH DAKOTA	PROJECT	SHEET	TOTAL SHEETS
	IM 0293(96)73 IM 2292(90)0	L14	L42

Plotting Date: 9/25/2015 Revised: 9/25/2015 (JMC)

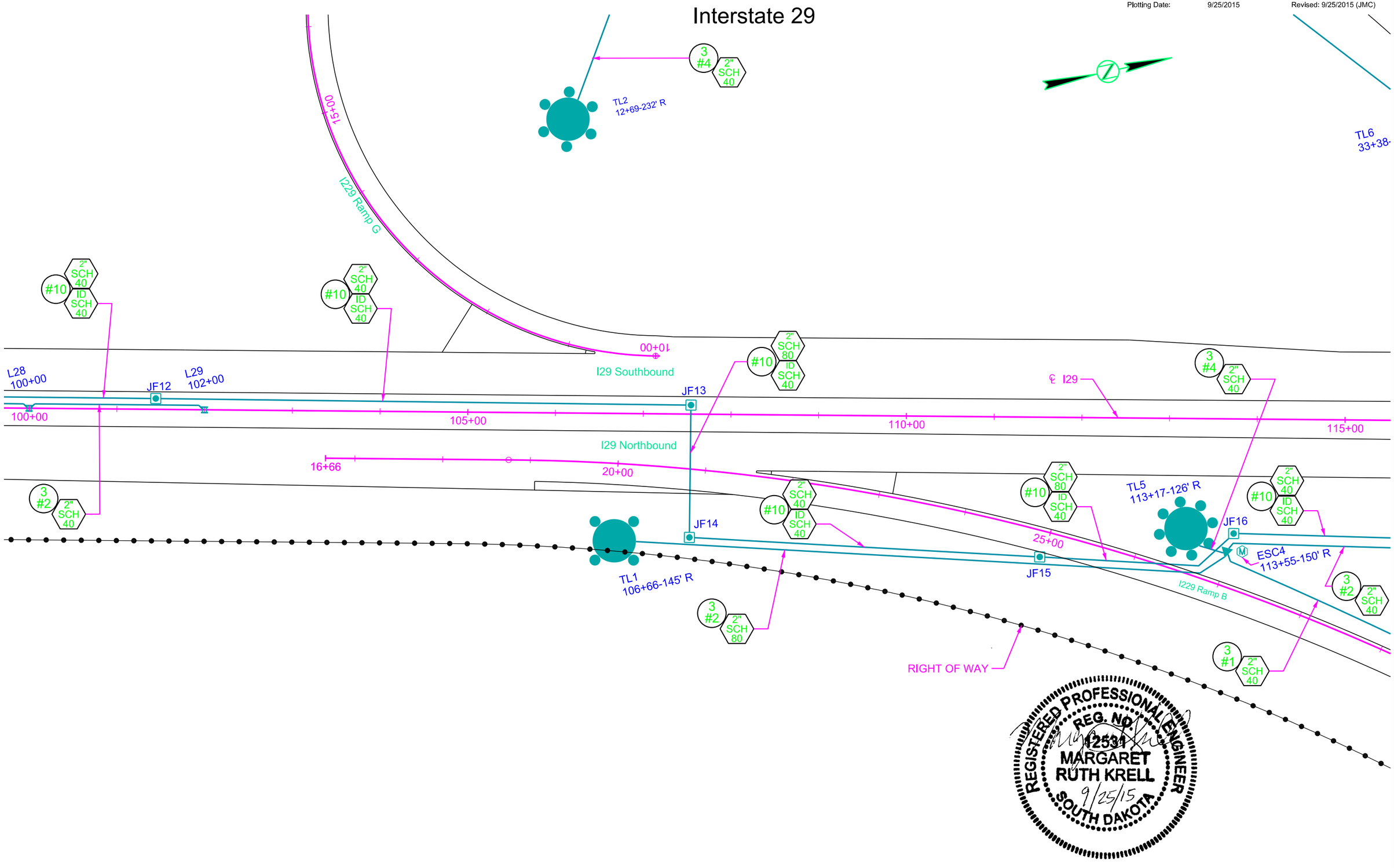

Plot Scale - 1:100

Plotted From - julian_chavez

Plot Name - 170

File - ...\rdprj\LINC01QS100I.dgn

FOR BIDDING PURPOSES ONLY

STATE OF SOUTH DAKOTA	PROJECT	SHEET	TOTAL SHEETS
	IM 0293(96)73 IM 2292(90)0	L15	L42

Plotting Date: 9/25/2015 Revised: 9/25/2015 (JMC)

CONDUIT LAYOUT
Interstate 29

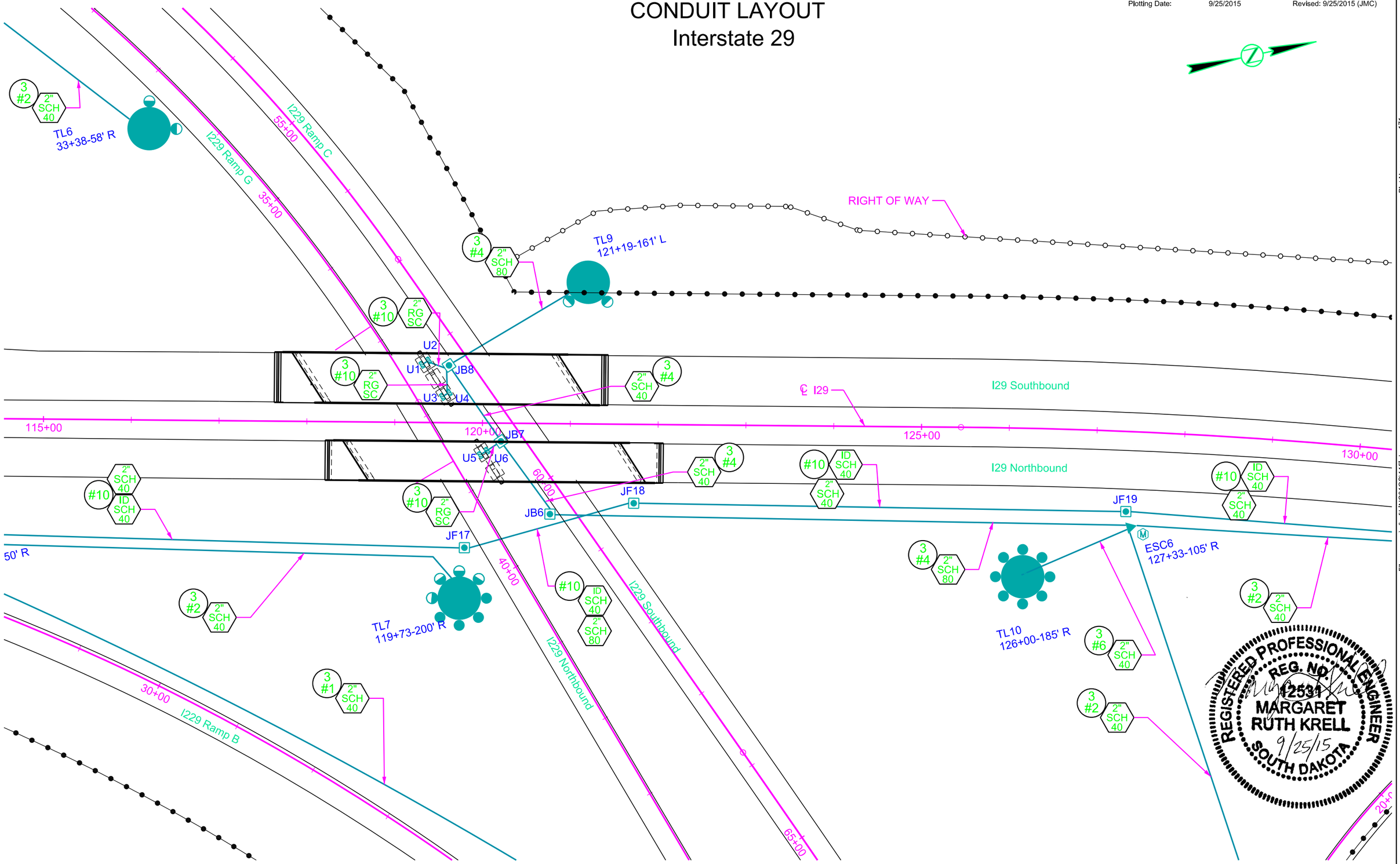

Plot Scale - 1:100
Plotted From - julian_chavez
Plot Name - 171
File - ...\rd\prj\LINC01QS\115l.dgn

STATE OF SOUTH DAKOTA	PROJECT	SHEET	TOTAL SHEETS
	IM 0293(96)73 IM 2292(90)0	L16	L42

FOR BIDDING PURPOSES ONLY

Plotting Date: 9/25/2015 Revised: 9/25/2015 (JMC)

CONDUIT LAYOUT
Interstate 29

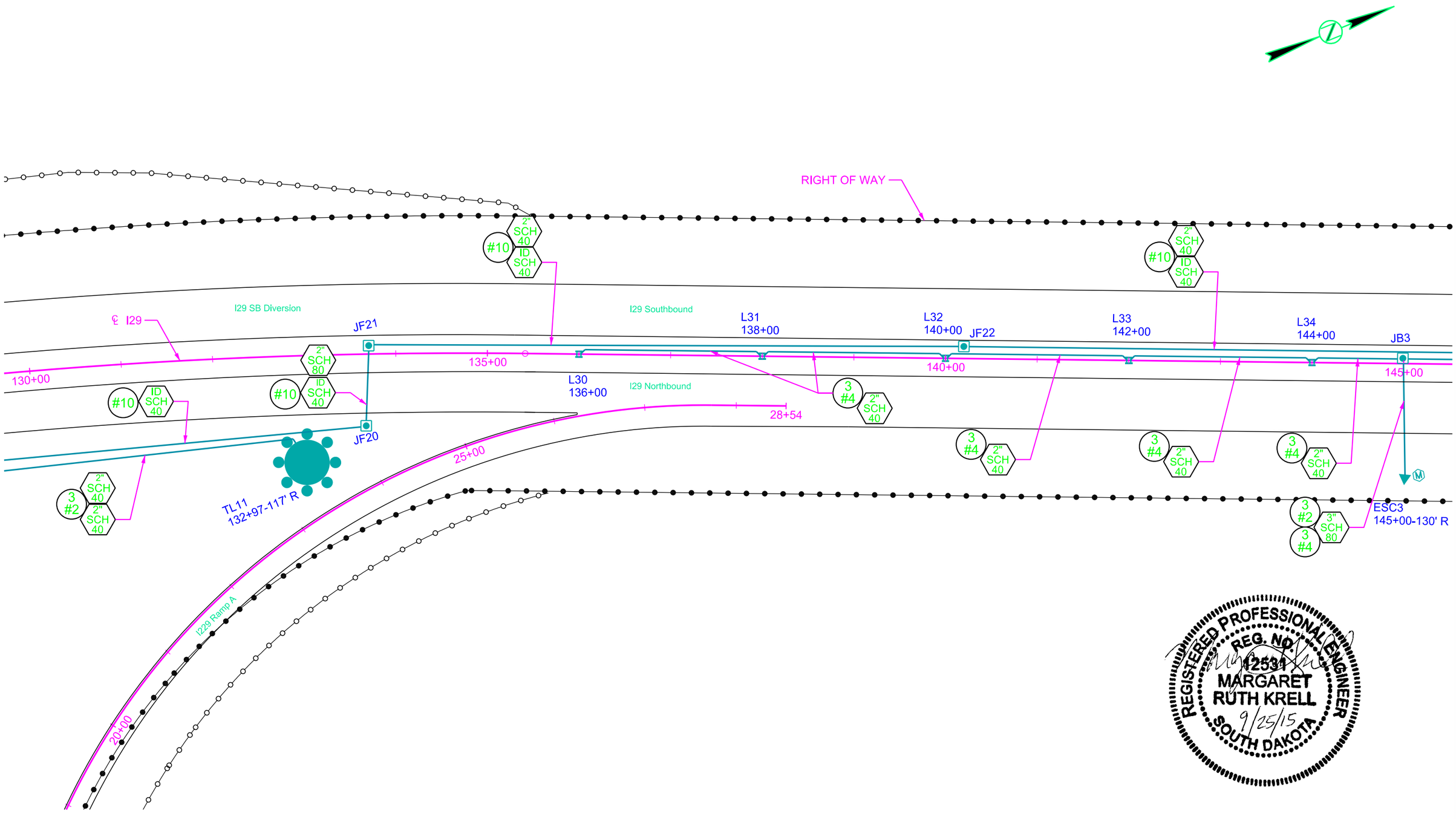

REGISTERED PROFESSIONAL ENGINEER
REG. NO. 12531
MARGARET RUTH KRELL
9/25/15
SOUTH DAKOTA

Plot Scale - 1:100
Plotted From - lidian chavez
Plot Name - 172
File - ...\rd\prj\LINC01GS\130l.dgn

FOR BIDDING PURPOSES ONLY

STATE OF SOUTH DAKOTA	PROJECT	SHEET	TOTAL SHEETS
	IM 0293(96)73 IM 2292(90)0	L17	L42

Plotting Date: 8/25/2015

CONDUIT LAYOUT
Interstate 29

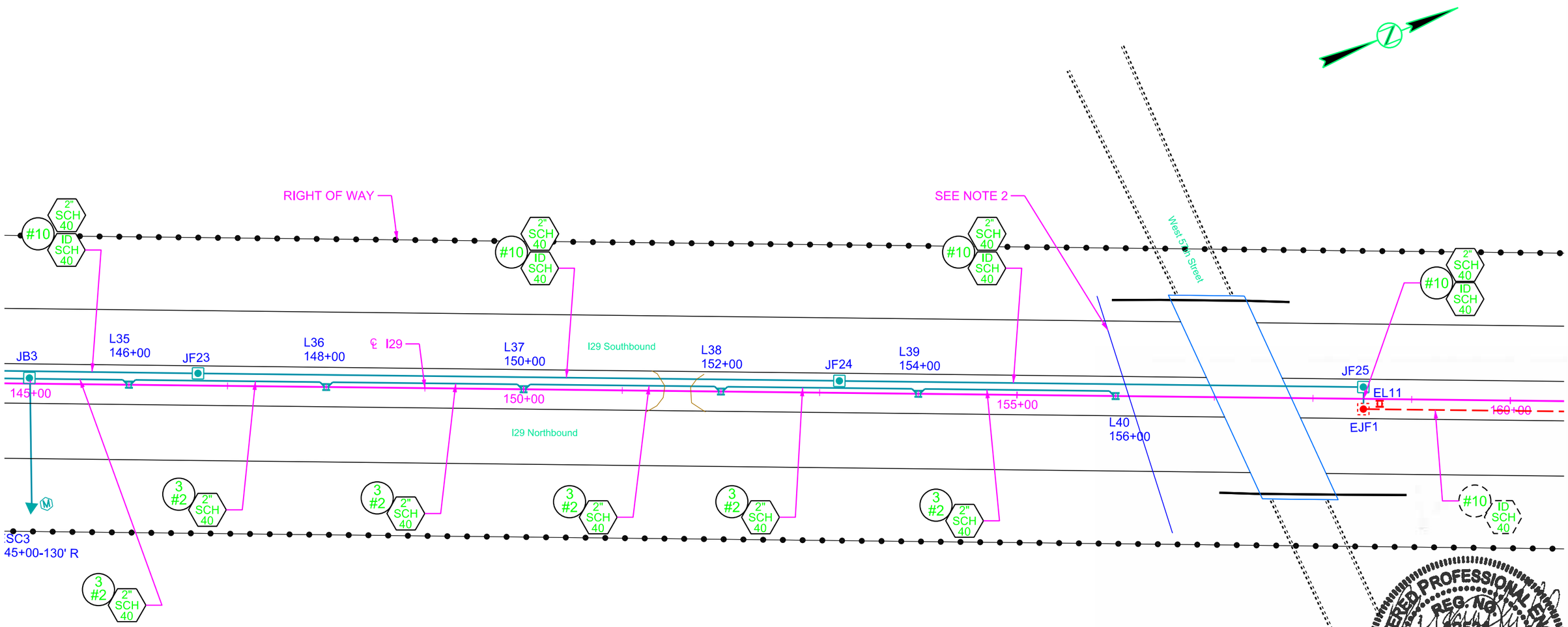

REGISTERED PROFESSIONAL ENGINEER
REG. NO. 12531
MARGARET RUTH KRELL
9/3/15
SOUTH DAKOTA

NOTES:

1. DASHED SYMBOLS REPRESENT EXISTING ITEMS. LOCATIONS ARE APPROXIMATE.
2. CONTRACTOR SHALL ENSURE THAT HORIZONTAL CLEARANCE FROM LUMINAIRE POLE L40 AND EXISTING OVERHEAD ELECTRICAL LINES COMPLIES WITH THE REQUIREMENTS LISTED IN THE NATIONAL ELECTRICAL SAFETY CODE.

Plotted From - Michael_Ryan
Plot Scale - 1:100
File - ...\rdprj\LINC01QS145I.dgn
Plot Name - 171

FOR BIDDING PURPOSES ONLY

STATE OF SOUTH DAKOTA	PROJECT	SHEET	TOTAL SHEETS
	IM 0293(96)73 IM 2292(90)0	L18	L42

Plotting Date: 9/25/2015 Revised: 9/25/2015 (JMC)

CONDUIT LAYOUT
Interstate 29

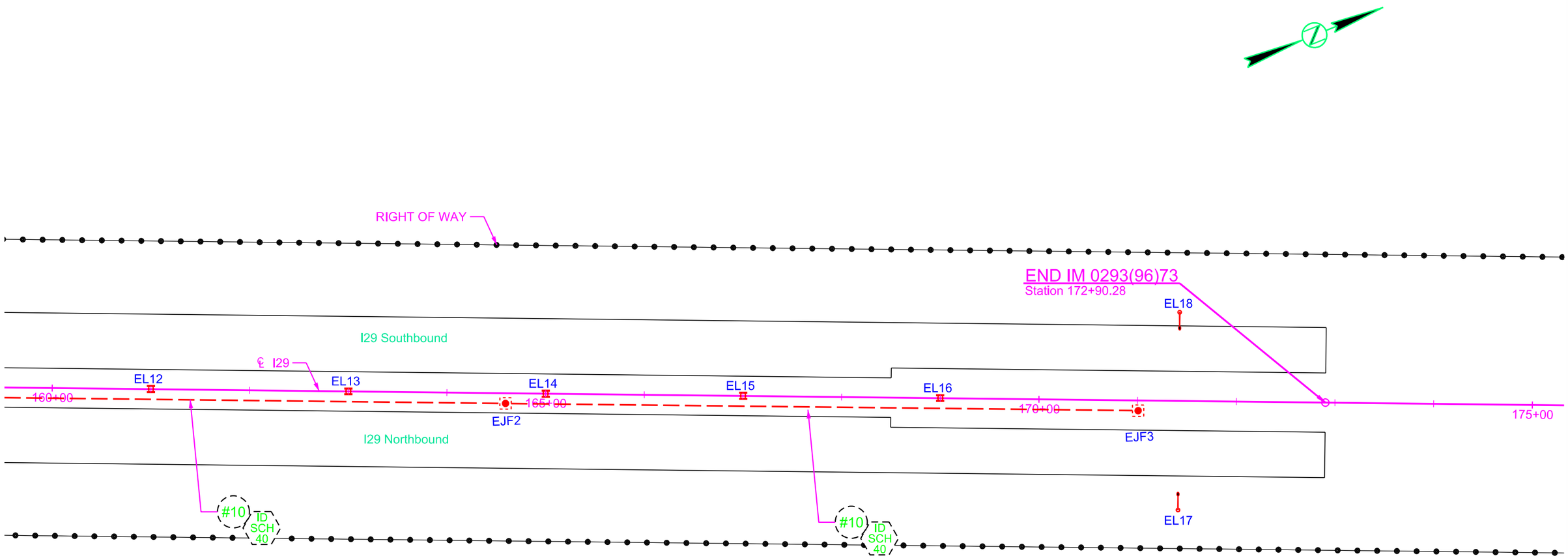

REGISTERED PROFESSIONAL ENGINEER
REG. NO. 12531
MARGARET RUTH KRELL
9/25/15
SOUTH DAKOTA

NOTE:

DASHED SYMBOLS REPRESENT EXISTING ITEMS.
LOCATIONS ARE APPROXIMATE.

Plot Scale - 1:100
Plotted From - julian_chavez
Plot Name - 174
File - ...\rd\prj\LINC01QS\160l.dgn

FOR BIDDING PURPOSES ONLY

STATE OF SOUTH DAKOTA	PROJECT	SHEET	TOTAL SHEETS
	IM 0293(96)73 IM 2292(90)0	L19	L42

Plotting Date: 8/25/2015

CONDUIT LAYOUT
I229

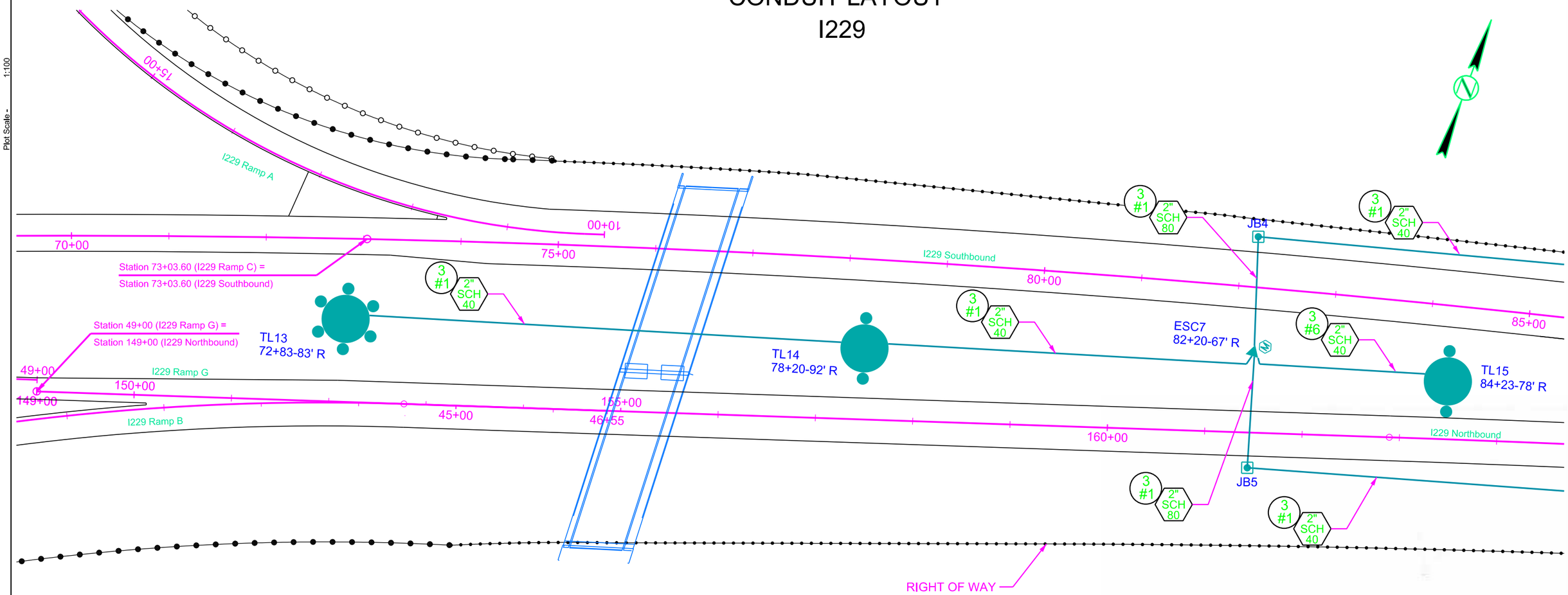

REGISTERED PROFESSIONAL ENGINEER
REG. NO. 12531
MARGARET RUTH KRELL
9/3/15
SOUTH DAKOTA

Plot Scale - 1:100
Plotted From - Michael Ryan
Plot Name - 173
File - ...\rdprj\LINC01QS\(229)10L.dgn

FOR BIDDING PURPOSES ONLY

STATE OF SOUTH DAKOTA	PROJECT	SHEET	TOTAL SHEETS
	IM 0293(96)73 IM 2292(90)0	L20	L42

Plotting Date: 8/25/2015

CONDUIT LAYOUT
I229

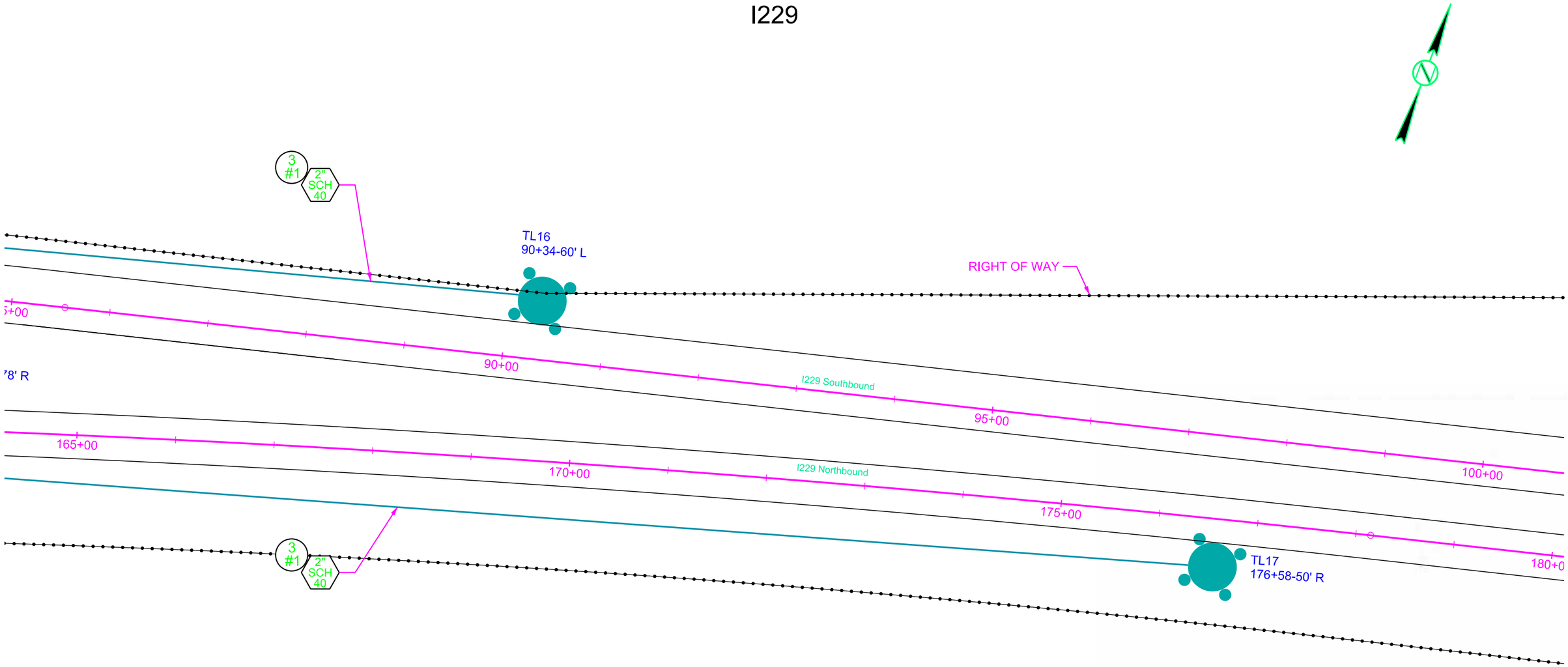

REGISTERED PROFESSIONAL ENGINEER
REG. NO. 12531
MARGARET RUTH KRELL
9/3/15
SOUTH DAKOTA

Plot Scale - 1:100
Plotted From - Michael_Ryan
Plot Name - 174
File - ...\rd\prj\LINC01GS\(229)20l.dgn

FOR BIDDING PURPOSES ONLY

STATE OF SOUTH DAKOTA	PROJECT	SHEET	TOTAL SHEETS
	IM 0293(96)73 IM 2292(90)0	L21	L42

Plotting Date: 8/25/2015

CONDUIT LAYOUT
I229

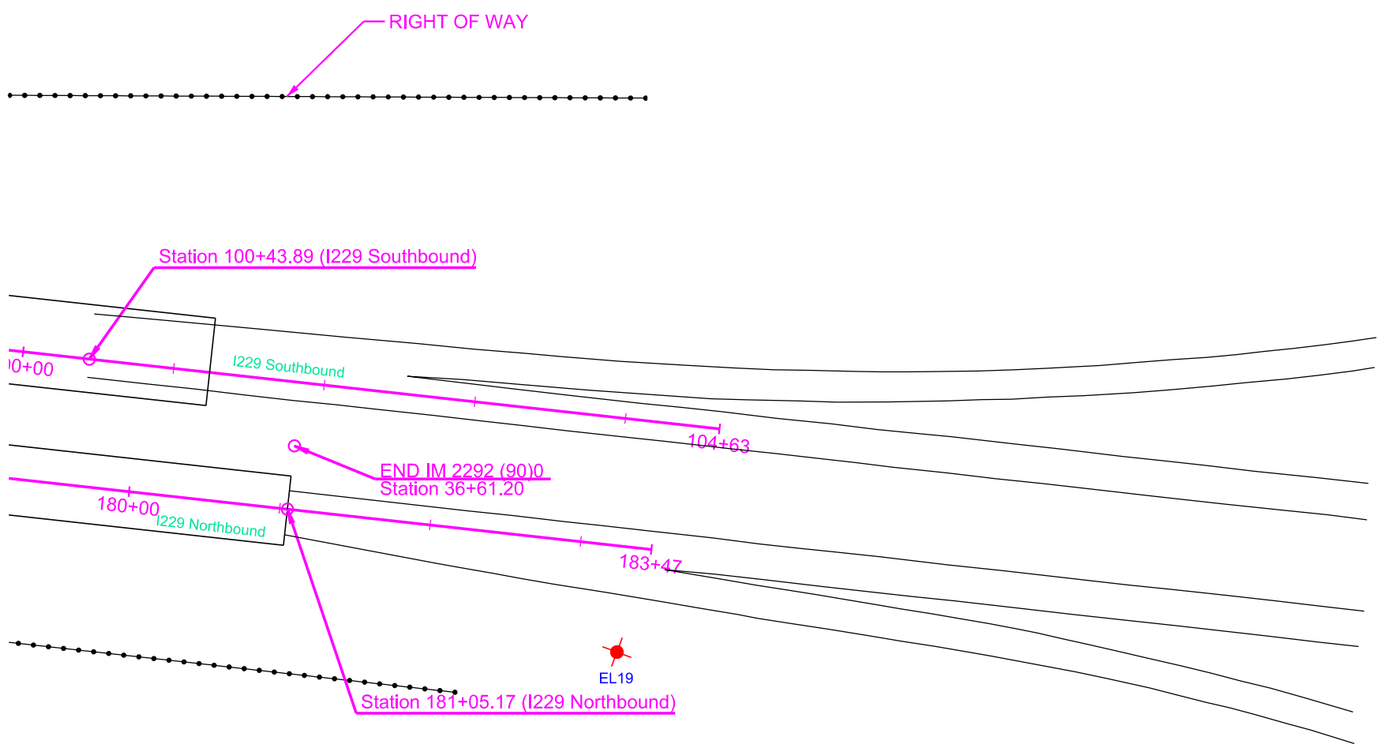

REGISTERED PROFESSIONAL ENGINEER
REG. NO. 12531
MARGARET RUTH KRELL
9/3/15
SOUTH DAKOTA

Plot Scale - 1:100
Plotted From - Michael_Ryan
Plot Name - 175
File - ...\rd\prj\LINC01QS\(229)35I.dgn

STATE OF SOUTH DAKOTA	PROJECT	SHEET	TOTAL SHEETS
	IM 0293(96)73 IM 2292(90)0	L22	L42

Plotting Date: 9/25/2015 Revised: 9/25/2015 (JMC)

FOR BIDDING PURPOSES ONLY

CONDUIT LAYOUT
I229 Ramp A

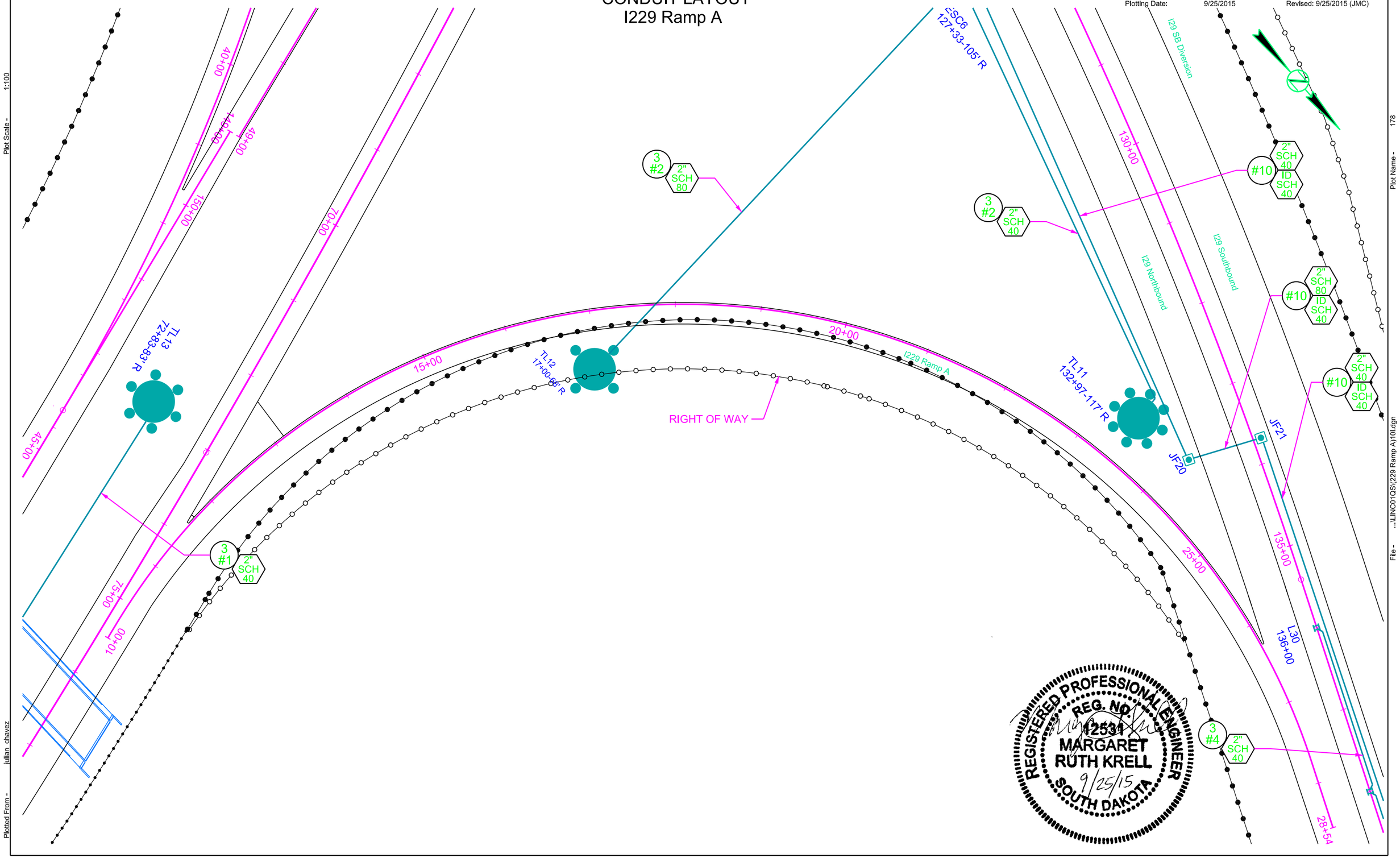

Plot Scale - 1:100

Plotted From - julian chavez

Plot Name - 178

File - ...\LINC01OS\I229 Ramp A\10l.dgn

FOR BIDDING PURPOSES ONLY

STATE OF SOUTH DAKOTA	PROJECT	SHEET	TOTAL SHEETS
	IM 0293(96)73 IM 2292(90)0	L23	L42

Plotting Date: 9/25/2015 Revised: 9/25/2015 (DJC)

CONDUIT LAYOUT
I229 Ramp B

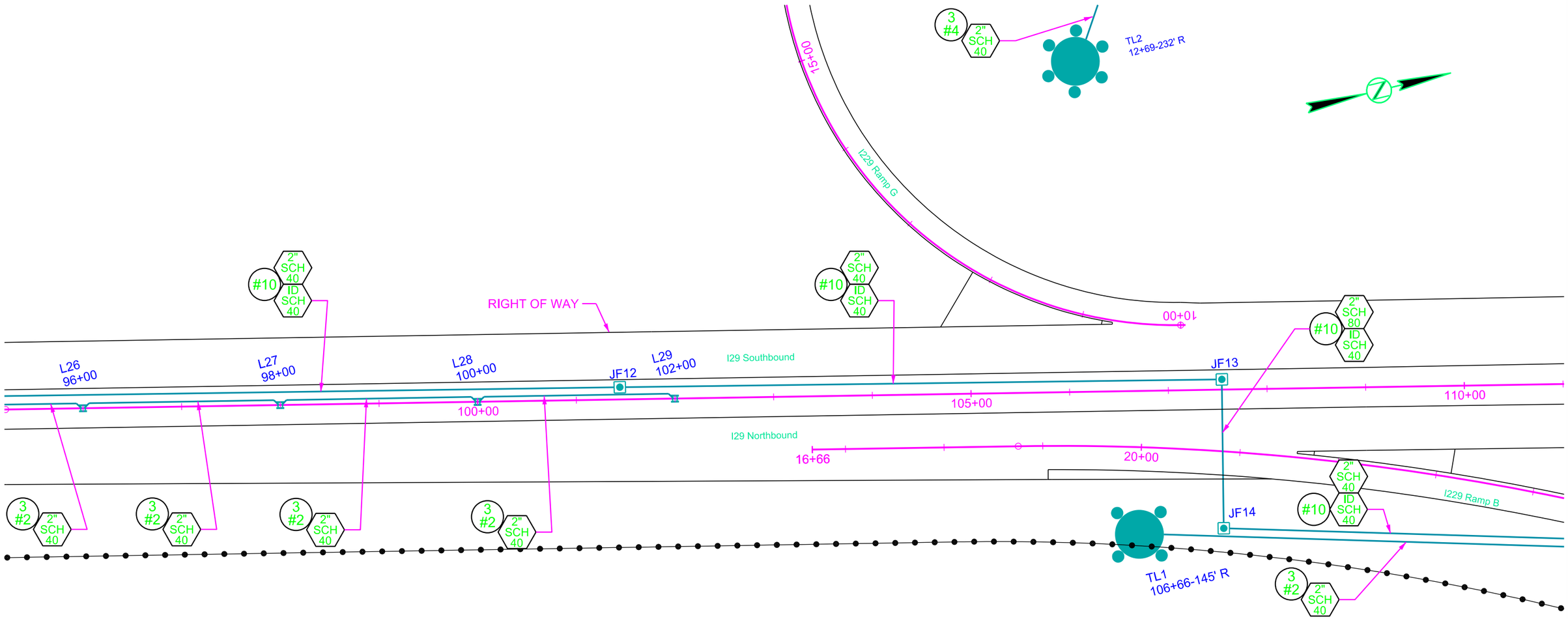

REGISTERED PROFESSIONAL ENGINEER
REG. NO.
12531
MARGARET
RUTH KRELL
9/25/15
SOUTH DAKOTA

Plot Scale - 1:100
Plotted From - julian_chavez
Plot Name - 179
File - ...\LINC01GS\(229 Ramp B)10l.dgn

FOR BIDDING PURPOSES ONLY

STATE OF SOUTH DAKOTA	PROJECT	SHEET	TOTAL SHEETS
	IM 0293(96)73 IM 2292(90)0	L24	L42

Plotting Date: 9/25/2015 Revised: 9/25/2015 (JMC)

CONDUIT LAYOUT
I229 Ramp B

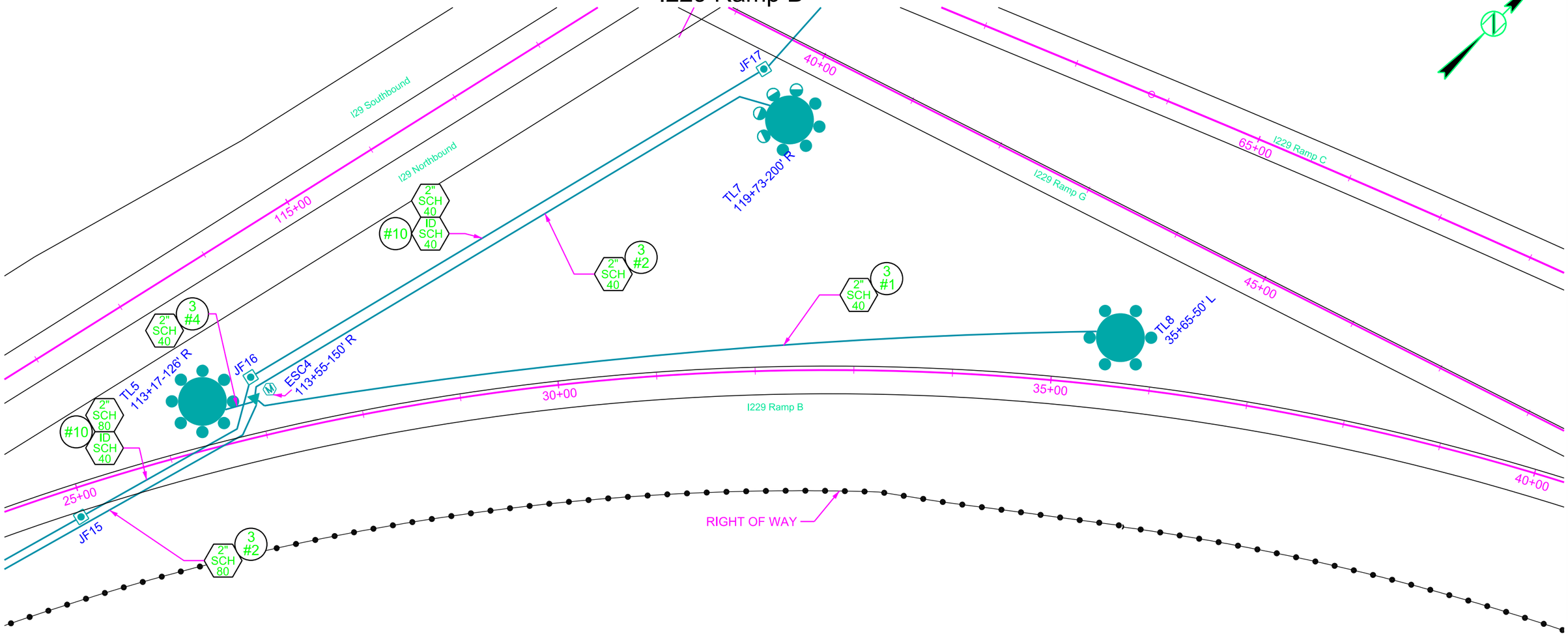

REGISTERED PROFESSIONAL ENGINEER
REG. NO. 12531
MARGARET RUTH KRELL
9/25/15
SOUTH DAKOTA

Plot Scale - 1:100
Plotted From - julian_chavez
Plot Name - 180
File - ...\LINC01GS\I229 Ramp B\25I.dgn

FOR BIDDING PURPOSES ONLY

STATE OF SOUTH DAKOTA	PROJECT	SHEET	TOTAL SHEETS
	IM 0293(96)73 IM 2292(90)0	L25	L42

Plotting Date: 8/25/2015

CONDUIT LAYOUT
I229 Ramp C

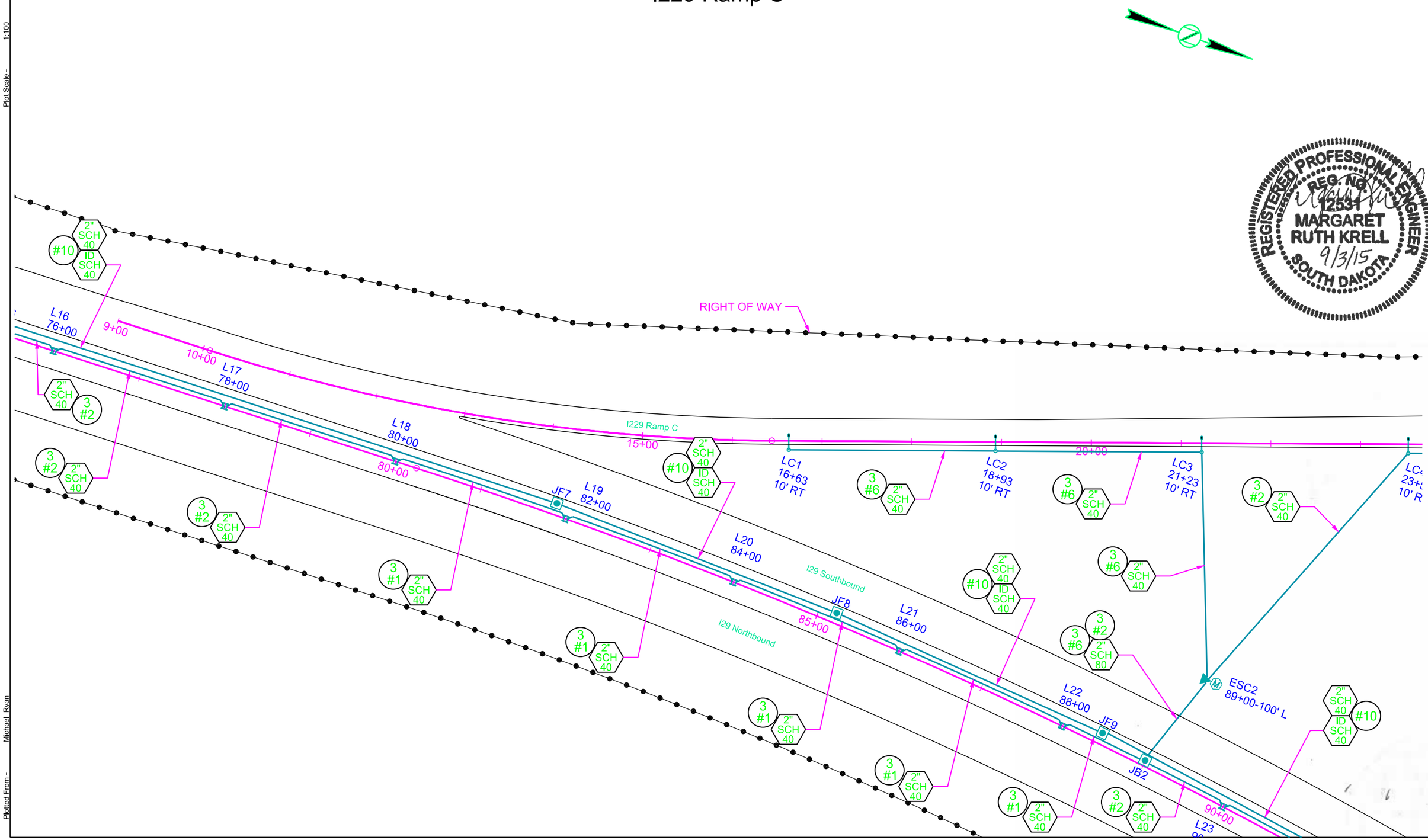

REGISTERED PROFESSIONAL ENGINEER
REG. NO. 12531
MARGARET RUTH KRELL
9/3/15
SOUTH DAKOTA

Plot Scale - 1:100
Plotted From - Michael Ryan
Plot Name - 179
File - ...\LINC01GS\I229 Ramp C\08l.dgn

FOR BIDDING PURPOSES ONLY

STATE OF SOUTH DAKOTA	PROJECT	SHEET	TOTAL SHEETS
	IM 0293(96)73 IM 2292(90)0	L26	L42

Plotting Date: 8/25/2015

CONDUIT LAYOUT
I229 Ramp C

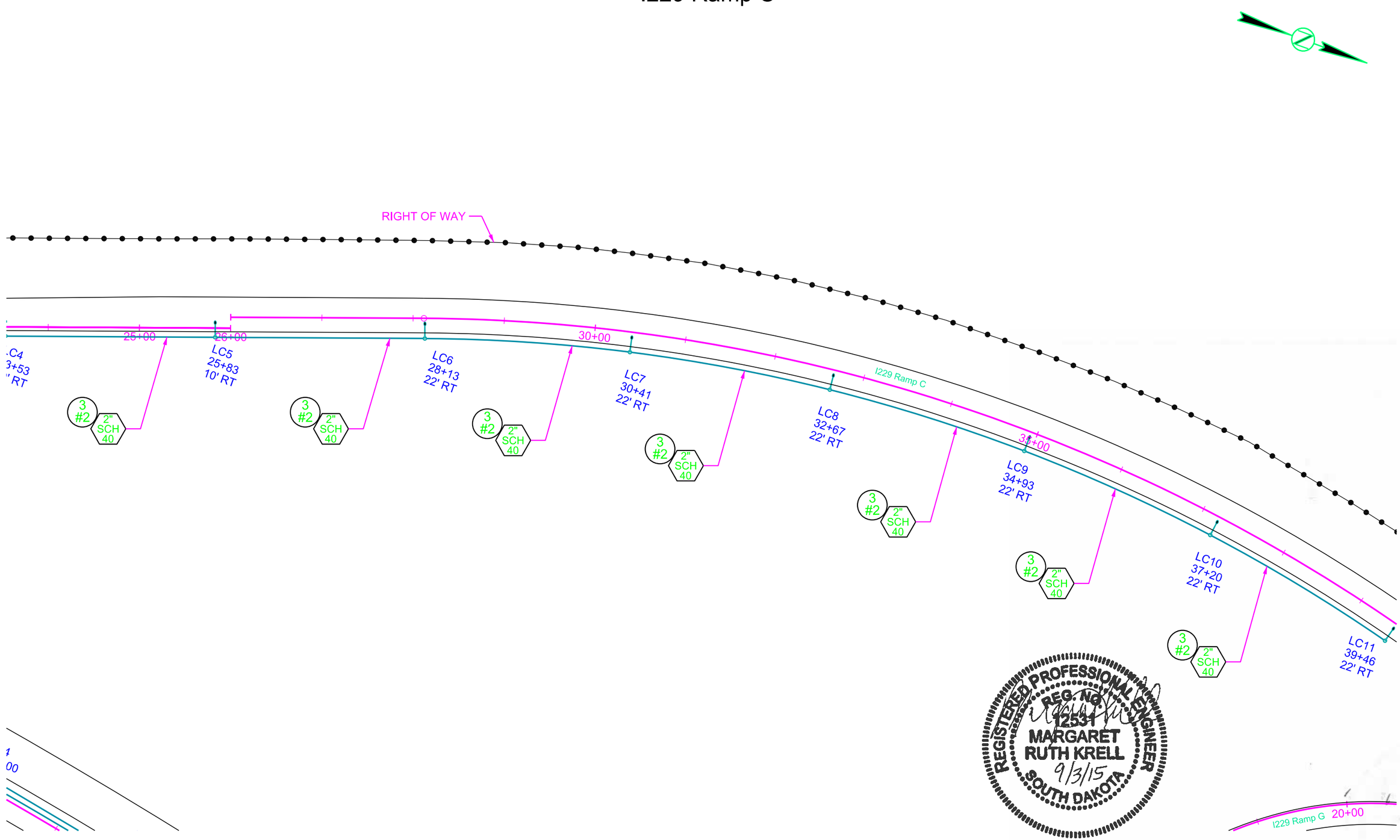

REGISTERED PROFESSIONAL ENGINEER
REG. NO.
12531
MARGARET
RUTH KRELL
9/3/15
SOUTH DAKOTA

Plot Scale - 1:100
Plot Name - 180
File - ...\LINC01GS\(229 Ramp C)25l.dgn
Plotted From - Michael Ryan

FOR BIDDING PURPOSES ONLY

STATE OF SOUTH DAKOTA	PROJECT	SHEET	TOTAL SHEETS
	IM 0293(96)73 IM 2292(90)0	L27	L42

Plotting Date: 9/25/2015 Revised: 9/25/2015 (JMC)

CONDUIT LAYOUT
I229 Ramp C

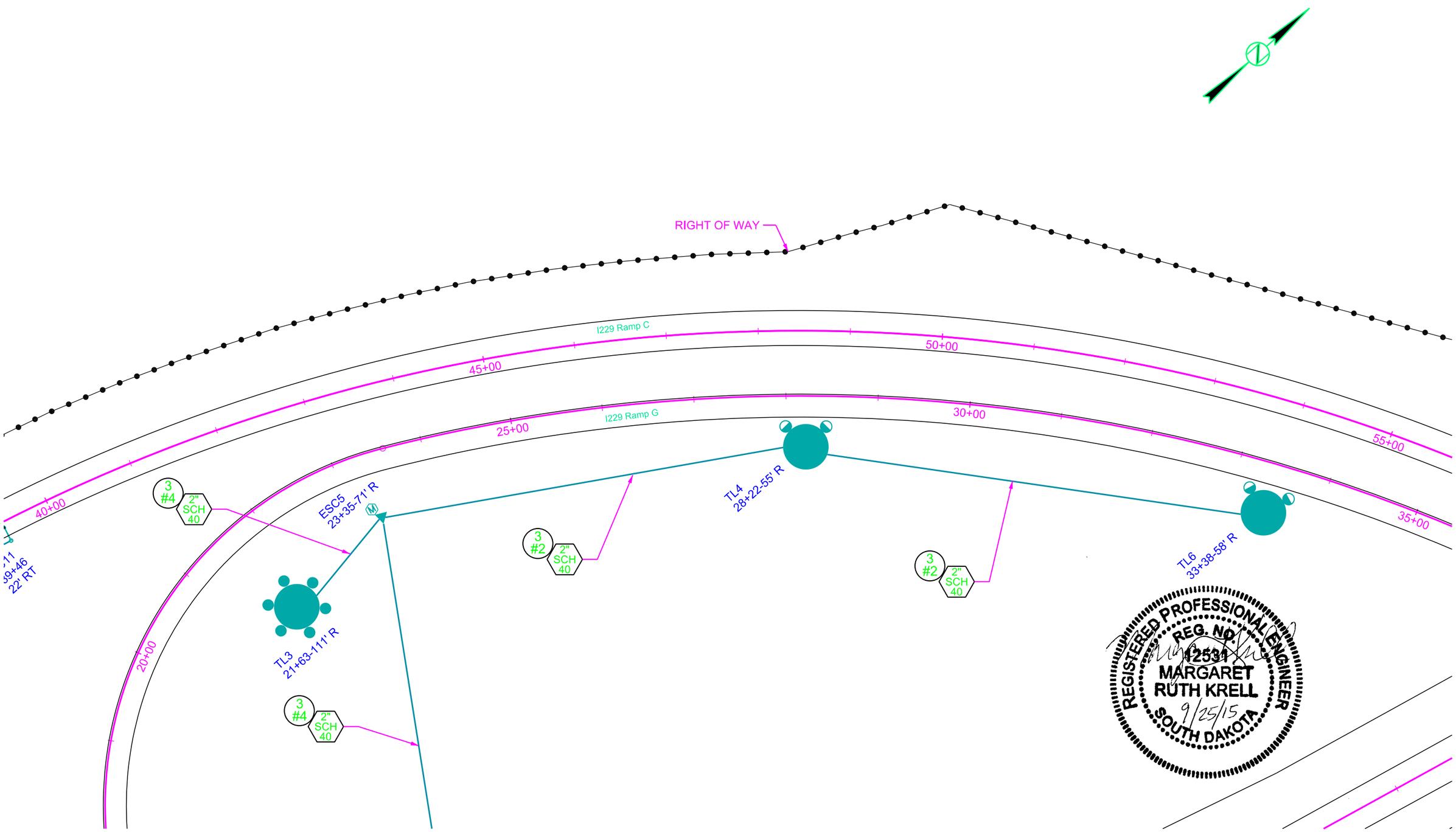

Plot Scale - 1:100

Plotted From - lullan chavez

Plot Name - 183

File - ...\LINC01QS\I229 Ramp C\40l.dgn

STATE OF SOUTH DAKOTA	PROJECT	SHEET	TOTAL SHEETS
	IM 0293(96)73 IM 2292(90)0	L28	L42

Plotting Date: 9/25/2015 Revised: 9/25/2015 (JMC)

FOR BIDDING PURPOSES ONLY

CONDUIT LAYOUT
I229 Ramp C

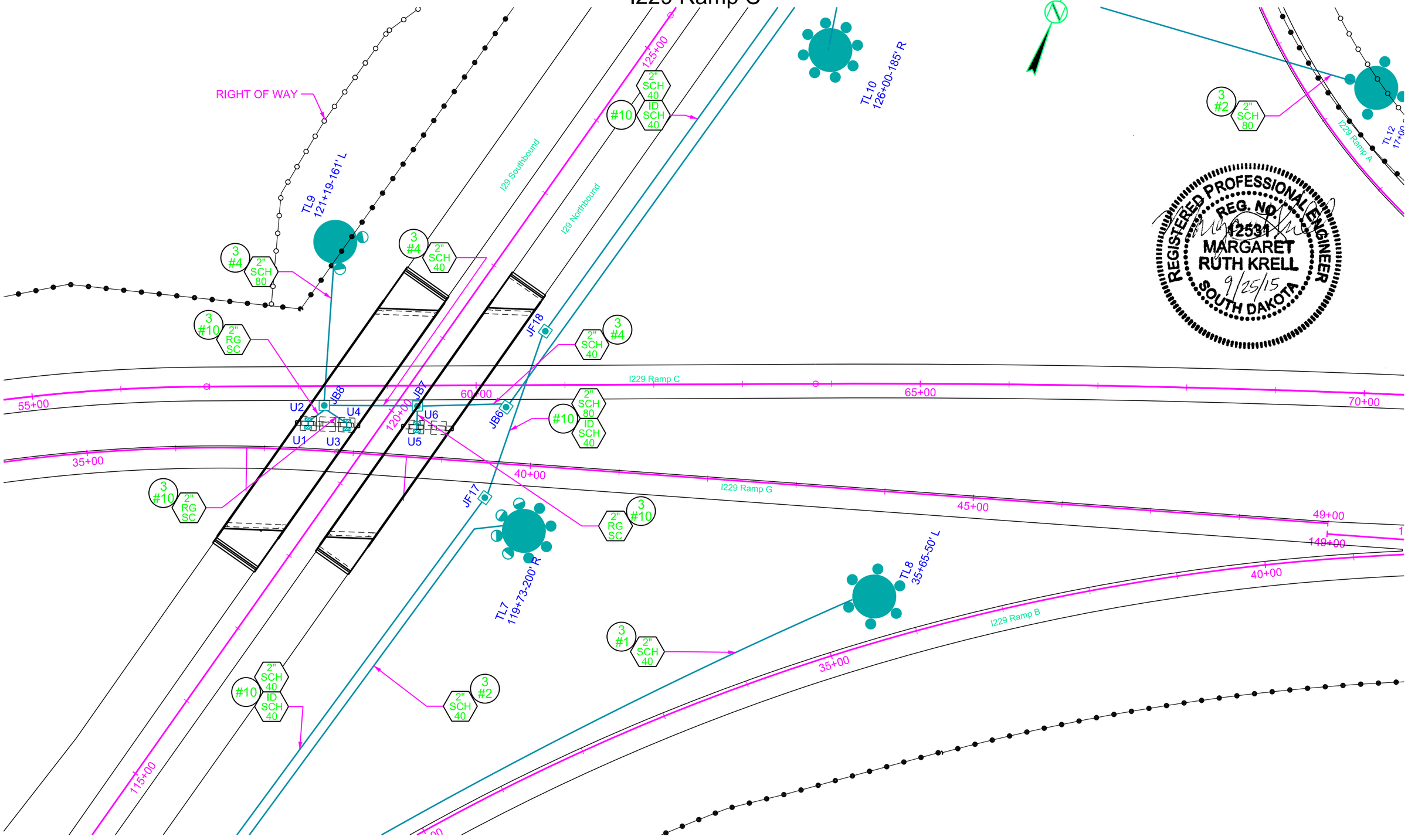

REGISTERED PROFESSIONAL ENGINEER
REG. NO. 12531
MARGARET RUTH KRELL
9/25/15
SOUTH DAKOTA

Plot Scale - 1:100
Plotted From - lullan_chavez
Plot Name - 184
File - ...\LINC01QS\I229 Ramp C\55L.dgn

STATE OF SOUTH DAKOTA	PROJECT	SHEET	TOTAL SHEETS
	IM 0293(96)73 IM 2292(90)0	L29	L42

FOR BIDDING PURPOSES ONLY

Plotting Date: 9/25/2015 Revised: 9/25/2015 (JMC)

CONDUIT LAYOUT
WB I229/I229 Ramp C

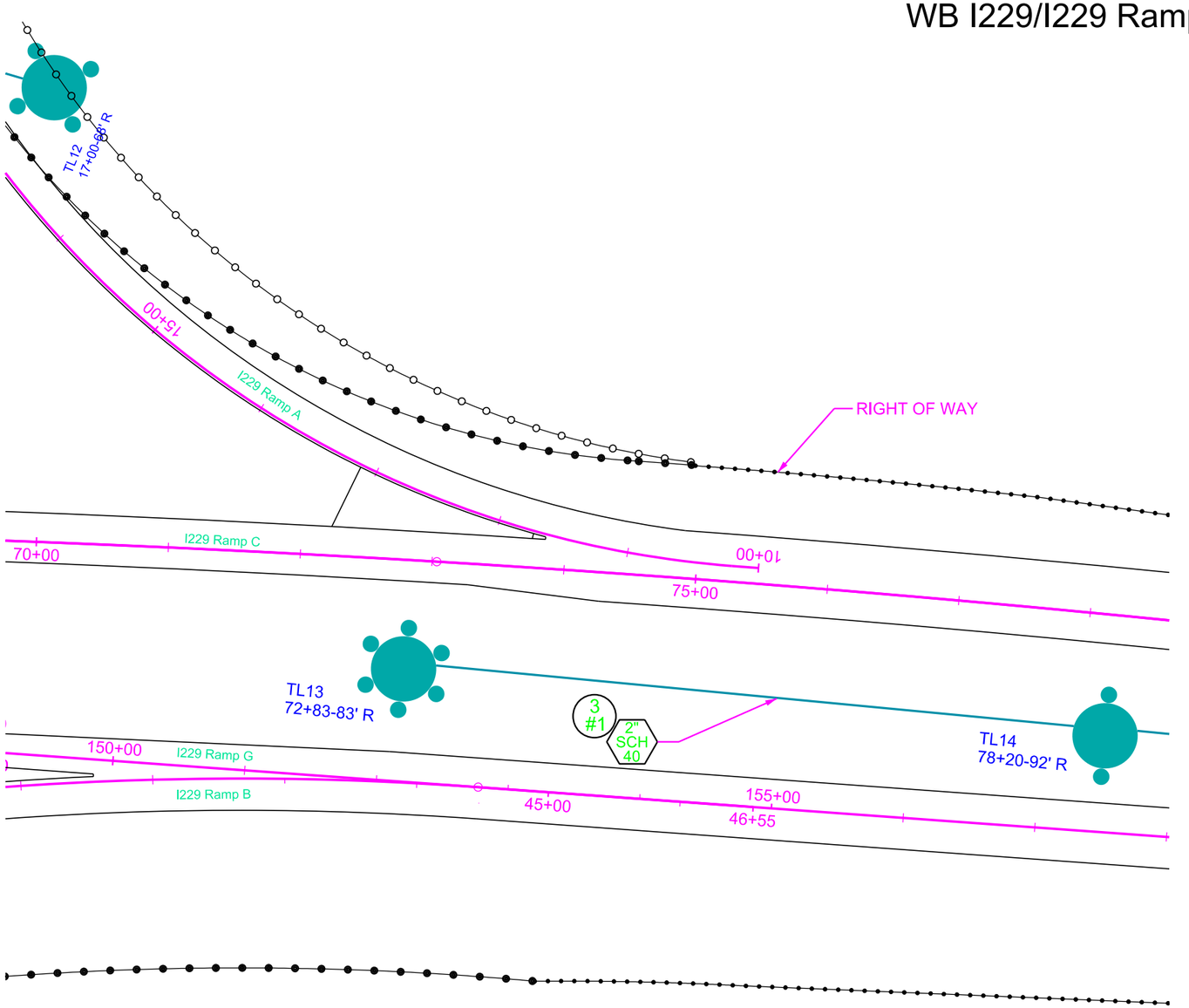

REGISTERED PROFESSIONAL ENGINEER
REG. NO. 12531
MARGARET RUTH KRELL
9/25/15
SOUTH DAKOTA

Plot Scale - 1:100
Plotted From - julian_chavez
Plot Name - 185
File - ...\LINC01QS\I229 Ramp C\70l.dgn

CONDUIT LAYOUT
I229 Ramp G

FOR BIDDING PURPOSES ONLY

STATE OF SOUTH DAKOTA	PROJECT	SHEET	TOTAL SHEETS
	IM 0293(96)73 IM 2292(90)0	L30	L42

Plotting Date: 9/25/2015 Revised: 9/25/2015 (DJC)

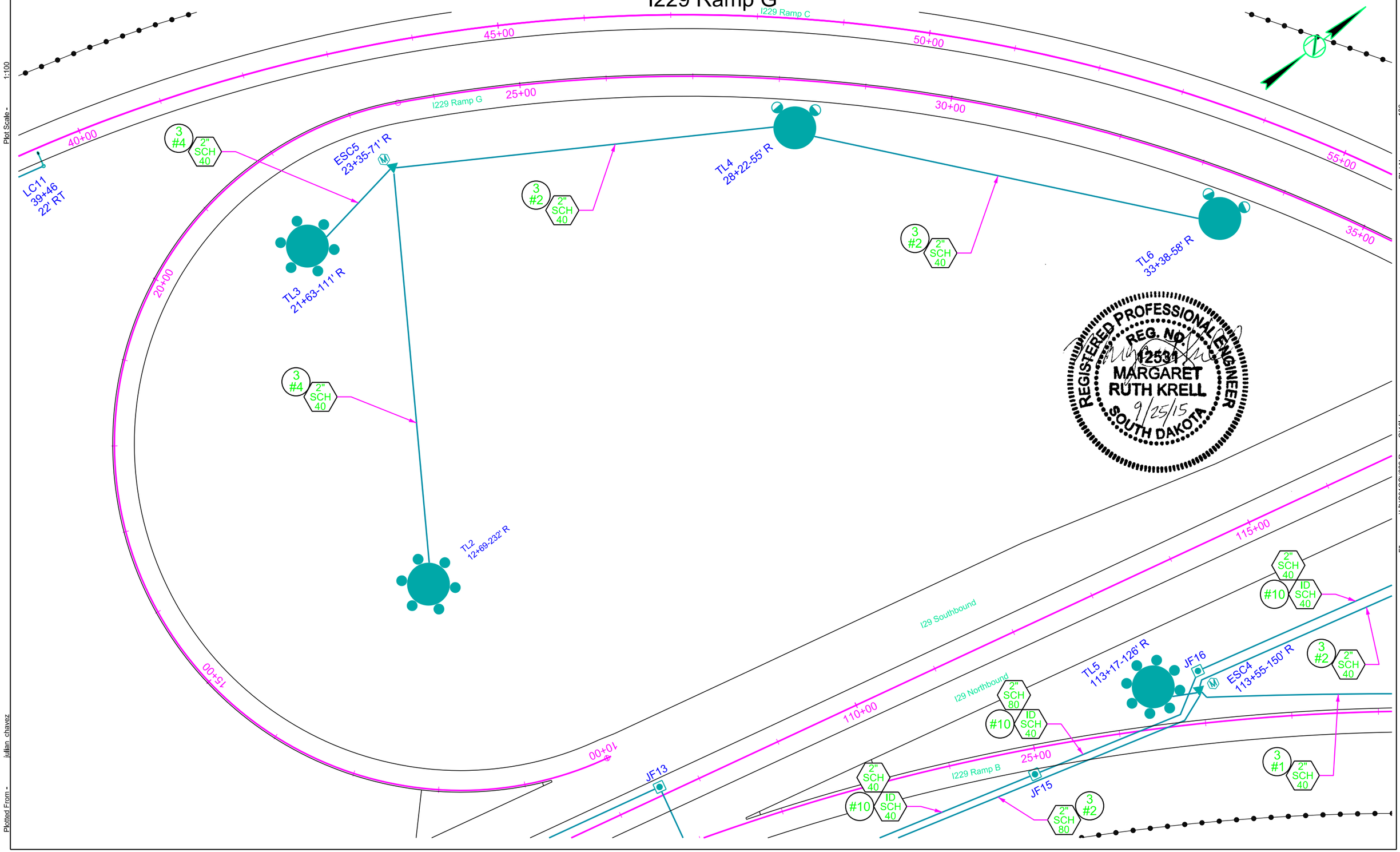

Plot Scale - 1:100

Plotted From - julian_chavez

Plot Name - 186

File - ...\LINC01QS\I229 Ramp G\10l.dgn

WIRING DIAGRAM

FOR BIDDING PURPOSES ONLY

STATE OF SOUTH DAKOTA	PROJECT	SHEET	TOTAL SHEETS
	IM 0293(96)73 IM 2292(90)0	L31	L42

Plotting Date: 8/25/2015

US INTERSTATE 29/229

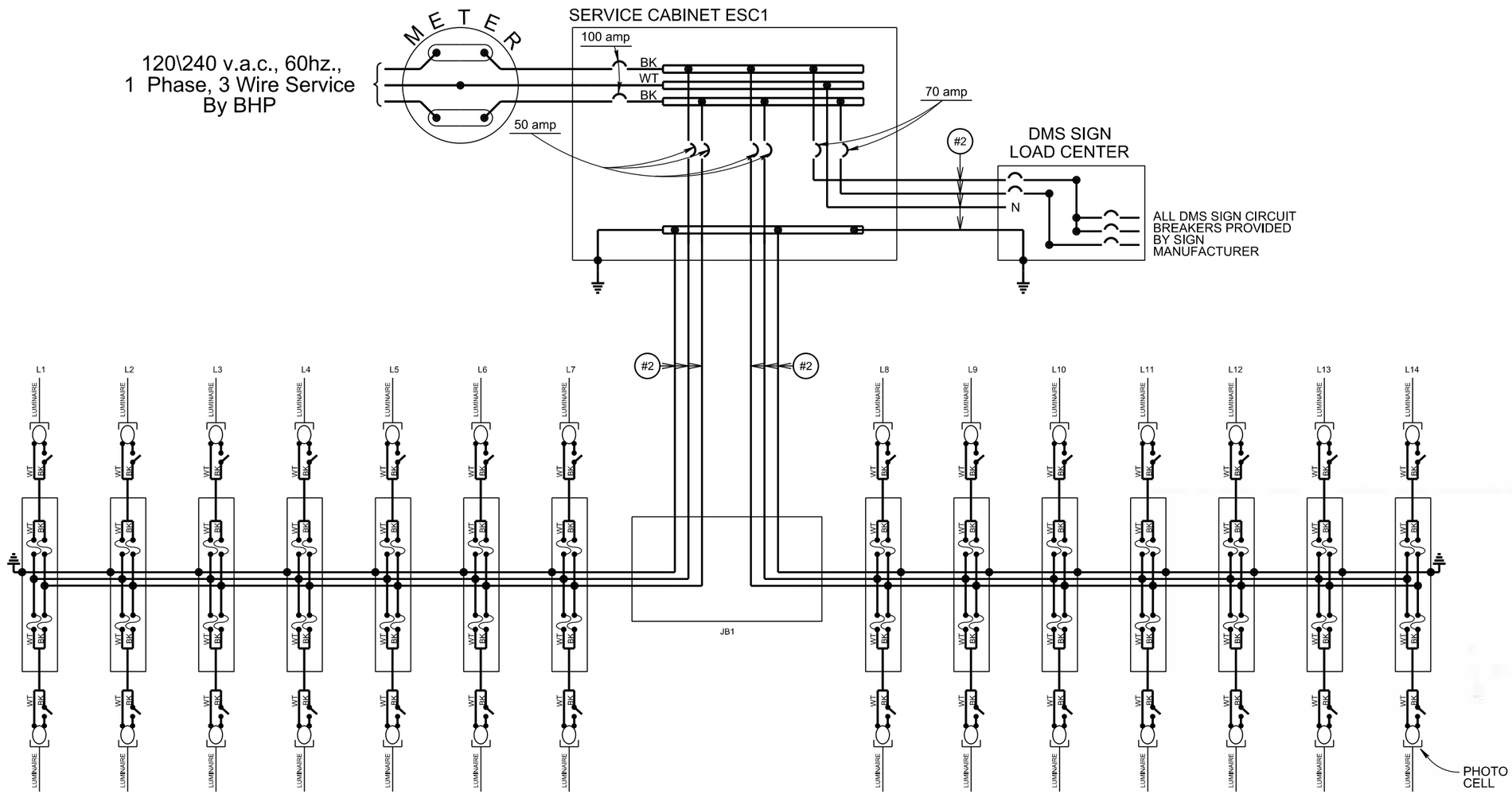

NOTE:
All circuits shall be bonded in accordance with the NATIONAL ELECTRICAL CODE. Quantities for bonding conductors are not included in these plans.

REGISTERED PROFESSIONAL ENGINEER
REG. NO. 12531
MARGARET RUTH KRELL
9/3/15
SOUTH DAKOTA

LEGEND:

- FUSE: 6 amp. Non-Time Delay or 2 8/10 amp. Dual Element
- LUMINAIRE: 400 watt High Pressure Sodium Lamp
- LUMINAIRE: 400 watt High Pressure Sodium Lamp
- LUMINAIRE: 100 watt High Pressure Sodium Lamp
- LUMINAIRE: 1000 watt High Pressure Sodium Lamp

Plot Scale - 1:200
Plotted From - Michael Ryan
Plot Name - 185
File - ...\rdprj\LINC01QSw_01.dgn

WIRING DIAGRAM

FOR BIDDING PURPOSES ONLY

US INTERSTATE 29/229

STATE OF SOUTH DAKOTA	PROJECT	SHEET	TOTAL SHEETS
	IM 0293(96)73 IM 2292(90)0	L32	L42

Plotting Date: 8/25/2015

REGISTERED PROFESSIONAL ENGINEER
REG. NO. 12531
MARGARET RUTH KRELL
9/3/15
SOUTH DAKOTA

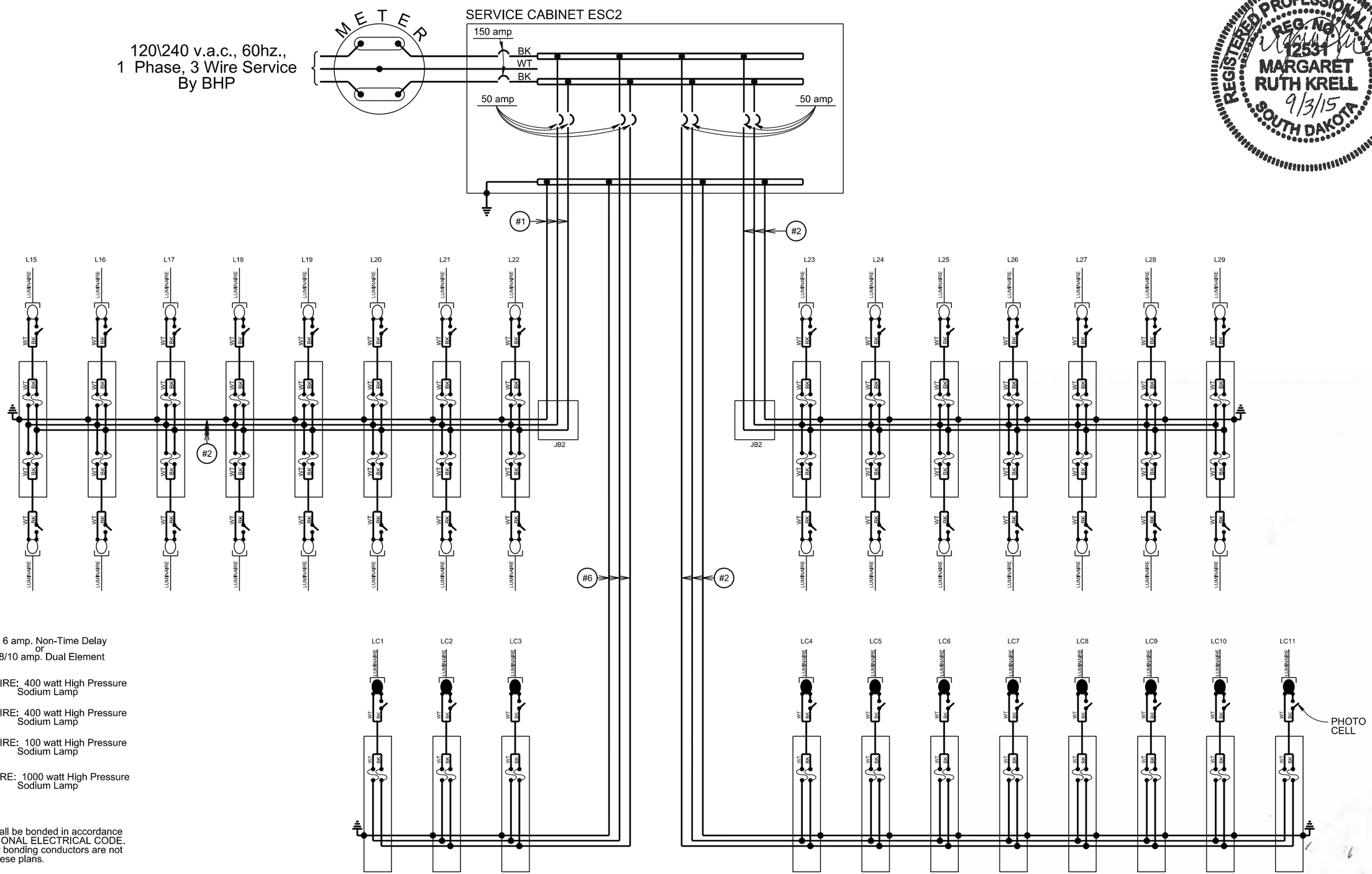

LEGEND:

- FUSE: 6 amp. Non-Time Delay or 2 8/10 amp. Dual Element
- LUMINAIRE: 400 watt High Pressure Sodium Lamp
- LUMINAIRE: 400 watt High Pressure Sodium Lamp
- LUMINAIRE: 100 watt High Pressure Sodium Lamp
- LUMINAIRE: 1000 watt High Pressure Sodium Lamp

NOTE:
All circuits shall be bonded in accordance with the NATIONAL ELECTRICAL CODE. Quantities for bonding conductors are not included in these plans.

Plot Scale - 1:200
Plotted From - Michael Ryan
Plot Name - 186
File - ...\rdprj\LINC01QSlw_02.dgn

WIRING DIAGRAM

FOR BIDDING PURPOSES ONLY

US INTERSTATE 29

STATE OF SOUTH DAKOTA	PROJECT	SHEET	TOTAL SHEETS
	IM 0293(96)73 IM 2292(90)0	L33	L42

Plotting Date: 8/25/2015

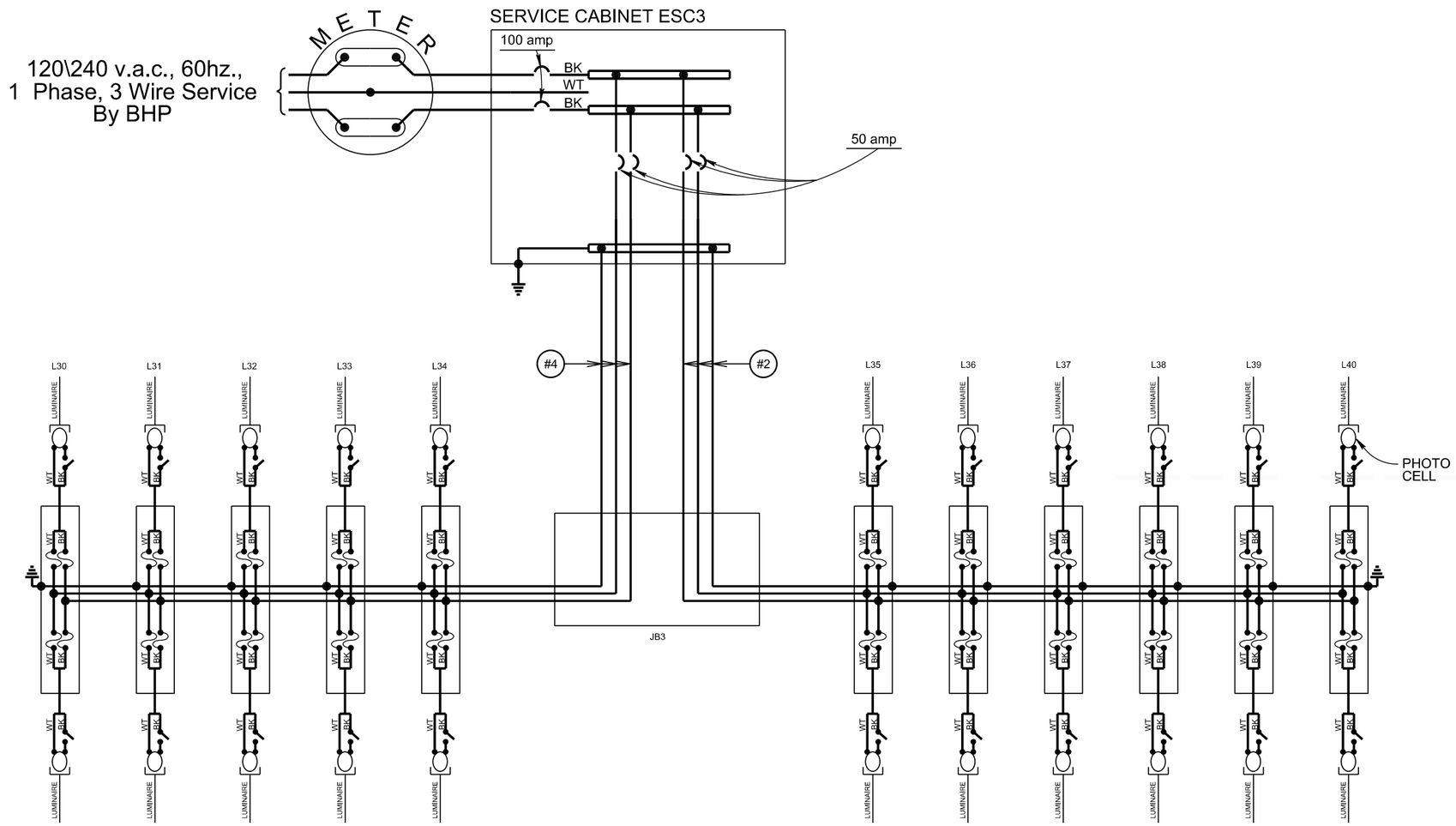

NOTE:
All circuits shall be bonded in accordance with the NATIONAL ELECTRICAL CODE. Quantities for bonding conductors are not included in these plans.

REGISTERED PROFESSIONAL ENGINEER
REG. NO. 12531
MARGARET RUTH KRELL
9/3/15
SOUTH DAKOTA

LEGEND:

- FUSE: 6 amp. Non-Time Delay or 2 8/10 amp. Dual Element
- LUMINAIRE: 400 watt High Pressure Sodium Lamp
- LUMINAIRE: 400 watt High Pressure Sodium Lamp
- LUMINAIRE: 100 watt High Pressure Sodium Lamp
- LUMINAIRE: 1000 watt High Pressure Sodium Lamp

Plot Scale - 1:200
Plotted From - Michael Ryan
Plot Name - 187
File - ...\rdprj\LINC01QSw_03.dgn

WIRING DIAGRAM

FOR BIDDING PURPOSES ONLY

US INTERSTATE 29/229

STATE OF SOUTH DAKOTA	PROJECT	SHEET	TOTAL SHEETS
	IM 0293(96)73 IM 2292(90)0	L34	L42

Plotting Date: 9/25/2015 Revised: 9/25/2015 (DJC)

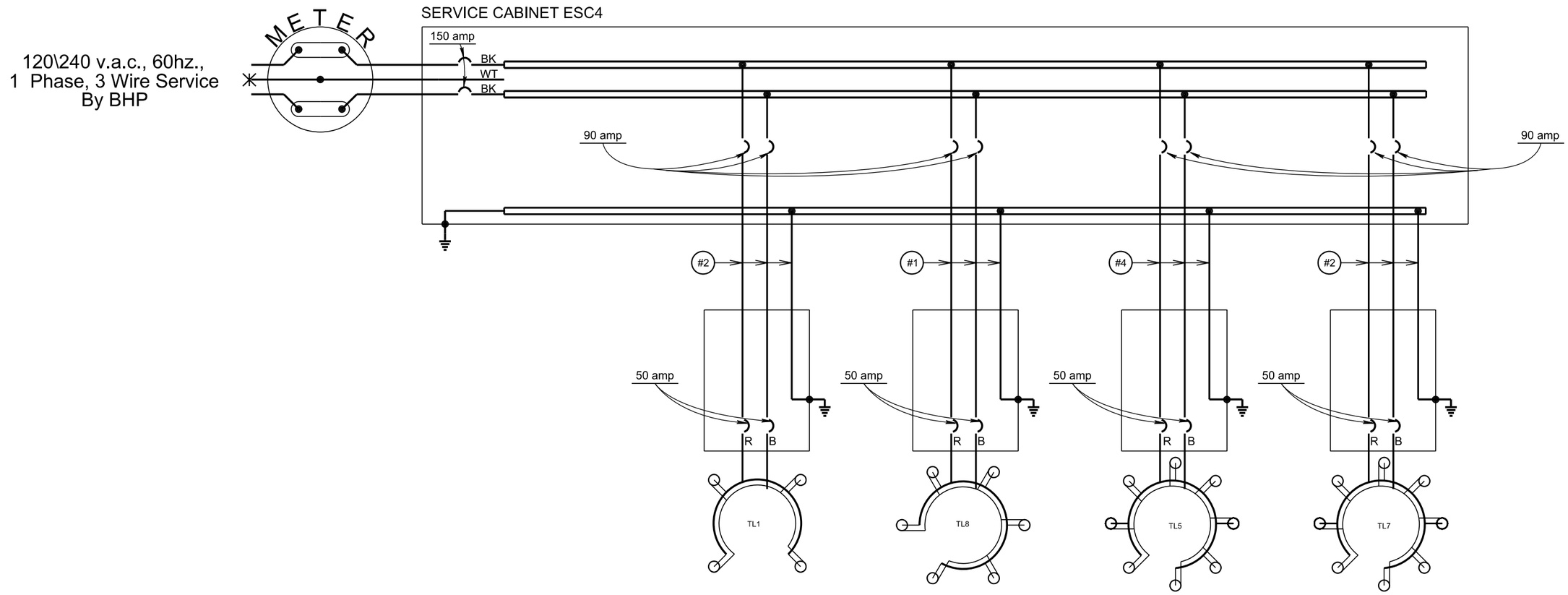

NOTE:
All circuits shall be bonded in accordance with the NATIONAL ELECTRICAL CODE. Quantities for bonding conductors are not included in these plans.

REGISTERED PROFESSIONAL ENGINEER
REG. NO. 12531
MARGARET RUTH KRELL
9/25/15
SOUTH DAKOTA

LEGEND:

- FUSE: 6 amp. Non-Time Delay or 2 8/10 amp. Dual Element
- LUMINAIRE: 400 watt High Pressure Sodium Lamp
- LUMINAIRE: 400 watt High Pressure Sodium Lamp
- LUMINAIRE: 100 watt High Pressure Sodium Lamp
- LUMINAIRE: 1000 watt High Pressure Sodium Lamp

Plot Scale - 1:200
Plotted From - julian_chavez
Plot Name - 190
File - ...\rdtprj\LINC01QSlw_04.dgn

WIRING DIAGRAM FOR BIDDING PURPOSES ONLY

US INTERSTATE 29/229

STATE OF SOUTH DAKOTA	PROJECT	SHEET	TOTAL SHEETS
	IM 0293(96)73 IM 2292(90)0	L35	L42

Plotting Date: 9/25/2015 Revised: 9/25/2015 (DJC)

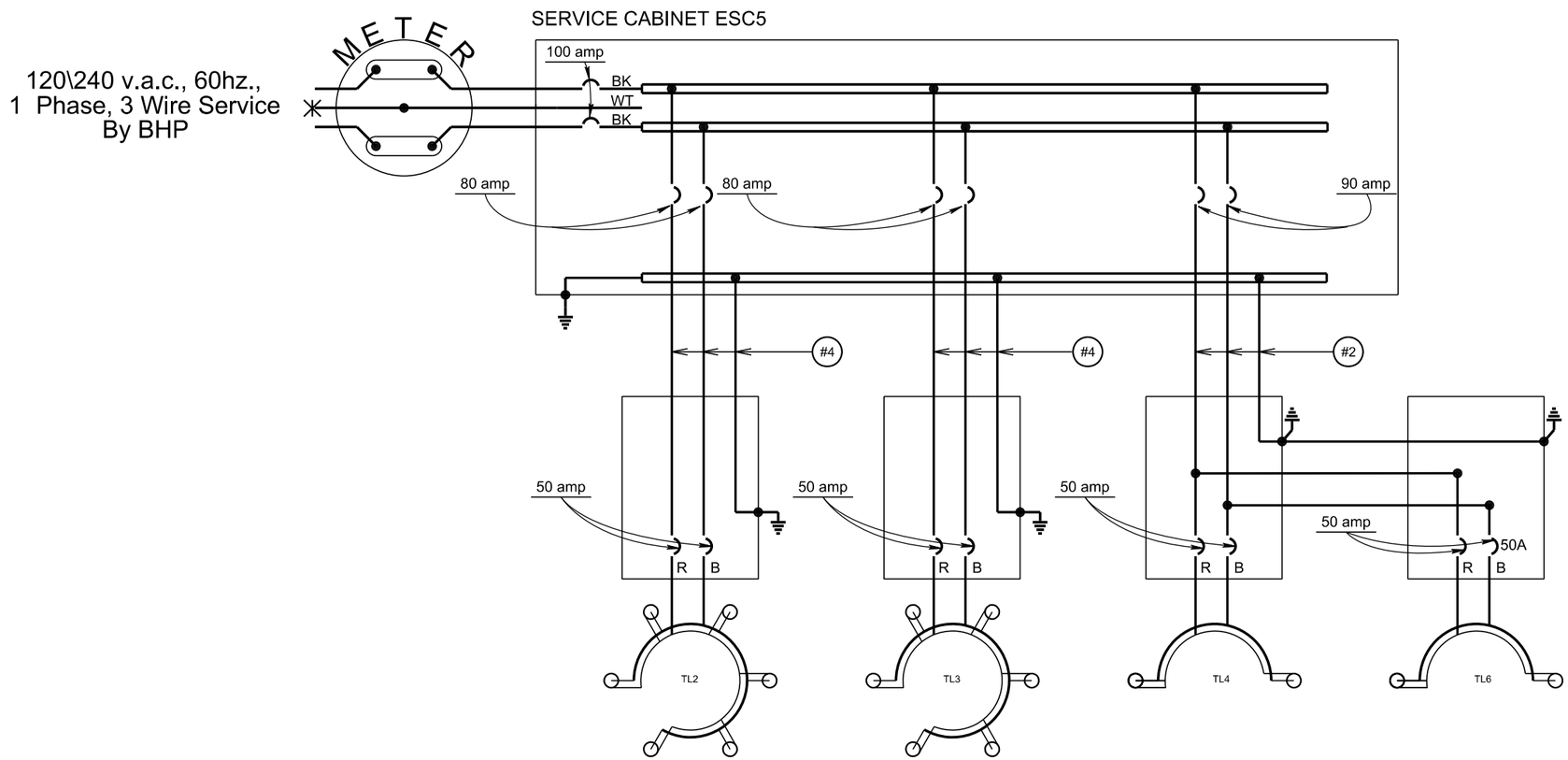

NOTE:
All circuits shall be bonded in accordance with the NATIONAL ELECTRICAL CODE. Quantities for bonding conductors are not included in these plans.

REGISTERED PROFESSIONAL ENGINEER
REG. NO. 12531
MARGARET RUTH KRELL
9/25/15
SOUTH DAKOTA

LEGEND:

- FUSE: 6 amp. Non-Time Delay or 2 8/10 amp. Dual Element
- LUMINAIRE: 400 watt High Pressure Sodium Lamp
- LUMINAIRE: 400 watt High Pressure Sodium Lamp
- LUMINAIRE: 100 watt High Pressure Sodium Lamp
- LUMINAIRE: 1000 watt High Pressure Sodium Lamp

Plot Scale - 1:200
Plotted From - julian_chavez
Plot Name - 191
File - ...\rdprj\LINC01QSw_05.dgn

WIRING DIAGRAM

FOR BIDDING PURPOSES ONLY

US INTERSTATE 29/229

STATE OF SOUTH DAKOTA	PROJECT	SHEET	TOTAL SHEETS
	IM 0293(96)73 IM 2292(90)0	L36	L42

Plotting Date: 9/25/2015 Revised: 9/25/2015 (DJC)

120\240 v.a.c., 60hz.,
1 Phase, 3 Wire Service
By BHP

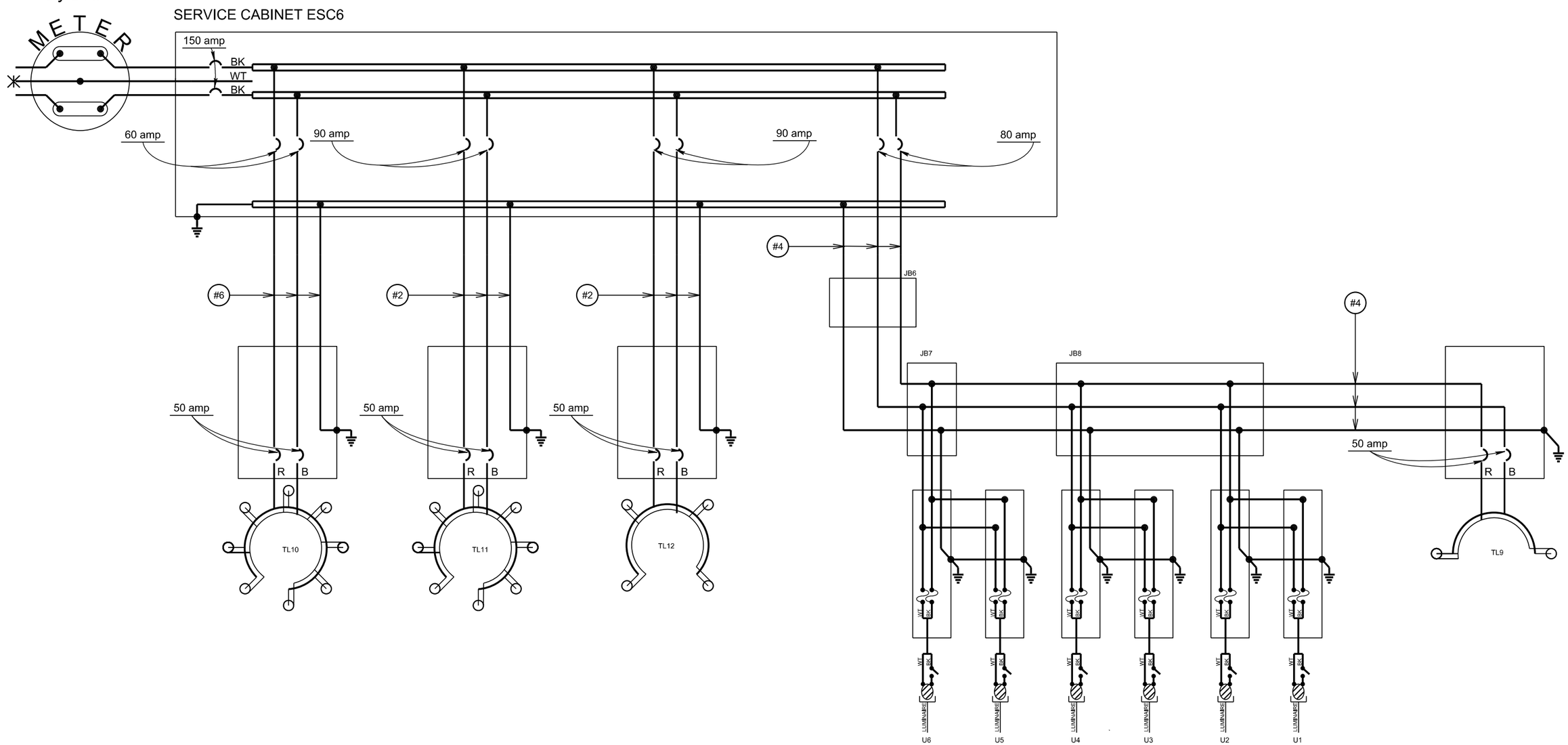

NOTE:
All circuits shall be bonded in accordance with the NATIONAL ELECTRICAL CODE. Quantities for bonding conductors are not included in these plans.

REGISTERED PROFESSIONAL ENGINEER
REG. NO. 12531
MARGARET RUTH KRELL
9/25/15
SOUTH DAKOTA

LEGEND:

- FUSE: 6 amp. Non-Time Delay or 2 8/10 amp. Dual Element
- LUMINAIRE: 400 watt High Pressure Sodium Lamp
- LUMINAIRE: 400 watt High Pressure Sodium Lamp
- LUMINAIRE: 100 watt High Pressure Sodium Lamp
- LUMINAIRE: 1000 watt High Pressure Sodium Lamp

Plotted From - julian_chavez
Plot Scale - 1:200
Plot Name - 192
File - ...\rd\prj\LINC01QSw_06.dgn

WIRING DIAGRAM

FOR BIDDING PURPOSES ONLY

US INTERSTATE 229

STATE OF SOUTH DAKOTA	PROJECT	SHEET	TOTAL SHEETS
	IM 0293(96)73 IM 2292(90)0	L37	L42

Plotting Date: 8/25/2015

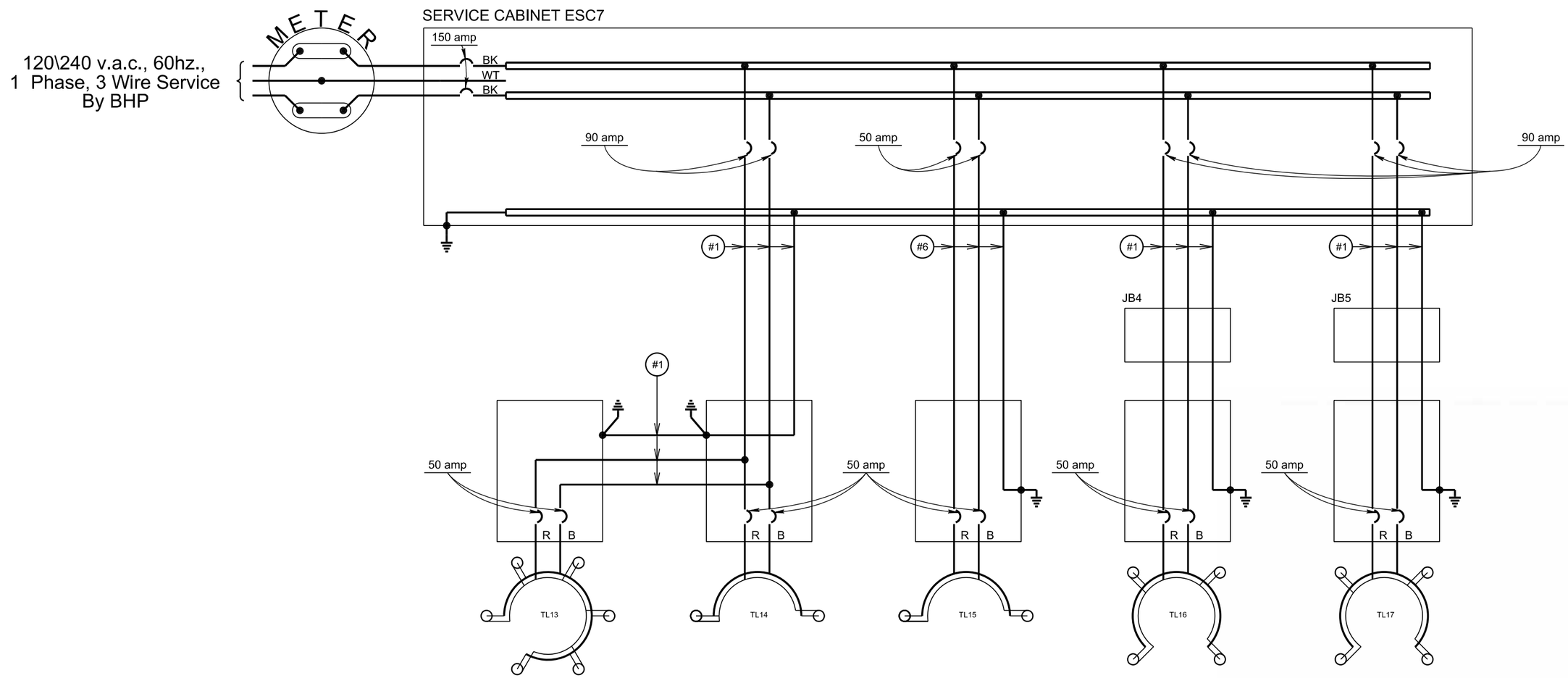

NOTE:
All circuits shall be bonded in accordance with the NATIONAL ELECTRICAL CODE. Quantities for bonding conductors are not included in these plans.

REGISTERED PROFESSIONAL ENGINEER
REG. NO. 12531
MARGARET RUTH KRELL
9/3/15
SOUTH DAKOTA

LEGEND:

- FUSE: 6 amp. Non-Time Delay or 2 8/10 amp. Dual Element
- LUMINAIRE: 400 watt High Pressure Sodium Lamp
- LUMINAIRE: 400 watt High Pressure Sodium Lamp
- LUMINAIRE: 100 watt High Pressure Sodium Lamp
- LUMINAIRE: 1000 watt High Pressure Sodium Lamp

Plot Scale - 1:200
Plotted From - Michael Ryan
Plot Name - 191
File - ...\rdprj\LINC01QSw_07.dgn

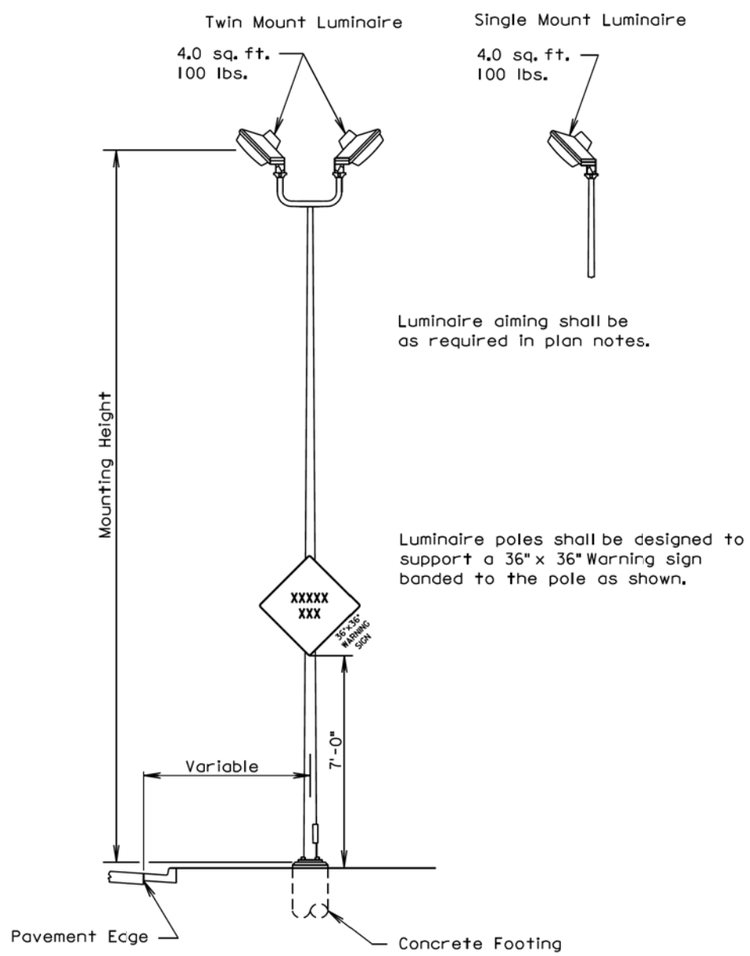

March 31, 2000

Published Date: 2nd Qtr. 2015

SDDOT

STEEL ROADWAY LUMINAIRE POLE FOR POST TOP MOUNTED LUMINAIRE

PLATE NUMBER 635.02

Sheet 1 of 1

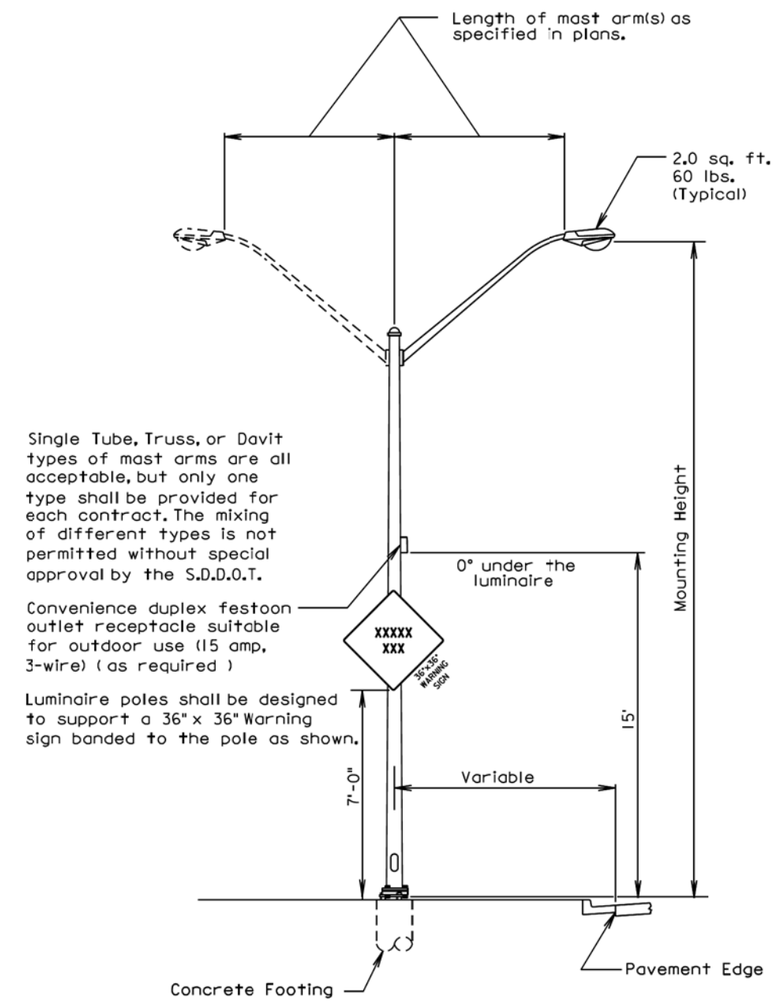

March 31, 2000

Published Date: 2nd Qtr. 2015

SDDOT

STEEL ROADWAY LUMINAIRE POLE WITH MAST ARM(S)

PLATE NUMBER 635.01

Sheet 1 of 1

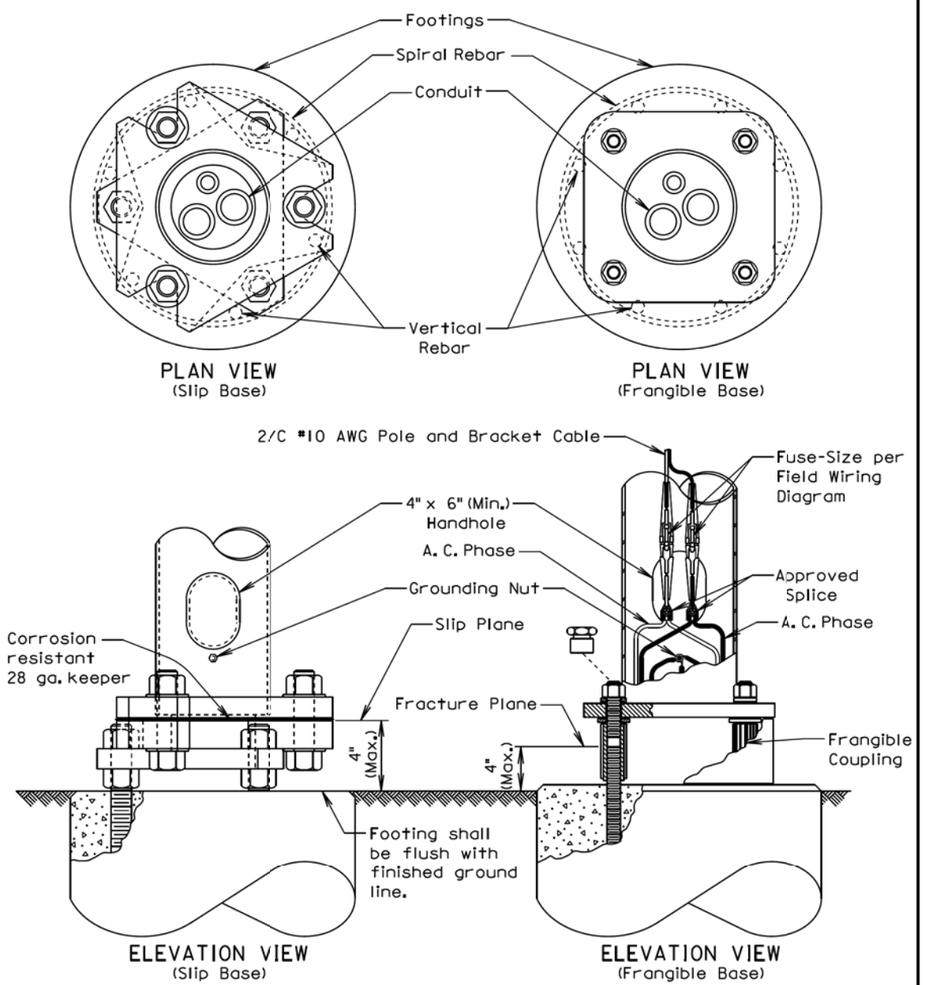

GENERAL NOTES:

The Contractor has the option of using either the Slip Base, Transformer Base, or Frangible Base.

Base details are provided for example only and are not intended to be a complete design.

Connectors shall be breakaway type.

June 26, 2013

Published Date: 2nd Qtr. 2015	SDDOT	ROADWAY LUMINAIRE POLE BREAKAWAY BASE	PLATE NUMBER 635.11 Sheet 1 of 1

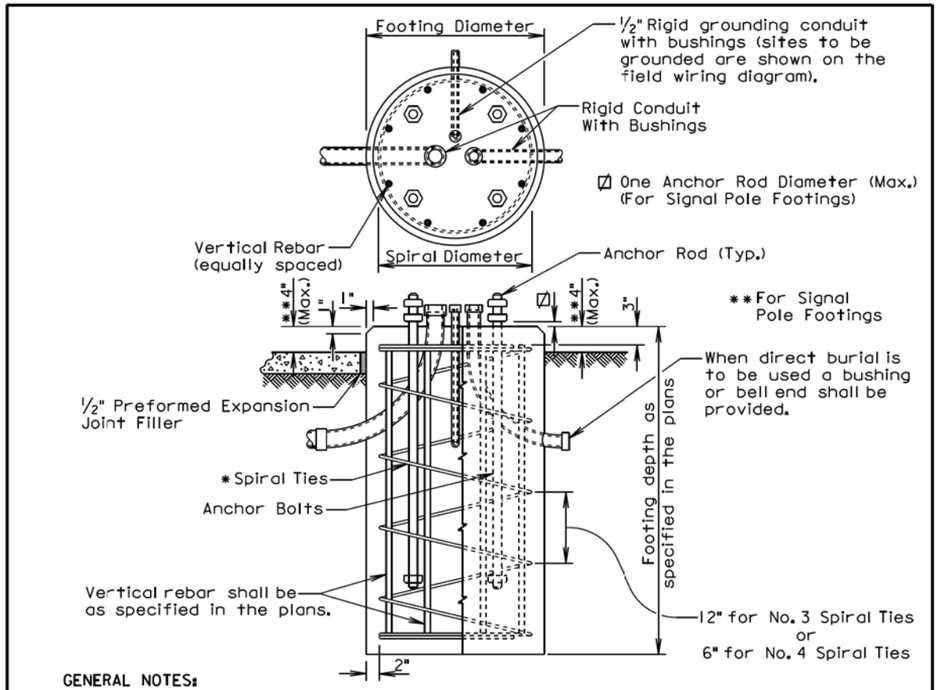

GENERAL NOTES:

* The tie sizes are specified in the plans. Circular ties may be used in lieu of the spirci ties. The No. 3 ties shall be spaced 12 inches apart except for the top two which shall be spaced 6 inches apart. The No. 4 ties shall be spaced 6 inches apart except for the top two which shall be spaced 3 inches apart. The ties shall be lapped 18 inches and the laps shall be staggered around the cage.

Spirci ties shall have 1-1/2 extra turns at each end.

See section 985 of the Standard Specifications for footing materials.

Conduits and bushings may project 2½ inches to 6 inches above footing for fixed base poles but shall not project above the slip plane or fracture plane for breakaway poles.

Conduits shall be sealed water-tight during all phases of construction until poles are in place.

The anchor rods shall fit inside the reinforcing steel cage. If the anchor rods designed by the Pole Manufacturer do not fit, contact the Office of Bridge Design for footing redesign. No additional payment will be made for the redesigned footing.

Costs of conduit and conduit bushings shown on footing detail shall be incidental to the footing bid item(s).

The pole shall not be installed until the concrete has attained design strength (4000 psi).

The contour of the area surrounding the breakaway pole shall be flat, though not necessarily level for a distance of 5 feet in all directions. The Contractor may be required to provide finish grading at some breakaway pole locations.

September 6, 2013

Published Date: 2nd Qtr. 2015	SDDOT	POLE FOOTING	PLATE NUMBER 635.55 Sheet 1 of 1

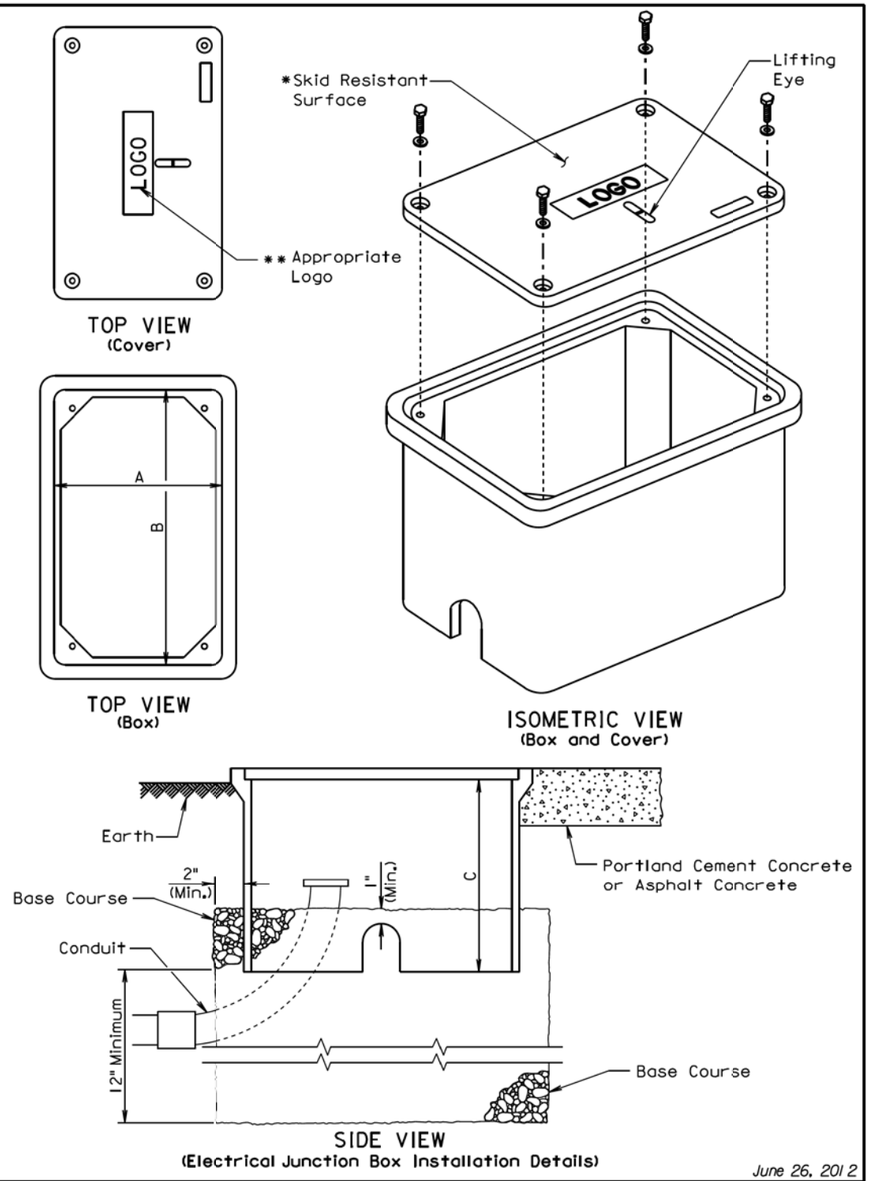

June 26, 2012

Published Date: 2nd Qtr. 2015	SDDOT	ELECTRICAL JUNCTION BOXES TYPE 1 THROUGH TYPE 4	PLATE NUMBER 635.65 Sheet 1 of 2

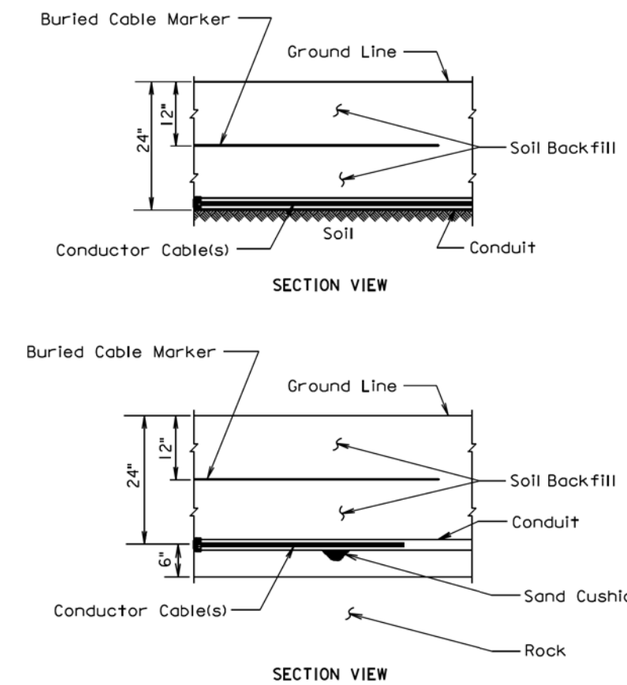

GENERAL NOTE:

The Buried Cable Marker shall be plastic, approximately 6" wide, and shall be capable of sustaining a minimum of a 350% tolerance of elongation without tearing. The Buried Cable Marker shall have a life expectancy approximately equal to that of the conductor(s) beneath it. A phrase indicating the presence of a buried electric circuit below shall be printed in a contrasting color on the cable marker. The Buried Cable Marker shall be subject to approval by the Engineer. All costs associated with furnishing and installing the Buried Cable Marker shall be incidental to the contract unit price per Foot for the bid item used for the electrical conductor.

March 31, 2000

Published Date: 2nd Qtr. 2015	SDDOT	CONDUIT INSTALLATION	PLATE NUMBER 635.76 Sheet 1 of 1

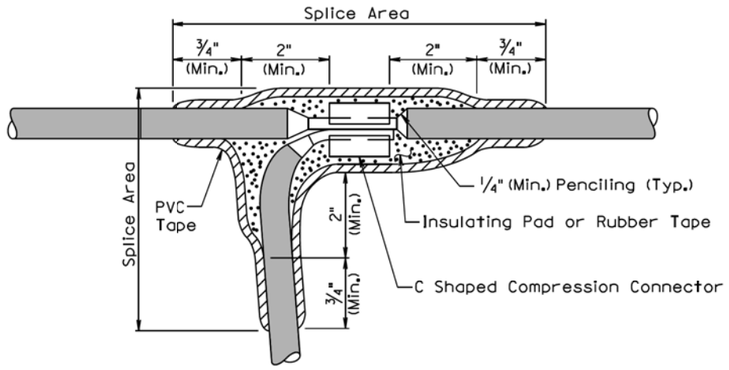

TYPE C SPLICE
(Between 1 free end and 1 through conductor)

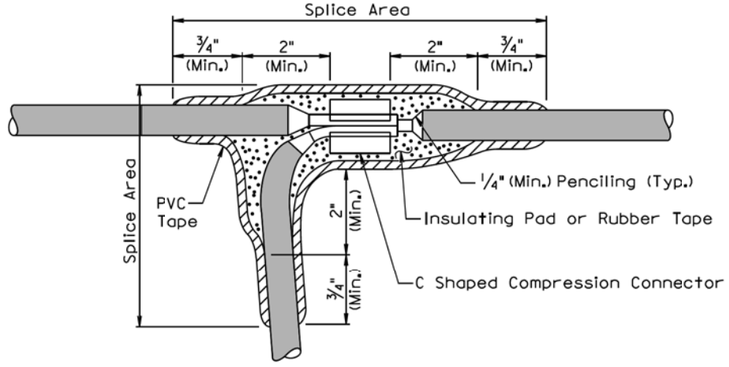

TYPE T SPLICE
(For 3 free ends)

February 14, 2010

Published Date: 2nd Qtr. 2015	SDDOT	WIRE SPLICING FOR LIGHTING (LOW VOLTAGE CIRCUITS (0 to 600 V))	PLATE NUMBER 635.80
			Sheet 1 of 2

FOR BIDDING PURPOSES ONLY

STATE OF SOUTH DAKOTA	PROJECT	SHEET	TOTAL SHEETS
	IM 0293(96)73 IM 2292(90)0	L42	L42

Plotting Date: mmm-ddd-yyy

Interstate 29

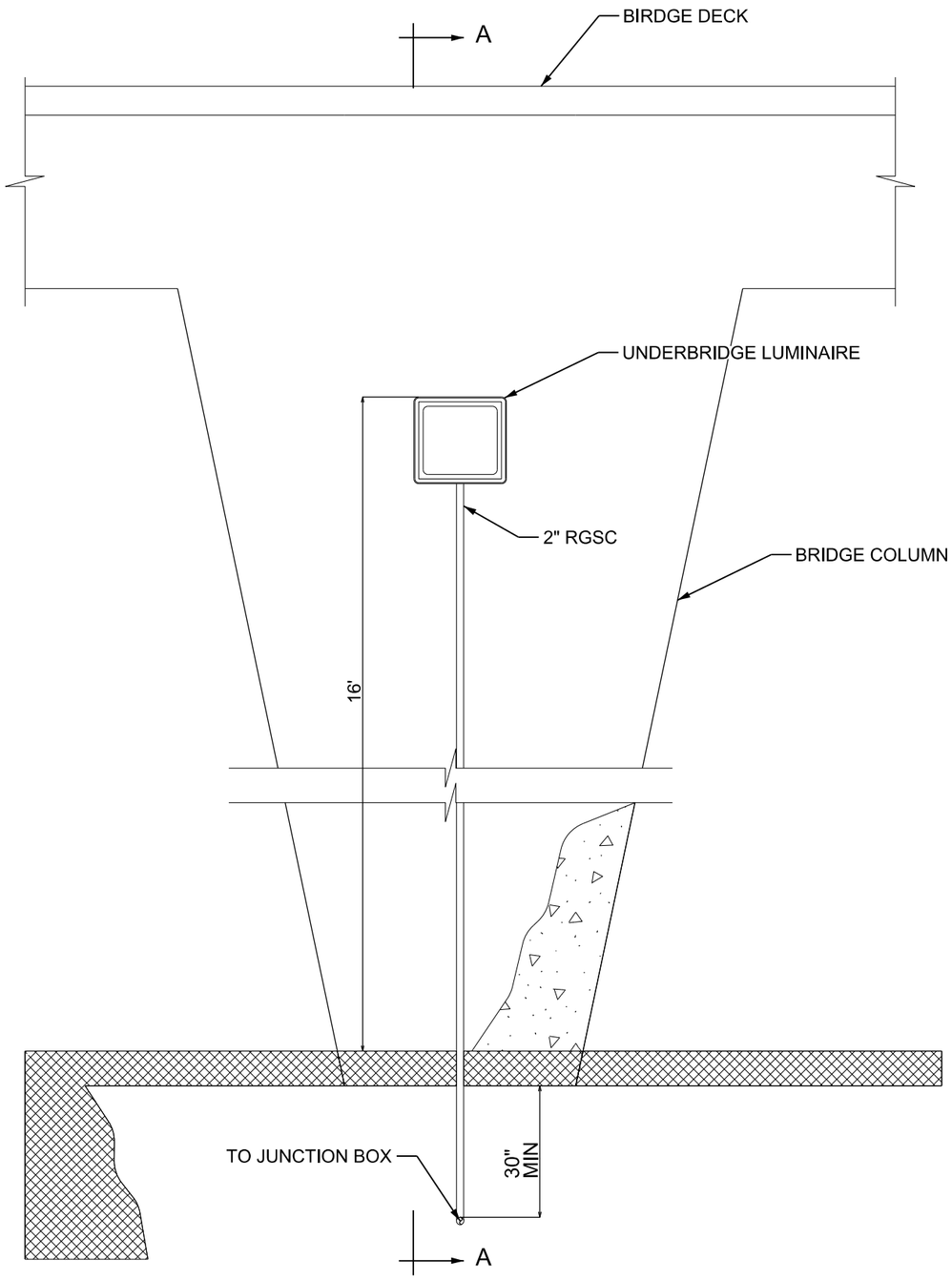

ELEVATION

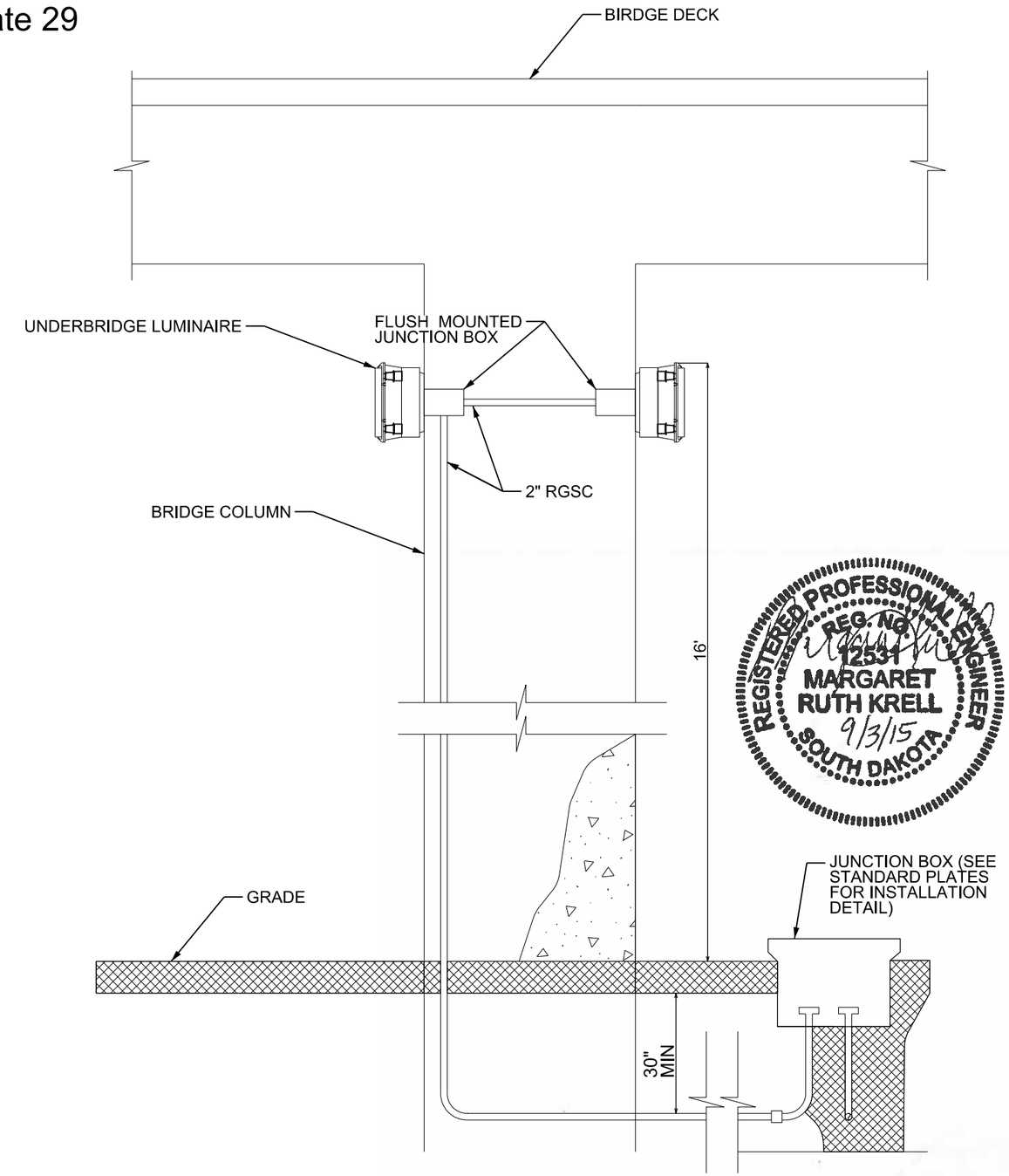

SECTION "A"

REGISTERED PROFESSIONAL ENGINEER
REG. NO. 12531
MARGARET RUTH KRELL
9/3/15
SOUTH DAKOTA

DETAIL: UNDERBRIDGE LUMINAIRE LOCATIONS AND CONDUIT ROUTING

NOT TO SCALE

Plot Scale - $$scale$$
Plotted From - $$username$$
Plot Name - $$plotname$$
File - $$filename$$