Section S: Permanent Signing Plans

FOR BIDDING PURPOSES ONLY

STATE OF SOUTH DAKOTA	PROJECT	SHEET	TOTAL SHEETS
	IM 0293(96)73 IM 2292(90)0	S1	S116

Rev: 9-15-19 SAH .

INDEX OF SHEETS

S1	General Layout w/ Index
S2 to S4	Estimate with Permanent Signing Notes
S5	Stationing Layout
S6 to S18	Permanent Signing Tables
S19	Table of Conduit and Cable Quantities for Road Closure Gates and Signing
S20 to S54	Sign Face Layouts
S55 to S57	Standard Highway Signs and Locations
S58	Signs to be Reset and Locations
S59 to S61	Delineator Layout and Erection Details
S62	Sign Angle Details for Interstate Highway Signs
S63	Details for Mounting Sheet Aluminum Signs on Flanged Posts
S64 to S72	Erection Details for Breakaway Sign Supports
S73 to S74	Erection Details for Fixed Sign Supports
S75	Details for Erecting E1-5 Exit Number Panels Above Guide Signs
S76	Details for Erecting Overhead D9 Series General Service Signs
S77 to S89	Details for Overhead Sign Supports
S90 to S91	Existing Road Closure Gate Details for Information Only
S92 to S95	Drop Arm Closure Gate Installation Details
S96	Erection Details for Advance and Exit Interstate Closure Signing and Beacons
S97 to S98	Road Closure Gate Wiring Diagrams
S99	Typical Snow Gate and Sign Layout
S100 to S103	Interstate Closure Electrical Conduit Layouts
S104	Type 2 Object Pipe End Marker Installation Details
S105 to S107	Square Steel Perforated Tube Post Installation Details
S108 to S116	Standard Plates

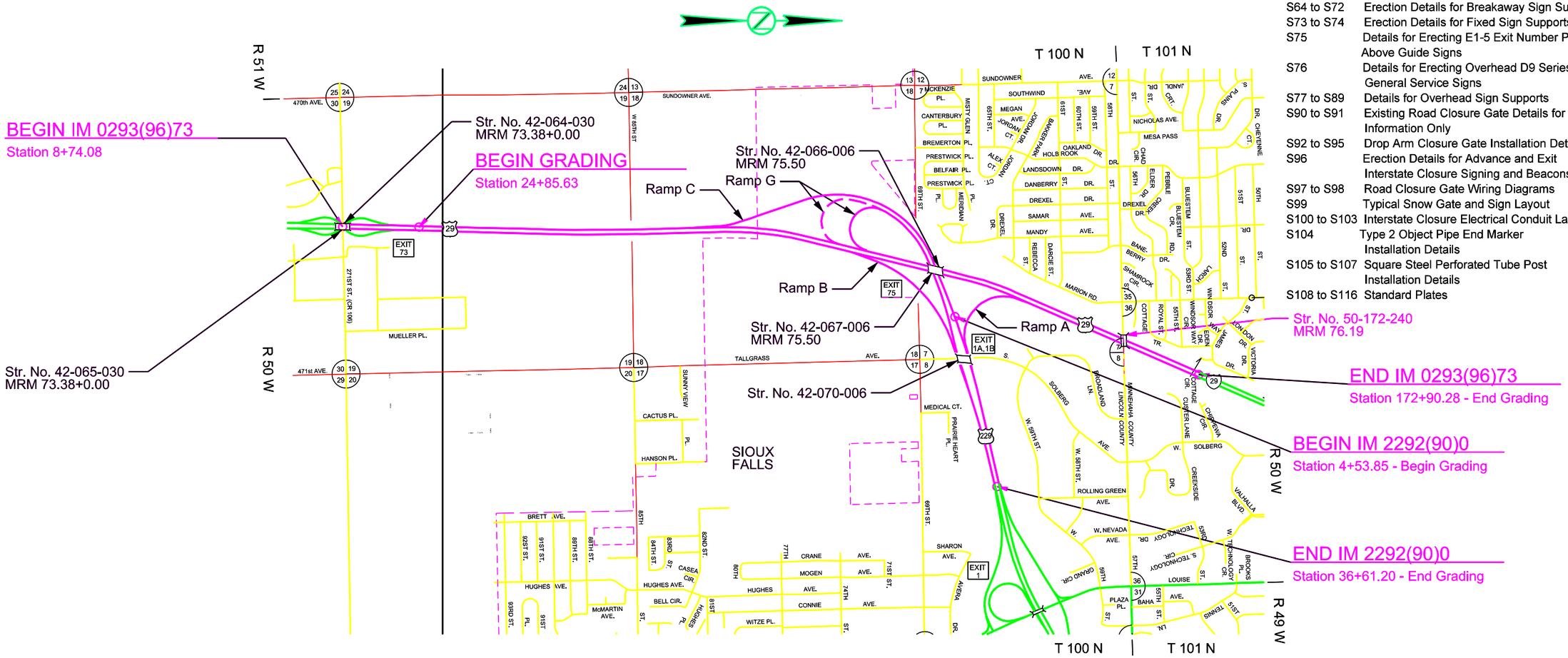

URS

8181 East Tufts Ave.
Denver, CO 80237
303-694-2770 (Phone)
303-694-3946 (Fax)

Plot Scale - $$scale$$
Plotted From - $$username$$
File - $$filename$$

SECTION S ESTIMATE OF QUANTITIES (01QS)

BID ITEM NUMBER	ITEM	QUANTITY	UNIT
110E0120	Remove Sign Bridge	3	Each
110E0130	Remove Traffic Sign	81	Each
110E7150	Remove Sign for Reset	7	Each
250E0010	Incidental Work	Lump Sum	LS
632E0010	1.25' Diameter Breakaway Support Concrete Footing	84.0	Ft
632E0012	1.5' Diameter Breakaway Support Concrete Footing	8.0	Ft
632E0014	1.75' Diameter Breakaway Support Concrete Footing	164.0	Ft
632E0058	2.25' Diameter Fixed Support Concrete Footing	102.0	Ft
632E0060	2.5' Diameter Fixed Support Concrete Footing	24.0	Ft
632E1225	W6x12 Steel Post	54.0	Ft
632E1235	W6x20 Steel Post	129.7	Ft
632E1240	W8x18 Steel Post	38.2	Ft
632E1245	W8x21 Steel Post	229.9	Ft
632E1255	W8x28 Steel Post	134.4	Ft
632E1260	W8x31 Steel Post	47.2	Ft
632E1320	2.0"x2.0" Perforated Tube Post	241.9	Ft
632E1410	3" Diameter Steel Post, .216" Shell	38.1	Ft
632E1415	4" Diameter Steel Post, .237" Shell	248.4	Ft
632E2000	4"x4" Amber Delineator with 1.12 Lb/Ft Post	144	Each
632E2004	4"x8" Amber Delineator with 1.12 Lb/Ft Post	15	Each
632E2020	4"x4" White Delineator with 1.12 Lb/Ft Post	193	Each
632E2024	4"x8" White Delineator with 1.12 Lb/Ft Post	37	Each
632E2220	Guardrail Delineator	18	Each
632E2520	Type 2 Object Marker	15	Each
632E3103	Extruded Aluminum Sign, Removable Copy High Intensity	5,190.8	SqFt
632E3203	Flat Aluminum Sign, Nonremovable Copy High Intensity	239.0	SqFt
632E3205	Flat Aluminum Sign, Nonremovable Copy Super/Very High Intensity	321.0	SqFt
632E3500	Reset Sign	7	Each
632E5010	Double Beam Sign Bridge	5	Each
632E5020	Overhead Cantilever Sign Support	3	Each
635E5302	Type 2 Electrical Junction Box	3	Each
635E8120	2" Rigid Conduit, Schedule 40	1,000	Ft
635E8220	2" Rigid Conduit, Schedule 80	75	Ft
635E9020	1/C #10 AWG Copper Wire	3,538	Ft

SECTION S ESTIMATE OF QUANTITIES (020Q)

BID ITEM NUMBER	ITEM	QUANTITY	UNIT
110E0120	Remove Sign Bridge	1	Each
110E0130	Remove Traffic Sign	33	Each
110E5040	Salvage Road Closure Gate	1	Each
250E0010	Incidental Work	Lump Sum	LS
632E0010	1.25' Diameter Breakaway Support Concrete Footing	12.0	Ft
632E0014	1.75' Diameter Breakaway Support Concrete Footing	106.0	Ft
632E1230	W6x15 Steel Post	71.8	Ft
632E1240	W8x18 Steel Post	40.1	Ft
632E1255	W8x28 Steel Post	169.4	Ft
632E1410	3" Diameter Steel Post, .216" Shell	13.3	Ft
632E1415	4" Diameter Steel Post, .237" Shell	26.0	Ft
632E2020	4"x4" White Delineator with 1.12 Lb/Ft Post	25	Each
632E2220	Guardrail Delineator	10	Each
632E2520	Type 2 Object Marker	1	Each
632E3105	Extruded Aluminum Sign, Removable Copy Super/Very High Intensity	2,685.0	SqFt
632E3203	Flat Aluminum Sign, Nonremovable Copy High Intensity	53.5	SqFt
632E3205	Flat Aluminum Sign, Nonremovable Copy Super/Very High Intensity	20.0	SqFt
632E5010	Double Beam Sign Bridge	4	Each
635E4010	1 Section Vehicle Signal Head	6	Each
635E5025	2.5' Diameter Footing	8.0	Ft
635E5302	Type 2 Electrical Junction Box	9	Each
635E5400	Electrical Service Cabinet	1	Each
635E5500	Meter Socket	1	Each
635E8015	1.5" Rigid Galvanized Steel Conduit	85	Ft
635E8120	2" Rigid Conduit, Schedule 40	2,535	Ft
635E8220	2" Rigid Conduit, Schedule 80	140	Ft
635E9016	1/C #6 AWG Copper Wire	2,240	Ft
635E9020	1/C #10 AWG Copper Wire	8,961	Ft
635E9505	5/C #14 AWG Copper Tray Cable, K2	60	Ft
900E0045	Drop Arm Road Closure Gate	1	Each

GENERAL NOTES

Permanent sign locations shall be staked in the field by the Engineer. The Contractor shall give the Engineer a minimum of two weeks advance notice to allow for staking prior to sign installation.

The Contractor shall be responsible for contacting South Dakota One Call to locate the utilities at the staked sign installation locations.

Prior to ordering sign posts, the Contractor shall verify post lengths.

REMOVE TRAFFIC SIGNS

Existing Traffic signs within the project limits are summarized in the following Tables;

Remove Traffic Sign.
Remove Sign For Reset.

Signs designated for removal are summarized in the Remove Traffic Sign table.

Existing traffic signs, posts, and hardware removed and not salvaged for reset shall become the property of the Contractor.

All costs associated with the removal and disposal of existing signs, posts, and hardware shall be incidental to the contract unit price per each for “Remove Traffic Sign”.

RESET TRAFFIC SIGNS

Signs designated for reset are summarized in the New and Reset Signs, table.

All costs associated with resetting the traffic signs, posts, anchor posts, stiffeners, hardware, and flashing beacons as designated in the New and Reset Signs table shall be incidental to the contract unit price per each for “Reset Sign”.

NEW PERMANENT SIGNING

New signs for installation are summarized in the New and Reset Signs, table.

Special design signs are illustrated on the Special Design Signs sheet.

All costs associated with furnishing and installing the new permanent signs, furnishing and installing stiffeners, hardware and side trim molding shall be incidental to the contract unit price per square foot for “Flat Aluminum Sign, Nonremovable Copy High Intensity” or “Flat Aluminum Sign, Nonremovable Copy Super/Very High Intensity” or “Extruded Aluminum Sign, Nonremovable Copy Super/Very High Intensity”.

SIGN LEGEND, BORDER AND BACKGROUND

All sign materials shall comply with Section 982 of the Specifications. All flat aluminum signs shall be 0.100” sheet aluminum.

SIGN INSTALLATION

Sign installation shall be as shown in the plans.

The installation height of signs shall not exceed the minimum by more than 1.0 foot. Sign posts shall not extend beyond the top of the sign. The post spacing of 2 post installations shall be 3/5 of the total sign width.

Install signs on posts as per the New and Reset Signs table.

PLOT SCALE - $$SCALE$$
PLOTTED FROM - $$USERNAME$$
PLOT NAME - $$PLOTNAME$$
FILE - $$FILENAME$$

SIGN DESIGN

Signs shall be constructed as required per the Manual on Uniform Traffic Control Devices (MUTCD), the latest edition of "Standard Highway Signs", and as specified on the Special Design Signs sheet shown in the plans.

All sign material shall comply with Section 982 of the Standard Specifications.

All upper/lower case letters and numerals shall be as required per the MUTCD, the latest edition of "Standard Highway Signs", and as illustrated on the Special Design Signs sheets.

Sheeting for the side trim moldings for extruded Aluminum signs shall match the sheeting type and color of the extruded aluminum background sheeting.

The Contractor shall furnish the Mitchell Region Traffic Engineer Scott Jansen with a detailed sign layout sheet for each sign shown at the following e-mail address:

Scott.Jansen@state.sd.us

These detailed sheets shall be provided prior to ordering the signs.

SQUARE TUBE ANCHOR SLEEVE

The Contractor shall furnish and install new square tube anchor sleeve as follows:

2.5" x 18", 12 Gauge square tube anchor sleeve, (or equivalent components as approved by the Engineer).

A 2.25" x 2.25" x 4' perforated tube post (12 Gauge) shall be used as the anchor post for installation with the square tube anchor sleeve.

SIGN BRIDGE

The Contractor shall determine the type of sign bridge required for each overhead sign support location, double beam or truss. The design shall be in accordance with Section 982 of the Specifications.

Costs for double beam or truss type sign bridges shall be included in the contract unit price per each for Double Beam Sign Bridge.

INCIDENTAL WORK

EXISTING DELINEATION

All existing delineators, object markers, delineator posts, and object marker posts shall be removed from along the mainline, structures, and on/off ramps.

Salvaged materials shall be stockpiled at the Sioux Falls Maintenance Yard, as designated by the Engineer..

There are approximately 320 existing delineators, object markers, and posts, along the mainline, structures, and on/off ramps.

All costs associated with delineation and object marker removal shall be incidental to the contract lump sum price for "Incidental Work".

SIGN INSTALLATION HARDWARE

Aluminum U-Channel stiffeners shall be used on all standard highway signs greater than 36 inches in width and shall conform to Alloy 6063-T6 or 6061-T6. The U-Channel shall be 2 inches in width and free of holes. The U-Channel stiffeners shall also be used to connect various signs together so that an entire sign assembly can be erected on a single installation.

Stiffeners may be fastened to signs by use of ¼ inch diameter drive rivets.

Refer to the Breakaway Sign Supports diagram for typical sign and stiffener details.

The Contractor shall use 3/8 inch diameter rust proof machine sign bolts, flat metal washers, neoprene washers (against the sign sheeting), lock washers, and nuts to fasten the sign to the channel aluminum and posts. A minimum of two bolts shall extend through each post.

All costs associated with furnishing and installing the sign stiffeners shall be incidental to the contract unit price per square foot for "Flat Aluminum Sign, Nonremovable Copy High Intensity" or "Flat Aluminum Sign, Nonremovable Copy Super/Very High Intensity".

REMOVE CONCRETE FOOTINGS

The Contractor shall remove the concrete footings listed for removal in the Remove Traffic Sign table. Holes remaining from the removal of the concrete footings shall be backfilled and compacted with material placed in layers not to exceed 6 inches in depth. Compaction shall be to the satisfaction of the Engineer.

All costs for removing, disposing of the concrete footings, backfilling and compaction of the soil shall be incidental to the contract Lump Sum price for "Remove Concrete Footing(s)".

REMOVE ROAD CLOSURE GATE

The Contractor shall remove and salvage the existing road closure gate and footing at I-229 Ramp 1B. Salvaged materials shall be stockpiled at the Sioux Falls Maintenance Yard, as designated by the Engineer..

Costs to remove and salvage the road closure gate and footing shall be included in the contract unit price per each for Salvage Road Closure Gate.

UTILITIES

The Contractor shall be responsible for coordinating electrical installations with the power source. Utility contact information is listed below:

Xcel Energy
PO Box 988
Sioux Falls, SD 57101-0988
603-339-8330

NEW CONCRETE FOOTINGS

Cylindrical footings for the cantilever signs and sign bridges will primarily be placed through 2 to 4 feet of new fill at the surface after the proposed grading has taken place except at I-29 Sta. 22+25 L cantilever sign and I-229 Sta. 61+50 L sign bridge which are outside of the grading limits for this project. The bottom of the footings will encounter in-situ soils except at I-29 Sta. 115+00 L sign bridge which will be installed completely in new and existing fill.

Subsurface conditions within the limits of the project predominately consist of brown to gray sand-clay to silt-clay (glacial till). Groundwater near the cantilever sign and sign bridge locations has been observed from the surface to greater than 13.3 feet below the surface. Borings completed within the limits of the project have remained open to depths below the bottom of the footings. Classification results of both the existing embankments and in-situ soils consist primarily of sand-clay to silt-clay.

Cylindrical footings for the Cantilever Signs and Sign Bridges shall be constructed in accordance with Section 465 of the Standard Specifications for Roads and Bridges, Drilled Shaft Construction except sections 465.3.A, 465.3.H, 465.3.I, 465.3.J and 465.3.K will not be required.

If the cantilever sign or sign bridge locations, mounting heights and/or mast arm lengths are changed, these recommendations may become invalid. Any questions about these recommendations may be directed to the Geotechnical Engineering Activity.

DROP ARM ROAD CLOSURE GATE

The Drop Arm Road Closure Gate shall be located as shown in the plans. The location shall be 4' off of the shoulder, unless otherwise specified.

GALVANIZING: The gate arm pivots, supports, and guides and all associated hardware shall be galvanized in accordance with ASTM A123. All rough edges and burrs shall be ground smooth prior to galvanizing.

After road closure gate assembly, all exposed bolt threads shall be painted with two coats of zinc rich paint conforming to the requirements of ASTM A 780.

Cost for drop arm road closure gate pole, gate, switches, transformers, LED signal modules, cube flasher units, cap flasher units, rigid steel conduit and miscellaneous material required to construct snow gates shall all be incidental to the contract unit price per each for Drop Arm Road Closure Gate. Cost for drop arm road closure gate breakaway footing shall be included in the contract unit price per foot for 2.5' Diameter Footing. Cost for #14 AWG "SO" cord shall be incidental to the contract unit price per foot for 5/C #14 AWG Copper Tray Cable, K2.

DROP ARM ROAD CLOSURE GATE DETAILS

When the gate is fully raised, the nut and washer shall be placed snugly against the outside of the rear channel and padlocked in place. The fabricator shall supply one heavy, weatherproof padlock with 2 keys for each gate arm pivot. All gate padlocks shall be keyed alike so that all keys will fit all gate padlocks.

All lockable 3R NEMA enclosures shall be keyed alike so that all keys will fit all 3R NEMA enclosures.

Costs for gate padlocks and keys, and lockable 3R NEMA enclosures and keys shall be incidental to the contract unit price per each for Drop Arm Road Closure Gate.

PLOT SCALE - $$SCALE$$
PLOTTED FROM - $$USERNAME$$
PLOT NAME - $$PLOTNAME$$
FILE - $$FILENAME$$

DROP ARM GATE MOUNTED SIGNS

R11-2 Special ROAD CLOSED signs that are mounted on the drop arm gates shall be attached as recommended by the drop arm gate manufacturer.

BREAKAWAY BASES

A statement is required, signed by a Professional Engineer registered in the State of South Dakota, certifying that the breakaway base devices meet the design requirements, including breakaway and structural adequacy, of the "AASHTO Specifications for Structural Supports for Highway Signs, Luminaires, and Traffic Signals". The physical testing procedures outlined in Section 8 of the Fifth Edition of the Aluminum Association's "Specifications for Aluminum Structures" may be used to establish service limits for structural adequacy certification of aluminum breakaway transformer bases and frangible couplings. If requested, test data of production samples to support the certification shall be provided.

BOLT TESTING

The certified mill test reports for all bolts used on the project shall include the test results for all of the testing specified in section 972.2D of the South Dakota Standard Specifications. Some of these tests are supplemental tests that must be requested at the time the bolts are ordered. It is the responsibility of the Contractor to notify the bolt supplier of these requirements.

ACCEPTANCE OF SIGN INSTALLATIONS

Acceptance of completed signs will be considered on a sign by sign basis in accordance with Section 5.16 of the Specifications.

DROP ARM ROAD CLOSURE GATE FOOTING DATA

Site Designation	Footing Diameter	* Footing Depth	**Spiral Diameter	**Spiral Length	Vertical Reinforcement
Road Closure Gate	2' - 6"	8' - 0"	2' - 2"	71' - 0"	12-#7 x 7' - 6"

* Footing depth shall be below ground level.
** The size of all spirals shall be #3.

PLOT SCALE - $$SCALE$$
PLOT NAME - $$PLOTNAME$$
FILE - $$FILENAME$$
PLOTTED FROM - $$USERNAME$$

STATE OF SOUTH DAKOTA	PROJECT	SHEET	TOTAL SHEETS
	IM 0293(96)73 IM 2292(90)0	S5	S116

Section S Stationing

FOR BIDDING PURPOSES ONLY

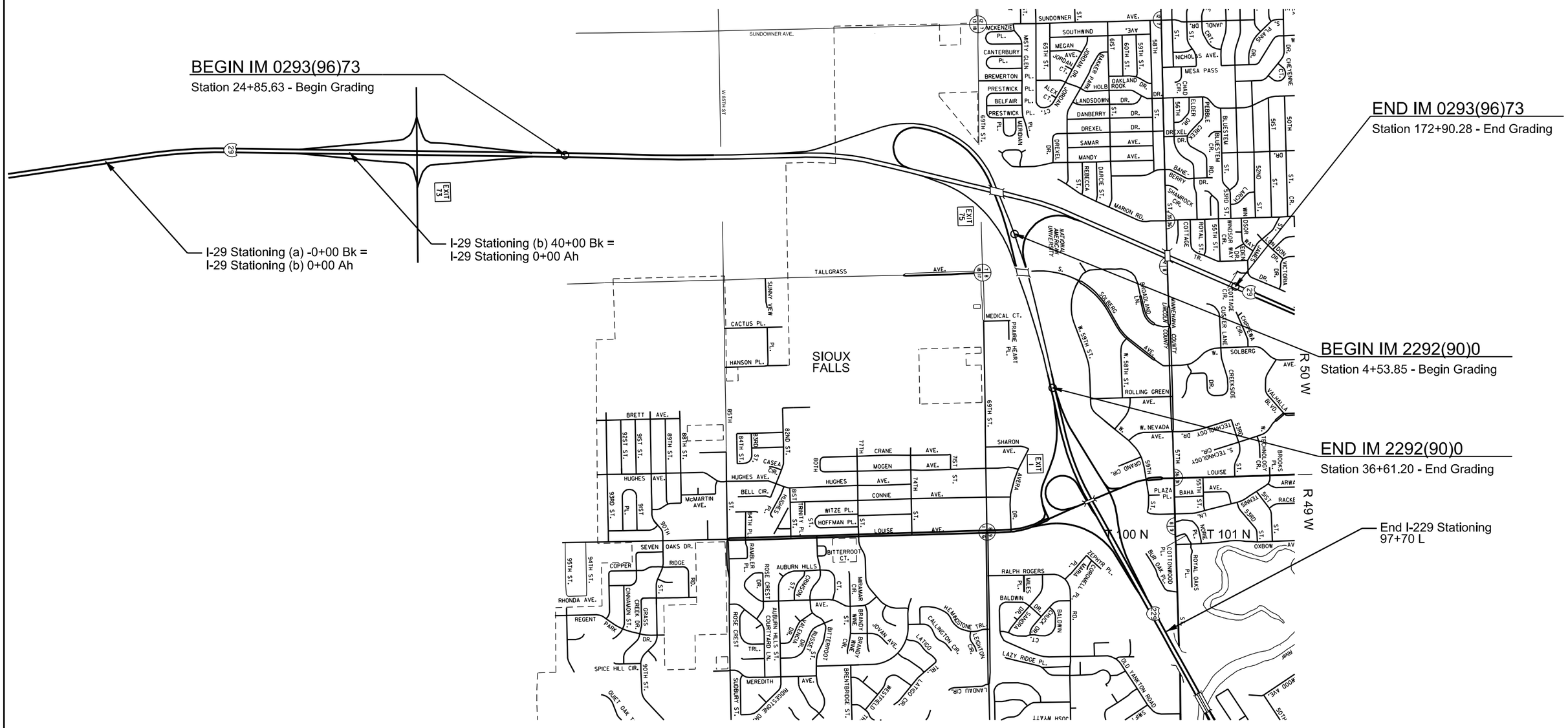

REMOVE TRAFFIC SIGN

Station	Description	Remove Signs (Each)	4"x6" Wood Post (Each)	U Channel Post (FT)	Square Tube Post (FT)	3"N.D. x 0.216" Round Steel Post (FT)	4"N.D. x 0.237" Round Steel Post (FT)	5"N.D. x 0.258" Round Steel Post (FT)	I-Beam Post (FT)	I-Beam Post (Size)	Concrete Footing (Each)	Concrete Footing (Size)	Slip Base Anchor (Each)	Remarks
Interstate 29														
a-23+25 - Rt.	EXIT 73	1												
	Tea 1 MILE	1							31	W6X15	2			Remove Extruded Aluminum sign, and concrete Footings, salvage Posts.
b 0+25 - Lt	44 10 Sioux City 75	1							32	W6X15	2	2X5		Remove Extruded Aluminum sign, and concrete Footings, salvage Posts.
b 24+75 - Rt	EXIT 73 GAS FOOD CAMPING	1							35	W8X18	2	2.5X8		Remove Extruded Aluminum sign, and concrete Footings, salvage Posts.
b 27+45 - Lt	29 CLOSED WHEN FLASHING EXIT	1							43.5	W8X28	2	1.9X6	2	Remove Extruded Aluminum sign
b 28+75 - Lt	EXIT 73 GAS FOOD CAMPING	1							44	W8X28	2	2X10		Remove Extruded Aluminum sign, and concrete Footings, salvage Posts.
b 32+75 - Rt	EXIT 73	1												Remove Extruded Aluminum sign, and concrete Footings, salvage Posts.
	Tea 45° diagonal arrow	1							34.6	W6X15	2	2X5		Remove Extruded Aluminum sign, and concrete Footings, salvage Posts.
41+00 - Rt	Route Assembly	2					13				1	1.25'x4'	1	Remove signs, post and concrete Footing.
45+00 - Lt	Emergency Parking	1							12.5	4X7.7	1	1.25'x5.3'	1	Remove signs, post and concrete Footing.
45+65 - Lt	MILE 74	1		10										Remove sign, post and stub.
45+67 - Rt	MILE 74	1		10										Remove sign, post and stub.
50+80 - Lt	CLOSED WHEN FLASHING	1							48.5	W6X15			1*	Remove signs, beacons, and Posts (*6' driven anchor)
50+80 - Lt	CLOSED WHEN FLASHING	1							48.5	W6X15			1*	Remove signs, beacons, and Posts (*6' driven anchor)
51+01 - Rt	REDUCED SPEED AHEAD	1	1											Remove sign and Post
51+02 - Rt	REDUCED SPEED AHEAD	1	1											Remove sign and Post
54+56 Rt	sign bridge supports										2	4X14		Remove concrete Footings, salvage Posts.
59+03	Maintenance and Authorized Vehicles	2		11.5										Remove signs and Post
64+91 - Rt	SPEED LIMIT 65	1	2											Remove sign and Posts.
64+96 - Rt	SPEED LIMIT 65	1	2											Remove sign and Posts.
64+97 - Lt	75 MPH 40 MPH Minumum	2							34	S3X5	2	1.25X4	2	Remove sign and Post.
70+50 - Lt	EXIT 73	1												
	Tea 1 MILE	1							40	W8X24	2	2x8.5		Remove Extruded Aluminum sign, and concrete Footings, salvage Posts.
93+05 - Rt	Home of Senator John Thune	1	2											Remove sign and Posts.
96+42 - Lt	MILE 75	1		10										Remove sign, post and stub.
96+46 - Rt	MILE 75	1		10										Remove sign, post and stub.
99+57 - Rt	Route Assembly	2					13				1	1.25'x4'		Remove signs, post and concrete Footing.

PLOT SCALE - $$SCALE$$
PLOTTED FROM - $$USERNAME$$
PLOT NAME - $$PLOTNAME$$
FILE - $$FILENAME$$

REMOVE TRAFFIC SIGN

Station	Description	Remove Signs (Each)	4"x6" Wood Post (Each)	U Channel Post (FT)	Square Tube Post (FT)	3"N.D. x 0.216" Round Steel Post (FT)	4"N.D. x 0.237" Round Steel Post (FT)	5"N.D. x 0.258" Round Steel Post (FT)	I-Beam Post (FT)	I-Beam Post (Size)	Concrete Footing (Each)	Concrete Footing (Size)	Slip Base Anchor (Each)	Remarks
99+57 - Lt	EXIT 75	1							28	S5X10	2	1.5X4	2	Remove Extruded Aluminum sign, and concrete Footings, salvage Posts.
101+36 - Lt	EXIT 75	1												
	SOUTH 29 229 v v 45° arrow	2									4X14	2		Remove Extruded Aluminum signs, and concrete Footings, salvage truss and supports.
	RAMP 30 MPH	1												Salvage sign on truss support.
105+74 - Rt	EXIT 75	1												
	29 229 v v 45° arrow	2									4X14	2		Remove Extruded Aluminum signs, and concrete Footings, salvage truss and supports.
107+33 - Lt	EXIT 30 MPH	1					11.5				1	1.25X4	1	Remove sign, post and concrete Footing, salvage Post.
109+52 - Rt	EXIT 75	1							28	S5X10	2	1.5X4	2	Remove Extruded Aluminum sign, and concrete Footings, salvage Posts.
111+50	Maintenance and authorized Vehicles	2		11.5										Remove signs and Post
115+47 - Rt	Route Assembly	2					13				1	1.25'x4'		Remove signs, post and concrete Footing.
118+ 33 - Rt	TYPE IV	1		12										Remove sign and Post
118+35 - Rt	TYPE IV	1		12										Remove sign and Post
121+36 - Lt	TYPE IV	1		12										Remove sign and Post
121+37 - Lt	TYPE IV	1		12										Remove sign and Post
128+10	Maintenance and authorized Vehicles	2		11.5										Remove signs and Post
140+31 - Rt	Sioux Falls NEXT 7 EXITS	1							36.2	W6X20	2	1.75X7		Remove Extruded Aluminum signs, and concrete Footings, salvage Posts.
	HOSPITAL USE EXIT 79	1												
144+27 - Rt	Route Assembly	2					13				1	1.25'x4'	1	Remove signs, and concrete Footing, salvage Post.

PLOT SCALE - $$SCALE$$
PLOTTED FROM - $$USERNAME$$
PLOT NAME - $$PLOTNAME$$
FILE - $$FILENAME$$

REMOVE TRAFFIC SIGN

Station	Description	Remove Signs (Each)	4"x6" Wood Post (Each)	U Channel Post (FT)	Square Tube Post (FT)	3"N.D. x 0.216" Round Steel Post (FT)	4"N.D. x 0.237" Round Steel Post (FT)	5"N.D. x 0.258" Round Steel Post (FT)	I-Beam Post (FT)	I-Beam Post (Size)	Concrete Footing (Each)	Concrete Footing (Size)	Slip Base Anchor (Each)	Remarks
148+27 - Rt	EXIT 77	1												Remove Extruded Aluminum sign, and concrete Footings, salvage Posts.
	41st Street 1MILE	1							36.2	W6X20	2	1.75X7	2	Remove Extruded Aluminum sign, and concrete Footings, salvage Posts.
151+64 - Rt	Route Assembly	2					13				1	1.25'x4'		Remove signs, post and concrete Footing.
152+25 - Rt	SPEED LIMIT 65	1					13.7				1	1.25X4	1	Remove sign, and concrete Footing, salvage Post.
156+25 - Rt	EXIT 77 LODGING	1							41.5	W8X18	2	2.25X6	2	Remove Extruded Aluminum sign, and concrete Footings, salvage Posts.
156+08 - Rt	Minnehaha County	1							23.9	S5X10	2	1.5X4	2	Remove Extruded Aluminum sign, and concrete Footings, salvage Posts.
158+30 - Lt	EXIT 75	1												
	229 NORTH 1 MILE	1												Remove Extruded Aluminum signs from truss.
Exit 73 Ramp "B"														
3014+50 - Rt	EXIT 73 GAS FOOD CAMPING	1							32.2	W6X15	2	2X5	2	Remove Extruded Aluminum sign, and concrete Footings, salvage Posts.
Exit 73 Ramp "D"														
5004+50 - Lt	EXIT 73 GAS FOOD CAMPING	1							32.2	W6X15	2	2X5	2	Remove Extruded Aluminum sign, and concrete Footings, salvage Posts.
Exit 75 Ramp "A"														
28+75 - Lt	YIELD	1					12.7				1	1.25X4	1	Remove sign, and concrete Footing, salvage Post.
Exit 75 Ramp "C"														
12+94 - Lt	YIELD	1					12.7				1	1.25X4	1	Remove signs, post and concrete Footing, salvage Post.
22+68 - Rt	LANE ENDS	1				12.6					1	1.25X4	1	Remove sign, and concrete Footing, salvage Post.
22+68 - Lt	LANE ENDS	1				12.6					1	1.25X4	1	Remove sign, and concrete Footing, salvage Post.
27+63 - Rt	LEFT LANE ENDS	1				13.1					1	1.25X4	1	Remove sign, and concrete Footing, salvage Post.
27+63 - Lt	LEFT LANE ENDS	1				12.6					1	1.25X4	1	Remove sign, and concrete Footing, salvage Post.
72+06 - Lt	EXIT 1B	1							28	S5X10	2	1.5X4	2	Remove Extruded Aluminum sign, and concrete Footings, salvage Posts.
Rt	chevrons	14		12										

PLOT SCALE - $$SCALE$$
PLOT NAME - $$PLOTNAME$$
FILE - $$FILENAME$$
PLOTTED FROM - $$USERNAME$$

REMOVE TRAFFIC SIGN

Station	Description	Remove Signs (Each)	4"x6" Wood Post (Each)	U Channel Post (FT)	Square Tube Post (FT)	3"N.D. x 0.216" Round Steel Post (FT)	4"N.D. x 0.237" Round Steel Post (FT)	5"N.D. x 0.258" Round Steel Post (FT)	I-Beam Post (FT)	I-Beam Post (Size)	Concrete Footing (Each)	Concrete Footing (Size)	Slip Base Anchor (Each)	Remarks
Exit 75 Ramp "G"														
51+38 - Rt	Yield	1				12.5					1	1.25'x4'	1	Remove sign, and concrete Footing, salvage post.
INTERSTATE 229														
8+76 - Lt	EXIT 1A EXIT 1B	4												
	SOUTH 29 29 NORTH v v 45° arrow										4X12	2		Remove Extruded Aluminum signs, and concrete Footings, salvage truss and supports.
9+92 - Rt	Sioux Falls NEXT 8 EXITS	1							37.7	W8X21	2	1.75X7		Remove Extruded Aluminum signs, and concrete Footings, salvage Posts.
	HOSPITAL EXITS 1C, 2 OR 4	1												
13+06 - Rt	Route Assembly	2					13				1	1.25'x4'	1	Remove sign, and concrete Footing, salvage Post.
14+74 - Lt	RAMP SPEED 45	1									1		1	Remove sign, and concrete Footing, salvage post.
14+94 - Rt	EXIT 1C	1												Remove Extruded Aluminum sign, and concrete Footings, salvage Posts.
	Louise Avenue 1/2 MILE	1							36.2	W6X20	2	1.75X7	2	Remove Extruded Aluminum signs, and concrete Footings, salvage Posts.
	H(OSPITAL SYMBOL)	1												
21+71 - Rt	SPEED LIMIT 65	1								S3X5	2	1.25X4	2	Remove sign, and concrete Footings, salvage Posts.
21+84 - Rt	EXIT 1C FOOD	1							40	W8X28	2	2.25X8	2	Remove Extruded Aluminum sign, and concrete Footings, salvage Posts.
23+45 - Lt	SPEED LIMIT 65	1								S3X5	2	1.25X4	2	Remove sign, and concrete Footings, salvage Posts.
25+70 - Lt	Route Assembly	2					13				1	1.25'x4'	1	Remove sign, and concrete Footing, salvage Post.
28+59 - Rt	EXIT 1C	1												
	Butterfly House & Marine Cove Game, Fish & Parks Outdoor Campus	1							36.2	W6X20	2	1.75X7	2	Remove Extruded Aluminum signs, and concrete Footings, salvage Posts.
35+25 - Rt	EXIT 1C	1												
	Louise Avenue 45° Arrow	1							37.7	W8X21	2	1.75X7	2	Remove Extruded Aluminum signs, and concrete Footings, salvage Posts.
	H (OSPITAL SYMBOL)	1												

PLOT SCALE - $$SCALE$$
PLOTTED FROM - $$USERNAME$$
PLOT NAME - $$PLOTNAME$$
FILE - $$FILENAME$$

REMOVE TRAFFIC SIGN

Station	Description	Remove Signs (Each)	4"x6" Wood Post (Each)	U Channel Post (FT)	Square Tube Post (FT)	3"N.D. x 0.216" Round Steel Post (FT)	4"N.D. x 0.237" Round Steel Post (FT)	5"N.D. x 0.258" Round Steel Post (FT)	I-Beam Post (FT)	I-Beam Post (Size)	Concrete Footing (Each)	Concrete Footing (Size)	Slip Base Anchor (Each)	Remarks
INTERSTATE 229														
36+15 - Lt	YIELD	1												
60+40 - Lt	EXIT 1A EXIT 1B	4												
	SOUTH 29 29 NORTH 1 ½ MILES 1 MILE													Remove Extruded Aluminum signs, and supporting hardware.
84+68 - Lt	EXIT 1C FOOD	1							40	W8X28	2	2.25X8	2	Remove Extruded Aluminum sign, and concrete Footings, salvage Posts.
97+70 Lt	EXIT 1C GAS LODGING	1												Remove Extruded Aluminum signs.
Exit 1C Ramp "A"														
14+50 - Rt	GAS LODGING	1							29.8	W6X12	2	1.75X5	2	Remove Extruded Aluminum sign, and concrete Footings, salvage Posts.
Exit 1C Ramp "D"														
5+50 - Lt	GAS LODGING	1							29.7	W6X12	2	1.75X5	2	Remove Extruded Aluminum sign, and concrete Footings, salvage Posts.
Totals		121*									80			

* - Includes 7 Remove Sign for Reset

PLOT SCALE - $$SCALE$$
PLOT NAME - $$PLOTNAME$$
FILE - $$FILENAME$$
PLOTTED FROM - $$USERNAME$$

FOR BIDDING PURPOSES ONLY

NEW and RESET SIGNS

Station	Description	Sign Code	Width (Inches)	Height (Inches)	High Intensity (SQFT)	Super/Very High Intensity (SQFT)	Extruded Aluminum Super/Very High Intensity Removable Copy (SQFT)	2"x2" Square Tube Post w/Anchor (FT) 12 Ga.	3"N.D. x 0.216" Round Steel Post (FT)	4"N.D. x 0.237" Round Steel Post (FT)	I-Beam Post (FT)	I-Beam Post (Size)	Concrete Footing (Dia.) (FT)	Reset Traffic Sign (Each)	Remarks
I-29															
a -23+25 Rt	EXIT 73	E1-5	114	30			23.8				38.2	8 WF 18	2.25		Install new signs and fixed posts
	CO RD 106 Tea 1 MILE	E1-2	114	120			95.0								
a -6+75 Rt	SPEED LIMIT 65 AHEAD	W3-5	48	48	16.0					13.8			1.25		Install new sign and breakaway post
a -6+75 Rt	SPEED LIMIT 65 AHEAD	W3-5	48	48	16.0					14.2			1.25		Install new sign and breakaway post
b 0+25 Lt	SD 44 8 Sioux City 73	D2-2	192	72			96.0				29	8 WF 21	2.25		Install new sign and fixed posts
b 8+75 Rt	EXIT 73 LODGING LOGO	LOGO	228	132			209.0				40.5	8 WF 21	2.25		Install new sign and fixed posts
b 8+80 Rt	SPEED LIMIT 65	R2-1	48	60	20.0					13			1.25		Install new sign and breakaway post
b 8+80 Rt	SPEED LIMIT 65	R2-1	48	60	20.0					13			1.25		Install new sign and breakaway post
b 8+80 Lt	SPEED LIMIT 80 / MINIMUM 40	R2-4a	48	96	32.0					16			1.25		Install new sign and breakaway post
b 16+75 Rt	EXIT 73 FOOD LOGOS	LOGO	228	132			209.0				40.5	8 WF 21	2.25		Install new sign and fixed posts
b 24+75 Rt	EXIT 73 GAS CAMPING LOGOS	LOGO	228	132			209.0				42.6	8 WF 28	2.25		Install new sign and fixed posts
b 32+75 Rt	EXIT 73	E1-5	114	30			23.8				46.1	8 WF 21	2.25		Install new signs and fixed posts
	CO RD 106 Tea ARROW	EXIT DIR	114	108			85.5								
22+25 Lt	EXIT 73	E1-5	114	30			23.8						*		Install new signs and cantilever support
	CO RD 106 Tea EXIT ONLY ARROW	EXIT DIR	180	138			172.5								
27+45 Lt	I-29 CLOSED WHEN FLASHING EXIT ARROW	EXIT DIR	150	114							-	8 WF 18	1.75		FOR INFORMATION ONLY
28+75 Lt	EXIT 73 GAS CAMPING LOGOS	LOGO	228	132			209.0				43.6	8 WF 28	1.75		Install new sign and breakaway posts, 30 ft offset
35+25 Lt	EXIT 73 FOOD LOGOS	LOGO	228	132			209.0				47.2	8 WF 31	2.5		Install new sign and fixed posts
41+75 Lt	EXIT 73	E1-5	114	30			23.8						*		Install new signs and cantilever support
	CO RD 106 Tea EXIT ONLY DOWN ARROW	E11-1	180	138			172.5								
45+00 Lt	EMERGENCY PARKING ONLY	R8-4	48	36	12.0				11.5				1.25		Install new sign and breakaway post
50+80 Lt	I-29 CLOSED WHEN FLASHING 1/2 MILE AHEAD	SPECIAL	108	78			-				-	6 WF 15	1.75	1	Reinstall sign, breakaway posts and beacons on new footings
50+80 Lt	I-29 CLOSED WHEN FLASHING 1/2 MILE AHEAD	SPECIAL	108	78			-				-	6 WF 15	1.75	1	Reinstall sign, breakaway posts and beacons on new footings
51+00 Rt	SPEED LIMIT 65	R2-1	48	60	20.0					13.3			1.25		Install new sign and breakaway post
52+80 Rt	EXIT 75	E1-5	114	30			23.8						*		Install new signs and sign bridge
	Sioux Falls NORTH 29 ARROWS	DIAGR	372	180			465.0								
	NORTH 229 1 MILE														
59+10 Median	Maintenance and Authorized Vehicles	SPECIAL	24	30	5			11.3							Install new signs back to back on new breakaway post
	Maintenance and Authorized Vehicles	SPECIAL	24	30	5										
59+90 Lt	SOUTH	M3-3	36	18	4.5				13.3				1.25		Install new signs and breakaway post
	29	M1-1	36	36	9										
62+80 Lt	EXIT 73 LODGING LOGO	LOGO	228	132			209.0				39	8 WF 21	1.75		Install new sign and fixed posts
64+90 Lt	SPEED LIMIT 65	R2-1	48	60	20.0					13.3			1.25		Install new sign and breakaway post

* - See Section E for Footing Data

PLOT SCALE - $$SCALE$$
PLOTTED FROM - $$USERNAME$$
PLOT NAME - $$PLOTNAME$$
FILE - $$FILENAME$$

FOR BIDDING PURPOSES ONLY

NEW and RESET SIGNS

Station	Description	Sign Code	Width (Inches)	Height (Inches)	High Intensity (SQFT)	Super/Very High Intensity (SQFT)	Extruded Aluminum Super/Very High Intensity Removable Copy (SQFT)	2"x2" Square Tube Post w/Anchor (FT) 12 Ga.	3"N.D. x 0.216" Round Steel Post (FT)	4"N.D. x 0.237" Round Steel Post (FT)	I-Beam Post (FT)	I-Beam Post (Size)	Concrete Footing (Dia.) (FT)	Reset Traffic Sign (Each)	Remarks
69+30 Lt	SOUTH 29 ARROWS	PULL THRU	216	96			144.0						*		Install new signs and sign bridge
	EXIT 73	E1-5	114	30			23.8								
	CO RD 106 Tea 1 MILE	E11-1	180	156			195.0								
	EXIT ONLY DOWN ARROW														
79+20 Rt	EXIT 75	E1-5	114	30			23.8						*		Install new signs and sign bridge
	Sioux Falls NORTH 29 ARROWS NORTH 229	DIAGR	372	180			465.0								
81+60 Lt	ADDED LANE	W4-3	48	48		16.0				13.2			1.25		Install new sign and breakaway post
93+05 Rt	Sioux Falls	SPECIAL	120	84										1	Reinstall sign and and wood posts
	Home of US Senator John Thune														
105+60 Rt	NORTH 29 ARROWS	PULL THRU	216	96			144.0						*		Install new signs and sign bridge
	EXIT 75	E1-5	114	30			23.8								
	229 NORTH EXIT ARROW ONLY	EXIT DIR	180	102			127.5								
105+85 Lt	EXIT 75 ARROW	E5-1a	78	60			32.5				30	6 WF 12	1.75		Install new sign and breakaway posts
	30 MPH	E13-1P	78	24			13.0								
109+60 Rt	EXIT 75 ARROW	E5-1a	78	60			32.5				24	6 WF 12	1.75		Install new sign and breakaway posts
111+50 Median	Maintenance and Authorized Vehicles	SPECIAL	24	30	5			11.3							Install new signs back to back on new breakaway post
	Maintenance and Authorized Vehicles	SPECIAL	24	30	5										
112+75 Lt	EXIT ARROW 30 MPH	W13-6	48	84		28.0				15.9			1.25		Install new sign and breakaway post
115+00 Lt	SOUTH 29 ARROWS	PULL THRU	216	96			144.0						*		Install new signs and sign bridge
	EXIT 75	E1-5	114	30			23.8								
	229 NORTH EXIT ARROW ONLY	EXIT DIR	180	102			127.5								
128+10 Median	Maintenance and Authorized Vehicles	SPECIAL	24	30	5			11.3							Install new signs back to back on new breakaway post
	Maintenance and Authorized Vehicles	SPECIAL	24	30	5										
135+45 Rt	ADDED LANE	W4-3	48	48		16.0				13.2			1.25		Install new sign and breakaway post
140+25 Rt	Sioux Falls NEXT 7 EXITS	NEXT EXITS	156	60			-				-	6 WF 20	1.75	1	Reinstall signs and breakaway posts on new footings
	HOSPITAL USE EXIT 79	NEXT EXITS	156	60			-								
141+35 Lt	EXIT 75	E1-5	114	30			23.8								Install new signs and cantilever support
	229 NORTH EXIT ARROW ONLY	E11-1	180	102			127.5								
144+25 Rt	NORTH	M3-1	36	18	4.5				13.3				1.25		Install new signs and breakaway post
	29	M1-1	36	36	9										
148+25 Rt	EXIT 77	E1-5	114	30			-				-	6 WF 20	1.75	1	Reinstall sign and breakaway posts on new concrete footings
	41st Street 1 MILE	E1-2	120	108			-								
152+25 Rt	SPEED LIMIT 65	R2-1	48	60	20.0					13.3			1.25		Install new sign and breakaway post
156+25 Rt	EXIT 77 LODGING LOGO	LOGO	228	120			-				-	8 WF 18	2.25	1	Reinstall sign and fixed posts on new concrete footings
156+80 Rt	Minnehaha County	I-2 COUNTY	84	36			-				-	5 I 10	1.5	1	Reinstall sign and breakaway posts on new concrete footings

* - See Section E for Footing Data

PLOT SCALE - $$SCALE$$
PLOT NAME - $$PLOTNAME$$
FILE - $$FILENAME$$
PLOTTED FROM - $$USERNAME$$

FOR BIDDING PURPOSES ONLY

NEW and RESET SIGNS

Station	Description	Sign Code	Width (Inches)	Height (Inches)	High Intensity (SQFT)	Super/Very High Intensity (SQFT)	Extruded Aluminum Super/Very High Intensity Removable Copy (SQFT)	2"x2" Square Tube Post w/Anchor (FT) 12 Ga.	3"N.D. x 0.216" Round Steel Post (FT)	4"N.D. x 0.237" Round Steel Post (FT)	I-Beam Post (FT)	I-Beam Post (Size)	Concrete Footing (Dia.) (FT)	Reset Traffic Sign (Each)	Remarks
158+25 Lt	SOUTH 29 ARROWS	PULL THRU	216	96			144.0								Install new signs on existing sign bridge
	EXIT 75	E1-5	114	30			23.8								
	229 NORTH 1 MILE EXIT ARROW ONLY	E11-1	180	126			157.5								
I-29 EXIT 73 RAMP B															
3011+50 Rt	LODGING LOGO	LOGO	120	84			70.0				32.3	6 WF 20	1.75		Install new sign and breakaway supports
3013+00 Rt	FOOD LOGO	LOGO	120	84			70.0				32.3	6 WF 20	1.75		Install new sign and breakaway supports
3014+50 Rt	GAS / CAMPING LOGO	LOGO	120	84			70.0				-	6 WF 15	-		Install new sign on existing breakaway supports
I-29 EXIT 73 RAMP D															
5004+50 Lt	GAS / CAMPING LOGO	LOGO	120	84			70.0				-	6 WF 15	-		Install new sign on existing breakaway supports
5006+00 Lt	FOOD LOGO	LOGO	120	84			70.0				32.6	6 WF 20	1.75		Install new sign and breakaway supports
5007+50 Lt	LODGING LOGO	LOGO	120	84			70.0				32.5	6 WF 20	1.75		Install new sign and breakaway supports
I-29 EXIT 75 RAMP A															
10+25 Rt	RAMP 45 MPH	W13-6	36	60		15.0				12.5			1.25'		Install new sign and breakaway post
13+05 Lt	CHEVRON	W1-8	24	30		5.0		8							Install new sign and breakaway post
14+20 Lt	CHEVRON	W1-8	24	30		5.0		8							Install new sign and breakaway post
15+35 Lt	CHEVRON	W1-8	24	30		5.0		8							Install new sign and breakaway post
16+50 Lt	CHEVRON	W1-8	24	30		5.0		8							Install new sign and breakaway post
17+65 Lt	CHEVRON	W1-8	24	30		5.0		8							Install new sign and breakaway post
18+80 Lt	CHEVRON	W1-8	24	30		5.0		8							Install new sign and breakaway post
19+95 Lt	CHEVRON	W1-8	24	30		5.0		8							Install new sign and breakaway post
21+10 Lt	CHEVRON	W1-8	24	30		5.0		8							Install new sign and breakaway post
22+25 Lt	CHEVRON	W1-8	24	30		5.0		8							Install new sign and breakaway post
23+40 Lt	CHEVRON	W1-8	24	30		5.0		8							Install new sign and breakaway post
24+45 Lt	CHEVRON	W1-8	24	30		5.0		8							Install new sign and breakaway post
I-29 EXIT 75 RAMP C															
37+00 Lt	LANE ENDS	W4-2	48	48		16.0				14.2			1.25		Install new sign and breakaway post
37+00 Rt	LANE ENDS	W4-2	48	48		16.0				13.8			1.25		Install new sign and breakaway post
51+35 Lt	LEFT LANE ENDS	W9-1	48	48		16.0				15.2			1.25		Install new sign and breakaway post
	1/2 MILE	W16-3P	30	24		5.0									
51+35 Rt	LEFT LANE ENDS	W9-1	48	48		16.0				14.8					Install new sign and breakaway post
	1/2 MILE	W16-3P	48	48		16.0									
72+75	ROAD CLOSED	R11-2 SPECIAL	72	12	6.0								2.5		Install new sign on snow gate drop arm
73+00 Lt	(ARROW) EXIT 1A	E1-5a	180	132			165.0				34.8	8 WF 21	1.75		Install new sign and breakaway posts
	29														
	EXIT 1B (ARROW)														

* - See Section E for Footing Data

PLOT SCALE - $$SCALE$$
PLOTTED FROM - $$USERNAME$$
PLOT NAME - $$PLOTNAME$$
FILE - $$FILENAME$$

FOR BIDDING PURPOSES ONLY

NEW and RESET SIGNS

Station	Description	Sign Code	Width (Inches)	Height (Inches)	High Intensity (SQFT)	Super/Very High Intensity (SQFT)	Extruded Aluminum Super/Very High Intensity Removable Copy (SQFT)	2"x2" Square Tube Post w/Anchor (FT) 12 Ga.	3"N.D. x 0.216" Round Steel Post (FT)	4"N.D. x 0.237" Round Steel Post (FT)	I-Beam Post (FT)	I-Beam Post (Size)	Concrete Footing (Dia.) (FT)	Reset Traffic Sign (Each)	Remarks
I-29 EXIT 75 RAMP G															
10+15 Rt	RAMP 45 MPH	W13-6	36	60		15.0				12.5			1.25'		Install new sign and breakaway post
12+25 Lt	CHEVRON	W1-8	24	30		5.0		8							Install new sign and breakaway post
13+05 Lt	CHEVRON	W1-8	24	30		5.0		8							Install new sign and breakaway post
13+85 Lt	CHEVRON	W1-8	24	30		5.0		8							Install new sign and breakaway post
14+65 Lt	CHEVRON	W1-8	24	30		5.0		8							Install new sign and breakaway post
15+45 Lt	CHEVRON	W1-8	24	30		5.0		8							Install new sign and breakaway post
16+25 Lt	CHEVRON	W1-8	24	30		5.0		8							Install new sign and breakaway post
17+05 Lt	CHEVRON	W1-8	24	30		5.0		8							Install new sign and breakaway post
17+85 Lt	CHEVRON	W1-8	24	30		5.0		8							Install new sign and breakaway post
18+65 Lt	CHEVRON	W1-8	24	30		5.0		8							Install new sign and breakaway post
19+45 Lt	CHEVRON	W1-8	24	30		5.0		8							Install new sign and breakaway post
20+25 Lt	CHEVRON	W1-8	24	30		5.0		8							Install new sign and breakaway post
21+05 Lt	CHEVRON	W1-8	24	30		5.0		8							Install new sign and breakaway post
21+85 Lt	CHEVRON	W1-8	24	30		5.0		8							Install new sign and breakaway post
22+65 Lt	CHEVRON	W1-8	24	30		5.0		8							Install new sign and breakaway post
23+45 Lt	CHEVRON	W1-8	24	30		5.0		8							Install new sign and breakaway post
44+75 Rt	Sioux Falls NEXT 8 EXITS	NEXT EXITS	180	60			75.0				48.2	8 WF 28	1.75		Install new signs and breakaway support posts
	HOSPITAL EXITS 1C, 2 OR 4	NEXT EXITS	180	60			75.0								
48+45 Rt	ADDED LANE	W4-3	48	48		16.0				13.2			1.25		Install new sign and breakaway post
I-229															
9+10 Rt	EXIT 1C	E1-5	114	30			23.8						*		Install new signs and sign bridge
	Louise Avenue 1/2 MILE	E1-2	228	84			133.0								
	H	D9-2	30	30			6.3								
13+00 Lt	END 229	PULL THRU	84	96			56.0						*		Install new signs and sign bridge
	EXIT 1A	E1-5	114	30			23.8								
	SOUTH 29 ARROWS	PULL THRU	216	96			144.0								
	EXIT 1B	E1-5	114	30			23.8								
	29 NORTH EXIT ARROW ONLY	EXIT DIR	180	102			127.5								
	EXIT 45 MPH	W13-2	48	60		20.0									
13+10 Lt	I-29 CLOSED WHEN FLASHING EXIT ARROW	EXIT DIR	150	114			118.8				40.1	8 WF 18	1.75'		Install new sign, breakaway posts, and beacons, 30 ft offset.
15+55 Rt	EXIT 1C	E1-5	114	30			23.8				44.8	8 WF 28	2.25		Install new signs and breakaway supports, 42 ft offset
	Butterfly House & Marine Cove	SUPPL	240	132			220.0								
	Game, Fish & Parks Outdoor Campus														
21+65 Lt	SPEED LIMIT 65	R2-1	48	60	20.0					13			1.25		Install new sign and breakaway support
22+05 Rt	EXIT 1C GAS / LODGING LOGO	LOGO	228	132			209.0				44.5	8 WF 28	1.75		Install new signs and breakaway supports, 42 ft offset
25+30 Rt	SPEED LIMIT 65	R2-1	48	60	20.0					13			1.25		Install new sign and breakaway post

* - See Section E for Footing Data

PLOT SCALE - $$SCALE$$
PLOTTED FROM - $$USERNAME$$
PLOT NAME - $$PLOTNAME$$
FILE - $$FILENAME$$

Rev: 9-15-15 SAH

FOR BIDDING PURPOSES ONLY

NEW and RESET SIGNS

Station	Description	Sign Code	Width (Inches)	Height (Inches)	High Intensity (SQFT)	Super/Very High Intensity (SQFT)	Extruded Aluminum Super/Very High Intensity Removable Copy (SQFT)	2"x2" Square Tube Post w/Anchor (FT) 12 Ga.	3"N.D. x 0.216" Round Steel Post (FT)	4"N.D. x 0.237" Round Steel Post (FT)	I-Beam Post (FT)	I-Beam Post (Size)	Concrete Footing (Dia.) (FT)	Reset Traffic Sign (Each)	Remarks
26+65 Lt	NORTH	M3-1	36	18	4.5				13.3				1.25		Install new signs and breakaway post
	29	M1-1	36	36	9										
28+55 Rt	EXIT 1C FOOD LOGO	LOGO	228	120			190.0				44.6	8 WF 28	1.75		Install new signs and breakaway supports, 42 ft offset
31+65 Lt	EXIT 1A	E1-5	114	30			23.8						*		Install new signs and sign bridge
	SOUTH 29 ARROWS	PULL THRU	216	96			144.0								
	EXIT 1B	E1-5	114	30			23.8								
	29 NORTH EXIT ARROW ONLY	EXIT DIR	180	102			127.5								
31+75 Lt	SOUTH I-29 CLOSED WHEN FLASHING EXIT ARROW	SPECIAL	108	78			58.5				34.6	6 WF 15	1.75'		Install new sign, breakaway supports, and beacons
31+75 Lt	SOUTH I-29 CLOSED WHEN FLASHING EXIT ARROW	SPECIAL	108	78			58.5				37.2	6 WF 15	1.75'		Install new sign, breakaway supports, and beacons
35+05 Rt	EXIT 1C	E1-5	114	30			23.8				35.5	8 WF 28	1.75'		Install new signs and fixed supports, 42 ft offset
	Louise Avenue ARROW	EXIT DIR	180	84			105.0								
	H	D9-2	30	30			6.3								
61+50 Lt	EXIT 1A	E1-5	114	30			23.8						*		Install new signs and sign bridge
	EXIT 1B	E1-5	114	30			23.8								
	SOUTH 29 ARROWS 29 NORTH	DIAGR	348	144			348.0								
97+70 Lt	EXIT 1C GAS / LODGING LOGO	LOGO	228	132			209.0					8 WF 31			Install new sign on existing breakaway supports
I-229 EXIT 1C RAMP A															
13+75 Rt	GAS / LODGING LOGO	LOGO	120	84			70.0					6 WF 12			Install new sign on existing breakaway supports
I-229 EXIT 1C RAMP D															
21+15 Rt	FOOD LOGO	LOGO	120	84			70.0					6 WF 12			Install new sign on existing breakaway supports
22+65 Rt	GAS / LODGING LOGO	LOGO	120	84			70.0					6 WF 12			Install new sign on existing breakaway supports
Totals					292.5	341.0	7875.8	241.9	51.4	274.4	914.7		80.5	7.0	

N.A.B.I. = Not A Bid Item

I-29 Equations - Sta. a -0+00 = Sta. b 0+00 Sta. b 40+00 = 0+00

* - See Section E for Footing Data

PLOT SCALE - $$SCALE$$
PLOTTED FROM - $$USERNAME$$
PLOT NAME - $$PLOTNAME$$
FILE - $$FILENAME$$

NEW CONCRETE FOOTINGS

Station	Description	N.A.B.I. 1.25' Dia. Concrete Footing (Each)	N.A.B.I. 1.5' Dia. Concrete Footing (Each)	N.A.B.I. 1.75' Dia. Concrete Footing (Each)	N.A.B.I. 2.25' Dia Concrete Footing (Each)	N.A.B.I. 2.5' Dia Concrete Footing (Each)	1.25' Dia. Concrete Footing (Lin. FT.)	1.5' Dia. Concrete Footing (Lin. FT.)	1.75' Dia. Concrete Footing (Lin. FT.)	2.25' Dia Concrete Footing (Lin. FT.)	2.5' Dia Concrete Footing (Lin. FT.)	N.A.B.I. Class M6 Concrete (Cubic Yards)	Remarks
	I-29 MAINLINE												
a -23+25 Rt	EXIT 73 CO RD 106 Tea 1 MILE				2					12		3.5	2 - 2.25' Dia. X 6.0' Deep concrete footing.
a -6+75 Rt	SPEED LIMIT 65 AHEAD	1					4					0.2	1 - 1.25' Dia. X 4.0' Deep concrete footing.
a -6+75 Rt	SPEED LIMIT 65 AHEAD	1					4					0.2	1 - 1.25' Dia. X 4.0' Deep concrete footing.
b 0+25 Lt	SD 44 8 Sioux City 73				2					14		4.1	2 - 2.25' Dia. X 6.0' Deep concrete footing.
b 8+75 Rt	EXIT 73 LODGING LOGO				2					12		3.5	2 - 2.25' Dia. X 6.0' Deep concrete footing.
b 8+80 Rt	SPEED LIMIT 65	1					4					0.2	1 - 1.25' Dia. X 4.0' Deep concrete footing.
b 8+80 Rt	SPEED LIMIT 65	1					4					0.2	1 - 1.25' Dia. X 4.0' Deep concrete footing.
b 8+80 Lt	SPEED LIMIT 80 / MINIMUM 40	1					4					0.2	1 - 1.25' Dia. X 4.0' Deep concrete footing.
b 16+75 Rt	EXIT 73 FOOD LOGOS				2					12		3.5	2 - 2.25' Dia. X 6.0' Deep concrete footing.
b 24+75 Rt	EXIT 73 GAS CAMPING LOGOS				2					16		4.7	2 - 2.25' Dia. X 8.0' Deep concrete footing.
b 32+75 Rt	EXIT 73 CO RD 106 Tea ARROW				2					10		2.9	2 - 2.25' Dia. X 5.0' Deep concrete footing.
22+25 Lt	EXIT 73 CO RD 106 Tea EXIT ARROW ONLY												See Section E for Footing Data.
28+75 Lt	EXIT 73 GAS CAMPING LOGOS			2					16			2.9	2 - 1.75' Dia. X 8.0' Deep concrete footing.
35+25 Lt	EXIT 73 FOOD LOGOS					2					16	5.8	2 - 2.5' Dia. X 8.0' Deep concrete footing.
41+75 Lt	EXIT 73 CO RD 106 Tea EXIT ARROW ONLY												See Section E for Footing Data.
45+00 Lt	EMERGENCY PARKING ONLY	1					4					0.2	1 - 1.25' Dia. X 4.0' Deep concrete footing.
50+80 Lt	I-29 CLOSED WHEN FLASHING 1/2 MILE AHEAD			2					10			1.8	2 - 1.75' Dia. X 5.0' Deep concrete footing.
50+80 Lt	I-29 CLOSED WHEN FLASHING 1/2 MILE AHEAD			2					10			1.8	2 - 1.75' Dia. X 5.0' Deep concrete footing.
51+00 Rt	SPEED LIMIT 65	1					4					0.2	1 - 1.25' Dia. X 4.0' Deep concrete footing.
52+80 Rt	EXIT 75 Sioux Falls N 29 ARWS N 229 1 MILE												See Section E for Footing Data.
59+90 Lt	SOUTH 29	1					4					0.2	1 - 1.25' Dia. X 4.0' Deep concrete footing.
62+80 Lt	EXIT 73 LODGING LOGO				2					14		4.1	2 - 2.25' Dia. X 7.0' Deep concrete footing.
64+90 Lt	SPEED LIMIT 65	1					4					0.2	1 - 1.25' Dia. X 4.0' Deep concrete footing.
69+30 Lt	S 29 ARWS EXIT 73 Tea 1 MILE EXIT ONLY												See Section E for Footing Data.
79+20 Rt	EXIT 75 Sioux Falls N 29 ARWS N 229												See Section E for Footing Data.

PLOT SCALE - $$SCALE$$
PLOTTED FROM - $$USERNAME$$
PLOT NAME - $$PLOTNAME$$
FILE - $$FILENAME$$

NEW CONCRETE FOOTINGS

Station	Description	N.A.B.I. 1.25' Dia. Concrete Footing (Each)	N.A.B.I. 1.5' Dia. Concrete Footing (Each)	N.A.B.I. 1.75' Dia. Concrete Footing (Each)	N.A.B.I. 2.25' Dia Concrete Footing (Each)	N.A.B.I. 2.5' Dia Concrete Footing (Each)	1.25' Dia. Concrete Footing (Lin. FT.)	1.5' Dia. Concrete Footing (Lin. FT.)	1.75' Dia. Concrete Footing (Lin. FT.)	2.25' Dia Concrete Footing (Lin. FT.)	2.5' Dia Concrete Footing (Lin. FT.)	N.A.B.I. Class M6 Concrete (Cubic Yards)	Remarks
81+60 Lt	ADDED LANE	1					4					0.2	1 - 1.25' Dia. X 4.0' Deep concrete footing.
105+60 Rt	N 29 ARWS EXIT 75 229 N EXIT ARW ONLY												See Section E for Footing Data.
105+85 Lt	EXIT 75 ARROW 30 MPH			2					10			1.8	2 - 1.75' Dia. X 5.0' Deep concrete footing.
109+60 Rt	EXIT 75 ARROW			2					10			1.8	2 - 1.75' Dia. X 5.0' Deep concrete footing.
112+75 Lt	EXIT ARROW 30 MPH	1					4					0.2	1 - 1.25' Dia. X 4.0' Deep concrete footing.
115+00 Lt	S 29 ARWS EXIT 75 229 N EXIT ARW ONLY												See Section E for Footing Data.
135+45 Rt	ADDED LANE	1					4					0.2	1 - 1.25' Dia. X 4.0' Deep concrete footing.
140+25 Rt	S F NEXT 7 EXITS HOSPITAL USE EXIT 79			2					12			2.1	2 - 1.75' Dia. X 6.0' Deep concrete footing.
141+35 Lt	EXIT 75 229 NORTH EXIT ARROW ONLY												See Section E for Footing Data.
144+25 Rt	NORTH 29	1					4					0.2	1 - 1.25' Dia. X 4.0' Deep concrete footing.
148+25 Rt	EXIT 77 41st Street 1 MILE			2					12			2.1	2 - 1.75' Dia. X 6.0' Deep concrete footing.
152+25 Rt	SPEED LIMIT 65	1					4					0.2	1 - 1.25' Dia. X 4.0' Deep concrete footing.
156+25 Rt	EXIT 77 LODGING LOGO				2					12		3.5	2 - 2.25' Dia. X 6.0' Deep concrete footing.
156+80 Rt	Minnehaha County		2					8				1.0	2 - 1.5' Dia. X 4.0' Deep concrete footing.
	I-29 EXIT 73 RAMP B												
3011+50 Rt	LODGING LOGO			2					14			2.5	2 - 1.75' Dia. X 7.0' Deep concrete footing.
3013+00 Rt	FOOD LOGO			2					14			2.5	2 - 1.75' Dia. X 7.0' Deep concrete footing.
	I-29 EXIT 73 RAMP D												
5006+00 Lt	FOOD LOGO			2					12			2.1	2 - 1.75' Dia. X 6.0' Deep concrete footing.
5007+50 Lt	LODGING LOGO			2					12			2.1	2 - 1.75' Dia. X 6.0' Deep concrete footing.
	I-29 EXIT 75 RAMP A												
10+25 Rt	RAMP 45 MPH	1					4					0.2	1 - 1.25' Dia. X 4.0' Deep concrete footing.
	I-29 EXIT 75 RAMP C												
37+00 Lt	LANE ENDS	1					4					0.2	1 - 1.25' Dia. X 4.0' Deep concrete footing.
37+00 Rt	LANE ENDS	1					4					0.2	1 - 1.25' Dia. X 4.0' Deep concrete footing.
51+35 Lt	LEFT LANE ENDS 1/2 MILE	1					4					0.2	1 - 1.25' Dia. X 4.0' Deep concrete footing.

PLOT SCALE - $$SCALE$$
PLOTTED FROM - $$USERNAME$$
PLOT NAME - $$PLOTNAME$$
FILE - $$FILENAME$$

NEW CONCRETE FOOTINGS

Station	Description	N.A.B.I. 1.25' Dia. Concrete Footing (Each)	N.A.B.I. 1.5' Dia. Concrete Footing (Each)	N.A.B.I. 1.75' Dia. Concrete Footing (Each)	N.A.B.I. 2.25' Dia Concrete Footing (Each)	N.A.B.I. 2.5' Dia Concrete Footing (Each)	1.25' Dia. Concrete Footing (Lin. FT.)	1.5' Dia. Concrete Footing (Lin. FT.)	1.75' Dia. Concrete Footing (Lin. FT.)	2.25' Dia Concrete Footing (Lin. FT.)	2.5' Dia Concrete Footing (Lin. FT.)	N.A.B.I. Class M6 Concrete (Cubic Yards)	Remarks
51+35 Rt	LEFT LANE ENDS 1/2 MILE	1					4					0.2	1 - 1.25' Dia. X 4.0' Deep concrete footing.
72+75	DROP ARM ROAD CLOSURE GATE					1					8	1.5	1 - 2.5' Dia. X 8.0' Deep concrete footing.
73+00 Lt	ARROW 1A 29 ARROW 1B			2					16			2.9	2 - 1.75' Dia. X 8.0' Deep concrete footing.
	I-29 EXIT 75 RAMP G												
10+15 Rt	RAMP 45 MPH	1					4					0.2	1 - 1.25' Dia. X 4.0' Deep concrete footing.
44+75 Rt	S F NEXT 8 EXITS HOSPITAL USE EXITS 1C,2,4			2					16			2.9	2 - 1.75' Dia. X 8.0' Deep concrete footing.
48+45 Rt	ADDED LANE	1					4					0.2	1 - 1.25' Dia. X 4.0' Deep concrete footing.
	I-229 MAINLINE												
9+10 Rt	EXIT 1C Louise Avenue 1/2 MILE H												See Section E for Footing Data.
12+15 Lt	END 229 1A S 29 ARWS 1B 29 N EXIT ONLY												See Section E for Footing Data.
13+10 Lt	I-29 CLOSED WHEN FLASHING EXIT ARROW			2					14			2.5	2 - 1.75' Dia. X 7.0' Deep concrete footing.
15+55 Rt	EXIT 1C Butterfly House & Marine Cove GF&P			2					16			2.9	2 - 1.75' Dia. X 8.0' Deep concrete footing.
21+65 Lt	SPEED LIMIT 65	1					4					0.2	1 - 1.25' Dia. X 4.0' Deep concrete footing.
22+05 Rt	EXIT 1C GAS / LODGING LOGO			2					18			3.2	2 - 1.75' Dia. X 9.0' Deep concrete footing.
25+30 Rt	SPEED LIMIT 65	1					4					0.2	1 - 1.25' Dia. X 4.0' Deep concrete footing.
26+65 Lt	NORTH 29	1					4					0.2	1 - 1.25' Dia. X 4.0' Deep concrete footing.
28+55 Rt	EXIT 1C FOOD LOGO			2					18			3.2	2 - 1.75' Dia. X 9.0' Deep concrete footing.
31+65 Lt	S I-29 CLOSED WHEN FLASHING EXIT ARROW			2					12			2.1	2 - 1.75' Dia. X 6.0' Deep concrete footing.
31+65 Lt	S I-29 CLOSED WHEN FLASHING EXIT ARROW			2					12			2.1	2 - 1.75' Dia. X 6.0' Deep concrete footing.
31+65 Lt	1A S 29 ARWS 1B 29 N EXIT ARW ONLY												See Section E for Footing Data.
35+05 Rt	EXIT 1C Louise Avenue ARROW H			2					16			2.9	2 - 1.75' Dia. X 8.0' Deep concrete footing.
61+50 Lt	EXIT 1A S 29 ARWS EXIT 1B 229 N 1 MILE												See Section E for Footing Data.
97+70 Lt	EXIT 1C GAS / LODGING LOGO												Existing
Totals		24.0	2.0	40.0	16.0	3.0	96.0	8.0	270.0	102.0	24.0	90.8	

N.A.B.I. = Not A Bid Item

I-29 Equations - Sta. a -0+00 = Sta. b 0+00 Sta. b 40+00 = 0+00

PLOT SCALE - $$SCALE$$
PLOTTED FROM - $$USERNAME$$
PLOT NAME - $$PLOTNAME$$
FILE - $$FILENAME$$

TABLE OF CONDUIT AND CABLE QUANTITIES FOR ROAD CLOSURE SIGNING

FOR BIDDING PURPOSES ONLY

STATE OF SOUTH DAKOTA	PROJECT	SHEET	TOTAL SHEETS
	IM 0293(96)73 IM 2292(90)0	S19	S116

Location to Location	Rigid Conduit							Copper Wire				Pole and Bracket Cable												
	Galv Steel	Schedule 40		Schedule 80																				
	1 1/2"	2"		2"				1/C #6 AWG	1/C #10 AWG						Type 2 Electrical Junction Box									
	Ft	Ft		Ft				Ft	Ft															
I-29 EXIT 73 RAMP D																								
SG7 to EJB2		EXIST																						
EJB2 to EJB1		EXIST																						
EJB1 to EJB43				EXIST																				
EJB43 to EJB3		EXIST																						
EJB3 to JB4		460							1452						1									
JB4 to SIGN	EXIST	35							139															
JB4 to EJB5		395							1251															
EJB5 to EJB6		EXIST																						
EJB6 to EJB7		EXIST																						
EJB7 to EJB8		EXIST																						
EJB8 to EJB9		EXIST																						
EJB9 to SIGN	EXIST	35							139															
EJB9 to JB10		60							216						1									
JB10 to JB11				75					263						1									
JB11 to SIGN	EXIST	15							77															
I-229 EXIT 1A																								
SG27 to JB1		15						77	77						1									
JB1 to JB2		500						1576	1576						1									
JB2 to JB3				70				247	247						1									
JB3 to JB4		45						170	170						1									
JB4 to METER		25						108	108															
METER to POWER		10						62	62															
JB4 to SIGN	35	10							170															
JB4 to JB5		475							1499						1									
JB5 to JB6		475							1499						1									
JB6 to JB7		465							1468						1									
JB7 to JB8		465							1468						1									
JB8 to SIGN	25	25							185															
JB8 to JB9				70					247						1									
JB9 to SIGN	25	25							185															
IM 0293(96)73 Totals:	**0**	**1000**		**75**				**0**	**3538**						**3**									
IM 2292(90)0 Totals:	**85**	**2535**		**140**				**2240**	**8961**						**9**									
Totals:	**85**	**3535**		**215**				**2240**	**12499**						**12**									

PLOT SCALE - $$SCALE$$
PLOTTED FROM - $$USERNAME$$
PLOT NAME - $$PLOTNAME$$
FILE - $$FILENAME$$

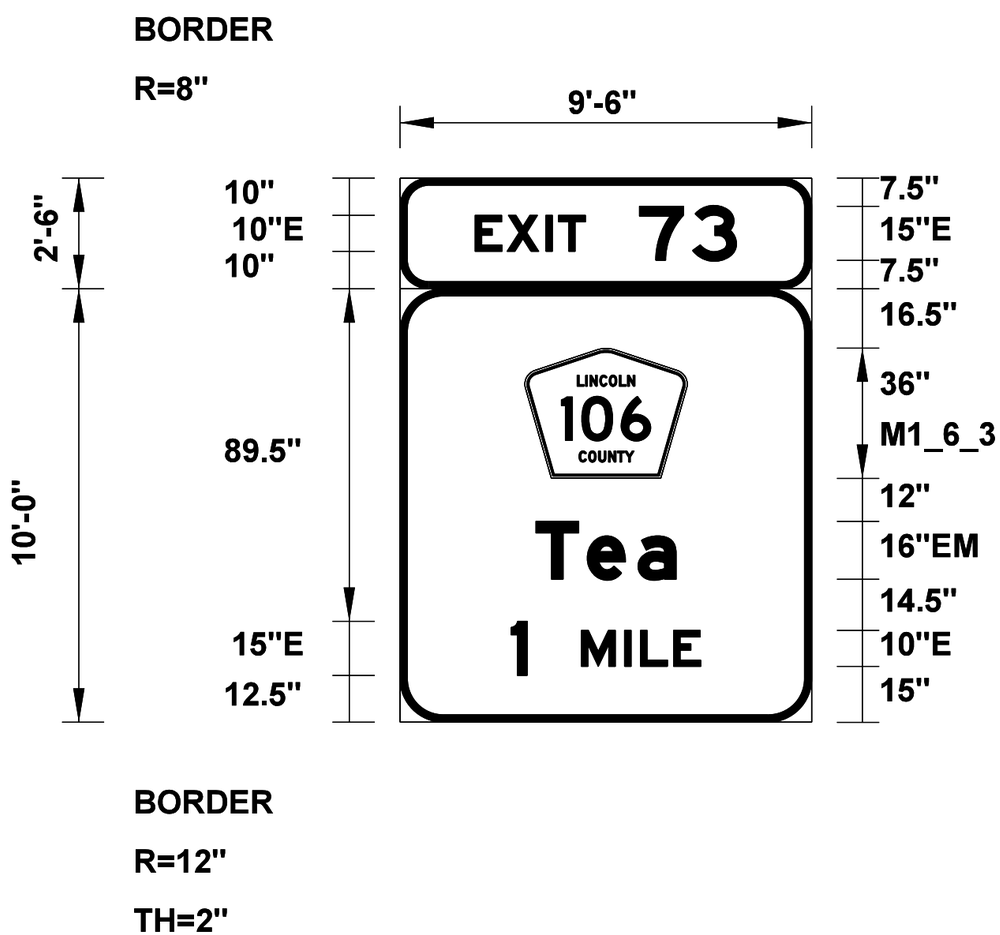

I-29 Station - a -23+25 Rt
Post Size - 8 WF 18
Post Length - 19'-7"
Post Length - 18'-7"
Footing Diameter - 2'-3"
Footing Depth - 6'-0"

Sheeting
Background - Green
Border and Legend - White
Type - Super/Very High Intensity
Extruded Aluminum
Removable Copy
Side Trim Molding - 25'

PLOT SCALE - 1:3.5
PLOTTED FROM - TRM111126
PLOT NAME - 3
FILE - ...\SIGNING\010S_SIGNS.DGN

FOR BIDDING PURPOSES ONLY

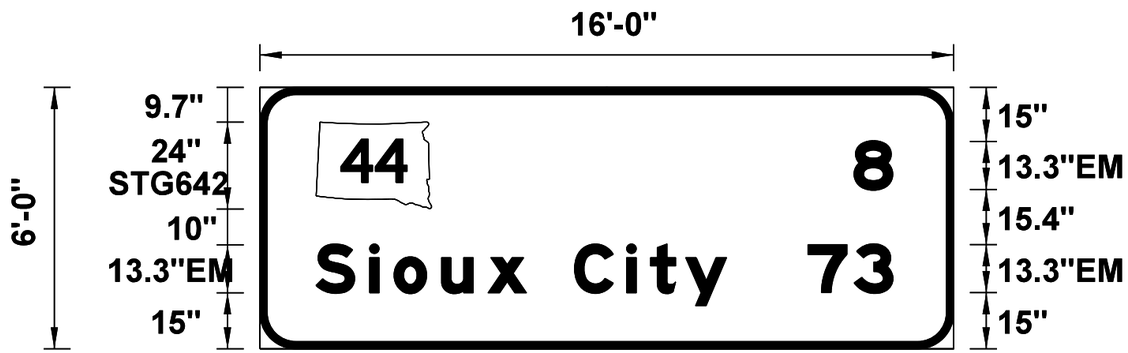

BORDER
R=10"
TH=2"

I-29 Station - b 0+25 Lt
Post Size - 8 WF 21
Post Length - 14'-6"
Post Length - 14'-6"
Footing Diameter - 2'-3"
Footing Depth - 7'-0"

Sheeting
Background - Green
Border and Legend - White
Type - Super/Very High Intensity
Extruded Aluminum
Removable Copy
Side Trim Molding - 12'

PLOT SCALE - 1:3.5
PLOTTED FROM - TRM111126
PLOT NAME - 4
FILE -...\SIGNING\010S_SIGNS.DGN

EXTRUDED ALUMINUM SIGNS WITH REMOVABLE COPY SUPER/VERY HIGH INTENSITY

FOR BIDDING PURPOSES ONLY

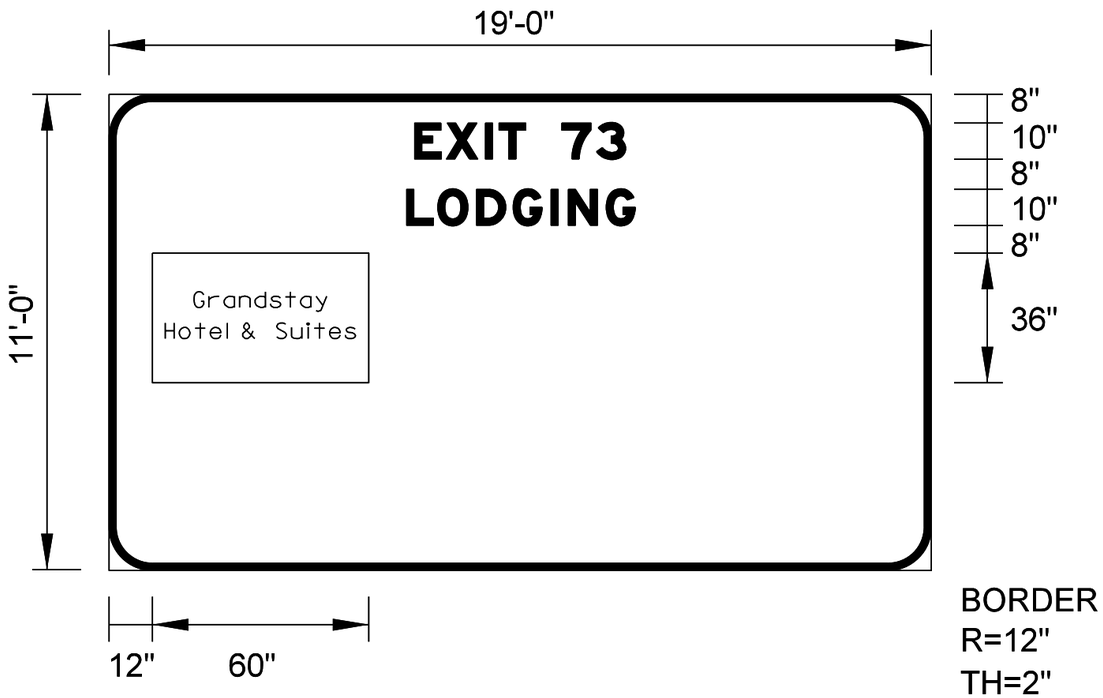

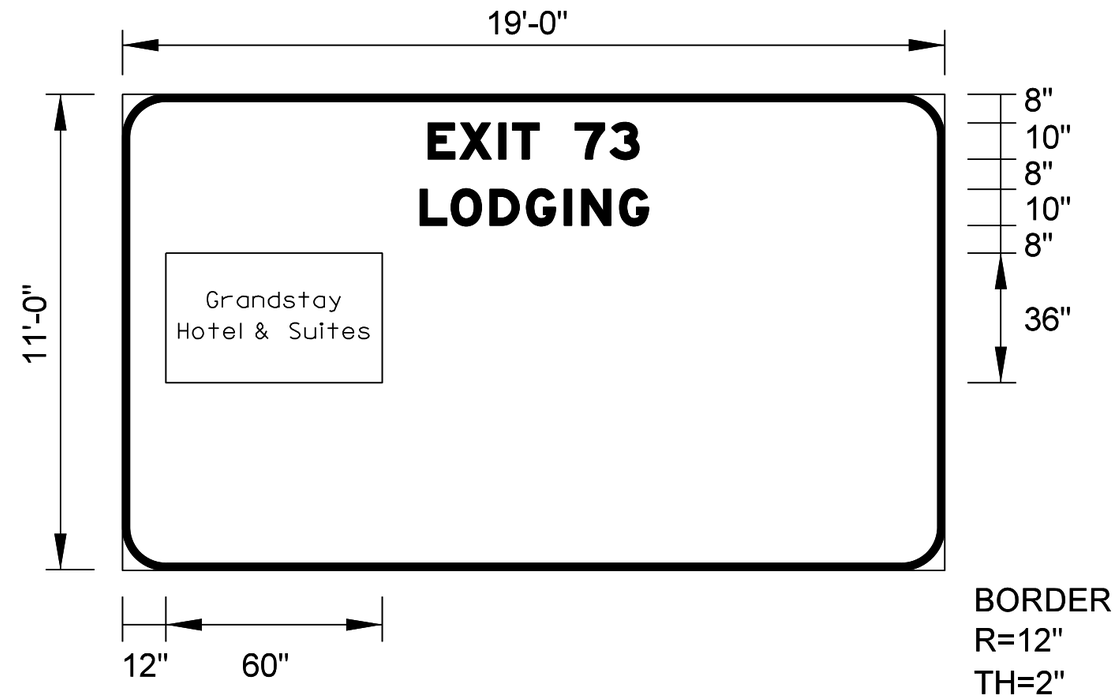

I-29 Station - b 8+75 Rt
Post Size - 8 WF 21
Post Length - 21'-0"
Post Length - 19'-6"
Footing Diameter - 2'-3"
Footing Depth - 6'-0"

Sheeting
Background - Blue
Border and Legend - White
Type - Super/Very High Intensity
Extruded Aluminum
Removable Copy
Side Trim Molding - 22'

I-29 Station - 62+80 Lt
Post Size - 8 WF 21
Post Length - 20'-2"
Post Length - 18'-10"
Footing Diameter - 2'-3"
Footing Depth - 7'-0"

Sheeting
Background - Blue
Border and Legend - White
Type - Super/Very High Intensity
Extruded Aluminum
Removable Copy
Side Trim Molding - 22'

PLOT SCALE - 1:3.5
PLOTTED FROM - TRM111126
PLOT NAME - 5
FILE - ...\SIGNING\010S_SIGNS.DGN

EXTRUDED ALUMINUM SIGNS WITH REMOVABLE COPY SUPER/VERY HIGH INTENSITY

FOR BIDDING PURPOSES ONLY

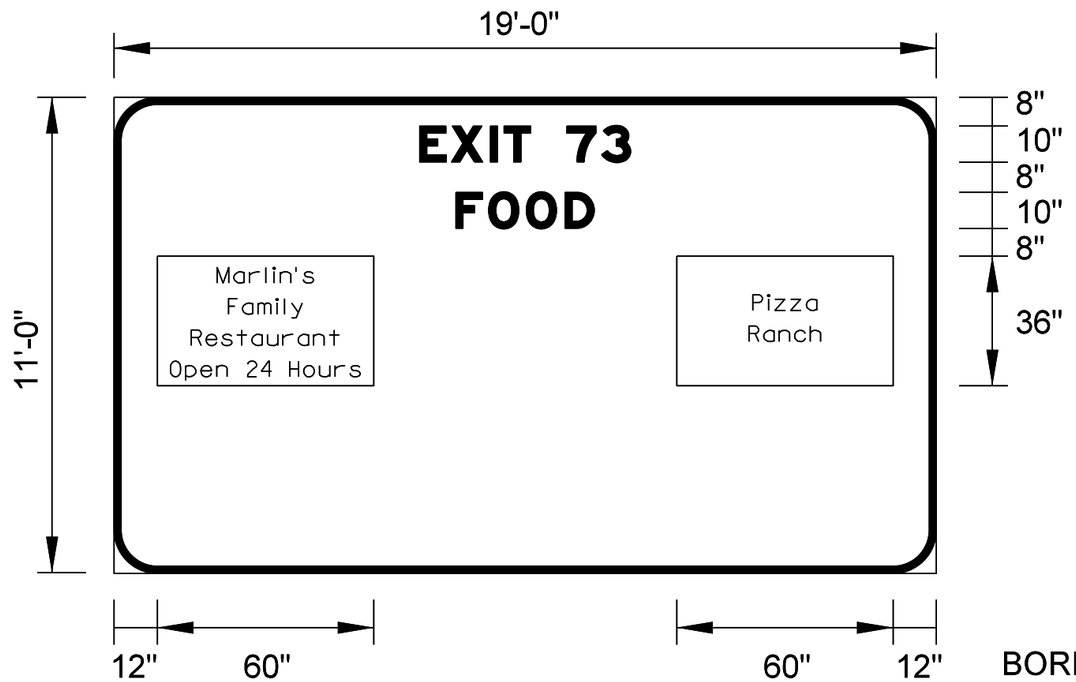

BORDER
R=12"
TH=2"

I-29 Station - b 16+75 Rt
Post Size - 8 WF 21
Post Length - 21'-0"
Post Length - 19'-6"
Footing Diameter - 2'-3"
Footing Depth - 6'-0"

Sheeting
Background - Blue
Border and Legend - White
Type - Super/Very High Intensity
Extruded Aluminum
Removable Copy
Side Trim Molding - 22'

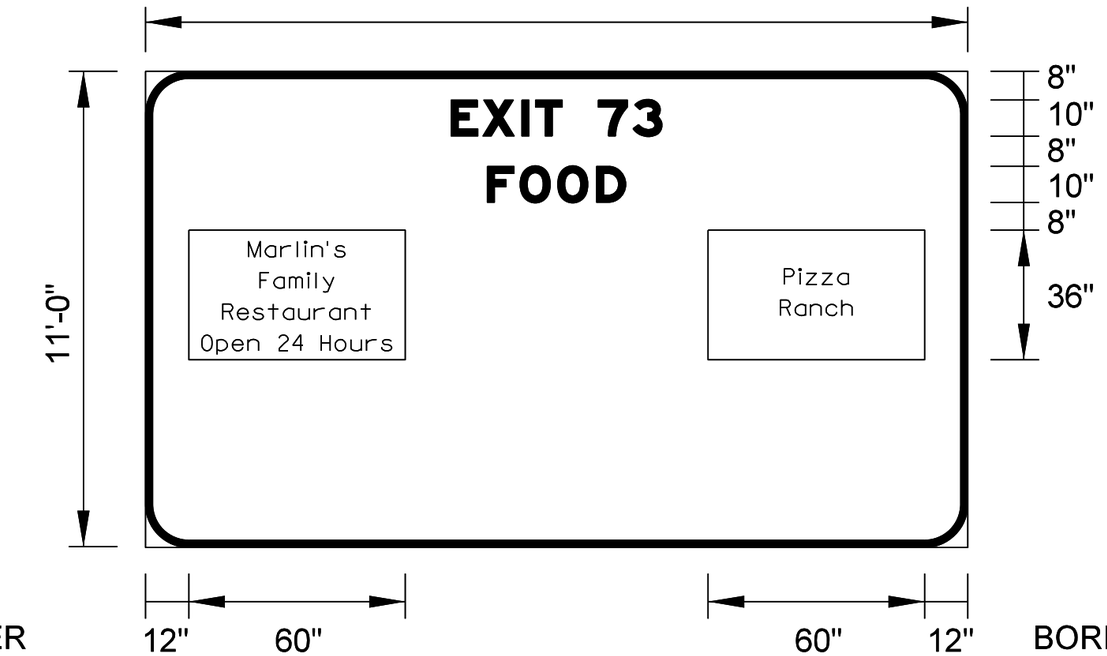

BORDER
R=12"
TH=2"

I-29 Station - 35+25 Lt
Post Size - 8 WF 31
Post Length - 23'-4"
Post Length - 23'-10"
Footing Diameter - 2'-6"
Footing Depth - 8'-0"

Sheeting
Background - Blue
Border and Legend - White
Type - Super/Very High Intensity
Extruded Aluminum
Removable Copy
Side Trim Molding - 22'

PLOT SCALE - 1:3.5
PLOTTED FROM - TRMI11126
PLOT NAME - 6
FILE -...\SIGNING\01GS_SIGNS.DGN

EXTRUDED ALUMINUM SIGNS WITH REMOVABLE COPY SUPER/VERY HIGH INTENSITY

FOR BIDDING PURPOSES ONLY

STATE OF SOUTH DAKOTA	PROJECT	SHEET	TOTAL SHEETS
	IM 0293(96)73 IM 2292(90)0	S24	S116

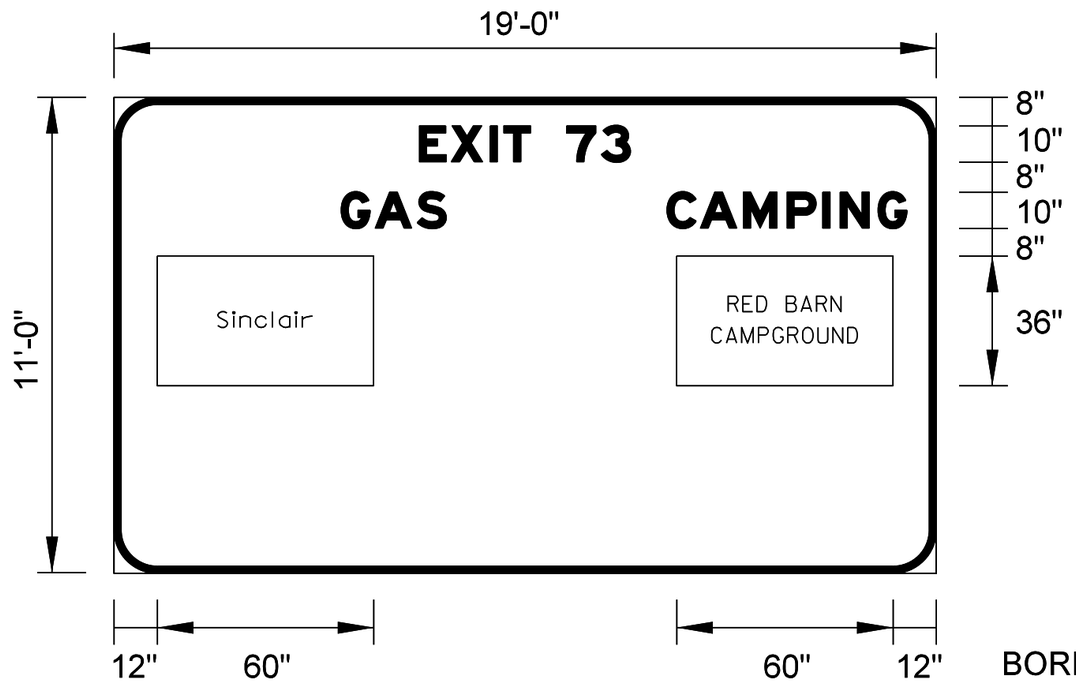

BORDER
R=12"
TH=2"

I-29 Station - b 24+75 Rt
Post Size - 8 WF 28
Post Length - 22'-3"
Post Length - 20'-2"
Footing Diameter - 2'-3"
Footing Depth - 8'-0"

Sheeting
Background - Blue
Border and Legend - White
Type - Super/Very High Intensity
Extruded Aluminum
Removable Copy
Side Trim Molding - 22'

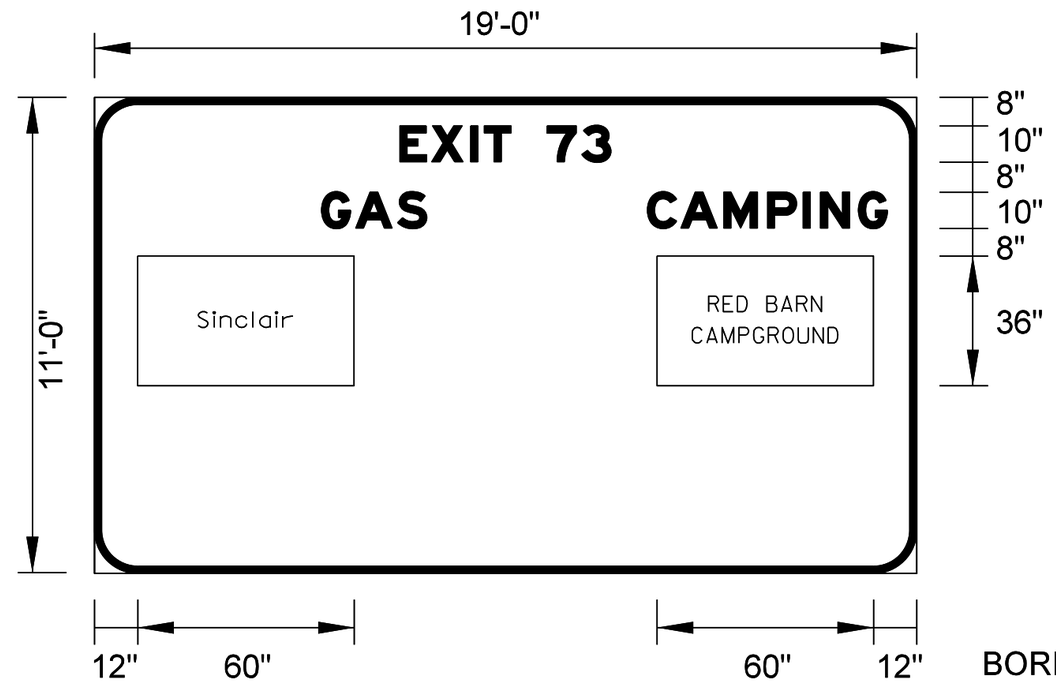

BORDER
R=12"
TH=2"

I-29 Station - 28+75 Lt
Post Size - 8 WF 28
Post Length - 23'-4"
Post Length - 20'-5"
Footing Diameter - 1'-9"
Footing Depth - 8'-0"

Sheeting
Background - Blue
Border and Legend - White
Type - Super/Very High Intensity
Extruded Aluminum
Removable Copy
Side Trim Molding - 22'

PLOT SCALE - 1:3.5
PLOTTED FROM - TRMI11126
PLOT NAME - 7
FILE -...\SIGNING\01GS_SIGNS.DGN

EXTRUDED ALUMINUM SIGNS WITH REMOVABLE COPY SUPER/VERY HIGH INTENSITY

FOR BIDDING PURPOSES ONLY

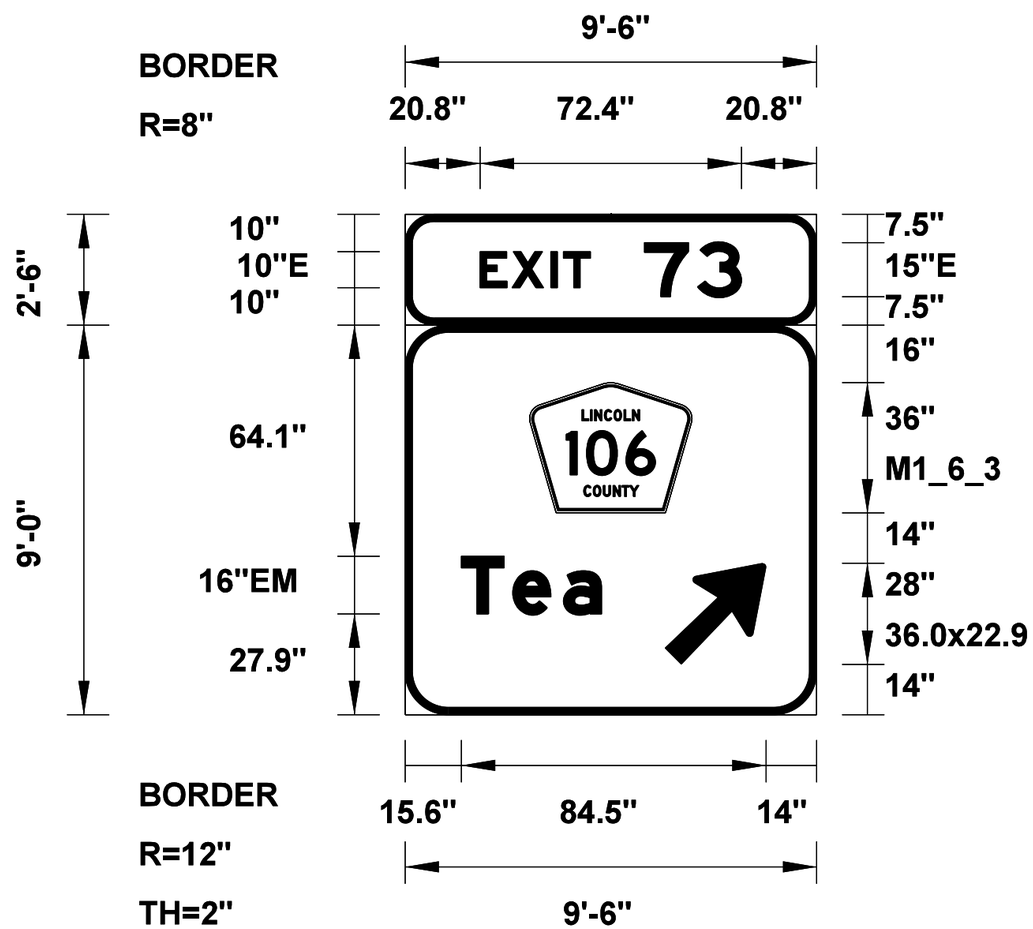

I-29 Station - b 32+75 Rt
Post Size - 8 WF 21
Post Length - 24'-0"
Post Length - 22'-1"
Footing Diameter - 2'-3"
Footing Depth - 5'-0"

Sheeting
Background - Green
Border and Legend - White
Type - Super/Very High Intensity
Extruded Aluminum
Non-removable Copy
Side Trim Molding - 23'

PLOT SCALE - 1:3.5
PLOT NAME - 10
FILE -...\SIGNING\010S_SIGNS.DGN
PLOTTED FROM - TRMI11126

EXTRUDED ALUMINUM SIGNS WITH REMOVABLE COPY SUPER/VERY HIGH INTENSITY

FOR BIDDING PURPOSES ONLY

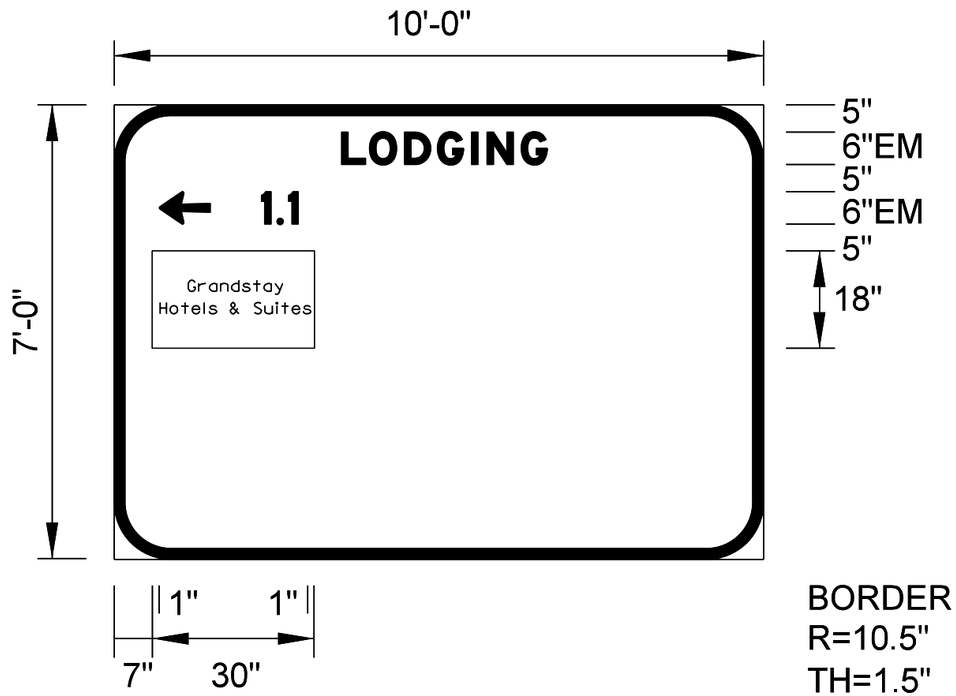

I-29 Exit 73 Ramp B
Station - 3011+50 Rt
Post Size - 6 WF 20
Post Length - 16'-10"
Post Length - 15'-5"
Footing Diameter - 1'-9"
Footing Depth - 7'-0"

Sheeting
Background - Blue
Border and Legend - White
Type - Super/Very High Intensity
Extruded Aluminum
Removable Copy
Side Trim Molding - 14'

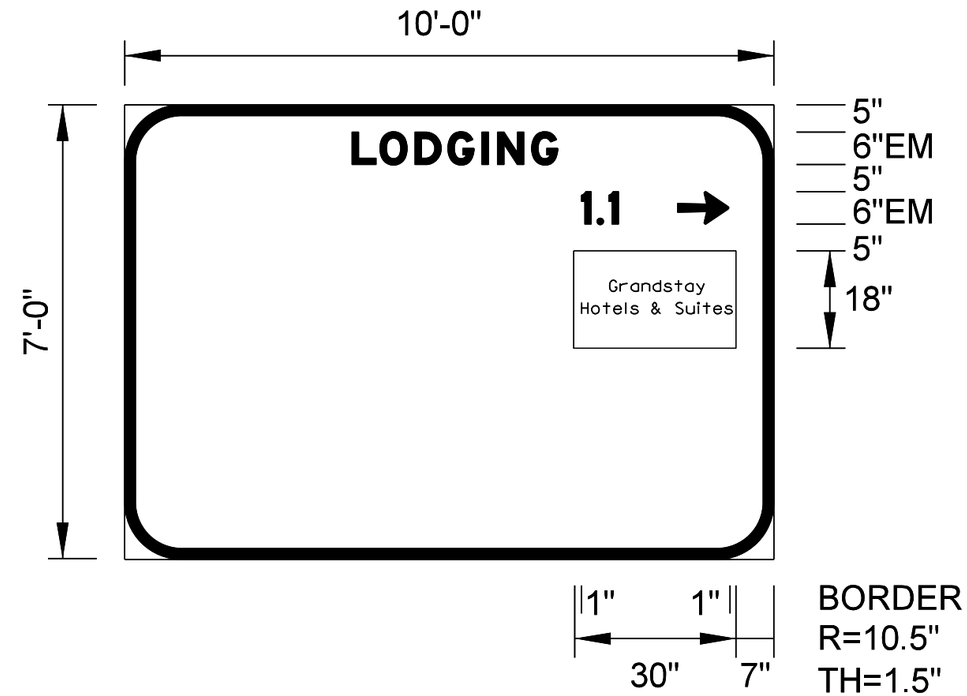

I-29 Exit 73 Ramp D
Station - 5007+50 Lt
Post Size - 6 WF 20
Post Length - 16'-8"
Post Length - 15'-10"
Footing Diameter - 1'-9"
Footing Depth - 6'-0"

Sheeting
Background - Blue
Border and Legend - White
Type - Super/Very High Intensity
Extruded Aluminum
Removable Copy
Side Trim Molding - 14'

PLOT SCALE - 1:3.5
PLOTTED FROM - TRMI11126
PLOT NAME - 8
FILE -...\SIGNING\0IGS_SIGNS.DGN

EXTRUDED ALUMINUM SIGNS WITH REMOVABLE COPY SUPER/VERY HIGH INTENSITY

FOR BIDDING PURPOSES ONLY

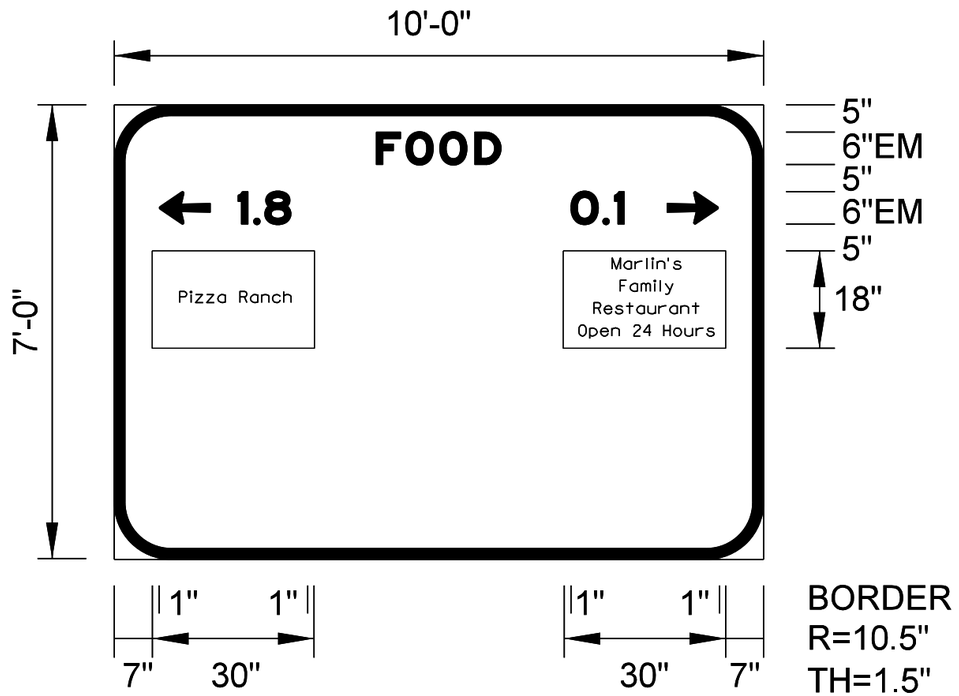

I-29 Exit 73 Ramp B
Station - 3013+00 Rt
Post Size - 6 WF 20
Post Length - 16′-10″
Post Length - 15′-5″
Footing Diameter - 1′-9″
Footing Depth - 7′-0″

Sheeting
Background - Blue
Border and Legend - White
Type - Super/Very High Intensity
Extruded Aluminum
Removable Copy
Side Trim Molding - 14′

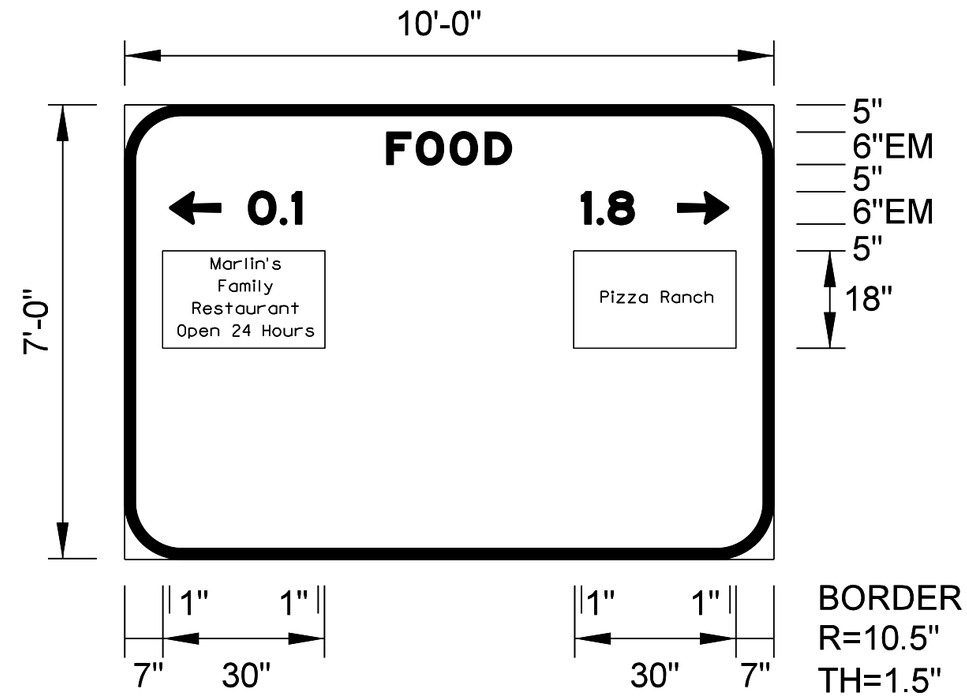

I-29 Exit 73 Ramp D
Station - 5006+00 Lt
Post Size - 6 WF 20
Post Length - 17′-1″
Post Length - 15′-4″
Footing Diameter - 1′-9″
Footing Depth - 6′-0″

Sheeting
Background - Blue
Border and Legend - White
Type - Super/Very High Intensity
Extruded Aluminum
Removable Copy
Side Trim Molding - 14′

PLOT SCALE - 1:3.5
PLOTTED FROM - TRMI11126
PLOT NAME - 9
FILE -...\SIGNING\0IOS_SIGNS.DGN

EXTRUDED ALUMINUM SIGNS WITH REMOVABLE COPY SUPER/VERY HIGH INTENSITY

FOR BIDDING PURPOSES ONLY

STATE OF SOUTH DAKOTA	PROJECT	SHEET	TOTAL SHEETS
	IM 0293(96)73 IM 2292(90)0	S28	S116

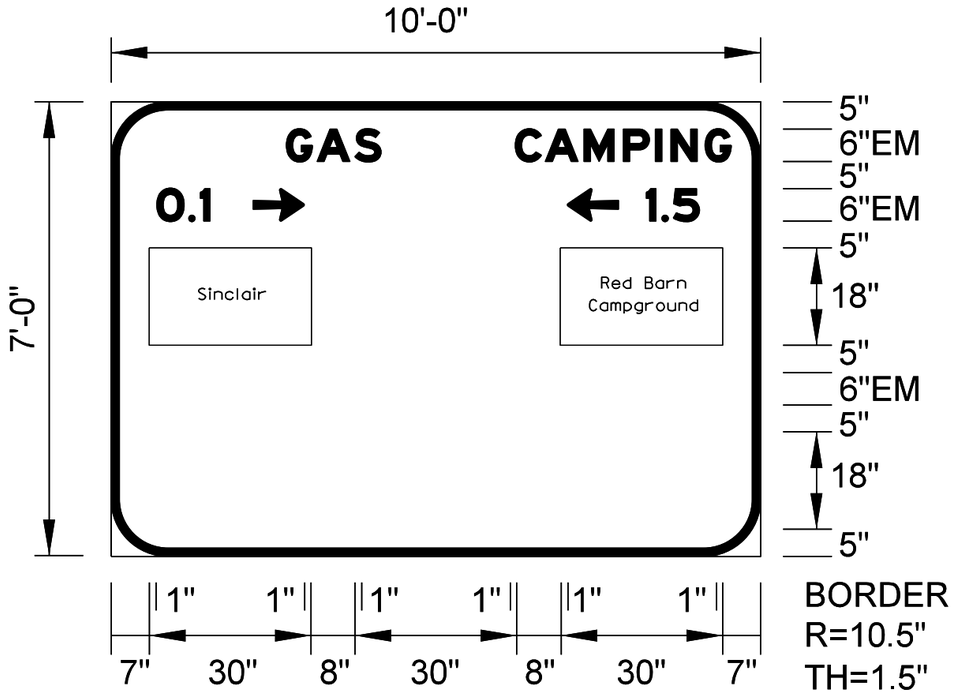

I-29 Exit 73 Ramp B
Station - 3014+50 Rt
Existing Post Size - 6 WF 15
Existing Post Length - 15'-2"
Existing Post Length - 17'-0"
Existing Footing Diameter - 2'-0"
Existing Footing Depth - 5'-0"

Sheeting
Background - Blue
Border and Legend - White
Type - Super/Very High Intensity
Extruded Aluminum
Removable Copy
Side Trim Molding - 14'

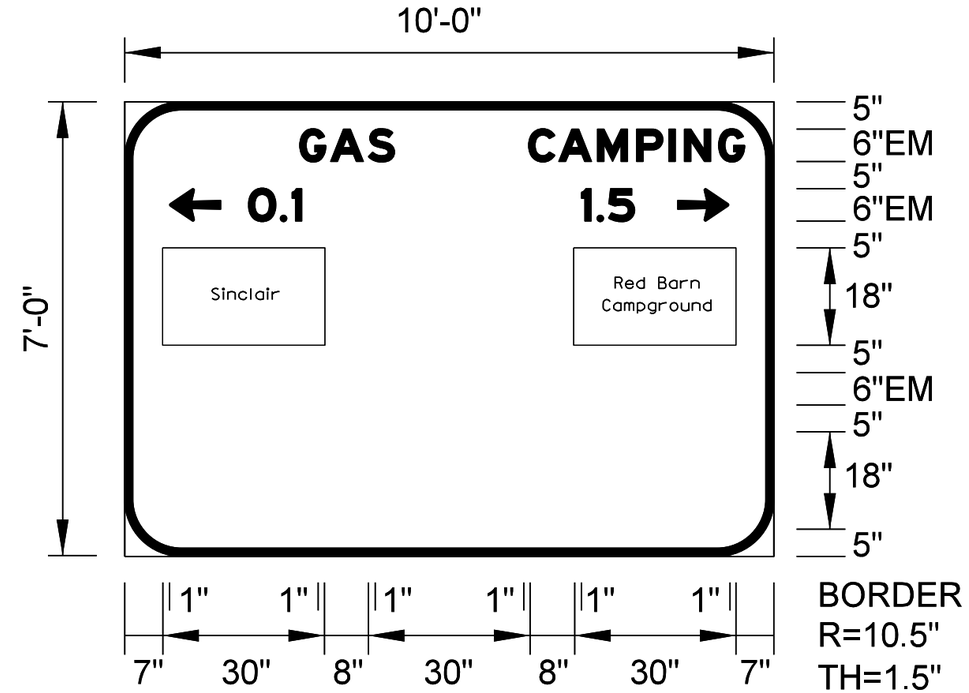

I-29 Exit 73 Ramp D
Station - 5004+50 Rt
Existing Post Size - 6 WF 15
Existing Post Length - 15'-2"
Existing Post Length - 17'-0"
Existing Footing Diameter - 2'-0"
Existing Footing Depth - 5'-0"

Sheeting
Background - Blue
Border and Legend - White
Type - Super/Very High Intensity
Extruded Aluminum
Removable Copy
Side Trim Molding - 14'

PLOT SCALE - 1:3.5
PLOTTED FROM - TRMI11126
PLOT NAME - 11
FILE -...\SIGNING\010S_SIGNS.DGN

EXTRUDED ALUMINUM SIGNS WITH REMOVABLE COPY SUPER/VERY HIGH INTENSITY

FOR BIDDING PURPOSES ONLY

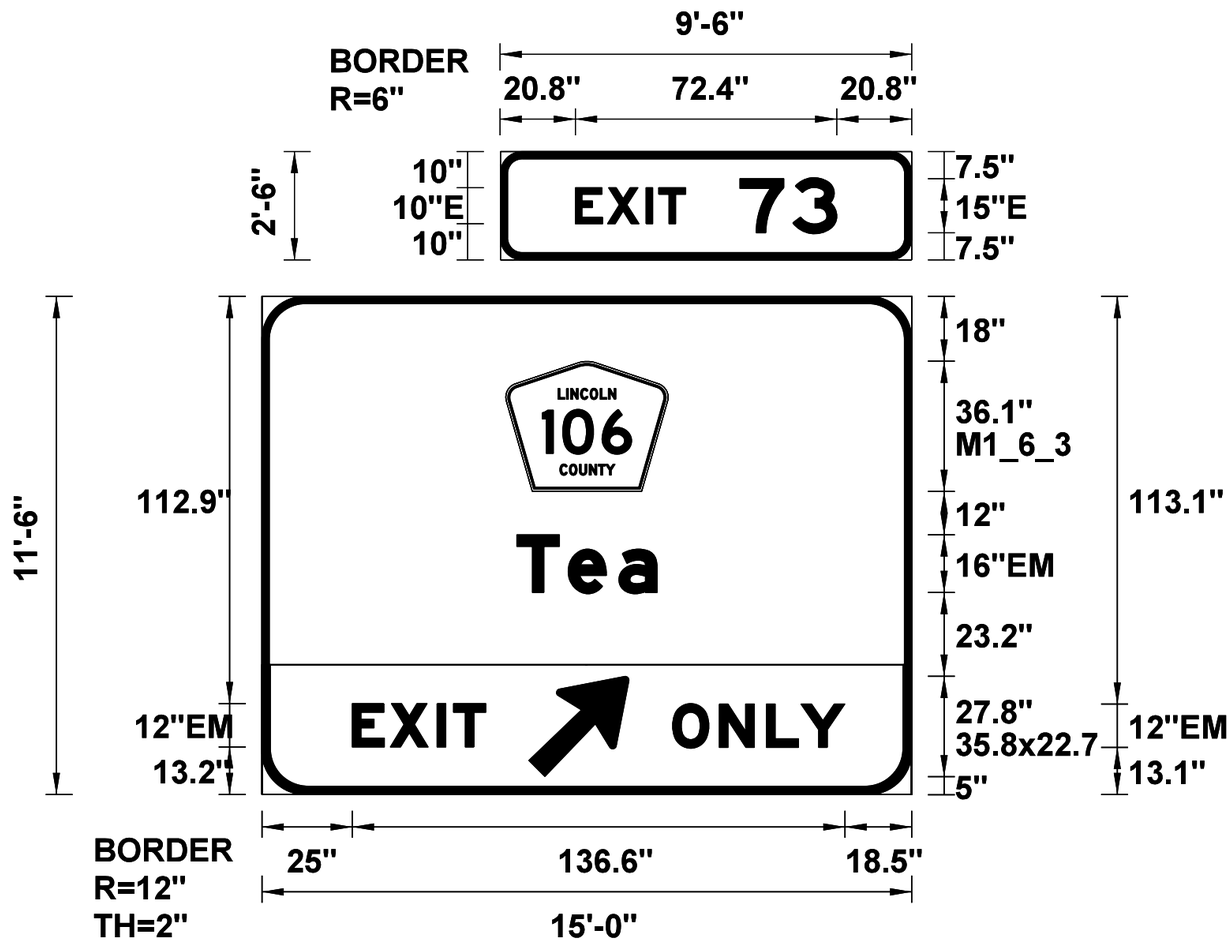

Sheeting
Background - Yellow
Border and Legend - Black
Type - Super/Very High Intensity
Extruded Aluminum
Non-removable Copy
Side Trim Molding - 6'

I-29 Station - 22+25 Lt
Cantilever Support

Sheeting
Background - Green
Border and Legend - White
Type - Super/Very High Intensity
Extruded Aluminum
Non-removable Copy
Side Trim Molding - 22'

PLOT SCALE - 1:3.5
PLOTTED FROM - TRMI11126
PLOT NAME - 12
FILE -...\SIGNING\010S_SIGNS.DGN

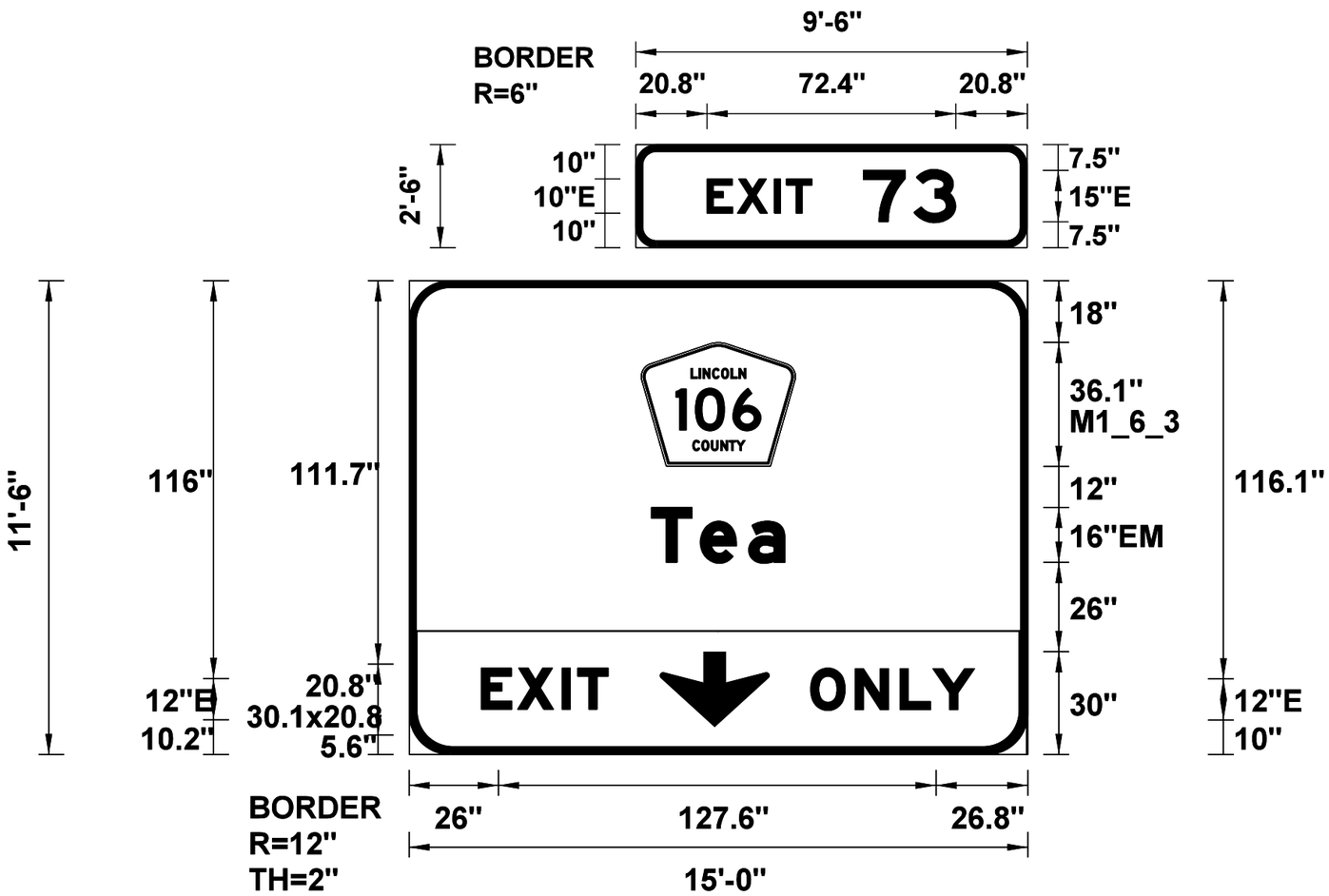

I-29 Station - 41+75 Lt
Cantilever Support

Sheeting
Background - Green
Border and Legend - White
Type - Super/Very High Intensity
Extruded Aluminum
Non-removable Copy
Side Trim Molding - 17'

Sheeting
Background - Yellow
Border and Legend - Black
Type - Super/Very High Intensity
Extruded Aluminum
Non-removable Copy
Side Trim Molding - 6'

PLOT SCALE - 1:3.5
PLOTTED FROM - TRMI11126
PLOT NAME - 13
FILE -...\SIGNING\01OS_SIGNS.DGN

EXTRUDED ALUMINUM SIGNS WITH REMOVABLE COPY SUPER/VERY HIGH INTENSITY

FOR BIDDING PURPOSES ONLY

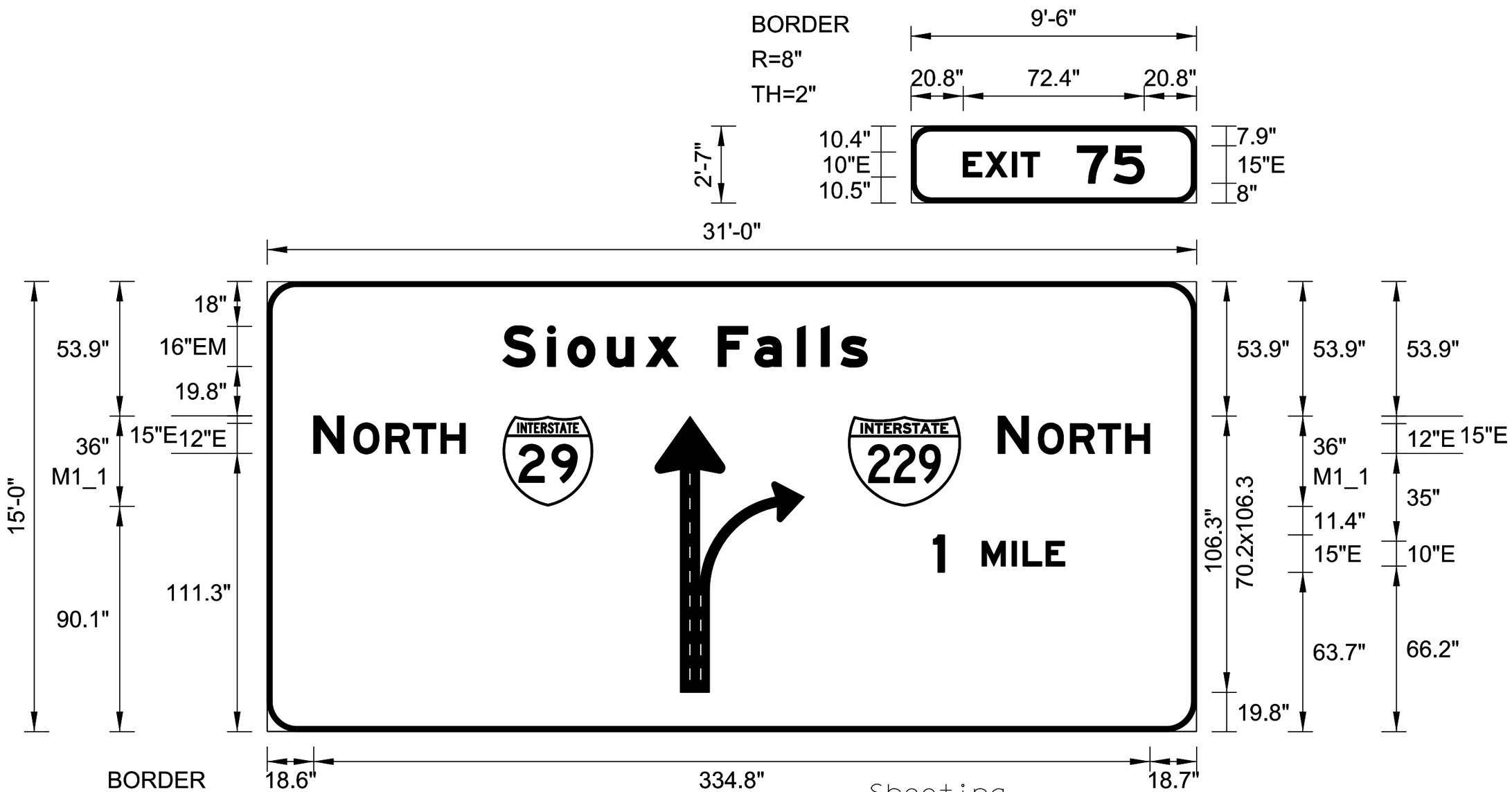

I-29 Station - 52+80 Rt
Sign Bridge

Sheeting
Background - Green
Border and Legend - White
Type - Super/Very High Intensity
Extruded Aluminum
Non-removable Copy
Side Trim Molding - 35'

PLOT SCALE - 1:3.5
PLOTTED FROM - TRM111126
PLOT NAME - 14
FILE - ...\SIGNING\010S_SIGNS.DGN

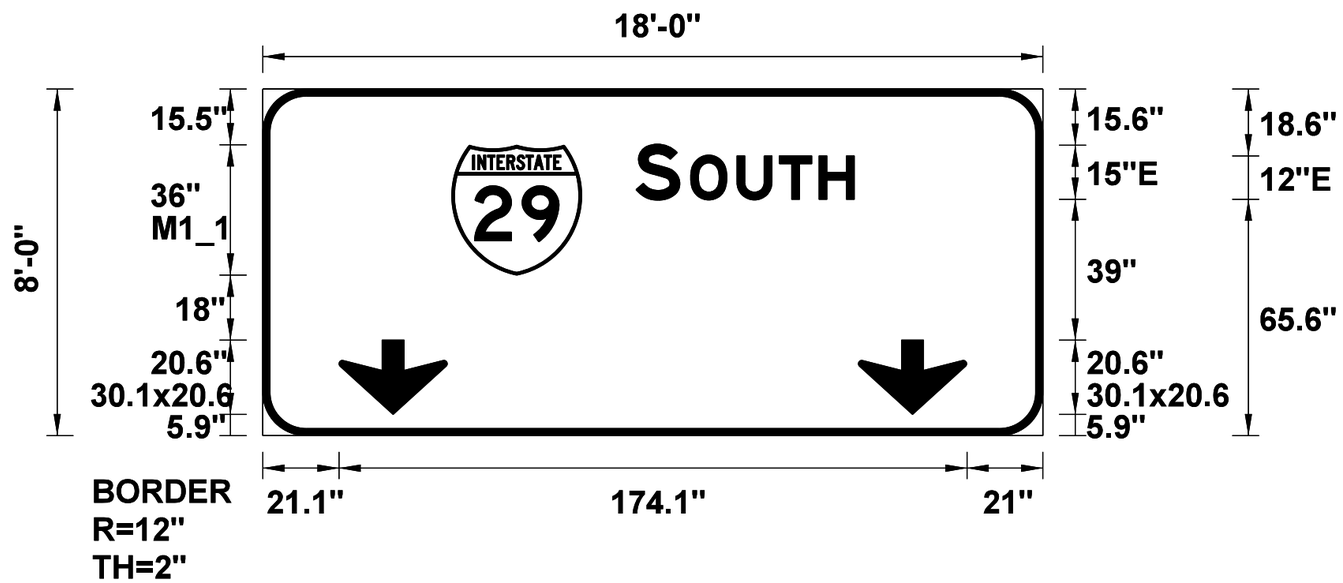

I-29 Station - 69+30 Lt
Sign Bridge

Sheeting
Background - Green
Border and Legend - White
Type - Super/Very High Intensity
Extruded Aluminum
Non-removable Copy
Side Trim Molding - 16'

PLOT SCALE - 1:3.5
PLOTTED FROM - TRM111126
PLOT NAME - 15
FILE - ...\SIGNING\010S_SIGNS.DGN

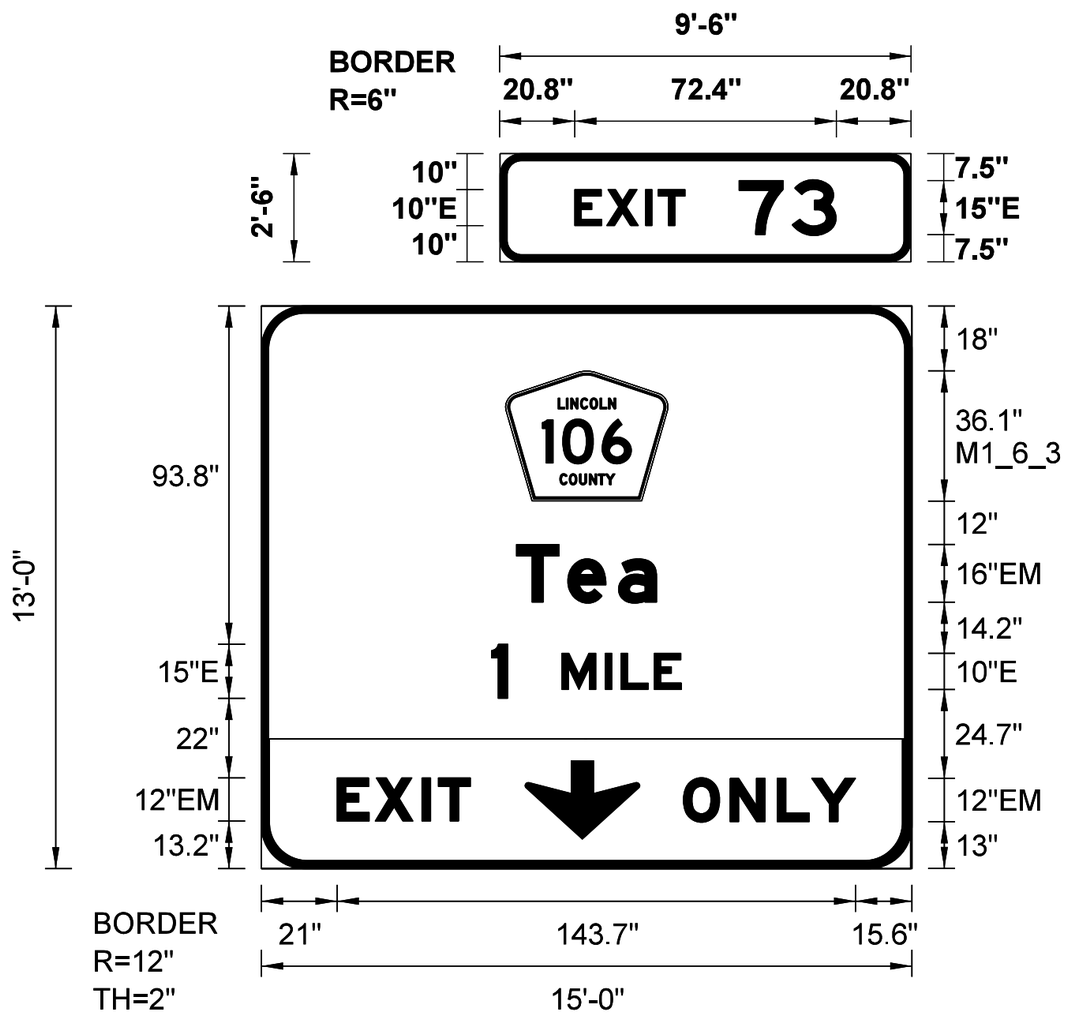

Sheeting
Background - Yellow
Border and Legend - Black
Type - Super/Very High Intensity
Extruded Aluminum
Non-removable Copy
Side Trim Molding - 6'

I-29 Station - 69+30 Lt
Sign Bridge

Sheeting
Background - Green
Border and Legend - White
Type - Super/Very High Intensity
Extruded Aluminum
Non-removable Copy
Side Trim Molding - 25'

PLOT SCALE - 1:3.5
PLOTTED FROM - TRM111126
PLOT NAME - 16
FILE -...\SIGNING\010S_SIGNS.DGN

EXTRUDED ALUMINUM SIGNS WITH REMOVABLE COPY SUPER/VERY HIGH INTENSITY

FOR BIDDING PURPOSES ONLY

STATE OF SOUTH DAKOTA	PROJECT	SHEET	TOTAL SHEETS
	IM 0293(96)73 IM 2292(90)0	S34	S116

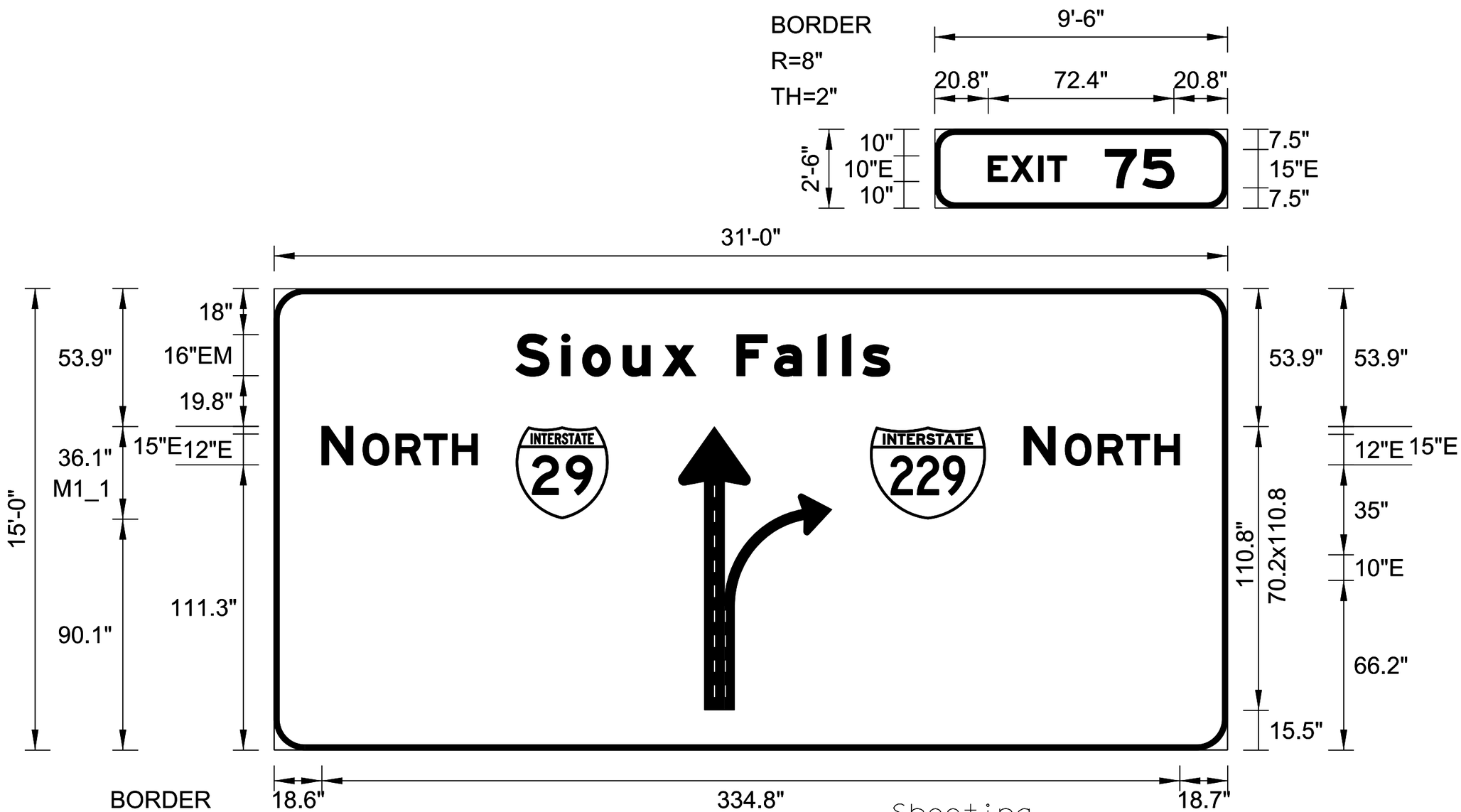

I-29 Station - 79+20 Rt
Sign Bridge

Sheeting
Background - Green
Border and Legend - White
Type - Super/Very High Intensity
Extruded Aluminum
Non-removable Copy
Side Trim Molding - 35'

PLOT SCALE - 1:3.5
PLOTTED FROM - TRM111126
PLOT NAME - 17
FILE - ...\SIGNING\010S_SIGNS.DGN

EXTRUDED ALUMINUM SIGNS WITH REMOVABLE COPY SUPER/VERY HIGH INTENSITY

FOR BIDDING PURPOSES ONLY

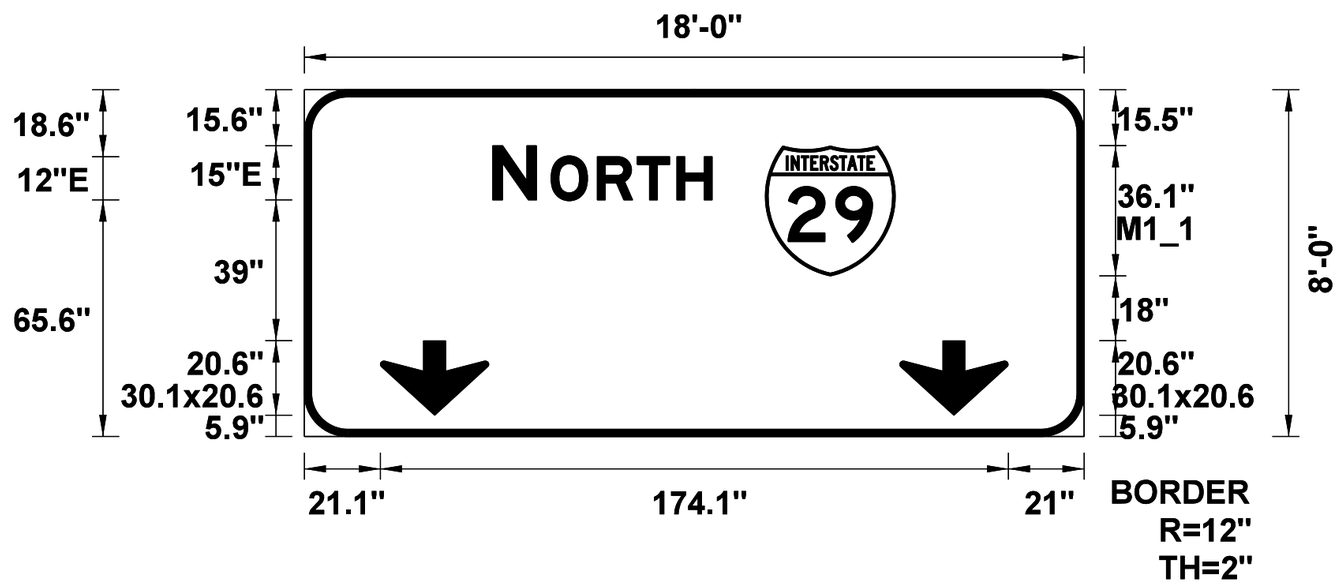

I-29 Station - 105+60 Rt
Sign Bridge

Sheeting
Background - Green
Border and Legend - White
Type - Super/Very High Intensity
Extruded Aluminum
Removable Copy
Side Trim Molding - 16'

PLOT SCALE - 1:3.5
PLOTTED FROM - TRM111126
PLOT NAME - 20
FILE -...\SIGNING\010S_SIGNS.DGN

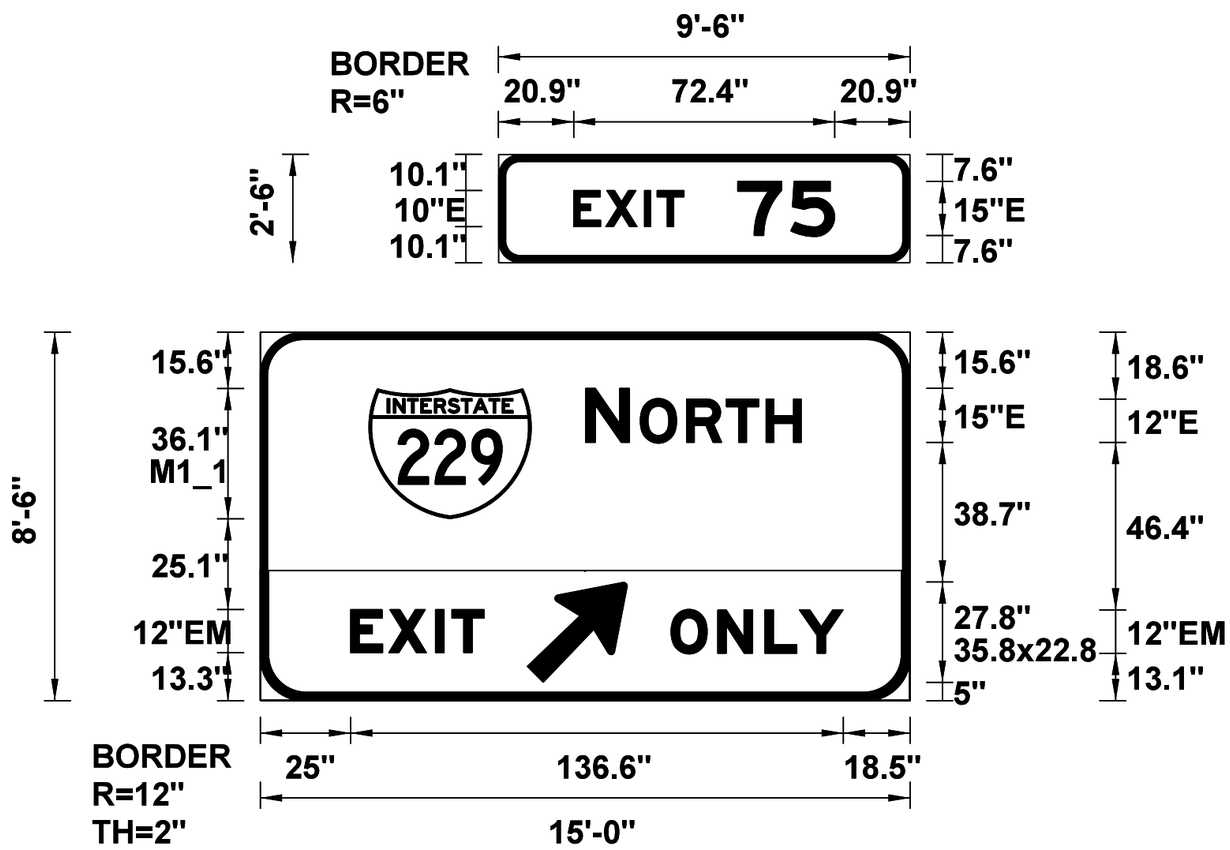

Sheeting
Background - Yellow
Border and Legend - Black
Type - Super/Very High Intensity
Extruded Aluminum
Removable Copy
Side Trim Molding - 6'

I-29 Station - 105+60 Rt
Sign Bridge

I-29 Station - 115+00 Lt
Sign Bridge

Sheeting
Background - Green
Border and Legend - White
Type - Super/Very High Intensity
Extruded Aluminum
Removable Copy
Side Trim Molding - 16'

PLOT SCALE - 1:3.5
PLOTTED FROM - TRM111126
PLOT NAME - 21
FILE -...\SIGNING\0105_SIGNS.DGN

EXTRUDED ALUMINUM SIGNS WITH REMOVABLE COPY SUPER/VERY HIGH INTENSITY

FOR BIDDING PURPOSES ONLY

STATE OF SOUTH DAKOTA	PROJECT	SHEET	TOTAL SHEETS
	IM 0293(96)73 IM 2292(90)0	S37	S116

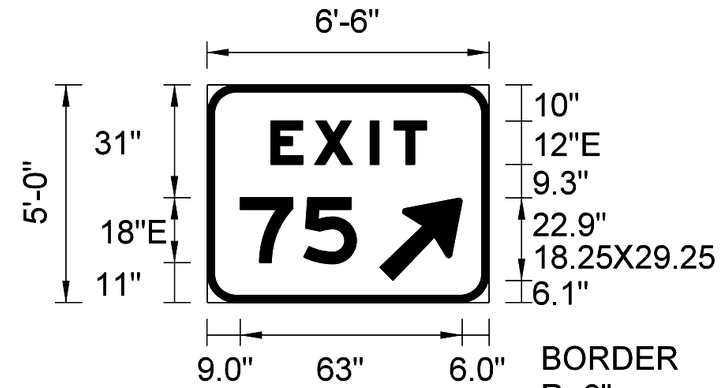

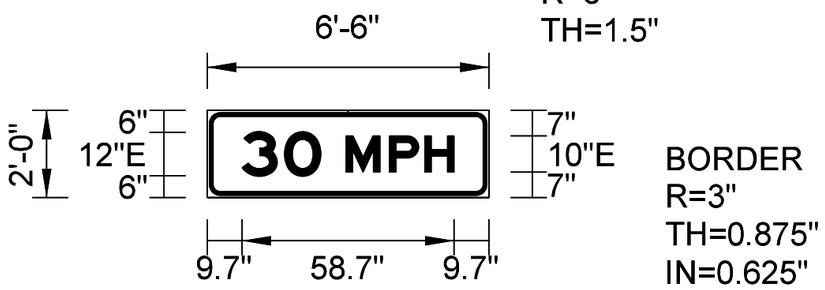

I-29 Station - 105+85 Lt
Post Size - 6 WF 12
Post Length - 15'-0"
Post Length - 15'-0"
Footing Diameter - 1'-9"
Footing Depth - 5'-0"

Sheeting
Background - Green
Border and Legend - White
Type - Super/Very High Intensity
Extruded Aluminum
Removable Copy
Side Trim Molding - 10'

Sheeting
Background - Yellow
Border and Legend - Black
Type - Super/Very High Intensity
Extruded Aluminum
Removable Copy
Side Trim Molding - 4'

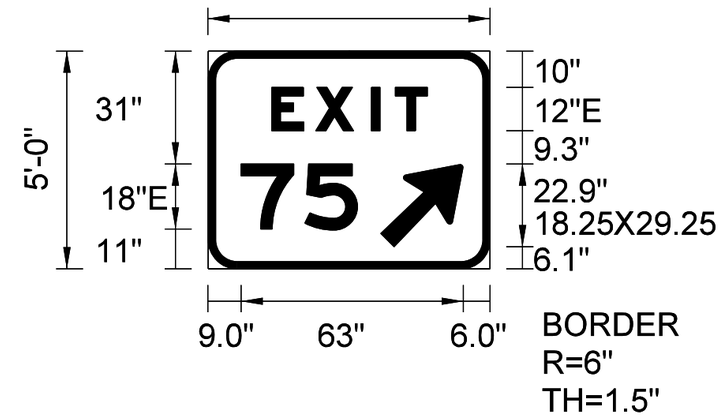

I-29 Station - 109+60 Rt
Post Size - 6 WF 12
Post Length - 12'-0"
Post Length - 12'-0"
Footing Diameter - 1'-9"
Footing Depth - 5'-0"

Sheeting
Background - Green
Border and Legend - White
Type - Super/Very High Intensity
Extruded Aluminum
Removable Copy
Side Trim Molding - 10'

PLOT SCALE - 1:3.5
PLOTTED FROM - TRMI11126
PLOT NAME - 18
FILE -...\SIGNING\0IOS_SIGNS.DGN

EXTRUDED ALUMINUM SIGNS WITH REMOVABLE COPY SUPER/VERY HIGH INTENSITY

FOR BIDDING PURPOSES ONLY

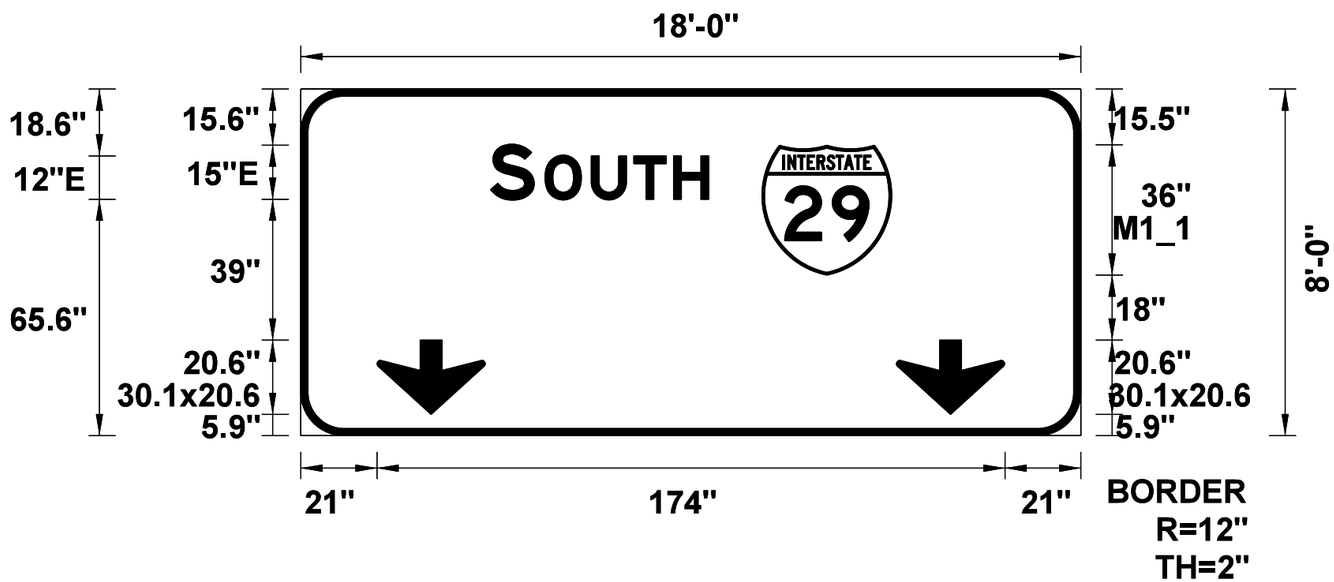

I-29 Station - 115+00 Lt
Sign Bridge

I-29 Station - 158+25 Lt
Existing Sign Bridge

Sheeting
Background - Green
Border and Legend - White
Type - Super/Very High Intensity
Extruded Aluminum
Removable Copy
Side Trim Molding - 16'

PLOT SCALE - 1:3.5
PLOTTED FROM - TRM111126
PLOT NAME - 19
FILE - ...\SIGNING\010S_SIGNS.DGN

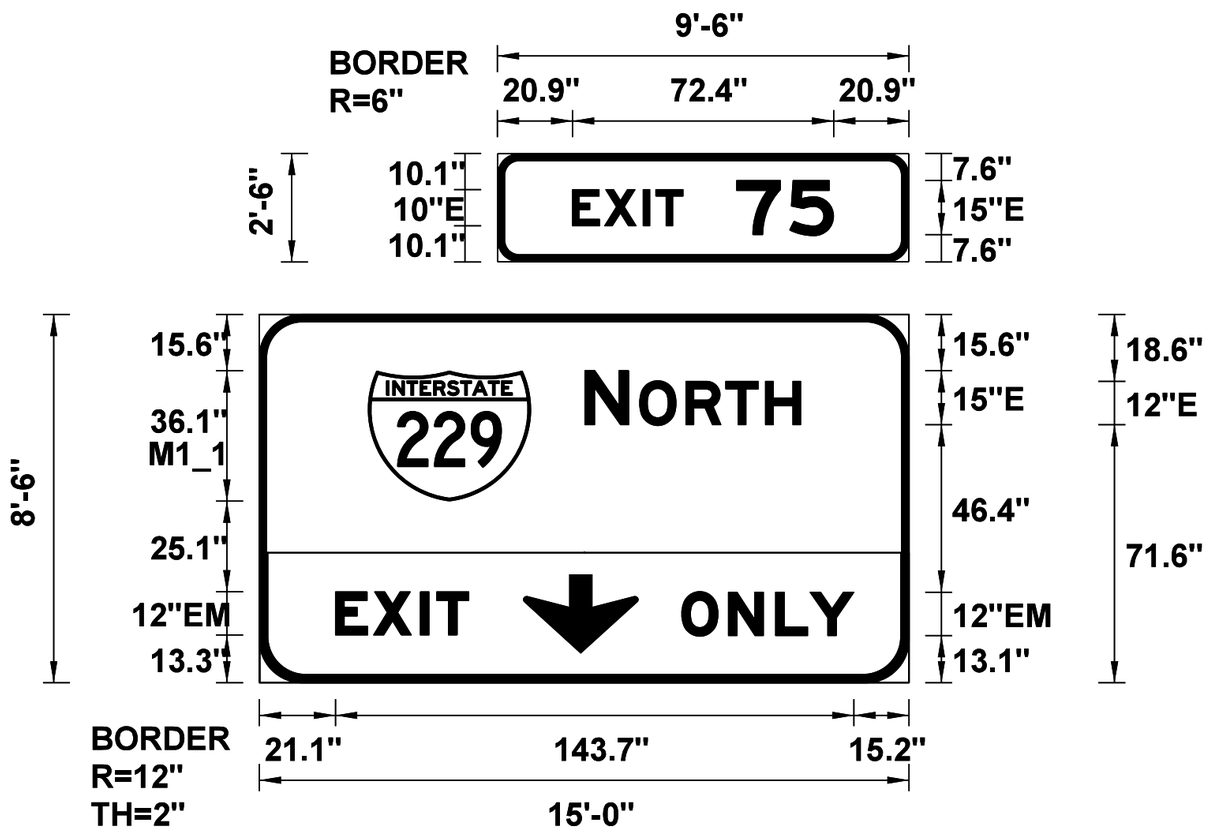

I-29 Station - 141+35 Lt
Sign Bridge

Sheeting
Background - Green
Border and Legend - White
Type - Super/Very High Intensity
Extruded Aluminum
Removable Copy
Side Trim Molding - 16'

Sheeting
Background - Yellow
Border and Legend - Black
Type - Super/Very High Intensity
Extruded Aluminum
Removable Copy
Side Trim Molding - 6'

PLOT SCALE - 1:3.5
PLOTTED FROM - TRM111126
PLOT NAME - 22
FILE - ...\SIGNING\0IGS_SIGNS.DGN

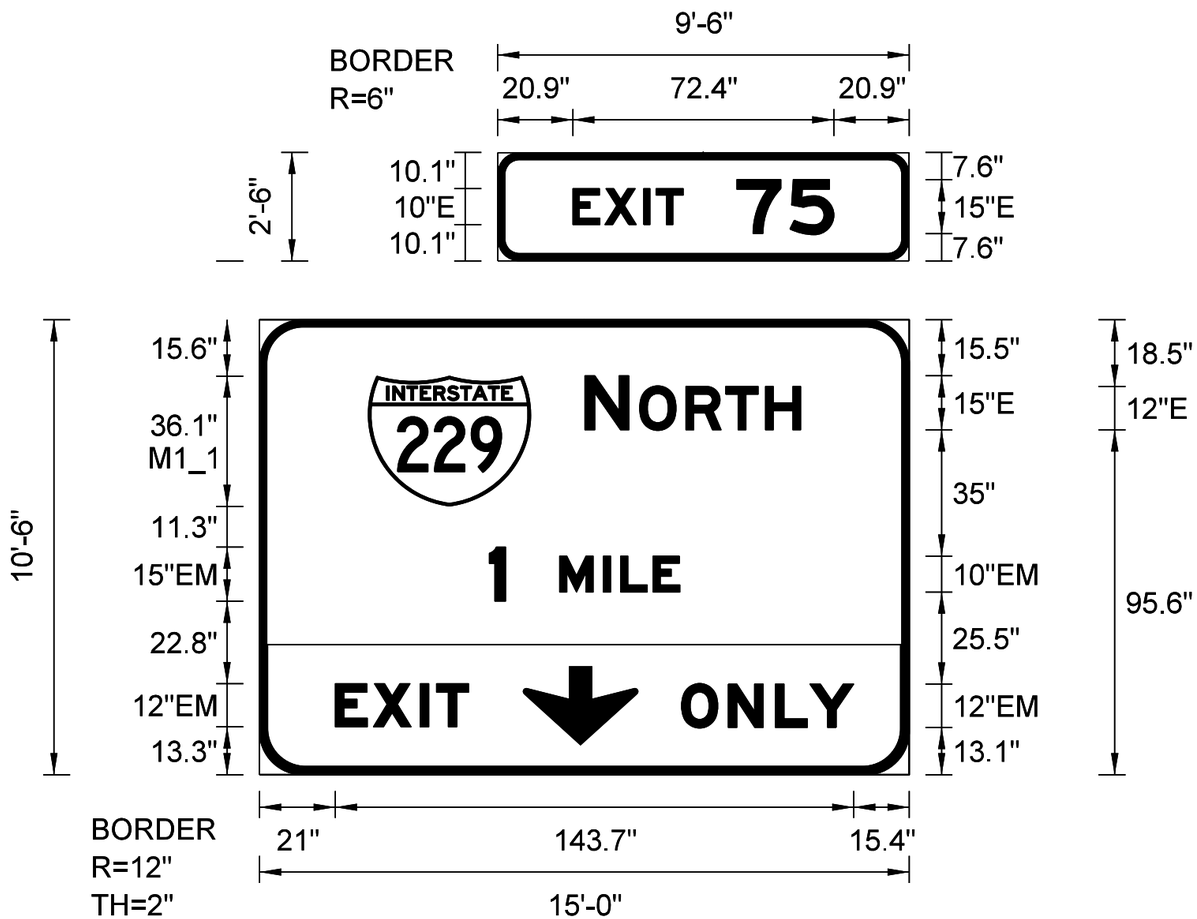

I-29 Station - 158+25 Lt
Existing Sign Bridge

Sheeting
Background - Green
Border and Legend - White
Type - Super/Very High Intensity
Extruded Aluminum
Non-removable Copy
Side Trim Molding - 20'

Sheeting
Background - Yellow
Border and Legend - Black
Type - Super/Very High Intensity
Extruded Aluminum
Removable Copy
Side Trim Molding - 6'

PLOT SCALE - 1:3.5
PLOTTED FROM - TRM111126
PLOT NAME - 41
FILE - ...\SIGNING\010S_SIGNS.DGN

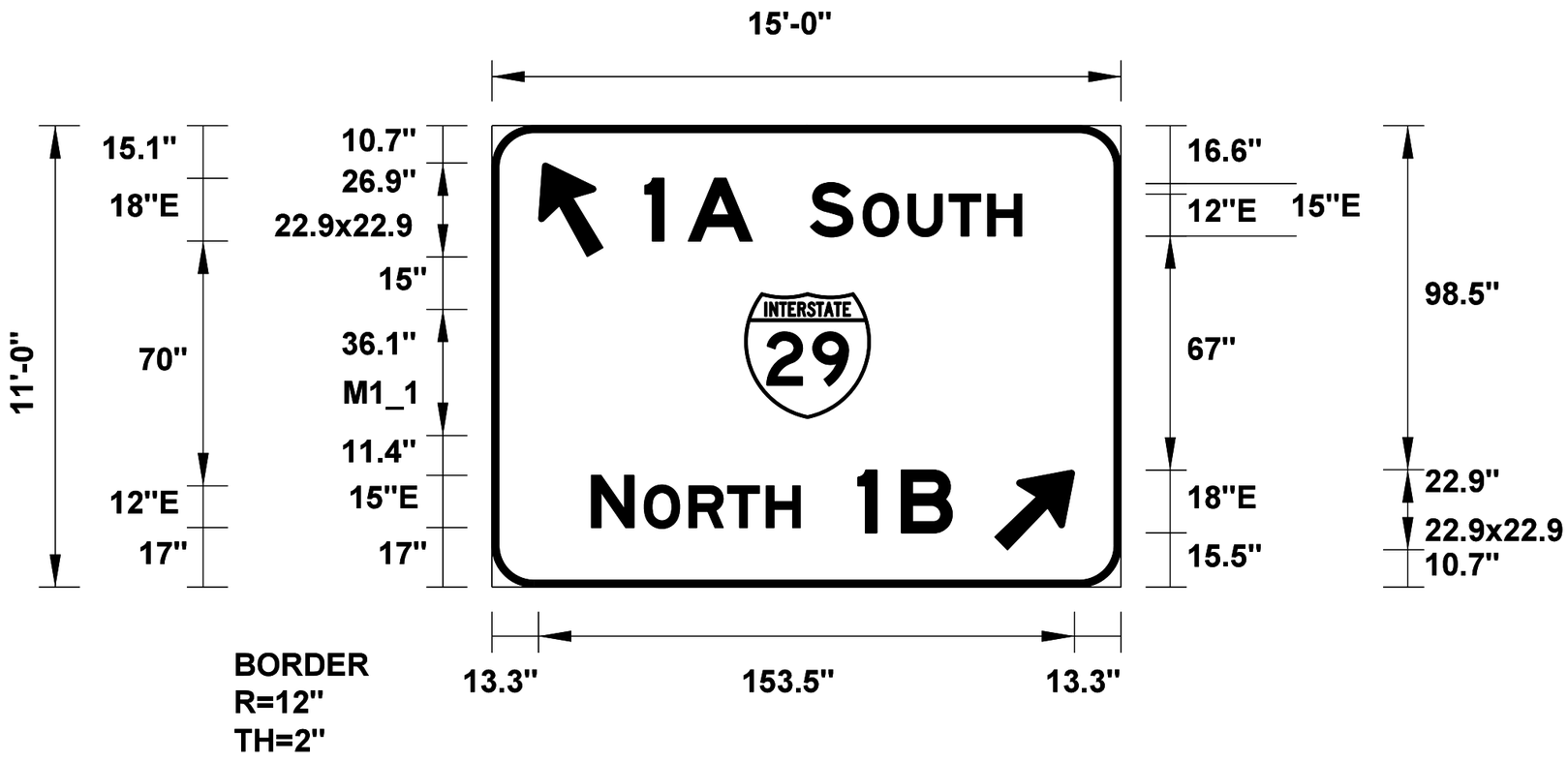

I-29 Exit 75 Ramp C
Station - 73+00 Lt
Post Size - 8 WF 21
Post Length - 16'-7"
Post Length - 18'-2"
Footing Diameter - 1'-9"
Footing Depth - 8'-0"

Sheeting
Background - Green
Border and Legend - White
Type - Super/Very High Intensity
Extruded Aluminum
Removable Copy
Side Trim Molding - 22'

PLOT SCALE - 1:3.5
PLOTTED FROM - TRMI11126
PLOT NAME - 23
FILE '...\SIGNING\010S_SIGNS.DGN

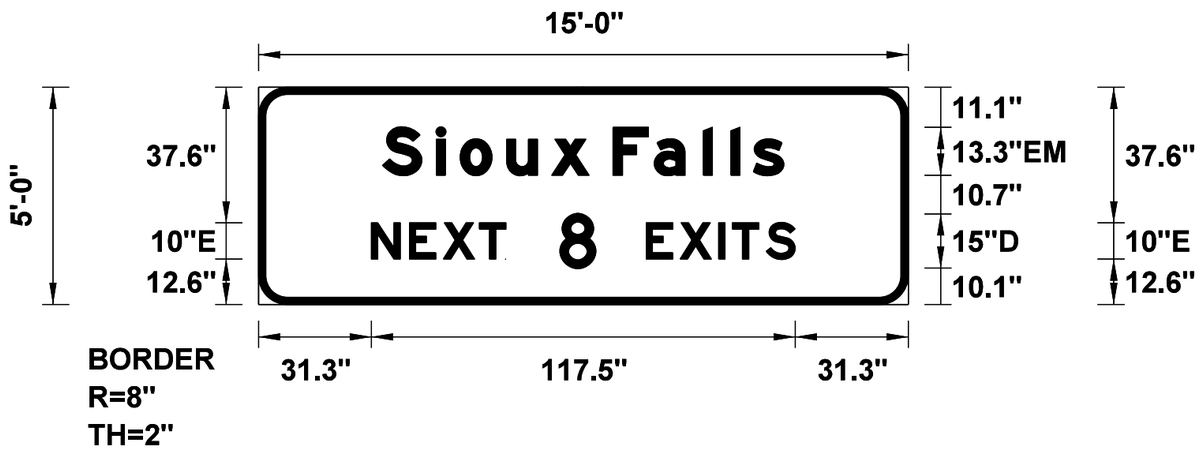

I-29 Exit 75 Ramp G
Station - 44+75 Rt
Post Size - 8 WF 28
Post Length - 23'-8"
Post Length - 24'-6"
Footing Diameter - 1"-9"
Footing Depth - 8'-0"

Sheeting
Background - Green
Border and Legend - White
Type - Super/Very High Intensity
Extruded Aluminum
Removable Copy
Side Trim Molding - 10'

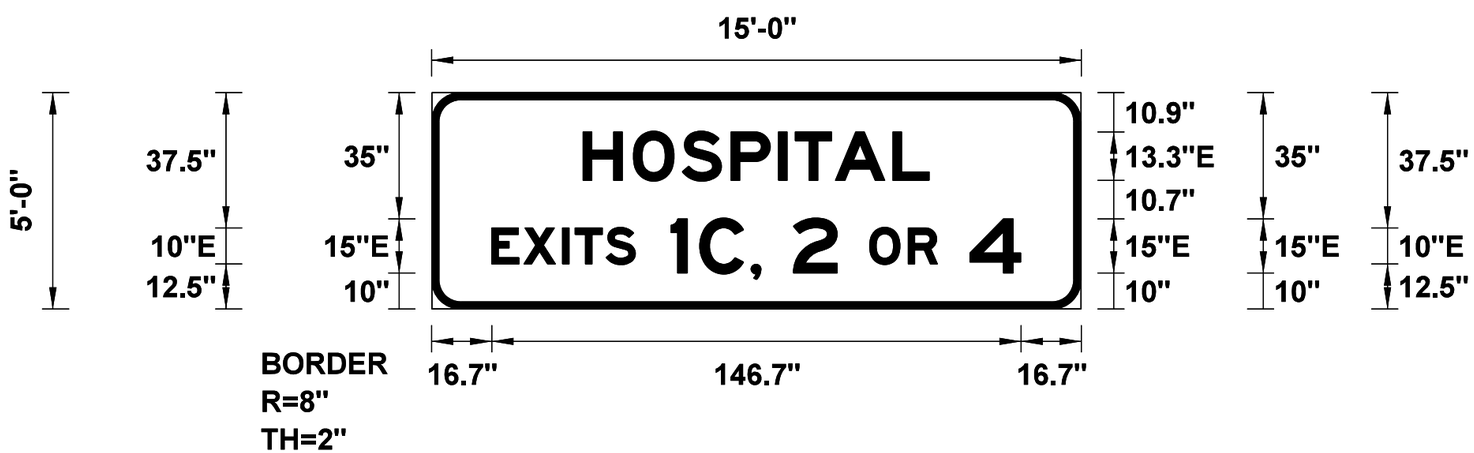

Sheeting
Background - Blue
Border and Legend - White
Type - Super/Very High Intensity
Extruded Aluminum
Removable Copy
Side Trim Molding - 10'

PLOT SCALE - 1:3.5
PLOTTED FROM - TRM111126
PLOT NAME - 24
FILE - ...\SIGNING\010S_SIGNS.DGN

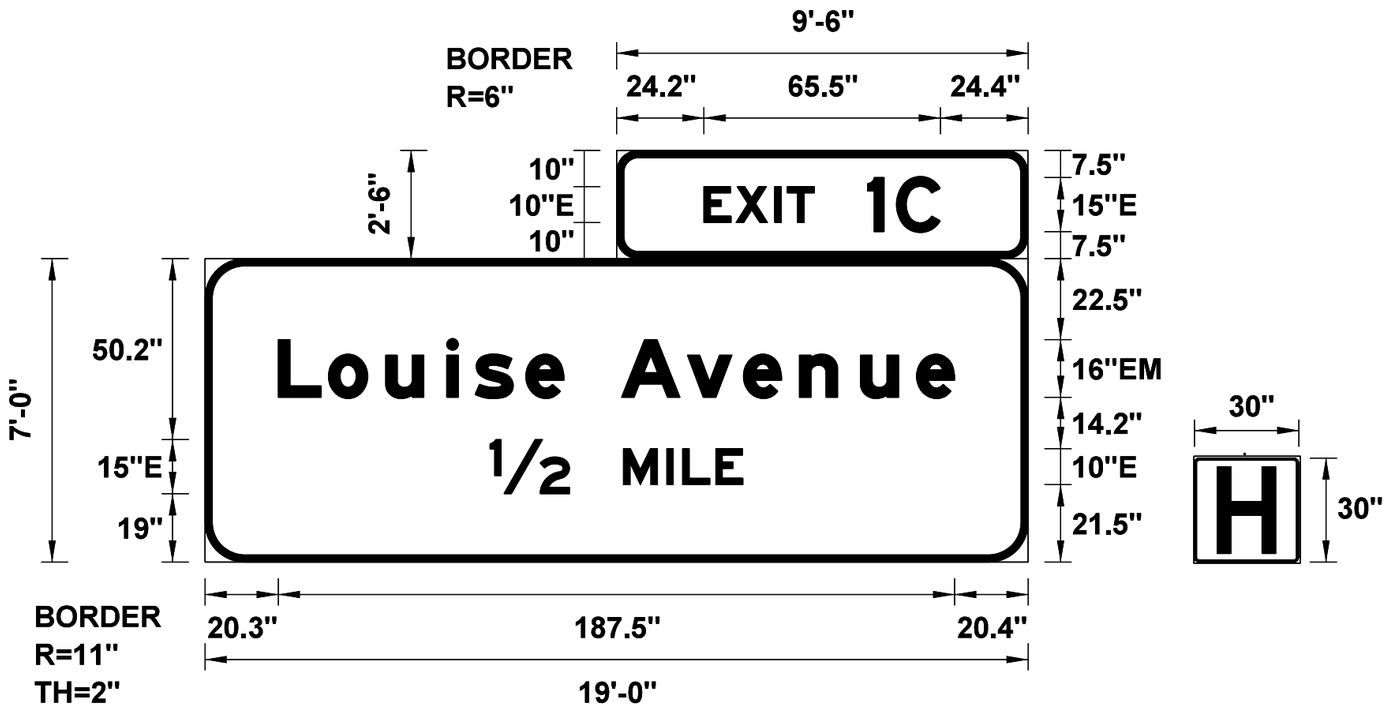

I-229 Station - 9+10
Sign Bridge

Sheeting
Background - Green
Border and Legend - White
Type - Super/Very High Intensity
Extruded Aluminum
Non-removable Copy
Side Trim Molding - 16.5'

Sheeting
Background - Blue
Border and Legend - White
Type - Super/Very High Intensity
Extruded Aluminum
Non-removable Copy
Side Trim Molding - 2.5'

PLOT SCALE - 1:3.5
PLOT NAME - 25
FILE ...\SIGNING\010S_SIGNS.DGN
PLOTTED FROM - TRM111126

EXTRUDED ALUMINUM SIGNS WITH REMOVABLE COPY SUPER/VERY HIGH INTENSITY

FOR BIDDING PURPOSES ONLY

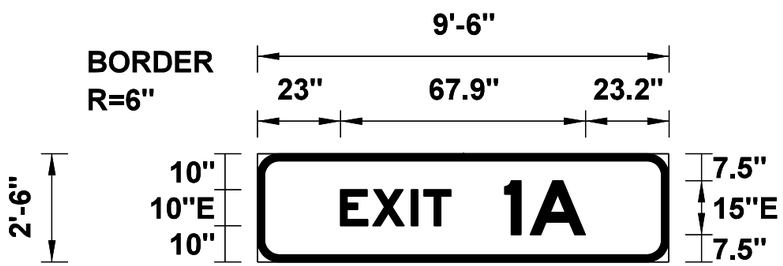

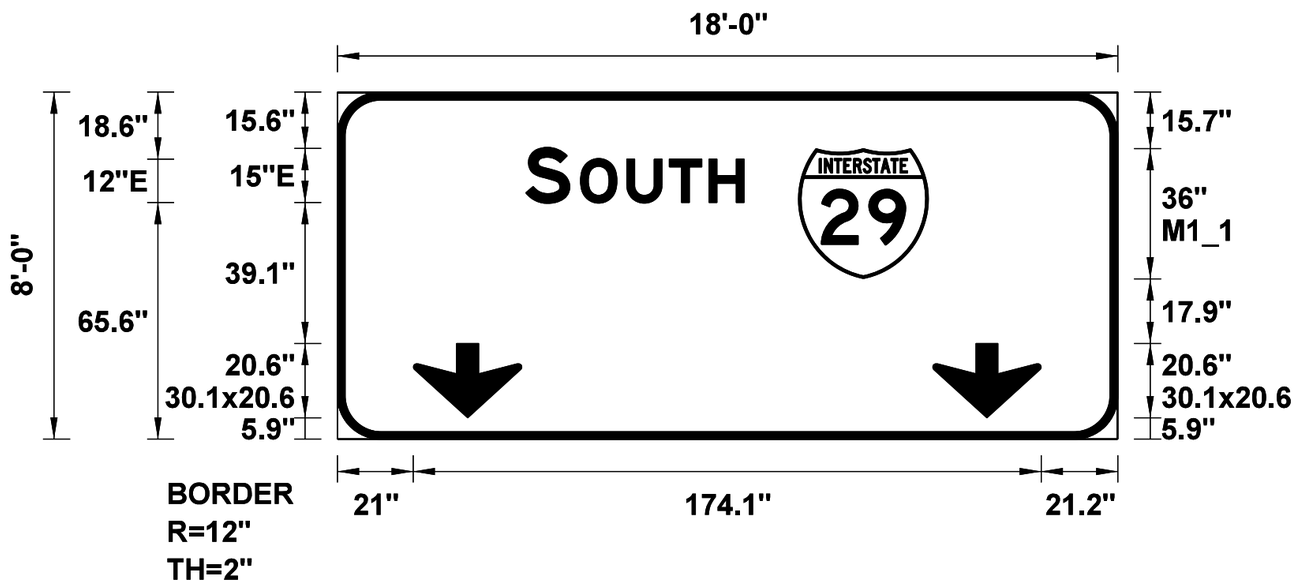

I-229 Station - 13+00 Lt
Sign Bridge

I-229 Station - 31+65 Lt
Sign Bridge

Sheeting
Background - Green
Border and Legend - White
Type - Super/Very High Intensity
Extruded Aluminum
Non-removable Copy
Side Trim Molding - 21'

PLOT SCALE - 1:3.5
PLOTTED FROM - TRM111126
PLOT NAME - 26
FILE - ...\SIGNING\010S_SIGNS.DGN

I-229 Station - 13+00 Lt
Sign Bridge

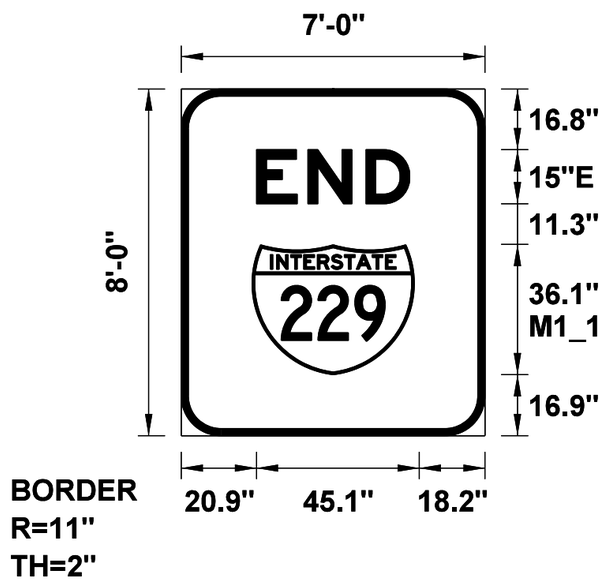

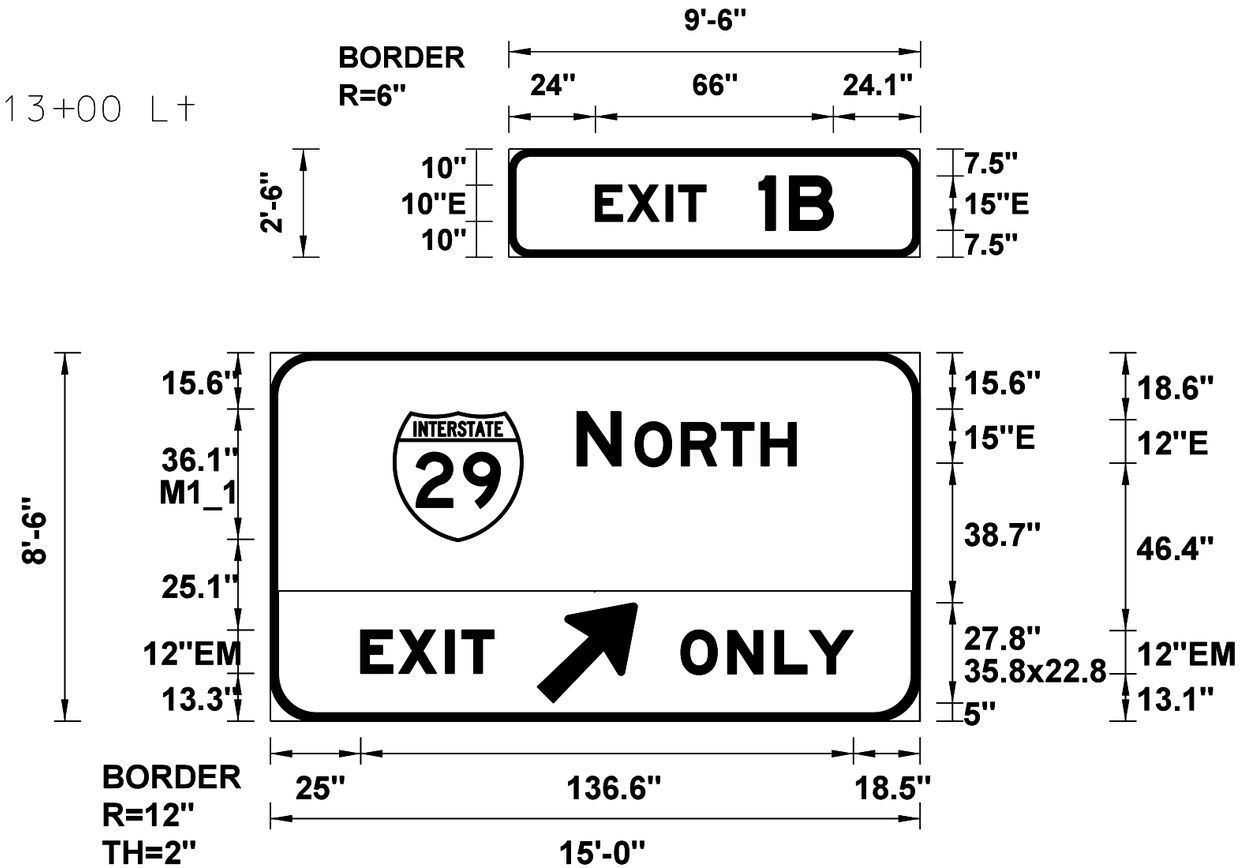

Sheeting
Background - Green
Border and Legend - White
Type - Super/Very
High Intensity
Extruded Aluminum
Non-removable Copy
Side Trim Molding - 16'

Sheeting
Background - Green
Border and Legend - White
Type - Super/Very
High Intensity
Extruded Aluminum
Removable Copy
Side Trim Molding - 16'

Sheeting
Background - Yellow
Border and Legend - Black
Type - Super/Very
High Intensity
Extruded Aluminum
Removable Copy
Side Trim Molding - 6'

PLOT SCALE - 1:3.5
PLOTTED FROM - TRM111126
PLOT NAME - 27
FILE - ...\SIGNING\010S_SIGNS.DGN

FLAT ALUMINUM SIGNS WITH NON-REMOVABLE COPY VERY HIGH INTENSITY

FOR BIDDING PURPOSES ONLY

Rev: 9-15-15 SAH

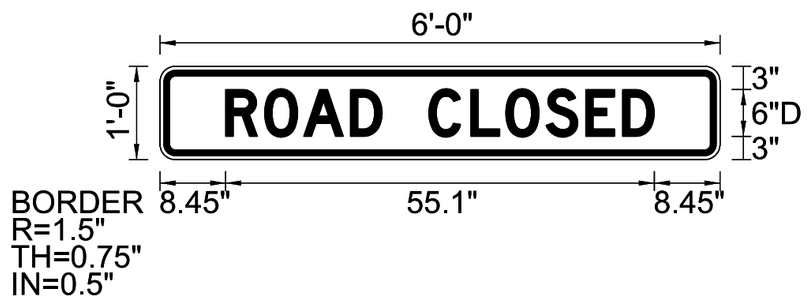

I-229 Station - 72+75
Drop Arm Gate
Background - White
Border and Legend - Black
Type - Super/Very High Intensity
Flat Aluminum
Non-removable Copy

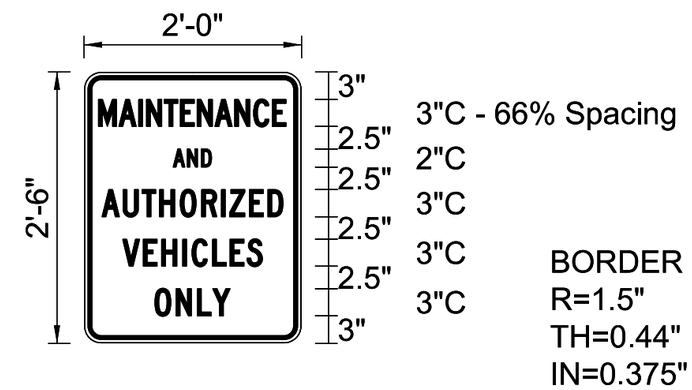

I-29 Stations
59+10 - Median
111+50 - Median
128+10 - Median
Background - White
Border and Legend - Black
Type - High Intensity
Flat Aluminum
Non-removable Copy

EXTRUDED ALUMINUM SIGNS WITH REMOVABLE COPY SUPER/VERY HIGH INTENSITY

FOR BIDDING PURPOSES ONLY

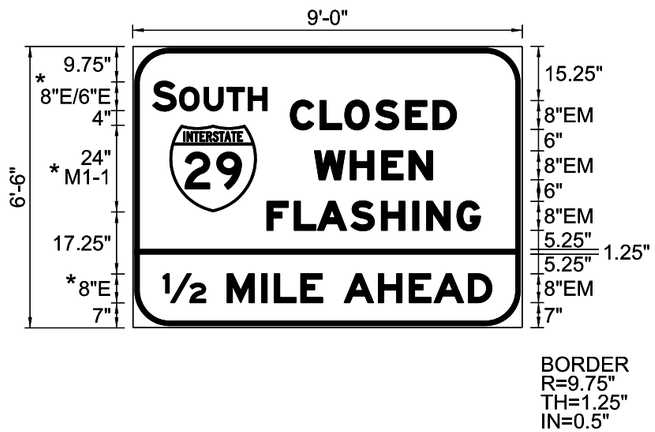

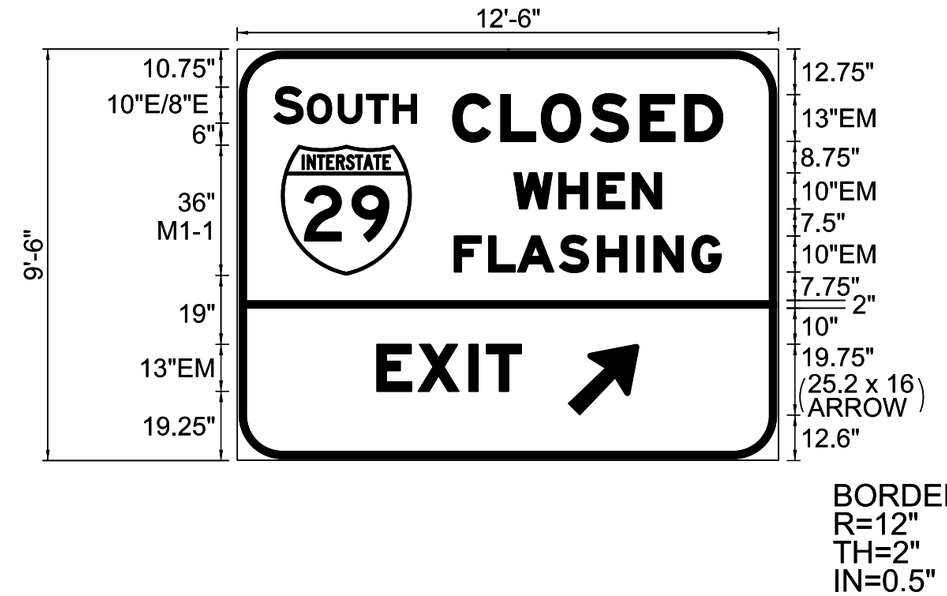

I-229 Station - 31+65 Lt
Median Shoulder
Post Size - 6 WF 15
Post Length - 17'-1"
Post Length - 17'-4"
Footing Diameter - 1'-9"
Footing Depth - 5'-0"

I-229 Station - 31+65 Lt
Outside Shoulder
Post Size - 6 WF 15
Post Length - 18'-1"
Post Length - 19'-1"
Footing Diameter - 1'-9"
Footing Depth - 5'-0"

I-229 Station - 13+10 Lt
Post Size - 8 WF 18
Post Length - 19'-10"
Post Length - 20'-3"
Footing Diameter - 1'-9"
Footing Depth - 7'-0"

Sheeting
Background - Yellow
Border and Legend - Black
Type - Super/Very High Intensity
Extruded Aluminum
Removable Copy
Side Trim Molding - 26'

Sheeting
Background - White
Border and Legend - Black
Type - Super/Very High Intensity
Extruded Aluminum
Removable Copy
Side Trim Molding - 19'

PLOT SCALE - 1:3.5
PLOTTED FROM - TRM111126
PLOT NAME - 28
FILE - ...\SIGNING\010S_SIGNS.DGN

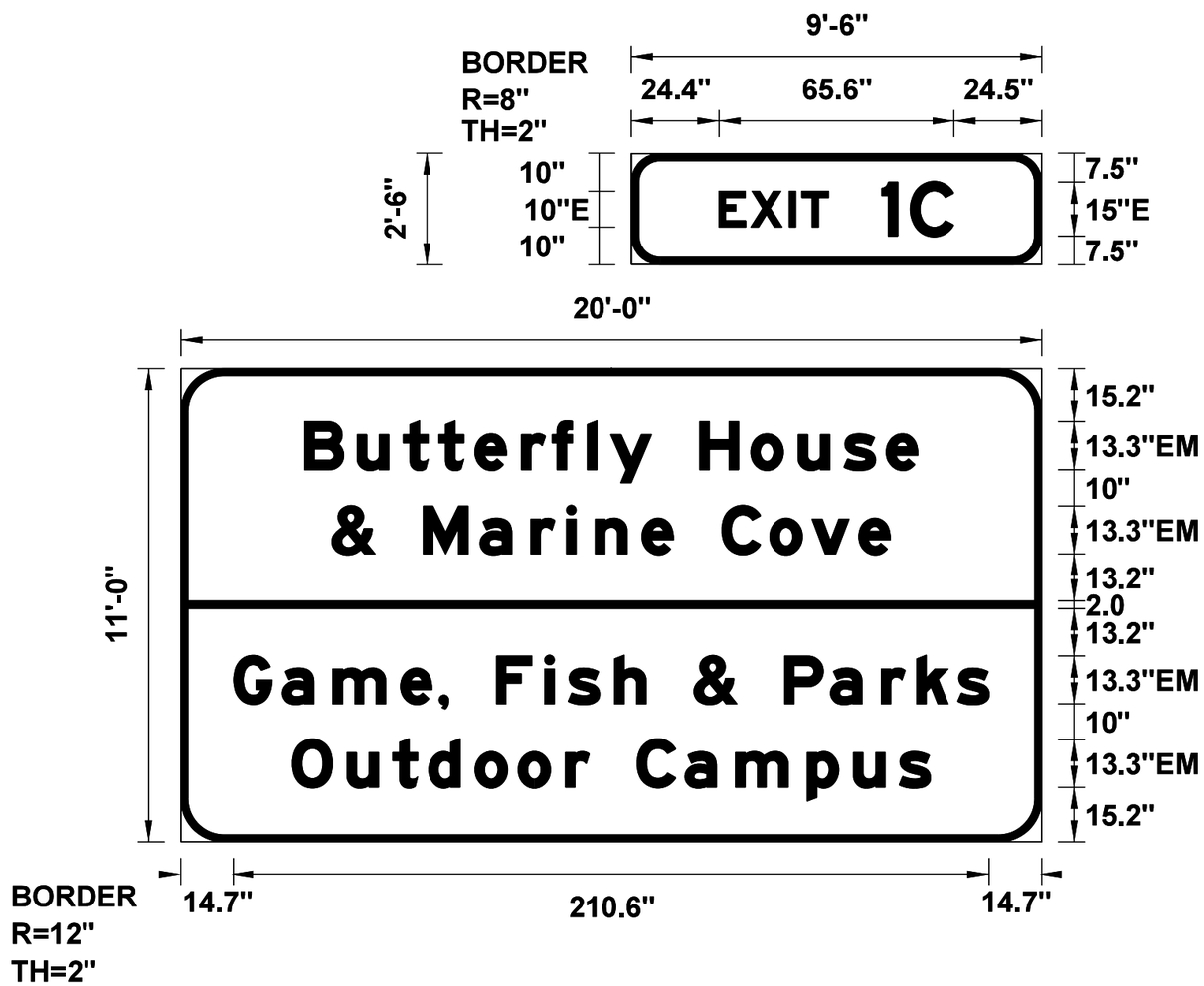

I-229 Station - 15+55 Rt
Post Size - 8 WF 28
Post Length - 22'-5"
Post Length - 22'-4"
Footing Diameter - 1'-9"
Footing Depth - 9'-0"

Sheetings
Background - Brown
Border and Legend - White
Type - Super/Very High Intensity
Extruded Aluminum
Removable Copy
Side Trim Molding - 27'

PLOT SCALE - 1:3.5
PLOTTED FROM - TRM111126
PLOT NAME - 29
FILE -...\SIGNING\010S_SIGNS.DGN

EXTRUDED ALUMINUM SIGNS WITH REMOVABLE COPY SUPER/VERY HIGH INTENSITY

FOR BIDDING PURPOSES ONLY

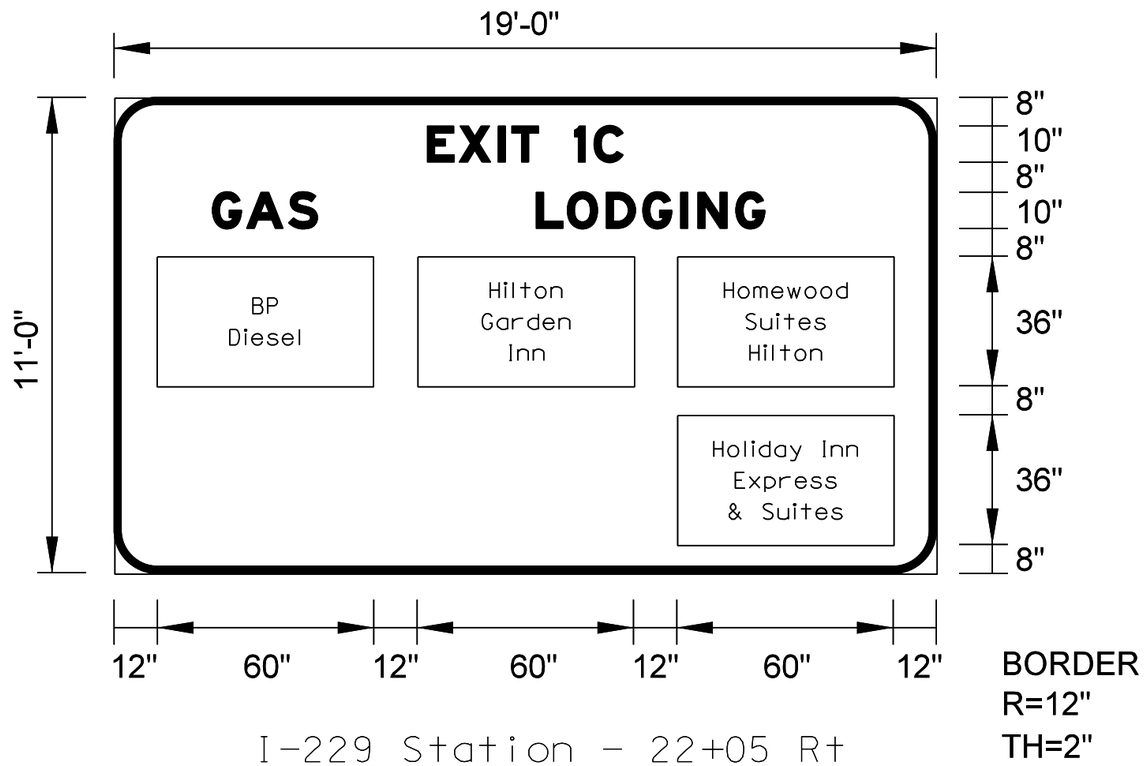

I-229 Station - 22+05 Rt
Post Size - 8 WF 28
Post Length - 22'-4"
Post Length - 22'-2"
Footing Diameter - 1'-9"
Footing Depth - 9'-0"

Sheeting
Background - Blue
Border and Legend - White
Type - Super/Very High Intensity
Extruded Aluminum
Removable Copy
Side Trim Molding - 22'

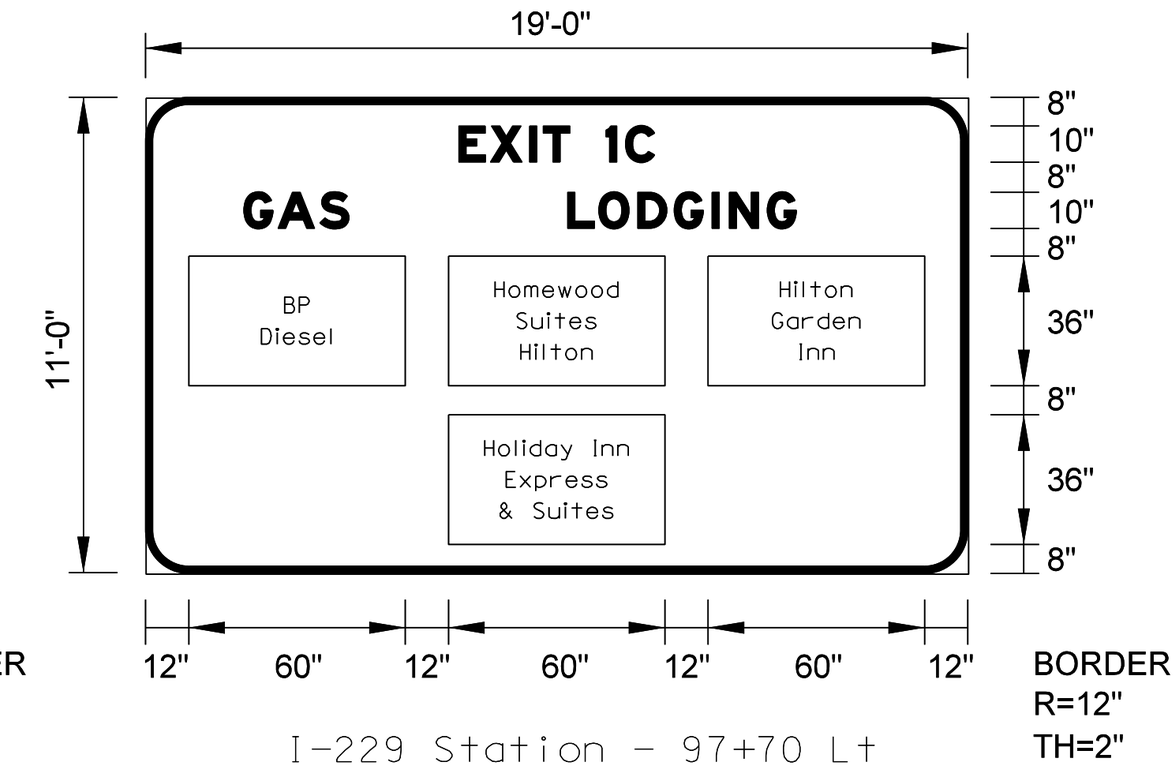

I-229 Station - 97+70 Lt
Existing Post Size - 8 WF 31
Existing Post Length - 20'-11"
Existing Post Length - 23'-3"
Existing Footing Diameter - 2'-0"
Existing Footing Depth - 9'-0"

Sheeting
Background - Blue
Border and Legend - White
Type - Super/Very High Intensity
Extruded Aluminum
Removable Copy
Side Trim Molding - 22'

PLOT SCALE - 1:3.5
PLOTTED FROM - TRMI11126
PLOT NAME - 30
FILE - ...\SIGNING\01GS_SIGNS.DGN

EXTRUDED ALUMINUM SIGNS WITH REMOVABLE COPY SUPER/VERY HIGH INTENSITY

FOR BIDDING PURPOSES ONLY

STATE OF SOUTH DAKOTA	PROJECT	SHEET	TOTAL SHEETS
	IM 0293(96)73 IM 2292(90)0	S50	S116

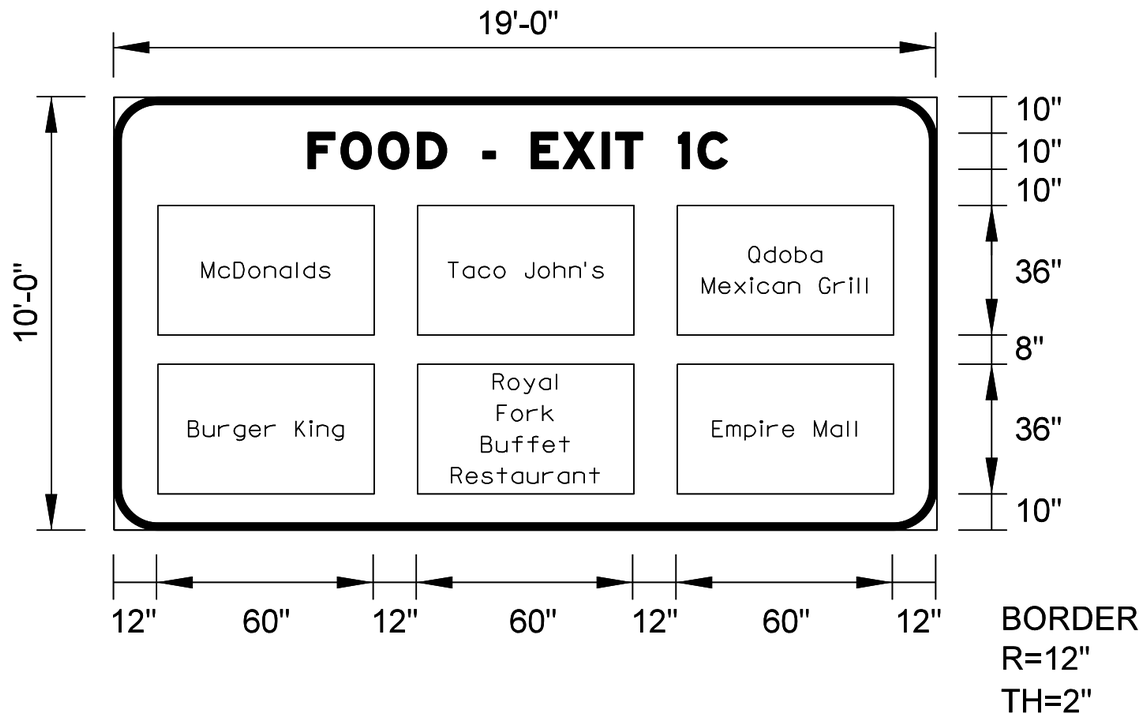

I-229 Station - 28+55 Rt
Post Size - 8 WF 21
Post Length - 22'-4"
Post Length - 22'-3"
Footing Diameter - 1'-9"
Footing Depth - 9'-0"

Sheeting
Background - Blue
Border and Legend - White
Type - Super/Very High Intensity
Extruded Aluminum
Removable Copy
Side Trim Molding - 20'

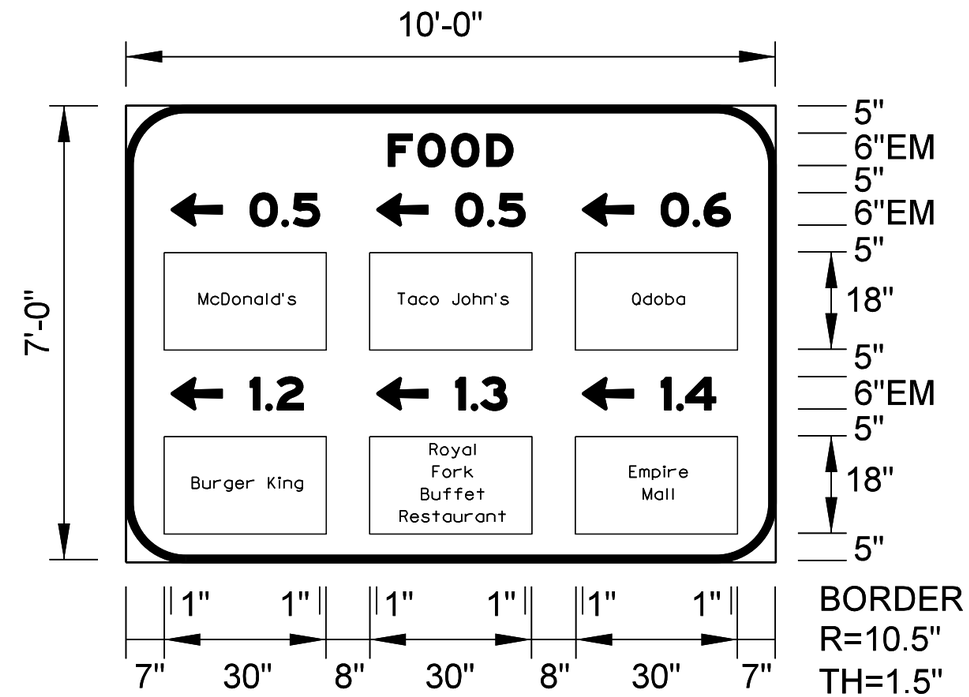

I-229 Exit 1C Ramp D
Station - 22+65 Rt
Existing Post Size - 6 WF 12
Existing Post Length - 14'-6"
Existing Post Length - 15'-3"
Existing Footing Diameter - 1'-9"
Existing Footing Depth - 5'-0"

Sheeting
Background - Blue
Border and Legend - White
Type - Super/Very High Intensity
Extruded Aluminum
Removable Copy
Side Trim Molding - 14'

PLOT SCALE - 1:3.5
PLOTTED FROM - TRMI11126
PLOT NAME - 31
FILE -...\SIGNING\0IGS_SIGNS.DGN

EXTRUDED ALUMINUM SIGNS WITH REMOVABLE COPY SUPER/VERY HIGH INTENSITY

FOR BIDDING PURPOSES ONLY

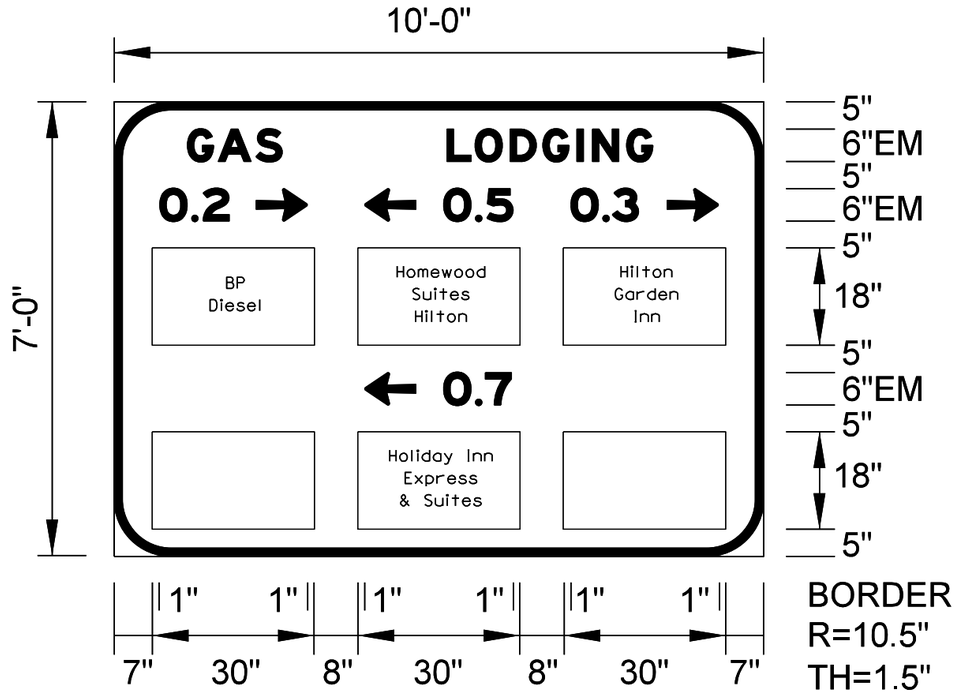

I-229 Exit 1C Ramp A
Station 13+75 - Rt
Existing Post Size - 6 WF 12
Existing Post Length - 15'-9"
Existing Post Length - 16'-4"
Existing Footing Diameter - 1'-9"
Existing Footing Depth - 4'-0"

Sheeting
Background - Blue
Border and Legend - White
Type - Super/Very High Intensity
Extruded Aluminum
Non-removable Copy
Side Trim Molding - 14'

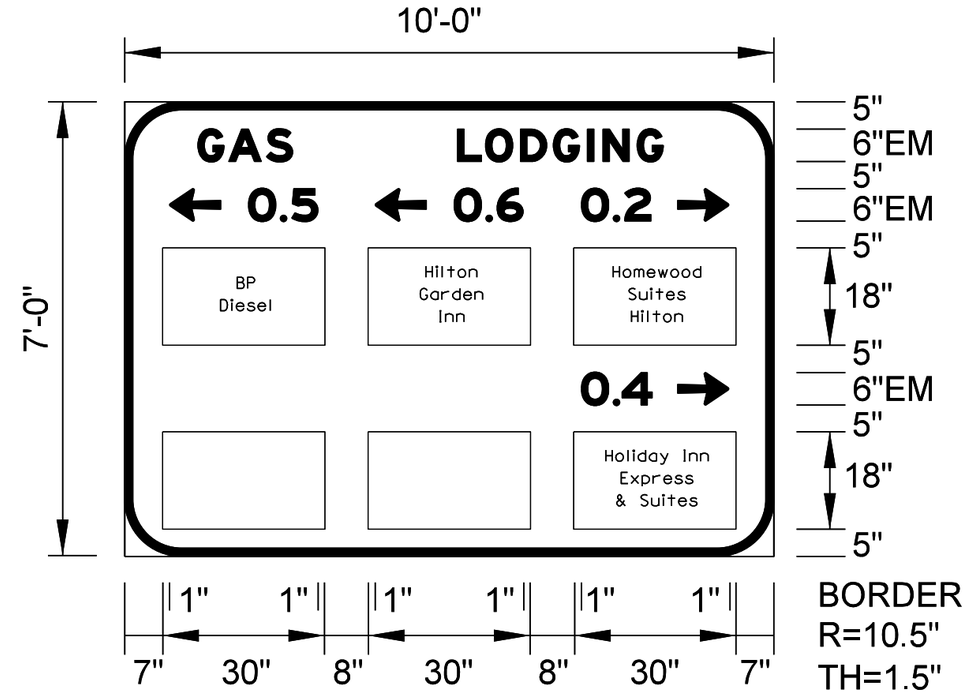

I-229 Exit 1C Ramp D
Station - 21+15 Rt
Existing Post Size - 6 WF 12
Existing Post Length - 14'-4"
Existing Post Length - 14'-11"
Existing Footing Diameter - 1'-9"
Existing Footing Depth - 5'-0"

Sheeting
Background - Blue
Border and Legend - White
Type - Super/Very High Intensity
Extruded Aluminum
Non-removable Copy
Side Trim Molding - 14'

PLOT SCALE - 1:3.5
PLOTTED FROM - TRMI11126
PLOT NAME - 32
FILE -...\SIGNING\0IOS_SIGNS.DGN

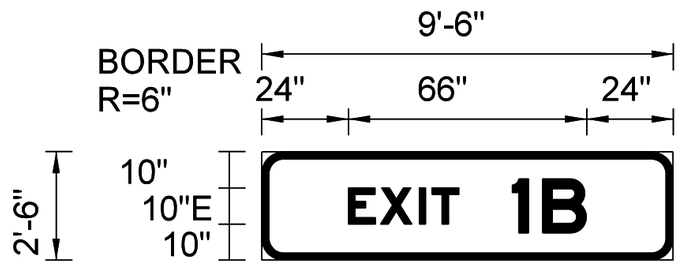

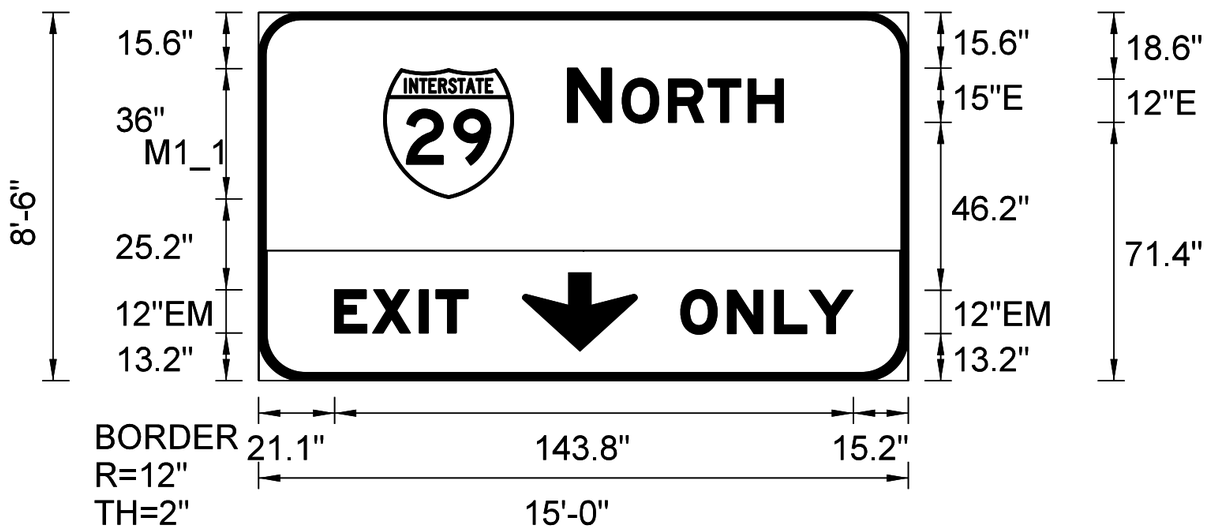

I-229 Station - 31+65 Lt
Sign Bridge

Sheeting
Background - Green
Border and Legend - White
Type - Super/Very High Intensity
Extruded Aluminum
Non-removable Copy
Side Trim Molding - 16'

Sheeting
Background - Yellow
Border and Legend - Black
Type - Super/Very High Intensity
Extruded Aluminum
Removable Copy
Side Trim Molding - 6'

PLOT SCALE - 1:3.5
PLOTTED FROM - TRM111126
PLOT NAME - 33
FILE -...\SIGNING\0105_SIGNS.DGN

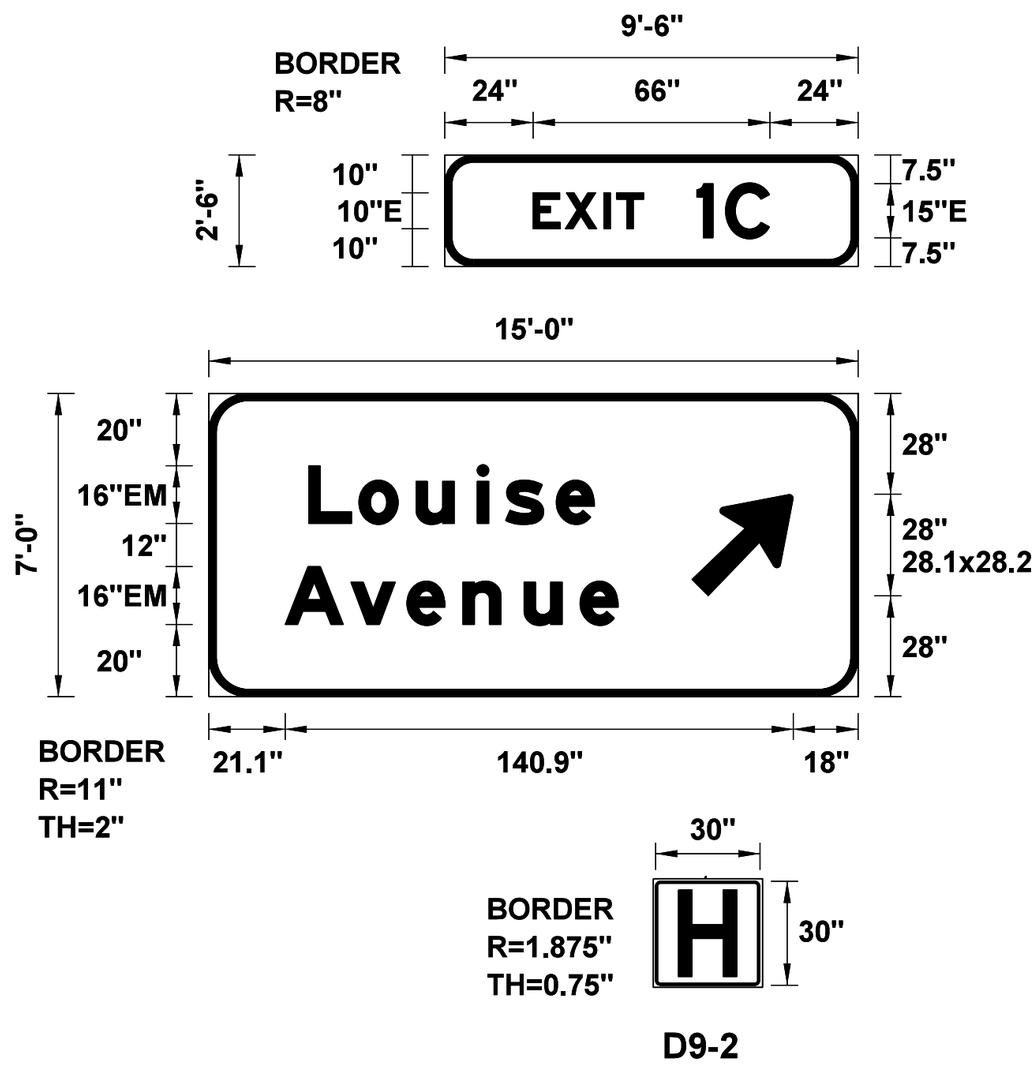

I-229 Station - 35+05 Rt
Post Size - 8 WF 28
Post Length - 18'-0"
Post Length - 17'-6"
Footing Diameter - 1'-9"
Footing Depth - 8'-0"

Sheeting
Background - Green
Border and Legend - White
Type - Super/Very High Intensity
Extruded Aluminum
Removable Copy
Side Trim Molding - 19'

Sheeting
Background - Blue
Border and Legend - White
Type - Super/Very High Intensity
Extruded Aluminum
Non-removable Copy
Side Trim Molding - 5'

PLOT SCALE - 1:3.5
PLOTTED FROM - TRMI11126
PLOT NAME - 35
FILE -...\SIGNING\0103_SIGNS.DGN

EXTRUDED ALUMINUM SIGNS WITH REMOVABLE COPY SUPER/VERY HIGH INTENSITY

FOR BIDDING PURPOSES ONLY

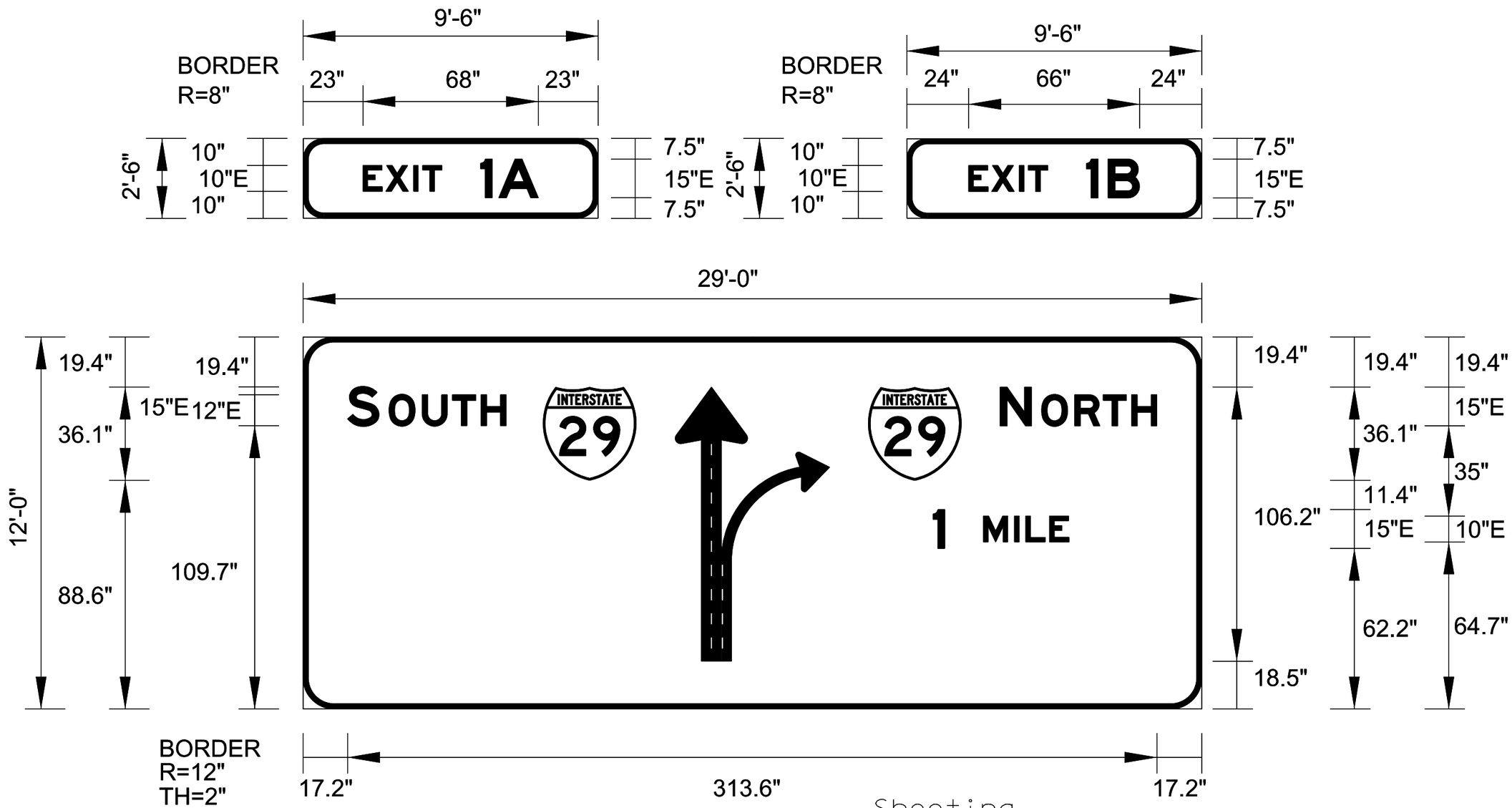

I-229 Station - 61+50 Lt
Sign Bridge

Sheeting
Background - Green
Border and Legend - White
Type - Super/Very High Intensity
Extruded Aluminum
Removable Copy
Side Trim Molding - 34'

PLOT SCALE - 1:3.5
PLOTTED FROM - TRM111126
PLOT NAME - 34
FILE - ...\SIGNING\010S_SIGNS.DGN

Standard Highway Signs and Locations

FOR BIDDING PURPOSES ONLY

STATE OF SOUTH DAKOTA	PROJECT	SHEET	TOTAL SHEETS
	IM 0293(96)73 IM 2292(90)0	S55	S116

Rev: 9-15-15 SAH

I-29 Sta. b 8+80 - Lt.

I29 Sta. b 8+80 - Rt.
51+00 - Rt.
64+90Lt.
152+25 - Rt.

I229 Sta.
21+65 - Lt.
25+30 - Rt.

Sta. I29 45+00 - Lt.

I-229 Sta. 18+80 - Rt.

I-229 Sta. 26+65 - Lt.

I-29 Sta. 41+00 - Rt.
I-29 Sta. 144+25 - Rt.

I-29 Sta. a 59+90 - Lt.

PLOT SCALE - $$SCALE$$
PLOT NAME - $$PLOTNAME$$
FILE - $$FILENAME$$
PLOTTED FROM - $$USERNAME$$

Standard Highway Signs and Locations

FOR BIDDING PURPOSES ONLY

I-29 Sta. 112+75 Lt.

I-29 Exit 75 Ramp G Sta. 10+15 Rt.

I-229 Sta. 13+00 Lt.

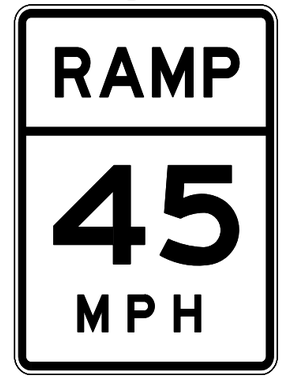

I-29 Exit 75 Ramp A Sta. 10+25 Rt.

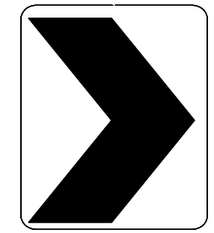

I-29 Exit 75

Ramp A	Sta. 13+05 - Lt.	Ramp G	Sta. 10+15 - Lt.
	Sta. 14+20 - Lt.		Sta. 12+25 - Lt.
	Sta. 15+35 - Lt.		Sta. 13+05 - Lt.
	Sta. 16+50 - Lt.		Sta. 13.85 - Lt.
	Sta. 17+65 - Lt.		Sta. 14+65 - Lt.
	Sta. 18+80 - Lt.		Sta. 15+45 - Lt.
	Sta. 19+95 - Lt.		Sta. 17+05 - Lt.
	Sta. 21+10 - Lt.		Sta. 17+85 - Lt.
	Sta. 22+25 - Lt.		Sta. 18+65 - Lt.
	Sta. 23+40 - Lt.		Sta. 19+45 - Lt.
	Sta. 24+45 - Lt.		Sta. 20+25 - Lt.
			Sta. 21+05 - Lt.
			Sta. 21+85 - Lt.
			Sta. 22+65 - Lt.
			Sta. 23+45 - Lt.

I-29 Sta. -a 6+75 - Rt.
-a 6+75 - Rt.

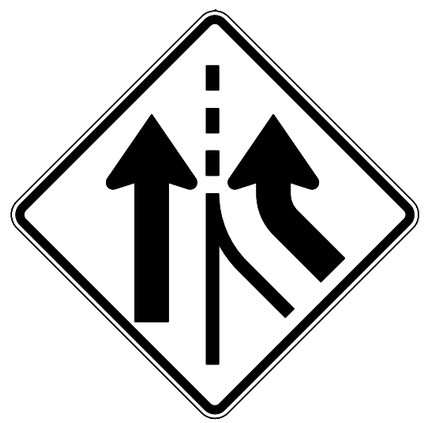

I-29 Sta. 81+60 - Lt.
135+45 - Rt.

I-29 Exit 75
Ramp G Sta. 48+45 - Rt.

I-29 Exit 75
Ramp C Sta. 51+35 - Rt.
51+35 - Lt.

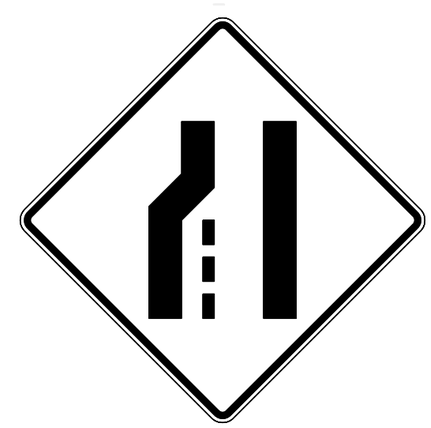

I-29 Exit 75
Sta. Ramp C 37+00 - Rt.
37+00 - Lt.

PLOT SCALE - $$SCALE$$
PLOT NAME - $$PLOTNAME$$
FILE - $$FILENAME$$
PLOTTED FROM - $$USERNAME$$

Signs to be Reset and Locations

FOR BIDDING PURPOSES ONLY

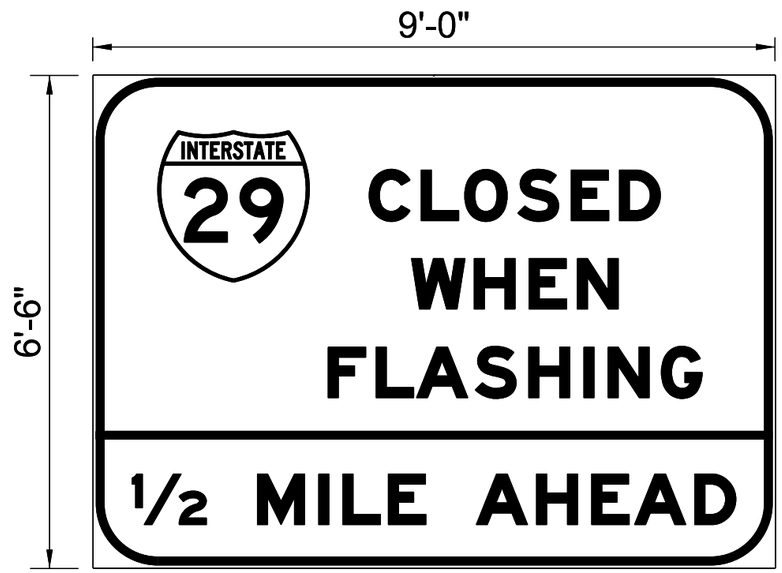

I-29 Station - 50+80 Lt
Existing Post Size - 6 WF 15
Existing Post Length - 18'-1"
Existing Post Length - 18'-4"
Footing Diameter - 1'-9"
Footing Depth - 5'-0"

Existing Sheeting
Background - Yellow
Border and Legend - Black
Type - Super/Very High Intensity
Existing Extruded Aluminum
Removable Copy
Existing Side Trim Molding - 13'

I-29 Station - 50+80 Lt
Existing Post Size - 6 WF 15
Existing Post Length - 16'-9"
Existing Post Length - 17'-3"
Footing Diameter - 1'-9"
Footing Depth - 5'-0"

Existing Sheeting
Background - Yellow
Border and Legend - Black
Type - Super/Very High Intensity
Existing Extruded Aluminum
Non-removable Copy
Existing Side Trim Molding - 13'

PLOT SCALE - 1:3.5
PLOTTED FROM - TRMI11126
PLOT NAME - 39
FILE - ...\SIGNING\0IGS_SIGNS.DGN

Signs to be Reset and Locations

FOR BIDDING PURPOSES ONLY

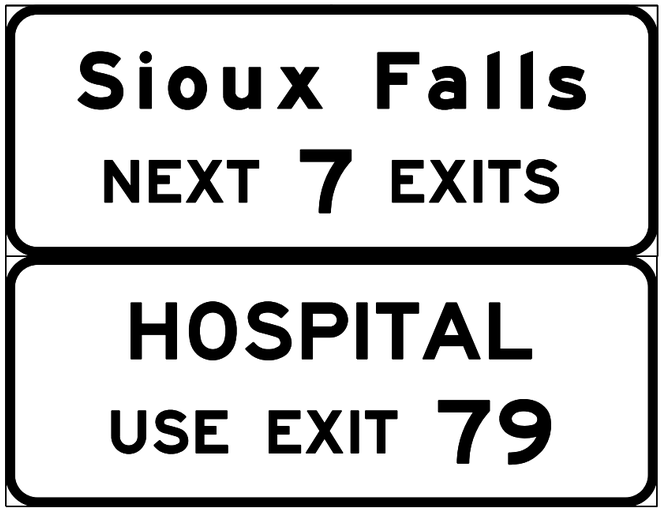

I-29 Sta. 140+25 - Rt.

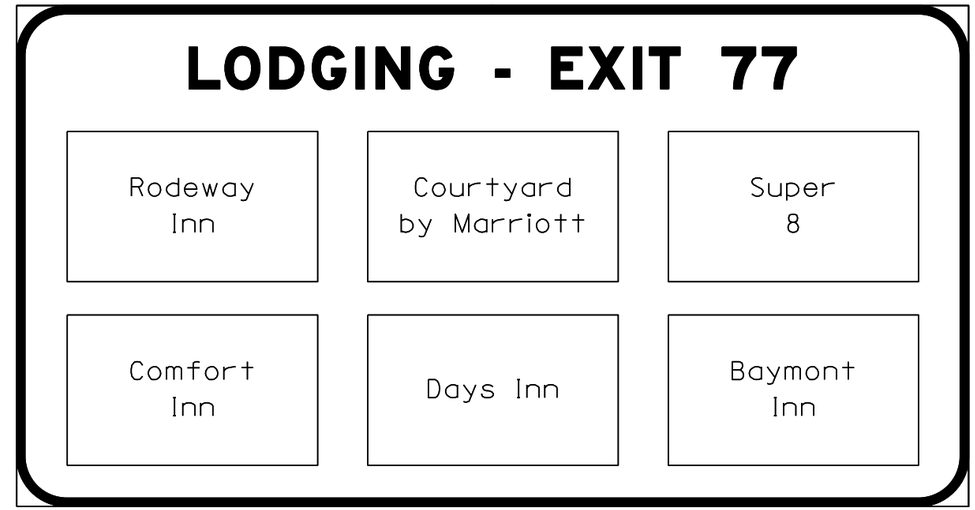

I-29 Sta. 156+25 - Rt.

I-29 Sta. 148+25 - Rt.

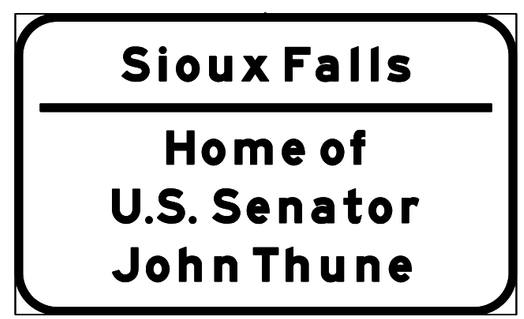

I-29 Sta. 93+05 - Rt.

I-29 Sta. 156+80 - Rt.

PLOT SCALE - 1:3.02505
PLOTTED FROM - TRMI11126
PLOT NAME - 40
FILE -...\SIGNING\010S_SIGNS.DGN

FOR BIDDING PURPOSES ONLY

DELINEATION LAYOUTS

INTERSTATE MAINLINE
(TYPICAL)

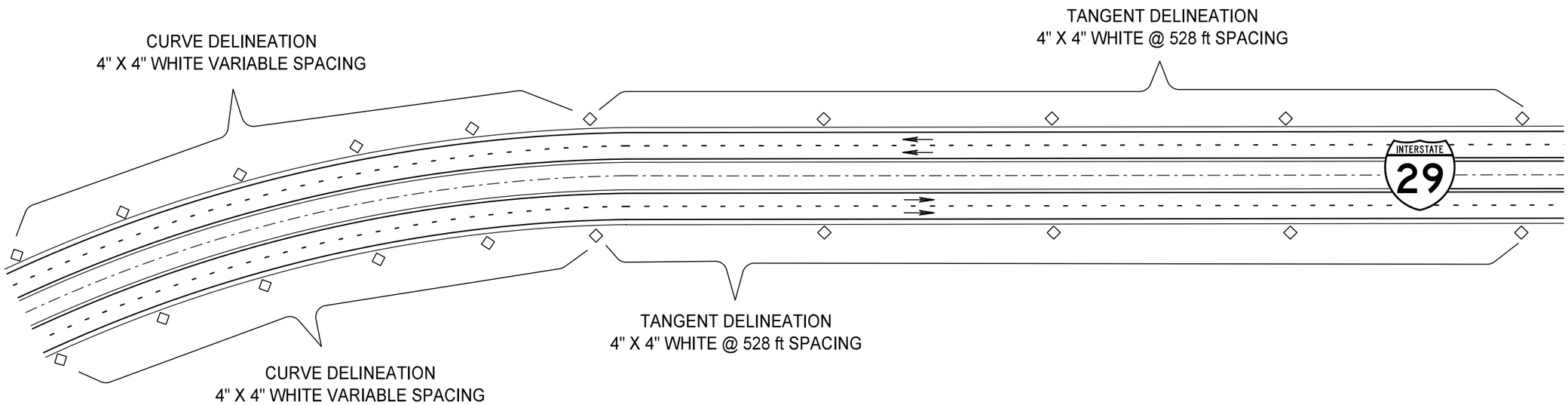

PLOT SCALE - 1:240
PLOTTED FROM - TRM111126
PLOT NAME - 44
FILE - ...\LINC01OS\SIGNING\01OS_DELR.DGN

FOR BIDDING PURPOSES ONLY

DELINEATION TABLES

INTERSTATE RAMPS
(TYPICAL)

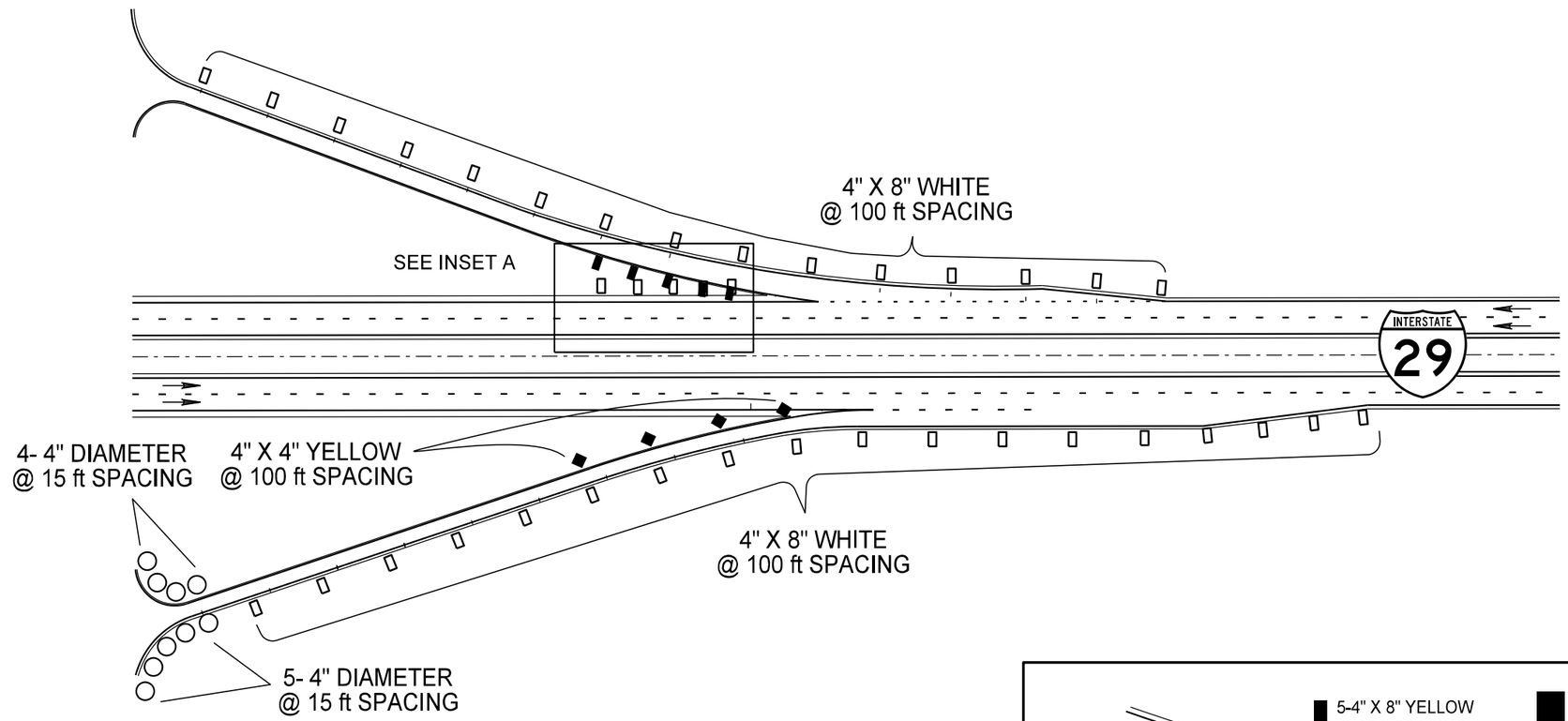

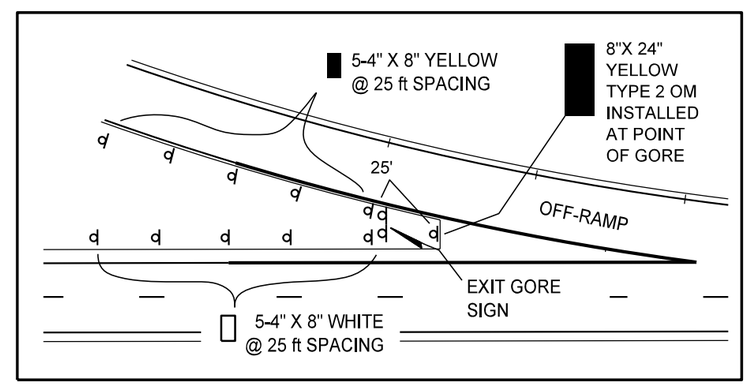

INSET A - GORE AREA DELINEATION
(TYPICAL)

LEGEND
◇ 4" X 4" WHITE DELINEATOR
◆ 4" X 4" YELLOW DELINEATOR
▯ 4" X 8" WHITE DELINEATOR
▮ 4" X 8" YELLOW DELINEATOR
○ 4" DIA X 6" WHITE TUBULAR DELINEATOR

PLOT SCALE - 1:240
PLOTTED FROM - TRM11126
PLOT NAME - 45
FILE - ...\LINC010S\SIGNING\010S_DELR.DGN

DELINEATOR ERECTION DETAILS

FOR BIDDING PURPOSES ONLY

STATE OF SOUTH DAKOTA	PROJECT	SHEET	TOTAL SHEETS
	IM 0293(96)73 IM 2292(90)0	S61	S116

Plotting Date: 09/16/2015

DETAIL FOR MOUNTING 4" X 4" DELINEATORS BACK TO BACK ON POST

{TYPICAL IN TANGENT SECTION}

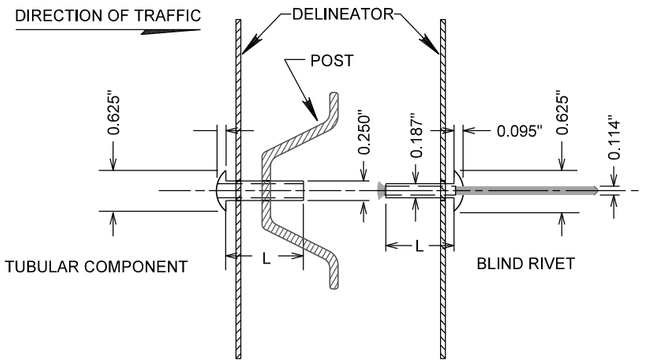

(L)ength varies with Grip Range of Rivet

1/4" Two Piece Oval Head Blind Rivet with Aluminum Sleeve, Aluminum Mandrel,and Aluminum Tubular Component is shown. An alternative method of fastening, such as a two piece 3/16 rivet lock bolt, may be approved by the Engineer.

4"X4" and 4"X8" DELINEATOR with Super/Very High Intensity Sheeting

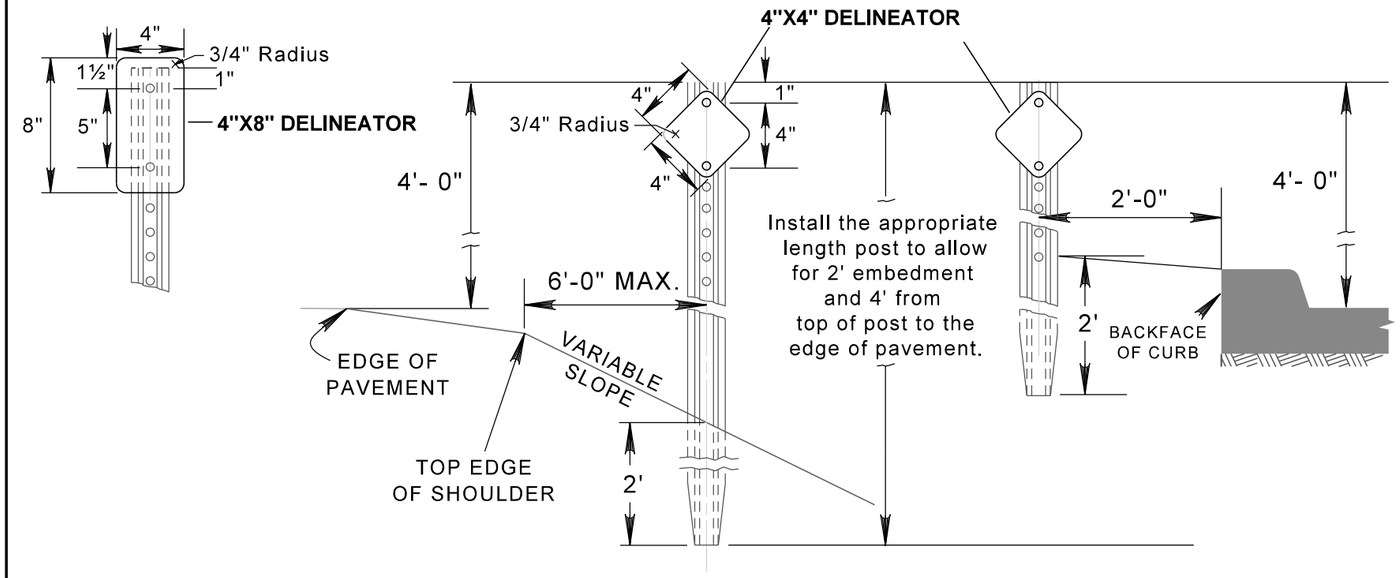

1/4 " Diameter Mounting Holes in all Delineators

POST DETAIL

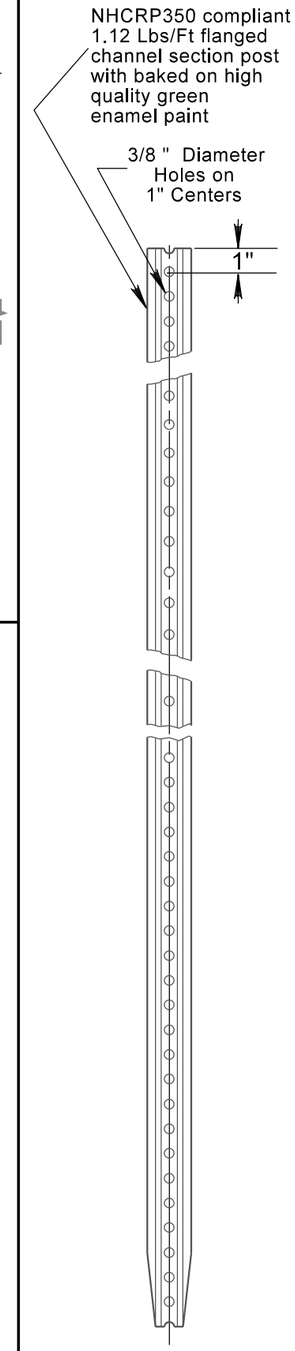

(TYPICAL)

DETAIL FOR MOUNTING 4" X 4" DELINEATORS WITH BRACKET

{TYPICAL IN CURVE SECTION}

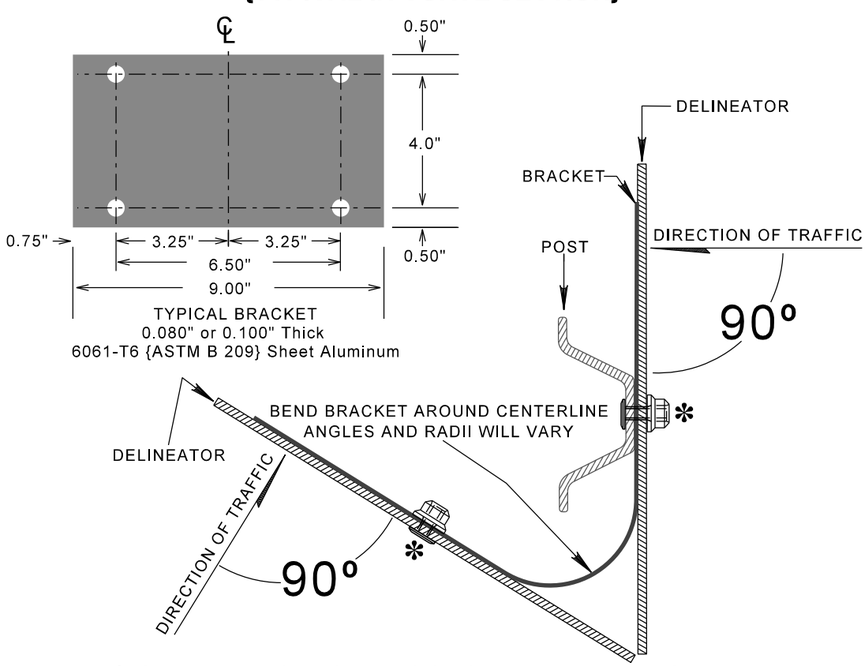

✻-SEE DETAIL FOR MOUNTING SINGLE 4"X4" DELINEATOR

DETAIL FOR MOUNTING SINGLE 4"X 4" DELINEATOR ON POST

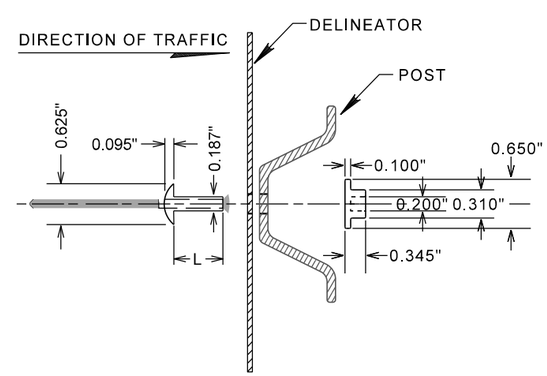

(L)ength varies with Grip Range of Rivet

3/16" Nail Type Blind Rivet with Large Flange Aluminum Rivet and Aluminum Mandrel is shown. An alternative method of fastening, such as two piece 3/16 rivet lock bolt, may be approved by the Engineer.

DETAIL FOR MOUNTING 4" TUBULAR DELINEATORS ON POST

with Super/Very High Intensity reflective sheeting

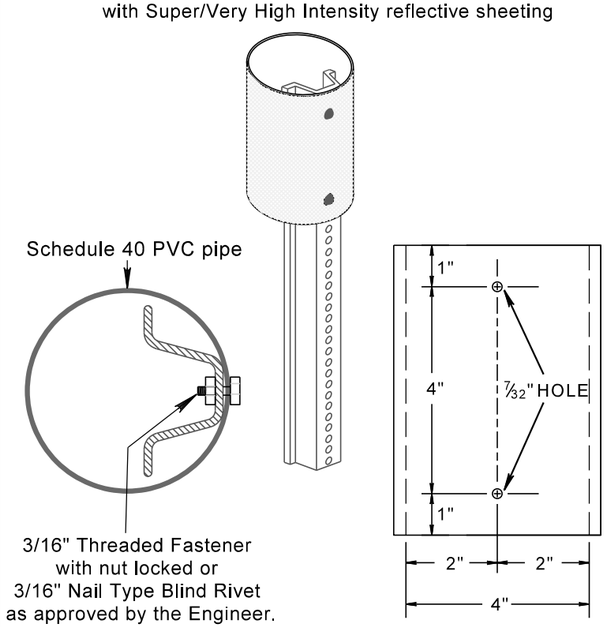

3/16" Threaded Fastener with nut locked or 3/16" Nail Type Blind Rivet as approved by the Engineer.

PLOT SCALE - 1:87.6484

PLOTTED FROM - TRM111126

PLOT NAME - 43

FILE = ...\LINC0TGS\SIGNING\0TGS_DELR.DGN

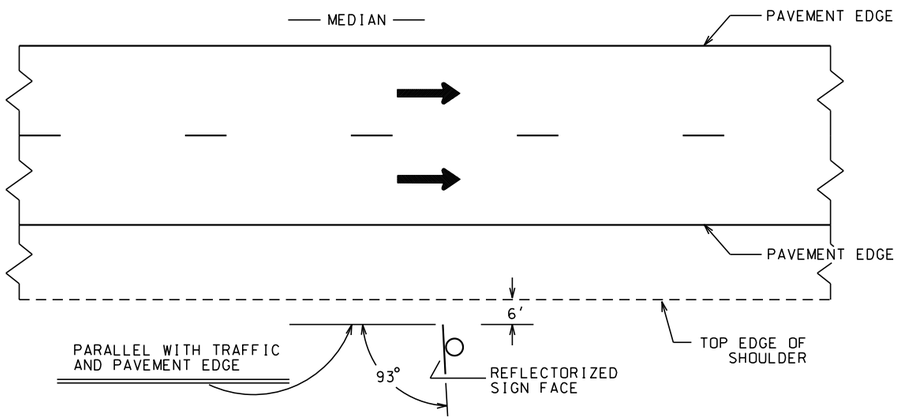

ANGLE OF SHOULDER MOUNTED REFLECTORIZED SIGNS TO APPROACHING TRAFFIC

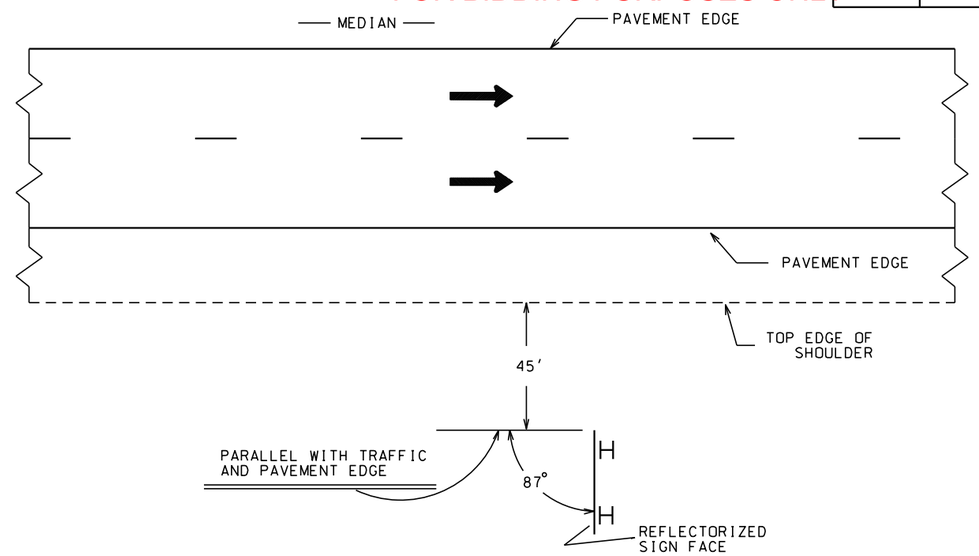

ANGLE OF APPROACHING TRAFFIC TO REFLECTORIZED SIGNS ERECTED OUT 45 FEET FROM THE TOP EDGE OF ASPHALT SHOULDER

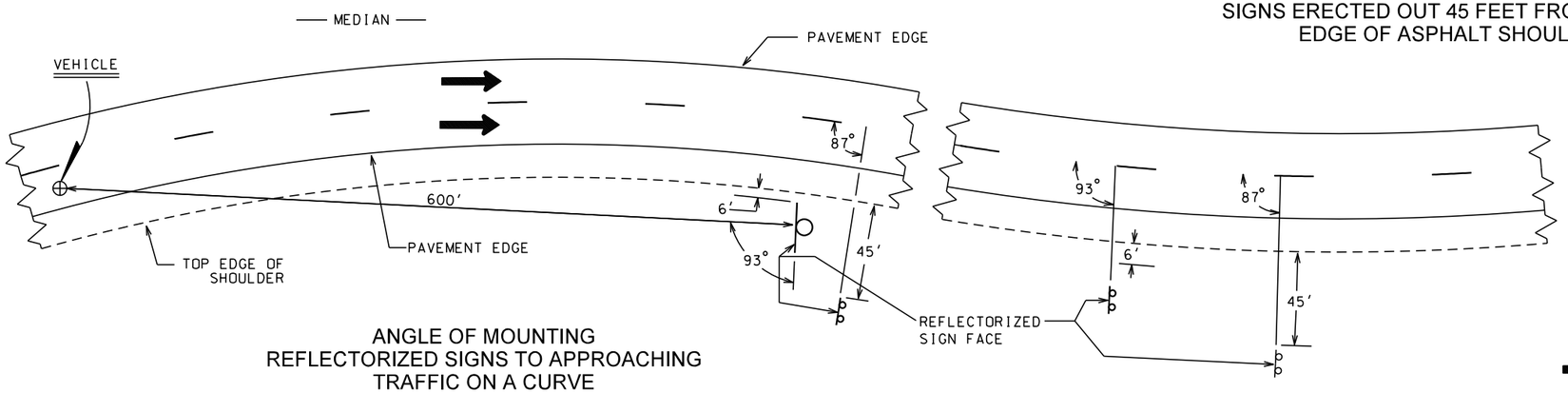

ANGLE OF MOUNTING REFLECTORIZED SIGNS TO APPROACHING TRAFFIC ON A CURVE

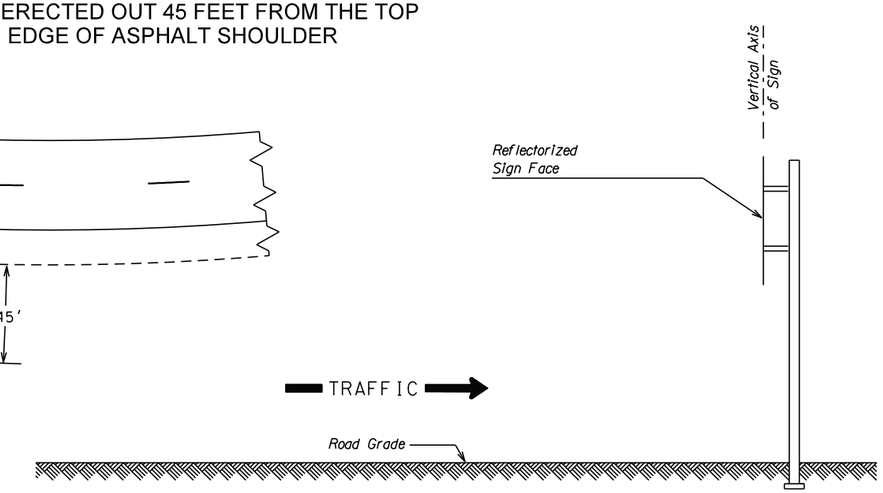

ANGLE OF OVERHEAD MOUNTED REFLECTORIZED SIGNS

NOTE:

Shoulder mounted signs shall be erected so the sign face is truly vertical and at 93° away from the center of the lane which the sign serves.

Signs mounted 45 feet from top edge of asphalt shoulder shall be erected so the sign face is truly vertical and at 87° to the roadway at the point of sign stationing shown on the plans.

At curved alignments, shoulder mounted signs (excluding signs mounted out 45' from edge of shoulder) shall be erected so the sign face is truly vertical and the horizontal axis is at an angle of 93° away from a straight line between the sign and a point 600 ft. in advance of the sign on the nearest driving lane.

NOTE:

Overhead signs shall be erected in accordance with the following requirements:

a) Where the road grade approaching the sign is + 2.0 % or greater, position the sign so the vertical axis is parallel to a plumb line and the horizontal axis is at right angles to the road (see exception for bridge mounted signs).

b) Where the road grade approaching the sign is less than + 2.0 %, position the sign so that the horizontal axis is at a right angle to the road (see exception) and the sign face vertical axis is inclined to face upward at a rate of 1/8 inch per foot of vertical sign surface for each one percent the road grade differs from + 2.0 %.

SIGN ANGLES FOR INTERSTATE HIGHWAY SIGNS SOUTH DAKOTA DEPARTMENT OF TRANSPORTATION

PLOT SCALE - 1:3.65181
PLOTTED FROM - TRMI11126
PLOT NAME - 42
FILE - ...\SIGNING\010S_ANGLES.DGN

FOR BIDDING PURPOSES ONLY

STATE OF	PROJECT	SHEET NO.	TOTAL SHEETS
S.D.	IM 0293(96)73 IM 2292(90)0	S63	S116

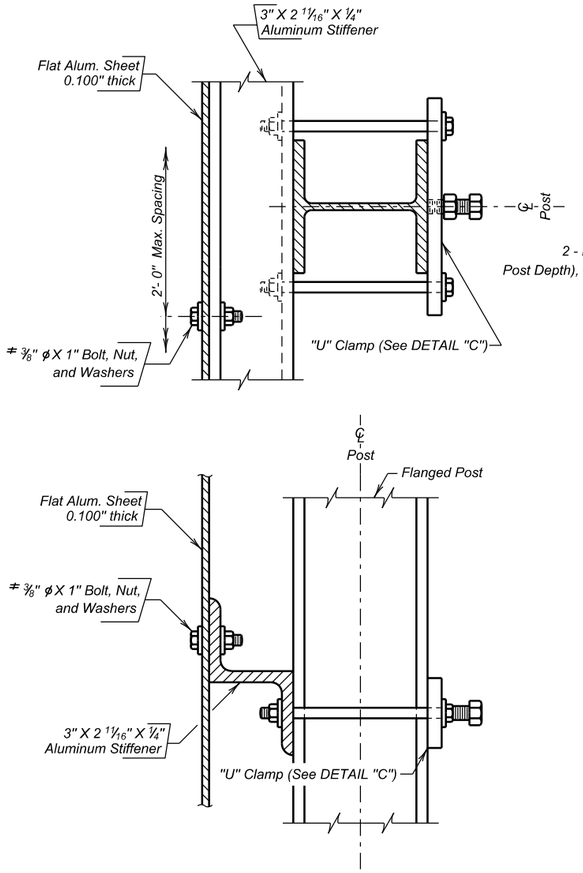

DETAILS FOR MOUNTING SHEET ALUMINUM SIGNS ON STEEL FLANGED POSTS

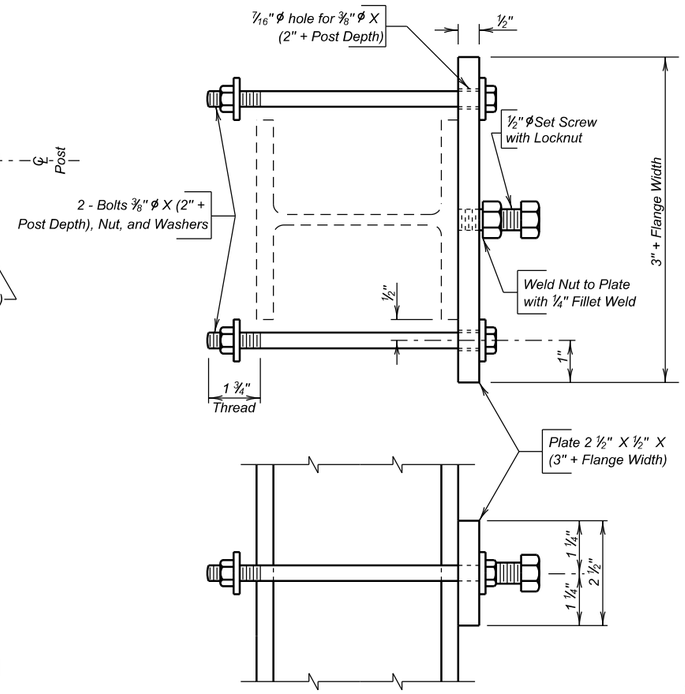

DETAIL "C"

A plastic washer, as recommended by the sheeting manufacturer, shall be installed between the sign face and the metal washer shown.

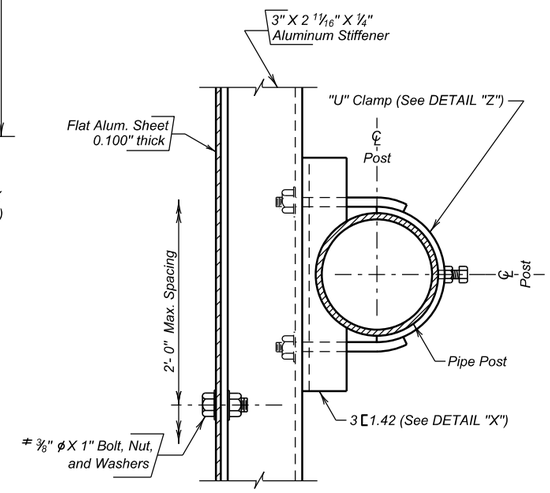

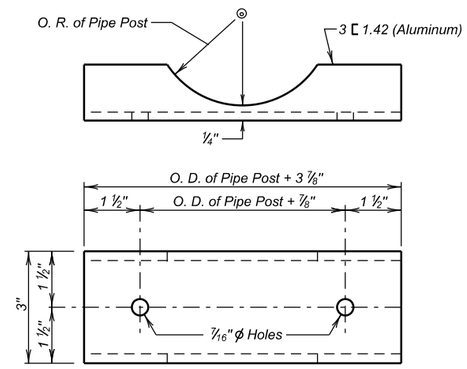

DETAIL "X"

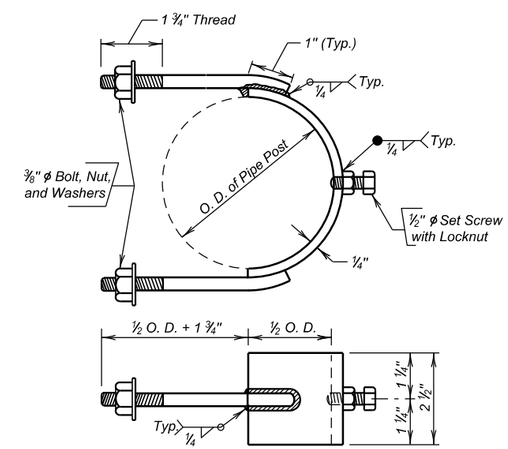

DETAIL "Z"

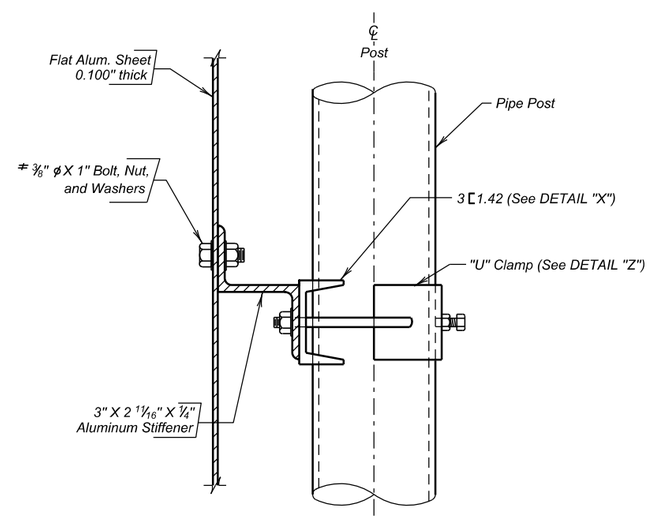

DETAILS FOR MOUNTING SHEET ALUMINUM SIGNS ON STEEL PIPE POSTS

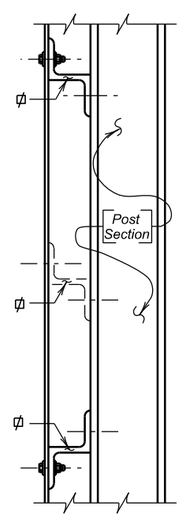

POSITIONING OF TOP AND BOTTOM STIFFENERS

STIFFENER NOTES-

1. Stiffeners must always be used on multiple post breakaway signs regardless of type of sign face employed.

2. Number of stiffeners used, N, shall be as follows:

If H < = 2'- 0" then N = 1
if 2'- 0" < H < = 8'- 0" then N = 2
if 8'- 0" < H < = 15'- 0" then N = 3

where H equals the vertical dimension of the sign panel of sign cluster.

3. All stiffener Bolts and Nuts shall conform to ASTM A307. Washers shall conform to ASTM F436. All hardware shall be galvanized in accordance with ASTM A153.

ERECTION DETAILS
FOR
SHEET ALUMINUM SIGNS
(ON FLANGED AND PIPE POSTS)
S. D. DEPT. OF TRANSPORTATION
DECEMBER 1994

1 OF 1

MK	REVISION	DATED	BY

DESIGNED BY	DRAWN BY	CHECKED BY	
RH/DM	RH/TB	RH/DM	Kevin N. Goeden
CNTYPCNX	PCNXDSPG	BSTDSAS1	BRIDGE ENGINEER

FOR BIDDING PURPOSES ONLY

ERECTION DETAILS FOR INTERSTATE HIGHWAY SIGNS

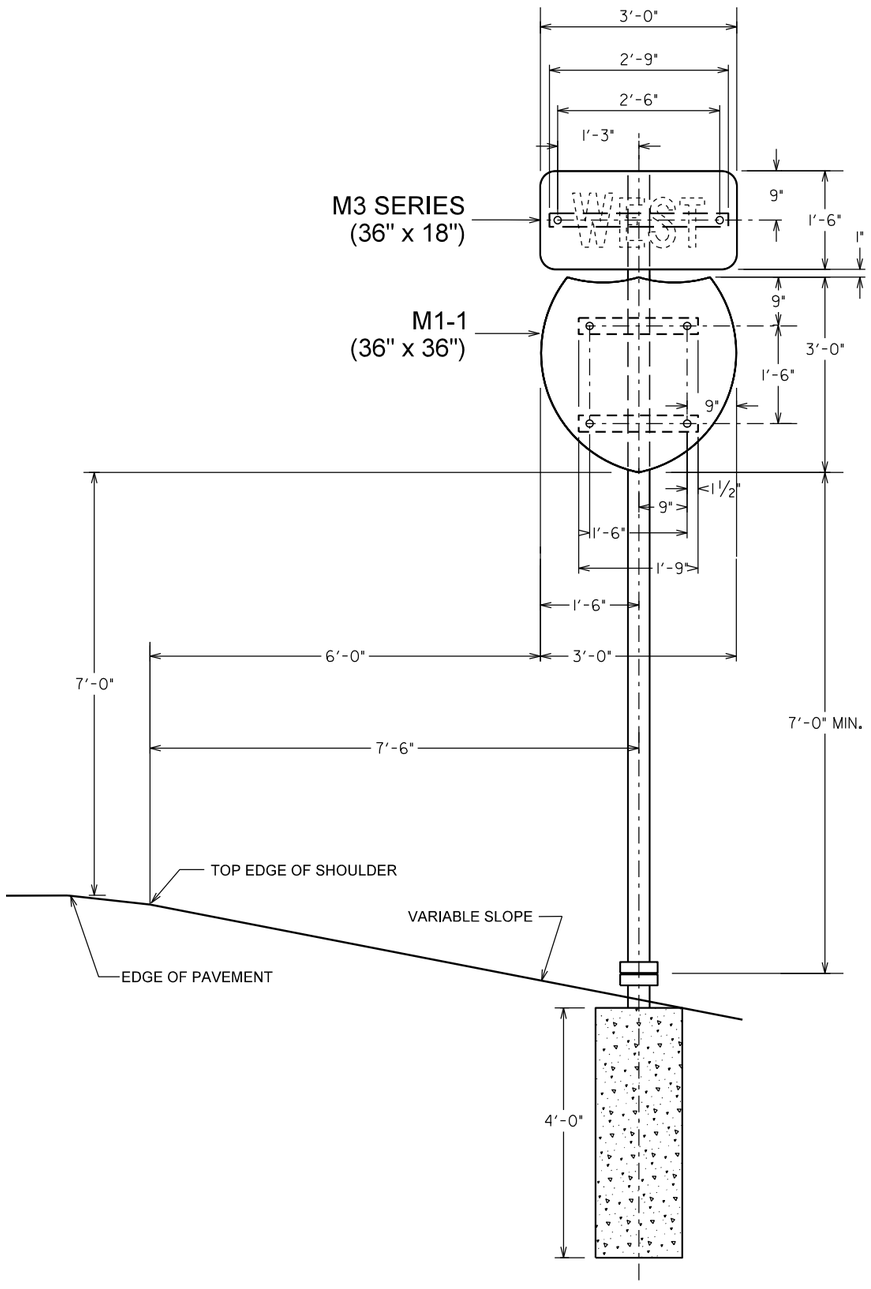

CARDINAL DIRECTION INTERSTATE
ROUTE MARKER ASSEMBLY

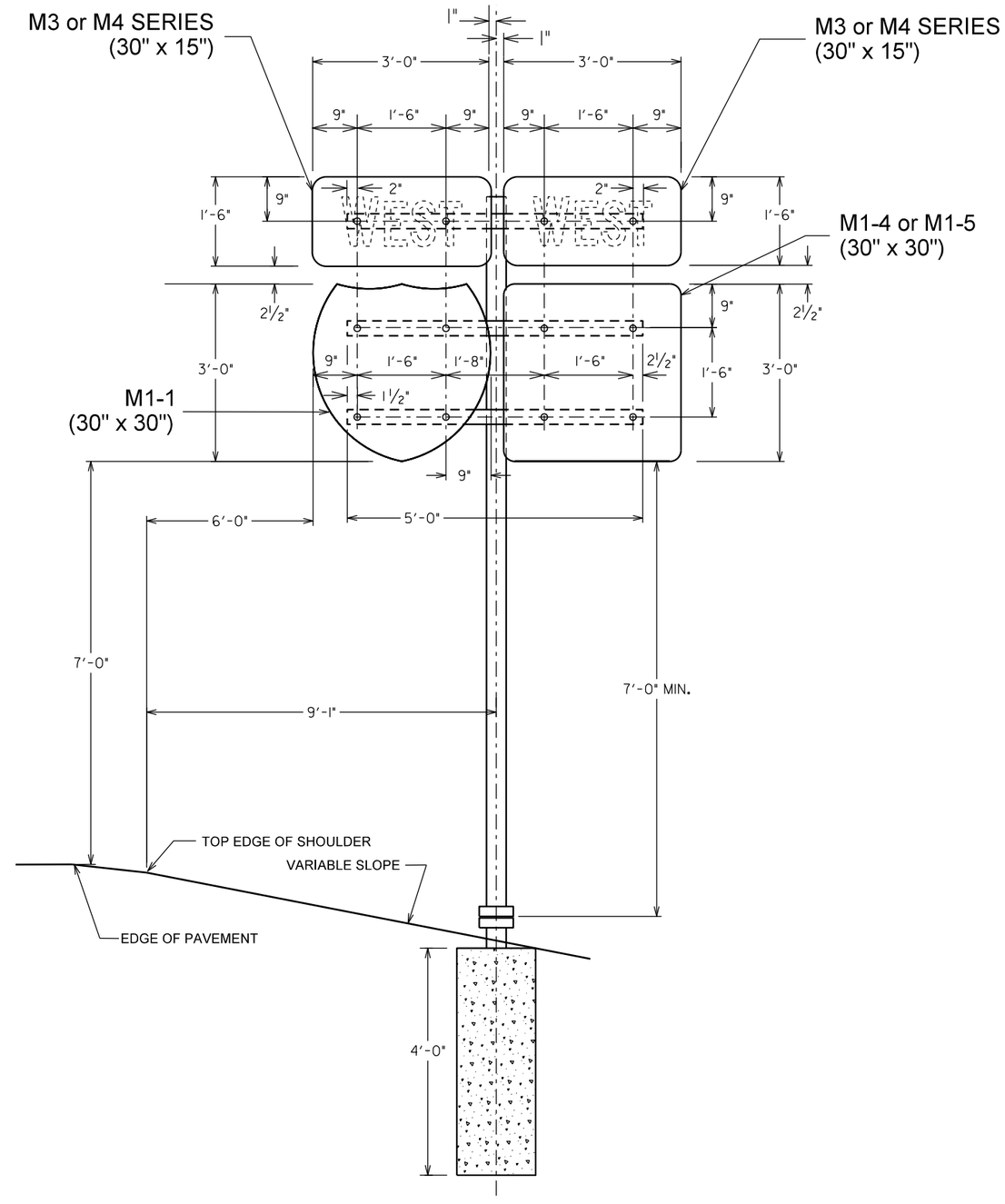

INTERSTATE MAINLINE COMBINATION
ROUTE MARKER ASSEMBLY

PLOT SCALE - 1:2.32834
PLOTTED FROM - TRM11126
PLOT NAME - 46
FILE - ...\SIGNING\010S_ROUTEMARKER.DGN

STATE OF SOUTH DAKOTA	PROJECT	SHEET	TOTAL SHEETS
	IM 0293(96)73 IM 2292(90)0	S65	S116

ERECTION DETAILS FOR INTERSTATE HIGHWAY SIGNS

FOR BIDDING PURPOSES ONLY

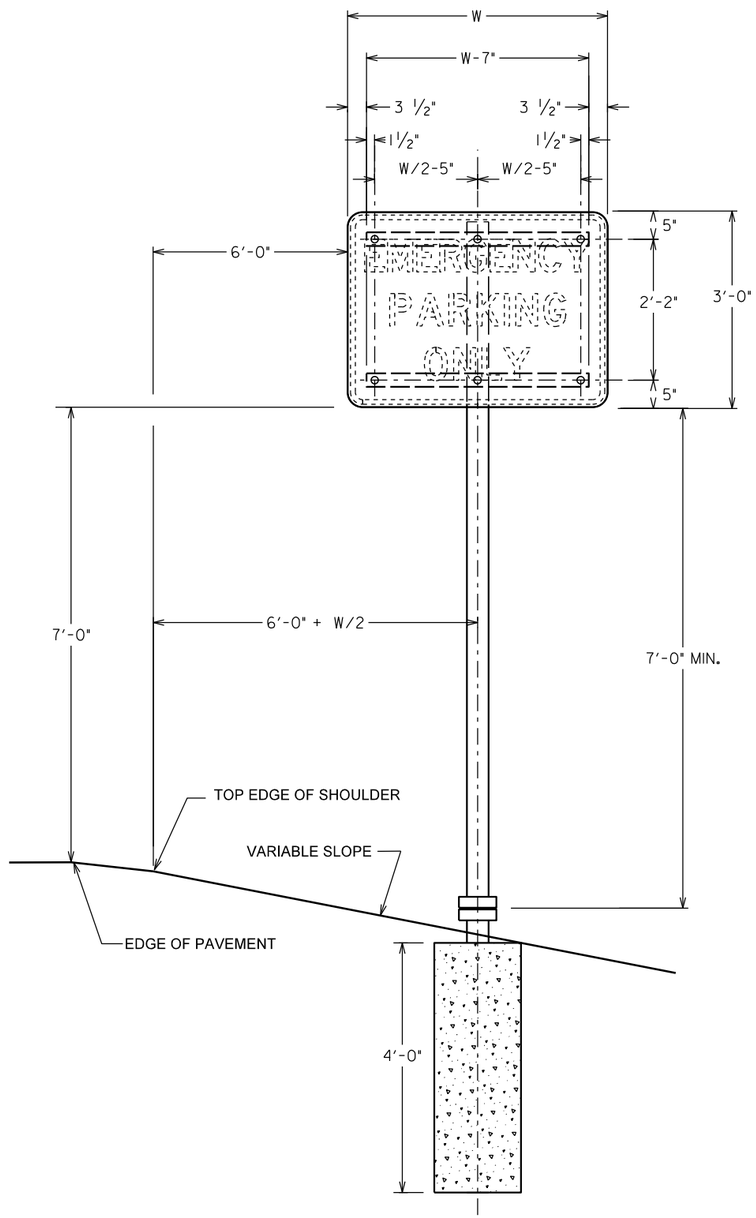

TYPICAL RECTANGULAR SIGN ASSEMBLY

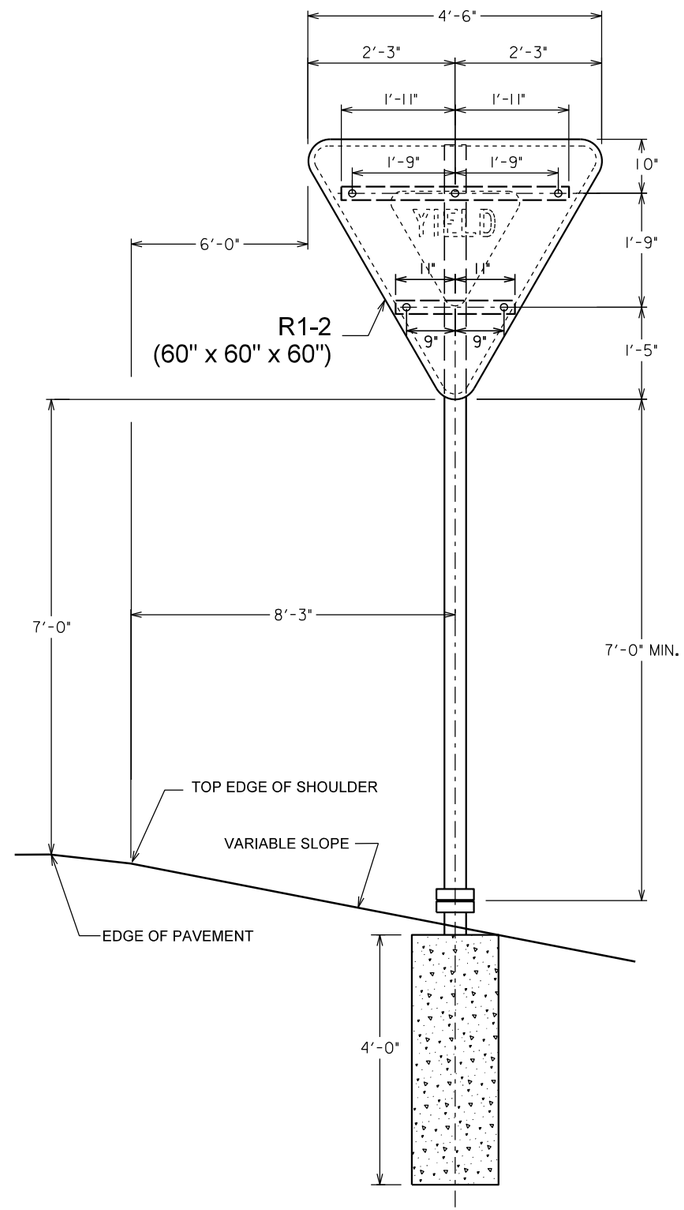

R1-2 YIELD SIGN ASSEMBLY

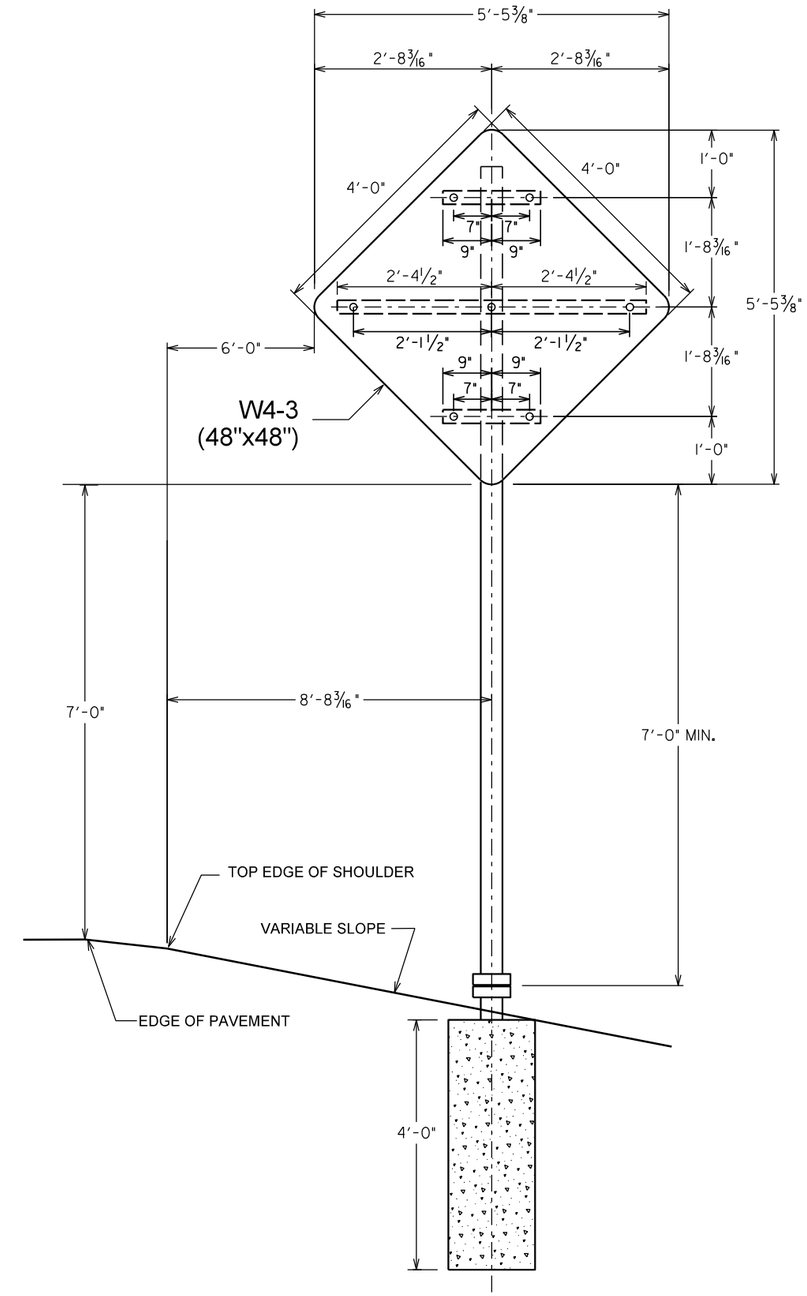

TYPICAL WARNING SIGN ASSEMBLY

PLOT SCALE - 1:2.32834

PLOTTED FROM - TRM111126

PLOT NAME - 47

FILE - ...\SIGNING\010S_ROUTEMARKER.DGN

ERECTION DETAILS FOR INTERSTATE HIGHWAY SIGNS

FOR BIDDING PURPOSES ONLY

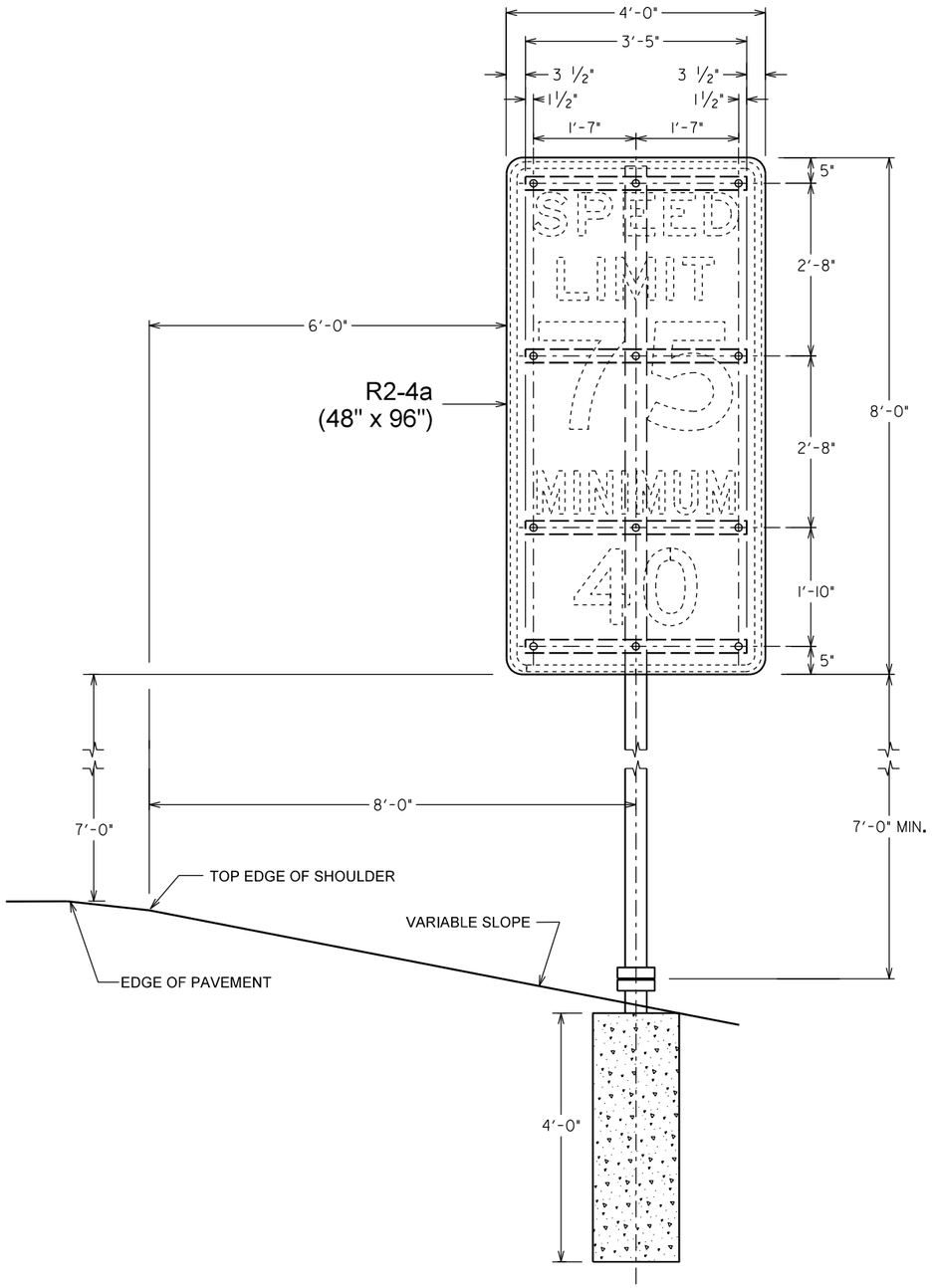

R2-4a SPEED LIMIT
SIGN ASSEMBLY

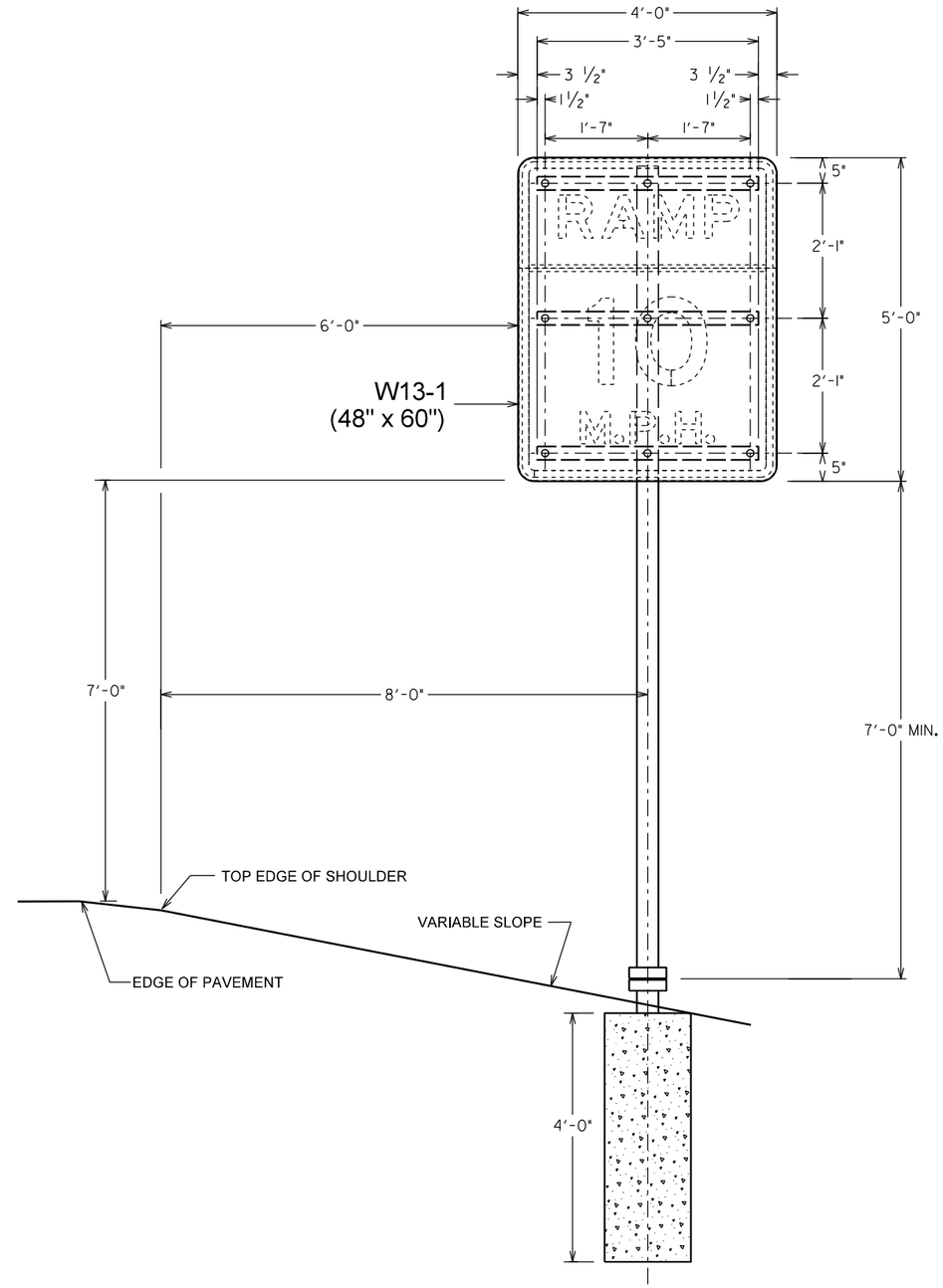

TYPICAL 4' X 5'
SIGN ASSEMBLY

PLOT SCALE - 1:2.32834
PLOTTED FROM - TRM111126
PLOT NAME - 48
FILE - ...\SIGNING\010S_ROUTEMARKER.DGN

FOR BIDDING PURPOSES ONLY

ERECTION DETAILS FOR INTERSTATE HIGHWAY SIGNS

MEDIAN X-OVERS

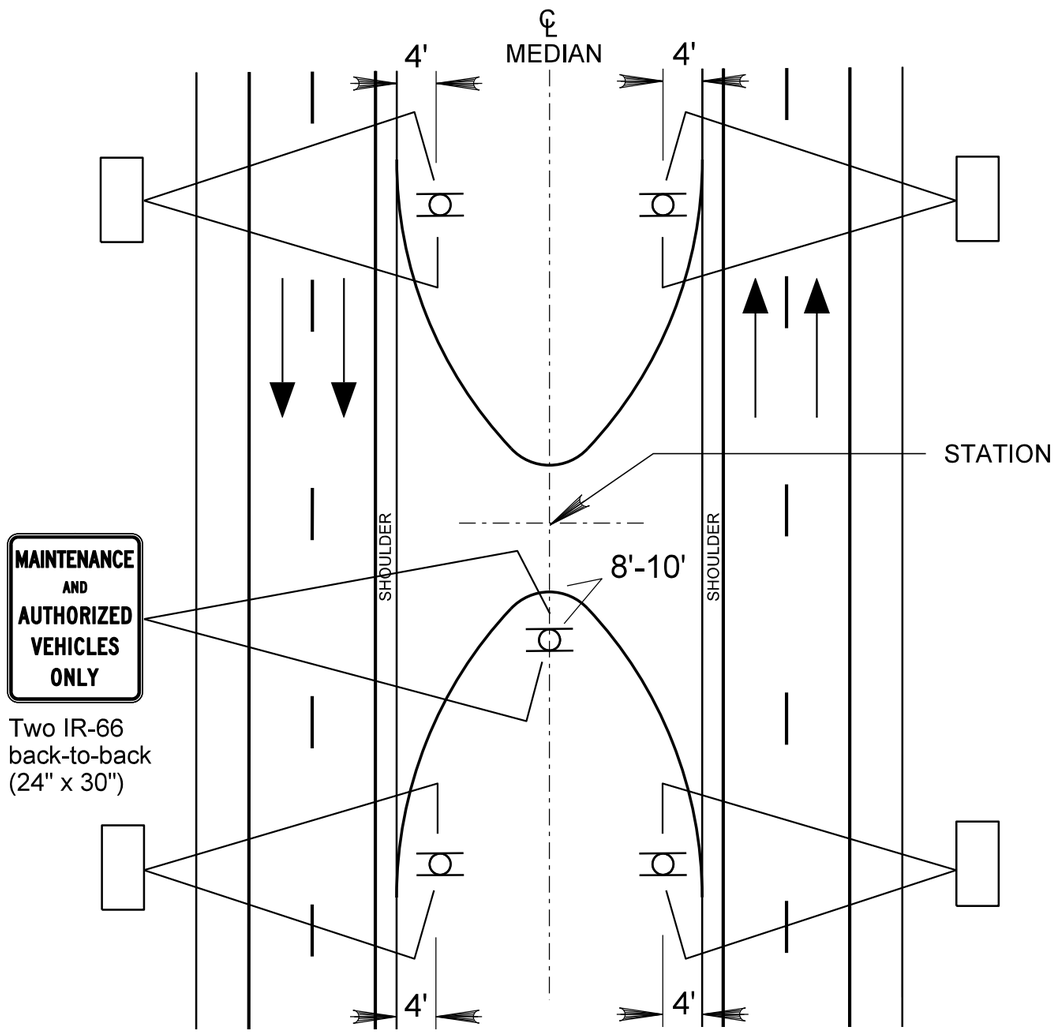

- 4" X 8" Flourescent Yellow Delineator

MEDIAN X-OVER
(TYPICAL)

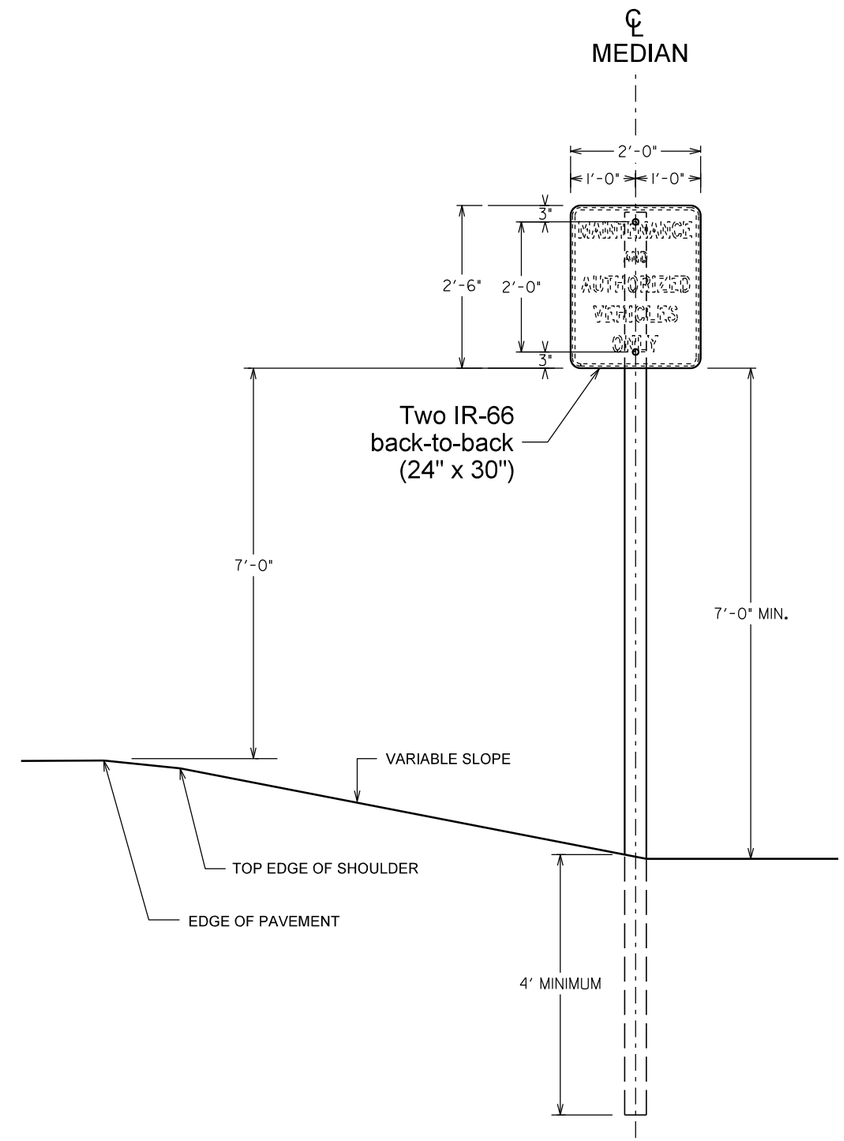

MAINTENANCE AND AUTHORIZED
VEHICLES ONLY ASSEMBLY

PLOT SCALE - 1:2.32834
PLOTTED FROM - TRM111126
PLOT NAME - 49
FILE - ...\SIGNING\010S_ROUTEMARKER.DGN

ERECTION DETAILS FOR INTERSTATE HIGHWAY SIGNS

FOR BIDDING PURPOSES ONLY

STATE OF SOUTH DAKOTA	PROJECT	SHEET NO.	TOTAL SHEETS
	IM 0293(96)73 IM 2292(90)0	S68	S116

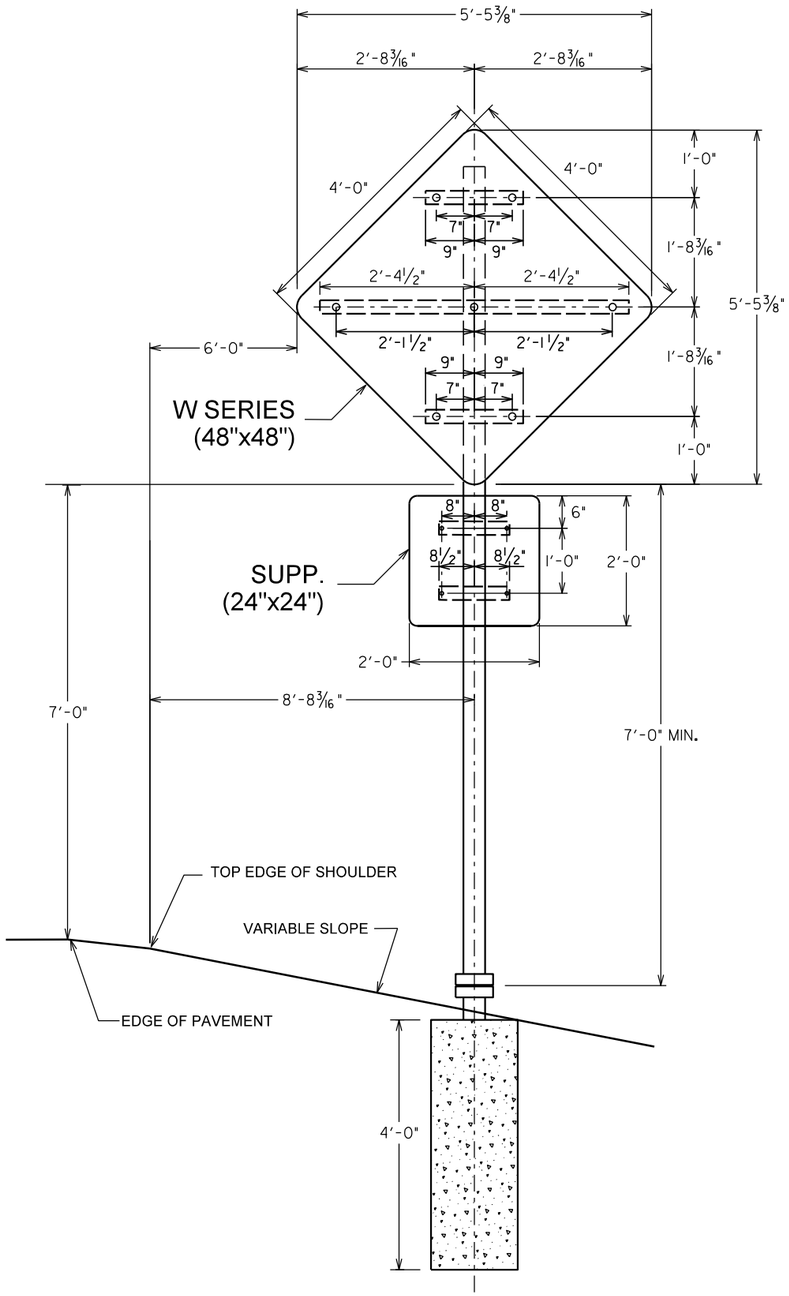

TYPICAL WARNING SIGN ASSEMBLY
WITH OPTIONAL SUPPLEMENTAL SIGN

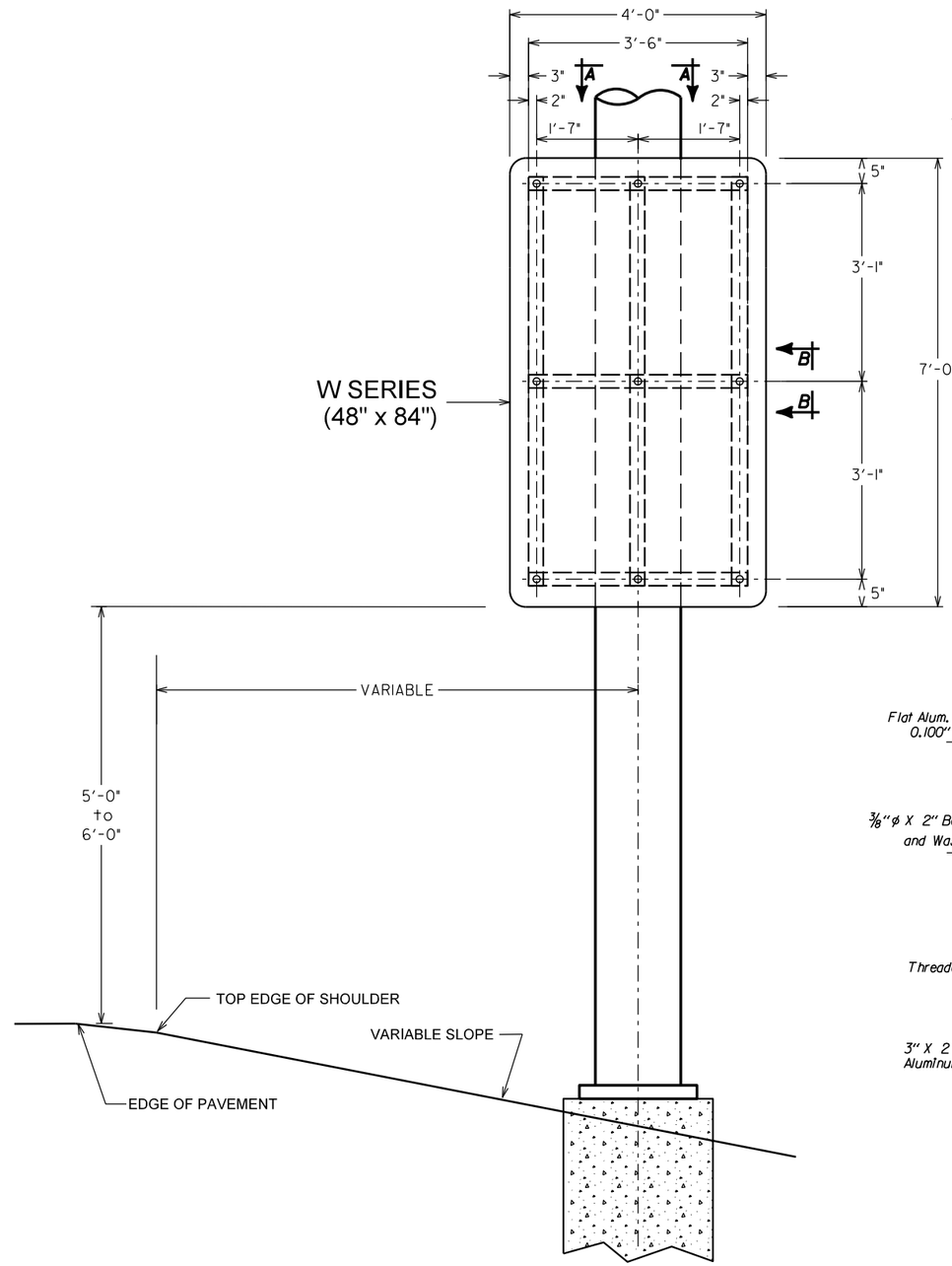

SIGN MOUNTING DETAIL FOR
VERTICAL SUPPORT POLE

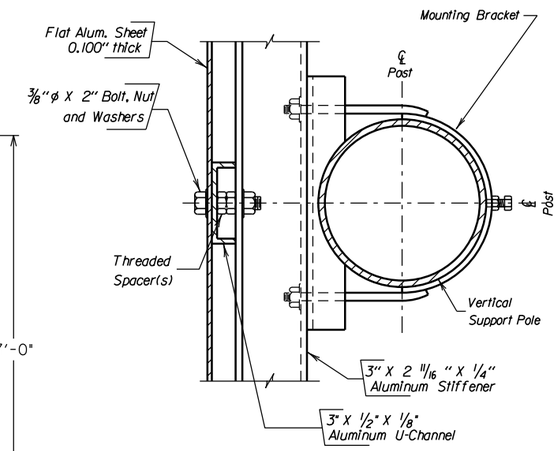

SEC. A-A

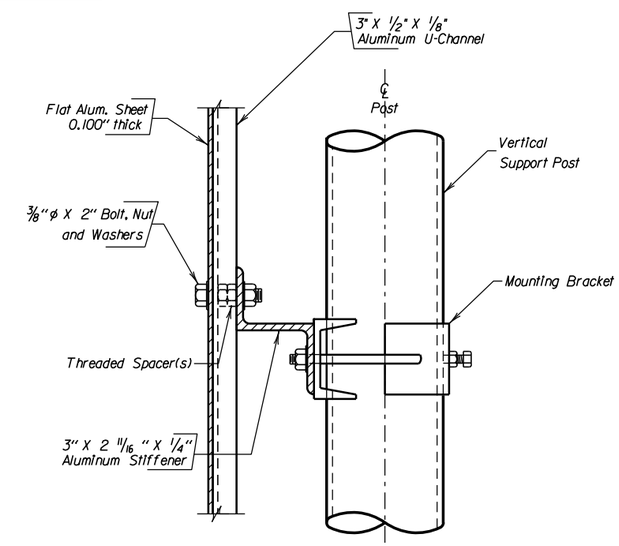

SEC. B - B

PLOT SCALE - 1:2.32834

PLOTTED FROM - TRM111126

PLOT NAME - 50

FILE - ...\SIGNING\010S_ROUTEMARKER.DGN

FOR BIDDING PURPOSES ONLY

SPECIAL SIGN SUPPORT DETAILS

(TYPICAL)

OFF- RAMP WRONG WAY SIGNING

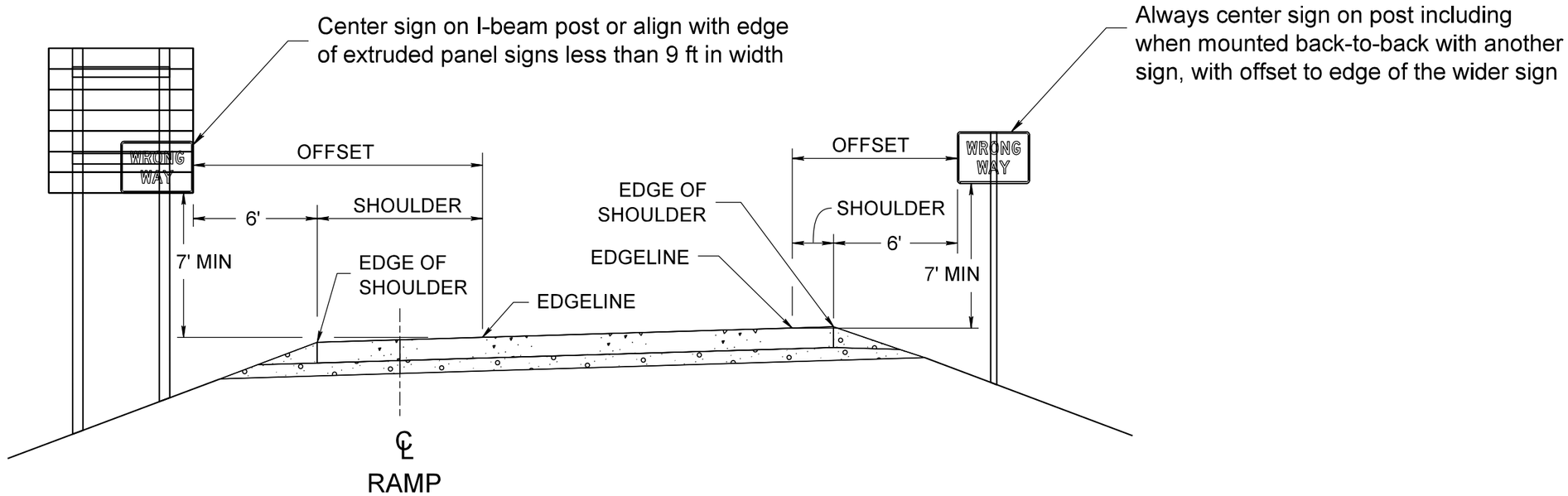

EXIT GORE SIGN INSTALLATION

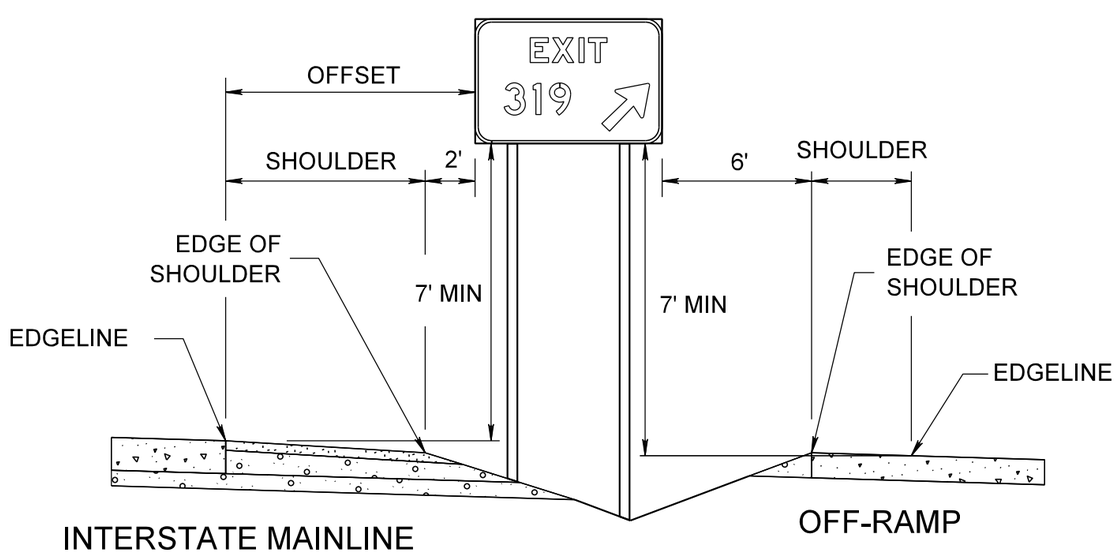

MERGE / ADDED LANE SIGN INSTALLATION

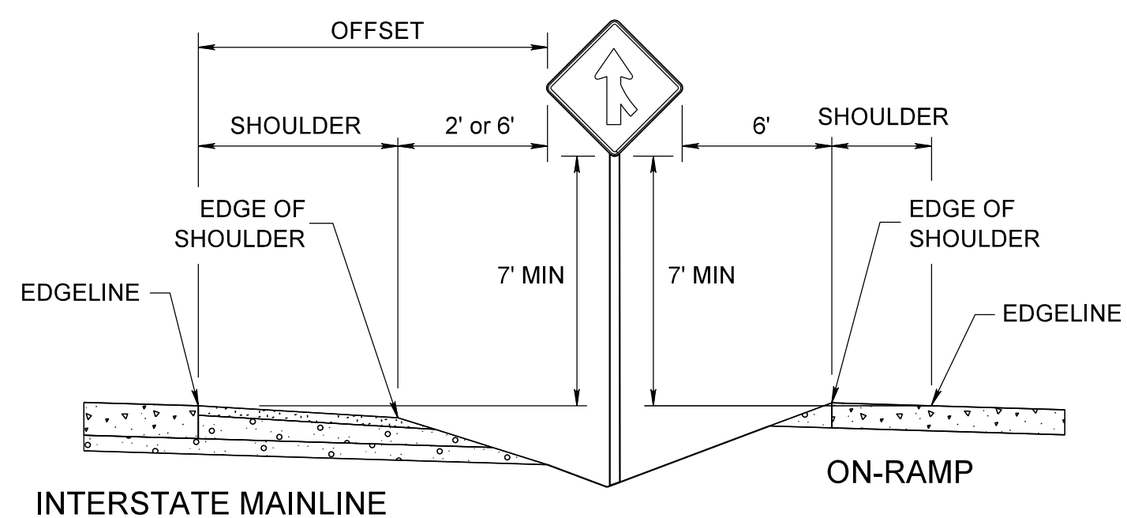

PLOT SCALE - $$SCALE$$
PLOT NAME - $$PLOTNAME$$
FILE - $$FILENAME$$
PLOTTED FROM - $$USERNAME$$

STATE OF	PROJECT	SHEET NO.	TOTAL SHEETS
S.D.	IM 0293(96)73 IM 2292(90)0	S70	S116

FOR BIDDING PURPOSES ONLY

△ Mounting height as recommended by latest edition of AASHTO ROADSIDE DESIGN GUIDE.

⌀ Clear distance as recommended by latest edition of MANUAL ON UNIFORM TRAFFIC CONTROL DEVICES.

ø See Erection Details for SHEET ALUMINUM SIGNS for flat sheet sign face installation details and stiffener requirements.

NOTE - N = Number of Stiffeners to be used
H = Vertical dimension of sign

★ NOTE:
Flanged Posts shall have a maximum depth of 5" and a maximum flange width of 4". Pipe posts shall have a maximum outside diameter of 5".

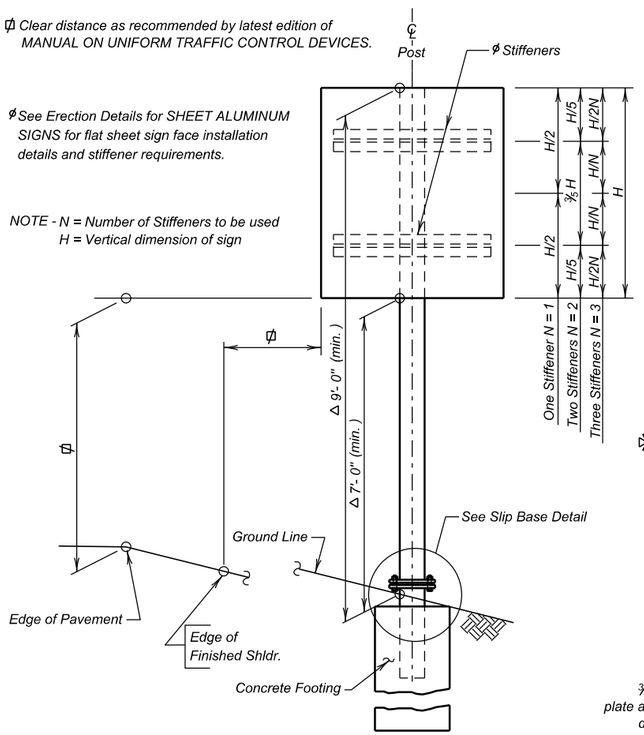

ELEVATION

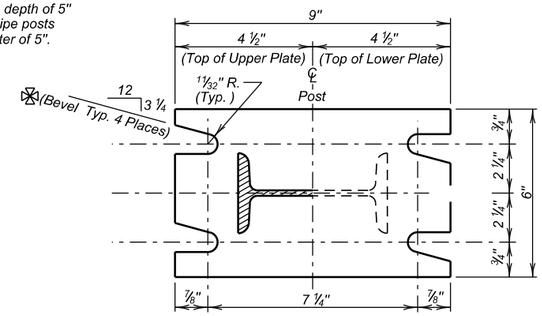

SEC. C - C
★ (Flanged Post)

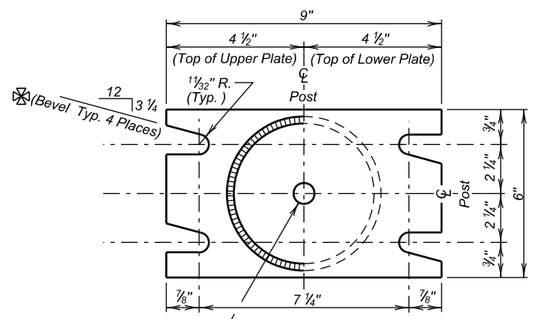

¾" ø drain hole in post base plate and stub base plate to allow drainage during galvanizing.

SEC. C - C
★ (Pipe Post)

NOTE:
Above Bevel is for sign on right shoulder. Plate Bevels are opposite hand for sign on left shoulder.

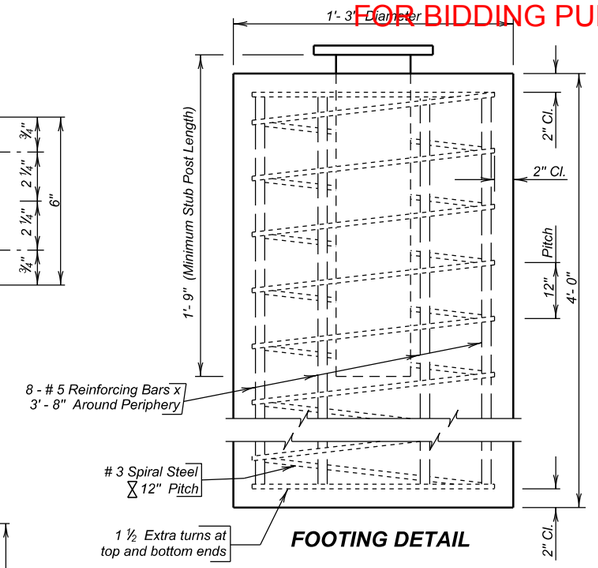

FOOTING DETAIL

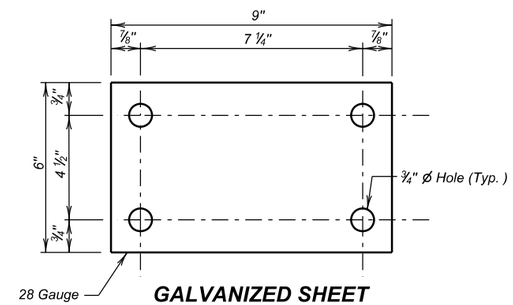

GALVANIZED SHEET METAL DIAPHRAGM

NOTE: Diaphragm need not be regalvanized after cutting to size and drilling of holes.

NOTES-

✳ 1. Design Specification: AASHTO Standard Specifications for Structural Supports for Highway Signs, Luminaires and Traffic Signals, 2001 Edition with 2003 Interims.

2. Concrete Footings shall be Class M6 - fc = 4000 p. s. i.

3. Structural Steel, except Pipe Posts, shall comform to ASTM A36. Pipe Posts shall conform to ASTM A53 Grade B or ASTM A501 and shall be standard weight posts (Schedule No. 40).

4. All Reinforcing Steel, except spirals, shall conform to ASTM 615 Grade 60.

5. Spiral Reinforcing Steel may be fabricated from cold drawn wire ASTM A82, or hot rolled plain or deformed bars conforming to the strength requirements of ASTM A615, Grade 60.

6. All Bolts and Nuts shall conform to ASTM A325. Washers shall conform to ASTM F436. All hardware shall be galvanized in accordance with ASTM A153.

7. All steel including Posts and Post Stubs shall be galvanized in accordance with ASTM A123.

8. All Bolt Holes shall be drilled. All plate cuts shall preferably be saw cuts. However, Flame Cutting will be permitted providing all edges are ground smooth (metal projecting beyond the plane of the plate face will NOT be allowed).

9. All welding and weld inspection shall be in accordance with the latest edition of AWS D 1.1 Structural Welding Code.

PROCEDURE FOR ASSEMBLING SLIP BASE-

1. Place galvanized Sheet Metal Diaphragms on top of the lower slip plate.

2. Connect main post to Stub Post with clean unlubricated bolts and nuts with one Hardened Washer on each bolt between slip plates.

3. Plumb post by adding shims between slip plates.

4. Tighten bolts to a practical maximum, using a 12" - 15" wrench in order to bed surfaces and clean threads. DO NOT TIGHTEN TO PROOF LOAD.

5. Loosen all bolts and retighten in increments, using a systematic order, until each bolt has been tightened to a torque not exceeding 345 in-lb. DO NOT OVERTIGHTEN. Check torque on each bolt after entire sign has been erected.

SHOP PLANS-

The fabricator shall initially submit two (2) copies of the shop plans to the Office of Bridge Design for review. One reviewed copy will be sent back to the fabricator who will then make changes, if any, and then send the Office of Bridge Design six (6) final approved copies for distribution.

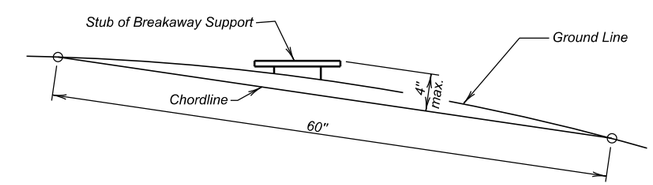

BREAKAWAY SUPPORT STUB CLEARANCE DIAGRAM

NOTE:
The stub post and lower slip plate shall NOT extend more than 4" max. above the chordline within a 60" chord.

≠ See Erection Details for SLIP BASE ALTERNATE.

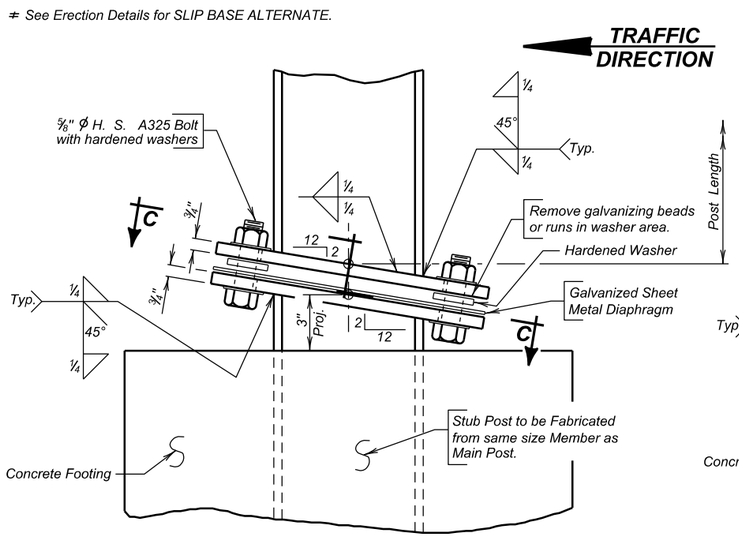

≠ SLIP BASE DETAIL
(Flanged Post)

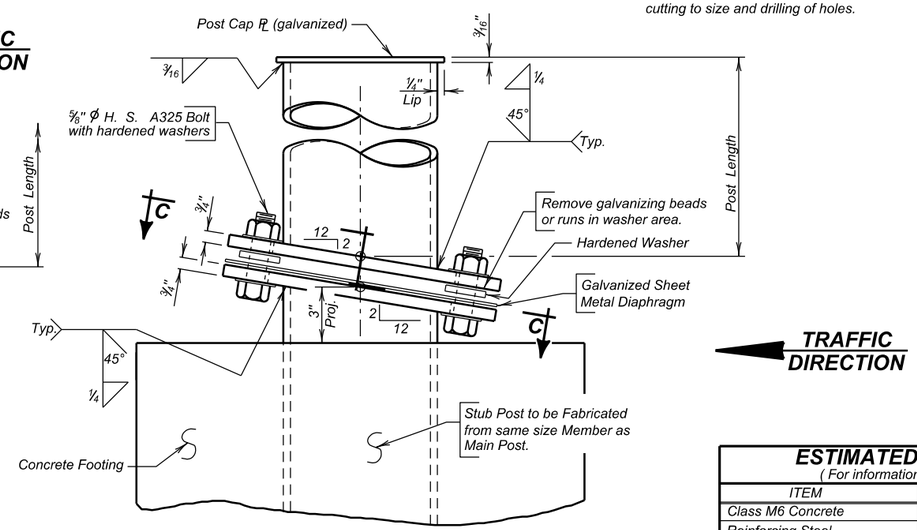

SLIP BASE DETAIL
(Pipe Post)

ESTIMATED QUANTITIES
(For informational purposes only)

ITEM	UNIT	QUANTITY
Class M6 Concrete	Cu. Yd.	0.182
Reinforcing Steel	Lb.	41
Structure Excavation	Cu. Yd.	0.182

ERECTION DETAILS
FOR
SINGLE POST BREAKAWAY SIGN SUPPORTS
(FLANGED AND PIPE POSTS)
S. D. DEPT. OF TRANSPORTATION
DECEMBER 1994

(X) OF (X)

MK	REVISION	DATED	BY
✳	Pitch Correction	3/24/11	DM
✳	Specification Update	7/11/05	AV

DESIGNED BY	DRAWN BY	CHECKED BY	
RH/DM	RH/TB	RH/DM	Kevin N. Goeden
CNTYPCNX	PCNXDSPG	BSTDBS1	BRIDGE ENGINEER

STATE OF	PROJECT	SHEET NO.	TOTAL SHEETS
S.D.	IM 0293(96)73 IM 2292(90)0	S71	S116

FOR BIDDING PURPOSES ONLY

Rev: 9-16-15 SAH

SITE LOCATION	POST SIZE	FOOTING DIMENSIONS		STUB POST LENGTH	LONGITUDINAL STEEL		SPIRAL STEEL	
		DIA.	DEPTH		QTY - SIZE	LENGTH	DIA.	LENGTH
28+75 Lt	W 8 x 28	1' - 9"	8' - 0"	2' - 6"	8 - #6 Bars	7' - 8"	1' - 5"	47'
50+80 Lt	W 6 x 15	1' - 9"	5' - 0"	2' - 0"	8 - #6 Bars	4' - 8"	1' - 5"	33'
50+80 Lt	W 6 x 15	1' - 9"	5' - 0"	2' - 0"	8 - #6 Bars	4' - 8"	1' - 5"	33'
105+85 Lt	W 6 x 12	1' - 9"	5' - 0"	2' - 0"	8 - #6 Bars	4' - 8"	1' - 5"	33'
109+60 Rt	W 6 x 12	1' - 9"	5' - 0"	2' - 0"	8 - #6 Bars	4' - 8"	1' - 5"	33'
140+25 Rt	W 6 x 20	1' - 9"	6' - 0"	2' - 3"	8 - #6 Bars	5' - 8"	1' - 5"	38'
148+25 Rt	W 6 x 20	1' - 9"	6' - 0"	2' - 3"	8 - #6 Bars	5' - 8"	1' - 5"	38'
156+80 Rt	S 5 x 10	1' - 6"	4' - 0"	1' - 9"	6 - #6 Bars	3' - 8"	1' - 2"	24'
13+10 Lt	W 8 x 18	1' - 9"	7' - 0"	2' - 3"	8 - #6 Bars	6' - 8"	1' - 5"	42'
15+55 Rt	W 8 x 28	1' - 9"	9' - 0"	2' - 6"	8 - #6 Bars	8' - 8"	1' - 5"	51'
22+05 Rt	W 8 x 28	1' - 9"	9' - 0"	2' - 6"	8 - #6 Bars	8' - 8"	1' - 5"	51'
28+55 Rt	W 8 x 28	1' - 9"	9' - 0"	2' - 6"	8 - #6 Bars	8' - 8"	1' - 5"	51'
31+75 Lt	W 6 x 15	1' - 9"	6' - 0"	2' - 0"	8 - #6 Bars	5' - 8"	1' - 5"	38'
31+75 Lt	W 6 x 15	1' - 9"	6' - 0"	2' - 0"	8 - #6 Bars	5' - 8"	1' - 5"	38'
35+05 Rt	W 8 x 28	1' - 9"	8' - 0"	2' - 6"	8 - #6 Bars	7' - 8"	1' - 5"	47'
3011+50 Rt	W 6 x 20	1' - 9"	7' - 0"	2' - 3"	8 - #6 Bars	6' - 8"	1' - 5"	42'
3013+00 Rt	W 6 x 20	1' - 9"	7' - 0"	2' - 3"	8 - #6 Bars	6' - 8"	1' - 5"	42'
5006+00 Lt	W 6 x 20	1' - 9"	6' - 0"	2' - 3"	8 - #6 Bars	5' - 8"	1' - 5"	38'
5007+50 Lt	W 6 x 20	1' - 9"	6' - 0"	2' - 3"	8 - #6 Bars	5' - 8"	1' - 5"	38'
73+00 Lt	W 8 x 21	1' - 9"	8' - 0"	2' - 3"	8 - #6 Bars	7' - 8"	1' - 5"	47'
44+75 Rt	W 8 x 28	1' - 9"	8' - 0"	2' - 6"	8 - #6 Bars	7' - 8"	1' - 5"	47'

NOTE: The above is a Site Specific data entry table and the inserted information is the responsibility of the Region Traffic Engineer.

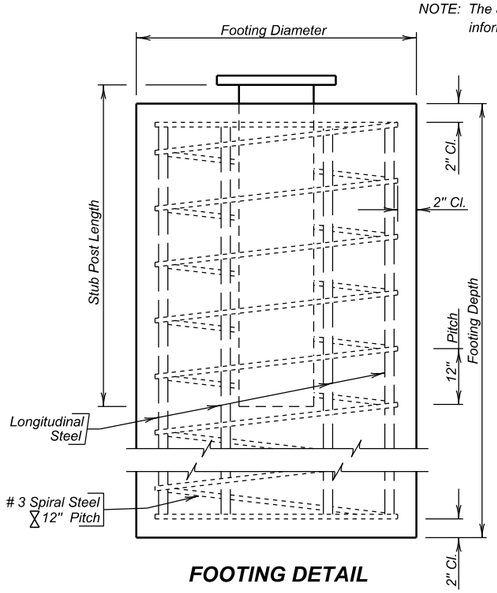

FOOTING DETAIL

Spirals - Use 12" pitch and 1 ½ extra turns at each end. Use 1 ½ turns for lap at splice as required, or weld as approved by the Office of Bridge Design, Spirals may be smooth bars, Bar length shown does not include Splices. Dimensions are out to out of bars.

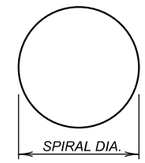

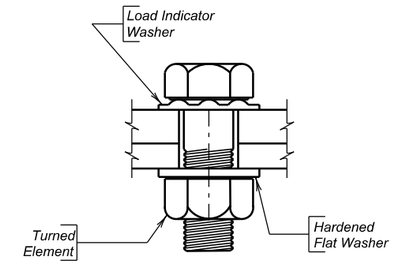

LOAD INDICATOR WASHER DETAIL

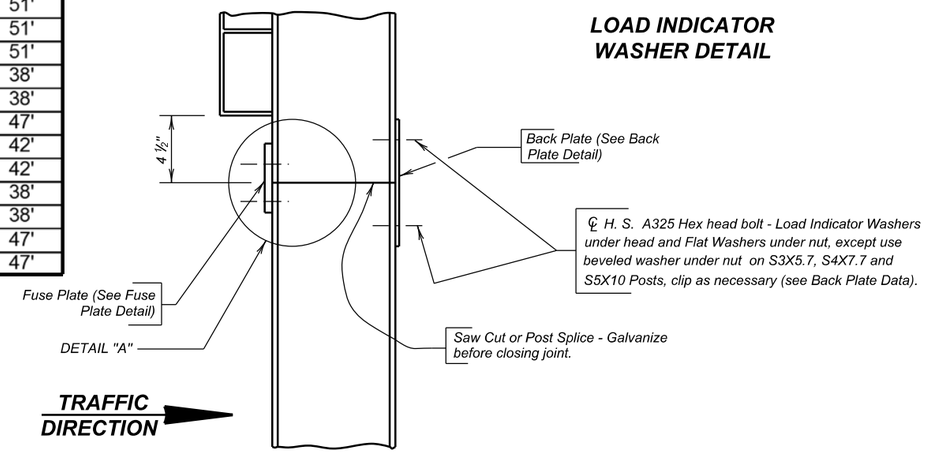

FUSE & BACK PLATE INSTALLATION

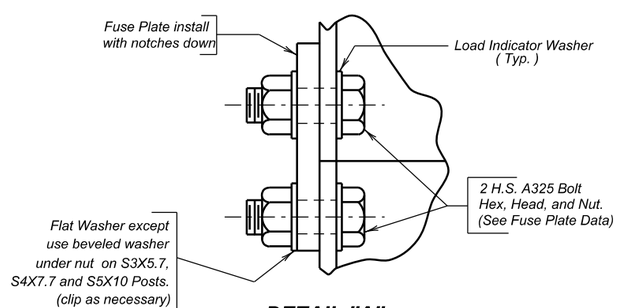

DETAIL "A"

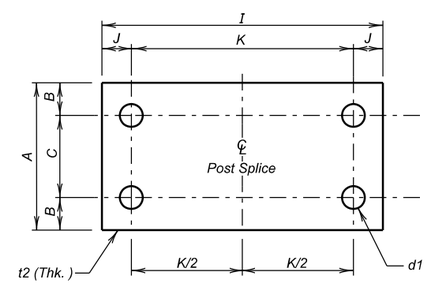

BACK PLATE DETAIL

NOTES-

✳ 1. Design Specification: AASHTO Standard Specifications for Structural Supports for Highway Signs, Luminaires and Traffic Signals, 2001 Edition with 2003 Interims.

2. Concrete Footings shall be Class M6 - fc = 4000 p. s. i.

3. Structural Steel shall comform to ASTM A36.

4. All Reinforcing Steel, except spirals, shall conform to ASTM 615 Grade 60.

5. Spiral Reinforcing Steel may be fabricated from cold drawn wire ASTM A82, or hot rolled plain or deformed bars conforming to the strength requirements of ASTM A615, Grade 60.

6. All Bolts and Nuts shall conform to ASTM A325 except that ½" diameter bolts may conform to either ASTM A325 or ASTM A449. Washers shall conform to ASTM F436. All hardware shall be galvanized in accordance with ASTM A153.

7. All structural steel including Posts and Post Stubs shall be galvanized in accordance with ASTM A123.

8. All Bolt Holes shall be drilled. All plate cuts shall preferably be saw cuts. However, Flame Cutting will be permitted providing all edges are ground smooth (metal projecting beyond the plane of the plate face will NOT be allowed).

9. All welding and weld inspection shall be in accordance with the latest edition of AWS D 1.1 Structural Welding Code.

PROCEDURE FOR ASSEMBLING SLIP BASE-

1. Place galvanized Sheet Metal Diaphrams on top of the lower slip plate.

2. Connect main post to Stub Post with clean unlubricated bolts and nuts with one Hardened Washer on each bolt between slip plates.

3. Plumb post by adding shims between slip plates.

4. Tighten bolts to a practical maximum, using a 12" - 15" wrench in order to bed surfaces and clean threads. DO NOT TIGHTEN TO PROOF LOAD.

5. Loosen all bolts and retighten in increments, using a systematic order, until each bolt has been tightened to the specified torque corresponding to the post size used (See Slip Base Plate Data). Tighten bolts only to the torque specified. DO NOT OVERTIGHTEN. Check torque on each bolt after entire sign has been erected.

ASSEMBLY OF FRICTION FUSE PLATES, BACK PLATES AND STIFFENERS-

1. High strength bolts shall be tightened so as to obtain a residual tension by the use of load indicator washers.

2. High strength bolts may be tightened by the "Turn of the Nut" method as provided in Section 11.5.6.4.4 of the AASHTO Standard Specifications for Highway Bridges in lieu of #1 above.

SHOP PLANS-

The fabricator shall initially submit two (2) copies of the shop plans to the Office of Bridge Design for review. One reviewed copy will be sent back to the fabricator who will then make changes, if any, and then send the Office of Bridge Design six (6) final approved copies for distribution.

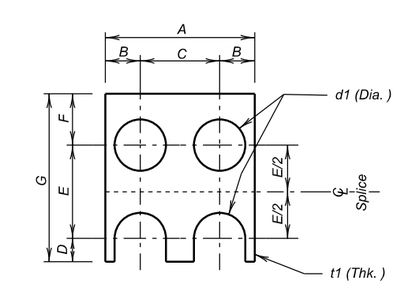

FUSE PLATE DETAIL

TABLE 1 - FUSE PLATE DATA

Post Size	A	B	C	D	E	F	G	d1	t1	Bolt Size
S3X5. 7	2 5/8"	9/16"	1 1/2"	1/2"	1 1/2"	1 1/8"	3 1/8"	5/8" Ø	1/4"	1/2" Ø
S4X7. 7	2 5/8"	9/16"	1 1/2"	1/2"	1 1/2"	1 1/8"	3 1/8"	5/8" Ø	1/4"	1/2" Ø
S5X10	3"	11/16"	1 5/8"	5/8"	2 1/4"	1 1/8"	4"	3/4" Ø	3/8"	5/8" Ø
W6X12	4"	15/16"	2 1/8"	5/8"	2 1/2"	1 3/8"	4 1/2"	3/4" Ø	3/8"	5/8" Ø
W6X15	6"	1 3/8"	3 1/4"	5/8"	2 1/2"	1 3/8"	4 1/2"	3/4" Ø	3/8"	5/8" Ø
W6X20	6"	1 3/8"	3 1/4"	5/8"	2 1/2"	1 3/8"	4 1/2"	3/4" Ø	3/8"	5/8" Ø
W8X18	5 1/4"	1 5/16"	2 5/8"	3/4"	2 1/2"	1 3/8"	4 5/8"	7/8" Ø	1/2"	3/4" Ø
W8X21	5 1/4"	1 5/16"	2 5/8"	3/4"	2 1/2"	1 3/8"	4 5/8"	7/8" Ø	1/2"	3/4" Ø
W8X24	6 1/2"	1 1/2"	3 1/2"	7/8"	3"	1 7/8"	5 1/2"	1" Ø	9/16"	7/8" Ø
W8X28	6 1/2"	1 9/16"	3 3/8"	7/8"	3"	1 3/4"	5 5/8"	1" Ø	1/2"	7/8" Ø
W8X31	8"	1 5/8"	4 3/4"	1"	3 1/2"	2"	6 1/2"	1 1/8" Ø	5/8"	1" Ø
W10X33	8"	1 7/8"	4 1/4"	1 1/8"	4 1/2"	2 1/4"	7 7/8"	1 1/4" Ø	3/4"	1 1/8" Ø

TABLE 5 - BACK PLATE DATA

Post Size	A	B	C	J	K	I	d1	t2	Bolt Size
S3X5. 7	2 5/8"	9/16"	1 1/2"	1 1/4"	4 1/2"	7"	5/8" Ø	1/4"	1/2" Ø
S4X7. 7	2 5/8"	9/16"	1 1/2"	1 1/4"	4 1/2"	7"	5/8" Ø	1/4"	1/2" Ø
S5X10	3"	11/16"	1 5/8"	1 1/4"	4 3/4"	7 1/4"	3/4" Ø	1/4"	5/8" Ø
W6X12	4"	15/16"	2 1/8"	1 1/4"	4 3/4"	7 1/4"	3/4" Ø	1/4"	5/8" Ø
W6X15	6"	1 3/8"	3 1/4"	1 1/4"	5 1/4"	7 3/4"	3/4" Ø	1/4"	5/8" Ø
W6X20	6"	1 3/8"	3 1/4"	1 1/4"	5 1/4"	7 3/4"	3/4" Ø	1/4"	5/8" Ø
W8X18	5 1/4"	1 5/16"	2 5/8"	1 3/8"	5 3/4"	8 1/2"	7/8" Ø	1/4"	3/4" Ø
W8X21	5 1/4"	1 5/16"	2 5/8"	1 3/8"	5 3/4"	8 1/2"	7/8" Ø	1/4"	3/4" Ø
W8X24	6 1/2"	1 1/2"	3 1/2"	1 3/8"	6"	9 1/4"	1" Ø	5/16"	7/8" Ø
W8X28	6 1/2"	1 9/16"	3 3/8"	1 3/4"	6"	9 1/2"	1" Ø	3/8"	7/8" Ø
W8X31	8"	1 5/8"	4 3/4"	2"	6 1/2"	10 1/2"	1 1/8" Ø	3/8"	1" Ø
W10X33	8"	1 7/8"	4 1/4"	2 1/2"	7"	1'- 0"	1 1/4" Ø	7/16"	1 1/8" Ø

ERECTION DETAILS

FOR

TWO-POST ONE-DIRECTION BREAKAWAY SIGN SUPPORTS

S. D. DEPT. OF TRANSPORTATION

DECEMBER 1994

1 OF 2

MK	REVISION	DATED	BY
✳	Pitch Correction	3/24/11	DM
✳	Specification Update	7/11/05	AV

DESIGNED BY	DRAWN BY	CHECKED BY	
RH/DM	TB	RH/DM	Kevin N. Boeder
CNTYPCNX	PCNXDSPG	BSTDBS2A	BRIDGE ENGINEER

FOR BIDDING PURPOSES ONLY

NOTE-
Sign face details shown are those for extruded aluminum panels.
See Erection Details for SHEET ALUMINUM SIGNS for mounting flat sheet sign face.

△ Mounting height as recommended by latest edition of AASHTO ROADSIDE DESIGN GUIDE.

ϕ Clear distance as recommended by latest edition of MANUAL ON UNIFORM TRAFFIC CONTROL DEVICES.

NOTE - N = Number of Stiffeners to be used
H = Vertical dimension of sign
L = Horizontal dimension of Main Sign

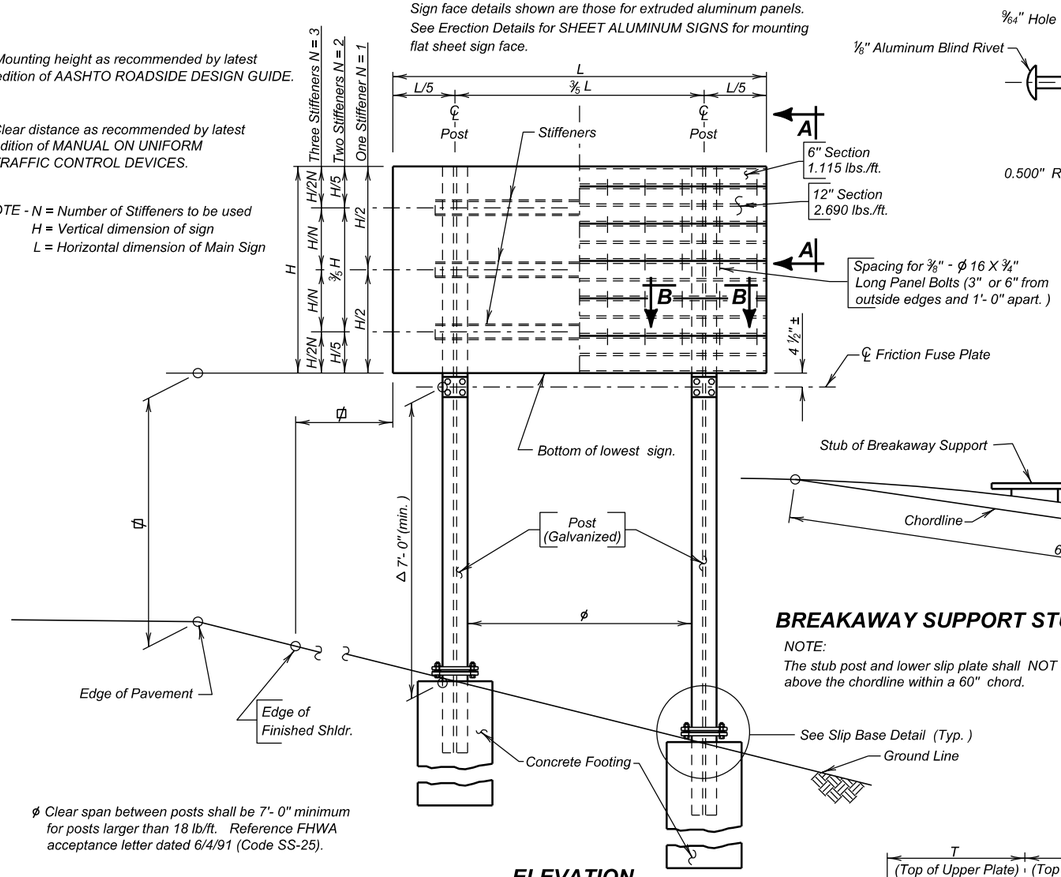

ϕ Clear span between posts shall be 7'- 0" minimum for posts larger than 18 lb/ft. Reference FHWA acceptance letter dated 6/4/91 (Code SS-25).

ELEVATION

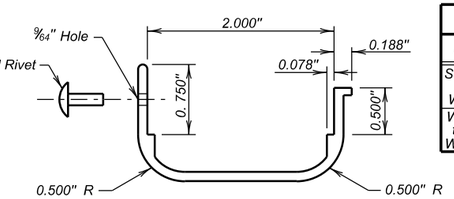

SIDE TRIM MOLDING

Side Trim Molding is required on all vertical edges of extruded panels. They shall be fastened at a minimum of one (1) rivet per panel.

STIFFENER DATA							
Post	Stiffener	a	b	c	d	Bolt (A325)	Plate Thk.
S3X5. 7 thru W8X21	C3X5	10 1/2"	5"	1 1/4"	8"	5/8" ϕ	5/16"
W8X24 thru W10x33	C5X6. 7	13 1/2"	6"	1 1/2"	10 1/2"	7/8" ϕ	3/8"

STIFFENER NOTES-

1. Stiffeners must always be used on Two Post Breakaway signs regardless of type of sign face employed.
2. Number of stiffeners used, N, shall be as follows:
   If H < = 2' - 0" then N = 1
   if 2' - 0" < H < = 8' - 0" then N = 2
   if 8' - 0" < H < = 15' - 0" then N = 3

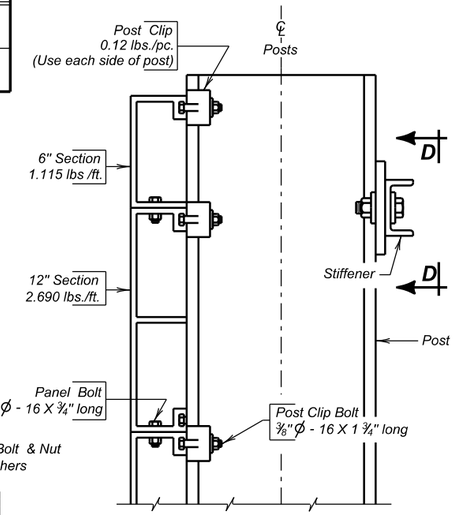

SEC. A - A

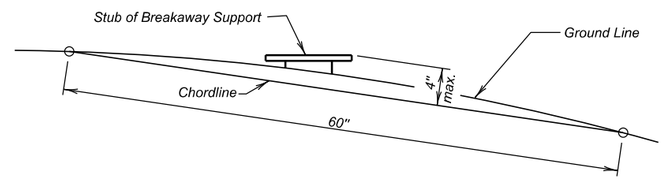

BREAKAWAY SUPPORT STUB CLEARANCE DIAGRAM

NOTE:
The stub post and lower slip plate shall NOT extend more than 4" max. above the chordline within a 60" chord.

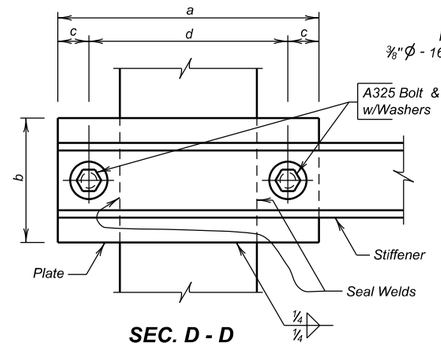

SEC. D - D

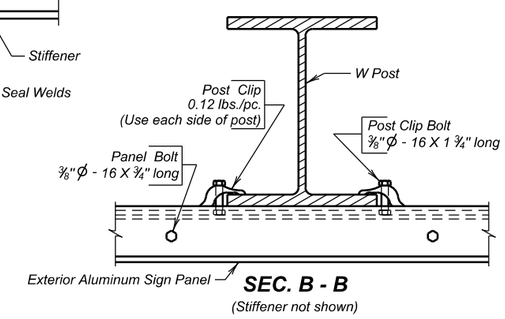

SEC. B - B

(Stiffener not shown)

≠ See Erection Details for SLIP BASE ALTERNATE.

TRAFFIC DIRECTION

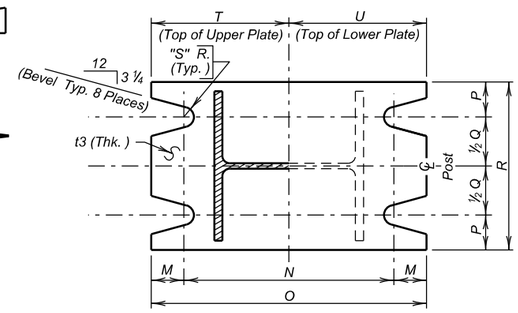

SEC. C - C

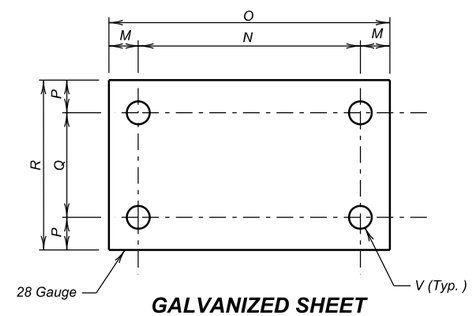

GALVANIZED SHEET METAL DIAPHRAGM

TABLE 3 - SHEET METAL DIAPHRAGM DATA							
Post Size	M	N	O	P	Q	R	V
S3X5. 7	3/4"	6"	7 1/2"	3/4"	1 1/2"	3"	5/8"
S4X7. 7	3/4"	6"	7 1/2"	3/4"	1 1/2"	3"	5/8"
S5X10	7/8"	7 1/4"	9"	3/4"	2"	3 1/2"	3/4"
W6X12	7/8"	8 1/4"	10"	7/8"	2 3/4"	4 1/2"	3/4"
W6X15	1 1/8"	8 1/2"	10 3/4"	1 1/4"	4"	6 1/2"	7/8"
W6X20	1 1/8"	10"	1'- 0 1/4"	1 1/4"	4"	6 1/2"	7/8"
W8X18	1 1/8"	10 1/2"	1'- 0 3/4"	1 1/4"	3 1/2"	6"	7/8"
W8X21	1 1/4"	11 1/4"	1'- 1 3/4"	1 1/4"	3 1/2"	6"	1"
W8X24	1 1/2"	11"	1'- 2"	1 5/8"	4 1/4"	7 1/2"	1"
W8X28	1 5/8"	11 1/4"	1'- 2 1/2"	1 5/8"	4 1/4"	7 1/2"	1 1/8"
W8X31	1 3/4"	11 1/4"	1'- 2 3/4"	1 7/8"	5 1/4"	9"	1 1/8"
W10X33	1 3/4"	1'- 2"	1'- 5 1/2"	1 7/8"	5 1/4"	9"	1 1/8"

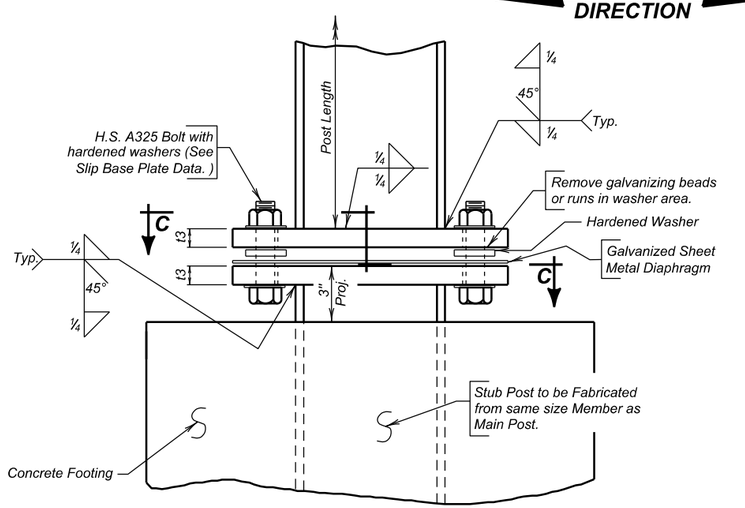

≠ SLIP BASE DETAIL

TABLE 4 - SLIP BASE PLATE DATA												
Post Size	M	N	O	P	Q	R	S	T	U	t3	Bolt Size	Bolt Torque
S3X5. 7	3/4"	6"	7 1/2"	3/4"	1 1/2"	3"	9/32"	3 3/4"	3 3/4"	5/8"	1/2" ϕ	142" - #
S4X7. 7	3/4"	6"	7 1/2"	3/4"	1 1/2"	3"	9/32"	3 3/4"	3 3/4"	5/8"	1/2" ϕ	142" - #
S5X10	7/8"	7 1/4"	9"	3/4"	2"	3 1/2"	11/32"	4 1/2"	4 1/2"	7/8"	5/8" ϕ	345" - #
W6X12	7/8"	8 1/4"	10"	7/8"	2 3/4"	4 1/2"	11/32"	5"	5"	7/8"	5/8" ϕ	345" - #
W6X15	1 1/8"	8 1/2"	10 3/4"	1 1/4"	4"	6 1/2"	13/32"	5 3/8"	5 3/8"	1"	3/4" ϕ	554" - #
W6X20	1 1/8"	10"	1'- 0 1/4"	1 1/4"	4"	6 1/2"	13/32"	6 1/8"	6 1/8"	1"	3/4" ϕ	554" - #
W8X18	1 1/8"	10 1/2"	1'- 0 3/4"	1 1/4"	3 1/2"	6"	13/32"	6 3/8"	6 3/8"	1"	3/4" ϕ	554" - #
W8X21	1 1/4"	11 1/4"	1'- 1 3/4"	1 1/4"	3 1/2"	6"	15/32"	6 7/8"	6 7/8"	1"	7/8" ϕ	645" - #
W8X24	1 1/2"	11"	1'- 2"	1 5/8"	4 1/4"	7 1/2"	15/32"	7"	7"	1"	7/8" ϕ	645" - #
W8X28	1 5/8"	11 1/4"	1'- 2 1/2"	1 5/8"	4 1/4"	7 1/2"	17/32"	7 1/4"	7 1/4"	1 1/8"	1" ϕ	735" - #
W8X31	1 3/4"	11 1/4"	1'- 2 3/4"	1 7/8"	5 1/4"	9"	17/32"	7 3/8"	7 3/8"	1 1/8"	1" ϕ	735" - #
W10X33	1 3/4"	1'- 2"	1'- 5 1/2"	1 7/8"	5 1/4"	9"	17/32"	8 3/4"	8 3/4"	1 1/4"	1" ϕ	735" - #

NOTE: Diaphragm need not be regalvanized after cutting to size and drilling of holes.

ERECTION DETAILS
FOR
TWO-POST ONE-DIRECTION
BREAKAWAY SIGN SUPPORTS
S. D. DEPT. OF TRANSPORTATION
DECEMBER 1994

DESIGNED BY	DRAWN BY	CHECKED BY	
RH/DM CNTYPCNX	TB PCNXDSPG	RH/DM BSTDBS2D	Kevin N. Goeden BRIDGE ENGINEER

FOR BIDDING PURPOSES ONLY

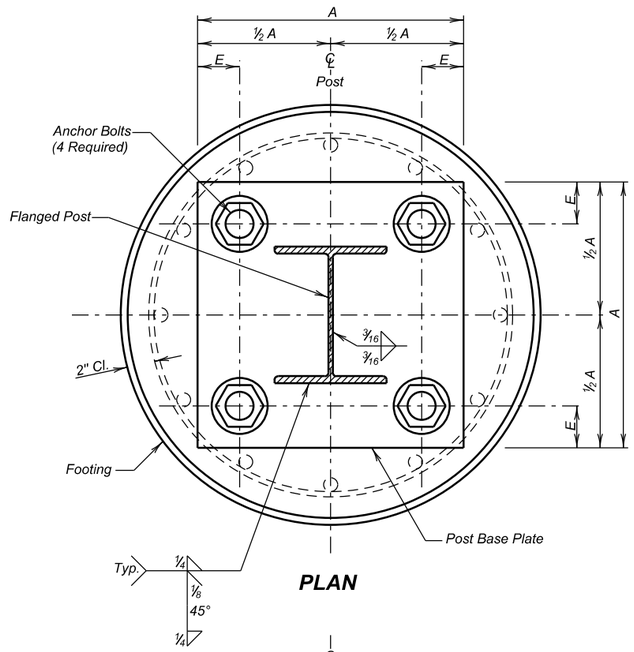

PLAN

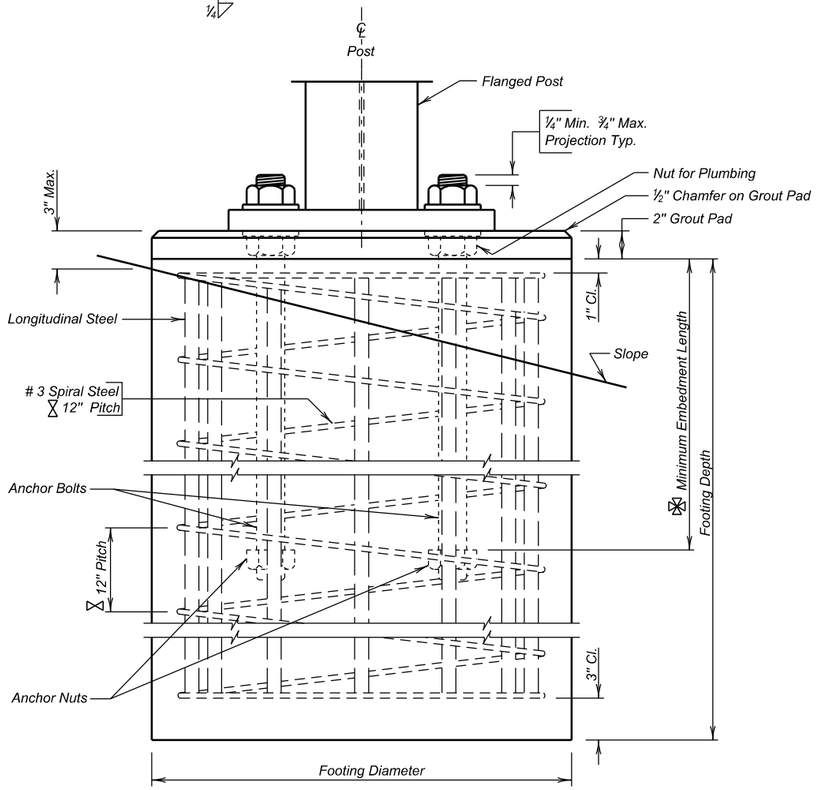

FOOTING DETAIL

SITE LOCATION	POST SIZE	FOOTING DIMENSIONS		POST BASE PLATE DIMENSIONS			ANCHOR BOLT SIZE			LONGITUDINAL STEEL		SPIRAL STEEL	
		DIA.	DEPTH	A	E	THICK.	DIA.	LENGTH	*MINIMUM EMBEDMENT	QTY-SIZE	LENGTH	DIA.	LENGTH
a -23+25 Rt	W 8 x 18	2' - 3"	6' - 0"	15 x 15	2 1/2"	5/8"	1 1/4"	3' - 3"	2' - 1"	8 - #8 Bars	5' - 8"	1' - 11"	51'
b 0+25 Lt	W 8 x 21	2' - 3"	7' - 0"	16 x 16	2 3/4"	3/4"	1 1/4"	3' - 3"	2' - 1"	8 - #8 Bars	6' - 8"	1' - 11"	57'
b 8+75 Rt	W 8 x 21	2' - 3"	6' - 0"	16 x 16	2 3/4"	7/8"	1 1/2"	3' - 9"	2' - 6"	8 - #8 Bars	5' - 8"	1' - 11"	51'
b 16+75 Rt	W 8 x 21	2' - 3"	7' - 0"	16 x 16	2 3/4"	3/4"	1 1/4"	3' - 3"	2' - 1"	8 - #8 Bars	6' - 8"	1' - 11"	57'
b 24+75 Rt	W 8 x 28	2' - 3"	8' - 0"	17 x 17	3"	1"	1 1/2"	3' - 9"	2' - 6"	8 - #8 Bars	7' - 8"	1' - 11"	63'
b 32+75 Rt	W 8 x 21	2' - 3"	5' - 0"	16 x 16	2 3/4"	3/4"	1 1/4"	3' - 3"	2' - 1"	8 - #8 Bars	4' - 8"	1' - 11"	45'
35+25 Lt	W 8 x 31	2' - 6"	8' - 0"	18 x 18	3"	1"	1 1/2"	3' - 9"	2' - 6"	12 - #7 Bars	7' - 8"	2' - 2"	71'
62+80 Lt	W 8 x 21	2' - 3"	7' - 0"	16 x 16	2 3/4"	7/8"	1 1/2"	3' - 9"	2' - 6"	8 - #8 Bars	6' - 8"	1' - 11"	57'
156+25 Rt	W 8 x 18	2' - 3"	6' - 0"	15 x 15	2 1/2"	3/4"	1 1/2"	3' - 9"	2' - 6"	8 - #8 Bars	5' - 8"	1' - 11"	51'

NOTE: The above is a Site Specific data entry table and the inserted information is the responsibility of the Region Traffic Engineer.

 # Spirals - Use 12" pitch and 1 ½ extra turns at each end. Use 1 ½ turns for lap at splice as required, or weld as approved by the Office of Bridge Design, Spirals may be smooth bars, Bar length shown does not include Splices.

See Footing Detail

Dimensions are out to out of bars.

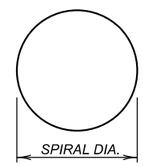

NOTES-

1. Design Specification: AASHTO Standard Specifications for Structural Supports for Highway Signs, Luminaires and Traffic Signals, 2001 Edition with 2003 Interims.
2. Concrete Footings shall be Class M6 - fc = 4000 p.s.i.
3. Structural Steel shall comform to ASTM A36.
4. All Reinforcing Steel, except spirals, shall conform to ASTM A615 Grade 60.
5. Spiral Reinforcing Steel may be fabricated from cold drawn wire ASTM A82, or hot rolled plain or deformed bars conforming to the strength requirements of ASTM A615, Grade 60.
6. All Anchor Bolts shall conform to ASTM A307 having a minimum yield stress of 36000 p.s.i. Anchor Bolts shall be cleaned to remove any oil from the threading process before galvanizing.
7. Anchor Bolts shall have 7" thread length on both ends.
8. All nuts shall conform to ASTM A563, DH. All nuts shall be heavy hex. All washers shall conform to ASTM F436.
9. All structural steel including the Steel Posts shall be galvanized according to ASTM A123. The Nuts, Washers and 10" of one end of the Anchor Bolts shall be galvanized according to ASTM A153.
10. All Bolt Holes shall be drilled. All plate cuts shall preferably be Saw Cuts, however, Flame Cutting will be permitted providing all edges are ground smooth (metal projecting beyond the plane of the plate face will NOT be allowed).
11. All welding and weld inspection shall be in accordance with the latest edition of AWS D1.1 Structural Welding Code.

SHOP PLANS-

The fabricator shall initially submit two (2) copies of the shop plans to the Office of Bridge Design for review. One reviewed copy will be sent back to the fabricator who will then make changes, if any, and then send the Office of Bridge Design six (6) final approved copies for distribution.

ERECTION DETAILS

FOR

FIXED SIGN SUPPORTS

S. D. DEPT. OF TRANSPORTATION

DECEMBER 1994

1 OF 2

MK	REVISION	DATED	BY
	Pitch Correction	3/24/11	DM
	Specification Update	7/11/05	AV

DESIGNED BY	DRAWN BY	CHECKED BY	
RH/DM	RH/TB	RH/DM	Kevin N. Goeden
CNTYPCNX	PCNXDSPG	BSTDFSSA	BRIDGE ENGINEER

FOR BIDDING PURPOSES ONLY

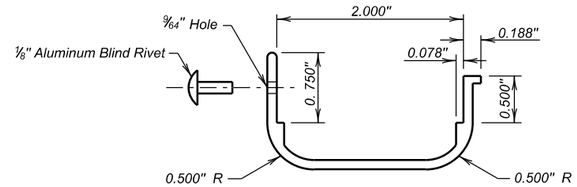

SIDE TRIM MOLDING

Side Trim Molding is required on all vertical edges of extruded panels. They shall be fastened at a minimum of one (1) rivet per panel.

NOTE- P = Number of Posts to be used
H = Vertical dimension of sign
L = Horizontal dimension of Main Sign

NOTE- 2 stiffeners are required when H is 8'- 0" or less.
3 stiffeners are required when H is more than 8'- 0".

△ Clear distance as recommended by latest edition of AASHTO ROADSIDE DESIGN GUIDE.

Φ Mounting height as recommended by latest edition of MANUAL ON UNIFORM TRAFFIC CONTROL DEVICES.

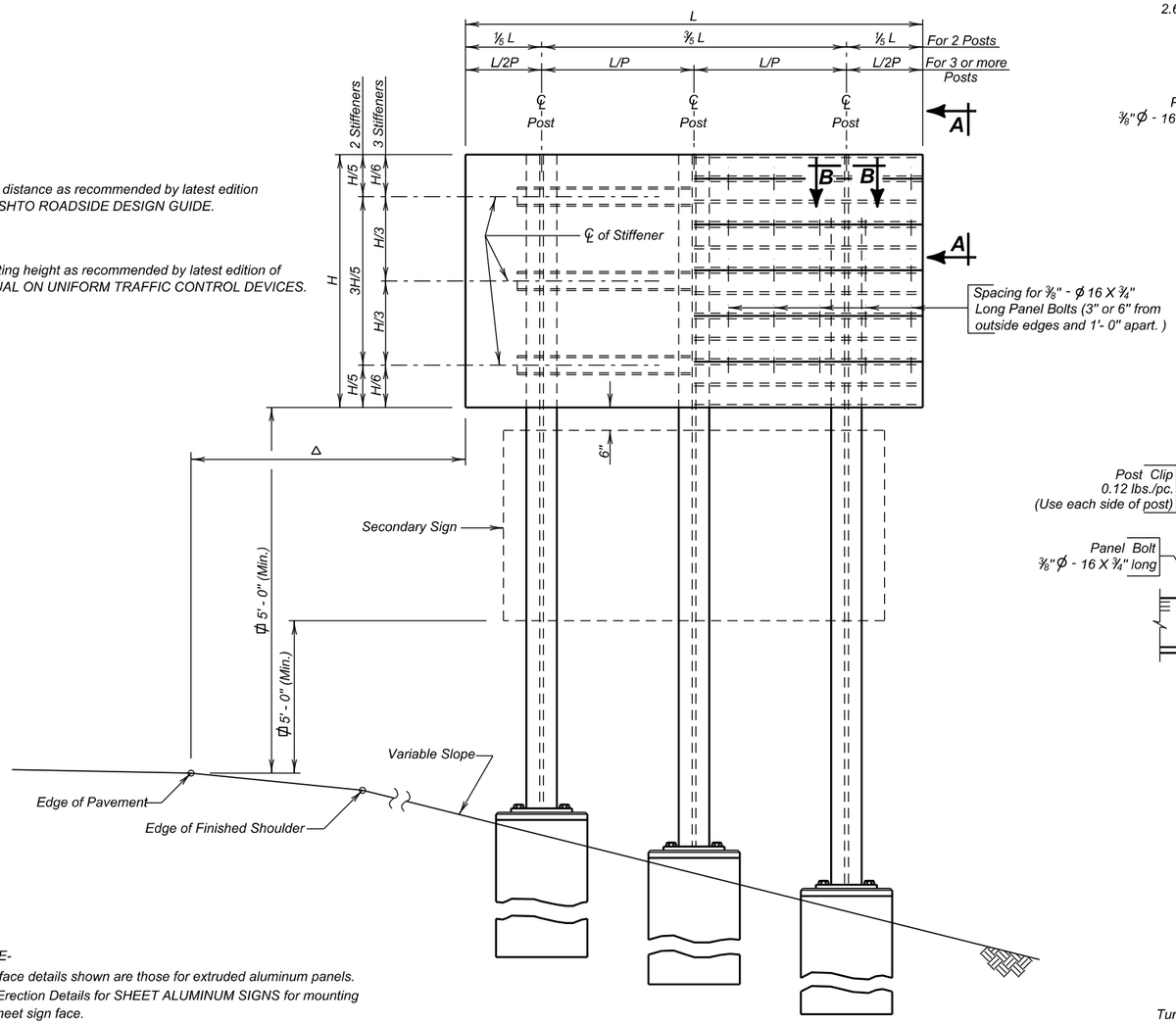

ELEVATION

NOTE-
Sign face details shown are those for extruded aluminum panels. See Erection Details for SHEET ALUMINUM SIGNS for mounting flat sheet sign face.

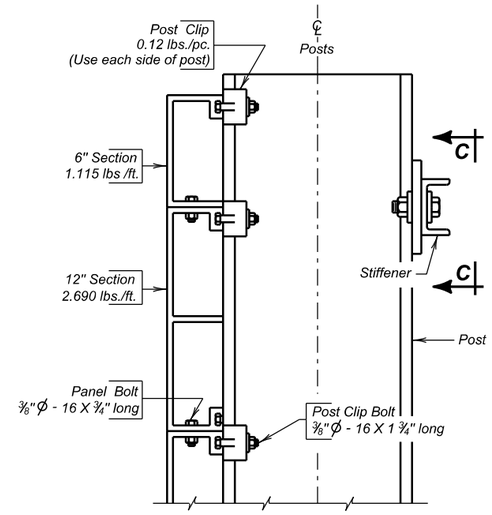

SEC. A - A

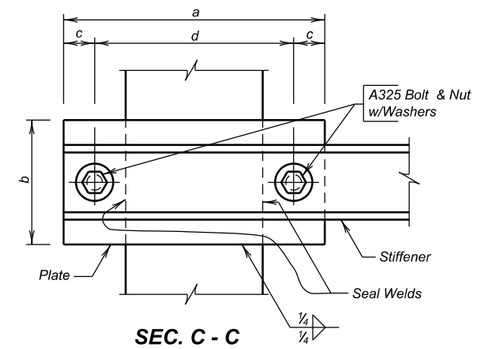

SEC. C - C

STIFFENER DATA							
Post	Stiffener	a	b	c	d	Bolt (A325)	Plate Thk.
S3X5. 7 thru W8X21	C3X5	10 1/2"	5"	1 1/4"	8"	5/8" Ø	5/16"
W8X24 thru W10x45	C5X6. 7	13 1/2"	6"	1 1/2"	10 1/2"	7/8" Ø	3/8"

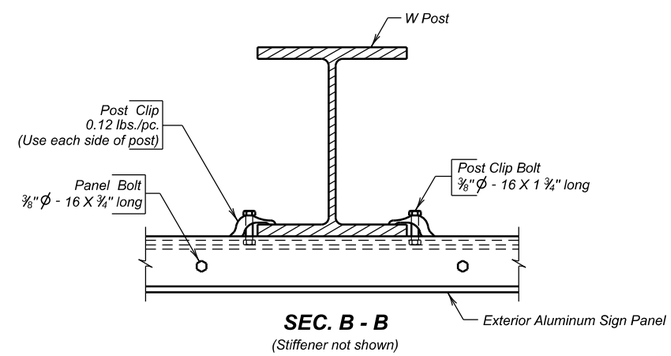

SEC. B - B

(Stiffener not shown)

STIFFENER BOLTING PROCEDURE-

1. High strength bolts shall be tightened so as to obtain a minimum residual tension by the use of load indicator washers.
2. High strength bolts may be tightened by the "Turn of the Nut" method as provided in Section 11.5.6.4.4 of the AASHTO Standard Specifications for Highway Bridges in lieu of #1 above.

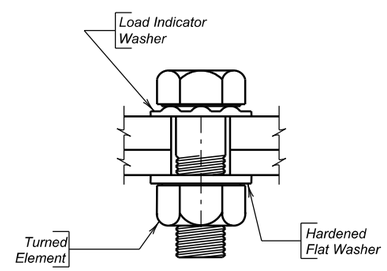

LOAD INDICATOR WASHER DETAIL

ERECTION DETAILS
FOR
FIXED SIGN SUPPORTS
S. D. DEPT. OF TRANSPORTATION
DECEMBER 1994

DESIGNED BY	DRAWN BY	CHECKED BY	
RH/DM	RH/TB	RH/DM	Kevin N. Goeden
CNTYPCNX	PCNXDSPG	BSTDFSSB	BRIDGE ENGINEER

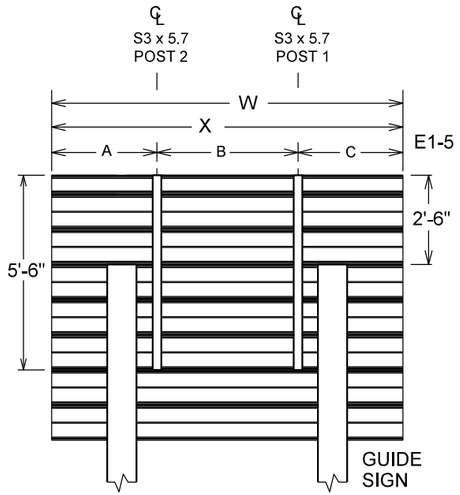

Brace Posts Case 1

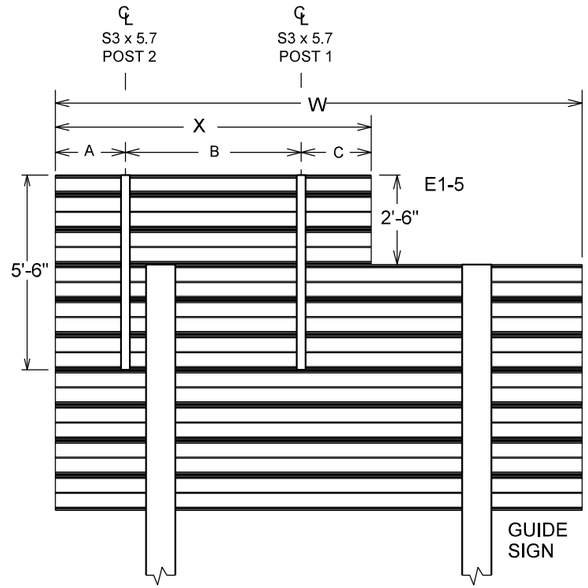

Brace Posts Case 2

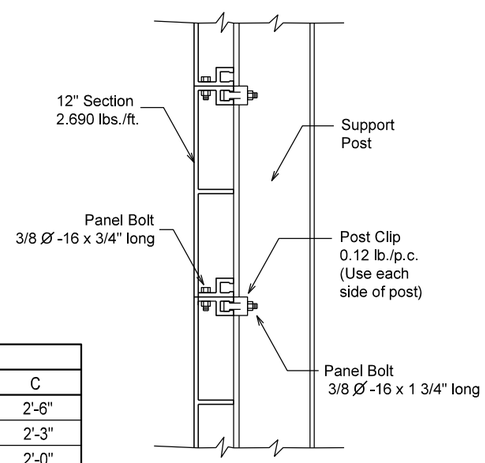

Section A-A

BRACE POST LOCATION TABLE					
	E1-5 WIDTH (X)	SIGN WIDTH (W)	A **	B	C
CASE 1*	9'-6"	9'-6"	2'-6"	4'-6"	2'-6"
		10'-0"	2'-9"	4'-6"	2'-3"
		11'-0"	2'-9"	4'-9"	2'-0"
	11'-0"	11'-0"	2'-9"	5'-6"	2'-9"
CASE 2	9'-6"	12'-0" to 13'-0"	1'-9"	5'-9"	2'-0"
		14'-0" and up	2'-0"	5'-6"	2'-0"
	11'-0"	12'-0"	1'-9"	7'-0"	2'-3"
		13'-0" and up	2'-0"	7'-0"	2'-0"

* The brace posts may be omitted if the sign posts extend to the top of the E1-5 sign, if specified in the plans.

** The A dimension may be adjusted (1" max.) to allow room for post clips.

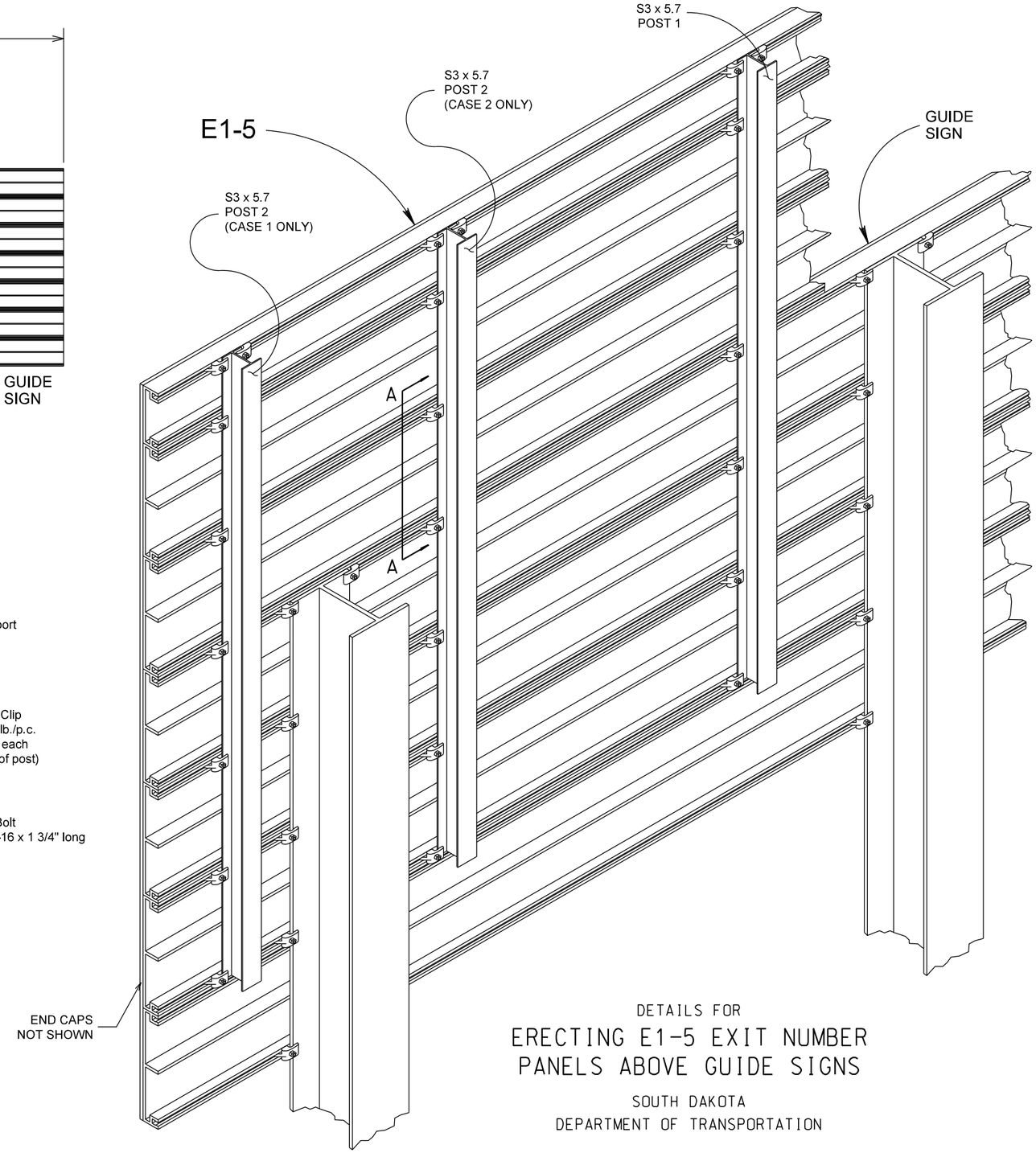

DETAILS FOR

ERECTING E1-5 EXIT NUMBER PANELS ABOVE GUIDE SIGNS

SOUTH DAKOTA
DEPARTMENT OF TRANSPORTATION

PLOT SCALE - 1:1.07829
PLOTTED FROM - TRM111126
PLOT NAME - 58
FILE - ...\LINC01OS\SIGNING\01OS_PANL.DGN

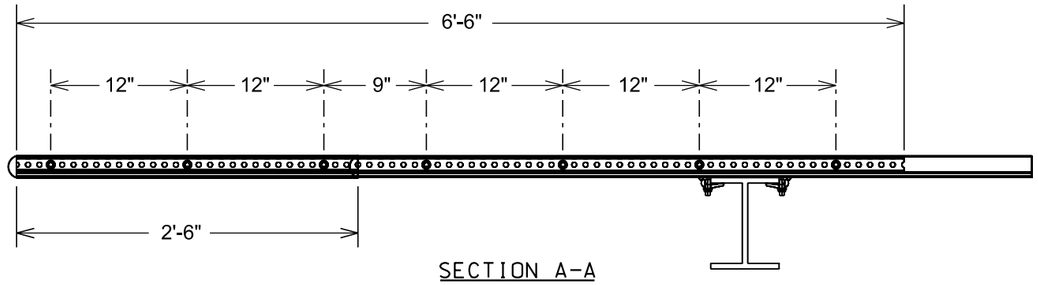

SECTION A-A

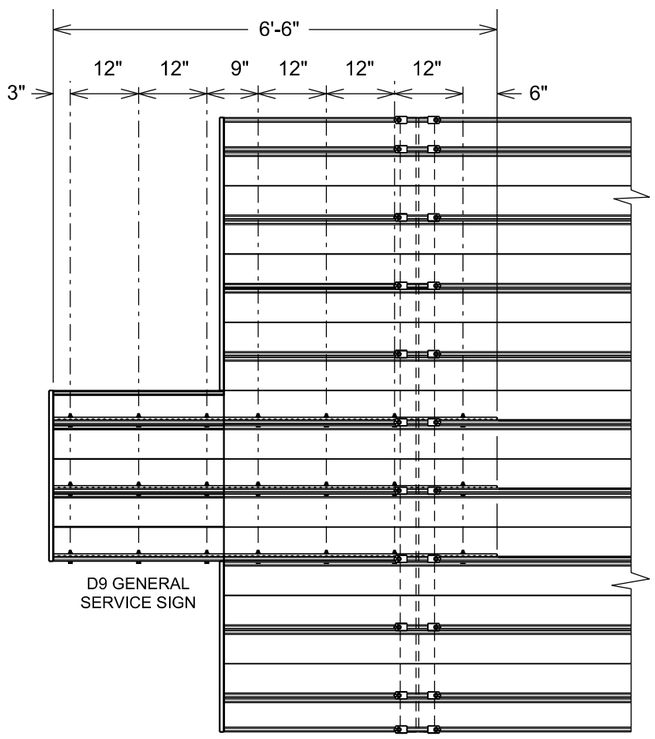

BACK VIEW

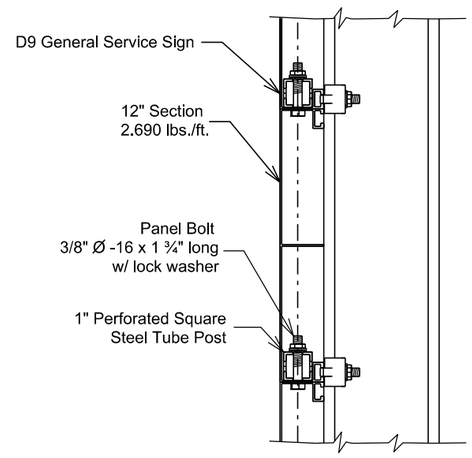

SECTION B-B

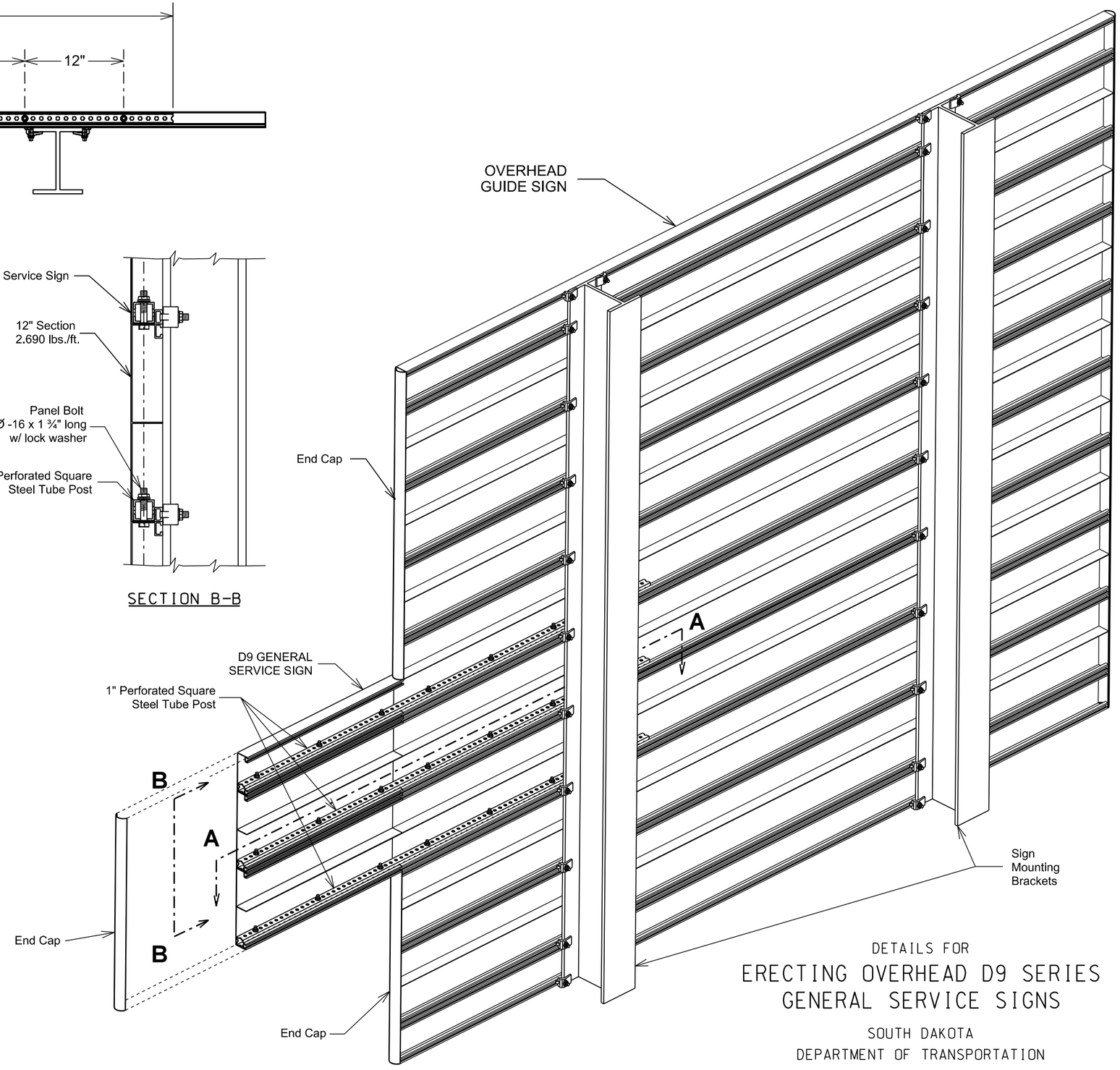

DETAILS FOR

ERECTING OVERHEAD D9 SERIES GENERAL SERVICE SIGNS

SOUTH DAKOTA
DEPARTMENT OF TRANSPORTATION

PLOT SCALE - 1:1.66408
PLOTTED FROM - TRMI11126
PLOT NAME - 59
FILE - ...\SIGNING\010S_HOSPITAL.DGN

FOR BIDDING PURPOSES ONLY

OVERHEAD SIGN SUPPORTS

CANTILEVER SUPPORT

I-29 Mainline SBL - Sta. 22+25 L

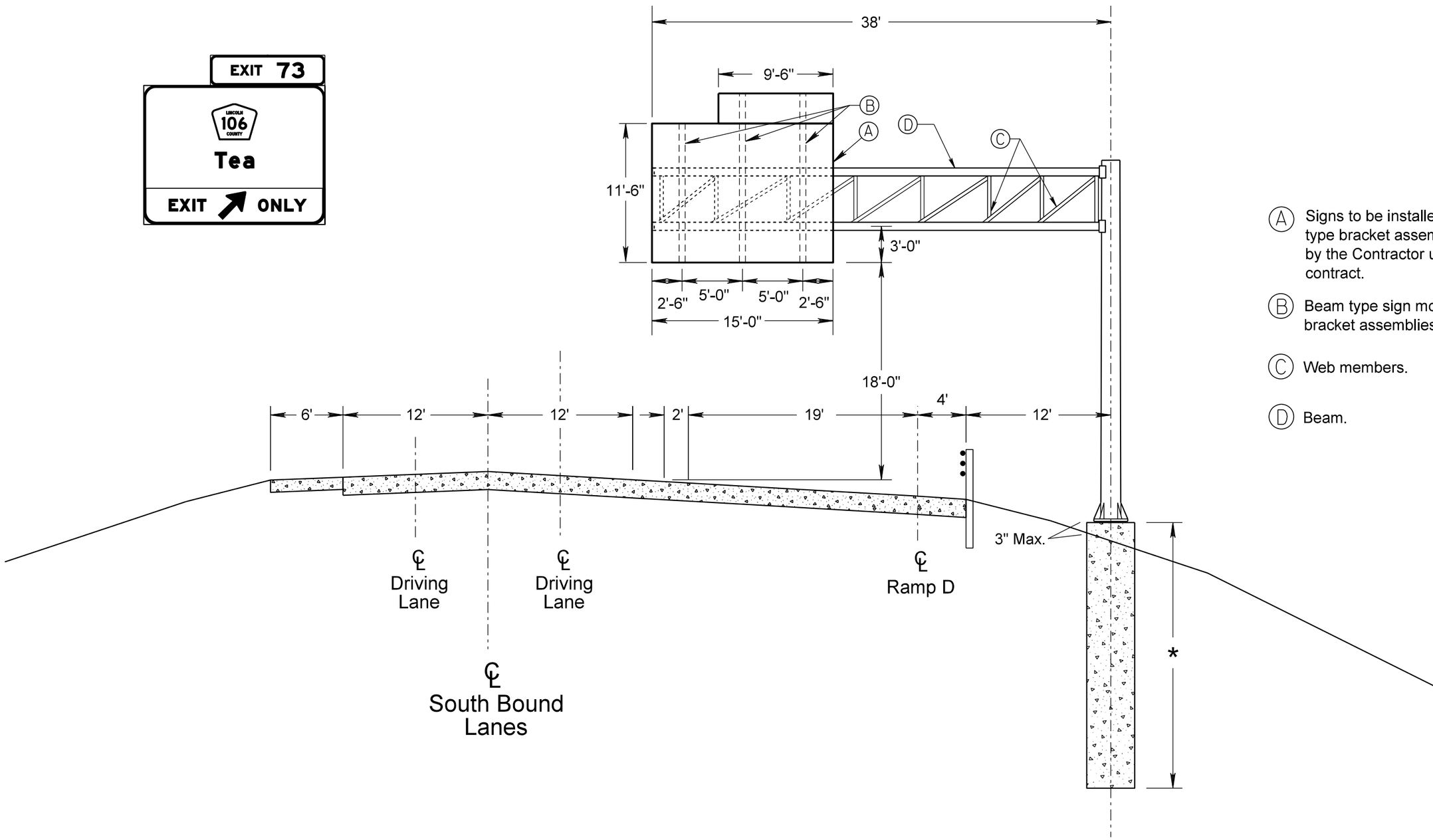

(A) Signs to be installed on beam type bracket assemblies by the Contractor under this contract.

(B) Beam type sign mounting bracket assemblies.

(C) Web members.

(D) Beam.

* - See **Section E for sign bridge f**ooting notes, details and tables.

PLOT SCALE - $$SCALE$$
PLOT NAME - $$PLOTNAME$$
FILE - $$FILENAME$$
PLOTTED FROM - $$USERNAME$$

FOR BIDDING PURPOSES ONLY

OVERHEAD SIGN SUPPORTS

CANTILEVER SUPPORT

I-29 Mainline SBL - Sta. 41+75 L

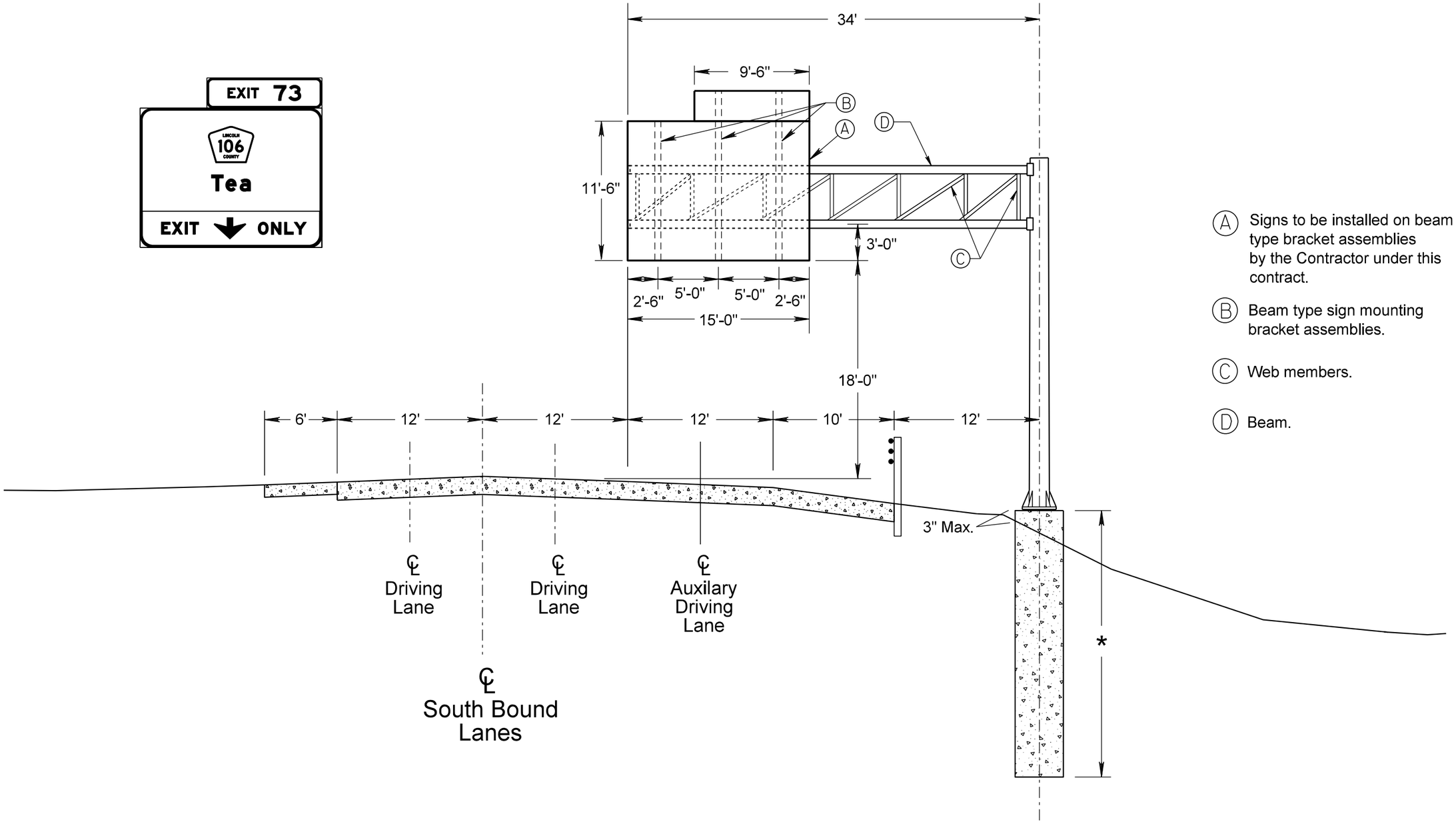

(A) Signs to be installed on beam type bracket assemblies by the Contractor under this contract.

(B) Beam type sign mounting bracket assemblies.

(C) Web members.

(D) Beam.

* - See **Section E for sign bridge** footing notes, details and tables.

PLOT SCALE - $$SCALE$$
PLOT NAME - $$PLOTNAME$$
FILE - $$FILENAME$$
PLOTTED FROM - $$USERNAME$$

FOR BIDDING PURPOSES ONLY

OVERHEAD SIGN SUPPORTS

SIGN BRIDGE

I-29 Mainline NBL - Sta. 52+80 R

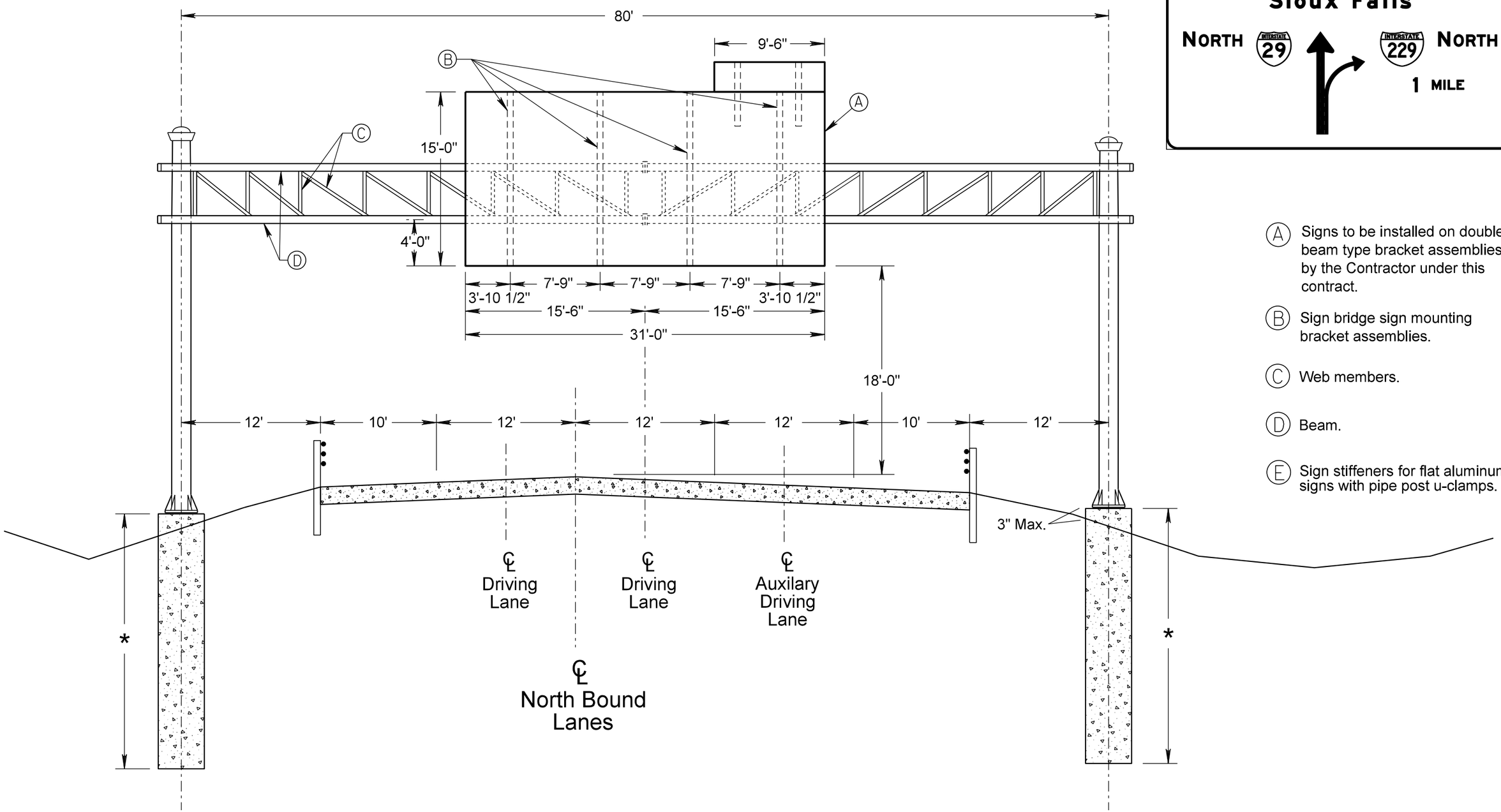

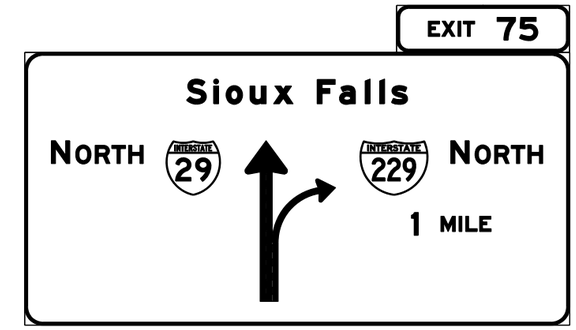

(A) Signs to be installed on double beam type bracket assemblies by the Contractor under this contract.

(B) Sign bridge sign mounting bracket assemblies.

(C) Web members.

(D) Beam.

(E) Sign stiffeners for flat aluminum signs with pipe post u-clamps.

* - See **Section E for sign bridge** footing notes, details and tables.

PLOT SCALE - $$SCALE$$
PLOTTED FROM - $$USERNAME$$
PLOT NAME - $$PLOTNAME$$
FILE - $$FILENAME$$

FOR BIDDING PURPOSES ONLY

OVERHEAD SIGN SUPPORTS

SIGN BRIDGE

I-29 Mainline SBL - Sta. 69+30 L

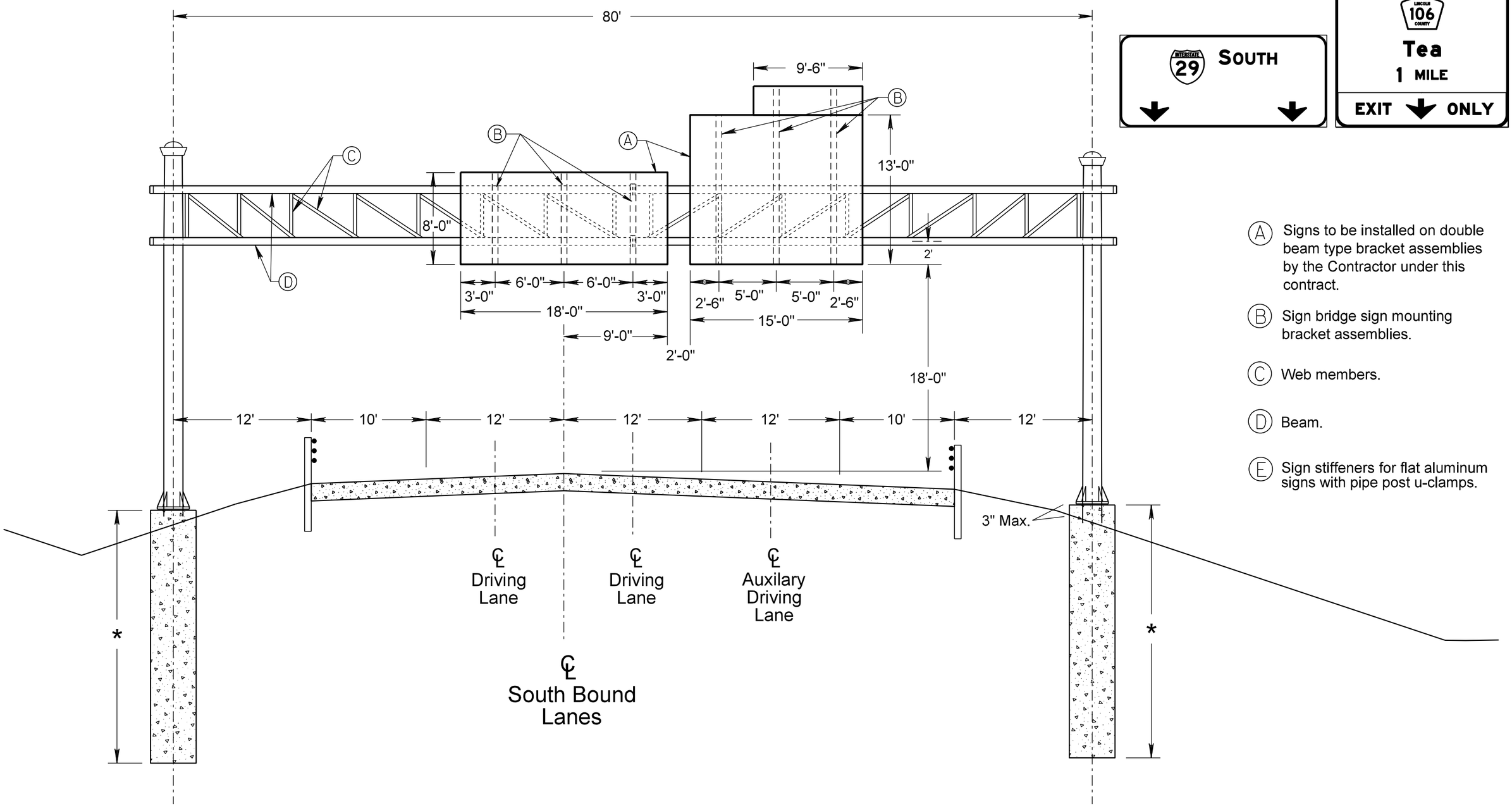

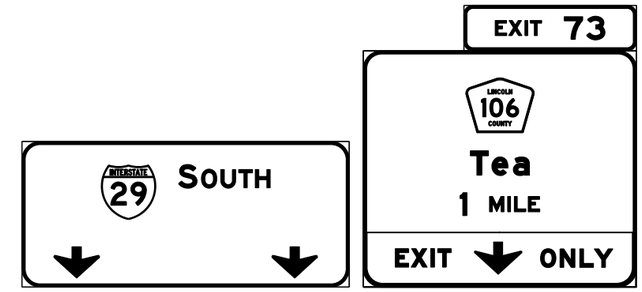

(A) Signs to be installed on double beam type bracket assemblies by the Contractor under this contract.

(B) Sign bridge sign mounting bracket assemblies.

(C) Web members.

(D) Beam.

(E) Sign stiffeners for flat aluminum signs with pipe post u-clamps.

* - See **Section E for sign bridge** footing notes, details and tables.

PLOT SCALE - $$SCALE$$
PLOT NAME - $$PLOTNAME$$
FILE - $$FILENAME$$
PLOTTED FROM - $$USERNAME$$

STATE OF SOUTH DAKOTA	PROJECT	SHEET	TOTAL SHEETS
	IM 0293(96)73 IM 2292(90)0	S81	S116

FOR BIDDING PURPOSES ONLY

Rev: 9-15-2015 SAH

OVERHEAD SIGN SUPPORTS

SIGN BRIDGE

I-29 Mainline NBL - Sta. 79+20 R

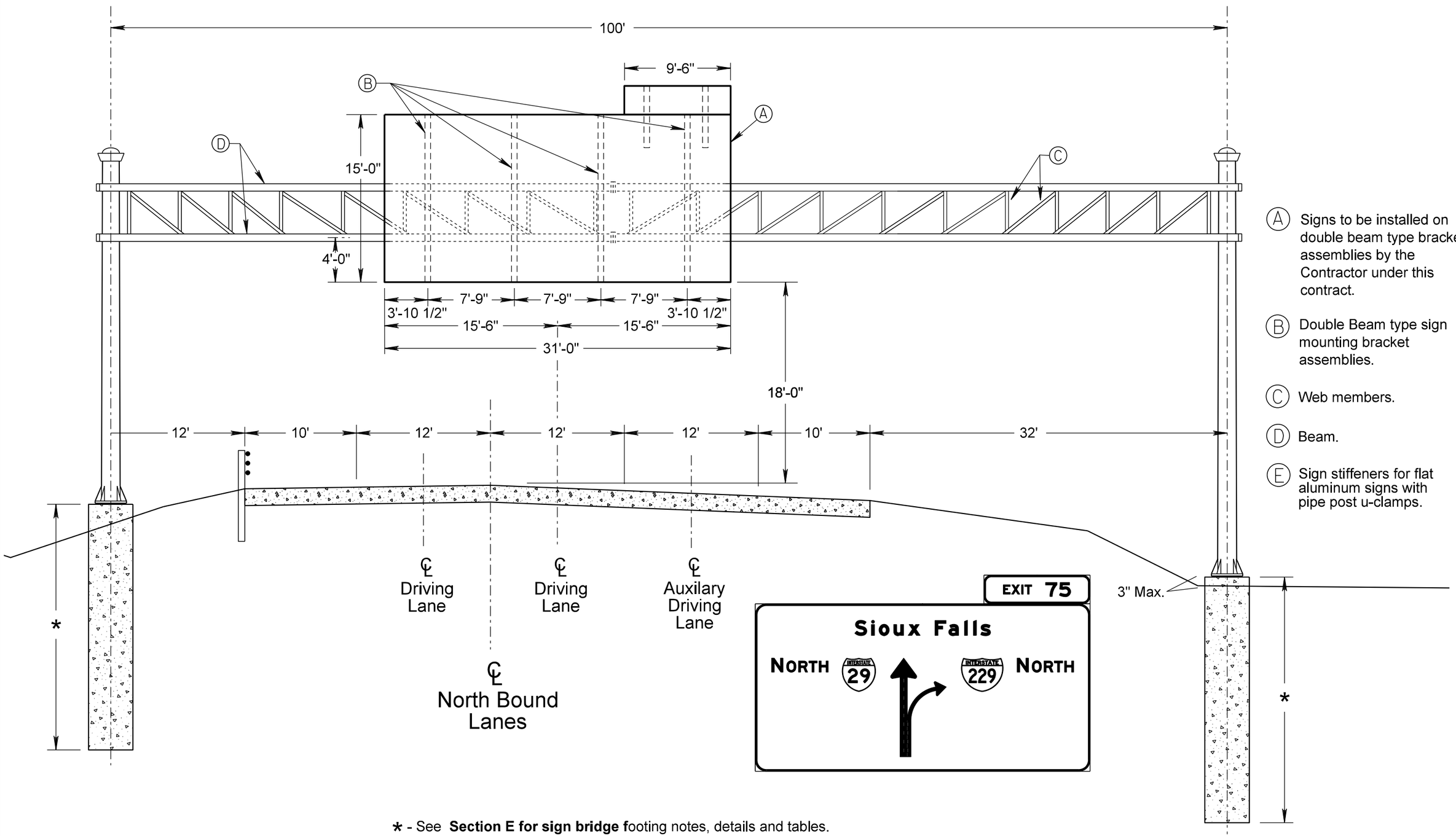

(A) Signs to be installed on double beam type bracket assemblies by the Contractor under this contract.

(B) Double Beam type sign mounting bracket assemblies.

(C) Web members.

(D) Beam.

(E) Sign stiffeners for flat aluminum signs with pipe post u-clamps.

* - See **Section E for sign bridge** footing notes, details and tables.

PLOT SCALE - $$SCALE$$

PLOT NAME - $$PLOTNAME$$

FILE - $$FILENAME$$

PLOTTED FROM - $$USERNAME$$

FOR BIDDING PURPOSES ONLY

OVERHEAD SIGN SUPPORTS

SIGN BRIDGE

I-29 Mainline NBL - Sta. 105+60 R

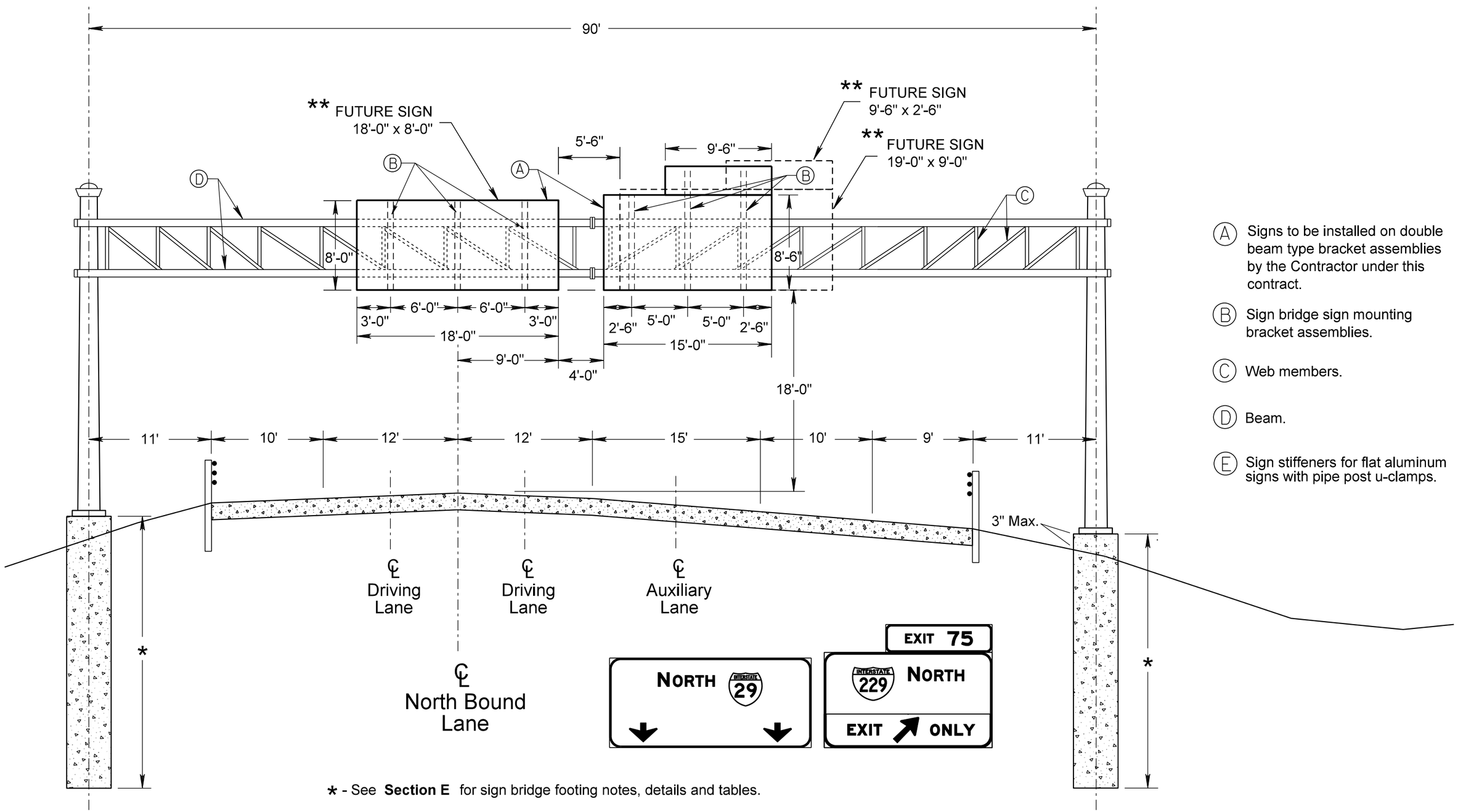

Ⓐ Signs to be installed on double beam type bracket assemblies by the Contractor under this contract.

Ⓑ Sign bridge sign mounting bracket assemblies.

Ⓒ Web members.

Ⓓ Beam.

Ⓔ Sign stiffeners for flat aluminum signs with pipe post u-clamps.

* - See **Section E** for sign bridge footing notes, details and tables.

** - Sign bridge shall be designed to accomodate future signing needs, as shown.

PLOT SCALE - $$SCALE$$
PLOT NAME - $$PLOTNAME$$
FILE - $$FILENAME$$
PLOTTED FROM - $$USERNAME$$

FOR BIDDING PURPOSES ONLY

OVERHEAD SIGN SUPPORTS

SIGN BRIDGE

I-29 Mainline SBL - Sta. 115+00 L

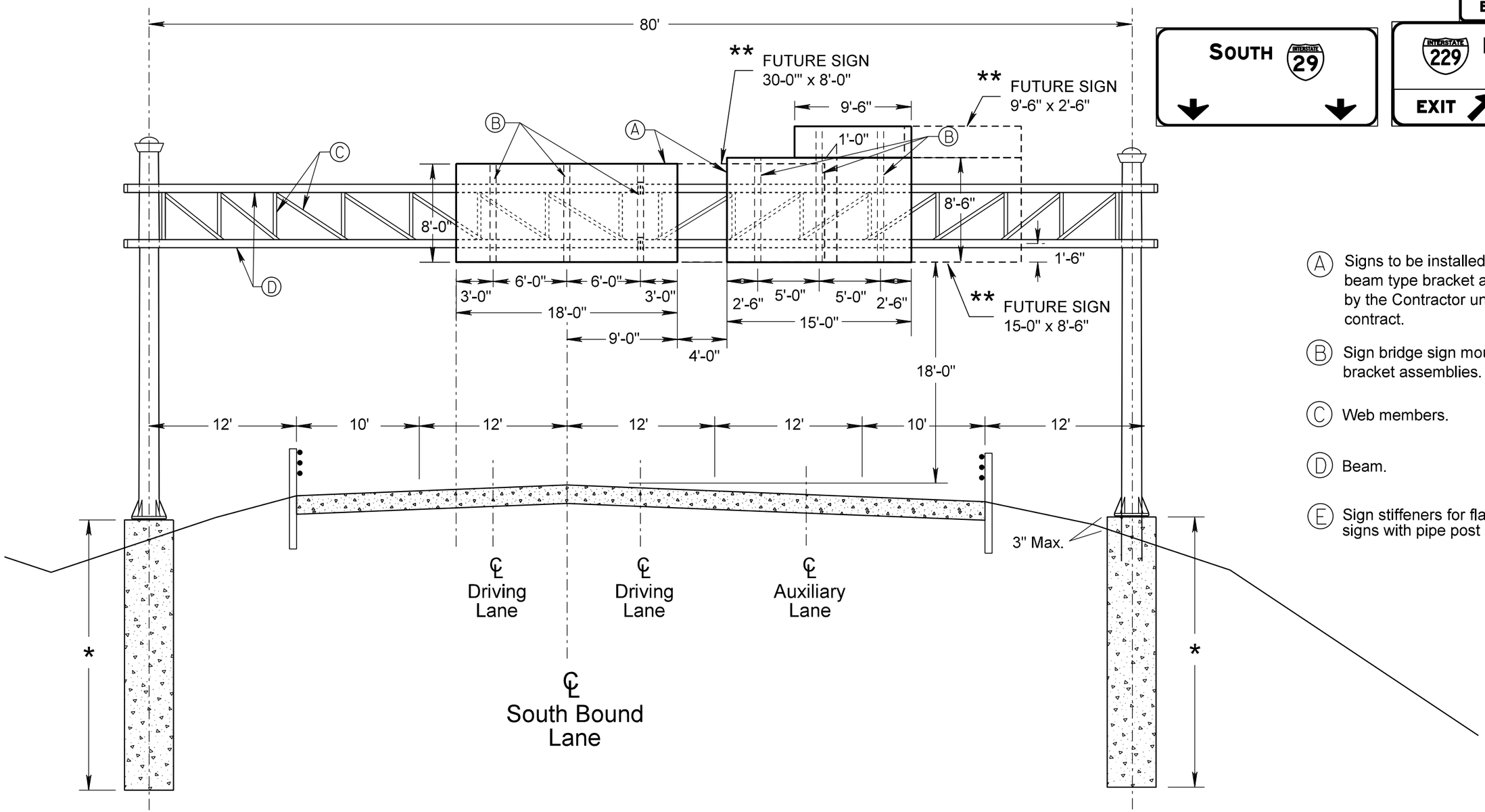

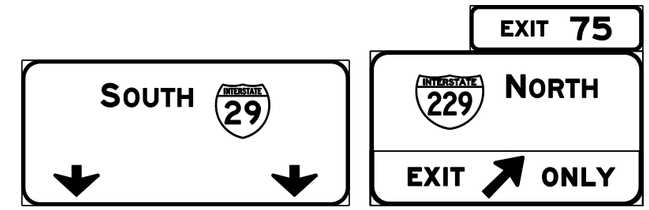

(A) Signs to be installed on double beam type bracket assemblies by the Contractor under this contract.

(B) Sign bridge sign mounting bracket assemblies.

(C) Web members.

(D) Beam.

(E) Sign stiffeners for flat aluminum signs with pipe post u-clamps.

* - See **Section E** for sign bridge footing notes, details and tables.

** - Sign bridge shall be designed to accomodate future signing needs, as shown.

PLOT SCALE - $$SCALE$$
PLOT NAME - $$PLOTNAME$$
FILE - $$FILENAME$$
PLOTTED FROM - $$USERNAME$$

FOR BIDDING PURPOSES ONLY

OVERHEAD SIGN SUPPORTS

CANTILEVER SUPPORT

I-29 Mainline SBL - Sta. 141+35 L

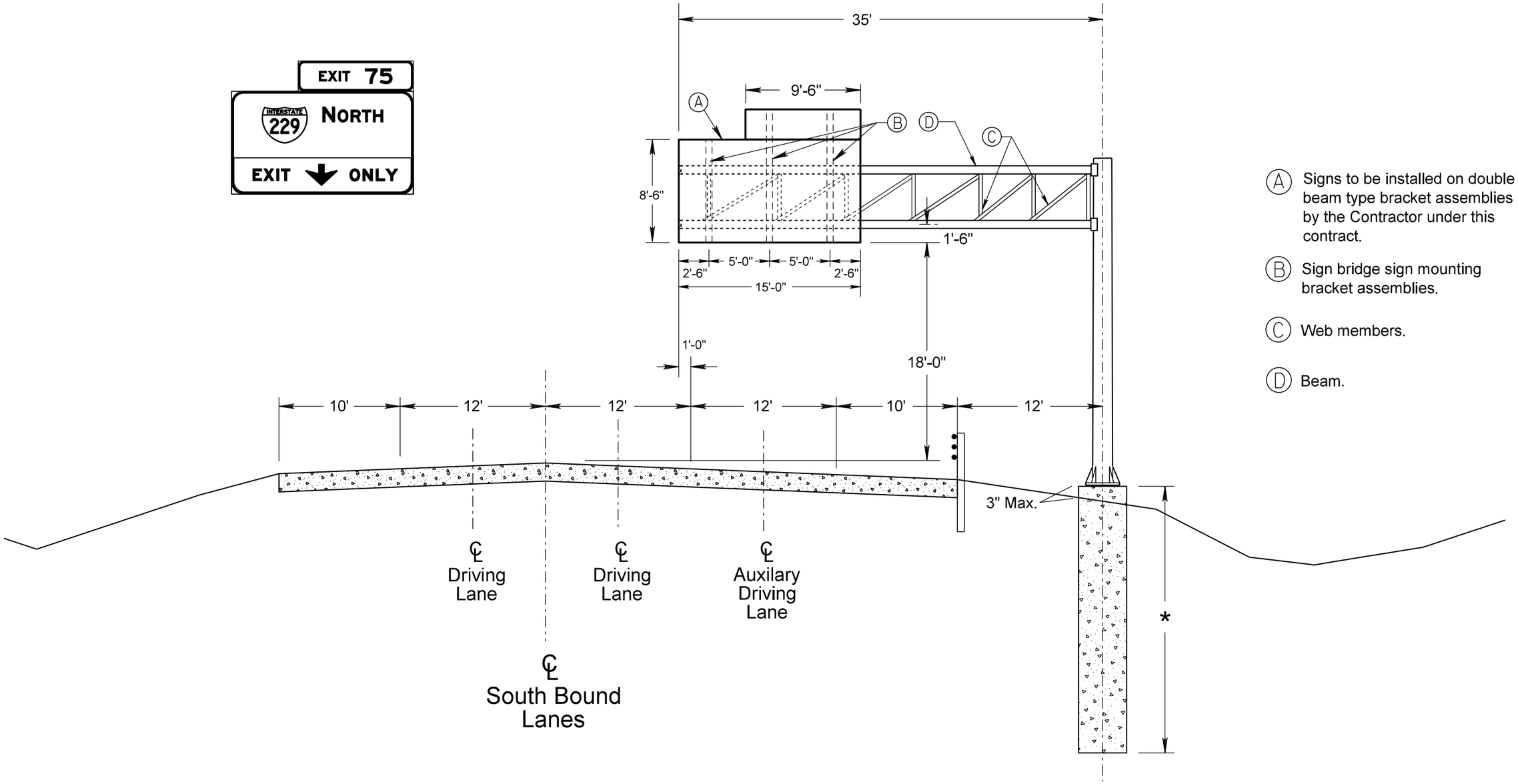

Ⓐ Signs to be installed on double beam type bracket assemblies by the Contractor under this contract.

Ⓑ Sign bridge sign mounting bracket assemblies.

Ⓒ Web members.

Ⓓ Beam.

* - See **Section E for sign bridge** footing notes, details and tables.

PLOT SCALE - $$SCALE$$
PLOT NAME - $$PLOTNAME$$
FILE - $$FILENAME$$
PLOTTED FROM - $$USERNAME$$

FOR BIDDING PURPOSES ONLY

OVERHEAD SIGN SUPPORTS

EXISTING SIGN BRIDGE

I-29 Mainline SBL - Sta. 158+25 L

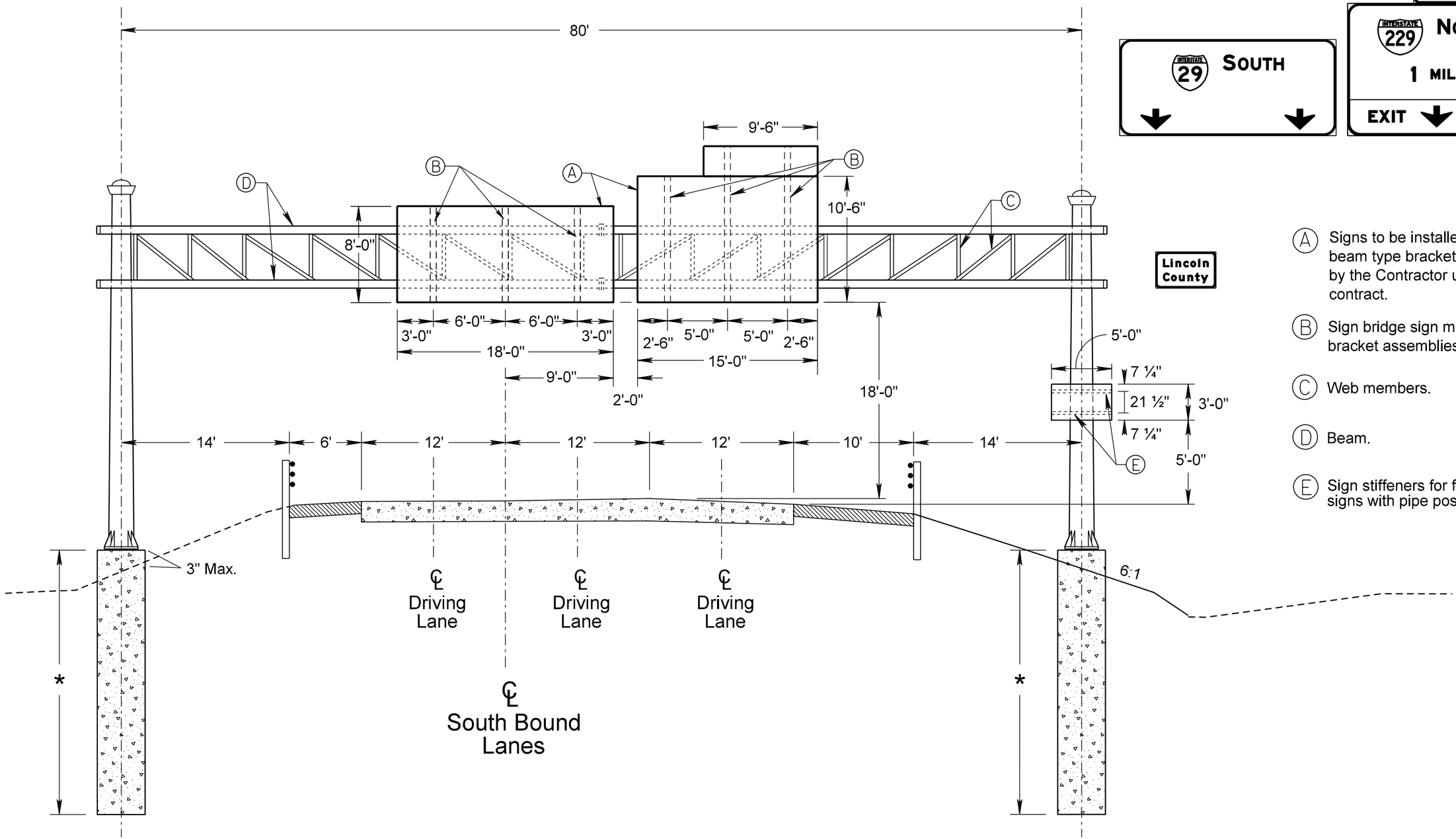

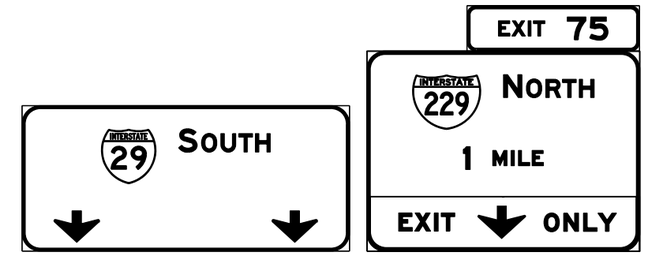

(A) Signs to be installed on double beam type bracket assemblies by the Contractor under this contract.

(B) Sign bridge sign mounting bracket assemblies.

(C) Web members.

(D) Beam.

(E) Sign stiffeners for flat aluminum signs with pipe post u-clamps.

* - See **Section E for sign bridge f**ooting notes, details and tables.

PLOT SCALE - $$SCALE$$
PLOT NAME - $$PLOTNAME$$
FILE - $$FILENAME$$
PLOTTED FROM - $$USERNAME$$

FOR BIDDING PURPOSES ONLY

OVERHEAD SIGN SUPPORTS

SIGN BRIDGE

I-229 Mainline NBL - Sta. 9+10 R

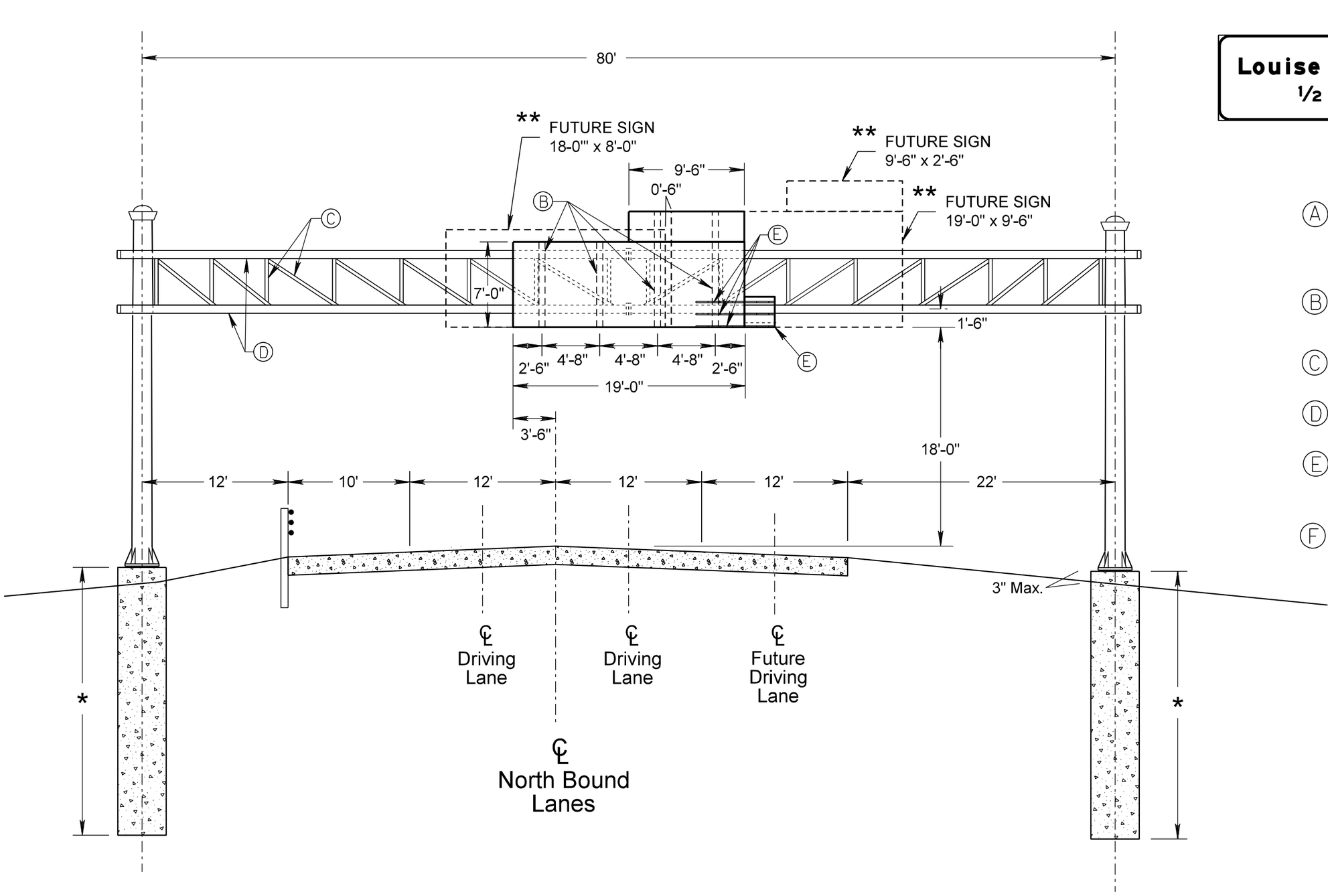

(A) Signs to be installed on double beam type bracket assemblies by the Contractor under this contract.

(B) Sign bridge sign mounting bracket assemblies.

(C) Web members.

(D) Beam.

(E) 1" square perforated steel tube sign supports to be installed by the Contractor.

(F) 30" X 30" D9-2 Sign to be installed by the Contractor.

* - See **Section E for sign bridge f**ooting notes, details and tables.

PLOT SCALE - $$SCALE$$
PLOTTED FROM - $$USERNAME$$
PLOT NAME - $$PLOTNAME$$
FILE - $$FILENAME$$

FOR BIDDING PURPOSES ONLY

OVERHEAD SIGN SUPPORTS

SIGN BRIDGE

I-229 Mainline SBL - Sta. 13+00 L

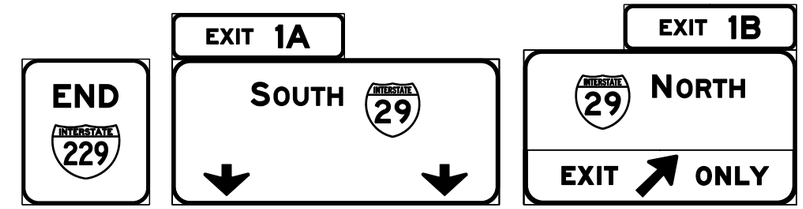

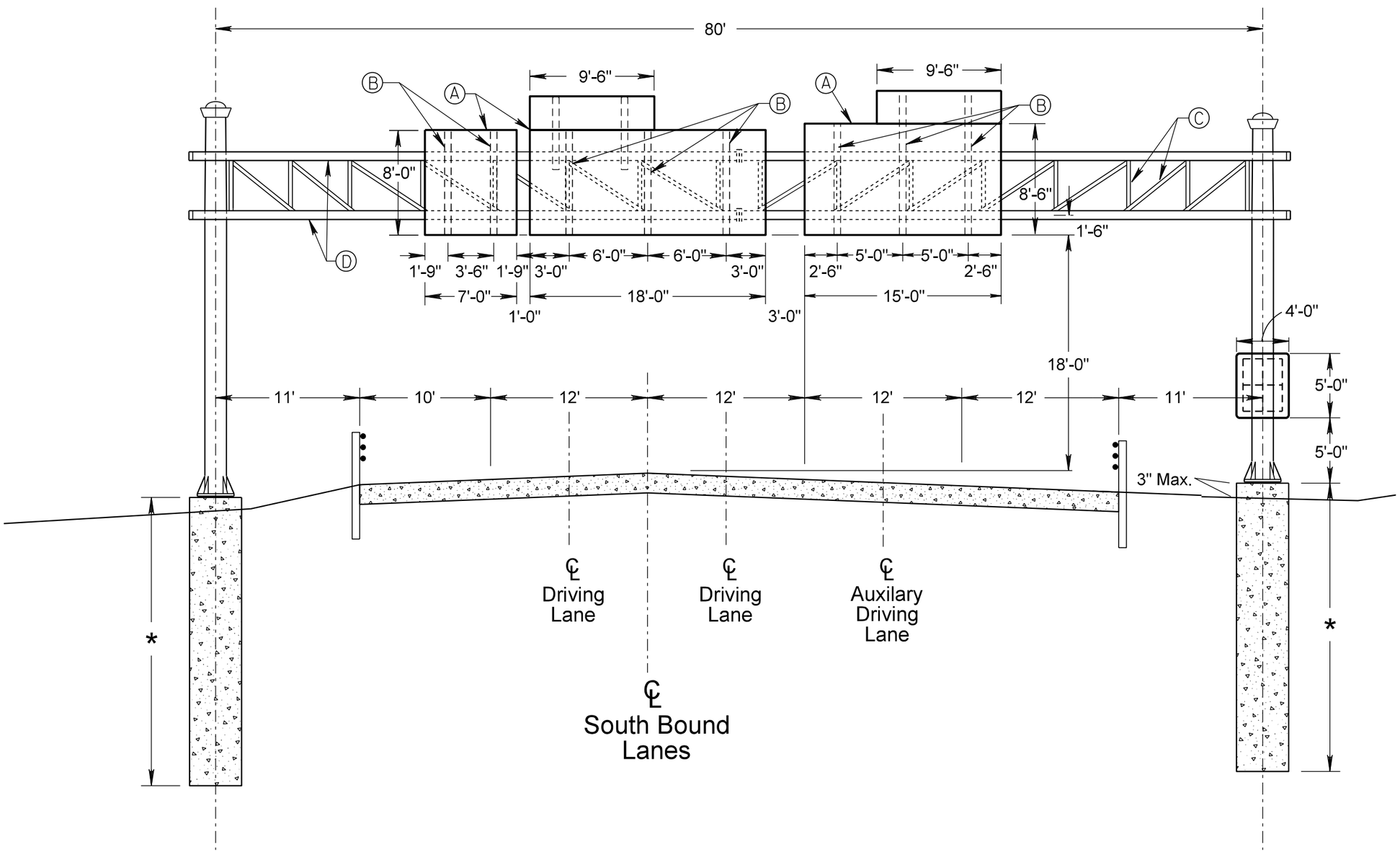

(A) Signs to be installed on double beam type bracket assemblies by the Contractor under this contract.

(B) Sign bridge sign mounting bracket assemblies.

(C) Web members.

(D) Beam.

(E) Sign stiffeners for flat aluminum signs with pipe post u-clamps.

* - See **Section E for sign bridge f**ooting notes, details and tables.

PLOT SCALE - $$SCALE$$
PLOT NAME - $$PLOTNAME$$
FILE - $$FILENAME$$
PLOTTED FROM - $$USERNAME$$

FOR BIDDING PURPOSES ONLY

OVERHEAD SIGN SUPPORTS

SIGN BRIDGE

I-229 Mainline SBL - Sta. 31+65 L

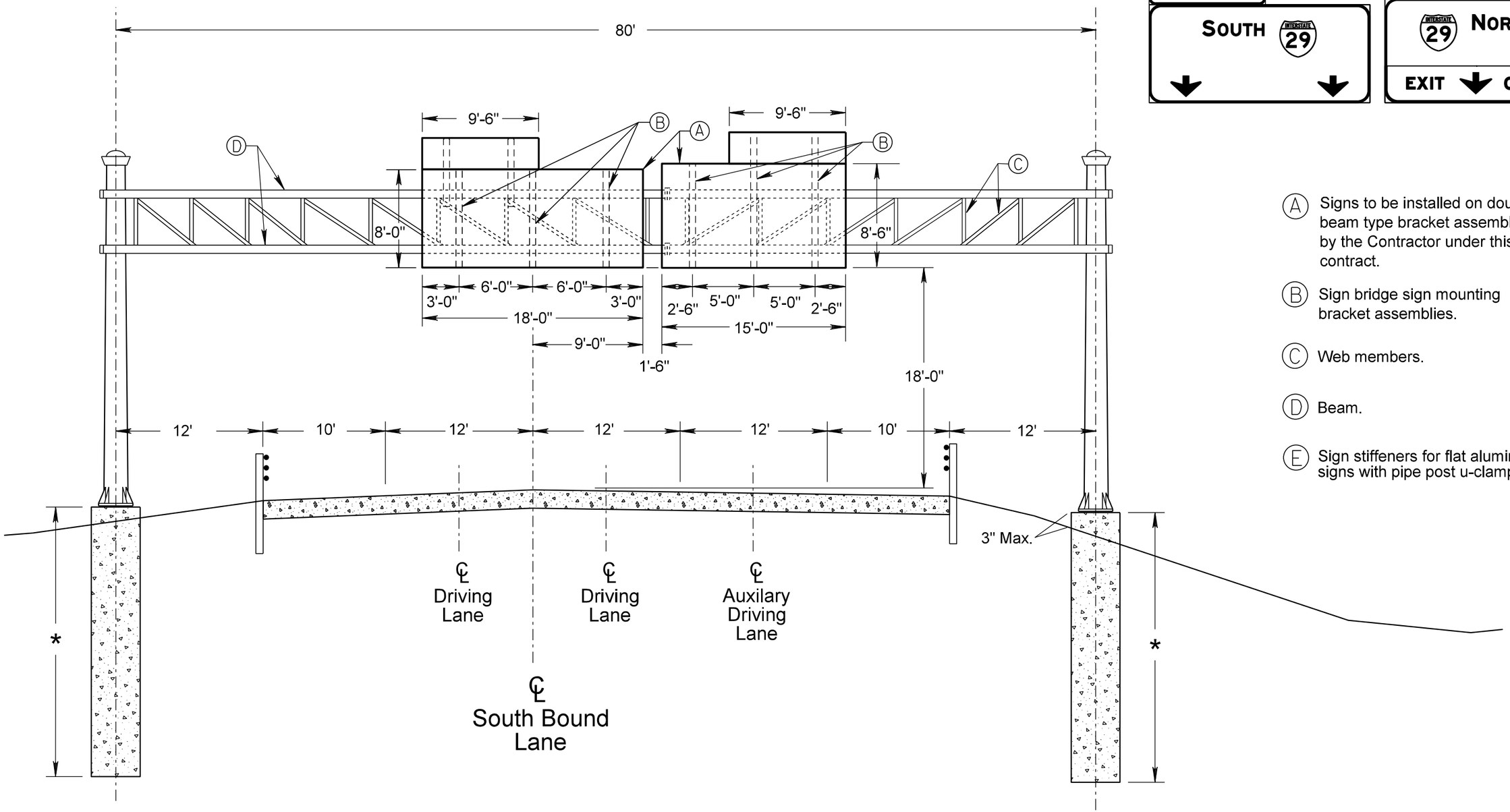

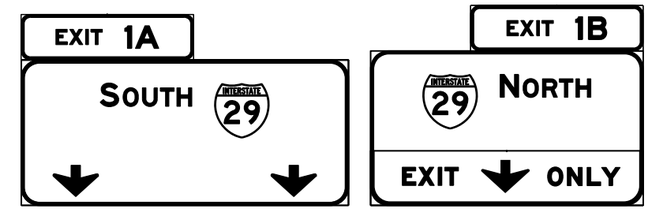

(A) Signs to be installed on double beam type bracket assemblies by the Contractor under this contract.

(B) Sign bridge sign mounting bracket assemblies.

(C) Web members.

(D) Beam.

(E) Sign stiffeners for flat aluminum signs with pipe post u-clamps.

* - See **Section E for sign bridge** footing notes, details and tables.

PLOT SCALE - $$SCALE$$
PLOT NAME - $$PLOTNAME$$
FILE - $$FILENAME$$
PLOTTED FROM - $$USERNAME$$

FOR BIDDING PURPOSES ONLY

OVERHEAD SIGN SUPPORTS

SIGN BRIDGE

I-229 Mainline SBL - Sta. 61+50 L

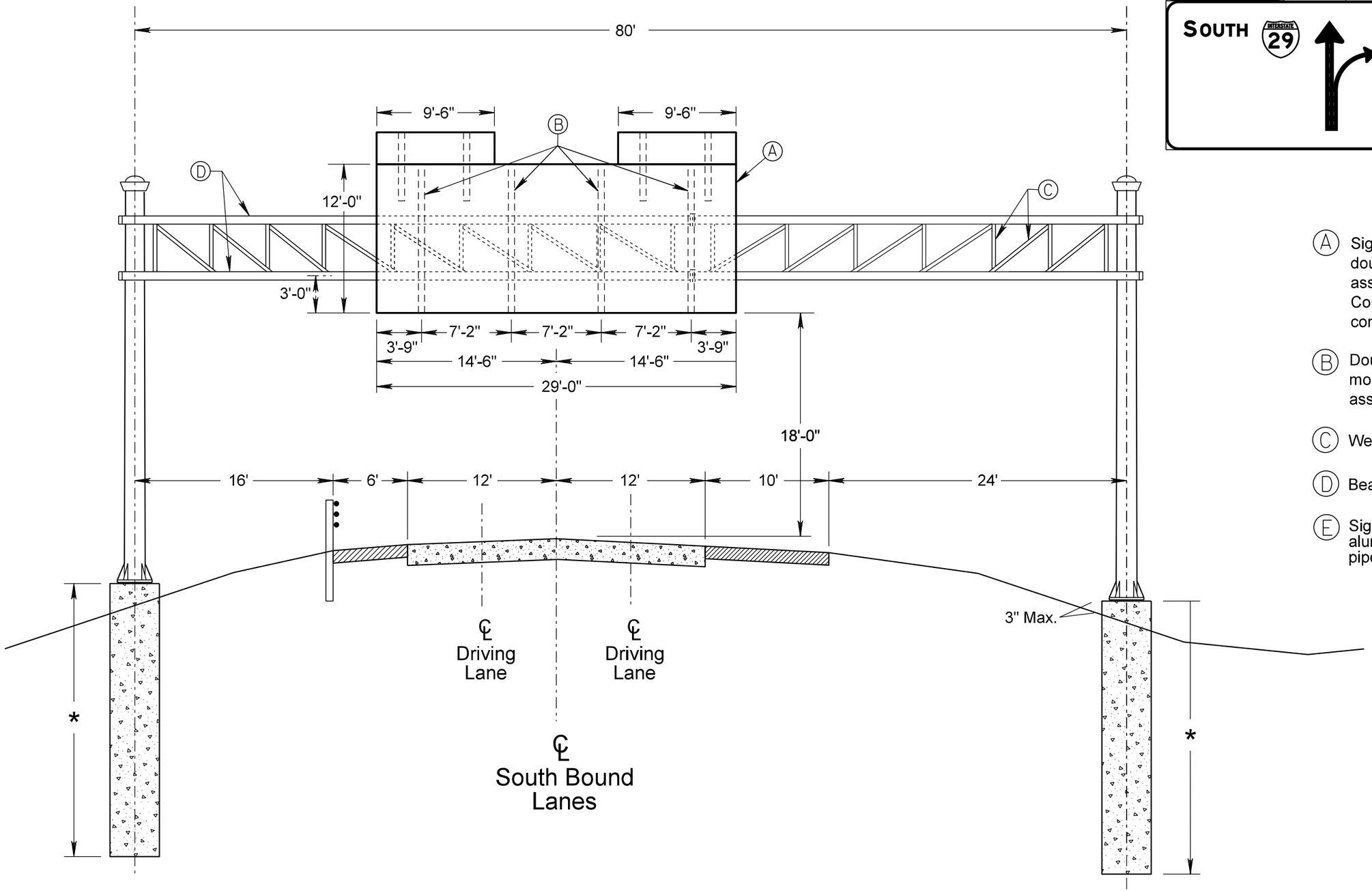

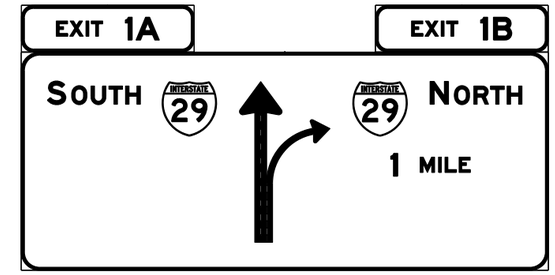

(A) Signs to be installed on double beam type bracket assemblies by the Contractor under this contract.

(B) Double Beam type sign mounting bracket assemblies.

(C) Web members.

(D) Beam.

(E) Sign stiffeners for flat aluminum signs with pipe post u-clamps.

* - See **Section E for sign bridge** footing notes, details and tables.

PLOT SCALE - $$SCALE$$
PLOT NAME - $$PLOTNAME$$
FILE - $$FILENAME$$
PLOTTED FROM - $$USERNAME$$

FOR BIDDING PURPOSES ONLY

ROAD CLOSURE GATE REMOVAL DETAILS

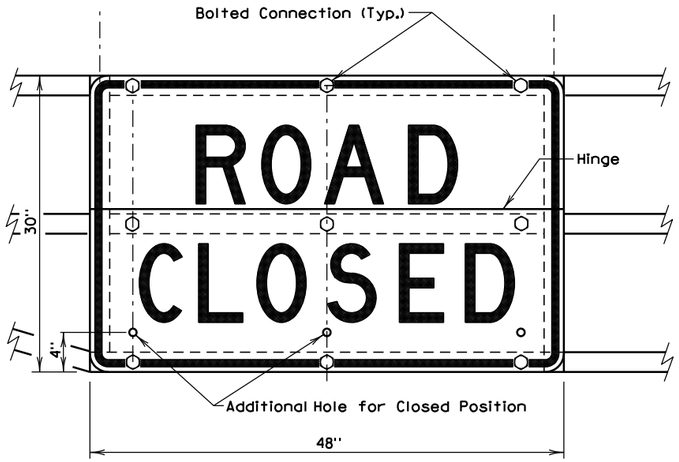

SIGN DETAILS

The Sign Shall Meet the Requirements of an R11-2 Sign (MUTCD). It Must be Reflectorized.

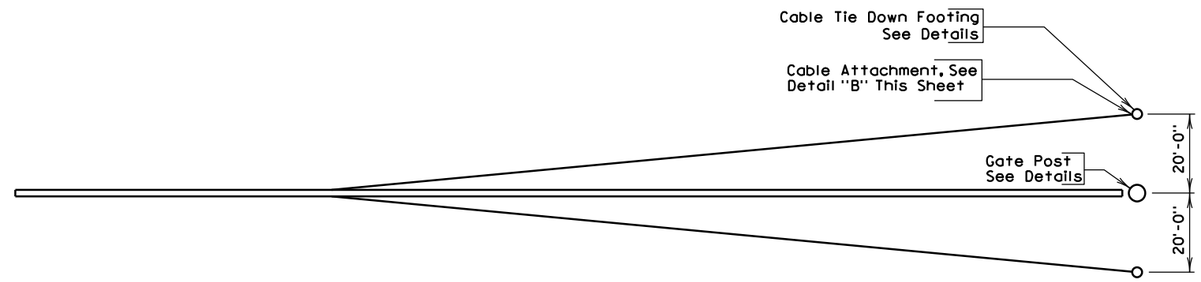

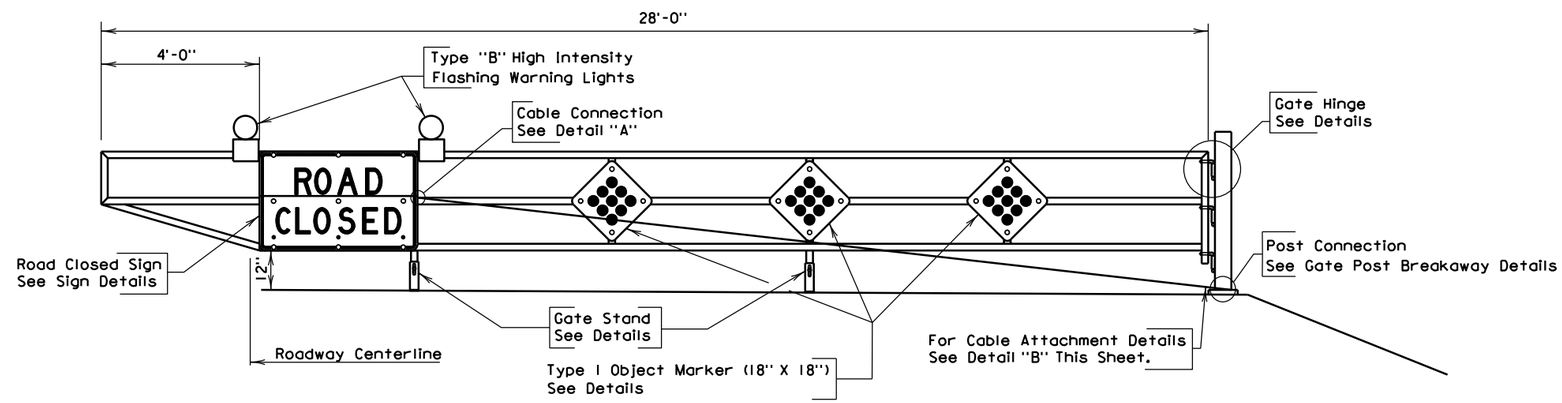

MAINLINE INTERSTATE CLOSURE GATE

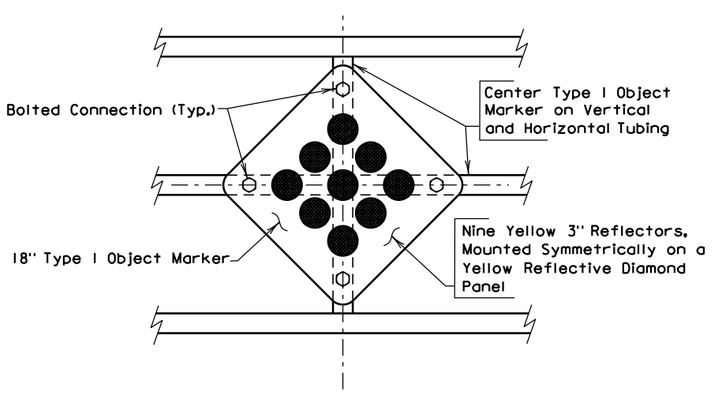

TYPICAL TYPE I OBJECT MARKER DETAILS

ORIGINAL PLANS
FOR INFORMATION ONLY

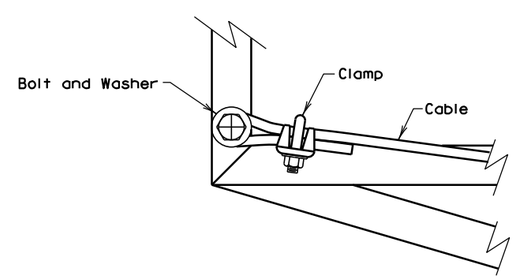

DETAIL "A"

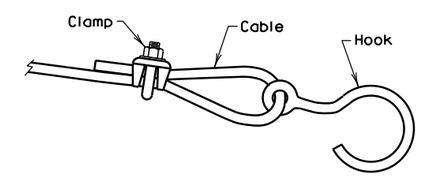

DETAIL "B"

SIGN AND OBJECT MARKER DETAILS FOR
ROAD CLOSURE GATE
S. D. DEPT. OF TRANSPORTATION
DECEMBER 2002

DESIGNED BY	DRAWN BY	CHECKED BY	APPROVED
DR STAN5858	JLS		John C. Cole BRIDGE ENGINEER

PLOT SCALE - $$SCALE$$
PLOT NAME - $$PLOTNAME$$
FILE - $$FILENAME$$
PLOTTED FROM - $$USERNAME$$

Rev: 9-15-15 SAH .

ROAD CLOSURE GATE REMOVAL DETAILS

FOR BIDDING PURPOSES ONLY

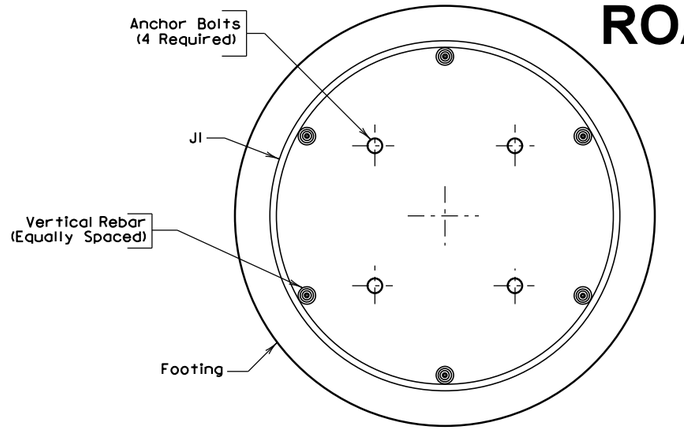

PLAN

ORIGINAL PLANS
FOR INFORMATION ONLY

REINFORCING SCHEDULE
(For One Post Footing)

Mk.		Size	Length	Type	Bending Details
H1	6	8	3'-6"	Str.	
✳ J1	1	3	34'-6"	Spiral	1'-8" J1

✳ #3 Circular Ties may be used in lieu of the #3 Spiral Ties. The ties shall be spaced 12" apart except for the top two which shall be spaced 6" apart. The ties shall be lapped 18" which will be staggered around the cage. Spiral ties shall have 1-1/2 extra turns at each end. Circular Ties shall conform to ASTM 82.

Type Spiral

ESTIMATED QUANTITIES
(Informational)

ITEM	UNIT	QUANTITY
Class M6 Concrete	CU.YD.	0.6
Reinforcing Steel	LB.	69

The quantity shown above is for one Post footing and two Cable Tie Down footings.

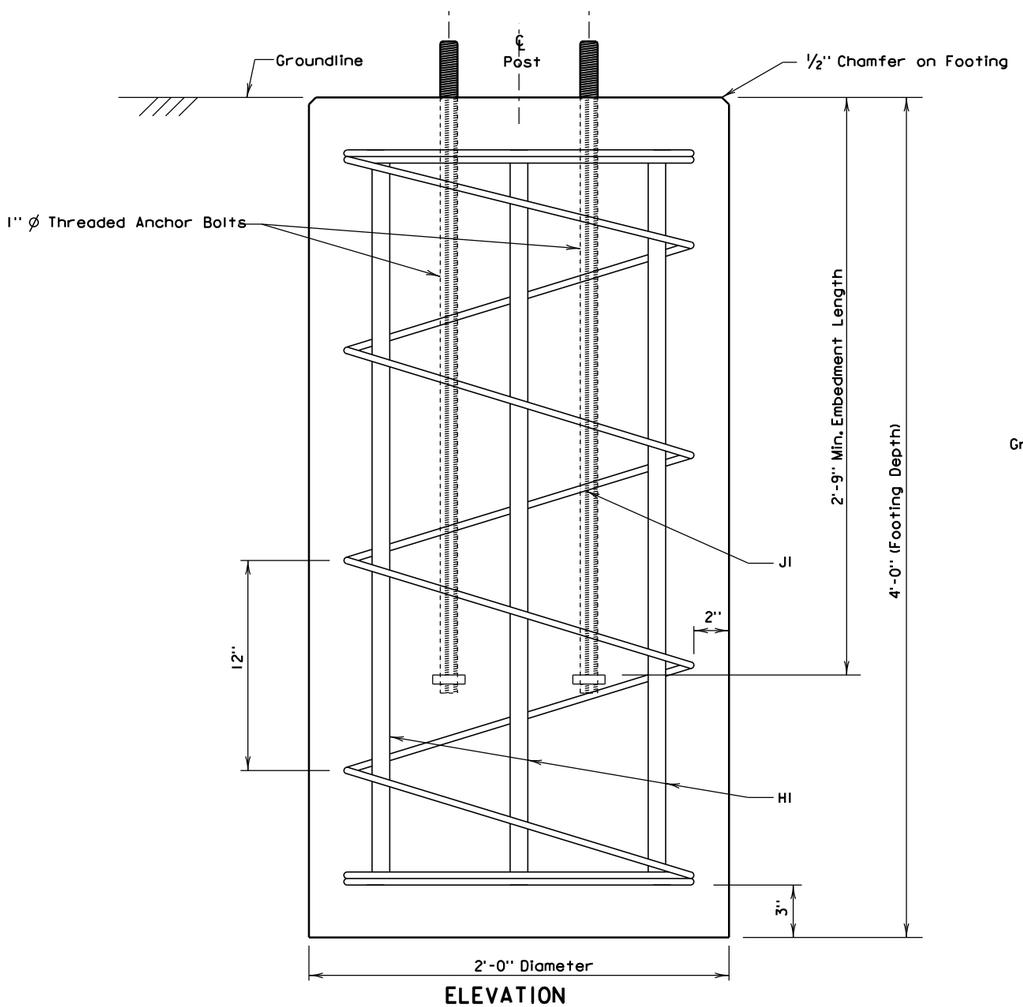

ELEVATION
POST FOOTING DETAIL

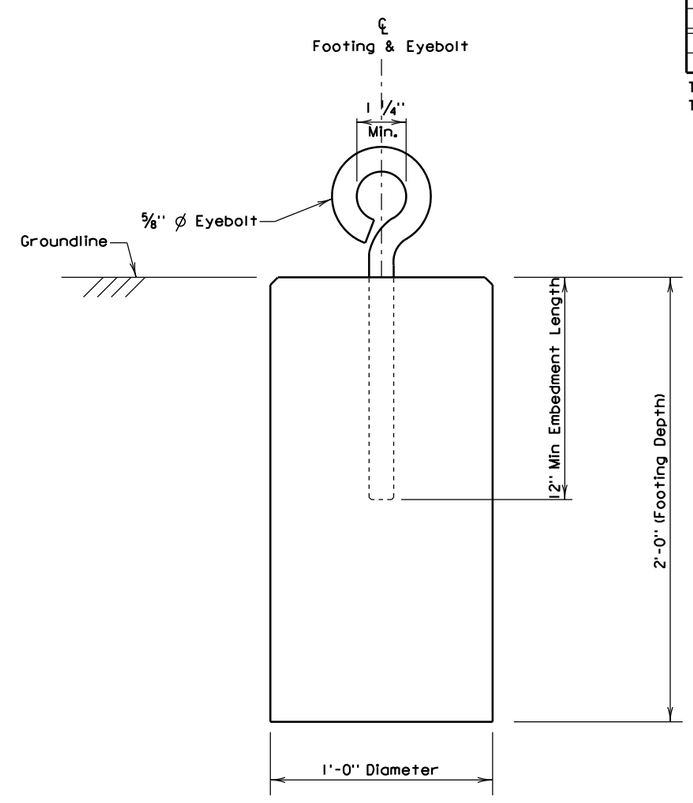

CABLE TIE DOWN FOOTING

CONCRETE FOOTINGS FOR
ROAD CLOSURE GATE
S. D. DEPT. OF TRANSPORTATION
DECEMBER 2002

DESIGNED BY	DRAWN BY	CHECKED BY	APPROVED
DR STAN5858	GWP		John C. Cole BRIDGE ENGINEER

PLOT SCALE - $$SCALE$$
PLOT NAME - $$PLOTNAME$$
FILE - $$FILENAME$$
PLOTTED FROM - $$USERNAME$$

DROP ARM ROAD CLOSURE GATE

FOR BIDDING PURPOSES ONLY

STATE OF SOUTH DAKOTA	PROJECT	SHEET NO.	TOTAL SHEETS
	IM 0293(96)73 IM 2292(90)0	S92	S116

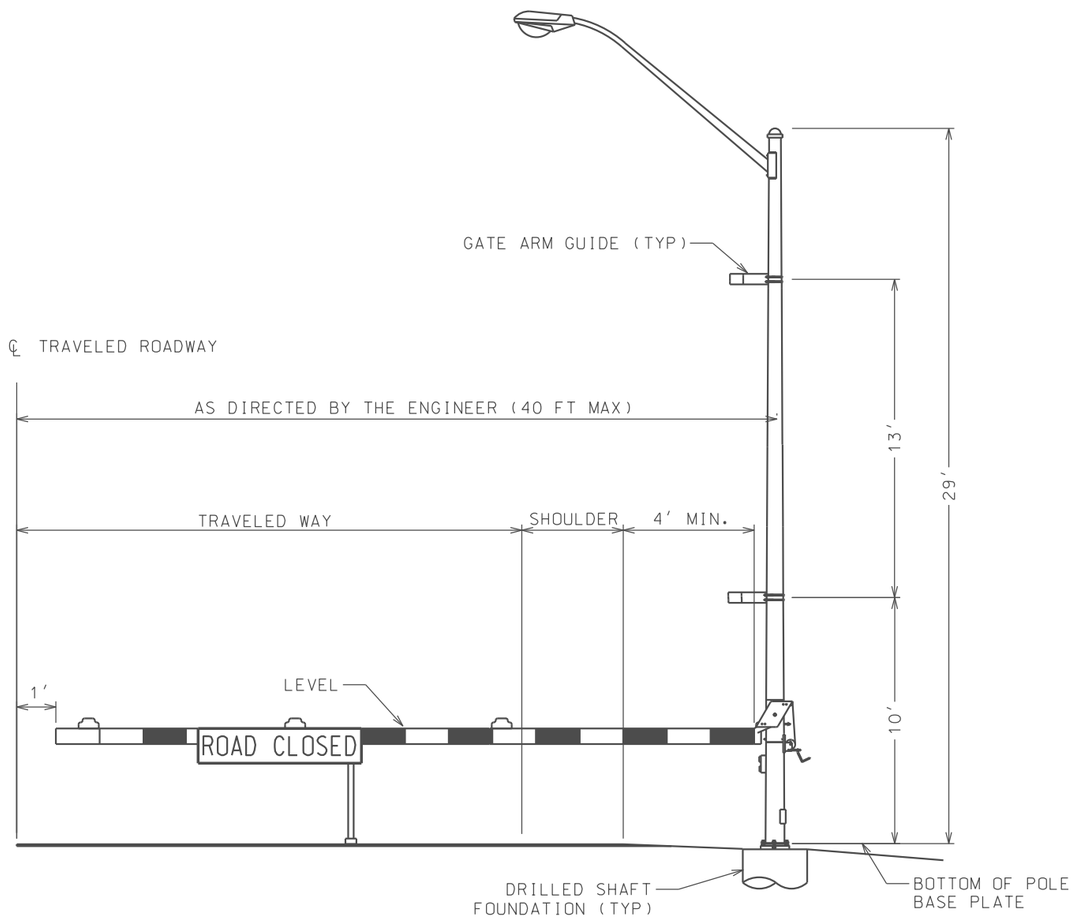

TOTAL WEIGHT OF THE LUMINAIRE POLE, LUMINAIRE, AND HARDWARE FOR THE ROAD CLOSURE GATE SHALL NOT EXCEED 1,000 POUNDS

NOTE: PLACE THE "ROAD CLOSED" SIGN ON CENTER OF THE THROUGH LANE THE SIGN IS BLACK ON WHITE

TYPICAL LOWERED POSITION

PLOT SCALE - $$SCALE$$
PLOT NAME - $$PLOTNAME$$
FILE - $$FILENAME$$
PLOTTED FROM - $$USERNAME$$

DROP ARM ROAD CLOSURE GATE

FOR BIDDING PURPOSES ONLY

STATE OF SOUTH DAKOTA	PROJECT	SHEET NO.	TOTAL SHEETS
	IM 0293(96)73 IM 2292(90)0	S93	S116

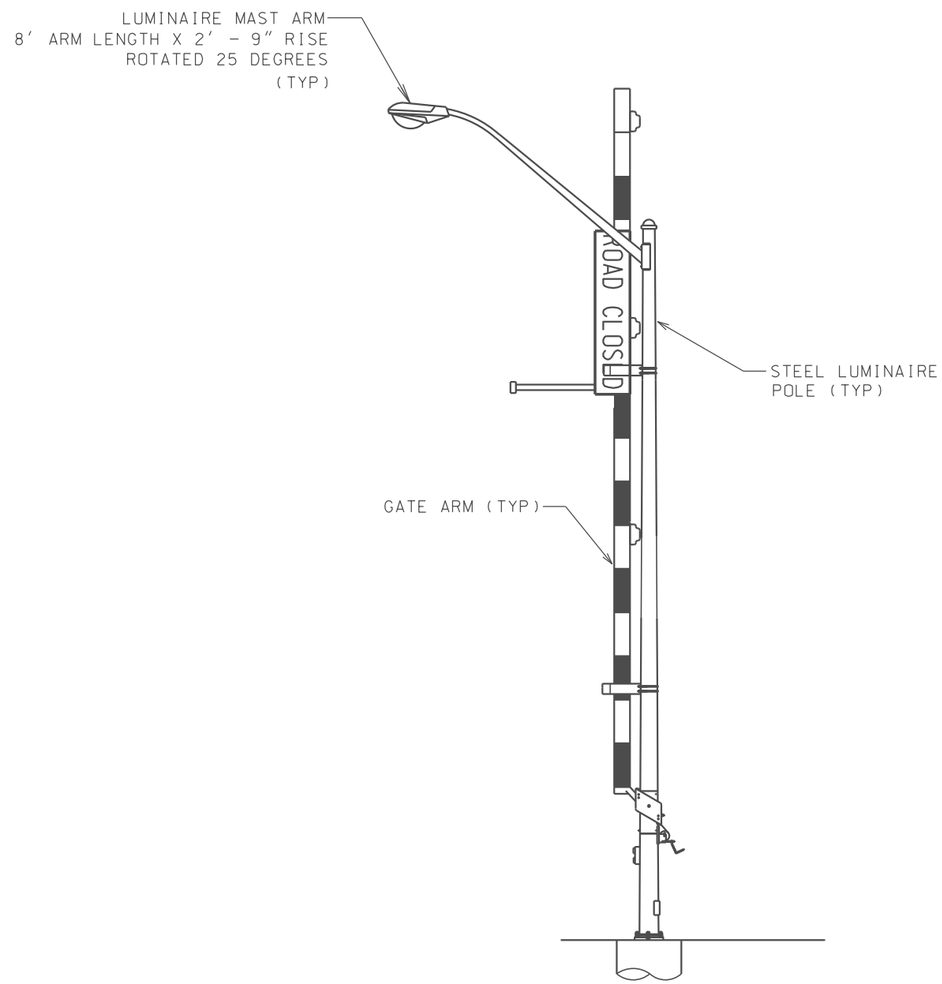

TYPICAL RAISED POSITION

PLOT SCALE - $$SCALE$$
PLOT NAME - $$PLOTNAME$$
FILE - $$FILENAME$$
PLOTTED FROM - $$USERNAME$$

DROP ARM ROAD CLOSURE GATE

FOR BIDDING PURPOSES ONLY

STATE OF SOUTH DAKOTA	PROJECT	SHEET NO.	TOTAL SHEETS
	IM 0293(96)73 IM 2292(90)0	S94	S116

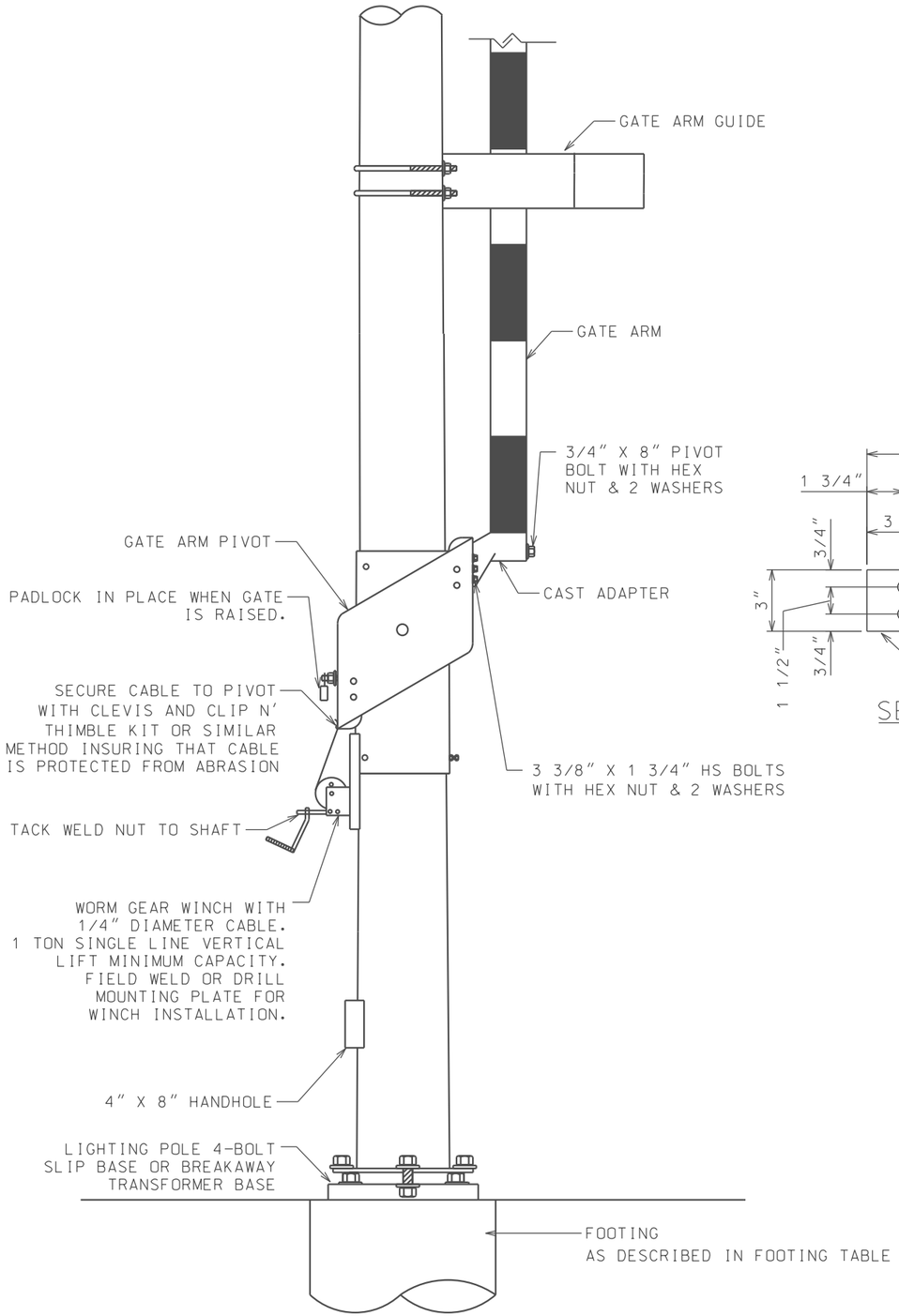

DROP GATE PIVOT ASSEMBLY

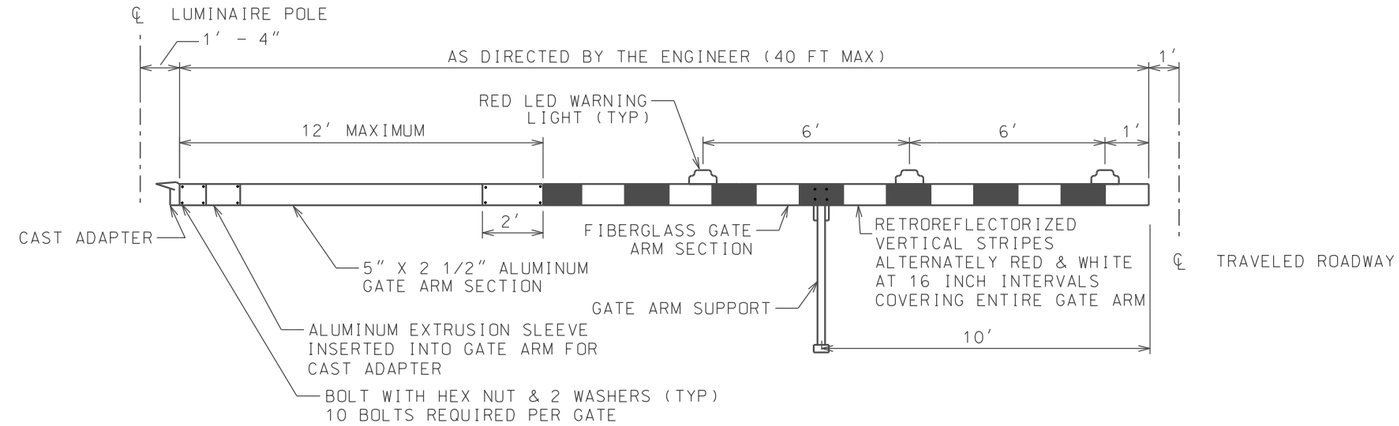

DROP GATE DETAIL

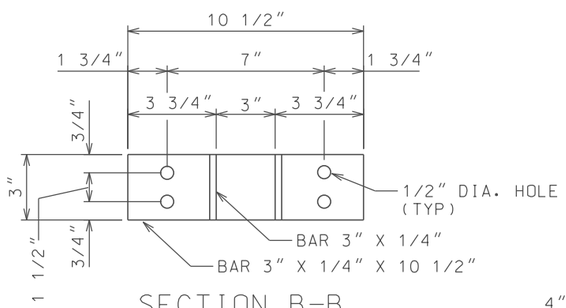

SECTION B-B

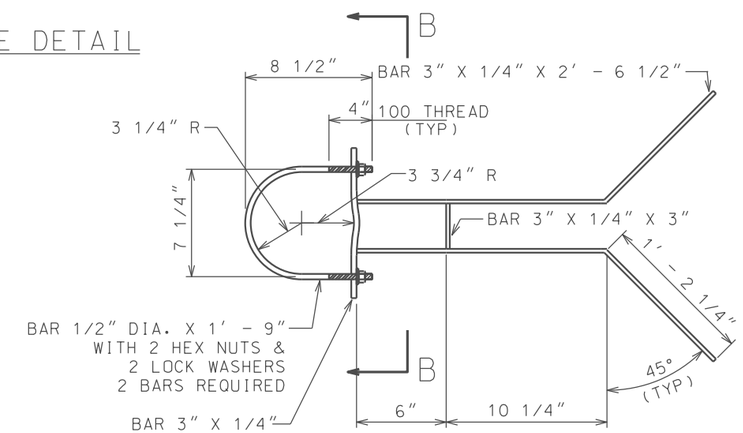

DROP GATE ARM GUIDE DETAIL

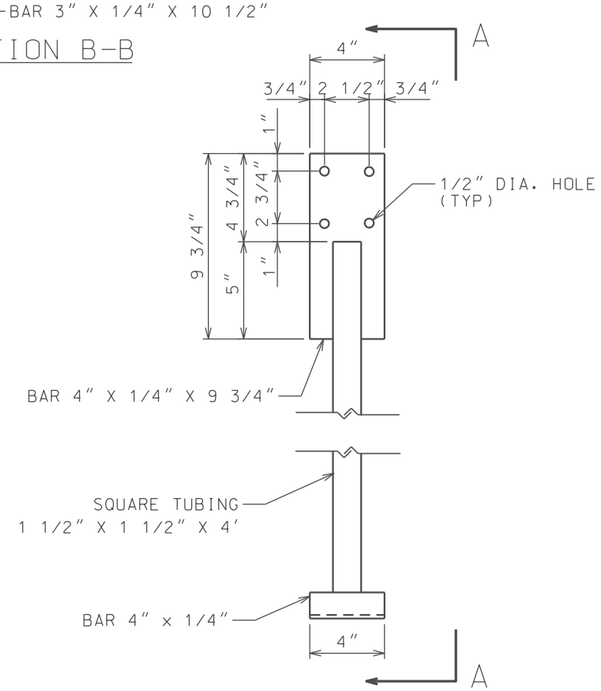

DROP GATE ARM SUPPORT DETAIL

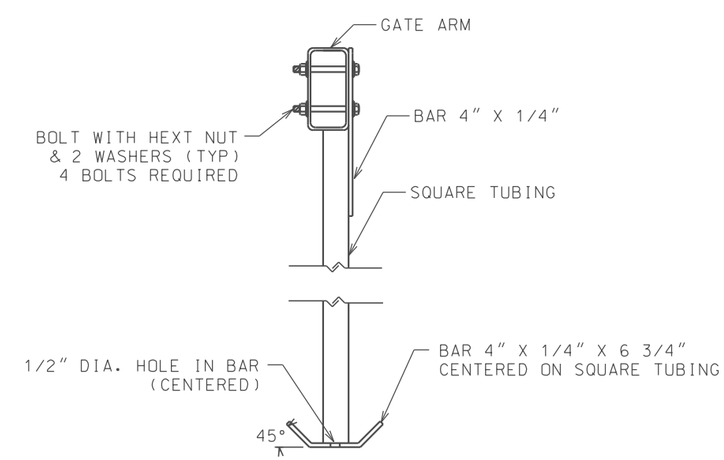

VIEW A-A

PLOT SCALE - $$SCALE$$
PLOT NAME - $$PLOTNAME$$
FILE - $$FILENAME$$
PLOTTED FROM - $$USERNAME$$

DROP ARM ROAD CLOSURE GATE

FOR BIDDING PURPOSES ONLY

STATE OF SOUTH DAKOTA	PROJECT	SHEET NO.	TOTAL SHEETS
	IM 0293(96)73 IM 2292(90)0	S95	S116

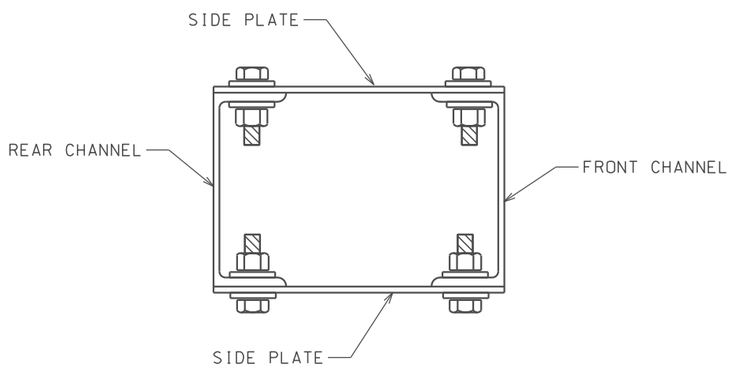

VIEW B-B

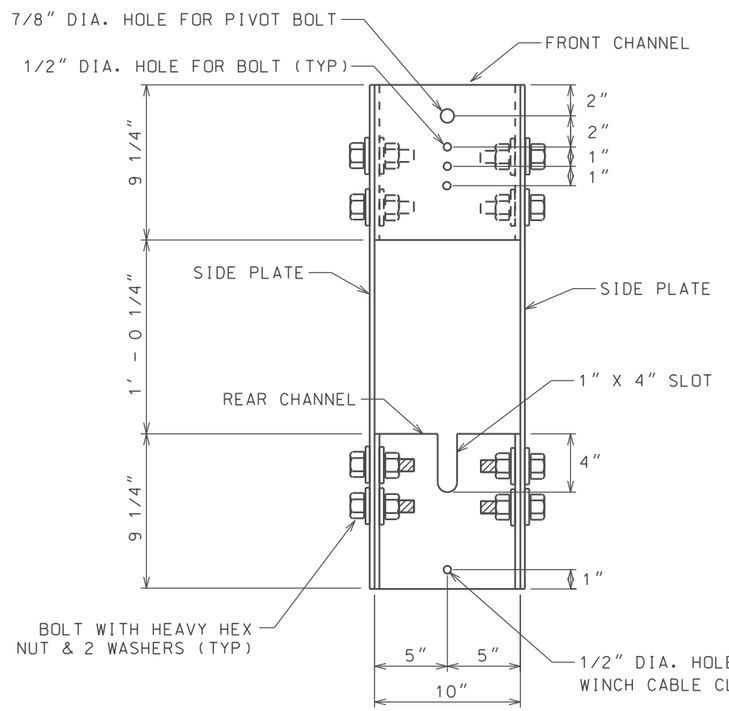

VIEW A-A

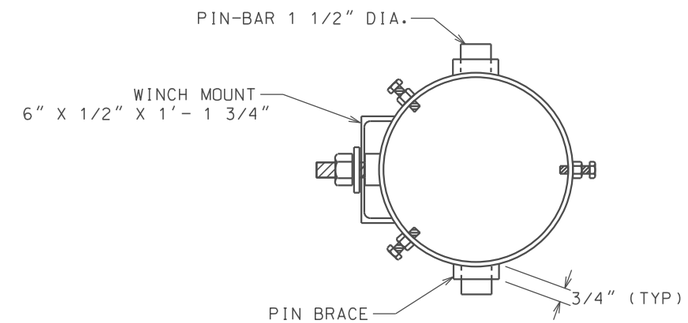

VIEW C-C

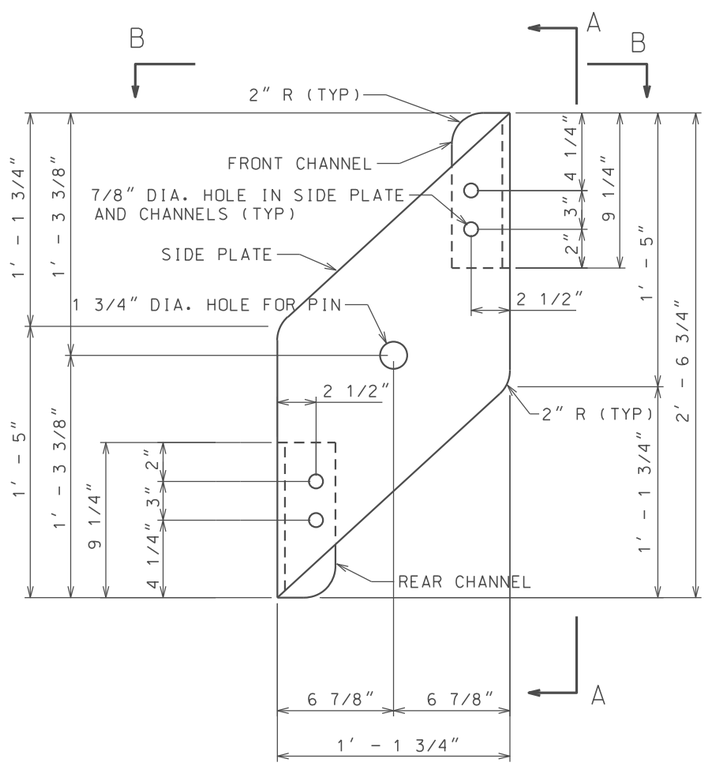

SIDE PLATE DETAIL

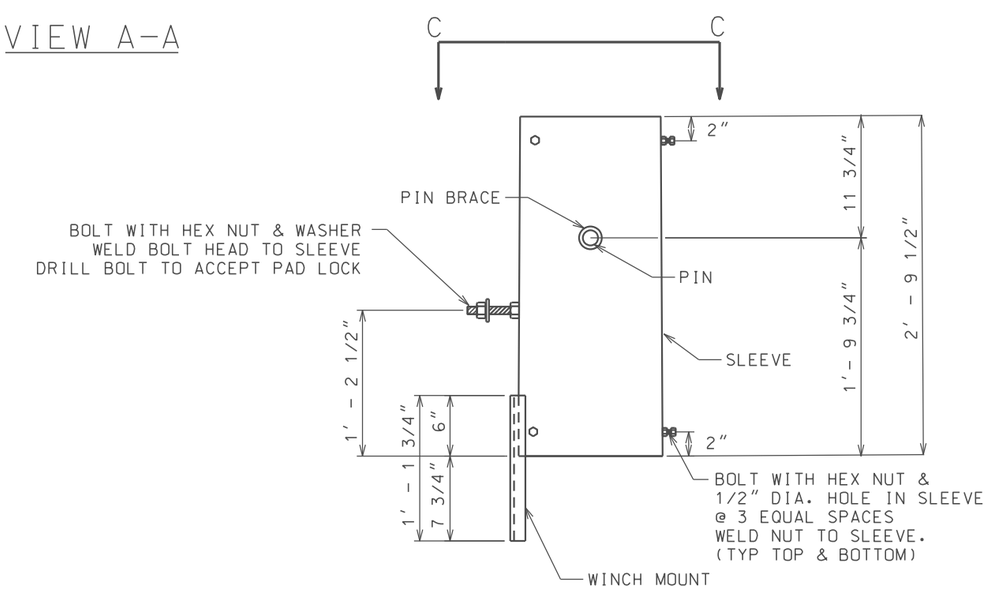

PIVOT SLEEVE DETAIL

PLOT SCALE - $$SCALE$$
PLOT NAME - $$PLOTNAME$$
FILE - $$FILENAME$$
PLOTTED FROM - $$USERNAME$$

FOR BIDDING PURPOSES ONLY

ERECTION DETAILS FOR INTERSTATE HIGHWAY SIGNS

ADVANCE AND EXIT INTERSTATE CLOSURE SIGNING (TYPICAL)

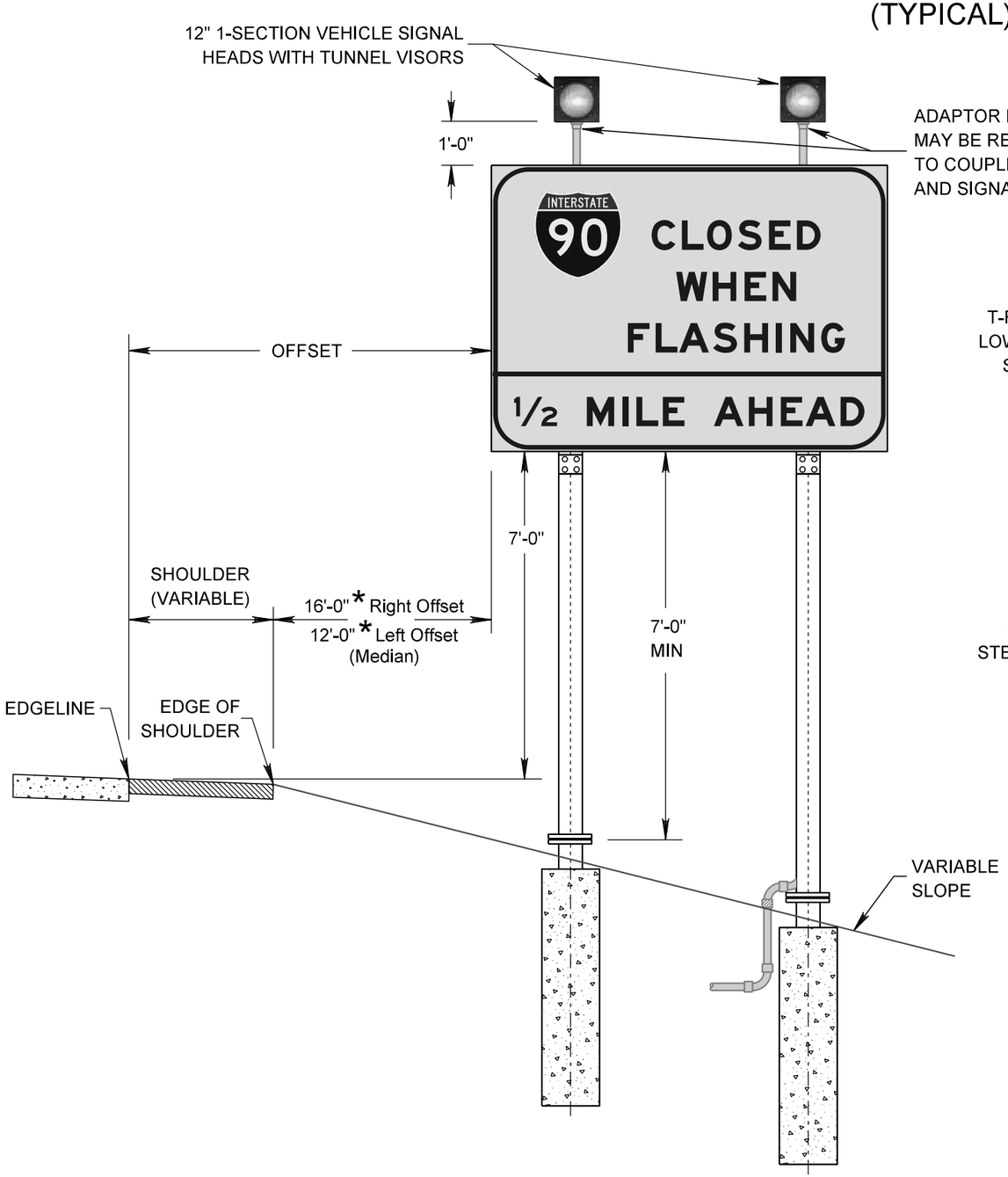

FRONT VIEW

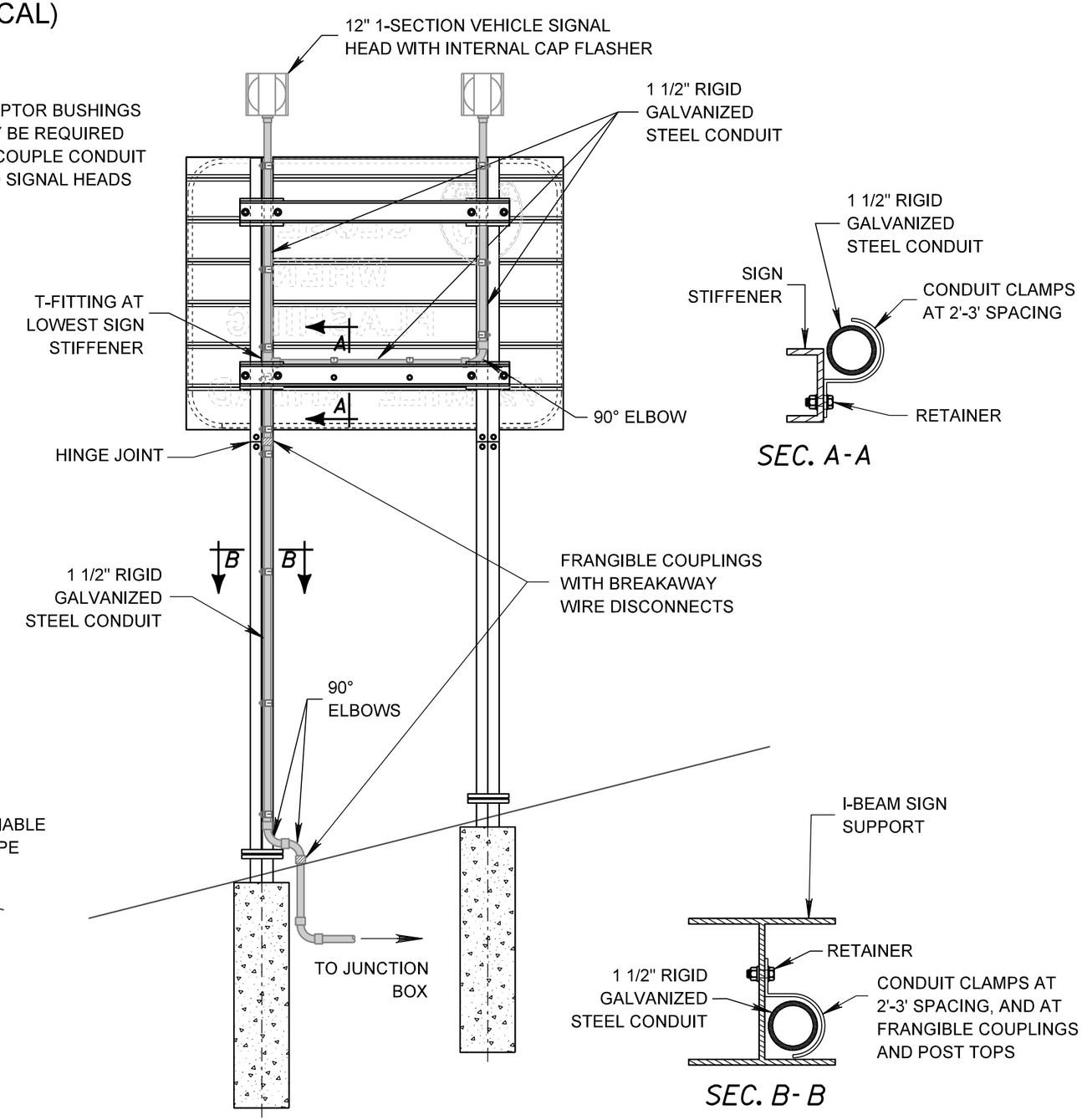

REAR VIEW

(REAR I-BEAM FLANGES NOT SHOWN)

* - Unless another offset is specified in the plans.

PLOT SCALE - $$SCALE$$
PLOT NAME - $$PLOTNAME$$
FILE - $$FILENAME$$
PLOTTED FROM - $$USERNAME$$

FOR BIDDING PURPOSES ONLY

ROAD CLOSURE GATE WIRING DIAGRAMS

(I-29 EXIT 73 SOUTHBOUND MAINLINE)

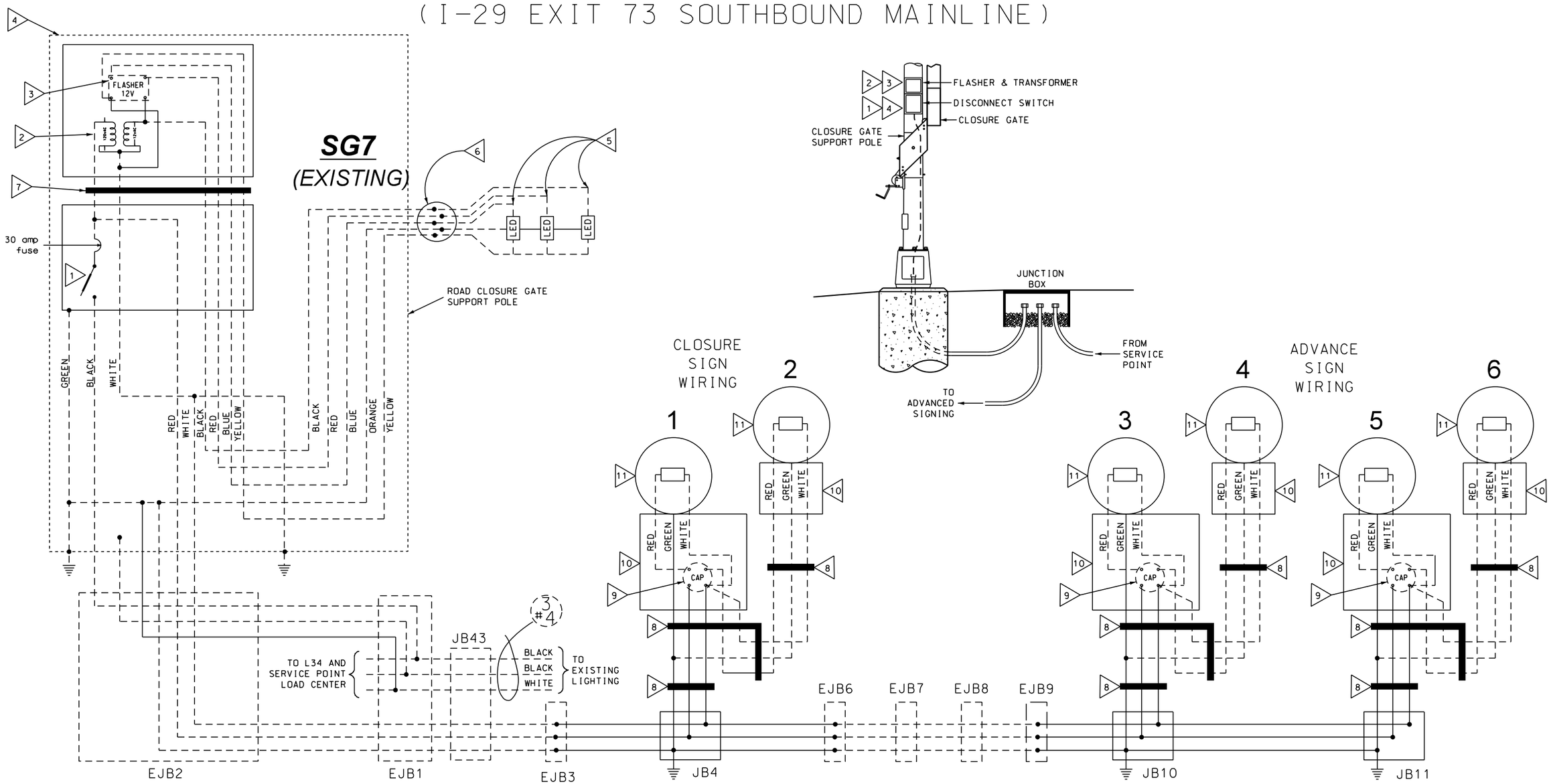

LEGEND:

FUSE: 8 amp. Non-Time Delay
or
3 1/2 amp. Dual Element

LUMINAIRE: 250 watt High Pressure Sodium Lamp

1. 30 AMP SAFETY SWITCH IN A NEMA 3R LOCKABLE ENCLOSURE. DPST FOR ROAD CLOSURE DROP GATE APPLICATIONS.
2. 120/240 VOLT PRIMARY, 12/24 VOLT SECONDARY TRANSFORMER, BUCK AND BOOST, MOUNTED IN LOCKABLE NEMA 3R ENCLOSURE.
3. CUBE FLASHER MODEL 12DC10DF AS MANUFACTURED BY TSC (or equal) IN LOCKABLE NEMA 3R ENCLOSURE.
4. THE NEMA 3R ENCLOSURES SHALL BE MOUNTED TO THE GATE CLOSURE SUPPORT POLE. THE DISCONNECT SWITCH SHALL BE MOUNTED AT A HEIGHT OF 5 feet.
5. LAMP ASSEMBLIES MANUFACTURED BY AURORA, PART NO. A30-944 (or equal) 12vAC LED GATE LIGHTS. 3 LAMP ASSEMBLIES SHALL BE MOUNTED ON EACH GATE.
6. THE CONTRACTOR SHALL INSTALL 2 CONDUCTOR NO. 14 AWG, "SO" CORD. CONNECTION OF THE "SO" CORD SHALL BE MADE IN A JUNCTION BOX MOUNTED ON THE GATE POST. THE JUNCTION BOX SHALL BE BANDED TO THE POST AND SHALL BE RAIN TIGHT AND WEATHERPROOF.
7. 2" RIGID STEEL CONDUIT WITH CONDUCTORS, CONNECTING NEMA 3R ENCLOSURES.
8. 1 1/2" RIGID STEEL CONDUIT WITH #10 AWG CONDUCTORS.
9. CAP FLASHER MODEL CF-2F AS MANUFACTURED BY TSC (or equal) IN VEHICLE SIGNAL HEAD HOUSING.
10. VEHICLE SIGNAL HEAD HOUSING WITH TUNNEL VISOR, 12 inch.
11. SDDOT APPROVED 12 inch LED SIGNAL MODULE INDICATION IN VEHICLE SIGNAL HEAD HOUSING.

PLOT SCALE - 1:80.6299
PLOT NAME - 80
FILE - ...\0IOS_WIRINGDIAGRAMS.DGN
PLOTTED FROM - TRM111126

STATE OF SOUTH DAKOTA	PROJECT	SHEET	TOTAL SHEETS
	IM 0293(96)73 IM 2292(90)0	S98	S116

FOR BIDDING PURPOSES ONLY

ROAD CLOSURE GATE WIRING DIAGRAMS

(I-29 EXIT 75 RAMP C / I-229 SOUTHBOUND MAINLINE)

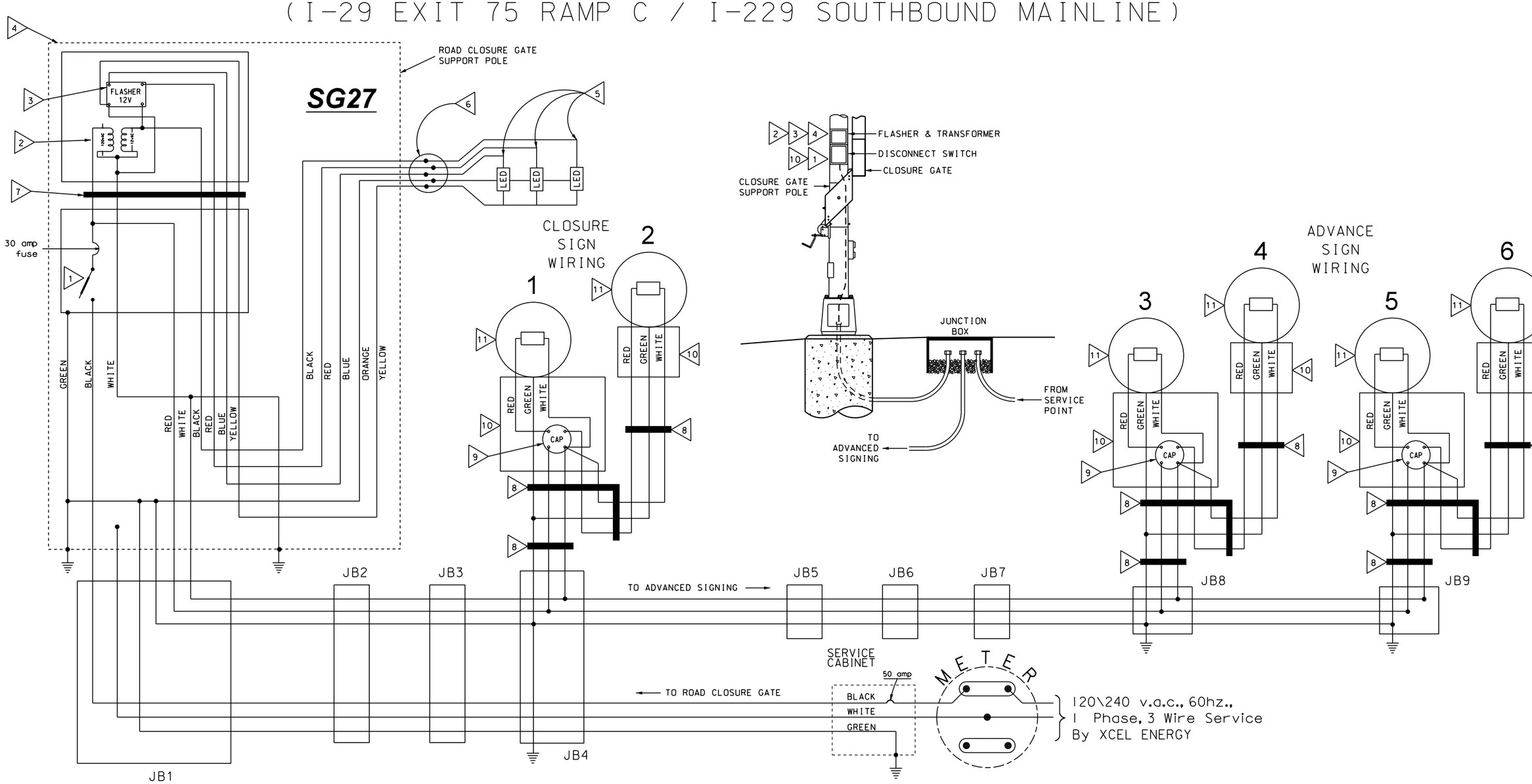

LEGEND:

FUSE: 8 amp. Non-Time Delay
or
3 1/2 amp. Dual Element

LUMINAIRE: 250 watt High Pressure Sodium Lamp

1. 30 AMP SAFETY SWITCH IN A NEMA 3R LOCKABLE ENCLOSURE. DPST FOR ROAD CLOSURE DROP GATE APPLICATIONS.
2. 120/240 VOLT PRIMARY, 12/24 VOLT SECONDARY TRANSFORMER, BUCK AND BOOST, MOUNTED IN LOCKABLE NEMA 3R ENCLOSURE.
3. CUBE FLASHER MODEL 12DC10DF AS MANUFACTURED BY TSC (or equal) IN LOCKABLE NEMA 3R ENCLOSURE.
4. THE NEMA 3R ENCLOSURES SHALL BE MOUNTED TO THE GATE CLOSURE SUPPORT POLE. THE DISCONNECT SWITCH SHALL BE MOUNTED AT A HEIGHT OF 5 feet.
5. LAMP ASSEMBLIES MANUFACTURED BY AURORA, PART NO. A30-944 (or equal) 12vAC LED GATE LIGHTS. 3 LAMP ASSEMBLIES SHALL BE MOUNTED ON EACH GATE.
6. THE CONTRACTOR SHALL INSTALL 2 CONDUCTOR NO. 14 AWG, "SO" CORD. CONNECTION OF THE "SO" CORD SHALL BE MADE IN A JUNCTION BOX MOUNTED ON THE GATE POST. THE JUNCTION BOX SHALL BE BANDED TO THE POST AND SHALL BE RAIN TIGHT AND WEATHERPROOF.
7. 2" RIGID STEEL CONDUIT WITH CONDUCTORS, CONNECTING NEMA 3R ENCLOSURES.
8. 1 1/2" RIGID STEEL CONDUIT WITH #10 AWG CONDUCTORS.
9. CAP FLASHER MODEL CF-2F AS MANUFACTURED BY TSC (or equal) IN VEHICLE SIGNAL HEAD HOUSING.
10. VEHICLE SIGNAL HEAD HOUSING WITH TUNNEL VISOR, 12 inch.
11. SDDOT APPROVED 12 inch LED SIGNAL MODULE INDICATION IN VEHICLE SIGNAL HEAD HOUSING.

PLOT SCALE - 1:80.6299
PLOTTED FROM - TRMI11126
PLOT NAME - 81
FILE - ...\0IOS_WIRINGDIAGRAMS.DGN

STATE OF SOUTH DAKOTA	PROJECT	SHEET	TOTAL SHEETS
	IM 0293(96)73 IM 2292(90)0	S99	S116

FOR BIDDING PURPOSES ONLY

SNOW GATE DETAILS

INTERSTATE INTERCHANGE
SNOW GATE & SIGNING PLACEMENT
(TYPICAL)

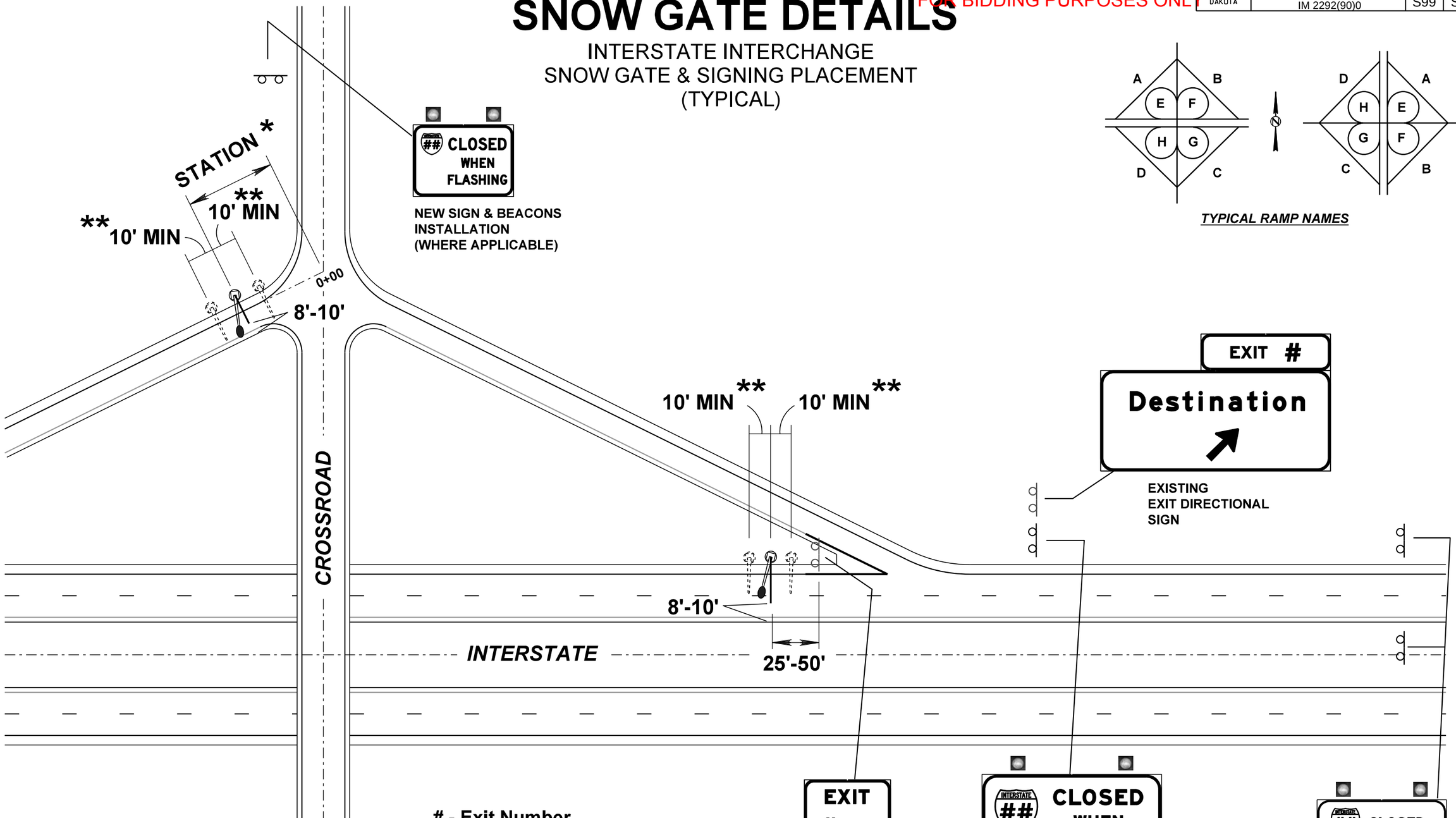

TYPICAL RAMP NAMES

- Exit Number
- Interstate 29, 90 or 229
- Existing Snow Gate or Footing
- New Snow Gate Installation

* - Default stationing unless shown otherwise in plan sheets.
** - 10' min. if existing snow gate footing is completely removed.

PLOT SCALE - $$SCALE$$
PLOT NAME - $$PLOTNAME$$
FILE - $$FILENAME$$
PLOTTED FROM - $$USERNAME$$

STATE OF SOUTH DAKOTA	PROJECT	SHEET NO.	TOTAL SHEETS
	IM 0293(96)73 IM 2292(90)0	S100	S116

FOR BIDDING PURPOSES ONLY

CONDUIT LAYOUT

I-29 MAINLINE - EXIT 73

SCALE: 1" = 100'

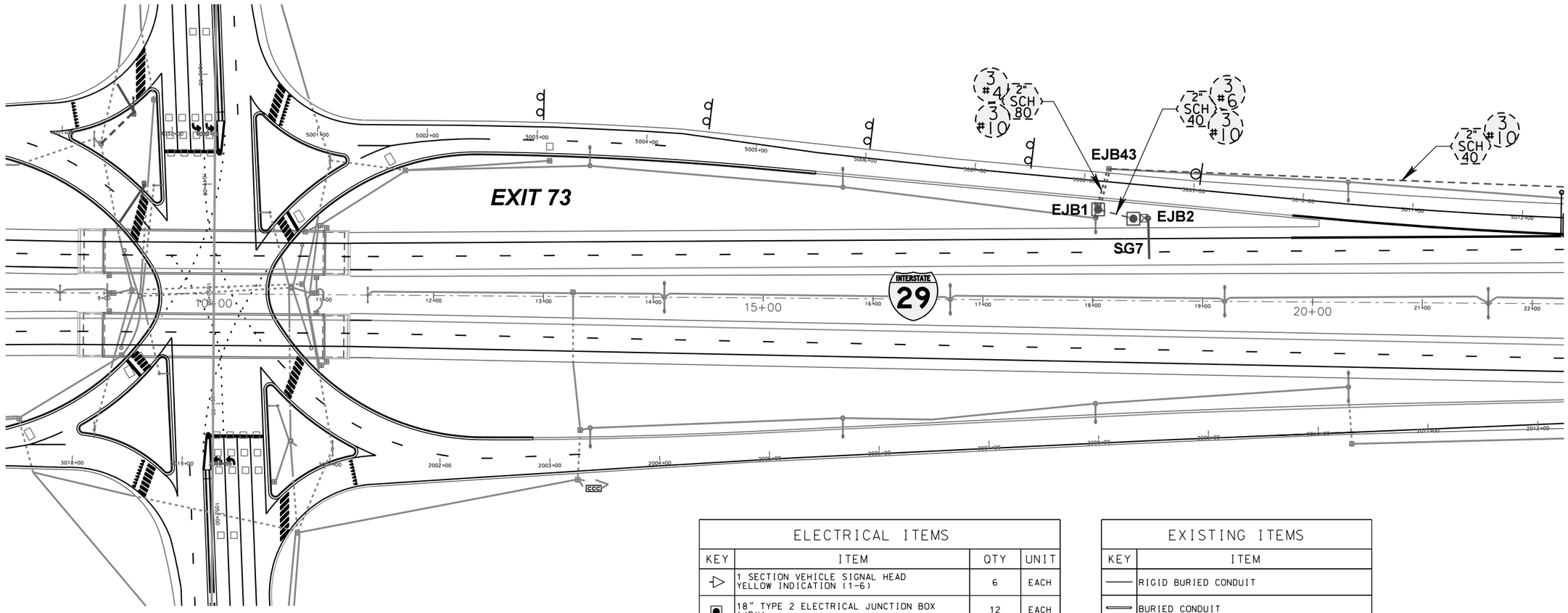

ELECTRICAL ITEMS			
KEY	ITEM	QTY	UNIT
	1 SECTION VEHICLE SIGNAL HEAD YELLOW INDICATION (1-6)	6	EACH
	18" TYPE 2 ELECTRICAL JUNCTION BOX (JB#)	12	EACH
1½" RIGID SC	1½" RIGID GALVANIZED STEEL CONDUIT	85	FT
2" SCH 40	2" RIGID CONDUIT, SCHEDULE 40	3,535	FT
2" SCH 80	2" RIGID CONDUIT, SCHEDULE 80	215	FT
#6	1/C #6 AWG COPPER WIRE	2,240	FT
#10	1/C #10 AWG COPPER WIRE	12,499	FT
	DROP ARM CLOSURE GATE (28' GATE) (SG27)	1	EACH
CAP	CAP FLASHER	3	EACH
	UTILITY POST	1	EACH
M	METER	1	EACH
	ELECTRICAL SERVICE CABINET	1	EACH

EXISTING ITEMS	
KEY	ITEM
	RIGID BURIED CONDUIT
	BURIED CONDUIT
	EXISTING RIGID BURIED CONDUIT
	EXISTING UNDERGROUND ELECTRIC
	EXISTING JUNCTION BOX (EJB#)
#X	EXISTING CONDUCTOR
2" SCH XX	EXISTING CONDUIT
	EXISTING UTILITY POLE

PLOT SCALE - $$SCALE$$
PLOTTED FROM - $$USERNAME$$
PLOT NAME - $$PLOTNAME$$
FILE - $$FILENAME$$

STATE OF SOUTH DAKOTA	PROJECT	SHEET NO.	TOTAL SHEETS
	IM 0293(96)73 IM 2292(90)0	S101	S116

FOR BIDDING PURPOSES ONLY

CONDUIT LAYOUT

I-29 MAINLINE - EXIT 73

SCALE: 1" = 100'

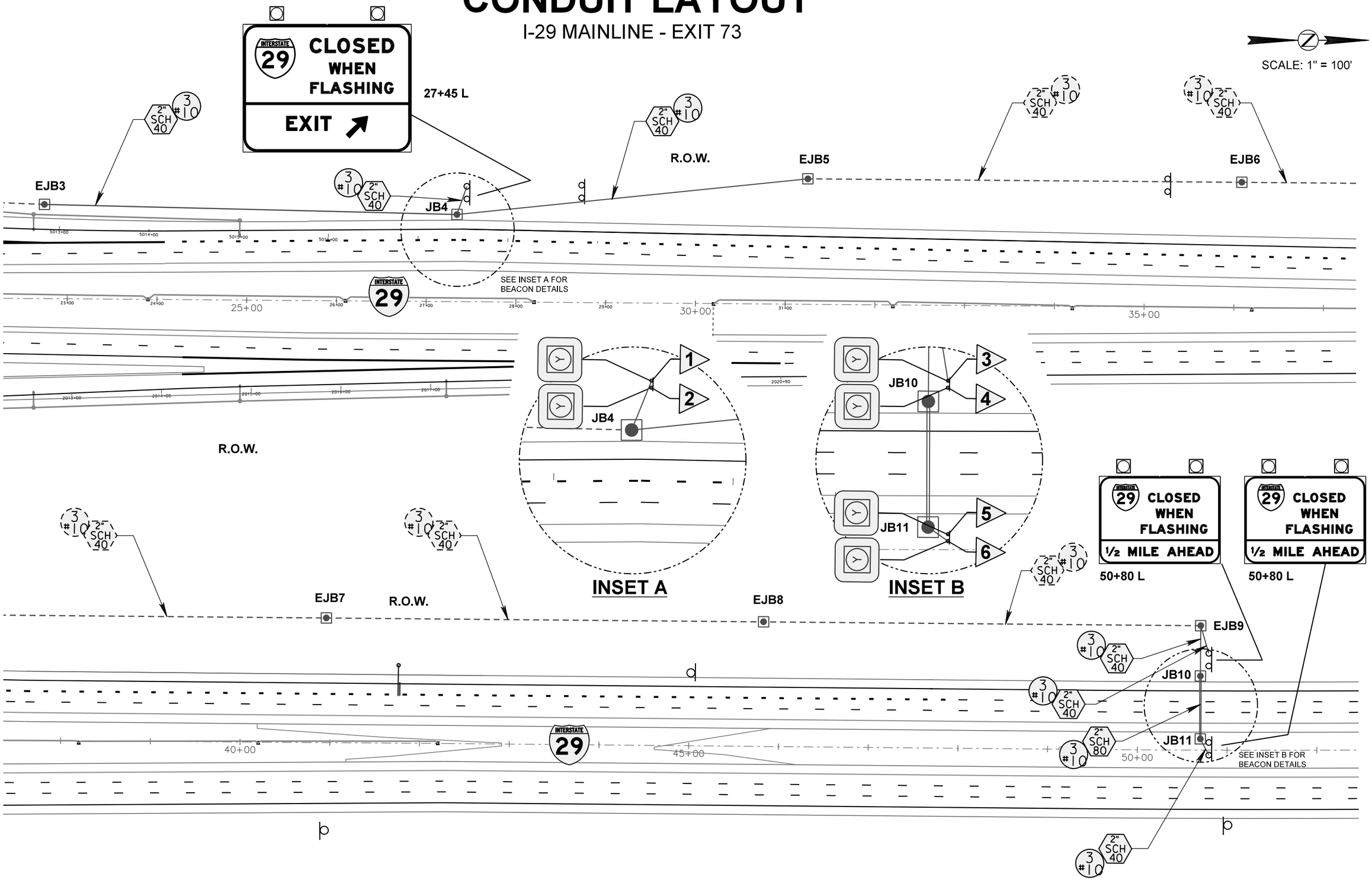

PLOT SCALE - $$SCALE$$
PLOTTED FROM - $$USERNAME$$
PLOT NAME - $$PLOTNAME$$
FILE - $$FILENAME$$

STATE OF SOUTH DAKOTA	PROJECT	SHEET NO.	TOTAL SHEETS
	IM 0293(96)73 IM 2292(90)0	S102	S116

FOR BIDDING PURPOSES ONLY

SNOW GATE LAYOUT

I-229 MAINLINE - EXIT 1A

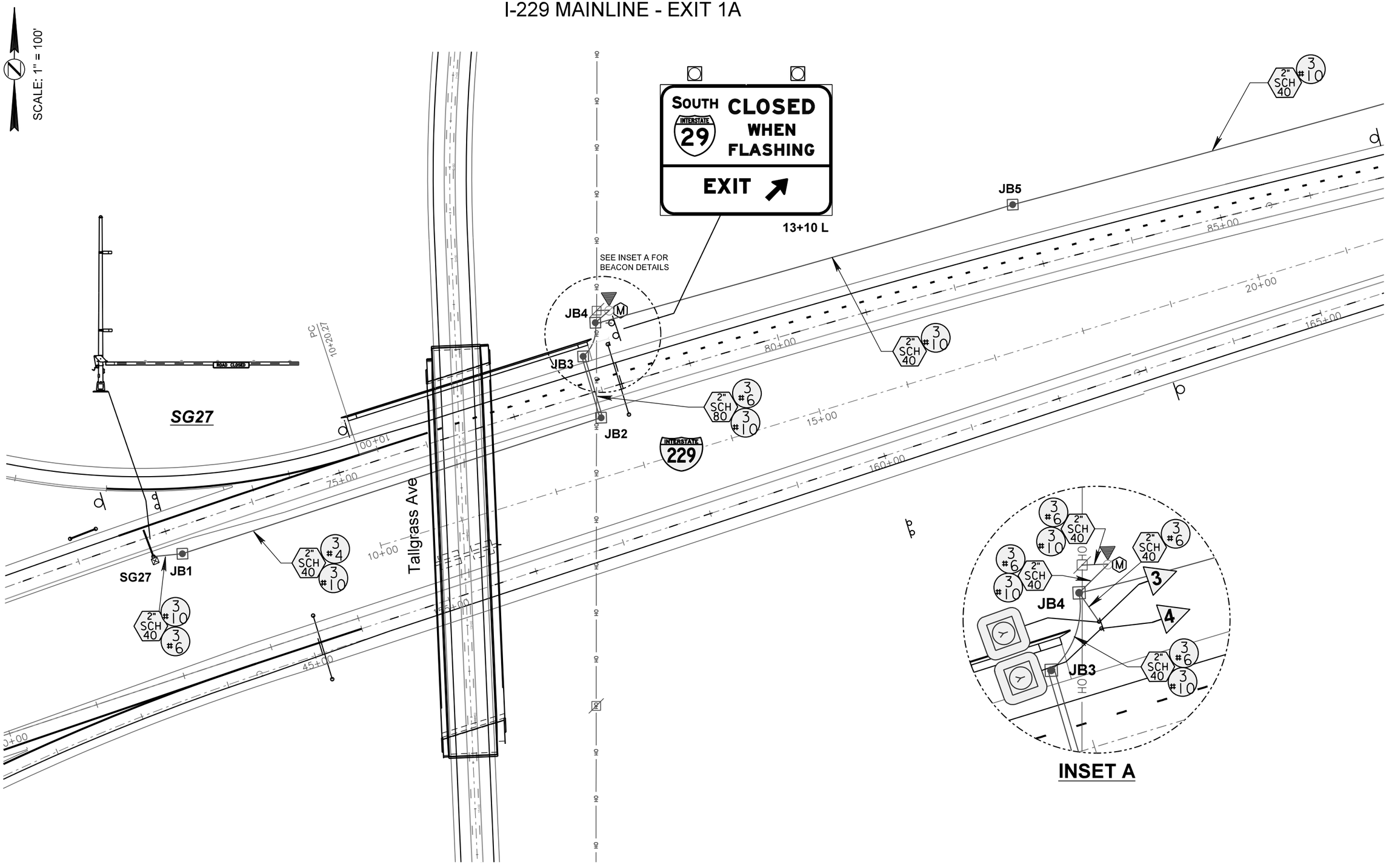

PLOT SCALE - $$SCALE$$
PLOTTED FROM - $$USERNAME$$
PLOT NAME - $$PLOTNAME$$
FILE - $$FILENAME$$

STATE OF SOUTH DAKOTA	PROJECT	SHEET NO.	TOTAL SHEETS
	IM 0293(96)73 IM 2292(90)0	S103	S116

Rev: 9-16-15 SAH

SNOW GATE LAYOUT

FOR BIDDING PURPOSES ONLY

I-229 MAINLINE - EXIT 1A

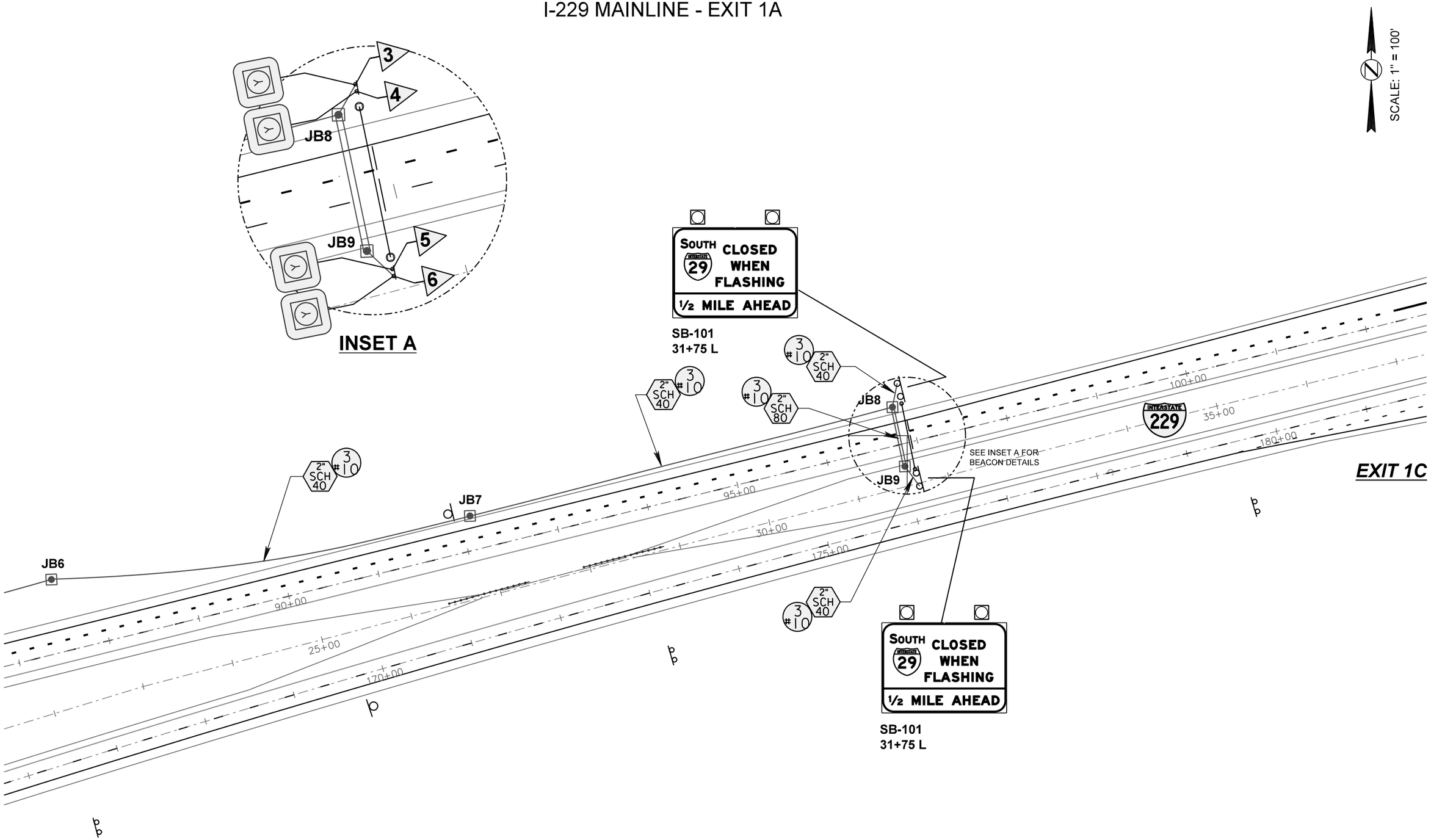

PLOT SCALE - $$SCALE$$
PLOT NAME - $$PLOTNAME$$
FILE - $$FILENAME$$
PLOTTED FROM - $$USERNAME$$

TYPE 2 OBJECT MARKER INSTALLATION AT PIPE CULVERTS, BOX CULVERTS, & CATTLE PASSES – LESS THAN 60" WIDTH

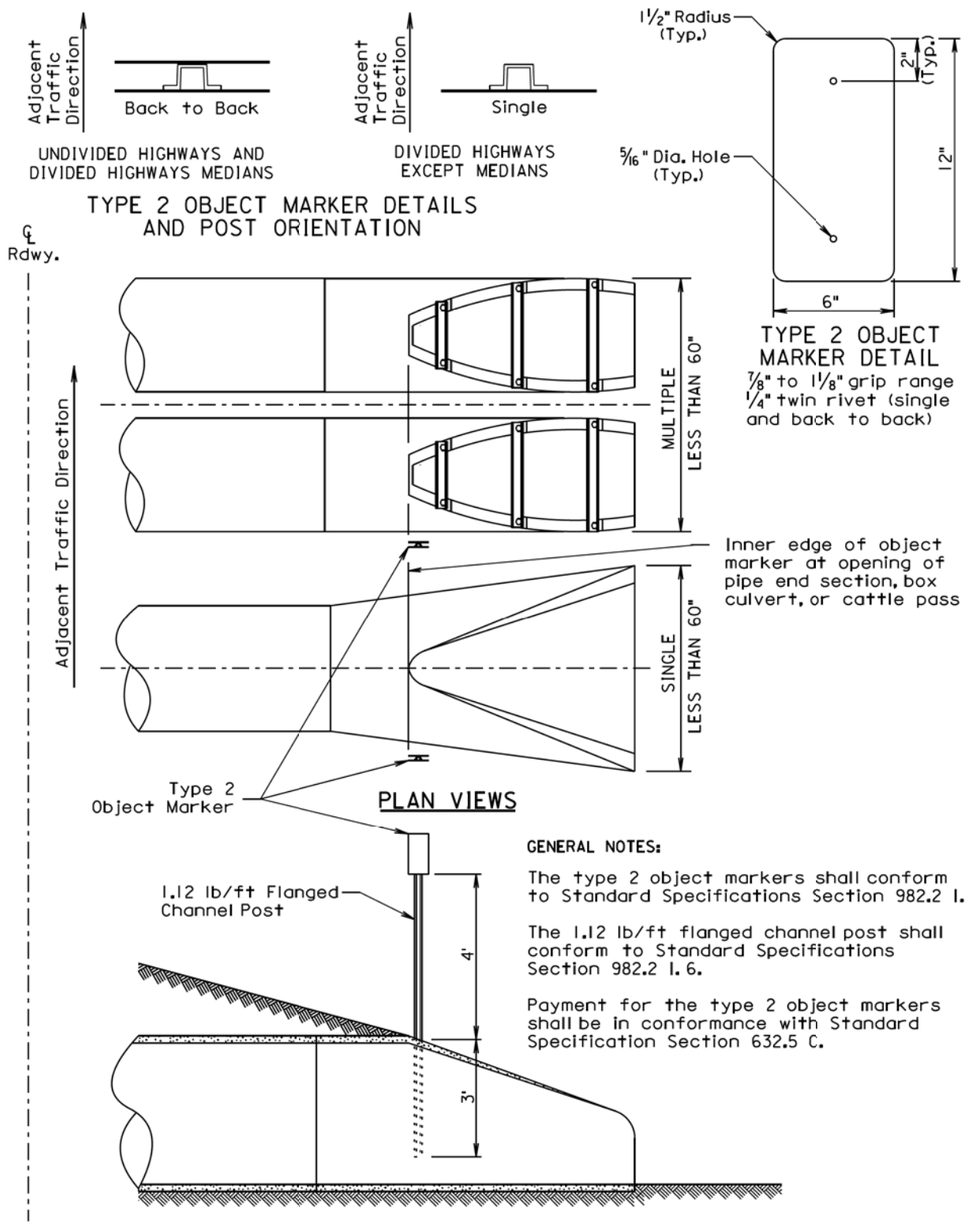

GENERAL NOTES:

The type 2 object markers shall conform to Standard Specifications Section 982.2 I.

The 1.12 lb/ft flanged channel post shall conform to Standard Specifications Section 982.2 I. 6.

Payment for the type 2 object markers shall be in conformance with Standard Specification Section 632.5 C.

TYPE 2 OBJECT MARKER INSTALLATION AT PIPE CULVERTS, BOX CULVERTS, & CATTLE PASSES – 60" OR GREATER WIDTH

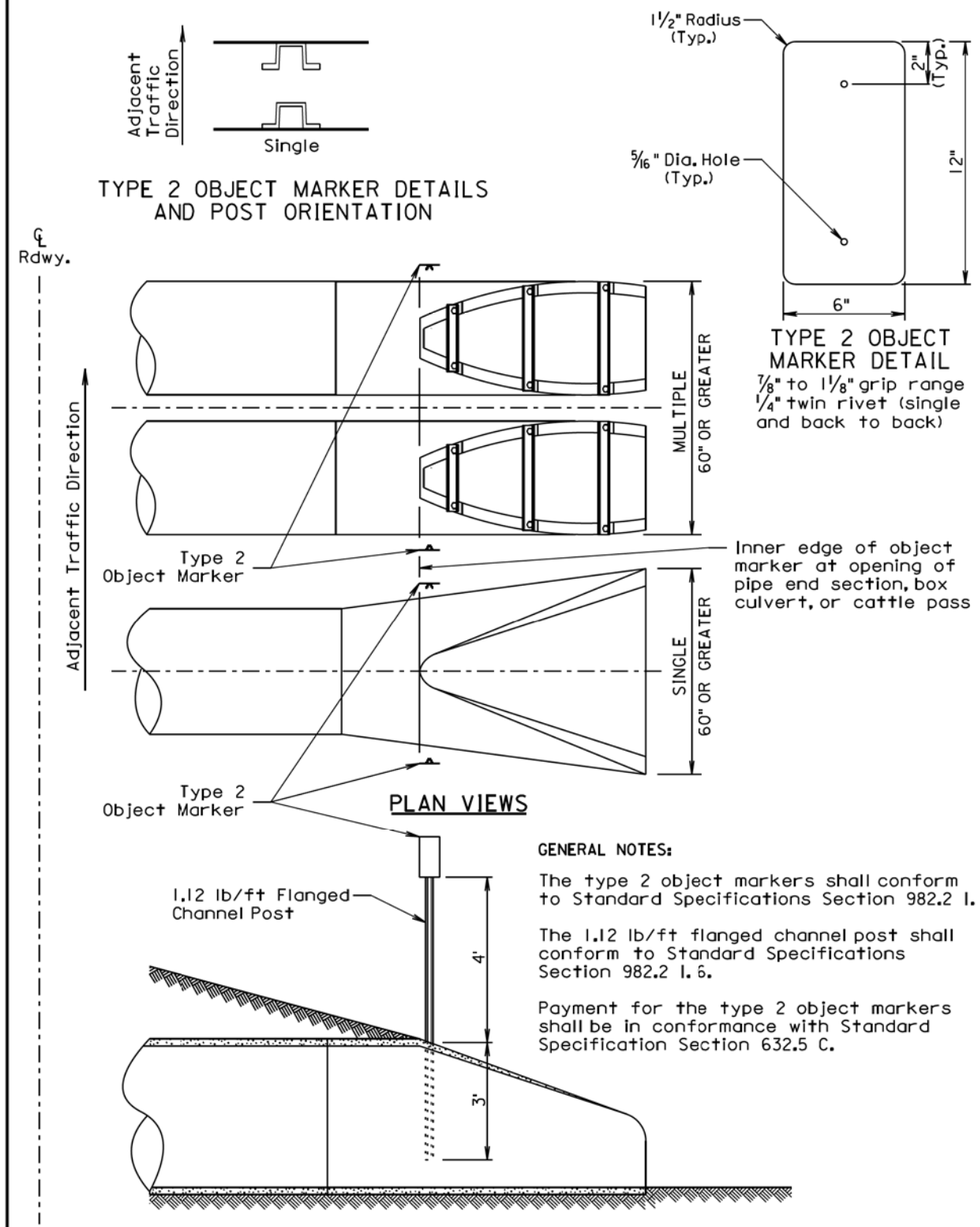

GENERAL NOTES:

The type 2 object markers shall conform to Standard Specifications Section 982.2 I.

The 1.12 lb/ft flanged channel post shall conform to Standard Specifications Section 982.2 I. 6.

Payment for the type 2 object markers shall be in conformance with Standard Specification Section 632.5 C.

2 1/2" SQUARE STEEL PERFORATED TUBE POST BREAKAWAY SLIP-BASE WITH FOOTING DETAILS (Typical)

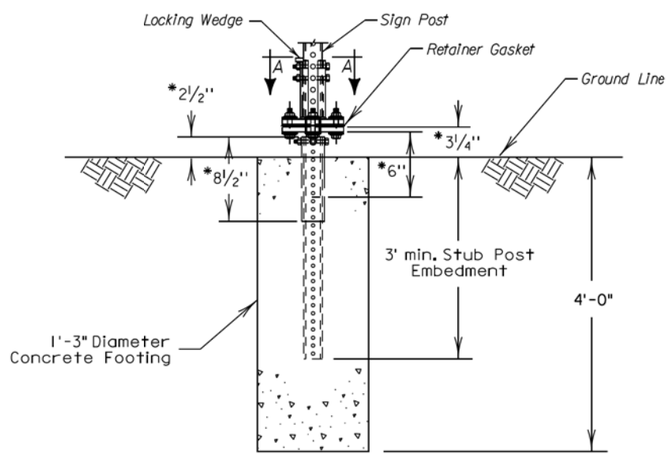

ELEVATION VIEW

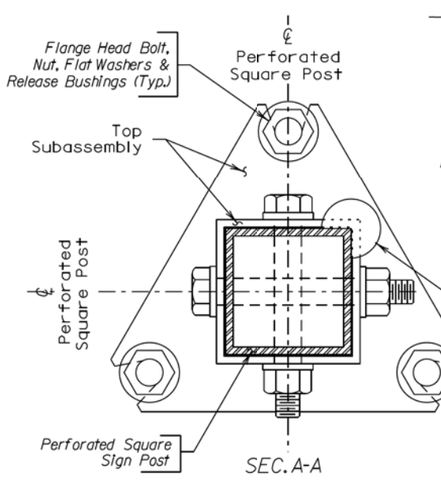

SEC. A-A

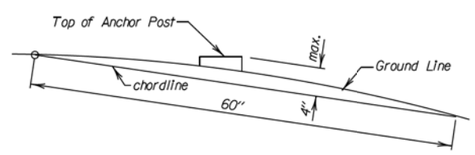

BREAKAWAY SUPPORT STUB CLEARANCE DIAGRAM

NOTE: The top of anchor post shall NOT extend more than 4" max. above the chordline within a 60" chord.

* Dimensions shown may vary by Manufacturer. The Contractor shall use Manufacturer recommended assembly parts and procedures. Sign installations must meet or exceed NCHRP 350 or MASH breakaway requirements and be FHWA approved.

DETAILS FOR MOUNTING SHEET ALUMINUM SIGNS ON STEEL FLANGED POSTS

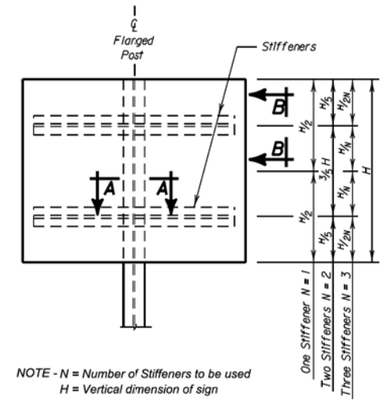

NOTE - N = Number of Stiffeners to be used
H = Vertical dimension of sign

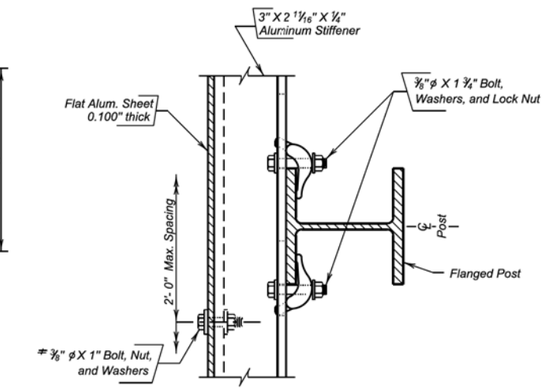

SEC. A-A

STIFFENER NOTES-

1. Stiffeners must always be used on flanged supports.
2. Number of stiffeners used, N, shall be as follows:
   If H <= 2'-0" then N = 1
   If 2'-0" < H <= 8'-0" then N = 2
   If 8'-0" < H <= 15'-0" then N = 3
   where H equals the vertical dimension of the sign panel.
3. All stiffener Bolts and Nuts shall conform to ASTM A307. Washers shall conform to ASTM F436. All hardware shall be galvanized in accordance with ASTM A153.

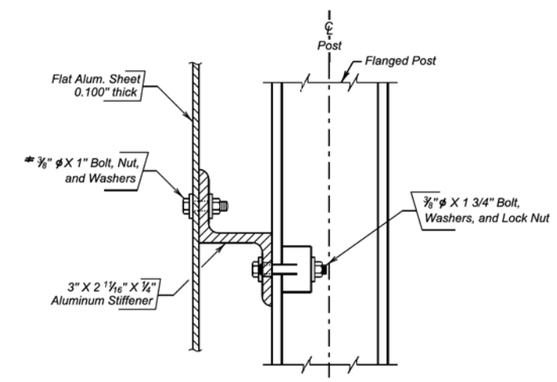

SEC. B-B

A plastic washer, as recommended by the sheeting manufacturer, shall be installed between the sign face and the metal washer shown.

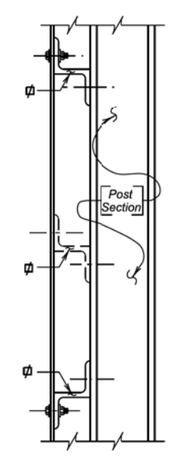

POSITIONING OF TOP AND BOTTOM STIFFENERS

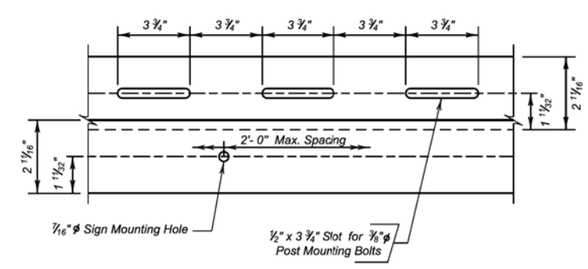

ALUMINUM STIFFENER

Plot Scale - 1:200
- Plotted From - tmi11126
File - ...\Signing\01QS_StdPlate.dgn

2" and 2 1/2" SQUARE STEEL PERFORATED TUBE POST BREAKAWAY WINGED ANCHOR BASE DETAILS (Typical)

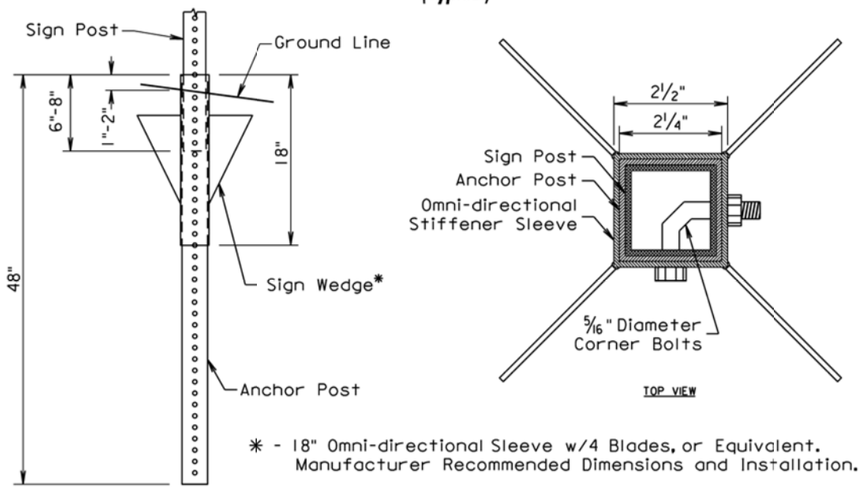

* - 18" Omni-directional Sleeve w/4 Blades, or Equivalent. Manufacturer Recommended Dimensions and Installation.

SIGN BASE DETAILS FOR A 2" SIGN POST

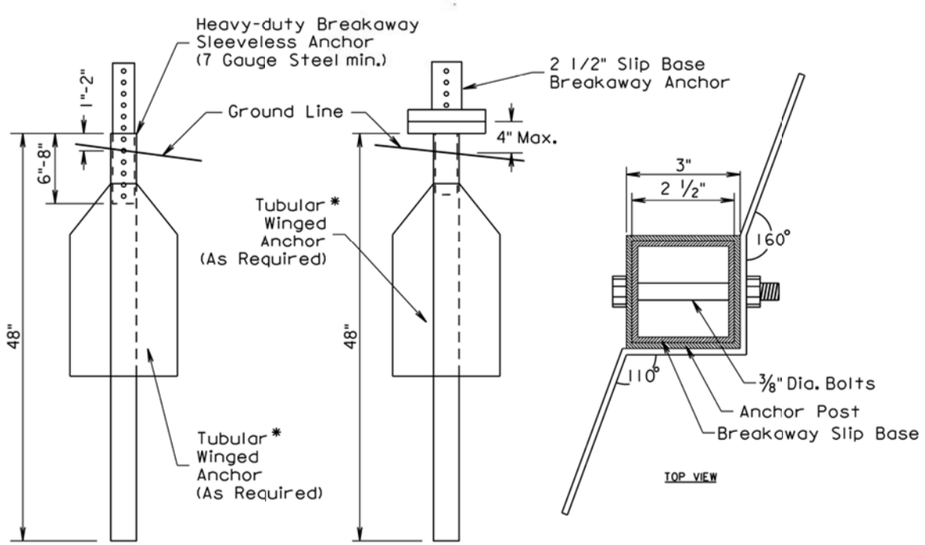

* - 7 ga. Tubular Winged Anchor, or Equivalent. Manufacturer Recommended Dimensions and Installation.

SIGN BASE DETAILS FOR A 2 1/2" SIGN POST

2" and 2 1/4" SQUARE STEEL PERFORATED TUBE POST BREAKAWAY TWO-PIECE ANCHOR BASE DETAILS (Typical)

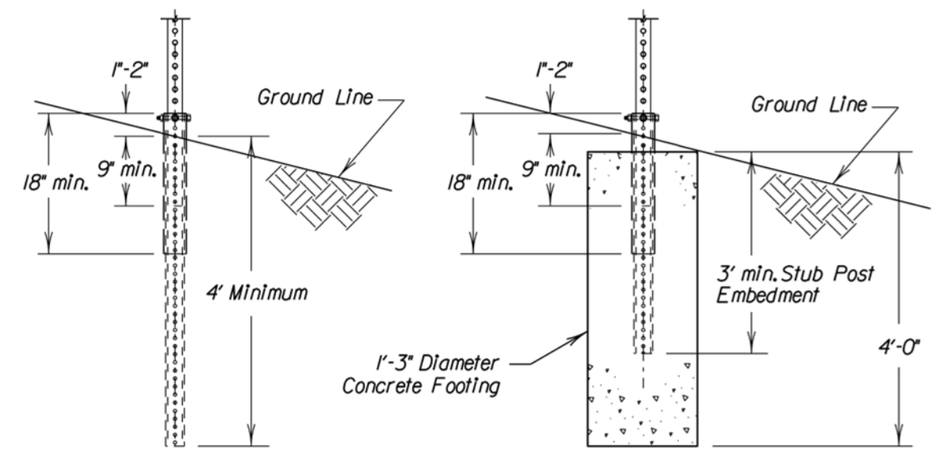

DRIVEN ANCHOR

CONCRETE FOOTING ANCHOR

ELEVATION VIEWS

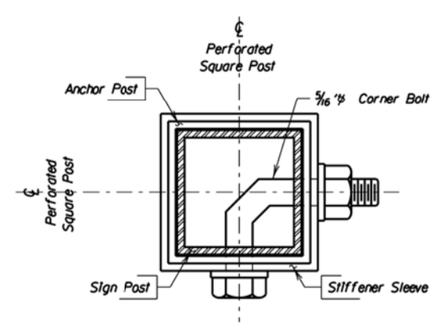

POST SIZES		
Sign Post	2"	2 1/4"
Anchor Post	2 1/4"	2 1/2"
Stiffener Sleeve	2 1/2"	*3"

* - 7 Gauge Steel

POST X-SECTION VIEW

NOTE: Square perforated tube post with breakaway anchor base shall be 12 gauge steel, unless otherwise specified in the plans. Sign installations must meet or exceed NCHRP 350 breakaway requirements and be FHWA approved.

Plot Scale - 1:200
- Plotted From - trmi11126
File - ...\Signing\01QS_StdPlate.dgn

W1-8 CHEVRON INSTALLATION (BREAKAWAY SIGN SUPPORT)

W1-8 DETAIL

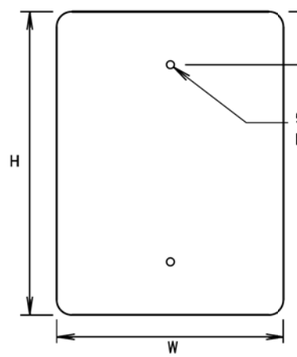

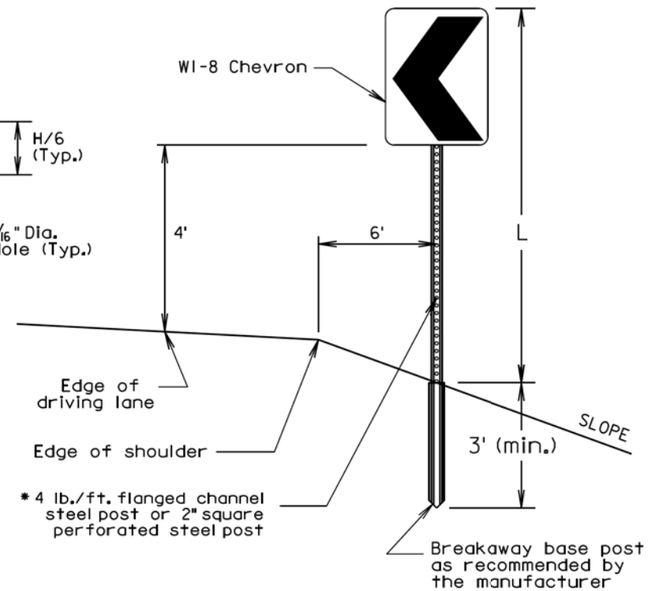

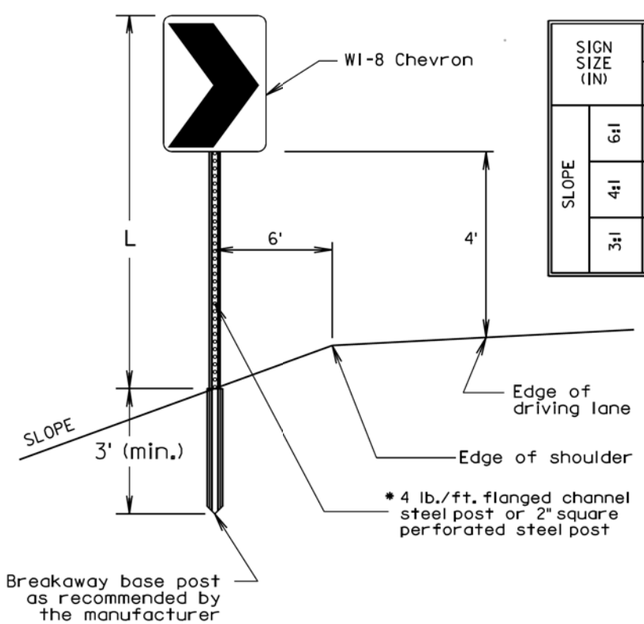

SIGN SIZE (IN)		12x18	18x24	24x30	30x36	36x48
		POST LENGTH L (FT)				
SLOPE	6:1	6½	7	7½	8	9
	4:1	7	7½	8	8½	9½
	3:1	7½	8	8½	9	10

W1-8 ATTACHMENTS

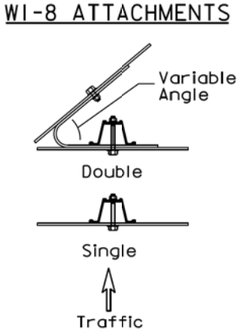

*Unless otherwise specified in the plans

Plot Scale - 1:200
- Plotted From - trmi11126
File - ...\Signing\01QS_StdPlate.dgn

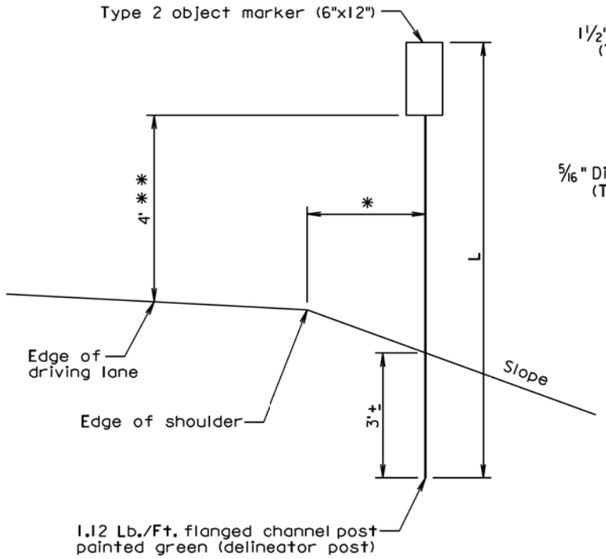

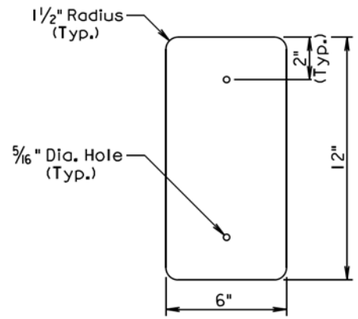

TYPE 2 OBJECT MARKER DETAIL

⅞" to 1⅛" grip range
¼" twin rivet (single and back to back)

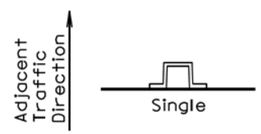

DIVIDED HIGHWAYS EXCEPT MEDIANS

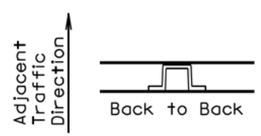

UNDIVIDED HIGHWAYS AND DIVIDED HIGHWAYS MEDIANS

* Type 2 object markers to be in same line as existing delineators. If no delineators are present, place type 2 object markers 6' from the edge of shoulder.

** Type 2 object markers shall be 4' above the ground when placed more than 8' from edge of shoulder.

TYPE 2 OBJECT MARKER DETAILS AND POST ORIENTATION

Distance To Marker (Ft.) *		2	3	4	5	6	7	8
		Post Length L (Ft.)						
Slope	4:1	9	9	9	9	10	10	10
	3:1	9	9	9	10	10	10	11

June 26, 2006

Published Date: 3rd Qtr. 2015

SDDOT

TYPE 2 OBJECT MARKER (DIRECT DRIVE)

PLATE NUMBER 632.01

Sheet 1 of 1

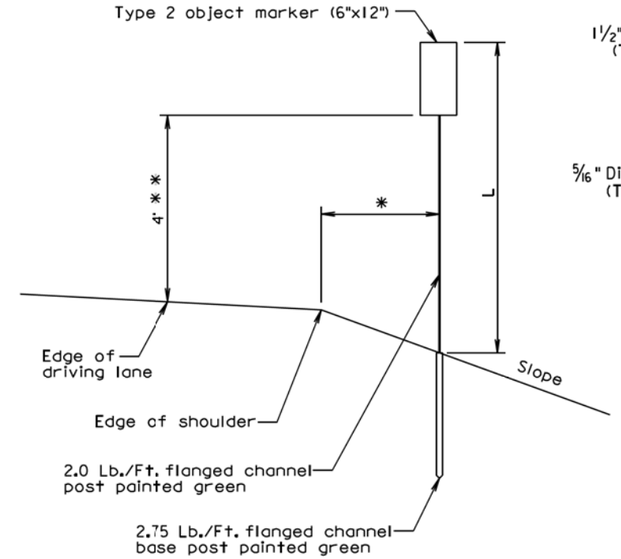

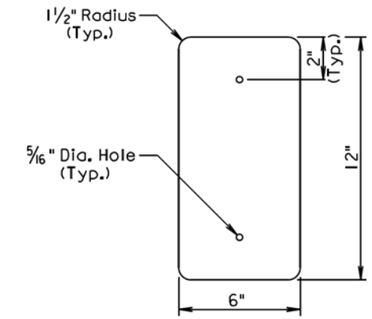

TYPE 2 OBJECT MARKER DETAIL

⅞" to 1⅛" grip range
¼" twin rivet (single and back to back)

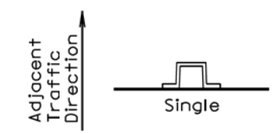

DIVIDED HIGHWAYS EXCEPT MEDIANS

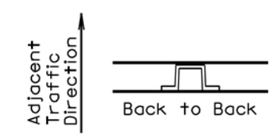

UNDIVIDED HIGHWAYS AND DIVIDED HIGHWAYS MEDIANS

* Type 2 object markers to be in same line as existing delineators. If no delineators are present, place type 2 object markers 6' from the edge of shoulder.

** Type 2 object markers shall be 4' above the ground when placed more than 8' from edge of shoulder.

TYPE 2 OBJECT MARKER DETAILS AND POST ORIENTATION

Distance To Marker (Ft.) *		2	3	4	5	6	7	8
		Post Length L (Ft.)						
Slope	4:1	6	6	6	6	7	7	7
	3:1	6	6	6	7	7	7	8

June 26, 2006

Published Date: 3rd Qtr. 2015

SDDOT

TYPE 2 OBJECT MARKER (BREAKAWAY SIGN SUPPORT)

PLATE NUMBER 632.02

Sheet 1 of 1

Plot Scale - 1:200
- Plotted From - trmi11126
File - ...\Signing\01QS_StdPlate.dgn

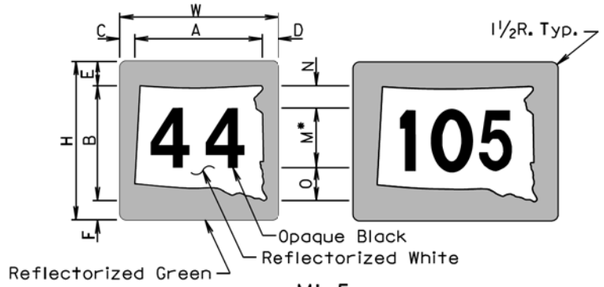

MI-5

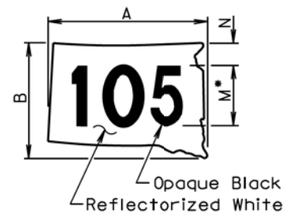

STG

SIGN CODE	WxH	A	B	C	D	E	F	M*	N	O
MI-5	24x24	20½	18	2	1½	3½	2½	12D	2	4
MI-5**	30x24	24	18	2¼	1¾	3½	2½	12D	2	4
MI-5	30x30	25⅝	22½	2½	1⅞	4⅜	3⅛	15D	2½	5
MI-5	36x36	30¾	27	3	2¼	5¼	3¾	18D	3	6

SIGN CODE	AxB	M*	N
STG-24	24x18	10D	4
STG-32	32x24	12D	4¾
STG-48	48x36	18D	7
STG-64	64x48	24D	9½

*In the few cases where there is not enough space for the numerals, the standard "D" series font may be replaced with "C" series font if approved by the Engineer.

** 3 Digits

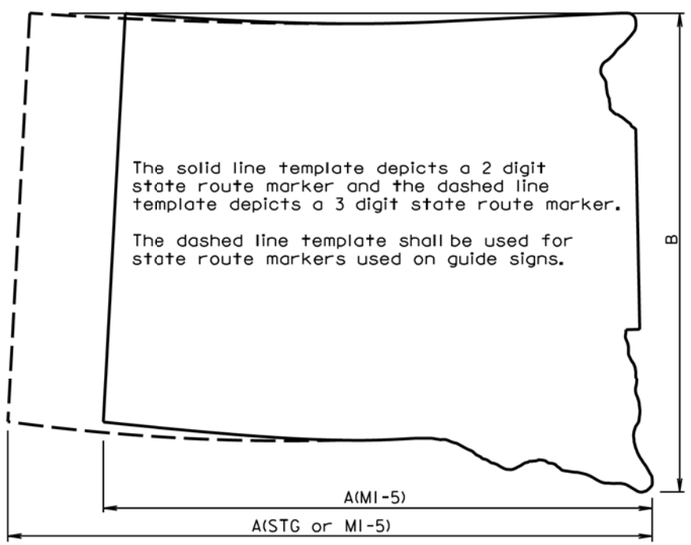

TEMPLATE FOR STATE ROUTE MARKER

GENERAL NOTES:

The unit for all dimensions shown is inches.

Numerals shall be "D" series font for all state route markers except as noted above.

December 23, 2003

Published Date: 3rd Qtr. 2015	SDDOT	STATE ROUTE MARKERS	PLATE NUMBER 632.20 Sheet 1 of 1

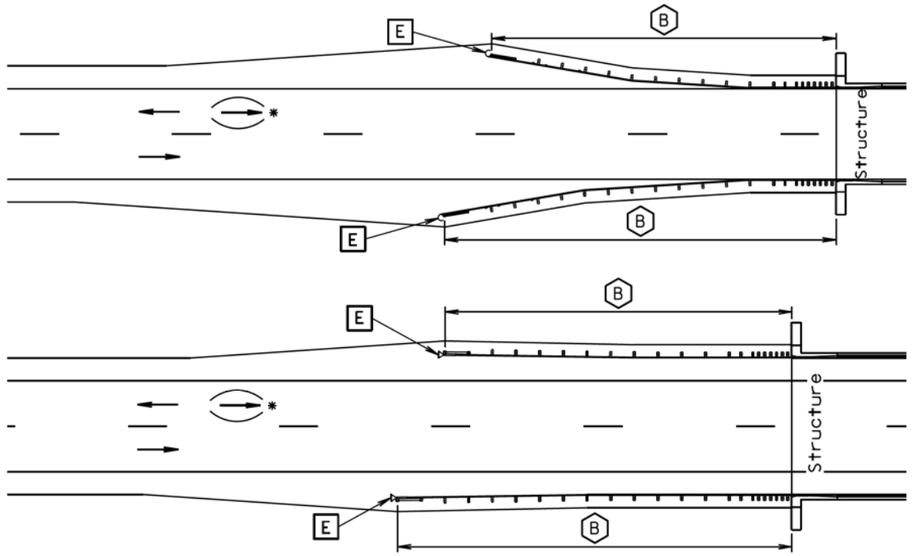

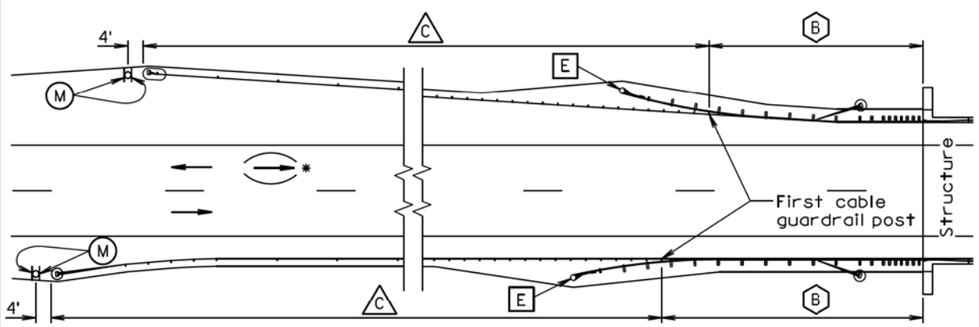

TYPICAL GUARDRAIL LAYOUTS

(B) Steel Beam Guardrail Delineation

[E] Guardrail Terminal End Object Marker

(C) 3 Cable Guardrail Delineation

(M) Type 2 Object Marker

* For two-way traffic, install delineation at the opposite end of structure the same as shown. Back-to-back delineation is required for two-way traffic, single-sided delineation for one-way traffic.

June 26, 2011

Published Date: 3rd Qtr. 2015	SDDOT	DELINEATION OF GUARDRAIL AT BRIDGES	PLATE NUMBER 632.40
			Sheet 1 of 4

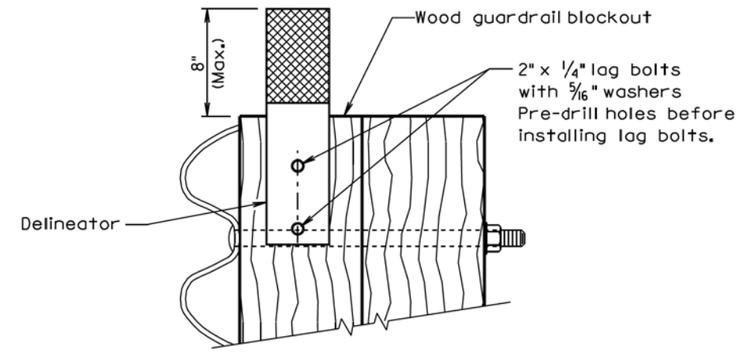

(B) STEEL BEAM GUARDRAIL DELINEATION

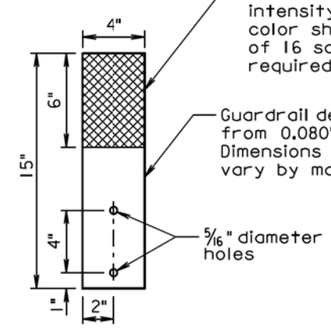

White or yellow super or very high intensity fluorescent sheeting. Sheeting color shall match edgeline color. A minimum of 16 square inches of sheeting area is required.

Guardrail delineators may be fabricated from 0.080" aluminum or flexible plastic. Dimensions of flexible delineators may vary by manufacturer.

5/16" diameter holes

DELINEATOR
(For Steel Beam Guardrail)

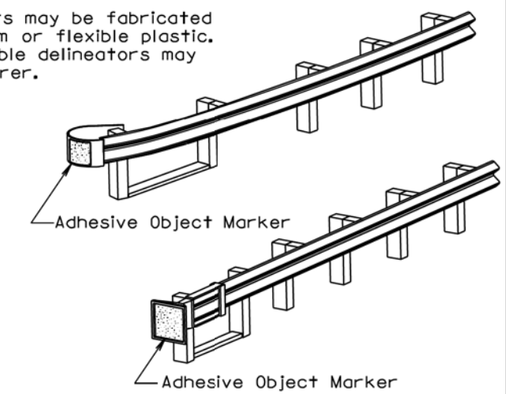

[E] GUARDRAIL TERMINAL END OBJECT MARKER

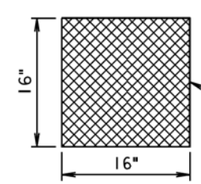

ADHESIVE OBJECT MARKER

Adhesive object marker dimensions may vary due to shape of terminal end. A minimum of 256 square inches of object marker sheeting area is required. The sheeting shall be fluorescent yellow super or very high intensity.

June 26, 2011

Published Date: 2nd Qtr. 2014	SDDOT	DELINEATION OF GUARDRAIL AT BRIDGES	PLATE NUMBER 632.40
			Sheet 2 of 4

Plot Scale - 1:200
- Plotted From - trmi11126
File - ...\Signing\01QS_StdPlate.dgn

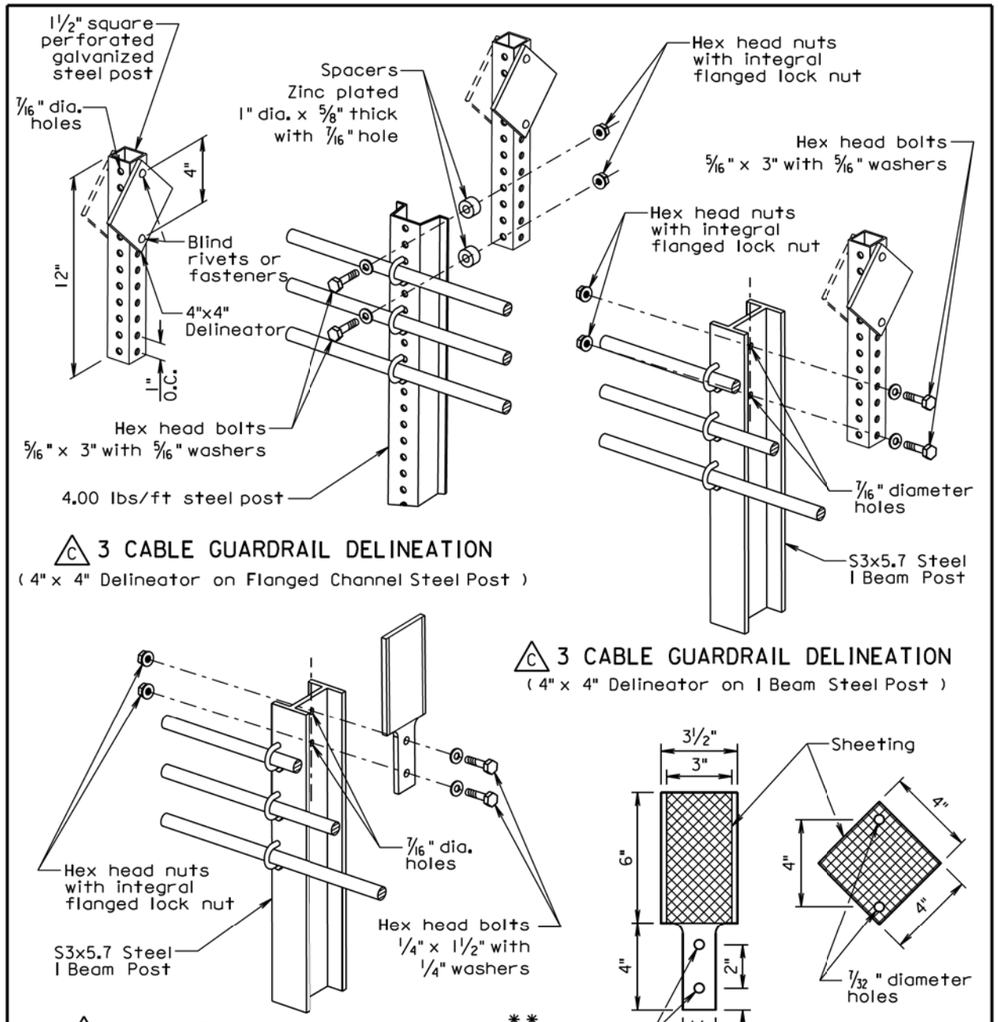

C 3 CABLE GUARDRAIL DELINEATION
(4" x 4" Delineator on Flanged Channel Steel Post)

C 3 CABLE GUARDRAIL DELINEATION
(4" x 4" Delineator on I Beam Steel Post)

C 3 CABLE GUARDRAIL DELINEATION**
(Flexible 3" x 6" Delineator on I Beam Post)

DELINEATORS***
(For 3 Cable Guardrail)

** Flexible delineators may be attached to post with manufacturer approved adhesive instead of bolts.

*** Dimensions of flexible delineators may vary by manufacturer. A minimum of 16 square inches of sheeting area is required. The sheeting shall be white or yellow super or very high intensity fluorescent sheeting. The sheeting color shall match the edgeline color.

June 26, 2011

Published Date: 2nd Qtr. 2014	SDDOT	DELINEATION OF GUARDRAIL AT BRIDGES	PLATE NUMBER 632.40
			Sheet 3 of 4

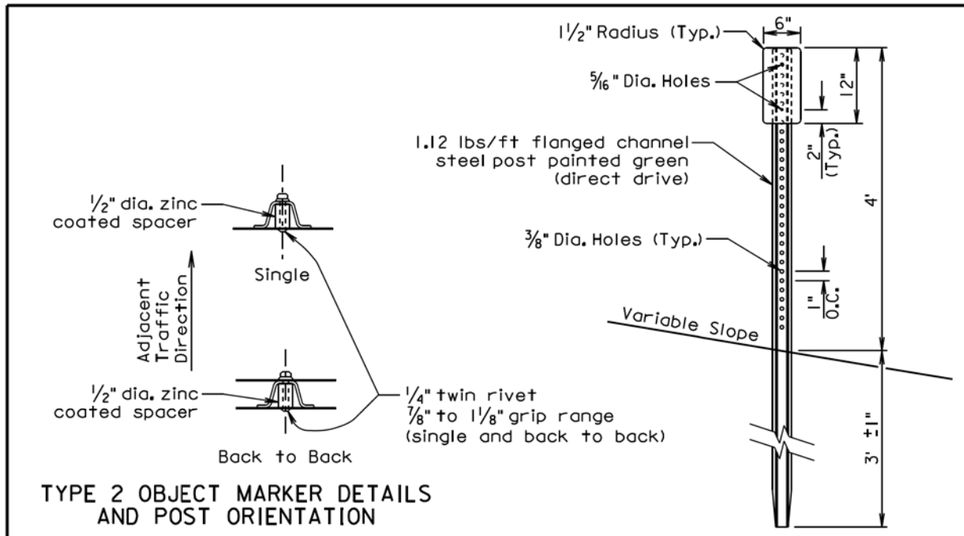

TYPE 2 OBJECT MARKER DETAILS AND POST ORIENTATION

M TYPE 2 OBJECT MARKER
(For Marking 3 Cable Guardrail Anchor)

GENERAL NOTES:

The delineators shall be covered with a minimum of 16 square inches of reflective sheeting. The reflective sheeting shall be of either very high intensity or super high intensity material. For bridges along two-way roadways the sheeting shall be on both sides of the delineator and shall be white in color. For one-way roadways the sheeting will only be required on the side facing traffic and the color will be the same as the nearest pavement marking, yellow on the left side of the roadway and white on the right side.

The first delineator shall be attached to the post nearest the bridge with additional delineators spaced in advance of the bridge at approximately 50 foot intervals. At bridges with short lengths of guardrail, less than 200 feet, a minimum of 4 delineators shall be placed in addition to the yellow object marker. The spacing between the delineators shall be approximately one third of the length of the guardrail. This will provide for a shorter spacing. At bridges with longer lengths of guardrail, greater than 200 feet, including bridges that have cable guardrail transitioning into the steel beam guardrail, the delineators will be placed at a spacing of approximately 50 feet. Delineation shall extend throughout the length of the guardrail system.

All costs for furnishing and installing single or back to back guardrail delineation shall be included in the contract unit price per each for "Guardrail Delineator".

An adhesive object marker shall be placed on the end of the W beam guardrail end terminal. The adhesive object marker dimensions may vary due to the shape of the terminal end. A minimum of 256 square inches of object marker reflective sheeting area is required. The reflective sheeting shall be fluorescent yellow super or very high intensity. All costs for furnishing and installing the adhesive object marker shall be incidental to various contract items.

A type 2 object marker shall be placed adjacent to the 3 cable guardrail anchor at the location noted on sheet 1 of this standard plate. The type 2 object marker (6" x 12") shall have a fluorescent yellow very high or super high intensity reflective sheeting. All costs for furnishing and installing the type 2 object marker including the steel post, 6" x 12" reflective panel, and hardware shall be included in the contract unit price per each for "Type 2 Object Marker" for single-sided and "Type 2 Object Marker Back to Back" for back to back type 2 object markers.

June 26, 2011

Published Date: 2nd Qtr. 2014	SDDOT	DELINEATION OF GUARDRAIL AT BRIDGES	PLATE NUMBER 632.40
			Sheet 4 of 4

Plot Scale - 1:200
Plotted From - tmi11126
File - ...\Signing\01QS_StdPlate.dgn

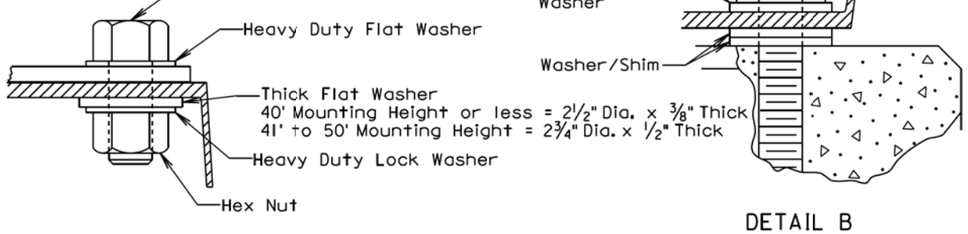

DETAIL A

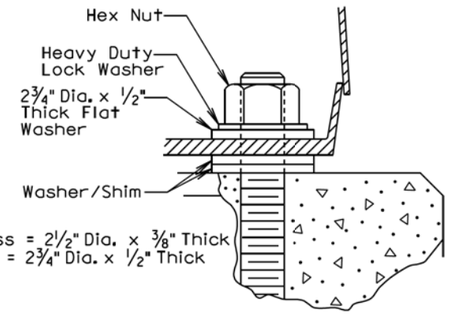

DETAIL B

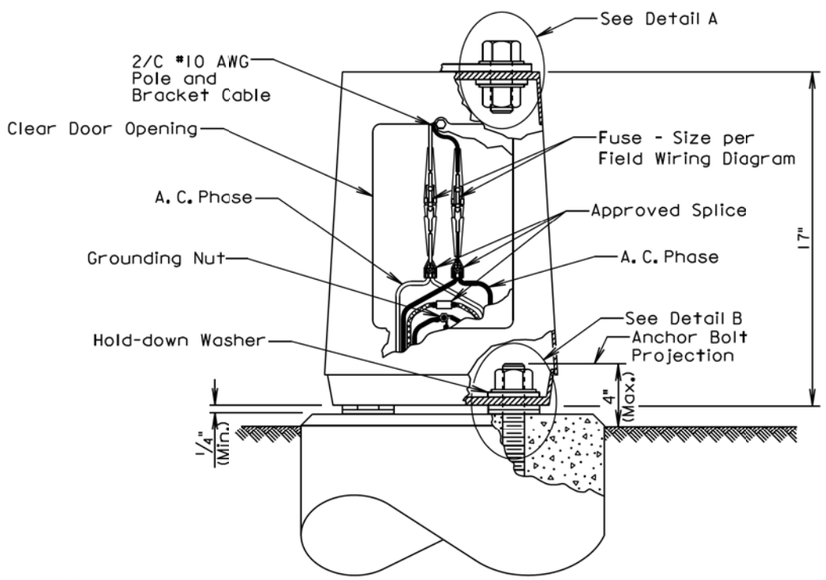

GENERAL NOTES:

Base details are provided for example only and are not intended to be a complete design.

Connectors shall be breakaway type.

The Contractor shall install "U" shaped shims or round flat washers if shimming is necessary to install the light poles plumb and level. The washers and shims shall be installed around the anchor bolts.

June 26, 2013

Published Date: 3rd Qtr. 2015	SDDOT	***ROADWAY LUMINAIRE POLE BREAKAWAY TRANSFORMER BASE***	*PLATE NUMBER* 635.21 *Sheet 1 of 1*

Plot Scale - 1:200
- Plotted From - tmi11126
File - ...\Signing\01QS_StdPlate.dgn

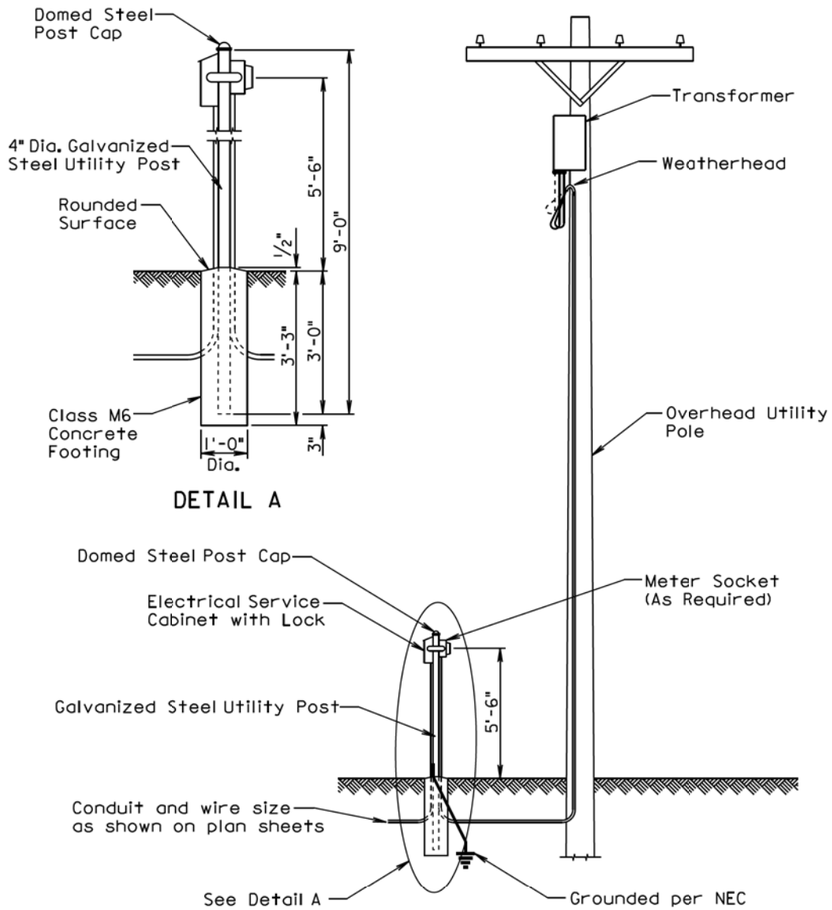

GENERAL NOTES:

The concrete for the post footing shall be class M6 concrete.

The 4" diameter galvanized steel utility post shall be 9' long and shall be in conformance with AASHTO Standard Specifications M181. The post shall be Type 1 and either Grade 1 or Grade 2. The domed steel post cap shall be in conformance with AASHTO Standard Specifications M181 and shall be Type 1.

The Contractor shall contact and coordinate his/her work with the Utility Companies regarding hookup requirements, fees, materials, and equipment necessary.

All costs for furnishing and installing all materials from the electrical service cabinet to the transformer including labor, equipment, hookup fees, all items within the cabinet, post, concrete footing, post cap, meter socket if required, conduit, and incidentals shall be incidental to the contract unit price per each for "Electrical Service Cabinet".

June 26, 2006

Published Date: 3rd Qtr. 2015	SDDOT	GALVANIZED STEEL UTILITY POST WITH OVERHEAD UTILITY POLE	PLATE NUMBER 635.35 Sheet 1 of 1

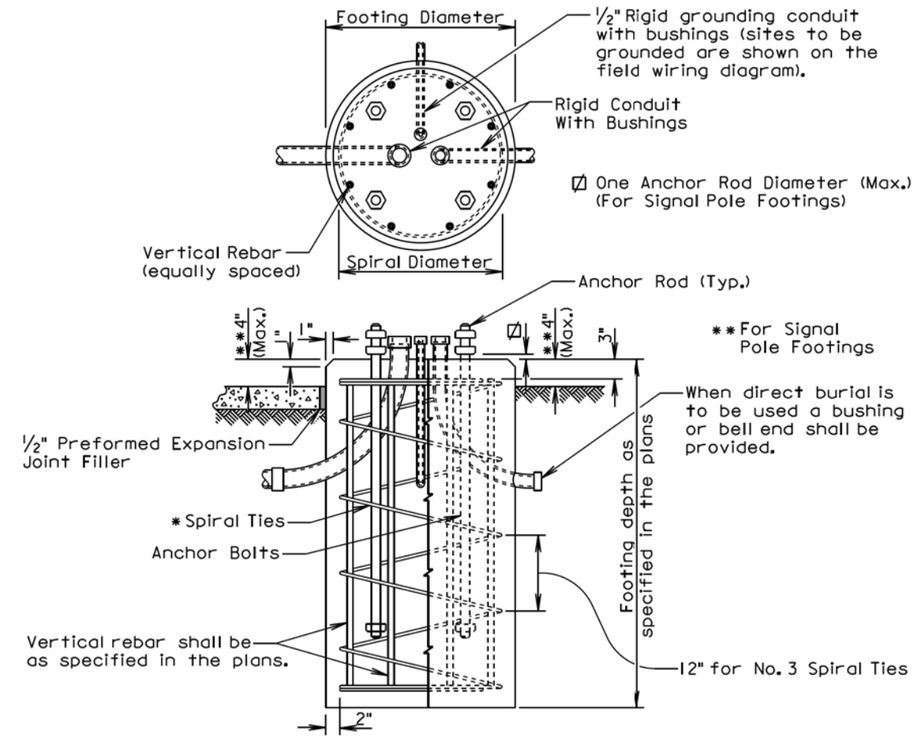

GENERAL NOTES:

* Circular ties may be used in lieu of the spiral ties. The No. 3 ties shall be spaced 12 inches apart except for the top two which shall be spaced 6 inches apart. The ties shall be lapped 18 inches and the laps shall be staggered around the cage.

Spiral ties shall have 1-1/2 extra turns at each end.

See Section 985 of the Specifications for footing materials.

Conduits and bushings may project 2½ inches to 6 inches above footing for fixed base poles but shall not project above the slip plane or fracture plane for breakaway poles.

Conduits shall be sealed water-tight during all phases of construction until poles are in place.

The anchor rods shall fit inside the reinforcing steel cage. If the anchor rods designed by the Pole Manufacturer do not fit, contact the Office of Bridge Design for footing redesign. No additional payment will be made for the redesigned footing.

Costs of conduit and conduit bushings shown on footing detail shall be incidental to the footing bid item(s).

The pole shall not be installed until the concrete has attained design strength (4000 psi).

The contour of the area surrounding the breakaway pole shall be flat, though not necessarily level for a distance of 5 feet in all directions. The Contractor may be required to provide finish grading at some breakaway pole locations.

June 26, 2015

Published Date: 3rd Qtr. 2015	SDDOT	POLE FOOTING	PLATE NUMBER 635.55 Sheet 1 of 1

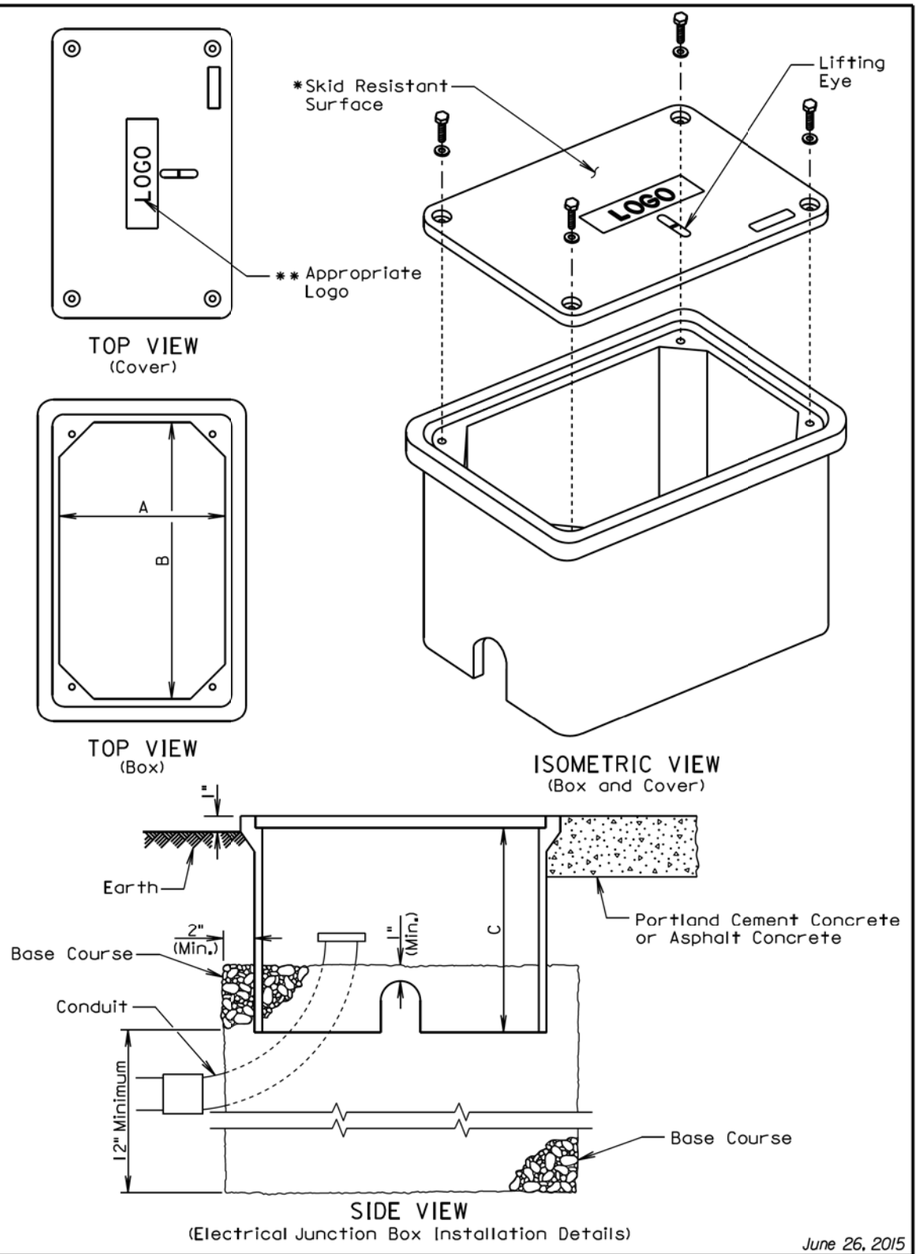

June 26, 2015

Published Date: 3rd Qtr. 2015

SDDOT

ELECTRICAL JUNCTION BOXES TYPE 1 THROUGH TYPE 4

PLATE NUMBER 635.65

Sheet 1 of 2

ELECTRICAL JUNCTION BOX

TYPE	DESCRIPTION	DIMENSIONS		
		A	B	C
1	Open Bottom with Gasket	11"-15"	18"-21"	18" (Min.)
2	Open Bottom with Gasket	13"-18"	23"-28"	18" (Min.)
3	Open Bottom with Gasket	17"-22"	24"-30"	18" (Min.)
4	Open Bottom with Gasket	28"-33"	36"-48"	24" (Min.)

GENERAL NOTES:

The cover shall be gasketed with a minimum of two stainless steel bolts and washers.

The cover shall have a lifting eye.

* The surface of the cover shall have a minimum wet and dry coefficient of friction value of 0.5 as determined by ASTM F 609.

** The cover of the junction box shall have the appropriate logo in one inch size letters and shall be recessed. When the junction box contains cables or wires for a traffic signal then the logo shall be "Signal". When the junction box contains lighting conductors then the logo shall be "Lighting".

The electrical junction boxes shall comply with the American National Standards Institute (ANSI)/Society of Cable Telecommunications Engineers (SCTE) 77 2007 Specification for Underground Enclosure Integrity. The loading requirement for all the electrical junction boxes shall be Tier 8 of ANSI/SCTE 77 2007.

The electrical junction boxes shall be UL listed.

June 26, 2015

Published Date: 3rd Qtr. 2015

SDDOT

ELECTRICAL JUNCTION BOXES TYPE 1 THROUGH TYPE 4

PLATE NUMBER 635.65

Sheet 2 of 2

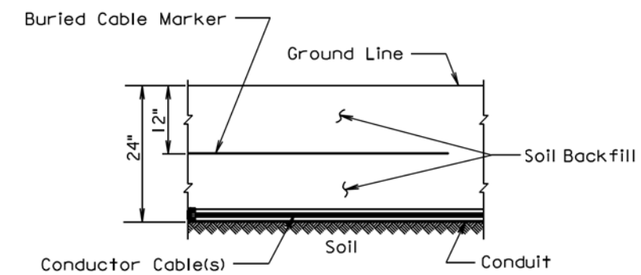

SECTION VIEW

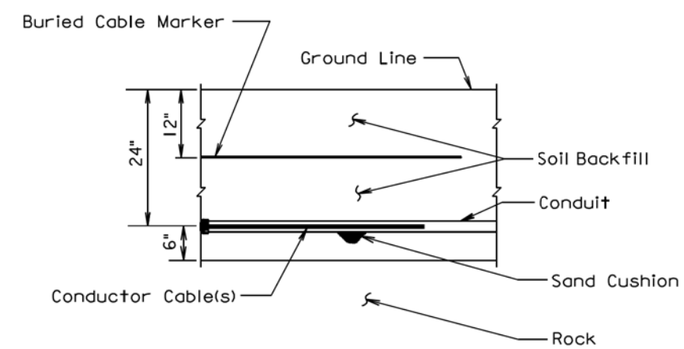

SECTION VIEW

GENERAL NOTE:

The Buried Cable Marker shall be plastic, approximately 6" wide, and shall be capable of sustaining a minimum of a 350% tolerance of elongation without tearing. The Buried Cable Marker shall have a life expectancy approximately equal to that of the conductor(s) beneath it. A phrase indicating the presence of a buried electric circuit below shall be printed in a contrasting color on the cable marker. The Buried Cable Marker shall be subject to approval by the Engineer. All costs associated with furnishing and installing the Buried Cable Marker shall be incidental to the contract unit price per Foot for the bid item used for the electrical conductor.

March 31, 2000

Published Date: 3rd Qtr. 2015	SDDOT	***CONDUIT INSTALLATION***	***PLATE NUMBER*** *635.76* *Sheet 1 of 1*

Plot Scale - 1:200
- Plotted From - tmi11126
File - ...\Signing\01QS_StdPlate.dgn

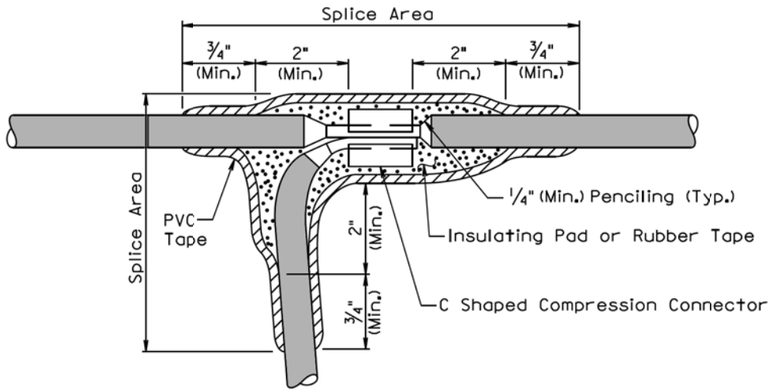

TYPE C SPLICE
(Between 1 free end and 1 through conductor)

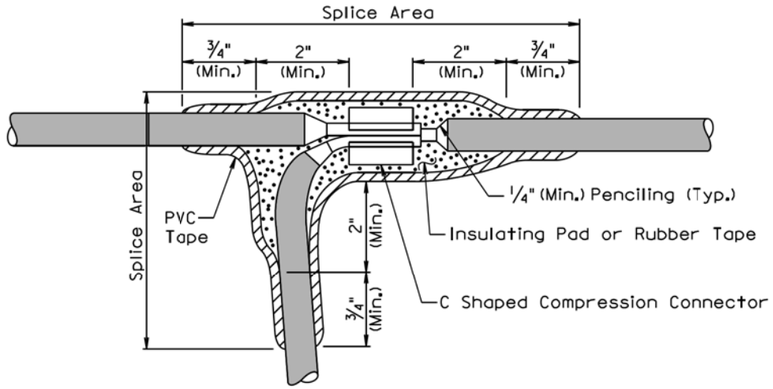

TYPE T SPLICE
(For 3 free ends)

February 14, 2010

Published Date: 3rd Qtr. 2015	SDDOT	WIRE SPLICING FOR LIGHTING (LOW VOLTAGE CIRCUITS (0 to 600 V))	PLATE NUMBER 635.80
			Sheet 1 of 2

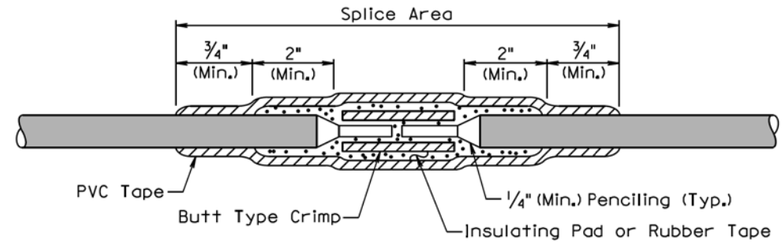

TYPE S SPLICE
(Between 2 free ends)

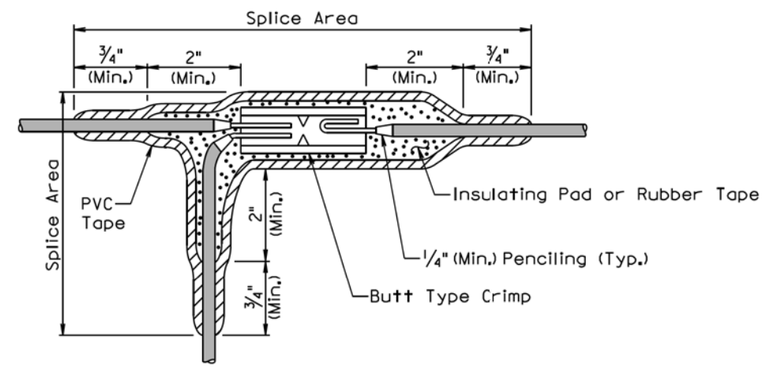

TYPE ST SPLICE
(For 3 free ends)

GENERAL NOTES:

The splice shall be environmentally sealed for protection from weather, moisture, and abrasion in accordance with the method stated below.

The rubber tapes shall be rolled after application.

Method for insulating splice area:

1. The splice area shall be completely covered with electrical insulating coating and dried.
2. Apply two layers of 1/8" minimum thickness electrical insulating pad or two layers of half lapped synthetic oil resistant self fusing rubber tape.
3. Three layers of half lapped polyvinyl chloride tape shall be applied.
4. The entire splice area shall be covered with electrical insulating coating and dried.

February 14, 2010

Published Date: 3rd Qtr. 2015	SDDOT	WIRE SPLICING FOR LIGHTING (LOW VOLTAGE CIRCUITS (0 to 600 V))	PLATE NUMBER 635.80
			Sheet 2 of 2

Plot Scale - 1:200
- Plotted From- tmil11126
File - ...\Signing\01QS_StdPlate.dgn