STATE OF	PROJECT	SHEET NO.	TOTAL SHEETS
S.D.	P 0073(53)252 NH 0012(150)105 P 0063(42)252	E1	E105

SECTION E: STRUCTURE PLANS

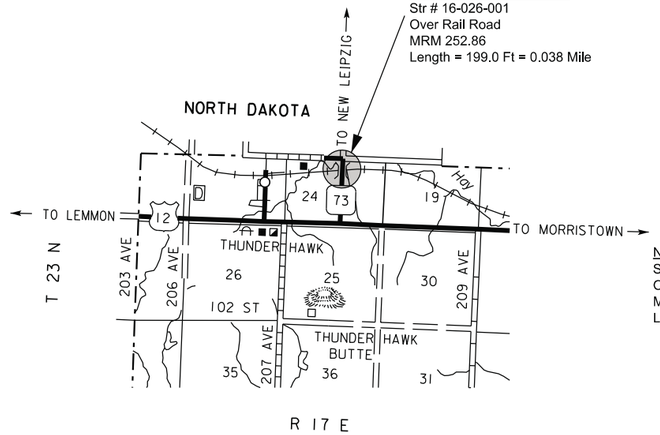

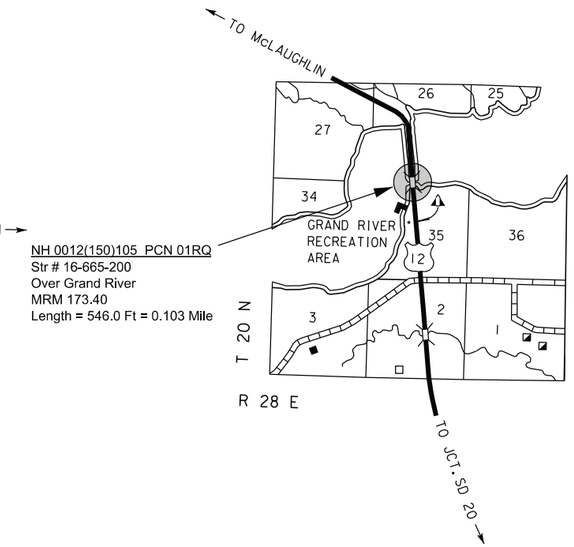

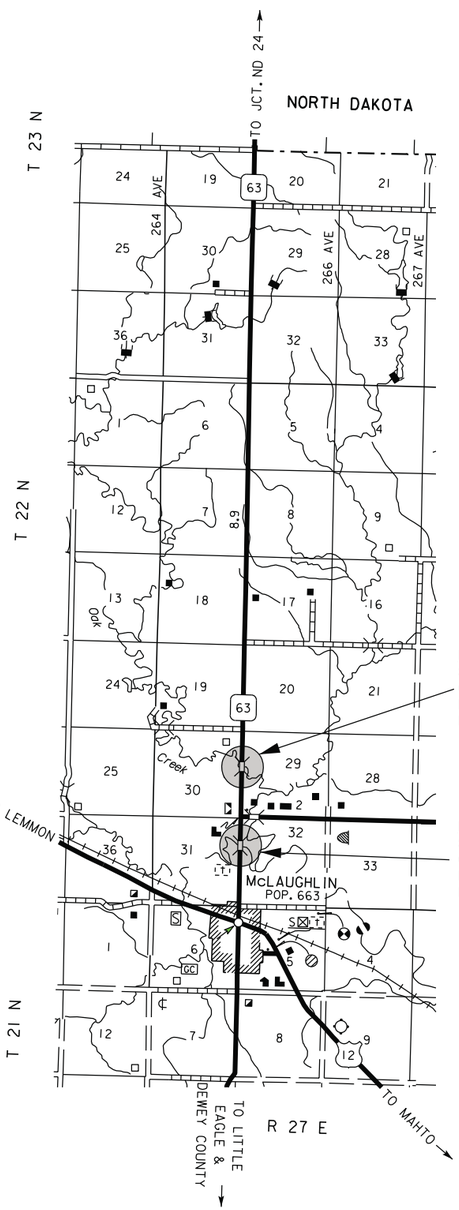

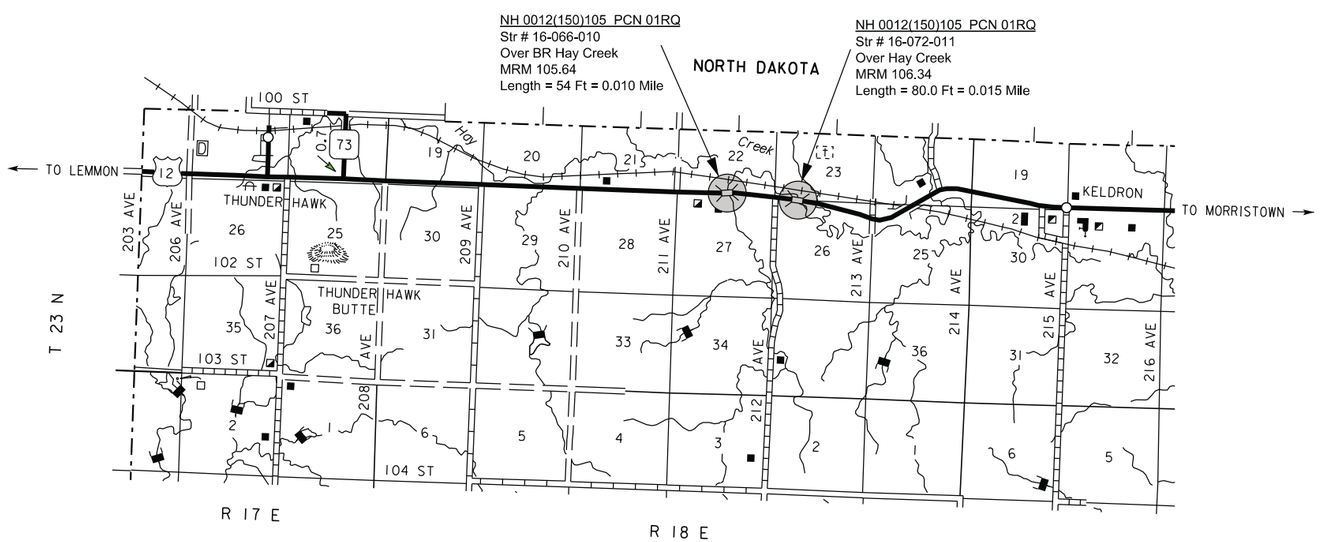

INDEX OF SHEETS

Sheet E1	Layout Map and Index
Sheet E2	Estimate of Quantities
Sheet E3-E17	Str. 16-066-010
Sheet E18-E31	Str. 16-072-011
Sheet E32-E37	Str. 16-665-200
Sheet E38-E58	Str. 16-026-001
Sheet E59-E81	Str. 16-580-084
Sheet E82-E105	Str. 16-580-075

ESTIMATE OF QUANTITIES

NH 0012(150)105, PCN 01RQ, 16-066-010

Bid Item Number	Item	Quantity	Unit
110E0020	Remove Bridge Railing	108	Ft
460E0070	Class A45 Concrete, Bridge Repair	8.2	CuYd
460E0200	Special Surface Finish	82	SqFt
460E0300	Breakout Structural Concrete	2.8	CuYd
460E0380	Install Dowel in Concrete	92	Each
480E0200	Epoxy Coated Reinforcing Steel	750	Lb
550E0010	Low Slump Dense Concrete Bridge Deck Overlay	13	CuYd
550E0100	Concrete Removal Type 1A	176.6	SqYd
550E0105	Concrete Removal Type 2A	44.2	SqYd
550E0110	Concrete Removal Type 1B	17.6	SqYd
550E0120	Concrete Removal Type 1C	8.8	SqYd
550E0130	Concrete Removal Type 1D	8.8	SqYd
550E0140	Concrete Removal Type B	20.0	Ft
550E0200	Class A45 Concrete Fill	1.9	CuYd
550E0500	Finishing and Curing	180.0	SqYd

NH 0012(150)105, PCN 01RQ, 16-072-011

Bid Item Number	Item	Quantity	Unit
110E0020	Remove Bridge Railing	160	Ft
460E0070	Class A45 Concrete, Bridge Repair	11.1	CuYd
460E0200	Special Surface Finish	134	SqFt
460E0300	Breakout Structural Concrete	2.8	CuYd
460E0380	Install Dowel in Concrete	132	Each
480E0200	Epoxy Coated Reinforcing Steel	1,008	Lb
550E0010	Low Slump Dense Concrete Bridge Deck Overlay	20	CuYd
550E0100	Concrete Removal Type 1A	263.3	SqYd
550E0105	Concrete Removal Type 2A	65.8	SqYd
550E0110	Concrete Removal Type 1B	26.3	SqYd
550E0120	Concrete Removal Type 1C	13.1	SqYd
550E0130	Concrete Removal Type 1D	13.1	SqYd
550E0140	Concrete Removal Type B	20.0	Ft
550E0200	Class A45 Concrete Fill	3.8	CuYd
550E0500	Finishing and Curing	266.6	SqYd

NH 0012(150)105, PCN 01RQ, 16-665-200

Bid Item Number	Item	Quantity	Unit
410E0030	Structural Steel, Miscellaneous	Lump Sum	LS
410E2600	Membrane Sealant Expansion Joint	32.4	Ft

P 0063(42)252, PCN 02HG, 16-580-084

Bid Item Number	Item	Quantity	Unit
110E0010	Remove Concrete Bridge Approach Slab	268.0	SqYd
250E0010	Incidental Work	Lump Sum	LS
410E2600	Membrane Sealant Expansion Joint	75.8	Ft
430E0300	Granular Bridge End Backfill	44.0	CuYd
430E0510	Approach Slab Underdrain Excavation	49.6	CuYd
460E0070	Class A45 Concrete, Bridge Repair	4.8	CuYd
460E0150	Concrete Approach Slab for Bridge	184.2	SqYd
460E0160	Concrete Approach Sleeper Slab for Bridge	37.8	SqYd
460E0300	Breakout Structural Concrete	5.0	CuYd
460E0380	Install Dowel in Concrete	64	Each
480E0200	Epoxy Coated Reinforcing Steel	698	Lb
480E0504	No. 4 Rebar Splice	28	Each
480E0505	No. 5 Rebar Splice	32	Each
480E0506	No. 6 Rebar Splice	46	Each
550E0010	Low Slump Dense Concrete Bridge Deck Overlay	45	CuYd
550E0100	Concrete Removal Type 1A	631.1	SqYd
550E0110	Concrete Removal Type 1B	63.1	SqYd
550E0120	Concrete Removal Type 1C	31.6	SqYd
550E0130	Concrete Removal Type 1D	31.6	SqYd
550E0140	Concrete Removal Type B	20.0	Ft
550E0200	Class A45 Concrete Fill	7.4	CuYd
550E0500	Finishing and Curing	631.0	SqYd
680E0040	4" Underdrain Pipe	116	Ft
680E2010	Precast Concrete Headwall for Drain	4	Each
680E2500	Porous Backfill	10.5	Ton

P 0063(42)252, PCN 02HG, 16-580-075

Bid Item Number	Item	Quantity	Unit
110E0010	Remove Concrete Bridge Approach Slab	268.0	SqYd
250E0010	Incidental Work	Lump Sum	LS
410E2600	Membrane Sealant Expansion Joint	75.8	Ft
430E0300	Granular Bridge End Backfill	62.5	CuYd
430E0510	Approach Slab Underdrain Excavation	68.0	CuYd
460E0070	Class A45 Concrete, Bridge Repair	4.8	CuYd
460E0150	Concrete Approach Slab for Bridge	250.8	SqYd
460E0160	Concrete Approach Sleeper Slab for Bridge	37.8	SqYd
460E0300	Breakout Structural Concrete	5.0	CuYd
460E0380	Install Dowel in Concrete	64	Each
480E0200	Epoxy Coated Reinforcing Steel	698	Lb
480E0504	No. 4 Rebar Splice	38	Each
480E0505	No. 5 Rebar Splice	32	Each
480E0506	No. 6 Rebar Splice	62	Each
550E0010	Low Slump Dense Concrete Bridge Deck Overlay	52	CuYd
550E0100	Concrete Removal Type 1A	777.4	SqYd
550E0110	Concrete Removal Type 1B	77.7	SqYd
550E0120	Concrete Removal Type 1C	38.9	SqYd
550E0130	Concrete Removal Type 1D	38.9	SqYd
550E0140	Concrete Removal Type B	20.0	Ft
550E0200	Class A45 Concrete Fill	9.5	CuYd
550E0500	Finishing and Curing	777.4	SqYd
680E0040	4" Underdrain Pipe	116	Ft
680E2010	Precast Concrete Headwall for Drain	4	Each
680E2500	Porous Backfill	10.6	Ton

P 0073(53)252, PCN 01RP, 16-026-001

Bid Item Number	Item	Quantity	Unit
110E0010	Remove Concrete Bridge Approach Slab	268.0	SqYd
410E2600	Membrane Sealant Expansion Joint	67.8	Ft
430E0300	Granular Bridge End Backfill	37.1	CuYd
430E0510	Approach Slab Underdrain Excavation	42.2	CuYd
460E0150	Concrete Approach Slab for Bridge	154.2	SqYd
460E0160	Concrete Approach Sleeper Slab for Bridge	33.8	SqYd
460E0300	Breakout Structural Concrete	0.2	CuYd
460E0380	Install Dowel in Concrete	44	Each
462E0100	Class M6 Concrete	0.2	CuYd
480E0504	No. 4 Rebar Splice	28	Each
480E0505	No. 5 Rebar Splice	32	Each
480E0506	No. 6 Rebar Splice	44	Each
480E5000	Galvanic Anode	7	Each
550E0010	Low Slump Dense Concrete Bridge Deck Overlay	26	CuYd
550E0100	Concrete Removal Type 1A	704.0	SqYd
550E0110	Concrete Removal Type 1B	70.8	SqYd
550E0120	Concrete Removal Type 1C	35.4	SqYd
550E0130	Concrete Removal Type 1D	35.4	SqYd
550E0140	Concrete Removal Type B	20.0	Ft
550E0200	Class A45 Concrete Fill	7.9	CuYd
550E0500	Finishing and Curing	704.0	SqYd
680E0040	4" Underdrain Pipe	108	Ft
680E2010	Precast Concrete Headwall for Drain	4	Each
680E2500	Porous Backfill	9.4	Ton
998E0100	Railroad Protective Insurance	Lump Sum	LS

STATE OF	PROJECT	SHEET NO.	TOTAL SHEETS
S.D.	NH 0012(150)105	E3	E105

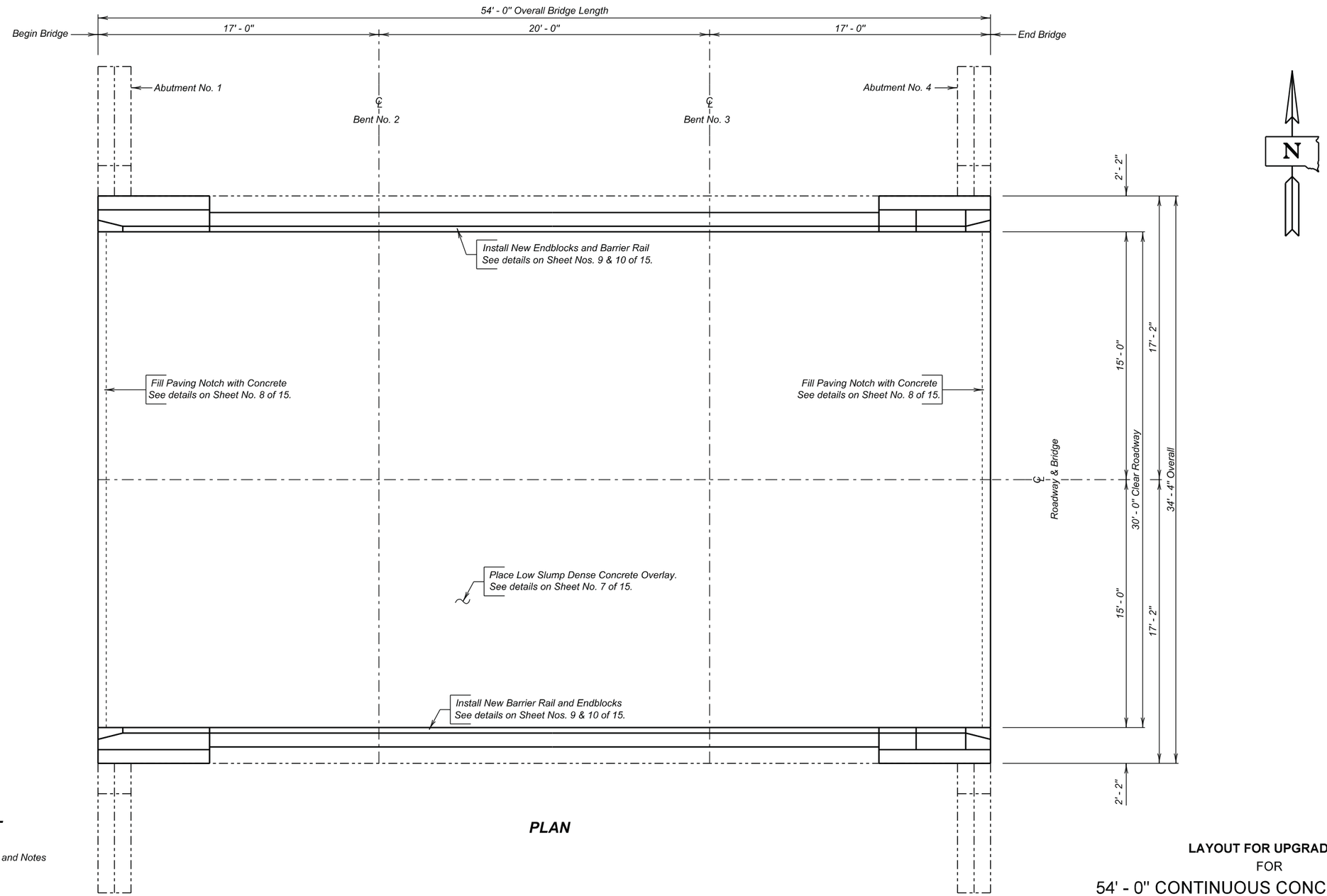

PLAN

INDEX OF BRIDGE SHEETS -

Sheet No. 1 - Layout for Upgrading
Sheet No. 2 - Estimate of Structure Quantities and Notes
Sheet No. 3 - Notes (Continued)
Sheet No. 4 - Notes (Continued)
Sheet No. 5 - Notes (Continued)
Sheet No. 6 - Deck Delamination Details
Sheet No. 7 - Deck Profiles for Low Slump Dense Concrete Overlay
Sheet No. 8 - Paving Notch Reinforcement Details
Sheet No. 9 - End Block and Rail Replacement Layout
Sheet No. 10 - End Block and Rail Replacement Details
Sheet No. 11 - Standard Plate 460.03 & 630.92
Sheet Nos. 12 thru 15 - Original Construction Plans

LAYOUT FOR UPGRADING
FOR
54' - 0" CONTINUOUS CONCRETE BRIDGE

30' - 0" ROADWAY — 0° SKEW
OVER BRANCH HAY CREEK — SEC. 22-T23N-R18E
STR. NO. 16-066-010 — NH 0012(150)105
PCN 01RQ

CORSON COUNTY
S. D. DEPT. OF TRANSPORTATION
OCTOBER 2013

PLANS BY :
OFFICE OF BRIDGE DESIGN, SOUTH DAKOTA DEPARTMENT OF TRANSPORTATION

DESIGNED BY	CK. DES. BY	DRAFTED BY	
BWS	KH	EJA	Kevin N. Goeden
CORS01RQ	01RQLA01		BRIDGE ENGINEER

ESTIMATE OF STRUCTURE QUANTITIES

ITEM NO.	DESCRIPTION	QUANTITY	UNIT
110E0020	Remove Bridge Railing	108	Ft
460E0070	Class A45, Bridge Repair	8.2	CuYd
460E0200	Special Surface Finish	81.8	SqFt
460E0300	Breakout Structural Concrete	2.8	CuYd
460E0380	Install Dowel in Concrete	92	Each
480E0200	Epoxy Coated Reinforcing Steel	750	Lb
550E0010	Low Slump Dense Concrete Deck Overlay	13.3	CuYd
550E0100	Concrete Removal Type 1A	176.6	SqYd
550E0105	Concrete Removal Type 2A	44.2	SqYd
550E0110	Concrete Removal Type 1B	17.6	SqYd
550E0120	Concrete Removal Type 1C	8.8	SqYd
550E0130	Concrete Removal Type 1D	8.8	SqYd
550E0140	Concrete Removal Type B	20.0	Ft
550E0200	Class A45 Concrete Fill	1.9	CuYd
550E0500	Finishing and Curing	180	SqYd

SPECIFICATIONS

1. Design Specifications: AASHTO Standard Specifications for Highway Bridges 17th Edition using Working Stress Design.

2. Construction Specifications: South Dakota Standard Specifications for Roads and Bridges, 2004 Edition and Required Provisions, Supplemental Specifications and/or Special Provisions as included in the Proposal.

DETAILS AND DIMENSIONS OF EXISTING BRIDGE

All details and dimensions of the existing bridge, contained in these plans, are based on the original construction plans and shop plans and are provided as information only. It is the Contractor's responsibility to inspect and verify the actual field conditions and any necessary as-built dimensions affecting the satisfactory completion of the work required for this project.

SCOPE OF BRIDGE WORK & SEQUENCE OF OPERATIONS

All work on this structure shall be accomplished with the traffic control shown elsewhere in the plans. Alternate sequence of operations may be submitted by the Contractor for approval by the Engineer a minimum of two weeks prior to the pre-construction meeting.

1. Modify the existing bridge rail for the first phase of construction by removing the steel rail and existing end blocks for the first phase of construction.

2. Place a concrete bridge rail on top of the existing curb and place new end blocks to allow for the attachment of thrie beam approach railing for the first phase of construction.

SCOPE OF BRIDGE WORK & SEQUENCE OF OPERATIONS(CONT.)

3. Breakout the paving notch concrete, install dowel bars, and place resteel for the first phase of construction.

4. Accomplish all Concrete Removal 1A, 2A, 1B, 1C, 1D and B and place Class A45 Concrete Fill to the satisfaction of the Engineer for the first phase of construction.

5. Place a Low Slump Dense Concrete Overlay to the elevations shown in the plans on the bridge deck for the first phase of construction.

6. Switch traffic and repeat steps 1 through 5 for the second phase of construction.

GENERAL CONSTRUCTION - BRIDGE

1. All mild reinforcing steel shall conform to ASTM A615, Grade 60.

2. All exposed concrete corners and edges shall be chamfered 3/4" unless noted otherwise in the plans. Match existing chamfer if the existing chamfer differs.

3. Use 2" clear cover on all reinforcing steel except as shown otherwise.

4. The Contractor shall <u>only</u> imprint one year plate on the structure. The year plate shall contain the date the existing bridge was built and shall be located as specified and detailed on Standard Plate No. 460.03.

5. Barrier Curbs and End blocks shall be built normal to the grade.

6. Request for construction joints or resteel splices at points other than those shown, must be submitted to the Engineer for prior approval. If additional splices are approved, no payment will be allowed for the added quantity of reinforcing steel.

7. Surfaces of fresh concrete at construction joints shall be rough floated sufficiently to consolidate the surface. All construction joints shall be cleaned of surface laitance, curing compounds and other foreign materials prior to placing fresh concrete against the joint.

8. Snap ties, if used in the barrier curb formwork, shall be epoxy coated. The epoxy coating shall be inert in concrete and compatible with the coating applied to the new epoxy coated reinforcing steel.

9. The concrete barriers shall be cured in accordance with Section 460.3.N. of the Construction Specifications except that no curing compounds shall be allowed.

REMOVAL OF EXISTING BRIDGE RAIL

△1. The existing rail and rail posts on the bridge shall be completely removed by the Contractor and disposed of in accordance with the Environmental Commitments. If the Contractor elects to salvage the rail and rail posts for his own use, they must be removed from view of the ROW to the satisfaction of the Engineer prior to project completion.

2. The existing rail anchor bolts protruding from the concrete shall be cut off and ground flush with the concrete surface as approved by the Engineer. The exposed ends shall be coated with a zinc-rich galvanizing paint in conformance with ASTM A780.

△3. The bridge railing to be removed consists of the steel rail, wood spacer blocks, thrie beam rail and any hardware attaching the railing to the bridge. Payment limits for this item shall be as shown in the plans. The cost of all labor, tools, materials, and incidentals necessary to cut and remove the steel rail, cut off the anchor bolts, and paint their exposed ends shall be incidental to the contract price per foot for "Remove Bridge Railing".

CONCRETE BREAKOUT

1. The existing curb shall be broken out to the limits shown on the plans. Breakout limits shall be defined with a 3/4" deep sawcut (unless specified otherwise in these plans), where practical, as approved by the Engineer. Reinforcing steel that is exposed and is scheduled for use in the new construction shall be cleaned and straightened to the satisfaction of the Engineer. Care shall be taken not to damage the existing reinforcing steel that is to be reused in the new construction during concrete breakout. Any reinforcing steel that is damaged during concrete breakout shall be replaced or repaired, as approved by the Engineer, by the Contractor at no cost to the Department. The existing reinforcing steel that is to be reused in the new construction and that is exposed during concrete breakout shall be epoxy coated in accordance with the "Epoxy Coating Existing Reinforcing Steel" notes.

2. The existing paving block shall be removed to the limits shown in the plans. The existing bolts in the paving block shall be cut flush with the limits of breakout as details in the plans. The paving notch shall then be cleaned by abrasive blasting as approved by the Engineer. Reinforcing steel shall be placed in the paving notch according to the plans. The modified paving notch shall be filled with Low Slump Dense Concrete during the placement of the Bridge Deck Overlay.

ESTIMATE OF STRUCTURE QUANTIES AND NOTES FOR

54' – 0" CONTINUOUS CONCRETE BRIDGE

Str. No. 16-066-010

APRIL 2013

DESIGNED BY	CK. DES. BY	DRAFTED BY:	
BWS	KH	BWS	Kevin N. Boerden
CORS01RQ	01RQNOTA		BRIDGE ENGINEER

CONCRETE BREAKOUT (CONTINUED)

3. All broken out concrete and discarded reinforcing bars shall be disposed of by the Contractor. Any disposal of discarded material shall be in accordance with the Construction Specifications.

4. During concrete removal operations, no broken out concrete shall be allowed to fall into Branch Hay Creek.

5. The contract unit price per cubic yard for “Breakout Structural Concrete” shall include breaking out concrete, cleaning, straightening existing reinforcing steel, removing existing paving notch bolts and disposal of all broken out material.

EPOXY COATING EXISTING REINFORCING STEEL

1. The existing resteel in the curb that is exposed during concrete breakout, and is to be reused, shall be epoxy coated in the field. This does not include rebar exposed while doing Concrete Removal Type 1A through 1D or Concrete Removal Type B.

2. The reinforcing steel shall be abrasive blasted clean and then epoxy coated. The epoxy coating shall be inert in concrete and compatible with the coating applied to the new epoxy coated reinforcing steel. This coating shall be the epoxy touch up coating material supplied by an epoxy coating manufacturer who supplies coating material for new epoxy coated reinforcing steel. The abrasive blasted reinforcing steel shall be coated promptly and before detrimental oxidation occurs. The coating shall be allowed to cure for 24 hours or as per the manufacturer’s recommendations, whichever is more stringent, before concrete can be placed. These bars shall be clean and free from all surface contaminants before coating.

3. The cost of cleaning and epoxy coating the existing reinforcing steel shall be incidental to the various bid items.

BRIDGE DECK OVERLAY

1. The preparation for resurfacing consists of Type 1A Removal on the entire bridge deck and Type 2A, Type 1B, Type 1C, Type 1D and Type B Removal over the deck surface as detailed on the plan sheets. Such removal shall be in conformance with these plans and Section 550 of the Construction Specifications.

2. Type 1A Removal shall consist of removing the existing concrete overlay to a depth of 2 inches. There are some specific areas, identified on the Deck Profile plan sheets that require Type 1A Removal in excess of 2.25 inches.

3. Extreme care shall be taken during the Type 1B Removal, Type 1C Removal, Type 1D Removal and Type B Removal to ensure that the existing resteel is not damaged. In the event that resteel damage inadvertently occurs, the Bridge Construction Engineer shall be immediately notified. Any damaged resteel shall be repaired by the Contractor, as approved by the Engineer, at no additional cost to the Department.

BRIDGE DECK OVERLAY (CONTINUED)

4. Type 2A Removal, Type 1B Removal, Type 1C Removal, Type 1D Removal, Type B Removal and Class A45 Concrete Fill may not be encountered and may be omitted from the project as determined by the Engineer.

5. Type 1C Removal, Type 1D Removal and Class A45 Concrete Fill is not anticipated to exceed the plan shown quantities. If the Engineer determines that Type 1C Removal, Type 1D Removal and/or Class A45 Concrete Fill in excess of the plan shown quantity is necessary, payment for the additional quantity shall be in conformance with Section 550.5 of the Construction Specifications.

6. The coarse aggregate in the existing bridge deck is a natural aggregate. The coarse aggregate in the low slump bridge deck overlay shall be limestone in accordance with Section 820 of the Construction Specification.

7. All fine aggregates used in the Portland cement concrete in the “Low Slump Dense Concrete Bridge Deck Overlay” and “Class A45 Concrete Fill” shall conform to Section 800.2.D of the Construction Specification "Alkali Silica Reactivity (ASR) requirements. The type of cement in the concrete mix shall be one of the options as indicated in the table shown in note number 12 shown on Sheet No. 4 of 15. Fine aggregates with a 14-day expansion value of 0.400 and greater shall not be used.

BRIDGE DECK OVERLAY (CONTINUED)

8. Below is a list of known fine aggregate sources and the average corresponding 14-day expansion values:

Source	Location	Expansion Value
Bachman	Winner, SD	0.335
Birdsall S&G	Creston, SD	0.158
Birdsall S&G	Oral, SD	0.131
Birdsall S&G	Wasta, SD	0.170
Bitterman	Delmont, SD	0.314
Concrete Materials	Corson, SD	0.170
Croell	Quinn, SD	0.089
Emme Sand & Gravel	Oneil, NE	0.217
Fischer S&G	Rapid City, SD	0.092
Fischer S&G	Spearfish, SD	0.053
Fuchs	Pickstown, SD	0.275
Higman	Akron, IA	0.198
Higman	Hudson, SD	0.187
Hilde	Madison, SD	0.116
Jensen	Herried, SD	0.276
L.G. Everist	Brookings, SD	0.186
L.G. Everist	Hawarden, IA	0.166
L.G. Everist	Summit, SD	0.141
Morris	Blunt, SD	0.192
Morris – Richards pit	Onida, SD	0.188
Myrl & Roys Paving-Nelson Pit	Sioux Falls, SD	0.156
Northern Concrete Agg.	Rauville, SD	0.113
Northern Concrete Agg.	Luverne, MN	0.124
Opperman – Gunvordahl Pit	Burke, SD	0.337
Opperman – Cahoy Pit	Herrick, SD	0.307
Opperman – Jones Pit	Burke, SD	0.321
Opperman – Randall Pit	Pickstown, SD	0.239
Thorpe Pit	Britton, SD	0.098
Wagner Building Supplies	Wagner, SD	0.241
Wasta Sand & Gravel	Wasta, SD	0.159

NOTES (CONTINUED)
FOR
54’ – 0” CONTINUOUS CONCRETE BRIDGE

Str. No. 16-066-010

APRIL 2013

DESIGNED BY	CK. DES. BY	DRAFTED BY:	
BWS	KH	BWS	Kevin N. Gordon
CORS01RQ	01RQNOTA		BRIDGE ENGINEER

BRIDGE DECK OVERLAY (CONTINUED)

9. The Department will use the running average of the last three known expansion test results or less for determining acceptability of source and the required Type of cement. These expansion results are reported table shown in note number 8. Additional testing, when requested by the Contractor, will be performed by the Department at the Contractor's expense.

10. The values listed in the table shown in note number 8 are intended for use in bidding. If a previously listed pit by SDDOT with acceptable test values (less than 0.250) is discovered after letting to require Type V cement or more lithium (greater than 0.250) the Department will accept financial responsibility for the change in materials.

11. When more than one source of fine aggregates is blended to meet the gradation specifications, the highest expansion value of either sand will be used for determining acceptability and type of cement and or fly ash and or lithium required.

12. Concrete used in the Low Slump Bridge Deck Overlay shall meet the requirements of Section 550 of the Construction Specification. Class A45 Concrete Fill shall meet the requirements of Section 460 of the Construction Specification. In addition both concretes shall have 20% to 25% of the cement replaced with Class F Modified Fly Ash in accordance with Section 605 of the Construction Specification and/or lithium nitrate (30% solution by weight) added to the concrete mix at the following rates.

Course Aggregate	Fine Aggregate	Cement Type	Fly Ash	Lithium Nitrate
Limestone or Granite	< 0.250%	Type I or II	Class F Modified	-----
		Type I or II	-----	1.5 gallon/cubic yard
Limestone or Granite	>0.250%	Type V	Class F Modified	-----
		Type I or II	-----	3.0 gallon/cubic yard
		Type I or II	Class F Modified	1.5 gallon/cubic yard
Quartzite	-----	Type V	Class F Modified	-----
		Type I or II	-----	3.0 gallon/cubic yard
		Type I or II	Class F Modified	1.5 gallon/cubic yard

The Contractor shall use one of these options, but the Contractor may choose which option. All material, labor, equipment, and incidental costs shall be included in the contract unit price for “Low Slump Dense Concrete Bridge Deck Overlay” or “Class A45 Concrete Fill”.

13. Grout for bonding new concrete to old concrete shall meet the requirements of Section 550 of the Construction Specification. In addition, the grout mix shall contain 1 1/2 gallons of Lithium per cubic yard or 20% to 25% of the cement replaced with fly ash.

BRIDGE DECK OVERLAY (CONTINUED)

14. Suppliers of Lithium are listed below:

    BASF Admixtures, Inc.
    23700 Chagrin Boulevard
    Cleveland, Ohio 44122-5554
    1-800-628-9990
    website: www.basf-admixtures.com

    FMC Corporation Lithium
    Seven LakePointe Plaza
    2801 Yorkmont Road, Suite 300
    Charlotte, North Carolina 28208
    1-704-868-5300
    website: www.fmclithium.com

    Grace Construction Products
    62 Whitmore Ave.
    Cambridge MA
    1-877-423-6491
    Website: www.graceconstruction.com

15. The bridge deck shall be overlayed with a minimum thickness of 2” Low Slump Dense Concrete.

16. It will be necessary for the Contractor to shape the surface of the Low Slump Dense Concrete Overlay within one foot of the curb as detailed in the plans to insure that water drains to the floor drains or off the ends of the bridge.

17. No traffic will be allowed to operate on the scarified portion of the bridge deck. If it appears that the entire Low Slump Dense Concrete Overlay can not be completed prior to winter, the Type 1A, 1B, 1C, 1D and Type B removal shall not be done until work resumes in the spring. In the event that scarification has been started and due to unforeseen circumstances it becomes impossible to complete the placement of the Low Slump Dense Concrete Overlay on the entire surface of the structure prior to winter, the Office of Bridge Design shall be notified. Recommendations for handling winter traffic will then be made. These recommendations may include, but are not limited to, filling extra depth removal areas with Class A45 Concrete, placing an asphalt overlay on the uncompleted area so that the entire roadway width may be opened to traffic, removal of the asphalt overlay when work is resumed and scarifying an additional 1/4” of depth on the bridge deck. The cost of this work, including asphalt overlay, scarification, Class A45 Concrete, extra Low Slump Dense Concrete, and all other items incidental to this work, shall be at the expense of the Contractor.

INSTALLING DOWELS IN CONCRETE

1. Holes drilled in the existing concrete shall be true and normal or as shown in the plans. Drilling holes using a core drill shall not be allowed. Care shall be taken not to damage the existing reinforcing steel. It is likely that some of the existing reinforcing steel shown in the original construction plans may have been placed out of position during original construction. Therefore, prior to the start of drilling any holes in the concrete, an effort will be made by Department forces to mark on the concrete surface where practical any locations of the in-place reinforcing steel. In spite of this precaution, the Contractor can still expect to encounter and have to drill through reinforcing steel or shift the dowel spacing as approved by the Engineer to miss the existing reinforcing steel. If the Contractor shifts the dowel spacing, the unused drill holes shall be completely filled with the epoxy resin specified in note number 2 under “Installing Dowels in Concrete” as approved by the Engineer.

2. The epoxy resin mixture shall be of a type for bonding steel to hardened concrete and shall conform to AASHTO M235 Type IV, (Equivalent to ASTM C881, Type IV). Grade 1, 2 or 3 may be used for vertical dowels.

3. The diameter of the drilled holes shall not be less than 1/8 inch greater, nor more than 3/8 inch greater than the diameter of the dowels or as per the Manufacturer’s recommendations. The drilled holes shall be blown out with compressed air using a device that will reach the back of the hole to ensure that all debris or loose material has been removed prior to epoxy injection.

4. Mix epoxy resin as recommended by the Manufacturer and apply by an injection method as approved by the Engineer. Beginning at the back of the drilled holes, fill the holes 1/3 to 1/2 full of epoxy, or as recommended by the Manufacturer, prior to insertion of the steel bar. Rotate the steel bar during installation to eliminate voids and ensure complete bonding of the bar. Insertion of the bars by the dipping or painting method will not be allowed.

5. No loads shall be applied to the epoxy grouted dowel bars until the epoxy resin has had sufficient time to cure as specified by the epoxy resin manufacturer.

6. Dowel bars shall be deformed bars conforming to ASTM A615 Grade 60.

7. The cost of epoxy resin, dowels, installation and other incidental items shall be incidental to the contract unit price per each for “Install Dowel in Concrete”.

NOTES (CONTINUED)
FOR
54’ – 0” CONTINUOUS CONCRETE BRIDGE

Str. No. 16-066-010

APRIL 2013

DESIGNED BY	CK. DES. BY	DRAFTED BY:	
BWS	KH	BWS	Kevin N Boeder
CORS01RQ	01RONOTA		BRIDGE ENGINEER

SURFACE FINISH

All surfaces of the new concrete barrier curb in the area of the barrier reconstruction and all visible surfaces of the newly constructed endblocks shall be given a Class B Commercial Texture Finish. The existing curb surface facing traffic between the new barrier and the bridge deck shall be given a Special Surface Finish. Both Surface Finishes shall be in accordance with Section 460.M. of the Construction Specifications. The color of both the Commercial and Special Surface Finishes shall match each other and shall closely simulate the color of the original concrete.

The concrete surfaces requiring the application of the Commercial Texture Finish shall be prepared in accordance with the manufacturer's recommendations. The Contractor shall submit a product data sheet, or an approved equal, documenting all pertinent information with regard to preparation of the concrete surfaces, materials and equipment required, mixing requirements, and application procedures to the Engineer in advance of the application of the Commercial Texture Finish for review and approval.

For informational purposes the amount of surface area requiring the Class B commercial texture finish is 274 square feet for Phase 1 and 274 square feet for Phase 2.

Any damage to the commercial texture finish or special surface finish during the construction including abrasion from traffic due to the traffic control shall be repaired by the Contractor, as approved by the Engineer, at no expense to the Department.

The cost of the commercial texture finish shall be incidental to the contract price per cubic yard for "Class A45 Concrete, Bridge Repair". This payment shall be full compensation for furnishing all materials, labor, tools and equipment necessary or incidental to the application of this finish. All costs associated with the application of the special surface finish to the existing curb face, including all materials, labor, tools and equipment shall be incidental to the contract price per square feet for "Special Surface Finish".

NOTES (CONTINUED)
FOR
54' – 0" CONTINUOUS CONCRETE BRIDGE

Str. No. 16-066-010

APRIL 2013

DESIGNED BY	CK. DES. BY	DRAFTED BY:	
BWS	KH	BWS	Kevin N. Gordon
CORS01RQ	01RQNOTA		BRIDGE ENGINEER

STATE OF	PROJECT	SHEET NO.	TOTAL SHEETS
S.D.	NH 0012(150)105	E8	E105

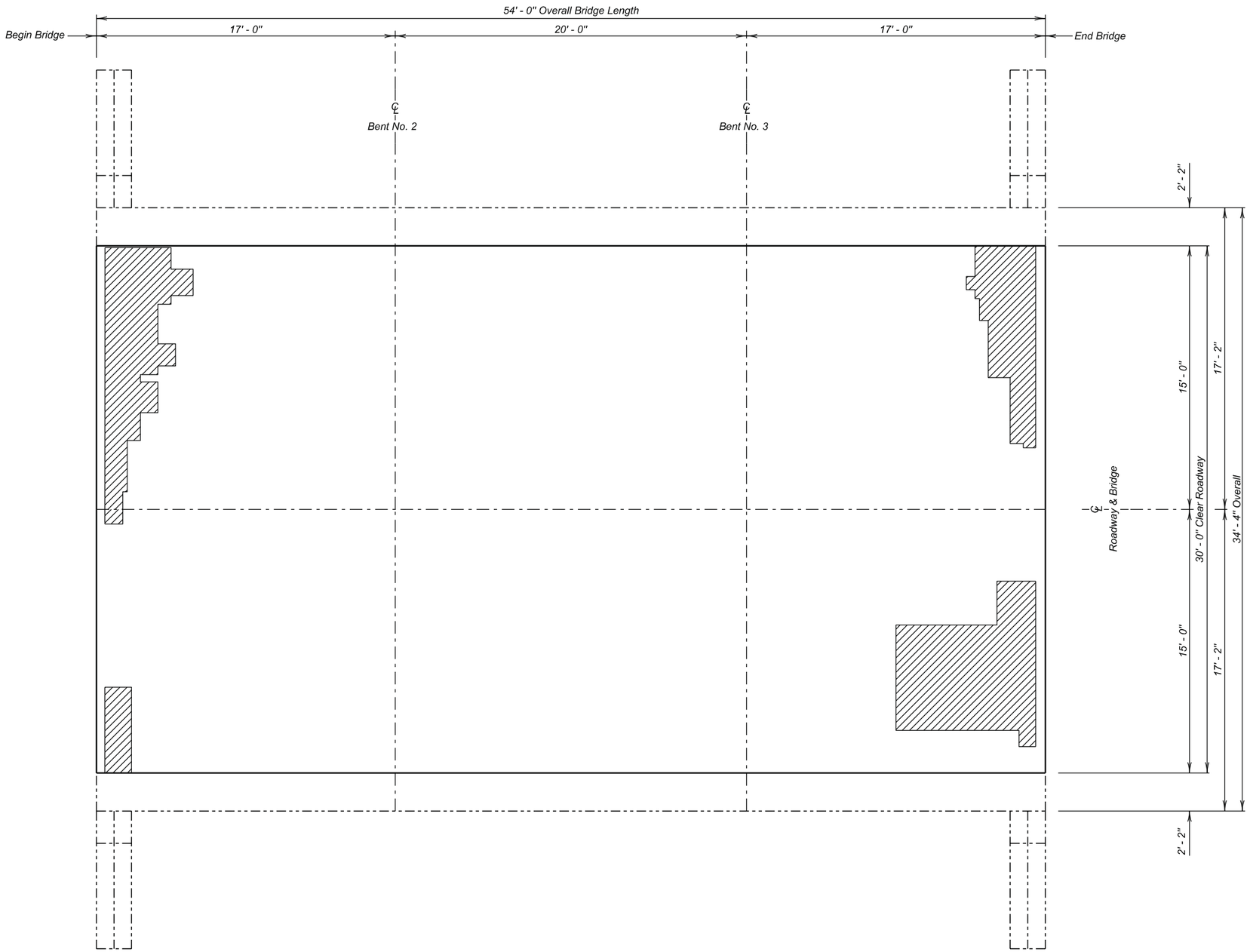

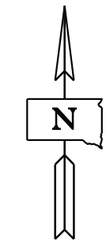

DECK DELAMINATION DETAILS

FOR

54' - 0" CONTINUOUS CONCRETE BRIDGE

30' - 0" ROADWAY — 0° SKEW

OVER BRANCH HAY CREEK — SEC. 22-T23N-R18E

STR. NO. 16-066-010 — NH 0012(150)105

CORSON COUNTY

S. D. DEPT. OF TRANSPORTATION

OCTOBER 2013

LEGEND -

Shaded area indicate approximate location of unsound concrete requiring Concrete Removal Type 1B

DESIGNED BY	CK. DES. BY	DRAFTED BY	
BWS	KH	JRK	Kevin N. Goeden
CORS01RQ	01RQLA06		BRIDGE ENGINEER

STATE OF	PROJECT	SHEET NO.	TOTAL SHEETS
S.D.	NH 0012(150)105	E9	E105

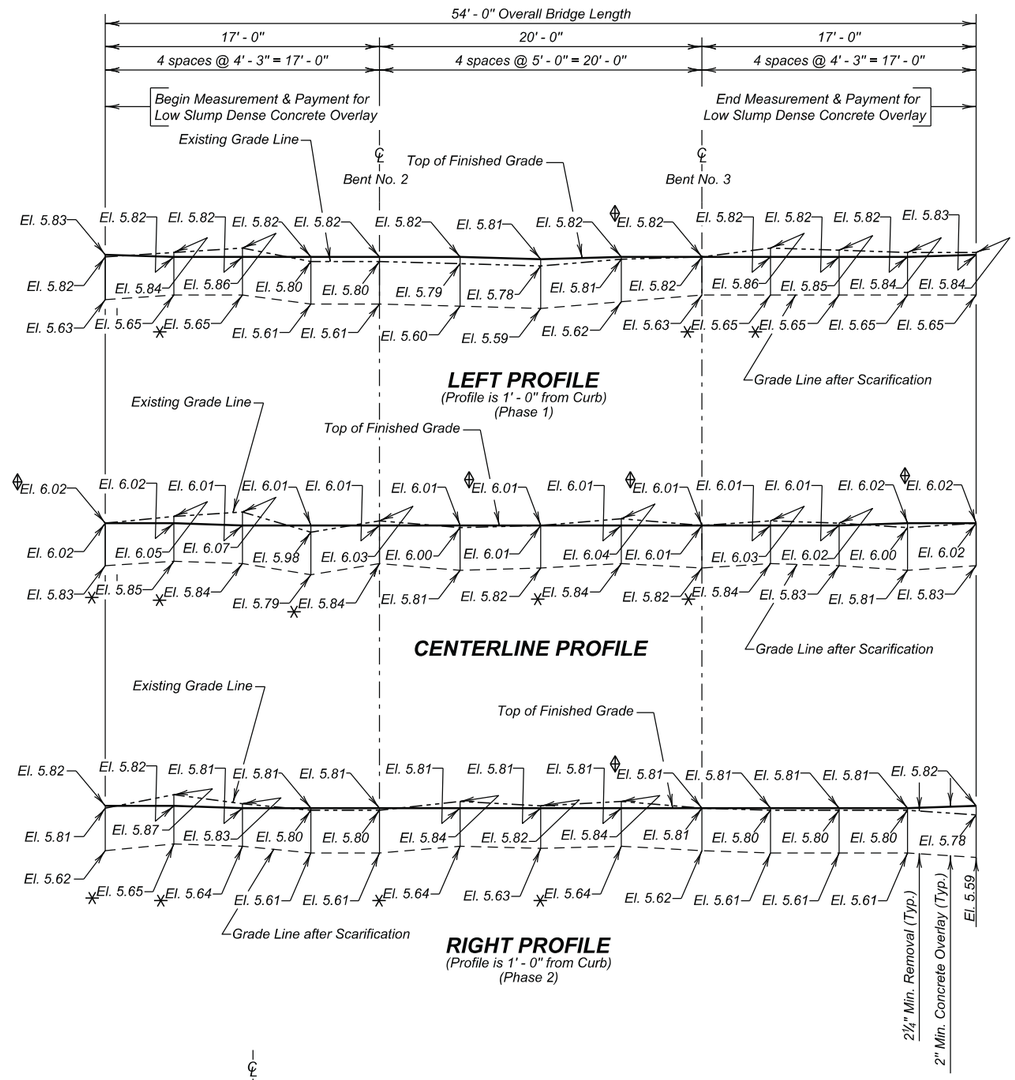

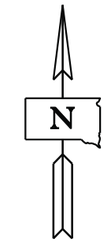

Benchmark Description:

CP 13 345+24.67 169.68 R, Rebar at Grading Project
Elevation 2601.2

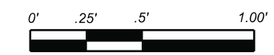

VERTICAL SCALE

ESTIMATED QUANTITIES

ITEM	UNIT	QUANTITY	
		Phase I	Phase 2
Low Slump Dense Concrete Deck Overlay	Cu. Yd.	6.7	6.6
Concrete Removal Type 1A	Sq. Yd.	94.2	82.4
Concrete Removal Type 2A	Sq. Yd.	23.6	20.6
Concrete Removal Type 1B	Sq. Yd.	9.4	8.2
Concrete Removal Type 1C	Sq. Yd.	4.7	4.1
Concrete Removal Type 1D	Sq. Yd.	4.7	4.1
Concrete Removal Type B	Ft.	10.0	10.0
Class A45 Concrete Fill	Cu. Yd.	1.0	0.9
Finishing and Curing	Sq. Yd.	90.0	90.0

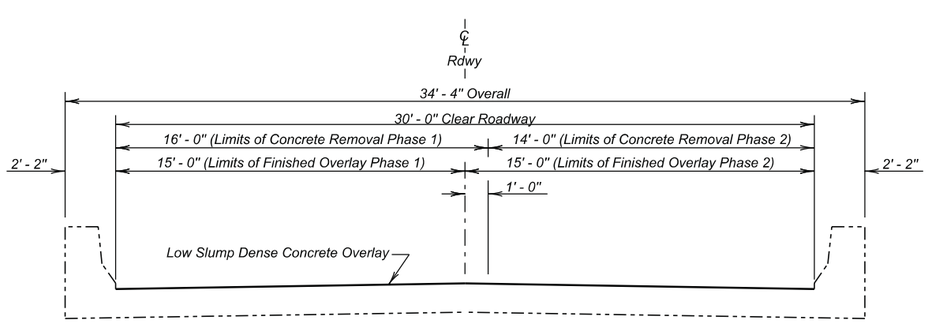

TYPICAL SECTION

NOTE :

Add 2450.00 to all elevations shown on profiles.

✳ Scarify in excess of 2¼" in these areas.

⊛ Existing Elevation is the same as the Finished Surface Elevation.

⊕ Existing Elevation is higher than the Finished Surface Elevation.

DECK PROFILES FOR LOW SLUMP DENSE CONCRETE OVERLAY
FOR

54' - 0" CONTINUOUS CONCRETE BRIDGE

30' - 0" ROADWAY — 0° SKEW
OVER BRANCH HAY CREEK — SEC. 22-T23N-R18E
STR. NO. 16-066-010 — NH 0012(150)105

CORSON COUNTY
S. D. DEPT. OF TRANSPORTATION
OCTOBER 2013

DESIGNED BY	CK. DES. BY	DRAFTED BY	
KH	BWS	KR	Kevin N. Boeder
CORS01RQ	01RQLA07		BRIDGE ENGINEER

STATE OF	PROJECT	SHEET NO.	TOTAL SHEETS
S.D.	NH 0012(150)105	E10	E105

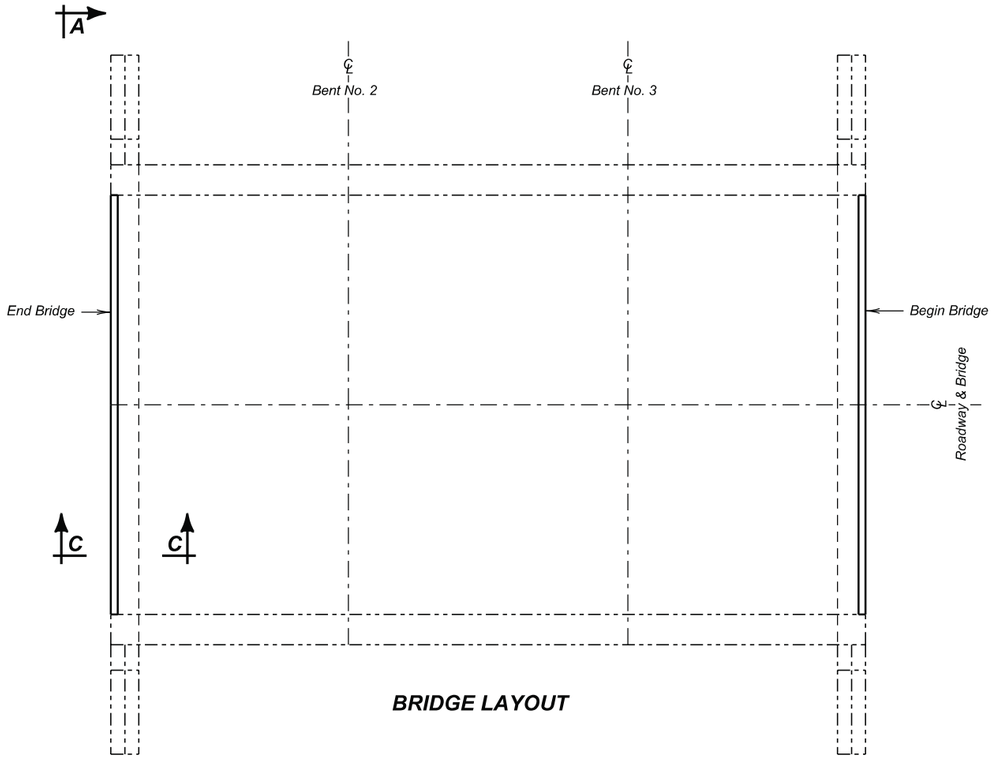

BRIDGE LAYOUT

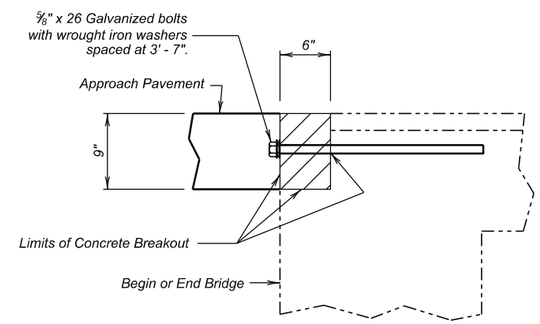

SECTION C - C

Existing Paving Block Removal

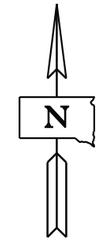

REINFORCING SCHEDULE

(For Both Ends of Bridge)

	Mk.	No.	Size	Length	Type
PHASE I	△ z1	8	5	2' - 8"	17A
	d1	4	5	6' - 9"	Str.
PHASE 2	△ z1	8	5	2' - 8"	17A
	d1	4	5	6' - 9"	Str.

Bending Details

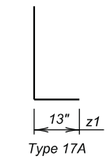

Type 17A

NOTES:

All Dimensions are out to out of bars.

All Bars to be Epoxy Coated.

△ Dowels

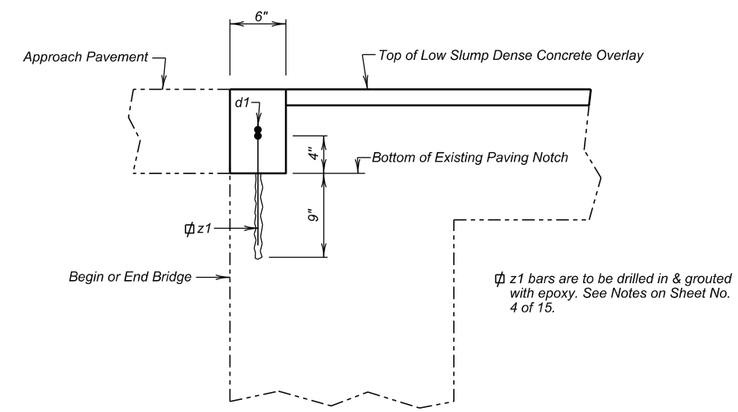

SECTION B - B

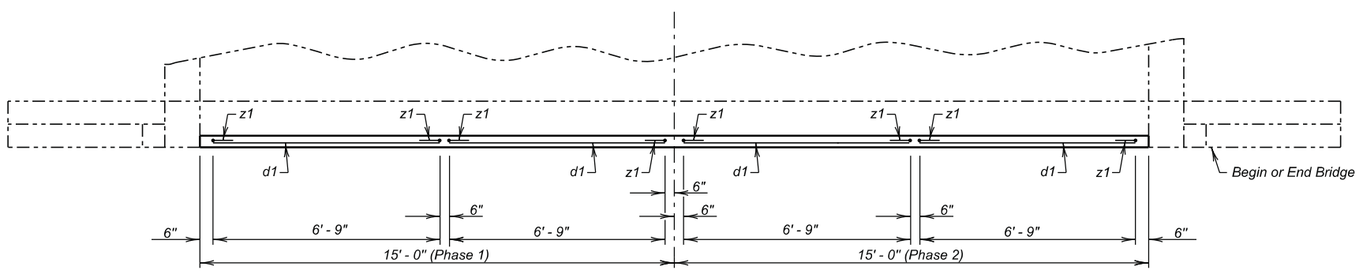

PLAN

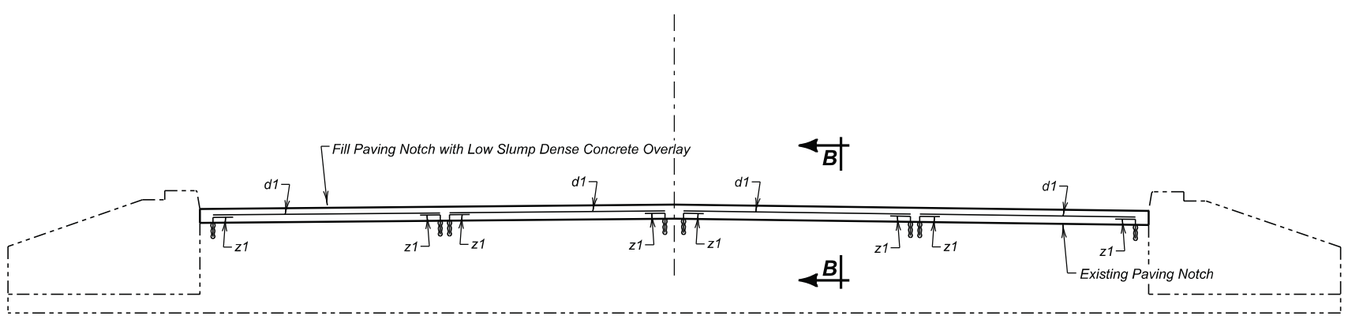

VIEW A - A

ESTIMATED QUANTITIES

ITEM	UNIT	QUANTITY Phase I	QUANTITY Phase 2
Breakout Structural Concrete	Cu. Yd.	0.4	0.4
Install Dowel in Concrete	Each	8	8
Epoxy Coated Reinforcing Steel	Lb	28	28
✳			

✳ Does not include the following quantities for z1 bars as these are paid for in the bid item "Install Dowel in Concrete".

PHASE I	PHASE 2
22 Lb.	22 Lb.

PAVING NOTCH REINFORCEMENT

FOR

54' - 0" CONTINUOUS CONCRETE BRIDGE

30' - 0" ROADWAY — 0° SKEW

OVER BRANCH HAY CREEK — SEC. 22-T23N-R18E

STR. NO. 16-066-010 — NH 0012(150)105

CORSON COUNTY

S. D. DEPT. OF TRANSPORTATION

OCTOBER 2013

DESIGNED BY	CK. DES. BY	DRAFTED BY	
BWS	KH	KR	Kevin N. Goeden BRIDGE ENGINEER
CORS01RQ	01RQRA08		

Δ Revised 11-06-14 BWS

STATE OF	PROJECT	SHEET NO.	TOTAL SHEETS
S.D.	NH 0012(150)105	E11	E105

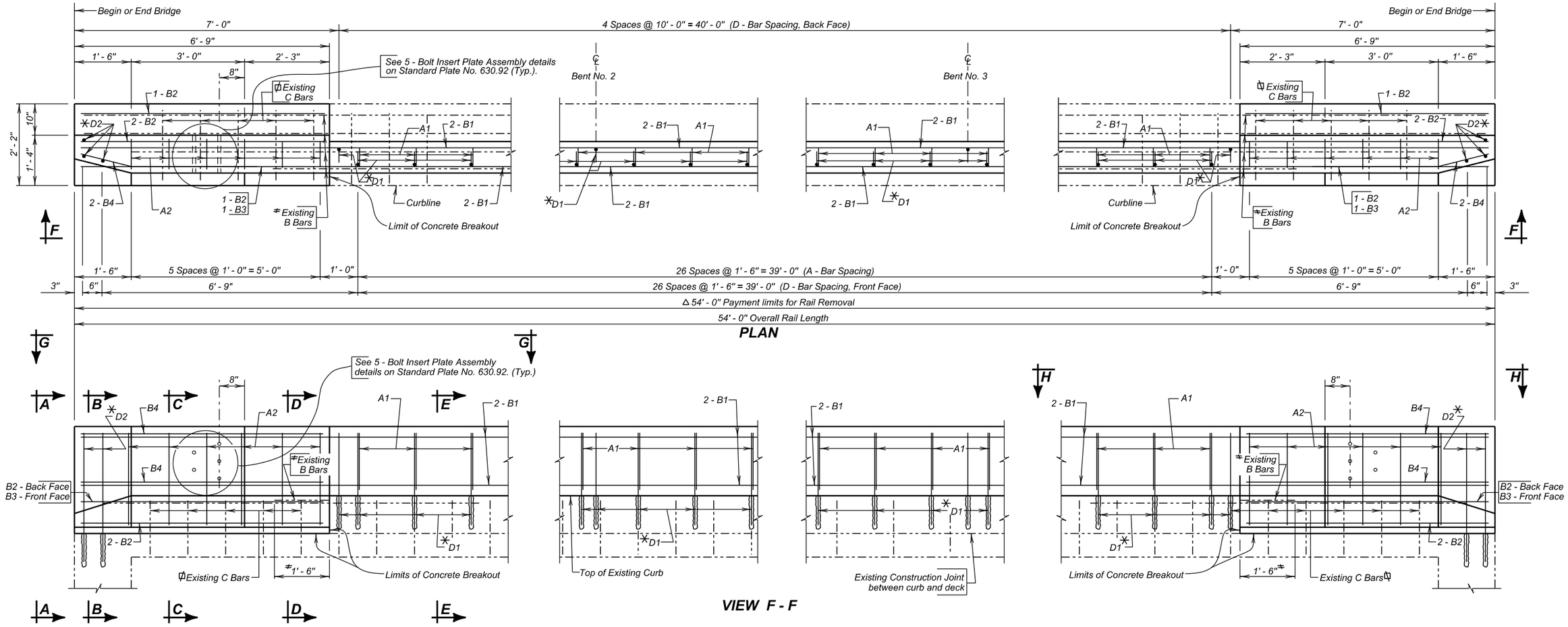

PLAN

VIEW F - F

Bend Existing Bars where necessary to maintain 2" clear cover.

D1 and D2 are to be drilled in and grouted with epoxy.

Extend existing B bars into new section (1' - 6").

NOTES -

1. For location of View and Sections, see Sheet No. 10 of 15.
2. If existing resteel is struck while drilling holes for Dowels the spacing can be shifted 2" longitudinally, 1" transversly or as approved by the Engineer to miss existing resteel.

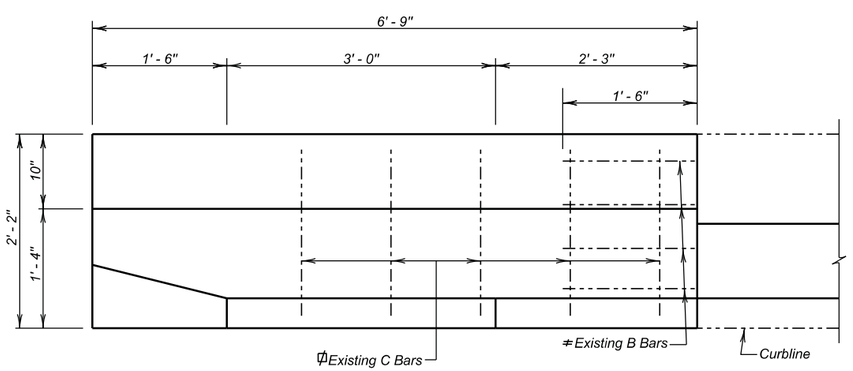

VIEW G - G

(New reinforcing steel not shown)

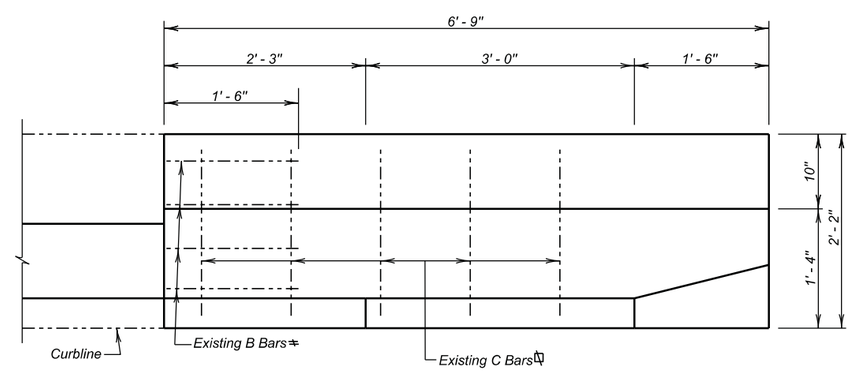

VIEW H - H

(New reinforcing steel not shown)

END BLOCK MODIFICATION AND RAIL REPLACEMENT LAYOUT
FOR

54' - 0" CONTINUOUS CONCRETE BRIDGE

30' - 0" ROADWAY — 0° SKEW
OVER BRANCH HAY CREEK — SEC. 22-T23N-R18E
STR. NO. 16-066-010 — NH 0012(150)105

CORSON COUNTY
S. D. DEPT. OF TRANSPORTATION
AUGUST 2013

DESIGNED BY	CK. DES. BY	DRAFTED BY	
BWS	KH	KR	Kevin N. Goeden
CORS01RQ	01RQRA09		BRIDGE ENGINEER

STATE OF	PROJECT	SHEET NO.	TOTAL SHEETS
S.D.	NH 0012(150)105	E12	E105

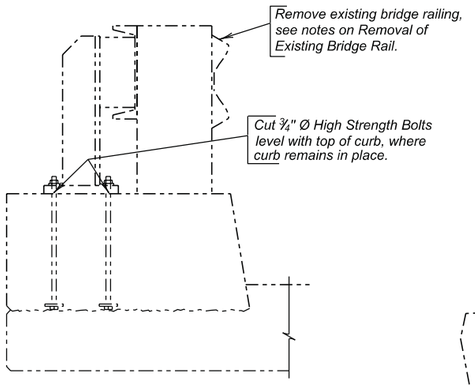

EXISTING CURB & RAIL

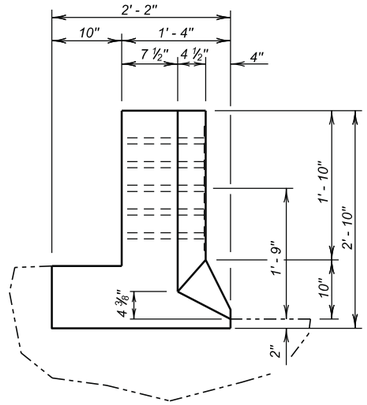

VIEW A - A

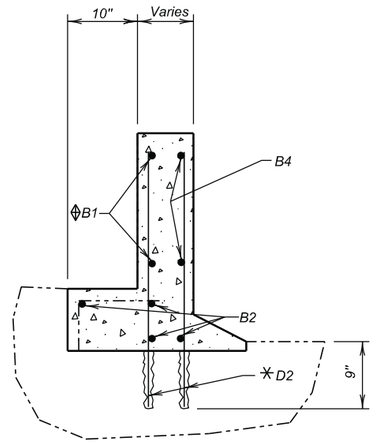

SECTION B - B

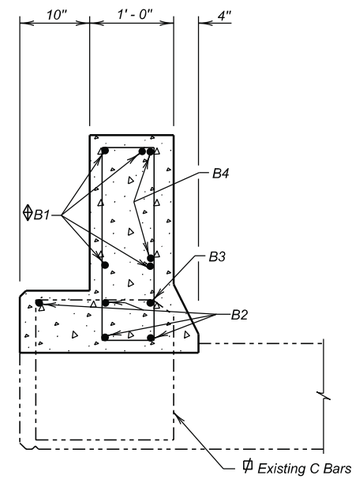

SECTION C - C

(5-Bolt Insert Assembly Not Shown)

REINFORCING SCHEDULE

	Mk.	No.	Size	Length	Type
Phase 1	A1	27	4	4' - 11"	T2
	A2	12	4	7' - 2"	T2
	⊕ B1	8	4	27' - 6"	Str.
	B2	8	4	6' - 5"	Str.
	B3	2	4	5' - 3"	Str.
	B4	4	4	4' - 10"	19A
	△ D1	32	6	2' - 6"	1A
	△ D2	6	6	3' - 5"	Str.
Phase 2	A1	27	4	4' - 11"	T2
	A2	12	4	7' - 2"	T2
	⊕ B1	8	4	27' - 6"	Str.
	B2	8	4	6' - 5"	Str.
	B3	2	4	5' - 3"	Str.
	B4	4	4	4' - 10"	19A
	△ D1	32	6	2' - 6"	1A
	△ D2	6	6	3' - 5"	Str.

Bending Details

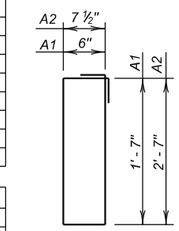

Type T2

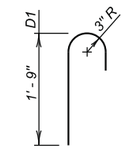

Type 1A

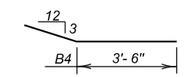

Type 19A

NOTES :
⊕ Min. Lap = 1' - 3"
△ Dowels
All bars are epoxy coated.
All dimensions are out to out of bars.

ESTIMATED QUANTITIES

ITEM	UNIT	QUANTITY PHASE I	QUANTITY PHASE 2
Remove Bridge Railing	Ft.	54	54
Class A45 Concrete, Bridge Repair	Cu.Yd.	4.1	4.1
Special Surface Finish	Sq. Ft.	40.9	40.9
Breakout Structural Concrete	Cu.Yd.	1.0	1.0
Install Dowel in Concrete	Each	38	38
★Epoxy Coated Reinforcing Steel	Lb.	347	347

★ Does not include the following quantities for D1 & D2 bars as these are paid for in the Bid Item "Install Dowel in Concrete".

PHASE I	PHASE 2
151 Lb.	151 Lb.

Bend existing C bars where necessary to maintain 2" clear cover.

D1 and D2 Dowels are to be drilled in and grouted with epoxy.

≠ Extend existing B bars into new section (1' - 6").

⊕ Min. Lap = 1' - 3"

NOTES:

Use this sheet in conjunction with Sheet No. 9 of 15.

If existing steel is struck while drilling holes for D1 or D2 dowels, the spacing can be shifted 2" longitudinally, 1" transversely, or as approved by the Engineer to miss existing steel.

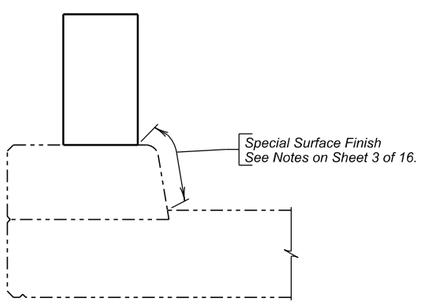

SPECIAL SURFACE FINISH

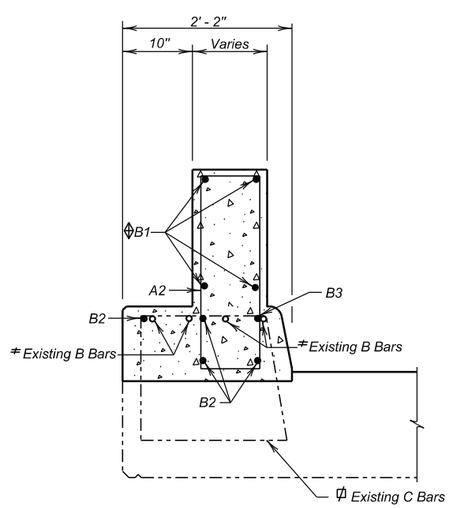

SECTION D - D

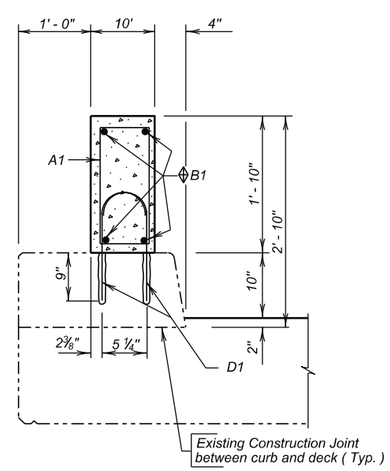

SECTION E - E

END BLOCK MODIFICATION AND RAIL REPLACEMENT DETAILS
FOR

54' - 0" CONTINUOUS CONCRETE BRIDGE

30' - 0" ROADWAY — 0° SKEW
OVER BRANCH HAY CREEK — SEC. 22-T23N-R18E
STR. NO. 16-066-010 — NH 0012(150)105

CORSON COUNTY
S. D. DEPT. OF TRANSPORTATION
OCTOBER 2013

DESIGNED BY	CK. DES. BY	DRAFTED BY	
BWS	KH	KR	Kevin N. Goeden
CORS01RQ	01RQRA10		BRIDGE ENGINEER

YEAR PLATE DETAILS FOR ORIGINAL CONSTRUCTION

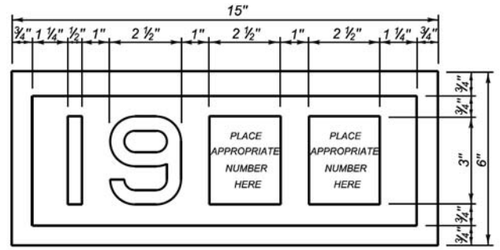

YEAR PLATE DETAILS FOR NEW CONSTRUCTION

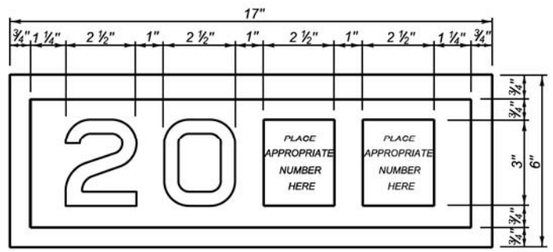

GENERAL NOTES:

1. Year plates of the general dimensions shown shall be constructed on all box culverts and bridges. The year plates shall be constructed in reverse and attached to the forms in such a manner that the finished imprint in the concrete does not exceed one-half (½) inch in depth.
2. Year plates shall be located on structure(s) as follows:
   a. On cast-in-place box culverts the year plates shall be four and one - half (4 ½) inches below the top of the upstream parapet wall and centered laterally on the upstream face. On precast box culverts the year plate shall be centered laterally on the upstream face of the top slab. Where an extended interior wall interferes with this location, the year plate shall be centered in an adjacent barrel.
   b. On bridges with six (6) inch curbs or "Jersey" shaped barriers with no endblocks, the year plate shall be centered vertically on the curb face approximately six (6) inches from the end of the bridge, or as designated by the Engineer. On bridges with "Jersey" shaped barrier endblocks, the year plate shall be centered on the upper sloped portion of the barrier approximately 5'- 6" from the end of the bridge, or as designated by the Engineer. There shall be one year plate at each end of the bridge on opposite sides.
   c. When the plans specify that both the original date of construction and the date of reconstruction are to be shown, one date shall be placed as listed above and the other located adjacent to it. Both year plates shall be shown at each end of the bridge on opposite sides.
3. There will be no separate measurement or payment made for year plates on box culverts and bridges. All costs for this work shall be incidental to other contract items.

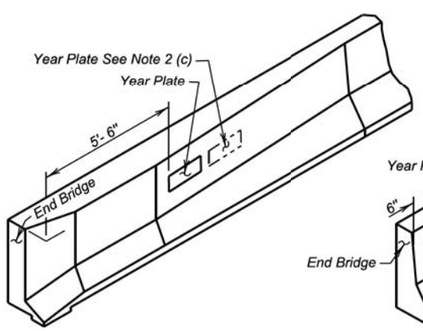

JERSEY BARRIER
(With Endblock)

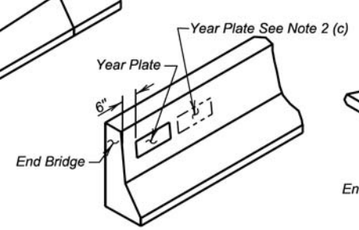

JERSEY BARRIER

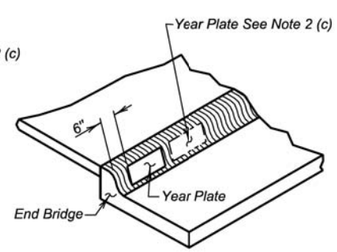

TYPE B CURB

June 26, 2012

Published Date: 3rd Qtr. 2014	SDDOT	DUAL DATE YEAR PLATE DETAILS	PLATE NUMBER 460.03
			Sheet 1 of 1

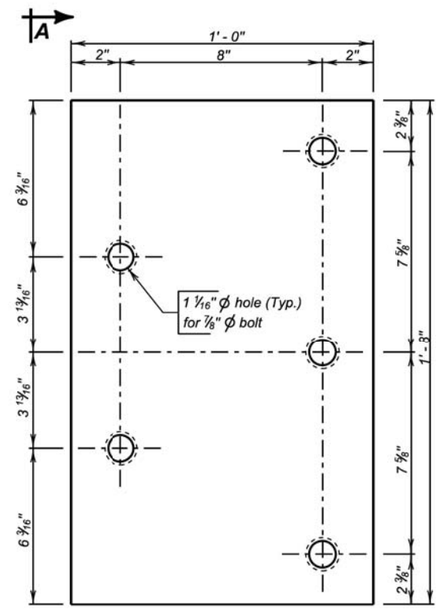

ELEVATION

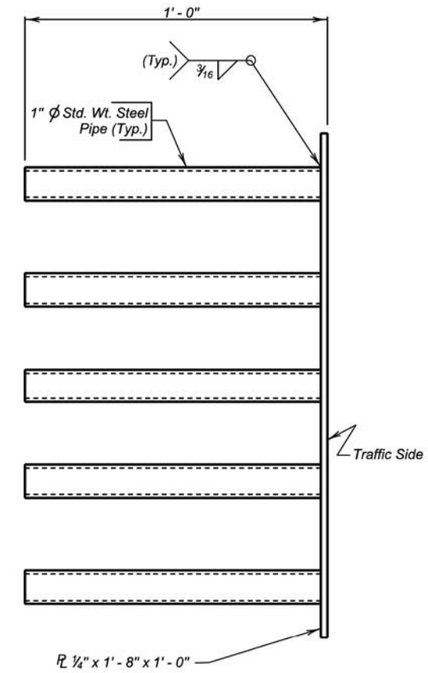

VIEW A - A

GENERAL NOTES:

1. Steel plate for the insert assembly shall conform to ASTM A709 Grade 36. The steel pipes shall conform to ASTM A53 or ASTM A500 Grade B.
2. Welding and weld inspection shall be in conformance with AWS D1.1 - (Current Year) Structural Welding Code - Steel.
3. After fabrication, galvanize in accordance with AASHTO M111 (ASTM A123).
4. Bolts, nuts, and washers shall be provided with each assembly. Bolts shall be galvanized and conform to the requirements of ASTM A307, A325, or A449. Plain washers shall be galvanized and conform to ASTM F844.
5. Bolt heads shall be placed on the traffic side of the endblock. Bolt projection at the back side of the insert shall not exceed 1 inch beyond the nut.
6. The cost of the 5 bolt insert plate assembly complete in place including welding and galvanizing shall be incidental to the contract unit price per Cubic Yard for " Class A45 Concrete, Miscellaneous ", " Class A45 Concrete, Bridge Deck ", or " Class A45 Concrete, Bridge Repair ", as applicable.

December 23, 2013

Published Date: 3rd Qtr. 2014	SDDOT	5 BOLT INSERT PLATE ASSEMBLY	PLATE NUMBER 630.92
			Sheet 1 of 1

-X020-

STATE OF	PROJECT	SHEET NO.	TOTAL SHEETS
S.D.	NH 0012(150)105	E14	E105

INDEX OF BRIDGE SHEETS—

Sheet No.1 General Drawing and Quantities
Sheet No.2 Subsurface Investigations
Sheet No.3 Details of Substructure
Sheet No.4 Details of Superstructure
Sheet No.5 Details of Type -B Railing CS-RB-00-119-3-3 (12-21-54)

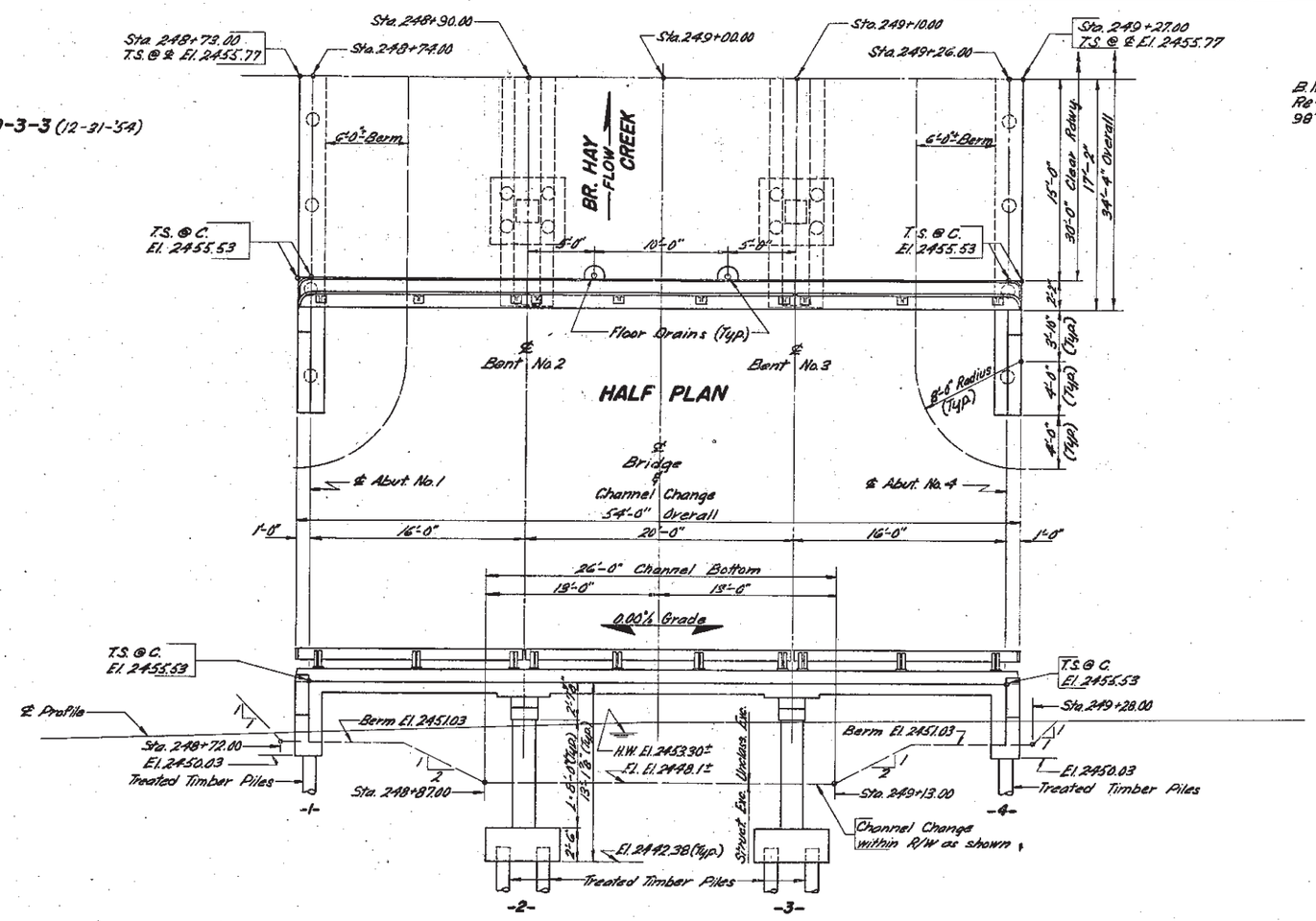

ELEVATION

B.M. #24 El. 2455.90
Re-bar & Gds. (In fence Line)
115' Rt Sta. 241+88

B.M. #25 El. 2454.50
Re-bar & Gds.
98' Rt. Sta. 252+00

NOTE
T.S.@C = Top of Slab at Curb.
T.S.@℄ = Top of Slab at ℄ Roadway.

Q	820 c.f.s.
A	100 sq. ft.
V	8.2 f.p.s.

SPECIFICATION NOTE—

Use current South Dakota Standard Specifications for Roads and Bridges and the Supplemental Specifications as included in the Proposal.

GENERAL NOTES—

1. See NOTES on sheet No.4
2. Omit floor drains in end spans.

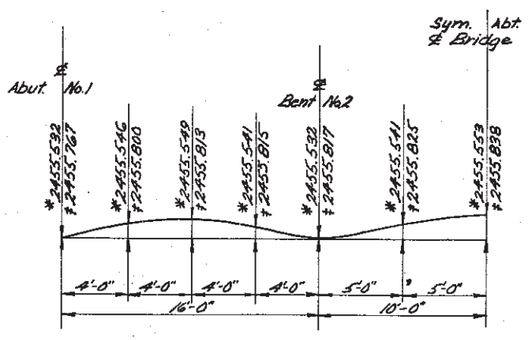

CURB & ℄ ELEVATIONS

Elevations indicated with * are Top of Finished Slab at Curb and with † are Top of Finished Slab at ℄ Roadway, which provide Camber for Dead Load Deflection PLUS Plastic Flow. Do not use Camber Dimensions shown on sheet No.4 of Bridge Plans.

ESTIMATED QUANTITIES

ITEM	Cl "A" Conc. Cu. Yds.	Steel - Lbs. Reinf.	Steel - Lbs. Struct.	Type B Steel Railing Lin. Ft.	Treated Timber Piles # Lin. Ft.	Excavation - Cu. Yds. Struct.	Excavation - Cu. Yds. Unclass.▲
Substructure	54.8	14,330	75	110.3			
Abuts. No.1 & No.4	33.8	3,650	760		16 @ 25' = 400	15	
Bents No.2 & No.3	21.0	4,125			16 @ 20' = 320	45	
Total	112.5	22,285	835	110.3	# 720	60	▲

#One Treated Timber Test Pile shall be driven at Abuts. No.1 & No.4 and at Bent No.3 before the remaining piles are ordered.
▲See Grading Plans for Unclassified Excavation.

Item	Trailing	Alignment	Sig. Exc.

ORIGINAL CONSTRUCTION PLANS

GENERAL DRAWING AND QUANTITIES
FOR
54'-0" CONTINUOUS CONCRETE BRIDGE
30'-0" ROADWAY
OVER BR. HAY CREEK SEC. 22-T23N-R18E
STA. 248+73.00 TO 249+27.00 F 044-2(3)
STR. NO. 16-066-010 CORSON COUNTY
SOUTH DAKOTA H20-S16-44
DEPARTMENT OF HIGHWAYS
SEPT. 1961

CHECKED	DRAWN BY	DESIGNED	APPROVED
	L.G.	B.E.M.	BRIDGE ENGINEER

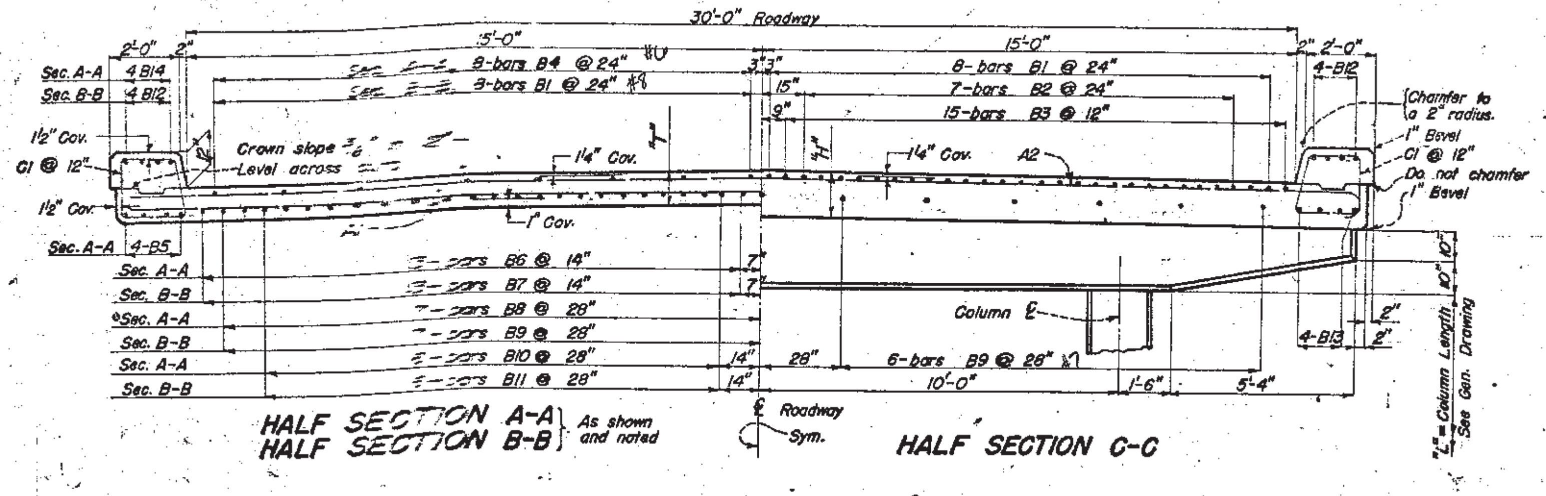

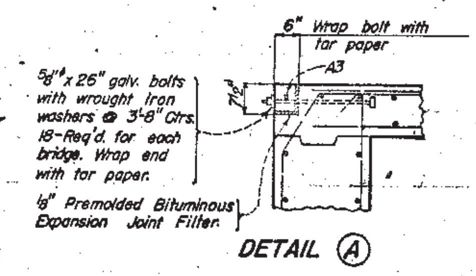

NOTES

These notes cover substructure, superstructure, and railing details. The General Plan for each structure will show spans, elevations, and other necessary notes and details.

CONSTRUCTION SPECIFICATIONS: South Dakota Dept. of Highways "Standard Specifications for Roads and Bridges," current issue, shall govern unless noted otherwise herein, on plans, or in Special Provisions.

PILING: See General Drawing for Lengths of Treated Timber Piles. Piling shall develop a minimum bearing value of 22 tons per pile.

STRUCTURAL STEEL: All 5/8" and 1" bolts including washers, 4" x 5/8" bent bars, and floor drains shall be paid for as Structural Steel.

CONCRETE: Class A Concrete shall develop a minimum allowable compressive strength of 4000 p.s.i. at 28 days. All exposed concrete corners and edges shall be chamfered to a 3/4" bevel unless noted otherwise. If necessary to facilitate construction, tranverse construction joints may be made at the quarter points of each or any span, adjacent to interior bents. A 1/4" wearing surface placed integral with the slab has been allowed for and is included in the slab thicknesses tabulated. All costs for expansion joint filler and tar paper shall be included in the unit price bid per cu. yd. for Class A Concrete.

DESIGN DATA: Design loading H20-S16-44 (T-current) A.A.S.H.O. Unit stresses: Concrete, f'c=1600 psi., n=8; Reinforcing, fs=20000 p.s.i. (Int. Grade Steel). Equivalent fluid pressure of earth at 40#/sq. ft.

REINFORCING STEEL: All reinforcing steel bars shall conform to A.S.T.M. Spec. A305 (T-current) and A15 (T-current) Int. Grade.

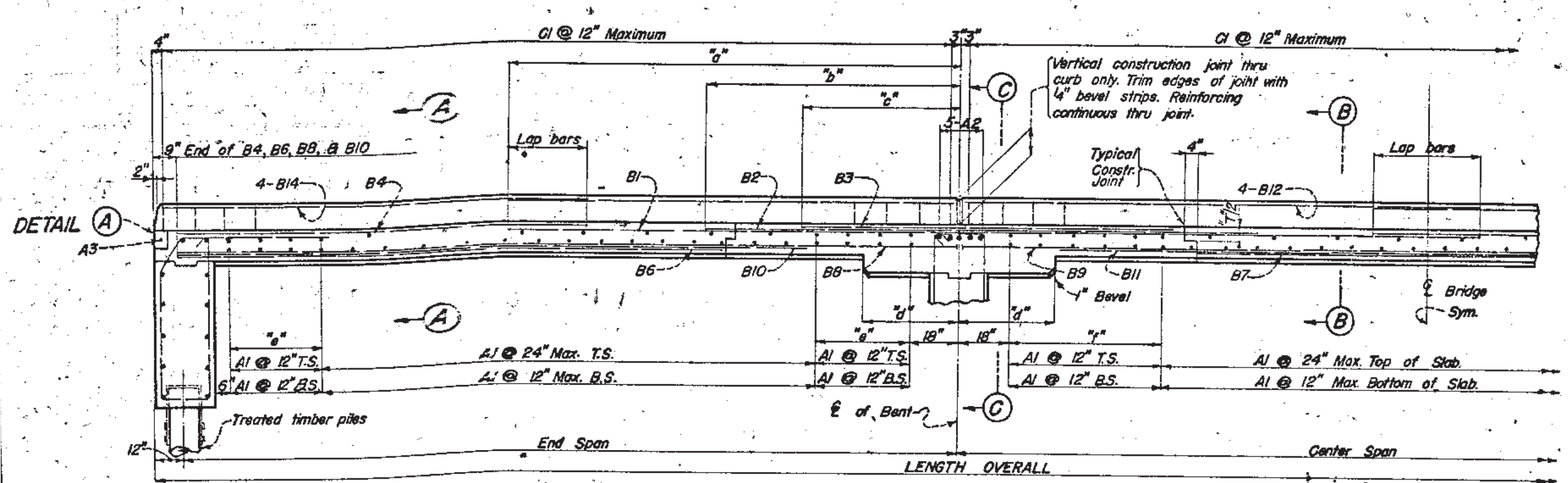

HALF LONGITUDINAL SECTIONAL VIEW
(Railing not shown)

ORIGINAL CONSTRUCTION PLANS

SLAB DATA

REINFORCING SCHEDULE

LENGTH OVERALL	END SPAN	CENTER SPAN	A1 No.	A1 Size	A1 Length	A2 No.	A2 Size	A2 Length	A2 Type	A2 B	A3 No.	A3 Size	A3 Length	B1 No.	B1 Size	B1 Length	B2 No.	B2 Size	B2 Length	B3 No.	B3 Size	B3 Length
54'-0"	16'	20'	79	5	33'-6"	10	9	35'-6"	1	33'-7"	2	5	29'-9"	32	8	22'-6"	29	7	13'-0"	60	6	9'-0"
60'-6"	18'	22'-6"	89	↓	↓	↓	7/8	35'-3"	↓	↓	↓	↓	↓	↓	7/8	24'-0"	↓	7/8	13'-6"	↓	3/4	9'-0"
67'-0"	20'	25'	101				1	35'-5"							7/8	26'-0"		7/8	16'-6"		7/8	11'-6"
73'-6"	22'	27'-6"	112				1								1	28'-0"		1	16'-6"		7/8	11'-0"
80'-0"	24'	30'	122				1								1	31'-0"		1	16'-0"		3/4	11'-0"
86'-6"	26'	32'-6"	134				1								1	32'-0"		1	20'-0"		1	13'-6"
93'-0"	28'	35'	144				1								1	35'-0"		1	21'-0"		1	15'-0"
99'-6"	30'	37'-6"	157				1								1	36'-6"		1	21'-0"		1	14'-6"
106'-0"	32'	40'	167				1								1	39'-0"		1	23'-0"		1	17'-0"
112'-6"	34'	42'-6"	177	↑	↑	↑	1	↑	↑	↑	↑	↑	↑	↑	1 1/8	40'-0"	↑	1 1/8	19'-0"	↑	1	12'-0"
119'-0"	36'	45'	189	5/8	33'-6"	12	1	35'-9"	1	33'-7"	2	5/8	29'-9"	32	1 1/8	42'-6"	28	1 1/8	20'-6"	60	1 1/8	13'-6"

LENGTH OVERALL	B4 No.	B4 Size	B4 Length	B5 No.	B5 Size	B5 Length	B6 No.	B6 Size	B6 Length	B7 No.	B7 Size	B7 Length	B8 No.	B8 Size	B8 Length	B9 No.	B9 Size	B9 Length
54'-0"	32	6	8'-0"	16	6	16'-9"	52	7	13'-6"	26	7	14'-0"	26	7	16'-3"	13	7	20'-0"
60'-6"	↓	↓	9'-6"	↓	3/4	18'-9"	↓	7/8	14'-6"	↓	7/8	14'-6"	↓	7/8	18'-3"	↓	7/8	22'-6"
67'-0"			11'-0"		7/8	20'-9"		7/8	15'-6"		7/8	15'-0"		1	20'-3"		1	25'-0"
73'-6"			12'-6"		1	22'-9"		7/8	17'-0"		7/8	16'-0"		1	22'-3"		1	27'-6"
80'-0"			12'-6"		1	24'-9"		1	19'-0"		1	19'-0"		1	24'-3"		1	30'-0"
86'-6"			15'-0"		1	26'-9"		7/8	19'-6"		7/8	17'-0"		1	26'-3"		1	32'-6"
93'-0"			15'-0"		1	28'-9"		1	21'-0"		1	19'-0"		1	28'-3"		1	35'-0"
99'-6"			17'-0"		1	30'-9"		1	22'-6"		1	21'-6"		1	30'-3"		1	37'-6"
106'-0"			17'-6"		1	32'-9"		1	24'-0"		1	24'-0"		1	32'-3"		1	40'-0"
112'-6"	↑	↑	19'-6"	↑	1 1/8	34'-9"	↑	1	24'-6"	↑	1	22'-6"	↑	1 1/8	34'-3"	↑	1 1/8	42'-6"
119'-0"	32	3/4	21'-0"	16	1 1/8	36'-9"	52	1	26'-6"	26	1	25'-0"	26	1 1/8	36'-3"	13	1 1/8	45'-0"

LENGTH OVERALL	B10 No.	B10 Size	B10 Length	B11 No.	B11 Size	B11 Length	B12 No.	B12 Size	B12 Length	B13 No.	B13 Size	B13 Length	B14 No.	B14 Size	B14 Length	C1 No.	C1 Size	C1 Length	C1 Type	C1 A	C1 B
54'-0"	24	7	14'-6"	12	7	16'-0"	16	6	22'-6"	8	6	20'-0"	16"	6	8'-6"	114	4	7'-6"	T1	7"	1'-5½"
60'-6"	↓	7/8	16'-0"	↓	7/8	17'-6"	↓	3/4	24'-0"	↓	3/4	22'-6"	↓	↓	10'-0"	126	↓	7'-9"	↓	↓	[illegible]
67'-0"		1	17'-6"		1	19'-0"		7/8	26'-0"		7/8	25'-0"			11'-6"	140		7'-9"			[illegible]
73'-6"		1	19'-0"		1	20'-0"		1	28'-0"		1	27'-6"			13'-0"	152		8'-0"			[illegible]
80'-0"		1	20'-6"		1	23'-0"		1	31'-0"		1	30'-0"			13'-0"	166		8'-0"			1'-8"
86'-6"		1	21'-6"		1	22'-6"		1	32'-0"		1	32'-6"			15'-6"	178		8'-3"			1'-8¾"
93'-0"		1	23'-6"		1	25'-0"		1	35'-0"		1	35'-0"			15'-6"	192		8'-3"			1'-9½"
99'-6"		1	25'-0"		1	27'-0"		1	36'-6"		1	37'-6"			17'-6"	204		8'-6"			[illegible]
106'-0"		1	26'-6"		1	28'-0"		1	39'-0"		1	40'-0"			18'-0"	218		8'-6"			1'-11"
112'-6"	↑	1 1/8	27'-6"	↑	1 1/8	28'-6"	↑	1 1/8	40'-6"	↑	1 1/8	42'-6"	↑	↑	20'-0"	230	↑	8'-9"	↑	↑	1'-11¾"
119'-0"	24	1 1/8	29'-0"	12	1 1/8	31'-0"	16	1 1/8	42'-6"	8	1 1/8	45'-0"	16"	3/4	21'-6"	244	12	8'-9"	T1	7"	2'-0½"

LENGTH OVERALL	DIMENSIONS "T"	"H"	"a"	"b"	"c"	"d"	"e"	"f"	LENGTH OVERALL
54'-0"	3½"	11½"	11'-0"	6'-6"	4'-6"	24"	2'-0"	3'-0"	54'-0"
60'-6"	[illegible]	12½"	11'-3"	6'-9"	4'-6"	27"	2'-0"	3'-0"	60'-6"
67'-0"	[illegible]	13¼"	12'-0"	8'-3"	5'-6"	30"	3'-0"	4'-0"	67'-0"
73'-6"	[illegible]	[illegible]	[illegible]	[illegible]	[illegible]	[illegible]	3'-0"	4'-0"	73'-6"
80'-0"	11"	[illegible]	14'-4"	9'-0"	5'-0"	36"	3'-0"	5'-0"	80'-0"
86'-6"	11¾"	16"	14'-1"	10'-0"	5'-6"	39"	4'-0"	5'-0"	86'-6"
93'-0"	12½"	17"	15'-0"	10'-6"	7'-0"	42"	4'-0"	6'-0"	93'-0"
99'-6"	[illegible]	18"	16'-1"	10'-6"	7'-0"	45"	5'-0"	6'-0"	99'-6"
106'-0"	14"	19"	17'-4"	10'-6"	7'-9"	48"	5'-0"	7'-0"	106'-0"
112'-6"	14¾"	20"	17'-4"	9'-3"	6'-0"	51"	5'-0"	7'-0"	112'-6"
119'-0"	15½"	21"	18'-0"	10'-3"	6'-9"	54"	6'-0"	8'-0"	119'-0"

BAR [illegible]
Note: All overall dimensions are out to out.

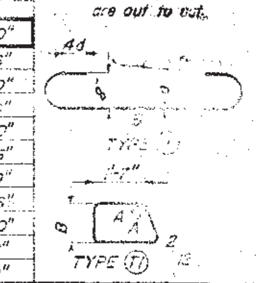

ESTIMATED QUANTITIES

LENGTH OVERALL	TWO ABUTMENTS Class A Concrete Cu. Yds.	Reinforcing Steel Lbs.	Number of Piles	Structural Steel Lbs.	TWO INTERIOR BENTS Class A Concrete Cu. Yds. Constant Quantity	Cu. Yds./Lin. ft. for Columns = "Q"	Reinforcing Steel Lbs. Constant Quantity	Lbs./lin. ft. for 4 Columns = "R"	SLABS & CURBS Number of Piles	Class A Concrete Cu. Yds.	Reinforcing Steel Lbs.	7/8" Bolts	Number of Floor Drains	Structural Steel Lbs.	TOTALS Exclusive of railing & Excavation Class A Concrete Cu. Yds.	Reinforcing Steel Lbs.	Structural Steel Lbs.	Number of Piles
54'-0"	25.8	3330	16	760	[illegible]		[illegible]		16	54.9	14,530	18	4	75				
60'-6"			16	760	17.3	0.412	2250	64.2	16	66.7	14,930		14	165	119.6+(")	20,810+(")	925	32
67'-0"			16	760	17.3	0.412	2250	64.2	16	77.9	18,710		14	170	130.8+(")	24,590+(")	930	32
73'-6"			16	760	22.6	0.412	2330	64.2	20	91.7	21,590		18	210	149.9+(")	27,550+(")	970	36
80'-0"			18	855	[illegible]	0.498	2555	79.8	20	[illegible]	24,915		18	220	163.4+(")	31,170+(")	1,075	38
86'-6"			18	855	23.2	0.498	2735	79.8	20		28,965		20	245	178.2+(")	33,330+(")	1,100	38
93'-0"			18	855	[illegible]	0.593	3155	98.7	[illegible]		[illegible]		20	285	196.[illegible]+(")	[illegible]+(")	1,110	42

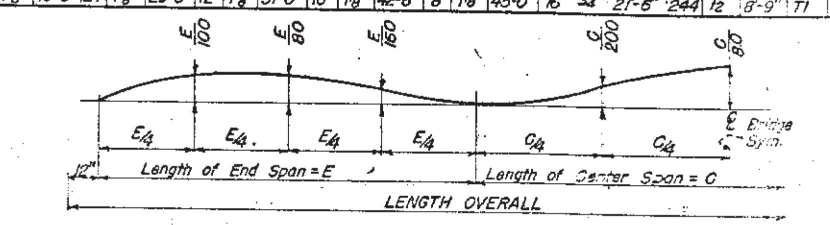

CAMBER DIAGRAM

Camber is calculated for dead load plus plastic flow. Camber is calculated thus using the [illegible] Bridge as an illustration: E = 32' and C = 40', C/80 = 40/80 = 1/2, provide 1/2" camber at [illegible] center span. The values obtained for camber shall be added to the proposed grade [illegible] respective stations to establish the elevations of the top of the [illegible]

SUPERSTRUCTURE DETAIL FOR
54'-0" CONTINUOUS CONCRETE BRIDGE
30'-0" ROADWAY
OVER BR. HAY CREEK SEC. 22-T[illegible]
STA. 248+73.0 TO 249+27.0 F[illegible]
CORSON COUNTY
SOUTH DAKOTA
STR. NO. 16-066-010

1-3 10-5-61 G.H.J. Rev. C.H. [illegible]

Let 2/7/79

STATE OF	PROJECT	SHEET NO.	TOTAL SHEETS
S.D.	NH 0012(150)105	E16	E105

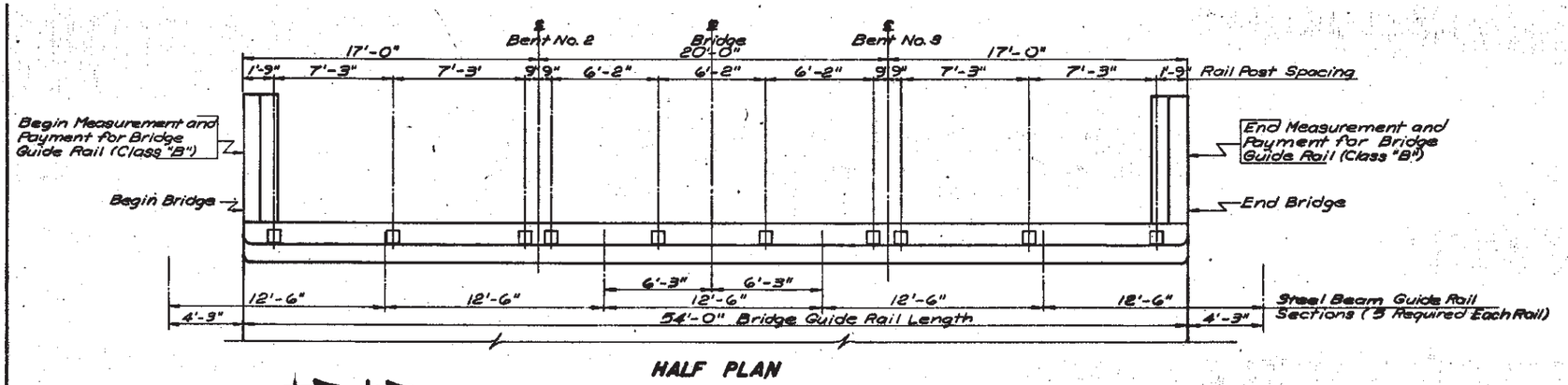

HALF PLAN

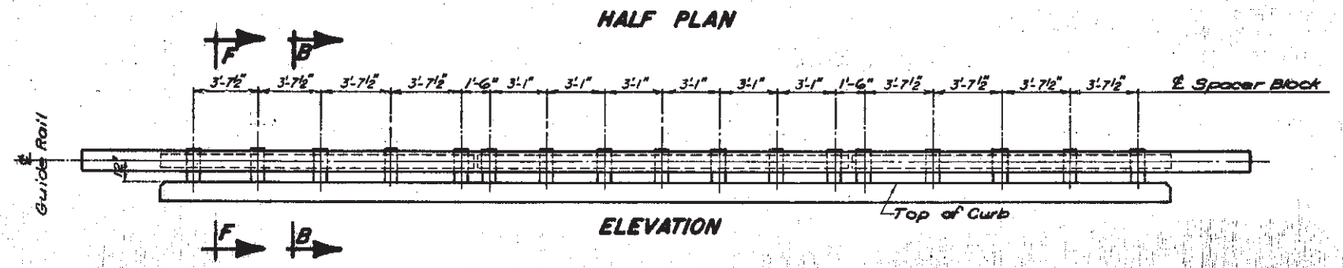

ELEVATION

ORIGINAL CONSTRUCTION PLANS

ESTIMATED QUANTITIES		
ITEM	UNIT	QUANTITY
Bridge Guide Rail Cl. "B" (Design 2)	Lin. Ft.	108.0
Type "B" Rail Splice	Each	4

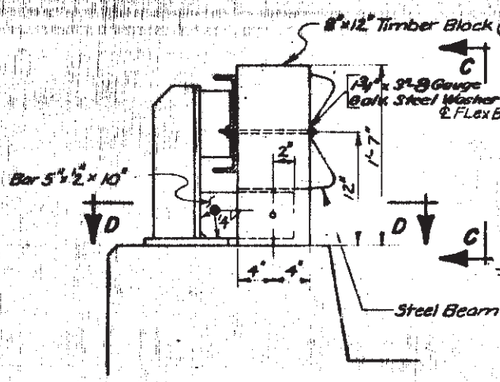

SEC. B-B

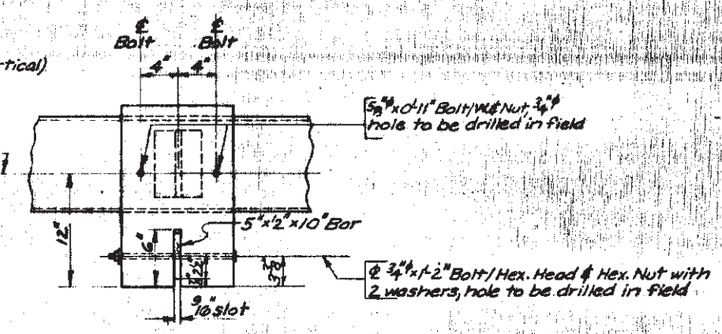

VIEW C-C

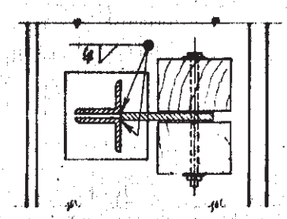

SEC. D-D

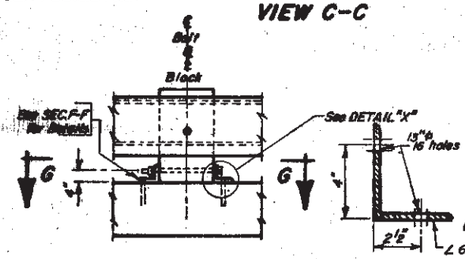

VIEW E-E

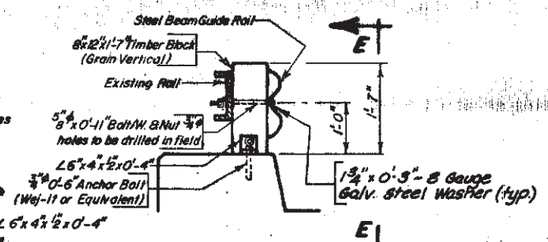

DETAIL "X"

SEC. F-F

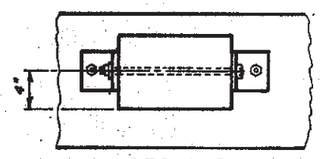

SEC. G-G

NOTE—

At the Contractors option, the method of anchoring the bottoms of the wood posts as shown above in SEC. F-F may be used in lieu of the methods shown in SEC. B-B at all locations, except at the Bents where the in place Rail Posts are spaced at 1'-6" centers. If such substitution is made, it will be d no change in the unit price bid for "Bridge Guide Rail, Class 'B' (Design 2)".

NOTES—

1. All bolts shall be galvanized in accordance with A.S.T.M. Specifications A153.
2. All ½" Bars shall be galvanized in accordance with A.S.T.M. Specifications A123.
3. Bridge Guide Rail is considered as that portion of Rail placed between beginning and end Bridge with pay length being the plan shown quantity. The portions of the Standard 12'-6" steel beam sections extending beyond the Bridge Ends shall be included with and paid for as steel Beam Guide Rail, Class "B" (Slotted Post).
4. Bridge Guide Rail will be paid for at the contract unit price per foot in place, which price shall be payment in full for furnishing all materials, galvanizing specified material, treating timber blocks with Preservative, drilling holes through existing steel rail and drilling through new steel beam guide rail for connecting guide rail to bridge, drilling through ½" Bars and 8"x12" Timber Blocks, Slot in Blocks, welding ½" bars & constructing the guide rail complete as shown on these plans.
5. Field drill bolt holes in Steel Beam Guide Rail, existing Steel Rail, ½" Bars and 8"x12" Timber Blocks, at locations as directed by the ENGINEER.
6. The wood and the preservative treatment of the timber blocks shall be in conformance with sections 630 and 950 respectively, of the S. Dak. Standard Specifications.
7. Steel for 5"x½"x0'-10" bars shall conform to ASTM-A36
8. Bolts shall conform to ASTM-A307.
9. The cost of chipping Timber Blocks to fit Type "B" Splices shall be absorbed in the unit price bid for Bridge Rail (Class "B")
10. After welding the ½" bars to the railposts and base plates, clean the weld affected areas and apply an approved galvanizing paint as directed by the Engineer.
11. Material for the ¾"x0'-6" anchor bolts, nuts, washers and expansion wedges shall be corrosion resistant either by galvanizing or by using stainless steel at the option of the Contractor. The anchor bolts shall be equipped with expansion double-wedge type anchor of a design similar or equivalent to that of the Standard "Wej-It" bolts as manufactured by "Wej-It" Corporation, Atlas Industrial Park, Broomfield, Colorado 80020. Bolts shall be set in concrete in accordance with recommendations of the manufacturer and shall have ultimate tensile and shear strengths of not less than 17,000 pounds when imbedded 4" in 4,000 p.s.i. concrete. The Contractor shall obtain from the manufacturer and submit to the Engineer certified copies of test results indicating that the anchor bolts meet these tensile and shear requirements.
12. The Steel for the 6"x4"x½" Angles shall conform to A.S.T.M.-A36.
13. The 6"x4"x½" Angles shall be galvanized in accordance with ASTM-A123. They may either be galvanized after fabrication or made from galvanized angles and after cutting and drilling, paint the exposed edges with an approved galvanizing paint.
14. The cost of drilling holes in the concrete, furnishing and installing ¾" anchor Bolts with nuts and washers, the 6"x4"x½" angles and the ⅝" bolts with nuts and washers shall be included in the unit price bid for "Bridge Guide Rail, Class 'B' (Design 2)"

BRIDGE STATIONING - STA. 248+73.00 TO STA. 249+27.00

Plans by: Bridge Engineering, S. Dak. Div. Hwys.

S. D. DEPT. OF TRANSPORTATION

DIVISION OF HIGHWAYS (16) OF (17)

STR. NO. 16-066-010 U.S. HWY. 12 CORSON COUNTY

DESIGNED BY	DRAWN BY	CHECKED BY	APPROVED
	W.C.P.	W.C.P.	BRIDGE ENGINEER

STATE OF	PROJECT	SHEET NO.	TOTAL SHEETS
S.D.	NH 0012(150)105	E17	E105

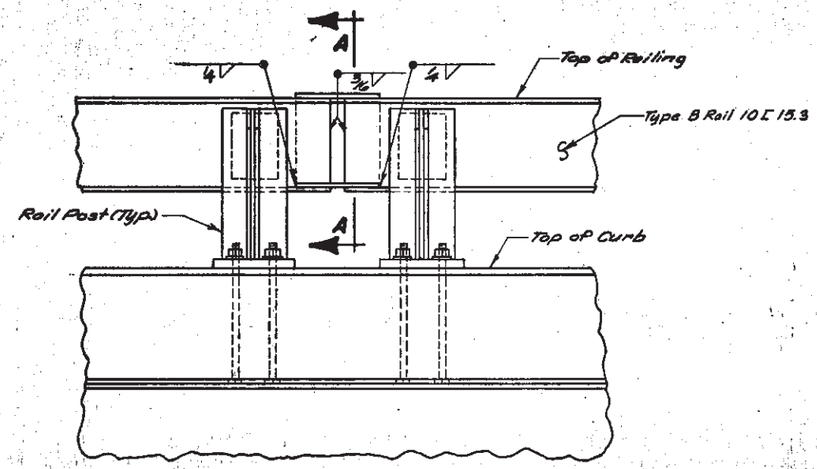

ELEVATION
(Out side)

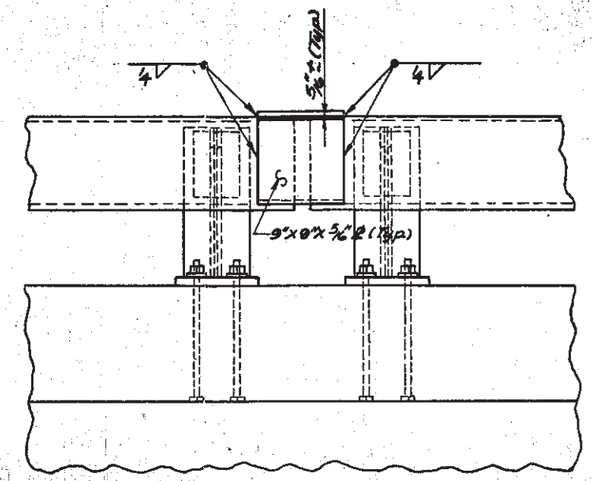

ELEVATION
(Traffic Side)

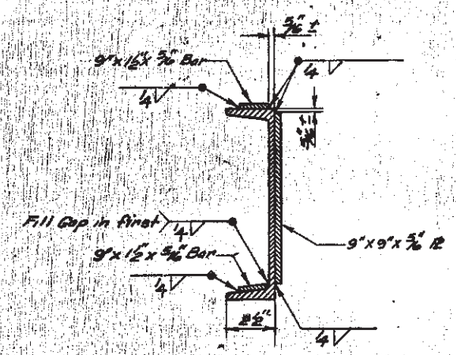

SEC. A-A

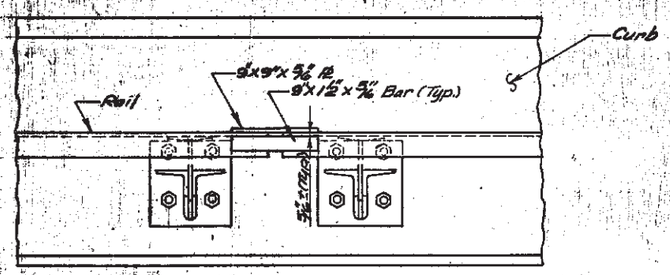

PLAN

NOTE —

4 Splices Required.

GENERAL NOTES:

1. Structural Steel shall conform to A.S.T.M.-A36.
2. The existing rail shall be prepared for welding by removal of all paint, rust, etc. as directed by the Engineer.
3. After welding, the splice material and the existing rail to 1' ± beyond the splice shall be cleaned and given a prime coat of Red Lead Paint (A.A.S.H.T.O. designation M72 Type I) or Red Lead Iron Oxide (A.A.S.H.T.O. designation M72, Type III) followed by two coats of paint to match the existing paint.
4. Payment for Rail Splice shall be the unit price bid per each complete in place and shall be full compensation for furnishing all labor, materials and incidentals necessary to complete the work as shown and noted hereon.

ORIGINAL CONSTRUCTION PLANS

SPLICE FOR TYPE B RAILING

Bridge Stationing - STA. 248+73.00 TO STA. 249+27.00

S. D. DEPT. OF TRANSPORTATION
DIVISION OF HIGHWAYS

17 OF 17

STR. NO. 16-066-010 U.S. HWY. 12 CORSON COUNTY

DESIGNED BY	DRAWN BY	CHECKED BY	APPROVED
G.L.Y.	Ed. L.	G.L.Y. / W.C.P.	BRIDGE ENGINEER

Sheet 21 of 42

STATE OF	PROJECT	SHEET NO.	TOTAL SHEETS
S.D.	NH 0012(150)105	E18	E105

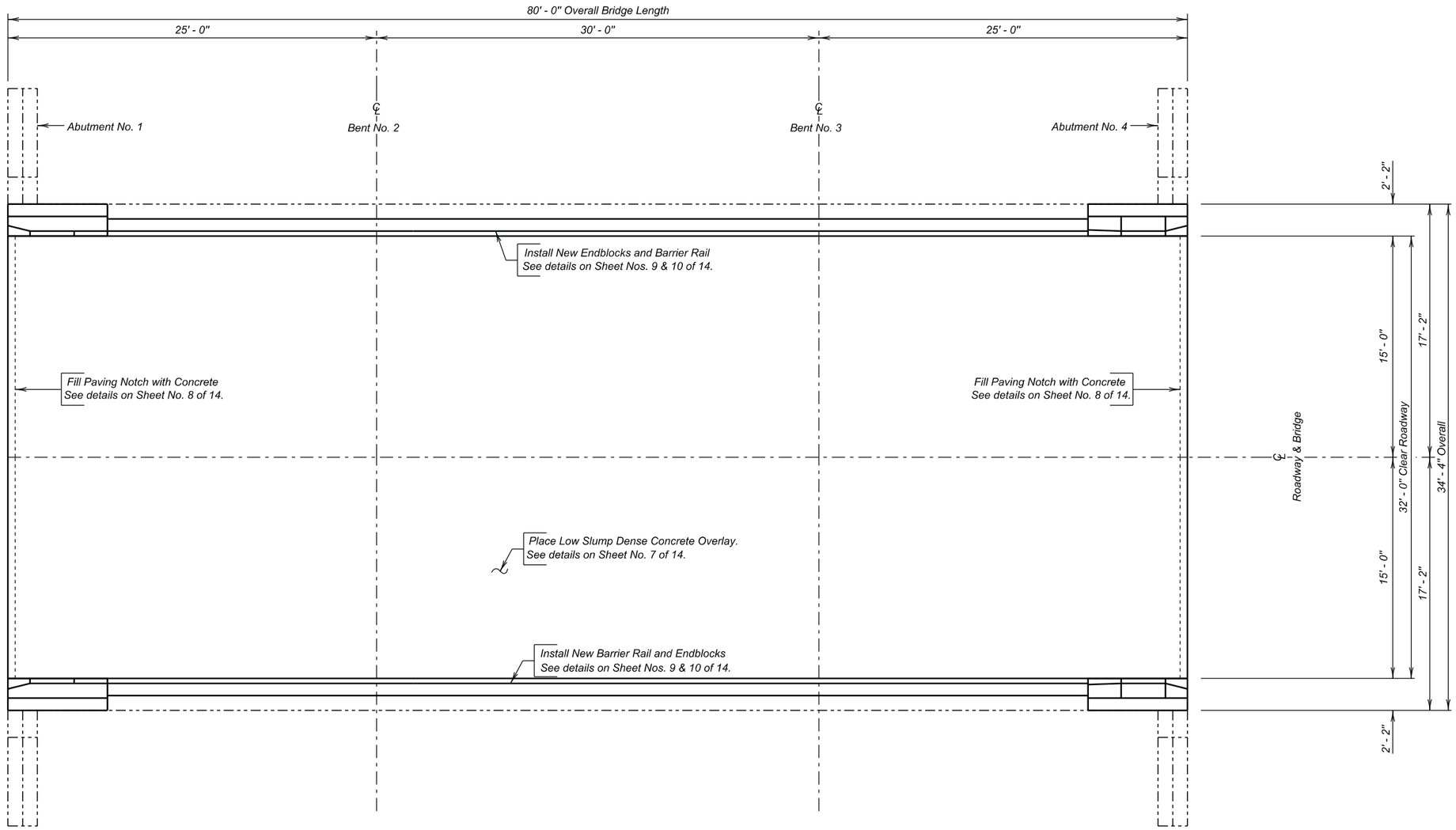

PLAN

INDEX OF BRIDGE SHEETS -

Sheet No. 1 - Layout for Upgrading
Sheet No. 2 - Estimate of Structure Quantities and Notes
Sheet No. 3 - Notes (Continued)
Sheet No. 4 - Notes (Continued)
Sheet No. 5 - Notes (Continued)
Sheet No. 6 - Deck Delamination Details
Sheet No. 7 - Deck Profiles for Low Slump Dense Concrete Overlay
Sheet No. 8 - Paving Notch Reinforcement Details
Sheet No. 9 - End Block and Rail Replacement Layout
Sheet No. 10 - End Block and Rail Replacement Details
Sheet No. 11 - Standard Plate 460.02 & 630.92
Sheet Nos. 12 thru 14 - Original Construction Plans

LAYOUT FOR UPGRADING
FOR
80' - 0" CONTINUOUS CONCRETE BRIDGE

30' - 0" ROADWAY — 0° SKEW
OVER HAY CREEK — SEC. 26-T23N-R18E
STR. NO. 16-072-011 — NH 0012(150)105
PCN 01RQ

CORSON COUNTY
S. D. DEPT. OF TRANSPORTATION
OCTOBER 2013

PLANS BY :
OFFICE OF BRIDGE DESIGN, SOUTH DAKOTA DEPARTMENT OF TRANSPORTATION

DESIGNED BY	CK. DES. BY	DRAFTED BY	
BWS	KH	EJA	Kevin N. Goeden
CORS01RQ	01RQLB01		BRIDGE ENGINEER

ESTIMATE OF STRUCTURE QUANTITIES

ITEM NO.	DESCRIPTION	QUANTITY	UNIT
110E0020	Remove Bridge Railing	160	Ft
460E0070	Class A45, Bridge Repair	11.1	CuYd
460E0200	Special Surface Finish	134.2	SqFt
460E0300	Breakout Structural Concrete	2.8	CuYd
460E0380	Install Dowel in Concrete	132	Each
480E0200	Epoxy Coated Reinforcing Steel	1008	Lb
550E0010	Low Slump Dense Concrete Deck Overlay	19.5	CuYd
550E0100	Concrete Removal Type 1A	263.3	SqYd
550E0105	Concrete Removal Type 2A	65.8	SqYd
550E0110	Concrete Removal Type 1B	26.3	SqYd
550E0120	Concrete Removal Type 1C	13.1	SqYd
550E0130	Concrete Removal Type 1D	13.1	SqYd
550E0140	Concrete Removal Type B	20.0	Ft
550E0200	Class A45 Concrete Fill	3.8	CuYd
550E0500	Finishing and Curing	266.6	SqYd

SPECIFICATIONS

1. Design Specifications: AASHTO Standard Specifications for Highway Bridges 17th Edition using Working Stress Design.

2. Construction Specifications: South Dakota Standard Specifications for Roads and Bridges, 2004 Edition and Required Provisions, Supplemental Specifications and/or Special Provisions as included in the Proposal.

DETAILS AND DIMENSIONS OF EXISTING BRIDGE

All details and dimensions of the existing bridge, contained in these plans, are based on the original construction plans and shop plans and are provided as information only. It is the Contractor's responsibility to inspect and verify the actual field conditions and any necessary as-built dimensions affecting the satisfactory completion of the work required for this project.

SCOPE OF BRIDGE WORK & SEQUENCE OF OPERATIONS

All work on this structure shall be accomplished with the traffic control shown elsewhere in the plans. Alternate sequence of operations may be submitted by the Contractor for approval by the Engineer a minimum of two weeks prior to the pre-construction meeting.

1. Modify the existing bridge rail for the first phase of construction by removing the steel rail and existing end blocks for the first phase of construction.

2. Place a concrete bridge rail on top of the existing curb and place new end blocks to allow for the attachment of thrie beam approach railing for the first phase of construction.

SCOPE OF BRIDGE WORK & SEQUENCE OF OPERATIONS(CONT.)

3. Breakout the paving notch concrete, install dowel bars, and place resteel for the first phase of construction.

4. Accomplish all Concrete Removal 1A, 2A, 1B, 1C, 1D and B and place Class A45 Concrete Fill to the satisfaction of the Engineer for the first phase of construction.

5. Place a Low Slump Dense Concrete Overlay to the elevations shown in the plans on the bridge deck for the first phase of construction.

6. Switch traffic and repeat steps 1 through 5 for the second phase of construction.

GENERAL CONSTRUCTION - BRIDGE

1. All mild reinforcing steel shall conform to ASTM A615, Grade 60.

2. All exposed concrete corners and edges shall be chamfered 3/4" unless noted otherwise in the plans. Match existing chamfer if the existing chamfer differs.

3. Use 2" clear cover on all reinforcing steel except as shown otherwise.

4. The Contractor shall <u>only</u> imprint one year plate on the structure. The year plate shall contain the date the existing bridge was built and shall be located as specified and detailed on Standard Plate No. 460.03.

5. Barrier Curbs and End blocks shall be built normal to the grade.

6. Request for construction joints or resteel splices at points other than those shown, must be submitted to the Engineer for prior approval. If additional splices are approved, no payment will be allowed for the added quantity of reinforcing steel.

7. Surfaces of fresh concrete at construction joints shall be rough floated sufficiently to consolidate the surface. All construction joints shall be cleaned of surface laitance, curing compounds and other foreign materials prior to placing fresh concrete against the joint.

8. Snap ties, if used in the barrier curb formwork, shall be epoxy coated. The epoxy coating shall be inert in concrete and compatible with the coating applied to the new epoxy coated reinforcing steel.

9. The concrete barriers shall be cured in accordance with Section 460.3.N. of the Construction Specifications except that no curing compounds shall be allowed.

REMOVAL OF EXISTING BRIDGE RAIL

Δ 1. The existing rail and rail posts on the bridge shall be completely removed by the Contractor and disposed of in accordance with the Environmental Commitments. If the Contractor elects to salvage the rail and rail posts for his own use, they must be removed from view of the ROW to the satisfaction of the Engineer prior to project completion.

2. The existing rail anchor bolts protruding from the concrete shall be cut off and ground flush with the concrete surface as approved by the Engineer. The exposed ends shall be coated with a zinc-rich galvanizing paint in conformance with ASTM A780.

Δ 3. The bridge railing to be removed consists of the steel rail, wood spacer blocks, thrie beam rail and any hardware attaching the railing to the bridge. Payment limits for this item shall be as shown in the plans. The cost of all labor, tools, materials, and incidentals necessary to cut and remove the steel rail, cut off the anchor bolts, and paint their exposed ends shall be incidental to the contract price per foot for "Remove Bridge Railing".

CONCRETE BREAKOUT

1. The existing curb shall be broken out to the limits shown on the plans. Breakout limits shall be defined with a 3/4" deep sawcut (unless specified otherwise in these plans), where practical, as approved by the Engineer. Reinforcing steel that is exposed and is scheduled for use in the new construction shall be cleaned and straightened to the satisfaction of the Engineer. Care shall be taken not to damage the existing reinforcing steel that is to be reused in the new construction during concrete breakout. Any reinforcing steel that is damaged during concrete breakout shall be replaced or repaired, as approved by the Engineer, by the Contractor at no cost to the Department. The existing reinforcing steel that is to be reused in the new construction and that is exposed during concrete breakout shall be epoxy coated in accordance with the "Epoxy Coating Existing Reinforcing Steel" notes.

2. The existing paving block shall be removed to the limits shown in the plans. The existing bolts in the paving block shall be cut flush with the limits of breakout as detailed in the plans. The paving notch shall then be cleaned by abrasive blasting as approved by the Engineer. Reinforcing steel shall be placed in the paving notch according to the plans. The modified paving notch shall be filled with Low Slump Dense Concrete during the placement of the Bridge Deck Overlay.

ESTIMATE OF STRUCTURE QUANTIES AND NOTES
FOR
80' – 0" CONTINUOUS CONCRETE BRIDGE

Str. No. 16-072-011

APRIL 2013

DESIGNED BY	CK. DES. BY	DRAFTED BY:	
BWS	KH	BWS	Kevin N. Boerden
CORS01RQ	01RQNOTB		BRIDGE ENGINEER

CONCRETE BREAKOUT (CONTINUED)

3. All broken out concrete and discarded reinforcing bars shall be disposed of by the Contractor. Any disposal of discarded material shall be in accordance with the Construction Specifications.

4. During concrete removal operations, no broken out concrete shall be allowed to fall into Hay Creek.

5. The contract unit price per cubic yard for "Breakout Structural Concrete" shall include breaking out concrete, cleaning, straightening existing reinforcing steel, removing existing paving notch bolts and disposal of all broken out material.

EPOXY COATING EXISTING REINFORCING STEEL

1. The existing resteel in the curb that is exposed during concrete breakout, and is to be reused, shall be epoxy coated in the field. This does not include rebar exposed while doing Concrete Removal Type 1A through 1D or Concrete Removal Type B.

2. The reinforcing steel shall be abrasive blasted clean and then epoxy coated. The epoxy coating shall be inert in concrete and compatible with the coating applied to the new epoxy coated reinforcing steel. This coating shall be the epoxy touch up coating material supplied by an epoxy coating manufacturer who supplies coating material for new epoxy coated reinforcing steel. The abrasive blasted reinforcing steel shall be coated promptly and before detrimental oxidation occurs. The coating shall be allowed to cure for 24 hours or as per the manufacturer's recommendations, whichever is more stringent, before concrete can be placed. These bars shall be clean and free from all surface contaminants before coating.

3. The cost of cleaning and epoxy coating the existing reinforcing steel shall be incidental to the various bid items.

BRIDGE DECK OVERLAY

1. The preparation for resurfacing consists of Type 1A Removal on the entire bridge deck and Type 2A, Type 1B, Type 1C, Type 1D and Type B Removal over the deck surface as detailed on the plan sheets. Such removal shall be in conformance with these plans and Section 550 of the Construction Specifications.

2. Type 1A Removal shall consist of removing the existing concrete overlay to a depth of 2 inches. There are some specific areas, identified on the Deck Profile plan sheets that require Type 1A Removal in excess of 2 ¼ inches.

3. Extreme care shall be taken during the Type 1B Removal, Type 1C Removal, Type 1D Removal and Type B Removal to ensure that the existing resteel is not damaged. In the event that resteel damage inadvertently occurs, the Bridge Construction Engineer shall be immediately notified. Any damaged resteel shall be repaired by the Contractor, as approved by the Engineer, at no additional cost to the Department.

BRIDGE DECK OVERLAY (CONTINUED)

4. Type 2A Removal, Type 1B Removal, Type 1C Removal, Type 1D Removal, Type B Removal and Class A45 Concrete Fill may not be encountered and may be omitted from the project as determined by the Engineer.

5. Type 1C Removal, Type 1D Removal and Class A45 Concrete Fill is not anticipated to exceed the plan shown quantities. If the Engineer determines that Type 1C Removal, Type 1D Removal and/or Class A45 Concrete Fill in excess of the plan shown quantity is necessary, payment for the additional quantity shall be in conformance with Section 550.5 of the Construction Specifications.

6. The coarse aggregate in the existing bridge deck is a natural aggregate. The coarse aggregate in the low slump bridge deck overlay shall be limestone in accordance with Section 820 of the Construction Specification.

7. All fine aggregates used in the Portland cement concrete in the "Low Slump Dense Concrete Bridge Deck Overlay" and "Class A45 Concrete Fill" shall conform to Section 800.2.D of the Construction Specification "Alkali Silica Reactivity (ASR) requirements. The type of cement in the concrete mix shall be one of the options as indicated in the table shown in note number 12 shown on Sheet No. 4 of 14. Fine aggregates with a 14-day expansion value of 0.400 and greater shall not be used.

BRIDGE DECK OVERLAY (CONTINUED)

8. Below is a list of known fine aggregate sources and the average corresponding 14-day expansion values:

Source	Location	Expansion Value
Bachman	Winner, SD	0.335
Birdsall S&G	Creston, SD	0.158
Birdsall S&G	Oral, SD	0.131
Birdsall S&G	Wasta, SD	0.170
Bitterman	Delmont, SD	0.314
Concrete Materials	Corson, SD	0.170
Croell	Quinn, SD	0.089
Emme Sand & Gravel	Oneil, NE	0.217
Fischer S&G	Rapid City, SD	0.092
Fischer S&G	Spearfish, SD	0.053
Fuchs	Pickstown, SD	0.275
Higman	Akron, IA	0.198
Higman	Hudson, SD	0.187
Hilde	Madison, SD	0.116
Jensen	Herried, SD	0.276
L.G. Everist	Brookings, SD	0.186
L.G. Everist	Hawarden, IA	0.166
L.G. Everist	Summit, SD	0.141
Morris	Blunt, SD	0.192
Morris – Richards pit	Onida, SD	0.188
Myrl & Roys Paving-Nelson Pit	Sioux Falls, SD	0.156
Northern Concrete Agg.	Rauville, SD	0.113
Northern Concrete Agg.	Luverne, MN	0.124
Opperman – Gunvordahl Pit	Burke, SD	0.337
Opperman – Cahoy Pit	Herrick, SD	0.307
Opperman – Jones Pit	Burke, SD	0.321
Opperman – Randall Pit	Pickstown, SD	0.239
Thorpe Pit	Britton, SD	0.098
Wagner Building Supplies	Wagner, SD	0.241
Wasta Sand & Gravel	Wasta, SD	0.159

NOTES (CONTINUED)
FOR
80' – 0" CONTINUOUS CONCRETE BRIDGE

Str. No. 16-072-011

APRIL 2013

DESIGNED BY	CK. DES. BY	DRAFTED BY:	
BWS	KH	BWS	Kevin N. Gordon
CORS01RQ	01RQNOTb		BRIDGE ENGINEER

BRIDGE DECK OVERLAY (CONTINUED)

9. The Department will use the running average of the last three known expansion test results or less for determining acceptability of source and the required Type of cement. These expansion results are reported table shown in note number 8. Additional testing, when requested by the Contractor, will be performed by the Department at the Contractor's expense.

10. The values listed in the table shown in note number 8 are intended for use in bidding. If a previously listed pit by SDDOT with acceptable test values (less than 0.250) is discovered after letting to require Type V cement or more lithium (greater than 0.250) the Department will accept financial responsibility for the change in materials.

11. When more than one source of fine aggregates is blended to meet the gradation specifications, the highest expansion value of either sand will be used for determining acceptability and type of cement and or fly ash and or lithium required.

12. Concrete used in the Low Slump Bridge Deck Overlay shall meet the requirements of Section 550 of the Construction Specification. Class A45 Concrete Fill shall meet the requirements of Section 460 of the Construction Specification. In addition both concretes shall have 20% to 25% of the cement replaced with Class F Modified Fly Ash in accordance with Section 605 of the Construction Specification and/or lithium nitrate (30% solution by weight) added to the concrete mix at the following rates.

Course Aggregate	Fine Aggregate	Cement Type	Fly Ash	Lithium Nitrate
Limestone or Granite	< 0.250%	Type I or II	Class F Modified	-----
		Type I or II	-----	1.5 gallon/cubic yard
Limestone or Granite	>0.250%	Type V	Class F Modified	-----
		Type I or II	-----	3.0 gallon/cubic yard
		Type I or II	Class F Modified	1.5 gallon/cubic yard
Quartzite	-----	Type V	Class F Modified	-----
		Type I or II	-----	3.0 gallon/cubic yard
		Type I or II	Class F Modified	1.5 gallon/cubic yard

The Contractor shall use one of these options, but the Contractor may choose which option. All material, labor, equipment, and incidental costs shall be included in the contract unit price for “Low Slump Dense Concrete Bridge Deck Overlay” or “Class A45 Concrete Fill”.

13. Grout for bonding new concrete to old concrete shall meet the requirements of Section 550 of the Construction Specification. In addition the grout mix shall contain 1 1/2 gallons of Lithium per cubic yard or 20% to 25% of the cement replaced with fly ash.

BRIDGE DECK OVERLAY (CONTINUED)

14. Suppliers of Lithium are listed below:

    BASF Admixtures, Inc.
    23700 Chagrin Boulevard
    Cleveland, Ohio 44122-5554
    1-800-628-9990
    website: www.basf-admixtures.com

    FMC Corporation Lithium
    Seven LakePointe Plaza
    2801 Yorkmont Road, Suite 300
    Charlotte, North Carolina 28208
    1-704-868-5300
    website: www.fmclithium.com

    Grace Construction Products
    62 Whitmore Ave.
    Cambridge MA
    1-877-423-6491
    Website: www.graceconstruction.com

15. The bridge deck shall be overlayed with a minimum thickness of 2” Low Slump Dense Concrete.

16. It will be necessary for the Contractor to shape the surface of the Low Slump Dense Concrete Overlay within one foot of the curb as detailed in the plans to insure that water drains to the floor drains or off the ends of the bridge.

17. No traffic will be allowed to operate on the scarified portion of the bridge deck. If it appears that the entire Low Slump Dense Concrete Overlay can not be completed prior to winter, the Type 1A, 1B, 1C, 1D and Type B removal shall not be done until work resumes in the spring. In the event that scarification has been started and due to unforeseen circumstances it becomes impossible to complete the placement of the Low Slump Dense Concrete Overlay on the entire surface of the structure prior to winter, the Office of Bridge Design shall be notified. Recommendations for handling winter traffic will then be made. These recommendations may include, but are not limited to, filling extra depth removal areas with Class A45 Concrete, placing an asphalt overlay on the uncompleted area so that the entire roadway width may be opened to traffic, removal of the asphalt overlay when work is resumed and scarifying an additional 1/4” of depth on the bridge deck. The cost of this work, including asphalt overlay, scarification, Class A45 Concrete, extra Low Slump Dense Concrete, and all other items incidental to this work, shall be at the expense of the Contractor.

INSTALLING DOWELS IN CONCRETE

1. Holes drilled in the existing concrete shall be true and normal or as shown in the plans. Drilling holes using a core drill shall not be allowed. Care shall be taken not to damage the existing reinforcing steel. It is likely that some of the existing reinforcing steel shown in the original construction plans may have been placed out of position during original construction. Therefore, prior to the start of drilling any holes in the concrete, an effort will be made by Department forces to mark on the concrete surface where practical any locations of the in-place reinforcing steel. In spite of this precaution, the Contractor can still expect to encounter and have to drill through reinforcing steel or shift the dowel spacing as approved by the Engineer to miss the existing reinforcing steel. If the Contractor shifts the dowel spacing, the unused drill holes shall be completely filled with the epoxy resin specified in note number 2 under “Installing Dowels in Concrete” as approved by the Engineer.

2. The epoxy resin mixture shall be of a type for bonding steel to hardened concrete and shall conform to AASHTO M235 Type IV, (Equivalent to ASTM C881, Type IV). Grade 1, 2 or 3 may be used for vertical dowels.

3. The diameter of the drilled holes shall not be less than 1/8 inch greater, nor more than 3/8 inch greater than the diameter of the dowels or as per the Manufacturer’s recommendations. The drilled holes shall be blown out with compressed air using a device that will reach the back of the hole to ensure that all debris or loose material has been removed prior to epoxy injection.

4. Mix epoxy resin as recommended by the Manufacturer and apply by an injection method as approved by the Engineer. Beginning at the back of the drilled holes, fill the holes 1/3 to 1/2 full of epoxy, or as recommended by the Manufacturer, prior to insertion of the steel bar. Rotate the steel bar during installation to eliminate voids and ensure complete bonding of the bar. Insertion of the bars by the dipping or painting method will not be allowed.

5. No loads shall be applied to the epoxy grouted dowel bars until the epoxy resin has had sufficient time to cure as specified by the epoxy resin manufacturer.

6. Dowel bars shall be deformed bars conforming to ASTM A615 Grade 60.

7. The cost of epoxy resin, dowels, installation and other incidental items shall be incidental to the contract unit price per each for “Install Dowel in Concrete”.

NOTES (CONTINUED)
FOR
80’ – 0” CONTINUOUS CONCRETE BRIDGE

Str. No. 16-072-011

APRIL 2013

DESIGNED BY	CK. DES. BY	DRAFTED BY:	
BWS	KH	BWS	Kevin N Boeder
CORS01RQ	01RQNOTb		BRIDGE ENGINEER

SURFACE FINISH

All surfaces of the new concrete barrier curb in the area of the barrier reconstruction and all visible surfaces of the newly constructed endblocks shall be given a Class B Commercial Texture Finish. The existing curb surface facing traffic between the new barrier and the bridge deck shall be given a Special Surface Finish. Both Surface Finishes shall be in accordance with Section 460.M. of the Construction Specifications. The color of both the Commercial and Special Surface Finishes shall match each other and shall closely simulate the color of the original concrete.

The concrete surfaces requiring the application of the Commercial Texture Finish shall be prepared in accordance with the manufacturer's recommendations. The Contractor shall submit a product data sheet, or an approved equal, documenting all pertinent information with regard to preparation of the concrete surfaces, materials and equipment required, mixing requirements, and application procedures to the Engineer in advance of the application of the Commercial Texture Finish for review and approval.

For informational purposes the amount of surface area requiring the Class B commercial texture finish is 391 square feet for Phase 1 and 391 square feet for Phase 2.

Any damage to the commercial texture finish or special surface finish during the construction including abrasion from traffic due to the traffic control shall be repaired by the Contractor, as approved by the Engineer, at no expense to the Department.

The cost of the commercial texture finish shall be incidental to the contract price per cubic yard for "Class A45 Concrete, Bridge Repair". This payment shall be full compensation for furnishing all materials, labor, tools and equipment necessary or incidental to the application of this finish. All costs associated with the application of the special surface finish to the existing curb face, including all materials, labor, tools and equipment shall be incidental to the contract price per square feet for "Special Surface Finish".

NOTES (CONTINUED)
FOR
80' – 0" CONTINUOUS CONCRETE BRIDGE

Str. No. 16-072-011

APRIL 2013

DESIGNED BY	CK. DES. BY	DRAFTED BY:	
BWS	KH	BWS	Kevin N. Jordan
CORS01RQ	01RQNOTb		BRIDGE ENGINEER

STATE OF	PROJECT	SHEET NO.	TOTAL SHEETS
S.D.	NH 0012(150)105	E23	E105

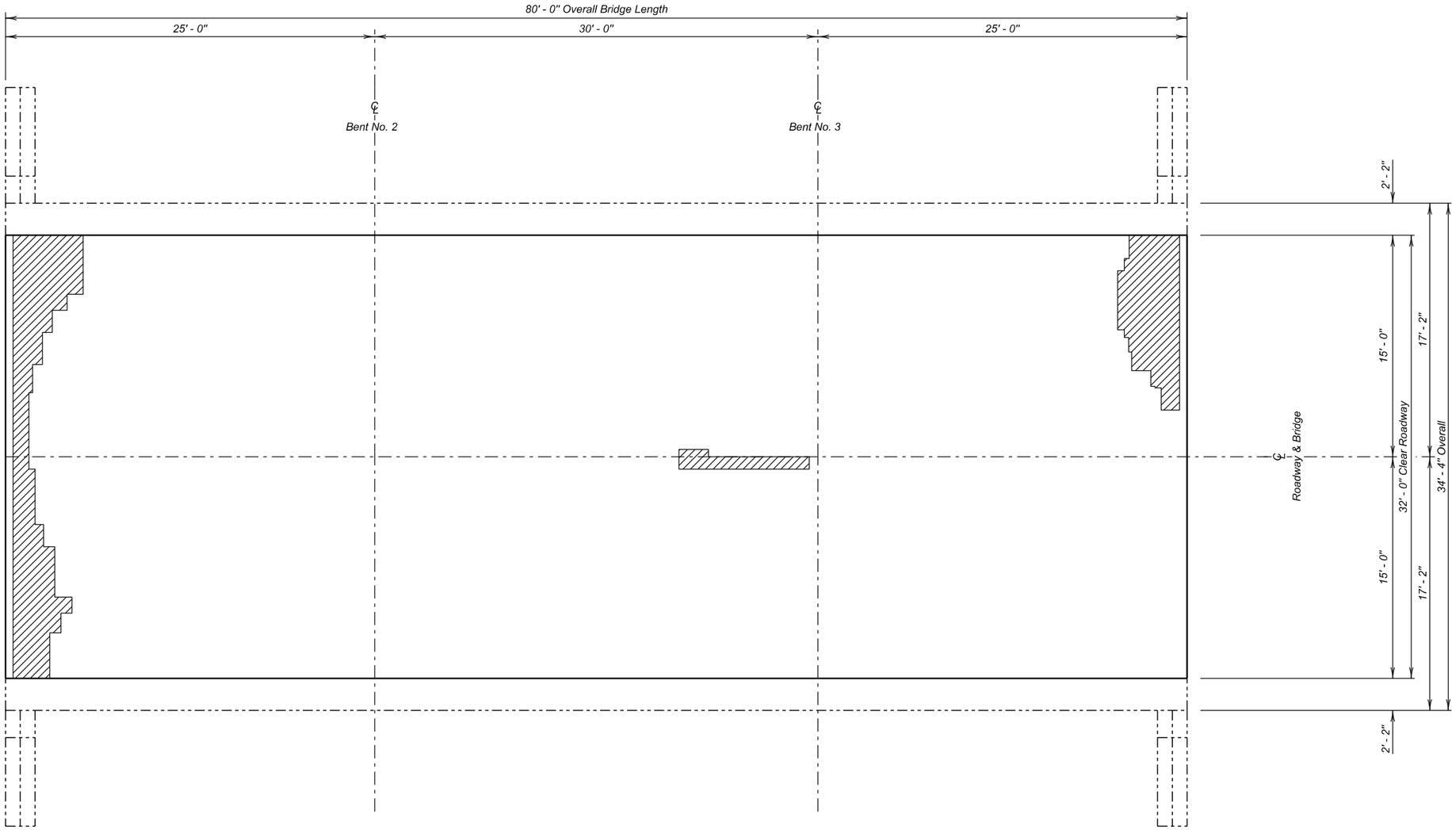

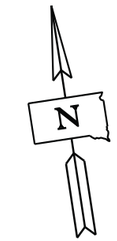

DECK DELAMINATION DETAILS

FOR

80' - 0" CONTINUOUS CONCRETE BRIDGE

30' - 0" ROADWAY — 0° SKEW

OVER HAY CREEK — SEC. 26-T23N-R18E

STR. NO. 16-072-011 — NH 0012(150)105

CORSON COUNTY

S. D. DEPT. OF TRANSPORTATION

OCTOBER 2013

6 OF 14

LEGEND -

Shaded area indicate approximate location of unsound concrete requiring Concrete Removal Type 1B

DESIGNED BY	CK. DES. BY	DRAFTED BY	
BWS	KH	JRK	Kevin N. Goeden
CORS01RQ	01RQLB06		BRIDGE ENGINEER

STATE OF	PROJECT	SHEET NO.	TOTAL SHEETS
S.D.	NH 0012(150)105	E24	E105

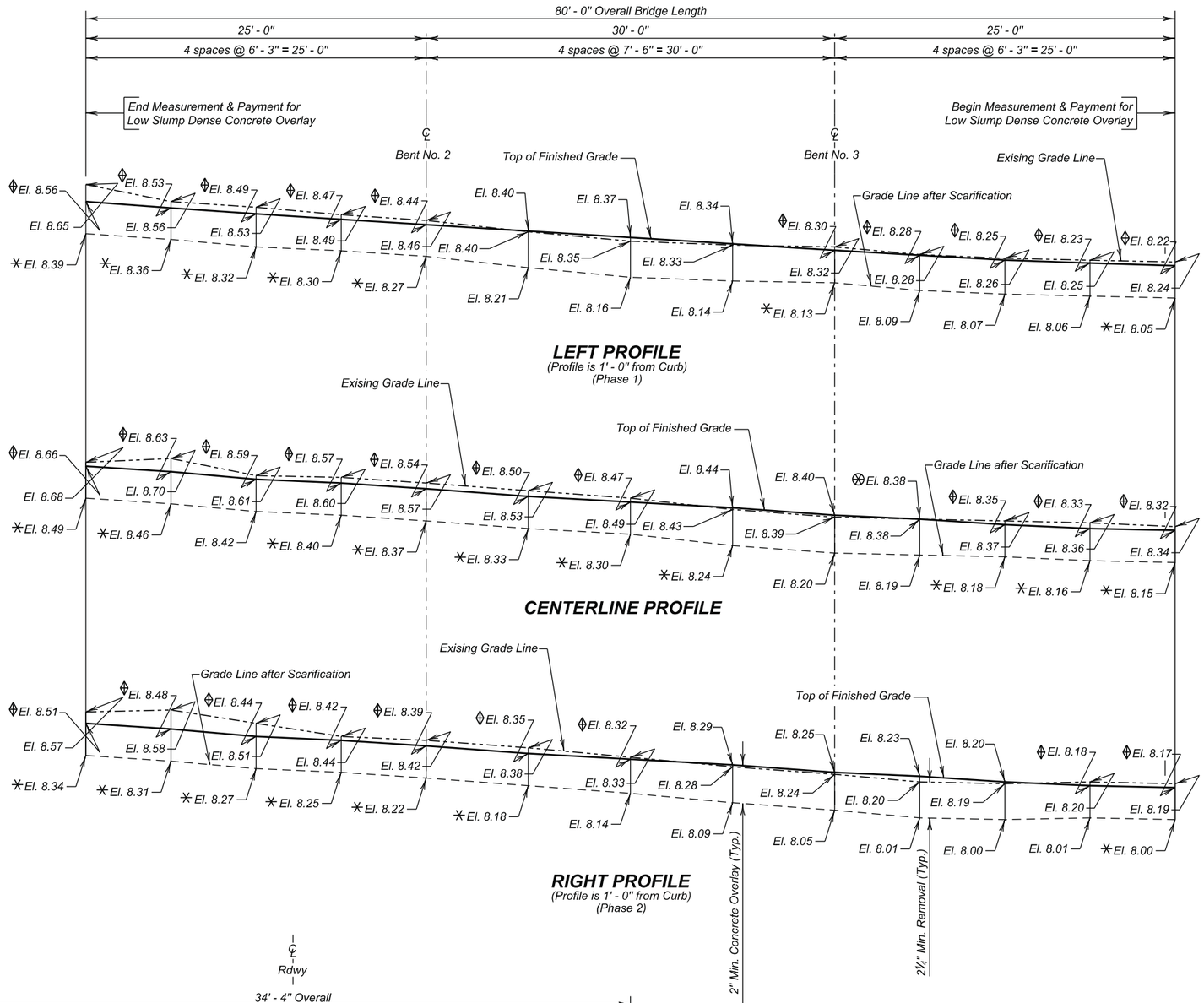

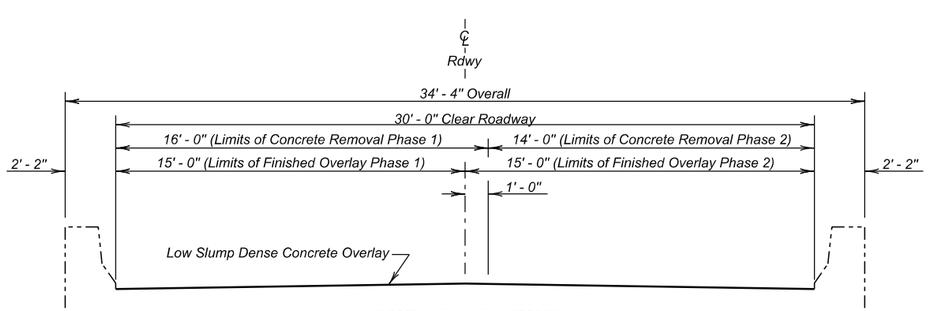

TYPICAL SECTION

NOTE :

Add 2420.00 to all elevations shown on profiles.

✳ Scarify in excess of 2¼" in these areas.

⊗ Existing Elevation is the same as the Finished Surface Elevation.

⟐ Existing Elevation is higher than the Finished Surface Elevation.

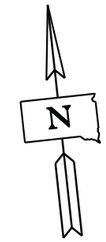

Benchmark Description:

CP 13 345+24.67 169.68 R, Rebar at Grading Project
Elevation 2601.2

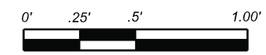

VERTICAL SCALE

ESTIMATED QUANTITIES

ITEM	UNIT	QUANTITY Phase I	QUANTITY Phase 2
Low Slump Dense Concrete Deck Overlay	Cu. Yd.	9.7	9.8
Concrete Removal Type 1A	Sq. Yd.	140.4	122.9
Concrete Removal Type 2A	Sq. Yd.	35.1	30.7
Concrete Removal Type 1B	Sq. Yd.	14.0	12.3
Concrete Removal Type 1C	Sq. Yd.	7.0	6.1
Concrete Removal Type 1D	Sq. Yd.	7.0	6.1
Concrete Removal Type B	Ft.	10.0	10.0
Class A45 Concrete Fill	Cu. Yd.	2.0	1.8
Finishing and Curing	Sq. Yd.	133.3	133.3

DECK PROFILES FOR LOW SLUMP DENSE CONCRETE OVERLAY
FOR

80' - 0" CONTINUOUS CONCRETE BRIDGE

30' - 0" ROADWAY — 0° SKEW
OVER HAY CREEK — SEC. 26-T23N-R18E
STR. NO. 16-072-011 — NH 0012(150)105

CORSON COUNTY
S. D. DEPT. OF TRANSPORTATION
OCTOBER 2013

DESIGNED BY	CK. DES. BY	DRAFTED BY	
BWS	KH	KR	Kevin N. Goeden
CORS01RQ	01RQKB07		BRIDGE ENGINEER

STATE OF	PROJECT	SHEET NO.	TOTAL SHEETS
S.D.	P 0281(93)85	E25	E105

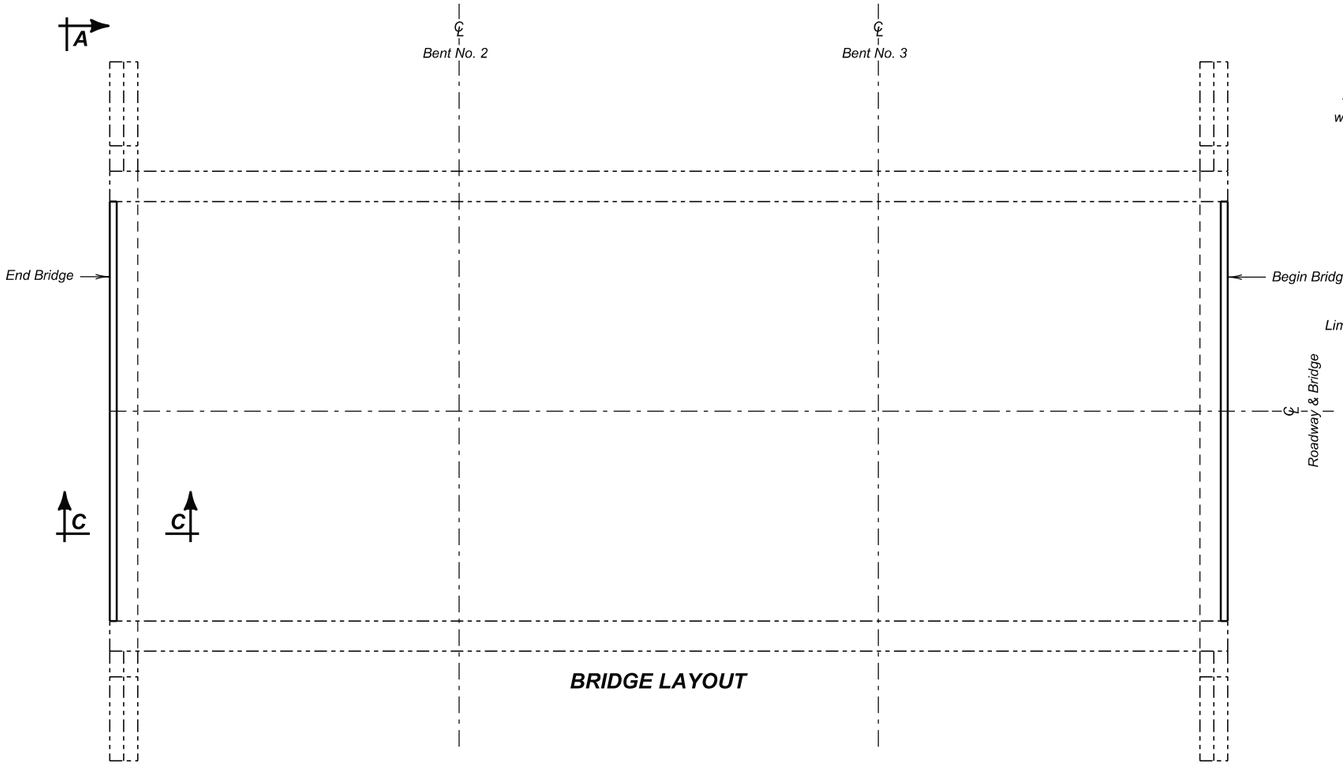

BRIDGE LAYOUT

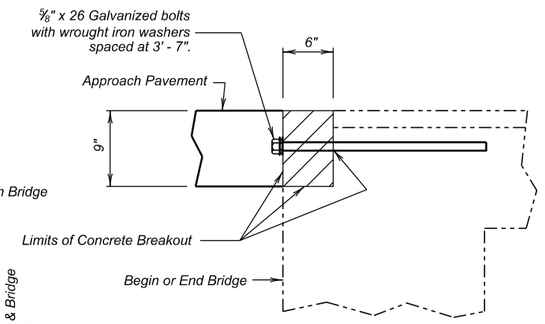

SECTION C - C

Existing Paving Block Removal

REINFORCING SCHEDULE

(For Both Ends of Bridge)

	Mk.	No.	Size	Length	Type
PHASE I	Δ z1	8	5	2' - 6"	17A
	d1	4	5	6' - 9"	Str.
PHASE 2	Δ z1	8	5	2' - 6"	17A
	d1	4	5	6' - 9"	Str.

Bending Details

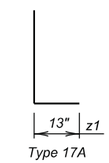

Type 17A

NOTES:

All Dimensions are out to out of bars.

All Bars to be Epoxy Coated.

Δ Dowels

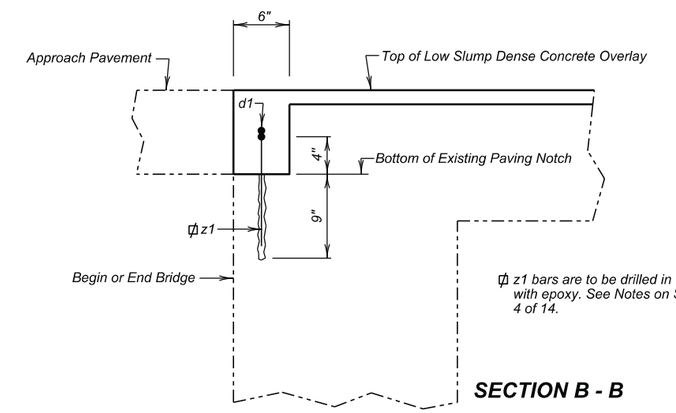

z1 bars are to be drilled in & grouted with epoxy. See Notes on Sheet No. 4 of 14.

SECTION B - B

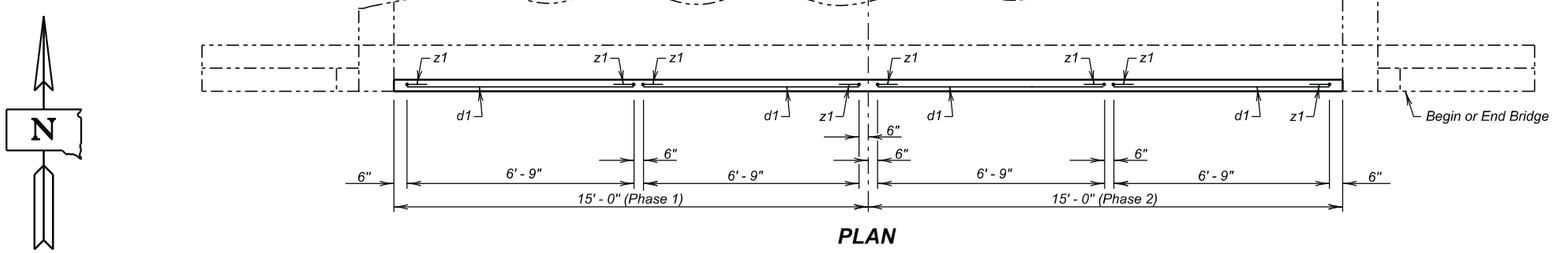

PLAN

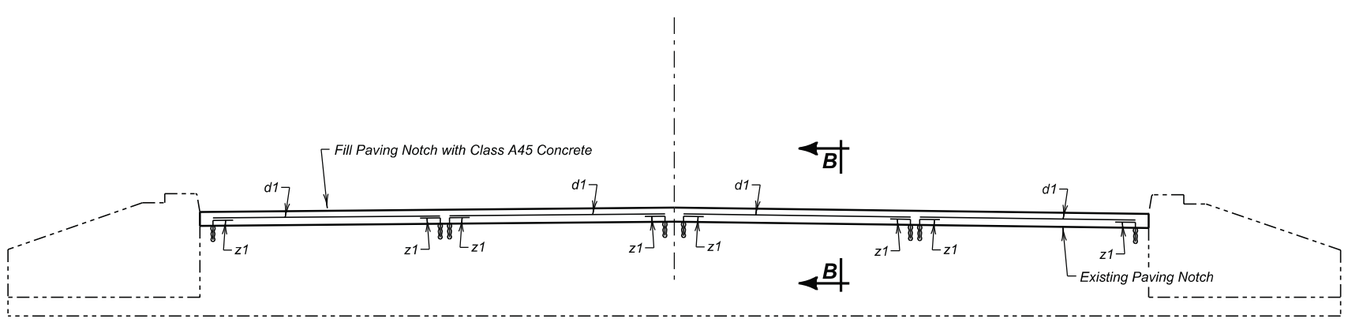

VIEW A - A

ESTIMATED QUANTITIES

ITEM	UNIT	QUANTITY Phase I	QUANTITY Phase 2
Breakout Structural Concrete	Cu. Yd.	0.4	0.4
Install Dowel in Concrete	Each	8	8
✳ Epoxy Coated Reinforcing Steel	Lb	28	28

✳ Does not include the following quantities for z1 bars as these are paid for in the bid item "Install Dowel in Concrete".

PHASE I	PHASE 2
22 Lb.	22 Lb.

PAVING NOTCH REINFORCEMENT

FOR

80' - 0" CONTINUOUS CONCRETE BRIDGE

30' - 0" ROADWAY — 0° SKEW

OVER HAY CREEK — SEC. 26-T23N-R18E

STR. NO. 16-072-011 — NH 0012(150)105

CORSON COUNTY

S. D. DEPT. OF TRANSPORTATION

OCTOBER 2013

DESIGNED BY	CK. DES. BY	DRAFTED BY	
BWS	KH	KR	Kevin N. Boeden
CORS01RQ	01RQLC08		BRIDGE ENGINEER

△ Revised 11-06-14 BWS

STATE OF	PROJECT	SHEET NO.	TOTAL SHEETS
S.D.	NH 0012(150)105	E26	E105

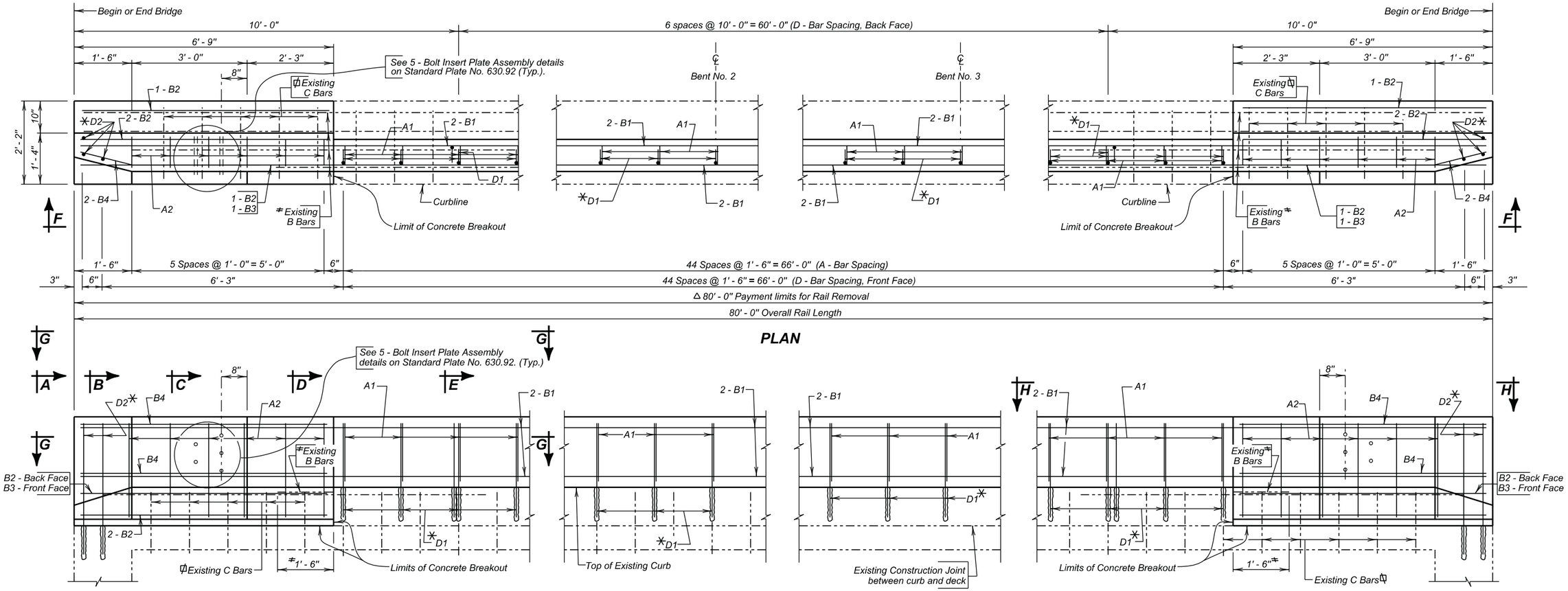

PLAN

VIEW F - F

Bend Existing Bars where necessary to maintain 2" clear cover.

D1 and D2 are to be drilled in and grouted with epoxy.

Extend existing B bars into new section (1' - 6").

NOTES -

1. For location of View and Sections, see Sheet No. 9 of 14.
2. If existing resteel is struck while drilling holes for Dowels the spacing can be shifted 2" longitudinally, 1" transversly or as approved by the Engineer to miss existing resteel.

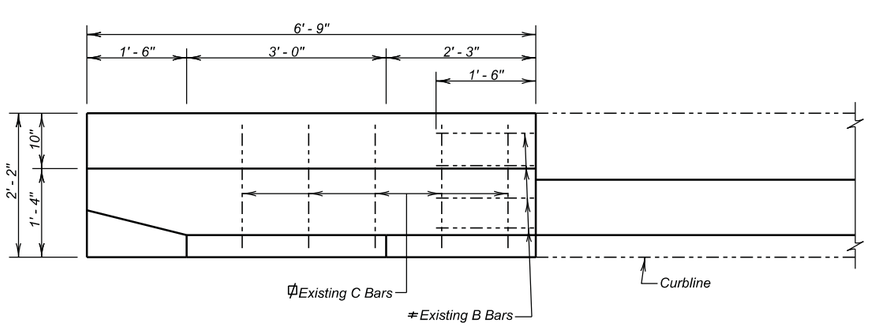

VIEW G - G
(New reinforcing steel not shown)

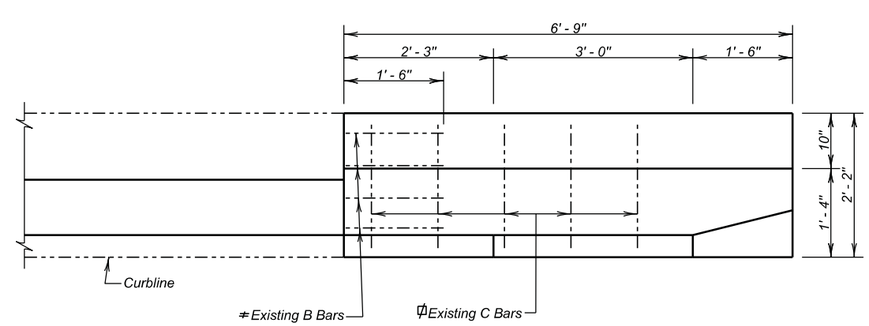

VIEW H - H
(New reinforcing steel not shown) (Off End shown)

END BLOCK MODIFICATION AND RAIL REPLACEMENT LAYOUT

FOR

80' - 0" CONTINUOUS CONCRETE BRIDGE

30' - 0" ROADWAY — 0° SKEW

OVER HAY CREEK — SEC. 26-T23N-R18E

STR. NO. 16-072-011 — NH 0012(150)105

CORSON COUNTY

S. D. DEPT. OF TRANSPORTATION

OCTOBER 2013

DESIGNED BY	CK. DES. BY	DRAFTED BY	
BWS	KH	KR	Kevin N. Boeden
CORS01RQ	01RQRB09		BRIDGE ENGINEER

STATE OF	PROJECT	SHEET NO.	TOTAL SHEETS
S.D.	NH 0012(150)105	E27	E105

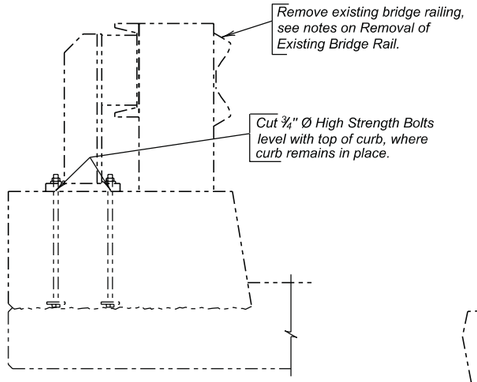

EXISTING CURB & RAIL

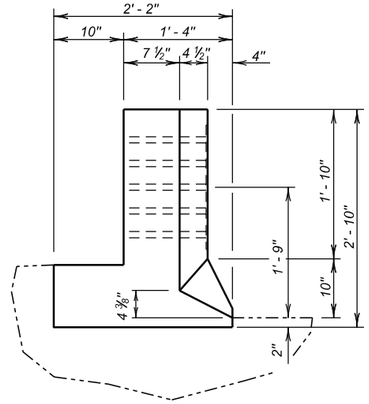

VIEW A - A

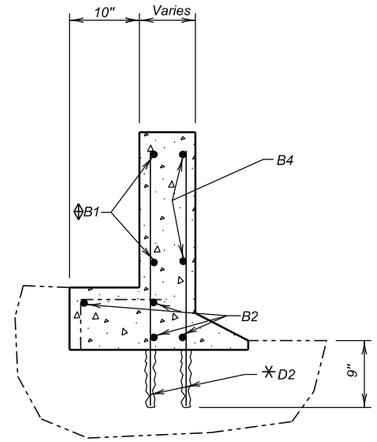

SECTION B - B

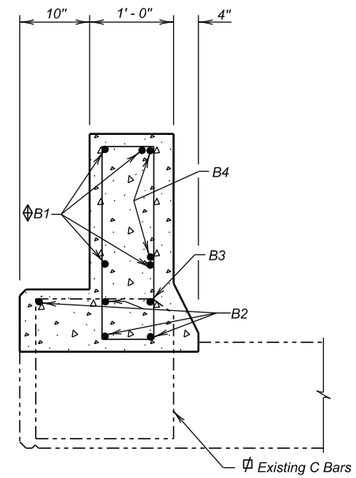

SECTION C - C

(5-Bolt Insert Assembly Not Shown)

REINFORCING SCHEDULE

	Mk.	No.	Size	Length	Type
Phase 1	A1	45	4	4' - 11"	T2
	A2	12	4	7' - 2"	T2
	⌖ B1	8	4	40' - 6"	Str.
	B2	8	4	6' - 5"	Str.
	B3	2	4	5' - 3"	Str.
	B4	4	4	4' - 10"	19A
	△ D1	52	6	2' - 6"	1A
	△ D2	6	6	3' - 5"	Str.
Phase 2	A1	45	4	4' - 11"	T2
	A2	12	4	7' - 2"	T2
	⌖ B1	8	4	40' - 6"	Str.
	B2	8	4	6' - 5"	Str.
	B3	2	4	5' - 3"	Str.
	B4	4	4	4' - 10"	19A
	△ D1	52	6	2' - 6"	1A
	△ D2	6	6	3' - 5"	Str.

Bending Details

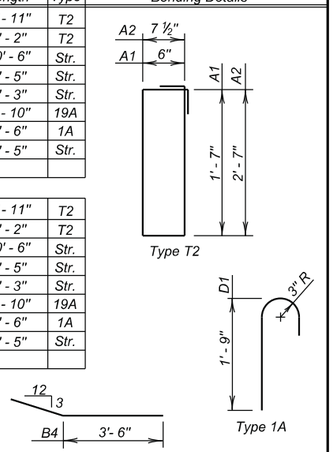

NOTES :
⌖ Min. Lap = 1' - 3"
△ Dowels
All bars are epoxy coated.
All dimensions are out to out of bars.

ESTIMATED QUANTITIES

ITEM	UNIT	QUANTITY PHASE I	QUANTITY PHASE 2
Remove Bridge Railing	Ft.	80	80
Class A45 Concrete, Bridge Repair	Cu.Yd.	5.6	5.6
Special Surface Finish	Sq. Ft.	67.1	67.1
Breakout Structural Concrete	Cu.Yd.	1.0	1.0
Install Dowel in Concrete	Each	58	58
★Epoxy Coated Reinforcing Steel	Lb.	476	476

★ Does not include the following quantities for D1 & D2 bars as these are paid for in the Bid Item "Install Dowel in Concrete".

PHASE I	PHASE 2
226.1 Lb.	226.1 Lb.

Φ Bend existing C bars where necessary to maintain 2" clear cover.

✳ D1 and D2 Dowels are to be drilled in and grouted with epoxy.

⌖ Min. Lap = 1' - 3"

NOTES:

Use this sheet in conjunction with Sheet No. 5 of 16.

If existing steel is struck while drilling holes for D1 or D2 dowels, the spacing can be shifted 2" longitudinally, 1" transversely, or as approved by the Engineer to miss existing steel.

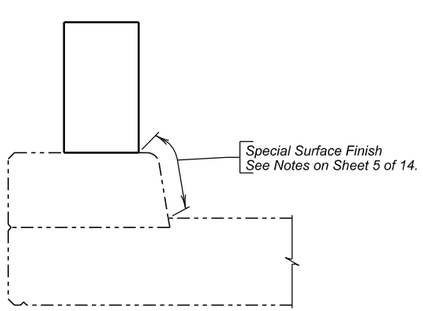

SPECIAL SURFACE FINISH

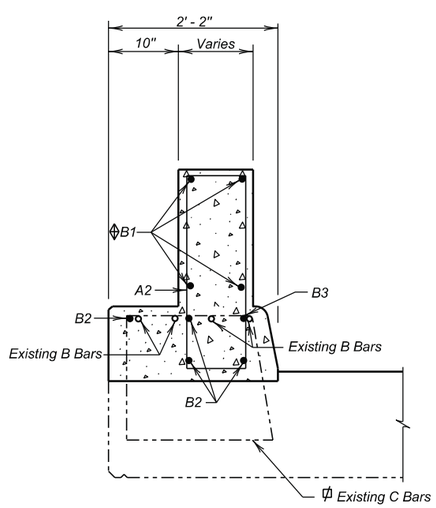

SECTION D - D

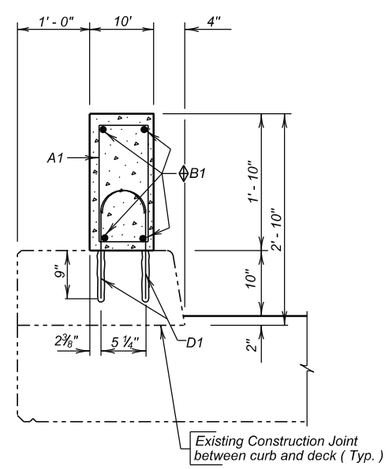

SECTION E - E

END BLOCK MODIFICATION AND RAIL REPLACEMENT DETAILS

FOR

80' - 0" CONTINUOUS CONCRETE BRIDGE

30' - 0" ROADWAY — 0° SKEW

OVER HAY CREEK — SEC. 26-T23N-R18E

STR. NO. 16-072-011 — NH 0012(150)105

CORSON COUNTY

S. D. DEPT. OF TRANSPORTATION

OCTOBER 2013

DESIGNED BY	CK. DES. BY	DRAFTED BY	
BWS	KH	KR	Kevin N. Boeden
CORS01RQ	01RQRB10		BRIDGE ENGINEER

YEAR PLATE DETAILS FOR ORIGINAL CONSTRUCTION

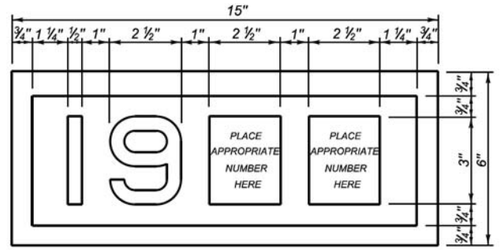

YEAR PLATE DETAILS FOR NEW CONSTRUCTION

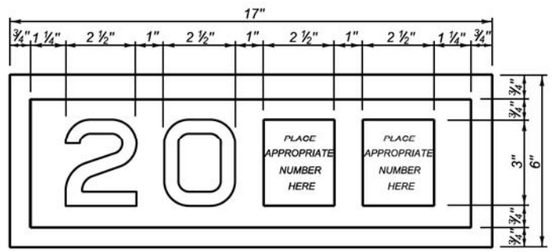

GENERAL NOTES:

1. Year plates of the general dimensions shown shall be constructed on all box culverts and bridges. The year plates shall be constructed in reverse and attached to the forms in such a manner that the finished imprint in the concrete does not exceed one-half (½) inch in depth.
2. Year plates shall be located on structure(s) as follows:
   a. On cast-in-place box culverts the year plates shall be four and one - half (4 ½) inches below the top of the upstream parapet wall and centered laterally on the upstream face. On precast box culverts the year plate shall be centered laterally on the upstream face of the top slab. Where an extended interior wall interferes with this location, the year plate shall be centered in an adjacent barrel.
   b. On bridges with six (6) inch curbs or "Jersey" shaped barriers with no endblocks, the year plate shall be centered vertically on the curb face approximately six (6) inches from the end of the bridge, or as designated by the Engineer. On bridges with "Jersey" shaped barrier endblocks, the year plate shall be centered on the upper sloped portion of the barrier approximately 5'- 6" from the end of the bridge, or as designated by the Engineer. There shall be one year plate at each end of the bridge on opposite sides.
   c. When the plans specify that both the original date of construction and the date of reconstruction are to be shown, one date shall be placed as listed above and the other located adjacent to it. Both year plates shall be shown at each end of the bridge on opposite sides.
3. There will be no separate measurement or payment made for year plates on box culverts and bridges. All costs for this work shall be incidental to other contract items.

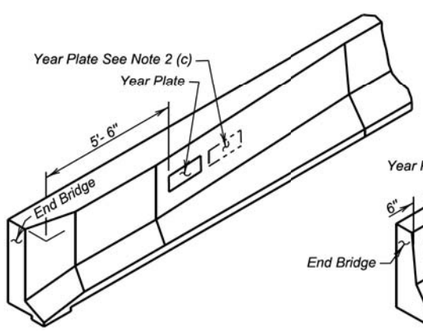

JERSEY BARRIER
(With Endblock)

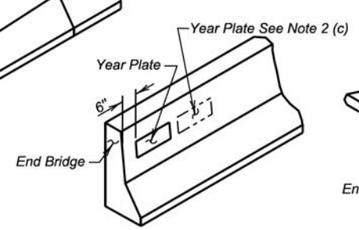

JERSEY BARRIER

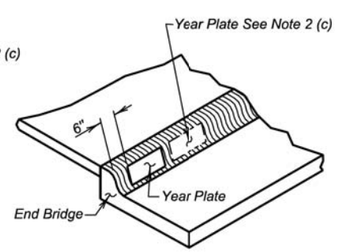

TYPE B CURB

June 26, 2012

Published Date: 3rd Qtr. 2014	SDDOT	DUAL DATE YEAR PLATE DETAILS	PLATE NUMBER 460.03
			Sheet 1 of 1

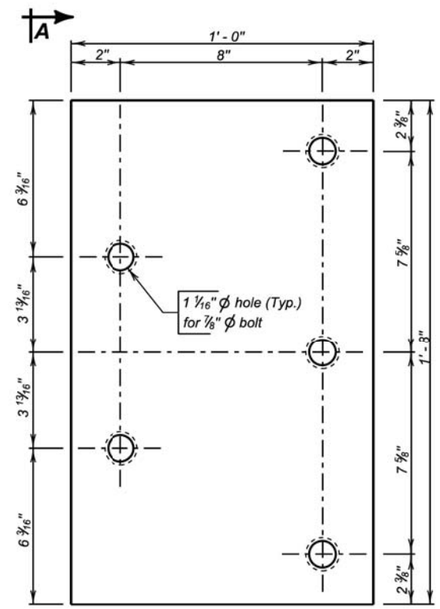

ELEVATION

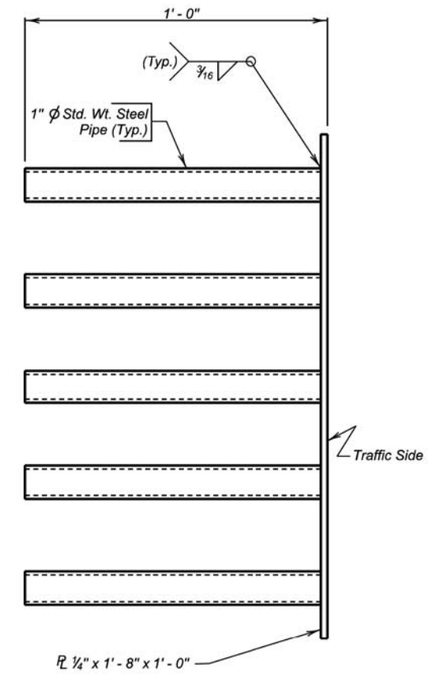

VIEW A - A

GENERAL NOTES:

1. Steel plate for the insert assembly shall conform to ASTM A709 Grade 36. The steel pipes shall conform to ASTM A53 or ASTM A500 Grade B.
2. Welding and weld inspection shall be in conformance with AWS D1.1 - (Current Year) Structural Welding Code - Steel.
3. After fabrication, galvanize in accordance with AASHTO M111 (ASTM A123).
4. Bolts, nuts, and washers shall be provided with each assembly. Bolts shall be galvanized and conform to the requirements of ASTM A307, A325, or A449. Plain washers shall be galvanized and conform to ASTM F844.
5. Bolt heads shall be placed on the traffic side of the endblock. Bolt projection at the back side of the insert shall not exceed 1 inch beyond the nut.
6. The cost of the 5 bolt insert plate assembly complete in place including welding and galvanizing shall be incidental to the contract unit price per Cubic Yard for " Class A45 Concrete, Miscellaneous ", " Class A45 Concrete, Bridge Deck ", or " Class A45 Concrete, Bridge Repair ", as applicable.

December 23, 2013

Published Date: 3rd Qtr. 2014	SDDOT	5 BOLT INSERT PLATE ASSEMBLY	PLATE NUMBER 630.92
			Sheet 1 of 1

-X020-

STATE OF	PROJECT	SHEET NO.	TOTAL SHEETS
S.D.	NH 0012(150)105	E29	E105

INDEX OF BRIDGE SHEETS —

Sheet No. 1 – General Drawing & Quantities.
Sheet No. 2 – Subsurface Investigations.
Sheet No. 3 – Superstructure Details.
Sheet No. 4 – Substructure Details.
Sheet No. 5 – Details of Type-B Railing CS-RB-00-119-3-3 (12-31-'54)

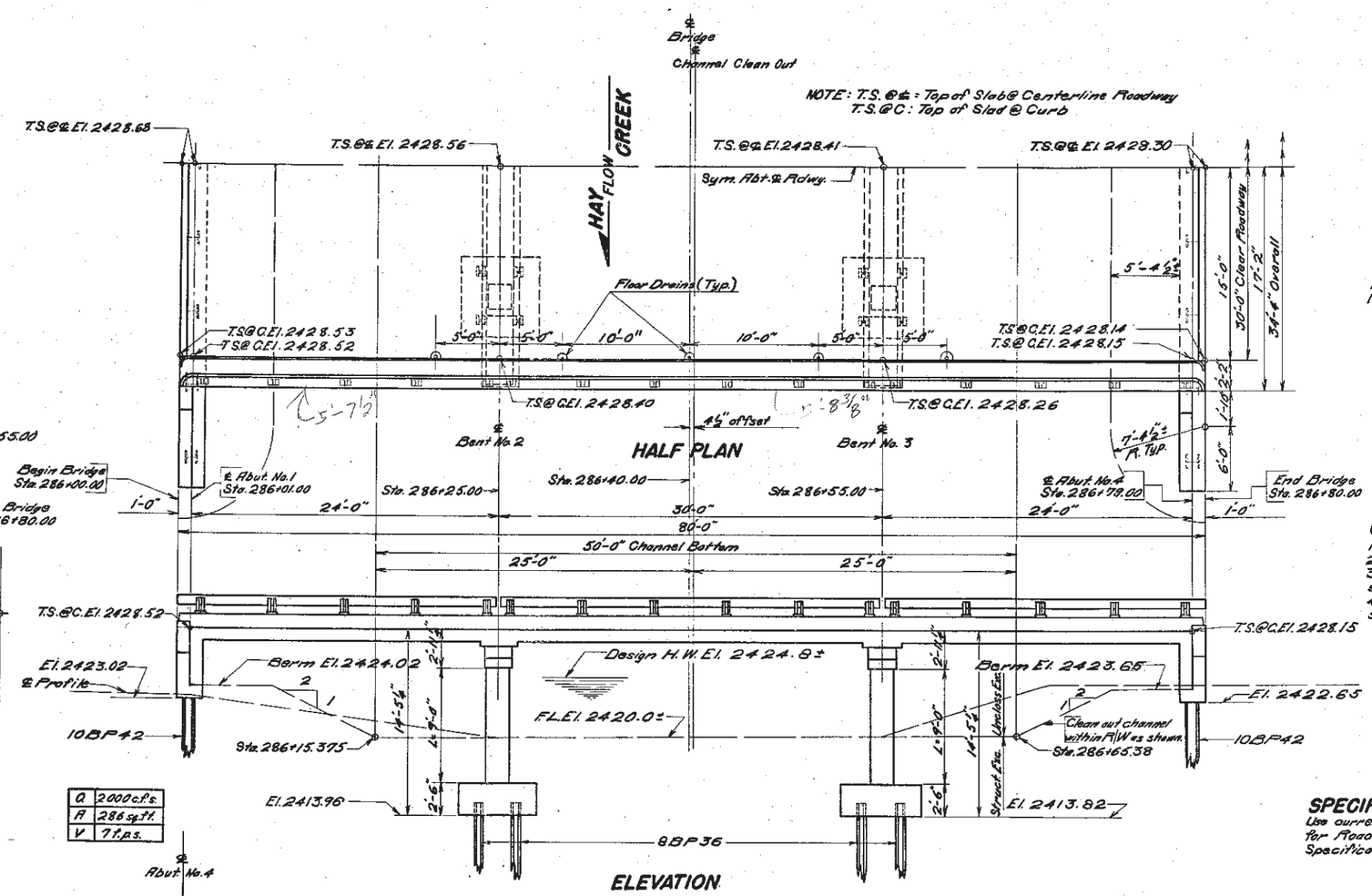

ELEVATION

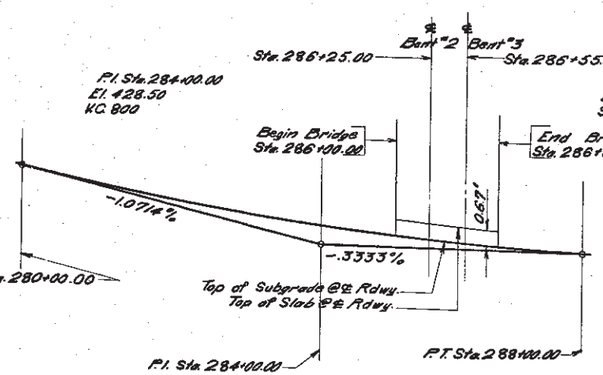

SUBGRADE CURVE DATA

Q	2000 c.f.s.
A	286 sq. ft.
V	7 f.p.s.

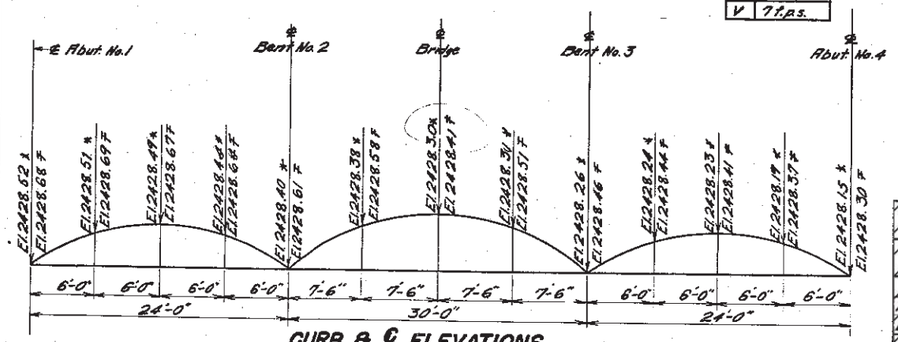

CURB & ℄ ELEVATIONS

Elevations indicated with F are Top of Finished Slab at Curb and with * are Top of Finished Slab at ℄ Roadway, which provide Camber for Dead Load Deflection PLUS Plastic Flow. Do not use Camber Dimensions shown on Sheet No. 3 of Bridge Plans.

ESTIMATED QUANTITIES

ITEM	Conc. Cu. Yds.	Steel – Lbs. Reinf.	Steel – Lbs. Struct.	Type-B Steel Railing Lin. Ft.	Steel Piles Lbs.	Bearing Piles Lin. Ft.	Excavation – Cu. Yds. Struct.	Excavation – Cu. Yds. ▲ Unclass.
Superstructure	104.6	16,795	119	162.3				
Abutments No. 1 & No. 4	54.6	3,630	795			8-10BP42 @ 14 Lin. Ft.	15	
Bents No. 2 & No. 3	24.5	1,565				16-8BP36 @ 11 Lin. Ft.	50	
Totals	184.0	26,190	845	162.3	♦ 16,920		65	▲ —

♦ One 10BP42 Steel Bearing Pile shall be driven @ Abuts. #1 & 4 and one 8BP36 Steel Bearing Pile shall be driven @ Bents #2 & 3 before remaining Steel Piles are ordered.
▲ See Grading Plans for Unclassified Excavation.

GENERAL NOTES —

1. See NOTES on sheet No. 3
2. Place floor drains in Plan. (10 Req'd)
3. Longitudinal elements of the slab shall conform to the vertical curve.
4. Rail Posts shall be built vertical.
5. Design Loading H 20 – S16-44 A.R.S.H.D.

SPECIFICATION NOTE

Use current South Dakota Standard Specifications for Roads and Bridges and the Supplemental Specifications as included in the Proposal.

ORIGINAL CONSTRUCTION PLANS

GENERAL DRAWING AND QUANTITIES
FOR
80'-0" CONTINUOUS CONCRETE BRIDGE
30'-0" ROADWAY
OVER HAY CREEK SEC. 26-T23N-R18E
STA. 286+00.00 TO 286+80.00 F044-2(3)
STR. NO. 16-072-011 CORSON COUNTY
SOUTH DAKOTA H20-S16-44
DEPARTMENT OF HIGHWAYS
APRIL 1961

(12) OF (14)

E.D.J. C.H.O. H.R. Cauw
BRIDGE ENGINEER

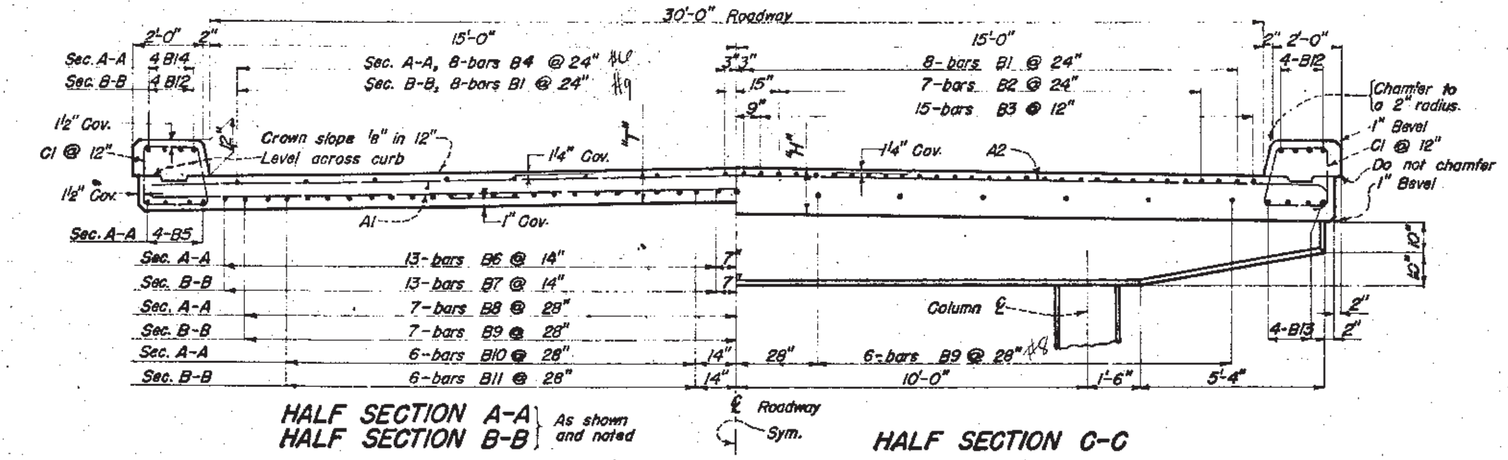

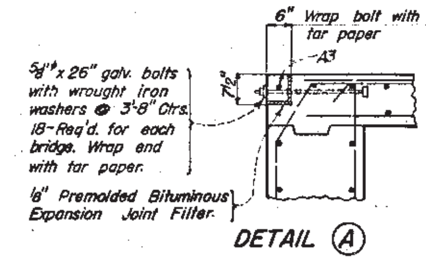

NOTES

These notes cover substructure, superstructure, and railing details. The General Plan for each structure will show spans, elevations, and other necessary notes and details.

CONSTRUCTION SPECIFICATIONS: South Dakota Highway Commission's "Standard Specifications for Roads and Bridges," current issue, shall govern unless noted otherwise herein, on plans, or in Special Provisions.

PILING: All piles shall be Steel Bearing Piles.

STRUCTURAL STEEL: All galvanized ⅝"ϕ bolts, ¾"ϕ Structural rib bolts, L6"x 4"x ⅞" (Pile Caps), and floor drains shall be paid for as Structural Steel.

CONCRETE: Class A Concrete shall develop a minimum allowable compressive strength of 4000 p.s.i. at 28 days. All exposed concrete corners and edges shall be chamfered to a ¾" bevel unless noted otherwise. If necessary to facilatate construction, tranverse construction joints may be made at the quarter points of each or any span, adjacent to interior bents. A ¼" wearing surface placed integral with the slab has been allowed for and is included in the slab thicknesses tabulated. All costs for expansion joint filler and tar paper shall be included in the unit price bid per cu. yd. for Class A Concrete.

DESIGN DATA: Design loading H20-S16-44 A.A.S.H.O. Unit stresses: Concrete, f = 1600 p.s.i., n = 8; Reinforcing, f = 20,000 p.s.i. (Int. Grade Steel).
Equivalent fluid pressure of earth at 40#/sq. ft.
Minimum pile loading = 20 Tons per pile, for Abutment piling & 31 Tons per pile, for Bent piling.

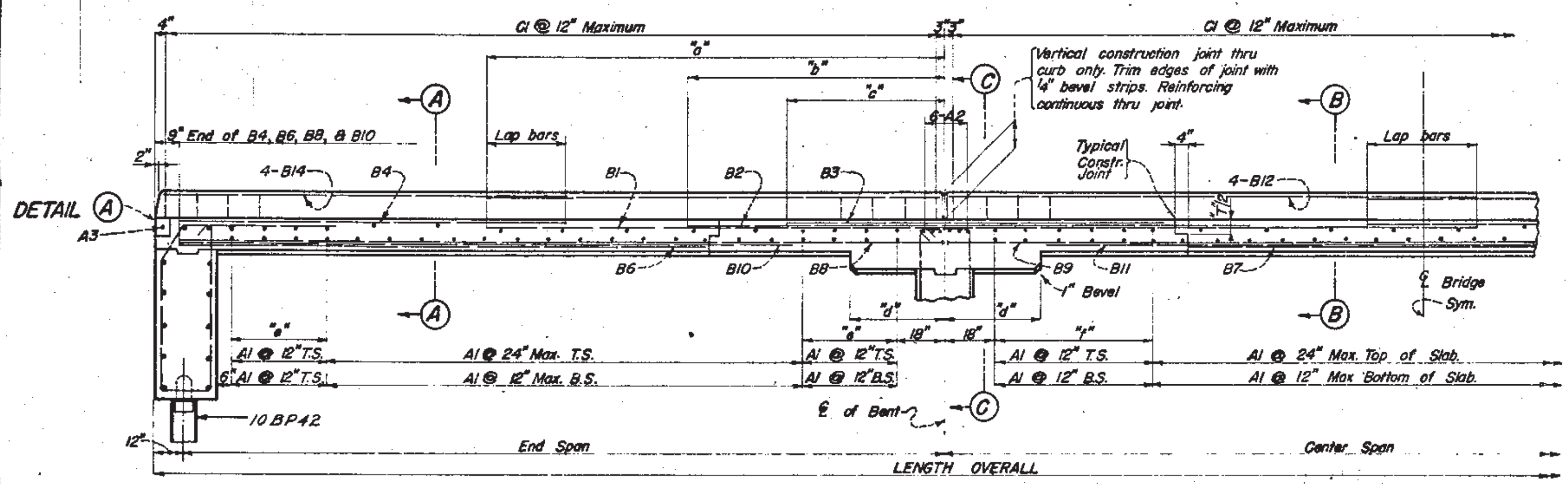

HALF LONGITUDINAL SECTIONAL VIEW

(Railing not shown)

ORIGINAL CONSTRUCTION PLANS

SLAB DATA

REINFORCING SCHEDULE

LENGTH OVERALL	END SPAN	CENTER SPAN	A1 No.	A1 Size	A1 Length	A2 No.	A2 Size	A2 Length	A2 Type	A2 B	A3 No.	A3 Size	A3 Length	B1 No.	B1 Size	B1 Length	B2 No.	B2 Size	B2 Length	B3 No.	B3 Size	B3 Length
54'-0"	16'	20'	79	5/8	33'-6"	12	7/8	35'-3"	1	33'-7"	2	5/8	29'-9"	32	7/8	22'-6"	28	7/8	13'-0"	60	3/4	9'-0"
60'-6"	18'	22'-6"	89	↓	↓	↓	7/8	35'-3"	↓	↓	↓	↓	↓	↓	7/8	24'-0"	↓	7/8	13'-6"	↓	3/4	9'-0"
67'-0"	20'	25'	101				1"	35'-9"							7/8	26'-0"		7/8	16'-6"		7/8	11'-6"
73'-6"	22'	27'-6"	112				1"	↓							1"	28'-0"		1"	16'-6"		7/8	11'-0"
80'-0"	24'	30'	122	5	33'-6"	12	10	35'-9"	1	33'-7"	2	5	29'-9"	32	9	31'-0"	28	9	16'-0"	60	7	11'-0"
86'-6"	26'	32'-6"	134				1"								1"	32'-0"		1"	20'-0"		1"	13'-6"
93'-0"	28'	35'	144				1"								1"	35'-0"		1"	21'-0"		1"	15'-0"
99'-6"	30'	37'-6"	157				1"								1"	36'-6"		1"	21'-0"		1"	14'-6"
106'-0"	32'	40'	167				1"								1"	39'-0"		1"	23'-0"		1"	17'-0"
112'-6"	34'	42'-6"	177	↑	↑	↑	1"	↑	↑	↑	↑	↑	↑	↑	1⅛	40'-0"	↑	1⅛	19'-0"	↑	1"	12'-0"
119'-0"	36'	45'	189	5/8	33'-6"	12	1"	35'-9"	1	33'-7"	2	5/8	29'-9"	32	1⅛	42'-6"	28	1⅛	20'-6"	60	1⅛	13'-6"

LENGTH OVERALL	B4 No.	B4 Size	B4 Length	B5 No.	B5 Size	B5 Length	B6 No.	B6 Size	B6 Length	B7 No.	B7 Size	B7 Length	B8 No.	B8 Size	B8 Length	B9 No.	B9 Size	B9 Length	B10 No.	B10 Size	B10 Length
54'-0"	32	3/4	8'-0"	16	3/4	16'-9"	52	7/8	13'-6"	26	7/8	14'-0"	26	7/8	16'-3"	13	7/8	20'-0"	24	7/8	14'-6"
60'-6"	↓	↓	9'-6"	↓	3/4	16'-9"	↓	7/8	14'-6"	↓	7/8	14'-6"	↓	7/8	18'-3"	↓	7/8	22'-6"	↓	7/8	16'-0"
67'-0"			11'-0"		7/8	20'-9"		7/8	15'-6"		7/8	15'-0"		1"	20'-3"		1"	25'-0"		1"	17'-6"
73'-6"			12'-6"		1"	22'-9"		7/8	17'-0"		7/8	16'-0"		1"	22'-3"		1"	27'-6"		1"	19'-0"
80'-0"	32	6	12'-6"	16	9	24'-9"	52	8	19'-0"	26	8	19'-0"	26	8	24'-3"	13	8	30'-0"	24	8	20'-6"
86'-6"			15'-0"		1"	26'-9"		7/8	19'-6"		7/8	17'-0"		1"	26'-3"		1"	32'-6"		1"	21'-6"
93'-0"			15'-0"		1"	28'-9"		1"	21'-0"		1"	19'-0"		1"	28'-3"		1"	35'-0"		1"	23'-6"
99'-6"			17'-0"		1"	30'-9"		1"	22'-6"		1"	21'-6"		1"	30'-3"		1"	37'-6"		1"	25'-0"
106'-0"			17'-6"		1"	32'-9"		1"	24'-0"		1"	24'-0"		1"	32'-3"		1"	40'-0"		1"	26'-6"
112'-6"	↑	↑	19'-6"	↑	1⅛	34'-9"	↑	1"	24'-6"	↑	1"	22'-6"	↑	1⅛	34'-3"	↑	1⅛	42'-6"	↑	1⅛	27'-6"
119'-0"	32	3/4	21'-0"	16	1⅛	36'-9"	52	1"	26'-6"	26	1"	25'-0"	26	1⅛	36'-3"	13	1⅛	45'-0"	24	1⅛	29'-0"

LENGTH OVERALL	B11 No.	B11 Size	B11 Length	B12 No.	B12 Size	B12 Length	B13 No.	B13 Size	B13 Length	B14 No.	B14 Size	B14 Length	C1 No.	C1 Size	C1 Length	C1 Type	C1 A	C1 B
54'-0"	12	7/8	16'-0"	16	3/4	22'-6"	8	3/4	20'-0"	16"	3/4	8'-6"	114	1/2	7'-6"	T1	7"	1'-5½"
60'-6"	↓	7/8	17'-6"	↓	3/4	24'-0"	↓	3/4	22'-6"	↓	↓	10'-0"	126	↓	7'-9"	↓	↓	1'-6¼"
67'-0"		1"	19'-0"		7/8	26'-0"		7/8	25'-0"			11'-6"	140		7'-9"			1'-6¾"
73'-6"		1"	20'-0"		1"	28'-0"		1"	27'-5"			13'-0"	152		8'-0"			1'-7½"
80'-0"	12	8	23'-0"	16	9	31'-0"	8	9	30'-0"	16	6	13'-0"	166	4	8'-0"	T1	7"	1'-8"
86'-6"		1"	22'-6"		1"	32'-0"		1"	32'-6"			15'-6"	178		8'-3"			1'-8¾"
93'-0"		1"	25'-0"		1"	35'-0"		1"	35'-0"			15'-6"	192		8'-3"			1'-9½"
99'-6"		1"	27'-0"		1"	36'-6"		1"	37'-6"			17'-6"	204		8'-6"			1'-10¼"
106'-0"		1"	28'-0"		1"	39'-0"		1"	40'-0"			18'-0"	218		8'-6"			1'-11"
112'-6"	↑	1⅛	28'-6"	↑	1⅛	40'-6"	↑	1⅛	42'-6"	↑	↑	20'-0"	230	↑	8'-9"	↑	↑	1'-11¾"
119'-0"	12	1⅛	31'-0"	16	1⅛	42'-6"	8	1⅛	45'-0"	16"	3/4	21'-6"	244	1/2	8'-9"	T1	7"	2'-0½"

LENGTH OVERALL	DIMENSIONS "T"	"H"	"a"	"b"	"c"	"d"	"e"	"f"	LENGTH OVERALL
54'-0"	8½"	11½"	11'-0"	6'-6"	4'-6"	24"	2'-0"	3'-0"	54'-0"
60'-6"	9¼"	12½"	11'-3"	6'-9"	4'-6"	27"	2'-0"	3'-0"	60'-6"
67'-0"	9¾"	13¼"	12'-0"	8'-3"	5'-6"	30"	3'-0"	4'-0"	67'-0"
73'-6"	10½"	14¼"	12'-7"	8'-3"	5'-0"	33"	3'-0"	4'-0"	73'-6"
80'-0"	11"	15"	14'-4"	8'-0"	5'-0"	36"	3'-0"	5'-0"	80'-0"
86'-6"	11¾"	16"	14'-1"	10'-0"	6'-6"	39"	4'-0"	5'-0"	86'-6"
93'-0"	12½"	17"	15'-10"	10'-6"	7'-0"	42"	4'-0"	6'-0"	93'-0"
99'-6"	13¼"	18"	16'-1"	10'-6"	7'-0"	45"	5'-0"	6'-0"	99'-6"
106'-0"	14"	19"	17'-4"	11'-6"	7'-9"	48"	5'-0"	7'-0"	106'-0"
112'-6"	14¾"	20"	17'-4"	9'-3"	6'-0"	51"	5'-0"	7'-0"	112'-6"
119'-0"	15½"	21"	18'-0"	10'-3"	6'-9"	54"	6'-0"	8'-0"	119'-0"

BAR BENDS

Note: All details dimensions are out to out.

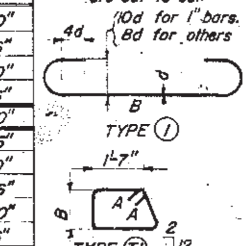

ESTIMATED QUANTITIES

LENGTH OVERALL	TWO ABUTMENTS: Class A Concrete Cu.Yds.☒	TWO ABUTMENTS: Reinforcing Steel Lbs.	TWO ABUTMENTS: Number of Piles	TWO ABUTMENTS: Structural Steel Lbs. (Pile Conn.)	TWO INTERIOR BENTS: Class A Concrete-Cu.Yds. Constant Quantity	TWO INTERIOR BENTS: Cu.Yds./lin.ft. for 4 Columns="Q"	TWO INTERIOR BENTS: Reinforcing Steel—Lbs. Constant Quantity	TWO INTERIOR BENTS: Lbs./lin.ft. for 4 Columns="R"	TWO INTERIOR BENTS: Number of Piles	SLABS & CURBS: Class A Concrete Cu.Yds.	SLABS & CURBS: Reinforcing Steel Lbs.	SLABS & CURBS: ⅝"ϕ Bolts	SLABS & CURBS: Number of Floor Drains	SLABS & CURBS: Structural Steel Lbs.	TOTALS, Exclusive of railing & Excavation: ⊗ Class A Concrete Cu.Yds.	TOTALS: ⊗ Reinforcing Steel Lbs.	TOTALS: Structural Steel Lbs.	TOTALS: Number of Piles
54'-0"	35.6	3630	16	760	17.3	0.412	2235	64.2	16	54.9	13,735	18	12	140	107.8+("Q"x"L")	19,600+("R"x"L")	900	32
60'-6"	↓	↓	16	760	17.3	0.412	2250	64.2	16	66.7	14,930	↓	14	165	118.6+(")	20,810+(")	925	32
67'-0"			16	760	17.3	0.412	2260	64.2	16	77.9	18,710		14	170	130.8+(")	24,590+(")	930	32
73'-6"			16	760	22.6	0.412	2330	64.2	20	91.7	21,690		18	210	149.9+(")	27,550+(")	970	36
80'-0"	35.6	3630	18	705	24.5	—	5755	—	16	104.6	26,795	18	10	140	—	—	—	—
86'-6"			18	855	25.2	0.498	2735	79.8	20	120.4	26,965		20	245	179.2+(")	33,330+(")	1,100	38
93'-0"			18	855	23.3	0.593	3155	96.7	24	137.2	31,645		20	255	196.1+(")	38,450+(")	1,110	42
99'-6"			20	950	23.3	0.593	3175	96.7	24	155.1	38,360		20	265	214.0+(")	43,165+(")	1,215	44
106'-0"			20	950	31.0	0.625	[illegible]	125.7	[illegible]	[illegible]	[illegible]		[illegible]	[illegible]	[illegible]	[illegible]	[illegible]	[illegible]

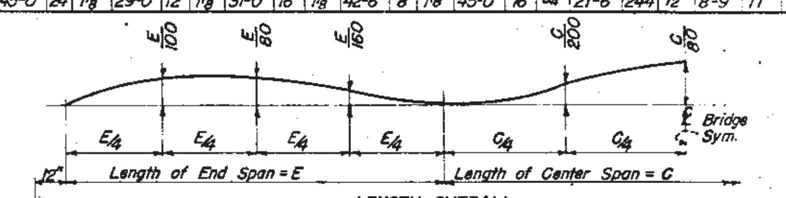

CAMBER DIAGRAM

Camber is calculated for dead load plus plastic flow. Camber is calculated thus using the 106'-0" Bridge as an illustration: E = 32' and C = 40', C/80 = 40/80 = 1/2, provide 1/2" camber at center of center span. The values obtained for camber shall be added to the proposed grade elevations at the respective stations to establish the elevations of the top of the finished roadway slab.

The slab shall also be raised ⅝" additional over the interior bents at Roadway ℄ to provide for dead load deflections and plastic flow at the ℄ of the bents as noted on details thereof.

SUPERSTRUCTURE DETAILS FOR

80'-0" CONTINUOUS CONCRETE BRIDGE

30'-0" ROADWAY

OVER HAY CREEK SEC. 26-T23N-R18E

STA. 286+00.00 TO 286+80.00 F044-2(3)

STR. NO. 16-072-011 CORSON COUNTY

SOUTH DAKOTA H20-S16-44

STATE HIGHWAY COMMISSION

MAY 1961

STATE OF	PROJECT	SHEET NO.	TOTAL SHEETS
S.D.	NH 0012(150)105	E31	E105

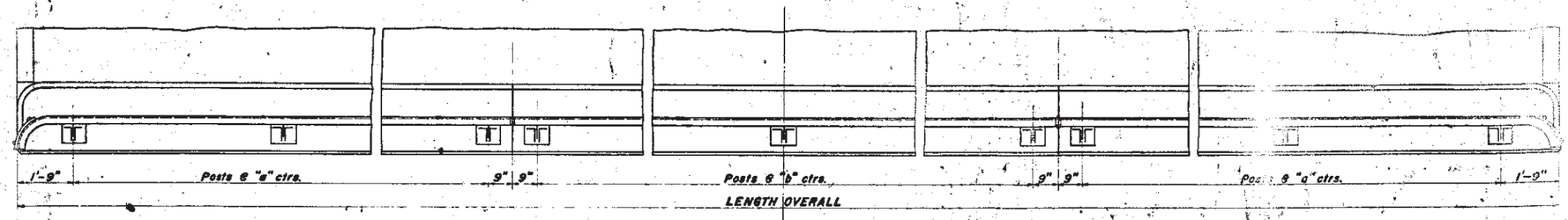

PART PLAN

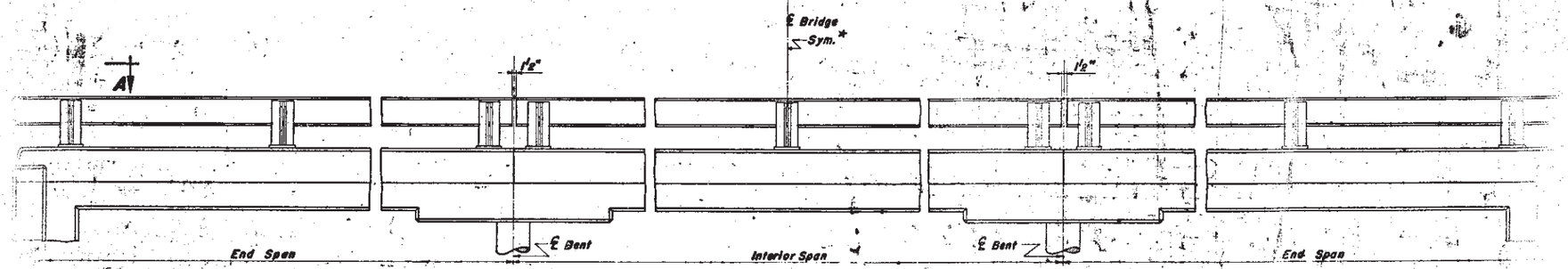

ELEVATION

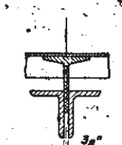

SEC. C-C

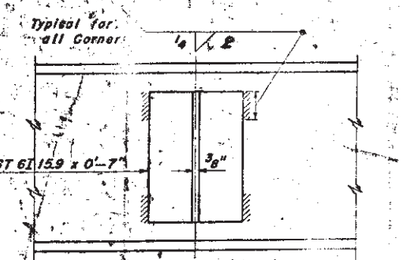

DETAIL "X"

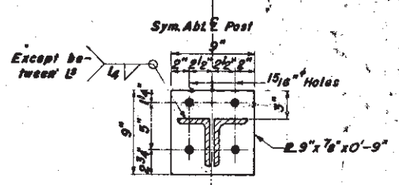

SEC. B-B

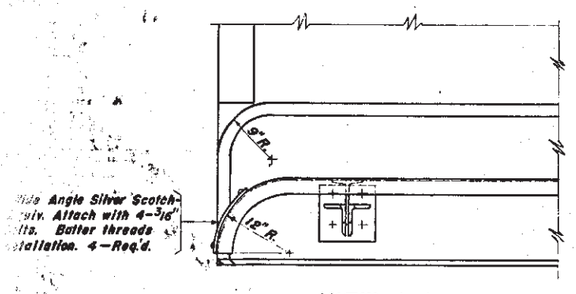

VIEW A-A

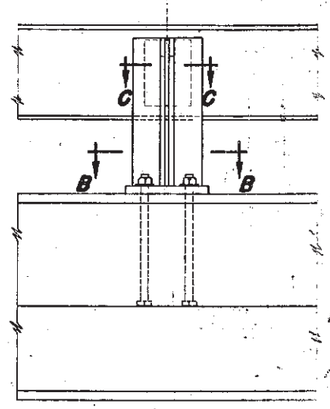

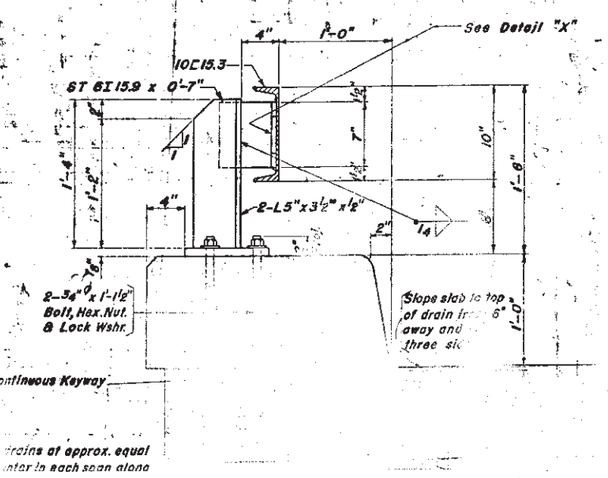

drains at approx. equal
inter in each span along

*** NOTE:–**
Structure is symmetrical about ℄, however, railpost spacings will vary the location of posts; see Railing Data.

RAILING DATA

LENGTH OVERALL	END SPAN	INTERIOR DIMENSIONS SPAN	"a"	"b"	No. of Posts	QUANTITIES Lin. Ft.
54'-0"	16'	20'	7'-3"	6'-2"	20	110.3
60'-6"	18'	22'-6"	5'-6"	5'-3"	26	123.3
67'-0"	20'	25'	6'-2"	5'-10½"	26	136.3
73'-6"	22'	27'-6"	6'-10"	6'-6"	26	149.3
80'-0"	24'	30'	5'-7½"	5'-8⅜"	32	162.3
86'-6"	26'	32'-6"	6'-1½"	6'-2⅜"	32	175.3
93'-0"	28'	35'	6'-7½"	6'-8⅜"	32	188.3
99'-6"	30'	37'-6"	7'-1½"	7'-2⅜"	32	201.3
106'-0"	32'	40'	6'-1¼"	6'-5"	38	214.3
112'-6"	34'	42'-6"	6'-6"	6'-10"	38	227.3
119'-0"	36'	45'	6'-10¾"	7'-3"	38	240.3

GENERAL NOTES.–
Railing shall be painted with one shop coat of Red Lead paint and two field coats of Aluminum or other approved paint. Cost of welding, painting, bolts, nuts, lock washers, and reflector strips shall be absorbed in the unit price bid for Railing.

ORIGINAL CONSTRUCTION PLANS

DETAILS OF TYPE-B RAILING
FOR STANDARD
3-SPAN CONTINUOUS
CONCRETE SLAB BRIDGES
24'-0" / 30'-0" ROADWAY 54'-0" TO 119'-0" OVERALL LENGTH
SOUTH DAKOTA
STATE HIGHWAY COMMISSION

STR. NO. 16-072-011

CS-RB-00-119-3-3

STATE OF	PROJECT	SHEET NO.	TOTAL SHEETS
S.D.	NH 0012(150)105	E32	E105

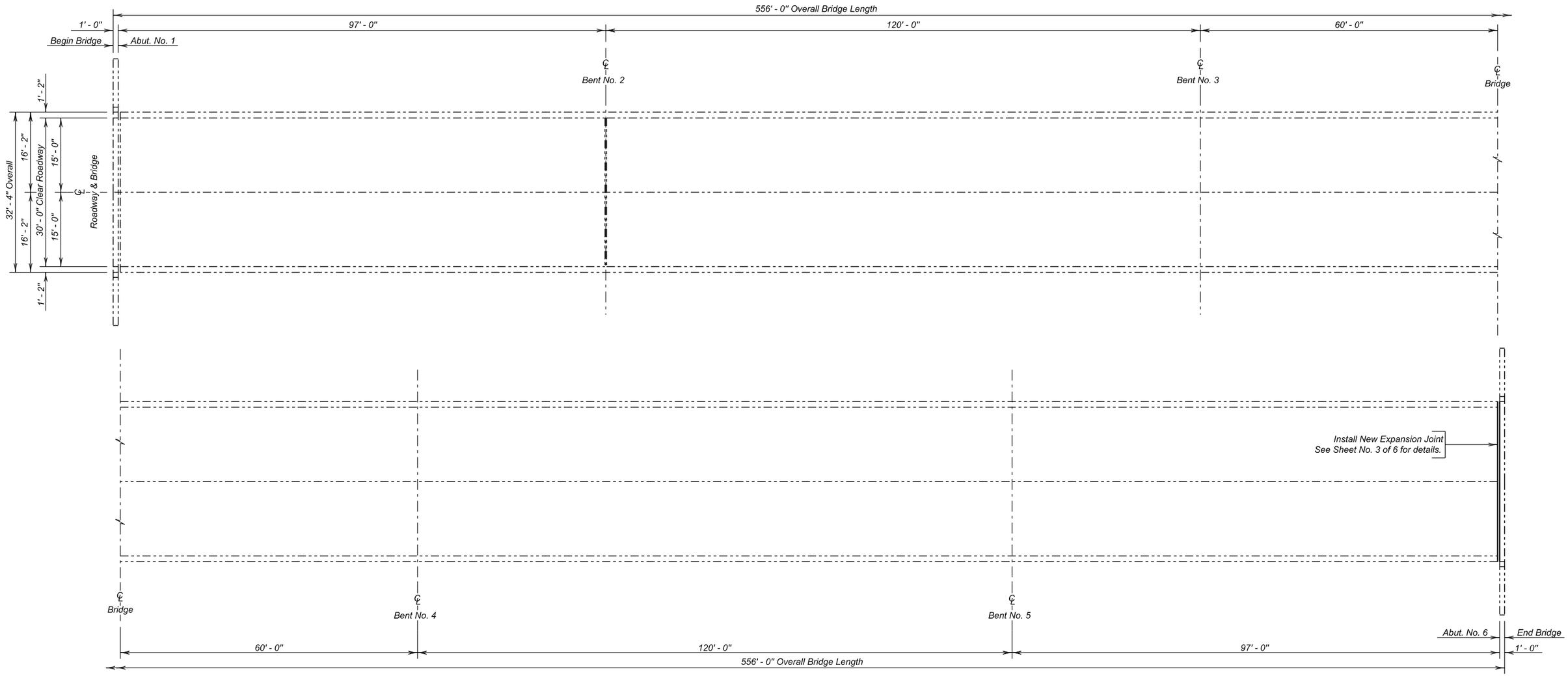

PLAN

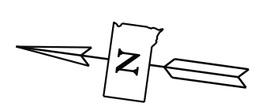

LAYOUT FOR UPGRADING
FOR
556' - 0" CONT. COMP. GIRDER BRIDGE

30' - 0" ROADWAY — 0° SKEW
OVER GRAND RIVER — SEC. 26 / 35-T20N-R28E
STR. NO. 16-665-200 — NH 0012(150)105
PCN 01RQ

CORSON COUNTY
S. D. DEPT. OF TRANSPORTATION
OCTOBER 2013

1 OF 6

INDEX OF BRIDGE SHEETS -

Sheet No. 1 - Layout for Upgrading
Sheet No. 2 - Estimate of Structure Quantities and Notes
Sheet No. 3 - Abutment No. 6 Joint Layout
Sheet No. 4 through 6 - Original Construction Plans

PLANS BY :
OFFICE OF BRIDGE DESIGN, SOUTH DAKOTA DEPARTMENT OF TRANSPORTATION

DESIGNED BY	CK. DES. BY	DRAFTED BY	
BWS	KH	KR	Kevin N. Boeder
CORS01RQ	01RQRH01		BRIDGE ENGINEER

ESTIMATE OF STRUCTURE QUANTITIES

ITEM NO.	DESCRIPTION	QUANTITY	UNIT
410E2600	Membrane Sealant Expansion Joint	32.4	Ft
410E0030	Structural Steel, Miscellaneous	Lump Sum	LS

SPECIFICATIONS

1. Design Specifications: AASHTO Standard Specifications for Highway Bridges 17th Edition using Working Stress Design.

2. Construction Specifications: South Dakota Standard Specifications for Roads and Bridges, 2004 Edition and Required Provisions, Supplemental Specifications and/or Special Provisions as included in the Proposal.

3. All Welding and Welding Inspection shall be in conformance with the AASHTO/AWS Bridge Welding Code D1.5M/D1.5:2010 unless otherwise noted in this plan set.

DETAILS AND DIMENSIONS OF EXISTING BRIDGE

All details and dimensions of the existing bridge, contained in these plans, are based on the original construction plans and shop plans and are provided as information only. It is the Contractor's responsibility to inspect and verify the actual field conditions and any necessary as-built dimensions affecting the satisfactory completion of the work required for this project.

SHOP PLANS

Shop plans shall be required as specified by Section 410.3.A. of the Construction Specifications.

SCOPE OF BRIDGE WORK & SEQUENCE OF OPERATIONS

All work on this structure shall be accomplished with the traffic control shown elsewhere in the plans. Alternate sequence of operations may be submitted by the Contractor for approval by the Engineer a minimum of two weeks prior to the pre-construction meeting.

1. Modify the existing joint at abutment 1 by removing existing strip seal gland and extrusions for phase 1 of construction.

2. Place Membrane Sealant Expansion Joint in the existing armor angle at abutment 6 for phase 1 of construction.

2. Switch traffic and repeat step 1 and 2.

MEMBRANE SEALANT EXPANSION JOINT

1. All new structural bars shall conform to ASTM A709, Grade 36.

2. Install all membrane sealant expansion joints at the plan shown locations in conformance to the following notes.

MEMBRANE SEALANT EXPANSION JOINT (CONTINUED)

3. The Membrane Sealant shall be one of membrane sealant types from the approved product list for Membrane Sealant Expansion Joints.

4. The manufacturer shall supply the membrane sealant in packaging that precompresses the membrane sealant. The precompressed dimension shall be as recommended by the sealant manufacturer to provide a water tight seal throughout a joint movement range of + 25% (minimum) from the specified joint opening dimension. In no case shall the precompressed dimension exceed 75% of the joint opening width. The foam sealant shall be slowly self expanding to permit workers ample time to install the membrane sealant before the membrane sealant exceeds the joint opening width.

5. The membrane sealant shall be supplied in pieces 5 feet in length or longer. The foam sealant shall be ultra-violet and ozone resistant.

6. The bonding adhesive used to attach the membrane sealant to the adjacent concrete shall be approved by the membrane sealant manufacturer.

7. Adhesive used to join adjacent pieces of the membrane sealant shall be as recommended by the manufacturer.

8. If Styrofoam filler material is used in the construction, it shall be closed cell and water-tight as approved by the Engineer.

9. Use plywood or other material to protect concrete adjacent to the joint from spalling before any equipment is moved across the joint. Any spall areas will be repaired at the Contractor's expense by breaking out and replacing adjacent concrete, as approved by the Engineer.

10. The minimum ambient air temperature at the time of joint installation and adhesive curing shall be 40° F.

11. A technical representative of the membrane sealant manufacturer shall be present at the jobsite during installation. The technical representative shall be knowledgeable in the correct procedures for the preparation and installation of the joint material to insure the Contractor installs the joint to the Manufacturers recommendations.

12. The joint opening shall be constant width and shall have smooth vertical sides. Surfaces of material adjacent to the joint shall be at the correct grade and crown as approved by the Engineer.

13. Concrete surfaces that will be in contact with the membrane sealant shall be thoroughly cleaned by abrasive blasting to remove all laitance and contaminants (such as oil, curing compounds, etc.) from the concrete surface. At a minimum two passes of abrasive blasting with the nozzle held at an angle to within 1 to 2 inches of the a concrete surface will be required. Cleaning of the concrete surfaces with solvents, wire brushing, or grinding shall not be permitted.

MEMBRANE SEALANT EXPANSION JOINT (CONTINUED)

14. After abrasive blasting, but immediately prior to membrane joint installation, the entire joint contact surface shall be air blasted. The air compressor used for joint cleaning shall be equipped with trap devices capable of providing moisture-free and oil-free air at a recommended pressure of 90 psi. To obtain complete bonding with the adhesive, the adjacent concrete surfaces must be dry and clean. The contact surfaces for the joint shall be visually inspected by the Engineer immediately prior to joint installation to verify the surface is dry and clean.

15. Individual spliced sections shall be installed as per the manufacturers' recommendations. The membrane joint sealant manufacturer shall submit a detailed installation procedure to the Engineer at least 5 days prior to joint installation for his review.

16. Traffic shall not be allowed on the joint for a minimum 3 hours unless otherwise directed by the Engineer.

17. Forms for the joint shall be left in place for a minimum of 7 days. No construction equipment or traffic shall be allowed on the joint until the concrete has reached design strength. The joint edges shall be protected from damage by equipment and traffic.

18. The Membrane Sealant Expansion Joint will be measured in feet to the nearest one-tenth foot, complete in place. Measurement will be made of the overall horizontal length. The Membrane Sealant Expansion Joint will be paid for at the contract unit price per foot complete in place. Payment for this item shall be full compensation for furnishing all the required materials in place, inclusive of labor, equipment and incidentals necessary to complete the work in accordance with the plans and the foregoing specifications.

ESTIMATE OF STRUCTURE QUANTIES AND NOTES FOR

556' – 0" CONT. COMP. GIRDER BRIDGE

Str. No. 16-665-200

OCTOBER 2013

DESIGNED BY	CK. DES. BY	DRAFTED BY:	
BWS	KH	BWS	Kevin N. Broden
CORS01RQ	01RONOTB		BRIDGE ENGINEER

STATE OF	PROJECT	SHEET NO.	TOTAL SHEETS
S.D.	NH 0012(150)105	E34	E105

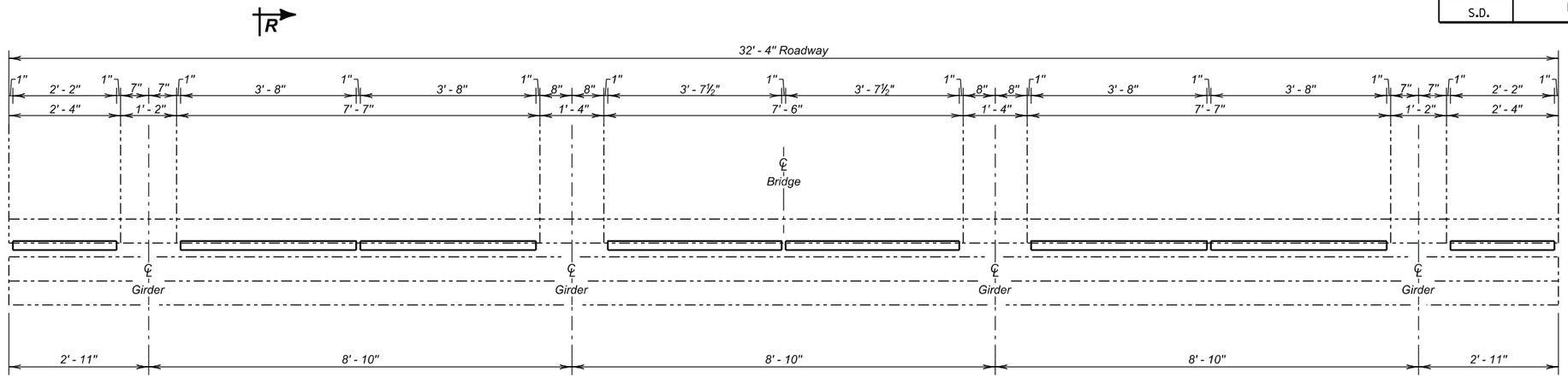

PLAN

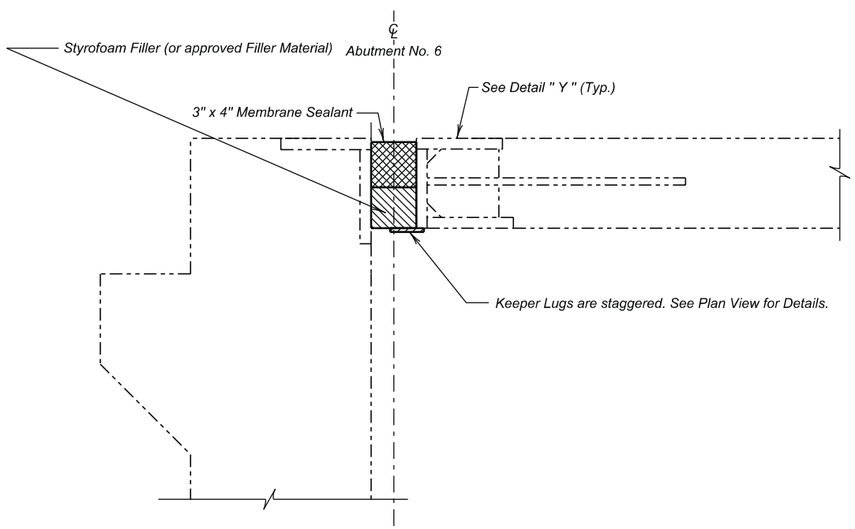

SECTION R - R

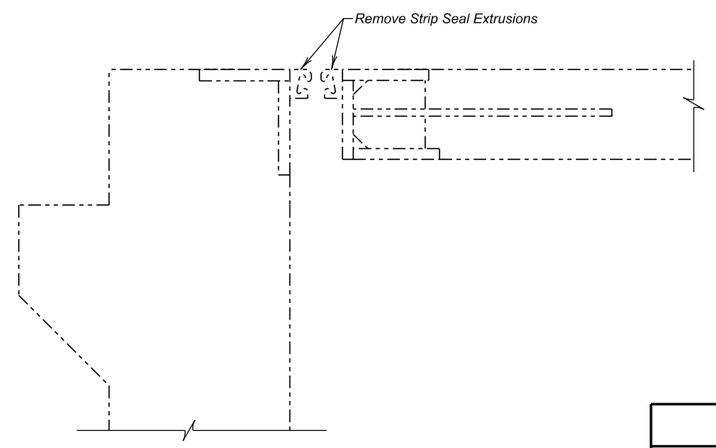

TYPICAL SECTION

(EXISTING)

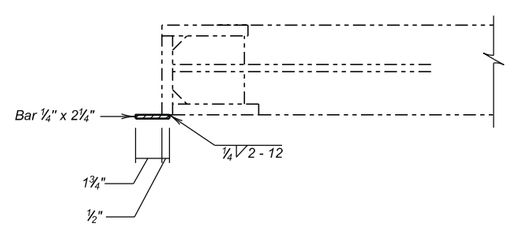

DETAIL "Y"

ESTIMATED QUANTITIES

ITEM	UNIT	PHASE 1 QUANTITY	PHASE 2 QUANTITY
Membrane Sealant Expansion Joint	Ft	16.2	16.2
Structural Steel, Miscellaneous	Ls	Lump Sum	Lump Sum

Items are approximate quantities contained in the above bid item and are for information only.

	PHASE I	PHASE 2
Structural Steel.	50 Lb.	50 Lb.

ABUTMENT NO. 6 JOINT LAYOUT

FOR

556' - 0" CONT. COMP. GIRDER BRIDGE

30' - 0" ROADWAY — 0° SKEW

OVER GRAND RIVER — SEC. 26 / 35-T20N-R28E

STR. NO. 16-665-200 — NH 0012(150)105

CORSON COUNTY

S. D. DEPT. OF TRANSPORTATION

SEPTEMBER 2013

DESIGNED BY	CK. DES. BY	DRAFTED BY	
BWS	KH	KR	Kevin N. Goeden
CORS01RQ	01RQRH06		BRIDGE ENGINEER

-X031-

INDEX OF BRIDGE SHEETS—

Sheet No.1 General Drawing and Quantities.
Sheet No.2 Details of Sills No.1 and No.6.
Sheet No.3 Details of Bents No.2 and No.5.
Sheet No.4 Details of Bents No.3 and No.4.
Sheet No.5 Details and Quantities of Bents.
Sheet No.6 Details of Superstructure.
Sheet No.7 Details of Superstructure.
Sheet No.8 Details of Shoes, Exp. Device, and Bumper.
Sheet No.9 Erection Data.
Sheet No.10 Std. Railing and Drain Details. RA-1 (12-4-51)

STATE OF	PROJECT	SHEET NO.	TOTAL SHEETS
S.D.	NH 0012(150)105	E35	E105

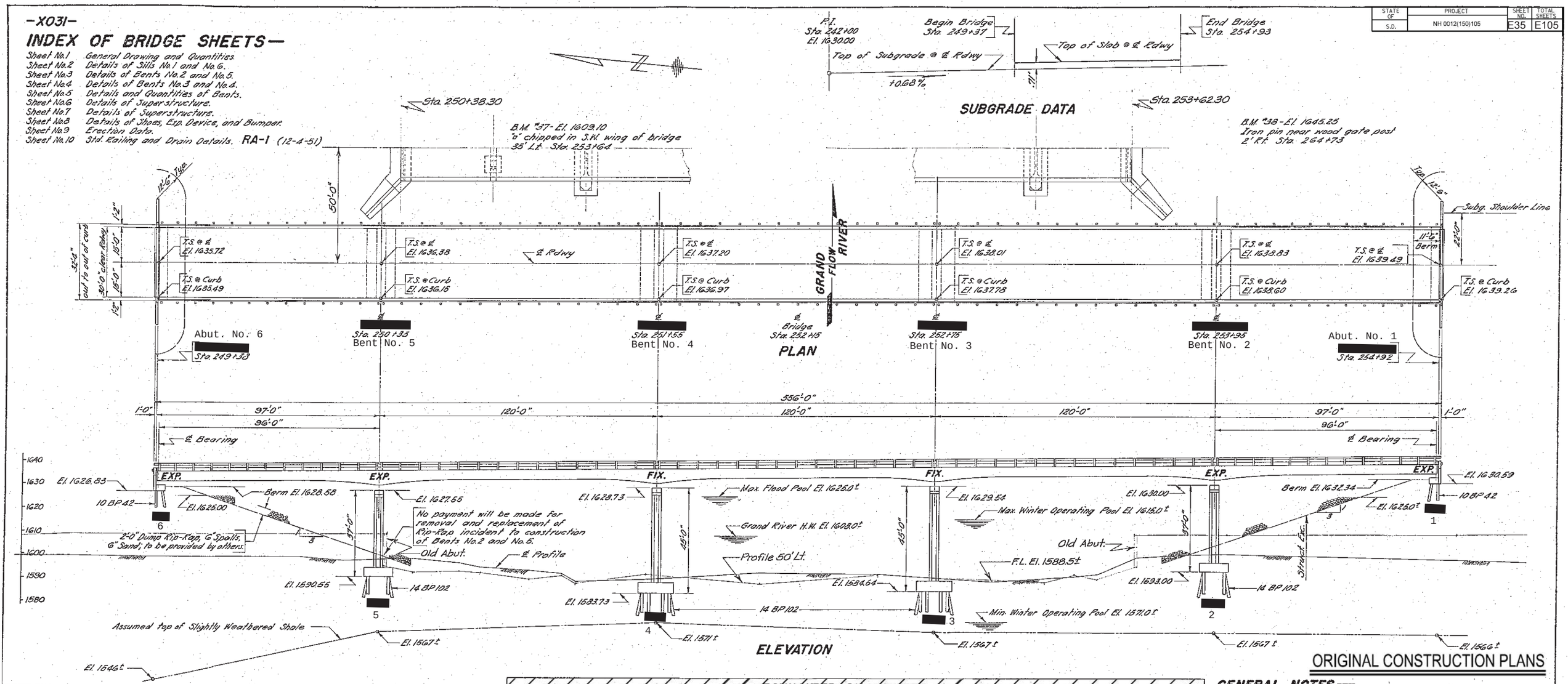

ORIGINAL CONSTRUCTION PLANS

TEST HOLE DATA

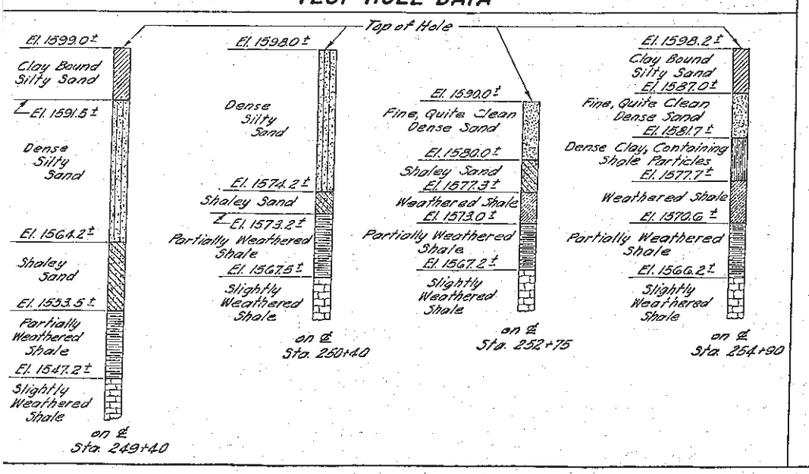

ESTIMATED QUANTITIES

ITEM	Concrete-Cu. Yds. Class "A"	Steel-Lbs. Reinf.	Steel-Lbs. Struc.	Type RA1 Steel Railing Lin. Ft.	Driving Steel Bearing Piles 14 BP 102-Lin. Ft.	Steel Bearing Piles @ BP 42	Steel Bearing Piles Lbs.	Excavation-Cu. Yds. Struct.	Excavation-Cu. Yds. Unclass.	
Superstr. 556'-0" Cont. Unit	379.0	65,385	463,400	1,114.3			20,763.3			INCIDENTAL WORK
Substr.-Sill No.1	29.4	3,535				8 @ 86'=258.00		20	1,167	
Substr.-Bent No.2	112.8	13,580			10 @ 30'=300'		8,943	130	3,620	
Substr.-Bent No.3	189.1	22,290			14 @ 20'=280'			100	4,179	
Substr.-Bent No.4	159.1	22,290			14 @ 25'=350'		27,8	130	3,131	
Substr.-Bent No.5	112.9	13,580			10 @ 30'=300'			120	3,416	
Substr.-Sill No.6	29.4	3,535				8 @ 68'=272.00	22,550	80	1,167	
			Shear Lbs. 1,439,8		14 @ 25'=350'		25,760	760		
Totals	931.8	142,115	463,400	1,114.3	1,239*		54,760	1,560	Unclassified Excavation for Bridge.	

*See Grading Plans for Unclassified Excavation.

* All piling driven to refusal (Specified by Field Engineer.)

★INCIDENTAL WORK:— In place 50'± left of ℄, Sta. 250+38.3 to 253+62.3, 324'-0"×26'-0" roadway Thru Truss Bridge with I-Beam approaches (2@40' I-Beam Spans, 200' Thru Truss Span, 1@40' I-Beam Span) and concrete floor throughout. Detail plans are on file in bridge division office. Present structure is to remain in place until traffic is routed over proposed structure. After traffic is routed over new structure take out old bridge. ITEM 1:- Break down concrete floor being careful not to injure the structural properties of steel members in the floor system of the spans. Break down old concrete substructure to 1'± below finished ground line. Satisfactory broken concrete shall be used as slope protection on new embankments at Sills No.1 and No.6. All other broken concrete and materials shall be disposed of as directed by the ENGINEER. ITEM 2:- Match mark and dismantle spans by member or by panel sections; or spans may be moved intact. Care shall be taken not to injure the steel members structurally during the operation of dismantling, transporting or piling in storage yard. All salvaged materials shall be piled neatly in storage yard at McLaughlin a distance of 18± miles, as directed by the ENGINEER. The site to be provided by State Department of Highways. ALTERNATE ITEM 2:- Remove superstructure steel by methods at the discretion of the contractor; the structural steel to become the property of the contractor. Any disposal of the structual steel locally shall be outside the limits of maximum pool elevation as directed by the ENGINEER.

GENERAL NOTES.—

1. Use current South Dakota Standard Specifications for Roads and Bridges.
2. Rail Posts shall be built vertical.

Item #1 = $2,000.00
Item #2 = $2,000.00
Tot. Incid. = $4,000.00

GENERAL DRAWING AND QUANTITIES

FOR

556'-0" CONT. COMP. GIRD. VIADUCT

30'-0" ROADWAY

OVER GRAND RIVER SEC. 26/35-T20N-R28E

STA. 249+37.00 TO 254+93.00 WAR 180 III

STR. NO. 16-665-200 CORSON COUNTY H20-44

SOUTH DAKOTA

DEPARTMENT OF HIGHWAYS

SEPT. 1959

4 OF 6

-X031-

DESIGNED BY	DRAWN BY	CHECKED BY	APPROVED
	K.C.W.	E.K.	BRIDGE ENGINEER

Finished 18 Apr 1961

D.H.

STATE OF	PROJECT	SHEET NO.	TOTAL SHEETS
S.D.	NH 0012(150)105	E36	E105

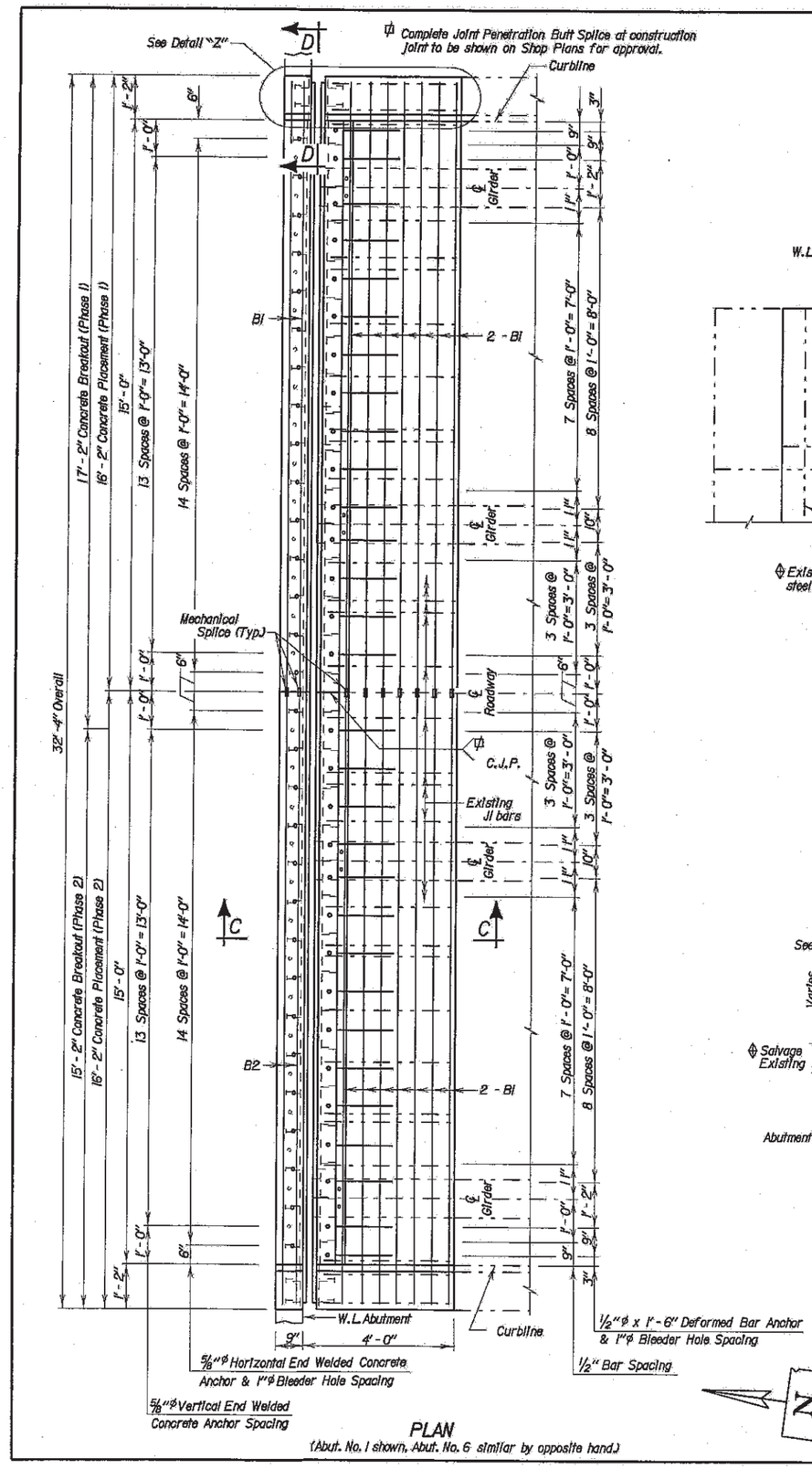

PLAN
(Abut. No. 1 shown, Abut. No. 6 similar by opposite hand.)

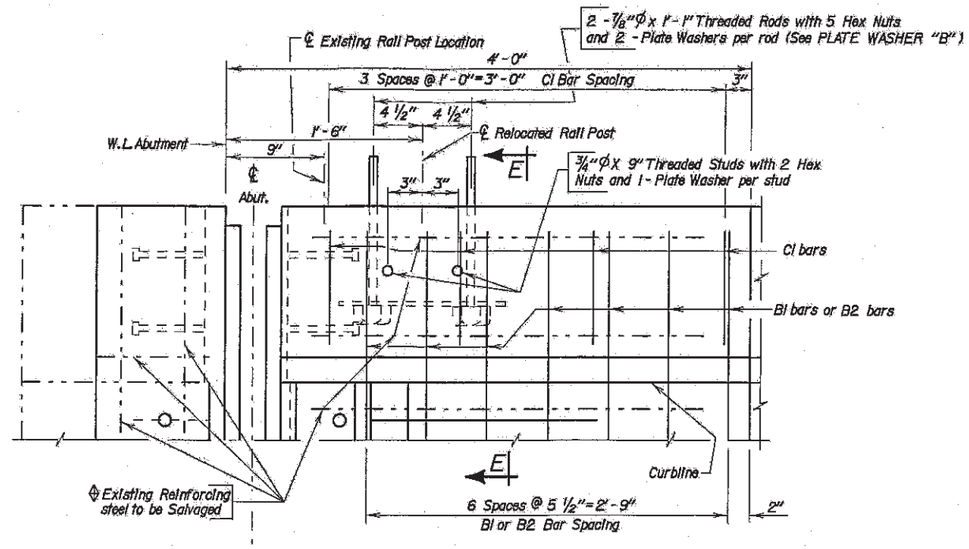

DETAIL "Z"

REINFORCING SCHEDULE

	Mk.	No.	Size	Length	Type
	Phase 1				
	C1	4	4	4'-11"	T 7
*	B1	16	5	16'-0"	Str.
	Phase 2				
	C1	4	4	4'-11"	T 7
*	B2	16	5	16'-0"	Str.

Bending Details

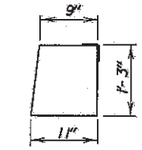

Type T 7

NOTES-
All Bars to be Epoxy Coated
All dimensions are out to out of bars.
* Bars to be Mechanically Spliced

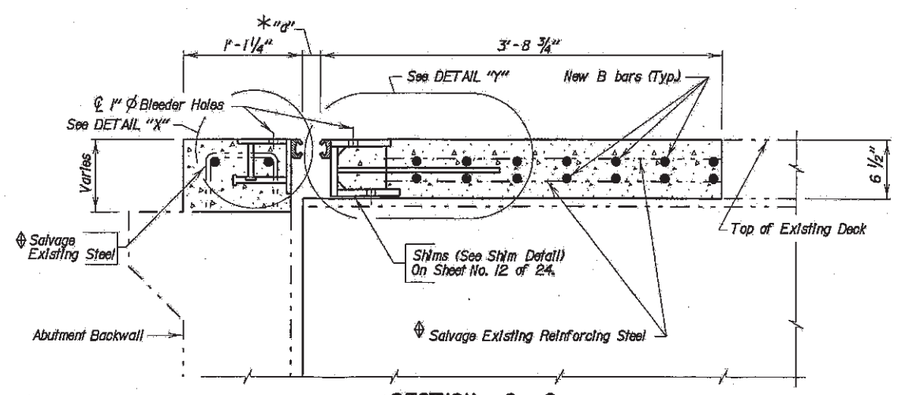

SECTION C - C
(Showing New Joint)

* Dimension "a"	
Temp.	Abut. No. 1
30°	2 13/16"
40°	2 5/8"
50°	2 3/8"
60°	2 3/16"
70°	2"
80°	1 3/4"
90°	1 9/16"

NOTE:
This sheet to be used in conjunction with Sheet No. 12 of 24.

ORIGINAL CONSTRUCTION PLANS

ABUTMENT JOINT REPLACEMENT DETAILS FOR

556' - 0" CONT. COMP. GIRDER BRIDGE

30' - 0" ROADWAY — 0° SKEW
OVER GRAND RIVER — SEC. 26/35-T20N-R28E
STR. NO. 16-665-200 — NH 0012(128)164

CORSON COUNTY

S. D. DEPT. OF TRANSPORTATION

JANUARY 2007

5 OF 6

DESIGNED BY	DRAWN BY	CHECKED BY	
DM	JK	PW	Kevin N. Boeder
CORS5661	5661SB11		BRIDGE ENGINEER

STATE OF	PROJECT	SHEET NO.	TOTAL SHEETS
S.D.	NH 0012(150)105	E37	E105

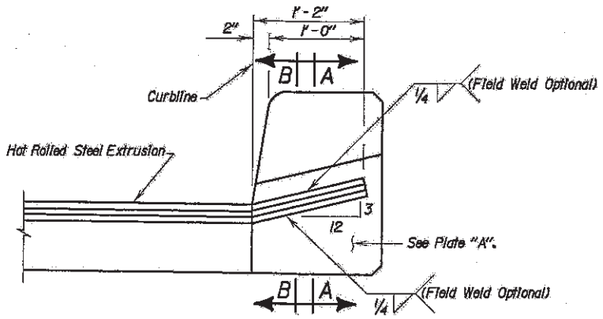

SEC. D - D

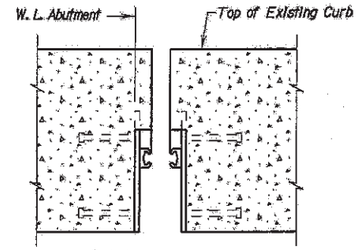

SEC. A - A

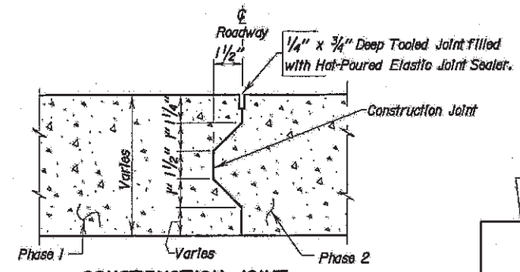

CONSTRUCTION JOINT

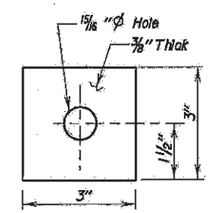

PLATE WASHER "A"

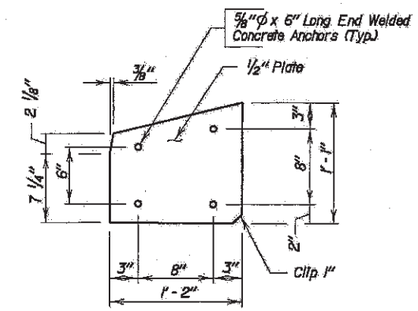

PLATE "A"

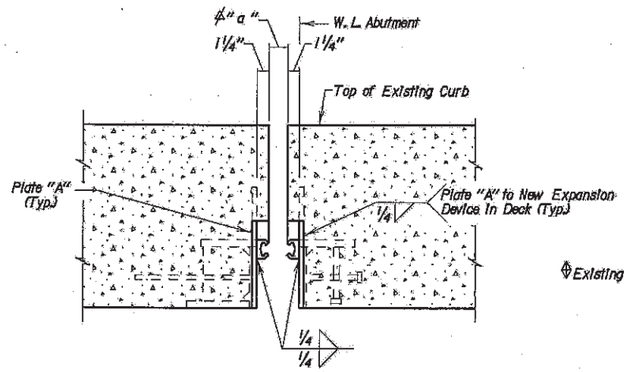

SEC. B - B

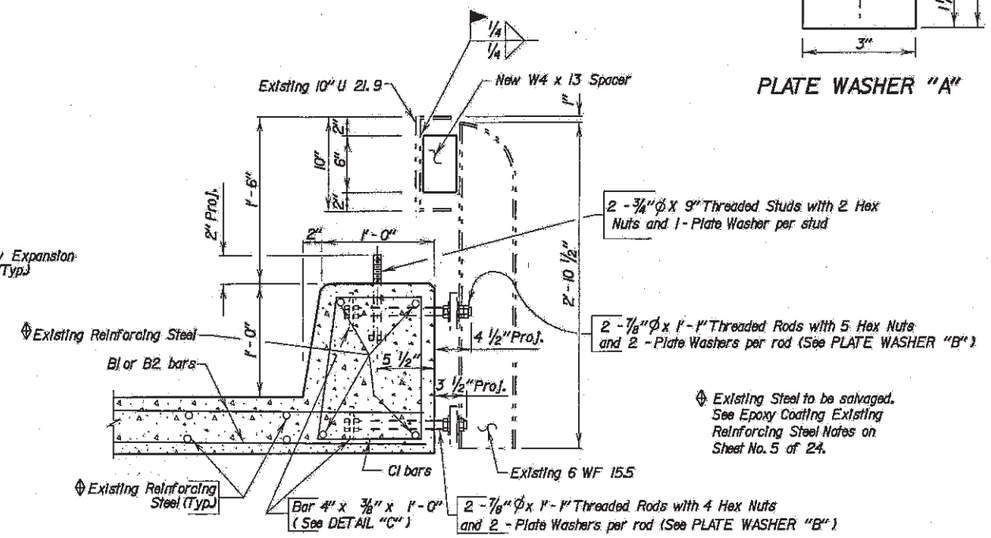

Existing Steel to be salvaged. See Epoxy Coating Existing Reinforcing Steel Notes on Sheet No. 5 of 24.

SEC. E - E

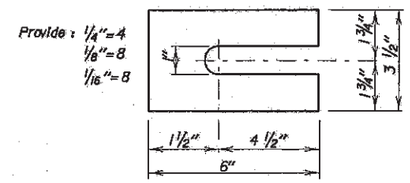

SHIM DETAIL

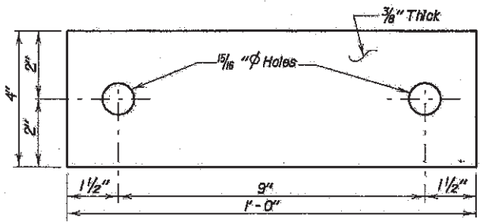

DETAIL "C"

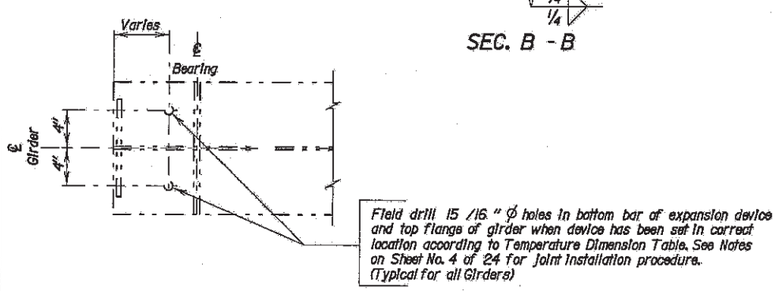

Field drill 15/16" ϕ holes in bottom bar of expansion device and top flange of girder when device has been set in correct location according to Temperature Dimension Table. See Notes on Sheet No. 4 of 24 for joint installation procedure. (Typical for all Girders)

DETAIL "Z"

DETAIL "E"

Neoprene Seal shall have a 5" movement capability.

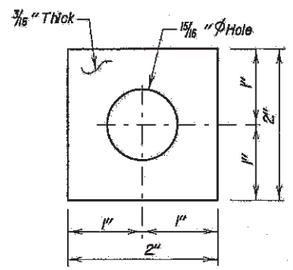

PLATE WASHER "B"

ESTIMATED QUANTITIES		
ITEM	UNIT	QUANTITY
Replace Expansion Device	Each	2
No. 5 Rebar Splice	Each	32
Class A4B Concrete, Bridge Repair	Cu Yd	8.2

Items 1 thru 3 are approximate quantities contained in the above bid items and are for informational purposes only.

	Phase 1	Phase 2
1. Epoxy Coated Reinforcing Steel :	280 Lb	280 Lb
2. Replace Expansion Device Structural Steel :	2646 Lb	2646 Lb
3. Replacement bolts and anchors for attaching barrier rail:	72 Lb	72 Lb

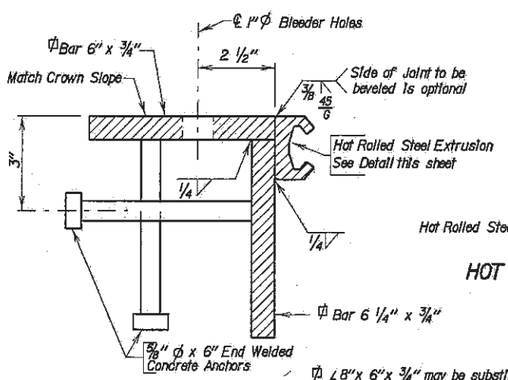

ϕ L8" x 6" x 3/4" may be substituted for 3/4" bars provided vertical leg is trimmed to equivalent dimension.

DETAIL "X"

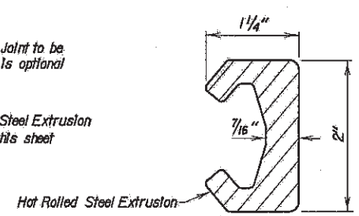

HOT ROLLED STEEL EXTRUSION

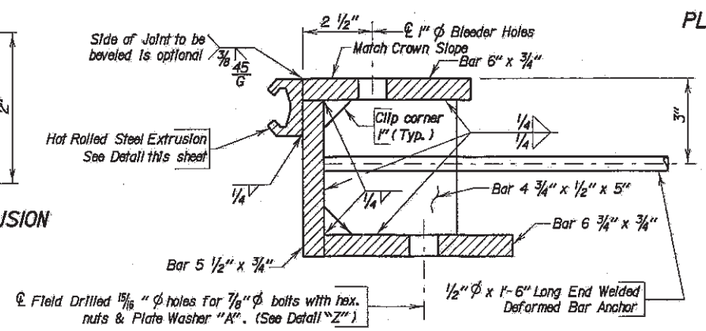

DETAIL "Y"

ABUTMENT JOINT REPLACEMENT DETAILS (CONTINUED)
FOR

556' - 0" CONT. COMP. GIRDER BRIDGE

30' - 0" ROADWAY — 0° SKEW
OVER GRAND RIVER — SEC. 26/35-T20N-R28E
STR. NO. 16-665-200 — NH 0012(128)164

CORSON COUNTY

S. D. DEPT. OF TRANSPORTATION

JANUARY 2007

6 OF 6

ORIGINAL CONSTRUCTION PLANS

DESIGNED BY	DRAWN BY	CHECKED BY	
DM	JK	PW	Kevin M. Goeden
CORS5661	5661SB12		BRIDGE ENGINEER

STATE OF	PROJECT	SHEET NO.	TOTAL SHEETS
S.D.	P 0073(53)252	E38	E105

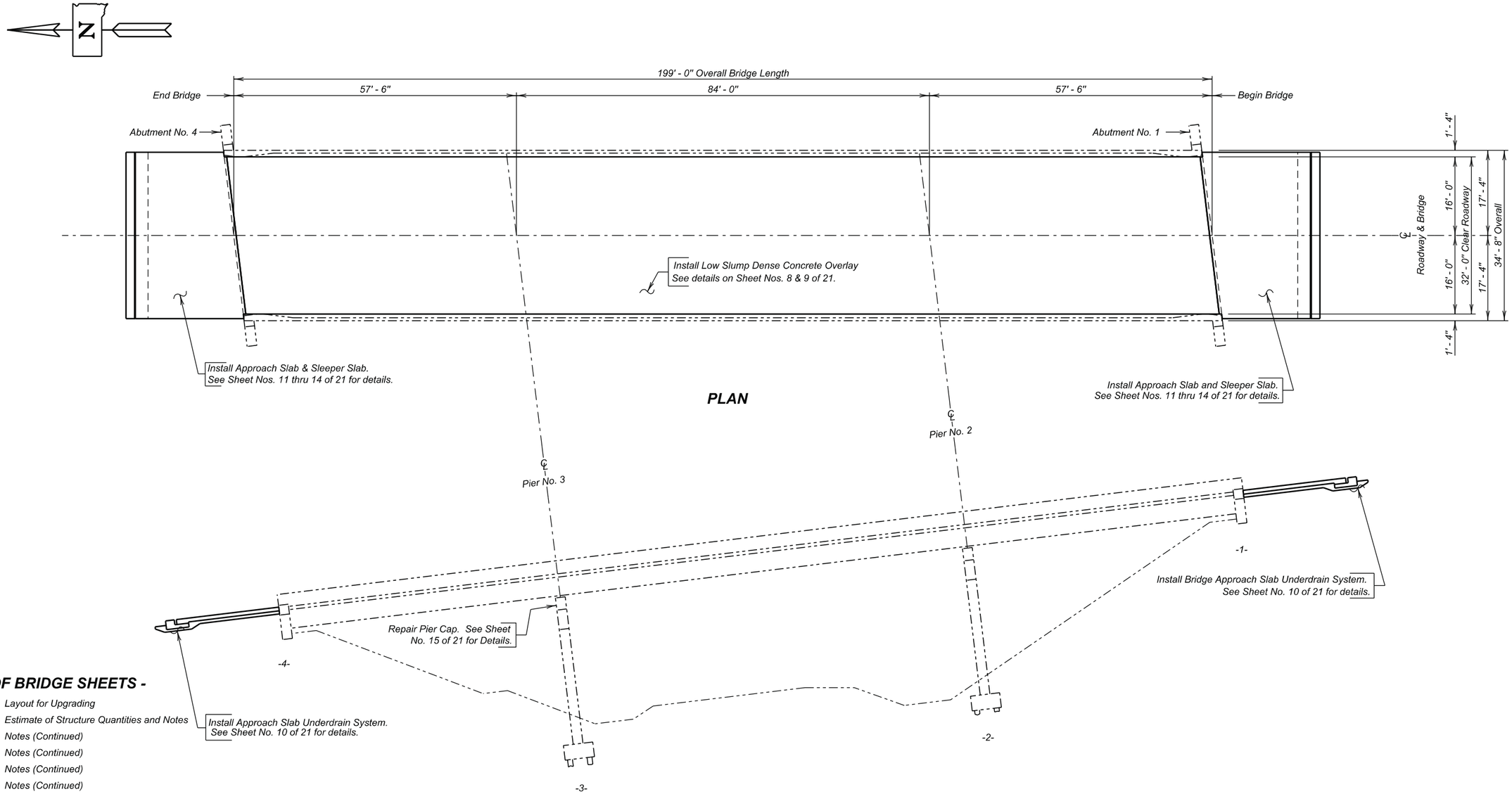

INDEX OF BRIDGE SHEETS -

Sheet No. 1 - Layout for Upgrading
Sheet No. 2 - Estimate of Structure Quantities and Notes
Sheet No. 3 - Notes (Continued)
Sheet No. 4 - Notes (Continued)
Sheet No. 5 - Notes (Continued)
Sheet No. 6 - Notes (Continued)
Sheet No. 7 - Deck Delamination Details
Sheet No. 8 - Profiles Low Slump Dense Concrete Overlay
Sheet No. 9 - Profiles Low Slump Dense Concrete Overlay (Continued)
Sheet No. 10 - Approach Slab Underdrain Details
Sheet No. 11 - Approach Slab Layout
Sheet No. 12 - Approach Slab Details
Sheet No. 13 - Approach Slab Details (Continued)
Sheet No. 14 - Approach Slab Joint Details
Sheet No. 15 - Pier No. 3 Repair Details
Sheet No. 16 - Standard Plate 680.03
Sheet Nos. 17 thru 21 - Original Construction Plans

LAYOUT FOR UPGRADING

FOR

199' - 0" CONTINUOUS COMP. GIRDER BRIDGE

32' - 0" ROADWAY
OVER RAILROAD
STR. NO. 16-026-001
PCN 01RP

6° 54' 23.5" SKEW RHF
SEC. 24-T23N-R17E
P 0073(53)252

CORSON COUNTY

S. D. DEPT. OF TRANSPORTATION

OCTOBER 2013

PLANS BY :
OFFICE OF BRIDGE DESIGN, SOUTH DAKOTA DEPARTMENT OF TRANSPORTATION

DESIGNED BY	CK. DES. BY	DRAFTED BY	
BWS	KH	EJA	Kevin N. Goeden
CORS01RP	01RPLE01		BRIDGE ENGINEER

ESTIMATE OF STRUCTURE QUANTITIES

ITEM NO.	DESCRIPTION	QUANTITY	UNIT
110E0010	Remove Concrete Bridge Approach Slab	268	SqYd
410E2600	Membrane Sealant Expansion Joint	67.8	Ft
430E0300	Granular Bridge End Backfill	37.1	CuYd
430E0510	Approach Slab Underdrain Excavation	42.2	CuYd
460E0150	Concrete Approach Slab for Bridge	154.2	SqYd
460E0160	Concrete Approach Sleeper Slab for Bridge	33.8	SqYd
460E0300	Breakout Structural Concrete	0.2	CuYd
460E0380	Install Dowel in Concrete	44	Each
462E0100	Class M6 Concrete	0.2	CuYd
480E0504	No. 4 Rebar Splice	28	Each
480E0505	No. 5 Rebar Splice	32	Each
480E0506	No. 6 Rebar Splice	44	Each
480E5000	Galvanic Anode	7	Each
550E0010	Low Slump Dense Concrete Deck Overlay	25.8	CuYd
550E0100	Concrete Removal Type 1A	704.0	SqYd
550E0110	Concrete Removal Type 1B	70.8	SqYd
550E0120	Concrete Removal Type 1C	35.4	SqYd
550E0130	Concrete Removal Type 1D	35.4	SqYd
550E0140	Concrete Removal Type B	20.0	Ft
550E0200	Class A45 Concrete Fill	7.9	CuYd
550E0500	Finishing and Curing	704.0	SqYd
680E0040	4" Underdrain Pipe	107.8	Ft
680E2010	Precast Concrete Headwall for Drain	4	Each
680E2500	Porous Backfill	9.4	Ton
998E0100	Railroad Protective Insurance	Lump Sum	LS

SPECIFICATIONS

1. Design Specifications: AASHTO Standard Specifications for Highway Bridges 17th Edition using Working Stress Design.

2. Construction Specifications: South Dakota Standard Specifications for Roads and Bridges, 2004 Edition and Required Provisions, Supplemental Specifications and/or Special Provisions as included in the Proposal.

DETAILS AND DIMENSIONS OF EXISTING BRIDGE

All details and dimensions of the existing bridge, contained in these plans, are based on the original construction plans and shop plans and are provided as information only. It is the Contractor's responsibility to inspect and verify the actual field conditions and any necessary as-built dimensions affecting the satisfactory completion of the work required for this project.

SCOPE OF BRIDGE WORK & SEQUENCE OF OPERATIONS

All work on this structure shall be accomplished with the traffic control shown elsewhere in the plans. Alternate sequence of operations may be submitted by the Contractor for approval by the Engineer a minimum of two weeks prior to the pre-construction meeting.

1. Remove existing rubberized asphalt chip seal for the first phase of construction.

2. Accomplish all Concrete Removal 1A, 1B, 1C, 1D and B and place Class A45 Concrete Fill to the satisfaction of the Engineer for the first phase of construction.

3. Place a Low Slump Dense Concrete Overlay to the elevations shown in the plans on the bridge deck for the first phase of construction.

4. Remove existing approach slabs for the first phase of construction.

5. Install the Approach Slab Underdrain System for the first phase of construction.

6. Install the Sleeper Slabs and Approach Slabs for the first phase of construction.

7. Breakout and repair delaminated concrete at pier 3 as detailed in plans.

8. Switch traffic and repeat steps 1 through 6 for the second phase of construction.

GENERAL CONSTRUCTION - BRIDGE

1. All mild reinforcing steel shall conform to ASTM A615, Grade 60.

2. All exposed concrete corners and edges shall be chamfered 3/4" unless noted otherwise in the plans. Match existing chamfer if the existing chamfer differs.

3. Use 2" clear cover on all reinforcing steel except as shown otherwise.

4. Request for construction joints or resteel splices at points other than those shown, must be submitted to the Engineer for prior approval. If additional splices are approved, no payment will be allowed for the added quantity of reinforcing steel.

5. Surfaces of fresh concrete at construction joints shall be rough floated sufficiently to consolidate the surface. All construction joints shall be cleaned of surface laitance, curing compounds and other foreign materials prior to placing fresh concrete against the joint.

6. The type of vibratory screed shall be approved by the Engineer.

REMOVAL OF RUBBERIZED ASPHALT CHIP SEAL (RACS)

This structure has a Rubberized Asphalt Chip Seal (RACS) on the entire deck. Cost for removal and disposal of the existing RACS shall be incidental to the contract unit price per square yard for "Type 1A Removal (Concrete)". The estimated thickness for the RACS is ½". Any excess rubber that exists on the curb within the limits of the Low Slump Dense Concrete Overlay thickness is to be removed also. All costs associated with curb asphalt removal is to be incidental to the various bid items.

BRIDGE DECK OVERLAY

1. The preparation for resurfacing consists of Type 1A Removal on the entire bridge deck and Type 2A, Type 1B, Type 1C, Type 1D and Type B Removal over the deck surface as detailed on the plan sheets. Such removal shall be in conformance with these plans and Section 550 of the Construction Specifications.

2. Type 1A Removal shall consist of removing the existing RACS and concrete to a depth of 0.25 inches. There are some specific areas, identified on the Deck Profile plan sheets that require Type 1A Removal in excess of 0.25 inches.

3. Extreme care shall be taken during the Type 1B Removal, Type 1C Removal, Type 1D Removal and Type B Removal to ensure that the existing resteel is not damaged. In the event that resteel damage inadvertently occurs, the Bridge Construction Engineer shall be immediately notified. Any damaged resteel shall be repaired by the Contractor, as approved by the Engineer, at no additional cost to the Department.

4. Type 1B Removal, Type 1C Removal, Type 1D Removal, Type B Removal and Class A45 Concrete Fill may not be encountered and may be omitted from the project as determined by the Engineer.

5. Type 1C Removal, Type 1D Removal and Class A45 Concrete Fill is not anticipated to exceed the plan shown quantities. If the Engineer determines that Type 1C Removal, Type 1D Removal and/or Class A45 Concrete Fill in excess of the plan shown quantity is necessary, payment for the additional quantity shall be in conformance with Section 550.5 of the Construction Specifications.

6. The coarse aggregate in the existing bridge deck is a natural aggregate. The coarse aggregate in the low slump bridge deck overlay shall be limestone in accordance with Section 820 of the Construction Specification.

ESTIMATE OF STRUCTURE QUANTIES AND NOTES
FOR
199' – 0" CONTINUOUS COMPOSITE GIRDER BRIDGE

Str. No. 16-026-001

OCTOBER 2013

DESIGNED BY	CK. DES. BY	DRAFTED BY:	
BWS	KH	BWS	Kevin N. Harder
CORS01RP	01RPNOTC		BRIDGE ENGINEER

BRIDGE DECK OVERLAY (CONTINUED)

7. All fine aggregates used in the Portland cement concrete in the "Low Slump Dense Concrete Bridge Deck Overlay" and "Class A45 Concrete Fill" shall conform to Section 800.2.D of the Construction Specification "Alkali Silica Reactivity (ASR)" requirements. The type of cement in the concrete mix shall be one of the options as indicated in the table shown in note number 12 shown on Sheet No. 3 of 21. Fine aggregates with a 14-day expansion value of 0.400 and greater shall not be used.

8. Below is a list of known fine aggregate sources and the average corresponding 14-day expansion values:

Source	Location	Expansion Value
Bachman	Winner, SD	0.335
Birdsall S&G	Creston, SD	0.158
Birdsall S&G	Oral, SD	0.131
Birdsall S&G	Wasta, SD	0.170
Bitterman	Delmont, SD	0.314
Concrete Materials	Corson, SD	0.170
Croell	Quinn, SD	0.089
Emme Sand & Gravel	Oneil, NE	0.217
Fischer S&G	Rapid City, SD	0.092
Fischer S&G	Spearfish, SD	0.053
Fuchs	Pickstown, SD	0.275
Higman	Akron, IA	0.198
Higman	Hudson, SD	0.187
Hilde	Madison, SD	0.116
Jensen	Herried, SD	0.276
L.G. Everist	Brookings, SD	0.186
L.G. Everist	Hawarden, IA	0.166
L.G. Everist	Summit, SD	0.141
Morris	Blunt, SD	0.192
Morris – Richards pit	Onida, SD	0.188
Myrl & Roys Paving-Nelson Pit	Sioux Falls, SD	0.156
Northern Concrete Agg.	Rauville, SD	0.113
Northern Concrete Agg.	Luverne, MN	0.124
Opperman – Gunvordahl Pit	Burke, SD	0.337
Opperman – Cahoy Pit	Herrick, SD	0.307
Opperman – Jones Pit	Burke, SD	0.321
Opperman – Randall Pit	Pickstown, SD	0.239
Thorpe Pit	Britton, SD	0.098
Wagner Building Supplies	Wagner, SD	0.241
Wasta Sand & Gravel	Wasta, SD	0.159

9. The Department will use the running average of the last three known expansion test results or less for determining acceptability of source and the required Type of cement. These expansion results are reported table shown in note number 8. Additional testing, when requested by the Contractor, will be performed by the Department at the Contractor's expense.

BRIDGE DECK OVERLAY (CONTINUED)

10. The values listed in the table shown in note number 8 are intended for use in bidding. If a previously listed pit by SDDOT with acceptable test values (less than 0.250) is discovered after letting to require Type V cement or more lithium (greater than 0.250) the Department will accept financial responsibility for the change in materials.

11. When more than one source of fine aggregates is blended to meet the gradation specifications, the highest expansion value of either sand will be used for determining acceptability and type of cement and or fly ash and or lithium required.

12. Concrete used in the Low Slump Bridge Deck Overlay shall meet the requirements of Section 550 of the Construction Specification. Class A45 Concrete Fill shall meet the requirements of Section 460 of the Construction Specification. In addition both concretes shall have 20% to 25% of the cement replaced with Class F Modified Fly Ash in accordance with Section 605 of the Construction Specification and/or lithium nitrate (30% solution by weight) added to the concrete mix at the following rates.

Course Aggregate	Fine Aggregate	Cement Type	Fly Ash	Lithium Nitrate
Limestone or Granite	< 0.250%	Type I or II	Class F Modified	-----
		Type I or II	-----	1.5 gallon/cubic yard
Limestone or Granite	>0.250%	Type V	Class F Modified	-----
		Type I or II	-----	3.0 gallon/cubic yard
		Type I or II	Class F Modified	1.5 gallon/cubic yard
Quartzite	-----	Type V	Class F Modified	-----
		Type I or II	-----	3.0 gallon/cubic yard
		Type I or II	Class F Modified	1.5 gallon/cubic yard

The Contractor shall use one of these options, but the Contractor may choose which option. All material, labor, equipment, and incidental costs shall be included in the contract unit price for "Low Slump Dense Concrete Bridge Deck Overlay" or "Class A45 Concrete Fill".

13. Grout for bonding new concrete to old concrete shall meet the requirements of Section 550 of the Construction Specification. In addition, the grout mix shall contain 1 1/2 gallons of Lithium per cubic yard or 20% to 25% of the cement replaced with fly ash.

BRIDGE DECK OVERLAY (CONTINUED)

14. Suppliers of Lithium are listed below:

BASF Admixtures, Inc.
23700 Chagrin Boulevard
Cleveland, Ohio 44122-5554
1-800-628-9990
Website: www.basf-admixtures.com

FMC Corporation Lithium
Seven LakePointe Plaza
2801 Yorkmont Road, Suite 300
Charlotte, North Carolina 28208
1-704-868-5300
Website: www.fmclithium.com

Grace Construction Products
62 Whitmore Ave.
Cambridge MA
1-877-423-6491
Website: www.graceconstruction.com

15. The bridge deck shall be overlayed with a minimum thickness of 2" Low Slump Dense Concrete.

16. It will be necessary for the Contractor to shape the surface of the Low Slump Dense Concrete Overlay within one foot of the curb as detailed in the plans to insure that water drains to the floor drains or off the ends of the bridge.

17. No traffic will be allowed to operate on the scarified portion of the bridge deck. If it appears that the entire Low Slump Dense Concrete Overlay cannot be completed prior to winter, the Type 1A, 1B, 1C, 1D and Type B removal shall not be done until work resumes in the spring. In the event that scarification has been started and due to unforeseen circumstances it becomes impossible to complete the placement of the Low Slump Dense Concrete Overlay on the entire surface of the structure prior to winter, the Office of Bridge Design shall be notified. Recommendations for handling winter traffic will then be made. These recommendations may include, but are not limited to, filling extra depth removal areas with Class A45 Concrete, placing an asphalt overlay on the uncompleted area so that the entire roadway width may be opened to traffic, removal of the asphalt overlay when work is resumed and scarifying an additional 1/4" of depth on the bridge deck. The cost of this work, including asphalt overlay, scarification, Class A45 Concrete, extra Low Slump Dense Concrete, and all other items incidental to this work, shall be at the expense of the Contractor.

NOTES (CONTINUED)
FOR
199' – 0" CONTINUOUS COMPOSITE GIRDER BRIDGE

Str. No. 16-026-001

OCTOBER 2013

DESIGNED BY	CK. DES. BY	DRAFTED BY:	
BWS	KH	BWS	Kevin N. Borden
CORS01RP	01RPNOTC		BRIDGE ENGINEER

APPROACH SLAB UNDERDRAIN SYSTEM

1. This work consists of excavating in place material under the limits of the new approach slab and installing a drainage system to prevent water retention directly under the approach and sleeper slabs. Excavation for placement of the new approach slab and sleeper slab underdrain system shall be done with minimal disturbance to the underlying material.

2. The Approach Slab Underdrain system shall be constructed in accordance with Section 430.3.C of the Special Provision for Approach Slab Underdrain System.

REMOVAL OF CONCRETE BRIDGE APPROACH SLAB

1. The existing concrete approach and sleeper slabs adjacent to the structure shall be completely removed by the Contractor.

2. The crushed concrete and reinforcing steel from the removal shall be disposed of by the Contractor at an approved site. An appropriate site will be as described in the Waste Disposal Site notes in this set of plans.

3. All labor, tools, equipment and any incidentals necessary for removal and disposal of the existing approach and sleeper slabs shall be incidental to the contract unit price per square yard for "Remove Concrete Bridge Approach Slab".

APPROACH SLABS

1. Excavation for placement of new approach slabs and sleeper slabs shall be done with minimal disturbance to the underlying material.

2. Low spots in the area where the approach slabs will be located are to be filled and compacted with bridge end backfill material back to the original grade line. Bridge End Backfill material shall be in accordance with Section 882 of the Construction Specifications. All costs for this work shall be incidental to the various contract bid items.

3. The top of approach slab elevations shall be established during construction and shall be subject to the approval of the Engineer. Care shall be taken to provide a smooth transition from the bridge deck elevations to the new pavement elevations established in the field so as to prevent any dips or bumps in the areas of the bridge ends or ends of the new approach slabs. The maximum rate of grade transition through the approach slab shall be 1 inch per 40 feet.

4. Sleeper slab riser shall be cast with or later than the Approach Slab. Care shall be taken to ensure the correct grade is maintained across the joint.

5. The use of a vibratory screed will be required during placement of Class A45 Concrete for the approach slabs. Concrete placement in front of the screed shall be kept parallel to the screed.

6. The concrete in the approach slab shall be tined.

APPROACH SLABS (CONTINUED)

7. The new approach slabs and sleeper slabs shall have a surface finish as stipulated in Section 460.3.M.4 of the Construction Specifications.

Δ 8. The Concrete Approach Slabs Adjacent to Bridge shall be cured in accordance with Section 460.3 N of the Construction Specifications. The minimum 7 day cure time requirement shall be waived. The approach slabs shall be cured until a minimum compressive strength of 4000 psi is reached.

9. Concrete Approach Sleeper Slab for Bridge will be paid for at the contract unit price per square yard. This payment shall be full compensation for all excavation, furnishing, hauling, and placing all materials including concrete, and reinforcing steel; for disposal of all excavated material and surplus materials; and for labor, tools, equipment and any incidentals necessary to complete this item of work.

10. Concrete Approach Slab for Bridge will be paid for at the contract unit price per square yard. This payment shall be full compensation for all excavation, furnishing, hauling and placing all materials including concrete, asphalt paint or 4 mil polyethylene sheeting, elastic joint sealer and reinforcing steel; for disposal of all excavated material and surplus materials and for labor, tools, equipment and any incidentals necessary to complete this item of work.

DESIGN MIX OF CONCRETE

1. Class A45 Concrete shall be used for the bid items Concrete Approach Slab for Bridge and Concrete Approach Sleeper Slab for Bridge.

2. The Type of cement, concrete strength requirements, aggregate requirements, slump and air requirements for the contract items Class A45 Concrete Bridge Repair, Concrete Approach Sleeper Slab for Bridge and Concrete Approach Slab for Bridge shall conform to the requirements of Section 460 of the Construction Specification.

MEMBRANE SEALANT EXPANSION JOINT

1. Install all membrane sealant expansion joints at the plan shown locations in conformance to the following notes.

2. The Membrane Sealant shall be one of membrane sealant types from the approved product list for Membrane Sealant Expansion Joints.

3. The manufacturer shall supply the membrane sealant in packaging that precompresses the membrane sealant. The precompressed dimension shall be as recommended by the sealant manufacturer to provide a water tight seal throughout a joint movement range of + 25% (minimum) from the specified joint opening dimension. In no case shall the precompressed dimension exceed 75% of the joint opening width. The foam sealant shall be slowly self expanding to permit workers ample time to install the membrane sealant before the membrane sealant exceeds the joint opening width.

MEMBRANE SEALANT EXPANSION JOINT (CONTINUED)

4. The membrane sealant shall be supplied in pieces 5 feet in length or longer. The foam sealant shall be ultra-violet and ozone resistant.

5. The bonding adhesive used to attach the membrane sealant to the adjacent concrete shall be approved by the membrane sealant manufacturer.

6. Adhesive used to join adjacent pieces of the membrane sealant shall be as recommended by the manufacturer.

7. If Styrofoam filler material is used in the construction, it shall be closed cell and water-tight as approved by the Engineer.

8. Use plywood or other material to protect concrete adjacent to the joint from spalling before any equipment is moved across the joint. Any spall areas will be repaired at the Contractor's expense by breaking out and replacing adjacent concrete, as approved by the Engineer.

9. The minimum ambient air temperature at the time of joint installation and adhesive curing shall be 40° F.

10. A technical representative of the membrane sealant manufacturer shall be present at the jobsite during installation. The technical representative shall be knowledgeable in the correct procedures for the preparation and installation of the joint material to insure the Contractor installs the joint to the Manufacturers recommendations.

11. The joint opening shall be constant width and shall have smooth vertical sides. Surfaces of material adjacent to the joint shall be at the correct grade and crown as approved by the Engineer.

12. Concrete surfaces that will be in contact with the membrane sealant shall be thoroughly cleaned by abrasive blasting to remove all laitance and contaminants (such as oil, curing compounds, etc.) from the concrete surface. At a minimum two passes of abrasive blasting with the nozzle held at an angle to within 1 to 2 inches of the a concrete surface will be required. Cleaning of the concrete surfaces with solvents, wire brushing, or grinding shall not be permitted.

NOTES (CONTINUED)
FOR
199' – 0" CONTINUOUS COMPOSITE GIRDER BRIDGE

Str. No. 16-026-001

OCTOBER 2013

DESIGNED BY	CK. DES. BY	DRAFTED BY:	
BWS	KH	BWS	Kevin N Goeden
CORS01RP	01RPNOTC		BRIDGE ENGINEER

MEMBRANE SEALANT EXPANSION JOINT (CONTINUED)

13. After abrasive blasting, but immediately prior to membrane joint installation, the entire joint contact surface shall be air blasted. The air compressor used for joint cleaning shall be equipped with trap devices capable of providing moisture-free and oil-free air at a recommended pressure of 90 psi. To obtain complete bonding with the adhesive, the adjacent concrete surfaces must be dry and clean. The contact surfaces for the joint shall be visually inspected by the Engineer immediately prior to joint installation to verify the surface is dry and clean.

14. Individual spliced sections shall be installed as per the manufacturers' recommendations. The membrane joint sealant manufacturer shall submit a detailed installation procedure to the Engineer at least 5 days prior to joint installation for his review.

15. Traffic shall not be allowed on the joint for a minimum 3 hours unless otherwise directed by the Engineer.

16. Forms for the joint shall be left in place for a minimum of 7 days. No construction equipment or traffic shall be allowed on the joint until the concrete has reached design strength. The joint edges shall be protected from damage by equipment and traffic.

17. The Membrane Sealant Expansion Joint will be measured in feet to the nearest one-tenth foot, complete in place. Measurement will be made of the overall horizontal length. The Membrane Sealant Expansion Joint will be paid for at the contract unit price per foot complete in place. Payment for this item shall be full compensation for furnishing all the required materials in place, inclusive of labor, equipment and incidentals necessary to complete the work in accordance with the plans and the foregoing specifications.

INSTALLING DOWELS IN CONCRETE

1. Holes drilled in the existing concrete shall be true and normal or as shown in the plans. Drilling holes using a core drill shall not be allowed. Care shall be taken not to damage the existing reinforcing steel. It is likely that some of the existing reinforcing steel shown in the original construction plans may have been placed out of position during original construction. Therefore, prior to the start of drilling any holes in the concrete, an effort will be made by Department forces to mark on the concrete surface where practical any locations of the in-place reinforcing steel. In spite of this precaution, the Contractor can still expect to encounter and have to drill through reinforcing steel or shift the dowel spacing as approved by the Engineer to miss the existing reinforcing steel. If the Contractor shifts the dowel spacing, the unused drill holes shall be completely filled with the epoxy resin specified in note number 2 under "Installing Dowels in Concrete" as approved by the Engineer.

2. The epoxy resin mixture shall be of a type for bonding steel to hardened concrete and shall conform to AASHTO M235 Type IV, Grade 3 (Equivalent to ASTM C881, Type IV, Grade 3). Grade 1, 2 or 3 may be used for vertical dowels and Grade 3 epoxy shall be used for all horizontal dowels.

INSTALLING DOWELS IN CONCRETE (CONTINUED)

3. The diameter of the drilled holes shall not be less than 1/8 inch greater, nor more than 3/8 inch greater than the diameter of the dowels or as per the Manufacturer's recommendations. The drilled holes shall be blown out with compressed air using a device that will reach the back of the hole to ensure that all debris or loose material has been removed prior to epoxy injection.

4. Mix epoxy resin as recommended by the Manufacturer and apply by an injection method as approved by the Engineer. Beginning at the back of the drilled holes, fill the holes 1/3 to 1/2 full of epoxy, or as recommended by the Manufacturer, prior to insertion of the steel bar. Care shall be taken to prevent epoxy from running out of the horizontal holes prior to steel bar insertion. Rotate the steel bar during installation to eliminate voids and ensure complete bonding of the bar. Insertion of the bars by the dipping or painting method will not be allowed.

5. No loads shall be applied to the epoxy grouted dowel bars until the epoxy resin has had sufficient time to cure as specified by the epoxy resin manufacturer.

6. Dowel bars shall be deformed bars conforming to ASTM A615 Grade 60.

7. The cost of epoxy resin, dowels, installation and other incidental items shall be incidental to the contract unit price per each for "Install Dowel in Concrete".

MECHANICAL REBAR SPLICES

The approach slabs will be built in phases under traffic. Mechanical splice devices will be required for the transverse approach slab and sleeper slab reinforcing steel. The mechanical rebar splices shall be in accordance with Section 480 of the Construction Specifications.

PIER CAP REPAIR

1. Deteriorated areas on the pier cap No. 3 will be broken out and repaired according to the plans. Breakout limits shall be defined by a 3/4" deep sawcut, where practical, as approved by the Engineer.

2. Cracker or expanding compounds placed into predrilled holes in the breakout section will not be permitted for concrete breakout.

3. Breakout concrete to the depths as shown on the plans or to sound concrete as approved by the Engineer. Care shall be taken not to damage the existing grout pads on the top of the cap or the reinforcing steel in the cap during concrete breakout. Any reinforcing steel that is damaged during concrete breakout shall be replaced or repaired (as approved by the Engineer) by the Contractor at no cost to the Department.

4. After all loose concrete has been removed, the area shall be abrasive blasted and blown clean with clean, dry, oil-free compressed air at 90 psi.

PIER CAP REPAIR (CONTINUED)

5. Reinforcing steel that is exposed and is scheduled for use in the new construction shall be cleaned and straightened to the satisfaction of the Engineer.

6. The cost of concrete breakout including sawing, breaking out concrete, cleaning, straightening reinforcing steel and disposal of all broken out concrete shall be incidental to the unit price per cubic yard for "Breakout Structural Concrete".

7. The pier cap shall be rebuilt to the dimensions of the original construction plans unless otherwise shown on the plans. The cap forms may be removed when the concrete attains a compressive strength of 2000 psi.

8. All costs associated with furnishing, placing and finishing Class A45 Concrete shall be incidental to the unit price per cubic yard for "Class M6 Concrete".

NOTES (CONTINUED)
FOR
199' – 0" CONTINUOUS COMPOSITE GIRDER BRIDGE

Str. No. 16-026-001

OCTOBER 2013

DESIGNED BY	CK. DES. BY	DRAFTED BY:	
BWS	KH	BWS	Kevin N. Gordon
CORS01RP	01RPNOTC		BRIDGE ENGINEER

PIER CAP REPAIR (CONTINUED)

8. Concrete used in vertical patching applications on the pier cap where forms are not practical shall consist of one of the following products, or equal as approved by the Office of Bridge Design.

   Vertical Patch
   Symons
   2400 Arthur Avenue
   Elk Grove Village, IL 60007
   Phone: (847) 298-3200
   Web site: www.symons.com

   HB2 Repair Mortar
   BASF Building Systems
   889 Valley Park Drive
   Shakopee, MN 55379
   Phone: (800) 433-9517
   Web site: www.buildingsystems.basf.com

   Meadow-Patch 20
   W. R. Meadows, Inc.
   P.O. Box 338
   Hampshire, IL 60140-0338
   Phone: (847) 214-2100
   Web site: www.wrmeadows.com

   Speed Crete Red Line
   The Euclid Chemical Company
   19218 Redwood Rd.
   Cleveland, OH 44110
   Phone: (800) 321-7628
   Web site: www.euclidchemical.com

   The concrete patch material shall be applied and cured as recommended by the Manufacturer and as approved by the Engineer.

9. All costs associated with furnishing, placing and finishing Class M6 Concrete and patching material shall be incidental to the unit price per cubic yard for "Class M6 Concrete".

GALVANIC ANODE

1. The Contractor shall furnish and place Galvanic anodes in the concrete repair areas specified in this plan set.

2. The galvanic anodes shall be supplied as one of the following:

   a. Galvashield XP+
      Vector Corrosion Technologies
      13312 N 56th St, Suite 102
      Tampa, FL 33617
      Phone: (813) 830-7566
      Website: www.vector-corrosion.com

   b. Sentinel GL
      Euclid Chemical Company
      19218 Redwood Road
      Cleveland, OH 44110
      Phone: (800) 321-7628
      Website: www.euclidchemical.com

   c. Sika Galvashield XP+
      Sika Corporation US
      201 Polito Avenue
      Lyndhurst, NJ 07071
      Phone: (800) 933-7452
      Website: http://usa.sika.com

3. The anodes shall be placed in accordance with manufacturer's recommendations and as approved by the Engineer. The anodes have not been shown on the drawings. The Contractor shall provide shop drawings of the galvanic anode installation including locations of the individual anodes.

4. The anodes shall be placed with a minimum ¾" cover and shall be set in Embedding Mortar per the manufacturer's recommendations. The anodes shall be fully encased in the concrete repair material. Where adequate cover does not exist, a concrete pocket shall be chipped out behind the anode to provide sufficient cover. The Contractor may need to chip around the reinforcing bar locally at the anode installation to make the electrical connection. The reinforcing steel at the connection location shall be cleaned per the manufacturer's recommendations to provide sufficient electrical connection and mechanical bond.

5. The electrical continuity of the electrical connections and reinforcing steel shall be confirmed per the manufacturer's recommendations.

6. The Contractor shall provide manufacturer's product literature, shop drawings and installation instructions.

7. All costs associated with placing anodes including labor, equipment, materials and incidentals shall be included in the contract unit price per each for "Galvanic Anode".

COORDINATION WITH RAILROAD

1. During construction of the pier wall repair, the Contractor shall not interfere with the operating railroad train movements. Construction activity must not take place within 25 ft. of the centerline track when train movements are occurring through the construction site and construction equipment shall be removed form this zone prior to arrival of any train. See Special Provision for Working on Railroad Company Right-of-Way.

2. See Special Provision Regarding Railroad Protective Liability Insurance.

NOTES (CONTINUED)
FOR
199' – 0" CONTINUOUS COMPOSITE GIRDER BRIDGE

Str. No. 16-026-001

OCTOBER 2013

DESIGNED BY	CK. DES. BY	DRAFTED BY:	
BWS	KH	BWS	Kevin N. Gordon
CORS01RP	01RPNOTC		BRIDGE ENGINEER

STATE OF	PROJECT	SHEET NO.	TOTAL SHEETS
S.D.	P 0073(53)252	E44	E105

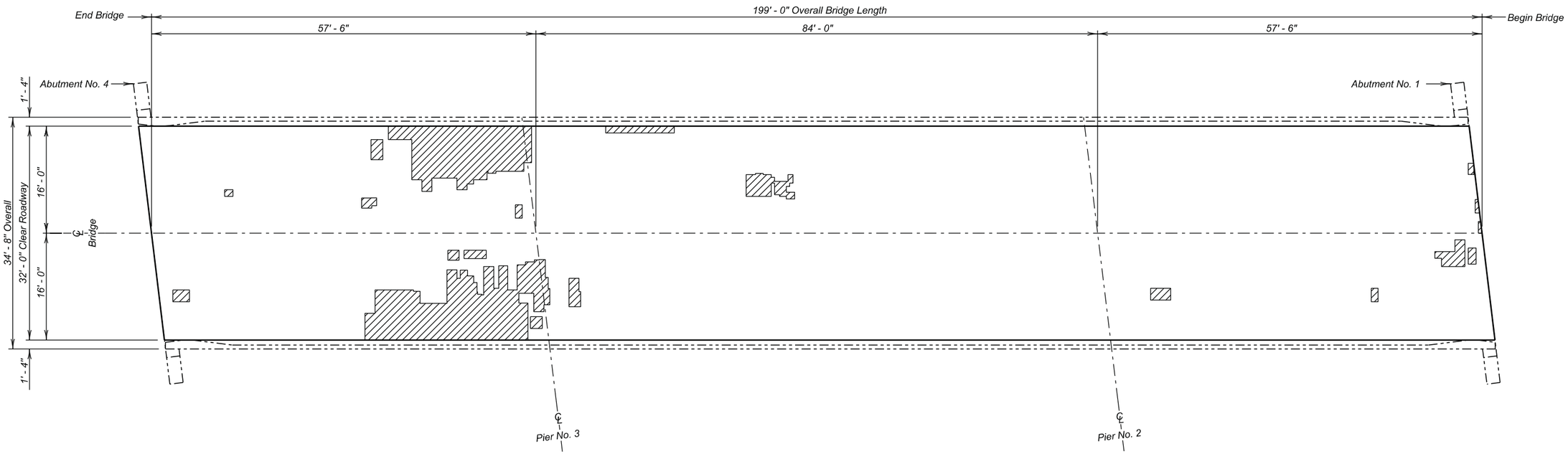

DECK DELAMINATION DETAILS

FOR

199' - 0" CONTINUOUS COMP. GIRDER BRIDGE

32' - 0" ROADWAY
OVER RAILROAD
STR. NO. 16-026-001

6° 54' 23.5" SKEW RHF
SEC. 24-T23N-R17E
P 0073(53)252

CORSON COUNTY

S. D. DEPT. OF TRANSPORTATION

OCTOBER 2013

7 OF 21

LEGEND -

Shaded area indicate approximate location of unsound concrete requiring Concrete Removal Type 1B

DESIGNED BY	CK. DES. BY	DRAFTED BY	
BWS	KH	JRK	Kevin N. Goeden
CORS01RP	01RPLE07		BRIDGE ENGINEER

STATE OF	PROJECT	SHEET NO.	TOTAL SHEETS
S.D.	P 0073(53)252	E45	E105

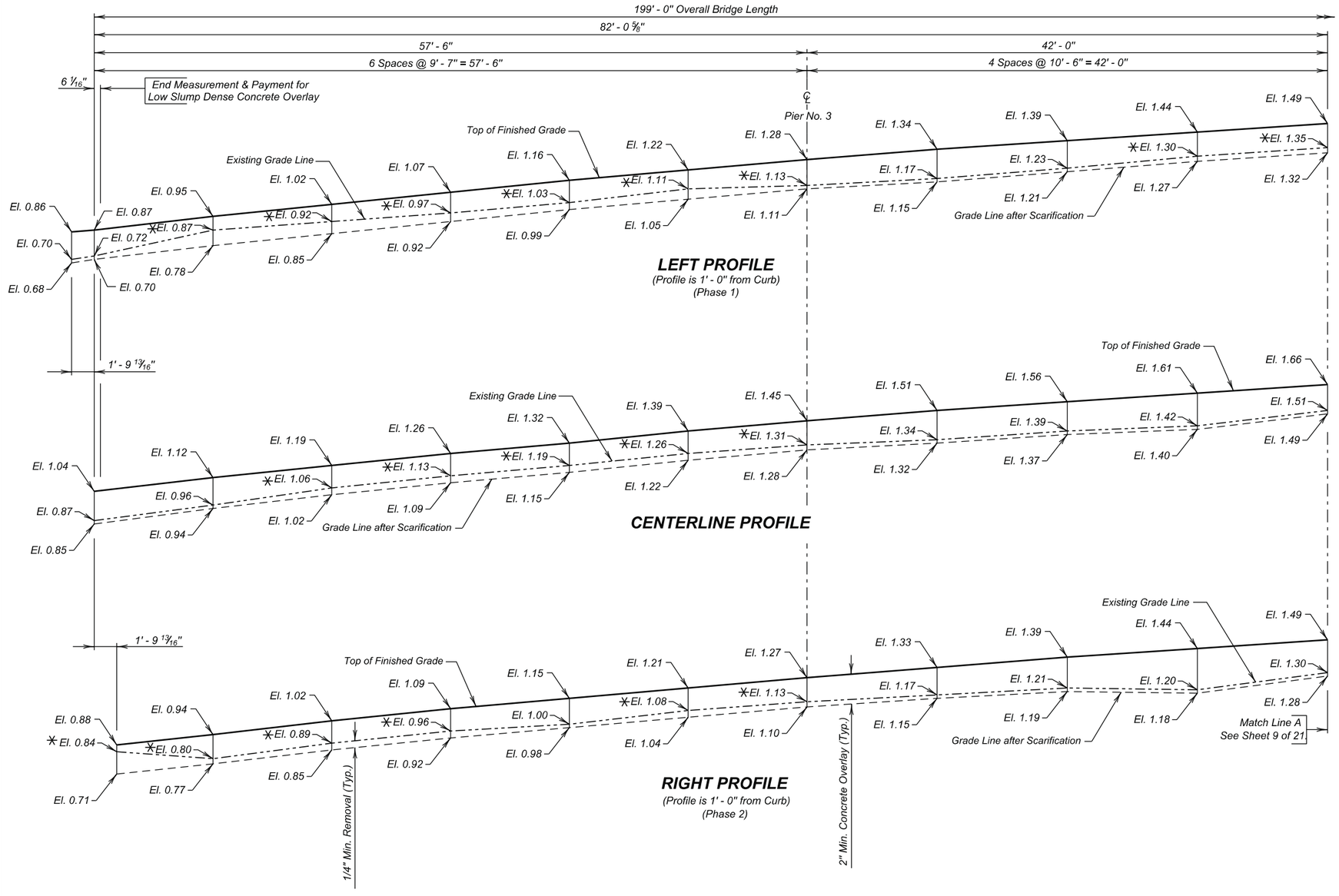

Benchmark Description:

CP13 345 + 24.67 169.68 R
rebar @ 4795 pcn grading project
Elevation 2601.20

0' .25' .5' 1.00'

VERTICAL SCALE

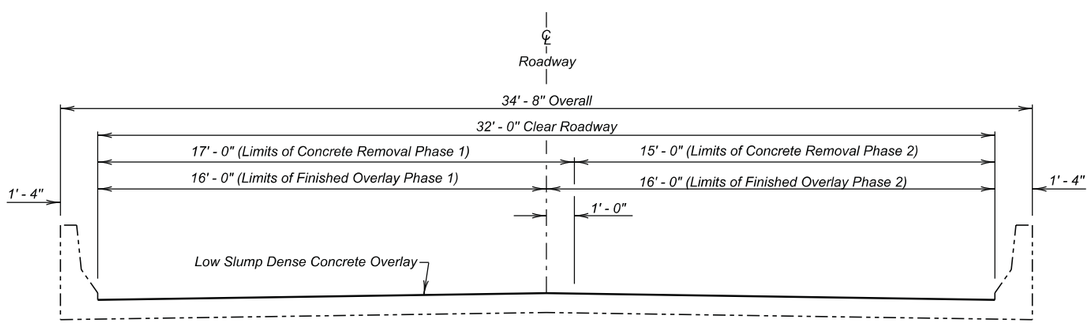

TYPICAL SECTION

NOTE :
Add 2600.00 to all elevations shown on profiles.
✳ Scarify in excess of 1/4" in these areas.
⊗ Existing Elevation is the same as the Finished Surface Elevation.
⊕ Existing Elevation is higher than the Finished Surface Elevation.

DECK PROFILES FOR LOW SLUMP DENSE CONCRETE OVERLAY

FOR

199' - 0" CONTINUOUS COMP. GIRDER BRIDGE

32' - 0" ROADWAY — 6° 54' 23.5" SKEW RHF
OVER RAILROAD — SEC. 24-T23N-R17E
STR. NO. 16-026-001 — P 0073(53)252

CORSON COUNTY
S. D. DEPT. OF TRANSPORTATION
OCTOBER 2013

DESIGNED BY	CK. DES. BY	DRAFTED BY	
NP	KH	JRK	Kevin N. Goeden
CORS01RP	01RPLE08		BRIDGE ENGINEER

STATE OF	PROJECT	SHEET NO.	TOTAL SHEETS
S.D.	P 0073(53)252	E46	E105

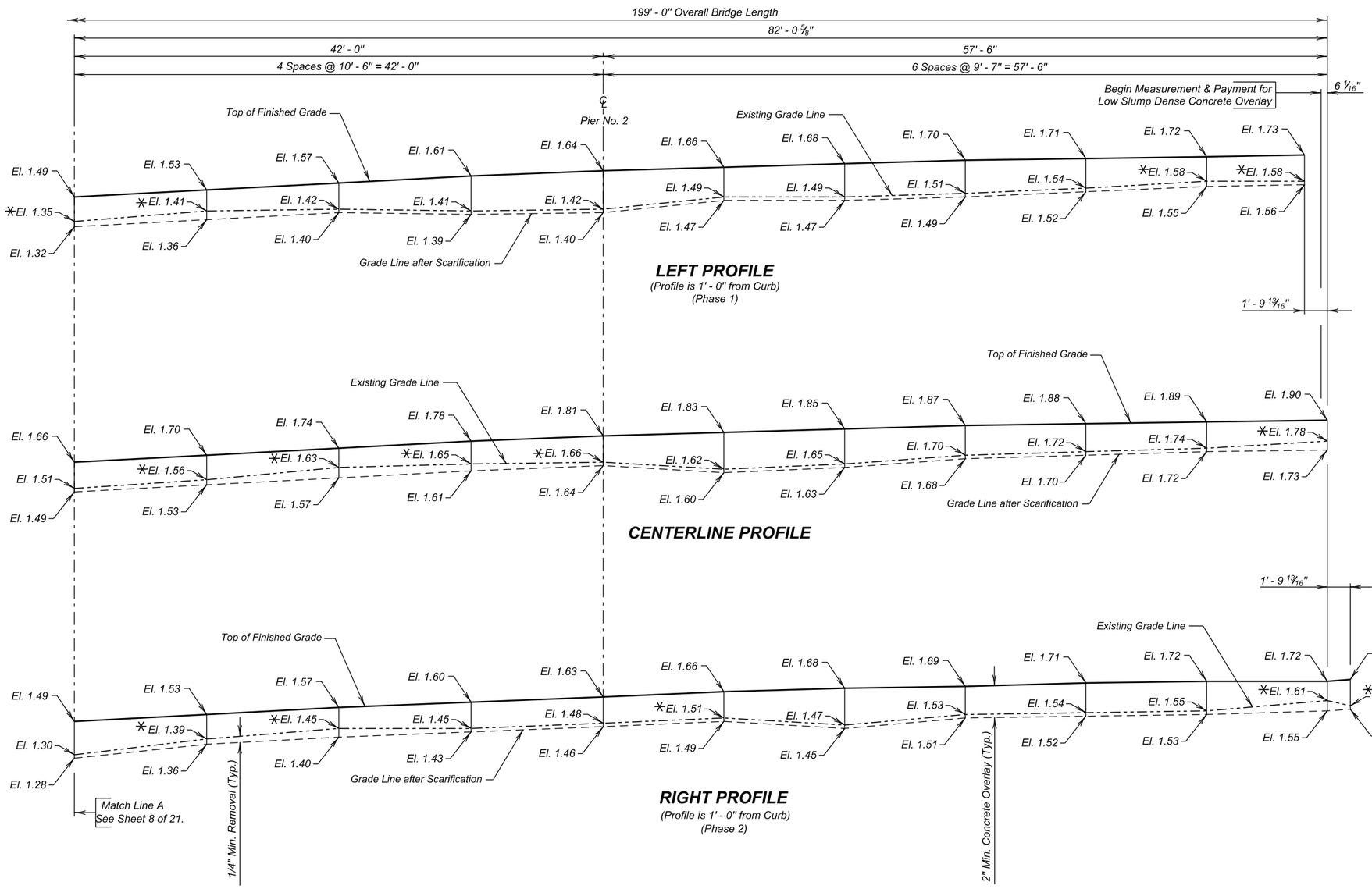

Benchmark Description:

CP13 345 + 24.67 169.68 R
rebar @ 4795 pcn grading project
Elevation 2601.20

0' .25' .5' 1.00'

VERTICAL SCALE

ESTIMATED QUANTITIES

ITEM	UNIT	QUANTITY Phase I	QUANTITY Phase 2
Low Slump Dense Concrete Deck Overlay	Cu. Yd.	25.8	25.8
Concrete Removal Type 1A	Sq. Yd.	374.0	330.0
Concrete Removal Type 1B	Sq. Yd.	37.6	33.2
Concrete Removal Type 1C	Sq. Yd.	18.8	16.6
Concrete Removal Type 1D	Sq. Yd.	18.8	16.6
Concrete Removal Type B	Ft.	10.0	10.0
Class A45 Concrete Fill	Cu. Yd.	4.2	3.7
Finishing and Curing	Sq. Yd.	352.0	352.0

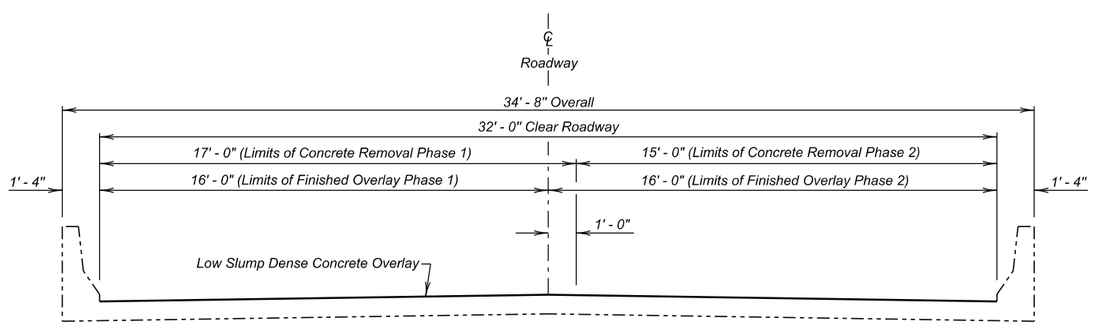

TYPICAL SECTION

NOTE :
Add 2600.00 to all elevations shown on profiles.
✳ Scarify in excess of 1/4" in these areas.
⊗ Existing Elevation is the same as the Finished Surface Elevation.
◊ Existing Elevation is higher than the Finished Surface Elevation.

DECK PROFILES FOR LOW SLUMP DENSE CONCRETE OVERLAY
FOR
199' - 0" CONTINUOUS COMP. GIRDER BRIDGE

32' - 0" ROADWAY — 6° 54' 23.5" SKEW RHF
OVER RAILROAD — SEC. 24-T23N-R17E
STR. NO. 16-026-001 — P 0073(53)252

CORSON COUNTY
S. D. DEPT. OF TRANSPORTATION
OCTOBER 2013

DESIGNED BY	CK. DES. BY	DRAFTED BY	
NP	KH	JRK	Kevin N. Boeden
CORS01RP	01RPLE09		BRIDGE ENGINEER

STATE OF	PROJECT	SHEET NO.	TOTAL SHEETS
S.D.	PH 0014(172)418	E47	E105

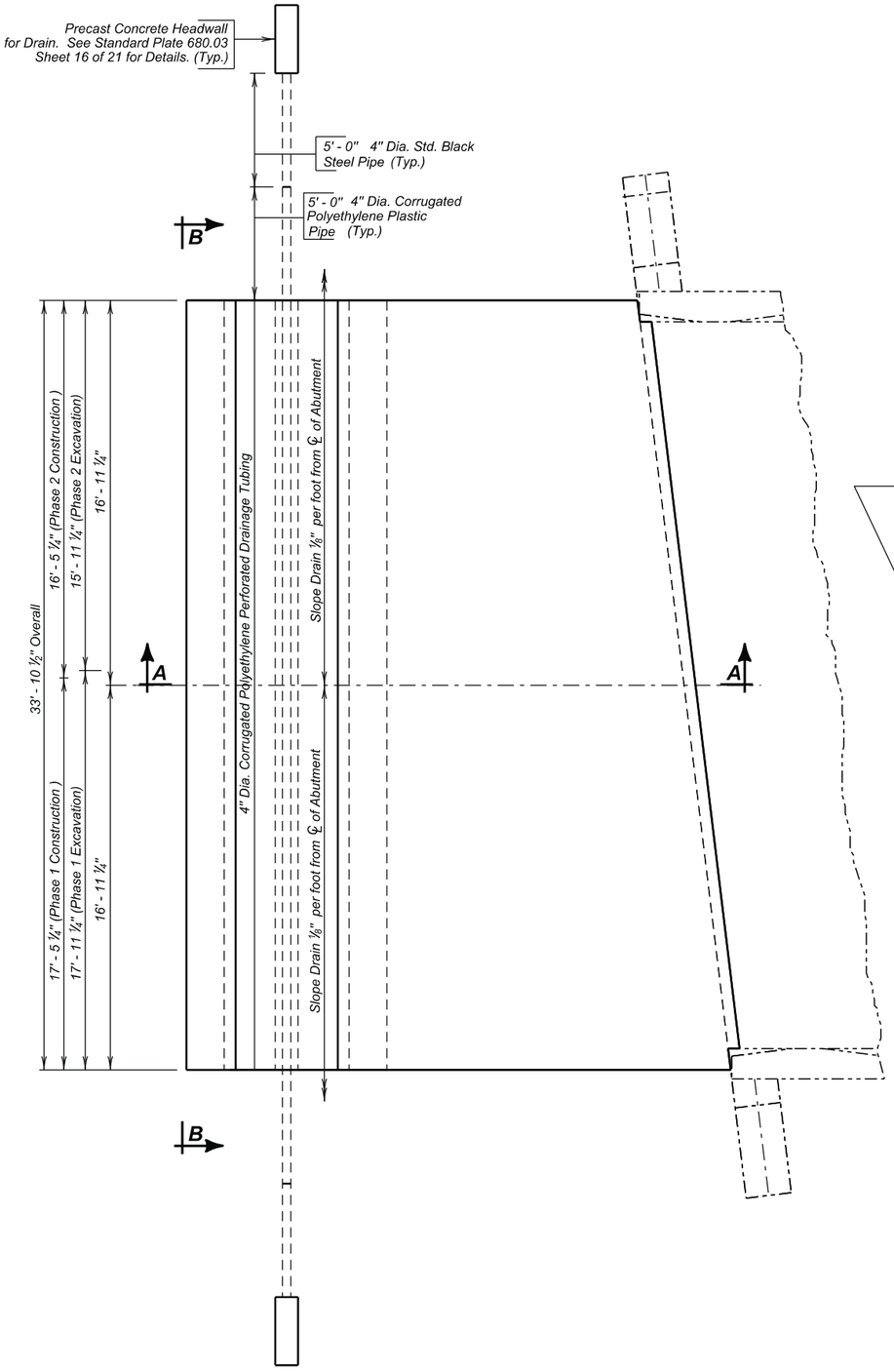

PLAN

(Bridge End Backfill shown adjacent to Abutment No. 4, Abutment No. 1 similiar by opposite hand.)

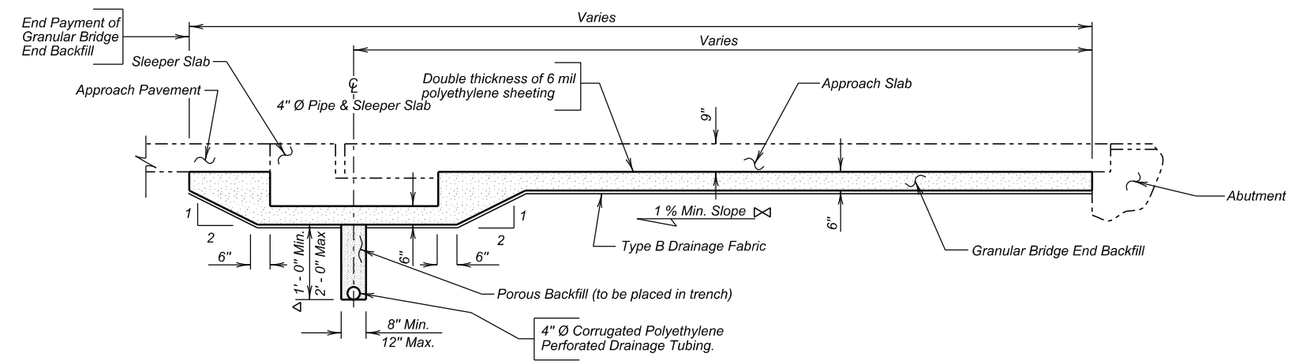

SEC. A - A

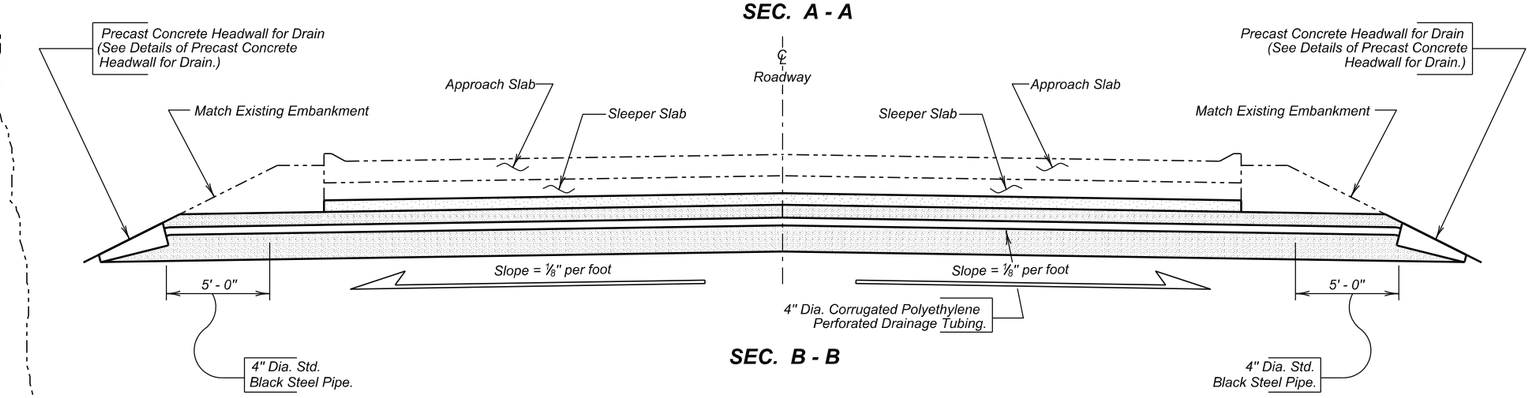

SEC. B - B

ESTIMATED QUANTITIES

(For both Ends of Bridge)

	ITEM	UNIT	PHASE 1 QUANTITY	PHASE 2 QUANTITY
⊛	Granular Bridge End Backfill	Cu.Yd.	19.4	17.7
	Approach Slab Underdrain Excavation	Cu.Yd.	22.0	20.2
✳	4" Underdrain Pipe	Ft.	54.9	52.9
	Precast Concrete Headwall for Drain	Each	2	2
★	Porous Backfill	Ton	4.8	4.6

✳ For informational purposes only, 10 feet of 4" Diameter Standard Black Steel Pipe is needed for each phase which is contained in the above bid items.

★ For estimating Purposes only, a factor of 1.89 tons/cu. yd. was used to convert Cu.Yd. to Ton. Quantities shown are based on a 2 foot x 12 inch trench.

⊛ Includes 343 Sq. Yd. of 6 mil. Polyethylene Sheeting (not including laps) and 175 Sq. Yd. of Type B Drainage Fabric.

GENERAL NOTES:

△ The depth of the trench shall be 2' - 0" unless the roadway ditch topography will not allow it. The trench depth shall never be less than 1' - 0" or greater than 2' - 0".

⊕ The centerline of the trench may be adjusted by one foot toward or away from the bridge, as approved by the Engineer, to miss the location of the guardrail posts.

⋈ For locations where the approach slab is on a zero grade to one percent grade provide this minimum slope. For all other grades finish this surface to match the finished grade of the approach slab.

The exact length of the 4" Dia. Corrugated Polyethylene Slotted Drainage Tubing shall be field determined. The length shown is an estimate based on the original construction plans.

APPROACH SLAB UNDERDRAIN DETAILS

FOR

199' - 0" CONTINUOUS COMP. GIRDER BRIDGE

32' - 0" ROADWAY — 6° 54' 23.5" SKEW RHF

OVER RAILROAD — SEC. 24-T23N-R17E

STR. NO. 16-026-001 — P 0073(53)252

CORSON COUNTY

S. D. DEPT. OF TRANSPORTATION

OCTOBER 2013

DESIGNED BY	CK. DES. BY	DRAFTED BY	
BWS	KH	EJA	Kevin N. Goeden
CORS01RP	01RPLE10		BRIDGE ENGINEER

STATE OF	PROJECT	SHEET NO.	TOTAL SHEETS
S.D.	P 0073(53)252	E48	E105

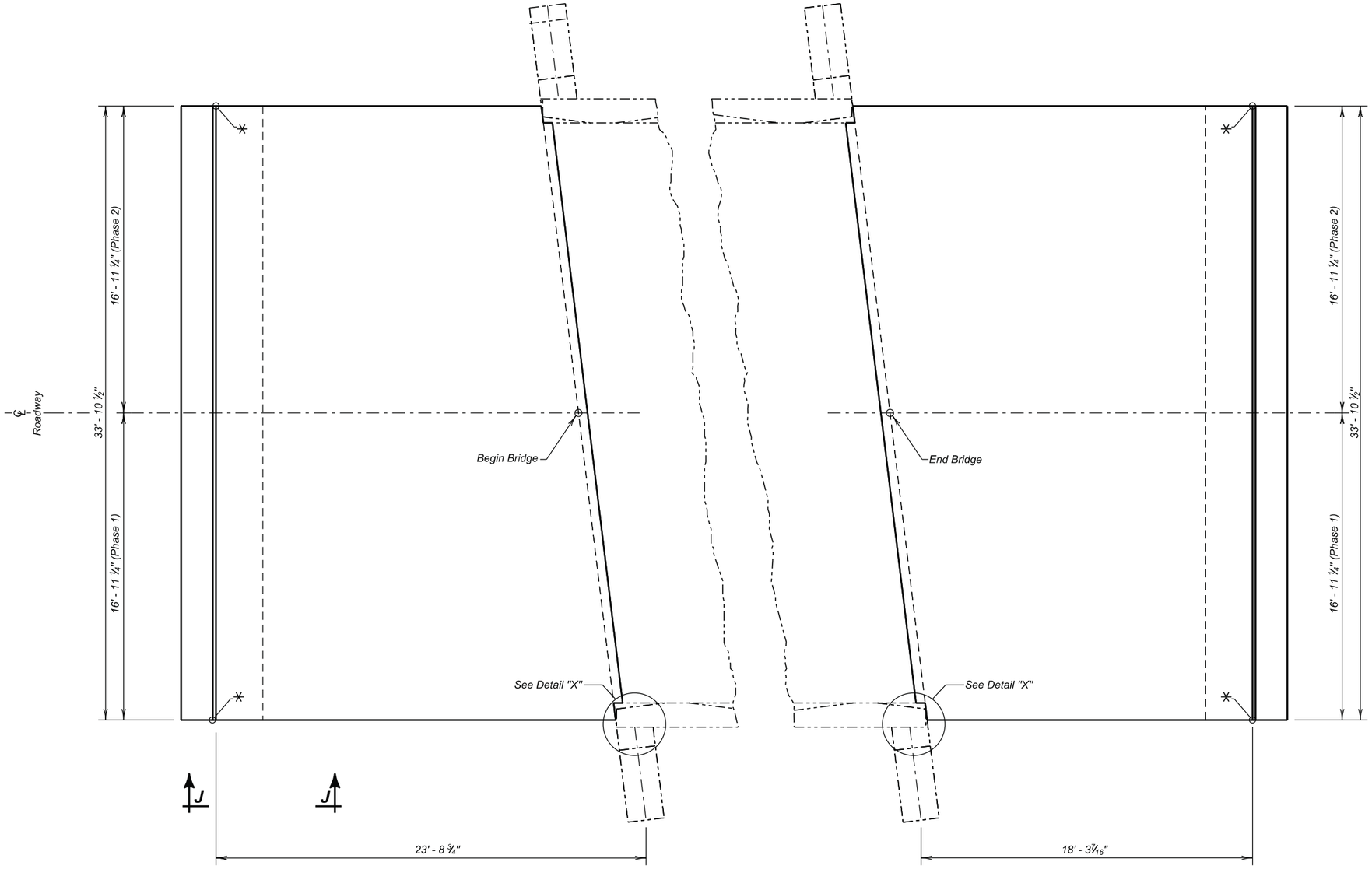

PLAN
(Abutment No. 4)

PLAN
(Abutment No. 1)

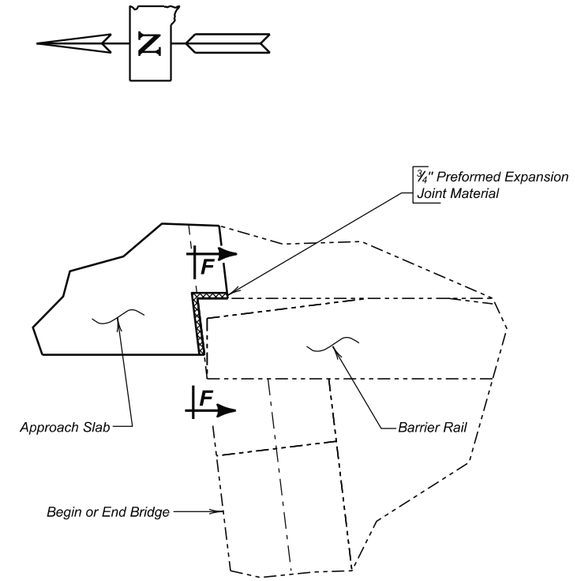

DETAIL "X"

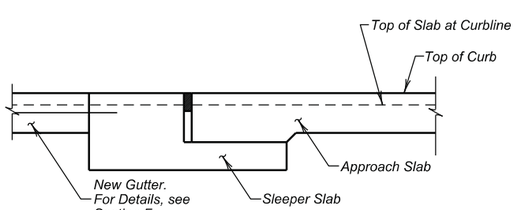

VIEW J - J

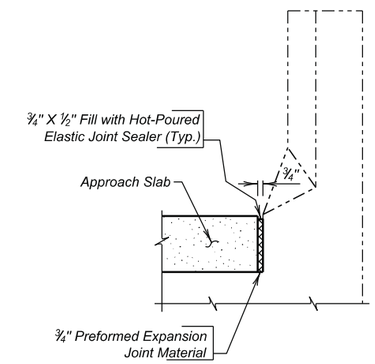

SEC. F - F

✳ Elevation is Top of Slab back of curb at this point. See Approach Slab Notes.

APPROACH SLAB LAYOUT
FOR
199' - 0" CONTINUOUS COMP. GIRDER BRIDGE

32' - 0" ROADWAY — 6° 54' 23.5" SKEW RHF
OVER RAILROAD — SEC. 24-T23N-R17E
STR. NO. 16-026-001 — P 0073(53)252

CORSON COUNTY
S. D. DEPT. OF TRANSPORTATION
AUGUST 2013

DESIGNED BY	CK. DES. BY	DRAFTED BY	
BWS	KH	KR	Kevin N. Goeden
CORS01RP	01RPRE11		BRIDGE ENGINEER

STATE OF	PROJECT	SHEET NO.	TOTAL SHEETS
S.D.	P 0073(53)252	E49	E105

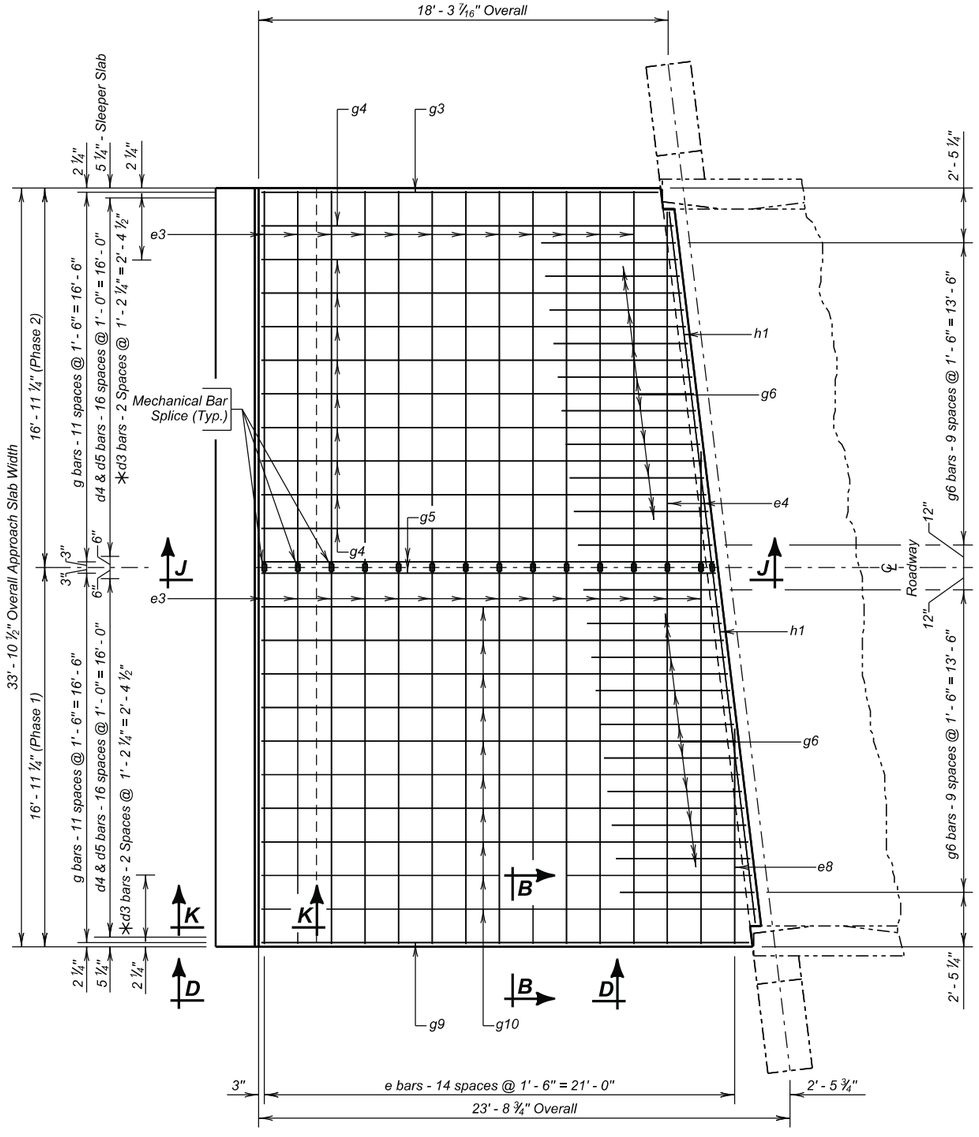

PLAN
(Top Steel Shown)
(Approach slab shown to Abutment No. 4)
(Approach slab adjacent to Abutment No. 1 similar by rotation)

* D3 Bars will only be placed in Sleeper Slab adjacent to Abutment 1.
See Section F for curb location and details.

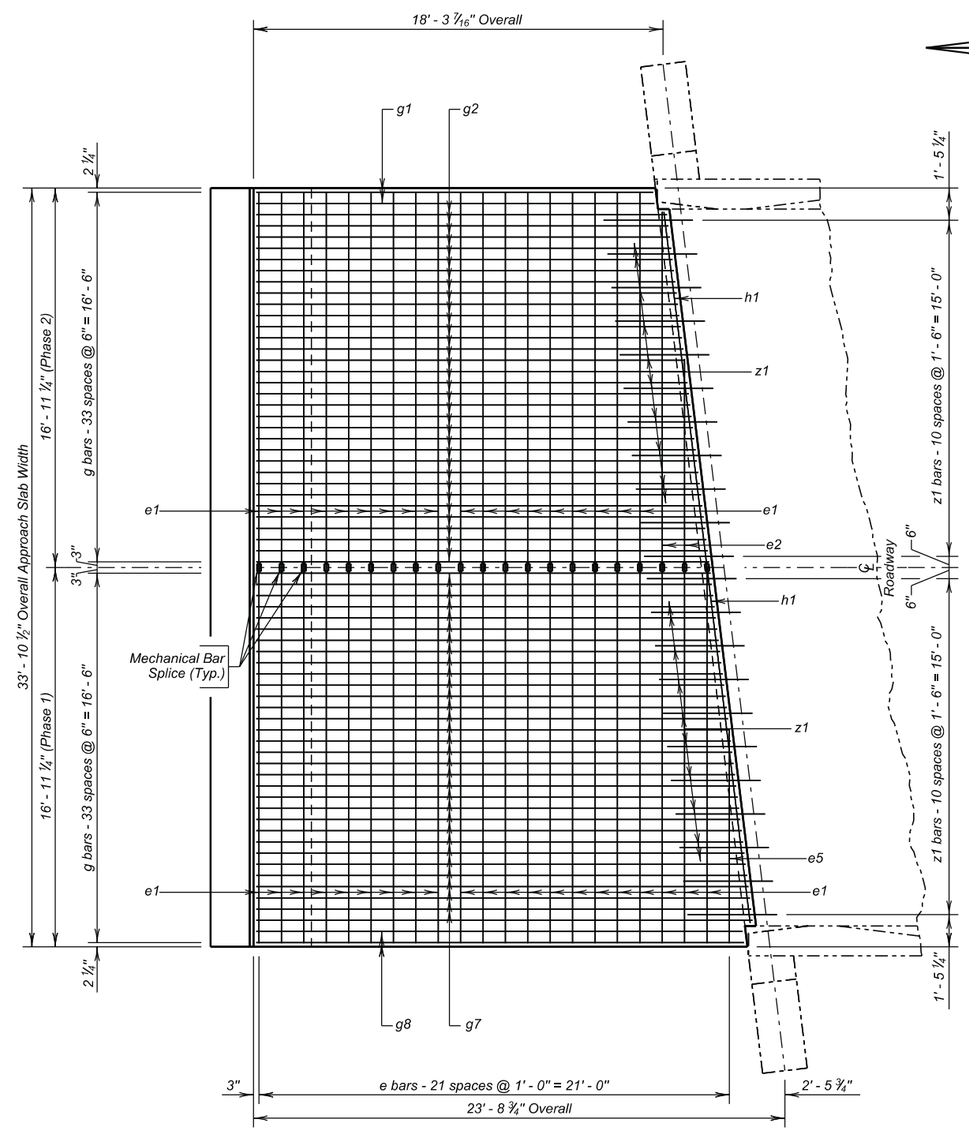

PLAN
(Bottom Steel Shown)
(Approach slab shown to Abutment No. 4)
(Approach slab adjacent to Abutment No. 1 similar by rotation)

APPROACH SLAB DETAILS
FOR
199' - 0" CONTINUOUS COMP. GIRDER BRIDGE

32' - 0" ROADWAY
OVER RAILROAD
STR. NO. 16-026-001

6° 54' 23.5" SKEW RHF
SEC. 24-T23N-R17E
P 0073(53)252

CORSON COUNTY
S. D. DEPT. OF TRANSPORTATION
OCTOBER 2013

DESIGNED BY	CK. DES. BY	DRAFTED BY	
BWS	KH	KR	Kevin N. Goeden
CORS01RP	01RPRE12		BRIDGE ENGINEER

STATE OF	PROJECT	SHEET NO.	TOTAL SHEETS
S.D.	P 0073(53)252	E50	E105

△ Z1 bars are to be placed with deck replacement
See Details on Sheet No. XX thru XX of XX.

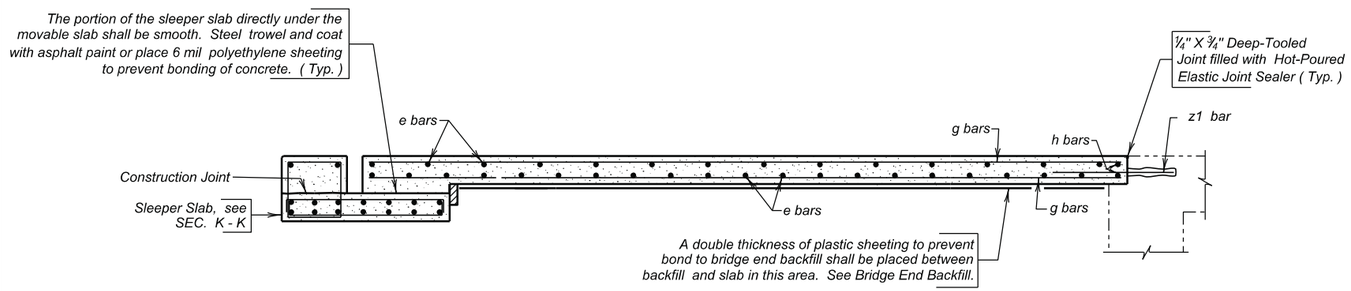

SEC. J - J

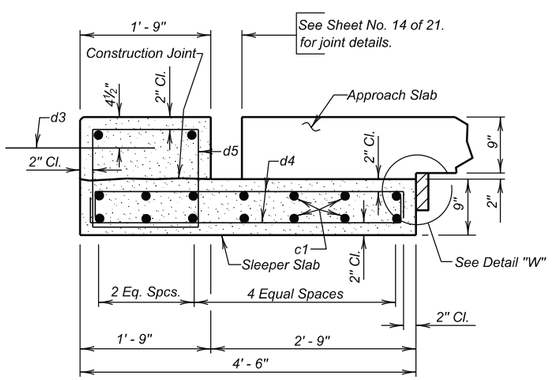

SEC. K - K
(Sleeper Slab)

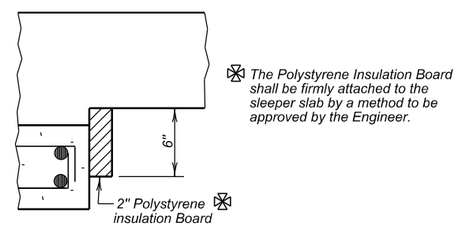

DETAIL "W"

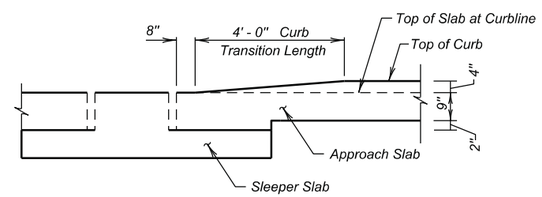

VIEW D - D
(Transition only for ends without curb extension.)

NOTE:
This sheet to be used in conjunction with Sheet Nos. 11 & 12 of 21.

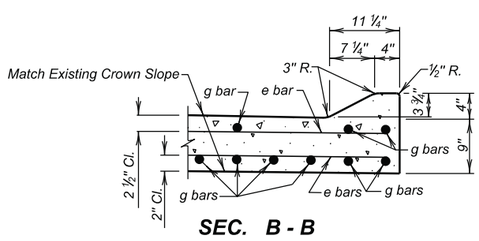

SEC. B - B

REINFORCING SCHEDULE
(For Two Approach and Sleeper Slab)

	Mk.	No.	Size	Length	Type	Bending Details
PHASE I	c1	32	5	16' - 9"	Str.	
	d3	3	4	2' - 0"	Str.	
	d4	68	4	5' - 0"	2	
	d5	34	4	6' - 1"	T2	
	e1	39	6	16' - 9"	Str.	
✱	e2	1	6	25' - 1"	Str.	
	e3	26	4	16' - 9"	Str.	
✱	e4	1	4	21' - 0"	Str.	
	e5	1	6	9' - 7"	Str.	
	e8	1	4	9' - 7"	Str.	
	g1	2	8	17' - 9"	Str.	
✱	g2	16	8	38' - 6"	Str.	
	g3	1	4	17' - 9"	Str.	
✱	g4	5	4	38' - 5"	Str.	
	g5	2	4	20' - 2"	Str.	
	g6	20	4	6' - 0"	Str.	
✱	g7	16	8	42' - 5"	Str.	
	g8	2	8	21' - 9"	Str.	
	g9	1	4	21' - 9"	Str.	
✱	g10	5	4	42' - 7"	Str.	
	h1	4	6	16' - 0"	Str.	
△	z1	22	6	4' - 0"	Str.	
PHASE 2	c1	32	5	16' - 9"	Str.	
	d3	3	4	2' - 0"	Str.	
	d4	68	4	5' - 0"	2	
	d5	34	4	6' - 1"	T2	
	e1	39	6	16' - 9"	Str.	
✱	e2	1	6	25' - 1"	Str.	
	e3	26	4	16' - 9"	Str.	
✱	e4	1	4	21' - 0"	Str.	
	e5	1	6	9' - 7"	Str.	
	e8	1	4	9' - 7"	Str.	
	g1	2	8	17' - 9"	Str.	
✱	g2	16	8	38' - 6"	Str.	
	g3	1	4	17' - 9"	Str.	
✱	g4	5	4	38' - 5"	Str.	
	g5	2	4	20' - 2"	Str.	
	g6	20	4	6' - 0"	Str.	
✱	g7	16	8	42' - 5"	Str.	
	g8	2	8	21' - 9"	Str.	
	g9	1	4	21' - 9"	Str.	
✱	g10	5	4	42' - 7"	Str.	
	h1	4	6	16' - 0"	Str.	
△	z1	22	6	4' - 0"	Str.	

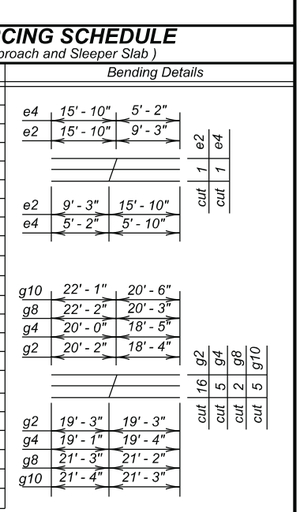

These bars shall be spliced with mechanical splice devices
Equivalent Splice Lengths
No. 4 - 2' - 0"
No. 5 - 2' - 6"
No. 6 - 3' - 0"

NOTES:
All Dimensions are out to out of bars.
All Bars to be Epoxy Coated.
✱ Cut Bars
△ Dowels

ESTIMATED QUANTITIES
(For Two Approach and Sleeper Slabs)

ITEM	UNIT	PHASE I QUANTITY	PHASE 2 QUANTITY
Concrete Approach Slab for Bridge	Sq. Yd.	77.1	77.1
Concrete Approach Sleeper Slab for Bridge	Sq. Yd.	16.9	16.9
No. 4 Rebar Splice	Each	28	–
No. 5 Rebar Splice	Each	32	–
No. 6 Rebar Splice	Each	44	–
Install Dowel in Concrete	Each	22	22
Remove Concrete Bridge Approach Slab	Sq. Yd.	134.0	134.0

	PHASE I	PHASE 2
1. Concrete in Approach Slabs.	19.3 Cu. Yd.	19.3 Cu. Yd.
2. Epoxy Coated Re-Steel in Approach Slabs.	5517 Lb.	5517 Lb.
3. Concrete in Sleeper Slabs	6.2 Cu. Yd.	6.2 Cu. Yd.
4. Epoxy Coated Re-Steel in Sleeper Slabs.	924.3 Lb.	924.3 Lb.

Items 1 thru 4 are approximate quantities contained in the above bid item and are for information only.

APPROACH SLAB DETAILS (CONTINUED)

FOR

199' - 0" CONTINUOUS COMP. GIRDER BRIDGE

32' - 0" ROADWAY
OVER RAILROAD
STR. NO. 16-026-001

6° 54' 23.5" SKEW RHF
SEC. 24-T23N-R17E
P 0073(53)252

CORSON COUNTY
S. D. DEPT. OF TRANSPORTATION
OCTOBER 2013

DESIGNED BY	CK. DES. BY	DRAFTED BY	
BWS	KH	KR	Kevin N. Goeden
CORS01RP	01RPRE13		BRIDGE ENGINEER

STATE OF	PROJECT	SHEET NO.	TOTAL SHEETS
S.D.	P 0073(53)252	E51	E105

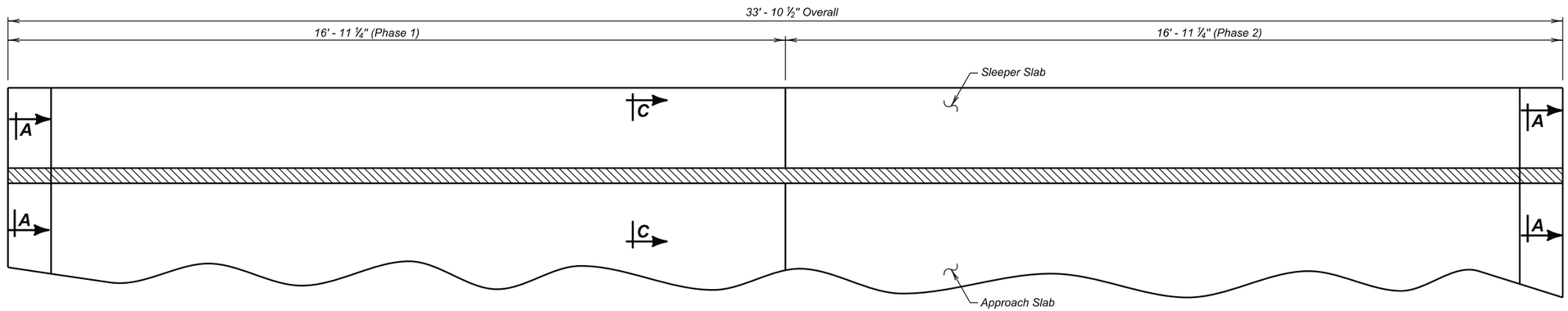

PLAN

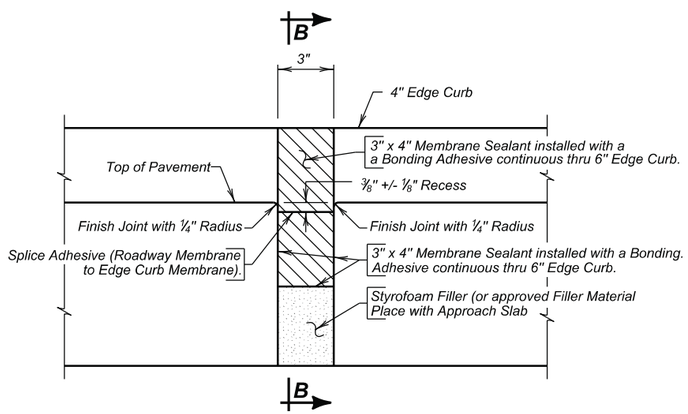

SECTION A - A

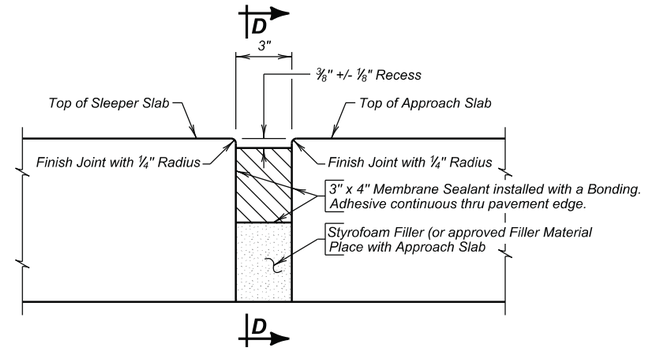

SECTION C - C

ESTIMATED QUANTITIES

ITEM	UNIT	Phase 1	Phase 2
Membrane Sealant Expansion Joint	Ft.	33.9	33.9

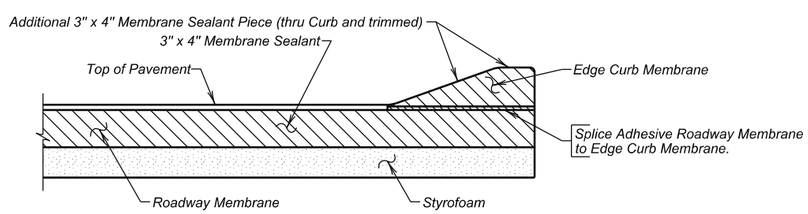

SECTION B - B

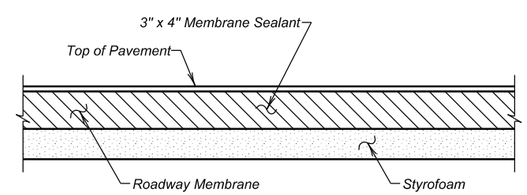

SECTION D - D

APPROACH SLAB JOINT DETAILS

FOR

199' - 0" CONTINUOUS COMP. GIRDER BRIDGE

32' - 0" ROADWAY
OVER RAILROAD
STR. NO. 16-026-001

6° 54' 23.5" SKEW RHF
SEC. 24-T23N-R17E
P 0073(53)252

CORSON COUNTY

S. D. DEPT. OF TRANSPORTATION

OCTOBER 2013

DESIGNED BY	CK. DES. BY	DRAFTED BY	
BWS	KH	BWS	Kevin N. Goeden
CORS01RP	01RPLE14		BRIDGE ENGINEER

STATE OF	PROJECT	SHEET NO.	TOTAL SHEETS
S.D.	P 0073(53)252	E52	E105

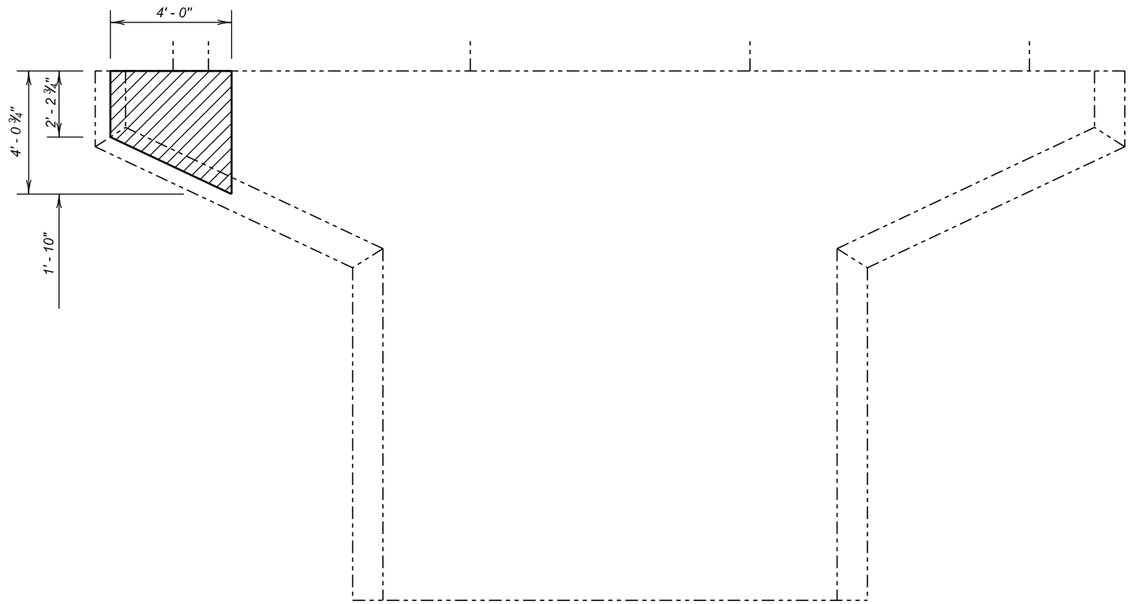

NORTH FACE
(Pier No. 3)

NOTE:
Shaded areas indicate limits of concrete breakout.

ESTIMATED QUANTITIES		
ITEM	UNIT	QUANTITY
Breakout Structural Concrete	Cu. Yd.	.2
Class M6 Concrete	Cu. Yd.	.2
Galvanic Anodes	Each	7

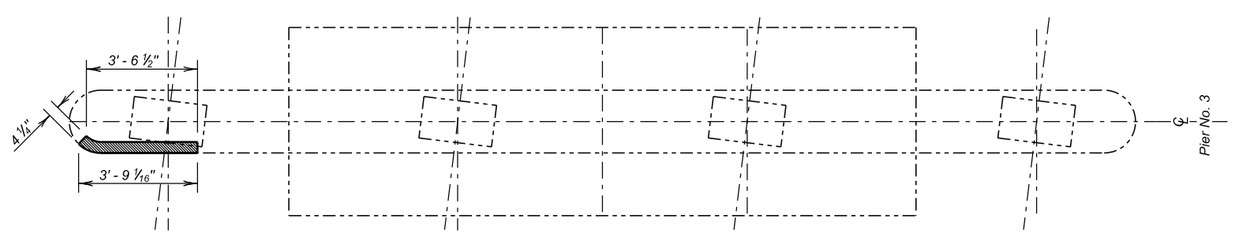

PLAN
(Pier No. 3)

PIER NO. 3 CAP REPAIR DETAILS
FOR
199' - 0" CONTINUOUS COMP. GIRDER BRIDGE
32' - 0" ROADWAY
OVER RAILROAD
STR. NO. 16-026-001
6° 54' 23.5" SKEW RHF
SEC. 24-T23N-R17E
P 0073(53)252

CORSON COUNTY
S. D. DEPT. OF TRANSPORTATION
OCTOBER 2013

DESIGNED BY	CK. DES. BY	DRAFTED BY	
BWS	KH	KR	Kevin N. Goeden
CORS01RP	01RPRE15		BRIDGE ENGINEER

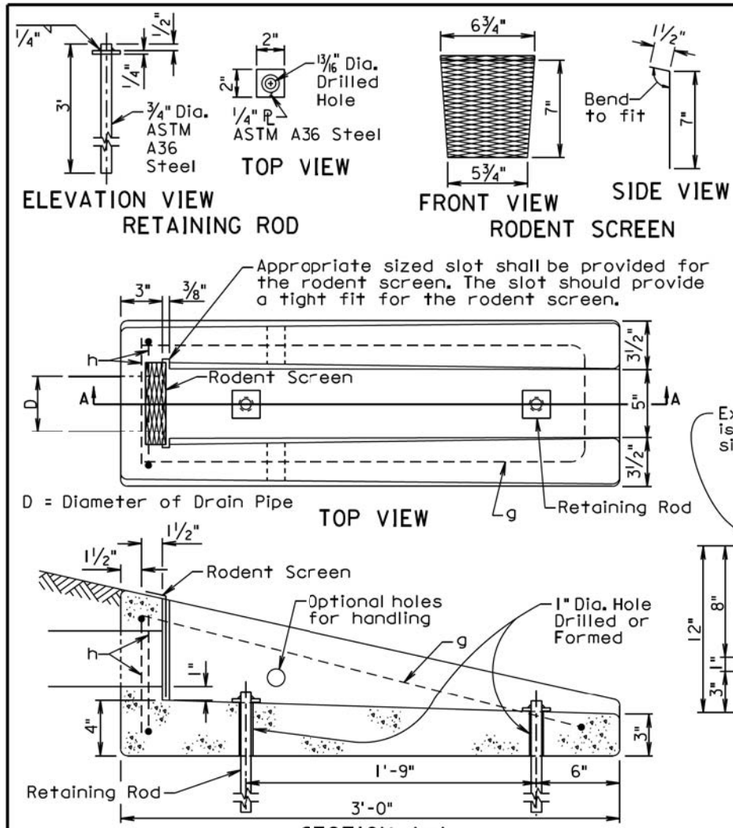

REINFORCING SCHEDULE

MK.	No.	Size	Length	Type
g	1	4	6'-3"	17
h	2	4	2'-4"	17

NOTE:
All dimensions are out to out of bars.

Bending Details

TYPE 17

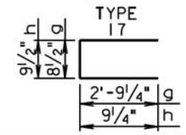

GENERAL NOTES:

The concrete shall be Class M6. The concrete shall conform to the requirements of section 462 of the Standard Specifications. It is estimated that each unit weighs approximately 210 pounds.

All reinforcing steel shall conform to ASTM A615 Grade 60 and shall be epoxy coated. The reinforcing steel shall be securely retained to prevent displacement during placement of concrete. It is estimated that 7.3 pounds of reinforcing steel is required for each unit.

The pipe shall be placed in the concrete headwall with the pipe end flush with the concrete surface adjacent to the rodent screen.

The rodent screen shall be galvanized 13 Ga. steel with a diamond shaped flattened mesh pattern. The size shall be 1/2". The size refers to the measurement across the smallest diamond shaped opening measured from the centers of the wires.

The retaining rod shall be galvanized in accordance with ASTM A123 after all shop welding has been completed.

The drawing indicates using 1/2" fillets; however, 3/4" chamfers may be substituted for the 1/2" fillets.

All costs for furnishing and installing the concrete headwall including equipment, labor, and materials including concrete, reinforcing steel, retaining rods, and rodent screen shall be incidental to the contract unit price per each for "Precast Concrete Headwall for Drain".

December 23, 2010

Published Date: 3rd Qtr. 2014	SDDOT	***PRECAST CONCRETE HEADWALL FOR DRAIN***	***PLATE NUMBER*** *680.03*
			Sheet 1 of 1

STATE OF	PROJECT	SHEET NO.	TOTAL SHEETS
S.D.	P 0073(53)252	E54	E105

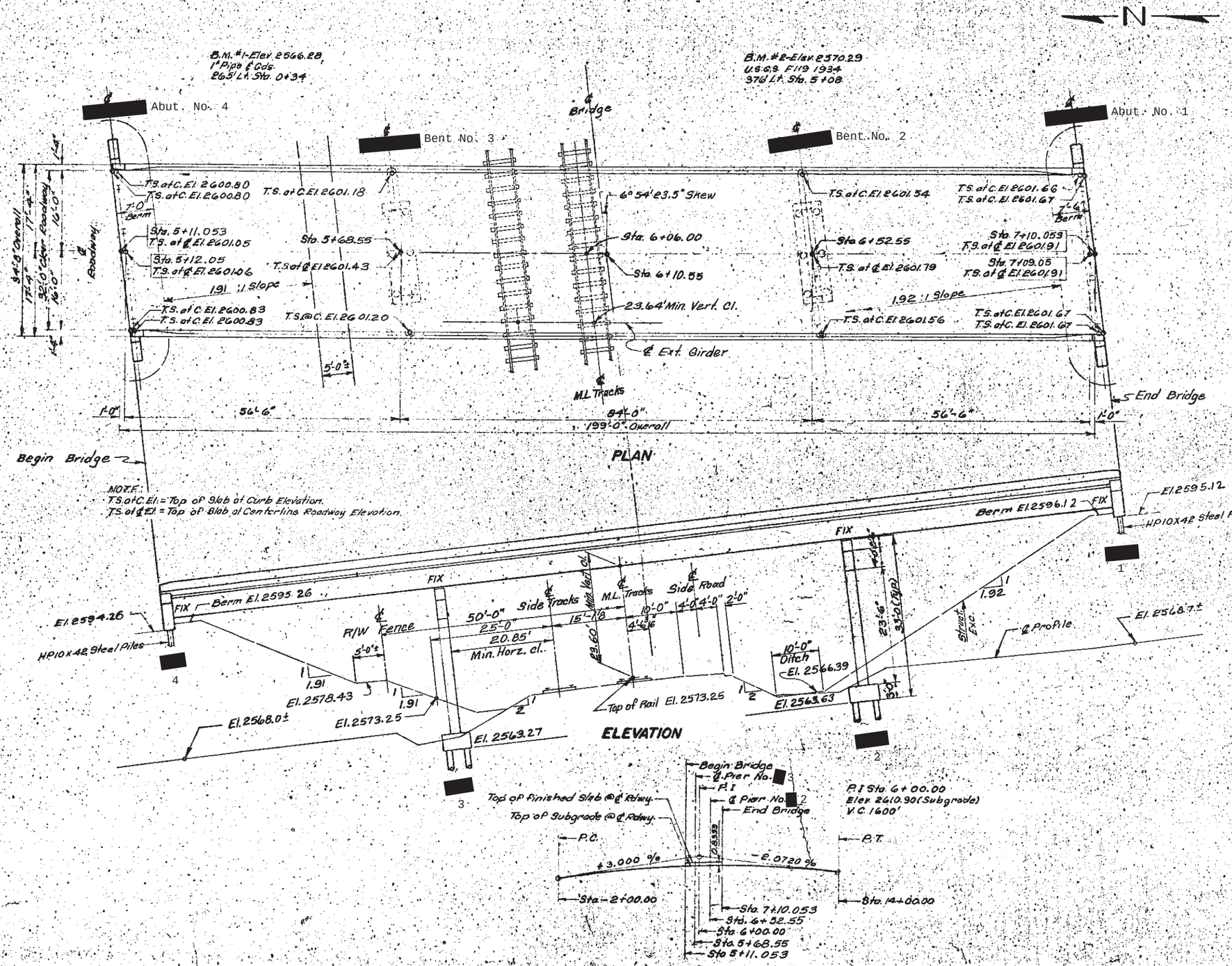

-X171-

INDEX OF BRIDGE SHEETS —

Sheet No. 1 – General Drawing.
Sheet No. 2 – Estimate of Structure Quantities and Notes.
Sheet No. 3 – Subsurface Investigations and Piling Layout.
Sheet No. 4 – Details of Abutment No. 1.
Sheet No. 5 – Details of Abutment No. 4.
Sheet No. 6 – Pier Details.
Sheet No. 7 – Slab Details.
Sheet No. 8 – End Block, Barrier and Drain Details.
Sheet No. 9 – Diaphragm Details.
Sheet No. 10 – Girder Layout and Details.
Sheet No. 11 – Framing Diagram and Erection Data.
Sheet No. 12 – Details of Field Splice and Bearings.
Sheet No. 13 – Details of Bridge End Backfill (Plan "E").
Sheet No. 14 – Details of Standard Plates No. 302 and 305.
Sheet No. 15 – Details of Approach Slab Adjacent to Bridge.
Sheet No. 16 – Approach Slab Joint Details.
Sheet No. 17 – Drop Inlet and Pipe Installation Sheet.

ORIGINAL CONSTRUCTION PLANS

GENERAL DRAWING
FOR
199'-0" CONT. COMP. GIRDER BRIDGE

32'-0" ROADWAY — SKEW 6° 54' 23.5" R.H.F.
OVER C.M.ST.P & P.R.R. — SEC. 24-T23N-R17E
STA. 5+11.053 TO 7+10.053 — TQF0073(1) 252
STR. NO. 16-026-001 — HS20-44 (& ALT.)
CORSON COUNTY
S. D. DEPT. OF TRANSPORTATION
DIVISION OF HIGHWAYS
OCT. 1975

PLANS BY:
BRIDGE PROGRAM SO. DAK. DIV. OF HWYS.

-X171-

17 OF 21

DESIGNED BY	DRAWN BY	CHECKED BY	APPROVED
	E.J.P.		R.C. Wilson, BRIDGE ENGINEER

STATE OF S.D.	PROJECT	SHEET NO.	TOTAL SHEETS
	P 0073(53)252	E55	E105

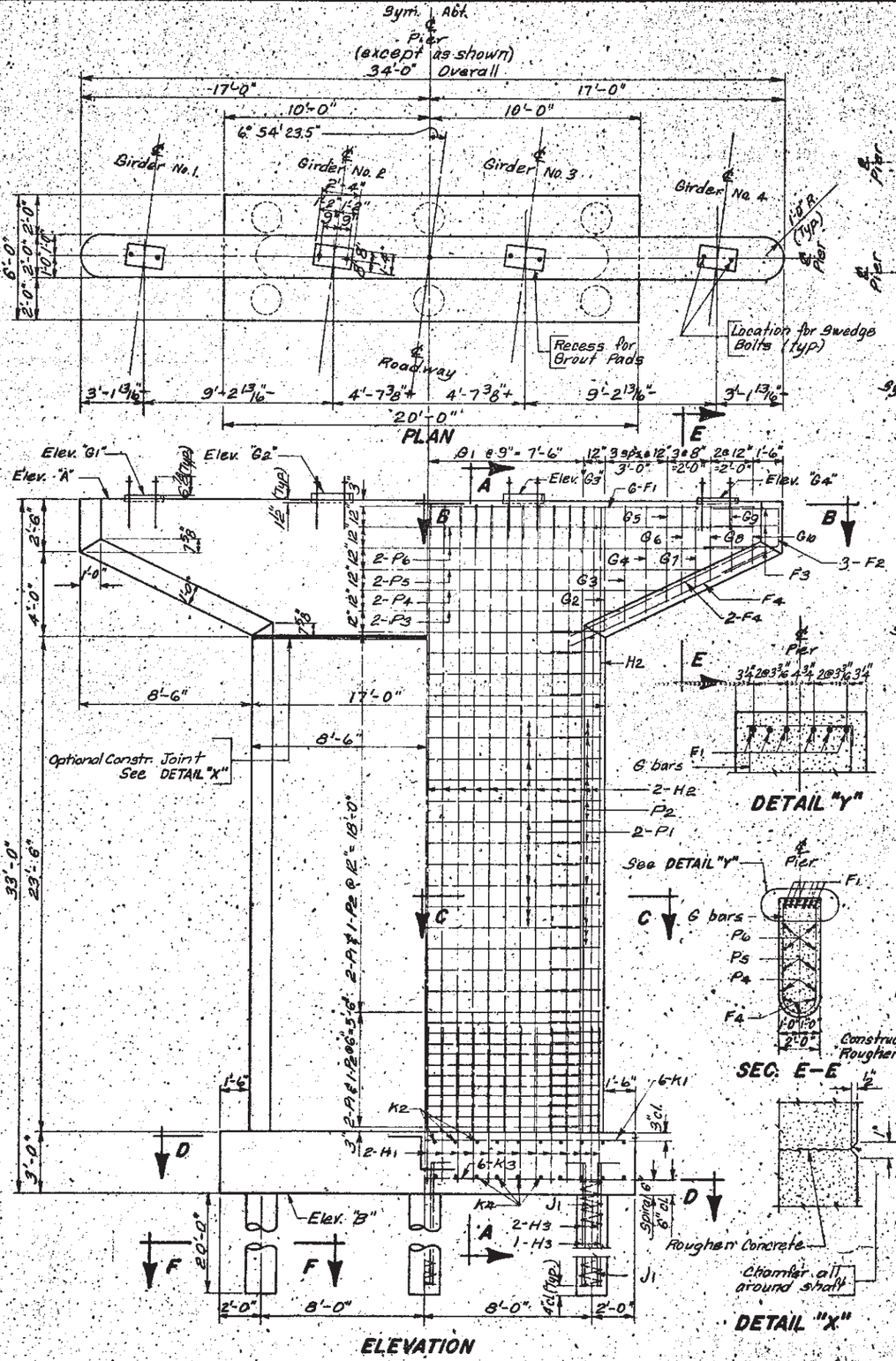

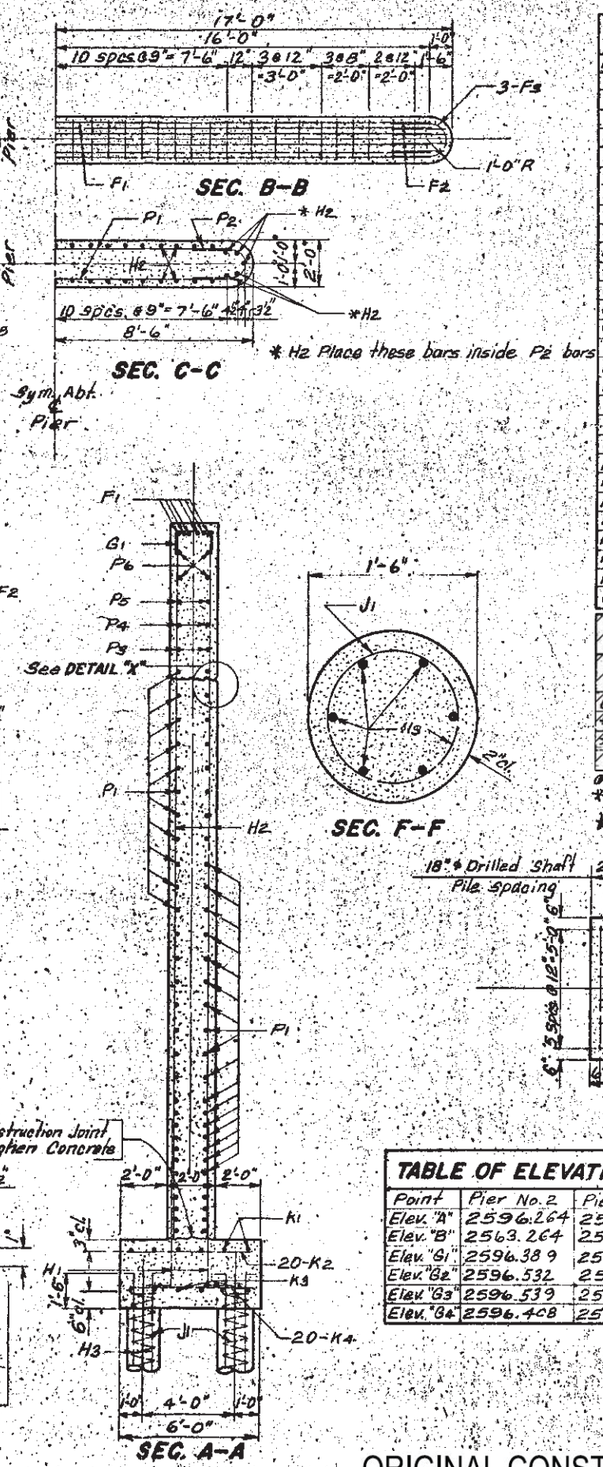

REINFORCING SCHEDULE
(for one pier)

MK.	No.	Size	Length	Type
F1	6	9	32'-0"	Str.
F2	6	5	7'-9"	S10A
F3	6	5	7'-0"	S10
F4	6	4	10'-6"	Str.
G1	21	5	4'-8"	S11
G2	2	5	15'-9"	S11A
G3	2	5	15'-0"	S11A
G4	2	5	14'-0"	S11A
G5	2	5	13'-2"	S11A
G6	2	5	12'-6"	S11A
G7	2	5	11'-9"	S11A
G8	2	5	11'-3"	S11A
G9	2	5	10'-3"	S11A
G10	2	5	9'-3"	S11A
H1	48	9	8'-6"	2
H2	48	9	29'-10"	Str.
H3	36	7	22'-2"	2
K1	6	5	19'-8"	Str.
K2	20	5	5'-8"	Str.
K3	6	7	19'-8"	Str.
K4	20	7	5'-8"	Str.
P1	60	4	15'-0"	Str.
P2	60	4	7'-0"	S11
P3	2	4	20'-4"	Str.
P4	2	4	24'-7"	Str.
P5	2	4	28'-10	Str.
P6	4	4	32'-0"	Str.
J1	6	3	167'-6"	Spiral

Bending Details

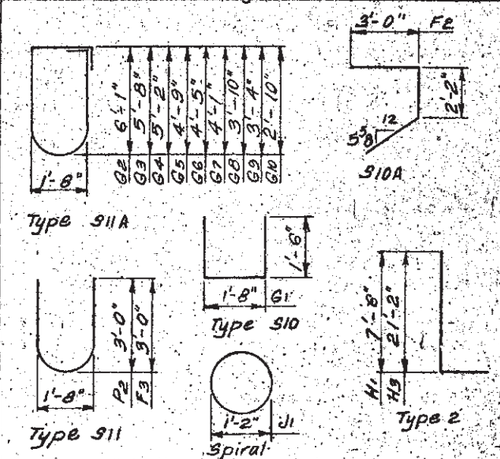

Spiral - 6" pitch - 1½ extra turns at each end. Use 1½ turns for lap at splice, or weld as approved by the BRIDGE SECTION. Use 2 vertical spacer bars per column. Spirals may be smooth bars.

NOTE: All dimensions are out to out of bars.

ESTIMATED QUANTITIES

ITEM	UNIT	QUANTITY Pier No. 2	QUANTITY Pier No. 3
@ Class "A" Concrete - Bridge	Cu. Yds.	63.6	63.6
* Reinforcement Concrete Masonry	Lb.	11,357	11,357
* Structure Excavation - Bridge	Cu. Yds.	63	51
Drilled In Foundation Excavation	Cu. Yds.	8	8

@ Includes 0.1 Cu. Yds. for Grout Pads.
* Includes 187 lbs. for spacer bars. Each spacer bar is computed at ¾ Lbs. per lin. ft. regardless of type furnished
* Structure Excavation per ft. of depth = 7.7 cu. Yds.

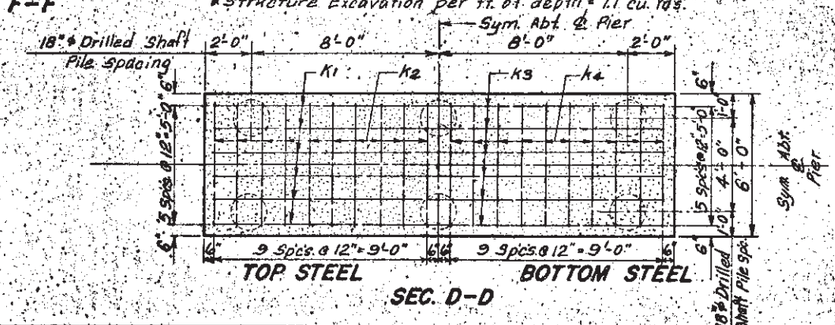

TABLE OF ELEVATIONS

Point	Pier No. 2	Pier No. 3
Elev. "A"	2596.264	2596.630
Elev. "B"	2563.264	2563.630
Elev. "G1"	2596.389	2596.755
Elev. "G2"	2596.532	2596.896
Elev. "G3"	2596.539	2596.899
Elev. "G4"	2596.408	2596.765

ORIGINAL CONSTRUCTION PLANS

PIER DETAILS
FOR
199'-0" CONT. COMP. GIRDER BRIDGE

32'-0" ROADWAY — 6° 54' 23.5" SKEW R.H.F.
OVER C.M. ST. P. & P.R.R. — SEC. 24-T23N-R17E
STA. 5+11.053 TO 7+10.053 — TQF 0073(1)252
STR. NO. 16-026-001 — HS20-44 (B ALT.)
CORSON COUNTY
S. D. DEPT. OF TRANSPORTATION
DIVISION OF HIGHWAYS
OCT. 1975

DESIGNED BY	DRAWN BY	CHECKED BY	APPROVED
	L.P.T.	G.A.	R.C. Wilson BRIDGE ENGINEER

STATE OF	PROJECT	SHEET NO.	TOTAL SHEETS
S.D.	P 0073(53)252	E56	E105

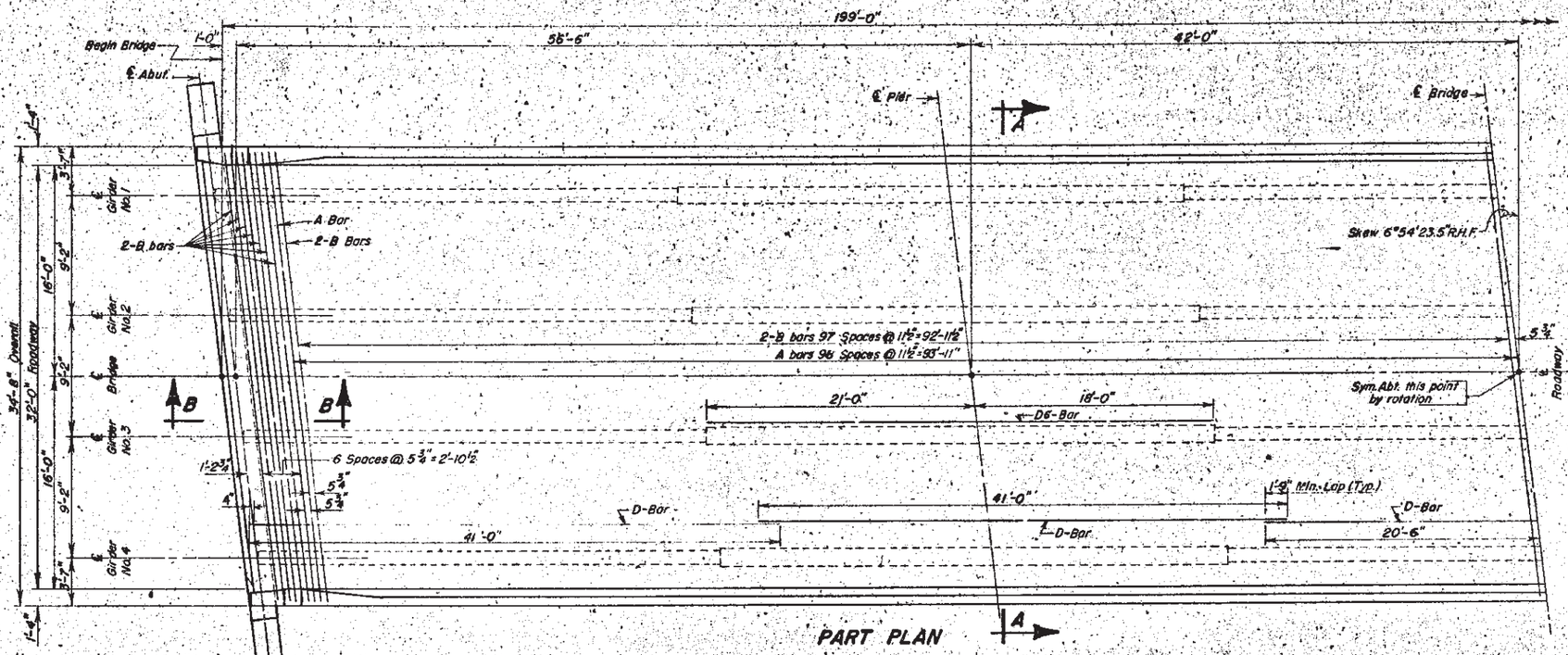

PART PLAN

REINFORCING SCHEDULE

MK	No.	Size	Length	Type
A	197	5	35'-6"	15
B	420	5	34'-6"	Str.
△C1	388	4	5'-7"	T2A
△C2	360	4	5'-0"	S11
△C3	4	4	3'-1"	17
△C4	4	4	5'-2"	17
△C5	36	4	3'-3"	17
△C6	4	4	4'-7"	17
△C7	4	4	4'-6"	17
△C8	36	4	4'-9"	17
△C9	8	4	5'-1"	17
△C10	8	4	3'-7"	17
△C11	16	4	5'-5"	T2
D	385	5	41'-0"	Str.
D1	60	4	38'-0"	Str.
△D2	12	4	9'-10"	Str.
△D3	12	8	12'-9"	19
△D4	8	4	12'-9"	19
△D5	16	4	1'-3"	Str.
D6	54	5	39'-0"	Str.
*Z1	88	7	4'-0"	Str.

Bending Details

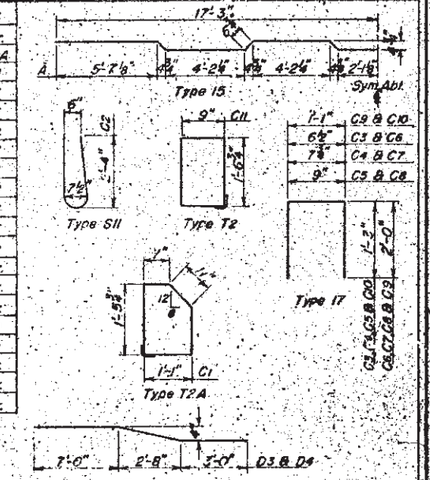

△ See Sheet No. 8 for positioning of these bars.
*See sheet 15 of 17 for positioning of Z1 bars.
NOTE: All dimensions are out to out of bars.

ESTIMATED QUANTITIES

ITEM	UNIT	QUANTITY
Class "A" Concrete - Bridge	Cu. Yd.	210.0
Reinforcement Concrete Masonry	Lb.	48,850
Structural Steel	Lb.	118,304
Oil Treatment	Gal.	32

34'-8" Overall
32'-0" Roadway
16'-0" 16'-0"
1'-4" 1'-4"
1'-2" 1'-2"
Sym. Abt. ℄ Rdwy.
Top D-bars (Typ.)
5 eq. spc's.
4 eq. spc's.
D-bars
Sloped 0.015'/ft.
8¼" Constant
7¾" at Abut.
D6 bars (over bents only)
2½" cl.
6¼" at Pier
D1-bars
C2-bars
D1-bars
C1-bars
Const. Joint. Make Level across Curb Roughen as shown.
10" 10" 6 eq. spc's. 10" 10" Bottom D-bars (Typ.)
A-bars
B-bars
1" cl.
3'-7" 9'-2" 4'-7" 4'-7" 9'-2" 3'-7"

SEC. A-A

★ Minimum clear cover.

℄ Dimensions are at ℄ Bearings. At other points along the Girders this dimension shall be computed as shown on the ERECTION DATA SHEET.

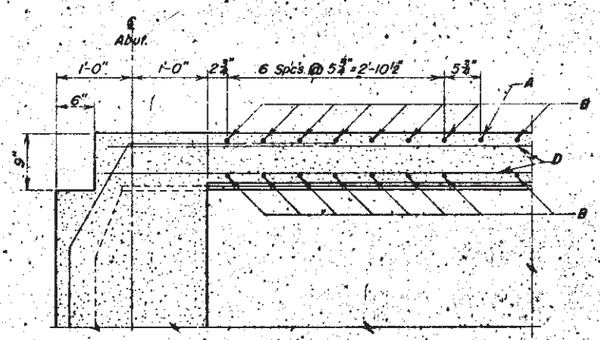

SEC. B-B

ORIGINAL CONSTRUCTION PLANS

SLAB DETAILS
FOR
199'-0" CONT. COMP. GIRDER BRIDGE

32'-0" ROADWAY — SKEW 6°54'23.5"R.H.F.
OVER C.M.ST.P. & P.R.R. — SEC. 24-T23N-R17E
STA. 5+11.053 TO 7+10.053 — TOF0073(1)252
STR. NO. 16-026-001 — HS20-44 (& ALT.)
CORSON COUNTY
S. D. DEPT. OF TRANSPORTATION
DIVISION OF HIGHWAYS
SEPT. 1975

(19) OF (21)

DESIGNED BY	DRAWN BY	CHECKED BY	APPROVED
	f.a.k.	W.C.P.	K.C. Wilson BRIDGE ENGINEER

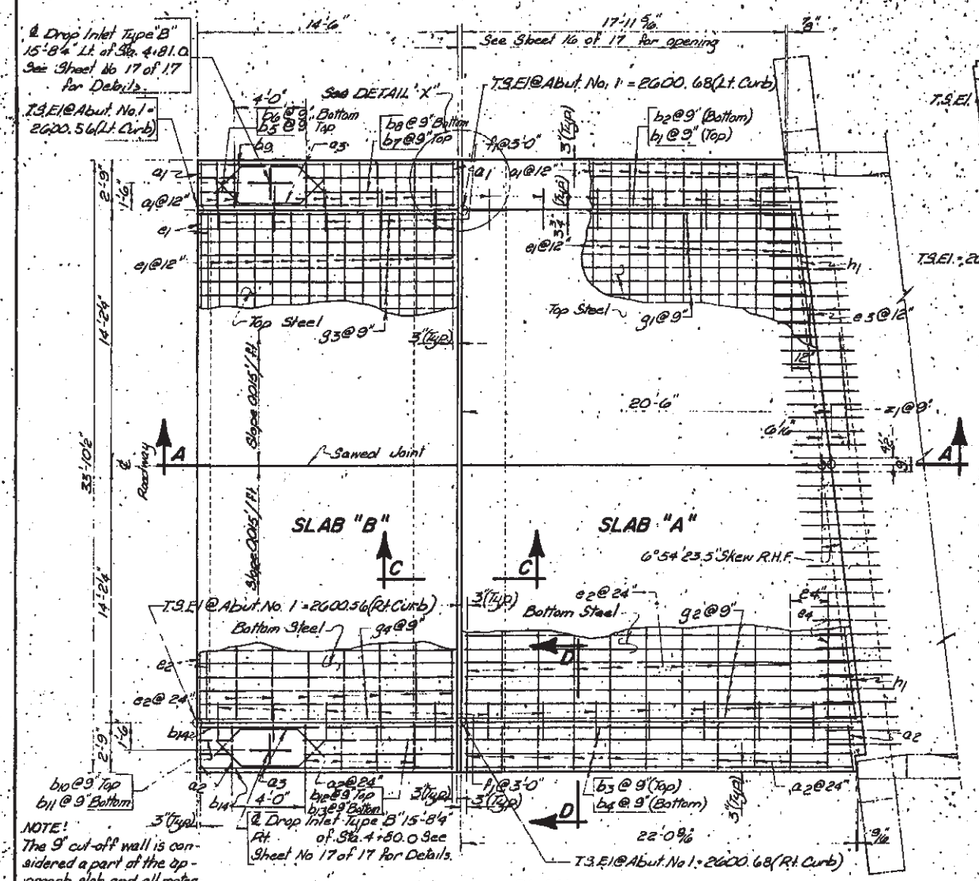

PLAN
(Shown adjacent to Abut. No. 1; Abut. No. 4 will be similar except as shown)
NOTE: No Drop Inlet at Abut. No. 4 end.

NOTE!
The 9' cut-off wall is considered a part of the approach slab and all material and work involved in constructing this, including excavation and disposal of excavated, and surplus material, shall be absorbed in the unit price bid for the concrete approach slab.

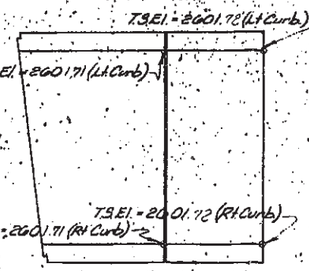

PLAN
(Adjacent to Abut. No. 4).

LEGEND:
T.S. = Top of Slab

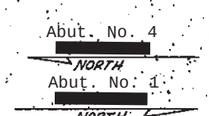

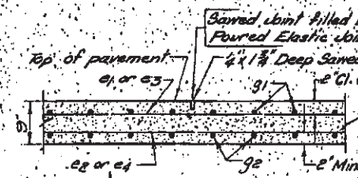

SAWED LONGITUDINAL JOINT

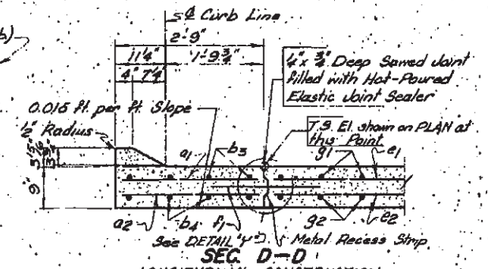

SEC. D–D
LONGITUDINAL CONSTRUCTION JOINT WITH TIE BARS

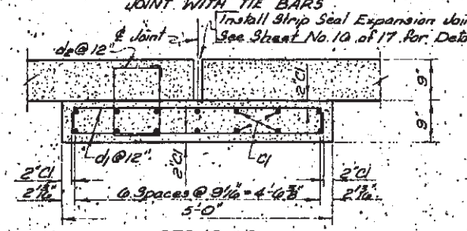

SEC. C–C

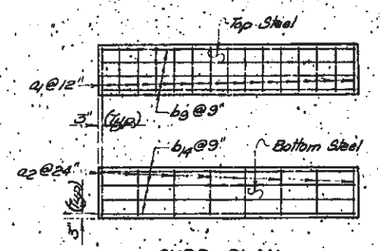

CURB PLAN
(Re-steel shown is in 14'-6" Gutter at Abut. No. 4 End)

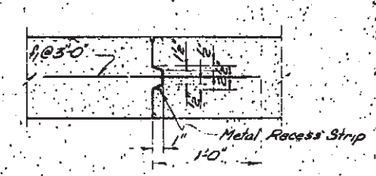

DETAIL "Y"
NOTE: If proposed approval of alternate designs of Metal Strips will be considered by the Engineer.

REINFORCING SCHEDULE
*(For Two Approach Slabs)

Mk.	No.	Size	Length	Type
a1	134	5	2'-5"	Str.
a2	74	5	2'-5"	Str.
a3	8	5	7'-4"	19A
b1	8	5	17'-7"	Str.
b2	8	7	17'-7"	
b3	8	5	21'-4"	
b4	8	7	21'-4"	
b5	2	5	2'-6"	
b6	2	7	2'-6"	
b7	2	5	7'-4"	
b8	2	7	7'-4"	
b9	12	5	14'-2"	
b10	2	5	1'-6"	
c1	28	5	33'-6"	Str.
d1	136	4	5'-6"	2
d2	68	4	4'-11"	T2
d3	38	4	3'-11"	T2
e1	70	5	29'-0"	Str.
e2	38	5	28'-0"	
e3	5	5	29'-6"	
e4	2	5	14'-10"	
f1	46	4	2'-0"	
g1	38	5	40'-3"	
g2	38	7	40'-3"	
g3	76	5	14'-2"	
g4	76	7	14'-2"	
h1	4	5	29'-5"	
b11	2	7	1'-6"	
b12	2	5	8'-4"	
b13	2	7	8'-4"	
b14	12	7	14'-2"	Str.

Bending Details

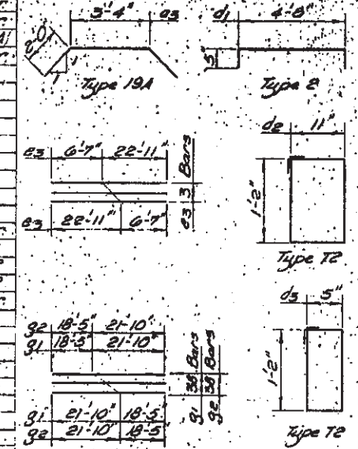

NOTE: Z1 bars are listed and included in Superstructure Quantities.
NOTE: All dimensions are out to out of bars.

1. 56.4 Cu.yds. concrete in Approach Slab.
2. 9549 Lbs. re-steel in Approach Slabs. (includes dowels)
3. 9.4 Cu.yds. concrete in Sleeper Slabs.
4. 1701 Lbs. re-steel in Sleeper Slabs.
5. 11.7 Cu.yds. concrete in gutter.
6. 1590 Lbs. re-steel in gutter.
7. 37 Tons. gravel cushion.

Items 1 thru 7 are approximate quantities contained in the above bid items and are for information only.

ESTIMATED QUANTITIES
*(For Two Approach Slabs)

ITEM	UNIT	QUANTITY
Gravel Cushion	Sq. Yd.	218.4
Conc. Appr. Slab Adjacent to Bridge	Sq. Yd.	223.4
Bridge Approach Sleeper Slab	Sq. Yd.	37.6
Conc. Gutter Type D-8 Straight	L.F.	140.0
Oil Treatment	Gal.	10

*NOTE: Slab "A" plus Slab "B" at each end of Bridge constitutes one approach slab in above schedule and estimate.

The portion of the Sleeper Slab directly under the movable slabs shall be smooth. Steel trowel coat with asphalt paint or place 4 mil. polyethylene sheeting to prevent bonding of concrete. (Typ)

4" x 3/4" Deep Sawed Joint filled with hot poured Elastic Joint Sealer (Typ)

See Sheet No. 16 of 17 for Joint Details. (Typ)

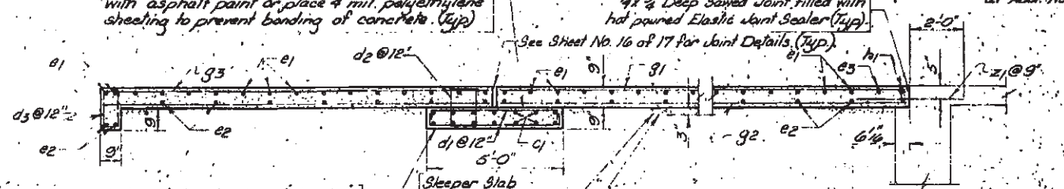

A plastic sheeting to prevent bond to cushion shall be placed between cushion and slab in this area between Bridge and Expansion Joints. (Typ)

SEC. A–A

Material for Gravel Cushion shall be as specified for Bridge End Backfill. Gravel Cushion shall be constructed to a depth of three inches under the Concrete Approach Pavement and Gutters. The quantity of Gravel shown in the Estimate of Quantities is based on a rate of 0.167 ton per square yard. Gravel cushion shall be watered and compacted to the satisfaction of the Engineer. The cost of water for compaction shall be absorbed in the various pay items of the contract.

GENERAL NOTES—

1. All concrete shall be class "A".
2. Bridge Approach Sleeper Slab will be paid for at the contract unit price bid per square yard. This payment shall be full compensation for all excavation, furnishing, hauling and placing all materials including concrete and re-steel; for disposal of all excavated and surplus materials; and for furnishing all labor, tools, equipment and incidentals necessary to complete the item of work.
3. The cost of furnishing and installing asphalt paint or 4 mil polyethylene sheeting, plastic sheeting, elastic joint sealer, metal recess strips, 18 gauge galvanized sheet metal shields attached to gutters at ends of strip seal joints, and sawing all joints shall be included in the unit price bid for Concrete Approach Slab Adjacent to Bridge.
4. Re-steel shall conform to A.S.T.M.-A615, Grade 40.

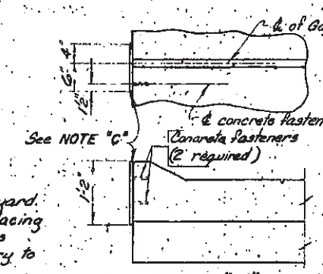

DETAIL "X"

NOTE "C"
18 gauge galv. sheet metal. Attach to one side of joint only, after Slabs "A" and "B" are poured. Use fasteners that will not spall the concrete as approved by the Engineer.

ORIGINAL CONSTRUCTION PLANS

DETAILS OF APPROACH SLAB ADJACENT TO BRIDGE
FOR
199'-0" CONT. COMP. GIRDER BRIDGE
32'-0" ROADWAY — 6°54'23.5" SKEW R.H.F.
OVER C.M.ST.P & P.R.R. — SEC. 24-T23N-R17E
STA. 5+11.053 TO 7+10.053 — TQF0073(1)252
STR. NO. 16-026-001 — HS 20-44 (B ALT.)
CORSON COUNTY
S. D. DEPT. OF TRANSPORTATION
DIVISION OF HIGHWAYS
OCT. 1975

(20) OF (21)

DESIGNED BY	DRAWN BY	CHECKED BY	APPROVED
	G.W.W.	W.A.P.	K. C. Wilson, BRIDGE ENGINEER

18-357

STATE OF	PROJECT	SHEET NO.	TOTAL SHEETS
S.D.	P 0073(53)252	E58	E105

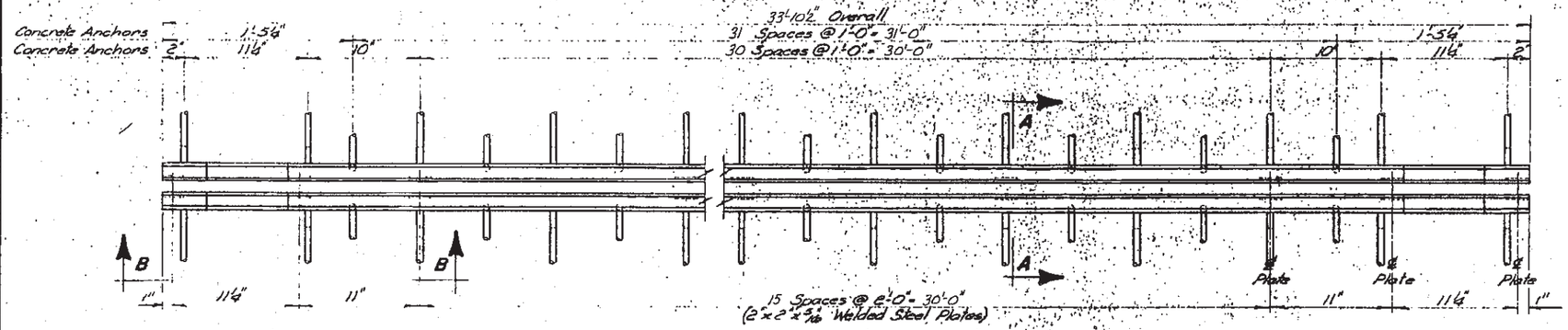

PLAN OF STRIP SEAL

① TEMP.	DIMENSION "X"
30°	2⅛"
40°	2⅛"
50°	2"
60°	1⅞"
70°	1¾"
80°	1⅝"
90°	1½"

GENERAL NOTES—

1. Material for Steel Extrusion shall conform to ASTM - A - 36 or A 242
2. Material for Neoprene Extrusion shall conform to that specified in Section 870 of the S Dak Standard Specifications. No Splices will be permitted in the Neoprene Strip
3. The installation of the Strip Seal shall be as recommended by its manufacturer and approved by the Engineer, but in general shall be as follows:
   The Neoprene Extrusion shall be installed and bonded to the Steel Extrusion with a high-solids lubricant-adhesive. The portion of the Steel Extrusion in Contact with the Neoprene Extrusion shall be sand blasted to a white finish prior to the installation of the Neoprene Strip. The Neoprene Surfaces shall be roughened with a wire brush before the application of the lubricant-adhesive. The Neoprene Strip may be installed either prior to or after the time the Steel Extrusions are concreted in the Approach slabs. The sand blasting may be done at the Shop provided the sand blasted surfaces are dry, clean, free from dirt, grease and contaminants at the time the Neoprene Strip is installed. The surface of the Steel Extrusions, except the portions in contact with the Neoprene Strip, and the surfaces of the 2"x2"x5/16" steel plated welded to the Steel Extrusions shall be painted with an approved Galvanizing Paint
4. Due to the length of the Steel Extrusions, Shop Welds are permitted. No welds shall be permitted in internal section of extrusion where Neoprene Strip is located. Weld details shall be shown on the Shop Plans for approval by the Engineer
5. The thickness and shape of the Neoprene Extrusion may vary from the sketch shown (Detail "C" on this Sheet) according to the manufacturer's design; however, the wedge lugs must properly fit the groove in the Steel Extrusion. Before installation, shop plans of the proposed strip seal showing, in addition to fixed dimensions, thickness of Neoprene Extrusion and dimensions pertinent to the fit of the Neoprene Extrusion in the Steel Extrusion shall be submitted to and approved by the Engineer.
6. Strip Seal will be measured in linear feet, to the nearest one-tenth foot, complete in place; measurments will be made of the overall horizontal length.
   Strip Seal will be paid for at the Contract unit price per linear foot complete in place. Payment for this item shall be full compensation for furnishing all the required materials in place, inclusive of labor, equipment and incidentals necessary to complete the work in accordance with plans and the Foregoing Specifications.
7. The lubricant-adhesive may be one or two component at the supplier's option. The Neoprene Strip seal and lubricant-adhesive should be supplied or recommended by the same source as they must be compatible. The lubricant-adhesive must have a solids content by weight of at least 65 percent and 250 percent minimum elongation. It may not contain solvents with a Flash point below 80°F.
8. The Contractor has the option of using 5/16"x5"x7¾" plates with #5 Re-bar as shown in the Supplemental Detail instead of the ½"ϕx6" welded Concrete anchors. If the plates are to be used, they shall be shown and detailed on the shop plans for approval by the ENGINEER.

*ESTIMATED QUANTITY		
ITEM	UNIT	QUANTITY
Strip Seal Expansion Joint	Lin. Ft.	* 678

* For two approach slab

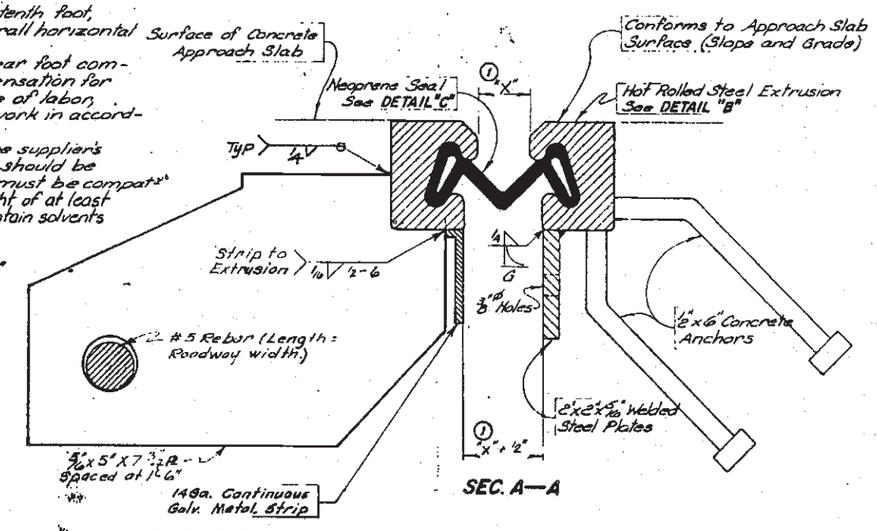

SUPPLEMENTAL DETAIL

The above 5/16"x5"x7¾" PL with #5 Rebar may be used instead of the ½"ϕx6" welded concrete anchors. See Note No. 8

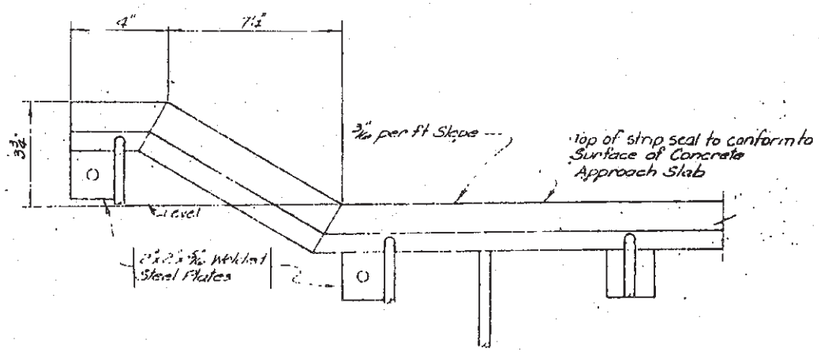

VIEW B—B

DETAIL "C"

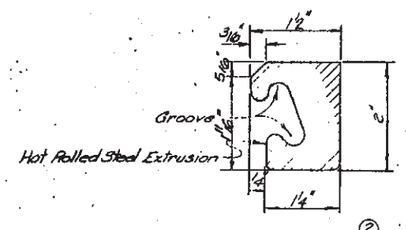

DETAIL "B" ②

② Rev. 1-16-76
① Rev. 8-1-74

ORIGINAL CONSTRUCTION PLANS

APPROACH SLAB JOINT DETAIL
FOR
199'-0" CONT. COMP. GIRDER BRIDGE

32'-0" ROADWAY — 6° 54' 23.5" SKEW R.H.F.
OVER C.M.ST.P. & P.R.R. — SEC. 24-T23N-R17E
STA. 5+11.053 TO 7+10.053 — IGH 0073(D) 252
STR. NO. 16-026-001 — HS20-44 (8 ALT.)
CORSON COUNTY
SOUTH DAKOTA
DEPARTMENT OF HIGHWAYS
SEPT. 1975 — 21 OF 21

DESIGNED BY	DRAWN BY	CHECKED BY	APPROVED
	G.W.W.	M.V.W.	R.C. Wilson, BRIDGE ENGINEER

MASTER

STATE OF	PROJECT	SHEET NO.	TOTAL SHEETS
S.D.	P 0063(42)252	E59	E105

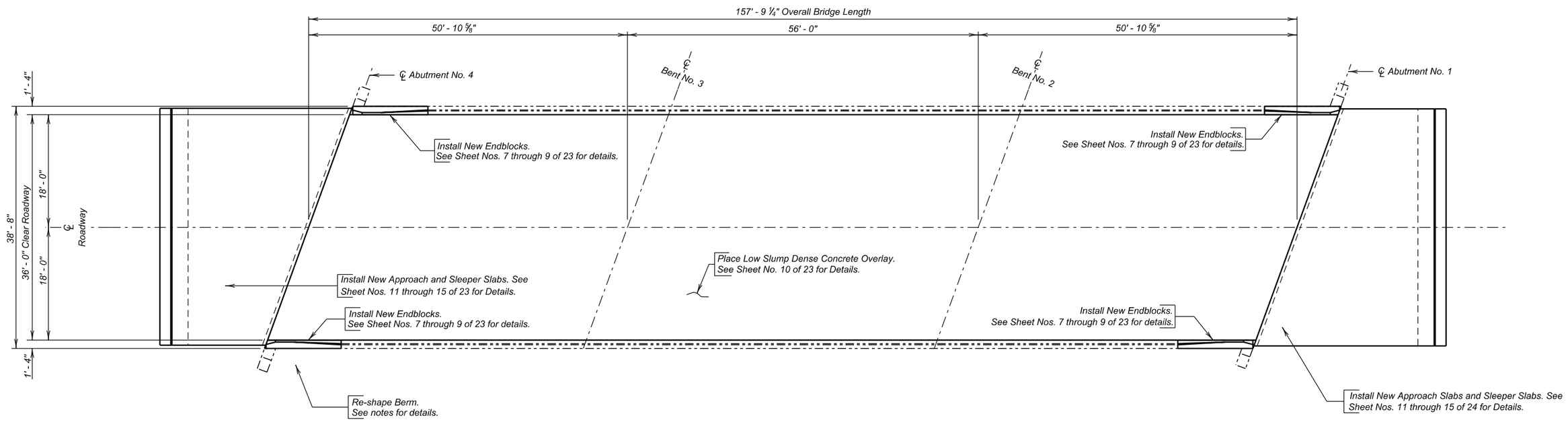

PLAN

INDEX OF BRIDGE SHEETS -

Sheet No. 1 - Layout for Upgrading
Sheet No. 2 - Estimate of Structure Quantities and Notes
Sheet No. 3 - Notes (Continued)
Sheet No. 4 - Notes (Continued)
Sheet No. 5 - Notes (Continued)
Sheet No. 6 - Notes (Continued)
Sheet No. 7 - End Block Removal Details
Sheet No. 8 - End Block Modification Layout
Sheet No. 9 - End Block Modification Details
Sheet No. 10 - Profiles Low Slump Dense Concrete
Sheet No. 11 - Approach Slab Underdrain Details
Sheet No. 12 - Approach Slab Layout
Sheet No. 13 - Approach Slab Details
Sheet No. 14 - Approach Slab Details (Continued)
Sheet No. 15 - Approach Slab Joint Details
Sheet No. 16 - Standard Plate 460.03 & 630.92
Sheet No. 17 - Standard Plate 680.03
Sheet Nos. 18 thru 23 - Original Construction Plans

LAYOUT FOR UPGRADING

FOR

157' - 9¼" PRESTRESSED GIRDER BRIDGE

36' - 0" ROADWAY — 20° SKEW LHF
OVER CREEK — SEC. 31/32-T22N-R27E
STR. NO. 16-580-084 — P 0063(42)252
PCN 02HG

CORSON COUNTY

S. D. DEPT. OF TRANSPORTATION

OCTOBER 2013

PLANS BY :
OFFICE OF BRIDGE DESIGN, SOUTH DAKOTA DEPARTMENT OF TRANSPORTATION

DESIGNED BY	CK DES BY	DRAFTED BY	
BWS	KH	EJA	Kevin N. Goeden
CORS02HG	02HGLF01		BRIDGE ENGINEER

ESTIMATE OF STRUCTURE QUANTITIES

ITEM NO.	DESCRIPTION	QUANTITY	UNIT
110E0010	Remove Concrete Bridge Approach Slab	268.0	SqYd
250E0010	Incidental Work	Lump Sum	LS
410E2600	Membrane Sealant Expansion Joint	75.8	Ft
430E0300	Granular Bridge End Backfill	44.0	CuYd
430E0510	Approach Slab Underdrain Excavation	49.6	CuYd
460E0070	Class A45 Concrete, Bridge Repair	4.8	CuYd
460E0150	Concrete Approach Slab for Bridge	184.2	SqYd
460E0160	Concrete Approach Sleeper Slab for Bridge	37.8	SqYd
460E0300	Breakout Structural Concrete	5.0	CuYd
460E0380	Install Dowel in Concrete	64	Each
460E0504	No. 4 Rebar Splice	28	Each
460E0505	No. 5 Rebar Splice	32	Each
460E0506	No. 6 Rebar Splice	46	Each
480E0200	Epoxy Coated Reinforcing Steel	698	Lb
550E0010	Low Slump Dense Concrete Overlay	45.0	CuYd
550E0100	Concrete Removal Type 1A	631.1	SqYd
550E0110	Concrete Removal Type 1B	63.1	SqYd
550E0120	Concrete Removal Type 1C	31.6	SqYd
550E0130	Concrete Removal Type 1D	31.6	SqYd
550E0140	Concrete Removal Type B	20.0	Ft
550E0200	Class A45 Concrete Fill	7.4	CuYd
550E0500	Finishing and Curing	631.0	SqYd
680E0040	4" Underdrain Pipe	115.8	CuYd
680E2010	Precast Concrete Headwall for Drain	4	Each
680E2500	Porous Backfill	10.5	Ton

SPECIFICATIONS

1. Design Specifications: AASHTO Standard Specifications for Highway Bridges 17th Edition using Working Stress Design.

2. Construction Specifications: South Dakota Standard Specifications for Roads and Bridges, 2004 Edition and Required Provisions, Supplemental Specifications and/or Special Provisions as included in the Proposal.

SCOPE OF BRIDGE WORK & SEQUENCE OF OPERATIONS

All work on this structure shall be accomplished with the traffic control shown elsewhere in the plans. Alternate sequence of operations may be submitted by the Contractor for approval by the Engineer a minimum of two weeks prior to the pre-construction meeting.

1. Remove the existing end blocks for the first phase of construction.

2. Place new end blocks to allow for the attachment of thrie beam approach railing for the first phase of construction.

SCOPE OF BRIDGE WORK & SEQUENCE OF OPERATIONS (CONT.)

3. Accomplish all Concrete Removal 1A, 2A, 1B, 1C, 1D and B and place Class A45 Concrete Fill to the satisfaction of the Engineer for the first phase of construction.

4. Place a Low Slump Dense Concrete Overlay to the elevations shown in the plans on the bridge deck for the first phase of construction.

5. Remove existing approach slabs for the first phase of construction.

6. Install the Approach Slab Underdrain System for the first phase of construction.

7. Install the Sleeper Slabs and Approach Slabs for the first phase of construction.

8. Place contractor furnished borrow at north abutment berm.

9. Switch traffic and repeat steps 1 through 7 for the second phase of construction.

GENERAL CONSTRUCTION - BRIDGE

1. All mild reinforcing steel shall conform to ASTM A615, Grade 60.

2. All exposed concrete corners and edges shall be chamfered 3/4" unless noted otherwise in the plans. Match existing chamfer if the existing chamfer differs.

3. Use 2" clear cover on all reinforcing steel except as shown otherwise.

4. The Contractor shall only imprint one year plate on the structure. The year plate shall contain the date the existing bridge was built and shall be located as specified and detailed on Standard Plate No. 460.03.

5. End blocks shall be built normal to the grade.

6. Request for construction joints or resteel splices at points other than those shown, must be submitted to the Engineer for prior approval. If additional splices are approved, no payment will be allowed for the added quantity of reinforcing steel.

7. Surfaces of fresh concrete at construction joints shall be rough floated sufficiently to consolidate the surface. All construction joints shall be cleaned of surface laitance, curing compounds and other foreign materials prior to placing fresh concrete against the joint.

8. The type of vibratory screed shall be approved by the Engineer.

9. Snap ties, if used in the end block formwork, shall be epoxy coated. The epoxy coating shall be inert in concrete and compatible with the coating applied to the new epoxy coated reinforcing steel.

10. End blocks shall be cured in accordance with Section 460.3.N. of the Construction Specifications except that no curing compounds shall be allowed.

BRIDGE DECK OVERLAY

1. The preparation for resurfacing consists of Concrete Removal Type 1A on the entire bridge deck and Type 1B, Type 1C, Type 1D and Type B over the deck surface as detailed on the plan sheets. Such removal shall be in conformance with these plans and Section 550 of the Construction Specifications. Extreme care shall be taken during the Concrete Removal Type 1A, Type 1B, Type 1D and Type B to assure that the existing resteel is not damaged. In the event that resteel damage inadvertently occurs, the Bridge Construction Engineer shall be immediately notified. Any damaged resteel shall be repaired by the Contractor, as approved by the Engineer, at no additional cost to the Department.

2. Concrete Removal Type 1B, Concrete Removal Type 1C, Concrete Removal Type 1D, Concrete Removal Type B and Class A45 Concrete Fill may not be encountered and may be omitted from the project as determined by the Engineer.

3. Concrete Removal Type 1C, Concrete Removal Type 1D and Class A45 Concrete Fill is not anticipated to exceed the plan shown quantities. If the Engineer determines that Concrete Removal Type 1C, Concrete Removal Type 1D and/or Class A45 Concrete Fill in excess of the plan shown quantity is necessary, payment for the additional quantity shall be conformance with Section 550.5 of the Construction Specifications.

4. The coarse aggregate in the existing bridge deck is a natural aggregate. The coarse aggregate in the low slump bridge deck overlay shall be limestone in accordance with Section 820 of the Construction Specification.

5. All fine aggregates used in the Portland cement concrete in the "Low Slump Dense Concrete Bridge Deck Overlay" and "Class A45 Concrete Fill" shall conform to Section 800.2.D of the Construction Specification "Alkali Silica Reactivity (ASR)" requirements. The type of cement in the concrete mix shall be one of the options as indicated in the table in note number 10 on Sheet No. 3 of 24. Fine aggregates with a 14-day expansion value of 0.400 and greater shall not be used.

ESTIMATE OF STRUCTURE QUANTIES AND NOTES
FOR
157' – 9 ¼" PRESTRESSED GIRDER BRIDGE

Str. No. 16-580-084

OCTOBER 2013

DESIGNED BY	CK. DES. BY	DRAFTED BY:	
BWS	KH	BWS	Kevin N. Hardin
CORS02HG	02HGNOTF		BRIDGE ENGINEER

BRIDGE DECK OVERLAY (CONTINUED)

6. Below is a list of known fine aggregate sources and the average corresponding 14-day expansion values:

Source	Location	Expansion Value
Bachman	Winner, SD	0.335
Birdsall S&G	Creston, SD	0.158
Birdsall S&G	Oral, SD	0.131
Birdsall S&G	Wasta, SD	0.170
Bitterman	Delmont, SD	0.314
Concrete Materials	Corson, SD	0.170
Croell	Quinn, SD	0.089
Emme Sand & Gravel	Oneil Nebraska	0.217
Fischer S&G	Rapid City, SD	0.092
Fischer S&G	Spearfish, SD	0.053
Fuchs	Pickstown, SD	0.275
Higman	Akron, IA	0.198
Higman	Hudson, SD	0.187
Hilde	Madison, SD	0.116
Jensen	Herried, SD	0.276
L.G. Everist	Brookings, SD	0.186
L.G. Everist	Hawarden, IA	0.166
L.G. Everist	Summit, SD	0.141
Morris	Blunt, SD	0.192
Morris – Richards pit	Onida, SD	0.188
Myrl & Roys Paving-Nelson Pit	Sioux Falls, SD	0.156
Northern Concrete Agg.	Rauville, SD	0.113
Northern Concrete Agg.	Luverne, MN	0.124
Opperman – Gunvordahl Pit	Burke, SD	0.337
Opperman – Cahoy Pit	Herrick, SD	0.307
Opperman – Jones Pit	Burke, SD	0.321
Opperman – Randall Pit	Pickstown, SD	0.239
Thorpe Pit	Britton, SD	0.098
Wagner Building Supplies	Wagner, SD	0.241
Wasta Sand & Gravel	Wasta, SD	0.159

7. The Department will use the running average of the last three known expansion test results or less for determining acceptability of source and the required Type of cement. These expansion results are reported in the table in note number 6. Additional testing, when requested by the Contractor, will be performed by the Department at the Contractor's expense.

8. The values listed in the table in note number 6 are intended for use in bidding. If a previously tested pit by SDDOT with acceptable test values (less than 0.250) is discovered after letting to require Type V cement or more lithium (greater than 0.250) the Department will accept financial responsibility for the change in materials.

BRIDGE DECK OVERLAY (CONTINUED)

9. When more than one source of fine aggregates is blended to meet the gradation specifications, the highest expansion value of either sand will be used for determining acceptability and type of cement and or fly ash and or Lithium required.

10. Concrete used in the Low Slump Bridge Deck Overlay shall meet the requirements of Section 550 of the Construction Specification. Class A45 Concrete Fill shall meet the requirements of Section 460 of the Construction Specification. In addition, both concretes shall have 20% to 25% of the cement replaced with Class F Modified Fly Ash in accordance with Section 605 of the Construction Specification and/or lithium nitrate (30% solution by weight) added to the concrete mix at the following rates.

Course Aggregate	Fine Aggregate	Cement Type	Fly Ash	Lithium Nitrate
Limestone or Granite	< 0.250%	Type I or II	Class F Modified	-----
		Type I or II	-----	1.5 gallon/cubic yard
Limestone or Granite	>0.250%	Type V	Class F Modified	-----
		Type I or II	-----	3.0 gallon/cubic yard
		Type I or II	Class F Modified	1.5 gallon/cubic yard
Quartzite	-----	Type V	Class F Modified	-----
		Type I or II	-----	3.0 gallon/cubic yard
		Type I or II	Class F Modified	1.5 gallon/cubic yard

The Contractor shall use one of these options, but the Contractor may choose which option. All material, labor, equipment, and incidental costs shall be included in the contract unit price for "Low Slump Dense Concrete Bridge Deck Overlay" or "Class A45 Concrete Fill".

11. Grout for bonding new concrete to old concrete shall meet the requirements of Section 550 of the Construction Specification. In addition, the grout mix shall contain 1 1/2 gallons of Lithium per cubic yard or 20% to 25% of the cement replaced with fly ash.

12. Suppliers of Lithium are listed below:

BASF Admixtures, Inc.
23700 Chagrin Boulevard
Cleveland, Ohio 44122-5554
1-800-628-9990
website: www.basf-admixtures.com

FMC Corporation Lithium
Seven LakePointe Plaza
2801 Yorkmont Road, Suite 300
Charlotte, North Carolina 28208
1-704-868-5300
website: www.fmclithium.com

Grace Construction Products
62 Whitmore Ave.
Cambridge MA
1-877-423-6491
Website: www.graceconstruction.com

BRIDGE DECK OVERLAY (CONTINUED)

13. A minimum thickness of 2" of Low Slump Dense Concrete shall be maintained on the bridge deck.

14. It will be necessary for the Contractor to shape the surface of the Low Slump Dense Concrete Overlay within one foot of the curb as detailed in the plans to insure that water drains to the floor drains or off the ends of the bridge.

15. No traffic will be allowed to operate on the scarified portion of the bridge deck. If it appears that the entire Low Slump Dense Concrete Overlay can not be completed prior to winter, the Concrete Removal Type 1A, 1B, 1C, 1D and Concrete Removal Type B shall not be done until work resumes in the spring. In the event that scarification has been started and due to unforeseen circumstances it becomes impossible to complete the placement of the Low Slump Dense Concrete Overlay on the entire surface of the structure prior to winter, the Office of Bridge Design shall be notified. Recommendations for handling winter traffic will then be made. These recommendations may include, but are not limited to, filling extra depth removal areas with Class A45 Concrete, placing an asphalt overlay on the uncompleted area so that the entire roadway width may be opened to traffic, removal of the asphalt overlay when work is resumed and scarifying an additional 1/4" of depth on the bridge deck. The cost of this work, including asphalt overlay, scarification, Class A45 Concrete, extra Low Slump Dense Concrete, and all other items incidental to this work, shall be at the expense of the Contractor.

NOTES (CONTINUED)
FOR
157' – 9 ¼" PRESTRESSED GIRDER BRIDGE

Str. No. 16-580-084

OCTOBER 2013

DESIGNED BY	CK. DES. BY	DRAFTED BY:	
BWS	KH	BWS	Kevin M. Boden
CORS02HG	02HGNOTF		BRIDGE ENGINEER

CONCRETE BREAKOUT

1. The existing curbs shall be broken out to the limits shown on the plans. Breakout limits shall be defined with a 3/4" deep sawcut (unless specified otherwise in these plans), where practical, as approved by the Engineer. Reinforcing steel that is exposed and is scheduled for use in the new construction shall be cleaned and straightened to the satisfaction of the Engineer. Care shall be taken not to damage the existing reinforcing steel that is to be reused in the new construction during concrete breakout. Any reinforcing steel that is damaged during concrete breakout shall be replaced or repaired, as approved by the Engineer, by the Contractor at no cost to the Department. The existing reinforcing steel that is to be reused in the new construction and that is exposed during concrete breakout shall be epoxy coated in accordance with the "Epoxy Coating Existing Reinforcing Steel" notes.

2. All broken out concrete, discarded reinforcing bars and expansion devices shall be disposed of by the Contractor. Any disposal of discarded material shall be in accordance with the Construction Specifications.

3. During concrete removal operations, no broken out concrete shall be allowed to fall into creek.

4. The contract unit price per cubic yard for "Breakout Structural Concrete" shall include breaking out concrete, cleaning, straightening existing reinforcing steel and disposal of all broken out material.

EPOXY COATING EXISTING REINFORCING STEEL

1. The existing resteel in the curb that is exposed during concrete breakout, and is to be reused, shall be epoxy coated in the field. This does not include rebar exposed while doing Concrete Removal Type 1A through 1D or Concrete Removal Type B.

2. The reinforcing steel shall be abrasive blasted clean and then epoxy coated. The epoxy coating shall be inert in concrete and compatible with the coating applied to the new epoxy coated reinforcing steel. This coating shall be the epoxy touch up coating material supplied by an epoxy coating manufacturer who supplies coating material for new epoxy coated reinforcing steel. The abrasive blasted reinforcing steel shall be coated promptly and before detrimental oxidation occurs. The coating shall be allowed to cure for 24 hours or as per the manufacturer's recommendations, whichever is more stringent, before concrete can be placed. These bars shall be clean and free from all surface contaminants before coating.

3. The cost of cleaning and epoxy coating the existing reinforcing steel shall be incidental to the various bid items.

REMOVAL OF CONCRETE BRIDGE APPROACH SLAB

1. The existing concrete approach and sleeper slabs adjacent to the structure shall be completely removed by the Contractor.

2. The crushed concrete and reinforcing steel from the removal shall be disposed of by the Contractor at an approved site. An appropriate site will be as described in the Waste Disposal Site notes in this set of plans.

3. All labor, tools, equipment and any incidentals necessary for removal and disposal of the existing approach and sleeper slabs shall be incidental to the contract unit price per square yard for "Remove Concrete Bridge Approach Slab".

APPROACH SLAB UNDERDRAIN SYSTEM

1. This work consists of excavating in place material under the limits of the new approach slab and installing a drainage system to prevent water retention directly under the approach and sleeper slabs. Excavation for placement of the new approach slab and sleeper slab underdrain system shall be done with minimal disturbance to the underlying material.

2. The Approach Slab Underdrain system shall be constructed in accordance with Section 430.3.C of the Special Provision for Approach Slab Underdrain System.

APPROACH SLABS

1. Excavation for placement of new approach slabs and sleeper slabs shall be done with minimal disturbance to the underlying material.

2. Low spots in the area where the approach slabs will be located are to be filled and compacted with bridge end backfill material back to the original grade line. Bridge End Backfill material shall be in accordance with Section 882 of the Construction Specifications. All costs for this work shall be incidental to the various contract bid items.

3. The top of approach slab elevations shall be established during construction and shall be subject to the approval of the Engineer. Care shall be taken to provide a smooth transition from the bridge deck elevations to the new pavement elevations established in the field so as to prevent any dips or bumps in the areas of the bridge ends or ends of the new approach slabs. The maximum rate of grade transition through the approach slab shall be 1 inch per 40 feet.

4. Sleeper slab riser shall be cast with or later than the Approach Slab. Care shall be taken to ensure the correct grade is maintained across the joint.

5. The use of a vibratory screed will be required during placement of Class A45 Concrete for the approach slabs. Concrete placement in front of the screed shall be kept parallel to the screed.

APPROACH SLABS (CONTINUED)

6. The concrete in the approach slab shall be.

7. The new approach slabs and sleeper slabs shall have a surface finish as stipulated in Section 460.3.M.4 of the Construction Specifications.

Δ 8. The Concrete Approach Slabs Adjacent to Bridge shall be cured in accordance with Section 460.3 N of the Construction Specifications. The minimum 7 day cure time requirement shall be waived. The approach slabs shall be cured until a minimum compressive strength of 4000 psi is reached.

9. Concrete Approach Sleeper Slab for Bridge will be paid for at the contract unit price per square yard. This payment shall be full compensation for all excavation, furnishing, hauling, and placing all materials including concrete and reinforcing steel; for disposal of all excavated material and surplus materials; and for labor, tools, equipment and any incidentals necessary to complete this item of work.

10. Concrete Approach Slab for Bridge will be paid for at the contract unit price per square yard. This payment shall be full compensation for all excavation, furnishing, hauling and placing all materials including concrete, asphalt paint or 4 mil polyethylene sheeting, elastic joint sealer and reinforcing steel; for disposal of all excavated material and surplus materials and for labor, tools, equipment and any incidentals necessary to complete this item of work.

DESIGN MIX OF CONCRETE

1. Class A45 Concrete shall be used for the bid items Concrete Approach Slab for Bridge and Concrete Approach Sleeper Slab for Bridge.

2. The Type of cement, concrete strength requirements, aggregate requirements, slump and air requirements for the contract items Class A45 Concrete Bridge Repair, Concrete Approach Sleeper Slab for Bridge and Concrete Approach Slab for Bridge shall conform to the requirements of Section 460 of the Construction Specification.

NOTES (CONTINUED)
FOR
157' – 9 ¼" PRESTRESSED GIRDER BRIDGE

Str. No. 16-580-084

OCTOBER 2013

DESIGNED BY	CK. DES. BY	DRAFTED BY:	
BWS	KH	BWS	Kevin M Boeder
CORS02HG	02HGNOTF		BRIDGE ENGINEER

MEMBRANE SEALANT EXPANSION JOINT

1. Install all membrane sealant expansion joints at the plan shown locations in conformance to the following notes.

2. The Membrane Sealant shall be one of membrane sealant types from the approved product list for Membrane Sealant Expansion Joints.

3. The manufacturer shall supply the membrane sealant in packaging that precompresses the membrane sealant. The precompressed dimension shall be as recommended by the sealant manufacturer to provide a water tight seal throughout a joint movement range of + 25% (minimum) from the specified joint opening dimension. In no case shall the precompressed dimension exceed 75% of the joint opening width. The foam sealant shall be slowly self expanding to permit workers ample time to install the membrane sealant before the membrane sealant exceeds the joint opening width.

4. The membrane sealant shall be supplied in pieces 5 feet in length or longer. The foam sealant shall be ultra-violet and ozone resistant.

5. The bonding adhesive used to attach the membrane sealant to the adjacent concrete shall be approved by the membrane sealant manufacturer.

6. Adhesive used to join adjacent pieces of the membrane sealant shall be as recommended by the manufacturer.

7. If Styrofoam filler material is used in the construction, it shall be closed cell and water-tight as approved by the Engineer.

8. Use plywood or other material to protect concrete adjacent to the joint from spalling before any equipment is moved across the joint. Any spall areas will be repaired at the Contractor's expense by breaking out and replacing adjacent concrete, as approved by the Engineer.

9. The minimum ambient air temperature at the time of joint installation and adhesive curing shall be 40° F.

10. A technical representative of the membrane sealant manufacturer shall be present at the jobsite during installation. The technical representative shall be knowledgeable in the correct procedures for the preparation and installation of the joint material to insure the Contractor installs the joint to the Manufacturers recommendations.

11. The joint opening shall be constant width and shall have smooth vertical sides. Surfaces of material adjacent to the joint shall be at the correct grade and crown as approved by the Engineer.

12. Concrete surfaces that will be in contact with the membrane sealant shall be thoroughly cleaned by abrasive blasting to remove all laitance and contaminants (such as oil, curing compounds, etc.) from the concrete surface. At a minimum two passes of abrasive blasting with the nozzle held at an angle to within 1 to 2 inches of the a concrete surface will be required. Cleaning of the concrete surfaces with solvents, wire brushing, or grinding shall not be permitted.

MEMBRANE SEALANT EXPANSION JOINT (CONTINUED)

13. After abrasive blasting, but immediately prior to membrane joint installation, the entire joint contact surface shall be air blasted. The air compressor used for joint cleaning shall be equipped with trap devices capable of providing moisture-free and oil-free air at a recommended pressure of 90 psi. To obtain complete bonding with the adhesive, the adjacent concrete surfaces must be dry and clean. The contact surfaces for the joint shall be visually inspected by the Engineer immediately prior to joint installation to verify the surface is dry and clean.

14. Individual spliced sections shall be installed as per the manufacturers' recommendations. The membrane joint sealant manufacturer shall submit a detailed installation procedure to the Engineer at least 5 days prior to joint installation for his review.

15. Traffic shall not be allowed on the joint for a minimum 3 hours unless otherwise directed by the Engineer.

16. Forms for the joint shall be left in place for a minimum of 7 days. No construction equipment or traffic shall be allowed on the joint until the concrete has reached design strength. The joint edges shall be protected from damage by equipment and traffic.

17. The Membrane Sealant Expansion Joint will be measured in feet to the nearest one-tenth foot, complete in place. Measurement will be made of the overall horizontal length. The Membrane Sealant Expansion Joint will be paid for at the contract unit price per foot complete in place. Payment for this item shall be full compensation for furnishing all the required materials in place, inclusive of labor, equipment and incidentals necessary to complete the work in accordance with the plans and the foregoing specifications.

INSTALLING DOWELS IN CONCRETE

1. Holes drilled in the existing concrete shall be true and normal or as shown in the plans. Drilling holes using a core drill shall not be allowed. Care shall be taken not to damage the existing reinforcing steel. It is likely that some of the existing reinforcing steel shown in the original construction plans may have been placed out of position during original construction. Therefore, prior to the start of drilling any holes in the concrete, an effort will be made by Department forces to mark on the concrete surface where practical any locations of the in-place reinforcing steel. In spite of this precaution, the Contractor can still expect to encounter and have to drill through reinforcing steel or shift the dowel spacing as approved by the Engineer to miss the existing reinforcing steel. If the Contractor shifts the dowel spacing, the unused drill holes shall be completely filled with the epoxy resin specified in note number 2 under "Installing Dowels in Concrete" as approved by the Engineer.

INSTALLING DOWELS IN CONCRETE (CONTINUED)

2. The epoxy resin mixture shall be of a type for bonding steel to hardened concrete and shall conform to AASHTO M235 Type IV, Grade 3 (Equivalent to ASTM C881, Type IV, Grade 3). Grade 1, 2 or 3 may be used for vertical dowels and Grade 3 epoxy shall be used for all horizontal dowels.

3. The diameter of the drilled holes shall not be less than 1/8 inch greater, nor more than 3/8 inch greater than the diameter of the dowels or as per the Manufacturer's recommendations. The drilled holes shall be blown out with compressed air using a device that will reach the back of the hole to ensure that all debris or loose material has been removed prior to epoxy injection.

4. Mix epoxy resin as recommended by the Manufacturer and apply by an injection method as approved by the Engineer. Beginning at the back of the drilled holes, fill the holes 1/3 to 1/2 full of epoxy, or as recommended by the Manufacturer, prior to insertion of the steel bar. Care shall be taken to prevent epoxy from running out of the horizontal holes prior to steel bar insertion. Rotate the steel bar during installation to eliminate voids and ensure complete bonding of the bar. Insertion of the bars by the dipping or painting method will not be allowed.

5. No loads shall be applied to the epoxy grouted dowel bars until the epoxy resin has had sufficient time to cure as specified by the epoxy resin manufacturer.

6. Dowel bars shall be deformed bars conforming to ASTM A615 Grade 60.

7. The cost of epoxy resin, dowels, installation and other incidental items shall be incidental to the contract unit price per each for "Install Dowel in Concrete".

MECHANICAL REBAR SPLICES

The approach slabs will be built in phases under traffic, mechanical splice devices will be required for the transverse approach slab and sleeper slab reinforcing steel. The mechanical rebar splices shall be in accordance with Section 480 of the Construction Specifications.

NOTES (CONTINUED)
FOR
157' – 9 ¼" PRESTRESSED GIRDER BRIDGE

Str. No. 16-580-084

OCTOBER 2013

DESIGNED BY	CK. DES. BY	DRAFTED BY:	
BWS	KH	BWS	Kevin N. Gordon
CORS02HG	02HGNOTF		BRIDGE ENGINEER

BRIDGE BERM REPAIR

1. The north berm near the abutment shall be rebuilt and reshaped to the adjacent berm elevation. Material shall be placed to a minimum 1' above the bottom of the abutment seat, as approved by the Engineer.

2. The berm slope shall be benched into stable embankment during reshaping and reconstruction. The soil shall be placed in horizontal lifts perpendicular to the centerline of the structure. Compaction of the reconstructed embankment will be governed by the Ordinary Compaction Method.

3. At the upper part of the berm slope, clearance between the structure and berm will prohibit the use of compaction equipment. The soil in this area will be placed by a method approved by and compacted to the satisfaction of the Engineer.

4. Soil used to reconstruct the berm slope shall be furnished by the Contractor. The soil will have a maximum of 70% passing the #4 sieve, have a maximum Liquid Limit (LL) of 45 and a Plastic Index (PI) greater than 10 but less than 25. The contractor shall be responsible for one gradation, LL and PI test for each borrow source for berm reconstruction. The results shall be supplied to the Engineer in writing.

5. Waste material from grading will be generated from this project. The Contractor may use this waste material providing it meets the requirements listed in note number 4 above.

6. The cost of the berm reconstruction and reshaping shall be incidental to the contract lump sum for "Incidental Work" This payment shall be full compensation for furnishing all materials, labor, tools, and equipment necessary or incidental to the reconstruction and reshaping of the bridge berm. For informational purposes the amount of fill required is 15.0 cubic yards.

CONTRACTOR FURNISHED BORROW

The Contractor shall provide a suitable site for Contractor furnished borrow material. The Contractor is responsible for obtaining all required permits and clearances for the borrow site. The borrow material shall be approved by the Engineer.

SURFACE FINISH

All visible surfaces of the newly constructed endblocks shall be given a Class A Commercial Texture Finish in accordance with Section 460.3.M.1.c. of the Construction Specifications.

The concrete surfaces requiring the application of the Commercial Texture Finish shall be prepared in accordance with the manufacturer's recommendations. The Contractor shall submit a product data sheet, or an approved equal, documenting all pertinent information with regard to preparation of the concrete surfaces, materials and equipment required, mixing requirements, and application procedures to the Engineer in advance of the application of the Commercial Texture Finish for review and approval.

For informational purposes the amount of surface area requiring the Class A Commercial Texture Finish is 247 square feet.

Any damage to the commercial texture finish during the construction including abrasion from traffic due to the traffic control shall be repaired by the Contractor, as approved by the Engineer, at no expense to the Department.

The cost of the commercial texture finish shall be included in the contract price per cubic yard for "Class A45 Concrete, Bridge Repair". This payment shall be full compensation for furnishing all materials, labor, tools and equipment necessary or incidental to the application of this finish.

NOTES (CONTINUED)
FOR
157' – 9 ¼" PRESTRESSED GIRDER BRIDGE

Str. No. 16-580-084

OCTOBER 2013

DESIGNED BY	CK. DES. BY	DRAFTED BY:	
BWS	KH	BWS	Kevin N Hedeen
CORS02HG	02HGNOTF		BRIDGE ENGINEER

STATE OF	PROJECT	SHEET NO.	TOTAL SHEETS
S.D.	P 0063(42)252	E65	E105

Shaded area indicate limits of concrete breakout

PLAN

(Limits of Concrete Breakout)

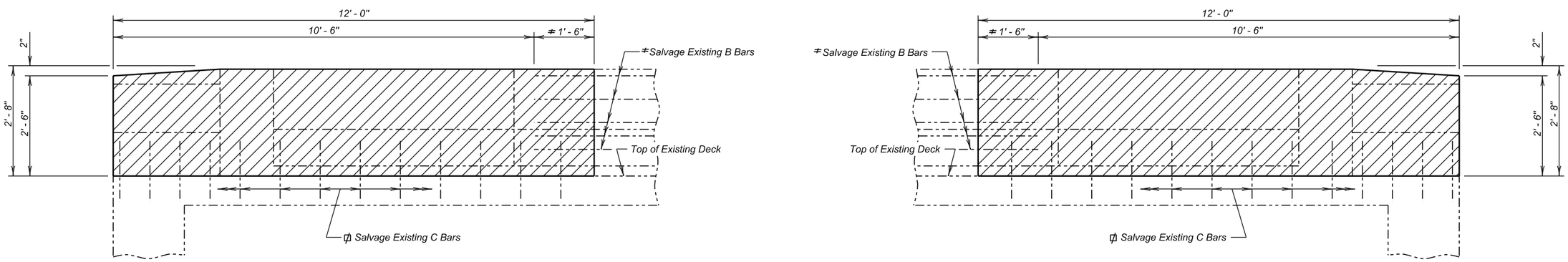

ELEVATION

(Limits of Concrete Breakout)

ϕ Bend Existing Bars where necessary to maintain 2" clear cover.

≠ Extend Existing Bars into new section (1' - 6")

END BLOCK CONCRETE REMOVAL

FOR

157' - 9¼" PRESTRESSED GIRDER BRIDGE

36' - 0" ROADWAY — 20° SKEW LHF

OVER CREEK — SEC. 31/32-T22N-R27E

STR. NO. 16-580-084 — P 0063(42)252

CORSON COUNTY

S. D. DEPT. OF TRANSPORTATION

OCTOBER 2013

DESIGNED BY	CK. DES. BY	DRAFTED BY	
NP	KH	NP	Kevin N. Goeden
CORS02HG	02HGLF07		BRIDGE ENGINEER

STATE OF	PROJECT	SHEET NO.	TOTAL SHEETS
S.D.	P 0063(42)252	E66	E105

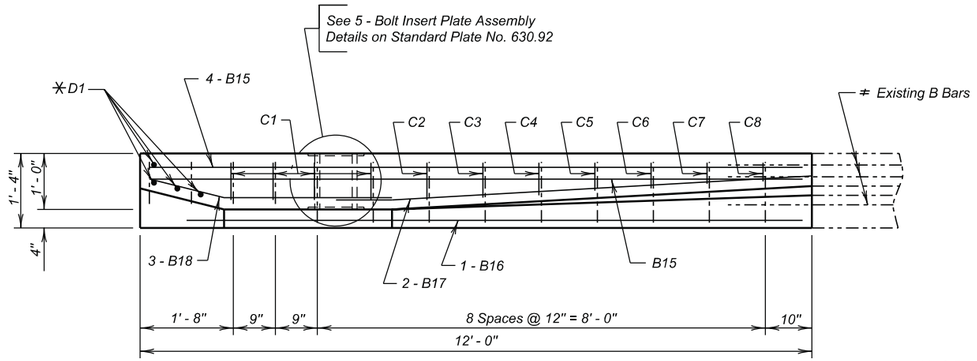

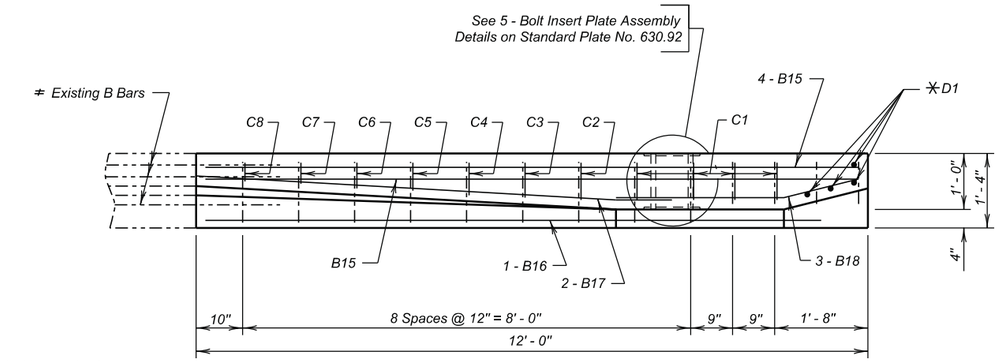

PLAN

(Left Barrier shown, Right Barrier identical by rotation)

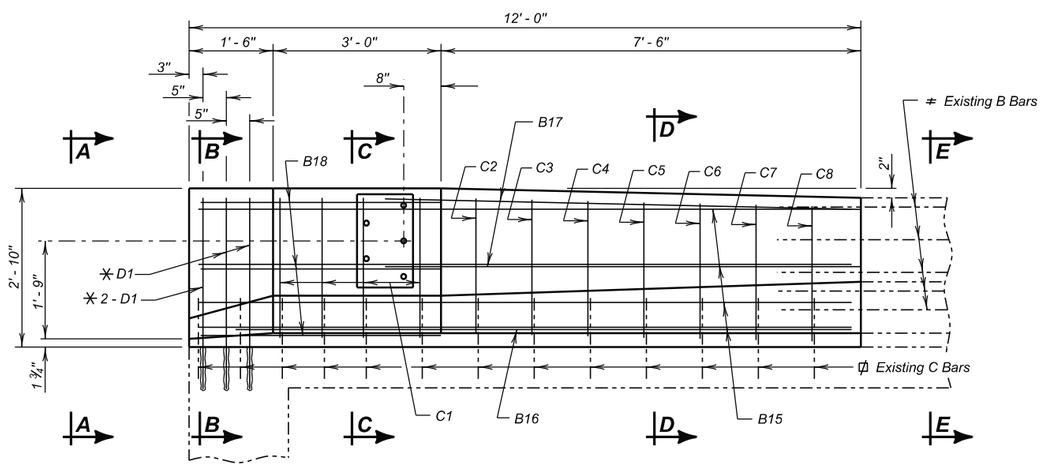

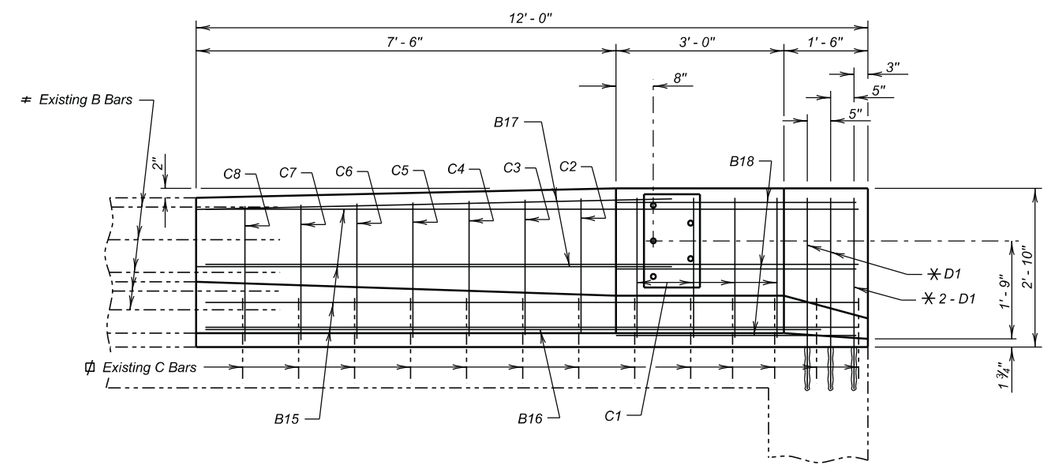

ELEVATION

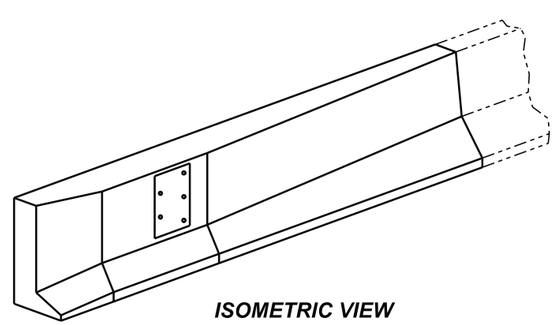

ISOMETRIC VIEW

Bend Existing Bars where necessary to maintain 2" clear cover.
✳ D1 are to be drilled in and grouted with epoxy.
≠ Extend Existing Bars into new section (1' - 6")

END BLOCK MODIFICATION

FOR

157' - 9¼" PRESTRESSED GIRDER BRIDGE

36' - 0" ROADWAY — 20° SKEW LHF
OVER CREEK — SEC. 31/32-T22N-R27E
STR. NO. 16-580-084 — P 0063(42)252

CORSON COUNTY

S. D. DEPT. OF TRANSPORTATION

OCTOBER 2013

DESIGNED BY	CK. DES. BY	DRAFTED BY	
NP	KH	NP	Kevin N. Goeden
CORS02HG	02HGLG08		BRIDGE ENGINEER

STATE OF	PROJECT	SHEET NO.	TOTAL SHEETS
S.D.	P 0063(42)252	E67	E105

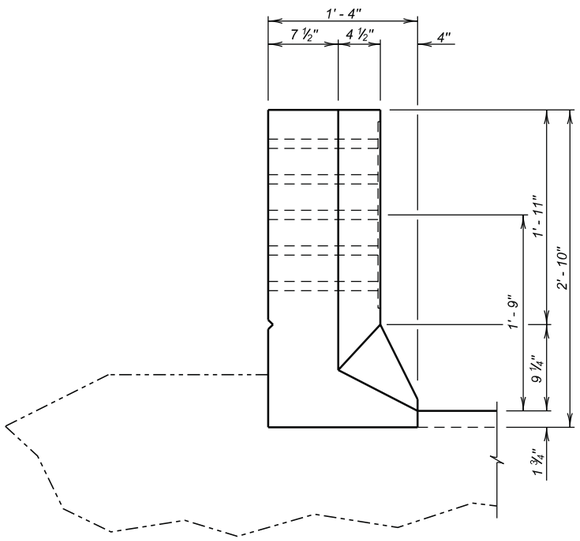

VIEW A - A

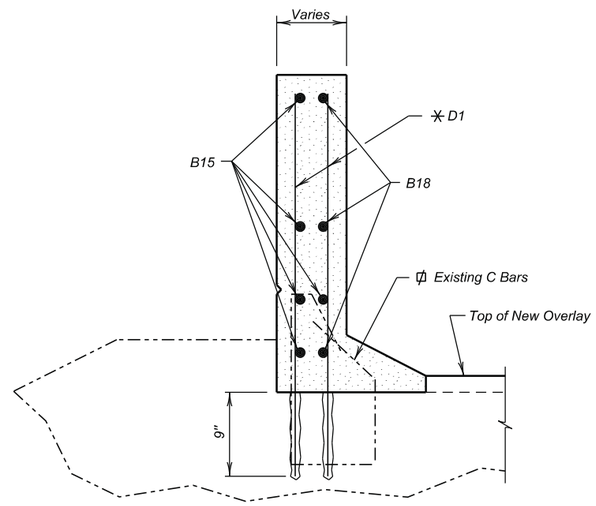

SECTION B - B

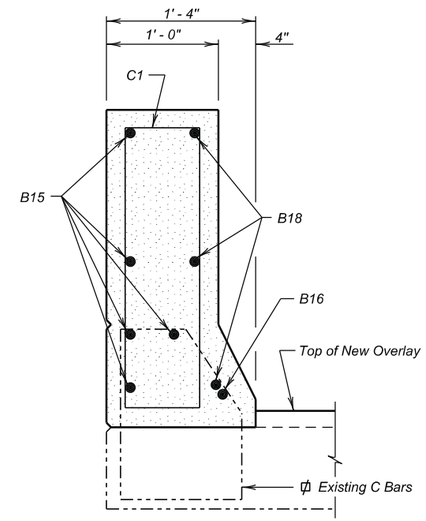

SECTION C - C

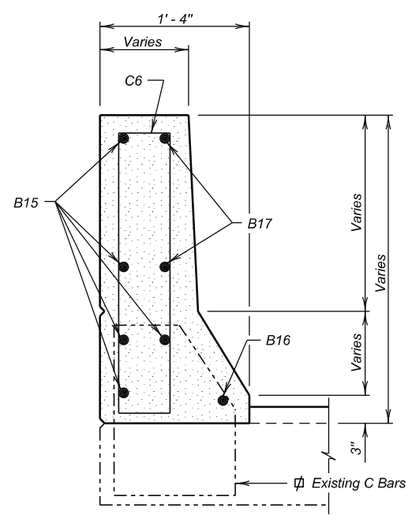

SECTION D - D

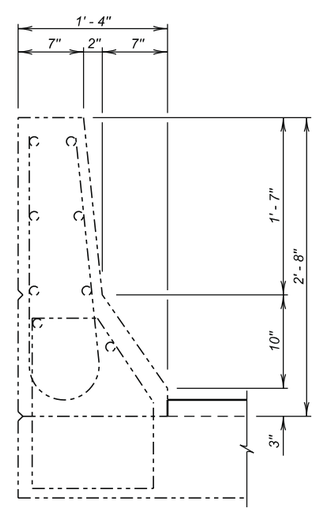

SECTION E - E

REINFORCING SCHEDULE

	Mk.	No.	Size	Length	Type
PHASE I	B15	10	5	11' - 8"	Str.
	B16	2	5	11' - 0"	Str.
	B17	4	5	8' - 6"	19A
	B18	6	8	4' - 4"	19A
	C1	8	4	7' - 1"	T2
	C2	2	4	6' - 11"	T2
	C3	2	4	6' - 10"	T2
	C4	2	4	6' - 9"	T2
	C5	2	4	6' - 7"	T2
	C6	2	4	6' - 6"	T2
	C7	2	4	6' - 4"	T2
	C8	2	4	6' - 3"	T2
	△D1	8	6	3' - 5"	Str.
PHASE 2	B15	10	5	11' - 8"	Str.
	B16	2	5	11' - 0"	Str.
	B17	4	5	8' - 6"	19A
	B18	6	8	4' - 4"	19A
	C1	8	4	7' - 1"	T2
	C2	2	4	6' - 11"	T2
	C3	2	4	6' - 10"	T2
	C4	2	4	6' - 9"	T2
	C5	2	4	6' - 7"	T2
	C6	2	4	6' - 6"	T2
	C7	2	4	6' - 4"	T2
	C8	2	4	6' - 3"	T2
	△D1	8	6	3' - 5"	Str.

Bending Details

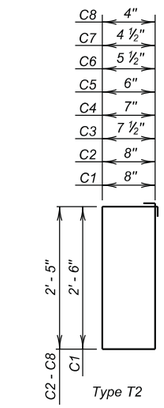

Type T2

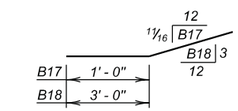

Type 19A

NOTES:
All Dimensions are out to out of bars.
All Bars to be Epoxy Coated.
△ Dowels

ESTIMATED QUANTITIES

ITEM	UNIT	PHASE I QUANTITY	PHASE 2 QUANTITY
Class A45 Concrete, Bridge Repair	Cu.Yd.	2.4	2.4
Epoxy Coated Reinforcing Steel	Lb.	349	349
Install Dowel In Concrete	Each	8	8
Breakout Structural Concrete	Cu.Yd.	2.5	2.5

✳ Does not include the following quantities for D1 bars as these are paid for in the Bid Item "Install Dowel in Concrete".

PHASE I	PHASE 2
41 Lb.	41 Lb.

ϕ Bend Existing Bars where necessary to maintain 2" clear cover.
✳ D1 are to be drilled in and grouted with epoxy.
≠ Extend Existing Bars into new section (1' - 6")

END BLOCK MODIFICATION DETAILS

FOR

157' - 9¼" PRESTRESSED GIRDER BRIDGE

36' - 0" ROADWAY — 20° SKEW LHF
OVER CREEK — SEC. 31/32-T22N-R27E
STR. NO. 16-580-084 — P 0063(42)252

CORSON COUNTY
S. D. DEPT. OF TRANSPORTATION
OCTOBER 2013

DESIGNED BY	CK. DES. BY	DRAFTED BY	
NP	KH	NP	Kevin N. Boeden
CORS02HG	02HGLF09		BRIDGE ENGINEER

△ Revised 9-26-14 BWS

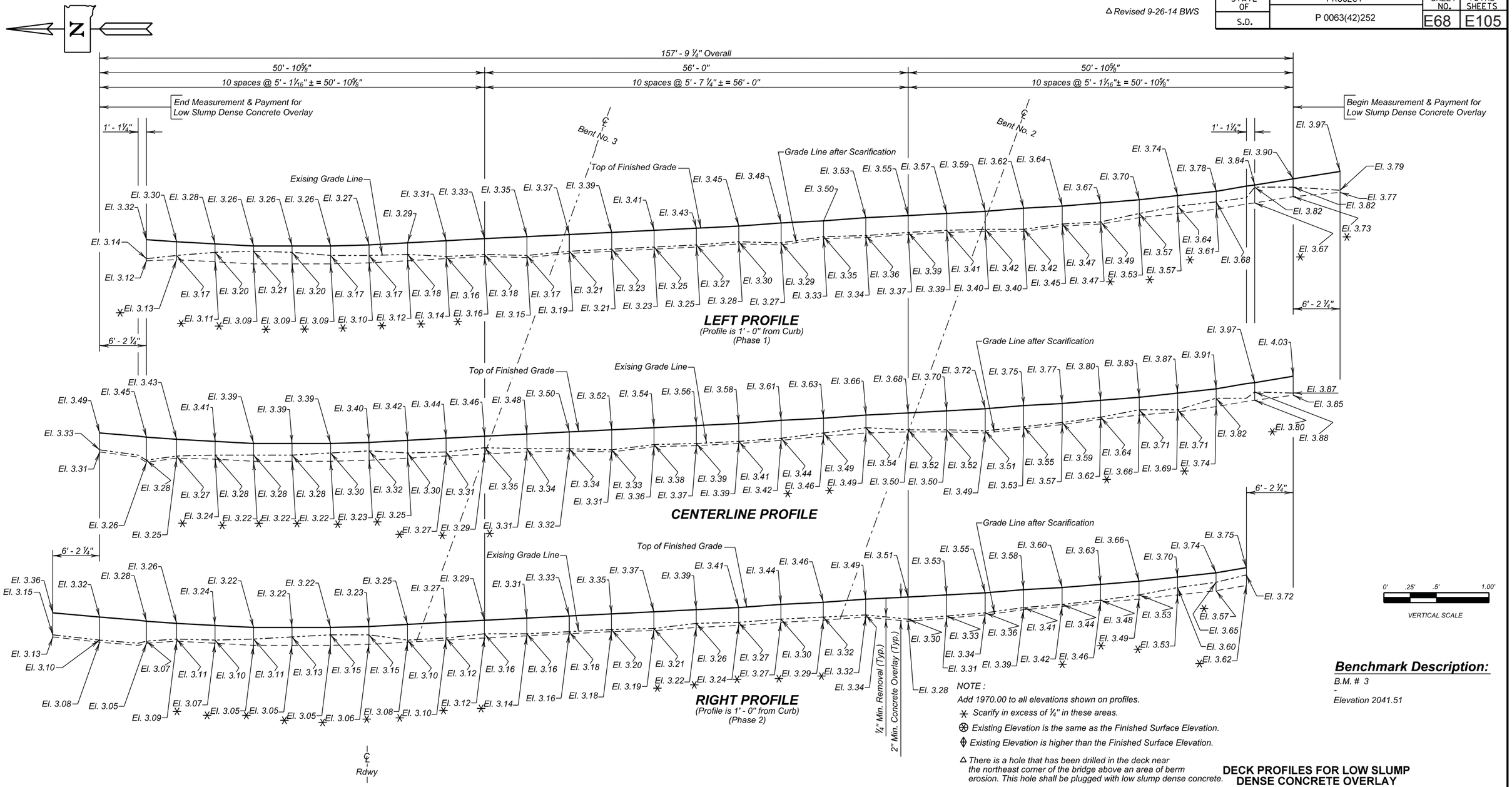

NOTE :

Add 1970.00 to all elevations shown on profiles.

✳ Scarify in excess of ¼" in these areas.

⊗ Existing Elevation is the same as the Finished Surface Elevation.

◊ Existing Elevation is higher than the Finished Surface Elevation.

△ There is a hole that has been drilled in the deck near the northeast corner of the bridge above an area of berm erosion. This hole shall be plugged with low slump dense concrete.

Benchmark Description:

B.M. # 3

-

Elevation 2041.51

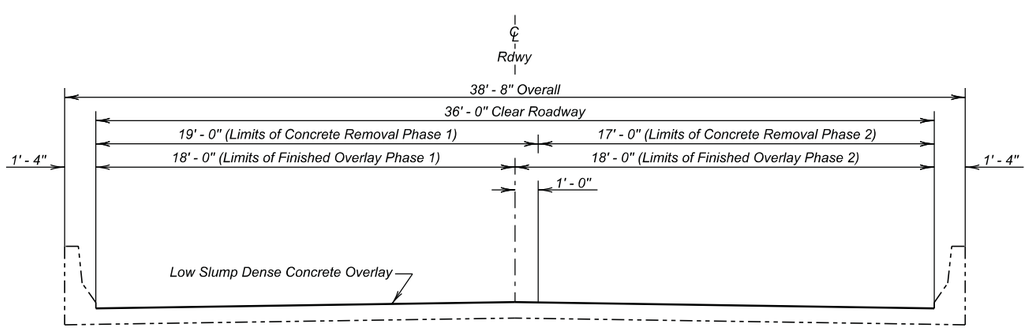

TYPICAL SECTION

ESTIMATED QUANTITIES

ITEM	UNIT	QUANTITY Phase I	QUANTITY Phase 2
Low Slump Dense Concrete Deck Overlay	Cu. Yd.	22.5	22.5
Concrete Removal Type 1A	Sq. Yd.	333.1	298.0
Concrete Removal Type 1B	Sq. Yd.	33.3	29.8
Concrete Removal Type 1C	Sq. Yd.	16.7	14.9
Concrete Removal Type 1D	Sq. Yd.	16.7	14.9
Concrete Removal Type B	Ft.	10.0	10.0
Class A45 Concrete Fill	Sq. Yd.	3.9	3.5
Finishing and Curing	Cu. Yd.	315.5	315.5

DECK PROFILES FOR LOW SLUMP DENSE CONCRETE OVERLAY
FOR
157' - 9 ¼" PRESTRESSED GIRDER BRIDGE

36' - 0" ROADWAY
OVER CREEK
STR. NO. 16-580-084

20° SKEW LHF
SEC. 31 / 32-T22N-R27E
P 0063(42)252

CORSON COUNTY
S. D. DEPT. OF TRANSPORTATION
OCTOBER 2013

DESIGNED BY	CK. DES. BY	DRAFTED BY	
NP	KH	KR	Kevin N. Goeden BRIDGE ENGINEER
CORS02HG	02HGLF10		

STATE OF	PROJECT	SHEET NO.	TOTAL SHEETS
S.D.	PH 0014(172)418	E69	E105

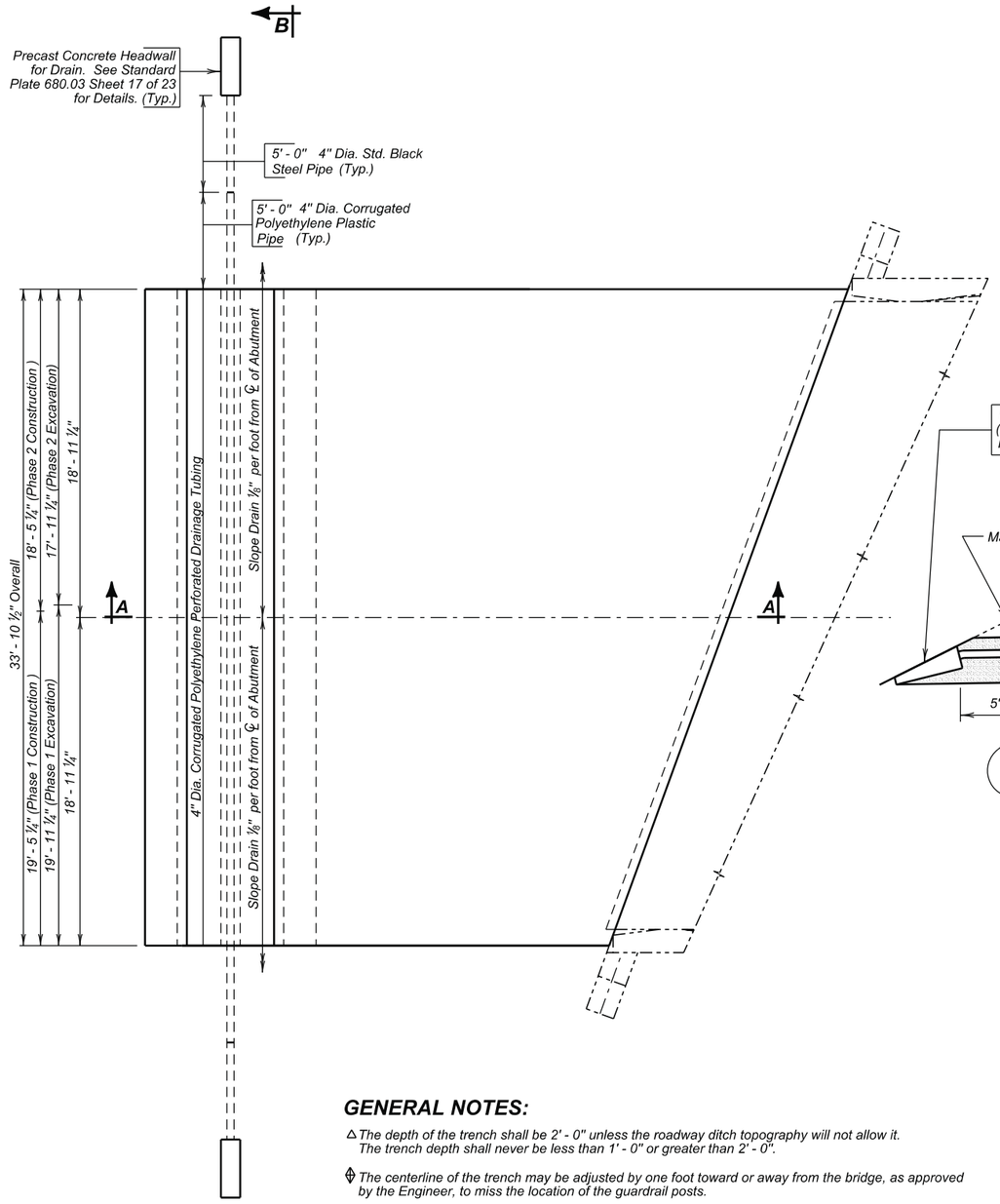

GENERAL NOTES:

△ The depth of the trench shall be 2' - 0" unless the roadway ditch topography will not allow it. The trench depth shall never be less than 1' - 0" or greater than 2' - 0".

⊕ The centerline of the trench may be adjusted by one foot toward or away from the bridge, as approved by the Engineer, to miss the location of the guardrail posts.

⋈ For locations where the approach slab is on a zero grade to one percent grade provide this minimum slope. For all other grades finish this surface to match the finished grade of the approach slab.

≠ The exact length of the 4" Dia. Corrugated Polyethylene Slotted Drainage Tubing shall be field determined. The length shown is an estimate based on the original construction plans.

PLAN

(Bridge End Backfill shown adjacent to Abutment No. 4, Abutment No. 1 similiar by opposite hand.)

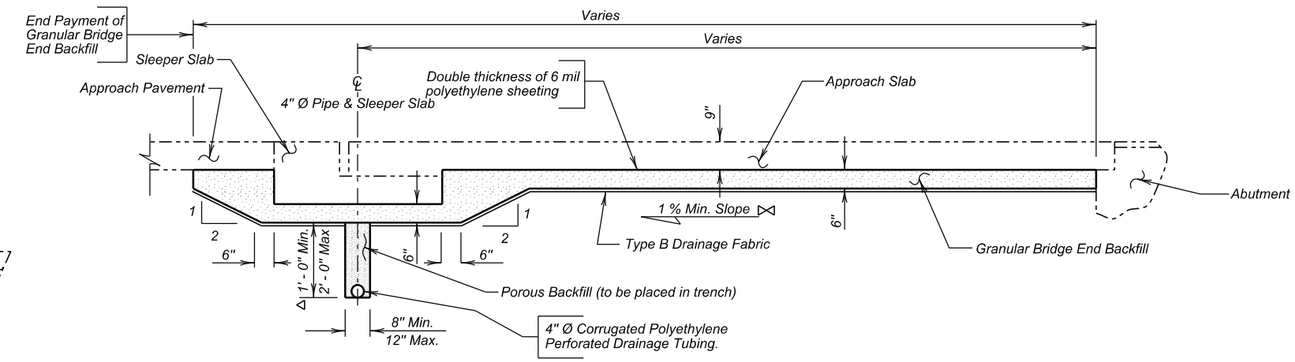

SEC. A - A

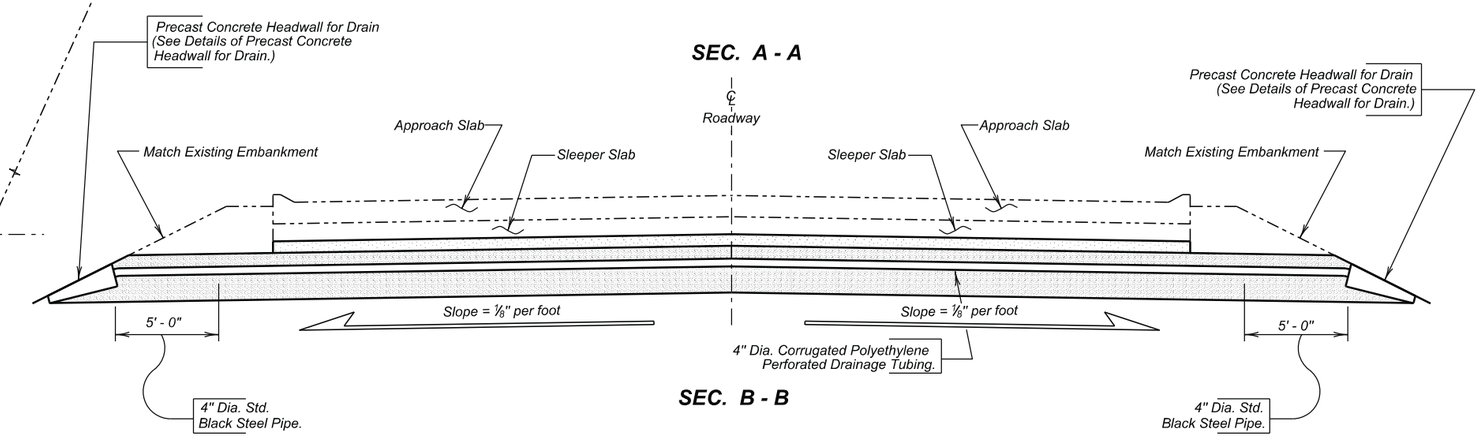

SEC. B - B

ESTIMATED QUANTITIES

(For both Ends of Bridge)

	ITEM	UNIT	PHASE 1 QUANTITY	PHASE 2 QUANTITY
⊗	Granular Bridge End Backfill	Cu.Yd.	22.6	21.4
	Approach Slab Underdrain Excavation	Cu.Yd.	26.1	23.5
✳	4" Underdrain Pipe	Ft.	58.9	56.9
	Precast Concrete Headwall for Drain	Each	2	2
★	Porous Backfill	Ton	5.4	5.1

✳ For informational purposes only, 10 feet of 4" Diameter Standard Black Steel Pipe is needed in each phase which is contained in the above bid items.

★ For estimating Purposes only, a factor of 1.89 tons/cu. yd. was used to convert Cu.Yd. to Ton. Quantities shown are based on a 2 foot x 12 inch trench.

⊗ Includes 390.2 Sq. Yd. of 6 mil. Polyethylene Sheeting (not including laps) and 215 Sq. Yd. of Type B Drainage Fabric.

APPROACH SLAB UNDERDRAIN DETAILS
FOR
157' - 9¼" PRESTRESSED GIRDER BRIDGE

36' - 0" ROADWAY — 20° SKEW LHF
OVER CREEK — SEC. 31/32-T22N-R27E
STR. NO. 16-580-084 — P 0063(42)252

CORSON COUNTY
S. D. DEPT. OF TRANSPORTATION
NOVEMBER 2012

DESIGNED BY	CK DES BY	DRAFTED BY	
BWS	KH	BWS	Kevin N. Goeden BRIDGE ENGINEER
CORS02HG	02HGLF11		

STATE OF	PROJECT	SHEET NO.	TOTAL SHEETS
S.D.	P 0063(42)252	E70	E105

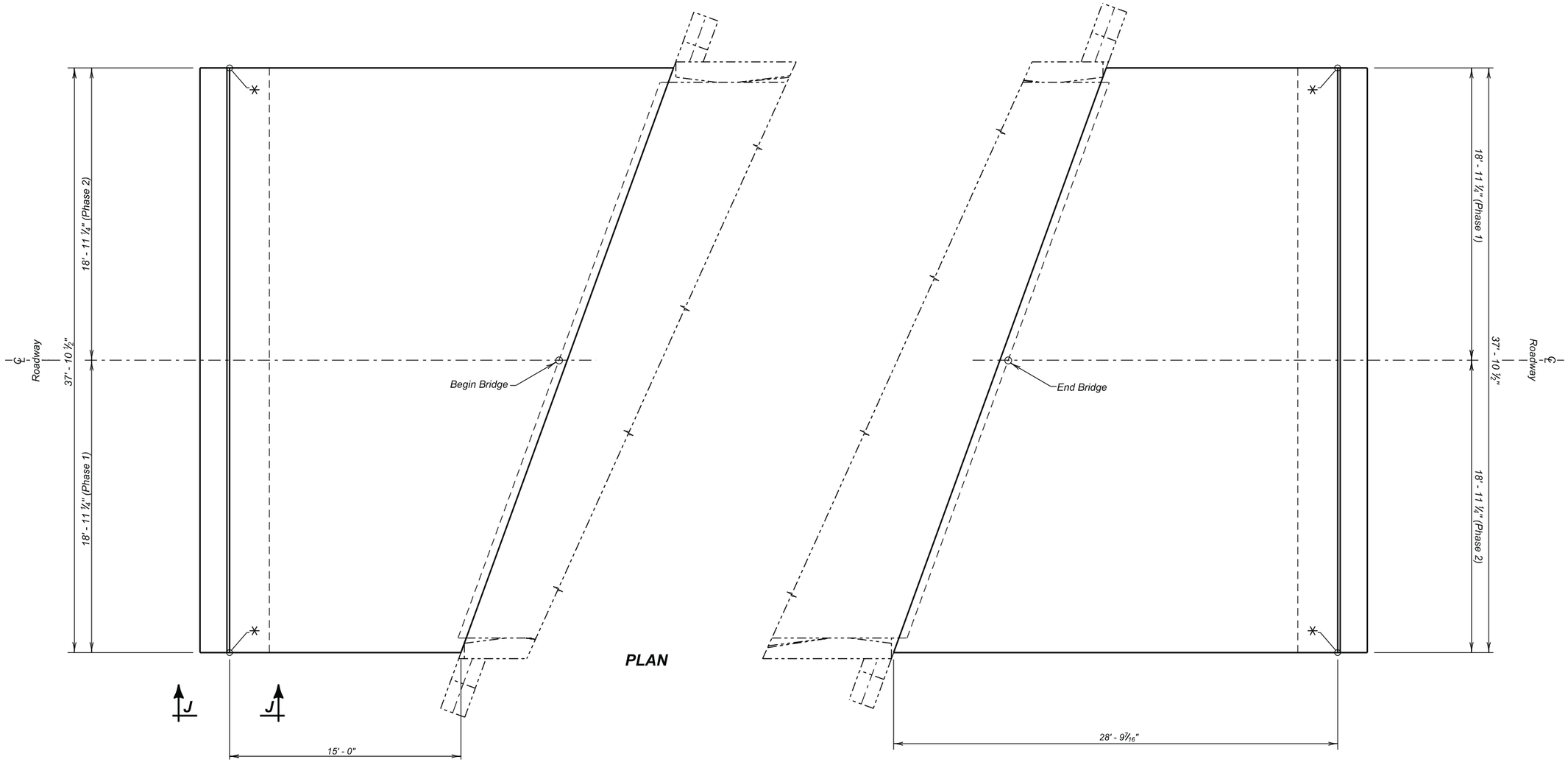

PLAN

PLAN
(Abutment No. 4)

PLAN
(Abutment No. 1)

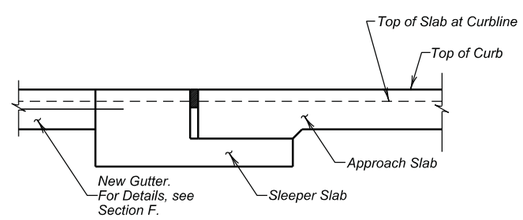

VIEW J - J

✳ Elevation is Top of Slab back of curb at this point.
See Approach Slab Notes.

APPROACH SLAB LAYOUT

FOR

157' - 9 ¼" PRESTRESSED GIRDER BRIDGE

36' - 0" ROADWAY
OVER CREEK
STR. NO. 16-580-084

20° SKEW LHF
SEC. 31 / 32-T22N-R27E
P 0063(42)252

CORSON COUNTY
S. D. DEPT. OF TRANSPORTATION
OCTOBER 2013

DESIGNED BY	CK. DES. BY	DRAFTED BY	
BWS	KH	KR	Kevin N. Goeden
CORS02HG	02HGRF12		BRIDGE ENGINEER

STATE OF	PROJECT	SHEET NO.	TOTAL SHEETS
S.D.	P 0063(42)252	E71	E105

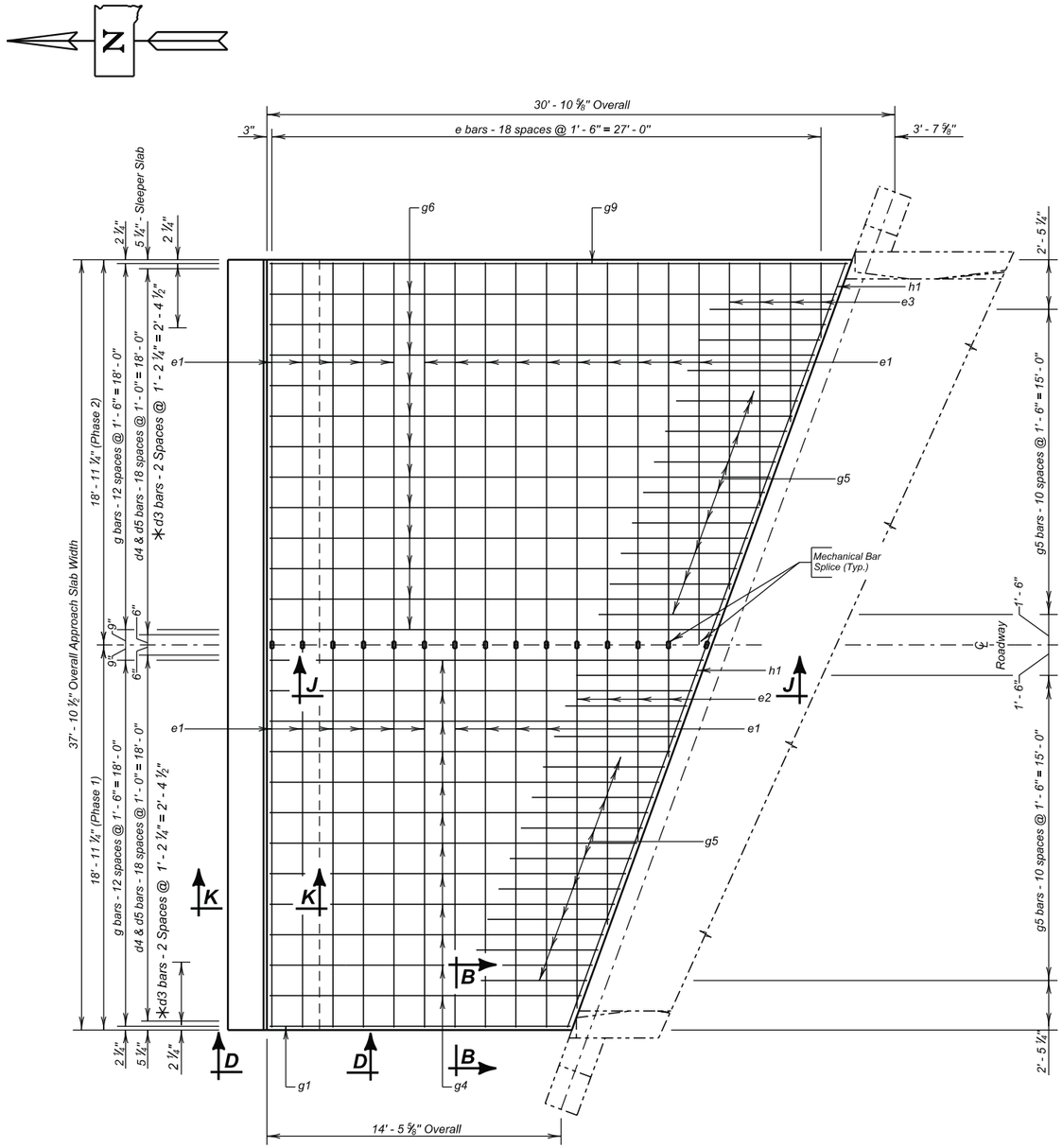

PLAN
(Top Steel Shown)
(Approach slab shown to Abutment No. 4)
(Approach slab adjacent to Abutment No. 1 similar by rotation)

✳ D3 Bars will only be placed in Sleeper Slab adjacent to Abutment 4.
See Section F for curb location and details.

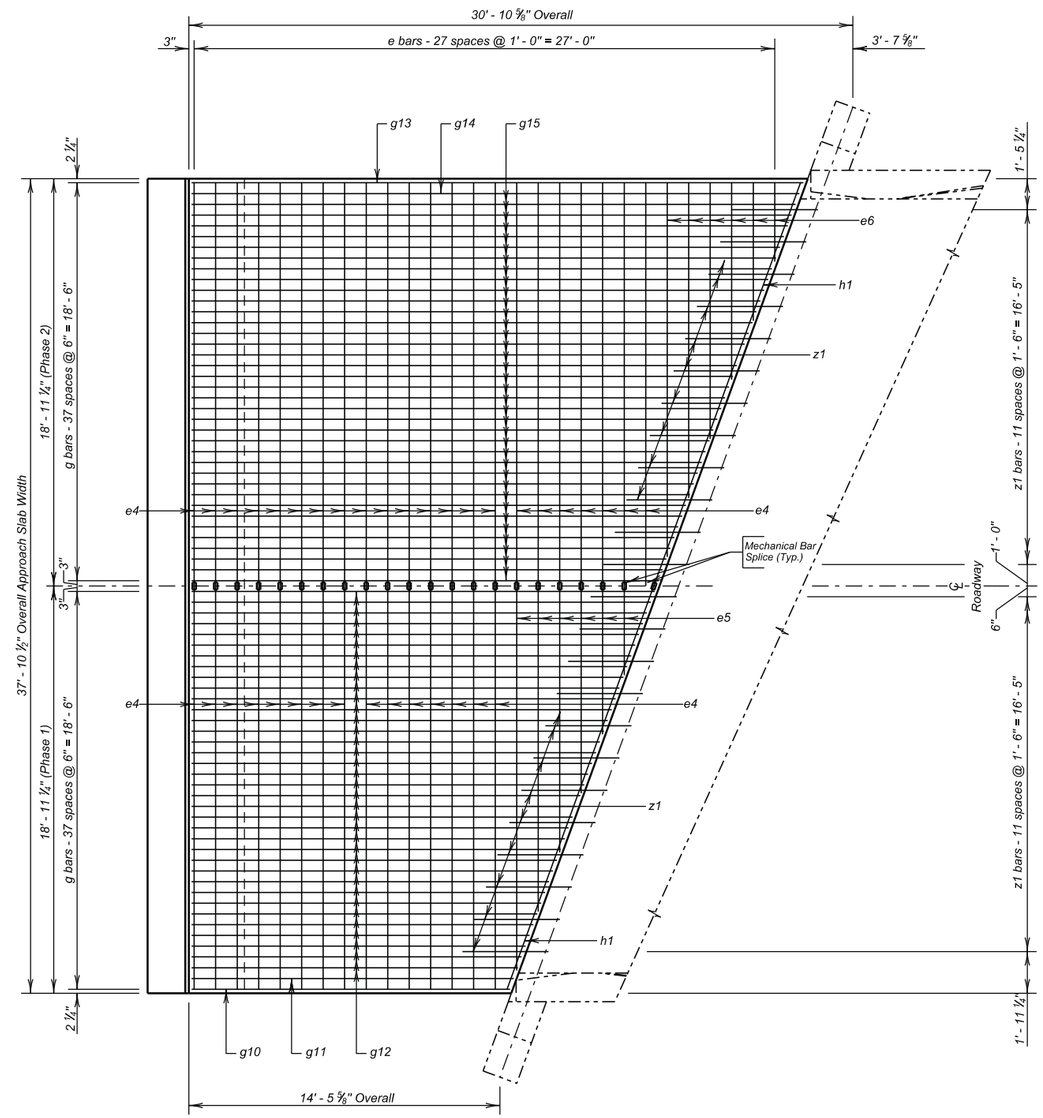

PLAN
(Bottom Steel Shown)
(Approach slab shown to Abutment No. 4)
(Approach slab adjacent to Abutment No. 1 similar by rotation)

APPROACH SLAB DETAILS

FOR

157' - 9 1/4" PRESTRESSED GIRDER BRIDGE

36' - 0" ROADWAY — 20° SKEW LHF
OVER CREEK — SEC. 31 / 32-T22N-R27E
STR. NO. 16-580-084 — P 0063(42)252

CORSON COUNTY
S. D. DEPT. OF TRANSPORTATION
OCTOBER 2013

DESIGNED BY	CK. DES. BY	DRAFTED BY	
BWS	KH	KR	Kevin N. Boeden
CORS02HG	02HGRF13		BRIDGE ENGINEER

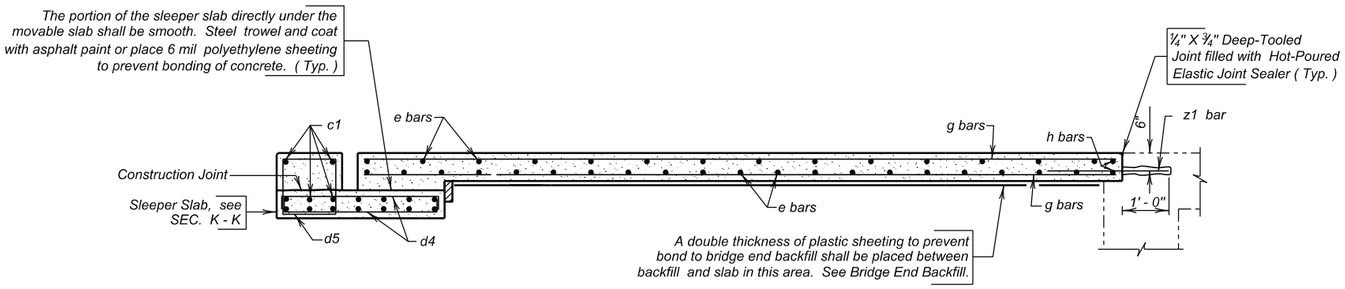

SEC. J - J

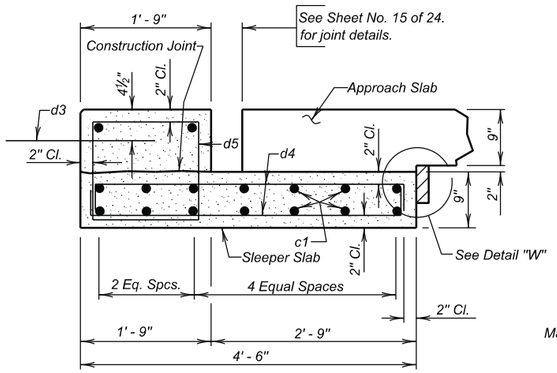

SEC. K - K
(Sleeper Slab)

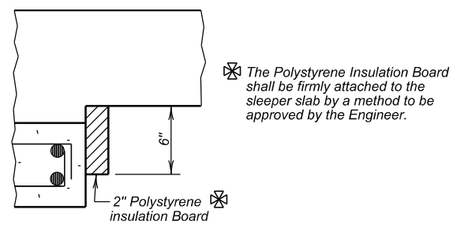

DETAIL "W"

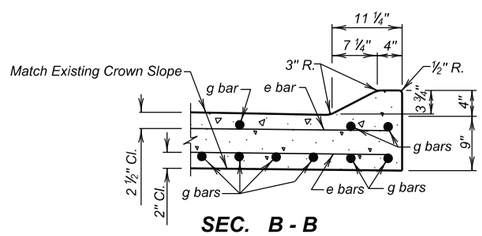

SEC. B - B

REINFORCING SCHEDULE
(For Two Approach and Sleeper Slabs)

Bending Details

	PHASE I				
	Mk.	No.	Size	Length	Type
⌀	c1	32	5	18' - 9"	Str.
	d3	3	4	2' - 0"	Str.
	d4	76	4	5' - 0"	2
	d5	38	4	6' - 3"	T2
⌀	e1	25	4	18' - 9"	Str.
✳⌀	e2	2	4	23' - 4"	Str.
✳	e3	2	4	19' - 10"	Str.
⌀	e4	37	6	18' - 9"	Str.
✳⌀	e5	3	6	21' - 11"	Str.
✳⌀	e6	3	6	21' - 1"	Str.
	g1	1	4	14' - 9"	Str.
✳	g4	6	4	36' - 8"	Str.
	g5	22	4	6' - 0"	Str.
✳	g6	6	4	49' - 10"	Str.
	g9	1	4	28' - 5"	Str.
✳	g12	19	8	36' - 5"	Str.
✳	g15	19	8	50' - 2"	Str.
⌀	h1	4	6	20' - 0"	Str.
△	z1	24	6	4' - 0"	Str.

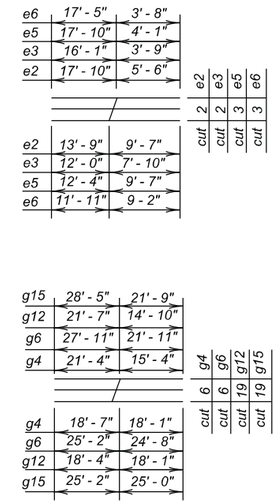

	PHASE 2				
	Mk.	No.	Size	Length	Type
⌀	c1	32	5	18' - 9"	Str.
	d3	3	4	2' - 0"	Str.
	d4	76	4	5' - 0"	2
	d5	38	4	6' - 3"	T2
⌀	e1	25	4	18' - 9"	Str.
✳⌀	e2	2	4	23' - 4"	Str.
✳	e3	2	4	19' - 10"	Str.
✳⌀	e4	37	6	18' - 9"	Str.
✳⌀	e5	3	6	21' - 11"	Str.
✳⌀	e6	3	6	21' - 1"	Str.
	g1	1	4	14' - 9"	Str.
✳	g4	6	4	36' - 8"	Str.
	g5	22	4	6' - 0"	Str.
✳	g6	6	4	49' - 10"	Str.
	g9	1	4	28' - 5"	Str.
✳	g12	19	8	36' - 5"	Str.
✳	g15	18	9	50' - 2"	Str.
⌀	h1	4	6	20' - 0"	Str.
△	z1	24	6	4' - 0"	Str.

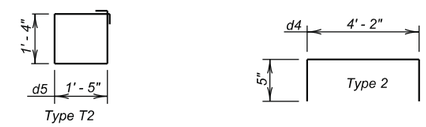

NOTES:
All Dimensions are out to out of bars.
All Bars to be Epoxy Coated.
✳ Cut Bars
△ Dowels

⌀ These bars shall be spliced with mechanical splice devices
Equivalent Splice Lengths
No. 4 - 2' - 0"
No. 5 - 2' - 6"
No. 6 - 3' - 0"

NOTE:
This sheet to be used in conjunction with Sheet Nos. 12 & 13 of 23.

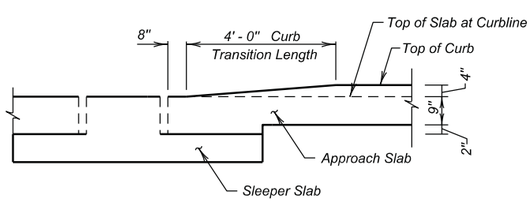

VIEW D - D
(Transition only for ends without curb extension.)

ESTIMATED QUANTITIES
(For Two Approach and Sleeper Slabs)

ITEM	UNIT	PHASE I QUANTITY	PHASE 2 QUANTITY
Concrete Approach Slab for Bridge	Sq. Yd.	92.1	92.1
Concrete Approach Sleeper Slab for Bridge	Sq. Yd.	18.9	18.9
No. 4 Rebar Splice	Each	28	–
No. 5 Rebar Splice	Each	32	–
No. 6 Rebar Splice	Each	46	–
Remove Concrete Bridge Approach Slab	Sq. Yd.	134.0	134.0
Install Dowels in Concrete	Each	24	24

	PHASE I	PHASE 2
1. Concrete in Approach Slabs.	23.3 Cu. Yd.	23.3 Cu. Yd.
2. Epoxy Coated Re-Steel in Approach Slabs.	6702.9 Lb.	6702.9 Lb.
3. Concrete in Sleeper Slabs	6.9 Cu. Yd.	6.9 Cu. Yd.
4. Epoxy Coated Re-Steel in Sleeper Slabs.	1046.3 Lb.	1046.3 Lb.

Items 1 thru 4 are approximate quantities contained in the above bid item and are for information only.

APPROACH SLAB DETAILS CONTINUED

FOR

157' - 9 ¼" PRESTRESSED GIRDER BRIDGE

36' - 0" ROADWAY — 20° SKEW LHF
OVER CREEK — SEC. 31 / 32-T22N-R27E
STR. NO. 16-580-084 — P 0063(42)252

CORSON COUNTY
S. D. DEPT. OF TRANSPORTATION
OCTOBER 2013

DESIGNED BY	CK. DES. BY	DRAFTED BY	
BWS	KH	KR	Kevin N. Boeden
CORS02HG	02HGRF14		BRIDGE ENGINEER

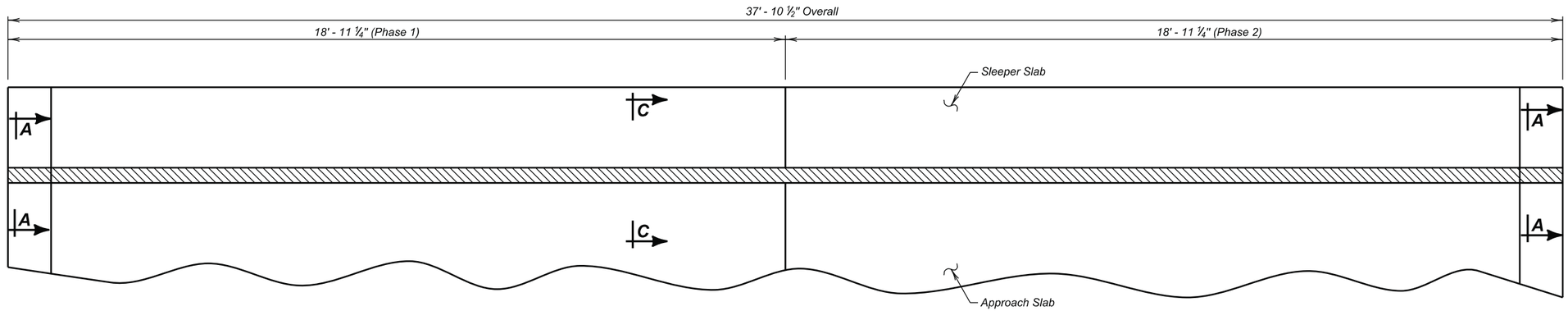

PLAN

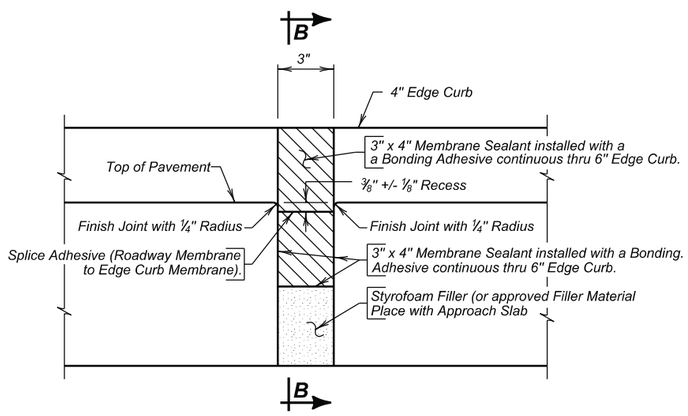

SECTION A - A

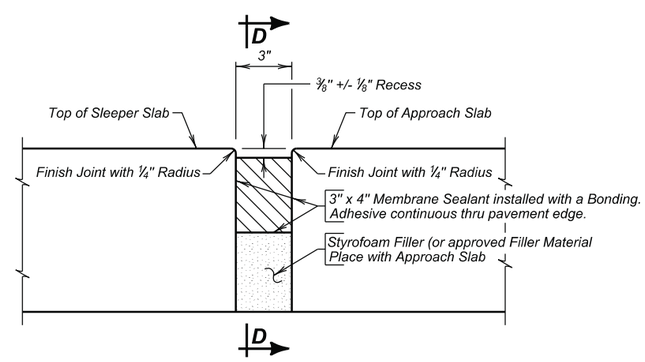

SECTION C - C

ESTIMATED QUANTITIES

ITEM	UNIT	Phase 1	Phase 2
Membrane Sealant Expansion Joint	Ft.	37.9	37.9

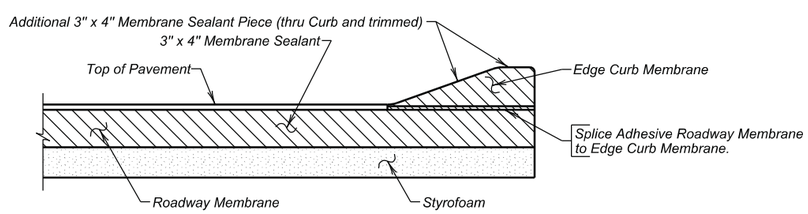

SECTION B - B

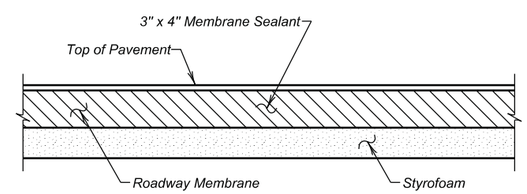

SECTION D - D

APPROACH SLAB JOINT DETAILS

FOR

157' - 9¼" PRESTRESSED GIRDER BRIDGE

36' - 0" ROADWAY — 20° SKEW LHF
OVER CREEK — SEC. 31/32-T22N-R27E
STR. NO. 16-580-084 — P 0063(42)252

CORSON COUNTY

S. D. DEPT. OF TRANSPORTATION

OCTOBER 2013

DESIGNED BY	CK DES BY	DRAFTED BY	
BWS	KH	BWS	Kevin N. Boeden BRIDGE ENGINEER
CORS02HG	02HGLF15		

YEAR PLATE DETAILS FOR ORIGINAL CONSTRUCTION

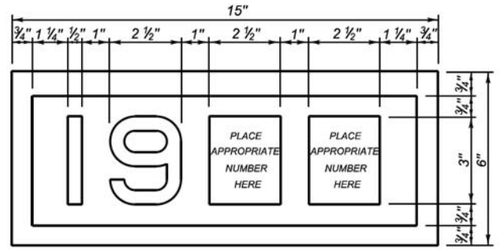

YEAR PLATE DETAILS FOR NEW CONSTRUCTION

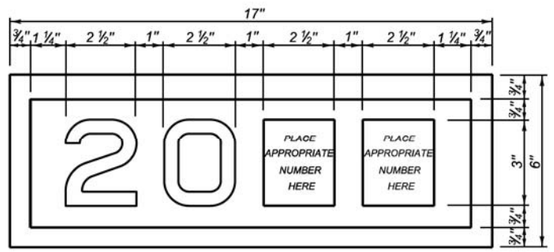

GENERAL NOTES:

1. Year plates of the general dimensions shown shall be constructed on all box culverts and bridges. The year plates shall be constructed in reverse and attached to the forms in such a manner that the finished imprint in the concrete does not exceed one-half (½) inch in depth.
2. Year plates shall be located on structure(s) as follows:
   a. On cast-in-place box culverts the year plates shall be four and one - half (4 ½) inches below the top of the upstream parapet wall and centered laterally on the upstream face. On precast box culverts the year plate shall be centered laterally on the upstream face of the top slab. Where an extended interior wall interferes with this location, the year plate shall be centered in an adjacent barrel.
   b. On bridges with six (6) inch curbs or "Jersey" shaped barriers with no endblocks, the year plate shall be centered vertically on the curb face approximately six (6) inches from the end of the bridge, or as designated by the Engineer. On bridges with "Jersey" shaped barrier endblocks, the year plate shall be centered on the upper sloped portion of the barrier approximately 5'- 6" from the end of the bridge, or as designated by the Engineer. There shall be one year plate at each end of the bridge on opposite sides.
   c. When the plans specify that both the original date of construction and the date of reconstruction are to be shown, one date shall be placed as listed above and the other located adjacent to it. Both year plates shall be shown at each end of the bridge on opposite sides.
3. There will be no separate measurement or payment made for year plates on box culverts and bridges. All costs for this work shall be incidental to other contract items.

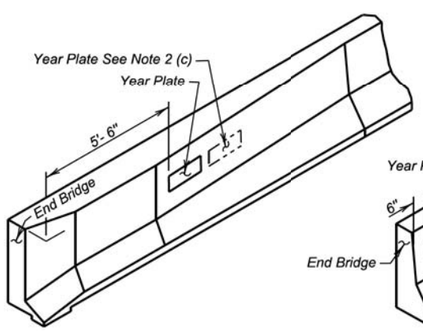

JERSEY BARRIER
(With Endblock)

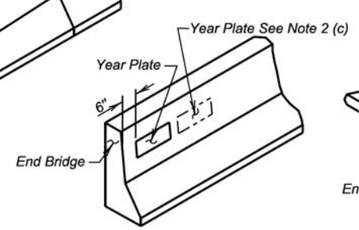

JERSEY BARRIER

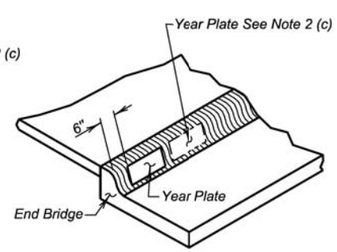

TYPE B CURB

June 26, 2012

Published Date: 3rd Qtr. 2014	SDDOT	DUAL DATE YEAR PLATE DETAILS	PLATE NUMBER 460.03
			Sheet 1 of 1

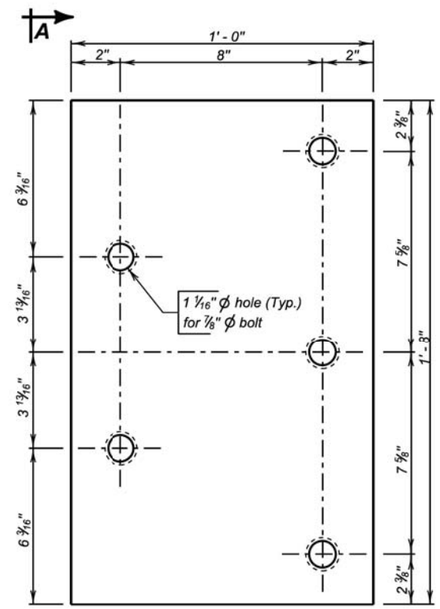

ELEVATION

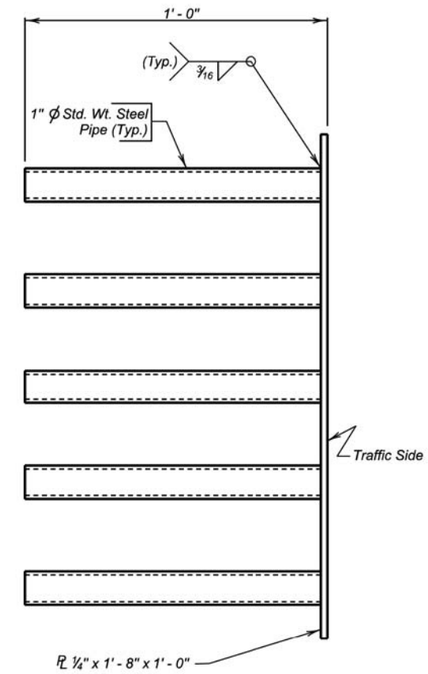

VIEW A - A

GENERAL NOTES:

1. Steel plate for the insert assembly shall conform to ASTM A709 Grade 36. The steel pipes shall conform to ASTM A53 or ASTM A500 Grade B.
2. Welding and weld inspection shall be in conformance with AWS D1.1 - (Current Year) Structural Welding Code - Steel.
3. After fabrication, galvanize in accordance with AASHTO M111 (ASTM A123).
4. Bolts, nuts, and washers shall be provided with each assembly. Bolts shall be galvanized and conform to the requirements of ASTM A307, A325, or A449. Plain washers shall be galvanized and conform to ASTM F844.
5. Bolt heads shall be placed on the traffic side of the endblock. Bolt projection at the back side of the insert shall not exceed 1 inch beyond the nut.
6. The cost of the 5 bolt insert plate assembly complete in place including welding and galvanizing shall be incidental to the contract unit price per Cubic Yard for " Class A45 Concrete, Miscellaneous ", " Class A45 Concrete, Bridge Deck ", or " Class A45 Concrete, Bridge Repair ", as applicable.

December 23, 2013

Published Date: 3rd Qtr. 2014	SDDOT	5 BOLT INSERT PLATE ASSEMBLY	PLATE NUMBER 630.92
			Sheet 1 of 1

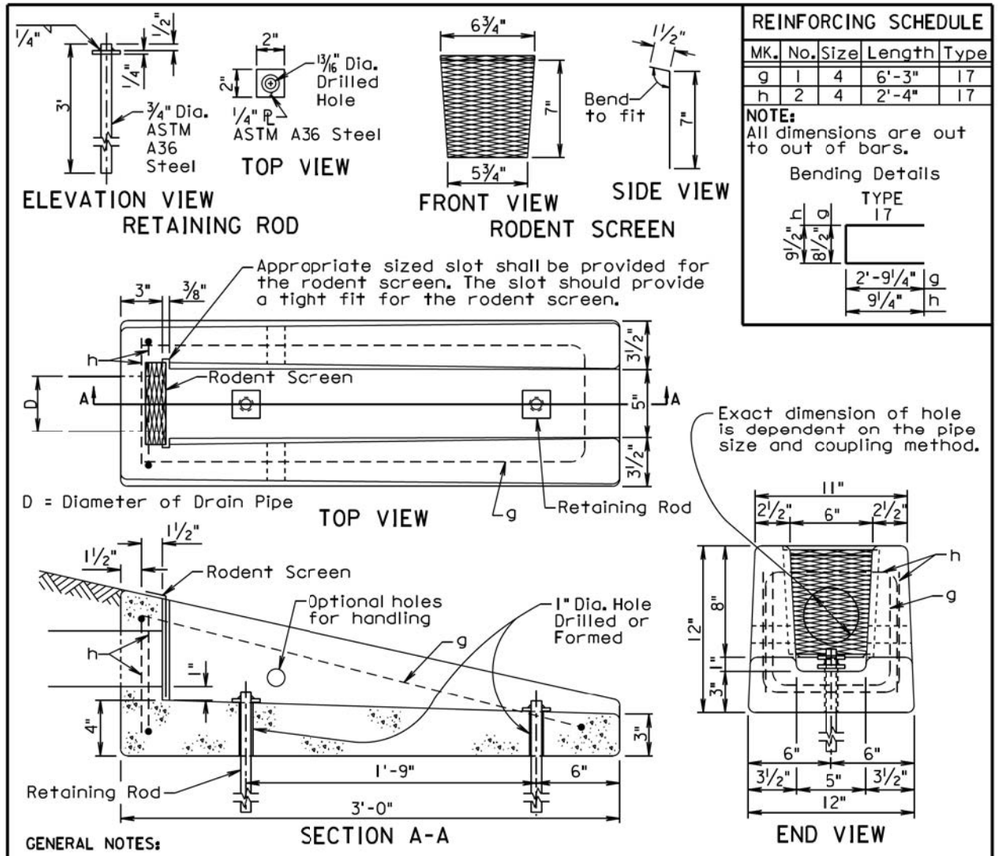

REINFORCING SCHEDULE

MK.	No.	Size	Length	Type
g	1	4	6'-3"	17
h	2	4	2'-4"	17

NOTE:
All dimensions are out to out of bars.

Bending Details

TYPE 17

GENERAL NOTES:

The concrete shall be Class M6. The concrete shall conform to the requirements of section 462 of the Standard Specifications. It is estimated that each unit weighs approximately 210 pounds.

All reinforcing steel shall conform to ASTM A615 Grade 60 and shall be epoxy coated. The reinforcing steel shall be securely retained to prevent displacement during placement of concrete. It is estimated that 7.3 pounds of reinforcing steel is required for each unit.

The pipe shall be placed in the concrete headwall with the pipe end flush with the concrete surface adjacent to the rodent screen.

The rodent screen shall be galvanized 13 Ga. steel with a diamond shaped flattened mesh pattern. The size shall be 1/2". The size refers to the measurement across the smallest diamond shaped opening measured from the centers of the wires.

The retaining rod shall be galvanized in accordance with ASTM A123 after all shop welding has been completed.

The drawing indicates using 1/2" fillets; however, 3/4" chamfers may be substituted for the 1/2" fillets.

All costs for furnishing and installing the concrete headwall including equipment, labor, and materials including concrete, reinforcing steel, retaining rods, and rodent screen shall be incidental to the contract unit price per each for "Precast Concrete Headwall for Drain".

December 23, 2010

Published Date: 3rd Qtr. 2014	SDDOT	***PRECAST CONCRETE HEADWALL FOR DRAIN***	*PLATE NUMBER* *680.03*
			Sheet 1 of 1

STATE OF S.D.	PROJECT P 0063(42)252	SHEET NO. E76	TOTAL SHEETS E105

NOTE:
T.S.@C.El.=Top of Slab at Curb Elevation.
T.S.@℄ El.= Top of Slab at Centerline Roadway Elevation.

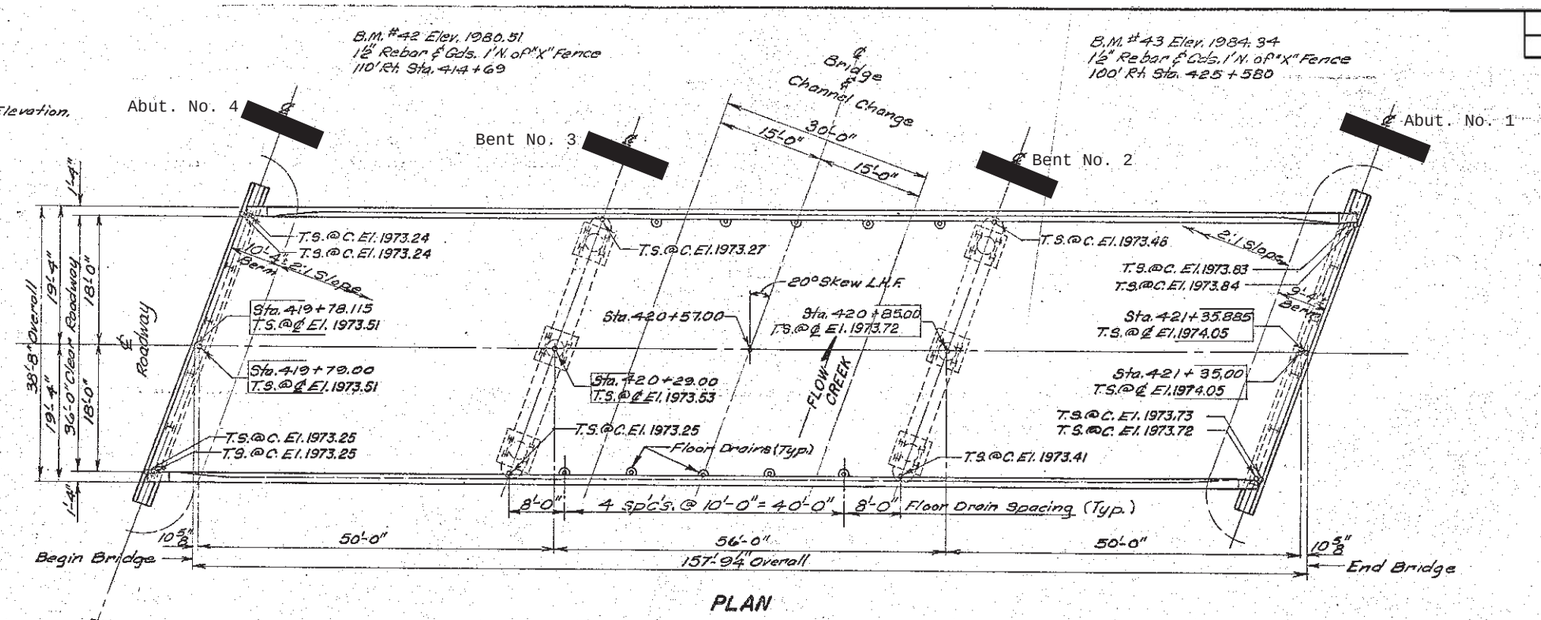

PLAN

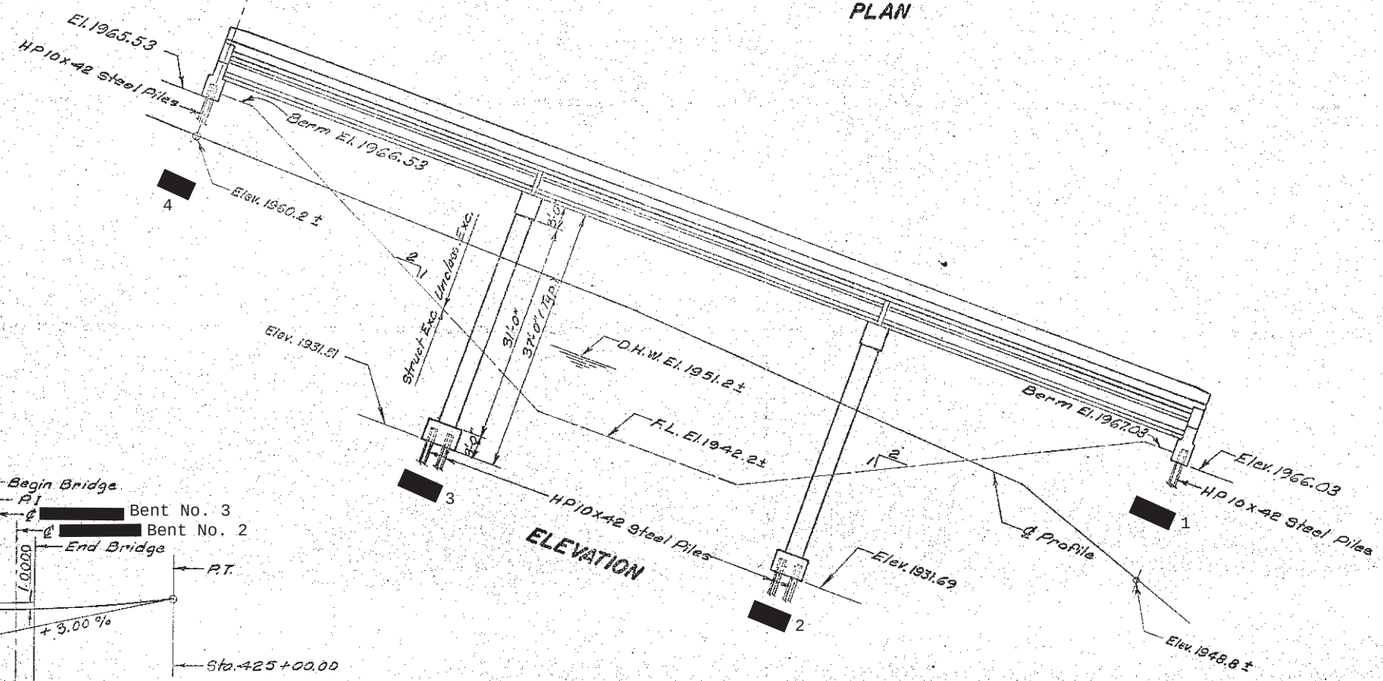

ELEVATION

D.D.00	3874 c.f.s.	
A	393.5 sq. ft.	
V	9.7 f.p.s.	

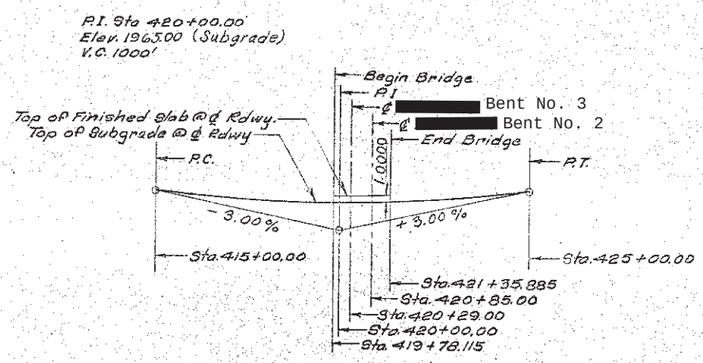

VERTICAL CURVE DATA

-X081-
INDEX OF BRIDGE SHEETS

Sheet No. 1 – General Drawing
Sheet No. 2 – Estimate of Structure Quantities and Notes.
Sheet No. 3 – Subsurface Investigations & Piling Layout.
Sheet No. 4 – Details of Abutment No. 1
Sheet No. 5 – Details of Abutment No. 4
Sheet No. 6 – Bent Details.
Sheet No. 7 – Superstructure Details.
Sheet No. 8 – End Block and Drain Details.
Sheet No. 9 – Girder Details.
Sheet No. 10 – Erection Details.
Sheet No. 11 – Details of Bridge End Backfill (Plan "D").
Sheet No. 12 – Standard Plates No. 302 and 305.
Sheet No. 13 – Details of Approach Slab Adjacent to Bridge
Sheet No. 14 – Approach Slab Joint Details.
Sheet No. 15 – Drop Inlet and Pipe Installation Sheet.
Sheet No. 16 – Standard Plate No. 308

ORIGINAL CONSTRUCTION PLANS

GENERAL DRAWING
FOR

157'-9 1/4" PRESTR. CONC. GIRDER BRIDGE

36'-0" ROADWAY — 20° SKEW L.H.F.
OVER CREEK — SEC. 31/32-T22N-R27E
STA. 419+78.115 TO 421+35.885 — BRF-044-2(12)
STR. NO. 16-580-084 — HS20-44 (&ALT.)
CORSON COUNTY

S. D. DEPT. OF TRANSPORTATION
DIVISION OF HIGHWAYS
NOV. 1974

-X081-

DESIGNED BY	DRAWN BY	CHECKED BY	APPROVED
	SH	G.J.W.	K.C. Wilson BRIDGE ENGINEER

PLANS BY:
BRIDGE PROGRAM, S. DAK. DIVISION OF HWYS.

F0063(1)251 & BRF 0063(5)251

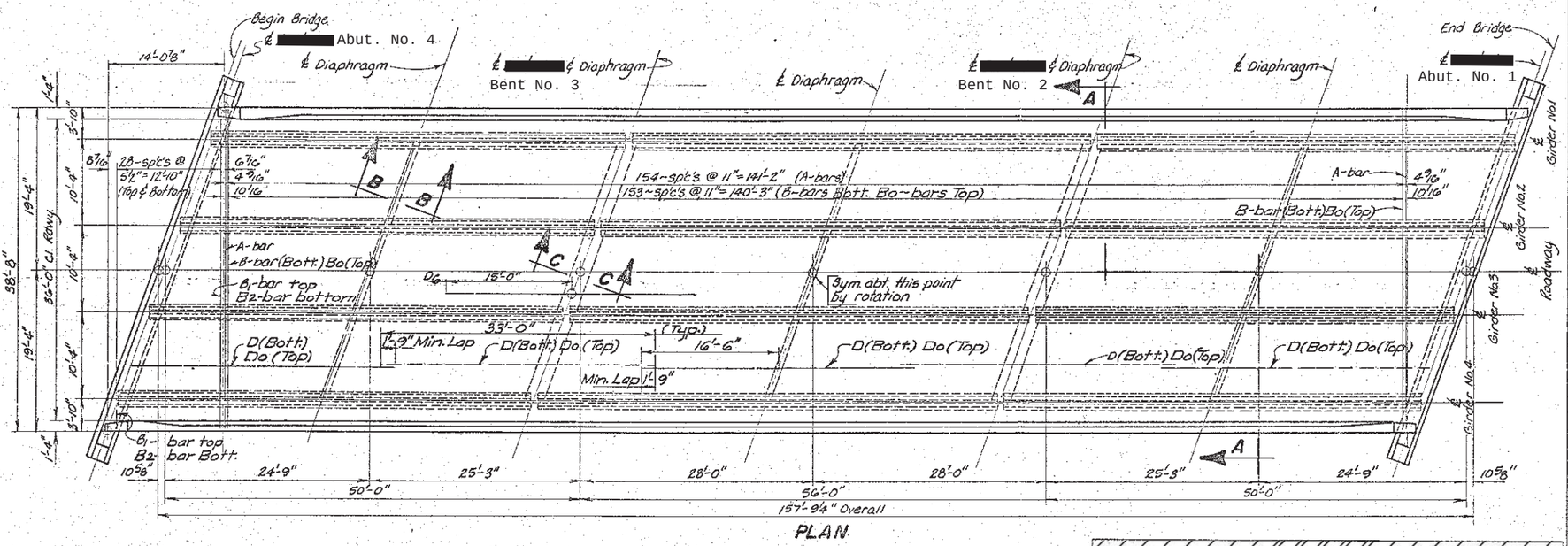

PLAN

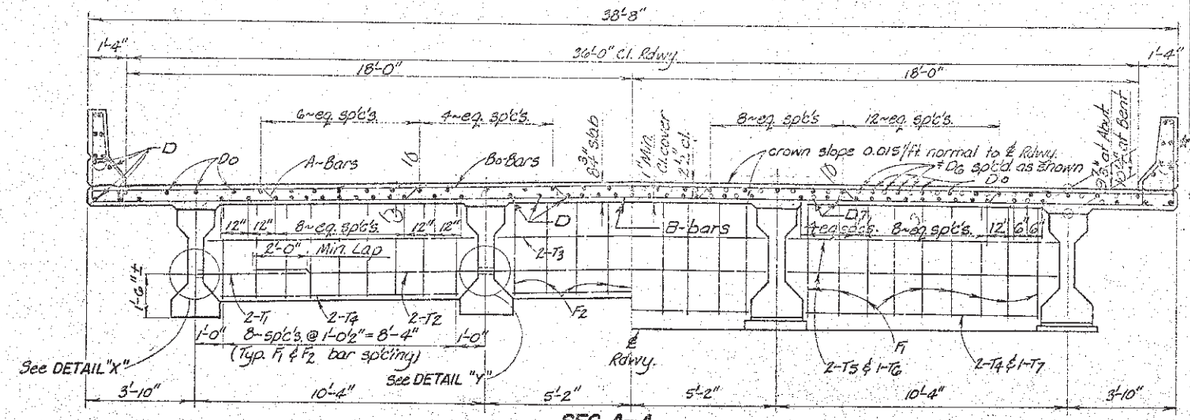

SEC. A-A

* D0 & D6 - clear distance between parallel bars shall not be less than 1½".

ESTIMATED QUANTITIES *

ITEM	UNIT	QUANTITY
Class "A" Concrete, Bridge Deck	Cu. Yds.	223.7
Reinforcement Bars (Epoxy)	Lb.	25,612
Prestr. Conc. Girder Type II-24	No.	8
Prestr. Conc. Girder Type II-24 B	No.	4
Structural Steel	Lump Sum	Lump Sum
Oil Treatment for Concrete Surfaces	Gal.	41
Epoxy Coated Reinforcing Steel	Lb.	2,856

*For informational purposes the estimated weight of structural steel is 352 pounds. This is weight of 8 drains.

See Sheet 8 of 16

** Includes quantities for Barrier Curb. See Sheet 8 of 16.

REINFORCING SCHEDULE

Mk.	No.	Size	Length	Type
*A	155	5	39'-6"	15
B	154	5	38'-4"	Str.
*B1	29	5	38'-5"	Str.
C1	304	5	5'-8"	T2A
C2	276	5	5'-1"	S11
C3	4	5	3'-1"	17
C4	4	5	3'-2"	17
C5	36	5	5'-3"	17
C6	4	5	4'-7"	17
C7	4	5	4'-8"	17
C8	36	5	4'-9"	17
C9	8	5	5'-1"	17
C10	8	4	3'-7"	17
C11	16	4	5'-9"	T2
D	245	5	33'-0"	Str.
*D0	175	5	33'-0"	Str.
D1	48	5	36'-9"	Str.
D2	12	4	9'-10"	Str.
D3	12	5	12'-9"	19
D4	8	4	12'-9"	19
D5	16	4	1'-3"	Str.
*D6	68	5	30'-0"	Str.
D7	24	5	30'-0"	Str.
F1	54	4	11'-2"	54
F2	81	4	8'-4"	54
T1	12	8	4'-0"	Str.
T2	6	7	29'-0"	Str.
T3	18	4	10'-0"	Str.
T4	30	5	8'-9"	Str.
T5	24	5	10'-0"	Str.
T6	4	6	33'-2"	Str.
T7	2	4	34'-5"	Str.
Z1	96	7	5'-0"	2A
*B0	154	5	38'-4"	Str.
B2	29	5	38'-5"	Str.

Bending Details

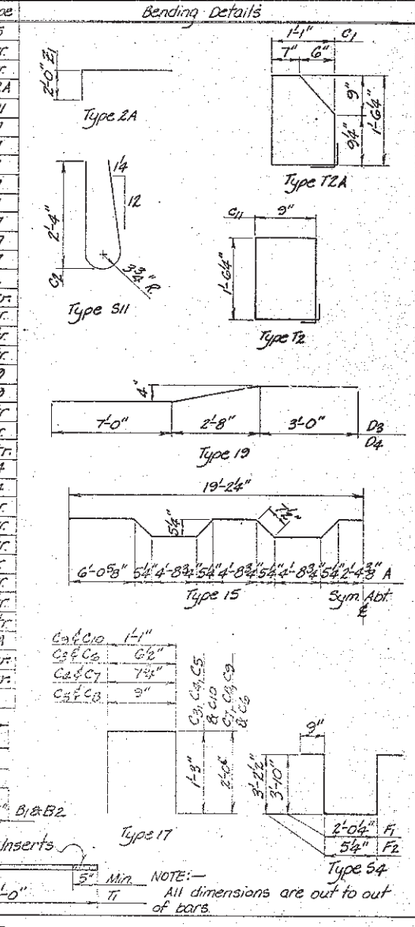

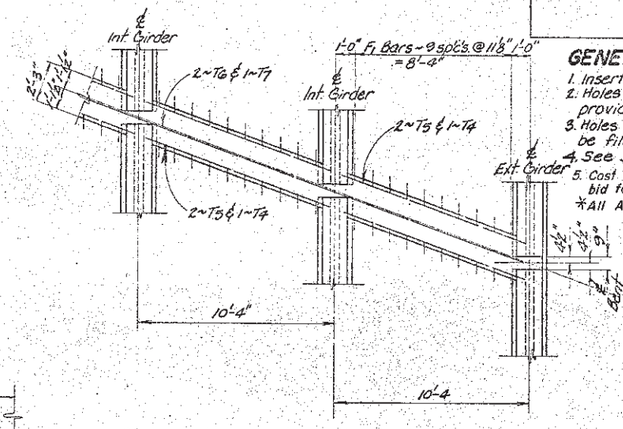

BENT DIAPHRAGMS

GENERAL NOTES—

1. Insert T2 bars before placing final outer girder in each span.
2. Holes and inserts to accomodate the diaphragm bars shall be provided in the girders at location on this sheet and sheet No. 9.
3. Holes which are left when the form supports are removed shall be filled with mortar.
4. See Sheet No. 13 of 16 for placement of Z1 bars.
5. Cost of furnishing and installing 1" ϕ inserts shall be included in the unit price bid for the Prestressed concrete Beams.

*All A, B1, B0, D0 and D6 Bars are to be Epoxy coated.

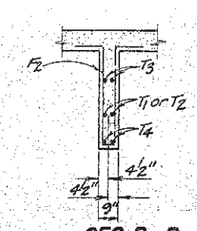

SEC. B-B

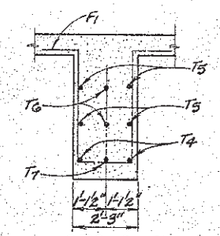

SEC. C-C

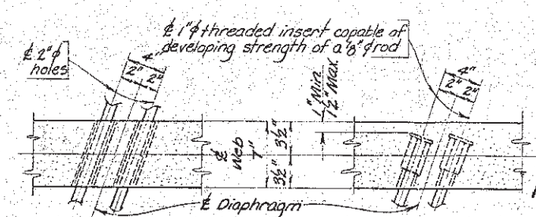

DETAIL "Y" (Interior Girders)

DETAIL "X" (Exterior Girders)

NOTE— In lieu of the bent epoxy coated "A" reinforcing bars, the contractor has the option of substituting for each "A" bar one straight "B" bar and one straight epoxy coated Bo bar with the epoxy coated Bo bar being placed in the top mat of reinf. steel. If the contractor elects to substitute "B" and Bo bars for the "A" bars, he shall do so at no additional cost to the State. For payment, weight will be based on that of "A" bars without regard to the weight of bars that may be substituted for them.

SUPERSTRUCTURE DETAILS

FOR

157'-9¼" PRESTR. CONC. GIRDER BRIDGE

36'-0" ROADWAY — 20° SKEW L.H.F.

OVER CREEK — SEC. 31/32-T22N-R27E

STA. 419+78.115 TO 421+35.885 — BRF-044-2(12)

STR. NO. 16-580-084 — HS 20-44 (& ALT.)

CORSON COUNTY

S. D. DEPT. OF TRANSPORTATION

DIVISION OF HIGHWAYS

OCT. 1974

DESIGNED BY	DRAWN BY	CHECKED BY	APPROVED
	J. R.L.B.	G.A.	H. C. Wilson, BRIDGE ENGINEER

ORIGINAL CONSTRUCTION PLANS

STATE OF	PROJECT	SHEET NO.	TOTAL SHEETS
S.D.	P 0063(42)252	E78	E105

CONSTRUCTION NOTE:
Sides of recess for Special End Shoe may be beveled a maximum of 2" in 4" to facilitate form removal.

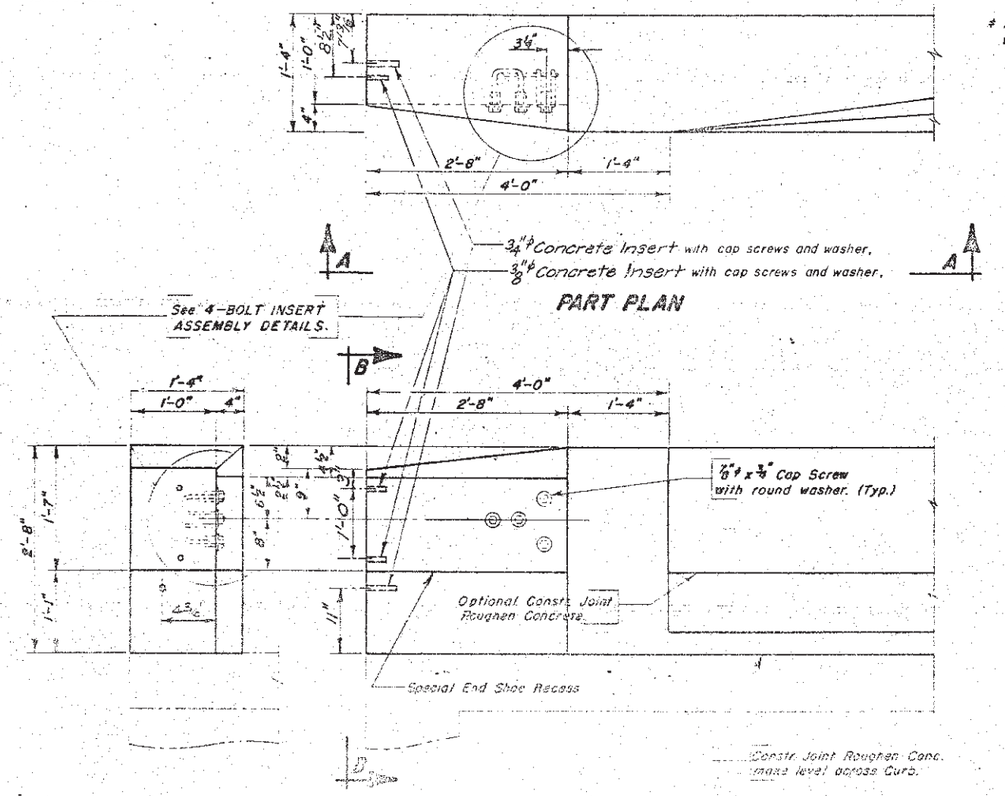

PART PLAN

VIEW B-B

VIEW A-A

* An equivalent resistance weld may be used.

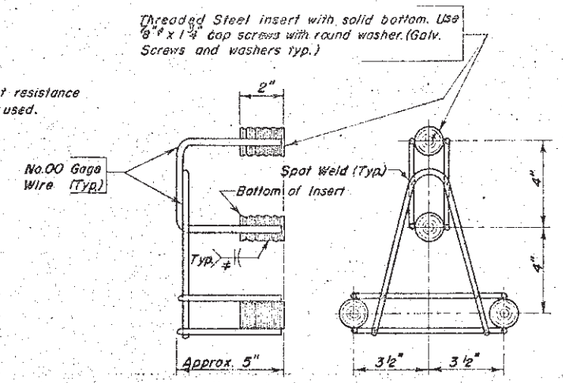

4-BOLT INSERT ASSEMBLY

GENERAL NOTES—

1. Use 1½" clear cover on all bars, except as shown.
2. Reinforcing Steel shall conform to A.S.T.M.—A615, Grade 60.
3. End Block shall be built normal to grade.
4. Wires for the 4-Bolt Insert Assembly are shown as the minimum allowable size designation being based on the United States Steel Wire Gage Standard. All wire shall conform to ASTM Specifications A-82 for Cold-drawn Steel Wire.
5. The Cost of the 4-Bolt Insert Assembly complete in place, including welding and galvanizing, shall be absorbed in the unit price bid for Class "A" Concrete.
6. Cap Screws and Washers shall be furnished as a part of the 4-Bolt Insert Assembly and shall be galvanized to conform to ASTM specifications A-153.
7. Concrete Inserts shall be internally threaded for use with coarse thread cap screws. The Inserts, Cap screws and washers shall either be galvanized in accordance with ASTM-A153 or made of a corrosion resistant material. The inserts shall be of such design that when installed in concrete having a compressive strength of 4,500 p.s.i. the ⅜"φ inserts will be capable of sustaining an ultimate load in tension of at least 2,500 pounds and the ¾"φ Inserts an ultimate load in tension of at least 17,000 pounds.

The cost of furnishing and installing the Inserts with cap screws and washers, shall be absorbed in the unit price bid for reinforcing steel except the ⅜"φ inserts placed in the beams for attachment of Roadway Drain Support shall be included in the unit price bid for Prestressed Concrete Beam, Type 3 (65' To 70').

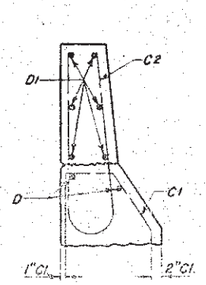

SEC. E-E

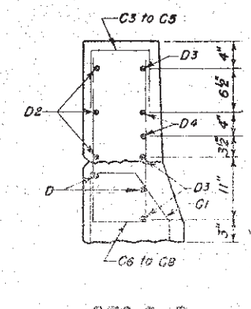

SEC. D-D

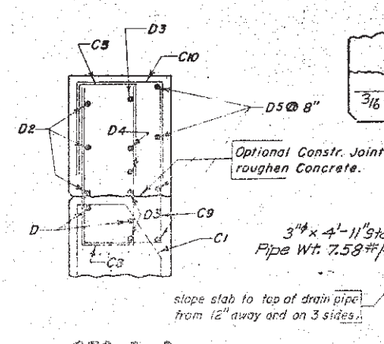

SEC. C-C

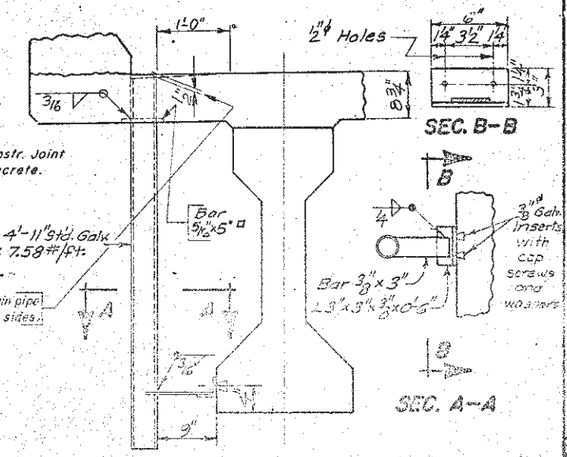

ROADWAY DRAIN
(8 Roadway Drains Required)
See Sheet No. 1 of 16 for spacing.

NOTE:
The Roadway Drain Pipes shall be hot-dip galvanized in accordance with ASTM-A123 and the drain support items, welds, cuts and heat affected areas shall be field painted with an approved Zinc-rich galvanizing paint. The cost of galvanizing, painting and welding shall be included in the Lump Sum bid for structural steel. See Estimated Quantities on Sheet No. 7 of 16.

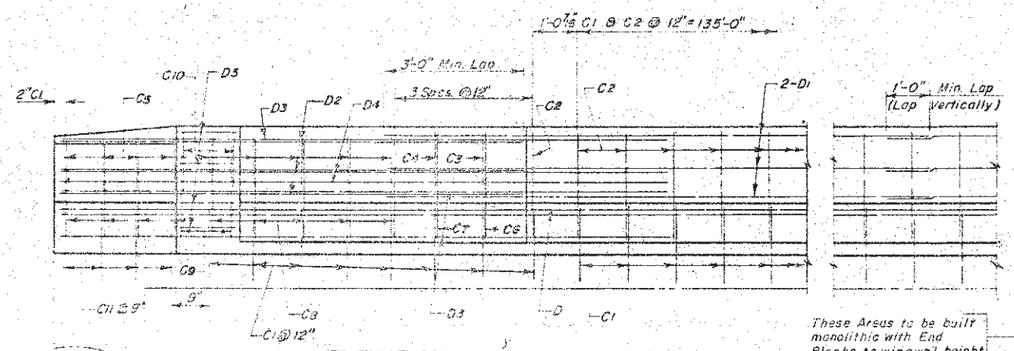

ELEVATION

These Areas to be built monolithic with End Blocks to wingwall height

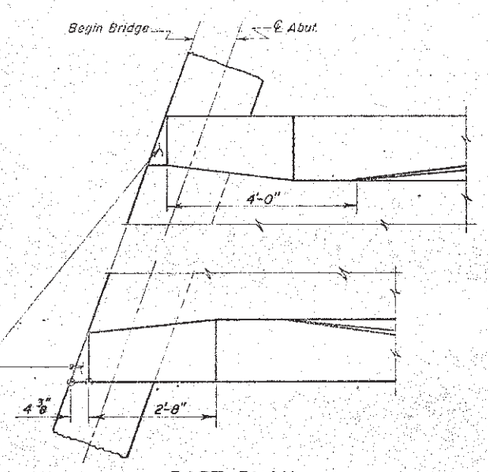

PART PLAN

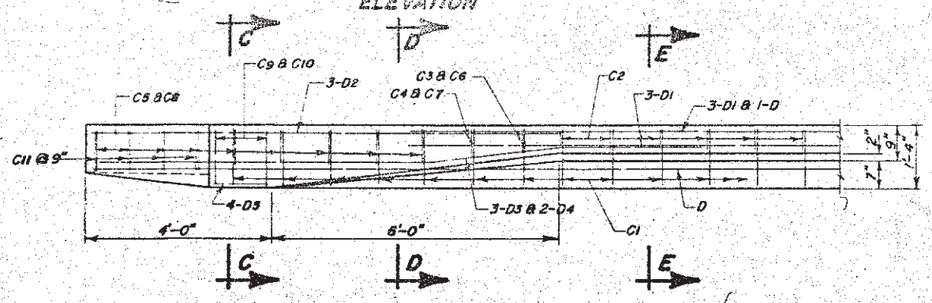

PLAN

ORIGINAL CONSTRUCTION PLANS

END BLOCK AND DRAIN DETAILS

FOR

157'-9¼" PRESTR. CONC. GIRDER BRIDGE

36'-0" ROADWAY — 20° SKEW L.H.F.

OVER CREEK — SEC. 31/32-T22N-R27E

STA. 419+78.115 TO 421+35.885 — BRF-044-2 (12)

STR. NO. 16-580-084 — HS20-44 (8 ALT.)

CORSON COUNTY

S. D. DEPT. OF TRANSPORTATION

DIVISION OF HIGHWAYS

OCT. 1974

20 OF 23

DESIGNED BY	DRAWN BY	CHECKED BY	APPROVED
	f.a.k.	C.D.	H.O. Wilson BRIDGE ENGINEER

STATE OF	PROJECT	SHEET NO.	TOTAL SHEETS
S.D.	P 0063(42)252	F79	F105

NOTES REGARDING MATERIAL FOR BRIDGE END BACKFILL—

Bridge End Backfill shall conform to the following requirements:

Passing a 1½ inch sieve	100%
Passing a 1 inch sieve	95 - 100%
Passing a ½ inch sieve	25 - 60%
Passing a number 4 sieve	0 - 10%

Material to be crushed rock having at least two (2) fractured faces on material retained on a number 4 sieve. Abrasion loss (AASHTO-T96) shall not exceed forty (40).

Backfill to be vibratory compacted in lifts not to exceed one (1) foot. Density requirements for backfill are waived.

NOTE: The above gradation conforms to that of Coarse Aggregate for Class "A" Concrete.

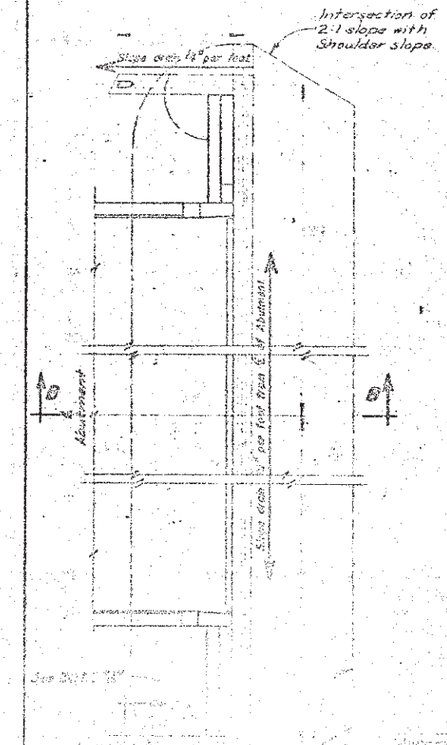

PLAN "B"

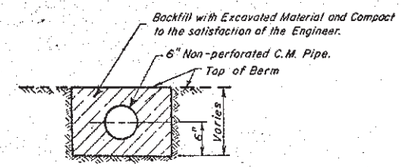

SEC. A-A

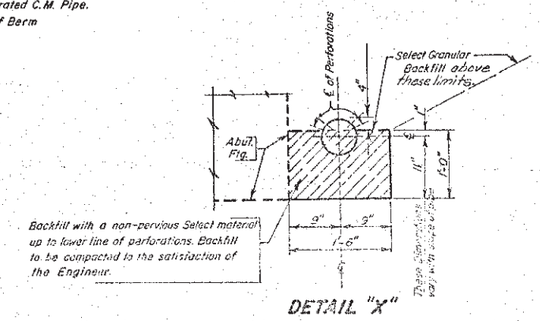

DETAIL "X"

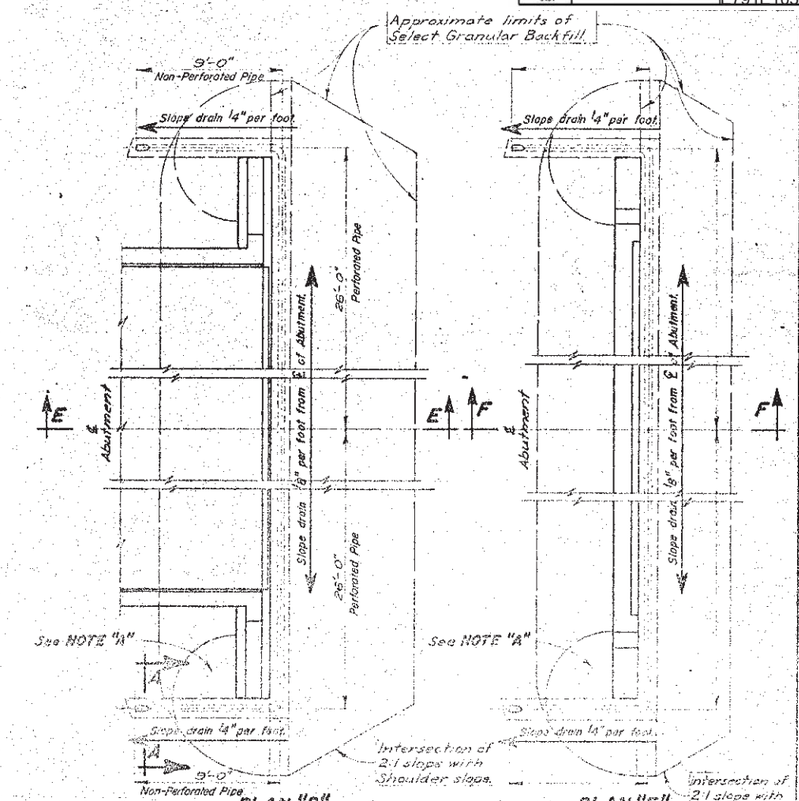

PLAN "D" PLAN "E"

ORIGINAL CONSTRUCTION PLANS

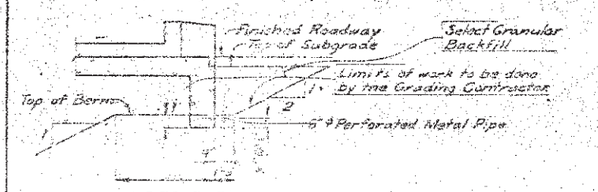

SEC. B-B

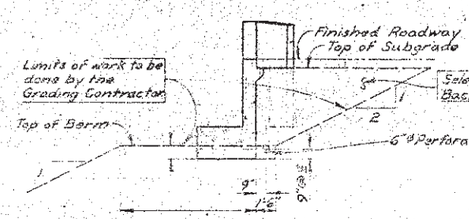

SEC. C-C

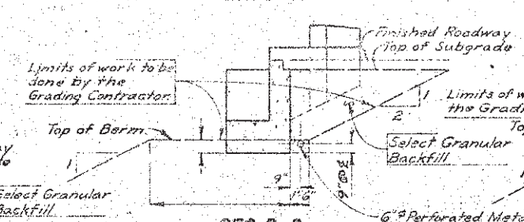

SEC. D-D

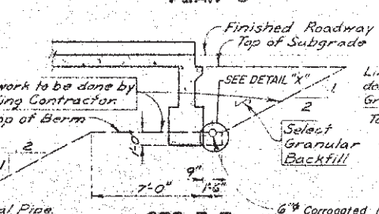

SEC. E-E

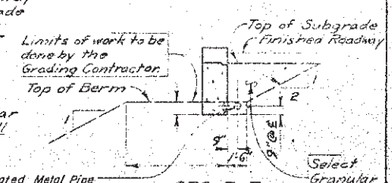

SEC. F-F

DETAILS OF BRIDGE END BACKFILL (PLAN "D")

FOR

157'-9¼" PRESTR. CONC. GIRDER BRIDGE

36'-0" ROADWAY — 20° SKEW L.H.F.

OVER CREEK — SEC. 31/32-T22N-R27E

STA. 419+78.115 TO 421+35.885 — BRF-044-2 (12)

STR. NO. 16-580-084 — HS 20-44 (& ALT)

CORSON COUNTY

SOUTH DAKOTA

DEPARTMENT OF HIGHWAYS

OCT. 1974

(21) OF (23)

NOTE "A"—

Excavated material not used for backfill of Abutments, supplemented with Select Granular Backfill, if required, shall be used to build these spill cones as directed by the ENGINEER.

GRANULAR BACKFILL NOTES—

1. The Bridge Contractor shall place Select Granular Backfill and install 6" ø corrugated metal pipe according to section 430 of the South Dakota Standard Specifications.
2. Suitable screen or grating shall be provided at pipe outlets as approved by the ENGINEER.
3. Where perforated pipe is called for, it shall be placed with perforations up.
4. Structure Excavation will not be computed for the outlet portions of the pipe drains beyond normal excavation limits.
5. Granular Bridge End Backfill shall not be placed until at least 24 hours after the completion of the deck pour.
6. The total estimated theoretical embankment volume of Granular Bridge End Backfill is 175 cubic yards for two abutments.
7. The total estimated length of the 6" ø corrugated underdrain pipe for two abutments is 140 feet. The cost of screen or grating in place is to be absorbed in the unit price bid for Bridge End Backfill Underdrain Pipe.
8. Underdrain Pipe shall conform to Section 1000 of the South Dakota Standard Specifications.

DESIGNED BY	DRAWN BY	CHECKED BY	APPROVED
	P.W.E.	A.S.F.	BRIDGE ENGINEER

P0063(1)251 & BRF 0063(5)251

STATE OF S.D.	PROJECT	SHEET NO.	TOTAL SHEETS
	P 0063(42)252	E80	E105

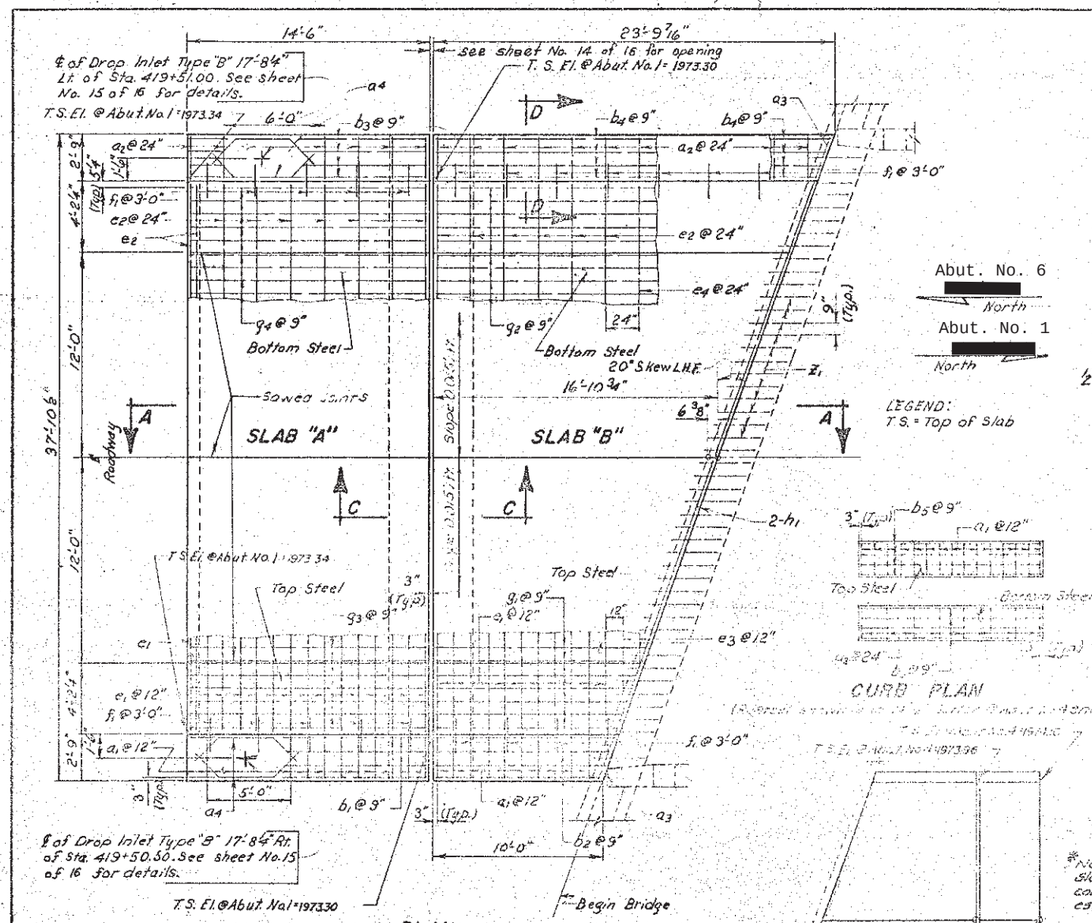

PLAN

(Shown adjacent to Abut. No. 1, Abut. No. 4 will be similar except as shown)
NOTE: No drop inlet at Abut. No. 4 end.

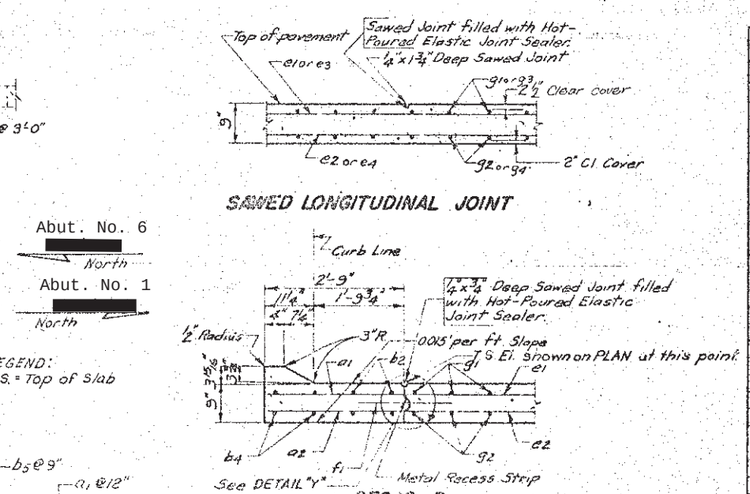

PLAN VIEW

*NOTE ~ Slab "A" plus slab "B" at each end of bridge constitutes one slab in above schedule and estimate

REINFORCING SCHEDULE

*(For two approach slabs)

Mk.	No.	Size	Length	Type
a_1	118	3	2'-5"	Str.
a_2	62	5	2'-5	Str.
a_3	8	4	2'-7"	Str.
a_4	8	3	7'-4"	19A
b_1	8	3	9'-6"	Str.
b_2	8	3	32'-11"	
b_3	8	7	9'-6"	
b_4	8	7	32'-11"	
b_5	8	3	14'-2"	
b_6	8	7	14'-2"	
c_1	28	5	37'-6"	Str.
d_1	152	4	5'-6"	2
d_2	76	4	4'-11"	T2
d_3	66	4	3'-11"	T2
e_1	54	3	32'-0"	Str.
e_2	30	5	32'-0"	
e_3	11	3	35'-1"	
e_4	5	5	35'-1"	
f_1	42	4	2'-0"	
g_1	43	3	32'-11"	
g_2	43	7	32'-11"	
g_3	86	3	14'-2"	
g_4	86	7	14'-2"	
h_1	4	5	33'-11"	Str.

Bending Details

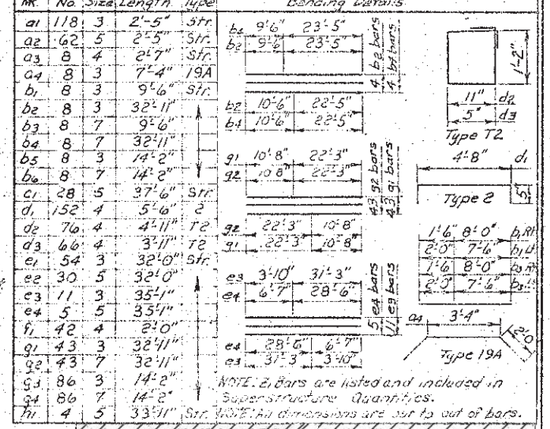

ESTIMATED QUANTITIES

ITEM	UNIT	QUANTITY
Gravel Cushion	Ton	213.9
Conc. Appr. Slab (6") to Bridge	Sq. Yd.	222.9
Bridge Approach Paving Slab	Sq. Yd.	42.1
Conc. Gutter (Type B) (8")	Lin. Ft.	125.6
Gravel Cushion (Approximate Depth 12")	Cu. Yd.	0

1. 57.8 Cu. Yds. concrete in Approach Slabs
2. 2,723 Lbs. reinforcing steel in Approach Slabs (includes dowels)
3. 12.1 Cu. Yds. concrete in Sleeper Slabs
4. 223 Lbs. reinforcing steel in Sleeper Slabs
5. 17.6 Cu. Yds. concrete in Gutter
6. 1,355 Lbs. reinforcing steel in Gutter
7. 213.9 Tons gravel cushion

Item 1 thru 7 are approximate quantities contained in the above Bid Items and are for information only.

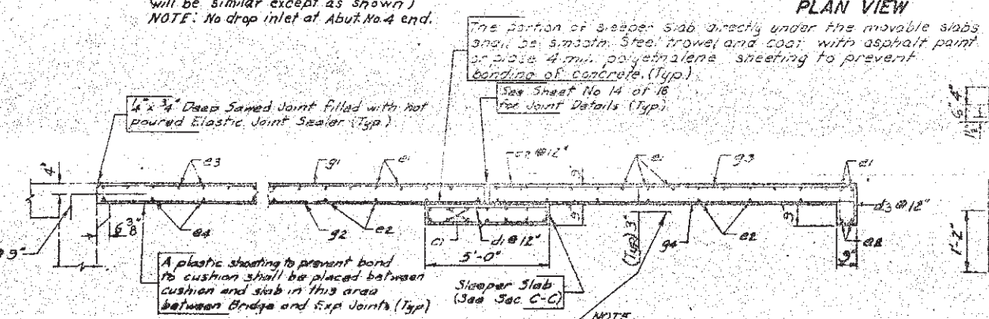

Gravel Cushion shall be constructed to a depth of three inches under the Concrete Approach Pavement and Gutters. The quantity of gravel shown in the Estimate of Quantities is based on a rate of 0.167 ton per square yard. Gravel Cushion shall be watered and compacted to the satisfaction of the Engineer. The cost of water for compaction shall be absorbed in the various pay items of the contract. Gravel Cushion shall be measured in square yards, to the nearest tenth of a square yard. Payment will be on the basis of square yards in lieu of tons stipulated in Section 280 of the S. Dak. Standard Specifications.

SEC. A-A

NOTE
The 3" cut-off wall is considered a part of the approach slab and all material and work involved in constructing this, including excavation and disposal of excavated, and surplus material, shall be absorbed in the unit price bid for the concrete approach slab

The portion of sleeper slab directly under the movable slabs shall be smooth. Steel trowel and coat with asphalt paint or place 4 mil. polyethylene sheeting to prevent bonding of concrete. (Typ.)

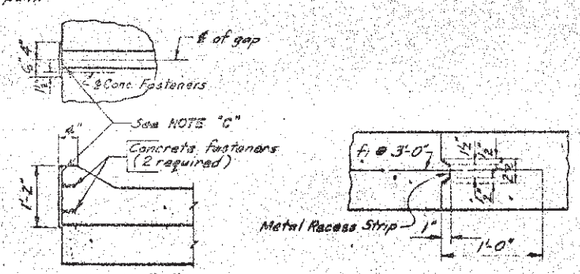

NOTE "C"
18 gauge galv. sheet metal. Attach to one side of joint only, after slabs A and B are poured. Use fasteners that will not spall the concrete as approved by the ENGINEER.

NOTE: If proposed, approval of alternate designs of Metal Strips will be considered by the ENGINEER.

ORIGINAL CONSTRUCTION PLANS

DETAILS OF APPROACH SLAB ADJACENT TO BRIDGE
FOR
157'-9¼" PRESTR. CONC. GIRDER BRIDGE

36'-0" ROADWAY — 20° SKEW L.H.F.
OVER CREEK — SEC. 31/32-T22N-R27E
STA. 419+78.115 TO 421+35.885 — BRF-044-2(12)
STR. NO. 16-580-084 — HS20-44 (B ALT.)

CORSON COUNTY
SOUTH DAKOTA
DEPARTMENT OF HIGHWAYS
NOV. 1974

22 OF 23

DESIGNED BY	DRAWN BY	CHECKED BY	APPROVED
	C.D.F. S.J.	G.A.	R.C. Wilson BRIDGE ENGINEER

STATE OF	PROJECT	SHEET NO.	TOTAL SHEETS
S.D.	P 0063(42)252	E81	E105

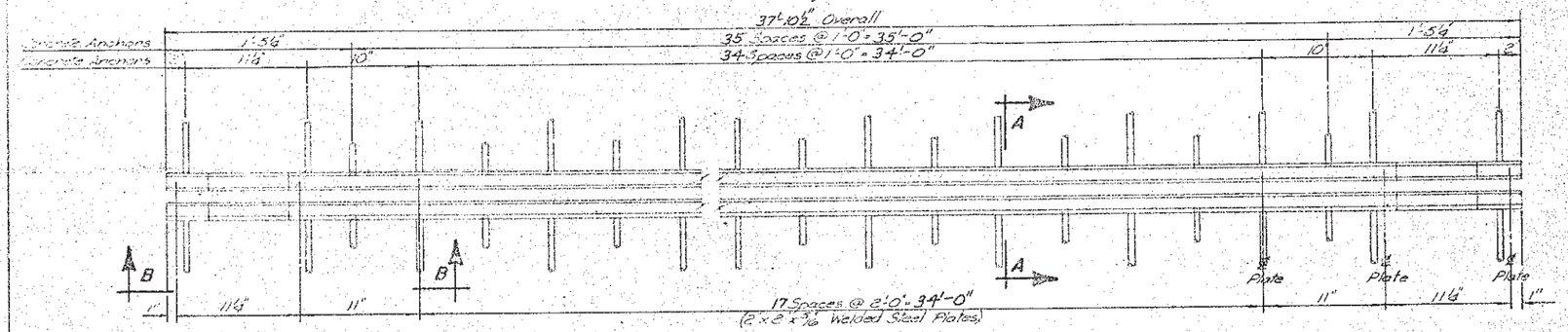

PLAN OF STRIP SEAL

TEMP	DIMENSION "X"
30°	2⅛"
40°	2"
50°	2"
60°	1⅞"
70°	1¾"
80°	1⅝"
90°	1½"

GENERAL NOTES—

[illegible] not conform to ASTM - A 36, A242 or 588.

[illegible] Section 870 [illegible] Splices will be permitted in the [illegible]

[illegible] shall be as recommended by its manufacturer [illegible] shall be as follows:

[illegible] and rolled to the steel extrusion [illegible] of the steel extrusion in order [illegible]

[illegible] shall be measured [illegible]

[illegible] Neoprene Strip is [illegible] shown on the Strip Plan for approval by the Engineer.

[illegible] of the Neoprene Extrusion may vary from the sketch shown (detail "B" on this Sheet) according to the manufacturer's design; however, the wedge lugs must properly fit the groove in the Steel Extrusion. Before installation, shop plans of the proposed strip seal showing, in addition to fixed dimensions, thickness of Neoprene Extrusion and dimensions pertinent to the fit of the Neoprene Extrusion in the Steel Extrusion shall be submitted to and approved by the Engineer.

6. Strip Seal will be measured in linear feet, to the nearest one-tenth foot, complete in place; measurements will be made of the overall horizontal length.

Strip Seal will be paid for at the Contract unit price per linear foot complete in place. The unit price bid shall be full compensation for furnishing all the required materials in place, including all labor, equipment and incidentals necessary to complete the work in accordance with plans and specifications.

The bottom surface of the component at the gap shall be [illegible] and adhesive shall be [illegible]

7. The Contractor has the option of using 3/8" x 5" x 7¾" plates which are to be placed in place and permanent Bridge notes on the 6" welded concrete anchors in the gap and to be used, they shall be given and located on the Shop plans for approval by the Engineer.

8. Since the configuration and dimensions of the steel extrusion may vary according to each manufacturers design, they need not conform exactly to that shown in Detail "B"; however, any deviations from the plan shown configuration or dimensions must be approved by the Bridge Engineer.

ESTIMATED QUANTITY		
ITEM	UNIT	QUANTITY
Strip Seal Expansion Joint	Lin. Ft.	73.8

* For two approach slabs

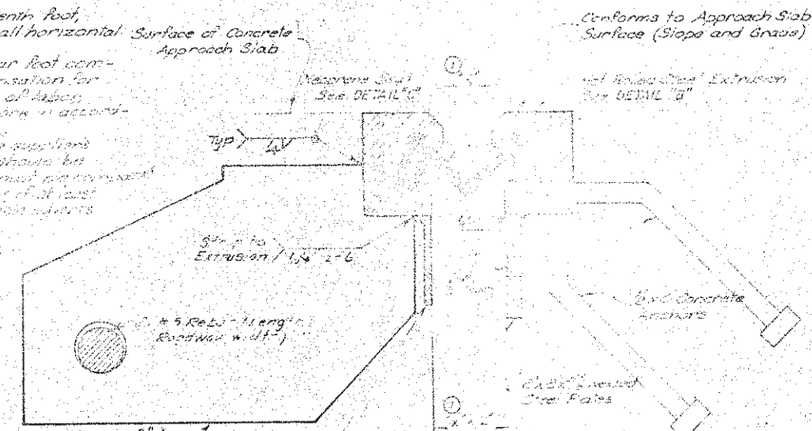

SUPPLEMENTAL DETAIL

The above 5/16" x 5" x 7¾" PL with #5 Rebar may be used instead of the 6"x6" welded concrete anchors. See Note No. 8

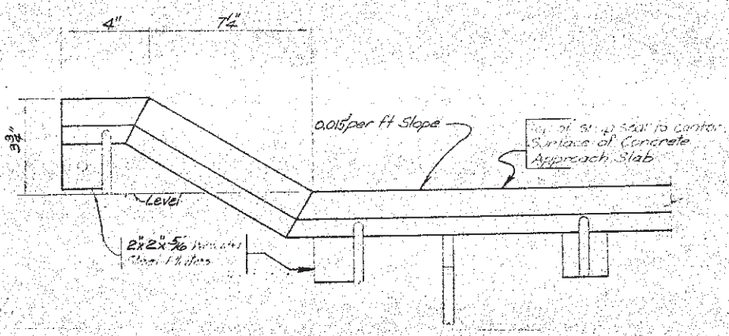

VIEW B—B

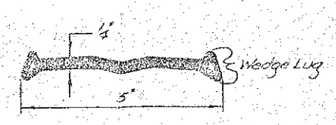

DETAIL "C"

Neoprene Seal Shall have a 2" movement capability

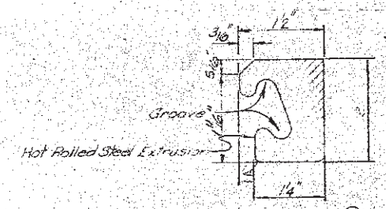

DETAIL "B" ②

② Rev. 1-16-76
① Rev. 8-1-74

ORIGINAL CONSTRUCTION PLANS

APPROACH SLAB JOINT DETAILS
FOR
157'-9¼" PRESTR. CONC. GIRDER BRIDGE

36'-0" ROADWAY — 20° SKEW L.H.F.
OVER CREEK — SEC. 31/32-T22N-R27E
STA. 419+78.115 TO 421+35.885 — BRF-044-2 (12)
STR. NO. 16-580-084 — HS20-44 (& ALT.)
CORSON COUNTY
SOUTH DAKOTA
DEPARTMENT OF HIGHWAYS
JUNE 1978 — 23 OF 23

DESIGNED BY: JJW — DRAWN BY: MLN — CHECKED BY: — APPROVED: H.C. Wilson, BRIDGE ENGINEER

F0063(1)251 & BRF 0063(5)251

Master Sheet 80 of 177 Sheets

STATE OF	PROJECT	SHEET NO.	TOTAL SHEETS
S.D.	P 0063(42)252	E82	E105

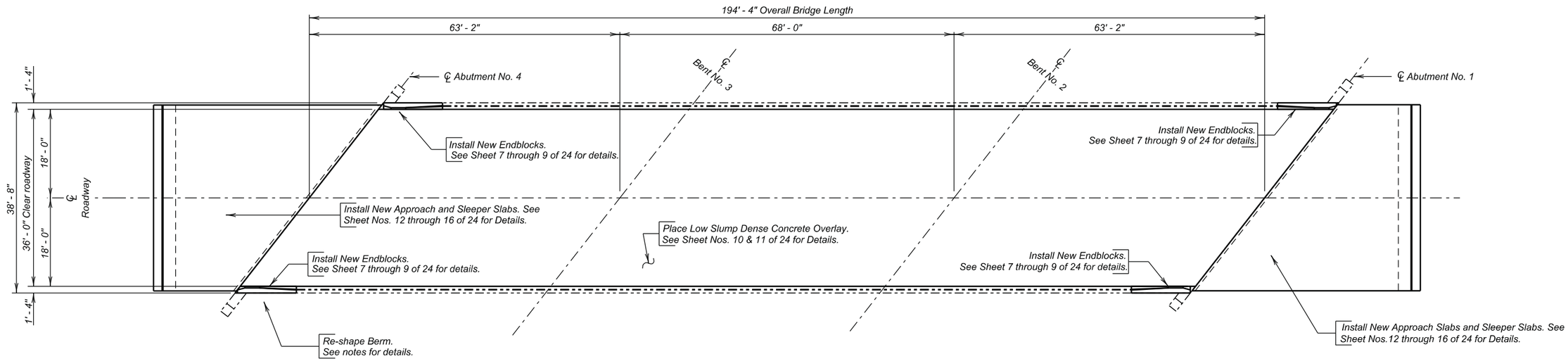

PLAN

INDEX OF BRIDGE SHEETS -

Sheet No. 1 - Layout for Upgrading
Sheet No. 2 - Estimate of Structure Quantities and Notes
Sheet No. 3 - Notes (Continued)
Sheet No. 4 - Notes (Continued)
Sheet No. 5 - Notes (Continued)
Sheet No. 6 - Notes (Continued)
Sheet No. 7 - End Block Removal Details
Sheet No. 8 - End Block Modification Layout
Sheet No. 9 - End Block Modification Details
Sheet No. 10 - Profiles Low Slump Dense Concrete
Sheet No. 11 - Profiles Low Slump Dense Concrete (Continued)
Sheet No. 12 - Approach Slab Underdrain Details
Sheet No. 13 - Approach Slab Layout
Sheet No. 14 - Approach Slab Details
Sheet No. 15 - Approach Slab Details (Continued)
Sheet No. 16 - Approach Slab Joint Details
Sheet No. 17 - Standard Plate 460.03 & 630.92
Sheet No. 18 - Standard Plate 680.03
Sheet Nos. 19 thru 24 - Original Construction Plans

LAYOUT FOR UPGRADING

FOR

194' - 4" PRESTRESSED GIRDER BRIDGE

36' - 0" ROADWAY — 38° SKEW LHF
OVER OAK CREEK — SEC. 29/30-T22N-R27E
STR. NO. 16-580-075 — P 0063(42)252
PCN 02HG

CORSON COUNTY

S. D. DEPT. OF TRANSPORTATION

OCTOBER 2013

PLANS BY :
OFFICE OF BRIDGE DESIGN, SOUTH DAKOTA DEPARTMENT OF TRANSPORTATION

DESIGNED BY	CK DES BY	DRAFTED BY	
BWS	KH	EJA	Kevin N. Goeden
CORS02HG	02HGLG01		BRIDGE ENGINEER

ESTIMATE OF STRUCTURE QUANTITIES

ITEM NO.	DESCRIPTION	QUANTITY	UNIT
110E0010	Remove Concrete Bridge Approach Slab	268	SqYd
250E0010	Incidental Work	Lump Sum	LS
410E2600	Membrane Sealant Expansion Joint	75.8	Ft
430E0300	Granular Bridge End Backfill	62.5	CuYd
430E0510	Approach Slab Underdrain Excavation	68.0	CuYd
460E0070	Class A45 Concrete, Bridge Repair	4.8	CuYd
460E0150	Concrete Approach Slab for Bridge	250.8	SqYd
460E0160	Concrete Approach Sleeper Slab for Bridge	37.8	SqYd
460E0300	Breakout Structural Concrete	5.0	CuYd
460E0380	Install Dowel in Concrete	64	Each
460E0504	No. 4 Rebar Splice	38	Each
460E0505	No. 5 Rebar Splice	32	Each
460E0506	No. 6 Rebar Splice	62	Each
480E0200	Epoxy Coated Reinforcing Steel	698	Lb
550E0010	Low Slump Dense Concrete Bridge Deck Overlay	51.6	CuYd
550E0100	Concrete Removal Type 1A	777.4	SqYd
550E0110	Concrete Removal Type 1B	77.7	SqYd
550E0120	Concrete Removal Type 1C	38.9	SqYd
550E0130	Concrete Removal Type 1D	38.9	SqYd
550E0140	Concrete Removal Type B	20.0	Ft
550E0200	Class A45 Concrete Fill	9.5	CuYd
550E0500	Finishing and Curing	777.4	SqYd
680E0040	4" Underdrain Pipe	115.8	CuYd
680E2010	Precast Concrete Headwall for Drain	4	Each
680E2500	Porous Backfill	10.6	Ton

SPECIFICATIONS

1. Design Specifications: AASHTO Standard Specifications for Highway Bridges 17th Edition using Working Stress Design.

2. Construction Specifications: South Dakota Standard Specifications for Roads and Bridges, 2004 Edition and Required Provisions, Supplemental Specifications and/or Special Provisions as included in the Proposal.

SCOPE OF BRIDGE WORK & SEQUENCE OF OPERATIONS

All work on this structure shall be accomplished with the traffic control shown elsewhere in the plans. Alternate sequence of operations may be submitted by the Contractor for approval by the Engineer a minimum of two weeks prior to the pre-construction meeting.

1. Remove the existing end blocks for the first phase of construction.

2. Place new end blocks to allow for the attachment of thrie beam approach railing for the first phase of construction.

SCOPE OF BRIDGE WORK & SEQUENCE OF OPERATIONS (CONT.)

3. Accomplish all Concrete Removal 1A, 1B, 1C, 1D and B and place Class A45 Concrete Fill to the satisfaction of the Engineer for the first phase of construction.

4. Place a Low Slump Dense Concrete Overlay to the elevations shown in the plans on the bridge deck for the first phase of construction.

5. Remove existing approach slabs for the first phase of construction.

6. Install the Approach Slab Underdrain System for the first phase of construction.

7. Install the Sleeper Slabs and Approach Slabs for the first phase of construction.

8. Place contractor furnished borrow at north abutment berm.

9. Switch traffic and repeat steps 1 through 7 for the second phase of construction.

GENERAL CONSTRUCTION - BRIDGE

1. All mild reinforcing steel shall conform to ASTM A615, Grade 60.

2. All exposed concrete corners and edges shall be chamfered 3/4" unless noted otherwise in the plans. Match existing chamfer if the existing chamfer differs.

3. Use 2" clear cover on all reinforcing steel except as shown otherwise.

4. The Contractor shall only imprint one year plate on the structure. The year plate shall contain the date the existing bridge was built and shall be located as specified and detailed on Standard Plate No. 460.03.

5. Barrier Curbs and End blocks shall be built normal to the grade.

6. Request for construction joints or resteel splices at points other than those shown, must be submitted to the Engineer for prior approval. If additional splices are approved, no payment will be allowed for the added quantity of reinforcing steel.

7. Surfaces of fresh concrete at construction joints shall be rough floated sufficiently to consolidate the surface. All construction joints shall be cleaned of surface laitance, curing compounds and other foreign materials prior to placing fresh concrete against the joint.

8. The type of vibratory screed shall be approved by the Engineer.

9. Snap ties, if used in the endblock formwork, shall be epoxy coated. The epoxy coating shall be inert in concrete and compatible with the coating applied to the new epoxy coated reinforcing steel.

10. The concrete endblocks shall be cured in accordance with Section 460.3.N. of the Construction Specifications except that no curing compounds shall be allowed.

BRIDGE DECK OVERLAY

1. The preparation for resurfacing consists of Concrete Removal Type 1A on the entire bridge deck and Type 1B, Type 1C, Type 1D and Type B over the deck surface as detailed on the plan sheets. Such removal shall be in conformance with these plans and Section 550 of the Construction Specifications. Extreme care shall be taken during the Concrete Removal Type 1A, Type 1B, Type 1D and Type B to assure that the existing resteel is not damaged. In the event that resteel damage inadvertently occurs, the Bridge Construction Engineer shall be immediately notified. Any damaged resteel shall be repaired by the Contractor, as approved by the Engineer, at no additional cost to the Department.

2. Concrete Removal Type 1B, Concrete Removal Type 1C, Concrete Removal Type 1D, Concrete Removal Type B and Class A45 Concrete Fill may not be encountered and may be omitted from the project as determined by the Engineer.

3. Concrete Removal Type 1C, Concrete Removal Type 1D and Class A45 Concrete Fill is not anticipated to exceed the plan shown quantities. If the Engineer determines that Concrete Removal Type 1C, Concrete Removal Type 1D and/or Class A45 Concrete Fill in excess of the plan shown quantity is necessary, payment for the additional quantity shall be conformance with Section 550.5 of the Construction Specifications.

4. The coarse aggregate in the existing bridge deck is a natural aggregate. The coarse aggregate in the low slump bridge deck overlay shall be limestone in accordance with Section 820 of the Construction Specification.

5. All fine aggregates used in the Portland cement concrete in the "Low Slump Dense Concrete Bridge Deck Overlay" and "Class A45 Concrete Fill" shall conform to Section 800.2.D of the Construction Specification "Alkali Silica Reactivity (ASR)" requirements. The type of cement in the concrete mix shall be one of the options as indicated in the table in note number 10 on Sheet No. 3 of 25. Fine aggregates with a 14-day expansion value of 0.400 and greater shall not be used.

ESTIMATE OF STRUCTURE QUANTIES AND NOTES
FOR
194' – 4" PRESTESSED GIRDER BRIDGE

Str. No. 16-580-075

AUGUST 2013

DESIGNED BY	CK. DES. BY	DRAFTED BY:	
BWS	KH	BWS	Kevin N. Hayden
CORS02HG	02HGNOTF		BRIDGE ENGINEER

BRIDGE DECK OVERLAY (CONTINUED)

6. Below is a list of known fine aggregate sources and the average corresponding 14-day expansion values:

Source	Location	Expansion Value
Bachman	Winner, SD	0.335
Birdsall S&G	Creston, SD	0.158
Birdsall S&G	Oral, SD	0.131
Birdsall S&G	Wasta, SD	0.170
Bitterman	Delmont, SD	0.314
Concrete Materials	Corson, SD	0.170
Croell	Quinn, SD	0.089
Emme Sand & Gravel	Oneil Nebraska	0.217
Fischer S&G	Rapid City, SD	0.092
Fischer S&G	Spearfish, SD	0.053
Fuchs	Pickstown, SD	0.275
Higman	Akron, IA	0.198
Higman	Hudson, SD	0.187
Hilde	Madison, SD	0.116
Jensen	Herried, SD	0.276
L.G. Everist	Brookings, SD	0.186
L.G. Everist	Hawarden, IA	0.166
L.G. Everist	Summit, SD	0.141
Morris	Blunt, SD	0.192
Morris – Richards pit	Onida, SD	0.188
Myrl & Roys Paving-Nelson Pit	Sioux Falls, SD	0.156
Northern Concrete Agg.	Rauville, SD	0.113
Northern Concrete Agg.	Luverne, MN	0.124
Opperman – Gunvordahl Pit	Burke, SD	0.337
Opperman – Cahoy Pit	Herrick, SD	0.307
Opperman – Jones Pit	Burke, SD	0.321
Opperman – Randall Pit	Pickstown, SD	0.239
Thorpe Pit	Britton, SD	0.098
Wagner Building Supplies	Wagner, SD	0.241
Wasta Sand & Gravel	Wasta, SD	0.159

7. The Department will use the running average of the last three known expansion test results or less for determining acceptability of source and the required Type of cement. These expansion results are reported in the table in note number 6. Additional testing, when requested by the Contractor, will be performed by the Department at the Contractor's expense.

8. The values listed in the table in note number 6 are intended for use in bidding. If a previously tested pit by SDDOT with acceptable test values (less than 0.250) is discovered after letting to require Type V cement or more lithium (greater than 0.250) the Department will accept financial responsibility for the change in materials.

BRIDGE DECK OVERLAY (CONTINUED)

9. When more than one source of fine aggregates is blended to meet the gradation specifications, the highest expansion value of either sand will be used for determining acceptability and type of cement and or fly ash and or Lithium required.

10. Concrete used in the Low Slump Bridge Deck Overlay shall meet the requirements of Section 550 of the Construction Specification. Class A45 Concrete Fill shall meet the requirements of Section 460 of the Construction Specification. In addition, both concretes shall have 20% to 25% of the cement replaced with Class F Modified Fly Ash in accordance with Section 605 of the Construction Specification and/or lithium nitrate (30% solution by weight) added to the concrete mix at the following rates.

Course Aggregate	Fine Aggregate	Cement Type	Fly Ash	Lithium Nitrate
Limestone or Granite	< 0.250%	Type I or II	Class F Modified	-----
		Type I or II	-----	1.5 gallon/cubic yard
Limestone or Granite	>0.250%	Type V	Class F Modified	-----
		Type I or II	-----	3.0 gallon/cubic yard
		Type I or II	Class F Modified	1.5 gallon/cubic yard
Quartzite	-----	Type V	Class F Modified	-----
		Type I or II	-----	3.0 gallon/cubic yard
		Type I or II	Class F Modified	1.5 gallon/cubic yard

The Contractor shall use one of these options, but the Contractor may choose which option. All material, labor, equipment, and incidental costs shall be included in the contract unit price for "Low Slump Dense Concrete Bridge Deck Overlay" or "Class A45 Concrete Fill".

11. Grout for bonding new concrete to old concrete shall meet the requirements of Section 550 of the Construction Specification. In addition, the grout mix shall contain 1 1/2 gallons of Lithium per cubic yard or 20% to 25% of the cement replaced with fly ash.

12. Suppliers of Lithium are listed below:

BASF Admixtures, Inc.
23700 Chagrin Boulevard
Cleveland, Ohio 44122-5554
1-800-628-9990
website: www.basf-admixtures.com

FMC Corporation Lithium
Seven LakePointe Plaza
2801 Yorkmont Road, Suite 300
Charlotte, North Carolina 28208
1-704-868-5300
website: www.fmclithium.com

Grace Construction Products
62 Whitmore Ave.
Cambridge MA
1-877-423-6491
Website: www.graceconstruction.com

BRIDGE DECK OVERLAY (CONTINUED)

13. A minimum thickness of 2" of Low Slump Dense Concrete shall be maintained on the bridge deck.

14. It will be necessary for the Contractor to shape the surface of the Low Slump Dense Concrete Overlay within one foot of the curb as detailed in the plans to insure that water drains to the floor drains or off the ends of the bridge.

15. No traffic will be allowed to operate on the scarified portion of the bridge deck. If it appears that the entire Low Slump Dense Concrete Overlay can not be completed prior to winter, the Concrete Removal Type 1A, 1B, 1C, 1D and Concrete Removal Type B shall not be done until work resumes in the spring. In the event that scarification has been started and due to unforeseen circumstances it becomes impossible to complete the placement of the Low Slump Dense Concrete Overlay on the entire surface of the structure prior to winter, the Office of Bridge Design shall be notified. Recommendations for handling winter traffic will then be made. These recommendations may include, but are not limited to, filling extra depth removal areas with Class A45 Concrete, placing an asphalt overlay on the uncompleted area so that the entire roadway width may be opened to traffic, removal of the asphalt overlay when work is resumed and scarifying an additional 1/4" of depth on the bridge deck. The cost of this work, including asphalt overlay, scarification, Class A45 Concrete, extra Low Slump Dense Concrete, and all other items incidental to this work, shall be at the expense of the Contractor.

NOTES (CONTINUED)
FOR
194' – 4" PRESTRESSED GIRDER BRIDGE

Str. No. 16-580-075

AUGUST 2013

DESIGNED BY	CK. DES. BY	DRAFTED BY:	
BWS	KH	BWS	BRIDGE ENGINEER
CORS02HG	02HGNOTF		

CONCRETE BREAKOUT

1. The existing curbs shall be broken out to the limits shown on the plans. Breakout limits shall be defined with a 3/4" deep sawcut (unless specified otherwise in these plans), where practical, as approved by the Engineer. Reinforcing steel that is exposed and is scheduled for use in the new construction shall be cleaned and straightened to the satisfaction of the Engineer. Care shall be taken not to damage the existing reinforcing steel that is to be reused in the new construction during concrete breakout. Any reinforcing steel that is damaged during concrete breakout shall be replaced or repaired, as approved by the Engineer, by the Contractor at no cost to the Department. The existing reinforcing steel that is to be reused in the new construction and that is exposed during concrete breakout shall be epoxy coated in accordance with the "Epoxy Coating Existing Reinforcing Steel" notes.

2. All broken out concrete, discarded reinforcing bars and expansion devices shall be disposed of by the Contractor. Any disposal of discarded material shall be in accordance with the Construction Specifications.

3. During concrete removal operations, no broken out concrete shall be allowed to fall into the creek.

4. The contract unit price per cubic yard for "Breakout Structural Concrete" shall include breaking out concrete, cleaning, straightening existing reinforcing steel and disposal of all broken out material.

EPOXY COATING EXISTING REINFORCING STEEL

1. The existing resteel in the curb that is exposed during concrete breakout, and is to be reused, shall be epoxy coated in the field. This does not include rebar exposed while doing Concrete Removal Type 1A through 1D or Concrete Removal Type B.

2. The reinforcing steel shall be abrasive blasted clean and then epoxy coated. The epoxy coating shall be inert in concrete and compatible with the coating applied to the new epoxy coated reinforcing steel. This coating shall be the epoxy touch up coating material supplied by an epoxy coating manufacturer who supplies coating material for new epoxy coated reinforcing steel. The abrasive blasted reinforcing steel shall be coated promptly and before detrimental oxidation occurs. The coating shall be allowed to cure for 24 hours or as per the manufacturer's recommendations, whichever is more stringent, before concrete can be placed. These bars shall be clean and free from all surface contaminants before coating.

3. The cost of cleaning and epoxy coating the existing reinforcing steel shall be incidental to the various bid items.

REMOVAL OF CONCRETE BRIDGE APPROACH SLAB

1. The existing concrete approach and sleeper slabs adjacent to the structure shall be completely removed by the Contractor.

2. The crushed concrete and reinforcing steel from the removal shall be disposed of by the Contractor at an approved site. An appropriate site will be as described in the Waste Disposal Site notes in this set of plans.

3. All labor, tools, equipment and any incidentals necessary for removal and disposal of the existing approach and sleeper slabs shall be incidental to the contract unit price per square yard for "Remove Concrete Bridge Approach Slab".

APPROACH SLAB UNDERDRAIN SYSTEM

1. This work consists of excavating in place material under the limits of the new approach slab and installing a drainage system to prevent water retention directly under the approach and sleeper slabs. Excavation for placement of the new approach slab and sleeper slab underdrain system shall be done with minimal disturbance to the underlying material.

2. The Approach Slab Underdrain system shall be constructed in accordance with Section 430.3.C of the Special Provision for Approach Slab Underdrain System.

APPROACH SLABS

1. Excavation for placement of new approach slabs and sleeper slabs shall be done with minimal disturbance to the underlying material.

2. Low spots in the area where the approach slabs will be located are to be filled and compacted with bridge end backfill material back to the original grade line. Bridge End Backfill material shall be in accordance with Section 882 of the Construction Specifications. All costs for this work shall be incidental to the various contract bid items.

3. The top of approach slab elevations shall be established during construction and shall be subject to the approval of the Engineer. Care shall be taken to provide a smooth transition from the bridge deck elevations to the new pavement elevations established in the field so as to prevent any dips or bumps in the areas of the bridge ends or ends of the new approach slabs. The maximum rate of grade transition through the approach slab shall be 1 inch per 40 feet.

4. Sleeper slab riser shall be cast with or later than the Approach Slab. Care shall be taken to ensure the correct grade is maintained across the joint.

5. The use of a vibratory screed will be required during placement of Class A45 Concrete for the approach slabs. Concrete placement in front of the screed shall be kept parallel to the screed.

APPROACH SLABS (CONTINUED)

6. The concrete in the approach slab shall be tined.

7. The new approach slabs and sleeper slabs shall have a surface finish as stipulated in Section 460.3.M.4 of the Construction Specifications.

Δ 8. The Concrete Approach Slabs Adjacent to Bridge shall be cured in accordance with Section 460.3 N of the Construction Specifications. The minimum 7 day cure time requirement shall be waived. The approach slabs shall be cured until a minimum compressive strength of 4000 psi is reached.

9. Concrete Approach Sleeper Slab for Bridge will be paid for at the contract unit price per square yard. This payment shall be full compensation for all excavation, furnishing, hauling, and placing all materials including concrete and reinforcing steel; for disposal of all excavated material and surplus materials; and for labor, tools, equipment and any incidentals necessary to complete this item of work.

10. Concrete Approach Slab for Bridge will be paid for at the contract unit price per square yard. This payment shall be full compensation for all excavation, furnishing, hauling and placing all materials including concrete, asphalt paint or 4 mil polyethylene sheeting, elastic joint sealer and reinforcing steel; for disposal of all excavated material and surplus materials and for labor, tools, equipment and any incidentals necessary to complete this item of work.

DESIGN MIX OF CONCRETE

1. Class A45 Concrete shall be used for the bid items Concrete Approach Slab for Bridge and Concrete Approach Sleeper Slab for Bridge.

2. The Type of cement, concrete strength requirements, aggregate requirements, slump and air requirements for the contract items Class A45 Concrete Bridge Repair, Concrete Approach Sleeper Slab for Bridge and Concrete Approach Slab for Bridge shall conform to the requirements of Section 460 of the Construction Specification.

NOTES (CONTINUED)
FOR
194' – 4" PRESTRESSED GIRDER BRIDGE

Str. No. 16-580-075

AUGUST 2013

DESIGNED BY	CK. DES. BY	DRAFTED BY:	
BWS	KH	BWS	Kevin M Boeder
CORS02HG	02HGNOTF		BRIDGE ENGINEER

MEMBRANE SEALANT EXPANSION JOINT

1. Install all membrane sealant expansion joints at the plan shown locations in conformance to the following notes.

2. The Membrane Sealant shall be one of membrane sealant types from the approved product list for Membrane Sealant Expansion Joints.

3. The manufacturer shall supply the membrane sealant in packaging that precompresses the membrane sealant. The precompressed dimension shall be as recommended by the sealant manufacturer to provide a water tight seal throughout a joint movement range of + 25% (minimum) from the specified joint opening dimension. In no case shall the precompressed dimension exceed 75% of the joint opening width. The foam sealant shall be slowly self expanding to permit workers ample time to install the membrane sealant before the membrane sealant exceeds the joint opening width.

4. The membrane sealant shall be supplied in pieces 5 feet in length or longer. The foam sealant shall be ultra-violet and ozone resistant.

5. The bonding adhesive used to attach the membrane sealant to the adjacent concrete shall be approved by the membrane sealant manufacturer.

6. Adhesive used to join adjacent pieces of the membrane sealant shall be as recommended by the manufacturer.

7. If Styrofoam filler material is used in the construction, it shall be closed cell and water-tight as approved by the Engineer.

8. Use plywood or other material to protect concrete adjacent to the joint from spalling before any equipment is moved across the joint. Any spall areas will be repaired at the Contractor's expense by breaking out and replacing adjacent concrete, as approved by the Engineer.

9. The minimum ambient air temperature at the time of joint installation and adhesive curing shall be 40° F.

10. A technical representative of the membrane sealant manufacturer shall be present at the jobsite during installation. The technical representative shall be knowledgeable in the correct procedures for the preparation and installation of the joint material to insure the Contractor installs the joint to the Manufacturers recommendations.

11. The joint opening shall be constant width and shall have smooth vertical sides. Surfaces of material adjacent to the joint shall be at the correct grade and crown as approved by the Engineer.

12. Concrete surfaces that will be in contact with the membrane sealant shall be thoroughly cleaned by abrasive blasting to remove all laitance and contaminants (such as oil, curing compounds, etc.) from the concrete surface. At a minimum two passes of abrasive blasting with the nozzle held at an angle to within 1 to 2 inches of the a concrete surface will be required. Cleaning of the concrete surfaces with solvents, wire brushing, or grinding shall not be permitted.

MEMBRANE SEALANT EXPANSION JOINT (CONTINUED)

13. After abrasive blasting, but immediately prior to membrane joint installation, the entire joint contact surface shall be air blasted. The air compressor used for joint cleaning shall be equipped with trap devices capable of providing moisture-free and oil-free air at a recommended pressure of 90 psi. To obtain complete bonding with the adhesive, the adjacent concrete surfaces must be dry and clean. The contact surfaces for the joint shall be visually inspected by the Engineer immediately prior to joint installation to verify the surface is dry and clean.

14. Individual spliced sections shall be installed as per the manufacturers' recommendations. The membrane joint sealant manufacturer shall submit a detailed installation procedure to the Engineer at least 5 days prior to joint installation for his review.

15. Traffic shall not be allowed on the joint for a minimum 3 hours unless otherwise directed by the Engineer.

16. Forms for the joint shall be left in place for a minimum of 7 days. No construction equipment or traffic shall be allowed on the joint until the concrete has reached design strength. The joint edges shall be protected from damage by equipment and traffic.

17. The Membrane Sealant Expansion Joint will be measured in feet to the nearest one-tenth foot, complete in place. Measurement will be made of the overall horizontal length. The Membrane Sealant Expansion Joint will be paid for at the contract unit price per foot complete in place. Payment for this item shall be full compensation for furnishing all the required materials in place, inclusive of labor, equipment and incidentals necessary to complete the work in accordance with the plans and the foregoing specifications.

INSTALLING DOWELS IN CONCRETE

1. Holes drilled in the existing concrete shall be true and normal or as shown in the plans. Drilling holes using a core drill shall not be allowed. Care shall be taken not to damage the existing reinforcing steel. It is likely that some of the existing reinforcing steel shown in the original construction plans may have been placed out of position during original construction. Therefore, prior to the start of drilling any holes in the concrete, an effort will be made by Department forces to mark on the concrete surface where practical any locations of the in-place reinforcing steel. In spite of this precaution, the Contractor can still expect to encounter and have to drill through reinforcing steel or shift the dowel spacing as approved by the Engineer to miss the existing reinforcing steel. If the Contractor shifts the dowel spacing, the unused drill holes shall be completely filled with the epoxy resin specified in note number 2 under "Installing Dowels in Concrete" as approved by the Engineer.

INSTALLING DOWELS IN CONCRETE (CONTINUED)

2. The epoxy resin mixture shall be of a type for bonding steel to hardened concrete and shall conform to AASHTO M235 Type IV, Grade 3 (Equivalent to ASTM C881, Type IV, Grade 3). Grade 1, 2 or 3 may be used for vertical dowels and Grade 3 epoxy shall be used for all horizontal dowels.

3. The diameter of the drilled holes shall not be less than 1/8 inch greater, nor more than 3/8 inch greater than the diameter of the dowels or as per the Manufacturer's recommendations. The drilled holes shall be blown out with compressed air using a device that will reach the back of the hole to ensure that all debris or loose material has been removed prior to epoxy injection.

4. Mix epoxy resin as recommended by the Manufacturer and apply by an injection method as approved by the Engineer. Beginning at the back of the drilled holes, fill the holes 1/3 to 1/2 full of epoxy, or as recommended by the Manufacturer, prior to insertion of the steel bar. Care shall be taken to prevent epoxy from running out of the horizontal holes prior to steel bar insertion. Rotate the steel bar during installation to eliminate voids and ensure complete bonding of the bar. Insertion of the bars by the dipping or painting method will not be allowed.

5. No loads shall be applied to the epoxy grouted dowel bars until the epoxy resin has had sufficient time to cure as specified by the epoxy resin manufacturer.

6. Dowel bars shall be deformed bars conforming to ASTM A615 Grade 60.

7. The cost of epoxy resin, dowels, installation and other incidental items shall be incidental to the contract unit price per each for "Install Dowel in Concrete".

MECHANICAL REBAR SPLICES

The approach slabs will be built in phases under traffic, mechanical splice devices will be required for the transverse approach slab and sleeper slab reinforcing steel. The mechanical rebar splices shall be in accordance with Section 480 of the Construction Specifications.

NOTES (CONTINUED)
FOR
194' – 4" PRESTRESSED GIRDER BRIDGE

Str. No. 16-580-075

AUGUST 2013

DESIGNED BY	CK. DES. BY	DRAFTED BY:	
BWS	KH	BWS	Kevin N. Gordon
CORS02HG	02HGNOTF		BRIDGE ENGINEER

BRIDGE BERM REPAIR

1. The north berm near the abutment shall be rebuilt and reshaped to the adjacent berm elevation. Material shall be placed to a minimum 1' above the bottom of the abutment seat, as approved by the Engineer.

2. The berm slope shall be benched into stable embankment during reshaping and reconstruction. The soil shall be placed in horizontal lifts perpendicular to the centerline of the structure. Compaction of the reconstructed embankment will be governed by the Ordinary Compaction Method.

3. At the upper part of the berm slope, clearance between the structure and berm will prohibit the use of compaction equipment. The soil in this area will be placed by a method approved by and compacted to the satisfaction of the Engineer.

4. Soil used to reconstruct the berm slope shall be furnished by the Contractor. The soil will have a maximum of 70% passing the #4 sieve, have a maximum Liquid Limit (LL) of 45 and a Plastic Index (PI) greater than 10 but less than 25. The contractor shall be responsible for one gradation, LL and PI test for each borrow source for berm reconstruction. The results shall be supplied to the Engineer in writing.

5. Waste material from grading will be generated from this project. The Contractor may use this waste material providing it meets the requirements listed in note number 4 above.

6. The cost of the berm reconstruction and reshaping shall be incidental to the contract lump sum for "Incidental Work" This payment shall be full compensation for furnishing all materials, labor, tools, and equipment necessary or incidental to the reconstruction and reshaping of the bridge berm. For informational purposes the amount of fill required is 10.0 cubic yards.

CONTRACTOR FURNISHED BORROW

The Contractor shall provide a suitable site for Contractor furnished borrow material. The Contractor is responsible for obtaining all required permits and clearances for the borrow site. The borrow material shall be approved by the Engineer.

SURFACE FINISH

All surfaces of the newly constructed endblocks shall be given a Class A Commercial Texture Finish in accordance with Section 460.3.M.1.c. of the Construction Specifications.

The concrete surfaces requiring the application of the Commercial Texture Finish shall be prepared in accordance with the manufacturer's recommendations. The Contractor shall submit a product data sheet, or an approved equal, documenting all pertinent information with regard to preparation of the concrete surfaces, materials and equipment required, mixing requirements, and application procedures to the Engineer in advance of the application of the Commercial Texture Finish for review and approval.

For informational purposes the amount of surface area requiring the Class A Commercial Texture Finish is 247 square feet.

Any damage to the commercial texture finish during the construction including abrasion from traffic due to the traffic control shall be repaired by the Contractor, as approved by the Engineer, at no expense to the Department.

The cost of the commercial texture finish shall be included in the contract price per cubic yard for "Class A45 Concrete, Bridge Repair". This payment shall be full compensation for furnishing all materials, labor, tools and equipment necessary or incidental to the application of this finish.

NOTES (CONTINUED)
FOR
194' – 4" PRESTRESSED GIRDER BRIDGE

Str. No. 16-580-075

AUGUST 2013

DESIGNED BY	CK. DES. BY	DRAFTED BY:	
BWS	KH	BWS	Kevin N Gordon
CORS02HG	02HGNOTF		BRIDGE ENGINEER

STATE OF	PROJECT	SHEET NO.	TOTAL SHEETS
S.D.	P 0063(42)252	E88	E105

Shaded area indicate limits of concrete breakout

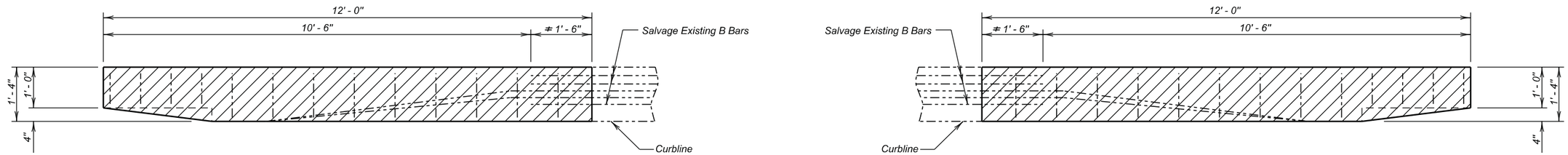

PLAN

(Limits of Concrete Breakout)

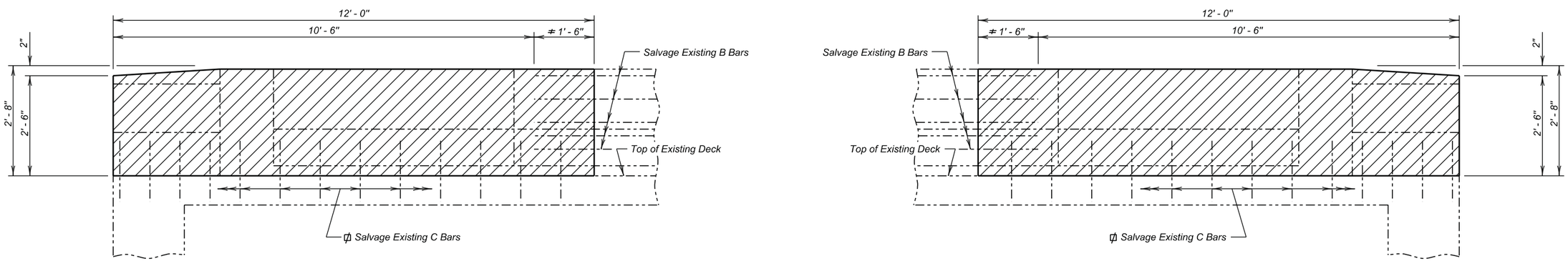

ELEVATION

(Limits of Concrete Breakout)

END BLOCK CONCRETE REMOVAL

FOR

194' - 4" PRESTRESSED GIRDER BRIDGE

36' - 0" ROADWAY — 38° SKEW LHF

OVER OAK CREEK — SEC. 29/30-T22N-R27E

STR. NO. 16-580-075 — P 0063(42)252

CORSON COUNTY

S. D. DEPT. OF TRANSPORTATION

OCTOBER 2013

Bend Existing Bars where necessary to maintain 2" clear cover.

≠ Extend Existing Bars into new section (1' - 6")

DESIGNED BY	CK. DES. BY	DRAFTED BY	
NP	KH	NP	Kevin N. Goeden
CORS02HG	02HGLG07		BRIDGE ENGINEER

STATE OF	PROJECT	SHEET NO.	TOTAL SHEETS
S.D.	P 0063(42)252	E89	E105

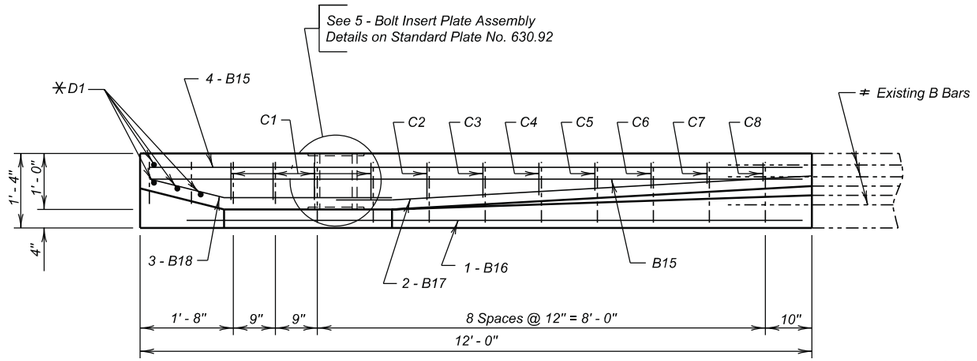

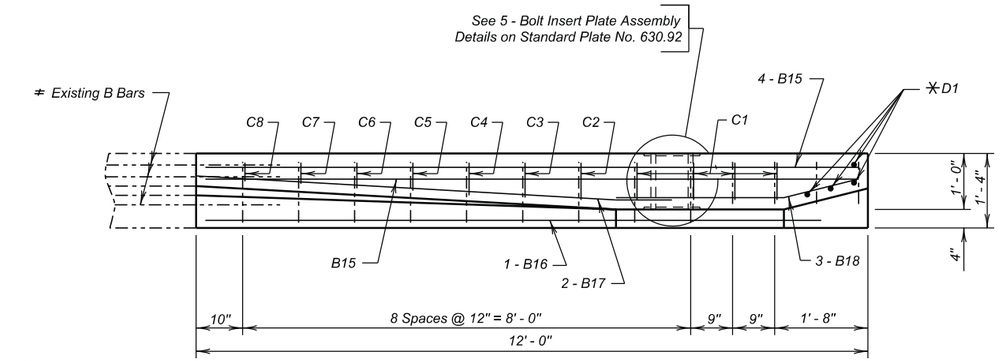

PLAN

(Left Barrier shown, Right Barrier identical by rotation)

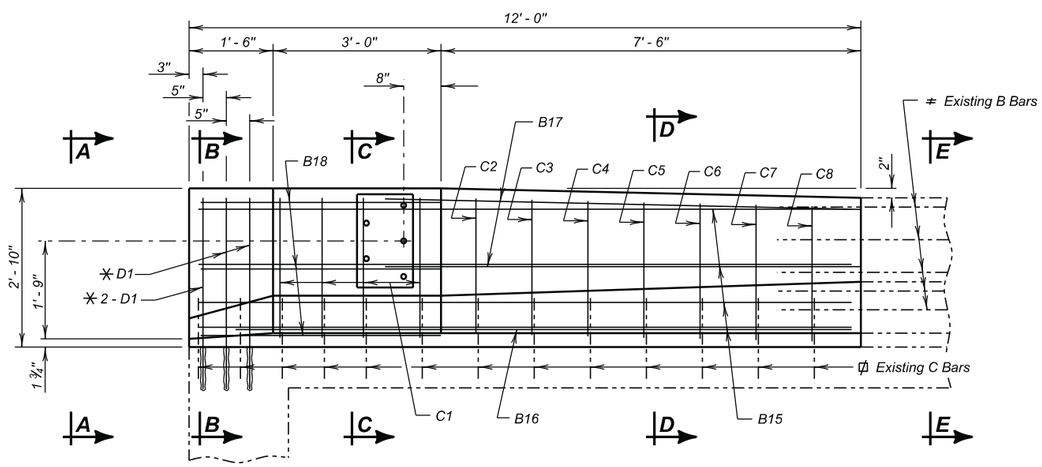

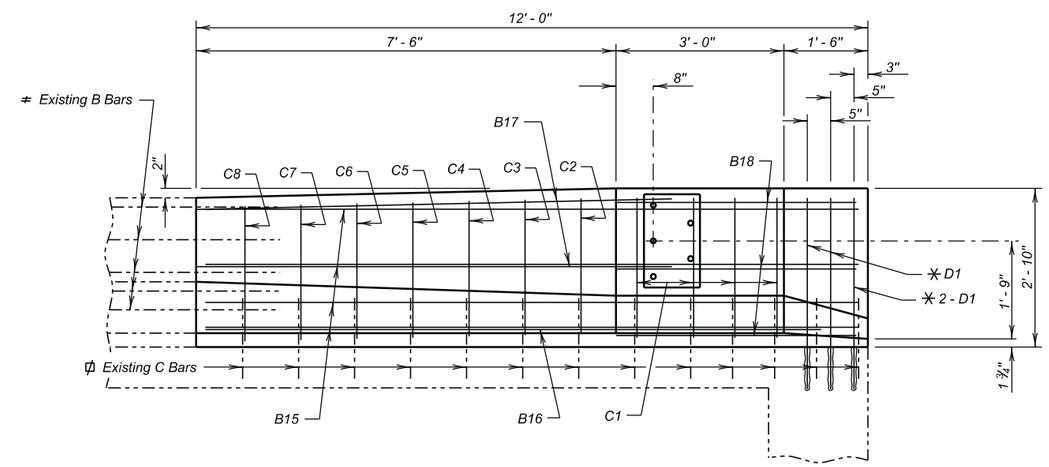

ELEVATION

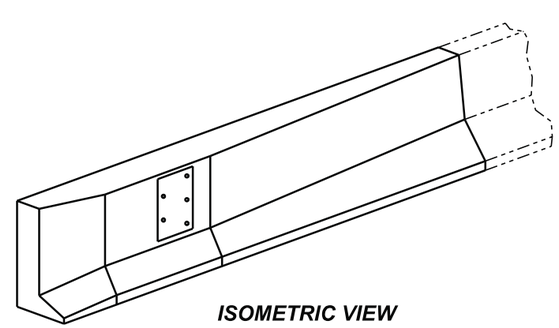

ISOMETRIC VIEW

Bend Existing Bars where necessary to maintain 2" clear cover.
✳ D1 are to be drilled in and grouted with epoxy.
≠ Extend Existing Bars into new section (1' - 6")

END BLOCK MODIFICATION

FOR

194' - 4" PRESTRESSED GIRDER BRIDGE

36' - 0" ROADWAY — 38° SKEW LHF
OVER OAK CREEK — SEC. 29/30-T22N-R27E
STR. NO. 16-580-075 — P 0063(42)252

CORSON COUNTY
S. D. DEPT. OF TRANSPORTATION
AUGUST 2013

DESIGNED BY	CK. DES. BY	DRAFTED BY	
NP	KH	NP	Kevin N. Goeden
CORS02HG	02HGLG08		BRIDGE ENGINEER

STATE OF	PROJECT	SHEET NO.	TOTAL SHEETS
S.D.	P 0063(42)252	E90	E105

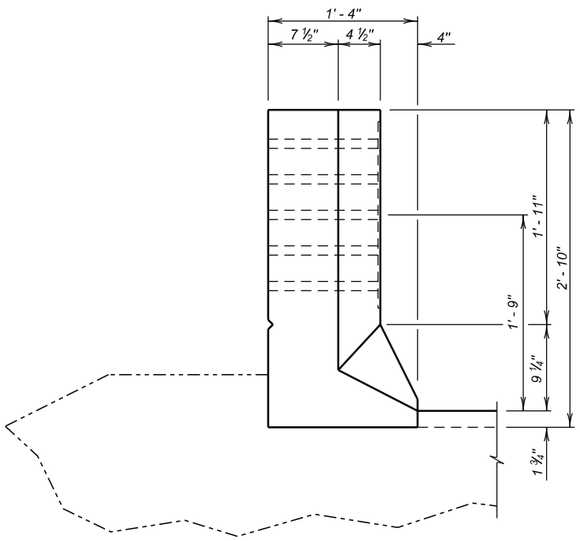

VIEW A - A

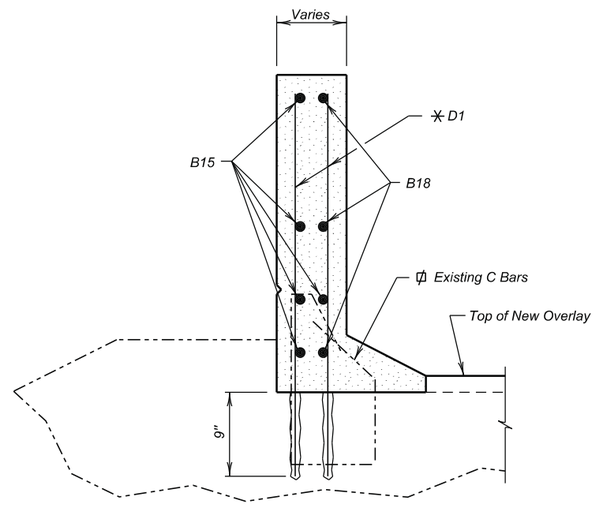

SECTION B - B

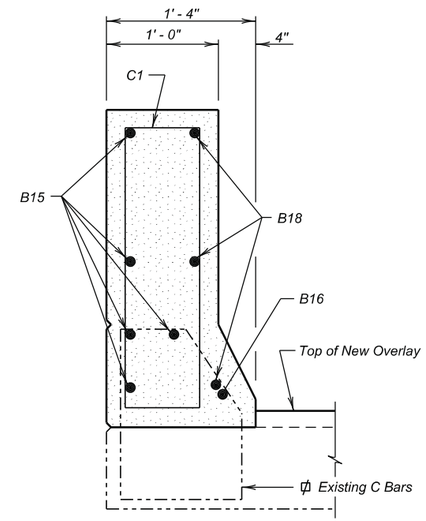

SECTION C - C

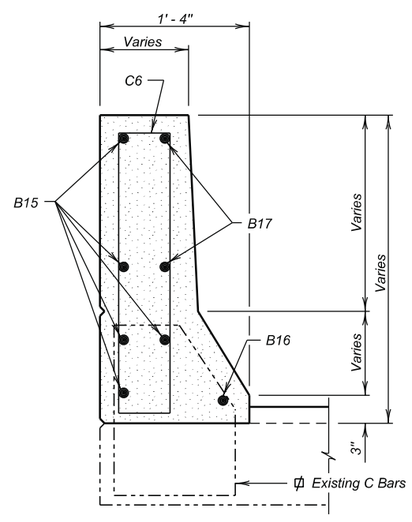

SECTION D - D

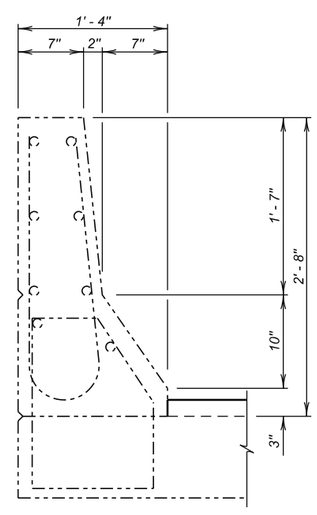

SECTION E - E

REINFORCING SCHEDULE

	Mk.	No.	Size	Length	Type
PHASE I	B15	10	5	11' - 8"	Str.
	B16	2	5	11' - 0"	Str.
	B17	4	5	8' - 6"	19A
	B18	6	8	4' - 4"	19A
	C1	8	4	7' - 1"	T2
	C2	2	4	6' - 11"	T2
	C3	2	4	6' - 10"	T2
	C4	2	4	6' - 9"	T2
	C5	2	4	6' - 7"	T2
	C6	2	4	6' - 6"	T2
	C7	2	4	6' - 4"	T2
	C8	2	4	6' - 3"	T2
	△D1	8	6	3' - 5"	Str.
PHASE 2	B15	10	5	11' - 8"	Str.
	B16	2	5	11' - 0"	Str.
	B17	4	5	8' - 6"	19A
	B18	6	8	4' - 4"	19A
	C1	8	4	7' - 1"	T2
	C2	2	4	6' - 11"	T2
	C3	2	4	6' - 10"	T2
	C4	2	4	6' - 9"	T2
	C5	2	4	6' - 7"	T2
	C6	2	4	6' - 6"	T2
	C7	2	4	6' - 4"	T2
	C8	2	4	6' - 3"	T2
	△D1	8	6	3' - 5"	Str.

Bending Details

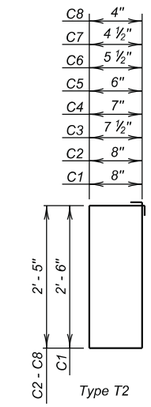

Type T2

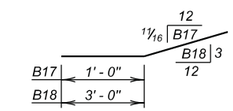

Type 19A

NOTES:
All Dimensions are out to out of bars.
All Bars to be Epoxy Coated.
△ Dowels

ESTIMATED QUANTITIES

ITEM	UNIT	PHASE I QUANTITY	PHASE 2 QUANTITY
Class A45 Concrete, Bridge Repair	Cu.Yd.	2.4	2.4
Epoxy Coated Reinforcing Steel	Lb.	349	349
Install Dowel In Concrete	Each	8	8
Breakout Structural Concrete	Cu.Yd.	2.5	2.5

✳ Does not include the following quantities for D1 bars as these are paid for in the Bid Item "Install Dowel in Concrete".

PHASE I	PHASE 2
41 Lb.	41 Lb.

ϕ Bend Existing Bars where necessary to maintain 2" clear cover.
✳ D1 are to be drilled in and grouted with epoxy.
≠ Extend Existing Bars into new section (1' - 6")

END BLOCK MODIFICATION DETAILS

FOR

194' - 4" PRESTRESSED GIRDER BRIDGE

36' - 0" ROADWAY — 38° SKEW LHF
OVER OAK CREEK — SEC. 29/30-T22N-R27E
STR. NO. 16-580-075 — P 0063(42)252

CORSON COUNTY
S. D. DEPT. OF TRANSPORTATION
OCTOBER 2013

DESIGNED BY	CK. DES. BY	DRAFTED BY	
NP	KH	NP	Kevin N. Goeden BRIDGE ENGINEER
CORS02HG	02HGLG08		

STATE OF	PROJECT	SHEET NO.	TOTAL SHEETS
S.D.	P 0063(42)252	E91	E105

△ Revised 9-26-14 BWS

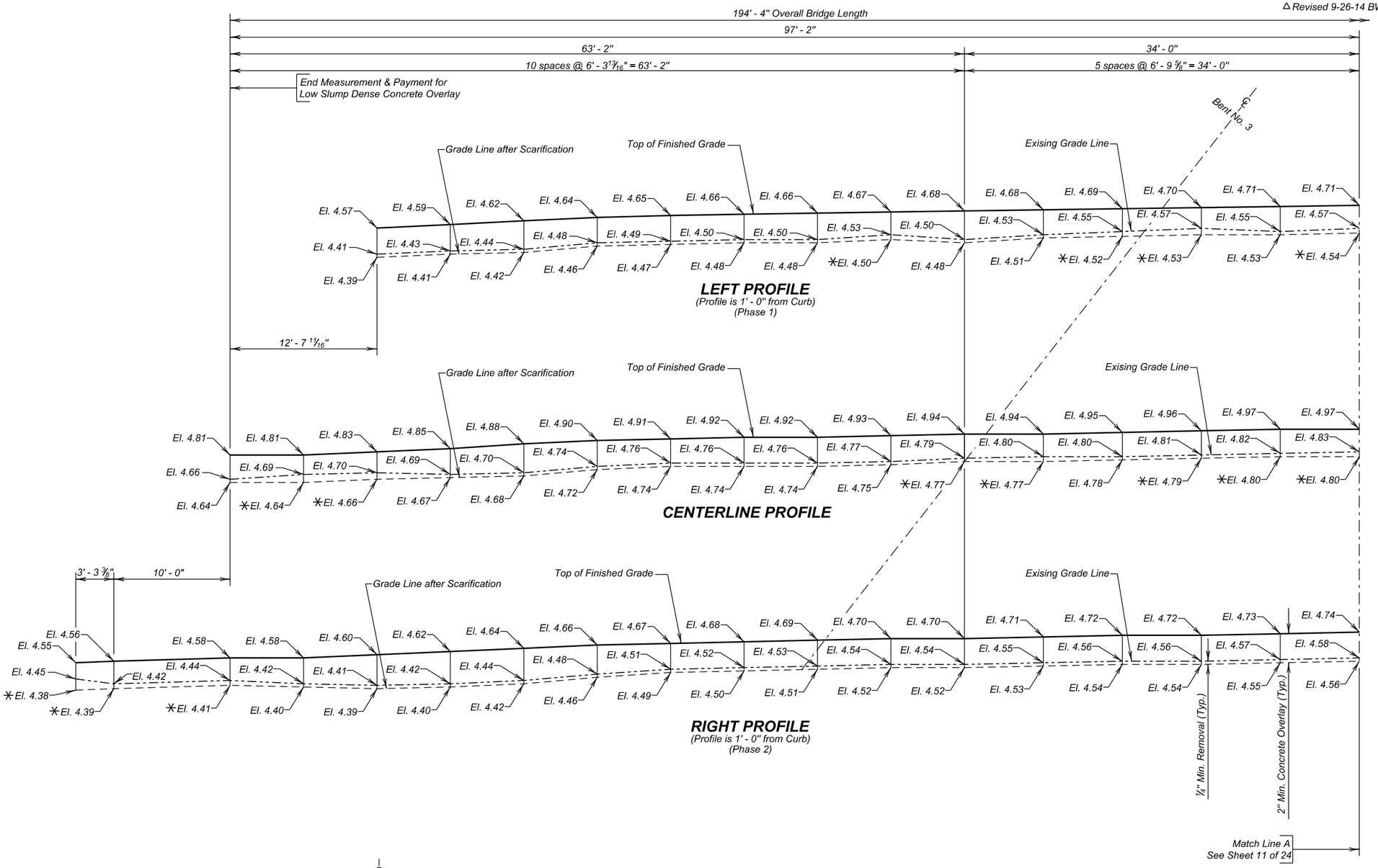

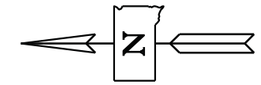

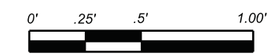

VERTICAL SCALE

Benchmark Description:

C. P. 13
-
Elevation 2601.2

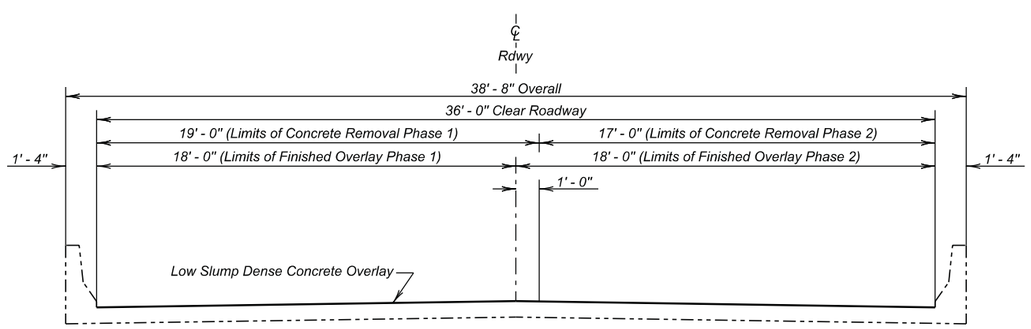

TYPICAL SECTION

NOTE :

Add 1970.00 to all elevations shown on profiles.

△ There is a hole that has been drilled in the deck near the northeast corner of the bridge above an area of berm erosion. This hole shall be plugged with low slump dense concrete.

✳ Scarify in excess of ¼" in these areas.

⊗ Existing Elevation is the same as the Finished Surface Elevation.

◊ Existing Elevation is higher than the Finished Surface Elevation.

DECK PROFILES FOR LOW SLUMP DENSE CONCRETE OVERLAY
FOR
194' - 4" PRESTRESSED GIRDER BRIDGE

36' - 0" ROADWAY — 38° SKEW LHF
OVER OAK CREEK — SEC. 29 / 30-T22N-R27E
STR. NO. 16-580-075 — P 0063(42)252

CORSON COUNTY
S. D. DEPT. OF TRANSPORTATION
OCTOBER 2013

DESIGNED BY	CK. DES. BY	DRAFTED BY	
NP	KH	KR	Kevin N. Goeden
CORS02HG	02HGLG10		BRIDGE ENGINEER

STATE OF	PROJECT	SHEET NO.	TOTAL SHEETS
S.D.	P 0063(42)252	E92	E105

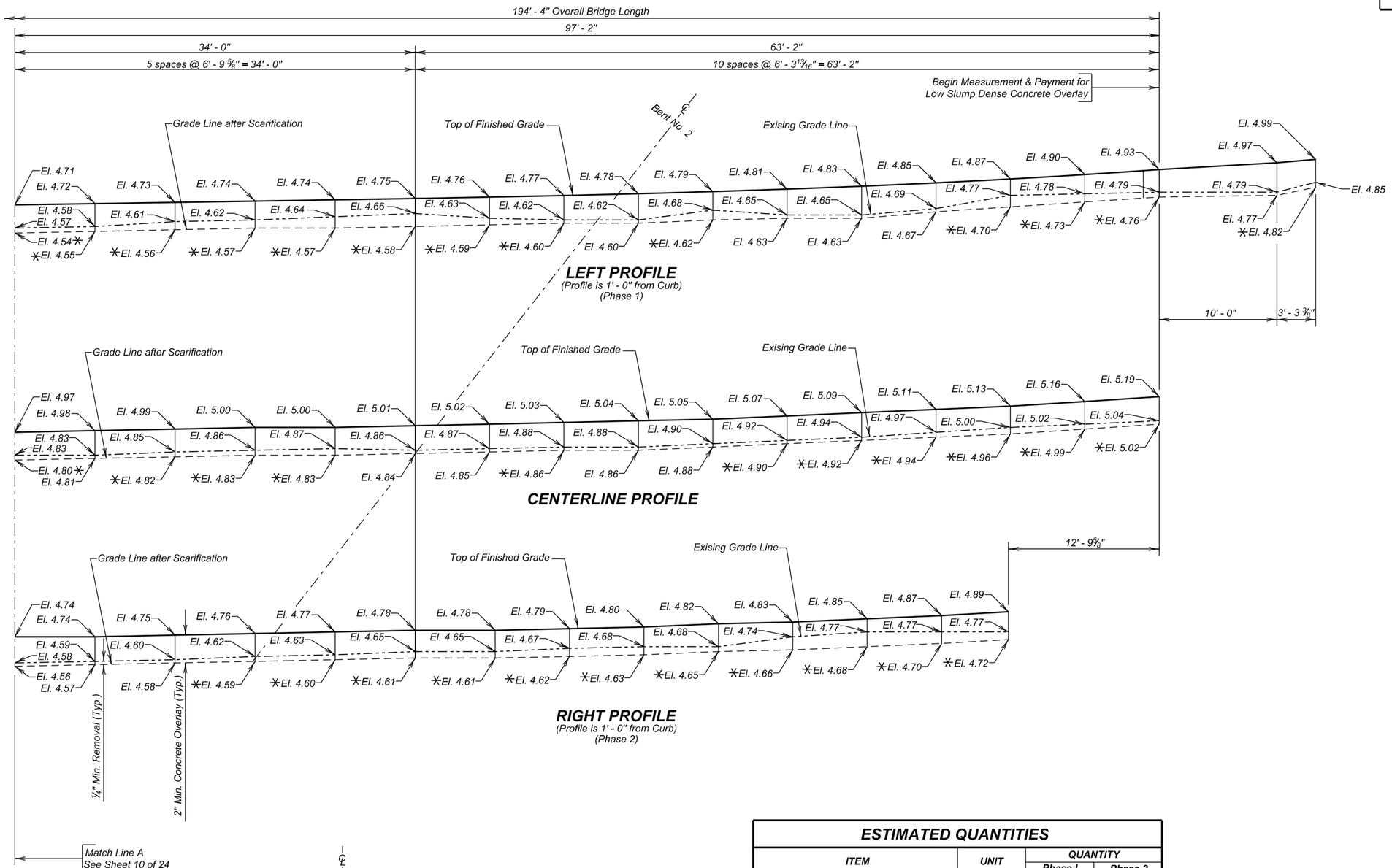

Benchmark Description:

C.P. 13
-
Elevation 2601.2

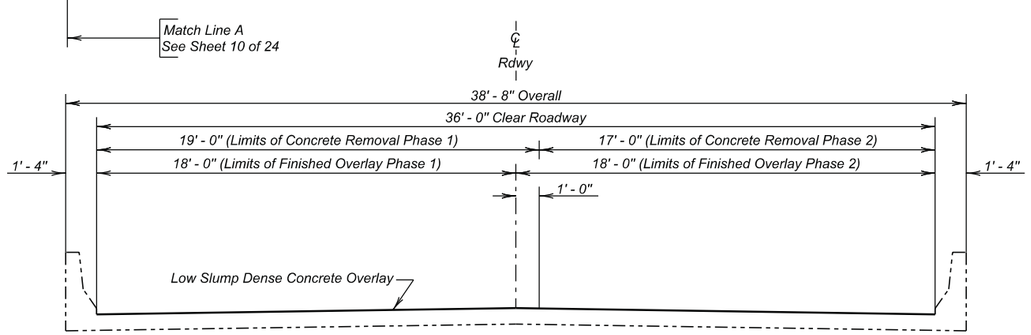

TYPICAL SECTION

ESTIMATED QUANTITIES

ITEM	UNIT	QUANTITY	
		Phase I	Phase 2
Low Slump Dense Concrete Deck Overlay	Cu. Yd.	25.7	25.9
Concrete Removal Type 1A	Sq. Yd.	410.3	367.1
Concrete Removal Type 1B	Sq. Yd.	41.0	36.7
Concrete Removal Type 1C	Sq. Yd.	20.5	18.4
Concrete Removal Type 1D	Sq. Yd.	20.5	18.4
Concrete Removal Type B	Ft.	10.0	10.0
Class A45 Concrete Fill	Cu. Yd.	5.0	4.5
Finishing and Curing	Sq. Yd.	388.7	388.7

NOTE :

Add 1970.00 to all elevations shown on profiles.

⚹ Scarify in excess of ¼" in these areas.

⊗ Existing Elevation is the same as the Finished Surface Elevation.

◊ Existing Elevation is higher than the Finished Surface Elevation.

DECK PROFILES FOR LOW SLUMP DENSE CONCRETE OVERLAY (CONTINUED)
FOR

194' - 4" PRESTRESSED GIRDER BRIDGE

36' - 0" ROADWAY — 38° SKEW LHF
OVER OAK CREEK — SEC. 29 / 30-T22N-R27E
STR. NO. 16-580-075 — P 0063(42)252

CORSON COUNTY
S. D. DEPT. OF TRANSPORTATION
AUGUST 2013

DESIGNED BY	CK. DES. BY	DRAFTED BY	
NP	KH	KR	Kevin N. Boeden
CORS02HG	02HGLG11		BRIDGE ENGINEER

STATE OF	PROJECT	SHEET NO.	TOTAL SHEETS
S.D.	PH 0014(172)418	E93	E105

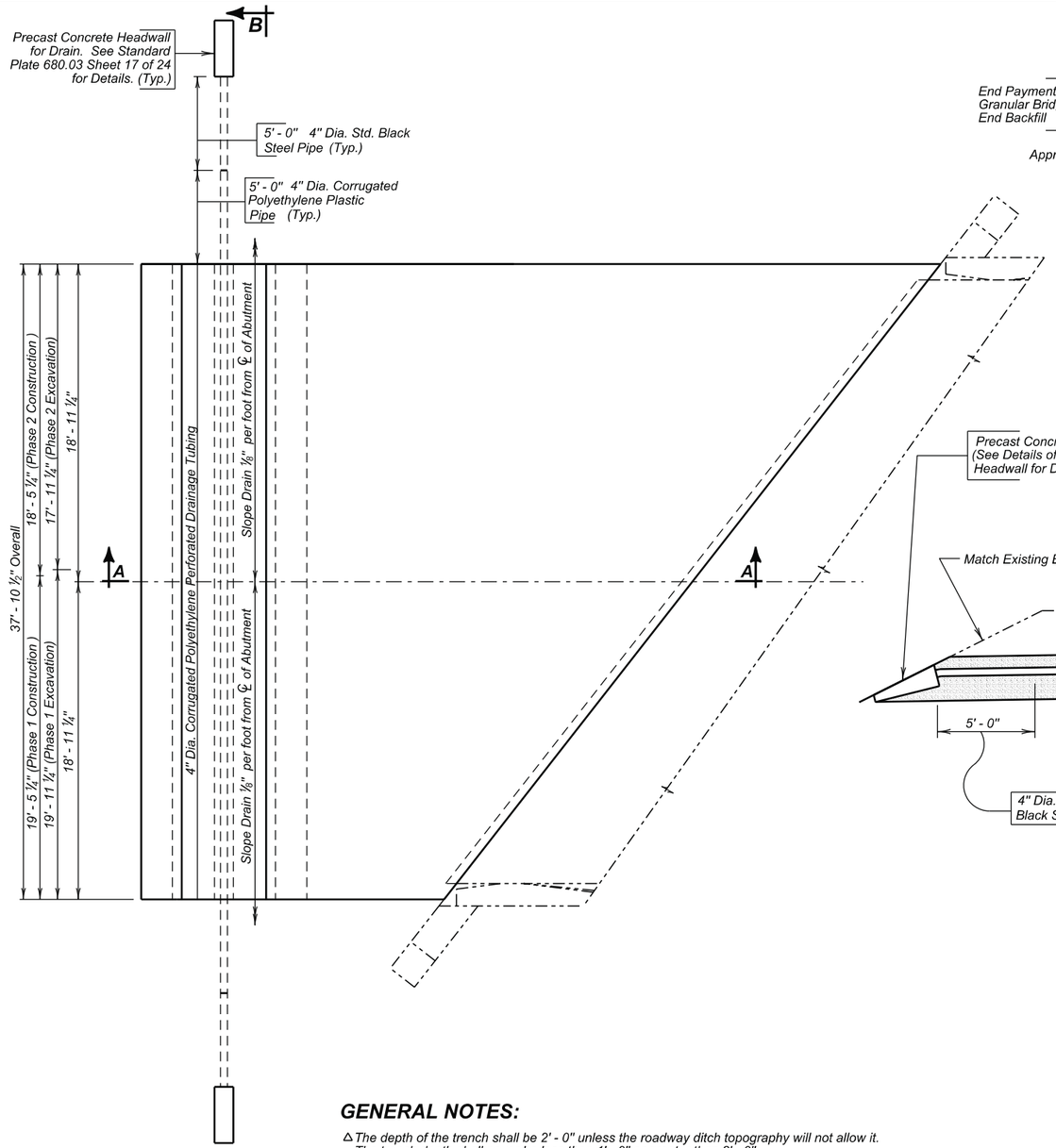

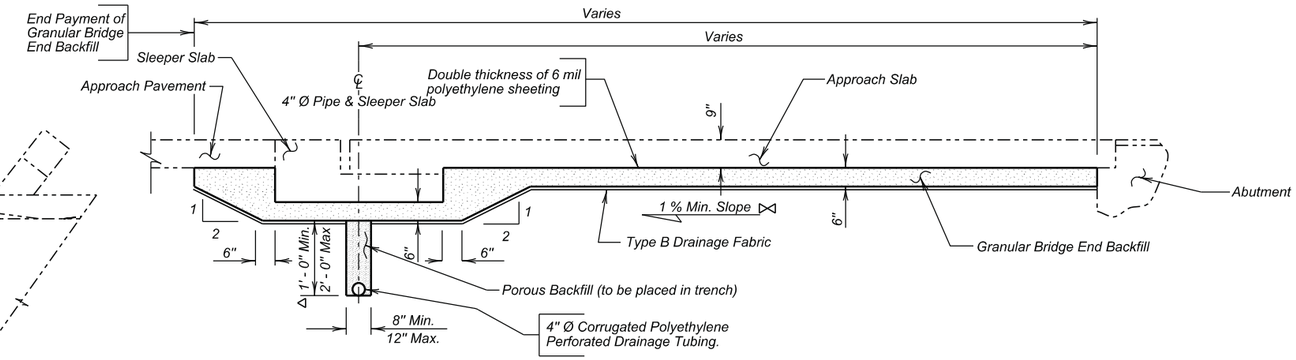

SEC. A - A

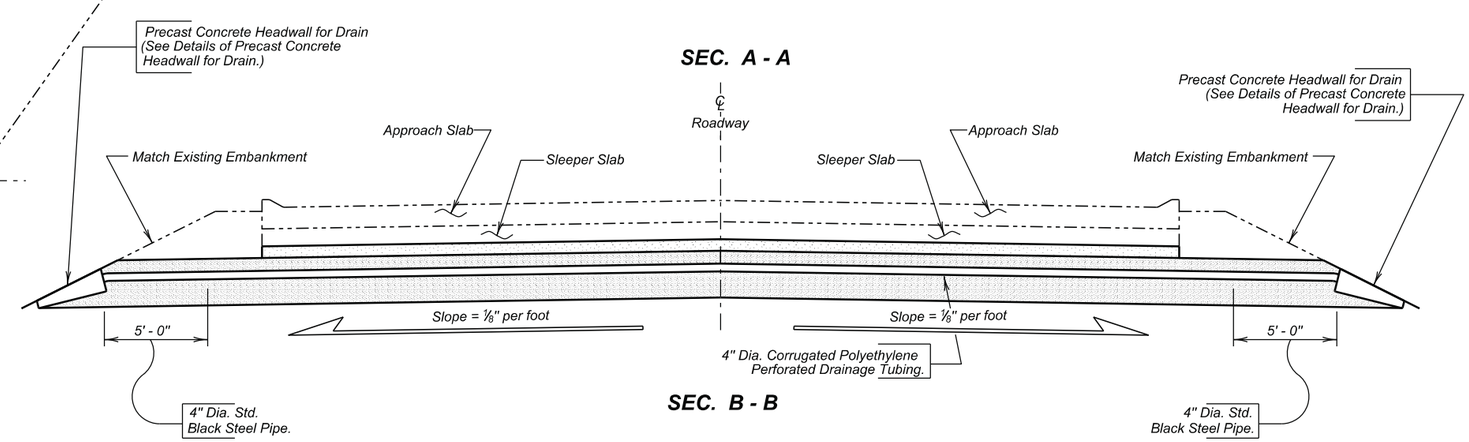

SEC. B - B

GENERAL NOTES:

△ The depth of the trench shall be 2' - 0" unless the roadway ditch topography will not allow it. The trench depth shall never be less than 1' - 0" or greater than 2' - 0".

⊕ The centerline of the trench may be adjusted by one foot toward or away from the bridge, as approved by the Engineer, to miss the location of the guardrail posts.

⋈ For locations where the approach slab is on a zero grade to one percent grade provide this minimum slope. For all other grades finish this surface to match the finished grade of the approach slab.

≠ The exact length of the 4" Dia. Corrugated Polyethylene Slotted Drainage Tubing shall be field determined. The length shown is an estimate based on the original construction plans.

PLAN

(Bridge End Backfill shown adjacent to Abutment No. 4, Abutment No. 1 similiar by opposite hand.)

ESTIMATED QUANTITIES

(For both Ends of Bridge)

	ITEM	UNIT	PHASE 1 QUANTITY	PHASE 2 QUANTITY
⊛	Granular Bridge End Backfill	Cu.Yd.	32.9	29.6
	Approach Slab Underdrain Excavation	Cu.Yd.	35.8	32.2
✳	4" Underdrain Pipe	Ft.	58.9	56.9
	Precast Concrete Headwall for Drain	Each	2	2
★	Porous Backfill	Ton	5.6	5.0

✳ For informational purposes only, 10 feet of 4" Diameter Standard Black Steel Pipe is needed for each phase which is contained in the above bid items.

★ For estimating Purposes only, a factor of 1.89 tons/cu. yd. was used to convert Cu.Yd. to Ton. Quantities shown are based on a 2 foot x 12 inch trench.

⊛ Includes 514 Sq. Yd. of 6 mil. Polyethylene Sheeting (not including laps) and 266 Sq. Yd. of Type B Drainage Fabric.

APPROACH SLAB UNDERDRAIN DETAILS
FOR
194' - 4" PRESTRESSED GIRDER BRIDGE

36' - 0" ROADWAY — 38° SKEW LHF
OVER OAK CREEK — SEC. 29/30-T22N-R27E
STR. NO. 16-580-075 — P 0063(42)252

CORSON COUNTY
S. D. DEPT. OF TRANSPORTATION
OCTOBER 2013

DESIGNED BY	CK DES BY	DRAFTED BY	
BWS	KH	EJA	Kevin N. Goeden BRIDGE ENGINEER
CORS02HG	02HGLG12		

STATE OF	PROJECT	SHEET NO.	TOTAL SHEETS
S.D.	P 0063(42)252	E94	E105

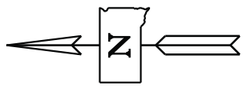

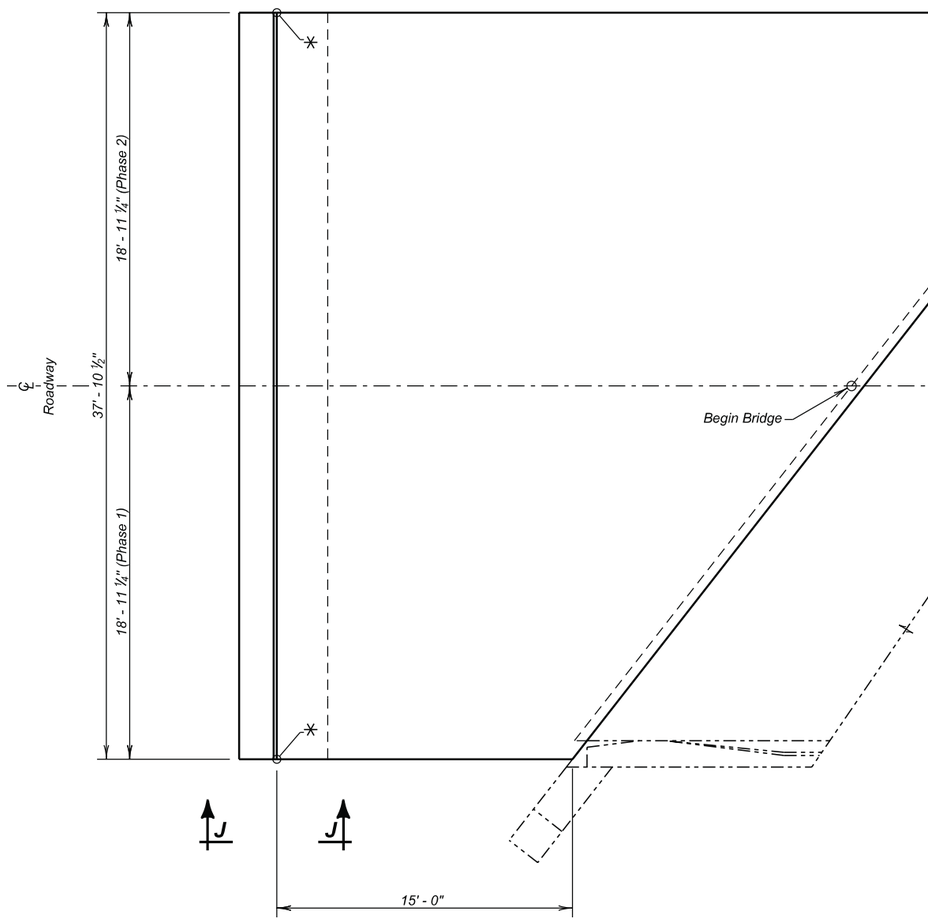

PLAN

(Abutment No. 4)

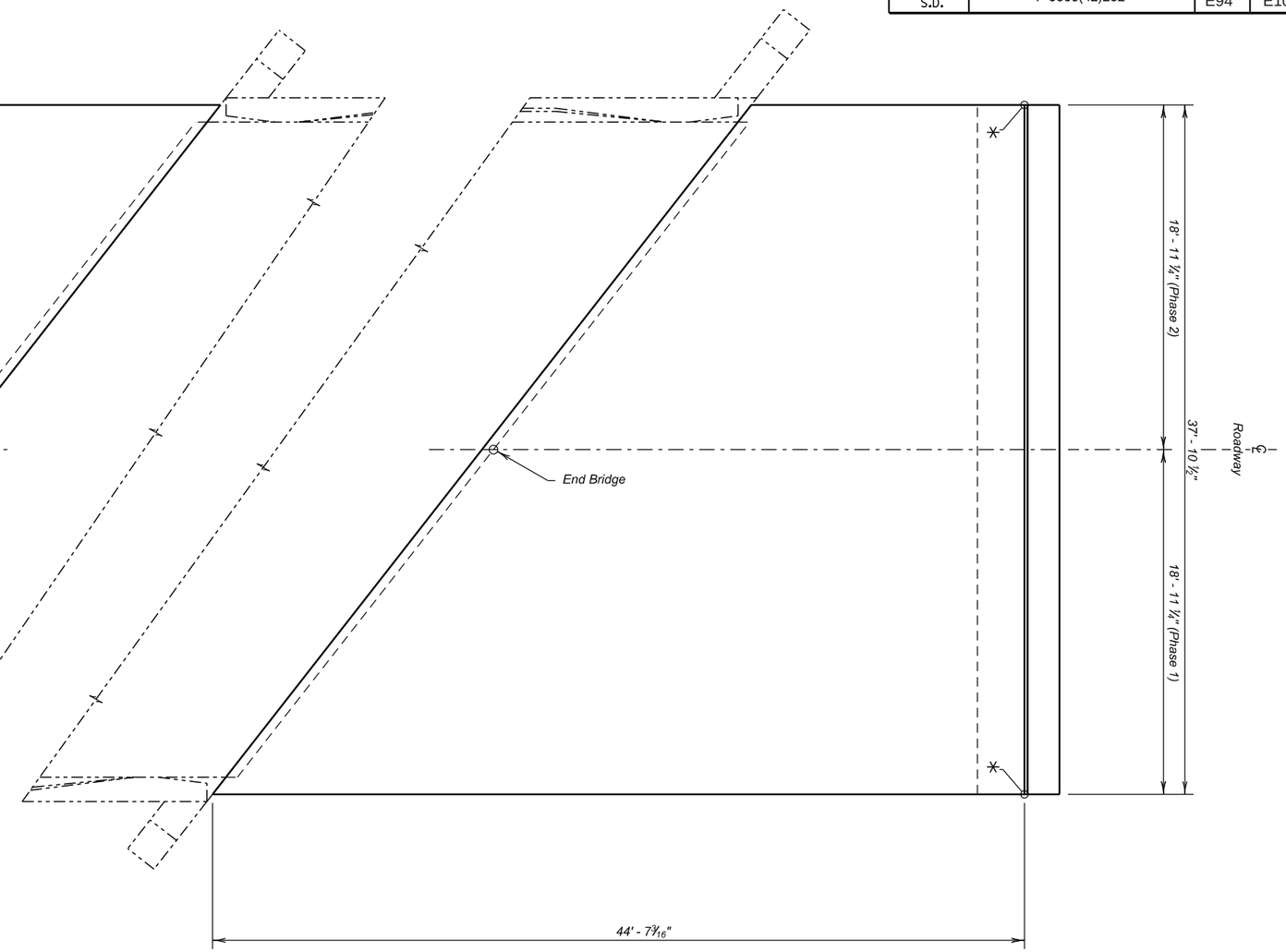

PLAN

(Abutment No. 1)

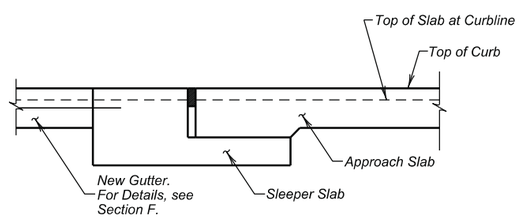

VIEW J - J

✳ *Elevation is Top of Slab back of curb at this point. See Approach Slab Notes.*

APPROACH SLAB LAYOUT

FOR

194' - 4" PRESTRESSED GIRDER BRIDGE

36' - 0" ROADWAY — 38° SKEW L.H.F.

OVER OAK CREEK — SEC. 29 / 30-T22N-R27E

STR. NO. 16-580-075 — P 0063(42)252

CORSON COUNTY

S. D. DEPT. OF TRANSPORTATION

OCTOBER 2013

DESIGNED BY	CK. DES. BY	DRAFTED BY	
BWS	KH	KR	Kevin N. Boeden
CORS02HG	02HGRG13		BRIDGE ENGINEER

STATE OF	PROJECT	SHEET NO.	TOTAL SHEETS
S.D.	P 0063(42)252	E95	E105

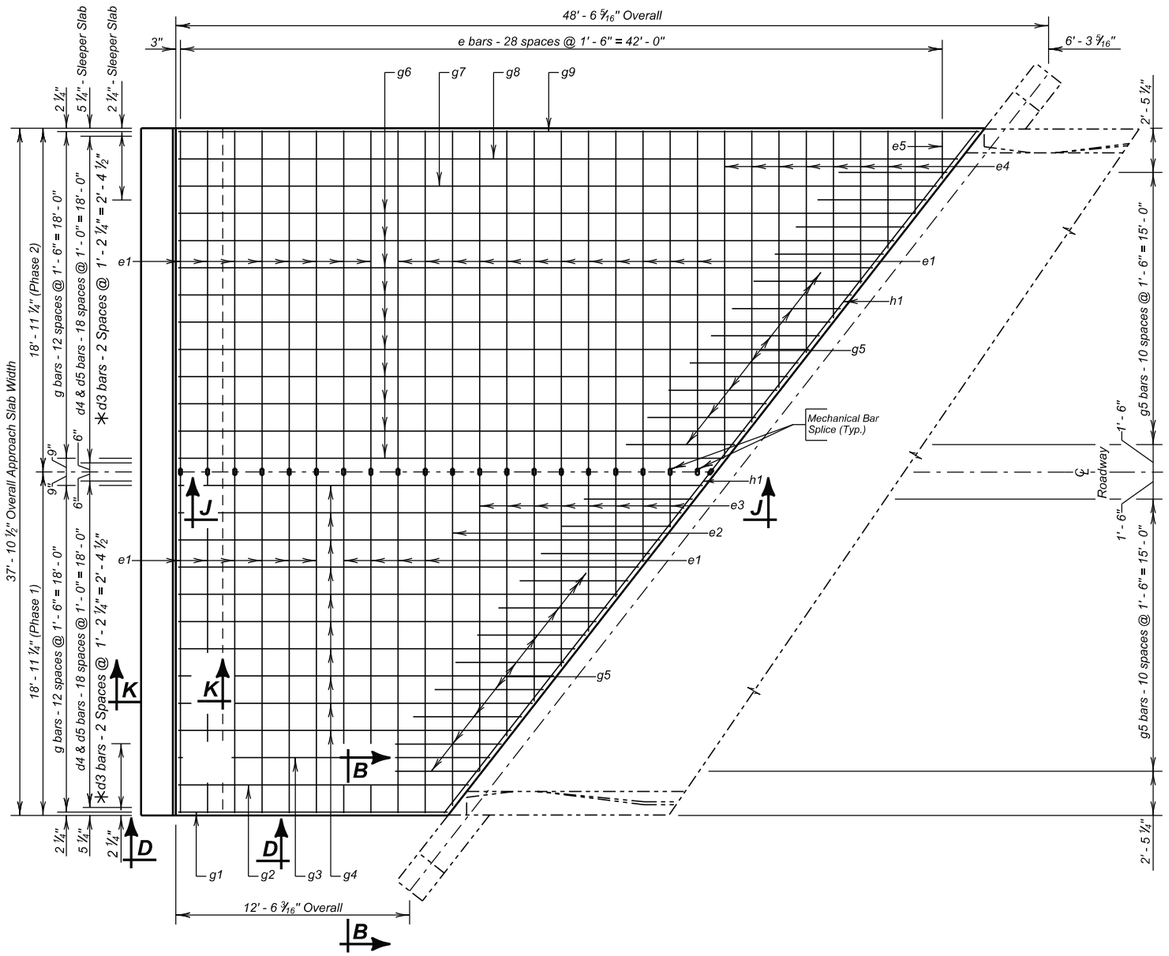

PLAN
(Top Steel Shown)
(Approach slab shown to Abutment No. 4)
(Approach slab adjacent to Abutment No. 1 similar by rotation)

✳ D3 Bars will only be placed in Sleeper Slab adjacent to Abutment 4.
See Section F for curb location and details.

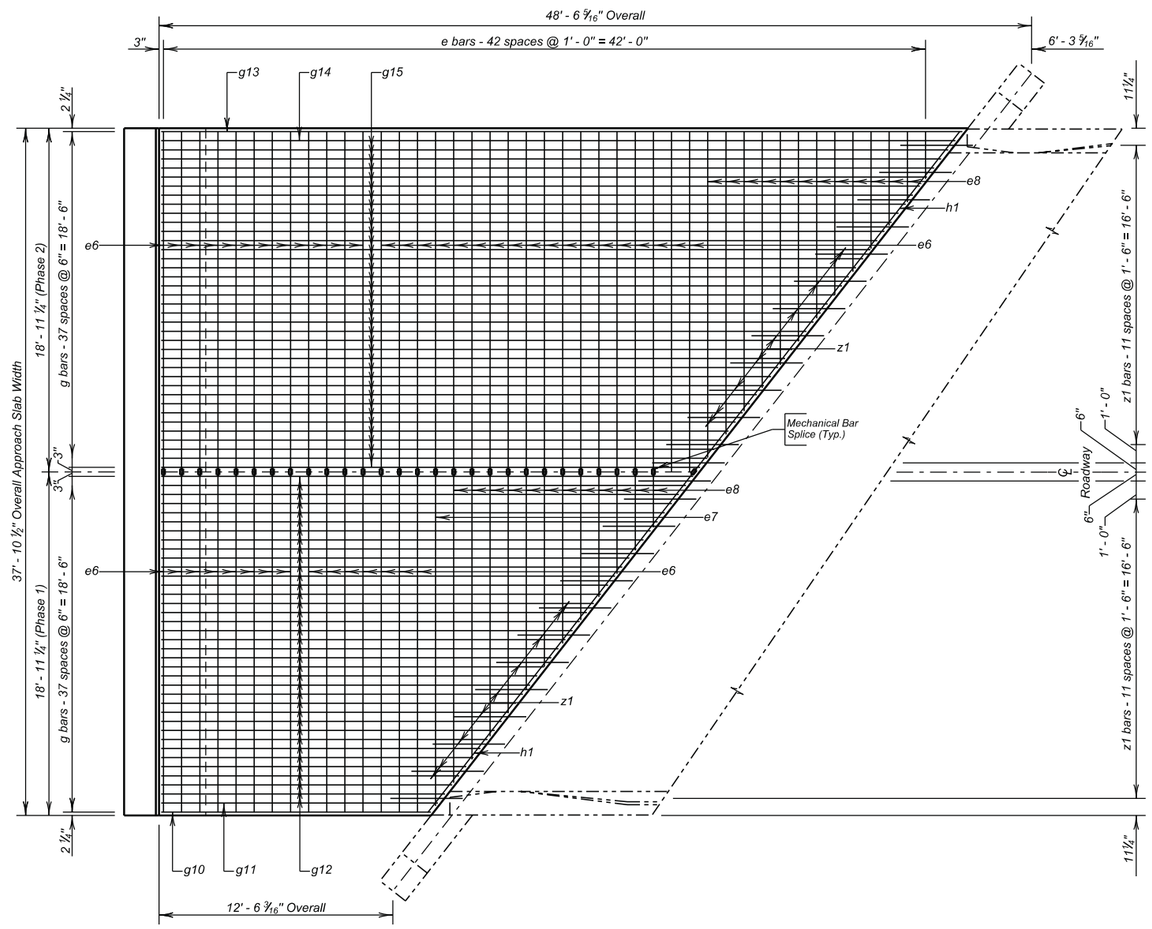

PLAN
(Bottom Steel Shown)
(Approach slab shown to Abutment No. 4)
(Approach slab adjacent to Abutment No. 1 similar by rotation)

APPROACH SLAB DETAILS
FOR
194' - 4" PRESTR. CONC. GIRDER BRIDGE

36' - 0" ROADWAY — 38° SKEW L.H.F.
OVER OAK CREEK — SEC. 29 / 30-T22N-R27E
STR. NO. 16-580-075 — P 0063(42)252

CORSON COUNTY
S. D. DEPT. OF TRANSPORTATION
OCTOBER 2013

DESIGNED BY	CK. DES. BY	DRAFTED BY	
BWS	KH	KR	Kevin N. Goeden
CORS02HG	02HGRG14		BRIDGE ENGINEER

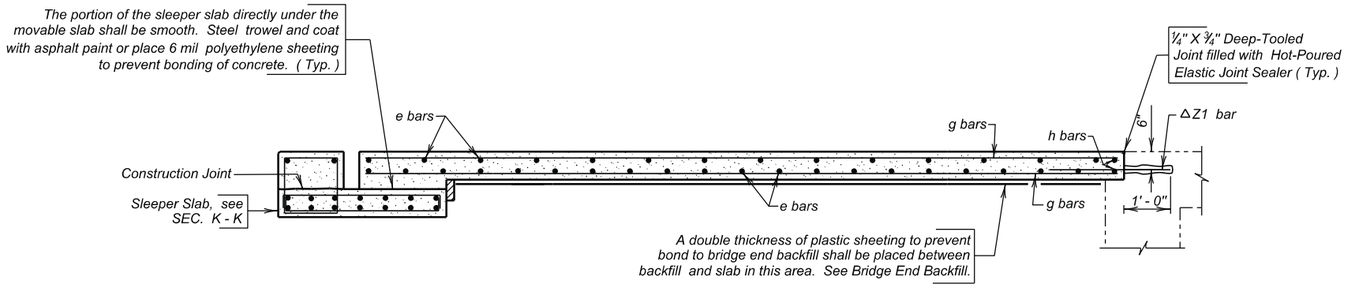

SEC. J - J

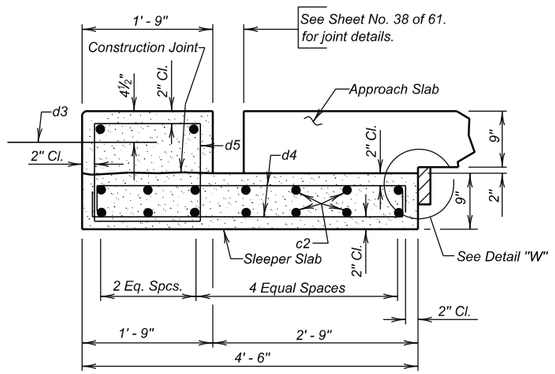

SEC. K - K
(Sleeper Slab)

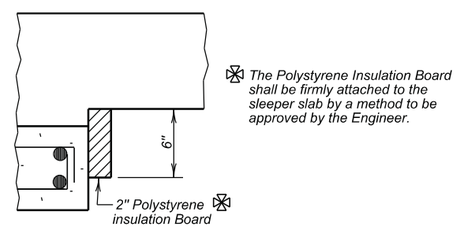

DETAIL "W"

REINFORCING SCHEDULE
(For Two Approach and Sleeper Slabs)

Bending Details

	PHASE I				
	Mk.	No.	Size	Length	Type
	c1	32	5	18' - 9"	Str.
	d3	6	4	2' - 0"	Str.
	d4	76	4	5' - 0"	2
	d5	38	4	6' - 1"	T2
⌀	e1	30	4	18' - 9"	Str.
⌀	e2	1	4	18' - 5"	Str.
✳⌀	e3	4	4	19' - 6"	Str.
✳	e4	4	4	22' - 7"	Str.
	e5	1	4	2' - 8"	Str.
⌀	e6	45	6	18' - 9"	Str.
	e7	1	6	18' - 5"	Str.
✳⌀	e8	6	6	20' - 3"	Str.
	e9	6	6	21' - 10"	Str.
	e10	1	6	2' - 8"	Str.
	g1	1	4	14' - 10"	Str.
	g2	1	4	16' - 0"	Str.
	g3	1	4	17' - 2"	Str.
✳	g4	5	4	47' - 3"	Str.
	g5	22	4	6' - 0"	Str.
✳	g6	5	4	70' - 8"	Str.
	g7	1	4	41' - 9"	Str.
	g8	1	4	42' - 11"	Str.
	g9	1	4	44' - 1"	Str.
	g10	1	8	14' - 10"	Str.
	g11	1	8	15' - 3"	Str.
✳	g12	18	8	44' - 11"	Str.
	g13	1	8	44' - 1"	Str.
	g14	1	8	43' - 9"	Str.
✳	g15	18	8	73' - 1"	Str.
⌀	h1	4	6	23' - 10"	Str.
△	z1	24	6	4' - 0"	Str.

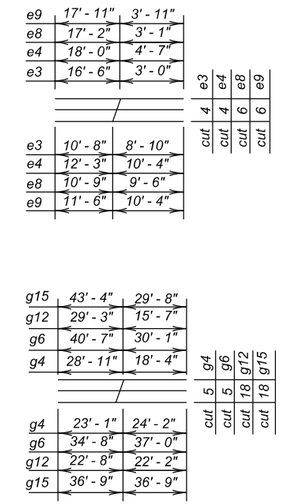

	PHASE 2				
	Mk.	No.	Size	Length	Type
	c1	32	5	18' - 9"	Str.
	d3	6	4	2' - 0"	Str.
	d4	76	4	5' - 0"	2
	d5	38	4	6' - 1"	T2
⌀	e1	30	4	18' - 9"	Str.
⌀	e2	1	4	18' - 5"	Str.
✳⌀	e3	4	4	19' - 6"	Str.
✳	e4	4	4	22' - 7"	Str.
	e5	1	4	2' - 8"	Str.
⌀	e6	45	6	18' - 9"	Str.
	e7	1	6	18' - 5"	Str.
✳⌀	e8	6	6	20' - 3"	Str.
	e9	6	6	21' - 10"	Str.
	e10	1	6	2' - 8"	Str.
	g1	1	4	14' - 10"	Str.
	g2	1	4	16' - 0"	Str.
	g3	1	4	17' - 2"	Str.
✳	g4	5	4	47' - 3"	Str.
	g5	22	4	6' - 0"	Str.
✳	g6	5	4	70' - 8"	Str.
	g7	1	4	41' - 9"	Str.
	g8	1	4	42' - 11"	Str.
	g9	1	4	44' - 1"	Str.
	g10	1	8	14' - 10"	Str.
	g11	1	8	15' - 3"	Str.
✳	g12	18	8	44' - 11"	Str.
	g13	1	8	44' - 1"	Str.
	g14	1	8	43' - 9"	Str.
✳	g15	18	8	73' - 1"	Str.
⌀	h1	4	6	23' - 10"	Str.
△	z1	24	6	4' - 0"	Str.

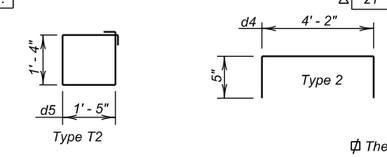

NOTES:
All Dimensions are out to out of bars.
All Bars to be Epoxy Coated.
✳ Cut Bars
△ Dowels

⌀ These bars shall be spliced with mechanical splice devices
Equivalent Splice Lengths
No. 4 - 2' - 0"
No. 5 - 2' - 6"
No. 6 - 3' - 0"

NOTE:
This sheet to be used in conjunction with Sheet Nos. 13 & 14 of 24.

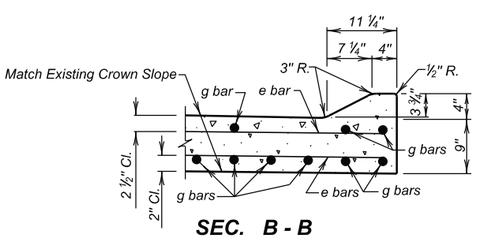

SEC. B - B

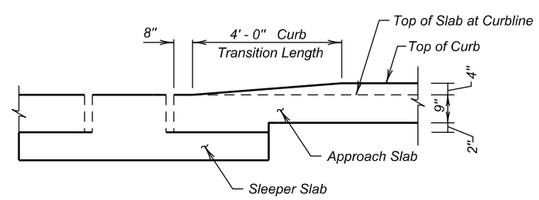

VIEW D - D
(Transition only for ends without curb extension.)

ESTIMATED QUANTITIES
(For Two Approach and Sleeper Slabs)

ITEM	UNIT	PHASE I QUANTITY	PHASE 2 QUANTITY
Concrete Approach Slab for Bridge	Sq. Yd.	125.4	125.4
Concrete Approach Sleeper Slab for Bridge	Sq. Yd.	18.9	18.9
No. 4 Rebar Splice	Each	38	–
No. 5 Rebar Splice	Each	32	–
No. 6 Rebar Splice	Each	62	–
Remove Concrete Bridge Approach Slab	Sq. Yd.	134.0	134.0
Install Dowel in Concrete	Each	24	24

	PHASE I	PHASE 2
1. Concrete in Approach Slabs.	31.4 Cu. Yd.	31.4 Cu. Yd.
2. Epoxy Coated Re-Steel in Approach Slabs.	9047.9 Lb.	9047.9 Lb.
3. Concrete in Sleeper Slabs	7.0 Cu. Yd.	7.0 Cu. Yd.
4. Epoxy Coated Re-Steel in Sleeper Slabs.	1034.1 Lb.	1034.1 Lb.

Items 1 thru 4 are approximate quantities contained in the above bid item and are for information only.

APPROACH SLAB DETAILS CONTINUED
FOR
194' - 4" PRESTR. CONC. GIRDER BRIDGE

36' - 0" ROADWAY — 38° SKEW L.H.F.
OVER OAK CREEK — SEC. 29 / 30-T22N-R27E
STR. NO. 16-580-075 — P 0063(42)252

CORSON COUNTY
S. D. DEPT. OF TRANSPORTATION
OCTOBER 2013

DESIGNED BY	CK. DES. BY	DRAFTED BY	
BWS	KH	KR	Kevin N. Boeden BRIDGE ENGINEER
CORS02HG	02HGRG15		

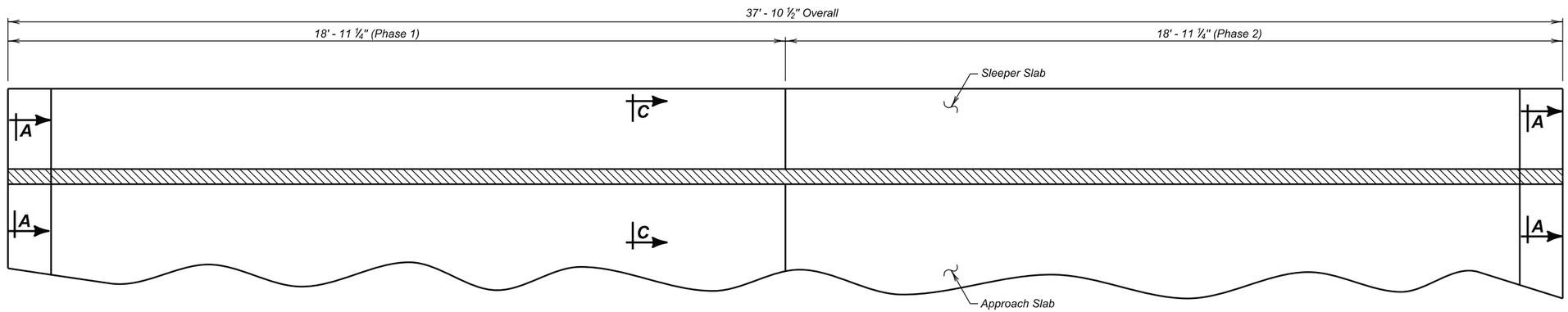

PLAN

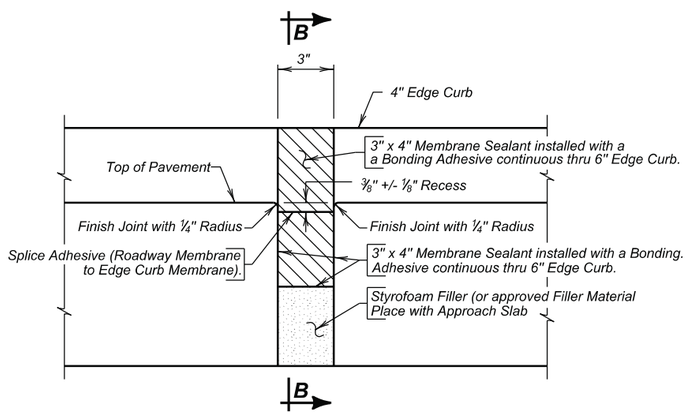

SECTION A - A

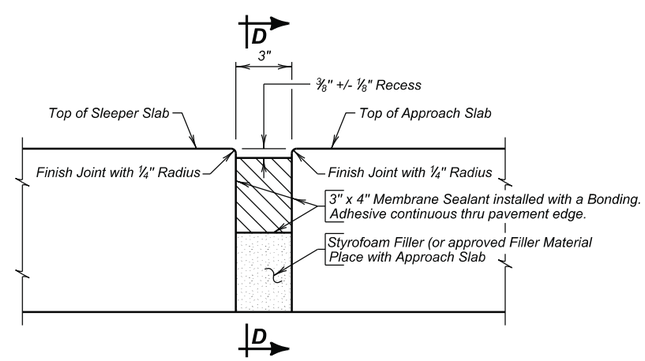

SECTION C - C

ESTIMATED QUANTITIES

ITEM	UNIT	Phase 1	Phase 2
Membrane Sealant Expansion Joint	Ft.	37.9	37.9

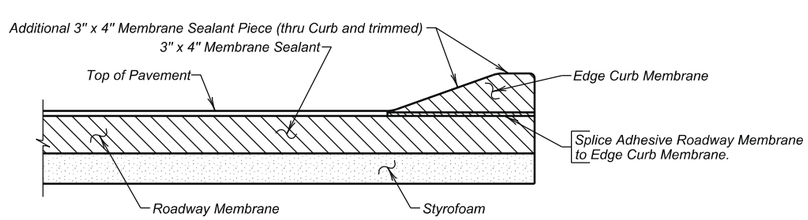

SECTION B - B

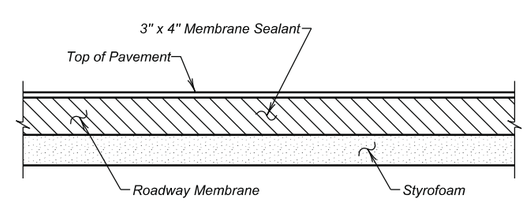

SECTION D - D

APPROACH SLAB JOINT DETAILS

FOR

194' - 4" PRESTRESSED GIRDER BRIDGE

36' - 0" ROADWAY — 38° SKEW LHF
OVER OAK CREEK — SEC. 29/30-T22N-R27E
STR. NO. 16-580-075 — P 0063(42)252

CORSON COUNTY

S. D. DEPT. OF TRANSPORTATION

OCTOBER 2013

DESIGNED BY	CK DES BY	DRAFTED BY	
BWS	KH	BWS	Kevin N. Coeden BRIDGE ENGINEER
CORS02HG	02HGLF16		

YEAR PLATE DETAILS FOR ORIGINAL CONSTRUCTION

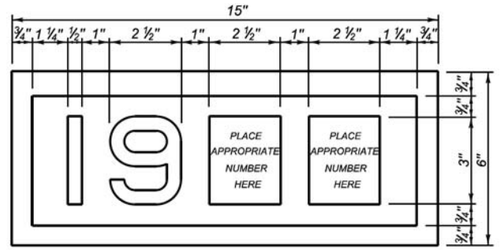

YEAR PLATE DETAILS FOR NEW CONSTRUCTION

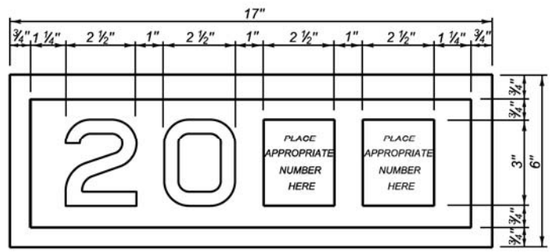

GENERAL NOTES:

1. Year plates of the general dimensions shown shall be constructed on all box culverts and bridges. The year plates shall be constructed in reverse and attached to the forms in such a manner that the finished imprint in the concrete does not exceed one-half (½) inch in depth.
2. Year plates shall be located on structure(s) as follows:
   a. On cast-in-place box culverts the year plates shall be four and one - half (4 ½) inches below the top of the upstream parapet wall and centered laterally on the upstream face. On precast box culverts the year plate shall be centered laterally on the upstream face of the top slab. Where an extended interior wall interferes with this location, the year plate shall be centered in an adjacent barrel.
   b. On bridges with six (6) inch curbs or "Jersey" shaped barriers with no endblocks, the year plate shall be centered vertically on the curb face approximately six (6) inches from the end of the bridge, or as designated by the Engineer. On bridges with "Jersey" shaped barrier endblocks, the year plate shall be centered on the upper sloped portion of the barrier approximately 5'- 6" from the end of the bridge, or as designated by the Engineer. There shall be one year plate at each end of the bridge on opposite sides.
   c. When the plans specify that both the original date of construction and the date of reconstruction are to be shown, one date shall be placed as listed above and the other located adjacent to it. Both year plates shall be shown at each end of the bridge on opposite sides.
3. There will be no separate measurement or payment made for year plates on box culverts and bridges. All costs for this work shall be incidental to other contract items.

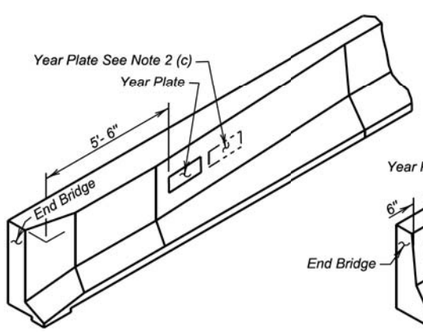

JERSEY BARRIER
(With Endblock)

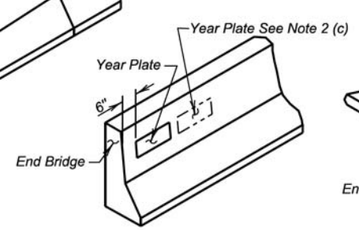

JERSEY BARRIER

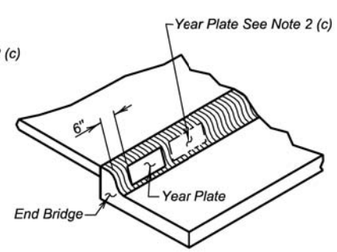

TYPE B CURB

June 26, 2012

Published Date: 3rd Qtr. 2014	SDDOT	DUAL DATE YEAR PLATE DETAILS	PLATE NUMBER 460.03
			Sheet 1 of 1

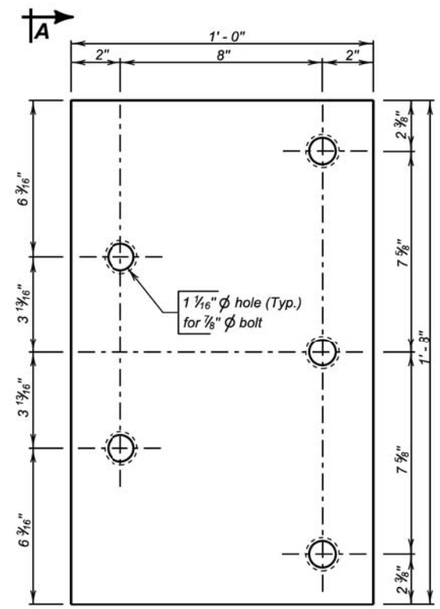

ELEVATION

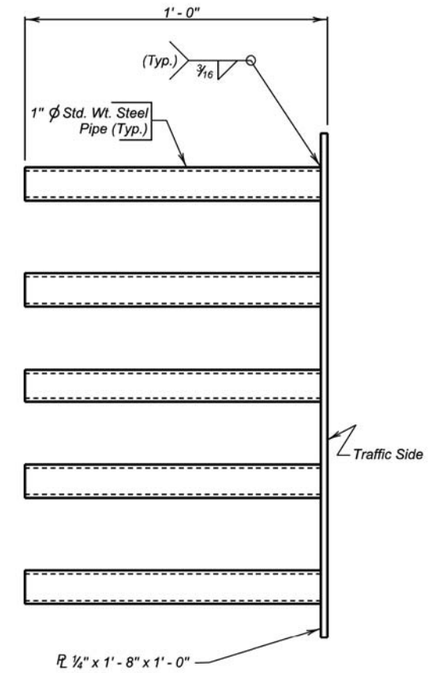

VIEW A - A

GENERAL NOTES:

1. Steel plate for the insert assembly shall conform to ASTM A709 Grade 36. The steel pipes shall conform to ASTM A53 or ASTM A500 Grade B.
2. Welding and weld inspection shall be in conformance with AWS D1.1 - (Current Year) Structural Welding Code - Steel.
3. After fabrication, galvanize in accordance with AASHTO M111 (ASTM A123).
4. Bolts, nuts, and washers shall be provided with each assembly. Bolts shall be galvanized and conform to the requirements of ASTM A307, A325, or A449. Plain washers shall be galvanized and conform to ASTM F844.
5. Bolt heads shall be placed on the traffic side of the endblock. Bolt projection at the back side of the insert shall not exceed 1 inch beyond the nut.
6. The cost of the 5 bolt insert plate assembly complete in place including welding and galvanizing shall be incidental to the contract unit price per Cubic Yard for " Class A45 Concrete, Miscellaneous ", " Class A45 Concrete, Bridge Deck ", or " Class A45 Concrete, Bridge Repair ", as applicable.

December 23, 2013

Published Date: 3rd Qtr. 2014	SDDOT	5 BOLT INSERT PLATE ASSEMBLY	PLATE NUMBER 630.92
			Sheet 1 of 1

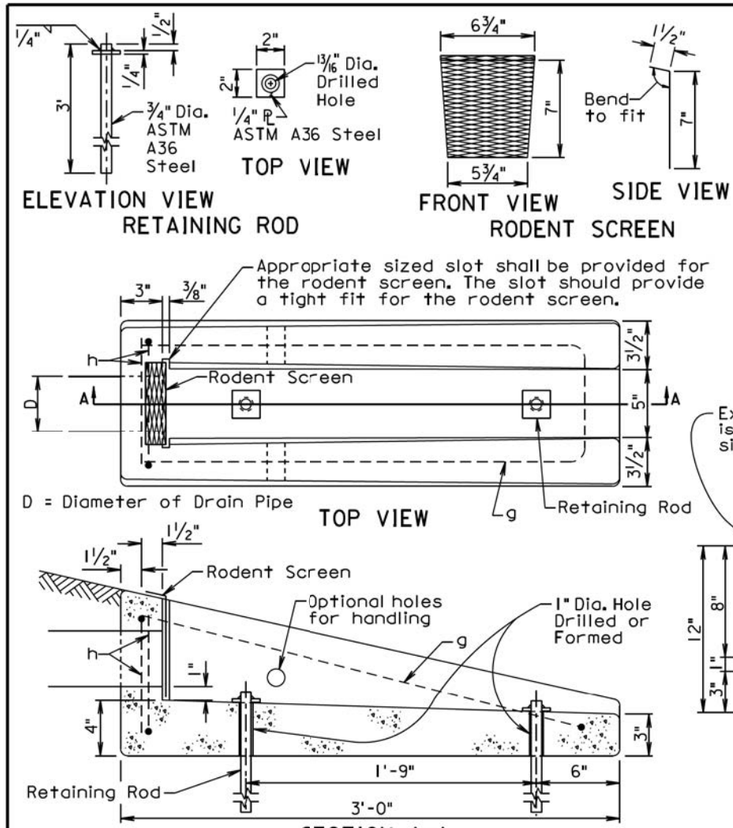

REINFORCING SCHEDULE

MK.	No.	Size	Length	Type
g	1	4	6'-3"	17
h	2	4	2'-4"	17

NOTE:
All dimensions are out to out of bars.

Bending Details

TYPE 17

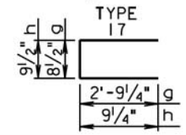

GENERAL NOTES:

The concrete shall be Class M6. The concrete shall conform to the requirements of section 462 of the Standard Specifications. It is estimated that each unit weighs approximately 210 pounds.

All reinforcing steel shall conform to ASTM A615 Grade 60 and shall be epoxy coated. The reinforcing steel shall be securely retained to prevent displacement during placement of concrete. It is estimated that 7.3 pounds of reinforcing steel is required for each unit.

The pipe shall be placed in the concrete headwall with the pipe end flush with the concrete surface adjacent to the rodent screen.

The rodent screen shall be galvanized 13 Ga. steel with a diamond shaped flattened mesh pattern. The size shall be 1/2". The size refers to the measurement across the smallest diamond shaped opening measured from the centers of the wires.

The retaining rod shall be galvanized in accordance with ASTM A123 after all shop welding has been completed.

The drawing indicates using 1/2" fillets; however, 3/4" chamfers may be substituted for the 1/2" fillets.

All costs for furnishing and installing the concrete headwall including equipment, labor, and materials including concrete, reinforcing steel, retaining rods, and rodent screen shall be incidental to the contract unit price per each for "Precast Concrete Headwall for Drain".

December 23, 2010

Published Date: 3rd Qtr. 2014	SDDOT	***PRECAST CONCRETE HEADWALL FOR DRAIN***	*PLATE NUMBER* 680.03
			Sheet 1 of 1

STATE OF S.D.	PROJECT	SHEET NO.	TOTAL SHEETS
	P 0063(42)252	E100	E105

NOTE:
T.S. @ C. EL. = Top of Slab at Curb Elevation
T.S. @ ℄ EL. = Top of Slab at Centerline Roadway Elevation

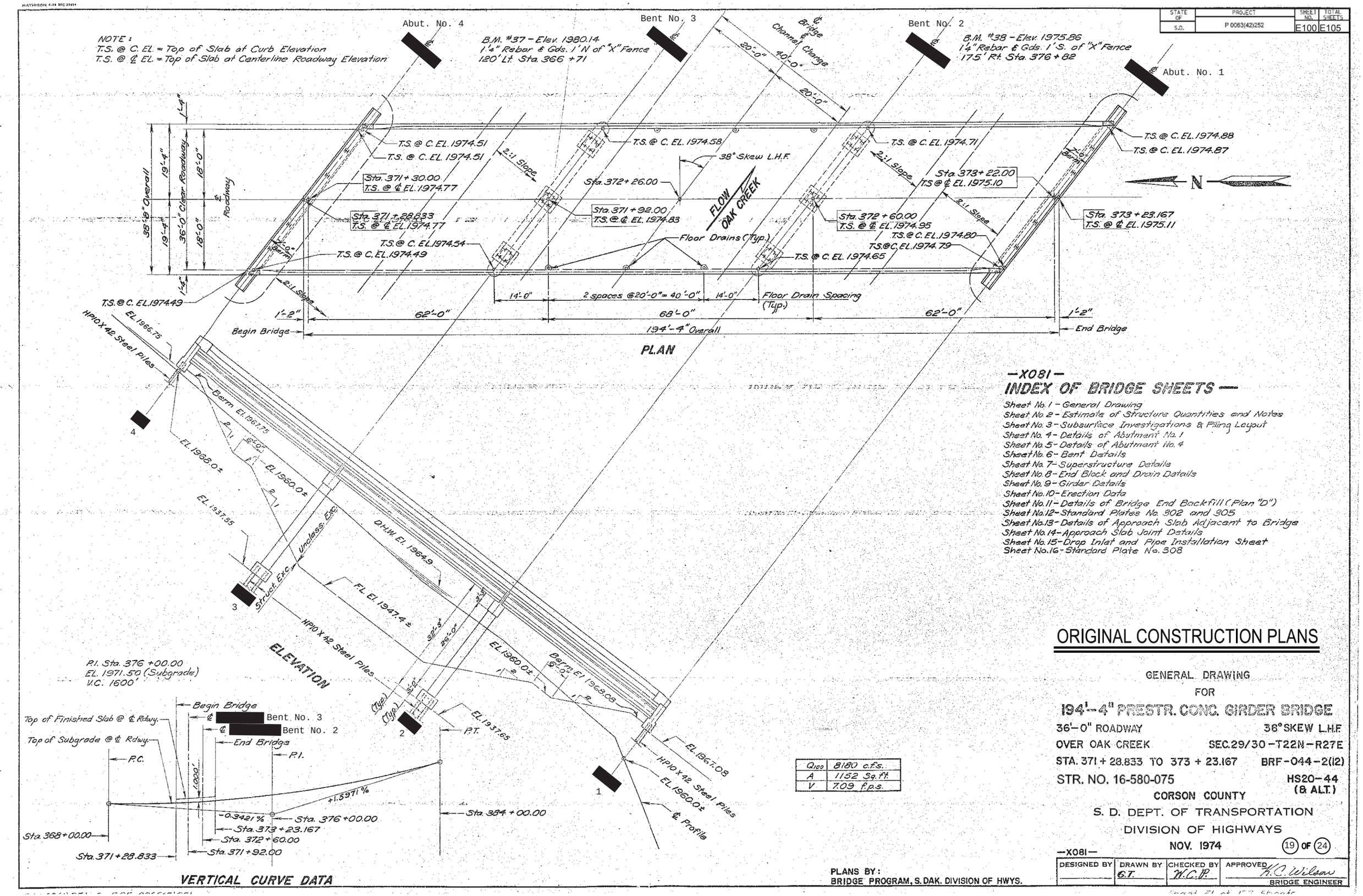

Q_{100}	8180 c.f.s.
A	1152 Sq. ft.
V	7.09 f.p.s.

—X081—

INDEX OF BRIDGE SHEETS

Sheet No. 1 - General Drawing
Sheet No. 2 - Estimate of Structure Quantities and Notes
Sheet No. 3 - Subsurface Investigations & Piling Layout
Sheet No. 4 - Details of Abutment No. 1
Sheet No. 5 - Details of Abutment No. 4
Sheet No. 6 - Bent Details
Sheet No. 7 - Superstructure Details
Sheet No. 8 - End Block and Drain Details
Sheet No. 9 - Girder Details
Sheet No. 10 - Erection Data
Sheet No. 11 - Details of Bridge End Backfill (Plan "D")
Sheet No. 12 - Standard Plates No. 302 and 305
Sheet No. 13 - Details of Approach Slab Adjacent to Bridge
Sheet No. 14 - Approach Slab Joint Details
Sheet No. 15 - Drop Inlet and Pipe Installation Sheet
Sheet No. 16 - Standard Plate No. 308

ORIGINAL CONSTRUCTION PLANS

GENERAL DRAWING
FOR
194'-4" PRESTR. CONC. GIRDER BRIDGE

36'-0" ROADWAY — 38° SKEW L.H.F.
OVER OAK CREEK — SEC. 29/30 - T22N - R27E
STA. 371 + 28.833 TO 373 + 23.167 — BRF-044-2(12)
STR. NO. 16-580-075 — HS20-44 (& ALT.)
CORSON COUNTY
S. D. DEPT. OF TRANSPORTATION
DIVISION OF HIGHWAYS
NOV. 1974

—X081—

PLANS BY:
BRIDGE PROGRAM, S. DAK. DIVISION OF HWYS.

DESIGNED BY	DRAWN BY	CHECKED BY	APPROVED
	G.T.	W.C.P.	K.C. Wilson BRIDGE ENGINEER

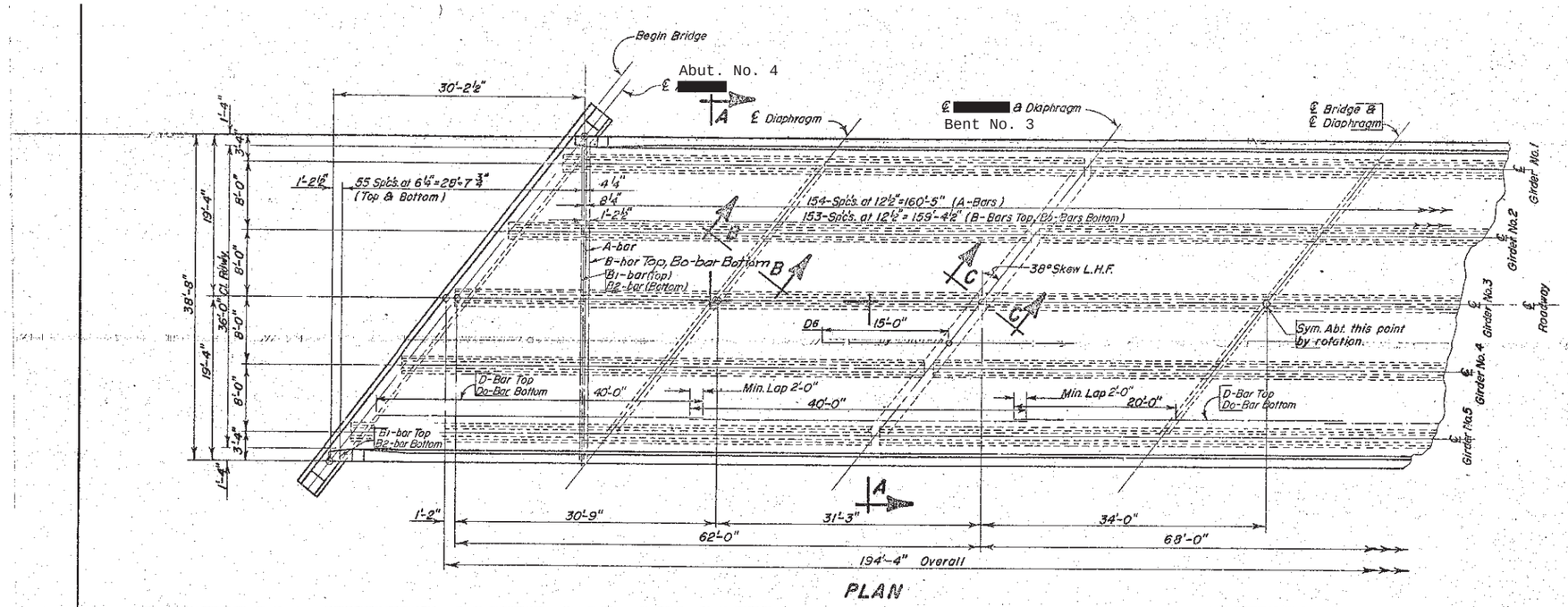

ORIGINAL CONSTRUCTION PLANS

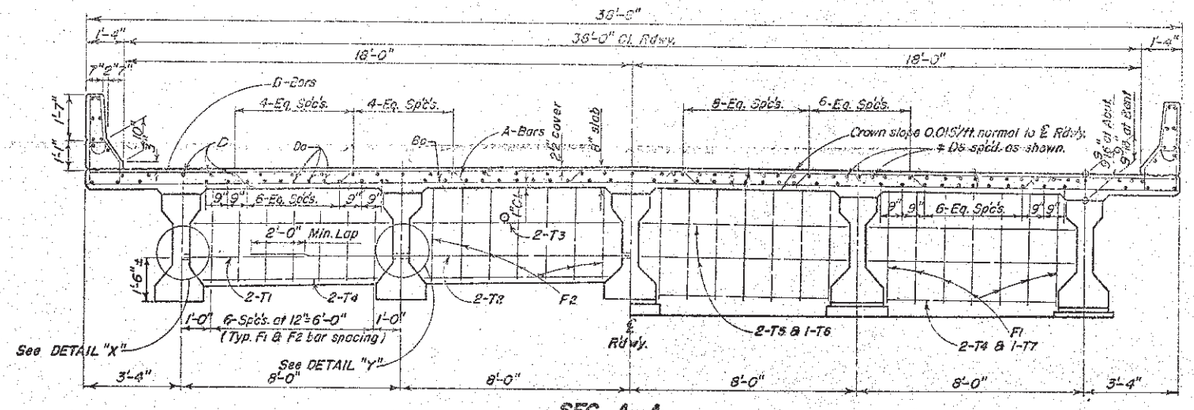

SEC. A-A

* Minimum clear cover.

‡ D & D6-Clear distance between parallel bars shall not be less than 1½".

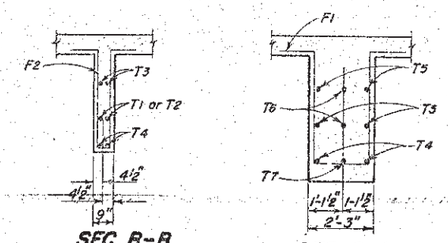

SEC. B-B

SEC. C-C

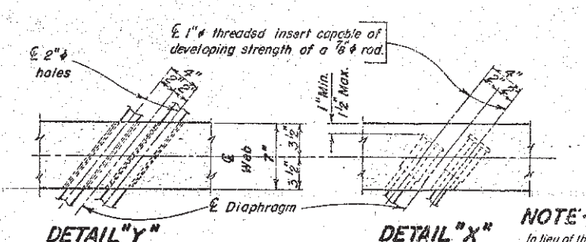

DETAIL "Y" (Interior Girders)

DETAIL "X" (Exterior Girders)

ESTIMATED QUANTITIES ※		
ITEM	UNIT	GRAND TOTAL
Class "A" Concrete—Bridge Deck	Cu. Yd.	263.8
Reinforcement Concrete—Bridge	Lb.	37,506
Prestr. Conc. Beam Type IV (36'-0")	No.	6
Prestr. Conc. Beam Type IV (36'-0")	No.	6
☆ Structural Steel	Lump Sum	Lump Sum
Bolt Treatment for Concrete Surfaces	Bolt	33
Epoxy Coated Reinforcing Steel	Lbs.	5,404

☆ The estimated weight of structural steel is for informational purposes 264 pounds. This is weight of 6 drains. See Sheet 8 of 16.

※ Includes Quantities for Barrier Curbs. See sheet 8 of 16.

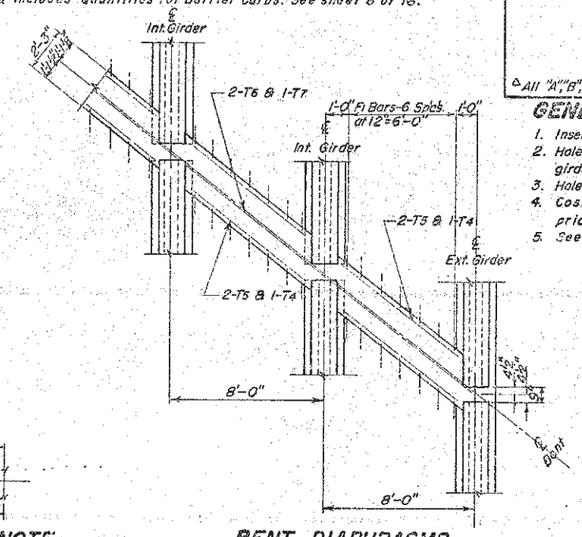

BENT DIAPHRAGMS

NOTE—

In lieu of the bent epoxy coated "A" reinforing bars, the Contractor has the option of substituting for each "A" bar one straight "Bo" bar and one straight epoxy coated "B" bar with the epoxy coated "B" bar being placed in the top mat of reinforcing steel.

If the Contractor elects to substitute "B" and "Bo" bars for the "A" bars, he shall do so at no additional cost to the State. For payment, weight will be based on that of "A" bars without regard to the weight of bars that may be substituted for them.

REINFORCING SCHEDULE

Mk.	No.	Size	Length	Type
△A	155	5	39'-6"	15
△B	154	5	38'-4"	Str.
△B1	56	5	39'-5"	Str.
C1	376	5	5'-10"	T2A
C2	348	5	5'-1"	S11
C3	4	5	3'-1"	17
C4	4	5	3'-2"	17
C5	36	5	3'-3"	17
C6	4	5	4'-7"	17
C7	4	5	4'-8"	17
C8	36	5	4'-9"	17
C9	8	4	5'-1"	17
C10	8	4	3'-7"	17
C11	16	5	5'-9"	T2
Do	270	5	40'-0"	Str.
△D	185	5	40'-0"	Str.
D1	60	5	37'-6"	Str.
D2	12	4	9'-10"	Str.
D3	12	5	12'-9"	19
D4	8	4	12'-9"	19
D5	16	4	1'-3"	Str.
△D6	60	5	30'-0"	Str.
B2	56	5	39'-5"	Str.
F1	56	4	11'-2"	S4
F2	84	4	8'-4"	S4
T1	12	8	4'-0"	Str.
T2	6	7	34'-3"	Str.
T3	24	4	9'-0"	Str.
T4	40	5	7'-6"	Str.
T5	32	5	9'-0"	Str.
※T6	4	6	40'-11"	Str.
※T7	2	4	42'-6"	Str.
Bi	96	7	5'-0"	2A
Bo	154	5	38'-4"	Str.

※ Bent in field as necessary to fit.

Bending Details

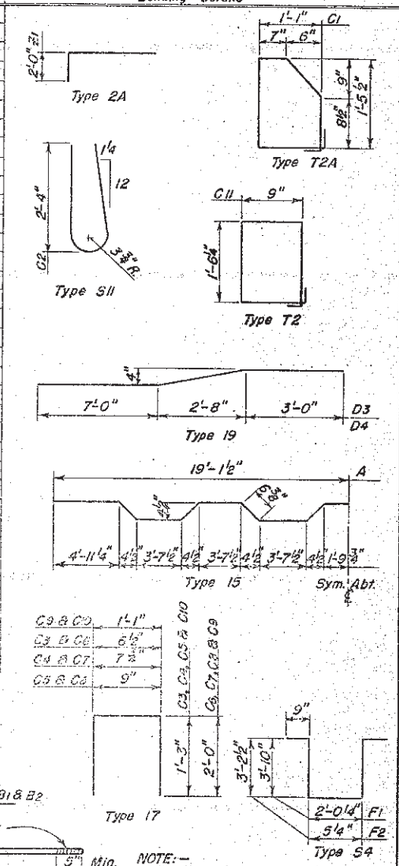

△ All "A", "B", "Bi", "D" and "D6" bars are to be Epoxy Coated

GENERAL NOTES —

1. Insert T2 bars before placing final outer girder in each span.
2. Holes and inserts to accomodate the diaphragm bars shall be provided in the girders at location on this sheet and sheet No.9.
3. Holes which are left when the form supports are removed shall be filled with mortar.
4. Cost of furnishing and installing 1"ϕ inserts shall be included in the unit price bid for the Prestressed Concrete Beams.
5. See Sheet No. 13 of 16 for placement of #1 Bars.

SUPERSTRUCTURE DETAILS

FOR

194'-4" PRESTR. CONC. GIRDER BRIDGE

36'-0" ROADWAY — 38° SKEW L.H.F.

OVER OAK CREEK — SEC. 29/30-T22N-R27E

STA. 371+28.833 TO 373+23.167 — BRF-044-2(12)

STR. NO. 16-580-075 — HS20-44 (& ALT.)

CORSON COUNTY

S. D. DEPT. OF TRANSPORTATION

DIVISION OF HIGHWAYS

DEC. 1974

STATE OF	PROJECT	SHEET NO.	TOTAL SHEETS
S.D.	P 0063(42)252	E102	E105

CONSTRUCTION NOTE:
Sides of recess for Special End Shoe may be beveled a maximum of ½" in 4" to facilitate form removal.

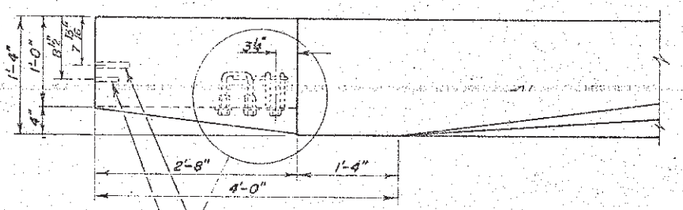

PART PLAN

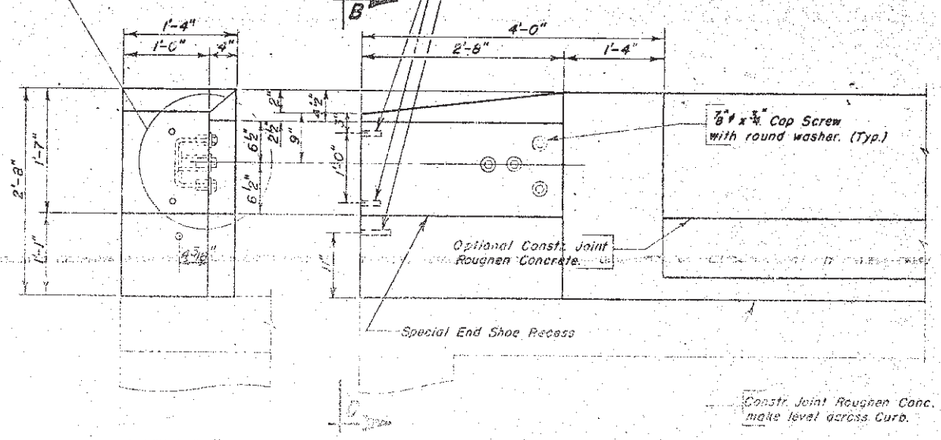

VIEW D-D

VIEW A-A

* An equivalent resistance weld may be used.

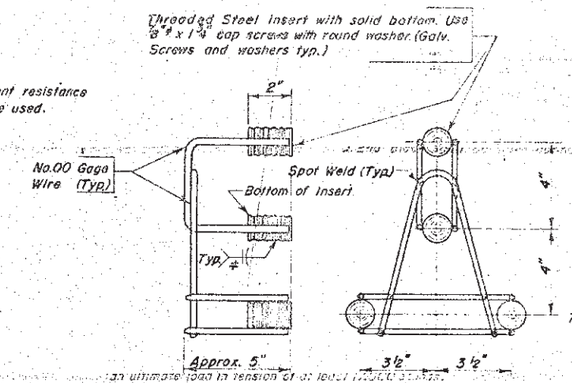

4-BOLT INSERT ASSEMBLY

GENERAL NOTES—

1. Use 1½" clear cover on all bars, except as shown.
2. Reinforcing Steel shall conform to A.S.T.M.-A615, Grade 60.
3. End Block shall be built normal to grade.
4. Wires for the 4-Bolt Insert Assembly are shown as the minimum allowable size designation being based on the United States Steel Wire Gage Standard. All wire shall conform to ASTM Specifications A-82 for Cold-drawn Steel Wire.
5. The Cost of the 4-Bolt Insert Assembly complete in place, including welding and galvanizing, shall be absorbed in the unit price bid for Class "A" Concrete.
6. Cap Screws and Washers shall be furnished as a part of the 4-Bolt Insert Assembly and shall be galvanized to conform to ASTM specifications A-153.
7. Concrete Inserts shall be internally threaded for use with coarse thread cap screws. The Inserts, Cap Screws and Washers shall either be galvanized in accordance with A.S.T.M.-A153 or made of a corrosion resistant material. The Inserts shall be of such design that when installed in concrete having a compressive strength of 4,500 p.s.i. the ⅜"φ Inserts will be capable of sustaining an ultimate load in tension of at least 2,500 pounds and the ¾"φ Inserts an ultimate load in tension of at least 17,000 pounds.

The cost of furnishing and installing the Inserts with Cap Screws and Washers shall be absorbed in the unit price bid for reinforcing steel except the ⅜"φ Inserts placed in the beams for attachment of Roadway Drain Support shall be included in the unit price bid for Prestressed Concrete Beam, Type 3, (65' to 70').

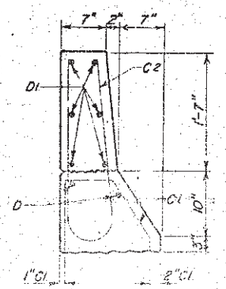

SEC. E-E

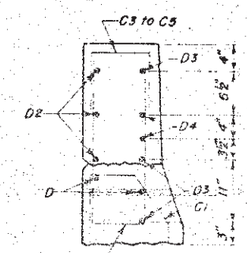

SEC. D-D

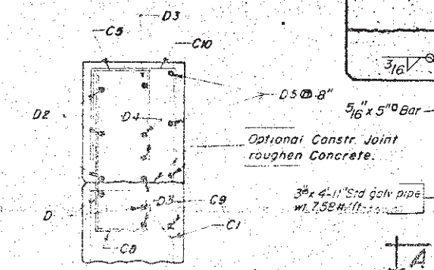

SEC. C-C

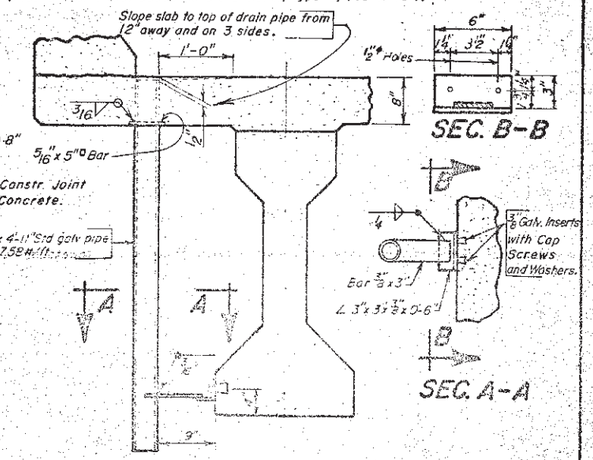

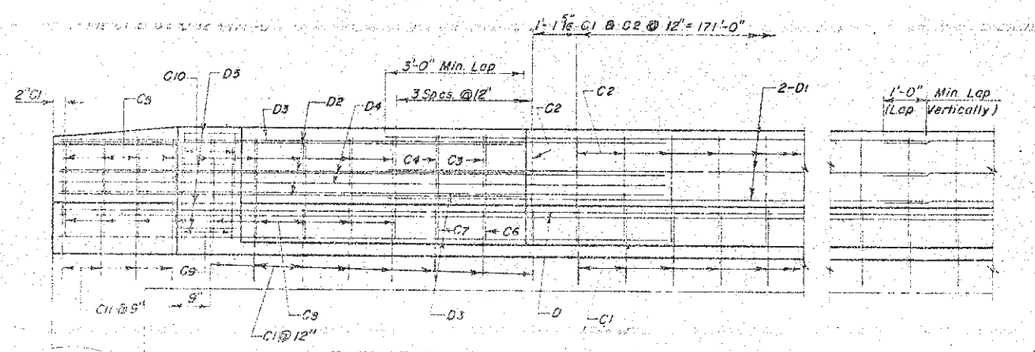

ELEVATION

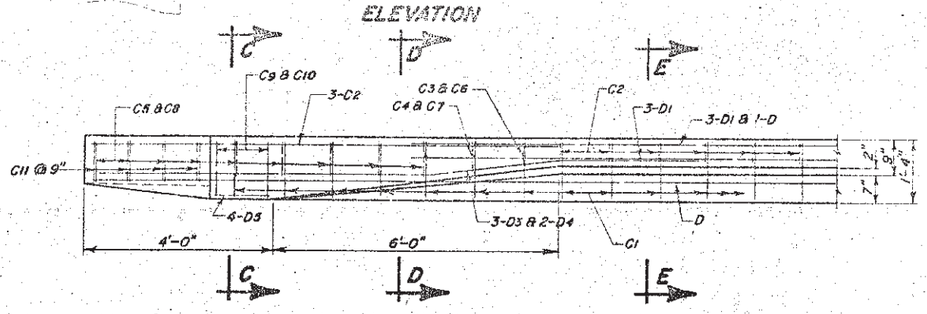

PLAN

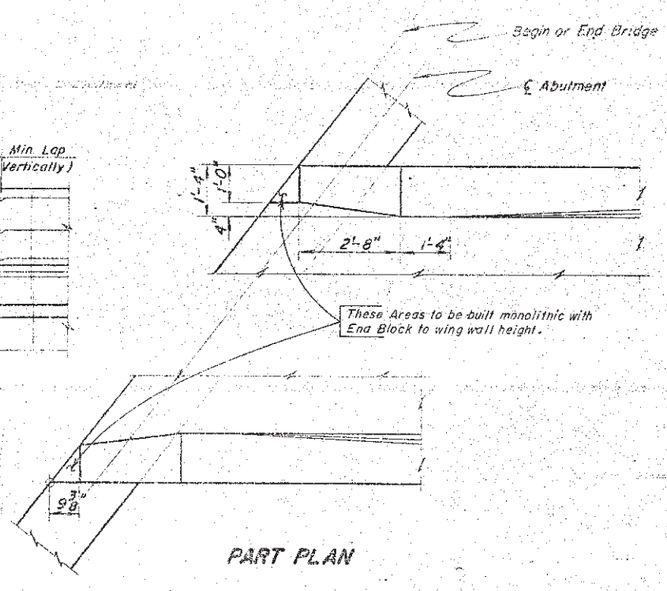

PART PLAN

ROADWAY DRAIN

3 Roadway Drains Required
See Sheet No. 1 of 16 for Spacing.

Note:
The roadway drain pipes shall be hot-dip galvanized in accordance with ASTM-A123 and the drain support items, welds, cuts and heat affected areas shall be field painted with an approved zinc-rich galvanizing paint. The cost of galvanizing, painting and welding shall be included in the Lump Sum bid for Structural Steel. See Estimated Quantities on sheet 7 of 16.

ORIGINAL CONSTRUCTION PLANS

END BLOCK & DRAIN DETAILS
FOR
194'-4" PRESTR. CONC. GIRDER BRIDGE
36'-0" ROADWAY — 38° SKEW L.H.F.
OVER OAK CREEK — SEC. 29/30-T22N-R27E
STA. 371+28.833 TO 373+23.167 — BRF-044-2(12)
STR. NO. 16-580-075 — HS20-44 (& ALT.)
CORSON COUNTY
S. D. DEPT. OF TRANSPORTATION
DIVISION OF HIGHWAYS
NOV. 1974

21 OF 24

DESIGNED BY	DRAWN BY	CHECKED BY	APPROVED
	t.a.k.	C.D.	K.C. Wilson BRIDGE ENGINEER

STATE OF S.D.	PROJECT	SHEET NO.	TOTAL SHEETS
	P 0063(42)252	E103	E105

NOTES REGARDING MATERIAL FOR BRIDGE END BACKFILL—
Bridge End Backfill shall conform to the following requirements:
Passing a 1½" sieve ~ 100%
Passing a 1" sieve ~ 95-100%
Passing a ⅜" sieve ~ 25-60%
Passing a No.4 sieve ~ 0-10%

Material to be crushed rock having at least two (2) fractured faces on material retained on a number 4 sieve. Abrasion loss (AASHTO - T96) shall not exceed forty (40).
Backfill to be vibratory compacted in lifts not to exceed one (1) foot. Density requirements for backfill are waived.

NOTE: The above gradation conforms to that of Coarse Aggregate for Class "A" Concrete.

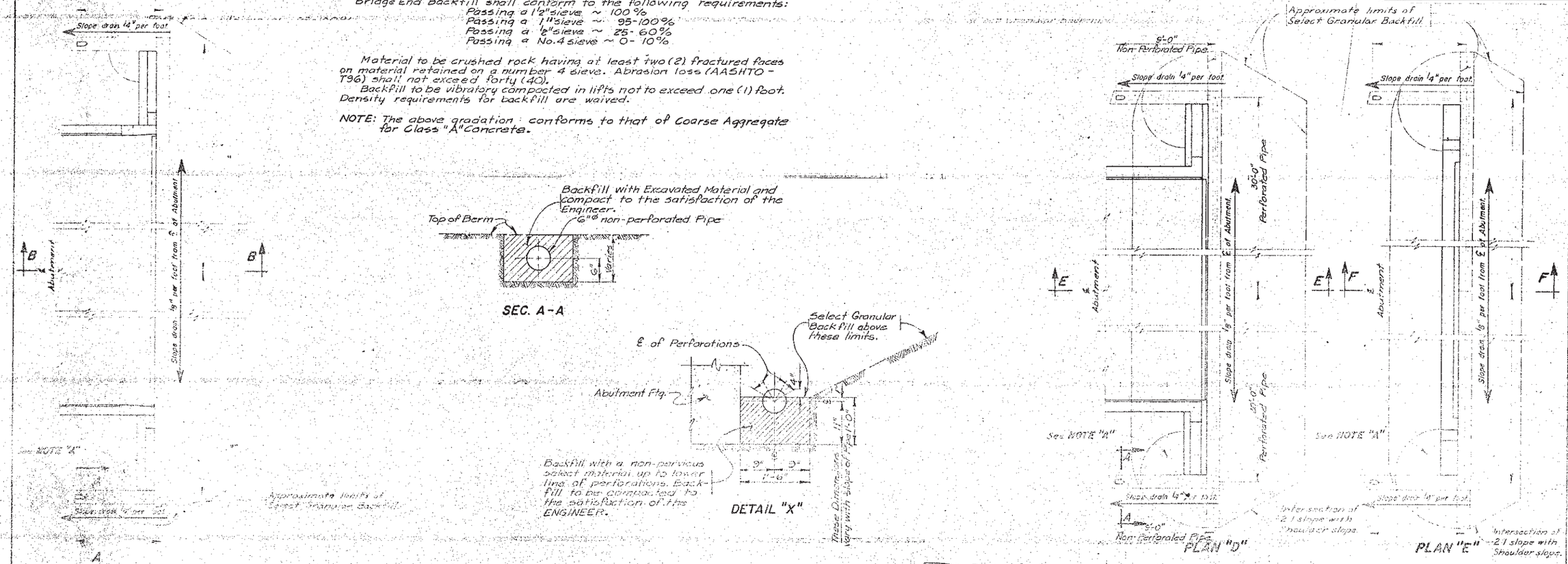

DETAILS OF BRIDGE END BACKFILL (PLAN "D")
FOR

ORIGINAL CONSTRUCTION PLANS

NOTE "A"—
Excavated material not used for backfill of Abutments, supplemented with Select Granular Backfill, if required, shall be used to build these spill cones as directed by the ENGINEER.

GRANULAR BACKFILL NOTES—
1. The Bridge Contractor shall place Select Granular Backfill and install 6" corrugated metal pipe according to Section 430 of the South Dakota Standard Specifications.
2. Suitable screen or grating shall be provided at pipe outlets as approved by the ENGINEER.
3. Where perforated pipe is called for, it shall be placed with perforations up.
4. Structure Excavation will not be computed for the outlet portions of the pipe drains beyond normal excavation limits.
5. Granular Bridge End Backfill shall not be placed until at least 24 hours after the completion of the deck pour.
6. The total estimated theoretical embankment Volume of Granular Bridge End Backfill for two abutments is 180 cubic yards.
7. The total estimated length of the 6" corrugated underdrain pipe for two abutments is 156 feet. The cost of screen or grating in place is to be absorbed in the unit price bid for Bridge End Backfill Underdrain Pipe.
8. Underdrain Pipe shall conform to Section 1000 of the South Dakota Standard Specifications.

△ Rev. Nov. 19 1971 L.H.J.

134'-4" PRESTR. CONC. GIRDER BRIDGE
36'-0" ROADWAY — 38° SKEW L.H.F.
OVER OAK CREEK — SEC. 29/30-T22N-R27E
STA. 371+28.833 TO 373+23.167 — BRF-044-2(12)
STR. NO. 16-580-075 — HS20-44 (& ALT.)
CORSON COUNTY
SOUTH DAKOTA
DEPARTMENT OF HIGHWAYS
NOV. 1974 — (22) OF (24)

DESIGNED BY	DRAWN BY	CHECKED BY	APPROVED
	P.W.F.	A.S.F.	BRIDGE ENGINEER

Sheet 61 of 177 Sheets

P 0063(1)251 & BRF 0063(5)251

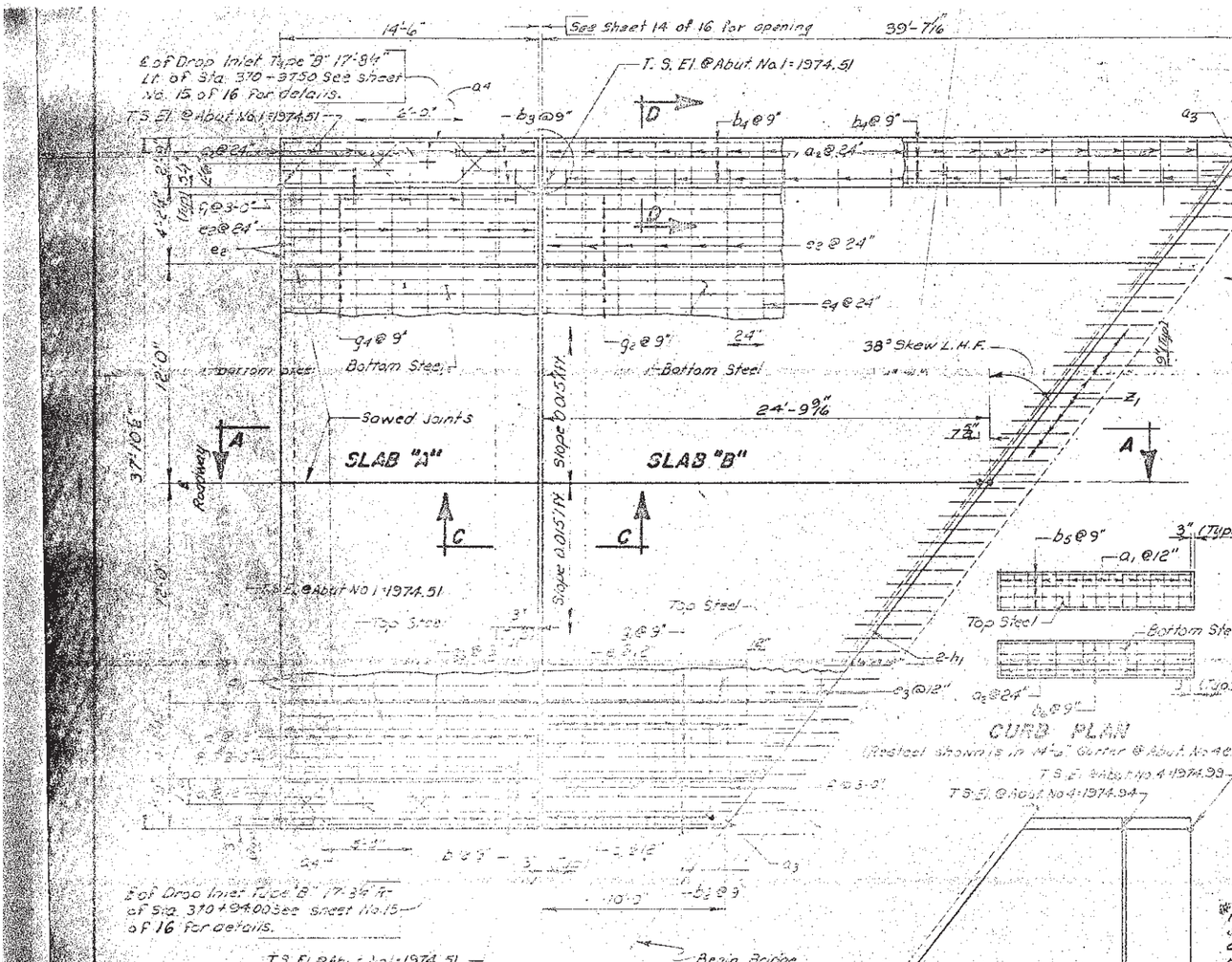

PLAN

(Shown adjacent to Abut. No. 1, Abut. No. 4 will be similar except as shown.)
NOTE: No drop inlet at Abut. No. 4 end.

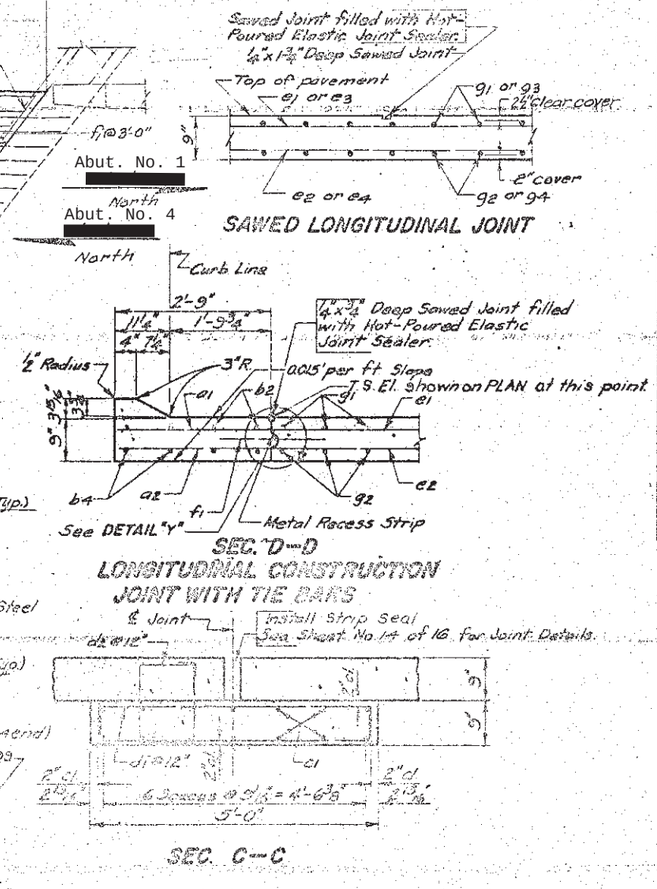

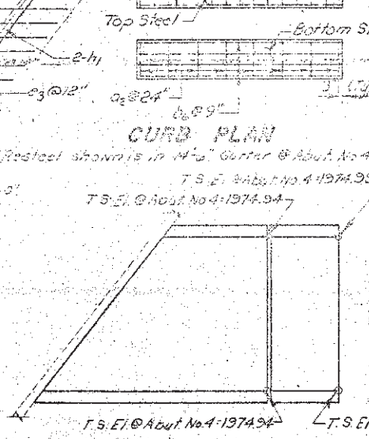

*NOTE:
Slab "A" plus slab "B" at each end of bridge constitutes one slab in above schedule and estimate.

Mk.	No.	Size	Length	Type
a1	148	3	2'-5"	Str.
a2	76	5	2'-5"	Str.
a3	8	4	3'-0"	Str.
a4	8	3	7'-4"	19A
b1	8	3	9'-6"	Str.
b2	8	3	48'-9"	
b3	8	7	9'-6"	
b4	8	7	48'-9"	
b5	8	3	14'-2"	
b6	8	7	14'-2"	
c1	28	5	37'-6"	Str.
d1	152	4	5'-6"	2
d2	76	4	4'-11"	T2
d3	66	4	3'-11"	T2
e1	56	3	32'-0"	Str.
e2	30	5	32'-0"	
e3	24	3	34'-4"	
e4	12	5	35'-7"	
f1	52	4	2'-0"	
g1	43	3	48'-10"	
g2	43	7	48'-10"	
g3	86	3	14'-2"	
g4	86	7	14'-2"	
h1	4	5	40'-6"	Str.

REINFORCING STEEL
(For two approach slabs)

Bending Details

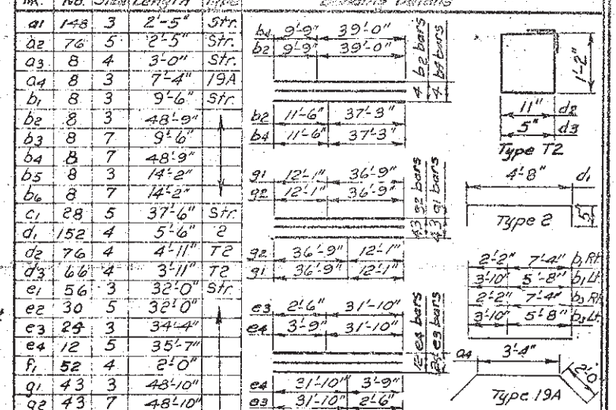

NOTE: Z Bars are listed and included in Superstructure Quantities.
NOTE: All dimensions are out to out of bars.

ESTIMATE OF QUANTITIES

Gravel Cushion	72.0	Cu. Yds.
Conc. Approach Slabs	10.871	Lbs.
Bridge Conc.	10.5	Cu. Yds.
Conc. Sleeper Slabs	4903	Lbs.
Conc. Gutter	13.2	Cu. Yds.
Gal. Gutter	4766	Lbs.
Gravel Cushion	47	Tons

1. 72.0 Cu. Yds. concrete in approach slabs.
2. 10,871 Lbs. reinforcing in approach slabs (includes dowels)
3. 10.5 Cu. Yds. concrete in sleeper slabs.
4. 4903 Lbs. reinforcing in sleeper slabs.
5. 13.2 Cu. Yds. concrete in gutter.
6. 4766 Lbs. reinforcing in gutter.
7. 47 Tons gravel cushion.

Item 1 thru 7 are approximate quantities contained in the above Bid items and are for information only.

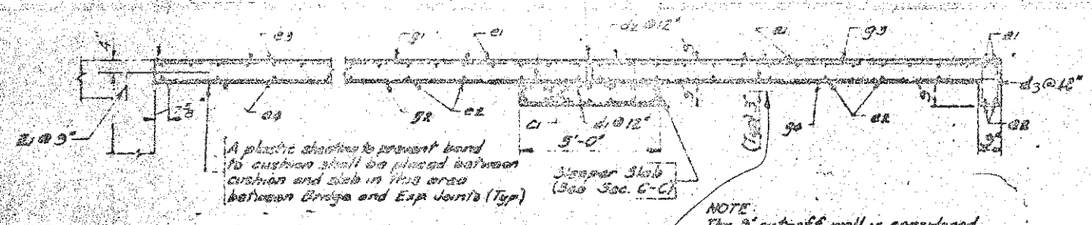

The portion of sleeper slab directly under the movable slabs shall be smooth. Steel trowel and coat with asphalt paint or place 4 mil. polyethylene sheeting to prevent bonding of concrete. (Typ.)
See Sheet No. 14 of 16 for Joint Details (Typ.)

Gravel Cushion shall be constructed to a depth of three inches under the Concrete Approach Pavement and Gutters. The Quantity of Gravel Cushion shown in the Estimate of Quantities is based on a rate of 0.167 ton per square yard. Gravel Cushion shall be watered and compacted to the satisfaction of the Engineer. The cost of water for compaction shall be absorbed in the various pay items of the Contract. Gravel Cushion shall be measured in Square Yards to the nearest tenth of a square yard. Payment will be on the basis of square yards in lieu of Tons stipulated in Section 820 of the South Dakota Standard Specifications.

SEC. A-A

NOTE
The 3' cut-off wall is considered a part of the approach slab and all material and work involved in constructing the, including excavation and disposal of excavated, and surplus material, shall be absorbed in the unit price bid for the concrete approach slab.

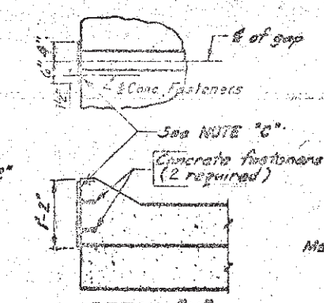

DETAIL "X"

NOTE "C"
18 gauge galv. sheet metal. Attach to one side of joint only, after slabs A and B are poured. Use fasteners that will not spall the concrete as approved by the ENGINEER.

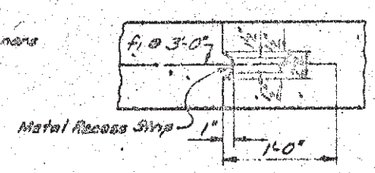

DETAIL "Y"

NOTE: If proposed, approval of alternate designs of Metal Strips will be considered by the ENGINEER.

ORIGINAL CONSTRUCTION PLANS

DETAILS OF APPROACH SLAB ADJACENT TO BRIDGE

FOR

194'-4" PRESTR. CONC. GIRDER BRIDGE

36'-0" ROADWAY — 38° SKEW L.H.F.

OVER OAK CREEK — SEC. 29/30-T22N-R27E

STA. 371+28.833 TO 373+23.167 — BRF-044-2(12)

STR. NO. 16-580-075 — HS20-44 (8 ALT.)

CORSON COUNTY

SOUTH DAKOTA

DEPARTMENT OF HIGHWAYS

NOV. 1974

(23) OF (24)

DESIGNED BY	DRAWN BY	CHECKED BY	APPROVED
	C.B.	C.A.	H.C. Wilson, BRIDGE ENGINEER

STATE OF	PROJECT	SHEET NO.	TOTAL SHEETS
S.D.	P 0063(42)252	E105	E105

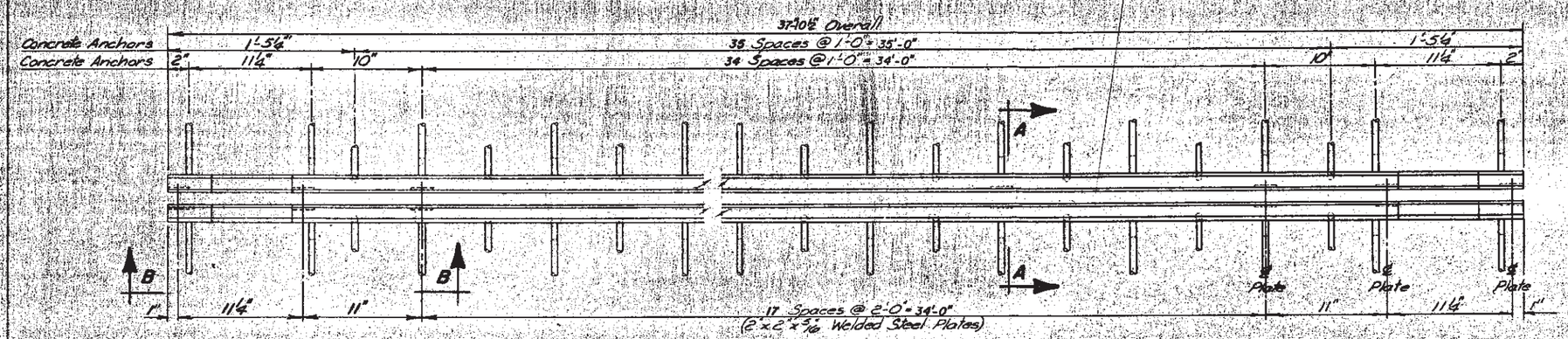

PLAN OF STRIP SEAL

TEMP.	DIMENSION "X"
30°	2⅛"
40°	2⅛"
50°	2"
60°	1⅞"
70°	1¾"
80°	1⅝"
90°	1½"

GENERAL NOTES—

1. Material for Steel Extrusion shall conform to ASTM-A-36, A242 or 588.
2. Material for Neoprene Extrusion shall conform to that specified in Section 870 of the S. Dak. Standard Specifications. No Splices will be permitted in the Neoprene Strip.
3. The installation of the Strip Seal shall be as recommended by its manufacturer and approved by the Engineer, but in general shall be as follows:
   The Neoprene Extrusion shall be installed and bonded to the Steel Extrusion with a high-solids lubricant-adhesive. The portion of the Steel Extrusion in Contact with the Neoprene Extrusion shall be sand blasted to a white finish prior to the installation of the Neoprene Strip. The Neoprene Surfaces shall be roughened with a wire brush before the application of the lubricant-adhesive. The Neoprene Strip may be installed either prior to or after the time the Steel Extrusions are concreted in the Approach slabs. The sand blasting may be done at the Shop provided the sand blasted surfaces are dry, clean, free from dirt, grease and contaminants at the time the Neoprene Strip is installed. The surfaces of the Steel Extrusions, except the portions in contact with the Neoprene Strip, and the surfaces of the 2"x2"x5/16" steel plates welded to the Steel Extrusions shall be painted with an approved Galvanizing Paint.
4. Due to the length of the Steel Extrusions, Shop Welds are permitted. No welds shall be permitted in internal section of extrusion where Neoprene Strip is located. Weld details shall be shown on the Shop Plans for approval by the Engineer.
5. The thickness and shape of the Neoprene Extrusion may vary from the sketch shown (Detail "C" on this Sheet) according to the manufacturer's design; however, the wedge lugs must properly fit the groove in the Steel Extrusion. Before installation, shop plans of the proposed strip seal showing, in addition to fixed dimensions, thickness of Neoprene Extrusion and dimensions pertinent to the fit of the Neoprene Extrusion in the Steel Extrusion shall be submitted to and approved by the Engineer.
6. Strip Seal will be measured in linear feet, to the nearest one-tenth foot, complete in place; measurements will be made of the overall horizontal length.
   Strip Seal will be paid for at the Contract unit price per linear foot complete in place. Payment for this item shall be full compensation for furnishing all the required materials in place, inclusive of labor, equipment and incidentals necessary to complete the work in accordance with plans and the foregoing Specifications.
7. The lubricant-adhesive may be one or two component at the supplier's option. The Neoprene Strip seal and lubricant-adhesive should be supplied or recommended by the same source as they must be compatible. The lubricant-adhesive must have a solids content by weight of at least 65 percent and 250 percent minimum elongation. It may not contain solvents with a Flash point below 80°F.
8. The Contractor has the option of using 5/16"x5"x7¾" plates with a #5 Re-bar as shown in the Supplemental Detail instead of the ½"ø x 6" welded Concrete anchors. If the plates are to be used, they shall be shown and detailed on the shop plans for approval by the ENGINEER.
9. Since the configuration and dimensions of the steel extrusion may vary according to each manufacturer's design, they need not conform exactly to that shown in DETAIL "B"; however, any deviations from the plan shown configuration or dimensions must be approved by the Bridge Program.

*ESTIMATED QUANTITY		
ITEM	UNIT	QUANTITY
Strip Seal Expansion Joint	Lin Ft	* 75.8

* For two approach slabs

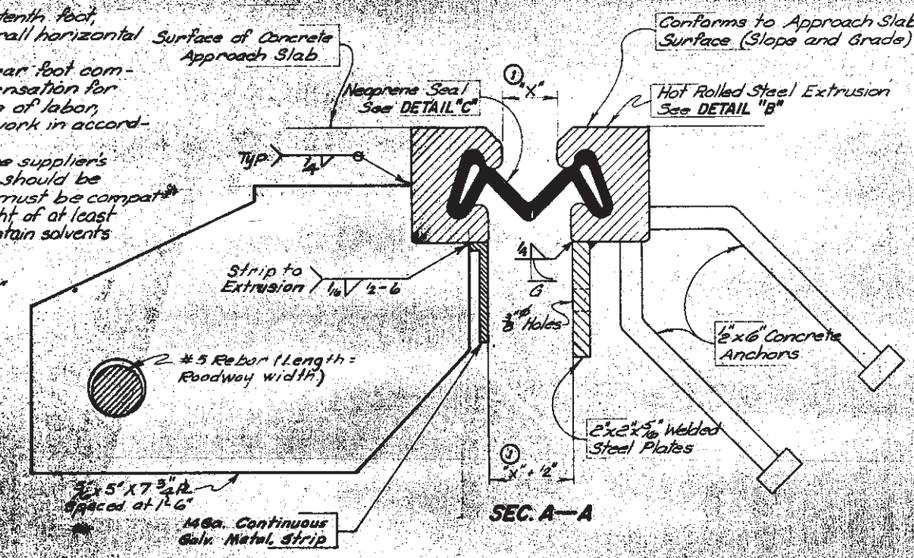

SUPPLEMENTAL DETAIL

The above 5/16"x5"x7¾" PL with #5 Rebar may be used instead of the ½"ø x 6" welded concrete anchors. See Note No. 8

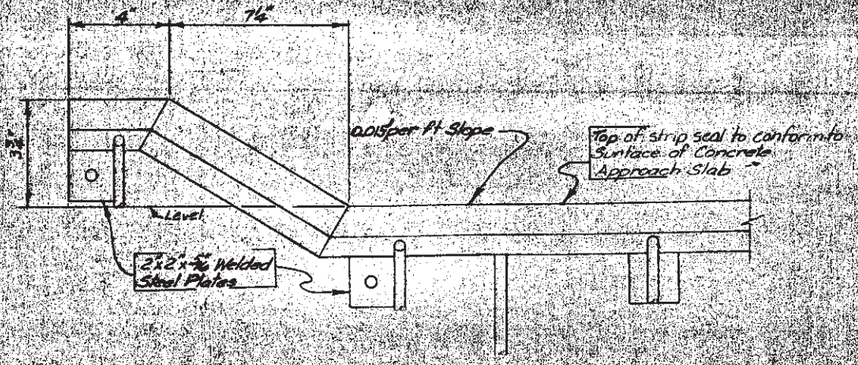

VIEW B—B

DETAIL "C"

Neoprene Seal shall have a 3" movement capability

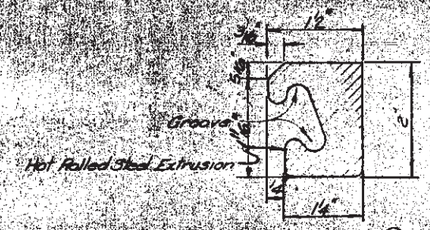

DETAIL "B" ②

② Rev. 1-16-76
① Rev. 8-1-74

ORIGINAL CONSTRUCTION PLANS

APPROACH SLAB JOINT DETAILS
FOR
194'-4" PRESTR. CONC. GIRDER BRIDGE

36'-0" ROADWAY — 38° SKEW L.H.F.
OVER OAK CREEK — SEC. 29/30-T22N-R27E
STA. 371+28.833 TO 373+23.167 — BRF-044-2(12)
STR. NO. 16-580-075 — HS20-44 (8 ALT.)
CORSON COUNTY
SOUTH DAKOTA
DEPARTMENT OF HIGHWAYS
JUNE 1978

(24) OF (24)

DESIGNED BY	DRAWN BY	CHECKED BY	APPROVED
	G.W.W. f.a.h.	M.V.W.	K.C. Wilson BRIDGE ENGINEER