FOR BIDDING PURPOSES ONLY

STATE OF SOUTH DAKOTA	PROJECT	SHEET	TOTAL SHEETS
	NH 0100(105)419	E1	E15

Section E: Structure Plans

INDEX OF SHEETS -

Sheet E1	Layout Map and Index
Sheet E2	Estimate of Quantities
Sheet E3 to E12	12'x10' Box Culvert
Sheet E13 to E15	10'x10' Junction Box

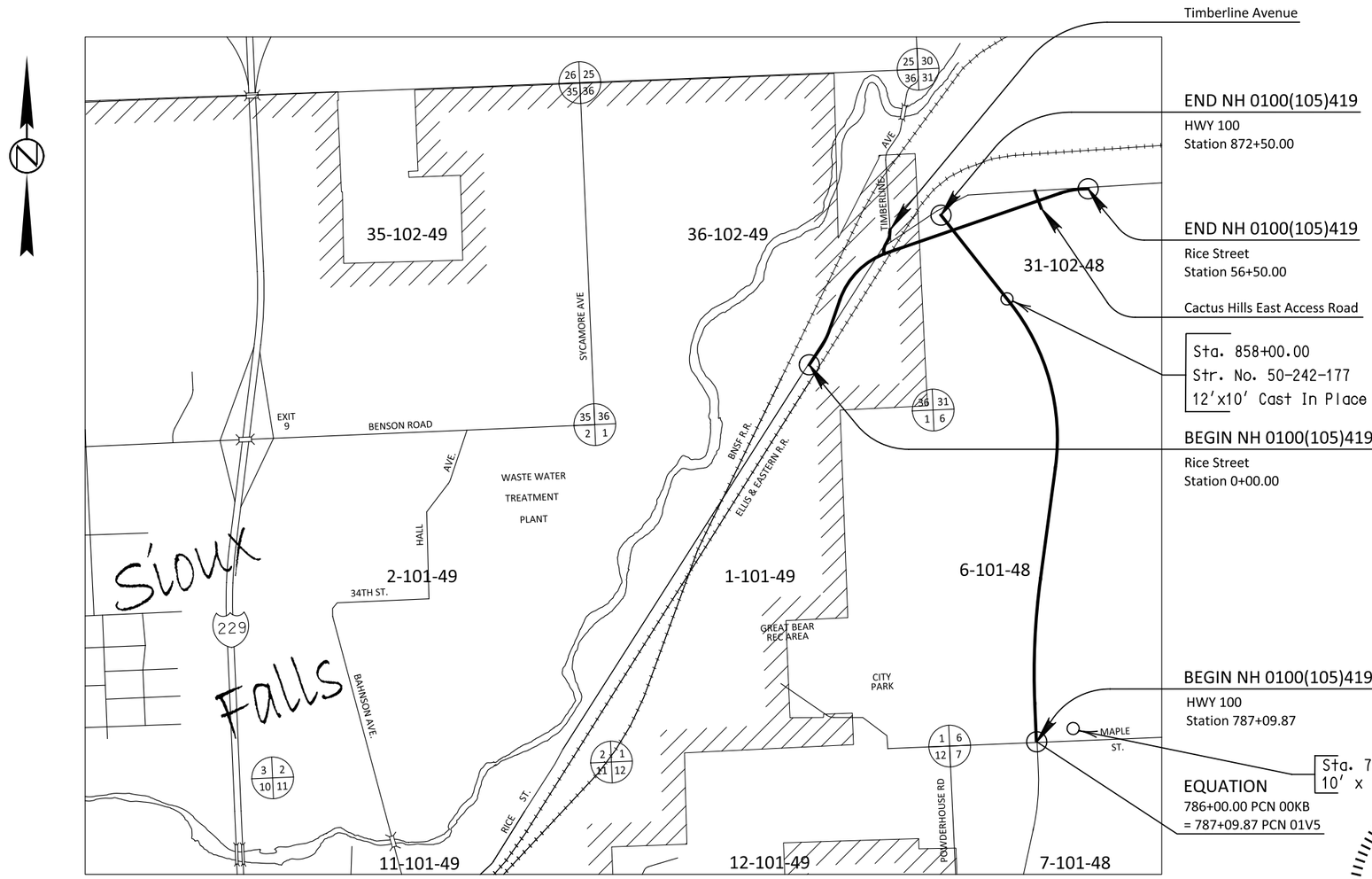

REGISTERED PROFESSIONAL ENGINEER
REG. NO. 8022
TROY D. BORCHARD
SOUTH DAKOTA
6/10/2016

HDR

SECTION E - ESTIMATE OF QUANTITIES

Str. No. 50-242-177
12'x10' Box Culvert

Bid Item Number	ITEM	QUANTITY	UNIT
420E0200	Structure Excavation, Box Culvert	137	Cu. Yd.
421E0200	Box Culvert Undercut	386	Cu. Yd.
460E0120	Class A45 Concrete, Box Culvert	357.9	Cu. Yd.
460E0204	Anti - Graffiti Coating	6755	Sq. Ft.
480E0100	Reinforcing Steel	58185	Lb.
621E0040	4' Chain Link Fence with Top Rail	134	Ft.

10'x10' Junction Box

Bid Item Number	ITEM	QUANTITY	UNIT
420E0400	Structure Excavation, Miscellaneous	34	Cu. Yd.
462E0100	Class M6 Concrete	13.8	Cu. Yd.
480E0100	Reinforcing Steel	2621	Lb.
671E6007	Type A7 Manhole Frame and Lid	1	Each

REGISTERED PROFESSIONAL ENGINEER
REG. NO. 8022
TROY D. BORCHARD
SOUTH DAKOTA
7/14/2016

The elevations shown in these plans are based on the National Geodetic Survey (NGS) North American Vertical Datum of 1988 (NAVD88).

FOR BIDDING PURPOSES ONLY

STATE OF SOUTH DAKOTA	PROJECT	SHEET	TOTAL SHEETS
	NH 0100(105)419	E3	E15

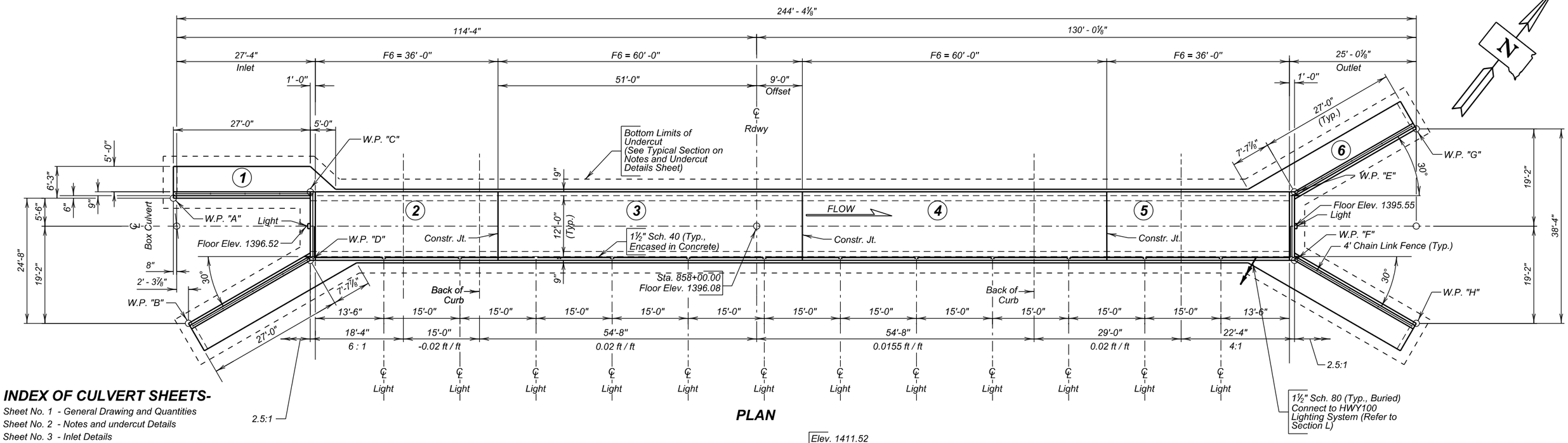

PLAN

INDEX OF CULVERT SHEETS-

Sheet No. 1 - General Drawing and Quantities
Sheet No. 2 - Notes and undercut Details
Sheet No. 3 - Inlet Details
Sheet No. 4 - Outlet Details
Sheet No. 5 - Inlet & Outlet Details & Quantities
Sheet No. 6 - F6 Barrel End Section Details (36-0)
Sheet No. 7 - F6 Barrel End Section Details (60-0)
Sheet No. 8 - Anti - Graffiti Coating
Sheet No. 9 - Details of Standard Plate No.'s 460.02 and 460.10
Sheet No. 10 - Details of Standard Plate No.'s 621.01 and 621.03

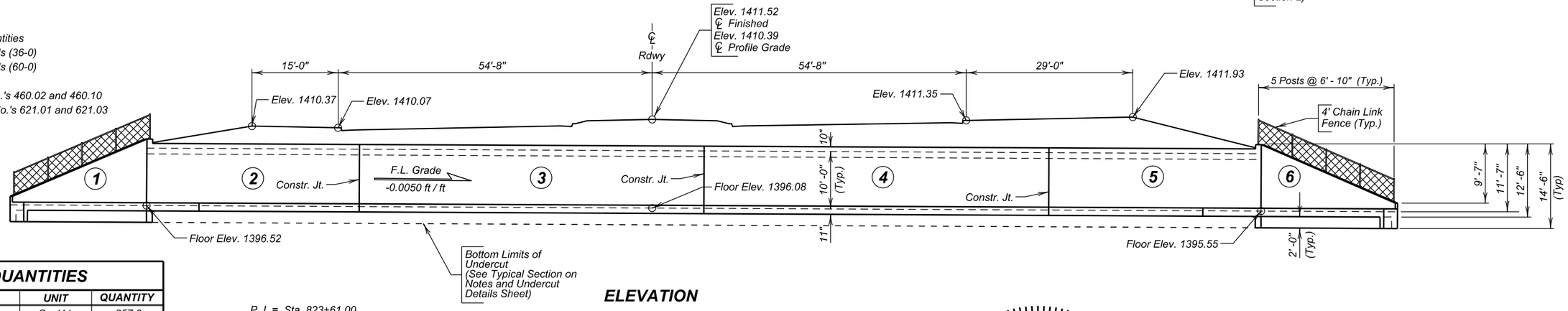

ELEVATION

ESTIMATED QUANTITIES

ITEM	UNIT	QUANTITY
Class A45 Concrete, Box Culvert	Cu. Yd.	357.9
Reinforcing Steel	Lb.	58185
Structure Excavation, Box Culvert	Cu. Yd.	137.1
Box Culvert Undercut	Cu. Yd.	386
Anti - Graffiti Coating	Sq. Ft.	6755
4' Chain Link Fence with Top Rail	Ft.	134

TABLE OF WORKING POINTS

W. P.	STATION	OFFSET
"A"	858 + 05.50	115.00' Lt.
"B"	857 + 80.84	112.01' Lt.
"C"	858 + 06.75	88.00' Lt.
"D"	857 + 93.25	88.00' Lt.
"E"	858 + 06.75	106.00' Rt.
"F"	857 + 93.25	106.00' Rt.
"G"	858 + 19.17	130.01' Rt.
"H"	857 + 80.83	130.01' Rt.

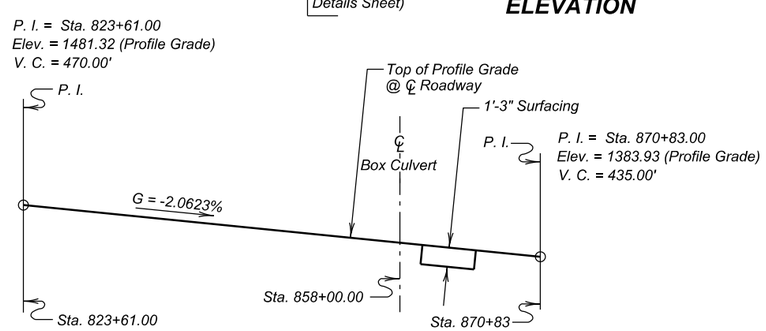

Roadway Data

REGISTERED PROFESSIONAL ENGINEER
REG. NO. 8022
TROY D. BORCHARD
SOUTH DAKOTA
6/10/2016

GENERAL DRAWING & QUANTITIES
FOR
12' X 10' BOX CULVERT

OVER PEDESTRIAN PATH — 0° SKEW
STA. 858+00.00 — SEC. 31-T102N-R48W
STR. NO. 50-242-177 — NH 0100(105)419
PCN 01V5 — HL-93

MINNEHAHA COUNTY
S. D. DEPT. OF TRANSPORTATION
APRIL 2016

1 OF 10

PLANS BY :
HDR ENGINEERING, 6300 S. OLD VILLAGE PL, SUITE 100, SIOUX FALLS, SD 57108

DESIGNED BY	CK. DES. BY	DRAFTED BY	CK. DRAFT BY
CH	TB	DM	CH

FOR BIDDING PURPOSES ONLY

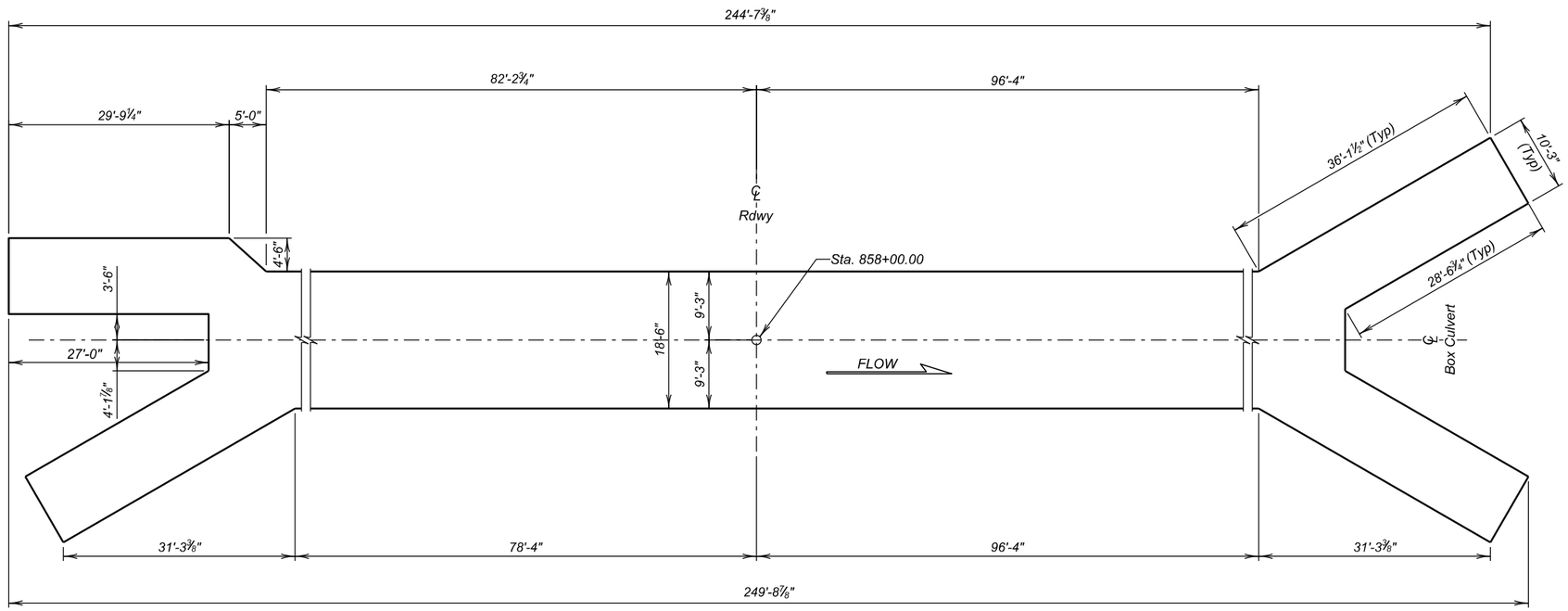

UNDERCUT LAYOUT
(Bottom Dimensions)

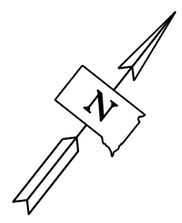

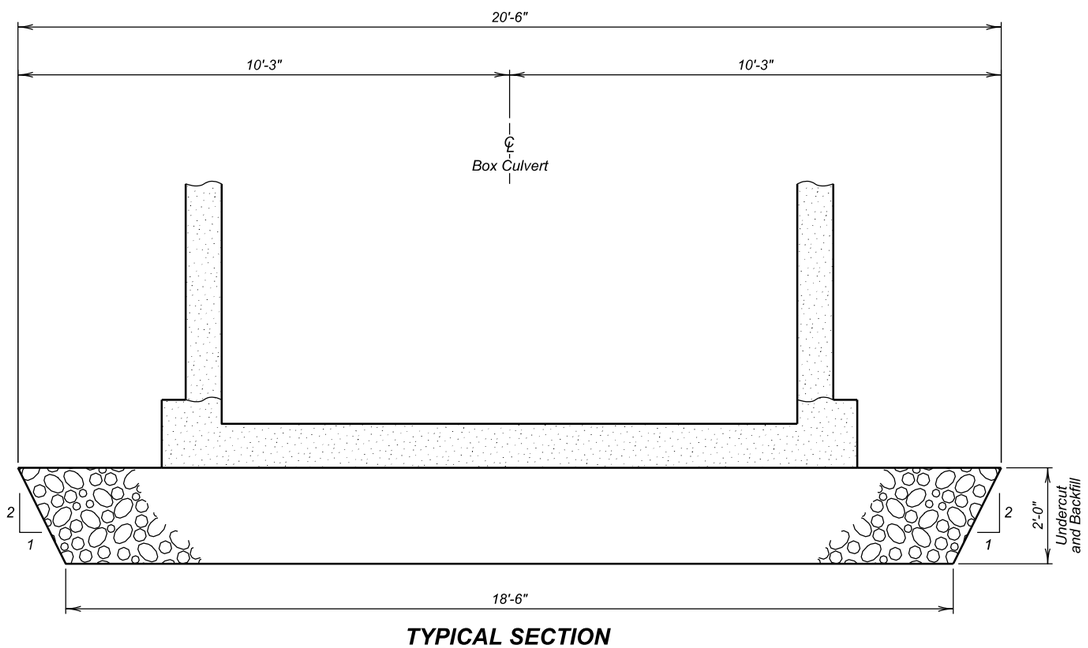

TYPICAL SECTION
(For Limits of Undercut)

ESTIMATED QUANTITIES

ITEM	UNIT	QUANTITY
⌀ Box Culvert Undercut	Cu. Yd.	386

⌀ *For payment, quantity is based on plan shown undercut dimensions and will not be measured unless the Enginer orders a change.*

SPECIFICATIONS

1. *Design Specifications: AASHTO LRFD Bridge Design Spcifications, 2014 Edition.*
2. *Construction Specifications: South Dakota Standard Specifications for Roads and Bridges, 2015 Edition and required Provisions, Supplemental Specifications, and Special Provisions as included in the Proposal.*

GENERAL NOTES

1. *Design Live Load: HL-93 and construction load consisting of one 7'-6"gage axle with gross weight = 95,850 lbs. The construction load shall not be applied until a minimum of 4 ft. of fill has been placed over the Box Culvert. Other construction loads in excess of legal load must be submitted thru proper channels to the Office of Bridge Design for analysis.*
2. *The design of the barrel section (F6) is based on a minimum fill height of 2 feet and includes all subsequent fill heights up to and including the maximum fill height of 6.0 ft.*
3. *Design Material Strengths: Concrete f'c = 4500 p.s.i.*
   Reinforcing Steel fy = 60000 p.s.i.
4. *All concrete shall be Class A45 conforming to Section 460.*
5. *All reinforcing steel shall conform to ASTM A615 Grade 60.*
6. *All exposed edges shall be chamfered 3/4 inch.*
7. *Use 1 inch clear cover on all reinforcing steel EXCEPT as shown.*
8. *The Contractor shall imprint on the structure the date of construction as specified and detailed on Standard Plate No. 460.02.*
9. *Care shall be taken to establish Working Points (W.P.) as shown on the wings.*
10. *Circled numbers in PLAN and ELEVATION views on the General Drawing are section I.D. Numbers (see SDDOT Materials Manual).*
11. *Compaction of earth embankment and box culvert backfill material shall be governed by the Specified Density method.*
12. *Material for backfilling the undercut area shall conform to the gradation requirements of either Base Course or Gravel Cushion in Section 882. All other requirements of Section 421 shall apply.*

SUBSURFACE SOIL NOTES

Subsurface soils at the pedestrian box culvert location to approximately 14 ft. below the bottom of the box culvert consist of the following:

Station	Offset	Elevation	Material Description	Groundwater/Cave-In Depth (ft)
858+05	92 ft. Lt.	1404.0-1383.0	Sand-clay	Dry / 17.4
		1383.0-1380.0	Sand-clay(Glacial Till)	
857+95	35 ft. Lt.	1403.9-1401.4	Sand-clay	14.4 / 14.7
		1401.4-1385.9	Sand and gravel	
		1385.9-1379.9	Sand-clay(Glacial Till)	
858+05	45 ft. Rt.	1407.7-1398.7	Sand-clay	17.7 / 18.7
		1398.7-1383.2	Sand and gravel	
		1383.2-1378.7	Sand-clay(Glacial Till)	
857+95	92 ft. Rt.	1399.0-1392.8	Clay-silt	Dry / 14.6
		1392.8-1389.3	Sand and gravel	
		1389.3-1380.0	Sand-clay(Glacial Till)	

PEDESTRIAN UNDERPASS LIGHTING

The Pedestrian Underpass lighting as detailed on Sheets 1, 5, 6, 7 and 8 will be paid under Section L. See Section L for all notes and quantities for the Pedestrian Underpass Lighting.

REGISTERED PROFESSIONAL ENGINEER
REG. NO. 8022
TROY D. BORCHARD
SOUTH DAKOTA
6/10/2016

NOTES AND UNDERCUT DETAILS
FOR
12' X 10' BOX CULVERT

OVER PEDESTRIAN PATH — 0° SKEW
STA. 858+00.00 — SEC. 31-T102N-R48W
STR. NO. 50-242-177 — NH 0100(105)419
PCN 01V5 — HL-93

MINNEHAHA COUNTY
S. D. DEPT. OF TRANSPORTATION
APRIL 2016

HDR

DESIGNED BY	CK. DES. BY	DRAFTED BY	CK. DRAFT BY
CH	TB	DM	CH

STATE OF SOUTH DAKOTA	PROJECT	SHEET	TOTAL SHEETS
	NH 0100(105)419	E5	E15

FOR BIDDING PURPOSES ONLY

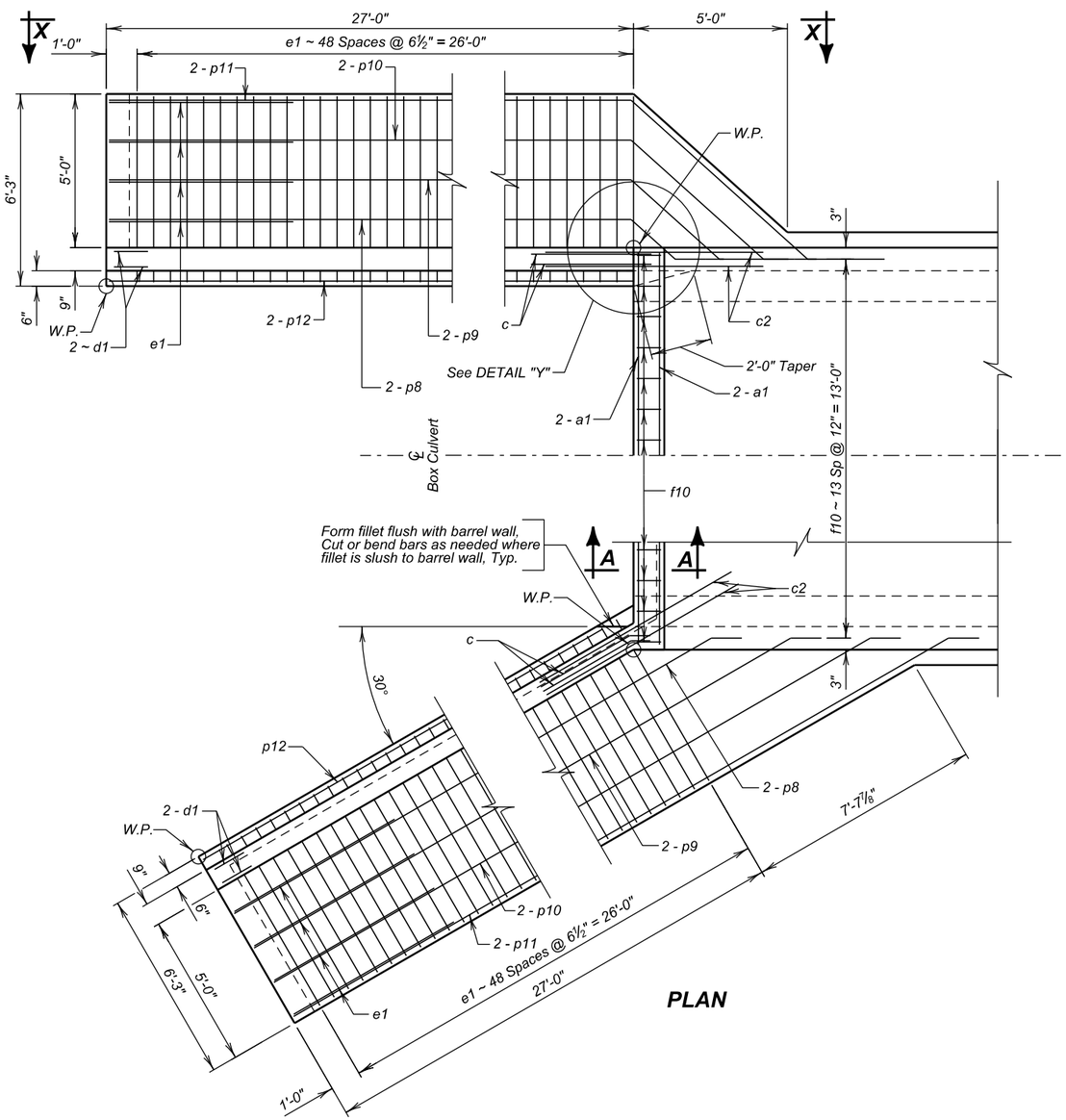

PLAN

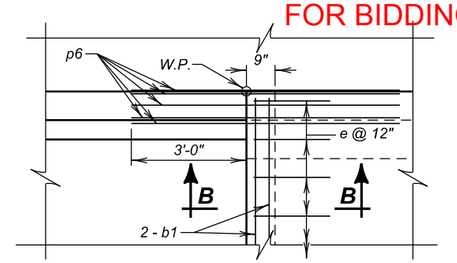

DETAIL "Y"
(At Bottom Slab)

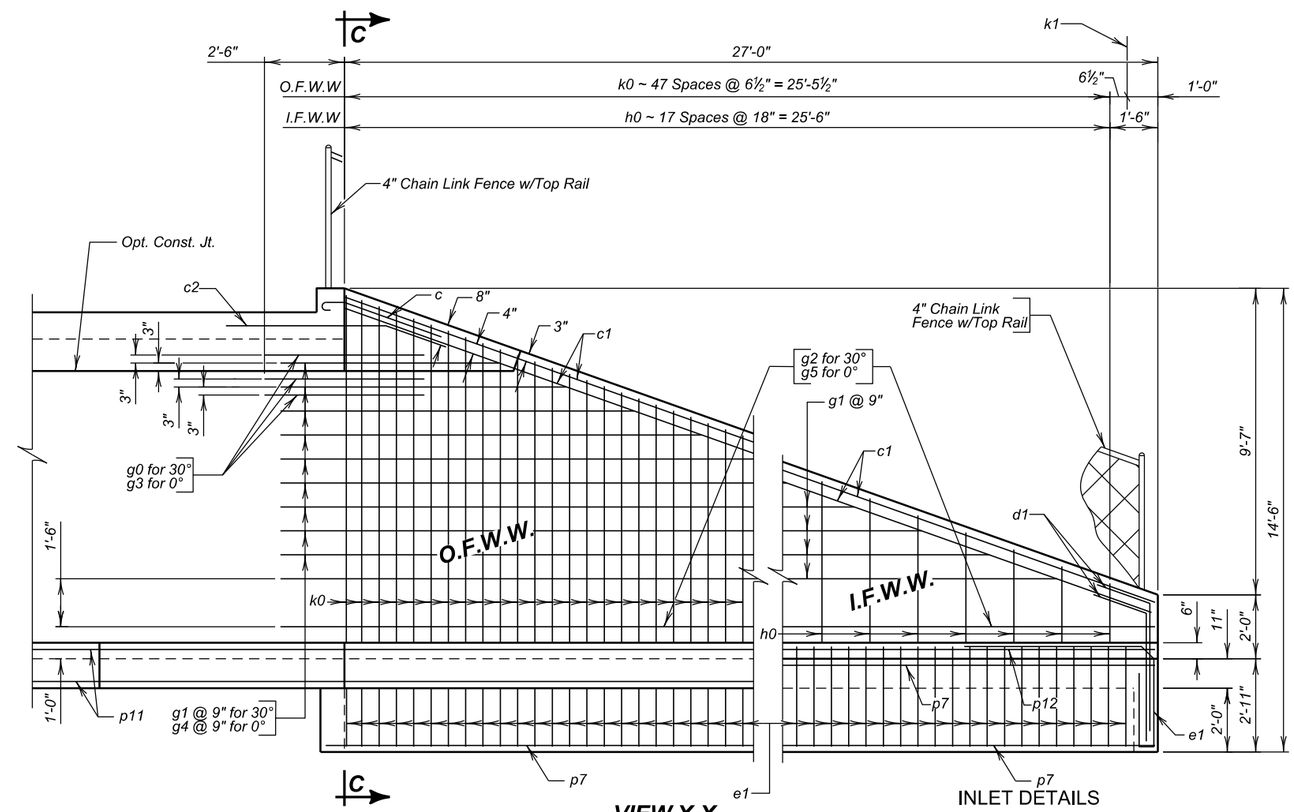

VIEW X-X

INLET DETAILS
FOR
12' X 10' BOX CULVERT

OVER PEDESTRIAN PATH — 0° SKEW
STA. 858+00.00 — SEC. 31-T102N-R48W
STR. NO. 50-242-177 — NH 0100(105)419
PCN 01V5 — HL-93

MINNEHAHA COUNTY
S. D. DEPT. OF TRANSPORTATION
APRIL 2016

REGISTERED PROFESSIONAL ENGINEER
REG. NO. 8022
TROY D. BORCHARD
SOUTH DAKOTA
6/10/2016

NOTES

1. See "Sheet No.4" for "SEC.B-B" & "SEC. A-A"
2. See "Sheet No.5" for "SEC.C-C"

LEGEND FOR PLACING RE-STEEL
I.F.W.W. - Inside Face of Wing Wall
O.F.W.W. - Outside Face of Wing Wall

HDR

DESIGNED BY	CK. DES. BY	DRAFTED BY	CK. DRAFT BY
CH	TB	DM	CH

FOR BIDDING PURPOSES ONLY

STATE OF SOUTH DAKOTA	PROJECT	SHEET	TOTAL SHEETS
	NH 0100(105)419	E6	E15

LEGEND FOR PLACING RE-STEEL

I.F.W.W. - Inside Face of Wing Wall

O.F.W.W. - Outside Face of Wing Wall

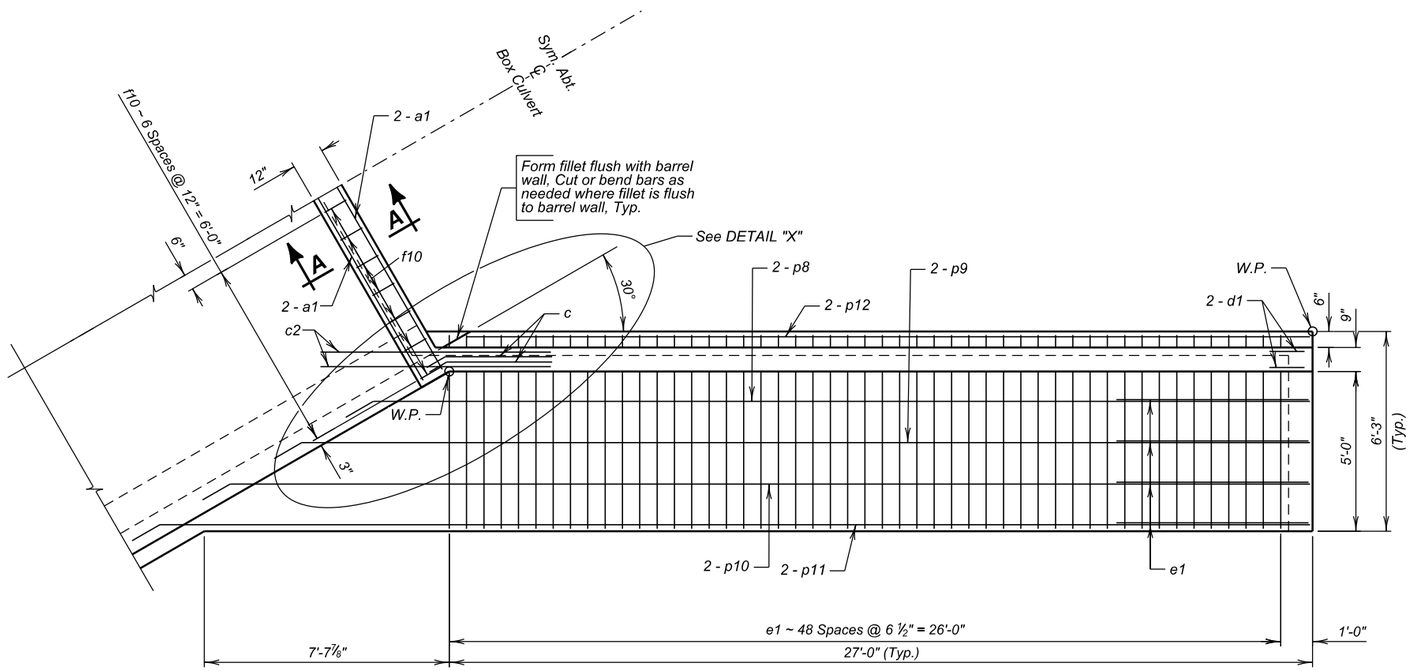

PLAN
(Outlet)

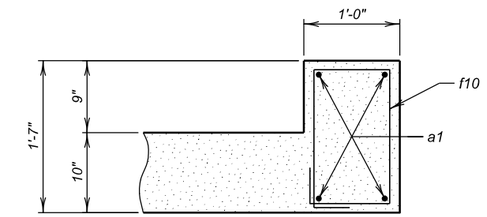

SEC. A-A
(At Top Slab)

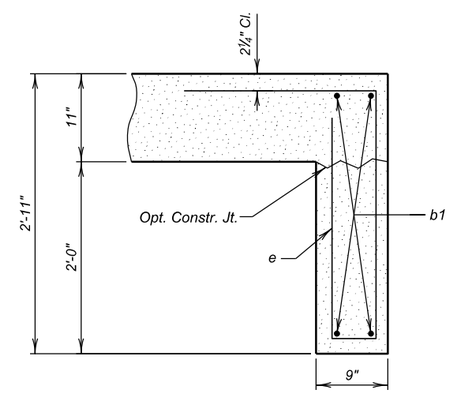

SEC. B-B

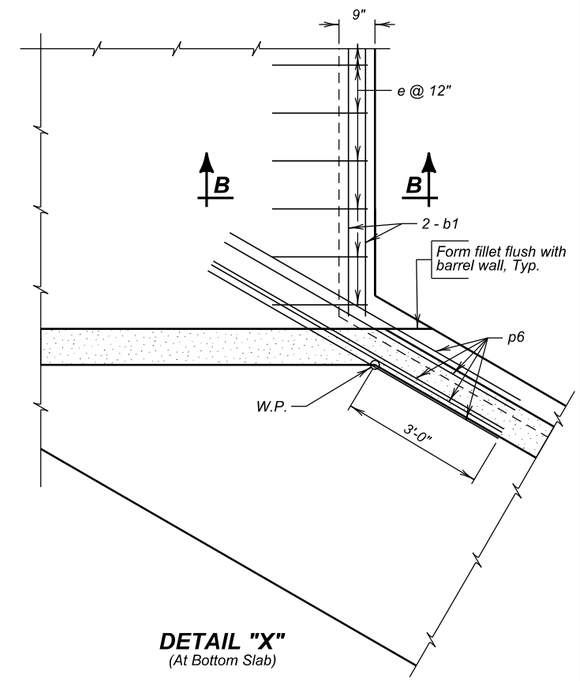

DETAIL "X"
(At Bottom Slab)

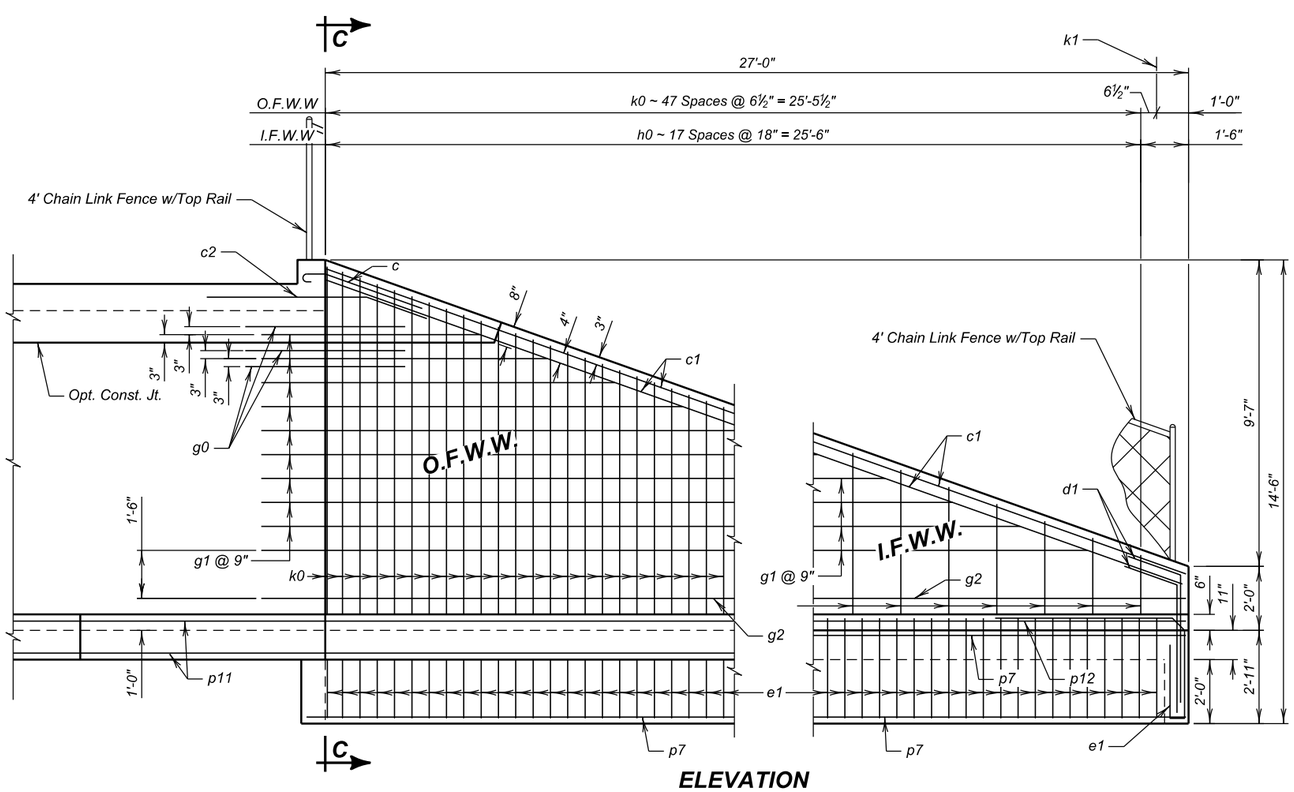

ELEVATION

NOTE

See "Sheet No.5" for "SEC. C-C".

REGISTERED PROFESSIONAL ENGINEER
REG. NO. 8022
TROY D. BORCHARD
SOUTH DAKOTA
6/10/2016

OUTLET DETAILS
FOR
12' X 10' BOX CULVERT

OVER PEDESTRIAN PATH — 0° SKEW
STA. 858+00.00 — SEC. 31-T102N-R48W
STR. NO. 50-242-177 — NH 0100(105)419
PCN 01V5 — HL-93

MINNEHAHA COUNTY
S. D. DEPT. OF TRANSPORTATION
APRIL 2016

HDR

DESIGNED BY	CK. DES. BY	DRAFTED BY	CK. DRAFT BY
CH	TB	DM	CH

STATE OF SOUTH DAKOTA	PROJECT	SHEET	TOTAL SHEETS
	NH 0100(105)419	E7	E15

FOR BIDDING PURPOSES ONLY

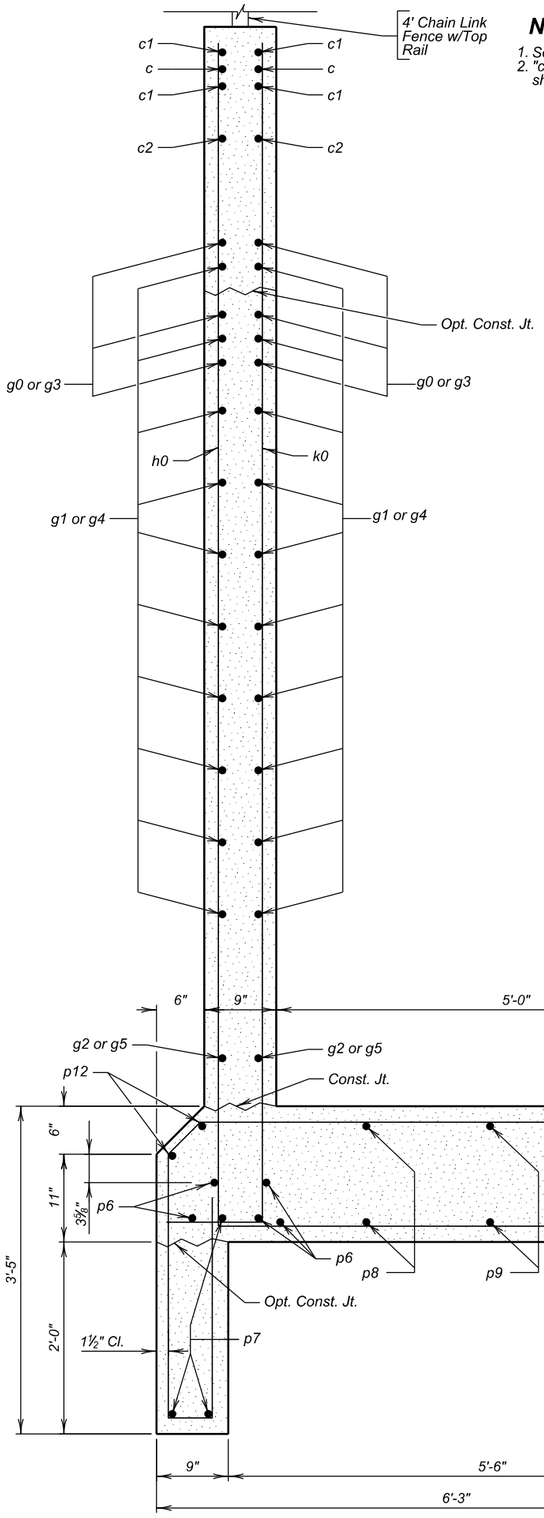

SEC. C-C

NOTES

1. See "Sheet No.3" & "Sheet No.4"for Locaton of "SEC.C-C"
2. "c2" bars are stright for Wingwall No.2. Contractor shall bent them in field as necessary to fit

REINFORCING SCHEDULE
(For 1 - Inlet)

	Mk.	No.	Size	Length	Type
	a1	4	6	13' - 0"	Str.
	b1	4	6	11' - 0"	Str.
✳	c	4	5	4' - 6"	1A
	c1	8	5	28' - 6"	Str.
	c2	4	5	7' - 0"	19B
	d1	8	5	5' - 9"	19B
	e	13	4	7' - 1"	S12
	e1	106	4	11' -4"	S12A
	f10	14	4	5' - 1"	T2
	g0	6	5	5' - 0"	19B
⌀	g1	10	4	32' - 8"	19B
	g2	2	4	28' - 11"	19B
	g3	6	5	5' - 0"	Str.
⌀	g4	10	4	32' - 8"	Str.
	g5	2	4	28' - 11"	Str.
⌀	h0	18	4	26' - 4"	17A
⌀	k0	48	4	17' - 4"	17A
	k1	2	4	4' - 0"	17A
	p6	10	6	7' - 0"	Str.
✳	p7	6	4	27' - 8"	Str.
✳	p8	4	4	30' - 4"	Str.
✳	p9	4	4	32' - 7"	Str.
✳	p10	4	4	34' - 9"	Str.
✳	p11	4	4	37' - 0"	Str.
✳	p12	4	4	26' - 11"	Str.

Bending Details

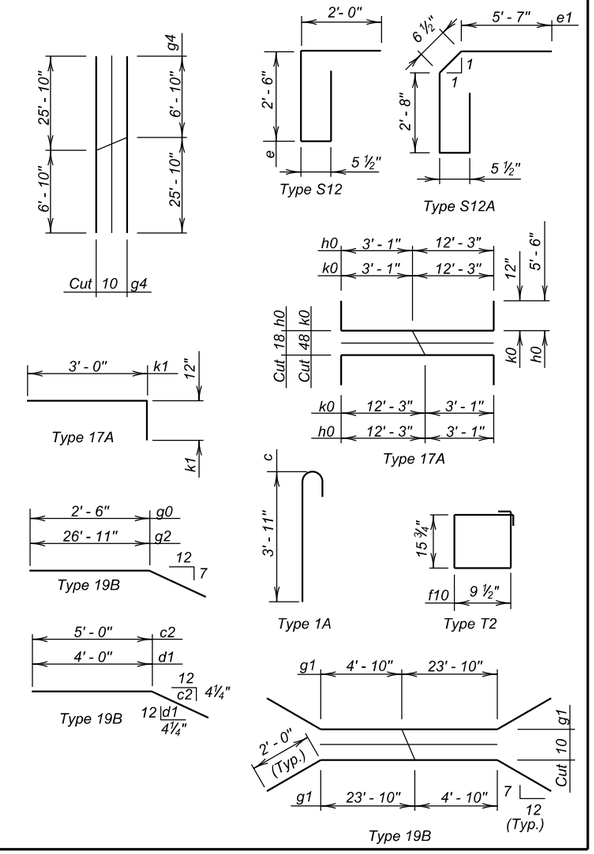

NOTES:
All dimensions are out to out of bars.
⌀ See cutting diagram.
✳ Bend in field as necessary to fit.

ESTIMATED QUANTITIES

ITEM	Class A45 Concrete Box Culvert	Reinforcing Steel	Structure Excavation Box Culvert
UNIT	Cu. Yd.	Lb.	Cu. Yd.
1 - Inlet	33.0	3491	21.3
1 - Outlet	33.0	3491	21.3

REINFORCING SCHEDULE
(For 1 - Outlet)

	Mk.	No.	Size	Length	Type
	a1	4	6	13' - 0"	Str.
	b1	4	6	11' - 0"	Str.
✳	c	4	5	4' - 6"	1A
	c1	8	5	28' - 6"	Str.
	c2	4	5	7' - 0"	19B
	d1	8	5	5' - 9"	19B
	e	13	4	7' - 1"	S12
	e1	106	4	11' -4"	S12A
	f10	14	4	5' - 1"	T2
	g0	12	5	5' - 0"	19B
⌀	g1	20	4	32' - 8"	19B
	g2	4	4	28' - 11"	19B
⌀	h0	18	4	26' - 4"	17A
⌀	k0	48	4	17' - 4"	17A
	k1	2	4	4'-0"	17A
	p6	10	6	7' - 0"	Str.
✳	p7	6	4	27' - 8"	Str.
✳	p8	4	4	30' - 4"	Str.
✳	p9	4	4	32' - 7"	Str.
✳	p10	4	4	34' - 9"	Str.
✳	p11	4	4	37' - 0"	Str.
✳	p12	4	4	26' - 11"	Str.

Bending Details

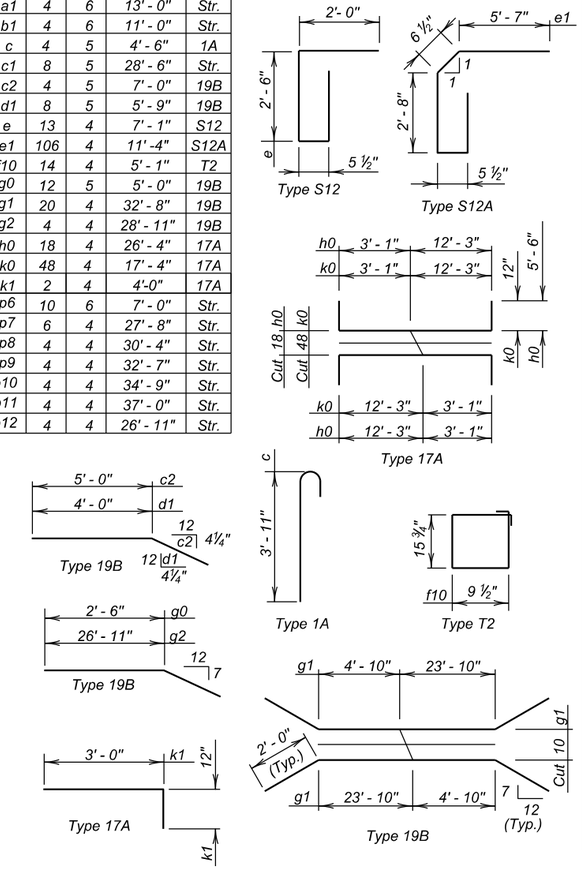

NOTES:
All dimensions are out to out of bars.
⌀ See cutting diagram.
✳ Bend in field as necessary to fit.

REGISTERED PROFESSIONAL ENGINEER
REG. NO. 8022
TROY D. BORCHARD
SOUTH DAKOTA
6/10/2016

HDR

INLET & OUTLET DETAILS & QUANTITIES
FOR
12' X 10' BOX CULVERT

OVER PEDESTRIAN PATH — 0° SKEW
STA. 858+00.00 — SEC. 31-T102N-R48W
STR. NO. 50-242-177 — NH 0100(105)419
PCN 01V5 — HL-93

MINNEHAHA COUNTY
S. D. DEPT. OF TRANSPORTATION
APRIL 2016

DESIGNED BY	CK. DES. BY	DRAFTED BY	CK. DRAFT BY
CH	TB	DM	CH

STATE OF SOUTH DAKOTA	PROJECT	SHEET	TOTAL SHEETS
	NH 0100(105)419	E8	E15

FOR BIDDING PURPOSES ONLY

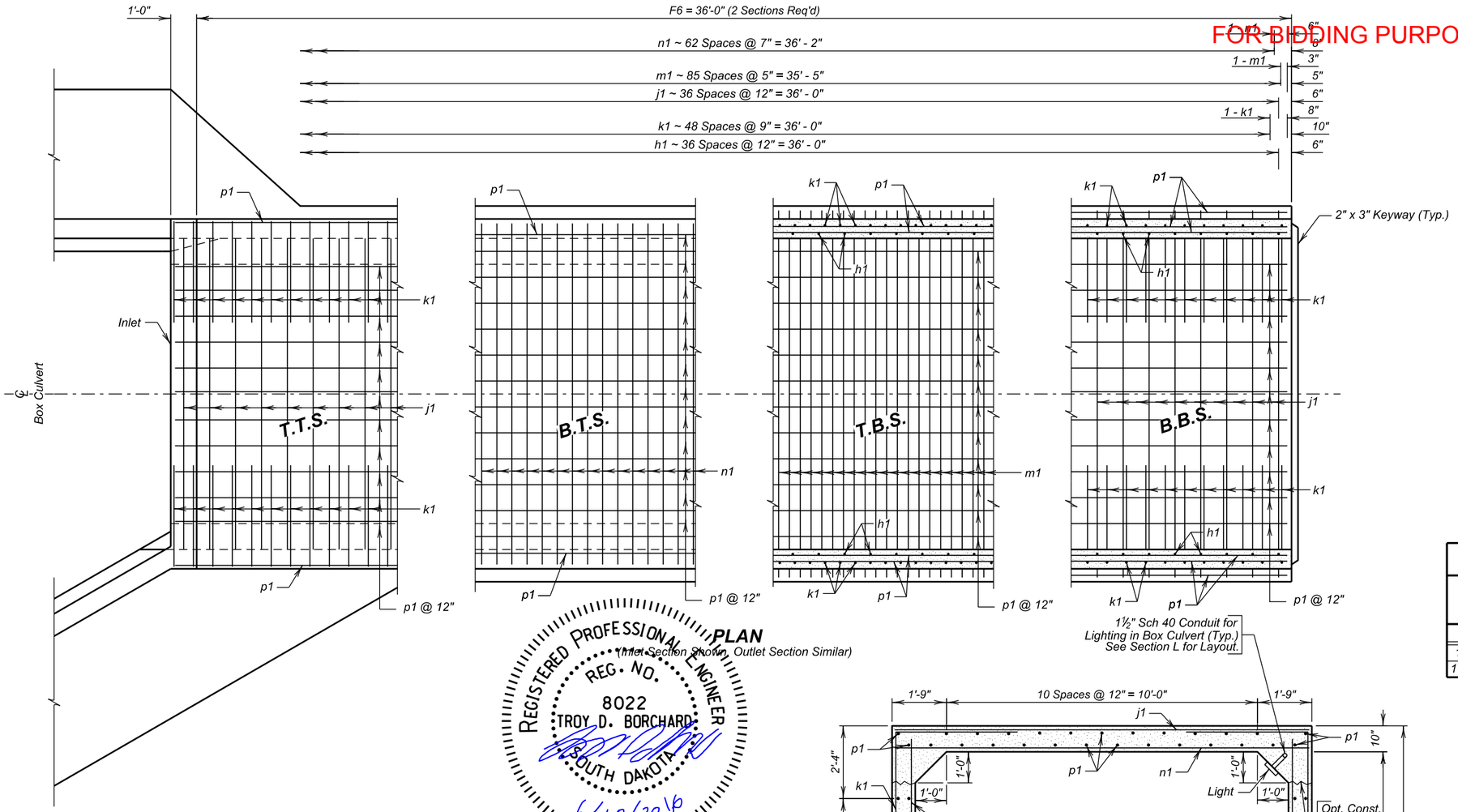

PLAN

(Inlet Section Shown, Outlet Section Similar)

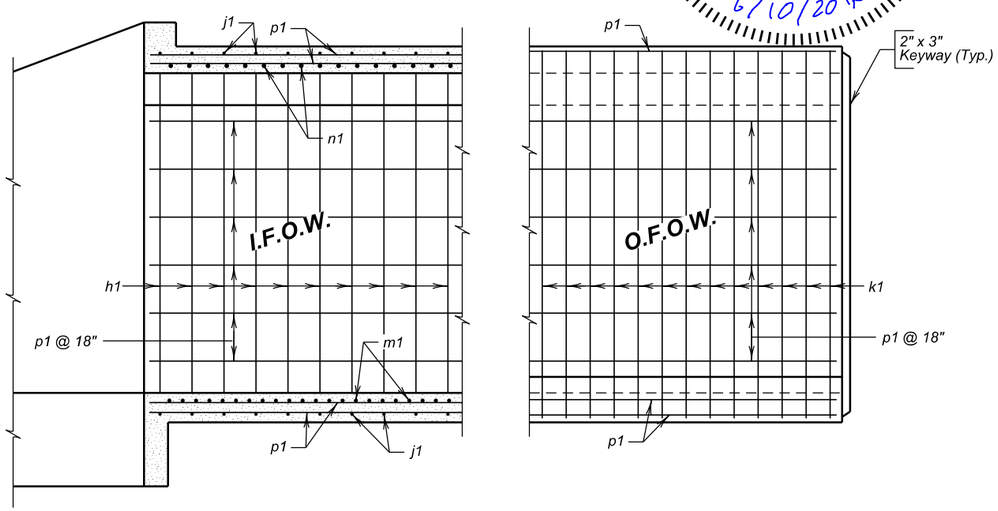

ELEVATION

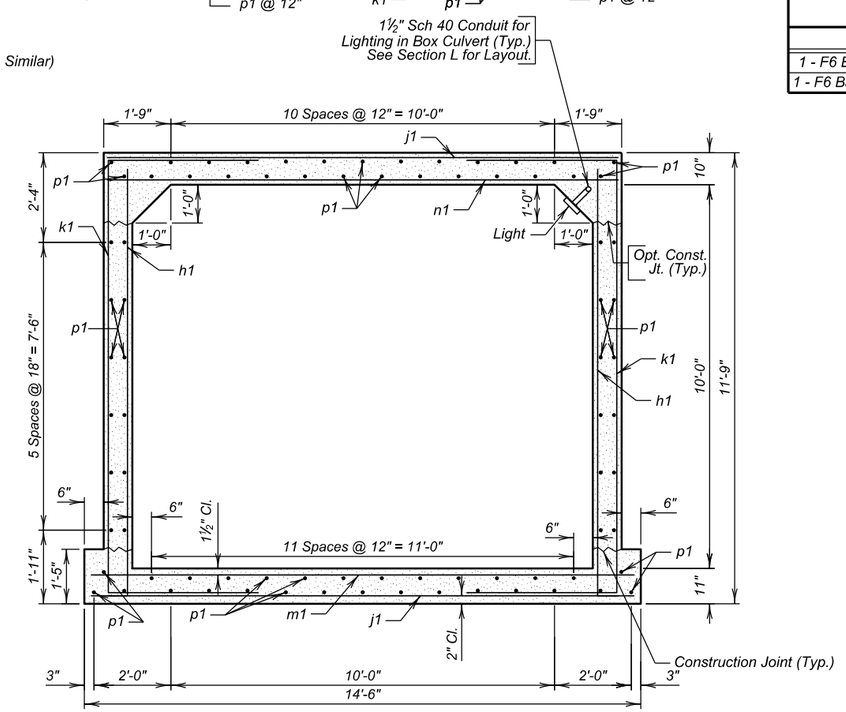

F6 BARREL SECTION

(6'-0" Maximum Fill)

REINFORCING SCHEDULE

(For 1 - F6 36'-0" Barrel End Section)(Two Required)

Mk.	No.	Size	Length	Type	Bending Details
h1	74	4	12' - 2"	17A	
j1	74	4	13' - 4"	Str.	
k1	100	6	19' - 4"	17	
m1	87	6	14' - 2"	Str.	
n1	64	7	13' - 4"	Str.	
p1	80	4	36' - 8"	Str.	
z1	See Sheet 7 of 10				

NOTES:

All dimensions are out to out of bars.

Contractor may use optional reinforcing steel splice, as shown. The cost of the additional reinforcing steel shall be borne by the Contractor.

ESTIMATED QUANTITIES

ITEM	Class A45 Concrete, Box Culvert	Reinforcing Steel	Structure Excavation, Box Culvert
UNIT	Cu.Yd.	Lb.	Cu.Yd.
1 - F6 Barrel End Section @ 36' - 0" - Inlet	54.7	9719	17.7
1 - F6 Barrel End Section @ 36' - 0" - Outlet	54.7	9719	17.7

OPTIONAL POUR - BOTTOM SLAB

The Bottom Slab may be poured continuously, at the option of the Contractor, with the use of a Preformed Metal keyway conforming to the keyway dimensions and location as shown on the plans. The keyway length shall be full width of the bottom slab. Care shall be taken to maintain proper alignment of the keyway during the pour sequence. All additional costs of this option shall be borne by the Contractor.

LEGEND FOR PLACING RE-STEEL

T.T.S. - Top of Top Slab
B.T.S. - Bottom of Top Slab
T.B.S. - Top of Bottom Slab
B.B.S. - Bottom of Bottom Slab
O. F. O. W. - Outside Face of Wall
I. F. O. W. - Inside Face of Wall

REGISTERED PROFESSIONAL ENGINEER
REG. NO. 8022
TROY D. BORCHARD
SOUTH DAKOTA
6/10/2016

F6 BARREL END SECTION DETAILS (36'-0")

FOR

12' X 10' BOX CULVERT

OVER PEDESTRIAN PATH — 0° SKEW
STA. 858+00.00 — SEC. 31-T102N-R48W
STR. NO. 50-242-177 — NH 0100(105)419
PCN 01V5 — HL-93

MINNEHAHA COUNTY

S. D. DEPT. OF TRANSPORTATION

APRIL 2016

HDR

DESIGNED BY	CK. DES. BY	DRAFTED BY	CK. DRAFT BY
CH	TB	DM	CH

STATE OF SOUTH DAKOTA	PROJECT	SHEET	TOTAL SHEETS
	NH 0100(105)419	E9	E15

FOR BIDDING PURPOSES ONLY

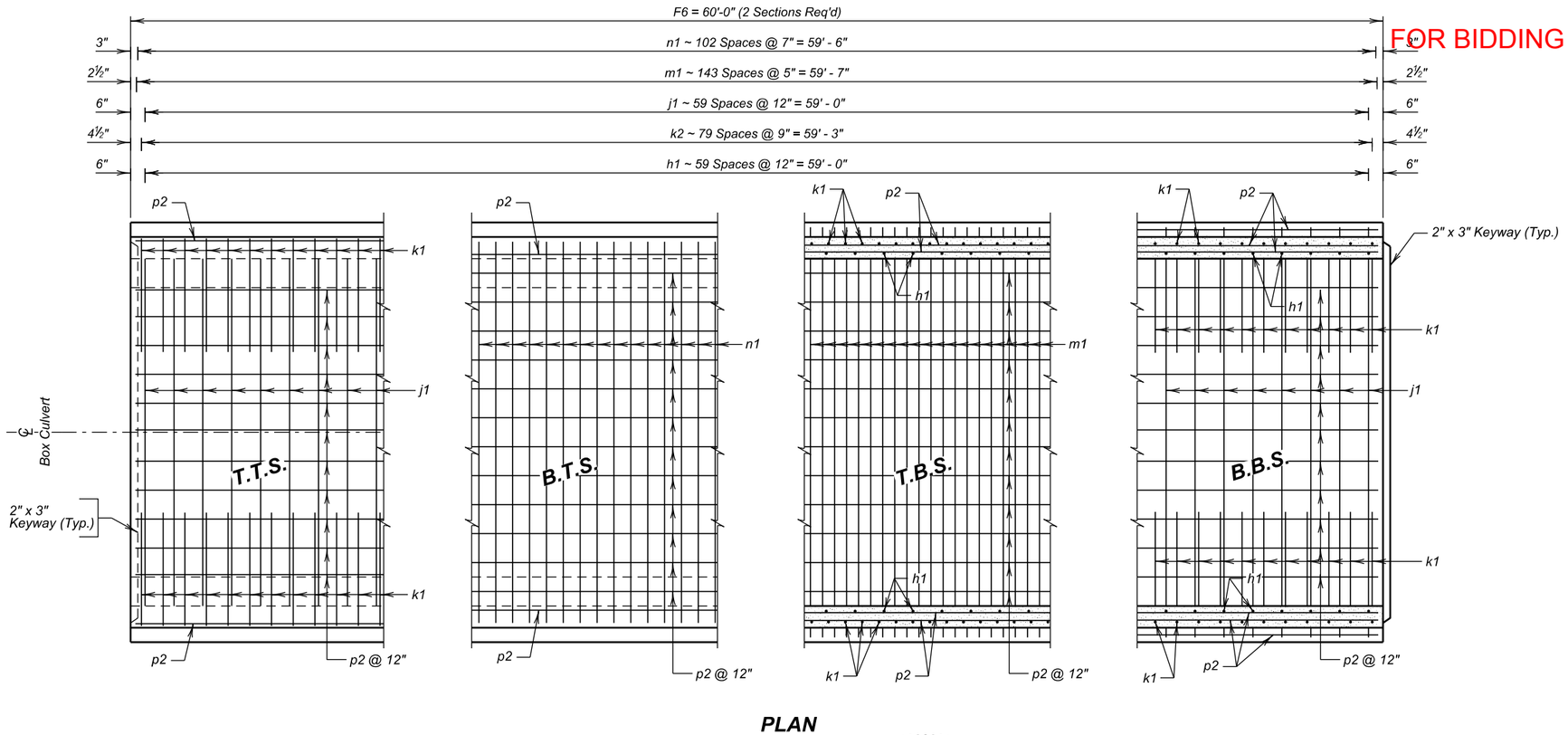

PLAN

REINFORCING SCHEDULE

(For one 60'-0" Barrel Section)
(Two Required)

Mk.	No.	Size	Length	Type	Bending Details
h1	120	4	12' - 2"	17A	
j1	120	4	13' - 4"	Str.	
k1	160	6	19' - 4"	17	
m1	144	6	14' - 2"	Str.	
n1	103	7	13' - 4"	Str.	
p2	80	4	59' - 8"	Str.	
✳ z1	36	5	3' - 6"	Str.	

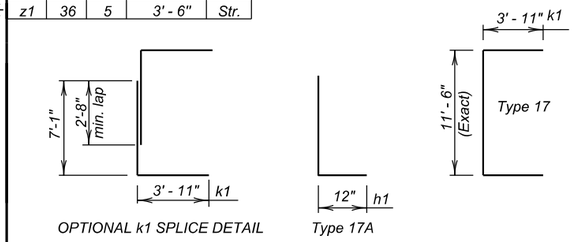

NOTES:

All dimensions are out to out of bars.

✳ Place z1 bars thru construction joint between barrel sections as shown on Standard Plate No. 460.10. Quantity shown is for one construction joint.

Contractor may use optional reinforcing steel splice, as shown. The cost of the additional reinforcing steel shall be borne by the Contractor.

ESTIMATED QUANTITIES

ITEM	Class A45 Concrete, Box Culvert	Reinforcing Steel	Structure Excavation, Box Culvert
UNIT	Cu.Yd.	Lb.	Cu.Yd.
2 - F6 Barrel Sections @ 60' - 0"	182.5	31,765	59.1

OPTIONAL POUR - BOTTOM SLAB

The Bottom Slab may be poured continuously, at the option of the Contractor, with the use of a Preformed Metal keyway conforming to the keyway dimensions and location as shown on the plans. The keyway length shall be full width of the bottom slab. Care shall be taken to maintain proper alignment of the keyway during the pour sequence. All additional costs of this option shall be borne by the Contractor.

LEGEND FOR PLACING RE-STEEL

T.T.S. - Top of Top Slab
B.T.S. - Bottom of Top Slab
T.B.S. - Top of Bottom Slab
B.B.S. - Bottom of Bottom Slab
O. F. O. W. - Outside Face of Wall
I. F. O. W. - Inside Face of Wall

REGISTERED PROFESSIONAL ENGINEER
REG. NO. 8022
TROY D. BORCHARD
SOUTH DAKOTA
6/10/2016

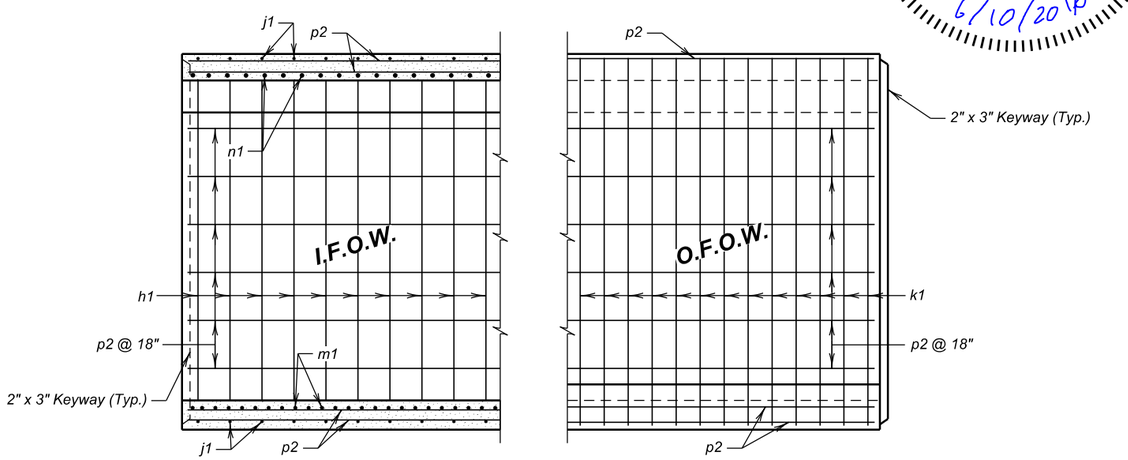

ELEVATION

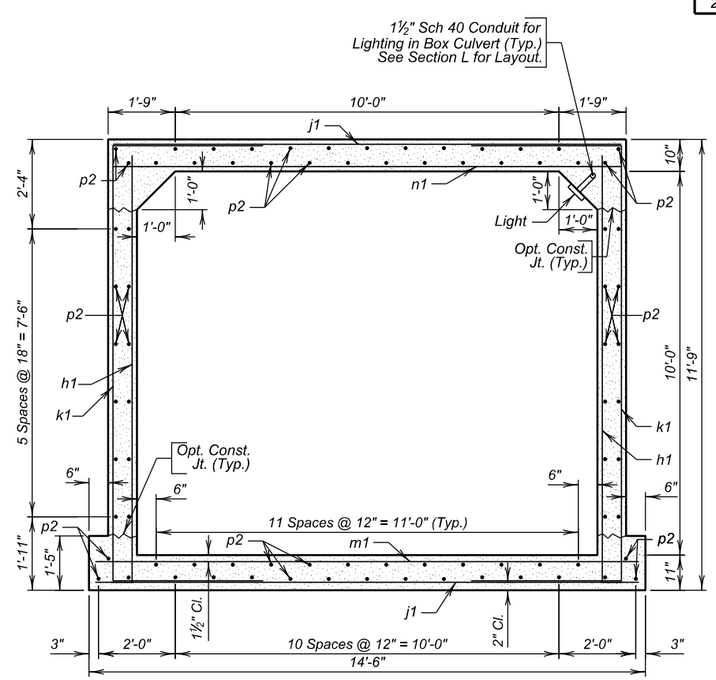

F6 BARREL SECTION
(6'-0" Maximum Fill)

F6 BARREL SECTION DETAILS (60' - 0")

FOR

12' X 10' BOX CULVERT

OVER PEDESTRIAN PATH — 0° SKEW
STA. 858+00.00 — SEC. 31-T102N-R48W
STR. NO. 50-242-177 — NH 0100(105)419
PCN 01V5 — HL-93

MINNEHAHA COUNTY
S. D. DEPT. OF TRANSPORTATION
APRIL 2016

DESIGNED BY	CK. DES. BY	DRAFTED BY	CK. DRAFT BY
CH	TB	DM	CH

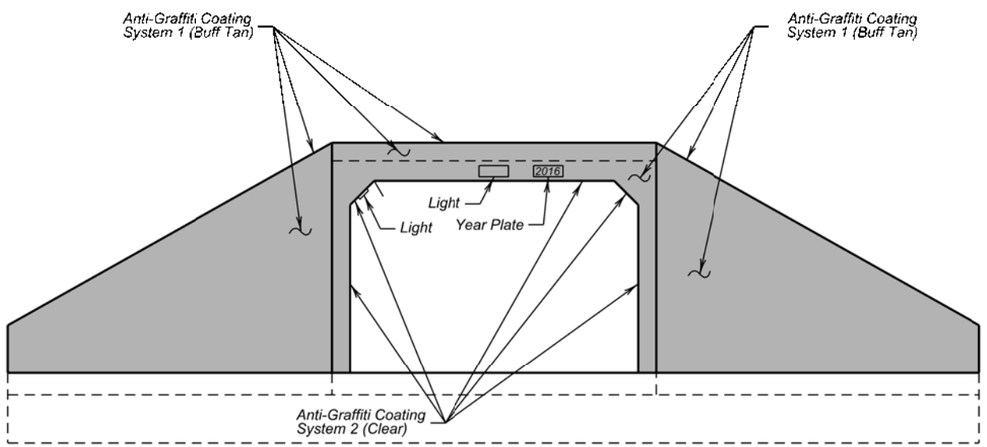

ANTI-GRAFFITI COATING
(Looking Towards Front Face of Wing Wall)
(Outlet Shown,Inlet Similar)

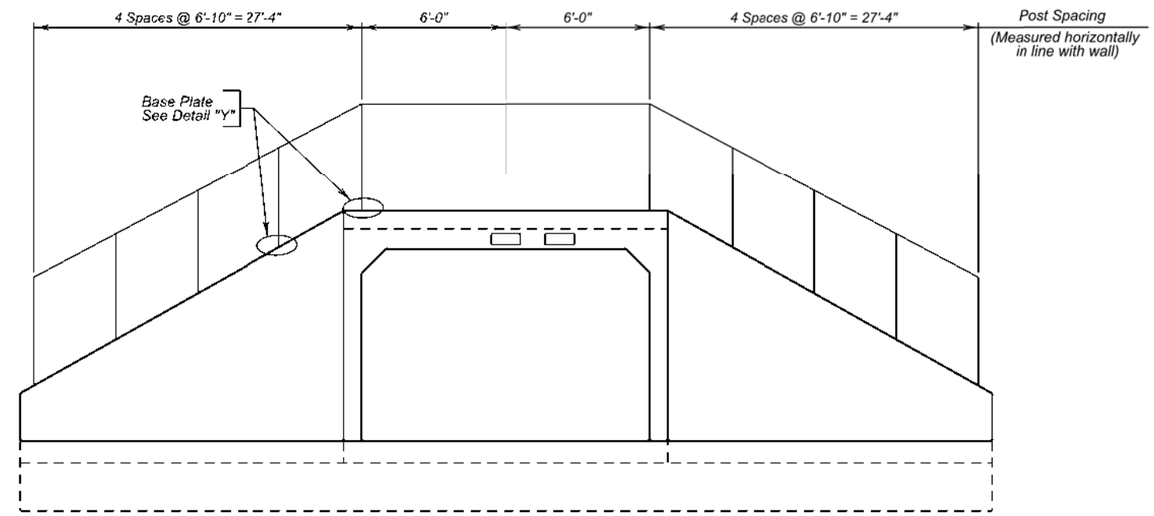

CHAIN LINK FENCE
(Outlet Shown,Inlet Similar)

ANTI-GRAFFITI COATING

Anti-Graffiti Coating - System 1 (Buff Tan color - Tnemec 31BR - Texas Sand)
Surface prep: SSPC SP 13 CSP 2
Skim Coat: Tnemec Series 218 - fill all voids to smooth surface
Prime: Tnemec Series N140 @ 8.0 dry mils
Int: Tnemec Series N140 @ 8.0 dry mils
Finish: Tnemec Series 290 @ 2.5 to 3.0 dry mils
Or Engineer Approved Equal.

Anti-Graffiti Coating - System 2 (Clear - TK-Permaclean - 1495
Surface prep: Grind to remove all sharp edges and light sandblast to removal all foreign material.
Prime: Tnemec 1450 urethane primer at 225 to 335 SqFt/gal.
Finish: TK-Permaclean 1495 at 300 to 400 SqFt/gal.
Or Engineer Approved Equal.

Anti-Graffiti coating is to be applied to the front, top and top one foot of the back of the parapet and wing walls and the walls, fillets and ceiling of the barrel as shown above. The "Skim Coat" is only required for the front faces of the wing walls and parapet and ends of the fillets (approximately 810 sq. ft.)

System 1 is to be applied to headwall and System 2 is to be applied to interior of barrel sections.

All costs in furnishing and applying the Anti-Graffiti Coating shall be included in the contract unit price per square foot for Anti-Graffiti Coating.

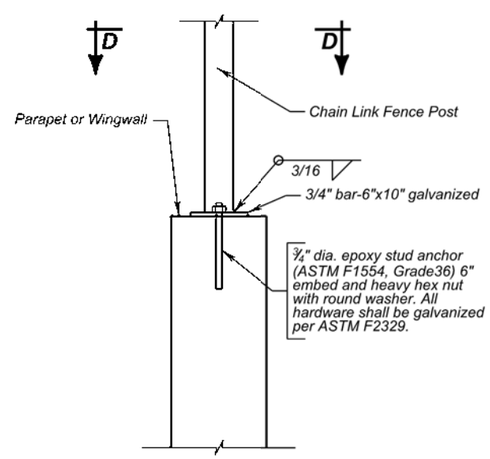

DETAIL "Y"

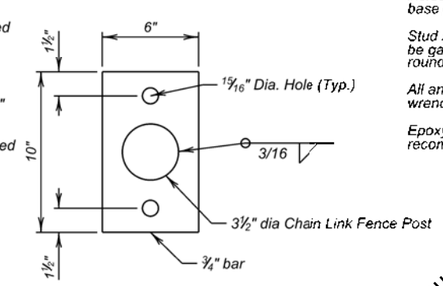

SEC. D-D

CHAIN LINK FENCE

The top of the top rail shall be 48" above top of wall.

The chain link fence fabric and supports shall conform to the requirements of Section 930 of the Construction Specifications as modified by the following notes. See Standard Plates 621.01 and 621.03 for additional requirements and details.

All posts shall be nominal 3½" diameter with a weight of 7.58 or 5.71 lb/ft.

The chain link fence fabric, wire ties, and miscellaneous hardware shall be galvanized and conform to AASHTO M181. The fence fabric shall be Type IV 9 gauge wire woven in a 2-inch diamond mesh. Knuckled selvages shall be used on the top and bottom of the fence fabric.

A brown thermally extruded polyvinyl coating shall be applied to the fence fabric, wire ties, and all miscellaneous hardware.All posts, rails, plates and other metal hardware that is not coated shall be painted in accordance with Section 411 of the Construction Specifications and the color shall be brown.

Chain link fence for the Pedestrian Underpass shall be paid for at the contract unit price per foot for 4' Chain Link Fence w/ Top Rail. This payment shall be full compensation for furnishing all material, labor, tools, and equipment necessary or incidental to the construction of the chain link fence including chain link fabric, posts, rails, wire ties, miscellaneous hardware, base plates, painting and welding, to satisfactorily complete this work.

Stud Anchors shall conform to ASTM F1554, Grade 36. Washers shall be in accordance with ASTM F436. Hardware shall be galvanized in accordance with ASTM F2329. Bolts shall be hex head "Structural" type with heavy hex, lock nuts , and round washers.

All anchor bolts and rods shall be tightened to a Torque of 120 ft./lbs. (approximated without the use of a calibrated torque wrench).

Epoxy shall be in accordance with ASTM C881 Type IV. Hole size shall be as per the epoxy manufacturer's recommendations. Core bits shall not be used to drill anchor rod holes.

ESTIMATED QUANTITIES

ITEM	UNIT	QUANTITY
4' Chain Link Fence with Top Rail	Ft	134
Anti-Graffiti Coating	Sq. Ft.	6755

REGISTERED PROFESSIONAL ENGINEER
REG. NO. 8022
TROY D. BORCHARD
SOUTH DAKOTA
6/10/2016

ANTI-GRAFFITI COATING AND
CHAIN LINK FENCE DETAILS
FOR

12' X 10' BOX CULVERT

OVER PEDESTRIAN PATH — 0° SKEW
STA. 858+00.00 — SEC. 31-T102N-R48W
STR. NO. 50-242-177 — NH 0100(105)419
PCN 01V5 — HL-93

MINNEHAHA COUNTY
S. D. DEPT. OF TRANSPORTATION
APRIL 2016

HDR

DESIGNED BY	CK. DES. BY	DRAFTED BY	CK. DRAFT BY
CH	TB	DM	CH

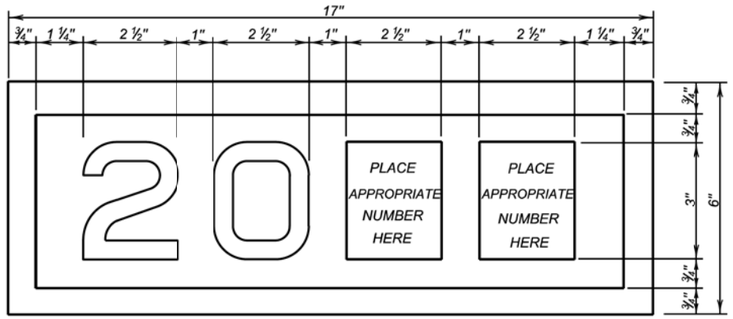

YEAR PLATE DETAILS

GENERAL NOTES:

1. Year plates of the general dimensions shown shall be constructed on all box culverts and bridges. The year plates shall be constructed in reverse and attached to the forms in such a manner that the finished imprint in the concrete does not exceed one-half (½) inch in depth.

2. Year plates shall be located on structure (s) as follows:

   a. On cast-in-place box culverts the year plates shall be four and one - half (4 ½) inches below the top of the upstream parapet wall and centered laterally on the upstream face. On precast box culverts the year plate shall be centered laterally on the upstream face of the top slab. Where an extended interior wall interferes with this location, the year plate shall be centered in an adjacent barrel.

   b. On bridges with six (6) inch curbs or "Jersey" shaped barriers with no endblocks, the year plate shall be centered vertically on the curb face approximately six (6) inches from the end of the bridge, or as designated by the Engineer. On bridges with "Jersey" shaped barrier endblocks, the year plate shall be centered on the upper sloped portion of the barrier approximately 5'- 6" from the end of the bridge, or as designated by the Engineer. There shall be one year plate at each end of the bridge on opposite sides.

   c. When the plans specify that both the original date of construction and the date of reconstruction are to be shown, one date shall be placed as listed above and the other located adjacent to it. Both year plates shall be shown at each end of the bridge on opposite sides.

3. There will be no separate measurement or payment made for year plates on box culverts and bridges. All costs for this work shall be incidental to other contract items.

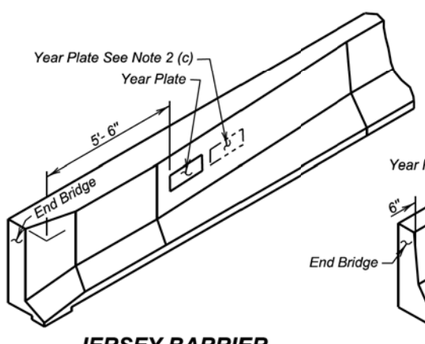

JERSEY BARRIER
(With Endblock)

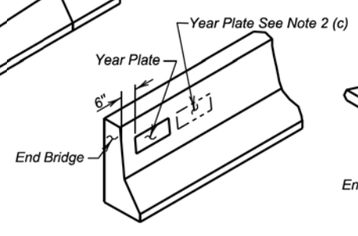

JERSEY BARRIER

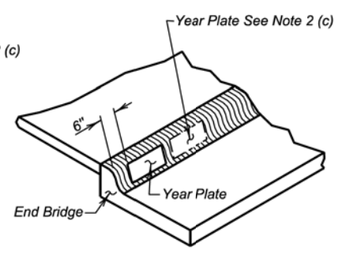

TYPE B CURB

June 26, 2012

Published Date: 3rd Qtr. 2014	SDDOT	YEAR PLATE DETAILS	PLATE NUMBER 460.02
			Sheet 1 Of 1

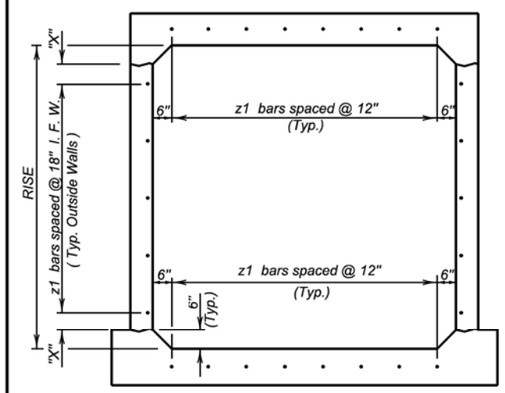

TYPICAL SINGLE BARREL VIEW A - A

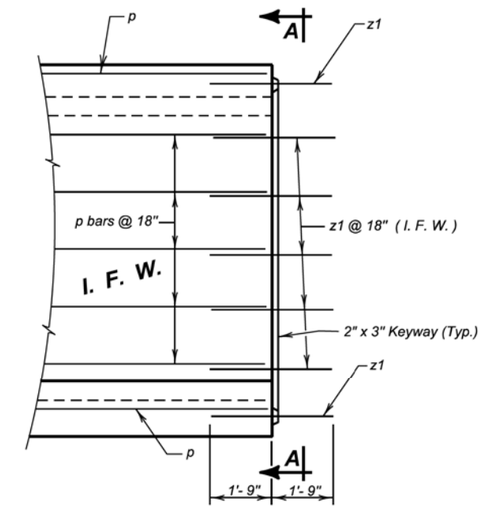

ELEVATION

LEGEND FOR PLACING RE-STEEL
I. F. W. - Inside Face Wall

RISE	"X"
3'- 0"	3"
4'- 0"	9"
5'- 0"	6"
6'- 0"	3"
7'- 0"	9"
8'- 0"	6"
9'- 0"	3"
10'- 0"	9"
11'- 0"	6"
12'- 0"	3"

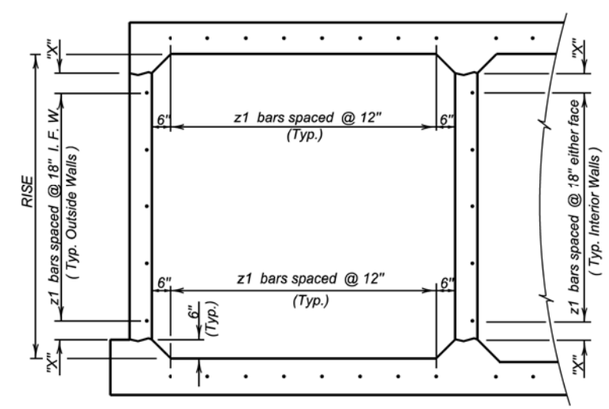

TYPICAL MULTIPLE BARREL VIEW A - A

GENERAL NOTES:

1. z1 bars shall be placed in the middle of the 2" X 3" keyway in the top and bottom slabs. z1 bars shall be lapped with the longitudinal p bars in the inside face of the wall for outside walls and in either face for interior walls. z1 bars are listed and included elsewhere in plans.

2. Drainage Fabric Protection shall be placed in accordance with Section 422, or Section 560, whichever is applicable.

June 26, 2012

Published Date: 3rd Qtr. 2014	SDDOT	BOX CULVERT BARREL TIE REINFORCEMENT	PLATE NUMBER 460.10
			Sheet 1 of 1

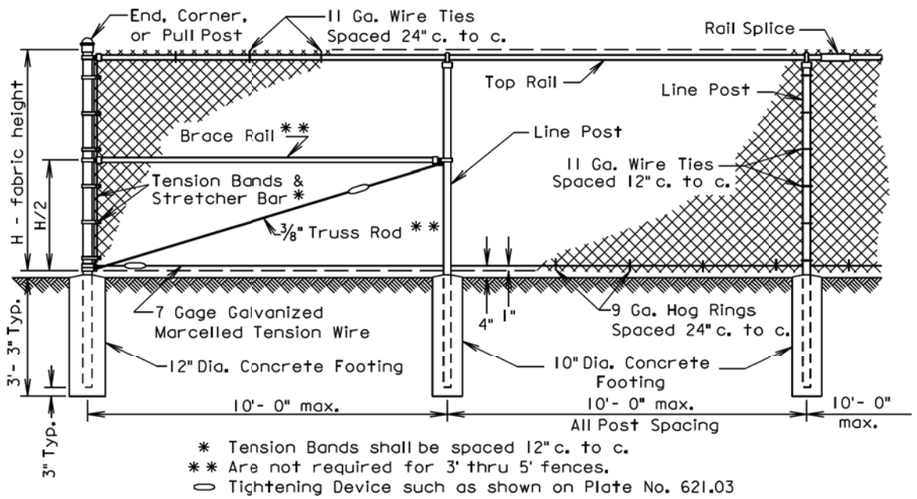

* Tension Bands shall be spaced 12" c. to c.
** Are not required for 3' thru 5' fences.
⬭ Tightening Device such as shown on Plate No. 621.03

Component	End, Corner & Pull Post		Line Post			Top & Brace Rail	
Type of Fabrication	Round Pipe Nominal	Roll Formed Steel	Round Pipe Nominal	"C" Section	H-Beam Steel	Round Pipe Nominal	Roll Formed Steel
Size	3.00" O. D.	3.5" x 3.5"	2.50" O. D.	1.875"x1.625"	2.25"x1.70"	1.625" O. D.	1.625"x1.25"
Weight (lb. / ft.)	5.79 or 4.64	5.14	3.65 or 3.12	2.34	3.43	2.27 or 1.84	1.35

GENERAL NOTES:

Specific details of manufacture of component parts of the complete fence construction shall be subject to the approval of the Engineer. Commercially available items produced specifically for the use intended shall be used wherever possible in the construction of the fence.

"H" (Height of Fabric) shall be as shown on the Plans. Fabric is available in the the following heights; 36", 42", 48", 60", 72", 84", 96", 108", 120", & 144". Fabric heights 60 inches and under shall be knuckled at both selvages. Fabric heights 72 inches and over shall be knuckled at one selvage and twisted at the other selvage.

Chain Link Fabric shall be 2" mesh, No. 9 gage galvanized wire securely fastened to Tension Wire, Line Post, Rails, Braces and Stretcher Bars spaced as shown hereon.

Fence may be constructed with either Round Pipe, "C" Section, "H" Beam, or roll Formed Steel components as shown in the table above. Line post may be Round Pipe, "C" Section, or "H" Beam. The Corner Post and Rails shall be either Round Pipe or Roll Formed Steel. The type of components used shall have prior approval by the Engineer before construction.

Where fence must cross small bodies of water (such as drainage areas or ponds) that could freeze during the winter, use 11 gage Hog Rings. Provide only two ties per Tension Wire and Top Rail between line posts.

A suitable method of rail splicing shall be used to allow for expansion and contraction while maintaining proper position of the Top Rail.

March 31, 2000

Published Date: 3rd Qtr. 2014	SDDOT	CHAIN LINK FENCE WITH TOP RAIL	PLATE NUMBER 621.01 Sheet 1 of 1

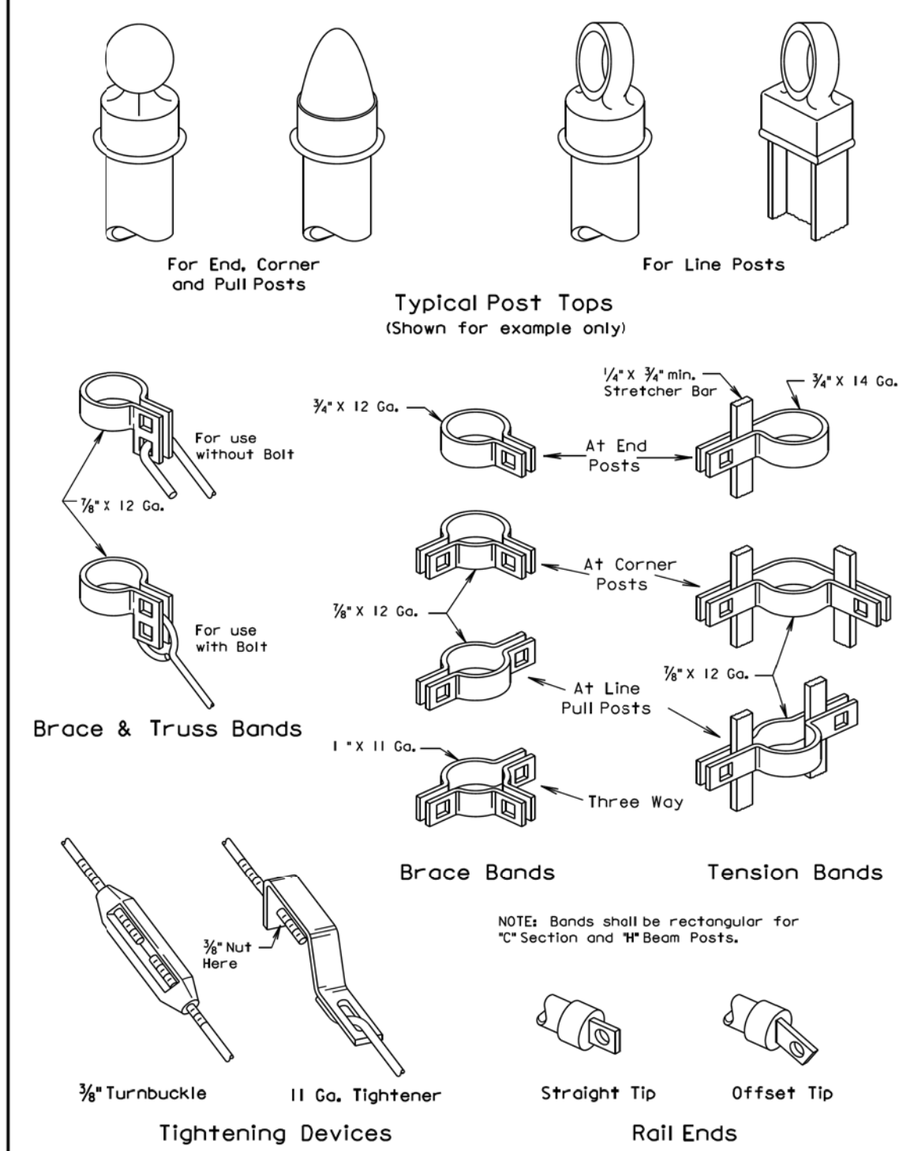

March 31, 2000

Published Date: 3rd Qtr. 2014	SDDOT	HARDWARE FOR CHAIN LINK FENCE	PLATE NUMBER 621.03 Sheet 1 of 1

The elevations shown in these plans are based on the National Geodetic Survey (NGS) North American Vertical Datum of 1988 (NAVD88).

FOR BIDDING PURPOSES ONLY

STATE OF SOUTH DAKOTA	PROJECT	SHEET	TOTAL SHEETS
	NH 0100(105)419	E13	E15

LEGEND FOR PLACING RE-STEEL

T.T.S. - Top of Top Slab
B.T.S. - Bottom of Top Slab
T.B.S. - Top of Bottom Slab
B.B.S. - Bottom of Bottom Slab

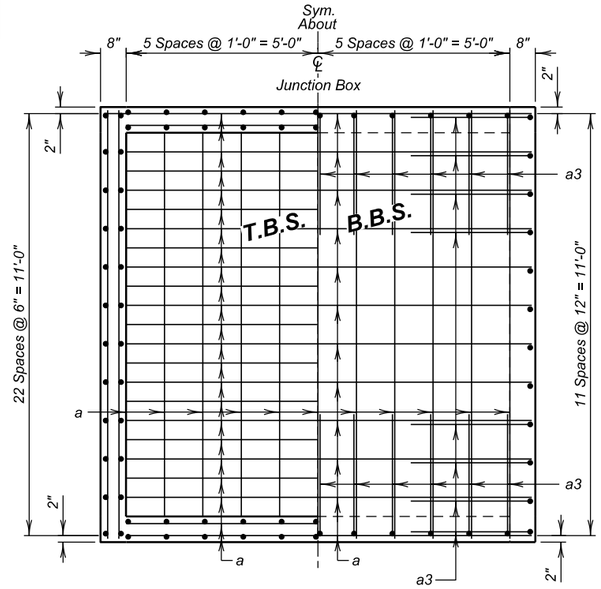

PLAN
(Bottom Slab)

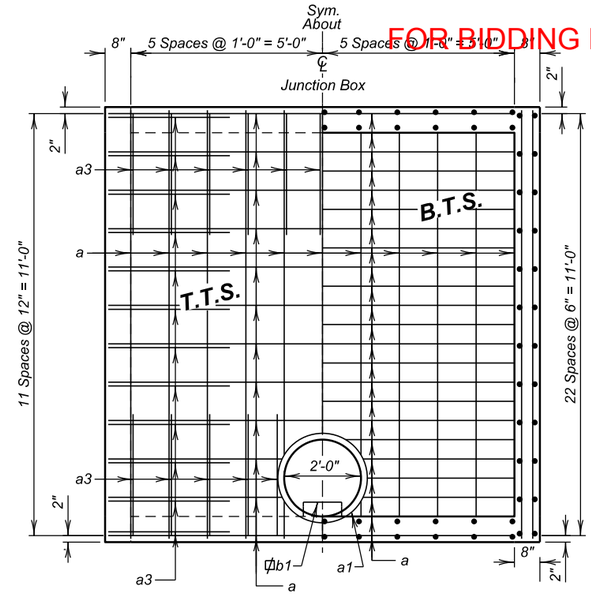

PLAN
(Top Slab)

NOTE:

1. See Sheet No. 2 for Section A-A, Section B-B, Section C-C, Section D-D and Section E-E.

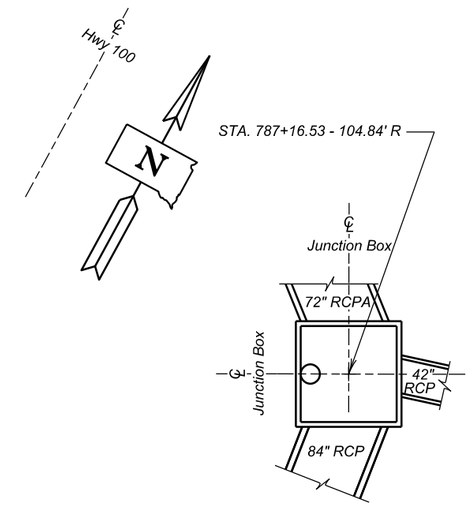

LAYOUT

ESTIMATED QUANTITIES

ITEM	⊛Class M6 Concrete	Reinforcing Steel	Structure Excavation (Misc.)	Type A7 Manhole Frame and Lid
UNIT	Cu.Yd.	Lb.	Cu.Yd.	Each
10 x 10 Junction Box	13.8	2621	34.2	1

⊛ The quantites for the Class A45 Concrete has been reduced for pipe openings & manhole. The reductions for each pipe opening / manhole are: 0.4 Cu.Yd. for 42" RCP, 1.4 Cu.Yd. for 72" RCPA, 1.0 Cu. Yd. for 84" RCP and 0.1 Cu. Yd. for manhole.

SPECIFICATIONS:

1. Design Specifications: AASHTO LRFD Specifications for Highway Bridges, 2015 Edition.
2. Constructions Specifications: South Dakota Standard Specifications for Roads and Bridges, Current Edition and required Provisions, Supplemental Specifications and/or Special Provisions as included in the Proposal.

GENERAL NOTES:

1. The design of the Junction Box is based on a maximum fill over the Junction Box of 2 feet.
2. All reinforcing steel shall conform to ASTM A615 Grade 60.
3. All exposed edges shall be chamfered ¾ inch
4. Use 1 inch clear cover on all reinforcing steel EXCEPT as shown
5. The cost of furnishing and installing the manhole steps shall be incidental to the contract unit price per pound for the Reinforcing Steel
6. Reinforcing steel shall be cut and bent in the field as necessary to fit pipe and manhole openings.
7. All pipes entering the junction box must fit between the inside faces of the walls.
8. No Live Load is considered in the design of Junction Box.

DESIGN MIX OF CONCRETE

1. Mix shall produce a concrete having a minimum compressive strength of 4500 p.s.i. at 28 days.
2. Type II cement is required

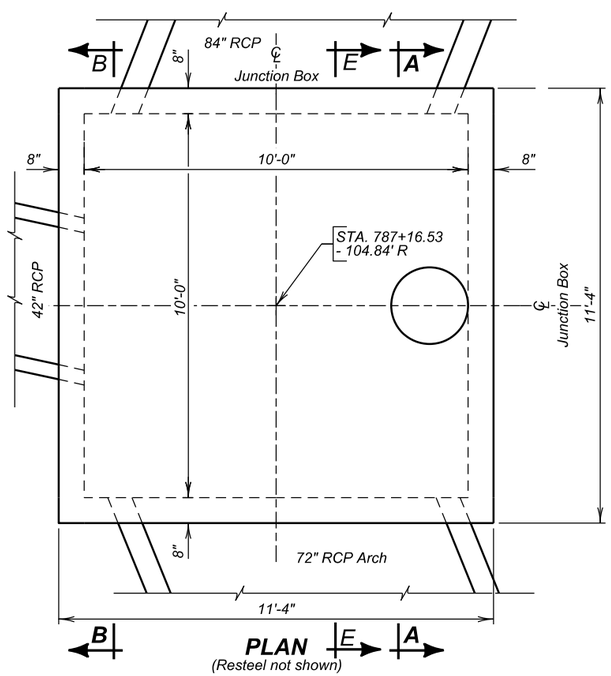

PLAN
(Resteel not shown)

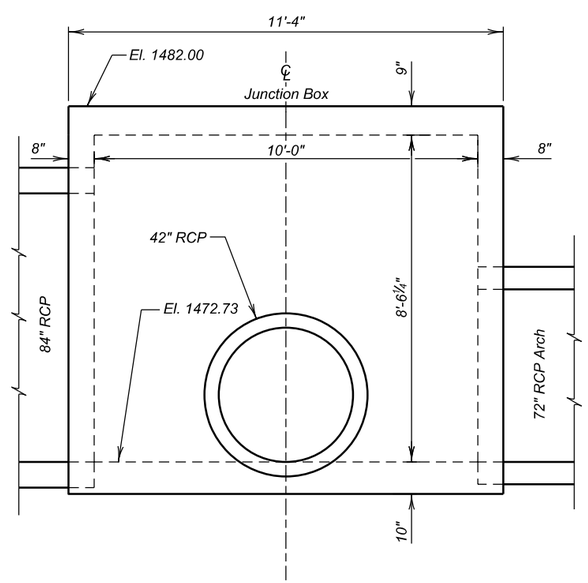

ELEVATION
(Resteel not shown)

REGISTERED PROFESSIONAL ENGINEER
REG. NO. 8022
TROY D. BORCHARD
SOUTH DAKOTA
6/10/2016

LAYOUT & DETAILS
FOR
10' X 10' JUNCTION BOX

STA. 787+16.53 - 104.84' R

SEC. 6-T101N-R48W
NH 0100(105)419

PCN 01V5

MINNEHAHA COUNTY
S. D. DEPT. OF TRANSPORTATION
APRIL 2016

HDR

DESIGNED BY	CK. DES. BY	DRAFTED BY	CK. DRAFT BY
CH	TB	CH	TB

STATE OF SOUTH DAKOTA	PROJECT	SHEET	TOTAL SHEETS
	NH 0100(105)419	E14	E15

FOR BIDDING PURPOSES ONLY

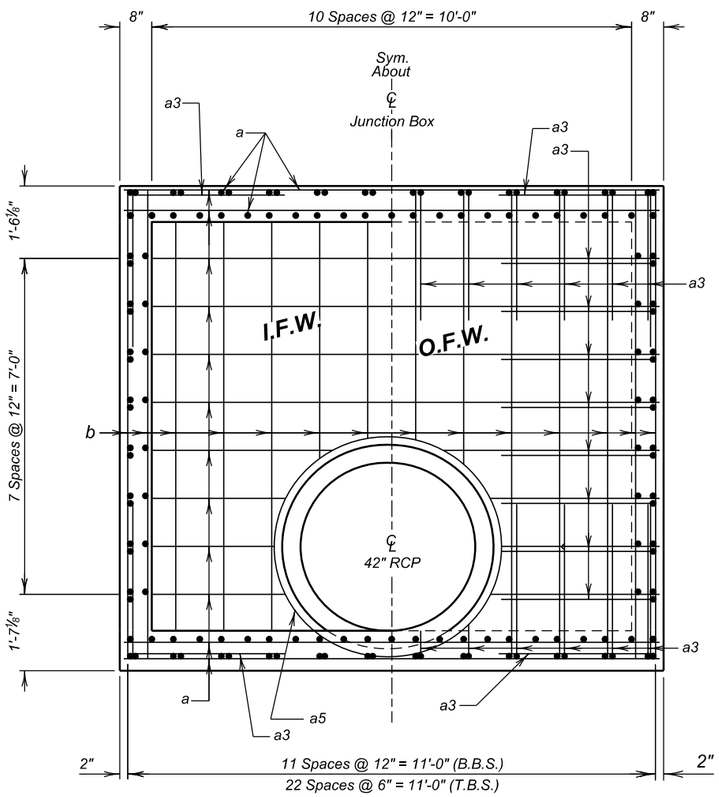

SEC. B - B

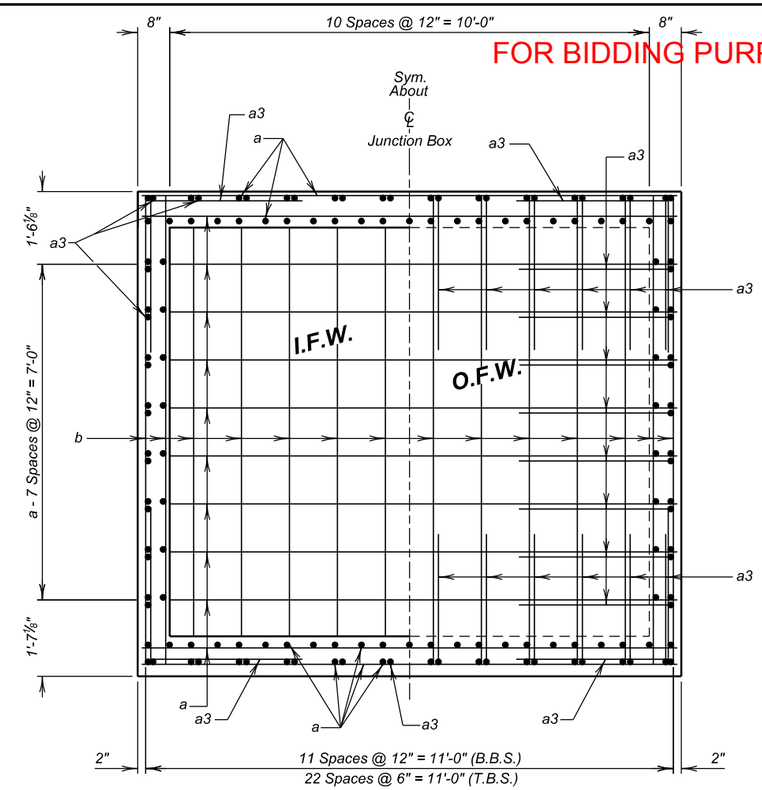

SEC. A - A

REINFORCING SCHEDULE

	Mk.	No.	Size	Length	Type
	a	186	4	11'-2"	Str.
	a1	2	4	8'-4"	T3
☆	a2	2	4	28'-9"	T3
	a3	111	4	6'-4"	17A
☆	a4	2	4	28'-3"	T3
	a5	2	4	15'-5"	T3
	b	92	4	10'-8"	Str.
⌀	b1	—	—	—	—

Bending Details

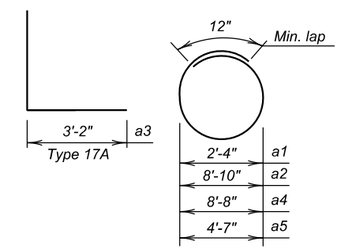

NOTES:

All dimensions are out to out of bars.

⌀ Cast Iron Manhole Steps (R-1980-C) from Neenah Foundry or equivalent.

☆ a2 for 72" RCPA, a4 for 84" RCP.

LEGEND FOR PLACING RE-STEEL

O.F.W - Outside Face of Wall

I.F.W. - Inside Face of Wall

NOTE:

See Sheet No.1 for location of Section A-A, Section B-B and Section E-E.

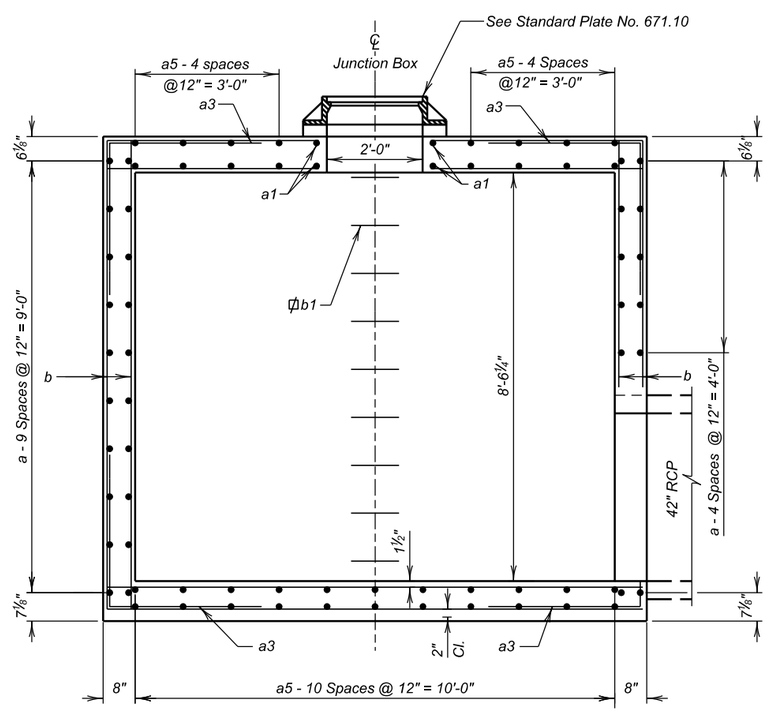

SEC. E - E

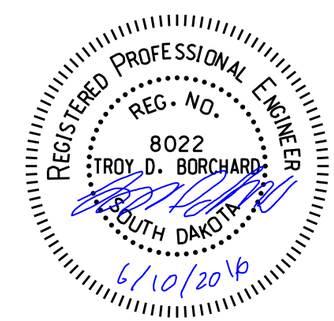

DETAILS

FOR

10' X 10' JUNCTION BOX

STA. 787+16.53 - 104.84' R

SEC. 6-T101N-R48W

NH 0100(105)419

PCN 01V5

MINNEHAHA COUNTY

S. D. DEPT. OF TRANSPORTATION

APRIL 2016

HDR

DESIGNED BY	CK. DES. BY	DRAFTED BY	CK. DRAFT BY
CH	TB	CH	TB

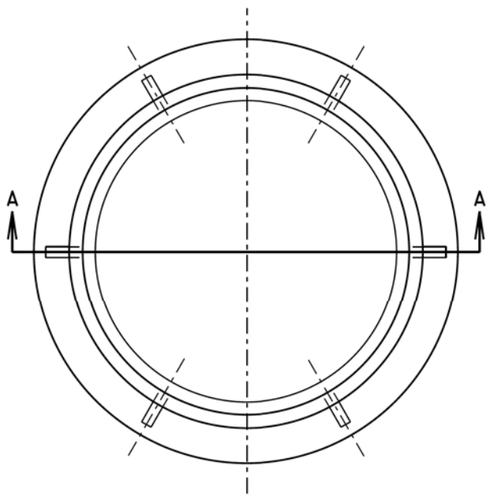

PLAN OF FRAME

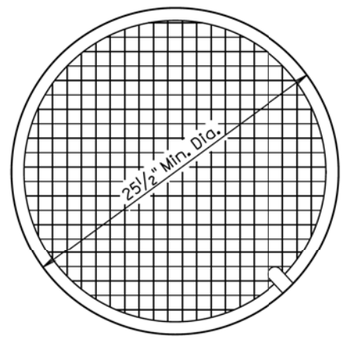

PLAN OF LID

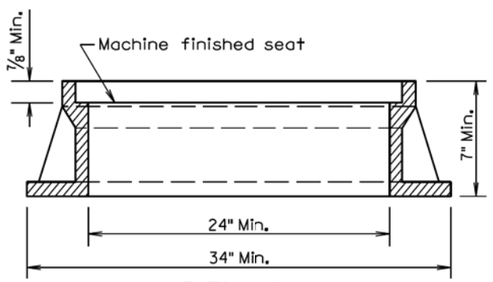

SECTION A-A

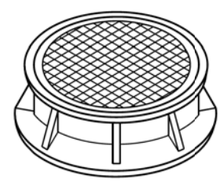

ASSEMBLED VIEW

TYPE	HEIGHT	MIN. WEIGHT
A7	7"	400Lbs.
A8	8"	440Lbs.
A9	9"	470Lbs.
A10	10"	480Lbs.

GENERAL NOTE:

Geometric pattern on top of lid other than that shown shall be approved by the Engineer.

March 31, 2000

Published Date: 2nd Qtr. 2016	SDDOT	***TYPE A MANHOLE FRAME AND LID***	***PLATE NUMBER*** *671.10*
			Sheet 1 of 1