Section S: Permanent Signing Plans

INDEX OF SHEETS

S1	General Layout w/Index
S2 and S3	Estimate W/General Notes, Sign Removal Table, and Breakaway Support Table
S4 and S5	Sign Installation Table
S6	Signing Layout
S7	Sign Details
S8 thru S12	Sign Installation Details
S13	Standard Plate

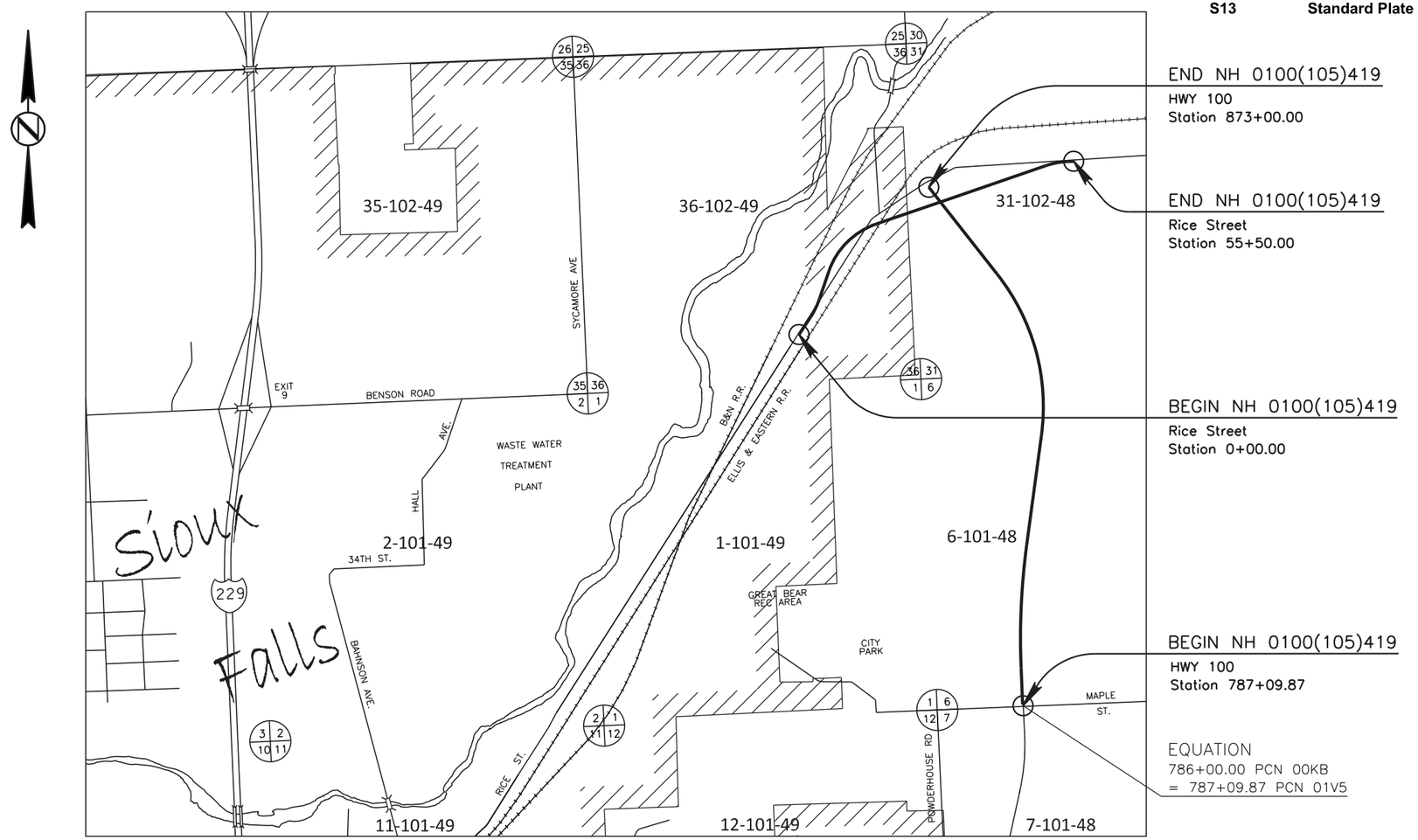

PLOT SCALE - 1:206.692
PLOTTED FROM - TRMI1NT17
PLOT NAME - 69
FILE - ...\01V5 SIGNING CONTAINER.DGN

SECTION S PERMANENT SIGNING ESTIMATE OF QUANTITIES

BID ITEM NUMBER	ITEM	QUANTITY	UNIT
110E5020	Salvage Traffic Sign	7	Each
110E5030	Salvage Extruded Panel Sign	1	Each
632E0010	1.25' Diameter Breakaway Support Concrete Footing	12.0	Ft
632E0014	1.75' Diameter Breakaway Support Concrete Footing	16.0	Ft
632E1235	W6x20 Steel Post	50.0	Ft
632E1320	2.0"x2.0" Perforated Tube Post	76.8	Ft
632E1340	2.5"x2.5" Perforated Tube Post	30.0	Ft
632E3113	Extruded Aluminum Sign, Nonremovable Copy High Intensity	140.0	SqFt
632E3203	Flat Aluminum Sign, Nonremovable Copy High Intensity	69.1	SqFt
632E3205	Flat Aluminum Sign, Nonremovable Copy Super/Very High Intensity	27.0	SqFt
632E3520	Remove, Salvage, Relocate, and Reset Traffic Sign	8	Each
632E4005	Type 3 Single Sided Barricade	8.0	Ft

SCOPE OF PERMANENT SIGN WORK

The permanent sign work includes, but is not limited to, the following:

A. Items to be removed and salvaged by the Contractor:

1. Existing permanent signs and supports
2. Extruded panel sign

B. Items to be furnished and installed by the Contractor:

1. Breakaway steel post sign supports with concrete footings
2. Perforated tube supports
3. Flat aluminum signs
4. Extruded Panel signs

SALVAGE TRAFFIC SIGN

Signs, reusable posts, and hardware damaged or lost while in the care of the Contractor shall be replaced in kind at the Contractor's expense.

The Contractor shall neatly stockpile salvaged signs, posts, and related hardware [nuts, bolts, and miscellaneous mounting hardware] at Department of Transportation Maintenance Yard at 5316 West 60th Street North in Sioux Falls, South Dakota. Stockpiling of salvaged material shall be coordinated with the Project Engineer and the Department of Transportation Sioux Falls Sign Crew Lead Worker.

All bolts, nuts, and washers shall be placed in individual five-gallon pails.

Signs, reusable posts, and hardware damaged or lost due to carelessness shall be replaced in kind at the contractor's expense.

All nuts, bolts, and miscellaneous mounting hardware salvaged from existing signs shall not be reused.

Single post flat aluminum sign assemblies [flat aluminum sign(s), post, hardware, and footing (if present)] may be removed and salvaged as one unit.

Signs shall be separated from supports prior to stockpiling. Salvaged signs shall be neatly stockpiled without damaging them.

All salvaged signs that are not immediately relocated and reset shall be neatly stockpiled.

Cost for salvaging shall be included in the contract unit price per each for Salvage Traffic Sign and Salvage Extruded Panel Sign.

SALVAGE EXTRUDED PANEL SIGN

The Advance Street Name Sign salvage at 773+00R involves salvaging of the extruded panels, hardware, and overlay only with the supports and footings remaining in place.

REMOVE, SALVAGE, RELOCATE AND RESET PERMANENT SIGNS

The Contractor shall remove, salvage, relocate, and reset the full roadway closure from station 786+0 to station 873+055, as indicated in the Sign Tables.

The Contractor shall replace in kind any signs, supports, support bases or related hardware lost or damaged during the time the signs were removed, salvaged, stockpiled and reset. Any replacement materials shall be in kind and at the Contractor's expense.

FURNISH AND INSTALL TRAFFIC SIGNS

The signs listed in the Sign Installation Table in the plans as new installations shall be provided for the locations specified.

Flat aluminum signs shall be 0.100" sheet aluminum.

SIGN LEGEND, BORDER AND BACKGROUND

All sign legend, border and background sheeting material shall meet or exceed standards for ASTM D4956 classified Type IV high intensity sheeting or Type XI super/very high intensity sheeting, as indicated in the plans.

Side trim moldings shall be painted to match the color of the sign background sheeting. The color coat shall be preceded by a zinc chromatic primer.

POLE MOUNTED SIGNS

Signs mounted on signal poles, luminaire poles, and mast arms shall be attached with high strength stainless steel bands or galvanized pole clamps. Mast arm sign supports shall conform to the specifications for cantilever sign supports. Mast arm supports shall be Pelco AB-0105 Astro-Brac Sign Band Mount manufactured by Pelco Products, Inc., 320 West 18TH Street, Edmond, Oklahoma, or approved equal.

All sign mounting hardware shall be stainless steel or galvanized steel.

SIGN POSTS

The plan post lengths shall be field verified by the Contractor.

Breakaway anchor perforated tube post lengths listed in the Post Size/ Quantity columns of the Sign Installation Table include the minimum 0.8' (9")/post subgrade length.

Direct drive perforated tube post lengths listed in the Post Size/ Quantity columns of the Sign Installation table include the minimum 4'/post subgrade length.

Supports shall be cut to provide the proper sign height.

Post anchors shall be 48" long. Two-piece anchor post systems are required for 2" perforated tube post anchor stub posts.

The Contractor shall provide block-outs or shall core holes 9" in diameter in concrete where sign posts are to be installed. The Contractor shall backfill each hole with cold mix asphalt concrete after the base has been installed, to the satisfaction of the Engineer.

TWO POST BREAKAWAY SIGN SUPPORT TABLE

SIGN NUMBER	SIGN DESCRIPTION	SITE LOCATION	POST SIZE	FOOTING DIMENSIONS		STUB POST LENGTH	LONGITUDINAL STEEL		SPIRAL STEEL	
				DIA.	DEPTH		QTY - SIZE	LENGTH	DIA.	LENGTH
NA	Advance Street Name Signs	SD 100 Mainline	W 6 x 20	1' - 9"	4' - 0"	2' - 3"	8 - #6 Bars	3' - 8"	1' - 5"	29'

CONCRETE FOOTINGS (CLASS M6)

The exposed portion of fixed base concrete footings shall be formed to provide a uniform diameter section and half-inch chamfer on the grout pad as shown on the footing details. The amount of exposed concrete footings on the up-slope side of the footing shall not be greater than 3” as shown on the footing details.

Footings for breakaway signs shall be below ground as shown on the footing details and need not be formed.

DATE DECAL

Each date decal is 2” X 2” having black numerals on a white background (as typified below).

SIGN REMOVAL TABLE

SIGN DATA					
STATION	DESCRIPTION	SIGN SIZE (FT)	SALVAGE TRAFFIC SIGN *	SALVAGE EXTRUDED PANEL SIGN	REMOVE AND RESET
			110E5020	110E5030	632E3520
SD100					
712+25 L	DIVIDED HIGHWAY	3.00X 3.00	1{PT}		
719+75 L	KEEP RIGHT	2.00X 2.50	1{PT}		
712+75 R	TWO-WAY TRAFFIC	3.00X 3.00	1{PT}		
734+75 L	DIVIDED HIGHWAY ENDS	3.00X 3.00	1{PT}		
773+00 R	Maple Street NEXT INTERSECTION	10.00X 3.00		1	
785+10 R	STOP	3.00X 3.00	1{PT}		
	ALL-WAY	1.50X 0.50			
786+05	ROAD CLOSED	4.00X 2.50			1
	TYPE 3 CLOSURE BARRICADE				7{2PT}
MAPLE STREET					
44+95 R	ALL-WAY (leave STOP)	1.50X 0.50	1		
264th STREET					
54+50 L	ALL-WAY (leave STOP)	1.50X 0.50	1		
TOTALS			**7**	**1**	**8**

* -Number and type- [{U}-Channel {L}uminaire

{PT} Perforated Tube {2PT} Two Perforated Tube] of support(s)

SIGN INSTALLATION TABLE

SIGN DATA											POST DATA						FOOTING DATA			
STATION	DESCRIPTION	SIGN CODE	SIGN SIZE (Ft)	SIGN AREA (SqFt) EA §	Type IV	TYPE XI	OFFSET* (R)IGHT/ (L)EFT	SIGN FACES	TYPE 3 BARRI-CADE	COMMENTS	POST LENGTHS Ⓧ INSIDE	OUTSIDE	BREAK-AWAY #	SIZE/QUANTITY {Ft} W6x20 STEEL	2.0"x2.0" TUBE	2.5"x2.5" TUBE	FOOTINGS (Ft) BREAKAWAY 1.25' DIA.	1.75' DIA.	FOOTING LENGTHS INSIDE	OUTSIDE
SD100				632E3115	632E3203	632E3205			632E4005					632E1235	632E1320	632E1340	632E0010	632E0014		
773+00 R	Maple Street NEXT INTERSECTION / Rice Street 2ND INTERSECTION	D3-2	10.00X 5.50	55.0			2.0' R	SOUTH		INSTALL NEW SIGN ON EXISTING SUPPORTS USING NEW HARDWARE.										
785+10 R	DO NOT ENTER	R5-1	3.00X 3.00			9.0	5.0' R	NW			10.0'		S			10.0	4.0		4.0	
785+25 L	ONE WAY	R6-6R	3.00X 1.00		3.0		16.0' L	WEST			8.8'		A		8.8					
	ONE WAY	R6-1L	3.00X 1.00		3.0			EAST												
785+95 R	ONE WAY	R6-6R	3.00X 1.00		3.0		8.0' R	WEST			8.8'		A		8.8					
	ONE WAY	R6-1L	3.00X 1.00		3.0			EAST												
786+00.00 PCN00KB=787+09.87 PCN01V5																				
787+70 L	DO NOT ENTER	R5-1	3.00X 3.00			9.0	2.0' R	SE			10.0'		S			10.0	4.0		4.0	
788+10 R	KEEP RIGHT	R4-8c	1.50X 2.50		3.8			SOUTH		CENTER IN MEDIAN-BLOCKOUT REQUIRED	10.3'		A		10.3					
789+00 R	SPEED LIMIT 45	R2-1	2.00X 2.50		5.0		2.0' R	SOUTH			10.3'		A		10.3					
798+00 L	Maple Street NEXT INTERSECTION / Madison Street 2ND INTERSECTION	D3-2	10.00X 5.50	55.0			2.0' R	SOUTH			12.5'	12.5'	S	25.0'				8.0	4.0	4.0
859+00 R	Rice Street NEXT INTERSECTION	SPECIAL	10.00X 3.00	30.0			2.0' R	SE			12.5'	12.5'	S	25.0'				8.0	4.0	4.0
869+50 L	SPEED LIMIT 45	R2-1	2.00X 2.50		5.0		2.0' R	SOUTH			10.3'		A		10.3					
869+95 R	DO NOT ENTER	R5-1	3.00X 3.00			9.0	2.0' R	NW			10.0'		S			10.0	4.0		4.0	
870+44 L	KEEP RIGHT	R4-8c	1.50X 2.50		3.8			NORTH		CENTER IN MEDIAN-BLOCKOUT REQUIRED	10.3'		A		10.3					
SHEET TOTALS				140.0	29.6	27.0			0.0					50.0	58.8	30.0	12.0	16.0		

* - Distance from edge of shoulder or back of curb to edge of the sign. § - E(xtruded) A(luminum)

\# - (S)lip Base, (A)nchor Stub Post, or (D)irect Drive

Ⓧ -Plan post lengths are estimates. The post lengths shall be field verified by the Contractor.

FOR BIDDING PURPOSES ONLY

STATE OF SOUTH DAKOTA	PROJECT	SHEET	TOTAL SHEETS
	NH 0100(105)148	S5	S13

SIGN INSTALLATION TABLE

SIGN DATA											POST DATA						FOOTING DATA			
STATION	DESCRIPTION	SIGN CODE	SIGN SIZE (Ft)	SIGN AREA (SqFt) EA §	SIGN AREA (SqFt) Type IV	SIGN AREA (SqFt) TYPE XI	OFFSET* (R)IGHT/ (L)EFT	SIGN FACES	TYPE 3 BARRI-CADE	COMMENTS	POST LENGTHS ☒ INSIDE	POST LENGTHS ☒ OUTSIDE	BREAK-AWAY #	SIZE/QUANTITY {Ft} W6x20 STEEL	SIZE/QUANTITY {Ft} 2.0"x2.0" TUBE	SIZE/QUANTITY {Ft} 2.5"x2.5" TUBE	FOOTINGS (Ft) BREAKAWAY 1.25' DIA.	FOOTINGS (Ft) BREAKAWAY 1.75' DIA.	FOOTING LENGTHS INSIDE	FOOTING LENGTHS OUTSIDE
SD100				632E3115	632E3203	632E3205			632E4005					632E1235	632E1320	632E1340	632E0010	632E0014		
870+90 R		R3-5R	2.50X 3.00		7.5		R	SOUTH		MAST ARM MOUNTED CENTERED OVER TURN LANE										
871+74 L		R3-5L	2.50X 3.00		7.5		R	SOUTH		MAST ARM MOUNTED CENTERED OVER TURN LANE										
871+86 L		R3-5L	2.50X 3.00		7.5		R	SOUTH		MAST ARM MOUNTED CENTERED OVER TURN LANE										
872+33 L		R3-5L	2.50X 3.00		7.5			SE		MAST ARM MOUNTED CENTERED OVER TURN LANE										
R		R3-5L	2.50X 3.00		7.5			SE		MAST ARM MOUNTED CENTERED OVER TURN LANE										
873+05 R		R9-9	2.00X 1.00		2.0		R	SOUTH	8	SIDEWALK CLOSED sign mounted on an 8 foot single sided Type 3 barricade with 0.75' wide rails mounted on two nine feet 2.0"X2.0" perforated tube supports at the terminated sidewalk			D		18.0					
SHEET TOTALS				0.0	39.5	0.0			8.0					0.0	18.0	0.0	0.0	0.0		
PROJECT TOTALS				**140.0**	**69.1**	**27.0**			**8.0**					**50.0**	**76.8**	**30.0**	**12.0**	**16.0**		

* - Distance from edge of shoulder or back of curb to edge of the sign.

§ - E(xtruded) A(luminum)

\# - (S)lip Base, (A)nchor Stub Post, or (D)irect Drive

☒ -Plan post lengths are estimates. The post lengths shall be field verified by the Contractor.

STATE OF SOUTH DAKOTA	PROJECT	SHEET	TOTAL SHEETS
	NH 0100(105)148	S6	S13

FOR BIDDING PURPOSES ONLY

PERMANENT SIGNING LAYOUT

SD100 at RICE STREET

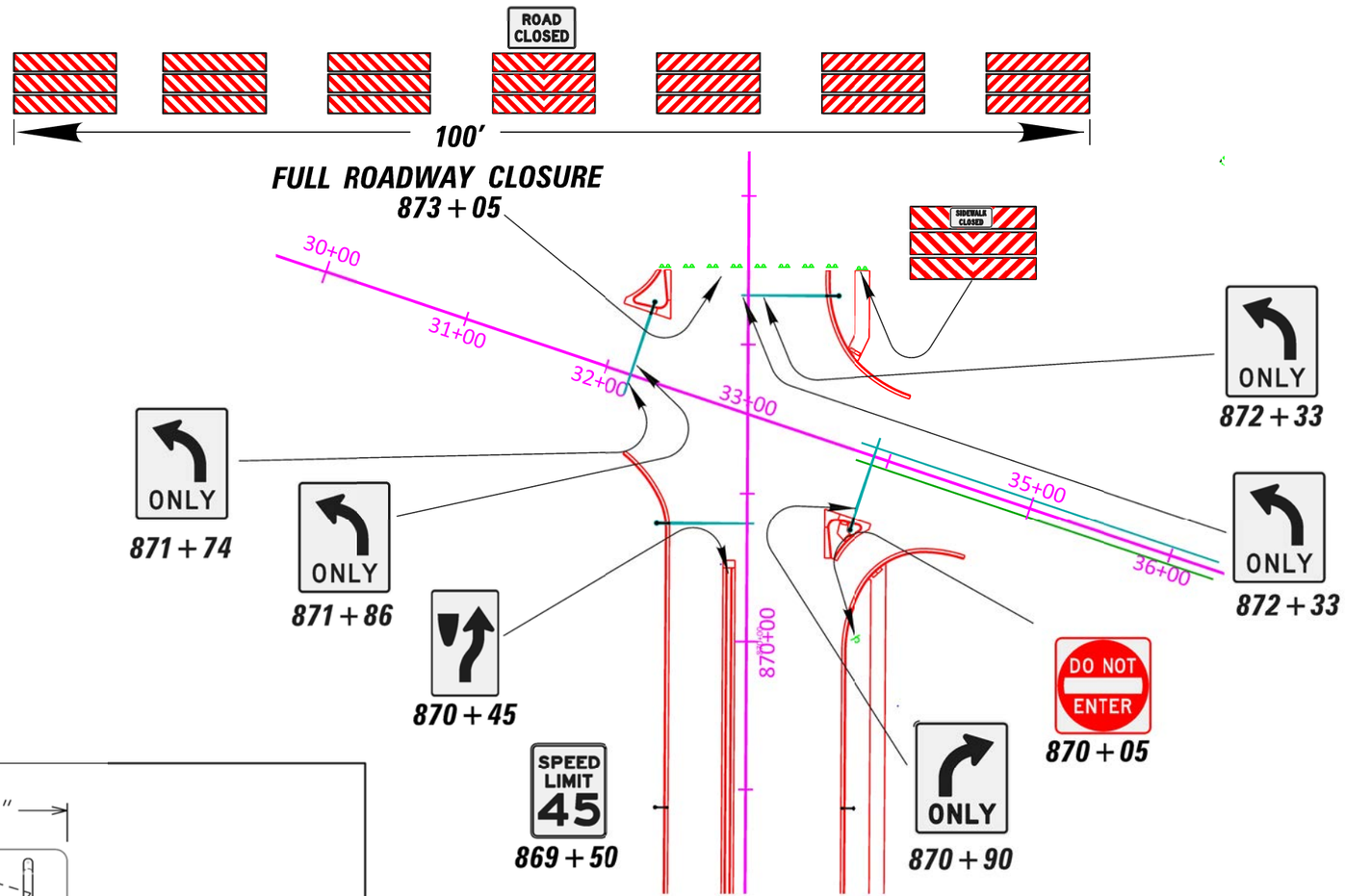

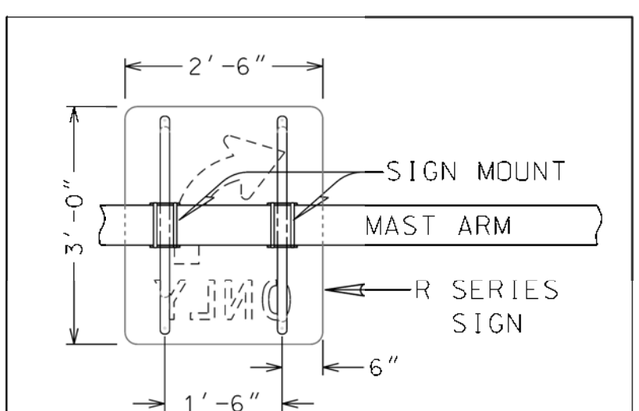

VERTICAL SIGN STIFFENERS
(TYPICAL)

PLOT SCALE - 1:98.1789
PLOT NAME - 2
FILE - ...\01V5 SIGNING CONTAINER.DGN
PLOTTED FROM - TRM1INT17

ADVANCE STREET NAME SIGN DETAILS

FOR BIDDING PURPOSES ONLY

EXTRUDED ALUMINUM SIGNS WITH NONREMOVABLE COPY-
WHITE BORDER, DIVIDER, AND LEGEND ON GREEN BACKGROUND

STATION	773+00
WIDTH X HEIGHT	10'-0" X 5'-6"
BORDER-DIVIDER WIDTH	1.5"
CORNER RADIUS	8.25"
LEGEND	4"D/8"D
BACKGROUND	TYPE: IV
	COLOR: GREEN
LEGEND/BORDER	TYPE: IV
	COLOR: WHITE

STATION	859+00
WIDTH X HEIGHT	10'-0" X 3'-0"
BORDER-DIVIDER WIDTH	1.5"
CORNER RADIUS	4.5"
LEGEND	4"D/8"D
BACKGROUND	TYPE: IV
	COLOR: GREEN
LEGEND/BORDER	TYPE: IV
	COLOR: WHITE

STATION	798+00
WIDTH X HEIGHT	10'-0" X 5'-6"
BORDER-DIVIDER WIDTH	1.5"
CORNER RADIUS	8.25"
LEGEND	4"D/8"D
BACKGROUND	TYPE: IV
	COLOR: GREEN
LEGEND/BORDER	TYPE: IV
	COLOR: WHITE

PLOT SCALE - 1:2.687
PLOTTED FROM - TRM11NT17
PLOT NAME - 3
FILE - ...\01V5 SIGNING CONTAINER.DGN

Plotting Date: 06/03/2016

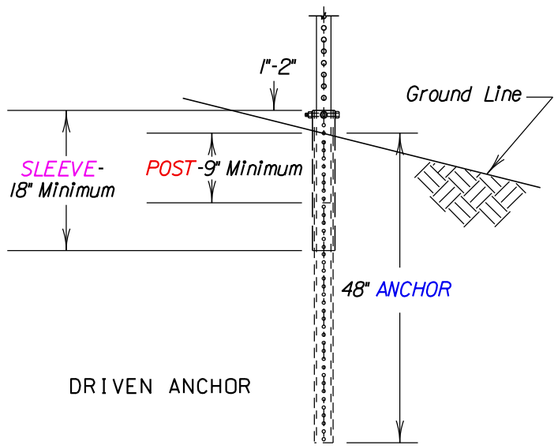

ELEVATION VIEW

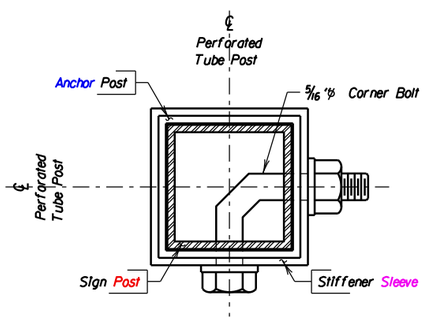

POST X-SECTION VIEW

POST SIZES		
Sign Post	2"	2¼"
Anchor Post	2¼"	2½"
Stiffener Sleeve	2½"	*3"

* - 7 Gauge Steel

NOTE:
Perforated tube post with breakaway anchor base shall be 12 gauge galvanized steel, unless otherwise specified in the plans. Sign installations must meet or exceed NCHRP 350 or The AASHTO Manual for Assessing Safety Hardware (MASH) crashworthy requirements and be FHWA approved.

PERFORATED TUBE POST BREAKAWAY TWO-PIECE ANCHOR DETAILS (Typical)

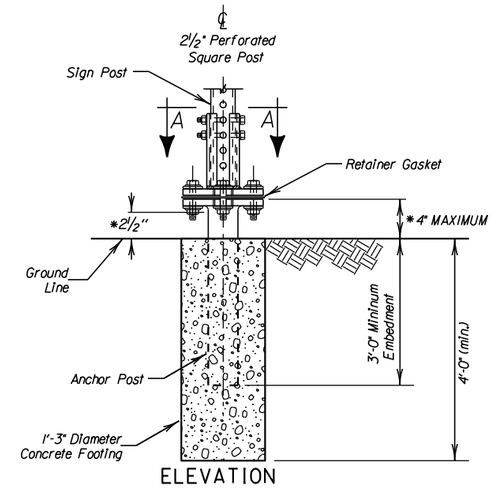

ELEVATION

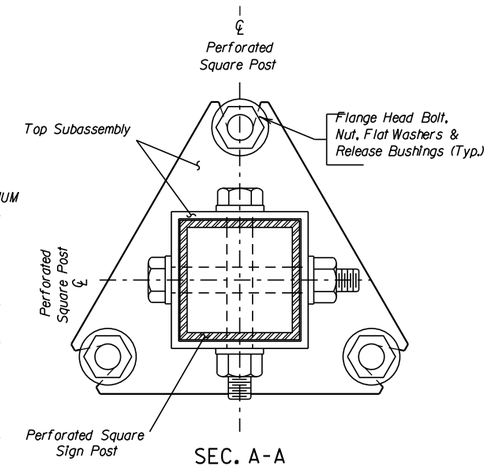

SEC. A-A

* — Dimensions shown may vary by Manufacturer. The Contractor shall use Manufacturer recommended assembly parts and procedures. Sign installations must meet NCHRP 350 or MASH breakaway requirements and be FHWA approved.

GENERAL NOTES-

1. Design Specification: AASHTO Standard Specifications for Structural Supports for Highway Signs, Luminaries and Traffic Signals, 4th Edition, with 2002, 2003, and 2004 Interims.

2. The manufacturer shall provide certification that the posts and hardware furnished have essentiall the same chemistry, mechanical properties and geometry as those used in the FHWA tests and will meet the FHWA change in velocity requirements.

3. The manufacturer shall provide certification that the breakaway system furnished will develop the full shear and bending yield strength of the sign post section being spliced.

4. All posts shall be galvanized in accordance with ASTM A653, Des. G-90.

5. All hardware shall be galvanized in accordance with ASTM A153.

SINGLE PERFORATED TUBE POST BREAKAWAY SUPPORT WITH SLIPBASE AND CONCRETE FOOTING (Typical)

Plot Scale - 1:200 1:200
Plotted From - TRMI11NT17
File - File.4011V5.sign.dgn

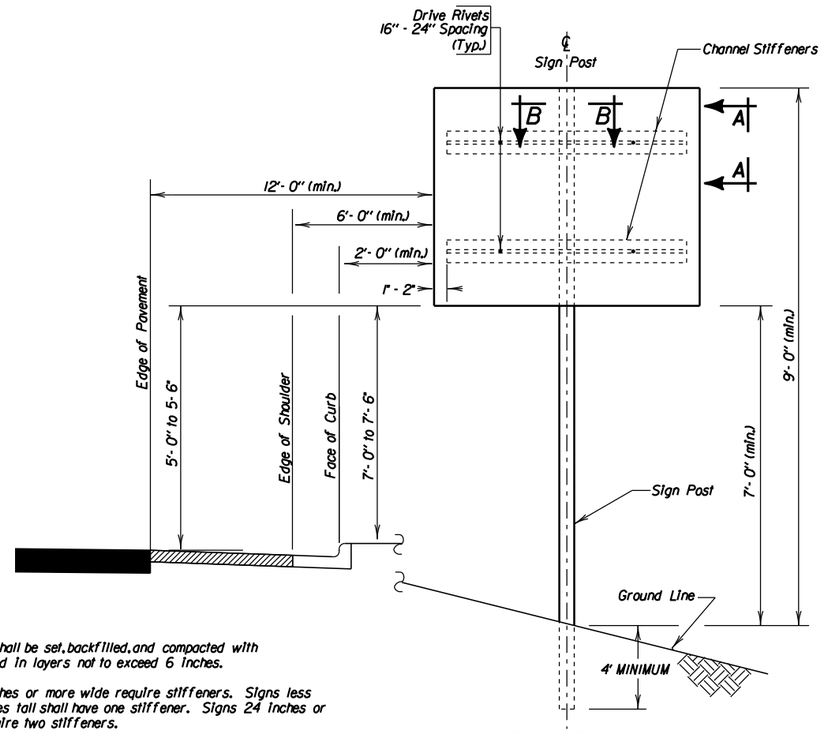

ELEVATION

NOTES:

Wood posts shall be set, backfilled, and compacted with material placed in layers not to exceed 6 inches.

Signs 48 inches or more wide require stiffeners. Signs less than 24 inches tall shall have one stiffener. Signs 24 inches or more tall require two stiffeners.

W14-3 signs shall have a minimum of one stiffener.

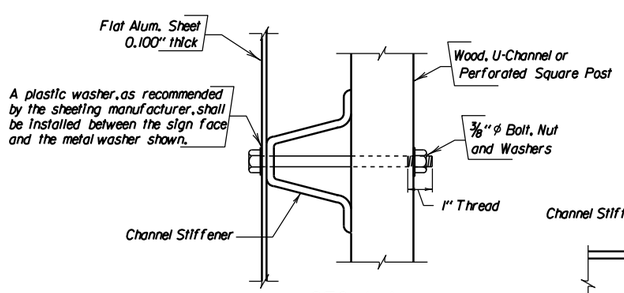

SEC. A-A

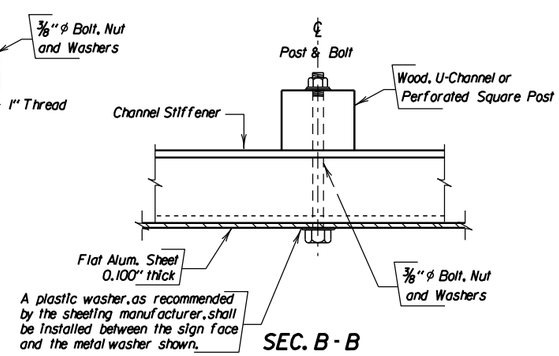

SEC. B - B

SINGLE POST BREAKAWAY SIGN SUPPORT
(Typical Sign and Stiffener Details)

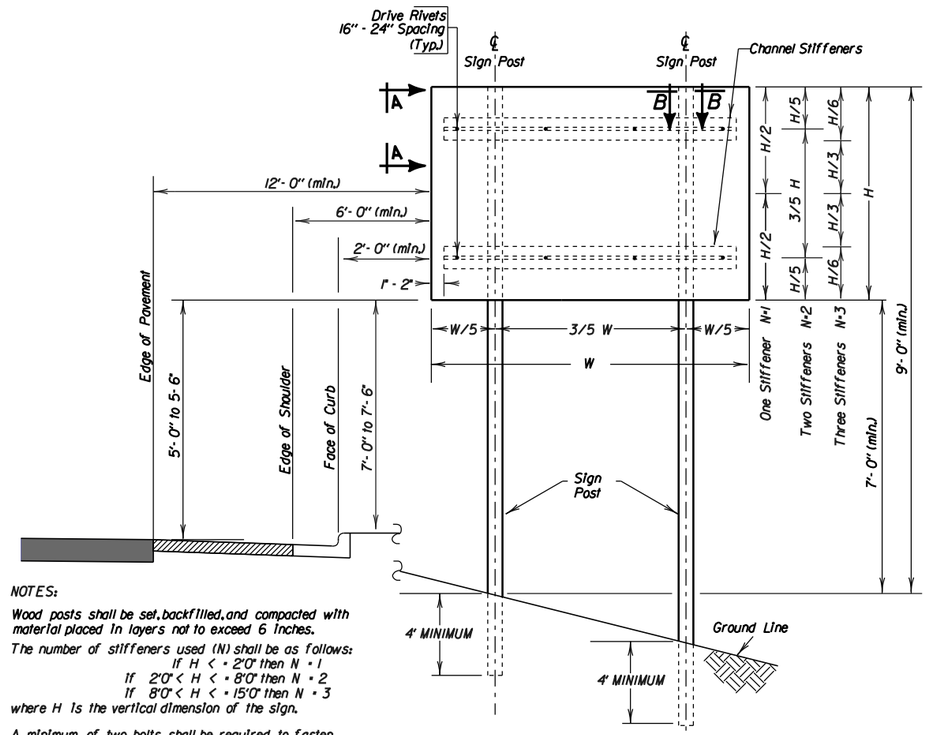

ELEVATION

NOTES:

Wood posts shall be set, backfilled, and compacted with material placed in layers not to exceed 6 inches.

The number of stiffeners used (N) shall be as follows:

If $H < = 2'0"$ then $N = 1$
If $2'0" < H < = 8'0"$ then $N = 2$
If $8'0" < H < = 15'0"$ then $N = 3$

where H is the vertical dimension of the sign.

A minimum of two bolts shall be required to fasten the sign to each post.

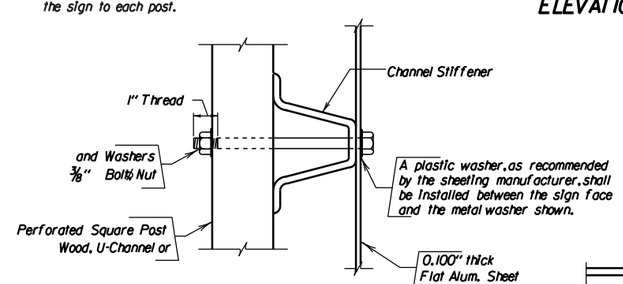

SEC. A-A

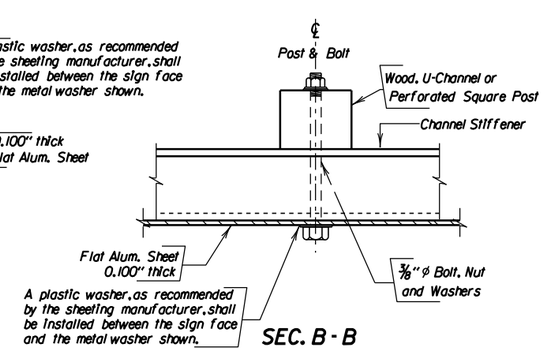

SEC. B - B

TWO POST BREAKAWAY SIGN SUPPORTS
(Typical Sign and Stiffener Details)

Plot Scale - 1:200
Plotted From - TRMINT17
File - ...\01V5 signing container.dgn

FOR BIDDING PURPOSES ONLY

Plotting Date: 06/03/2016

SEE NOTES FOR TABLE

SITE LOCATION	POST SIZE	FOOTING DIMENSIONS		STUB POST LENGTH	LONGITUDINAL STEEL QUANTITIES			# SPIRAL STEEL QUANTITIES	
		DIA.	DEPTH		NO.	SIZE	LENGTH	DIA.	LENGTH

Spirals - Use 12" pitch and 1 ½ extra turns at each end. Use 1 ½ turns for lap at splice as required, or weld as approved by the Office of Bridge Design, Spirals may be smooth bars, Bar length shown does not include Splices. Dimensions are out to out of bars.

NOTE: The above is a Site Specific data entry table and the inserted information is the responsibility of the Region Traffic Engineer.

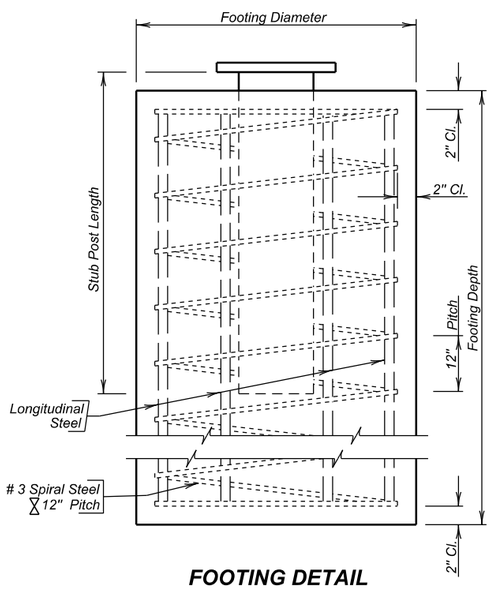

FOOTING DETAIL

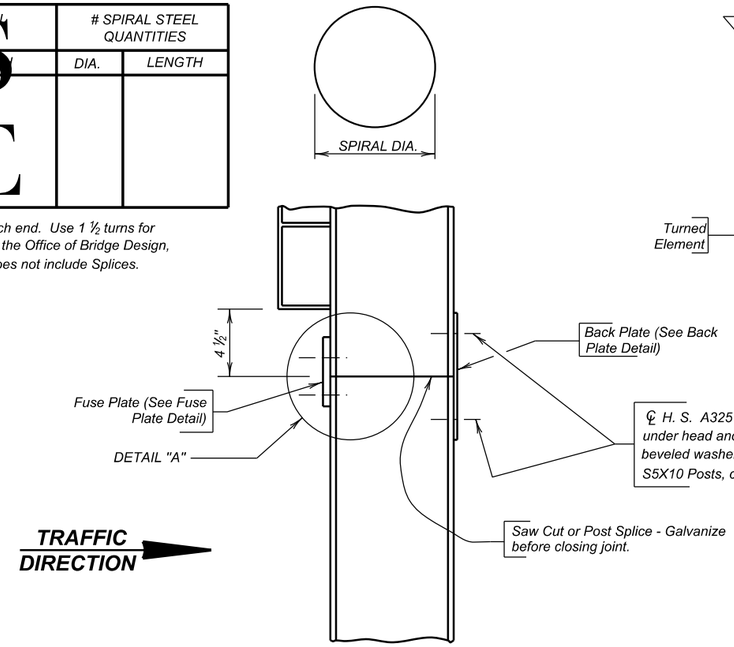

FUSE & BACK PLATE INSTALLATION

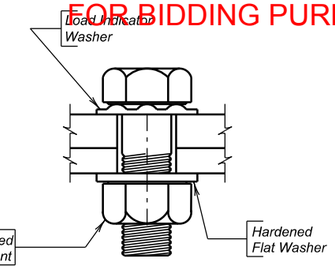

LOAD INDICATOR WASHER DETAIL

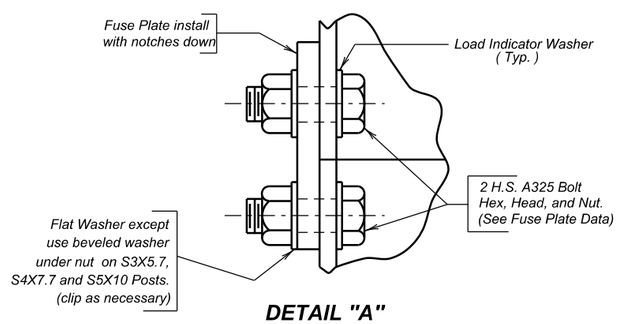

DETAIL "A"

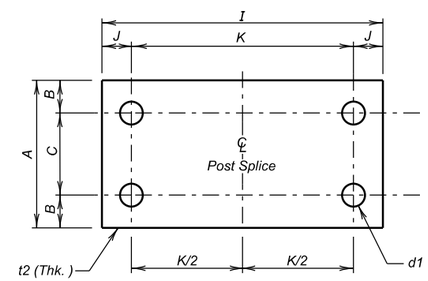

BACK PLATE DETAIL

NOTES-

1. Design Specification: AASHTO Standard Specifications for Structural Supports for Highway Signs, Luminaires and Traffic Signals, 2001 Edition with 2003 Interims.
2. Concrete Footings shall be Class M6 - fc = 4000 p. s. i.
3. Structural Steel shall comform to ASTM A36.
4. All Reinforcing Steel, except spirals, shall conform to ASTM 615 Grade 60.
5. Spiral Reinforcing Steel may be fabricated from cold drawn wire ASTM A1064, or hot rolled plain or deformed bars conforming to the strength requirements of ASTM A615, Grade 60.
6. All Bolts and Nuts shall conform to ASTM A325 except that ½" diameter bolts may conform to either ASTM A325 or ASTM A449. Washers shall conform to ASTM F436. All hardware shall be galvanized in accordance with ASTM F2329.
7. All structural steel including Posts and Post Stubs shall be galvanized in accordance with ASTM A123.
8. All Bolt Holes shall be drilled. All plate cuts shall preferably be saw cuts. However, Flame Cutting will be permitted providing all edges are ground smooth (metal projecting beyond the plane of the plate face will NOT be allowed).
9. All welding and weld inspection shall be in accordance with the latest edition of AWS D 1.5 Structural Welding Code.

PROCEDURE FOR ASSEMBLING SLIP BASE-

1. Place galvanized Sheet Metal Diaphrams on top of the lower slip plate.
2. Connect main post to Stub Post with clean unlubricated bolts and nuts with one Hardened Washer on each bolt between slip plates.
3. Plumb post by adding shims between slip plates.
4. Tighten bolts to a practical maximum, using a 12" - 15" wrench in order to bed surfaces and clean threads. DO NOT TIGHTEN TO PROOF LOAD.
5. Loosen all bolts and retighten in increments, using a systematic order, until each bolt has been tightened to the specified torque corresponding to the post size used (See Slip Base Plate Data). Tighten bolts only to the torque specified. DO NOT OVERTIGHTEN. Check torque on each bolt after entire sign has been erected.

ASSEMBLY OF FRICTION FUSE PLATES, BACK PLATES AND STIFFENERS-

High strength bolts shall be tightened so as to obtain a residual tension by the use of load indicator washers.

SHOP PLANS-

The fabricator shall submit shop plans in accordance with the Specifications or in Adobe PDF format. Shop plan submittals shall be sent to the Office of Bridge Design. Include design and check design, if applicable, with initial submittal.

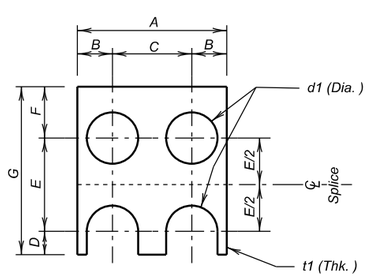

FUSE PLATE DETAIL

TABLE 1 - FUSE PLATE DATA

Post Size	A	B	C	D	E	F	G	d1	t1	Bolt Size
S3X5. 7	2 ⅝"	9/16"	1 ½"	½"	1 ½"	1 ⅛"	3 ⅛"	⅝" ϕ	¼"	½" ϕ
S4X7. 7	2 ⅝"	9/16"	1 ½"	½"	1 ½"	1 ⅛"	3 ⅛"	⅝" ϕ	¼"	½" ϕ
S5X10	3"	11/16"	1 ⅝"	⅝"	2 ¼"	1 ⅛"	4"	¾" ϕ	⅜"	⅝" ϕ
W6X12	4"	15/16"	2 ⅛"	⅝"	2 ½"	1 ⅜"	4 ½"	¾" ϕ	⅜"	⅝" ϕ
W6X15	6"	1 ⅜"	3 ¼"	⅝"	2 ½"	1 ⅜"	4 ½"	¾" ϕ	⅜"	⅝" ϕ
W6X20	6"	1 ⅜"	3 ¼"	⅝"	2 ½"	1 ⅜"	4 ½"	¾" ϕ	⅜"	⅝" ϕ
W8X18	5 ¼"	1 9/16"	2 ⅝"	¾"	2 ½"	1 ⅜"	4 ⅝"	⅞" ϕ	½"	¾" ϕ
W8X21	5 ¼"	1 5/16"	2 ⅝"	¾"	2 ½"	1 ⅜"	4 ⅝"	⅞" ϕ	½"	¾" ϕ
W8X24	6 ½"	1 ½"	3 ½"	⅞"	3"	1 ⅝"	5 ½"	1"ϕ	9/16"	⅞" ϕ
W8X28	6 ½"	1 9/16"	3 ⅜"	⅞"	3"	1 ¾"	5 ⅝"	1"ϕ	½"	⅞" ϕ
W8X31	8"	1 ⅝"	4 ¾"	1"	3 ½"	2"	6 ½"	1 ⅛" ϕ	⅝"	1" ϕ
W10X33	8"	1 ⅞"	4 ¼"	1 ⅛"	4 ½"	2 ¼"	7 ⅞"	1 ¼" ϕ	¾"	1 ⅛" ϕ

TABLE 5 - BACK PLATE DATA

Post Size	A	B	C	J	K	I	d1	t2	Bolt Size
S3X5. 7	2 ⅝"	9/16"	1 ½"	1 ¼"	4 ½"	7"	⅝" ϕ	¼"	½" ϕ
S4X7. 7	2 ⅝"	9/16"	1 ½"	1 ¼"	4 ½"	7"	⅝" ϕ	¼"	½" ϕ
S5X10	3"	11/16"	1 ⅝"	1 ¼"	4 ¾"	7 ¼"	¾" ϕ	¼"	⅝" ϕ
W6X12	4"	15/16"	2 ⅛"	1 ¼"	4 ¾"	7 ¼"	¾" ϕ	¼"	⅝" ϕ
W6X15	6"	1 ⅜"	3 ¼"	1 ¼"	5 ¼"	7 ¾"	¾" ϕ	¼"	⅝" ϕ
W6X20	6"	1 ⅜"	3 ¼"	1 ¼"	5 ¼"	7 ¾"	¾" ϕ	¼"	⅝" ϕ
W8X18	5 ¼"	1 5/16"	2 ⅝"	1 ⅜"	5 ¾"	8 ½"	⅞" ϕ	¼"	¾" ϕ
W8X21	5 ¼"	1 5/16"	2 ⅝"	1 ⅜"	5 ¾"	8 ½"	⅞" ϕ	¼"	¾" ϕ
W8X24	6 ½"	1 ½"	3 ½"	1 ⅝"	6"	9 ¼"	1"ϕ	5/16"	⅞" ϕ
W8X28	6 ½"	1 9/16"	3 ⅜"	1 ¾"	6"	9 ½"	1"ϕ	⅜"	⅞" ϕ
W8X31	8"	1 ⅝"	4 ¾"	2"	6 ½"	10 ½"	1 ⅛" ϕ	⅜"	1" ϕ
W10X33	8"	1 ⅞"	4 ¼"	2 ½"	7"	1'- 0"	1 ¼" ϕ	7/16"	1 ⅛" ϕ

ERECTION DETAILS

FOR

TWO-POST ONE-DIRECTION BREAKAWAY SIGN SUPPORTS

S. D. DEPT. OF TRANSPORTATION

DECEMBER 1994

1 OF 2

MK	REVISION	DATED	BY
X	Pitch Correction	3/24/11	DM
*	Specification Update	7/11/05	AV

DESIGNED BY	DRAWN BY	CHECKED BY	
RH/DM	TB	RH/DM	Kevin N. Cooden
CNTYPCNX	PCNXDSPG	BSTDBS2A	BRIDGE ENGINEER

Plot Scale - 1:0.169082
Plotted From - TRMI1NT17
File - ...\01V5 signing container.dgn

FOR BIDDING PURPOSES ONLY

Plotting Date: 06/03/2016

NOTE-
Sign face details shown are those for extruded aluminum panels.
See Erection Details for SHEET ALUMINUM SIGNS for mounting flat sheet sign face.

△ Mounting height as recommended by latest edition of AASHTO ROADSIDE DESIGN GUIDE.

ϕ Clear distance as recommended by latest edition of MANUAL ON UNIFORM TRAFFIC CONTROL DEVICES.

NOTE - N = Number of Stiffeners to be used
H = Vertical dimension of sign
L = Horizontal dimension of Main Sign

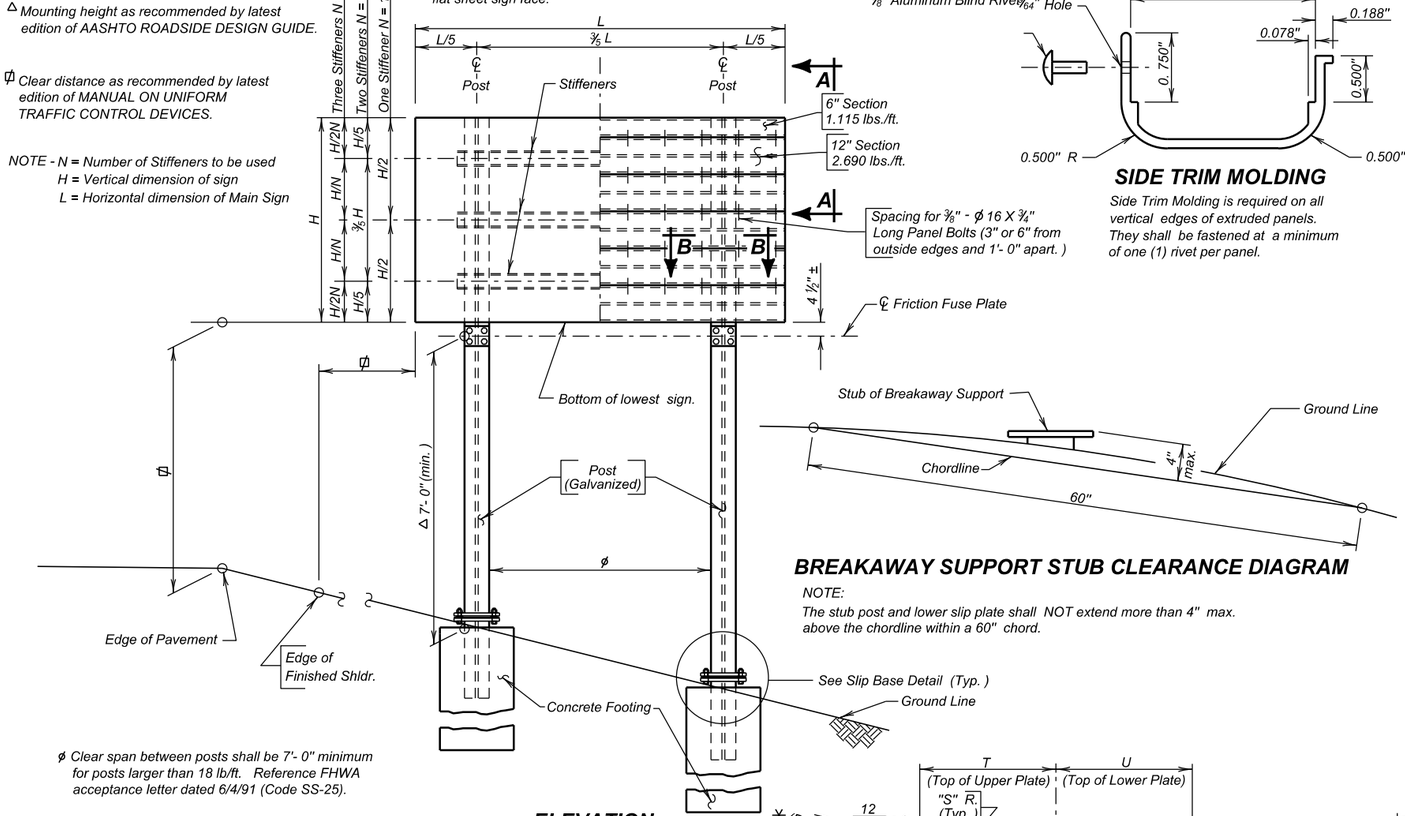

ϕ Clear span between posts shall be 7'- 0" minimum for posts larger than 18 lb/ft. Reference FHWA acceptance letter dated 6/4/91 (Code SS-25).

ELEVATION

BREAKAWAY SUPPORT STUB CLEARANCE DIAGRAM

NOTE:
The stub post and lower slip plate shall NOT extend more than 4" max. above the chordline within a 60" chord.

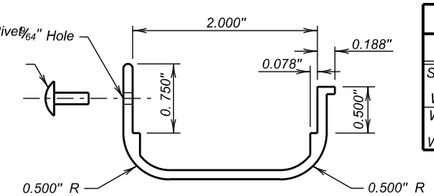

SIDE TRIM MOLDING

Side Trim Molding is required on all vertical edges of extruded panels. They shall be fastened at a minimum of one (1) rivet per panel.

STIFFENER DATA

Post	Stiffener	a	b	c	d	Bolt (A325)	Plate Thk.
S3X5. 7 thru W8X21	C3X5	10 1/2"	5"	1 1/4"	8"	5/8" ϕ	5/16"
W8X24 thru W10x33	C5X6. 7	13 1/2"	6"	1 1/2"	10 1/2"	7/8" ϕ	3/8"

STIFFENER NOTES-

1. Stiffeners must always be used on Two Post Breakaway signs regardless of type of sign face employed.
2. Number of stiffeners used, N, shall be as follows:
   If H < = 2' - 0" then N = 1
   if 2' - 0" < H < = 8' - 0" then N = 2
   if 8' - 0" < H < = 15' - 0" then N = 3

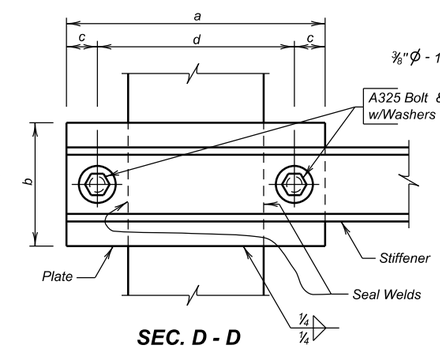

SEC. D - D

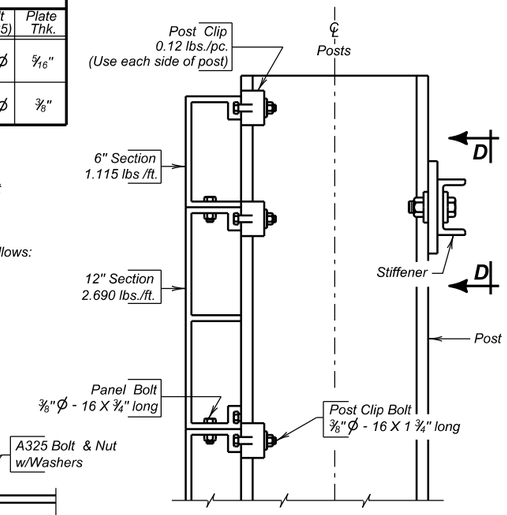

SEC. A - A

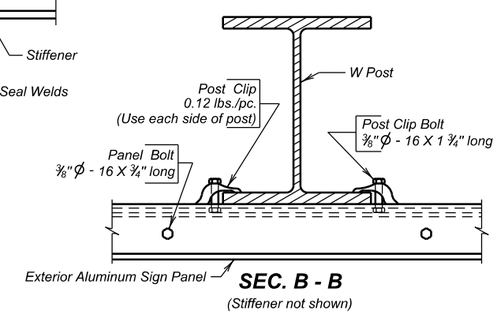

SEC. B - B

(Stiffener not shown)

≠ See Erection Details for SLIP BASE ALTERNATE.

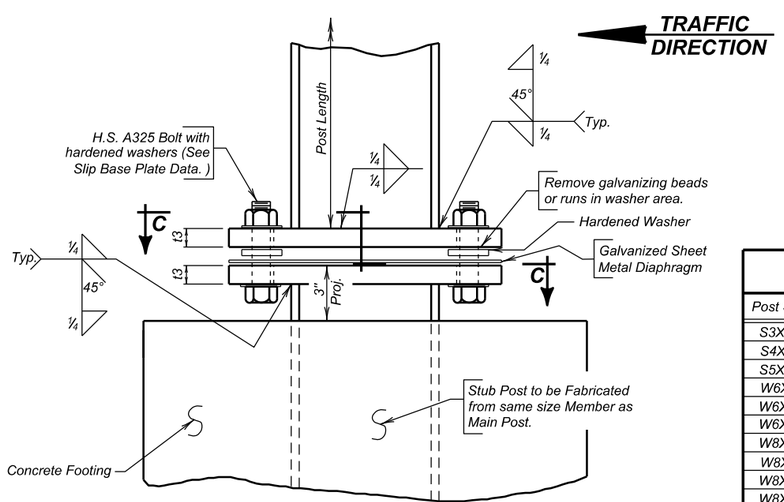

≠ SLIP BASE DETAIL

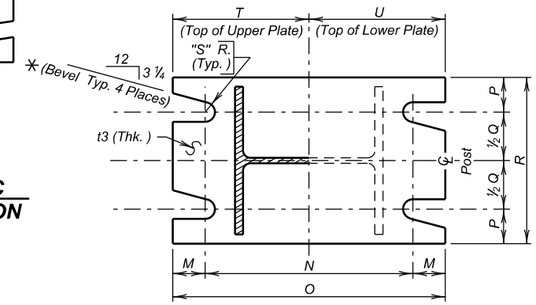

SEC. C - C

✳ NOTE:
Above Bevel is for Sign on Right Shoulder. Plate Bevels are Opposite hand for Sign on Left Shoulder.

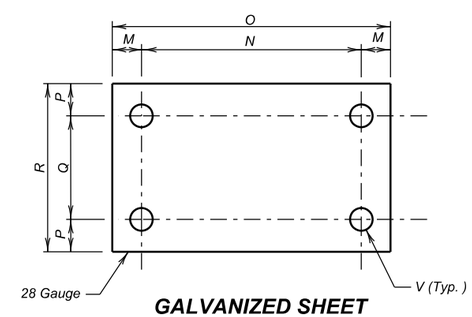

GALVANIZED SHEET METAL DIAPHRAGM

TABLE 3 - SHEET METAL DIAPHRAGM DATA

Post Size	M	N	O	P	Q	R	V
S3X5. 7	3/4"	6"	7 1/2"	3/4"	1 1/2"	3"	5/8"
S4X7. 7	3/4"	6"	7 1/2"	3/4"	1 1/2"	3"	5/8"
S5X10	7/8"	7 1/4"	9"	3/4"	2"	3 1/2"	3/4"
W6X12	7/8"	8 1/4"	10"	7/8"	2 3/4"	4 1/2"	3/4"
W6X15	1 1/8"	8 1/2"	10 3/4"	1 1/4"	4"	6 1/2"	7/8"
W6X20	1 1/8"	10"	1'- 0 1/4"	1 1/4"	4"	6 1/2"	7/8"
W8X18	1 1/8"	10 1/2"	1'- 0 3/4"	1 1/4"	3 1/2"	6"	7/8"
W8X21	1 1/4"	11 1/4"	1'- 1 3/4"	1 1/4"	3 1/2"	6"	7/8"
W8X24	1 1/2"	11"	1'- 2"	1 5/8"	4 1/4"	7 1/2"	1"
W8X28	1 5/8"	11 1/4"	1'- 2 1/2"	1 5/8"	4 1/4"	7 1/2"	1"
W8X31	1 3/4"	11 1/4"	1'- 2 3/4"	1 7/8"	5 1/4"	9"	1 1/8"
W10X33	1 3/4"	1'- 2"	1'- 5 1/2"	1 7/8"	5 1/4"	9"	1 1/8"

NOTE: Diaphragm need not be regalvanized after cutting to size and drilling of holes.

TABLE 4 - SLIP BASE PLATE DATA

Post Size	M	N	O	P	Q	R	S	T	U	t3	Bolt Size	Bolt Torque
S3X5. 7	3/4"	6"	7 1/2"	3/4"	1 1/2"	3"	9/32"	3 3/4"	3 3/4"	5/8"	1/2" ϕ	142" - #
S4X7. 7	3/4"	6"	7 1/2"	3/4"	1 1/2"	3"	9/32"	3 3/4"	3 3/4"	5/8"	1/2" ϕ	142" - #
S5X10	7/8"	7 1/4"	9"	3/4"	2"	3 1/2"	11/32"	4 1/2"	4 1/2"	7/8"	5/8" ϕ	345" - #
W6X12	7/8"	8 1/4"	10"	7/8"	2 3/4"	4 1/2"	11/32"	5"	5"	7/8"	5/8" ϕ	345" - #
W6X15	1 1/8"	8 1/2"	10 3/4"	1 1/4"	4"	6 1/2"	13/32"	5 3/8"	5 3/8"	1"	3/4" ϕ	554" - #
W6X20	1 1/8"	10"	1'- 0 1/4"	1 1/4"	4"	6 1/2"	13/32"	6 1/8"	6 1/8"	1"	3/4" ϕ	554" - #
W8X18	1 1/8"	10 1/2"	1'- 0 3/4"	1 1/4"	3 1/2"	6"	13/32"	6 3/8"	6 3/8"	1"	3/4" ϕ	554" - #
W8X21	1 1/4"	11 1/4"	1'- 1 3/4"	1 1/4"	3 1/2"	6"	15/32"	6 7/8"	6 7/8"	1"	7/8" ϕ	645" - #
W8X24	1 1/2"	11"	1'- 2"	1 5/8"	4 1/4"	7 1/2"	19/32"	7"	7"	1"	7/8" ϕ	645" - #
W8X28	1 5/8"	11 1/4"	1'- 2 1/2"	1 5/8"	4 1/4"	7 1/2"	17/32"	7 1/4"	7 1/4"	1 1/8"	1" ϕ	735" - #
W8X31	1 3/4"	11 1/4"	1'- 2 3/4"	1 7/8"	5 1/4"	9"	17/32"	7 3/8"	7 3/8"	1 1/8"	1" ϕ	735" - #
W10X33	1 3/4"	1'- 2"	1'- 5 1/2"	1 7/8"	5 1/4"	9"	17/32"	8 3/4"	8 3/4"	1 1/4"	1" ϕ	735" - #

ERECTION DETAILS
FOR
TWO-POST ONE-DIRECTION
BREAKAWAY SIGN SUPPORTS
S. D. DEPT. OF TRANSPORTATION
DECEMBER 1994

DESIGNED BY	DRAWN BY	CHECKED BY	
RH/DM	TB	RH/DM	Kevin N. Cooden
CNTYPCNX	PCNXDSPG	BSTDBS2B	BRIDGE ENGINEER

Plot Scale - 1:0.169092
Plotted From - TRMI1NT17
File - ...\01V5 signing container.dgn

FOR BIDDING PURPOSES ONLY

STATE OF SOUTH DAKOTA	PROJECT	SHEET	TOTAL SHEETS
	NH 0100(105)148	S12	S13

Plotting Date: 06/03/2016

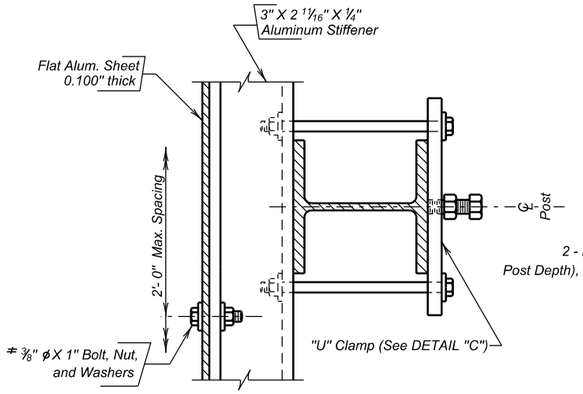

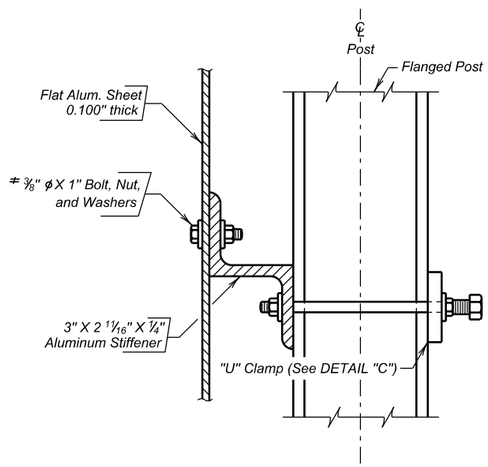

DETAILS FOR MOUNTING SHEET ALUMINUM SIGNS ON STEEL FLANGED POSTS

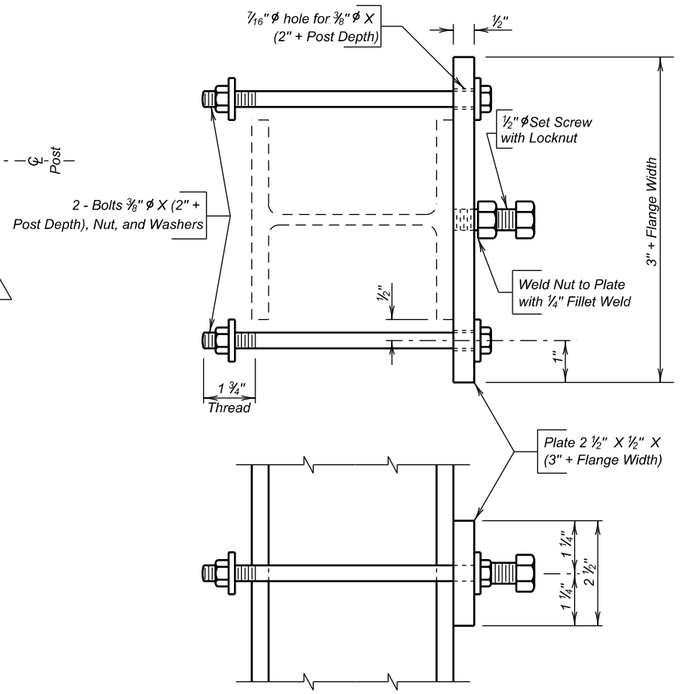

DETAIL "C"

A plastic washer, as recommended by the sheeting manufacturer, shall be installed between the sign face and the metal washer shown.

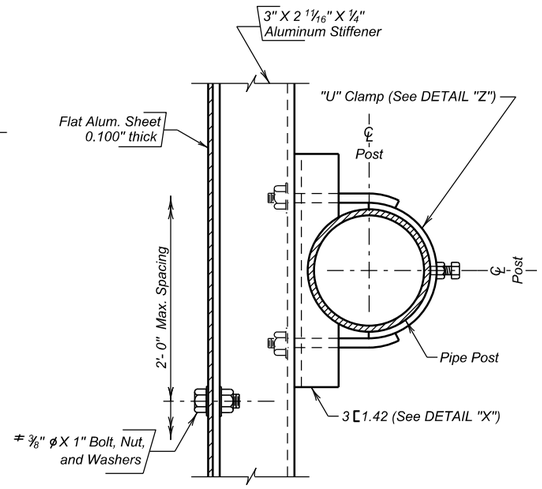

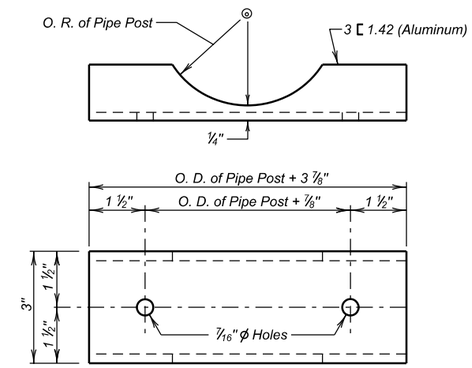

DETAIL "X"

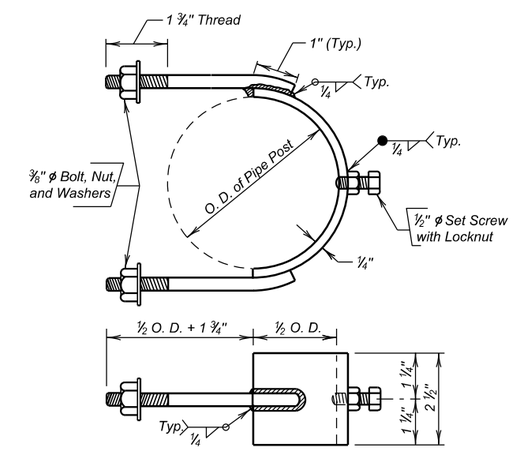

DETAIL "Z"

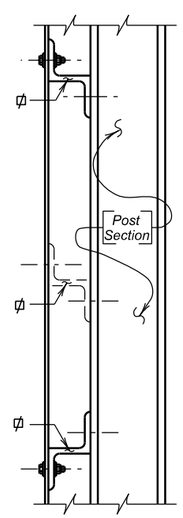

POSITIONING OF TOP AND BOTTOM STIFFENERS

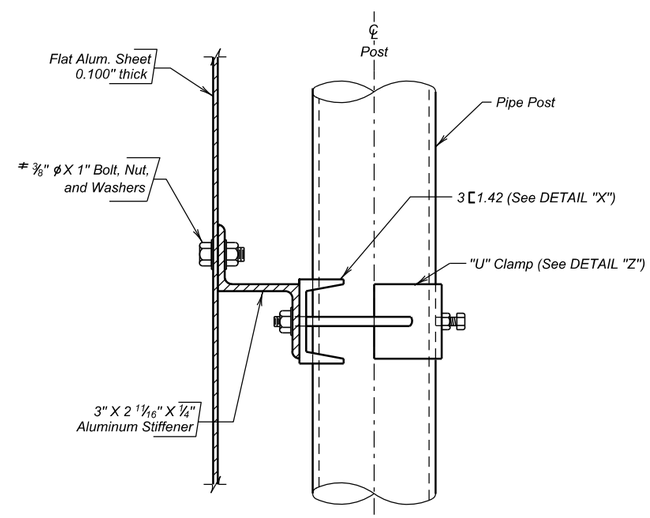

DETAILS FOR MOUNTING SHEET ALUMINUM SIGNS ON STEEL PIPE POSTS

STIFFENER NOTES-

1. Stiffeners must always be used on multiple post breakaway signs regardless of type of sign face employed.

ø 2. Number of stiffeners used, N, shall be as follows:

If H < = 2'- 0" then N = 1
if 2'- 0" < H < = 8'- 0" then N = 2
if 8'- 0" < H < = 15'- 0" then N = 3

where H equals the vertical dimension of the sign panel of sign cluster.

3. All stiffener Bolts and Nuts shall conform to ASTM A307. Washers shall conform to ASTM F436. All hardware shall be galvanized in accordance with ASTM F2329.

ERECTION DETAILS
FOR
SHEET ALUMINUM SIGNS
(ON FLANGED AND PIPE POSTS)
S. D. DEPT. OF TRANSPORTATION
DECEMBER 1994

1 OF 1

MK	REVISION	DATED	BY

DESIGNED BY	DRAWN BY	CHECKED BY	
RH/DM	RH/TB	RH/DM	Kevin N. Boeden
CNTYPCNX	PCNXDSPG	BSTDSAS1	BRIDGE ENGINEER

Plot Scale - 1:0.169092
Plotted From - TRM1NT17
File - ...\01V5 signing container.dgn

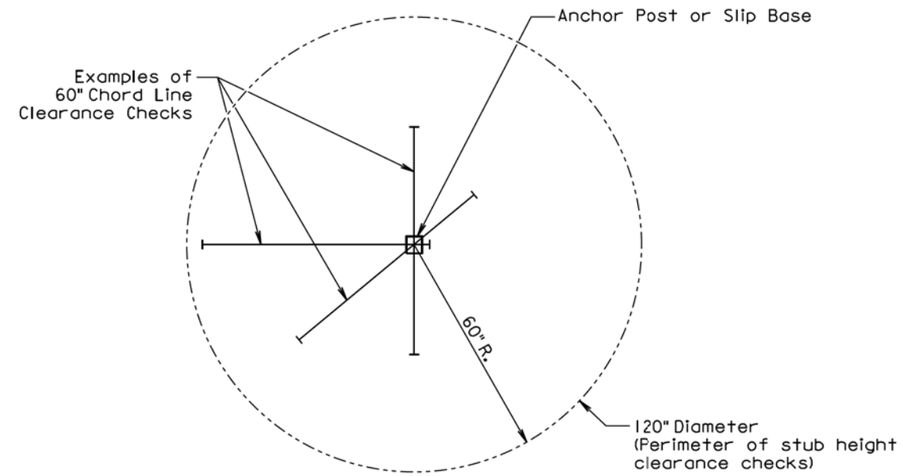

PLAN VIEW

(Examples of stub height clearance checks)

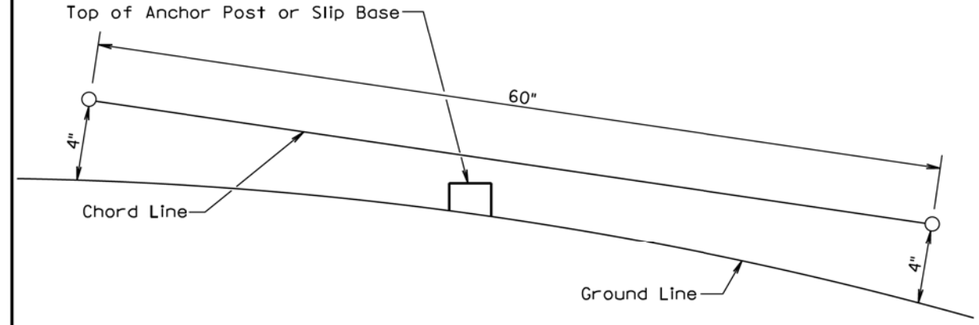

ELEVATION VIEW

GENERAL NOTES:

The top of anchor posts and slip bases SHALL NOT extend above a 60" chord line within a 120" diameter circle around the post with ends 4" above the ground.

At locations where there is curb and gutter adjacent to the breakaway sign support, the stub height shall be a maximum of 4" above the ground line at the localized area adjacent to the breakaway support stub.

The 4" stub height clearance is not necessary for U-channel lap splices where the support is designed to yield (bend) at the base.

July 1, 2005

Published Date: 2nd Qtr. 2016	SDDOT	***BREAKAWAY SUPPORT STUB CLEARANCE***	***PLATE NUMBER*** *634.99*
			Sheet 1 of 1

Plot Scale - 1:200
Plotted From - TRMI1NT17
File - ...\01V5 signing container.dgn