Section F: Surfacing Plans

FOR BIDDING PURPOSES ONLY

STATE OF SOUTH DAKOTA	PROJECT	SHEET	TOTAL SHEETS
	IM 0901(162)14 & P 014A(11)8	F1	F69

Plotting Date: 01/14/2016

INDEX OF SHEETS

F1	General Layout with Index
F2 thru F13	Estimate of Quantities, Notes, Rates, and Tables
F14 thru F27	Typical Surfacing Sections
F28 thru F55	PCC Pavement Joint Layouts
F56	Membrane Sealant Expansion Joint
F57 thru F59	Special Details
F60 thru F69	Standard Plates

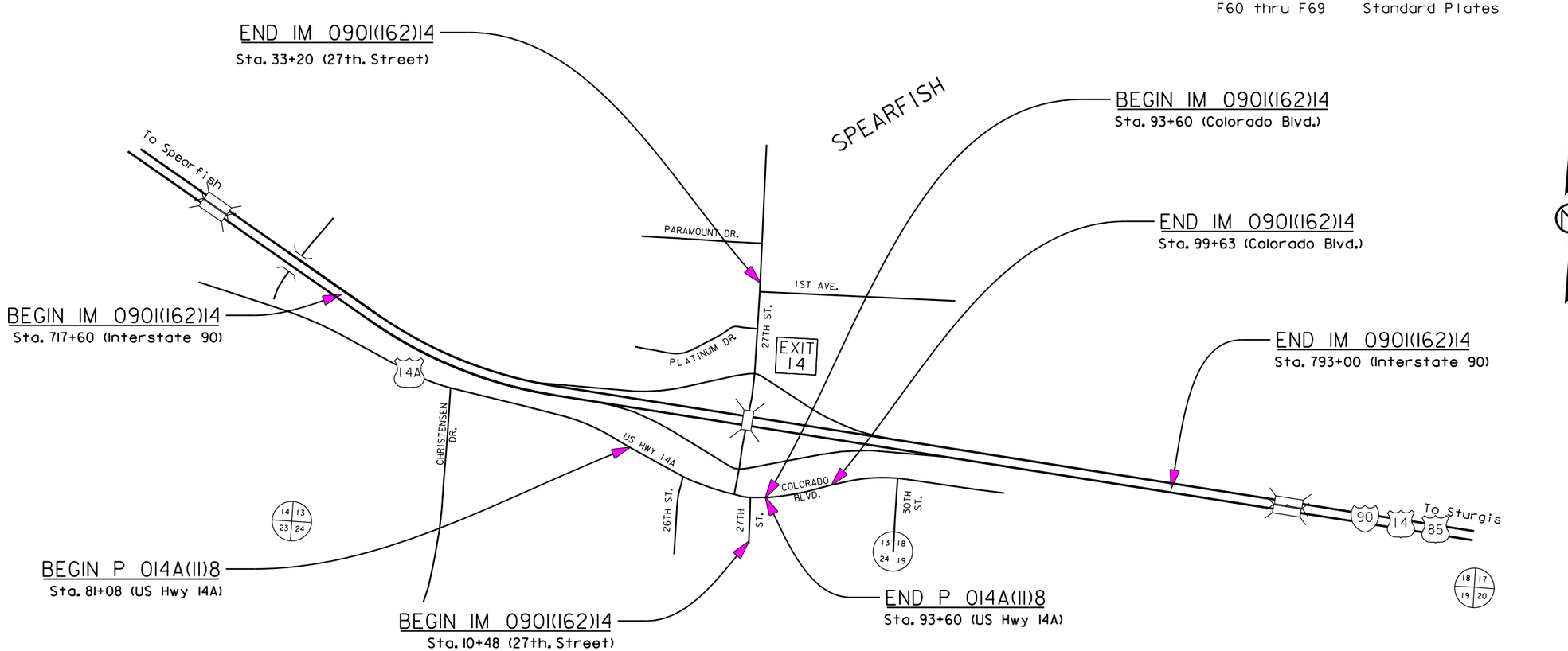

PLOT SCALE - 1:1056

PLOTTED FROM - TRPR16032

PLOT NAME - 1

FILE - ...\PRJ\LAWR020U\TITLE F 020U.DGN

FOR BIDDING PURPOSES ONLY

Revised: 14 Jan 16, RML

SECTION F ESTIMATE OF QUANTITIES FOR PCN 020U

BID ITEM NUMBER	ITEM	QUANTITY	UNIT
004E0050	Remove Traffic Diversion(s)	Lump Sum	LS
009E3320	Checker	Lump Sum	LS
110E0300	Remove Concrete Curb and Gutter	1,979	Ft
110E0415	Remove Edge Drains	Lump Sum	LS
110E0655	Remove Interim Crossover Closure	256	Ft
110E1020	Remove Asphalt Concrete Pavement	12,399.8	CuYd
110E1105	Remove Concrete Pavement	10,020.7	CuYd
110E1110	Remove Concrete Approach Pavement	356.2	SqYd
110E1140	Remove Concrete Sidewalk	401.1	SqYd
110E1640	Remove Granular Material	17,452.7	CuYd
110E7000	Remove Crossover Closure for Reset	416	Ft
120E0010	Unclassified Excavation	48,310	CuYd
120E6200	Water for Granular Material	959.9	MGal
210E2000	Shoulder Shaping	5.347	Mile
260E1010	Base Course	24,712.4	Ton
260E2010	Gravel Cushion	48,921.0	Ton
270E0020	Salvage and Stockpile Asphalt Mix Material	3,192.3	Ton
320E1200	Asphalt Concrete Composite	200.0	Ton
320E5010	Saw and Seal Shoulder Joint	28,235	Ft
320E7012	Grind 12" Rumble Strip or Stripe in Asphalt Concrete	2.9	Mile
330E0010	MC-70 Asphalt for Prime	47.5	Ton
330E0100	SS-1h or CSS-1h Asphalt for Tack	8.6	Ton
330E0210	SS-1h or CSS-1h Asphalt for Flush Seal	4.7	Ton
330E2000	Sand for Flush Seal	1.6	Ton
380E0070	9" Nonreinforced PCC Pavement	42,652.5	SqYd
380E0110	11" Nonreinforced PCC Pavement	53,418.7	SqYd
380E6000	Dowel Bar	50,374	Each
380E6110	Insert Steel Bar in PCC Pavement	96	Each
410E2600	Membrane Sealant Expansion Joint	345.4	Ft
629E9050	Reset Crossover Closure	416	Ft

ALTERNATE A FOR PCN 020U

BID ITEM NUMBER	ITEM	QUANTITY	UNIT
320E0004	PG 58-28 Asphalt Binder	389.3	Ton
320E1070	Class HR Asphalt Concrete	9,734.4	Ton

ALTERNATE B FOR PCN 020U

BID ITEM NUMBER	ITEM	QUANTITY	UNIT
320E0004	PG 58-28 Asphalt Binder	359.9	Ton
320E1070	Class HR Asphalt Concrete	9,996.7	Ton

SECTION F ESTIMATE OF QUANTITIES FOR PCN 0217

BID ITEM NUMBER	ITEM	QUANTITY	UNIT
009E3320	Checker	Lump Sum	LS
110E0300	Remove Concrete Curb and Gutter	860	Ft
110E1020	Remove Asphalt Concrete Pavement	1,350.0	CuYd
110E1140	Remove Concrete Sidewalk	232.1	SqYd
110E1640	Remove Granular Material	3,722.2	CuYd
120E0010	Unclassified Excavation	5,529	CuYd
120E6200	Water for Granular Material	63.0	MGal
260E1010	Base Course	1,030.6	Ton
260E2010	Gravel Cushion	4,216.5	Ton
270E0020	Salvage and Stockpile Asphalt Mix Material	207.7	Ton
330E0010	MC-70 Asphalt for Prime	1.2	Ton
330E0100	SS-1h or CSS-1h Asphalt for Tack	0.6	Ton
330E0210	SS-1h or CSS-1h Asphalt for Flush Seal	0.2	Ton
330E2000	Sand for Flush Seal	4.2	Ton
380E0070	9" Nonreinforced PCC Pavement	9,768.0	SqYd
380E6000	Dowel Bar	6,127	Each

ALTERNATE A FOR PCN 0217

BID ITEM NUMBER	ITEM	QUANTITY	UNIT
320E0004	PG 58-28 Asphalt Binder	26.0	Ton
320E1070	Class HR Asphalt Concrete	646.3	Ton

ALTERNATE B FOR PCN 0217

BID ITEM NUMBER	ITEM	QUANTITY	UNIT
320E0004	PG 58-28 Asphalt Binder	23.9	Ton
320E1070	Class HR Asphalt Concrete	663.8	Ton

SURFACING THICKNESS DIMENSIONS

Plans tonnage will be applied even though the thickness may vary from that shown on the plans.

At those locations where material must be placed to achieve a required elevation, plans tonnage may be varied to achieve the required elevation.

CONTROL OF ACCESS

If a Contractor's operations would require access to the interstate ROW in any locations not currently designated as public access, prior approval must be obtained from the Department. All requests will be reviewed on the basis of safety and construction sequencing. A contractor shall not assume that all requests will be granted.

The Contractor shall be responsible for all safety control and signing measures.

The request for access shall be provided in writing to the Engineer two weeks in advance of any proposed break in control of access.

FOR BIDDING PURPOSES ONLY

TABLE OF UNCLASSIFIED EXCAVATION

Location of Removal Areas	Salvaged and Stockpile Asphalt Mix Material Or Remove Asphalt Concrete	Remove Granular Material	Remove Concrete Pavement, Curb & Gutter, Or Sidewalk	Waste Material
	CuYds	CuYds	CuYds	CuYds
I-90, includes Gore Areas				
Sta. 717+60 to Sta. 793+00 WBL	2,424.3		4,468.1	2,744.2
Sta. 717+60 to Sta. 793+00 EBL	2,425.8		4,468.1	2,744.3
I-90 Mainline Maintenance Overlay				
Sta. 717+60 to Sta. 755+12 WBL	442.9			
Sta. 785+37 to Sta. 793+00 WBL	90.1			
Sta. 731+20 to Sta. 793+00 EBL	1,068.2			
27TH Street Crossroad				
Sta. 10+48 to Sta. 14+30	254.7	408.8		51.1
Sta. 15+30 to Sta. 29+20, except bridge	1,312.3	3,300.4		290.8
Sta. 29+20 to Sta. 33+20	355.6	819.9		68.3
Colorado Blvd.				
Sta. 81+08 to Sta. 87+15.1	564.3	1,630.1		124.6
Sta. 87+15.1 to Sta. 99+63	979.0	3,132.4		250.7
Exit 14 Ramps includes Gore Area				
WB On Ramp	380.8	993.8	281.5	104.2
WB Off Ramp	440.0	1,019.8	264.8	146.8
EB Off Ramp	472.5	913.5	264.8	153.0
EB On Ramp	397.2	882.6	273.4	108.6
Ramp Detours and Temporary Traffic Control Surfacing	3,593.4	8,074.6		
Intersecting Streets and Driveways				
27th Street, 4 each	112.8			
Colorado Blvd., 6 each	234.8			
Curb and Gutter – Ramp A Detour (Sta. 790+62 – 158' Lt., I-90)			5.8	
Curb and Gutter – Colorado Blvd.				
Sta. 81+08 to Sta. 86+98.3 Rt.			44.5	
Sta. 90+80 Median			9.7	
Curb and Gutter – 27th Street				
Sta. 25+38 Median			6.1	
Sta. 10+48 to Sta. 14+29.8 Rt.			26.4	
Sta. 10+90 to Sta. 14+30.9 Lt.			20.7	
Sta. 28+69 to Sta. 32+71.5 Lt.			38.8	
Sta. 28+87.7 to Sta. 32+18.7 Rt.			26.7	
Sidewalk – Colorado Blvd.				
Sta. 88+71.3 to Sta. 90+52.5 Lt.			20.3	
Sta. 91+41.2 to Sta. 92+31.0 Rt.			5.5	
Sidewalk – 27th Street				
Sta. 10+48.0 to Sta. 14+22.4 Rt.			21.2	
Sta. 27+94.9 to Sta. 29+80.8 Rt.			9.0	
Sta. 30+54.4 to Sta. 33+11.4 Lt.			14.4	
27th Street Driveway Approaches - 5 each			46.1	
Colorado Blvd Driveway Approaches – 3 each			13.2	
Subtotals	15,548.7	21,174.9	10,329.1	6,786.6
TOTAL	53,839.3			

UNCLASSIFIED EXCAVATION

All excavation required to remove in place surfacing shall be paid for as Unclassified Excavation. Unclassified Excavation quantity shall be as noted in the preceding table. Unclassified Excavation will not be measured for payment and the basis of payment will be plans quantity. Unclassified Excavation is salvaged and stockpile asphalt mix material, removal of asphalt concrete, removal of granular material, removal of concrete pavement/curb & gutter/sidewalk/approach pavement, and removal of waste material, see typical sections.

The Unclassified Excavation waste material may be used as Borrow. The Contractor will ensure no asphalt concrete material will be used on the inslopes.

The Salvaged Asphalt Mix Material (RAP) (estimated at 3,400 tons) will be used for Class HR Asphalt Concrete on this project.

RECLAIMED MATERIAL

Asphalt Concrete Pavement removed from within the project limits may be crushed and reused as Base Course or Gravel Cushion provided it is blended at a ratio not exceeding 1 part asphalt concrete material to 1 part either virgin granular material, granular material removed from project, or reclaimed concrete aggregate.

PCC Pavement removed from within the project limits may be crushed and reused as Gravel Cushion.

Concrete Curb & Gutter, Concrete Sidewalk, and Concrete Approach Pavement removed from within the project limits **will not** be reused within the project limits.

Granular Material removed from within the project limits may be reused as Base Course or Gravel Cushion.

Reclaimed material to be used as Base Course or Gravel Cushion on this project must meet the specification requirements for the material it is replacing and the Engineer's approval.

FOR BIDDING PURPOSES ONLY

REMOVE ASPHALT CONCRETE

Location of Removal Areas	* Remove Asphalt Concrete And Salvage and Stockpile Asphalt Mix Material
	CuYds
I-90, includes Gore Areas	
Sta. 717+60 to Sta. 793+00 WBL	2,424.3
Sta. 717+60 to Sta. 793+00 EBL	2,425.8
I-90 Mainline Maintenance Overlay	
Sta. 717+60 to Sta. 755+12 WBL	442.9
Sta. 785+37 to Sta. 793+00 WBL	90.1
Sta. 731+20 to Sta. 793+00 EBL	1,068.2
27TH Street Crossroad	
Sta. 10+48 to Sta. 14+30	254.7
Sta. 15+30 to Sta. 29+20, except bridge	1,312.3
Sta. 29+20 to Sta. 33+20	355.6
Colorado Blvd.	
Sta. 81+08 to Sta. 87+15.1	564.3
Sta. 87+15.1 to Sta. 99+63	979.0
Exit 14 Ramps	
WB On Ramp	380.8
WB Off Ramp	440.0
EB Off Ramp	472.5
EB On Ramp	397.2
Intersecting Streets & Entrances	
27th Street – 4 each	112.8
Colorado Blvd – 6 each	234.8
Detours and Temporary Traffic Control Surfacing	
Phase 1	532.8
Phase 2A	** 1,132.5
Phase 2B	** 679.9
Phase 2C	** 828.7
Phase 3A	** 281.4
Phase 3B	** 138.1
SUBTOTAL	15,548.7
Minus Salvaged Asphalt Mix Material	1,798.9
Remove Asphalt Concrete TOTAL	13,749.8

* Plans quantity will be the basis of measurement and payment for the above mentioned work. An estimated 1,798.9 cubic yards (3,400.0 tons) of in place asphalt concrete will be salvaged and stockpiled to be used as Salvaged Asphalt Mix Material (RAP) for the Class HR Asphalt Concrete on this project. For informational purposes only, the total of Remove Asphalt Concrete Material is estimated at 13,749.8 cu.yds. (25,987.1 tons) on this project, which may be crushed and reused as Base Course or Gravel Cushion. This quantity is based on a unit weight of 1.89 tons per cubic yard for the reclaimed asphalt concrete aggregate. Refer to typical sections for location and depth of Asphalt Concrete Removal.

** An estimated 3,060.6 cu.yds. of material will be removed near the completion of the project.

SALVAGE AND STOCKPILE ASPHALT MIX MATERIAL

An estimated 3,400.0 tons of salvaged asphalt concrete will be used on this project in the Class HR Asphalt Concrete mixture. The Contractor is responsible to assure enough asphalt concrete salvage is available for the Class HR Asphalt Concrete. The Contractor shall dispose of the asphalt mix material not utilized on the project at a site approved by the Engineer.

The location of the salvaging operation will be at the discretion of the Contractor.

Removal of the remainder of the in place asphalt concrete material will be paid for as Remove Asphalt Concrete.

Plans quantity will be the basis of measurement and payment for the above mentioned work.

REMOVE GRANULAR MATERIAL

Location of Removal Areas	* Remove Granular Material
	CuYds
27TH Street Crossroad	
Sta. 10+48 to Sta. 14+30	408.8
Sta. 15+30 to Sta. 29+20, except bridge	3,300.4
Sta. 29+20 to Sta. 33+20	819.9
Colorado Blvd.	
Sta. 81+08 to Sta. 87+15.1	1,630.1
Sta. 87+15.1 to Sta. 99+63	3,132.4
Exit 14 Ramps	
WB On Ramp	992.8
WB Off Ramp	1,019.8
EB Off Ramp	913.5
EB On Ramp	882.6
Detours and Temporary Traffic Control Surfacing	
Phase 1	1,115.4
Phase 2A	** 2,604.4
Phase 2B	** 1,637.5
Phase 2C	** 1,888.7
Phase 3A	** 556.0
Phase 3B	** 272.6
TOTAL	21,174.9

* Plans quantity will be the basis of measurement and payment for the above mentioned work. For informational purposes only, there is an estimated 21,174.9 cu.yds (40,020.6 tons) of granular material on this project that may be reused as Base Course or Gravel Cushion. Refer to the typical sections for location and depth of granular material. This quantity is based on a unit weight of 1.89 tons per cubic yard for the reclaimed granular aggregate.

** An estimated 6,959.2 cu.yds. of material will be removed near the completion of the project.

REMOVE CONCRETE PAVEMENT

Location of Removal Areas	Pavement Thickness	* Remove Concrete Pavement
	Inches	CuYds
I-90, includes Gore Areas		
Sta. 717+60 to Sta. 793+00 WBL	8	4,468.1
Sta. 717+60 to Sta. 793+00 EBL	8	4,468.1
Exit 14 Gore Areas		
WB On Ramp	8	281.5
WB Off Ramp	8	264.8
EB Off Ramp	8	264.8
EB On Ramp	8	273.4
	TOTAL	10,020.7

* Plans quantity will be the basis of measurement and payment for the above mentioned work. For informational purposes only, there is an estimated 15,963.3 tons of PCC Pavement on this project that may be crushed and reused as Gravel Cushion. Refer to typical sections for location and depth of PCCP Removal. This quantity is based on a unit weight of 118 lbs. per cubic foot for the reclaimed concrete aggregate.

EXISTING 8" CONTINUOUSLY REINFORCED P.C.C. PAVEMENT

The existing 8" Continuously Reinforced P.C.C. Pavement is reinforced with No. 5 deformed bars longitudinal, spaced 6.5" center to center and No. 5 deformed bars transverse, spaced 48" center to center.

The course aggregate in the existing P.C.C. Pavement is limestone.

Locations for concrete removal are provided in the "Remove Concrete Pavement Table".

REMOVAL OF IN PLACE ASPHALT CONCRETE MAINTENANCE OVERLAY

The removal of the I-90 Westbound and Eastbound mainline maintenance overlay shall be incidental to the contract unit price per cubic yard for Remove Asphalt Concrete Pavement or Salvage and Stockpile Asphalt Mix Material, see Remove Asphalt Concrete table.

Location	Width	Depth
Sta. 717+60 to Sta. 755+12 WBL	24'	1.5"
Sta. 785+37 to Sta. 793+00 WBL	24'	1.5"
Sta. 731+20 to Sta. 793+00 EBL	26'	2"

TABLE OF CONCRETE CURB AND GUTTER REMOVAL

Station	to Station	L/R	* Quantity (Ft.)
Ramp A Detour			
local road	790+62 I-90	L	96.0
Colorado Blvd			
81+08.0	86+98.3	Rt.	706.0
90+80.0		Median	154.0
27th Street			
25+38.0		Median	96.0
10+90.0	14+30.9	Lt.	329.0
10+48.0	14+29.8	Rt.	419.0
28+69.0	32+71.5	Lt.	615.0
28+87.7	32+18.7	Rt.	424.0
		Total:	2,839.0

* Plans quantity will be the basis of measurement and payment for the above mentioned work. Refer to typical sections and Section B for location of Concrete Curb & Gutter Removal. Concrete Curb and Gutter removal material will not be reused on this project.

TABLE OF SIDEWALK REMOVAL

Station	to Station	L/R	* Quantity (Sq.Yds.)
Colorado Blvd			
88+71.3	90+52.5	Lt.	182.2
91+41.2	92+31.0	Rt.	49.9
27th Street			0
10+48.0	14+22.4	Rt.	191.1
27+94.9	29+80.8	Rt.	80.6
30+54.4	33+11.4	Lt.	129.4
		Total:	633.2

* Plans quantity will be the basis of measurement and payment for the above mentioned work. Refer to typical sections and Section B for location of Concrete Sidewalk Removal. Concrete Sidewalk removal material will not be reused on this project.

TABLE OF CONCRETE APPROACH PAVEMENT REMOVAL

Station	* Quantity (Sq.Yds.)
27th Street – 5 each	276.8
Colorado Blvd – 3 Each	79.4
Total:	356.2

* Plans quantity will be the basis of measurement and payment for the above mentioned work. Refer to typical sections and Section B for location of Concrete Approach Pavement Removal. Concrete Approach Pavement removal material will not be reused on this project.

REMOVE AND RESET CROSSOVER CLOSURE

The crossover closures (estimated at 416') shall be removed and reset for the median crossovers at Sta. 699+00 and Sta. 793+00 when traffic is no longer being carried on the crossover at the end of each construction season. The crossover closure shall be constructed according to details on standard plate 629.40.

TABLE OF CROSSOVER CLOSURES

Location	Length Ft.
Sta. 699+00	208
Sta. 793+00	208
TOTAL	416

REMOVE INTERIM CROSSOVER CLOSURE

The interim crossover closures (estimated at 256') shall be removed from the ramp detours.

TABLE OF INTERIM CROSSOVER CLOSURES

Location	Length Ft.
Exit 14 WB On Ramp	128
Exit 14 WB Off Ramp	128
TOTAL	256

REMOVE EDGE DRAINS

The Contractor will remove the 12" edge drain mats, edge drain outlets, and splash blocks installed along the WB and EB outside shoulders, see typical section. Estimated length of edge drain mat is 9,691', for information only. Estimated quantity of edge drain outlets and splash blocks is 33 each, for information only.

Cost for this work including materials shall be incidental to the contract lump sum price for REMOVE EDGE DRAINS.

CHECKING SPREAD RATES

The Contractor shall be responsible for checking the Base Course, Gravel Cushion and Class HR Asphalt Concrete spread rates and taking the weigh delivery tickets as the surfacing material arrives on the project and is placed onto the roadway.

The Contractor shall compute the required spread rates for each typical surfacing section and create a spread chart prior to the start of material delivery and placement. The Engineer will review and check the Contractor's calculations and spread charts. The station to station spread shall be written on each ticket as the surfacing material is delivered to the roadway.

At the end of each day's shift, the Contractor shall verify the following:

- All tickets are present and accounted for,
- The quantity summary for each item is calculated,
- The amount of material wasted if any,
- Each day's ticket summary is marked with the corresponding 'computed by',
- The ticket summary is initialed and certified that the delivered and placed quantity is correct.

All daily tickets and the summary by item shall be given to the Engineer no later than the following morning.

If the checker is not properly and accurately performing the required duties, the Contractor shall correct the problem or replace the checker with an individual capable of performing the duties to the satisfaction of the Engineer. Failure to do so will result in suspension of the work.

The Department will perform depth checks. The Contractor shall be responsible for placement of material to the correct depth unless otherwise directed by the Engineer. If the placed material is not within a tolerance of ±1/2 inch of the plan shown depth, the Contractor shall correct the problem at no additional cost to the Department. Excess material above the tolerance will not be paid for. Achieving the correct depth may require picking up and moving material or other action as required by the Engineer.

All costs for providing the Contractor furnished checker and performing all related duties shall be incidental to the contract lump sum price for the CHECKER. No allowances will be made to the contract lump sum price for CHECKER due to authorized quantity variations unless the quantities for the material being checked vary above or below the estimated quantities by more than 25 percent. Payment for the Checker shall then be increased or decreased by the same proportion as the placed material quantity bears to the estimated material quantity.

FOR BIDDING PURPOSES ONLY

Revised: 14 Jan 16, RML

MAINTENANCE OF MAINLINE SURFACE & SHOULDERS

The Contractor shall place Asphalt Concrete, Composite on the mainline and shoulders, at the Engineers discretion, before Head-to-Head traffic is placed on it. The Contractor will remove loose and broken pavement from the mainline and shoulders.

After Initial Patching is complete, the Contractor shall be responsible for maintaining the surface, throughout the length and duration of the project.

Cost for maintaining the mainline surface and shoulders for the length and duration of the project shall be incidental to the contract unit price per ton for Asphalt Concrete Composite, estimated at 200 tons.

TRIM MATERIAL

Material removed during the trimming operation may be used for the Construction Haul Road, hauled ahead to be placed on the grade, or hauled from the roadbed. Material hauled from the roadbed may be placed on shoulders after completion of the Nonreinforced Concrete Pavement. No additional payment will be made for handling, stockpiling, processing, or placement of trim material. Water added by road mix or plant mix methods will be paid at the contract unit price per MGal for Water for Granular Material.

CONSTRUCTION HAUL ROAD

Included in the Estimate of Quantities are 1,000 tons of Gravel Cushion per mile and 12 MGal of Water for Granular Material per mile for the purpose of haul road construction. The use of this material will be at the discretion of the Contractor. Any additional construction and removal for the construction haul road shall be the Contractor's responsibility. The Contractor shall receive no additional compensation for this work. An estimated 2.856 miles required for project.

Granular Material from the Construction Haul Road shall be removed during the Shoulder Shaping operation and may be reused as Base Course material.

GRAVEL CUSHION

Gravel Cushion shall be furnished by the Contractor and/or may be produced from the material removed from the project per the plan note requirements.

If the asphalt concrete removed from the project is used, the Contractor shall establish a percentage (± 5% tolerance) for each material to be blended during production of the Gravel Cushion. The stockpile(s) shall be uniformly blended at a Contractor furnished site.

All other requirements for Gravel Cushion shall apply.

BASE COURSE

Base Course shall be furnished by the Contractor and/or may be produced from the material removed from the project per the plan note requirements.

If the asphalt concrete removed from the project is used, the Contractor shall establish a percentage (± 5% tolerance) for each material to be blended during production of the Base Course. The stockpile(s) shall be uniformly blended at a Contractor furnished site.

All other requirements for Base Course shall apply.

CLASS HR ASPHALT CONCRETE

Virgin mineral aggregate for Class HR Asphalt Concrete Alternate A shall conform to the requirements for Class E, Type 1.

Virgin mineral aggregate for Class HR Asphalt Concrete Alternate B shall consist of a minimum of 80 percent crushed limestone ledgerock and shall conform to the requirements for Class E, Type 1.

The RAP shall be crushed so the particle size in the cold feed will meet the requirements specified in Section 884.2 C.1.

Screening or scalping of the RAP stockpile(s) will not be allowed.

An estimated 3,400 tons of salvaged asphalt concrete is needed.

The Class HR Asphalt Concrete shall include 30 percent RAP in the mixture.

All other requirements for Class HR shall apply.

ASPHALT CONCRETE RUMBLE STRIP

Asphalt Concrete Rumble Strips shall be milled continuously on the median shoulder. Construction of Asphalt Concrete Rumble Strips shall be paid for at the contract unit price per mile for Grind 12" Rumble Strip or Stripe in Asphalt Concrete. It is estimated that 2.9 miles of asphalt concrete rumble strip will be required for the median shoulder.

SUMMARY OF ASPHALT CONCRETE – Alt. A

Location	Class HR Asphalt Concrete With Specified Density	Class HR Asphalt Concrete Without Specified Density
	Ton	Ton
I-90 WBL & EBL		
Sta. 717+60 to Sta. 793+00 Outside Sh.	1,980.2	
Sta. 717+60 to Sta. 793+00 Median Sh.	1,325.5	
I-90 adjacent MSE Wall		
Sta. 754+56.6 to Sta. 757+45.0 WBL	106.7	
Sta. 754+56.6 to Sta. 757+45.0 EBL	106.7	
Colorado Blvd.		
Sta. 79+00 to Sta. 81+08 Mainline		20.2 / 16.3
Miscellaneous Items		
Entrances		222.2
Guardrail Surfacing		202.5
Detours and Temporary Traffic Control Surfacing	6,400.4	
TOTAL	9,919.5	461.2

SUMMARY OF ASPHALT CONCRETE – Alt. B

Location	Class HR Asphalt Concrete With Specified Density	Class HR Asphalt Concrete Without Specified Density
	Ton	Ton
I-90 WBL & EBL		
Sta. 717+60 to Sta. 793+00 Outside Sh.	2,033.7	
Sta. 717+60 to Sta. 793+00 Median Sh.	1,360.2	
I-90 adjacent MSE Wall		
Sta. 754+56.6 to Sta. 757+45.0 WBL	109.6	
Sta. 754+56.6 to Sta. 757+45.0 EBL	109.6	
Colorado Blvd.		
Sta. 79+00 to Sta. 81+08 Mainline		20.7 / 16.8
Miscellaneous Items		
Entrances		228.3
Guardrail Surfacing		208.0
Detours and Temporary Traffic Control Surfacing	6,573.8	
TOTAL	10,186.9	473.8

FOR BIDDING PURPOSES ONLY

ALKALI SILICA REACTIVITY

Fine aggregate shall conform to Section 800.2.D Alkali Silica Reactivity (ASR) Requirements.

Below is a list of known fine aggregate sources and the average corresponding 14 day expansion values:

Source	Location	Expansion Value
Bachman	Winner, SD	0.335*
Bitterman	Delmont, SD	0.316*
Concrete Materials	Corson, SD	0.170
Croell	Hot Springs, SD	0.089
Croell	Wasta, SD	0.212
Emme Sand & Gravel	Oneil, NE	0.217
Fisher S&G – Mickelson Pit	E. of Nisland, SD	0.129
Fisher S&G - Vallery Pit	Nisland, SD	0.110
Fisher S&G	Rapid City, SD	0.092
Fisher S&G	Spearfish, SD	0.053
Fisher S&G	Wasta, SD	0.159
Fuchs	Pickstown, SD	0.275*
Higman	Akron, IA	0.203
Higman	Hudson, SD	0.187
Hilde	Madison, SD	0.116
Jensen	Herried, SD	0.276*
L.G. Everist	Brookings, SD	0.186
L.G. Everist	Hawarden, IA	0.166
L.G. Everist	Summit, SD	0.178
Morris	Blunt, SD	0.192
Morris - Richards Pit	Onida, SD	0.188
Myrl & Roys - East Sioux Quarry	NE Sioux Falls, SD	0.214
Myrl & Roys - Nelson Pit	Sioux Falls, SD	0.156
Northern Concrete Agg.	Rauville, SD	0.113
Northern Concrete Agg.	Luverne, MN	0.133
Opperman - Gunvordahl Pit	Burke, SD	0.362*
Opperman - Cahoy Pit	Herrick, SD	0.307*
Opperman - Jones Pit	Burke, SD	0.321*
Opperman - Randall Pit	Pickstown, SD	0.239
Pete Lien & Sons	Creston, SD	0.158
Pete Lien & Sons	Oral, SD	0.129
Pete Lien & Sons	Wasta, SD	0.192
Thorpe Pit	Britton, SD	0.098
Wagner Building Supplies	Pickstown (Wagner), SD	0.241
Winter Brothers- Whitehead Pit	Brookings, SD	0.197

* These sources will require Type V cement in the concrete mix design and Class F (Modified) fly ash as specified.

The Department will use the running average of the last three known expansion test results or less for determining acceptability of source and the required Type of cement. These expansion results are reported in the preceding table. Additional testing, when requested by the Contractor, will be performed by the Department at the Contractor's expense.

The values listed in the table are intended for use in bidding. If a previously tested pit by SDDOT with acceptable test values (less than 0.250) is discovered after letting to require Type V cement (greater than 0.250) the Department will accept financial responsibility for the change from Type II to Type V cement.

Type II or Type V cement will not change the requirement for the fly ash. The cost for either type of cement shall be subsidiary to the contract item.

11” & 9” NONREINFORCED CONCRETE PAVEMENT

The fine aggregate shall be screened over a 1 inch square opening screen just prior to introduction into the concrete paving mix. The Contractor will screen all of the aggregate to prevent the incorporation of foreign materials (ie: mud balls) into the concrete mix.

Fine aggregate shall conform to Section 800.2 D, Alkali Silica Reactivity (ASR) Requirements, of the Specifications.

The transverse contraction joints shall be perpendicular to the centerline as detailed in the standard plates for PCC Pavement Dowel Bar Assembly for Transverse Contraction Joints and PCC Pavement Transverse Contraction Joint Spacing. In multilane areas the transverse contraction joints shall be perpendicular to the centerline and be in a straight line across the width of the pavement. In special situations the Engineer may pre-approve transverse contraction joints that do not meet these requirements. All nonconforming transverse contraction joints shall be removed at the Contractor’s expense. Any method of placement that cannot produce these requirements shall not be allowed to continue.

There will be no direct payment for trimming of the Gravel Cushion. The trimming will be considered incidental to the related items required for PCC Pavement. Trimming shall be performed as required by Section 380.3 C. of the Specifications.

A construction joint will be sawed whenever new concrete pavement is placed adjacent to existing concrete pavement.

Concrete used in Portland cement concrete pavement shall conform to the Special Provision for Contractor Furnished Mix Design for PCC Pavement.

The following locations shall be tested for smoothness with a Contractor furnished and operated 25 foot California style profilograph in accordance with Section 380.3 of the Specifications:

I 90 - Sta. 717+60 to Sta. 793+00 WBL Driving and Passing Lanes
I 90 - Sta. 717+60 to Sta. 793+00 EBL Driving and Passing Lanes

The following locations shall be tested for smoothness with a Contractor furnished and operated 25 foot California style profilograph in accordance with the Special Provision for PI PCC Pavement Smoothness (Non-overlay):

On Ramp Acceleration Lane, Exit 14 WBL and EBL
Off Ramp Acceleration Lane, Exit 14 WBL and EBL

The surface of the mainline paving shall be longitudinally tined. All non string line machine tined areas shall be transverse tined.

11” & 9” NONREINFORCED CONCRETE PAVEMENT (CONTINUED)

See Standard Plate 380.15 for placement of PCC Pavement Rumble Strips. Payment for forming rumble strips including labor, materials and incidentals shall be incidental to the contract unit price per square yard for 11" NONREINFORCED PCC PAVEMENT.

PCC PAVEMENT RUMBLE STRIPS, for information only	
Location	PCCP Rumble Strips
	mile
PCCP Shoulder	1.73

* 11” NONREINFORCED PCC PAVEMENT	
LOCATION	11” NONREINFORCED PCC PAVEMENT SQ.YDS.
I-90 Mainline	
Sta. 717+60 to Sta. 793+00 WB	21,782.2
Sta. 717+60 to Sta. 793+00 EB	21,782.2
I-90 Ramp Gore Areas	
Exit 14 WB On Ramp	3,289.6
Exit 14 WB Off Ramp	1,653.9
Exit 14 EB Off Ramp	2,231.2
Exit 14 EB On Ramp	2,679.6
TOTAL	53,418.7

* Transverse contraction joints in 11” Nonreinforced PCC Pavement will be sealed with Low Modulus Silicone Sealant, standard plate 380.06.

FOR BIDDING PURPOSES ONLY

Revised: 14 Jan 16, RML

* 9" NONREINFORCED PCC PAVEMENT	
LOCATION	9" NONREINFORCED PCC PAVEMENT SQ.YDS.
I-90 Ramp	
Ramp A	3,821.5
Ramp B	5,721.8
Ramp C	4,726.9
Ramp D	5,594.2
Ramp E	695.4
Ramp F	590.1
Ramp G	687.0
Ramp H	634.9
Colorado Blvd.	
Sta. 81+08 to Sta. 82+33.7	1,012.7
Sta. 82+33.7 to Sta. 85+81.4 WB	1,278.6
Sta. 82+33.7 to Sta. 85+81.4 EB	857.7
Sta. 85+81.4 to Sta. 86+86.7	935.6
Sta. 86+86.7 to Sta. 91+82.6 WB	1,554.8
Sta. 86+86.7 to Sta. 91+82.6 EB	1,807.4
Sta. 91+82.6 to Sta. 93+51.4	1,281.1
Sta. 93+51.4 to Sta. 98+43.9 WB	1,883.9
Sta. 93+51.4 to Sta. 98+43.9 EB	664.3
Sta. 98+43.9 to Sta. 99+63	498.5
27th Str.	
Sta. 10+48 to Sta. 12+65.0	1,146.9
Sta. 12+65.0 to Sta. 13+89.3 SB	153.5
Sta. 12+65.0 to Sta. 13+89.3 NB	305.0
Sta. 13+89.3 to Sta. 14+61.6	749.6
Sta. 15+30.3 to Sta. 15+64.5	642.6
Sta. 15+64.5 to Sta. 19+39.6 SB	1,376.4
Sta. 15+64.5 to Sta. 19+39.6 NB	1,625.6
Sta. 19+39.6 to Sta. 19+80.4	389.7
Sta. 22+13.1 to Sta. 22+57.9	449.2
Sta. 22+57.9 to Sta. 28+94.0 SB	2,978.2
Sta. 22+57.9 to Sta. 28+94.0 NB	2,200.7
Sta. 28+94.0 to Sta. 29+26.5	257.6
Sta. 29+26.5 to Sta. 31+98.6 SB	769.0
Sta. 29+26.5 to Sta. 31+98.6 NB	959.0
Sta. 31+98.6 to Sta. 33+20	734.2
Entrances	
Colorado Blvd.	
Sta. 81+75 Rt.	271.9
Sta. 86+77 Rt.	335.1
Sta. 90+09 Rt.	375.7
Sta. 95+54 Rt.	278.4
Sta. 99+08 Rt.	285.5
27th Str.	
Sta. 29+17 Rt.	208.4
Sta. 29+18 Lt.	278.3
Sta. 32+48 Rt.	368.0
Sta. 32+48 Lt.	154.6
TOTAL	51,539.5

* Transverse contraction joints in 9" Nonreinforced PCC Pavement will be sealed with Hot Poured Elastic Joint Sealer, standard plate 380.05.

* 9" NONREINFORCED PCC PAVEMENT	
LOCATION	9" NONREINFORCED PCC PAVEMENT SQ.YDS.
Colorado Blvd. – 8' Shoulders	
Sta. 93+51.4 to Sta. 95+00.5 Rt.	132.4
Sta. 96+07.4 to Sta. 98+51.0 Rt.	216.5
Sta. 93+64.4 to Sta. 99+63.0 Lt.	532.1
TOTAL	881.0

* Transverse contraction joints in 9" Nonreinforced PCC Pavement will be sealed with Hot Poured Elastic Joint Sealer, standard plate 380.05.

LOCATION OF CONCRETE PAVEMENT JOINTS

The location of joints, as shown on the "PCC Pavement Layout" sheets, are only approximate locations to be used as a guide in the final location of joints and to afford bidders a basis for estimating the construction costs of the joints. The final locations of the joints are to be designated by the Engineer during construction.

TRANSVERSE CONTRACTION JOINTS

Silicone sealing operations shall be suspended per Specifications for seasonal restrictions (380.3 P.3). Hot poured elastic joint sealer may be temporarily placed during the seasonal restrictions of silicone sealing. If hot poured elastic joint sealer is used, it will be removed the following year and replaced with silicone sealant. All costs associated with the placement and removal of the hot poured elastic joint sealer, any additional joint cleaning, sawing, and traffic control shall be at the Contractor's expense with no additional payment.

BLOCKOUT AREAS

It is anticipated that there will be a minimum of 2 pavement blockouts at ramp detour locations (Exit 14 Ramp C & D).

TABLE OF DOWEL BARS

Location	1 ½" Bars	1 ¼" Bars
	Each	Each
I-90 Mainline, includes gore area		
Sta. 717+60 to Sta. 793+00 WB	11,290	
Sta. 717+60 to Sta. 793+00 EB	11,281	
I-90 Ramp		
Ramp A		2,639
Ramp B		3,923
Ramp C		3,167
Ramp D		3,171
Ramp E		791
Ramp F		648
Ramp G		687
Ramp H		779
Colorado Blvd.		7,622
27th Str.		9,250
Entrances		
Colorado Blvd		665
27th Str.		588
SUBTOTAL	22,571	33,930
TOTAL	56,501	

STEEL BAR INSTALLATION

The Contractor shall install the Steel Bars (1½ inch x 18 inch epoxy coated plain round dowel bar) into drilled holes in the existing concrete pavement. An epoxy resin adhesive must be used to anchor the steel bar in the drilled hole.

The steel bars shall be cut to the specified length by sawing and shall be free from burring or other deformations. Shearing will not be permitted.

The diameter of the drilled holes in the existing concrete pavement for the steel bars shall not be less than 1/8 inch nor more than 3/8 inch greater than the overall diameter of the steel bar. Holes drilled into the existing concrete pavement shall be located at mid-depth of the slab and true and normal. The drilled holes shall be blown out with compressed air using a device that will reach to the back of the hole to ensure that all debris or loose material has been removed prior to epoxy injection.

Epoxy coated plain round steel bars shall be installed on 12 inch centers in the transverse joint. The first steel bar shall be placed a minimum of 3 inches and a maximum of 6 inches from the outside edge of the slab.

Epoxy resin adhesive shall be of the type intended for horizontal applications, and shall conform to the requirements of ASTM C 881, Type IV, Grade 3 (equivalent to AASHTO M235, Type IV, Grade 3).

Mix the epoxy resin as recommended by the manufacturer and apply by an injection method approved by the Engineer. If an epoxy pump is utilized, it shall be capable of metering the components at the manufacturers designated rate and be equipped with an automatic shut-off. The pump shall shut off when any of the components are not being metered at the designated rate. Fill the drilled holes 1/3 to 1/2 full of epoxy, or as recommended by the manufacturer, prior to insertion of the steel bar. Care shall be taken to prevent epoxy from running out of the horizontal holes prior to steel bar insertion. Rotate the steel bar during installation to eliminate voids and ensure complete bonding of the bar. Insertion of the bars by the dipping method will not be allowed.

Cost for the epoxy resin adhesive, steel bars, drilling of holes, applying the adhesive, installing the steel bars into the drilled holes and all other items incidental to the installation of the steel bars shall be incidental to the contract unit price per each for Insert Steel Bar in PCC Pavement.

TABLE OF STEEL BAR INSTALLATION

LOCATION*	1-1/2" x 18" Plain Round Dowel Bars
	each
I-90 Mainline	
Sta. 717+60 WBL	24
Sta. 793+00 WBL	24
Sta. 717+60 EBL	24
Sta. 793+00 EBL	24
TOTAL	96

I-90 SHOULDER SHAPING

Prior to paving the asphalt shoulders, the Contractor shall remove all granular material from the shoulders to an elevation equal to the bottom of the concrete pavement to a separate stockpile site as directed by the Engineer. This material may be reused as Base Course at the discretion of the Engineer.

Prior to placement of the Base Course on the shoulders, the existing Gravel Cushion shall be reshaped to conform to typical sections and compacted with adequate moisture to the satisfaction of the Engineer until a uniform, stable surface is obtained.

After Shoulder Shaping is completed the shoulder granular material shall be placed according to the requirements of 260.3 A of the Specifications for Base Course material.

Included in the Estimate of Quantities are 5.347 miles of Shoulder Shaping for both driving and passing lane shoulders of I-90. There are 2.856 miles of Median Shoulder Shaping and 2.491 miles of Outside Shoulder Shaping.

Included in the Estimate of Quantities is 58.8 MGal of Water for Granular Material per mile for Median Shoulders and 67.1 Mgal of Water per mile for Outside Shoulders for compaction of granular material associated with Shoulder Shaping.

All costs associated with removing, hauling, reshaping/compacting & stockpiling the granular material shall be incidental to the contact unit price per mile for Shoulder Shaping.

All costs associated with the placement of Base Course on the shoulders shall be incidental to the contact unit price per ton for Base Course.

REMOVE RAMP DETOURS

Upon completion of the project the Ramp Detours and Ramp Widenings for Traffic Control shall be removed. The asphalt concrete and granular material will be removed in accordance with typical sections. The Pit Run from the Eastbound off ramp detour (constructed during another project) may be removed and reused as Pit Run or disposed of by the Contractor as approved by the Engineer, estimated at 956.7 cu.yds. All culverts, pipe end sections, and delineators shall become the property of the Contractor.

Cost for removing the embankment material, Pit Run, culverts, pipe end sections, and delineators shall be incidental to the contract lump sum price for REMOVE TRAFFIC DIVERSION(S).

FOR BIDDING PURPOSES ONLY

RATES OF MATERIALS

The Estimate of Surfacing Quantities is based on the following quantities of materials per **station**.

I-90 MAINLINE

Sta. 717+60 to Sta. 719+18.2 WBL
Sta. 739+88.8 to Sta. 766+26.4 WBL
Sta. 776+17.2 to Sta. 793+00 WBL
Sta. 717+60 to Sta. 731+49.5 EBL
Sta. 742+44.3 to Sta. 772+52.4 EBL
Sta. 790+62.7 to Sta793+00 EBL

GRAVEL CUSHION

Crushed Aggregate 150.94 Tons.

Water for Granular Material at the rate of 1.81 M. Gallons.

I-90 OUTSIDE SHOULDERS – 8' wide

Sta. 717+60 to Sta. 719+18.2 WBL
Sta. 739+88.8 to Sta. 766+26.4 WBL
Sta. 776+17.2 to Sta. 793+00 WBL
Sta. 717+60 to Sta. 731+49.5 EBL
Sta. 742+44.3 to Sta. 772+52.4 EBL
Sta. 790+62.7 to Sta793+00 EBL

BASE COURSE

Crushed Aggregate 43.86 Tons.

Water for Granular Material at the rate of 0.53 M. Gallons.

MC-70 Asphalt for Prime at the rate of 0.14 ton applied 10.5 feet wide (Rate = 0.30 gallon per square yard).

CLASS HR ASPHALT CONCRETE

	Alt. A	Alt. B
Crushed Aggregate	10.88 Tons	11.22 Tons
Salvaged Asphalt Concrete	4.66 Tons	4.81 Tons
PG 58-28 Asphalt Binder	0.65 Tons	0.60 Tons
Total	16.19 Tons	16.63 Tons

The exact proportions of this material will be determined on construction.

SS-1h or CSS-1h Asphalt for Tack at the rate of 0.02 ton applied 10.0 feet wide
(Rate = 0.05 gallon per square yard).

FLUSH SEAL

SS-1h or CSS-1h Asphalt for Flush Seal at the rate of 0.02 ton applied 9.5 feet wide (Rate = 0.05 gallon per square yard).

I-90 OUTSIDE SHOULDERS (adjacent gore area) – 6' wide

Sta. 719+18.2 to Sta. 733+19.4 WBL
Sta. 769+47.2 to Sta. 776+17.2 WBL
Sta. 731+49.5 to Sta. 737+87.6 EBL
Sta. 776+82.7 to Sta. 790+62.7 EBL

BASE COURSE

Crushed Aggregate 37.39 Tons.

Water for Granular Material at the rate of 0.45 M. Gallons.

MC-70 Asphalt for Prime at the rate of 0.11 ton applied 8.5 feet wide (Rate = 0.30 gallon per square yard).

CLASS HR ASPHALT CONCRETE

	Alt. A	Alt. B
Crushed Aggregate	8.39 Tons	8.65 Tons
Salvaged Asphalt Concrete	3.60 Tons	3.71 Tons
PG 58-28 Asphalt Binder	0.50 Tons	0.46 Tons
Total	12.49 Tons	12.82 Tons

The exact proportions of this material will be determined on construction.

SS-1h or CSS-1h Asphalt for Tack at the rate of 0.02 ton applied 8.0 feet wide (Rate = 0.05 gallon per square yard).

FLUSH SEAL

SS-1h or CSS-1h Asphalt for Flush Seal at the rate of 0.02 ton applied 7.5 feet wide (Rate = 0.05 gallon per square yard).

I-90 MEDIAN SHOULDERS – 4' wide

Sta. 717+60 to Sta. 793+00 WBL
Sta. 717+60 to Sta. 793+00 EBL

BASE COURSE

Crushed Aggregate 31.34 Tons.

Water for Granular Material at the rate of 0.38 M. Gallons.

MC-70 Asphalt for Prime at the rate of 0.09 ton applied 6.5 feet wide (Rate = 0.30 gallon per square yard).

CLASS HR ASPHALT CONCRETE

	Alt. A	Alt. B
Crushed Aggregate	5.91 Tons	6.09 Tons
Salvaged Asphalt Concrete	2.53 Tons	2.61 Tons
PG 58-28 Asphalt Binder	0.35 Tons	0.32 Tons
Total	8.79 Tons	9.02 Tons

The exact proportions of this material will be determined on construction.

SS-1h or CSS-1h Asphalt for Tack at the rate of 0.01 ton applied 6.0 feet wide (Rate = 0.05 gallon per square yard).

FLUSH SEAL

SS-1h or CSS-1h Asphalt for Flush Seal at the rate of 0.01 ton applied 5.5 feet wide (Rate = 0.05 gallon per square yard). Flush Seal shall be applied after the Asphalt Concrete Rumble Strips have been milled on the median shoulder.

FOR BIDDING PURPOSES ONLY

RAMP SHOULDERS – 4.5' wide Area

Sta. 14+98.5 to Sta. 22+17.4 Ramp A - Rt.
Sta. 14+56.3 to Sta. 27+98.0 Ramp B – Lt.
Sta. 21+07.3 to Sta. 31+59.8 Ramp C – Lt.
Sta. 30+47.4 to Sta. 43+49.6 Ramp D – Rt.

GRAVEL CUSHION

Crushed Aggregate 23.63 Tons.

Water for Granular Material at the rate of 0.28 M. Gallons.

RAMP SHOULDER WEDGE AREAS -(adjacent 9" PCCP)

Sta. 15+12.8 to Sta. 22+17.4 Ramp A - Lt.
Sta. 12+01.4 to Sta. 14+10.3 Ramp E – Lt.
Sta. 14+56.3 to Sta. 27+98.0 Ramp B – Rt.
Sta. 12+36.0 to Sta. 13+49.8 Ramp F – Rt.
Sta. 21+07.3 to Sta. 31+45.4 Ramp C - Rt.
Sta. 10+85.6 to Sta. 12+81.1 Ramp G – Rt.
Sta. 30+47.4 to Sta. 43+49.6 Ramp D – Lt.
Sta. 11+03.4 to Sta. 11+97.7 Ramp H – Lt.

GRAVEL CUSHION

Crushed Aggregate 7.88 Tons.

Water for Granular Material at the rate of 0.09 M. Gallons.

OUTSIDE SHOULDER WEDGE AREAS (adjacent gore area)

Sta. 733+19.4 to Sta. 739+87.3 WBL
Sta. 766+29.3 to Sta. 769+47.2 WBL
Sta. 737+87.6 to Sta. 742+42.3 EBL
Sta. 772+54.2 to Sta. 776+82.7 EBL

GRAVEL CUSHION

Crushed Aggregate 16.04 Tons.

Water for Granular Material at the rate of 0.19 M. Gallons.

TABLE OF ADDITIONAL QUANTITIES

Revised: 14 Jan 16, RML

Location-Description	Water for Granular Material	Gravel Cushion	Base Course	Class HR Asphalt Concrete, Alt. A	PG 58-28 Asphalt Binder, Alt. A	Class HR Asphalt Concrete, Alt. B	PG 58-28 Asphalt Binder, Alt. B	MC-70 Asphalt for Prime	SS-1h or CSS-1h Asphalt for Tack	SS-1h or CSS-1h Asphalt for Flush Seal	Sand for Flush Seal
	MGal	Ton	Ton	Ton	Ton	Ton	Ton	Ton	Ton	Ton	Ton
Gore Areas (includes mainline surfacing)											
Sta. 719+18.2 to Sta. 739+88.8 WBL	44.6	3,715.9	---	---	---	---	---	---	---	---	---
Sta. 766+26.4 to Sta. 776+17.2 WBL	21.1	1,757.2	---	---	---	---	---	---	---	---	---
Sta. 731+49.5 to Sta. 742+44.3 EBL	25.7	2,138.3	---	---	---	---	---	---	---	---	---
Sta. 772+52.4 to Sta. 790+62.7 EBL	39.1	3,254.6	---	---	---	---	---	---	---	---	---
I-90 adjacent to MSE Wall											
Sta. 754+56.6 to Sta. 757+45.0 WBL	1.2	---	100.9	106.7	4.3	109.6	4.0	0.7	0.1	0.1	---
Sta. 754+56.6 to Sta. 757+45.0 EBL	1.2	---	100.9	106.7	4.3	109.6	4.0	0.7	0.1	0.1	---
Ramp Mainline											
Sta. 13+03.2 to Sta. 22+17.4 Ramp A	14.7	1,221.7	---	---	---	---	---	---	---	---	---
Sta. 12+82.1 to Sta. 27+98.0 Ramp B	22.2	1,850.9	---	---	---	---	---	---	---	---	---
Sta. 21+07.3 to Sta. 33+48.4 Ramp C	18.4	1,530.2	---	---	---	---	---	---	---	---	---
Sta. 30+47.4 to Sta. 45+18.1 Ramp D	21.7	1,804.1	---	---	---	---	---	---	---	---	---
Sta. 10+75.7 to Sta. 12+95.4 Ramp E	3.1	257.2	---	---	---	---	---	---	---	---	---
Sta. 10+68.5 to Sta. 12+58.6 Ramp F	2.7	223.0	---	---	---	---	---	---	---	---	---
Sta. 12+00.6 to Sta. 14+18.2 Ramp G	3.0	253.4	---	---	---	---	---	---	---	---	---
Sta. 11+94.5 to Sta. 13+97.4 Ramp H	2.9	238.8	---	---	---	---	---	---	---	---	---
Colorado Blvd Mainline											
Sta. 79+00.0 to Sta. 81+08.0 – 1st / 2nd Lift	1.6	---	135.9	20.2 / 16.3	0.8 / 0.8	20.7 / 16.8	0.7 / 0.6	0.1	---	---	0.4
Sta. 81+08.0 to Sta. 86+86.7	17.4	1,446.2	---	---	---	---	---	---	---	---	---
Sta. 86+86.7 to Sta. 93+51.4	18.4	1,557.1	---	---	---	---	---	---	---	---	---
Sta. 93+51.4 to Sta. 99+63.0	16.9	1,408.3	---	---	---	---	---	---	---	---	---
27th Street Mainline											
Sta. 10+48.0 to Sta. 14+61.6	9.5	792.9	---	---	---	---	---	---	---	---	---
Sta. 15+30.3 to Sta. 19+80.4	16.0	1,329.8	---	---	---	---	---	---	---	---	---
Sta. 22+13.1 to Sta. 33+20.0	34.1	2,838.1	---	---	---	---	---	---	---	---	---
Colorado Blvd Shoulders											
Sta. 93+46.3 to Sta. 99+63.0 Rt.	0.6	44.7	---	---	---	---	---	---	---	---	---
Sta. 93+64.4 to Sta. 99+63.0 Lt.	0.5	43.4	---	---	---	---	---	---	---	---	---
Intersecting Str. / Entrances											
Colorado Blvd											
Sta. 81+75 Rt.	1.1	92.9	---	---	---	---	---	---	---	---	---
Sta. 86+77 Rt., Intersecting Str.	4.4	368.8	---	75.1	3.0	77.2	2.8	0.5	0.1	0.1	1.8
Sta. 90+09 Rt.	4.9	406.0	---	81.1	3.2	83.3	3.0	0.6	0.1	0.1	2.0
Sta. 95+54 Rt.	0.7	55.2	---	---	---	---	---	---	---	---	---
Sta. 99+08 Rt.	0.7	55.6	---	---	---	---	---	---	---	---	---
27th Street											
Sta. 29+17 Rt.	1.1	91.8	---	---	---	---	---	---	---	---	---
Sta. 29+18 Lt., Intersecting Str.	2.1	171.4	---	21.9	0.9	22.5	0.8	0.2	---	---	0.5
Sta. 30+65 – 340' Rt.	0.4	36.2	---	19.1	0.8	19.6	0.7	0.1	---	---	0.5
Sta. 32+48 Rt., Intersecting Str.	1.3	108.9	---	---	---	---	---	---	---	---	---
Sta. 32+48 Lt.	1.0	86.7	---	25.0	1.0	25.7	0.9	0.2	---	---	0.6

TABLE OF ADDITIONAL QUANTITIES (CONTINUED)

Revised: 14 Jan16, RML

Location-Description	Water for Granular Material	Gravel Cushion	Base Course	Class HR Asphalt Concrete, Alt. A 1st / 2nd Lift	PG 58-28 Asphalt Binder, Alt. A 1st / 2nd Lift	Class HR Asphalt Concrete, Alt. B 1st / 2nd Lift	PG 58-28 Asphalt Binder, Alt. B 1st / 2nd Lift	MC-70 Asphalt for Prime	SS-1h or CSS-1h Asphalt for Tack	SS-1h or CSS-1h Asphalt for Flush Seal	Sand for Flush Seal
	MGal	Ton	Ton	Ton	Ton	Ton	Ton	Ton	Ton	Ton	Ton
Guardrail Additional Surfacing											
I-90 WB Median	4.1	---	340.6	78.3	3.1	80.4	2.9	0.8	0.2	0.2	---
I-90 EB Median	4.1	---	339.5	78.0	3.1	80.1	2.9	0.8	0.2	0.2	---
Ramp A	0.8	---	64.2	11.3	0.5	11.6	0.4	0.1	---	---	---
Ramp B	0.9	---	76.3	13.4	0.5	13.8	0.5	0.1	---	---	---
Ramp C	0.8	---	62.5	11.0	0.4	11.3	0.4	0.1	---	---	---
Ramp D	0.7	---	59.6	10.5	0.4	10.8	0.4	0.1	---	---	---
Median PCC Pavement Areas											
Ramp A and E	1.0	79.7	---	---	---	---	---	---	---	---	---
Ramp B and F	0.9	77.8	---	---	---	---	---	---	---	---	---
Ramp C and G	1.0	79.1	---	---	---	---	---	---	---	---	---
Ramp D and H	0.9	78.1	---	---	---	---	---	---	---	---	---
Colorado Blvd – 1st Section	3.2	266.1	---	---	---	---	---	---	---	---	---
Colorado Blvd – 2nd Section	1.0	79.4	---	---	---	---	---	---	---	---	---
Colorado Blvd – 3rd Section	3.1	258.9	---	---	---	---	---	---	---	---	---
27th Street – 1st Section	0.2	18.9	---	---	---	---	---	---	---	---	---
27th Street – 2nd Section	1.3	108.9	---	---	---	---	---	---	---	---	---
27th Street – 3rd Section	2.6	212.8	---	---	---	---	---	---	---	---	---
27th Street – 4th Section	1.3	109.5	---	---	---	---	---	---	---	---	---
27th Street Entrance – Sta. 29+17 Rt.	0.2	18.3	---	---	---	---	---	---	---	---	---
27th Street Entrance – Sta. 29+18 Lt.	0.1	5.3	---	---	---	---	---	---	---	---	---
Miscellaneous Area											
I-90 Maintenance Crossover	0.3	---	24.3	---	---	---	---	---	---	---	---
TOTAL	383.1	30,572.1	1,304.7	674.6	26.9	693.0	25.0	5.1	0.8	0.8	5.8

TABLE OF DETOURS AND TRAFFIC CONTROL SURFACING QUANTITIES

Location-Description	Water for Granular Material	Base Course	Class HR Asphalt Concrete, Alt. A 1st / 2nd Lift	PG 58-28 Asphalt Binder, Alt. A 1st / 2nd Lift	Class HR Asphalt Concrete, Alt. B 1st / 2nd Lift	PG 58-28 Asphalt Binder, Alt. B 1st / 2nd Lift	SS-1h or CSS-1h Asphalt for Tack 1st / 2nd Lift
	MGal	Ton	Ton	Ton	Ton	Ton	Ton
Phase 1	12.6	1,051.2	307.7 / 307.7	12.4 / 12.4	316.0 / 316.0	11.5 / 11.5	--- / 0.4
Phase 2A	59.1	4,922.3	1,070.1 / 1,070.1	42.9 / 42.9	1,099.3 / 1,099.3	39.7 / 39.7	--- / 1.6
Phase 2B	37.1	3,094.8	642.4 / 642.4	25.6 / 25.6	659.9 / 659.9	23.7 / 23.7	--- / 0.9
Phase 2C	42.8	3,569.6	783.0 / 783.0	31.3 / 31.3	804.2 / 804.2	29.0 / 29.0	--- / 1.0
Phase 3A	12.5	1,050.9	266.5 / 266.5	10.7 / 10.7	273.5 / 273.5	9.9 / 9.9	--- / 0.3
Phase 3B	6.2	515.2	130.5 / 130.5	5.2 / 5.2	134.0 / 134.0	4.8 / 4.8	--- / 0.1
TOTAL	170.3	14,204.0	6,400.4	256.2	6,573.8	237.2	4.3

FOR BIDDING PURPOSES ONLY

I-90 stationing alignment is located at centerline of median.

IN PLACE TYPICAL SECTIONS

PCC Pavement Removal

Asphalt Concrete Removal or Salvage & Stockpile Asphalt Mix Material

Unclassified Excavation (Waste Material)

Transitions: EB Off Ramp Gore Areas

Sta. 737+50.0 to Sta. 742+50.0
* 12′ to 24.6′

Sta. 742+50.0 to Sta. 745+32.6
* 24.6′ to 53.0′

Sta. 742+50.0 to Sta. 744+12.9
** 10′ to 3′

Sta. 744+12.9 to Sta. 745+32.6
** 3′

Transitions: EB On Ramp Gore Areas

Sta. 765+81.3 to Sta. 768+50.0
* 47.8′ to 24.3′

Sta. 768+50.0 to Sta. 775+99.9
* 24.3′ to 12′

Sta. 765+81.3 to Sta. 766+86.9
** 3′

Sta. 766+86.9 to Sta. 768+50.0
** 3′ to 10′

Transitions: WB On Ramp Gore Areas

Sta. 735+00.0 to Sta. 742+50.0
* 12′ to 24.3′

Sta. 742+50.0 to Sta. 745+26.0
* 24.3′ to 48.9′

Sta. 742+50.0 to Sta. 744+13.1
** 10′ to 3′

Sta. 744+13.1 to Sta. 745+26.0
** 3′

Transitions: WB Off Ramp Gore Areas

Sta. 764+67.4 to Sta. 767+50.0
* 53.0′ to 24.6′

Sta. 767+50.0 to Sta. 772+49.8
* 24.6′ to 12′

Sta. 764+67.4 to Sta. 765+87.1
** 3′

Sta. 765+87.1 to Sta. 767+50.0
** 3′ to 10′

Sta. 717+60.0 to Sta. 793+00.0

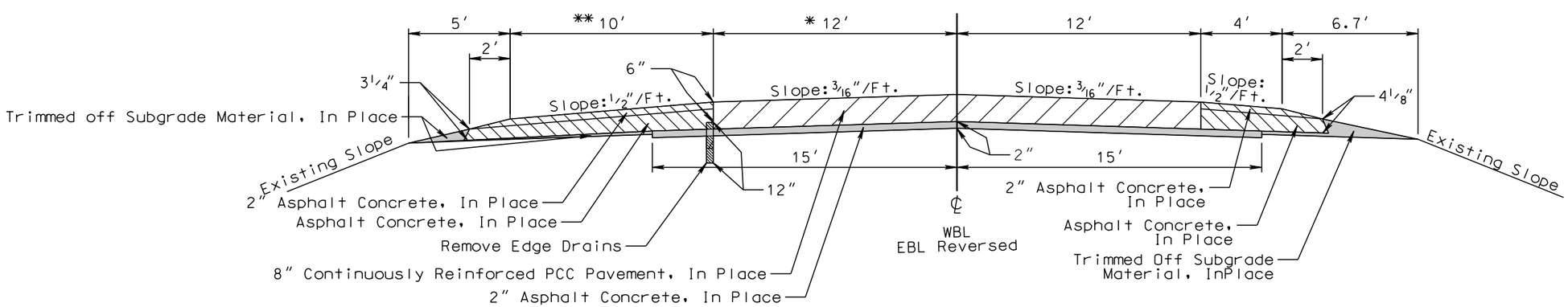

PLOT SCALE - 1:6

PLOT NAME - 2

FILE -...\PRJ\LAWR020U\TYPICALS 020U.DGN

PLOTTED FROM - TRPR16032

FOR BIDDING PURPOSES ONLY

IN PLACE TYPICAL SECTIONS

Asphalt Concrete Removal or Salvage & Stockpile Asphalt Mix Material

Granular Material Removal

Unclassified Excavation (Waste Material)

PCC Pavement Removal

Exit 14 Interchange Ramps
Sta. 2+77.8 to Sta. 13+32.4 WB On
Sta. 3+77.6 to Sta. 10+03.0 WB Off
Sta. 0+13.1 to Sta. 11+13.0 EB On
Sta. 2+84.70 to Sta. 7+33.1 EB Off

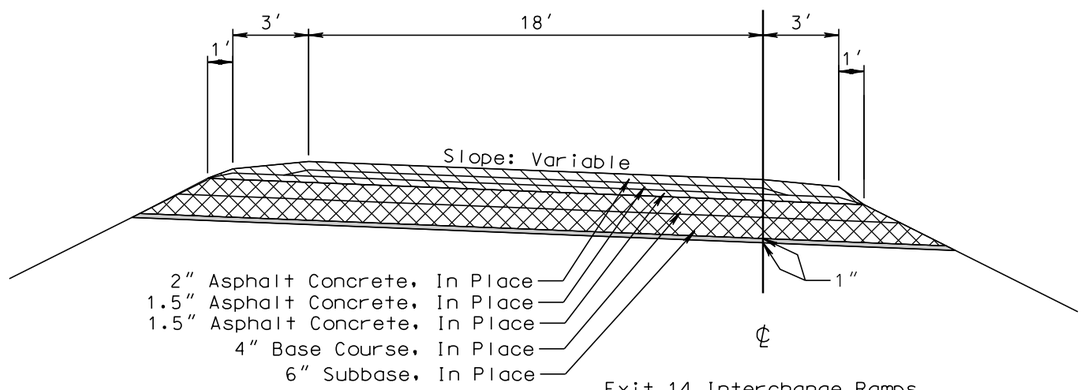

Exit 14 Interchange Ramps
Sta. 0+13.1 to Sta. 3+77.6 WB Off
Sta. 7+33.1 to Sta. 13+32.1 EB Off

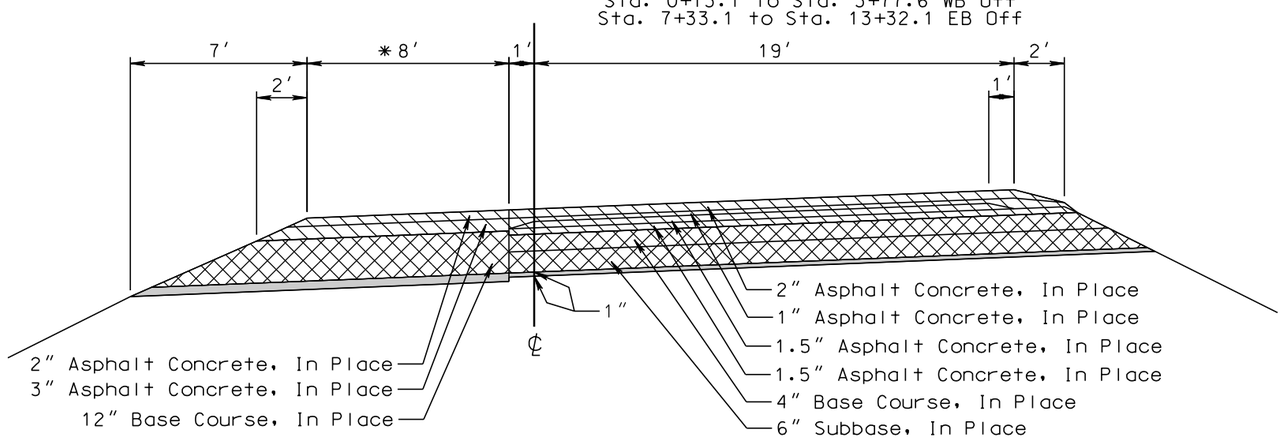

Transitions:

Sta. 2+57.6 to Sta. 3+77.6 WB Off
* 8′ to 2′

Sta. 7+33 to 8+53.1 EB Off
* 2′ to 8′

Colorado Blvd.
Sta. 81+08 to Sta. 87+15.1

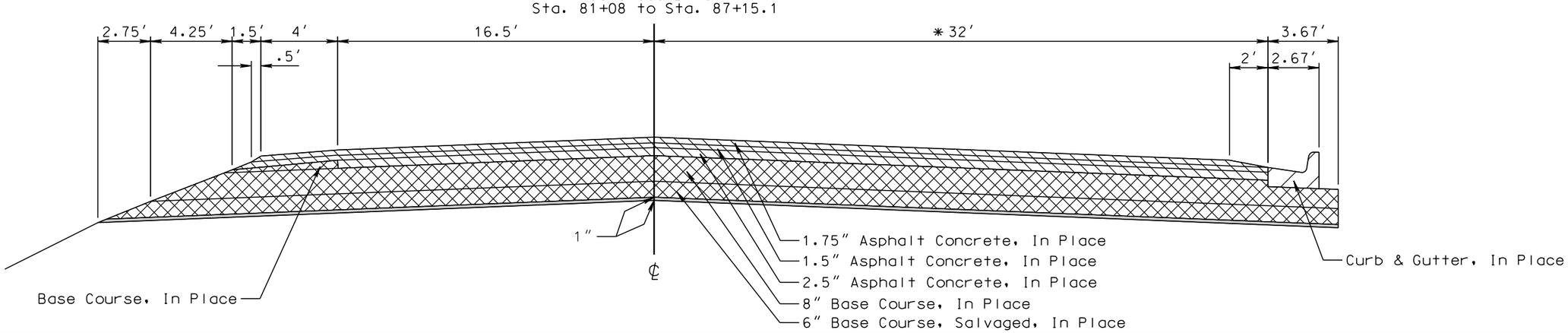

Transition:

Sta. 81+08 to Sta.82+00
* 44′

PLOT SCALE - 1:6
PLOTTED FROM - TRPR16032
PLOT NAME - 3
FILE - ...\PRJ\LAWR020U\TYPICALS 020U.DGN

FOR BIDDING PURPOSES ONLY

Plotting Date: 01/14/2016

IN PLACE TYPICAL SECTIONS

Asphalt Concrete Removal or Salvage & Stockpile Asphalt Mix Material

Granular Material Removal

Unclassified Excavation (Waste Material)

PCC Pavement Removal

Transition:

Sta. 91+50 to Sta.99+63
* 27.5′ to 15.5′

Colorado Blvd.
Sta. 87+15.1 to Sta. 99+63

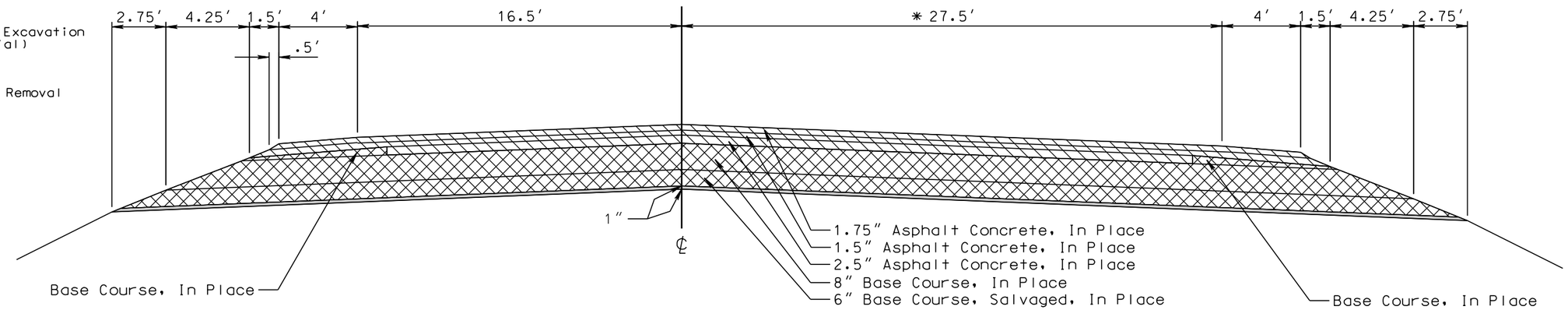

27th Str.
Sta. 10+48 to Sta. 14+30

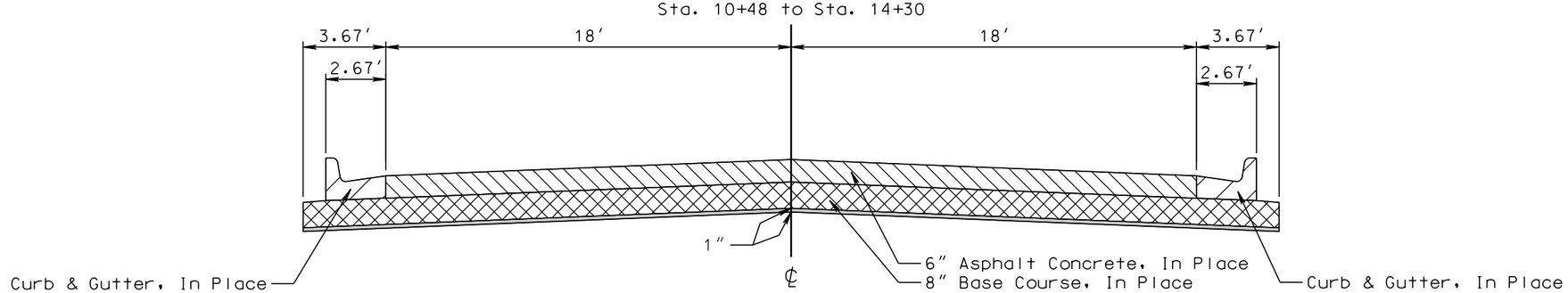

27th Str.
Sta. 15+30 to Sta. 29+20

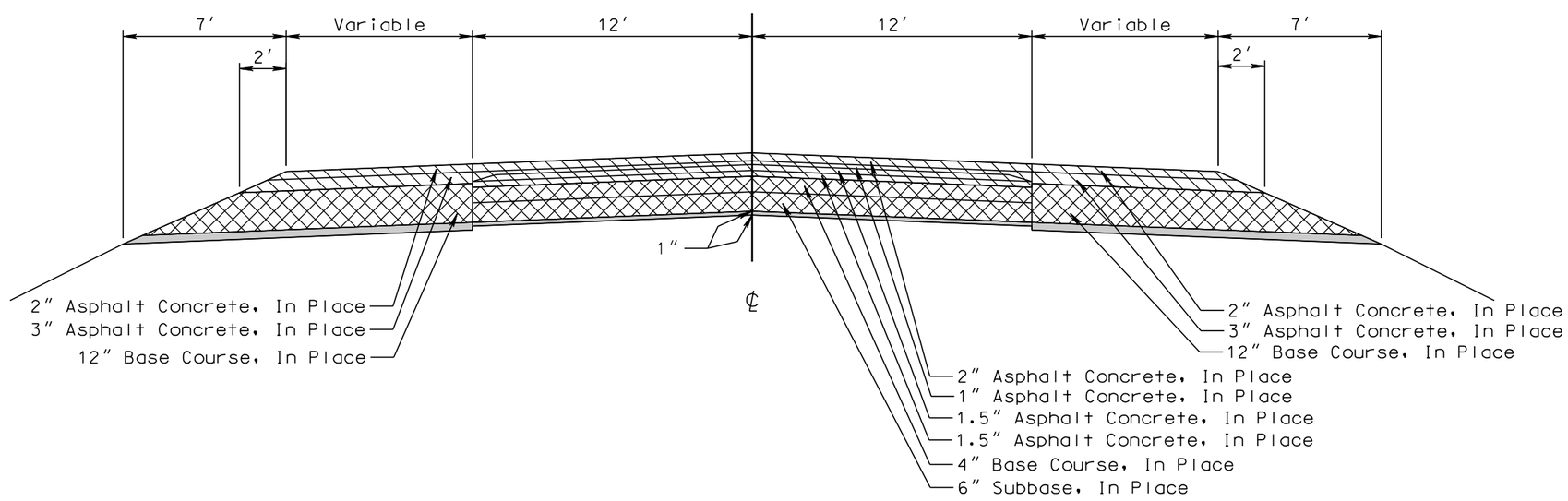

PLOT SCALE - 1:6

PLOT NAME - 4

FILE - ...\PRJ\LAWR020U\TYPICALS 020U.DGN

PLOTTED FROM - TRPR16032

FOR BIDDING PURPOSES ONLY

IN PLACE TYPICAL SECTIONS

Asphalt Concrete Removal or Salvage & Stockpile Asphalt Mix Material

Granular Material Removal

Unclassified Excavation (Waste Material)

Material removed during Traffic Diversion Removal

PCC Pavement Removal

27th Str.
Sta. 29+20 to Sta. 33+20

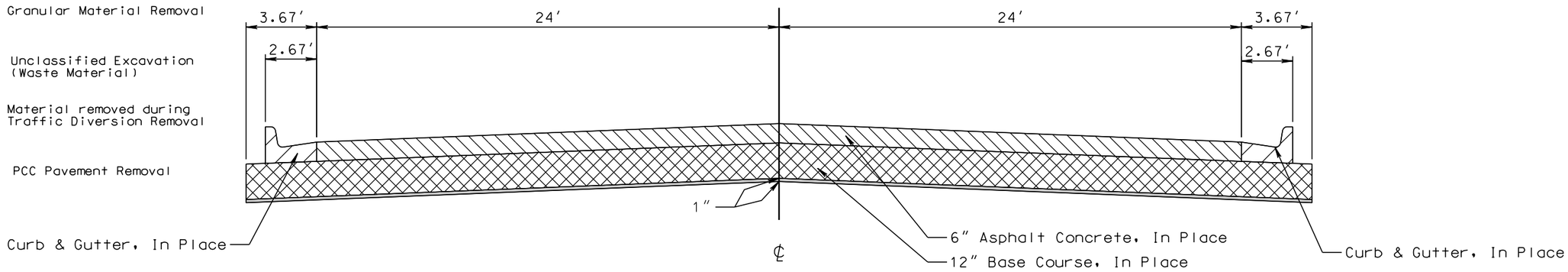

Ramp Detour to Local Street
Sta. 3+05 to Sta. 12+56 Ramp A

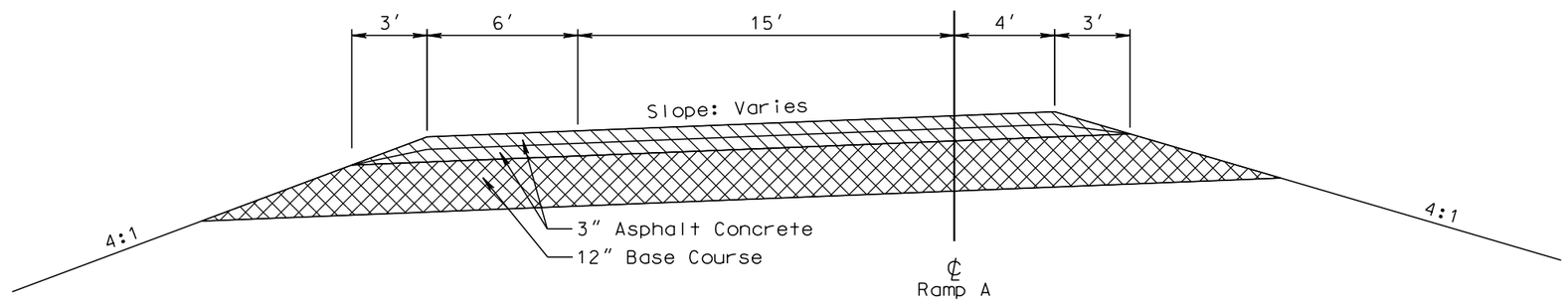

I-90 RAMP DETOURS

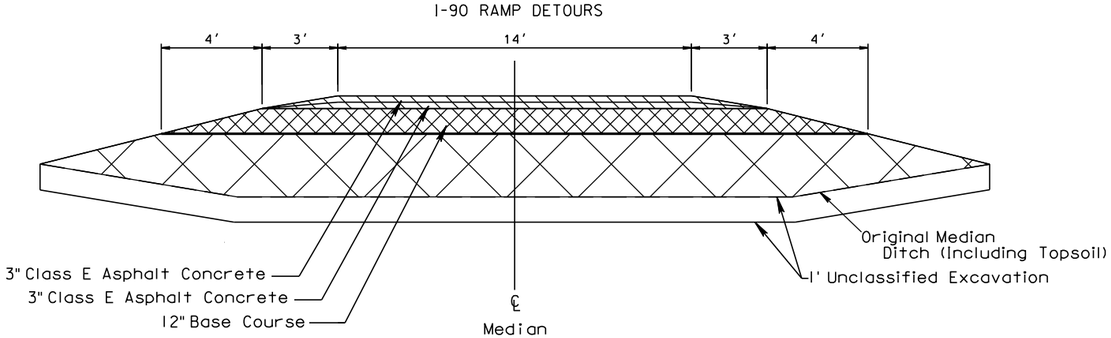

Temporary Traffic Control Surfacing

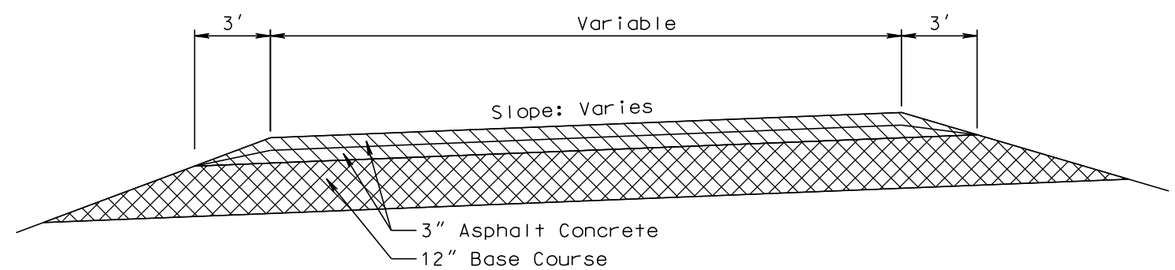

FOR BIDDING PURPOSES ONLY

TYPICAL SURFACING SECTIONS

Sta. 717+60.8 to Sta. 719+18.2 WBL
Sta. 739+88.8 to Sta. 754+56.6 WBL
Sta. 757+45.0 to Sta. 766+26.4 WBL
Sta. 776+17.2 to Sta. 793+00.0 WBL
Sta. 717+60.0 to Sta. 731+49.5 EBL
Sta. 742+44.3 to Sta. 754+56.6 EBL
Sta. 757+45.0 to Sta. 772+52.4 EBL
Sta. 790+62.7 to Sta. 793+00.0 EBL

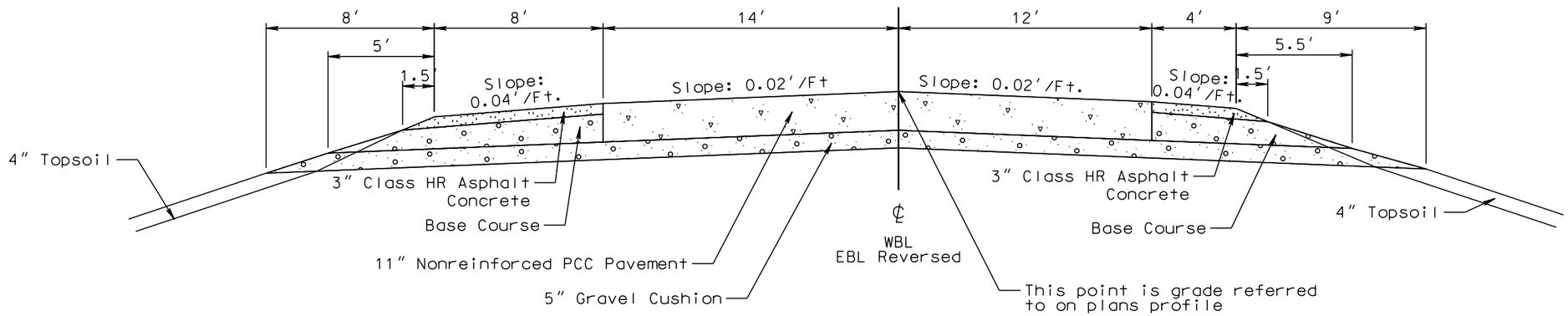

Transitions: Off Ramp

Sta. 773+37.2 to Sta. 775+77.2 WBL
* 12′ to 2′

Sta. 775+77.2 to Sta. 776+17.2 WBL
Sta. 731+49.5 to Sta. 731+89.1 EBL
* 2′

Sta. 731+89.1 to Sta. 733+87.2 EBL
* 2′ to 12′

Sta. 719+18.2 to Sta. 733+19.4 WBL
Sta. 769+47.2 to Sta. 776+17.2 WBL
Sta. 731+49.5 to Sta. 737+87.6 EBL
Sta. 776+82.7 to Sta. 790+62.7 EBL

Transitions: On Ramp

Sta. 719+18.2 to Sta. 720+18.2 WBL
Sta. 789+62.7 to Sta. 790+62.7 EBL
* 2′

Sta. 720+18.2 to Sta. 725+28.2 WBL
* 2′ to 12′

Sta. 784+62.7 to Sta. 789+62.7 EBL
* 12′ to 2′

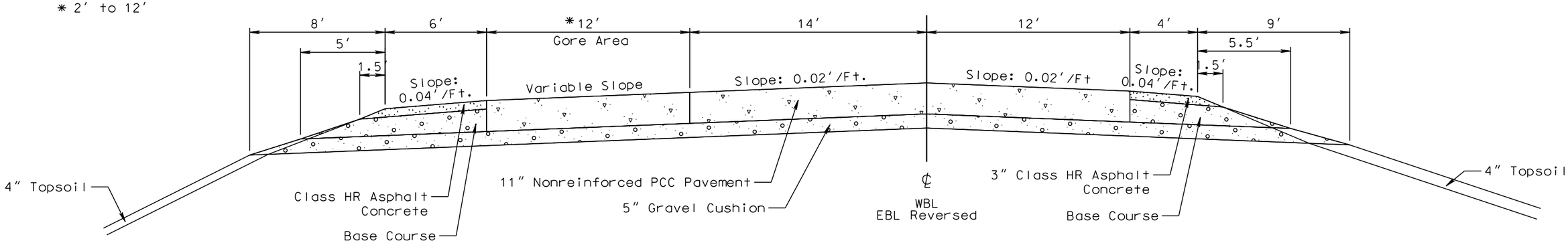

PLOT SCALE - 1:6
PLOTTED FROM - TRPR16032
PLOT NAME - 6
FILE -...\PRJ\LAWR020U\TYPICALS 020U.DGN

FOR BIDDING PURPOSES ONLY

TYPICAL SURFACING SECTIONS

See Curb & Gutter Layout

Transitions: Off Ramp

Sta. 766+26.4 to Sta. 769+47.2 WBL
* 40.9′ to 18′

Sta. 737+87.6 to Sta. 742+44.3 EBL
* 18′ to 40.9′

Sta. 733+19.4 to Sta. 739+88.8 WBL
Sta. 766+26.4 to Sta. 769+47.2 WBL
Sta. 737+87.6 to Sta. 742+44.3 EBL
Sta. 772+52.4 to Sta. 776+82.7 EBL

Transitions: On Ramp

Sta. 733+19.4 to Sta. 739+88.8 WBL
* 18′ to 36.6′

Sta. 772+52.4 to Sta. 776+82.7 EBL
* 36.9′ to 18′

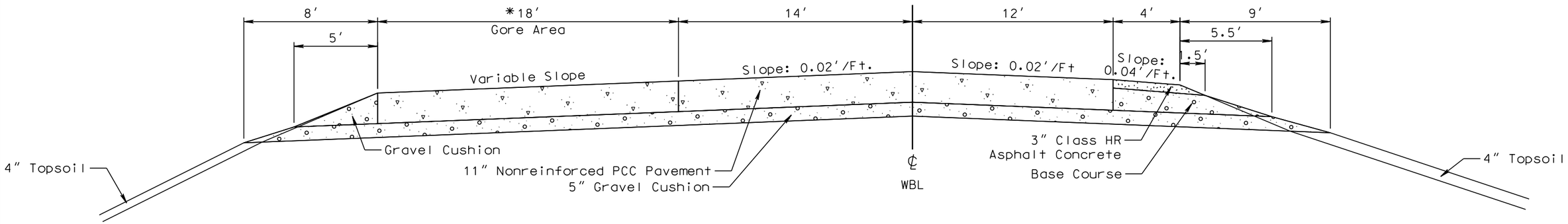

Sta. 754+56.6 to Sta. 757+45.0 WBL & EBL

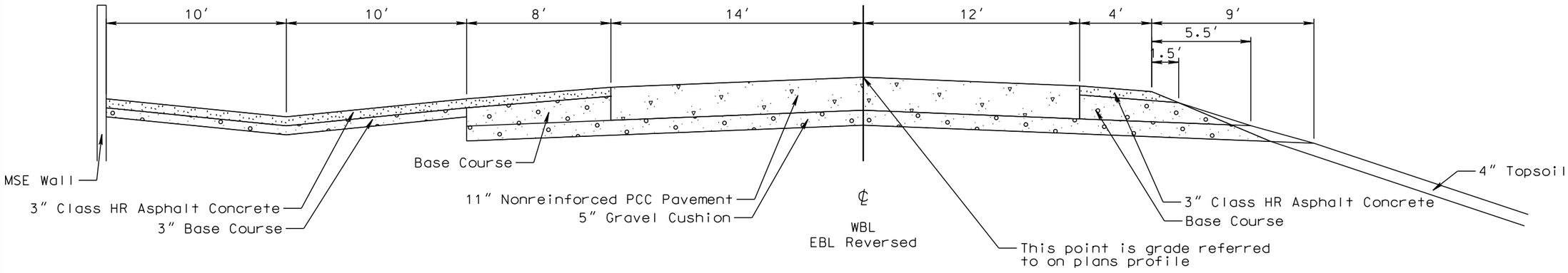

Ramps A and D
Sta. 13+03.2 to Sta. 14+04.0 Ramp A
Sta. 44+36.4 to Sta. 45+18.1 Ramp D

See Curb and Gutter Layout

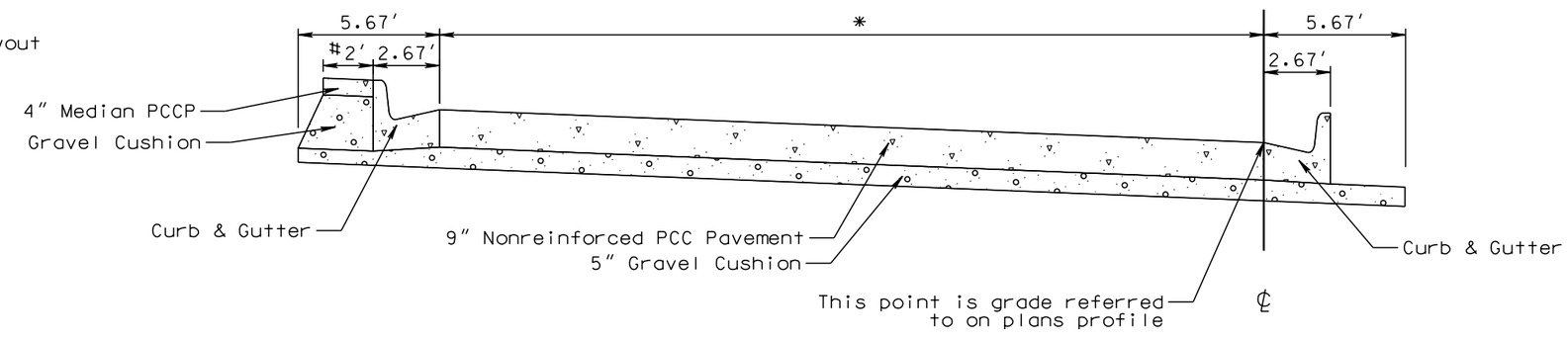

Transitions:

Sta. 13+03.2 to Sta. 14+04.0 Ramp A
* 33.8′ to 34′

Sta. 44+36.4 to Sta. 45+18.1 Ramp D
* 32′ to 33.1′

PLOT SCALE - 1:6
PLOT NAME - 7
FILE - ...\PRJ\LAWR020U\TYPICALS 020U.DGN
PLOTTED FROM - TRPR16032

FOR BIDDING PURPOSES ONLY

TYPICAL SURFACING SECTIONS

Transitions:

Sta. 14+04.0 to Sta. 14+98.5 Ramp A
* 69.4′ to 53′

Sta. 43+49.6 to Sta. 44+36.4 Ramp D
* 53′ to 65.4′

Ramps A and D
Sta. 14+04.0 to Sta. 14+98.5 Ramp A
Sta. 43+49.6 to Sta. 44+36.4 Ramp D

See Curb & Gutter Layout

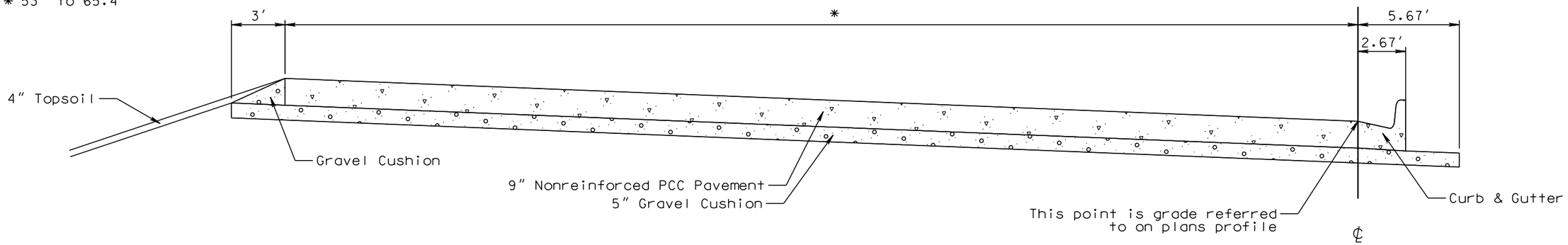

Transitions:

Sta. 14+98.5 to Sta. 22+17.4 Ramp A
* 53′ to 23′

Sta. 30+47.4 to Sta. 43+49.6 Ramp D
* 23′ to 53′

Ramps A and D

Sta. 14+98.5 to Sta. 22+17.4 Ramp A
Sta. 30+47.4 to Sta. 43+49.6 Ramp D

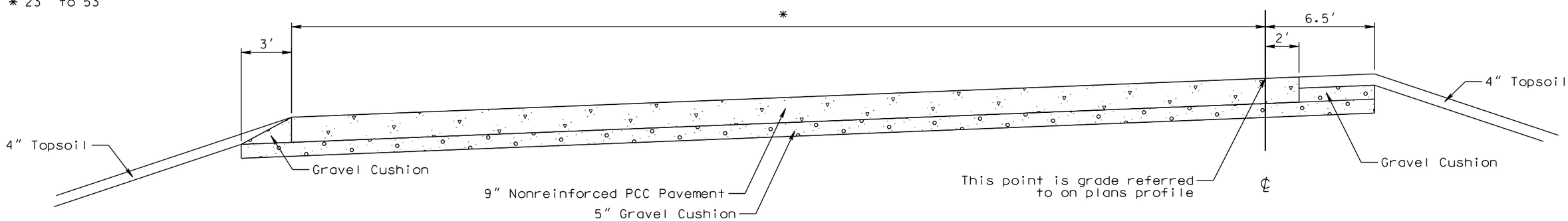

Ramps B and C

Sta. 12+82.1 to Sta. 13+69.3 Ramp B
Sta. 32+54.4 to Sta. 33+48.4 Ramp C

Transitions:

Sta. 12+82.1 to Sta. 13+69.3 Ramp B
* 34.9′ to 32′

Sta. 32+54.4 to Sta. 33+48.4 Ramp C
* 34′ to 33.8′

See Curb and Gutter Layout

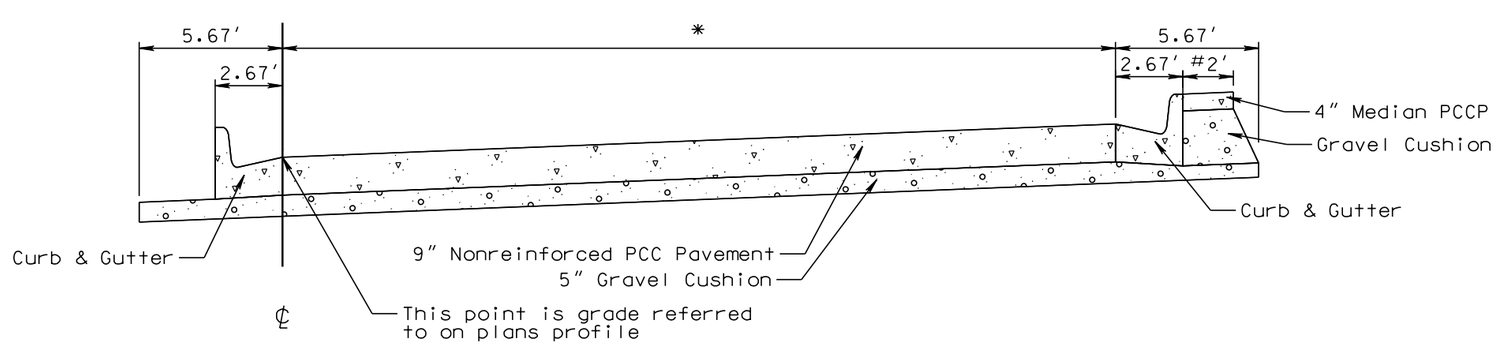

PLOT SCALE - 1:6
PLOTTED FROM - TRPR16032
PLOT NAME - 8
FILE - ...\PRJ\LAWR020U\TYPICALS 020U.DGN

FOR BIDDING PURPOSES ONLY

TYPICAL SURFACING SECTIONS

Transitions:

Sta. 13+69.3 to Sta. 14+56.3 Ramp B
* 65.9′ to 53′

Sta. 31+59.9 to Sta. 32+54.4 Ramp C
* 53′ to 69.4′

Ramps B and C

Sta. 13+69.3 to Sta. 14+56.3 Ramp B
Sta. 31+59.9 to Sta. 32+54.4 Ramp C

See Curb & Gutter Layout

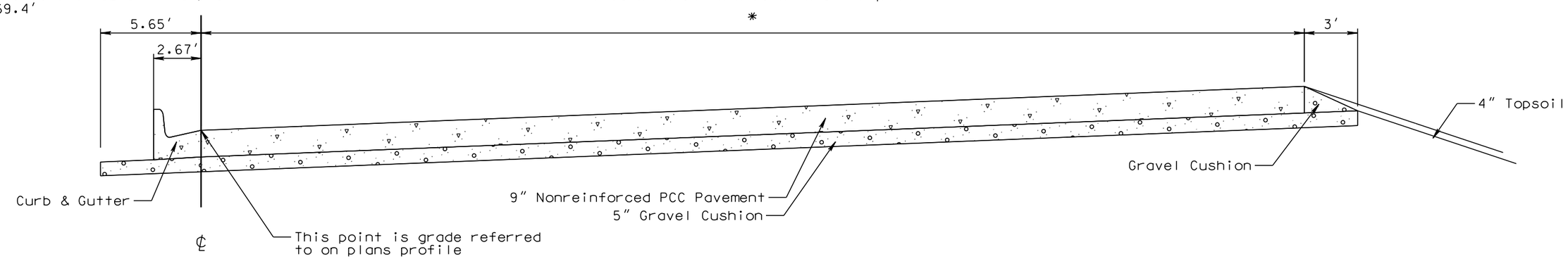

Transitions:

Sta. 14+56.3 to Sta. 27+98.0 Ramp B
* 53′ to 23′

Sta. 21+07.3 to Sta. 31+59.9 Ramp C
* 23′ to 53′

Ramps B and C

Sta. 14+56.3 to Sta. 27+98.0 Ramp B
Sta. 21+07.3 to Sta. 31+59.9 Ramp C

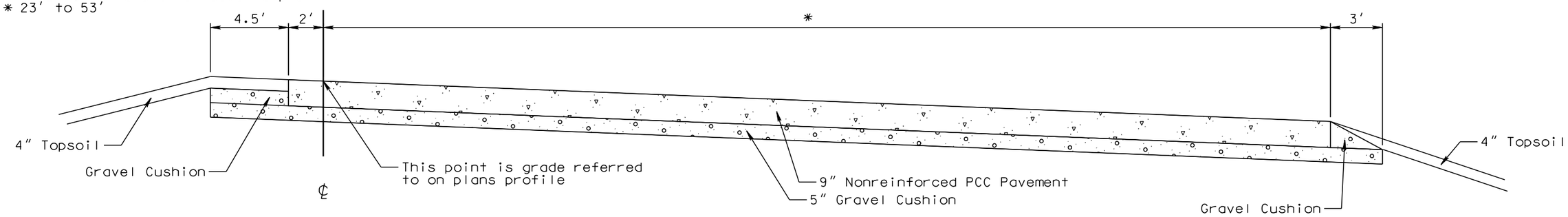

Ramps E and H

Sta. 10+97.2 to Sta. 12+01.5 Ramp E
Sta. 11+97.7 to Sta. 13+67.6 Ramp H

Transitions:

Sta. 10+97.2 to Sta. 12+01.5 Ramp E
* 2.1′ to 4.0′

Sta. 11+97.7 to Sta. 13+67.6 Ramp H
* 2.0′ to 4.0′

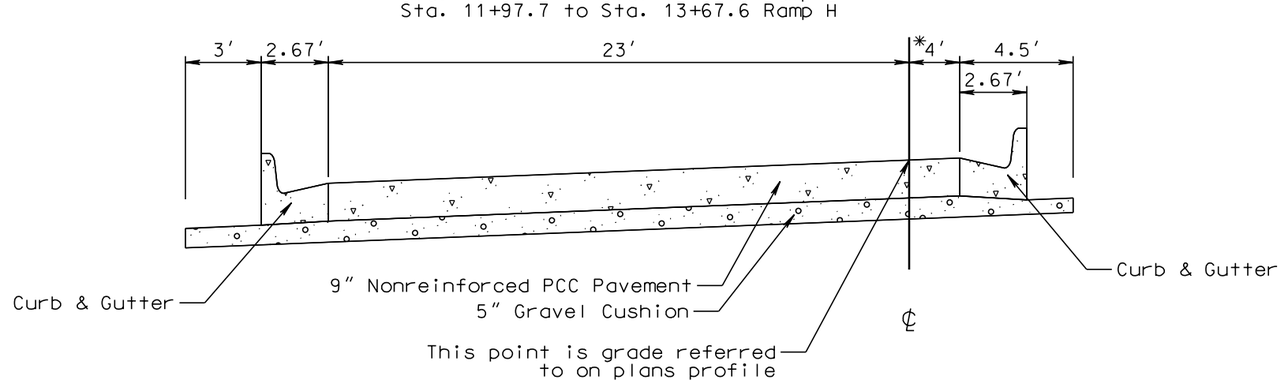

PLOT SCALE - 1:6
PLOTTED FROM - TRPRIG032
PLOT NAME - 9
FILE - ...\PRJ\LAWR020U\TYPICALS 020U.DGN

FOR BIDDING PURPOSES ONLY

TYPICAL SURFACING SECTIONS

See Curb & Gutter Layout

Ramps E

Sta. 12+01.5 to Sta. 12+90.4 Ramp E

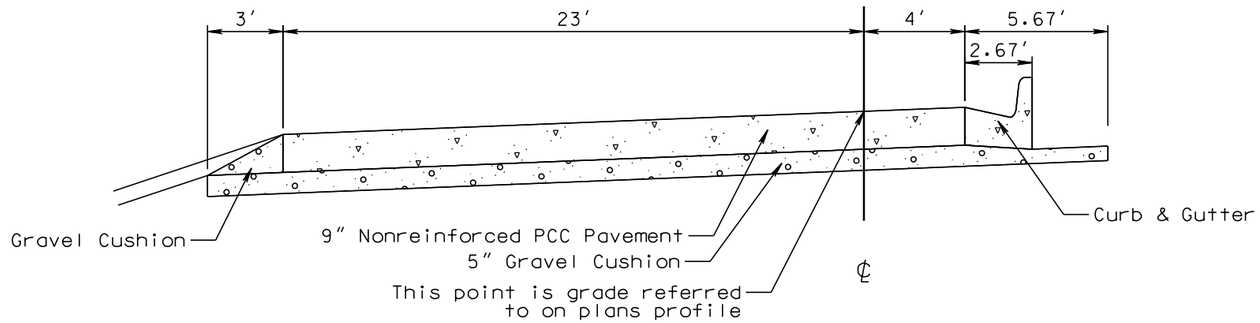

Transitions:

Sta. 10+92.8 to Sta. 12+36.0 Ramp F
* 3.8′ to 2′

Sta. 12+81.2 to Sta. 13+95.8 Ramp G
* 4′ to 2.3′

Ramps F and G

Sta. 10+92.8 to Sta. 12+36.0 Ramp F
Sta. 12+81.2 to Sta. 13+95.8 Ramp G

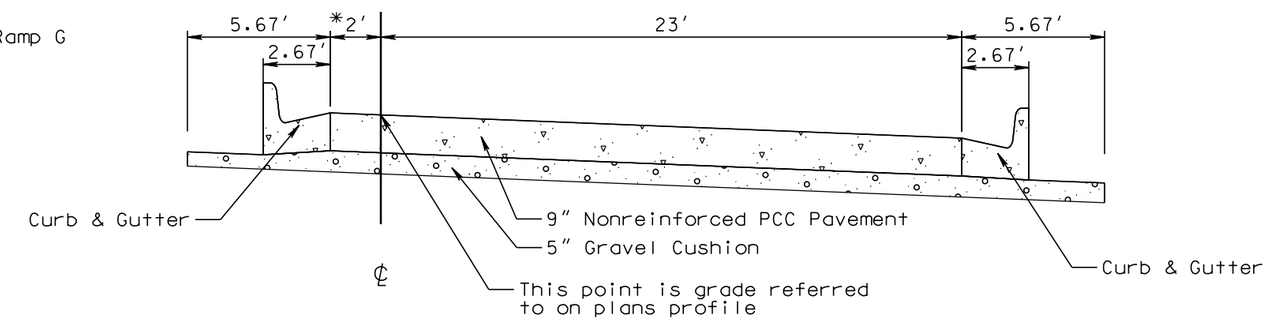

Transition:

Sta. 12+05.6 to Sta. 12+81.2 Ramp G
* 4′

Ramps F and G

Sta. 12+36.0 to Sta. 12+53.6 Ramp F
Sta. 12+05.6 to Sta. 12+81.2 Ramp G

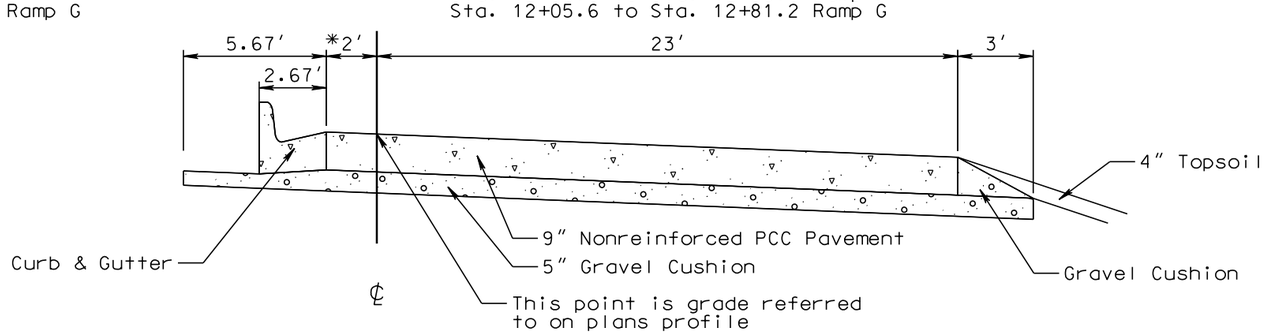

PLOT SCALE - 1:6
PLOT NAME - 10
FILE - ...\PRJNLAWR020U\TYPICALS 020U.DGN
PLOTTED FROM - TRPR16032

FOR BIDDING PURPOSES ONLY

TYPICAL SURFACING SECTIONS

See Curb & Gutter Layout

Revised: 4 Jan 16, RML

27th Street

Sta. 10+48.2 to Sta. 12+65.0

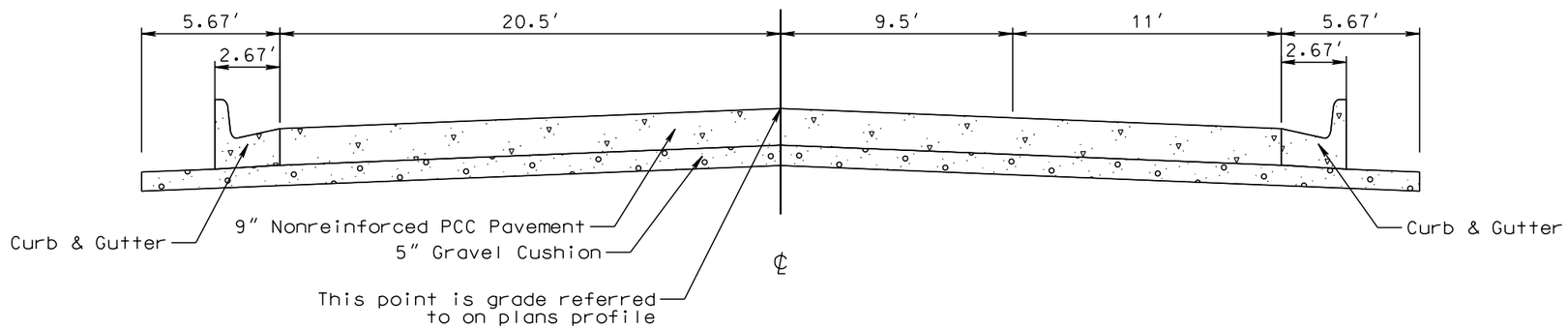

27th Street

Sta. 12+65.0 to Sta. 13+89.3

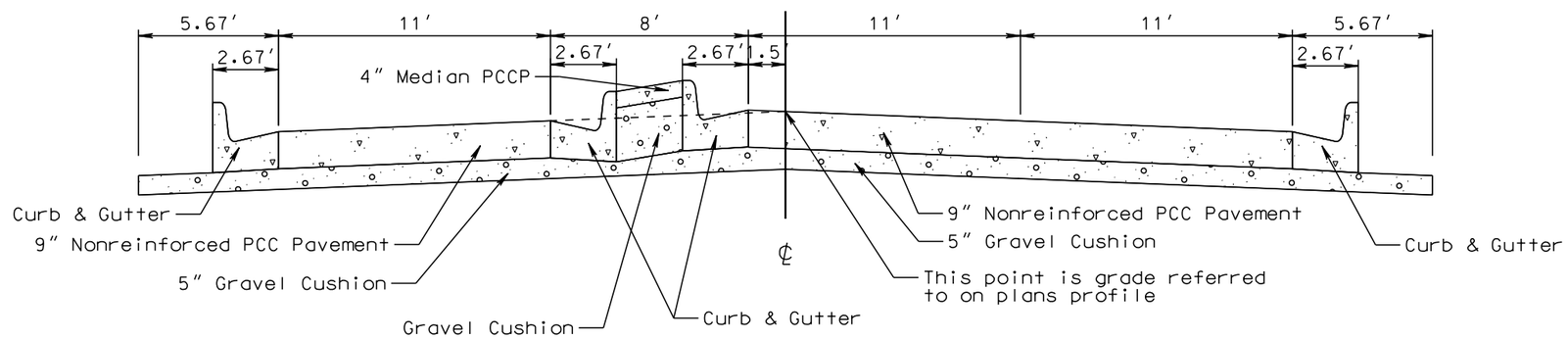

Intersection:
27th Street & Colorado Blvd
Sta.13+89.3 to Sta. 15+68.9

27th Street

Sta. 15+68.9 to Sta. 17+58.6

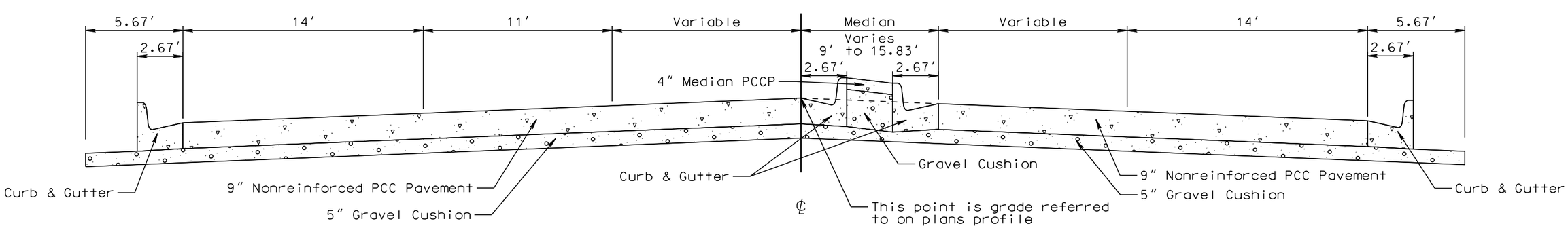

PLOT SCALE - 1:6
PLOTTED FROM - TRPR16032
PLOT NAME - 11
FILE -...\PRJ\LAWR020U\TYPICALS 020U.DGN

TYPICAL SURFACING SECTIONS

FOR BIDDING PURPOSES ONLY

STATE OF SOUTH DAKOTA	PROJECT	SHEET	TOTAL SHEETS
	IM 0901(162)14 & P 014A(11)8	F24	F69

Plotting Date: 01/14/2016

See Curb & Gutter Layout

Bridge & Approach Slab
Sta. 19+80.4

27th Street

Sta. 17+58.60 to Sta. 19+80.4

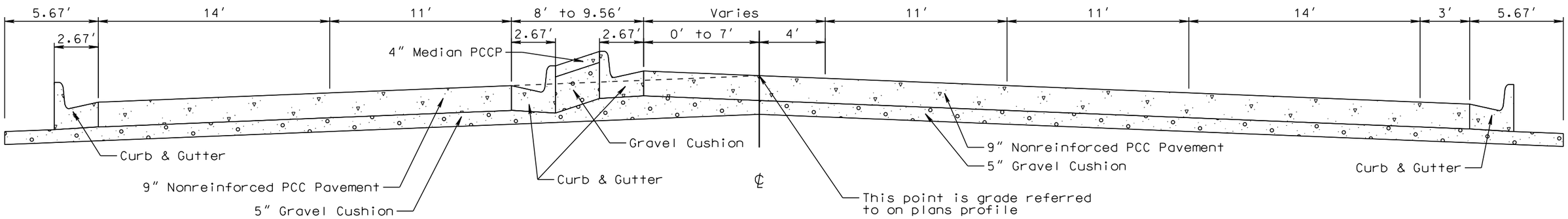

Bridge & Approach Slab
Sta. 22+13.1

27th Street

Sta. 22+13.1 to Sta. 26+72.2

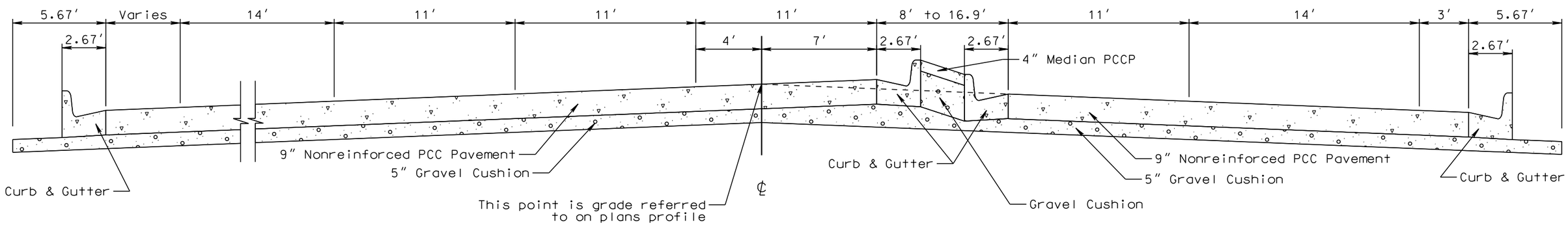

27th Street

Sta. 26+72.2 to Sta. 29+27.5

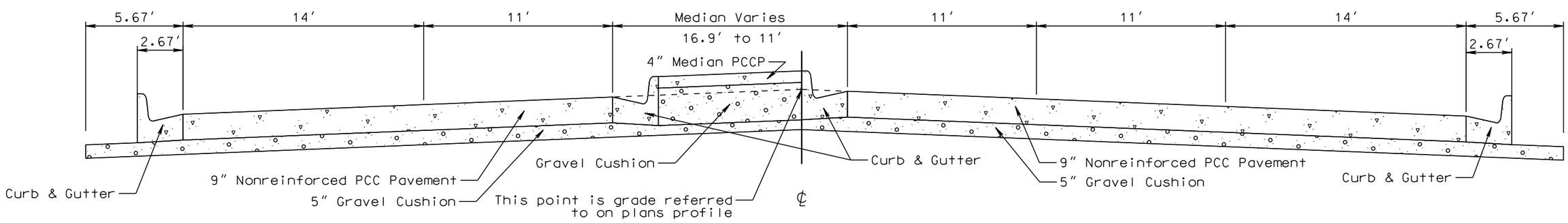

PLOT SCALE - 1:6

PLOT NAME - 12

FILE - ...\PRJ\LAWR020U\TYPICALS 020U.DGN

PLOTTED FROM - TRPR16032

FOR BIDDING PURPOSES ONLY

TYPICAL SURFACING SECTIONS

See Curb & Gutter Layout

27th Street

Sta. 29+27.5 to Sta. 33+20.0

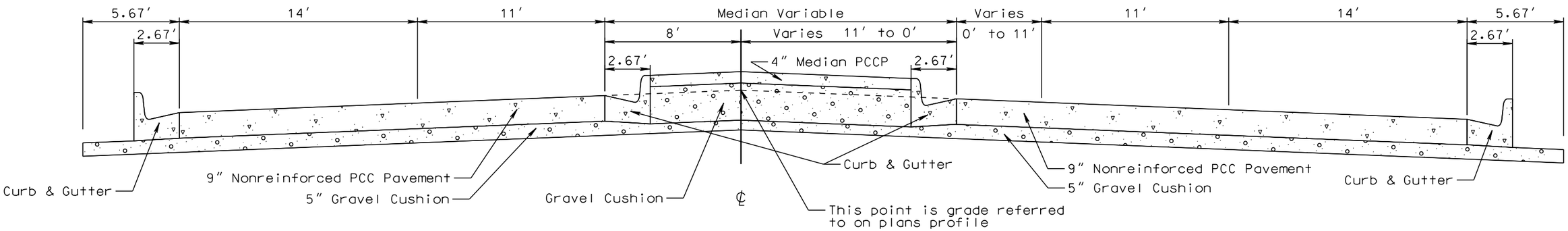

Colorado Blvd

Sta. 81+08 to Sta. 82+40.3

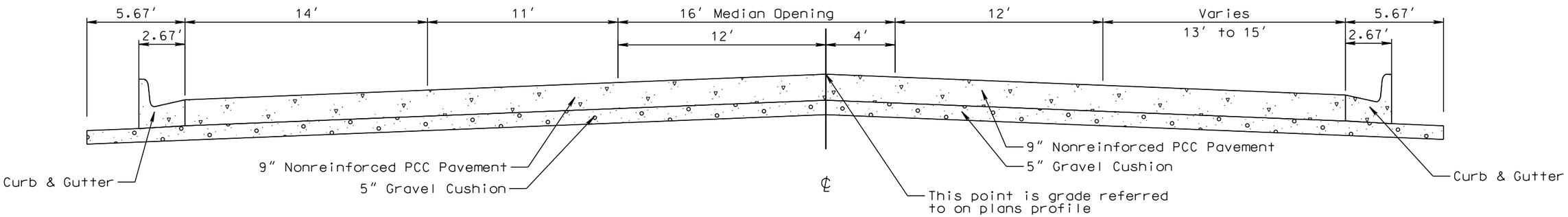

** Sta.83+16.19 Begin Right Turn Lane
Sta. 85+84.42 End Right Turn Lane

Colorado Blvd

Sta. 82+40.3 to Sta. 88+19.9

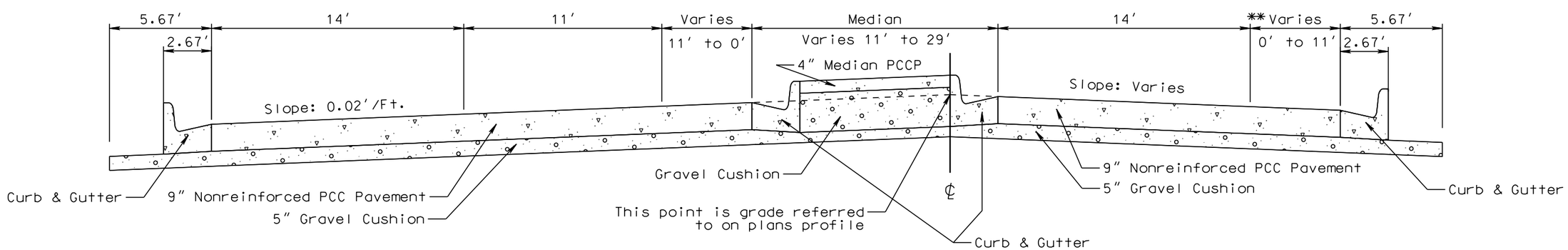

PLOT SCALE - 1:6
PLOT NAME - 13
FILE - ...\PRJ\LAWR020U\TYPICALS 020U.DGN
PLOTTED FROM - TRPR16032

STATE OF SOUTH DAKOTA	PROJECT	SHEET	TOTAL SHEETS
	IM 0901(162)14 & P 014A(11)8	F26	F69

Plotting Date: 01/14/2016

See Curb & Gutter Layout

TYPICAL SURFACING SECTIONS

FOR BIDDING PURPOSES ONLY

Revised: 14 Jan 16, RML

Colorado Blvd
Sta. 88+19.9 to Sta. 91+78.6

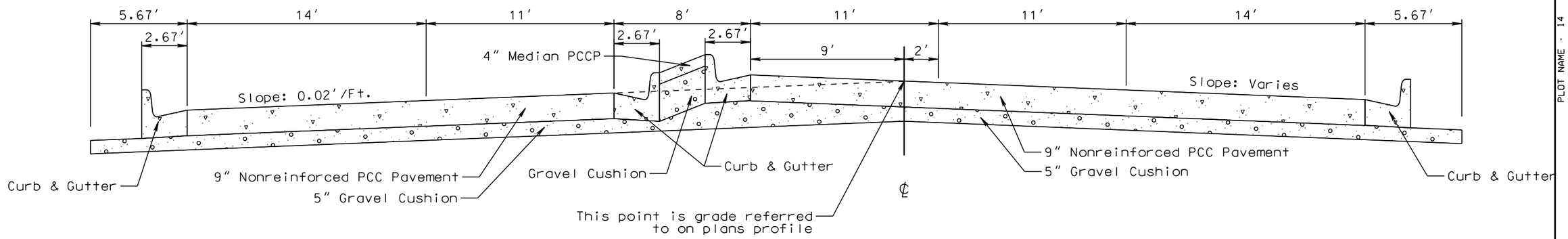

Colorado Blvd
Sta. 93+51.5 to Sta. 95+88.1

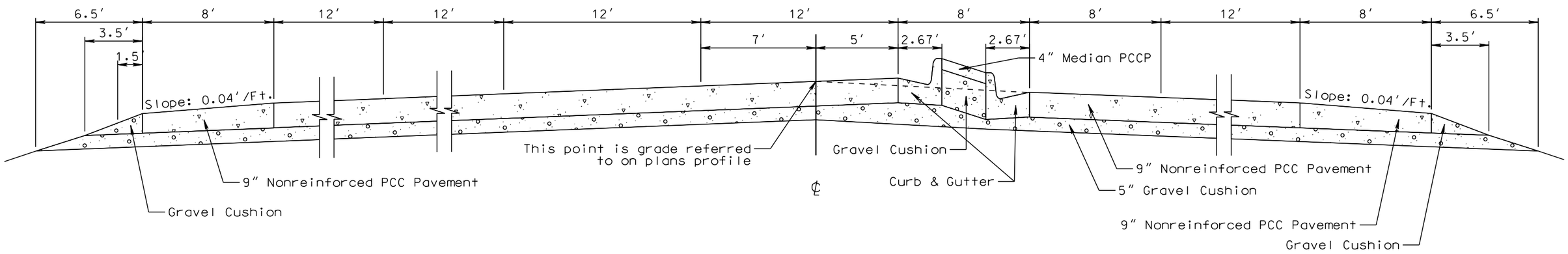

Colorado Blvd
Sta. 95+88.1 to Sta. 99+63.0

* Transition to Match Existing Cross Slope at Sta. 99+25

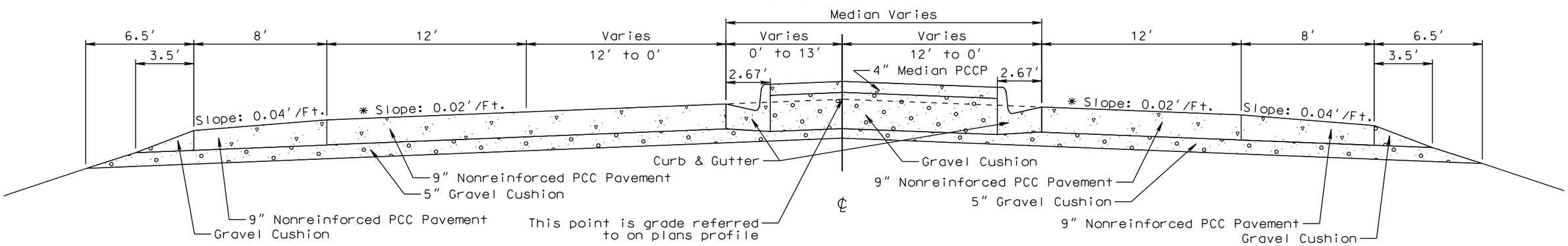

PLOT SCALE - 1:6

PLOT NAME - 14

FILE -...\PRJ\LAWR020UTYPICALS 020U.DGN

PLOTTED FROM - TRPR16032

FOR BIDDING PURPOSES ONLY

TYPICAL SURFACING SECTIONS

Ramp Detour to Local Street
Sta. 3+05 to Sta. 12+56 Ramp A

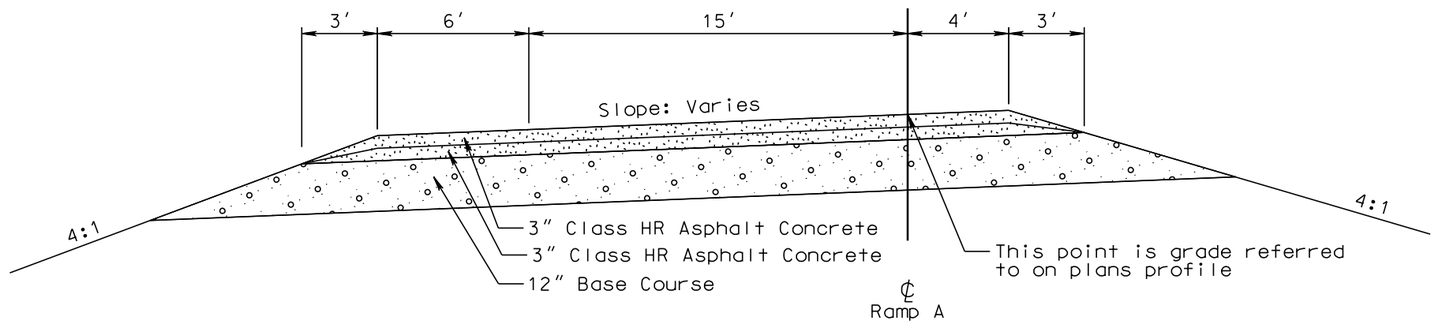

I-90 RAMP DETOURS

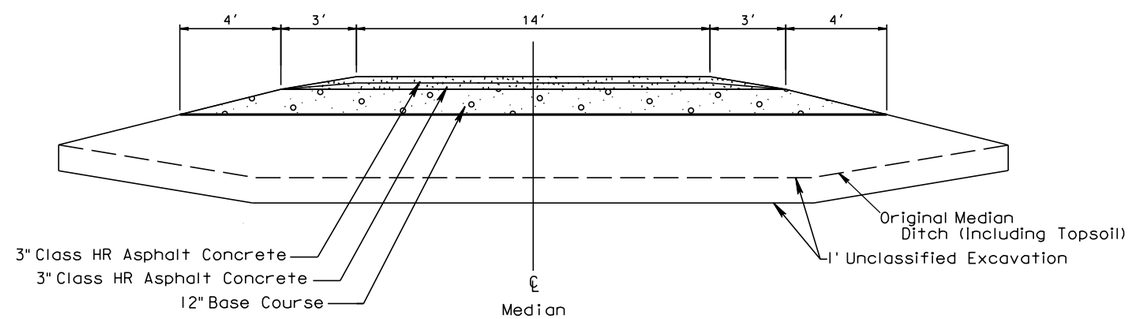

Temporary Traffic Control Surfacing

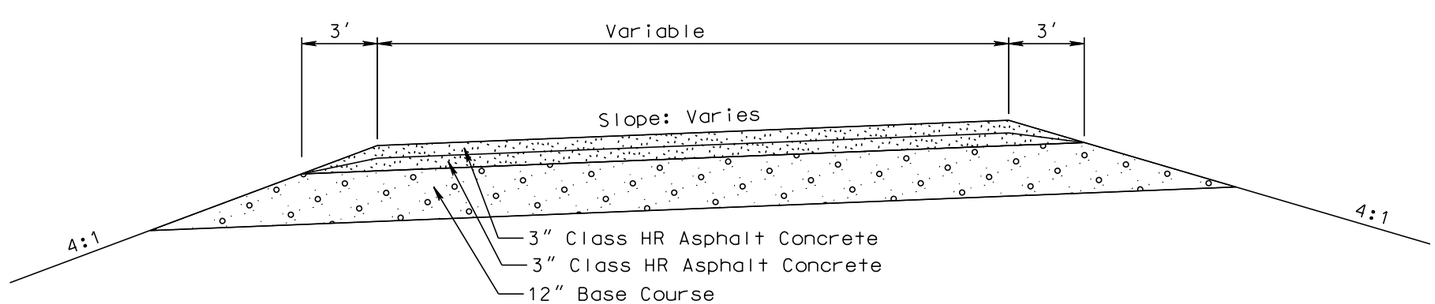

PLOT SCALE - 1:6
PLOTTED FROM - TRPR16032
PLOT NAME - 15
FILE - ...\PRJ\LAWR020U\TYPICALS 020U.DGN

PCC PAVEMENT JOINT LAYOUT

FOR BIDDING PURPOSES ONLY

STATE OF SOUTH DAKOTA	PROJECT	SHEET	TOTAL SHEETS
	IM 0901(162)14 & P 014A(11)8	F28	F69

Plotting Date: 01/14/2016

Scale 1 Inch = 40 Feet
Sheet 1 of 28 Sheets

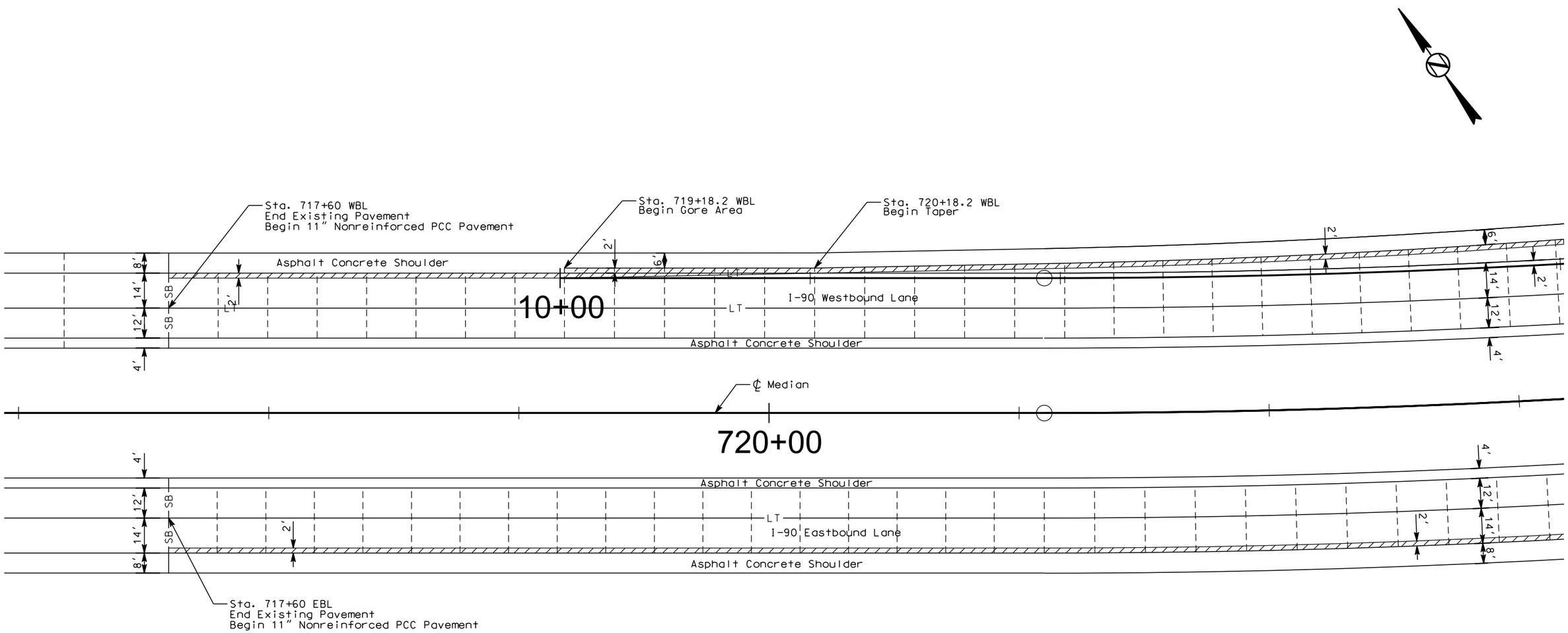

LEGEND:

Longitudinal Joint Without Tie Bars (Construction or Sawed) ——L——L——
Longitudinal Joint With Tie Bars (Construction or Sawed) ——LT——LT——
Transverse Contraction Joint — — — — — — — — — — — — — — — — — —
Steel Bar Installation in Longitudinal or Transverse Joint ——SB——SB——
Areas to be poured monolithically with adjacent slab (See Detail A)
Areas to be poured monolithically with adjacent curb and gutter (See Detail B)

Transverse contraction joints within these areas shall not have dowel bar assemblies. All other transverse contraction joints shall have dowel bar assemblies.

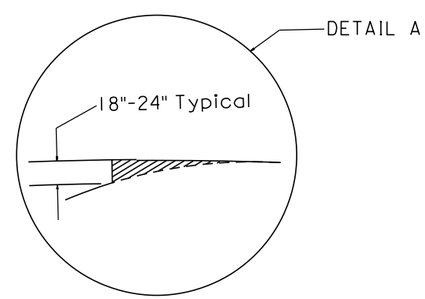

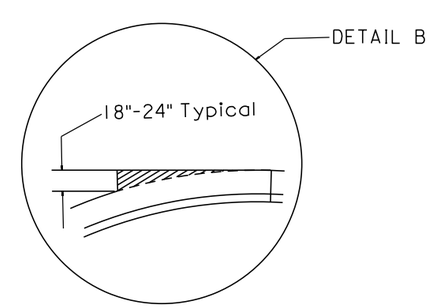

PLOT SCALE - 1:40.0001
PLOTTED FROM - TRPR16032
PLOT NAME - 16
FILE - ...\020U PCC PAVEMENT LAYOUT WORKS.DGN

PCC PAVEMENT JOINT LAYOUT

FOR BIDDING PURPOSES ONLY

STATE OF SOUTH DAKOTA	PROJECT	SHEET	TOTAL SHEETS
	IM 0901(162)14 & P 014A(11)8	F29	F69

Plotting Date: 01/14/2016

Scale 1 Inch = 40 Feet
Sheet 2 of 28 Sheets

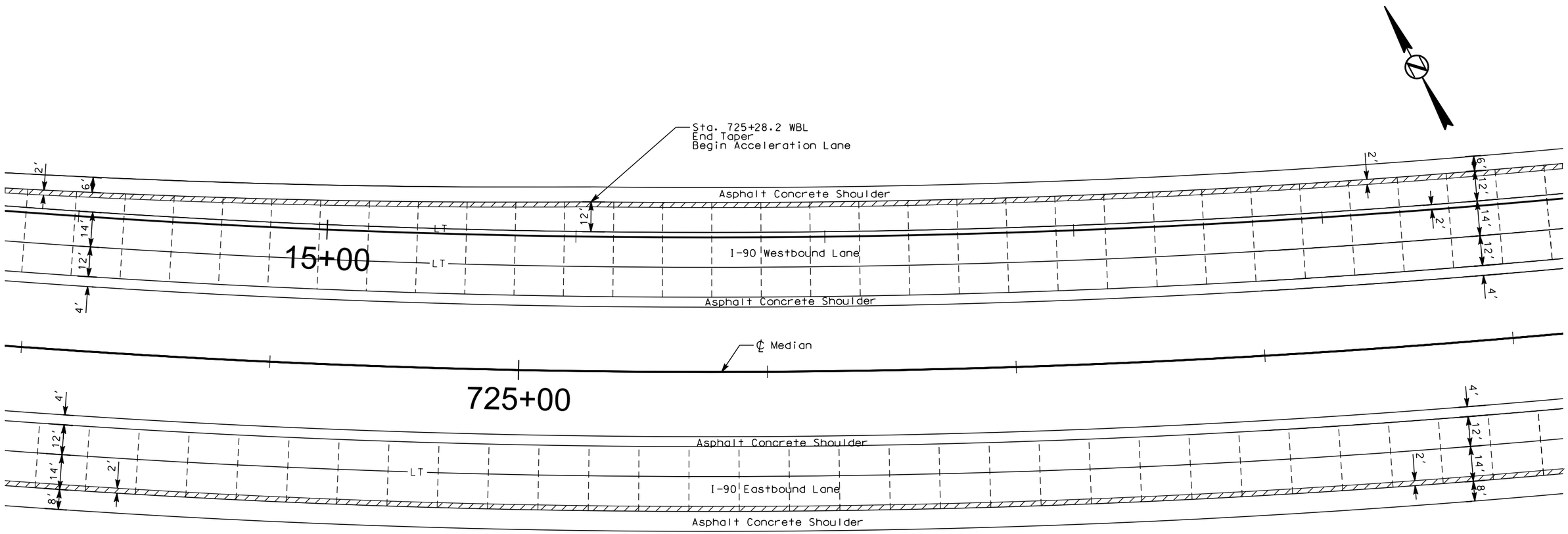

PLOT SCALE - 1:40.0001

PLOTTED FROM - TRPR16032

PLOT NAME - 17

FILE - ...\020U PCC PAVEMENT LAYOUT WORKS.DGN

PCC PAVEMENT JOINT LAYOUT

FOR BIDDING PURPOSES ONLY

STATE OF SOUTH DAKOTA	PROJECT	SHEET	TOTAL SHEETS
	IM 0901(162)14 & P 014A(11)8	F30	F69

Plotting Date: 01/14/2016

Scale 1 Inch = 40 Feet
Sheet 3 of 28 Sheets

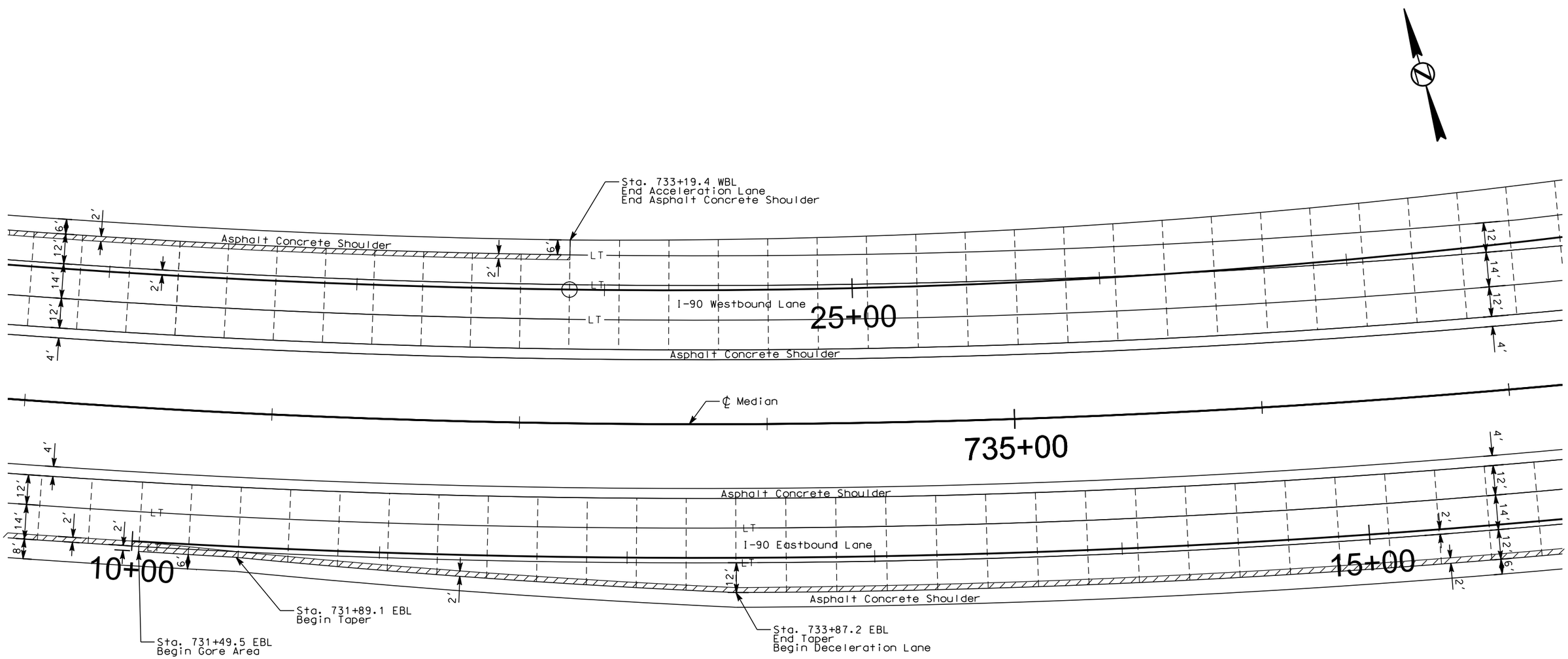

PLOT SCALE - 1:40.0001

PLOTTED FROM - TRPR16032

PLOT NAME - 18

FILE - ...\020U PCC PAVEMENT LAYOUT WORKS.DGN

PCC PAVEMENT JOINT LAYOUT

FOR BIDDING PURPOSES ONLY

STATE OF SOUTH DAKOTA	PROJECT	SHEET	TOTAL SHEETS
	IM 0901(162)14 & P 014A(11)8	F31	F69

Plotting Date: 01/14/2016

Scale 1 Inch = 40 Feet
Sheet 4 of 28 Sheets

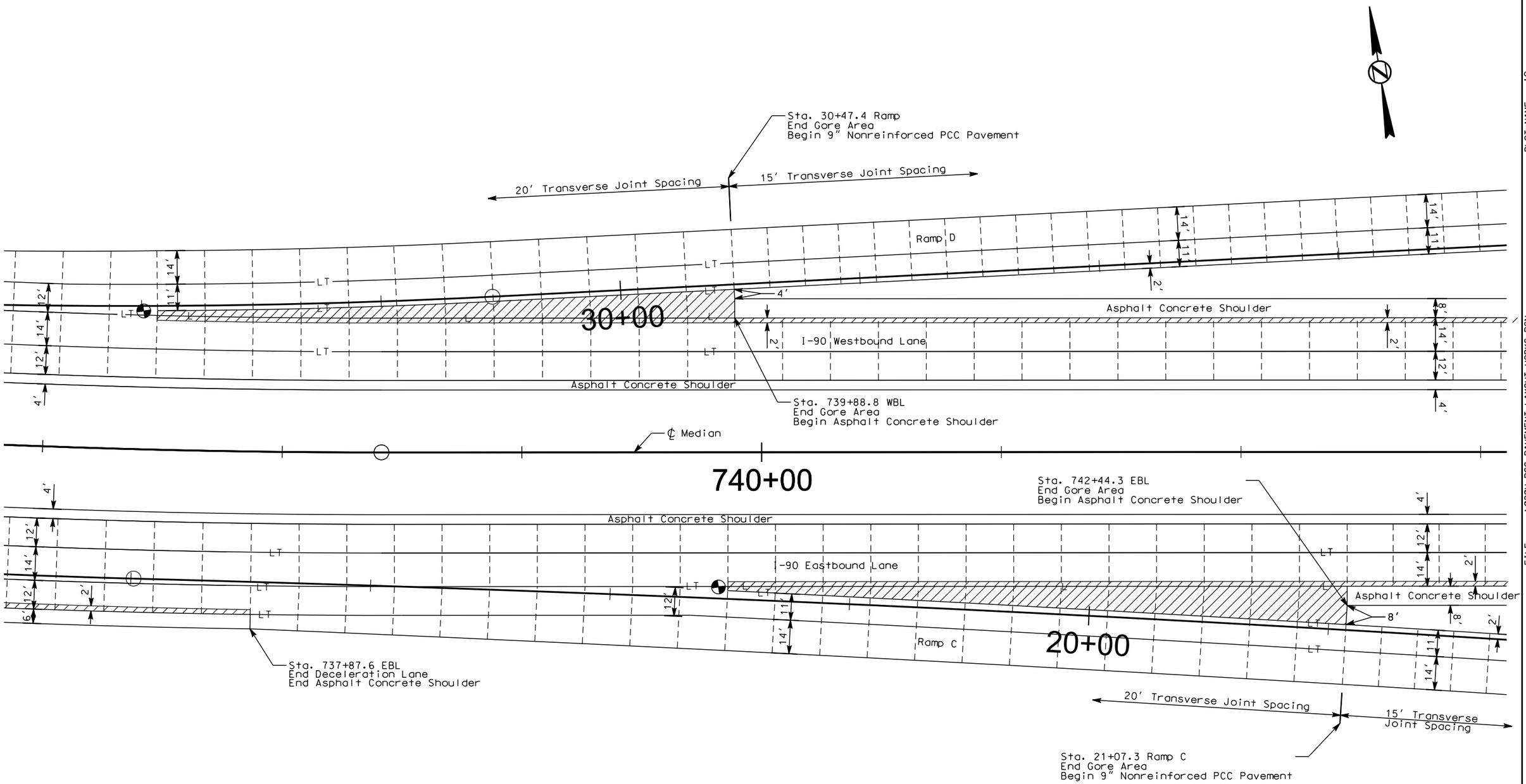

PLOT SCALE - 1:40.0001

PLOT NAME - 19

FILE - ...\020U PCC PAVEMENT LAYOUT WORKS.DGN

PLOTTED FROM - TRPR16032

PCC PAVEMENT JOINT LAYOUT

FOR BIDDING PURPOSES ONLY

STATE OF SOUTH DAKOTA	PROJECT	SHEET	TOTAL SHEETS
	IM 0901(162)14 & P 014A(11)8	F32	F69

Plotting Date: 01/14/2016

Scale 1 Inch = 40 Feet
Sheet 5 of 28 Sheets

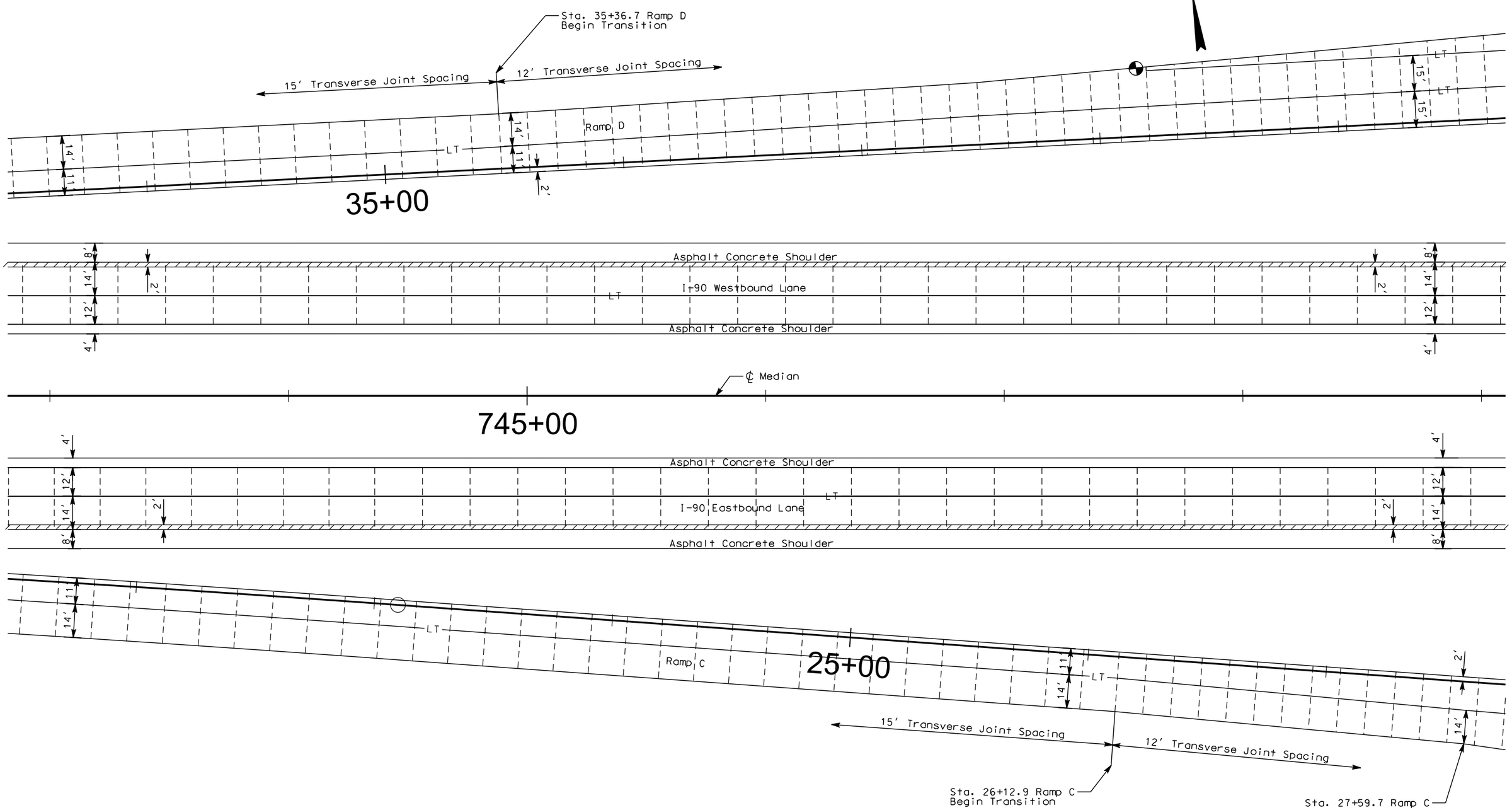

PLOT SCALE - 1:40.0001

PLOT NAME - 20

FILE - ...\020U PCC PAVEMENT LAYOUT WORKS.DGN

PLOTTED FROM - TRPR16032

PCC PAVEMENT JOINT LAYOUT

FOR BIDDING PURPOSES ONLY

STATE OF SOUTH DAKOTA	PROJECT	SHEET	TOTAL SHEETS
	IM 0901(162)14 & P 014A(11)8	F33	F69

Plotting Date: 01/14/2016

Scale 1 Inch = 40 Feet
Sheet 6 of 28 Sheets

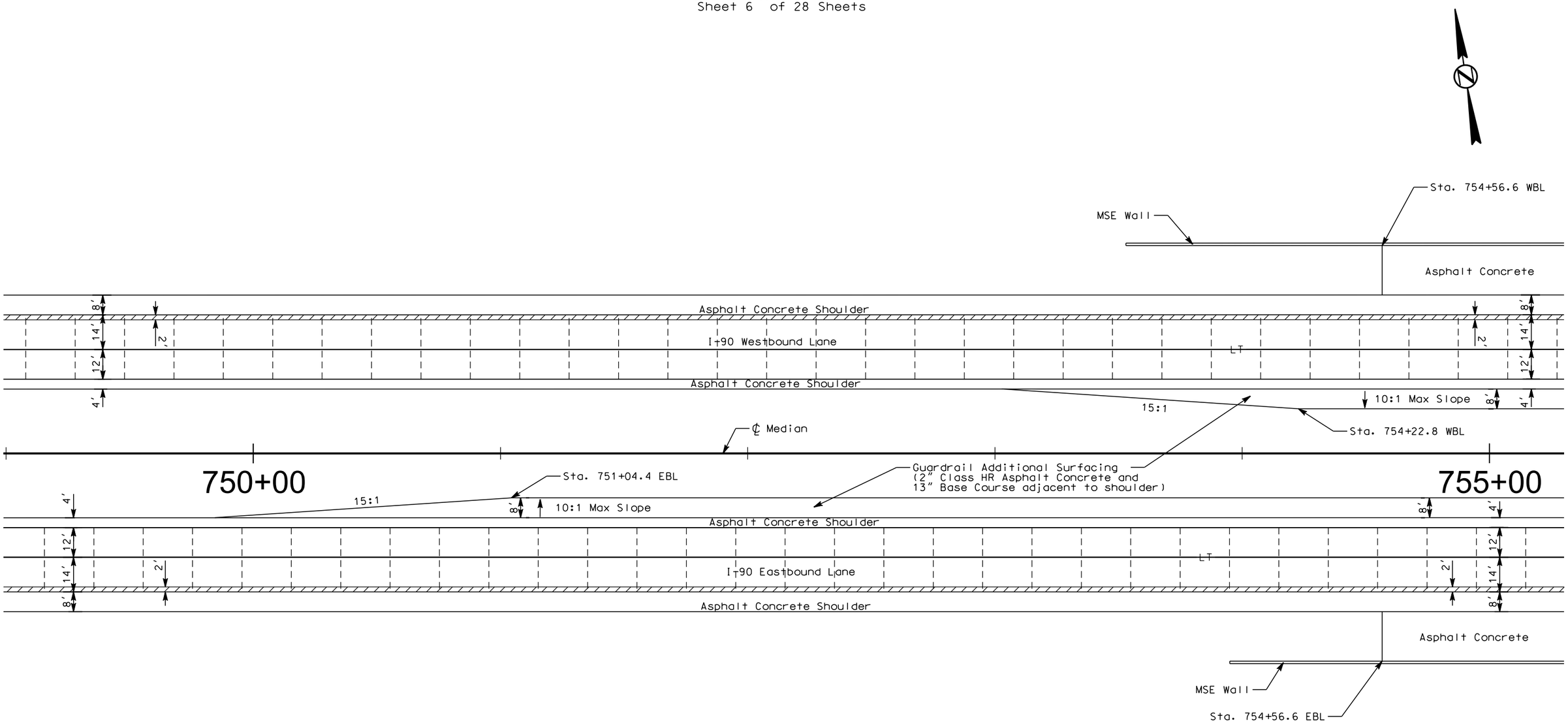

PLOT SCALE - 1:40.0001

PLOTTED FROM - TRPR16032

PLOT NAME - 21

FILE -...\020U PCC PAVEMENT LAYOUT WORKS.DGN

PCC PAVEMENT JOINT LAYOUT

FOR BIDDING PURPOSES ONLY

STATE OF SOUTH DAKOTA	PROJECT	SHEET	TOTAL SHEETS
	IM 0901(162)14 & P 014A(11)8	F34	F69

Plotting Date: 01/14/2016

Scale 1 Inch = 40 Feet
Sheet 7 of 28 Sheets

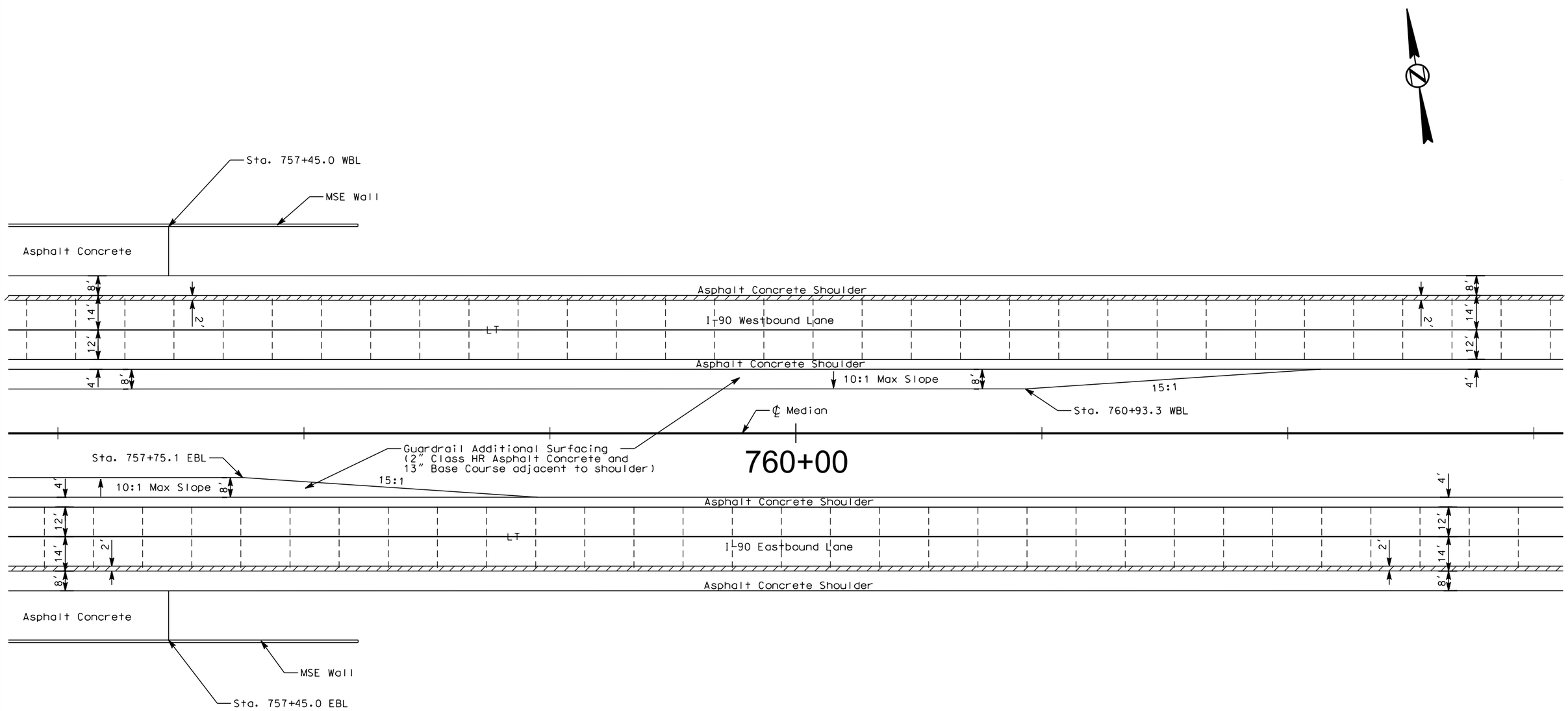

PLOT SCALE - 1:40.0001

PLOTTED FROM - TRPR16032

PLOT NAME - 22

FILE - ...\020U PCC PAVEMENT LAYOUT WORKS.DGN

PCC PAVEMENT JOINT LAYOUT

FOR BIDDING PURPOSES ONLY

STATE OF SOUTH DAKOTA	PROJECT	SHEET	TOTAL SHEETS
	IM 0901(162)14 & P 014A(11)8	F35	F69

Plotting Date: 01/14/2016

Scale 1 Inch = 40 Feet
Sheet 8 of 28 Sheets

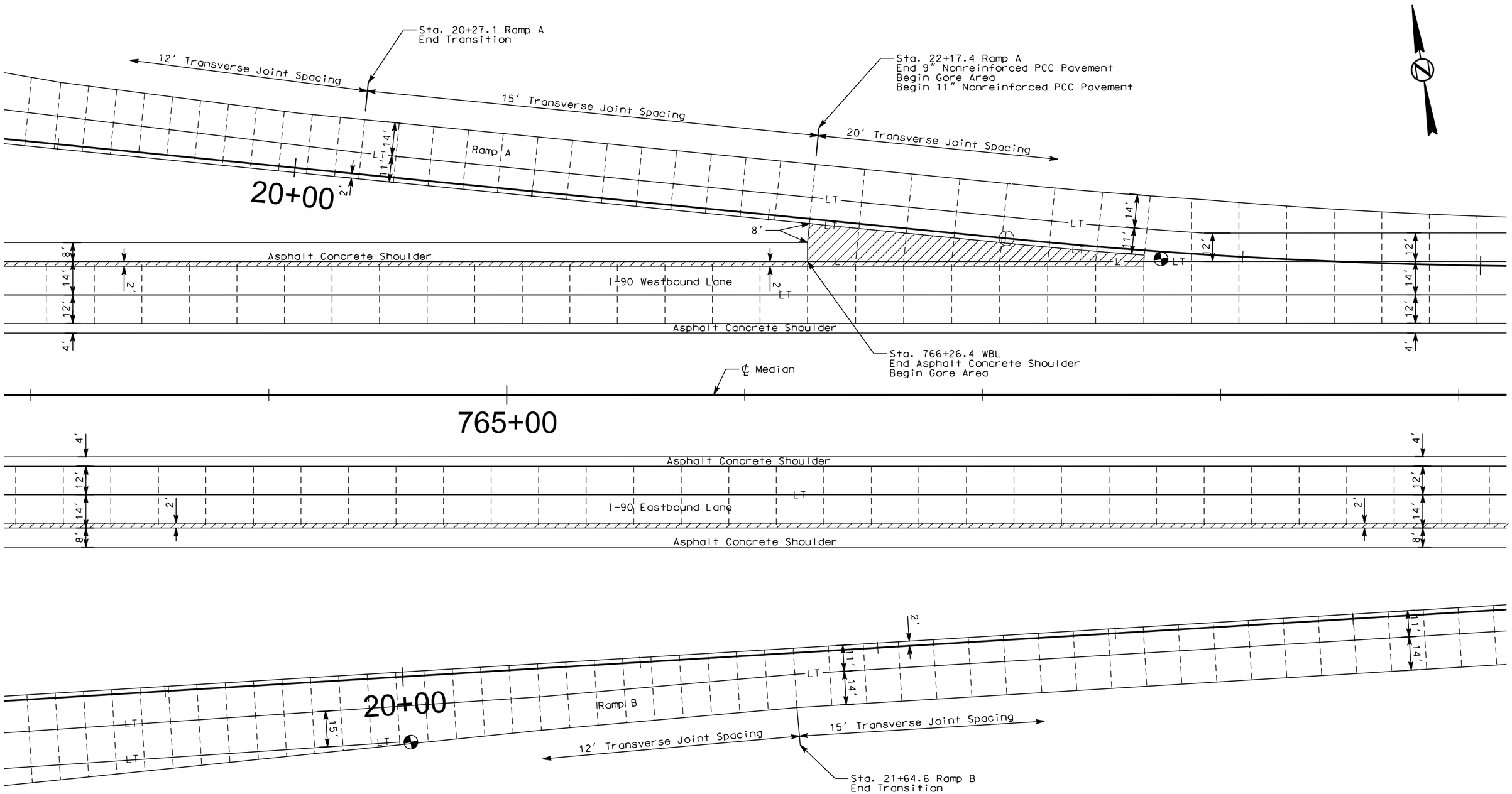

PLOT SCALE - 1:40.0001

PLOTTED FROM - TRPR16032

PLOT NAME - 23

FILE - ...\020U PCC PAVEMENT LAYOUT WORKS.DGN

PCC PAVEMENT JOINT LAYOUT

FOR BIDDING PURPOSES ONLY

STATE OF SOUTH DAKOTA	PROJECT	SHEET	TOTAL SHEETS
	IM 0901(162)14 & P 014A(11)8	F36	F69

Plotting Date: 01/14/2016

Scale 1 Inch = 40 Feet
Sheet 9 of 28 Sheets

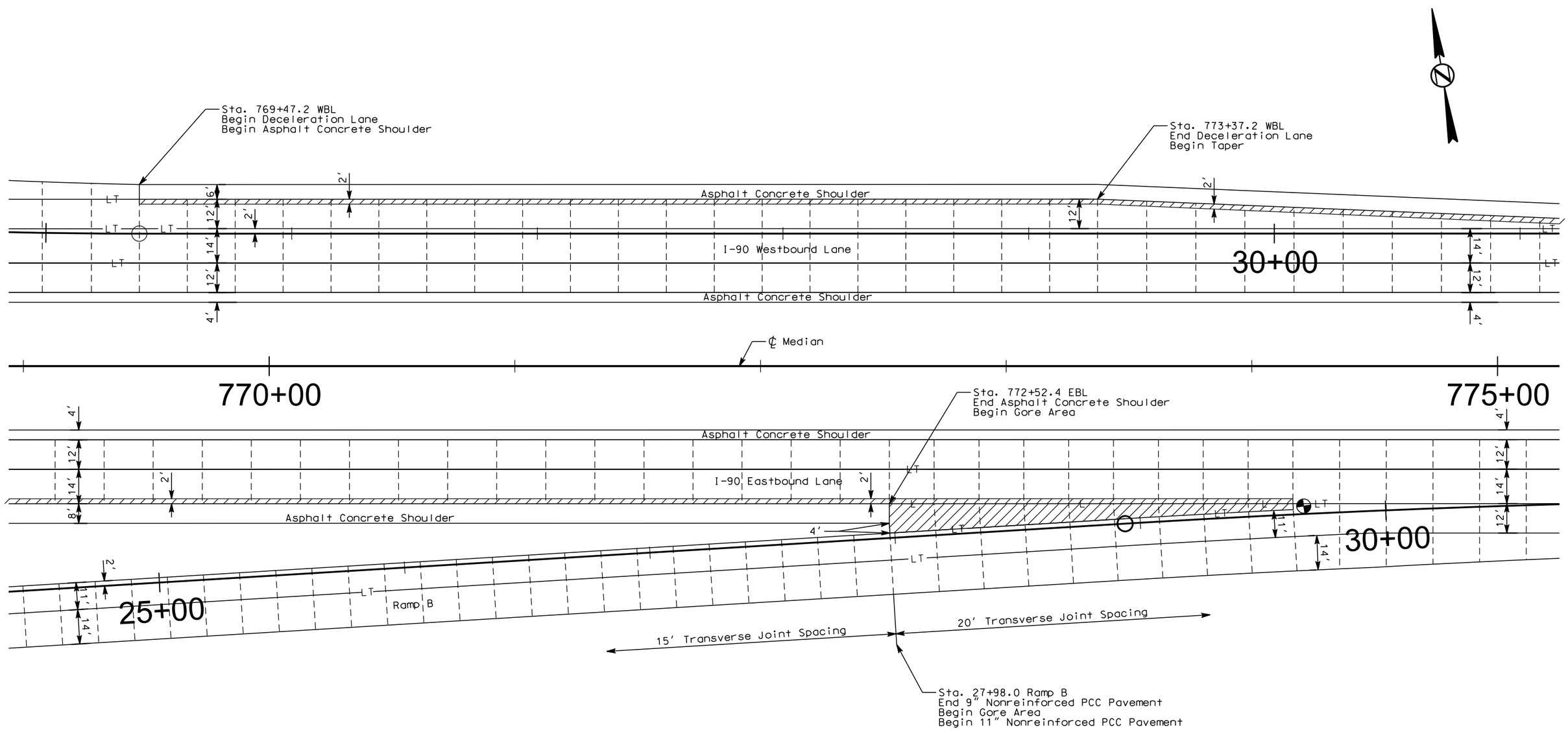

PLOT SCALE - 1:40.0001

PLOT NAME - 24

FILE - ...\020U PCC PAVEMENT LAYOUT WORKS.DGN

PLOTTED FROM - TRPR16032

PCC PAVEMENT JOINT LAYOUT

FOR BIDDING PURPOSES ONLY

STATE OF SOUTH DAKOTA	PROJECT	SHEET	TOTAL SHEETS
	IM 0901(162)14 & P 014A(11)8	F37	F69

Plotting Date: 01/14/2016

Scale 1 Inch = 40 Feet
Sheet 10 of 28 Sheets

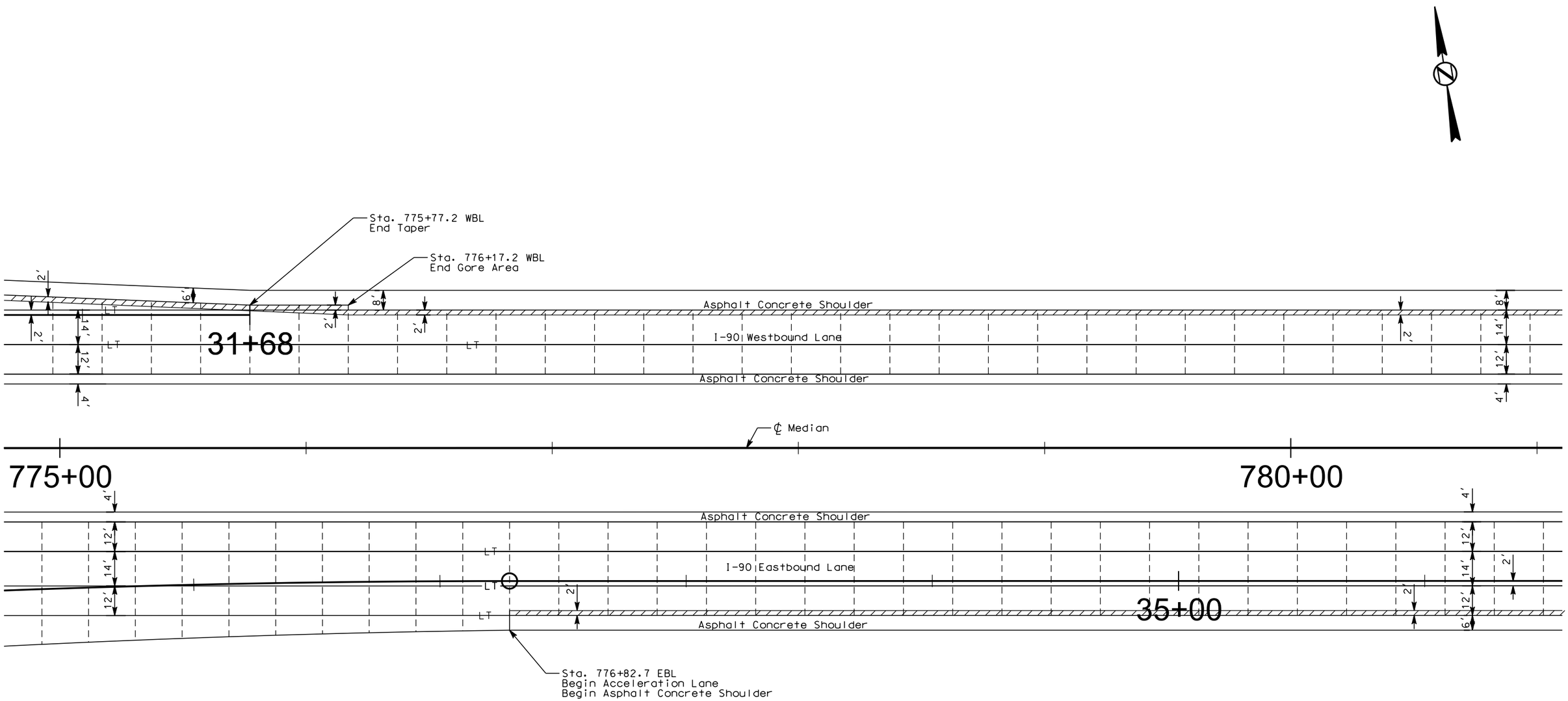

PLOT SCALE - 1:40.0001

PLOT NAME - 25

FILE ...\020U PCC PAVEMENT LAYOUT WORKS.DGN

PLOTTED FROM - TRPR16032

PCC PAVEMENT JOINT LAYOUT

FOR BIDDING PURPOSES ONLY

STATE OF SOUTH DAKOTA	PROJECT	SHEET	TOTAL SHEETS
	IM 0901(162)14 & P 014A(11)8	F38	F69

Plotting Date: 01/14/2016

Scale 1 Inch = 40 Feet
Sheet 11 of 28 Sheets

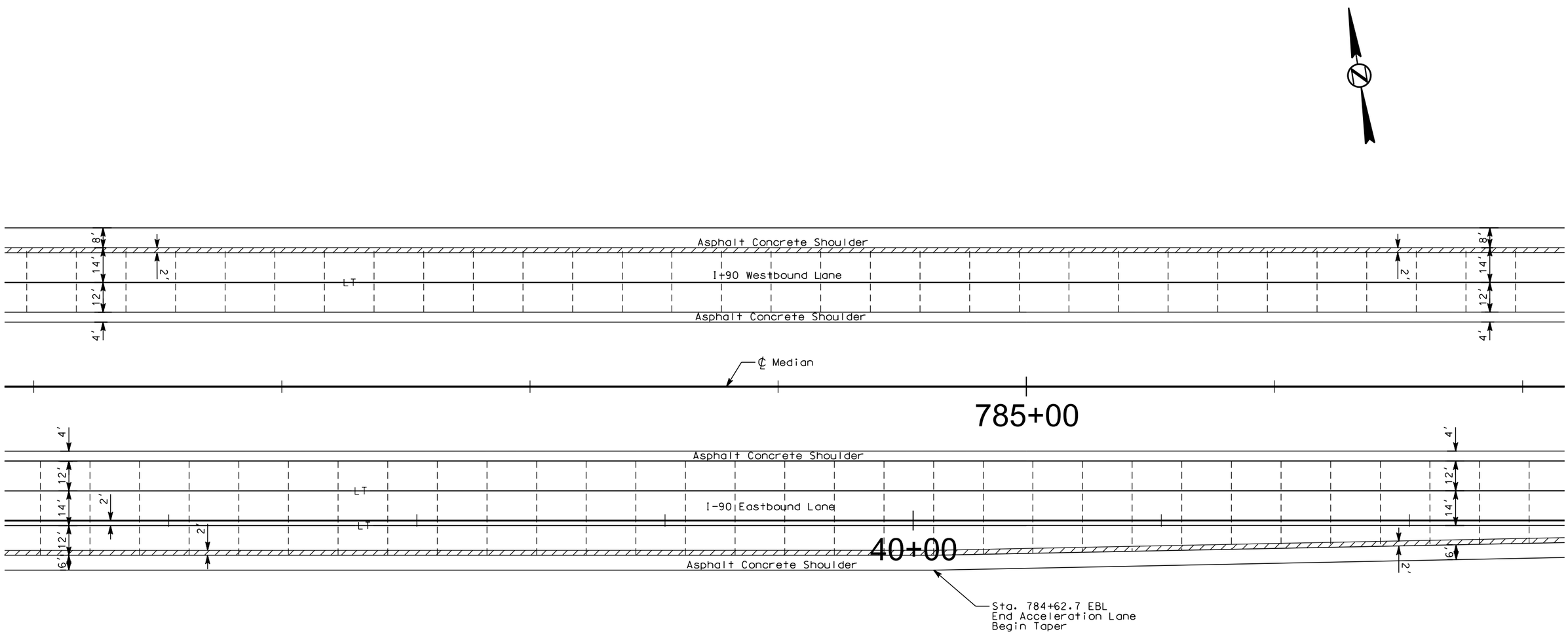

PLOT SCALE - 1:40.0001

PLOTTED FROM - TRPR16032

PLOT NAME - 26

FILE - ...\020U PCC PAVEMENT LAYOUT WORKS.DGN

PCC PAVEMENT JOINT LAYOUT

FOR BIDDING PURPOSES ONLY

STATE OF SOUTH DAKOTA	PROJECT	SHEET	TOTAL SHEETS
	IM 0901(162)14 & P 014A(11)8	F39	F69

Plotting Date: 01/14/2016

Scale 1 Inch = 40 Feet
Sheet 12 of 28 Sheets

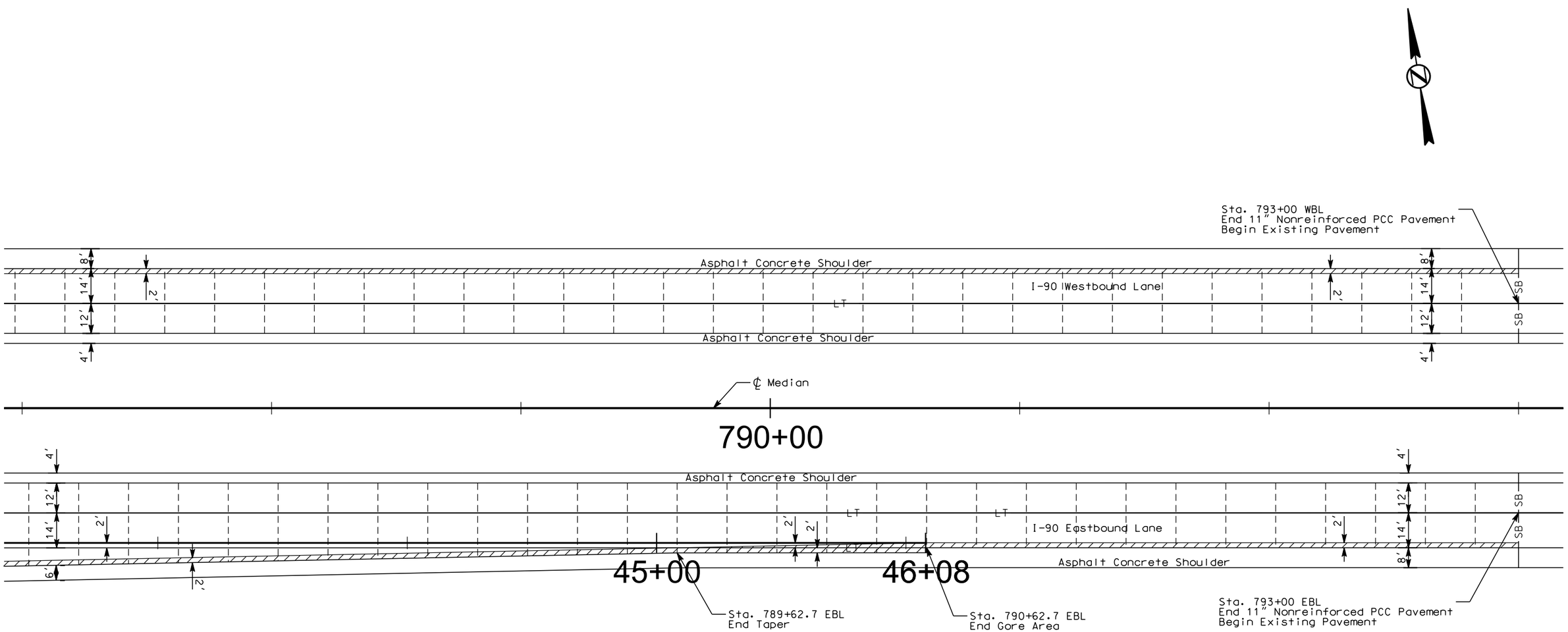

PLOT SCALE - 1:40.0001

PLOTTED FROM - TRPR16032

PLOT NAME - 27

FILE - ...\020U PCC PAVEMENT LAYOUT WORKS.DGN

PCC PAVEMENT JOINT LAYOUT

FOR BIDDING PURPOSES ONLY

STATE OF SOUTH DAKOTA	PROJECT	SHEET	TOTAL SHEETS
	IM 0901(162)14 & P 014A(11)8	F40	F69

Plotting Date: 01/14/2016

Scale 1 Inch = 40 Feet
Sheet 13 of 28 Sheets

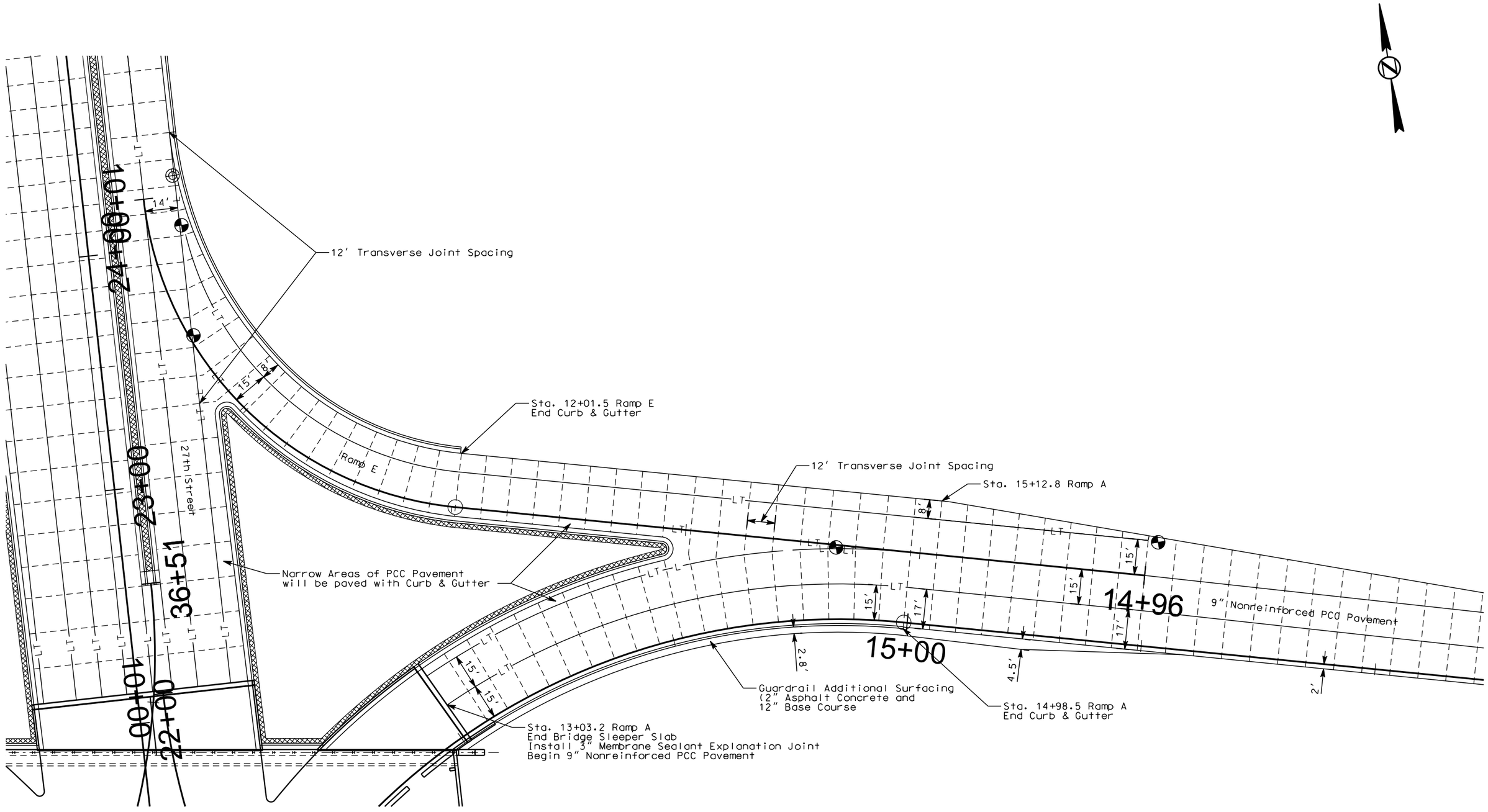

PLOT SCALE - 1:40.0001

PLOTTED FROM - TRPR16032

PLOT NAME - 28

FILE - ...\020U PCC PAVEMENT LAYOUT WORKS.DGN

PCC PAVEMENT JOINT LAYOUT

FOR BIDDING PURPOSES ONLY

STATE OF SOUTH DAKOTA	PROJECT	SHEET	TOTAL SHEETS
	IM 0901(162)14 & P 014A(11)8	F41	F69

Plotting Date: 01/14/2016

Scale 1 Inch = 40 Feet
Sheet 14 of 28 Sheets

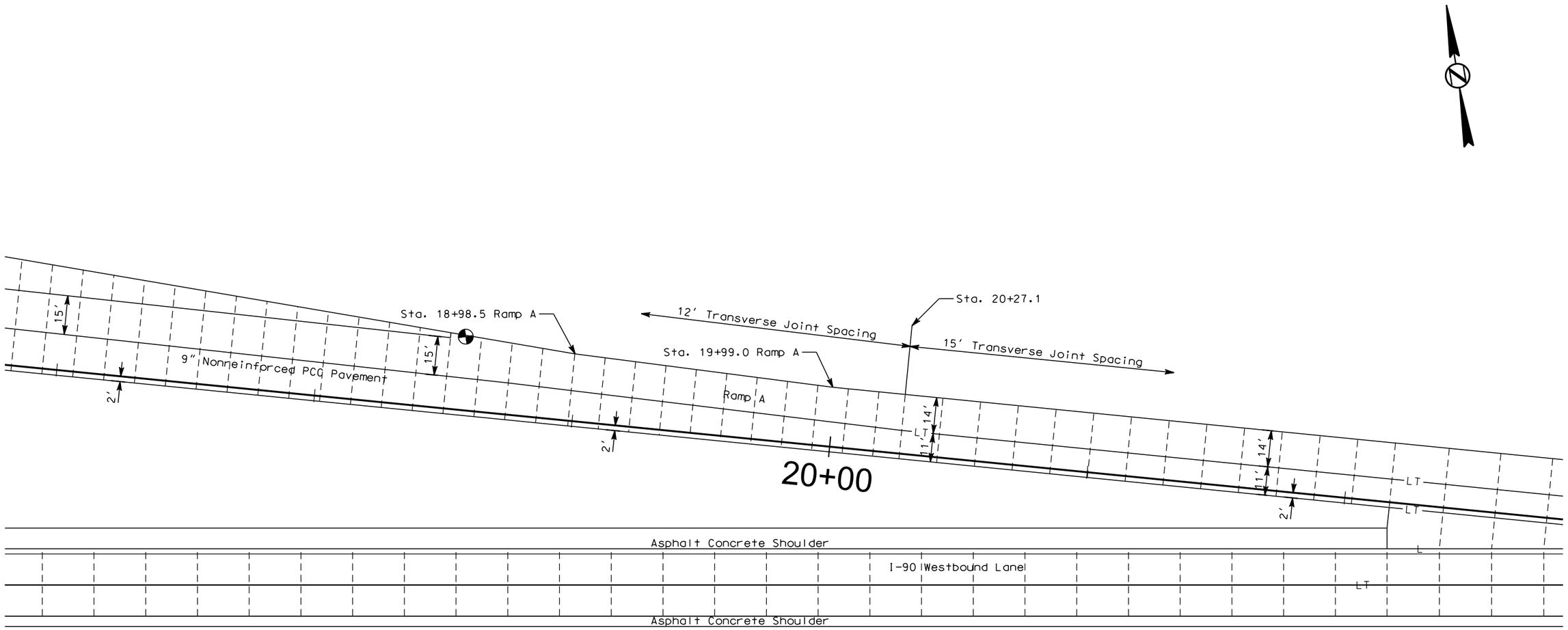

PLOT SCALE - 1:40.0001

PLOTTED FROM - TRPR16032

PLOT NAME - 29

FILE - ...\020U PCC PAVEMENT LAYOUT WORKS.DGN

PCC PAVEMENT JOINT LAYOUT

FOR BIDDING PURPOSES ONLY

STATE OF SOUTH DAKOTA	PROJECT	SHEET	TOTAL SHEETS
	IM 0901(162)14 & P 014A(11)8	F42	F69

Plotting Date: 01/14/2016

Scale 1 Inch = 40 Feet
Sheet 15 of 28 Sheets

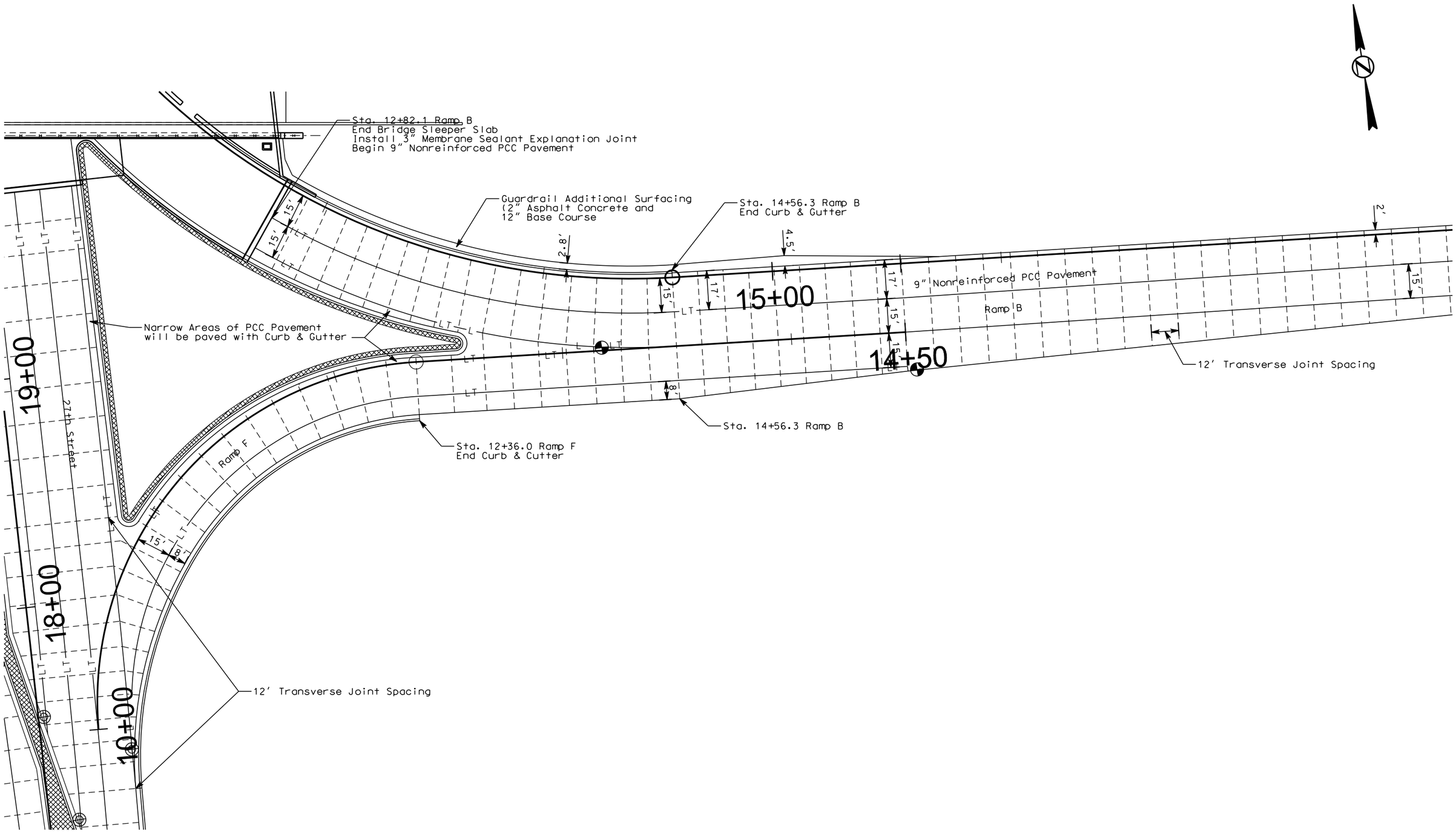

PLOT SCALE - 1:40.0001

PLOTTED FROM - TRPR16032

PLOT NAME - 30

FILE - ...\020U PCC PAVEMENT LAYOUT WORKS.DGN

PCC PAVEMENT JOINT LAYOUT

FOR BIDDING PURPOSES ONLY

STATE OF SOUTH DAKOTA	PROJECT	SHEET	TOTAL SHEETS
	IM 0901(162)14 & P 014A(11)8	F43	F69

Plotting Date: 01/14/2016

Scale 1 Inch = 40 Feet
Sheet 16 of 28 Sheets

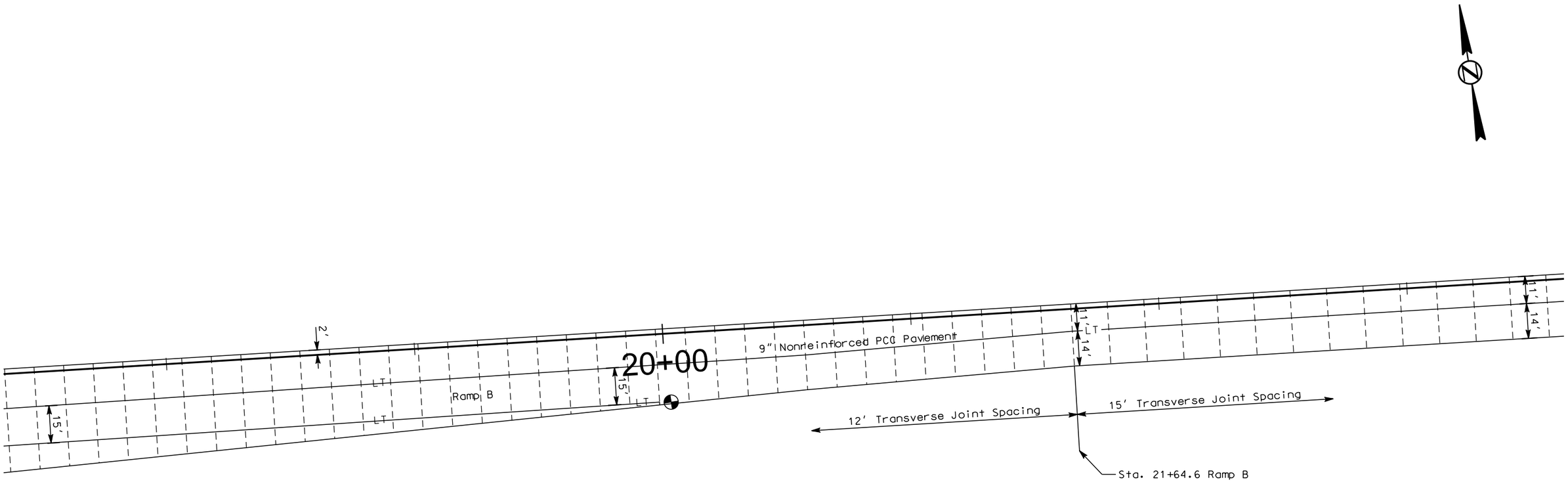

PLOT SCALE - 1:40.0001

PLOTTED FROM - TRPR16032

PLOT NAME - 31

FILE - ...\020U PCC PAVEMENT LAYOUT WORKS.DGN

PCC PAVEMENT JOINT LAYOUT

FOR BIDDING PURPOSES ONLY

STATE OF SOUTH DAKOTA	PROJECT	SHEET	TOTAL SHEETS
	IM 0901(162)14 & P 014A(11)8	F44	F69

Plotting Date: 01/14/2016

Scale 1 Inch = 40 Feet
Sheet 17 of 28 Sheets

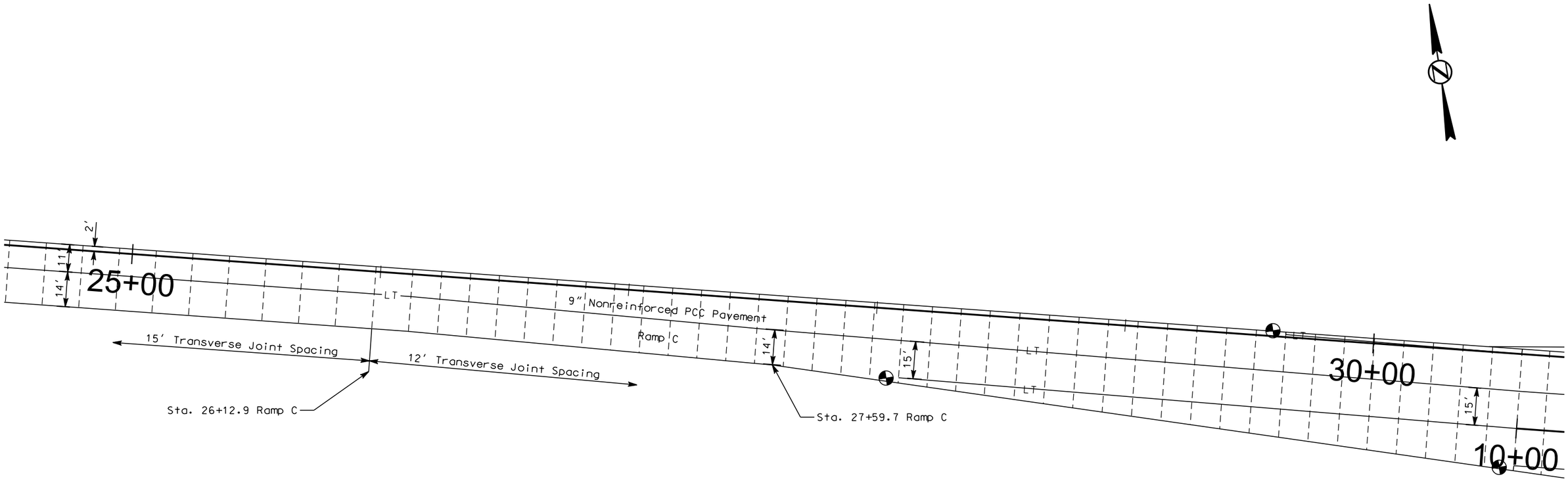

PLOT SCALE - 1:40.0001

PLOTTED FROM - TRPR16032

PLOT NAME - 32

FILE - ...\020U PCC PAVEMENT LAYOUT WORKS.DGN

PCC PAVEMENT JOINT LAYOUT

FOR BIDDING PURPOSES ONLY

STATE OF SOUTH DAKOTA	PROJECT	SHEET	TOTAL SHEETS
	IM 0901(162)14 & P 014A(11)8	F45	F69

Plotting Date: 01/14/2016

Scale 1 Inch = 40 Feet
Sheet 18 of 28 Sheets

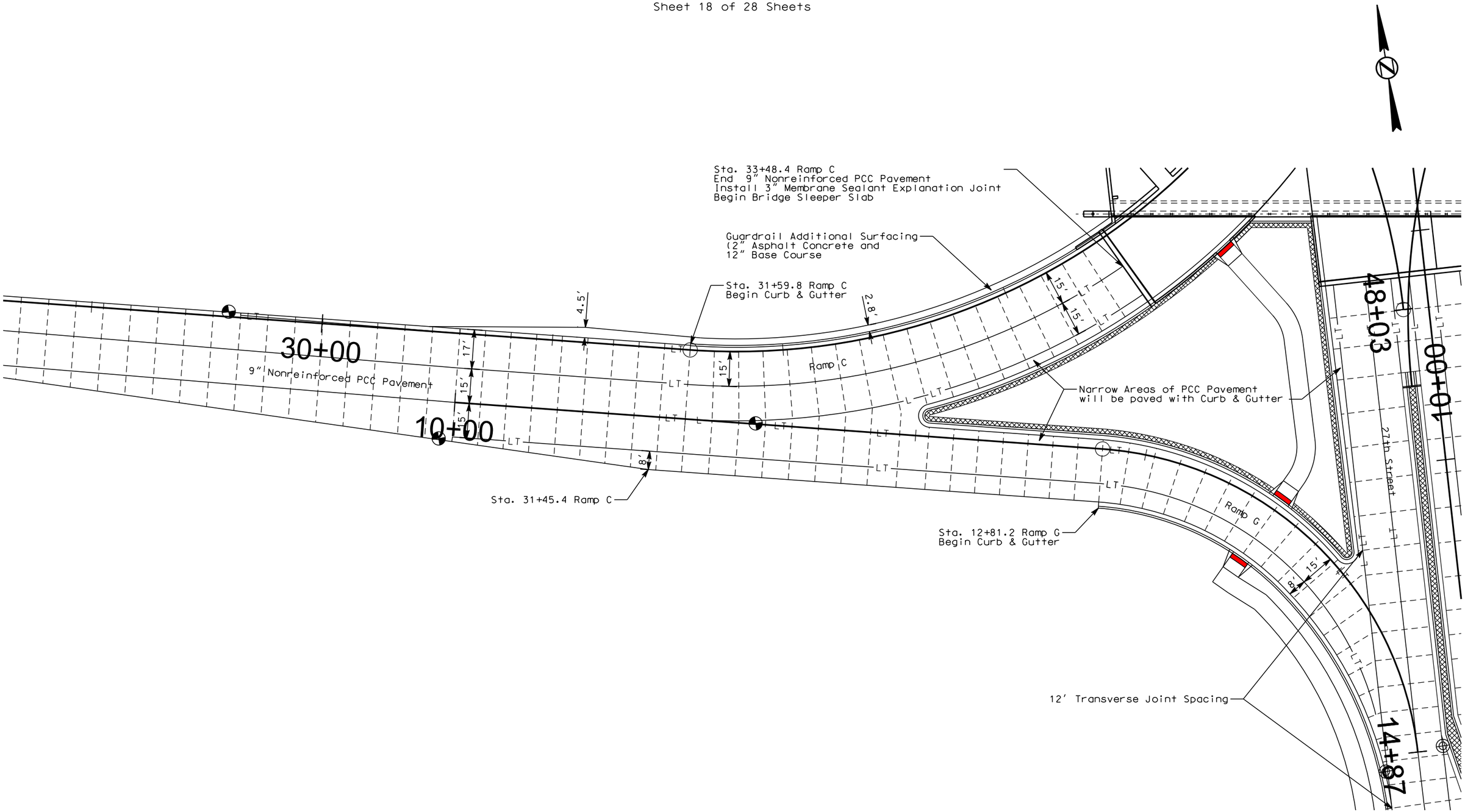

PLOT SCALE - 1:40.0001

PLOTTED FROM - TRPR16032

PLOT NAME - 33

FILE - ...\020U PCC PAVEMENT LAYOUT WORKS.DGN

PCC PAVEMENT JOINT LAYOUT

FOR BIDDING PURPOSES ONLY

STATE OF SOUTH DAKOTA	PROJECT	SHEET	TOTAL SHEETS
	IM 0901(162)14 & P 014A(11)8	F46	F69

Plotting Date: 01/14/2016

Scale 1 Inch = 40 Feet
Sheet 19 of 28 Sheets

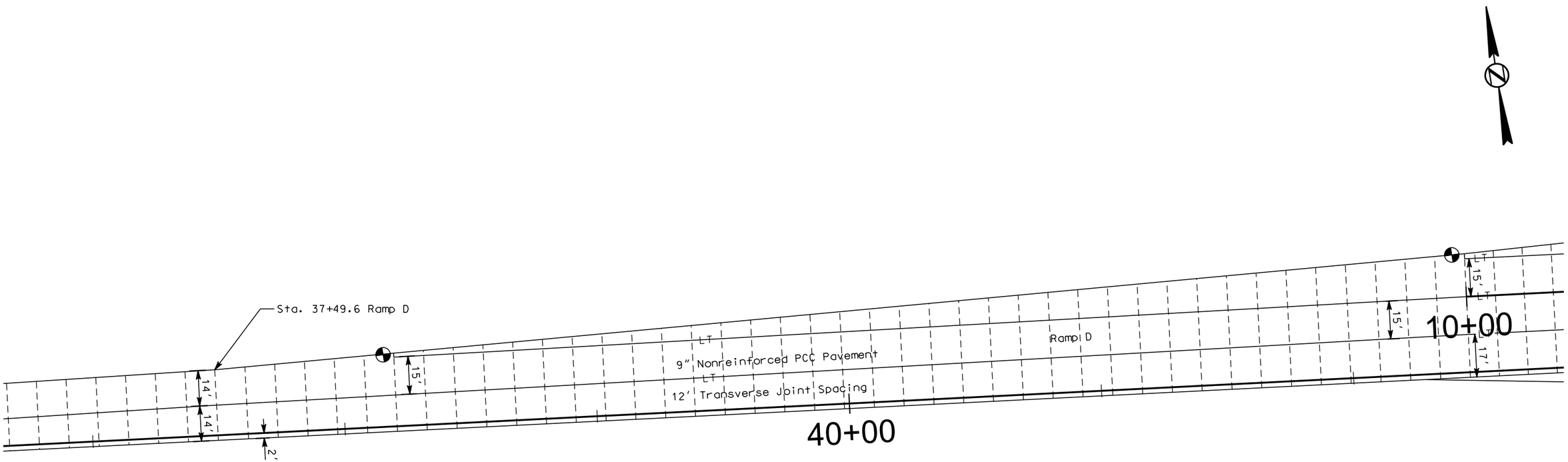

PLOT SCALE - 1:40.0001

PLOTTED FROM - TRPR16032

PLOT NAME - 34

FILE - ...\020U PCC PAVEMENT LAYOUT WORKS.DGN

PCC PAVEMENT JOINT LAYOUT

FOR BIDDING PURPOSES ONLY

STATE OF SOUTH DAKOTA	PROJECT	SHEET	TOTAL SHEETS
	IM 0901(162)14 & P 014A(11)8	F47	F69

Plotting Date: 01/14/2016

Scale 1 Inch = 40 Feet
Sheet 20 of 28 Sheets

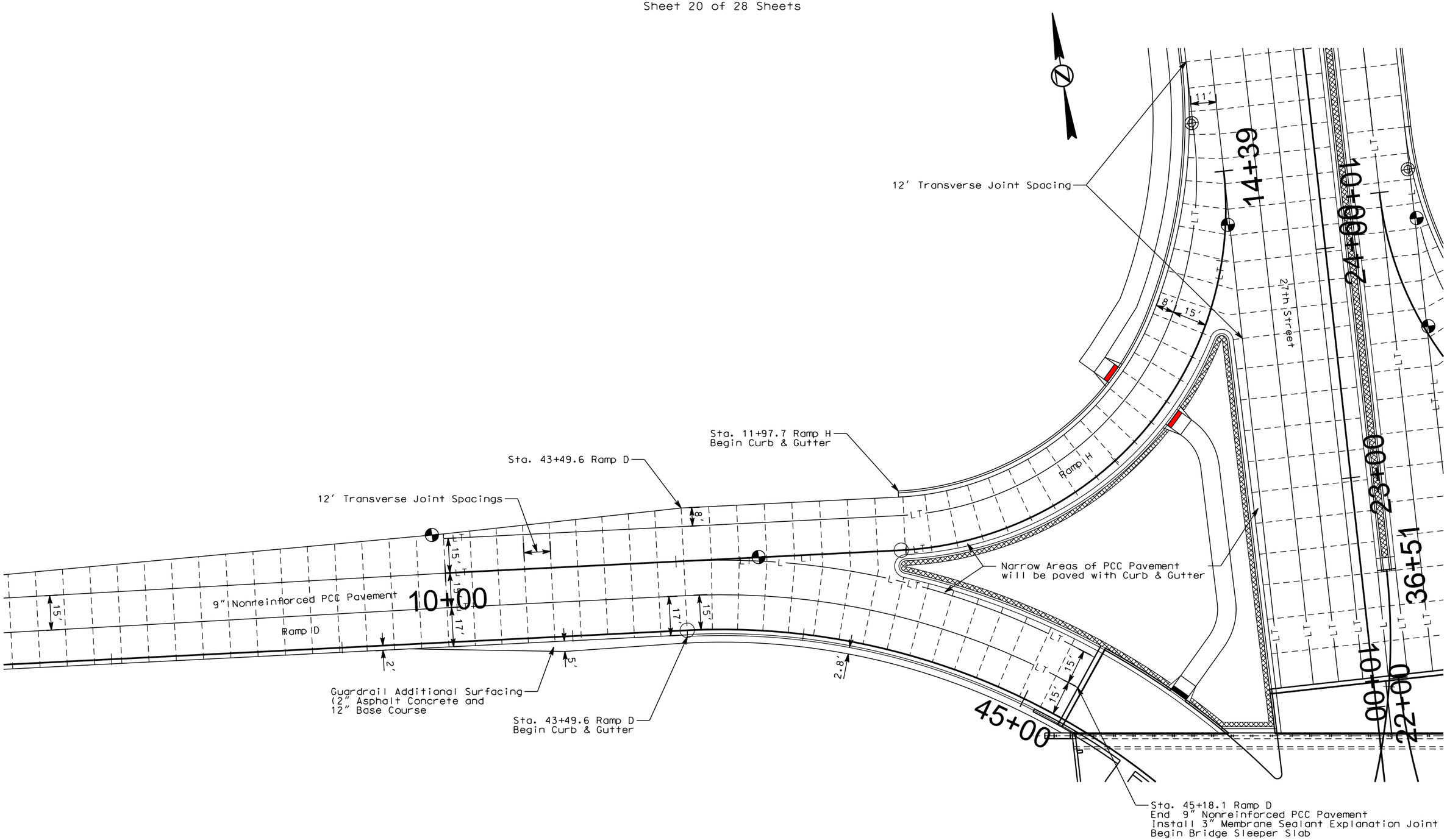

PLOT SCALE - 1:40.0001

PLOTTED FROM - TRPR16032

PLOT NAME - 35

FILE - ...\020U PCC PAVEMENT LAYOUT WORKS.DGN

PCC PAVEMENT JOINT LAYOUT

FOR BIDDING PURPOSES ONLY

STATE OF SOUTH DAKOTA	PROJECT	SHEET	TOTAL SHEETS
	IM 0901(162)14 & P 014A(11)8	F48	F69

Plotting Date: 01/14/2016

Revised: 4 Jan 16, RML

Scale 1 Inch = 40 Feet
Sheet 21 of 28 Sheets

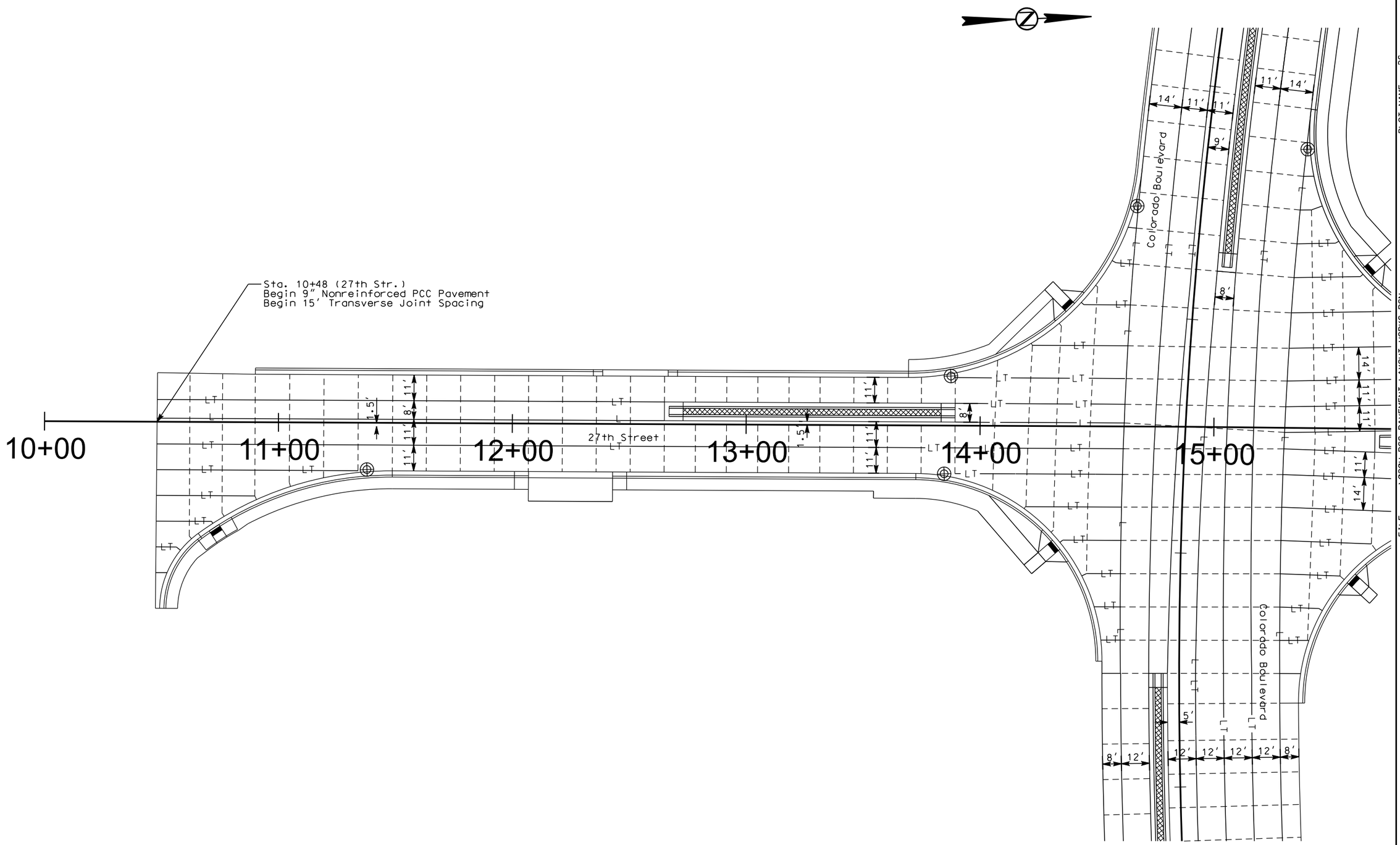

PLOT SCALE - 1:40.0001

PLOTTED FROM - TRPR16032

PLOT NAME - 36

FILE - ...\020U PCC PAVEMENT LAYOUT WORKS.DGN

PCC PAVEMENT JOINT LAYOUT

FOR BIDDING PURPOSES ONLY

STATE OF SOUTH DAKOTA	PROJECT	SHEET	TOTAL SHEETS
	IM 0901(162)14 & P 014A(11)8	F49	F69

Plotting Date: 01/14/2016

Scale 1 Inch = 40 Feet
Sheet 22 of 28 Sheets

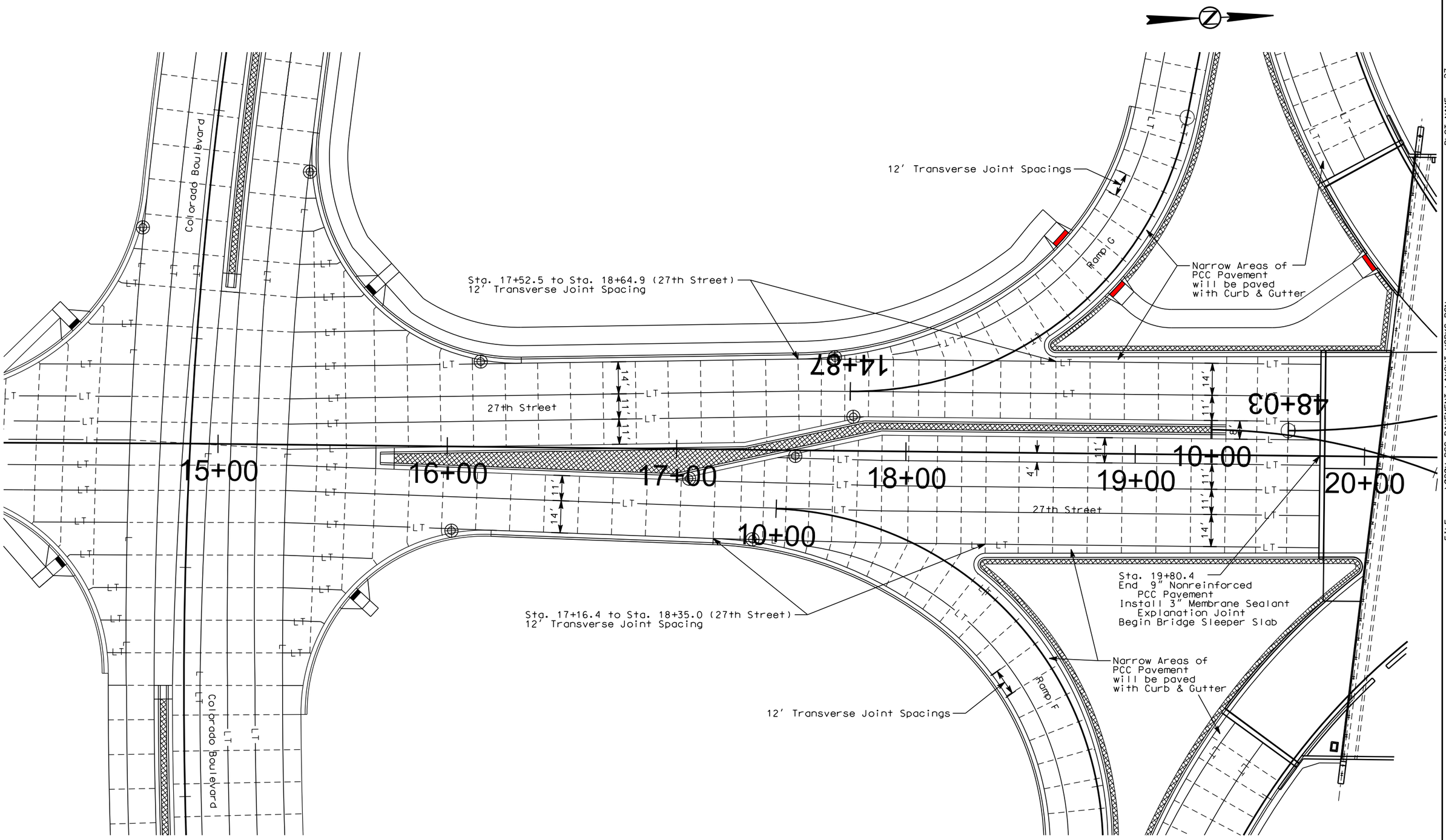

PLOT SCALE - 1:40.0001

PLOTTED FROM - TRPR16032

PLOT NAME - 37

FILE - ...\020U PCC PAVEMENT LAYOUT WORKS.DGN

PCC PAVEMENT JOINT LAYOUT

FOR BIDDING PURPOSES ONLY

STATE OF SOUTH DAKOTA	PROJECT	SHEET	TOTAL SHEETS
	IM 0901(162)14 & P 014A(11)8	F50	F69

Plotting Date: 01/14/2016

Scale 1 Inch = 40 Feet
Sheet 23 of 28 Sheets

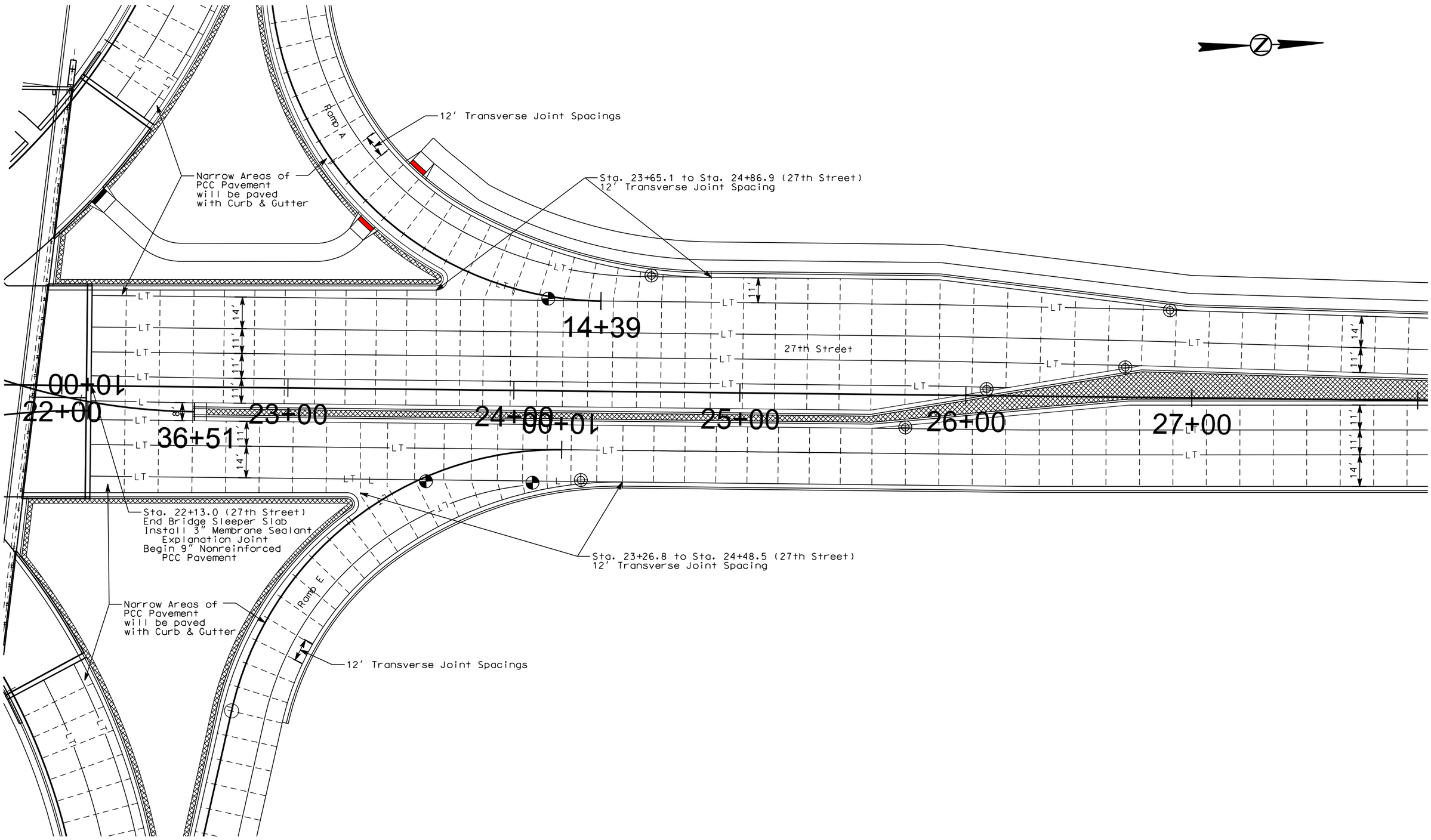

PLOT SCALE - 1:40.0001

PLOTTED FROM - TRPR16032

PLOT NAME - 38

FILE - ...\020U PCC PAVEMENT LAYOUT WORKS.DGN

PCC PAVEMENT JOINT LAYOUT

FOR BIDDING PURPOSES ONLY

STATE OF SOUTH DAKOTA	PROJECT	SHEET	TOTAL SHEETS
	IM 0901(162)14 & P 014A(11)8	F51	F69

Plotting Date: 01/14/2016

Scale 1 Inch = 40 Feet
Sheet 24 of 28 Sheets

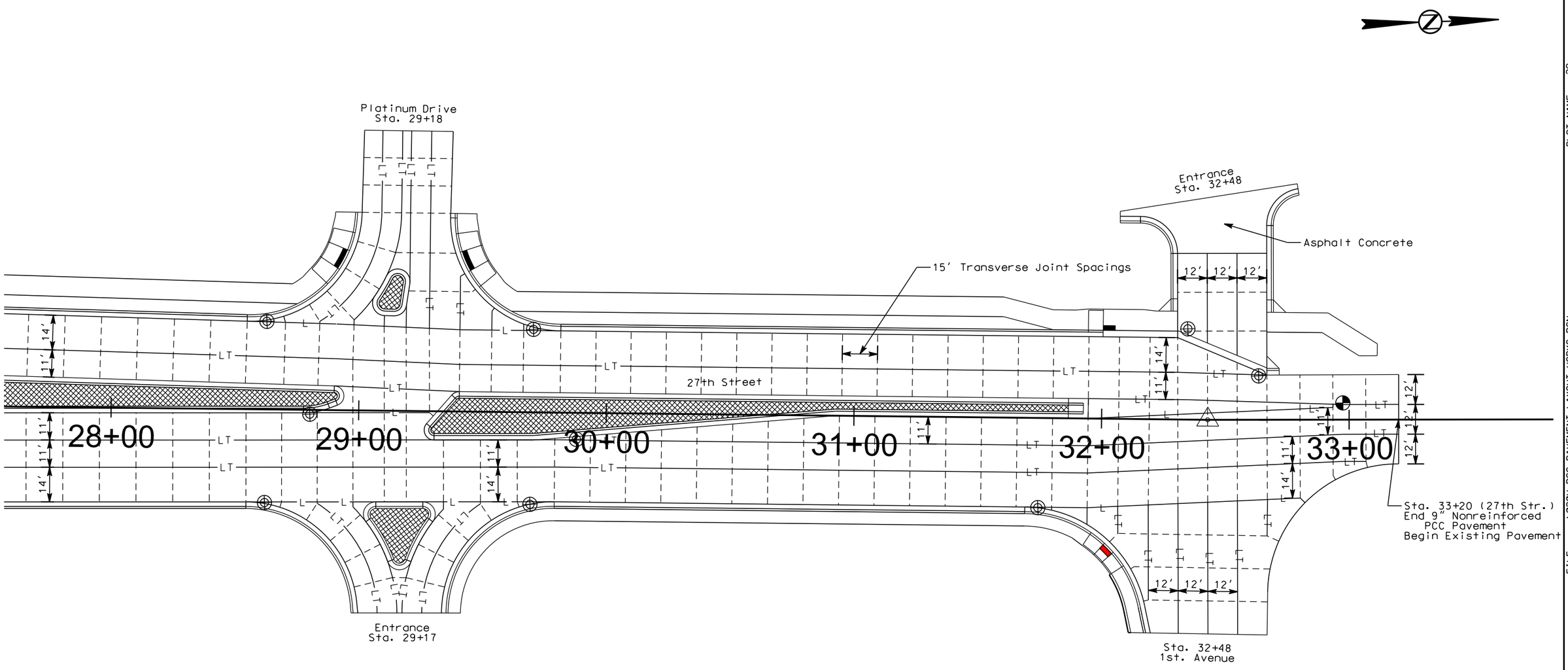

PLOT SCALE - 1:40.0001

PLOTTED FROM - TRPR16032

PLOT NAME - 39

FILE -...\020U PCC PAVEMENT LAYOUT WORKS.DGN

PCC PAVEMENT JOINT LAYOUT

FOR BIDDING PURPOSES ONLY

STATE OF SOUTH DAKOTA	PROJECT	SHEET	TOTAL SHEETS
	IM 0901(162)14 & P 014A(11)8	F52	F69

Plotting Date: 01/14/2016

Scale 1 Inch = 40 Feet
Sheet 25 of 28 Sheets

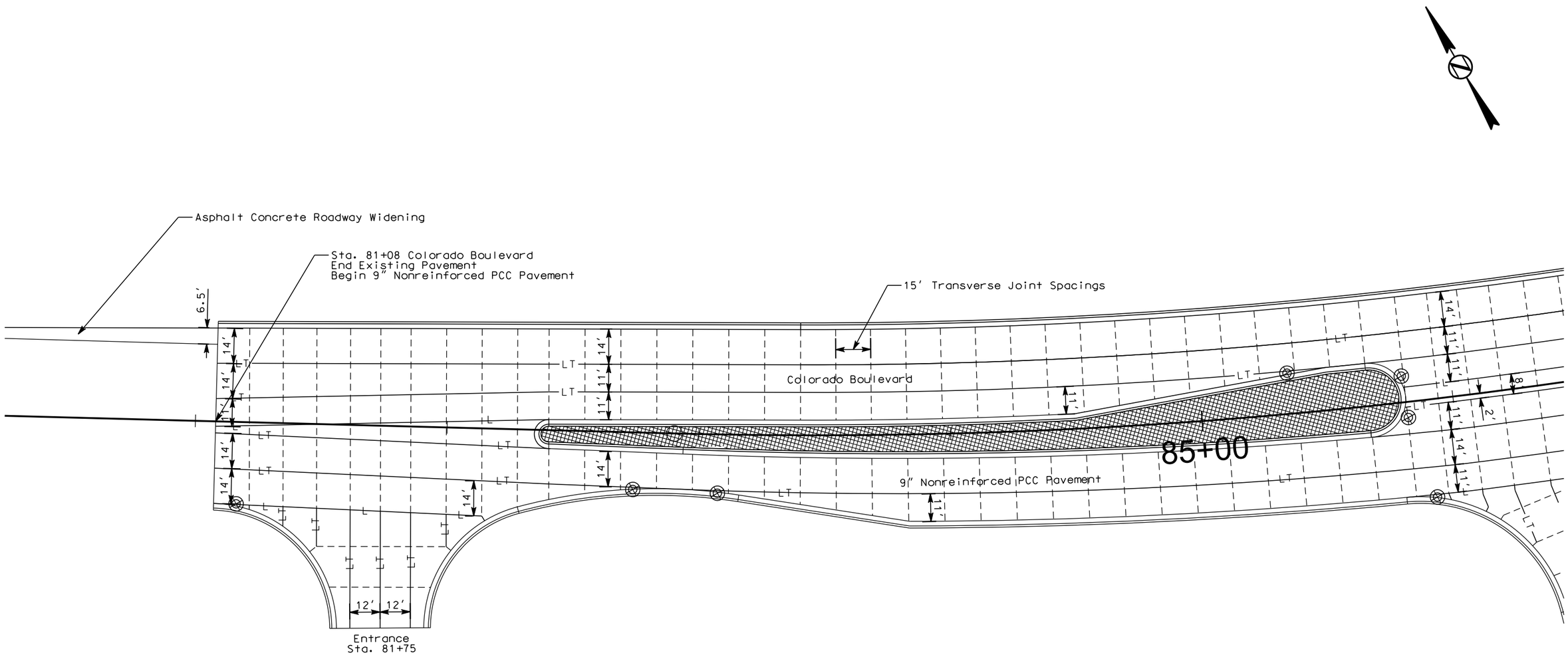

PLOT SCALE - 1:40.0001

PLOTTED FROM - TRPR16032

PLOT NAME - 40

FILE - ...\020U PCC PAVEMENT LAYOUT WORKS.DGN

PCC PAVEMENT JOINT LAYOUT

FOR BIDDING PURPOSES ONLY

STATE OF SOUTH DAKOTA	PROJECT	SHEET	TOTAL SHEETS
	IM 0901(162)14 & P 014A(11)8	F53	F69

Plotting Date: 01/14/2016

Scale 1 Inch = 40 Feet
Sheet 26 of 28 Sheets

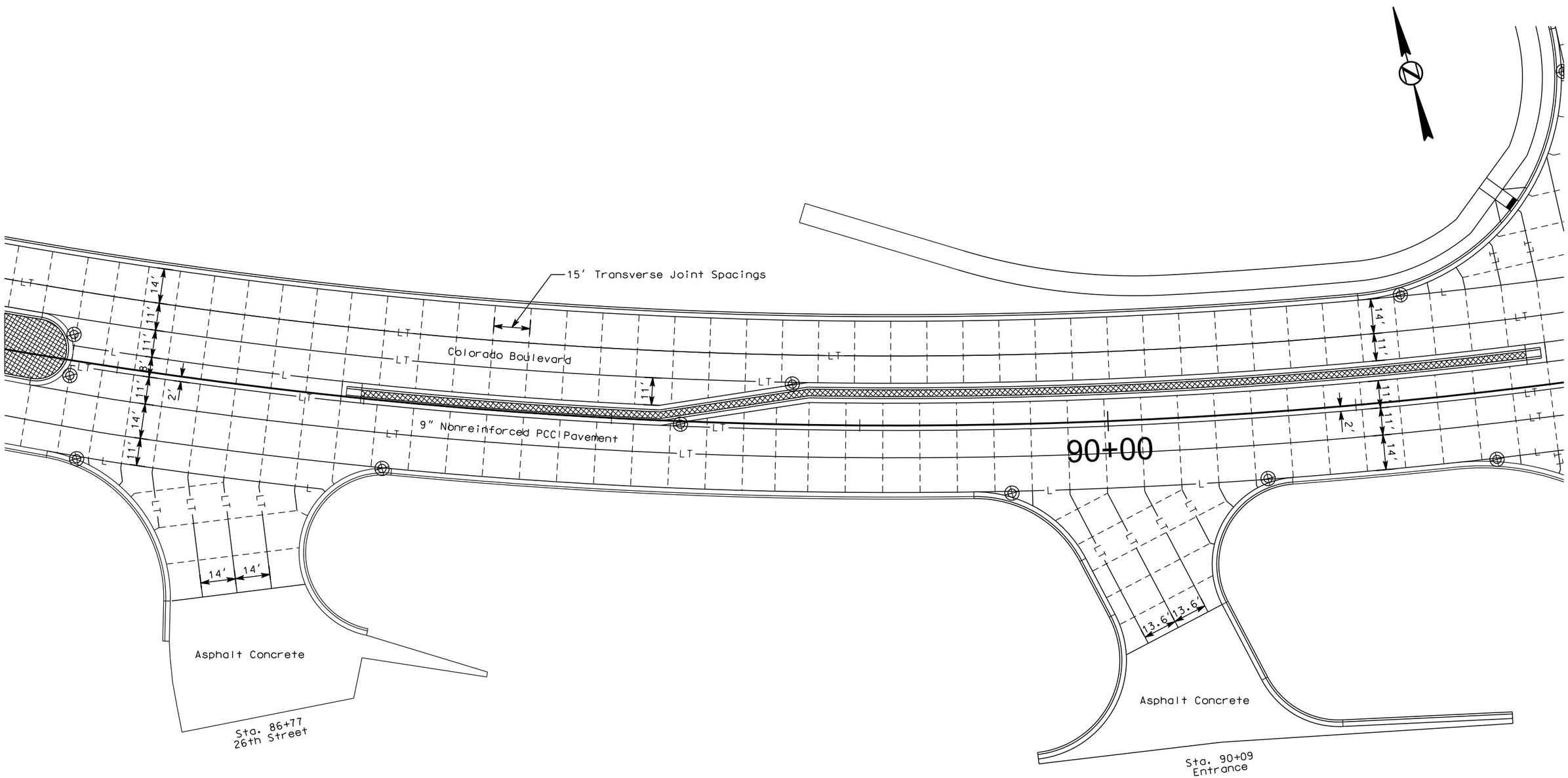

PLOT SCALE - 1:40.0001

PLOTTED FROM - TRPR16032

PLOT NAME - 41

FILE - ...\020U PCC PAVEMENT LAYOUT WORKS.DGN

PCC PAVEMENT JOINT LAYOUT

FOR BIDDING PURPOSES ONLY

STATE OF SOUTH DAKOTA	PROJECT	SHEET	TOTAL SHEETS
	IM 0901(162)14 & P 014A(11)8	F54	F69

Plotting Date: 01/14/2016

Scale 1 Inch = 40 Feet
Sheet 27 of 28 Sheets

Revised: 14 Jan 16, RML

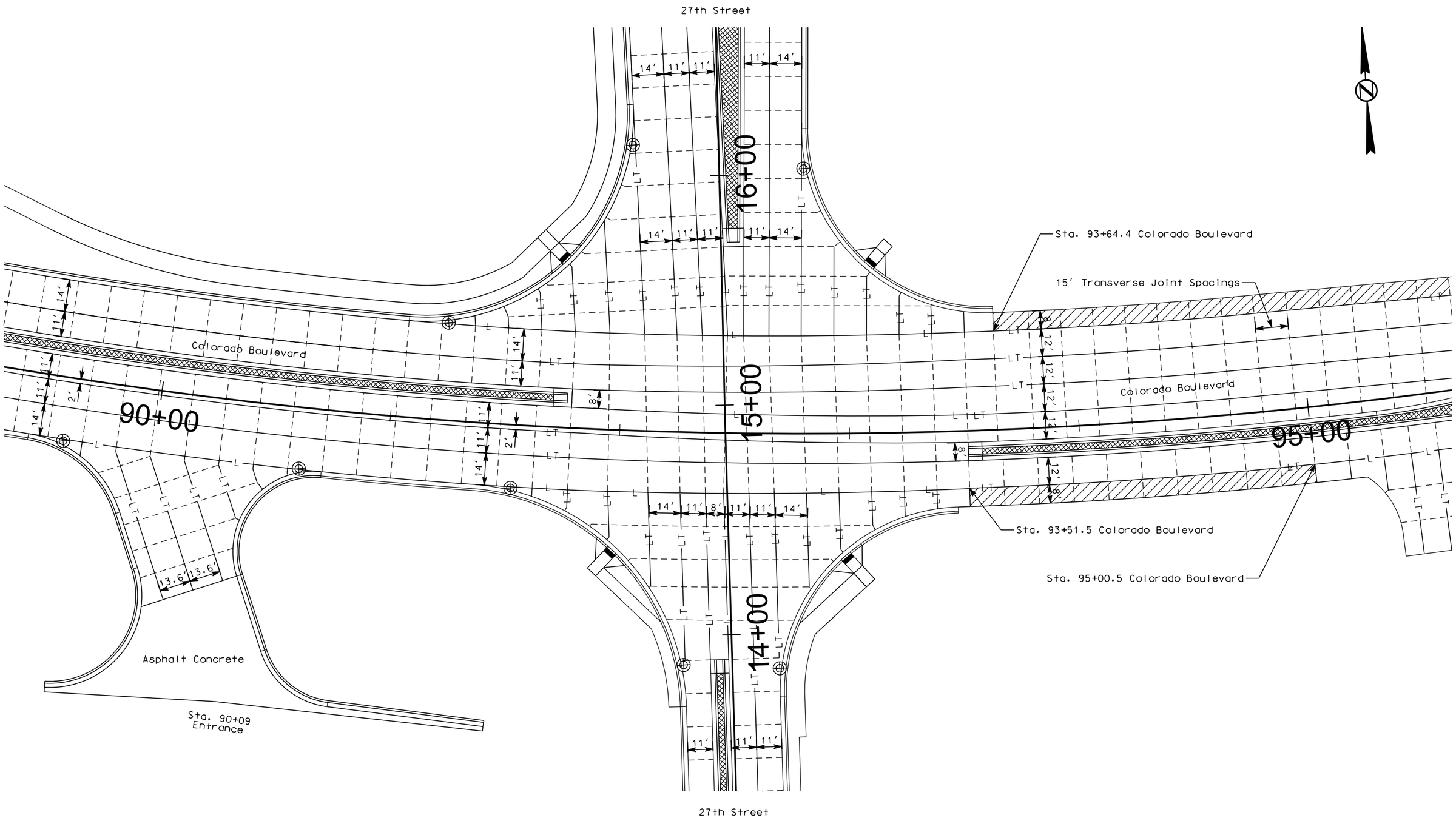

PLOT SCALE - 1:40.0001

PLOTTED FROM - TRPR16032

PLOT NAME - 42

FILE - ...\020U PCC PAVEMENT LAYOUT WORKS.DGN

PCC PAVEMENT JOINT LAYOUT

FOR BIDDING PURPOSES ONLY

STATE OF SOUTH DAKOTA	PROJECT	SHEET	TOTAL SHEETS
	IM 0901(162)14 & P 014A(11)8	F55	F69

Plotting Date: 01/14/2016

Scale 1 Inch = 40 Feet
Sheet 28 of 28 Sheets

Revised: 14 Jan 16, RML

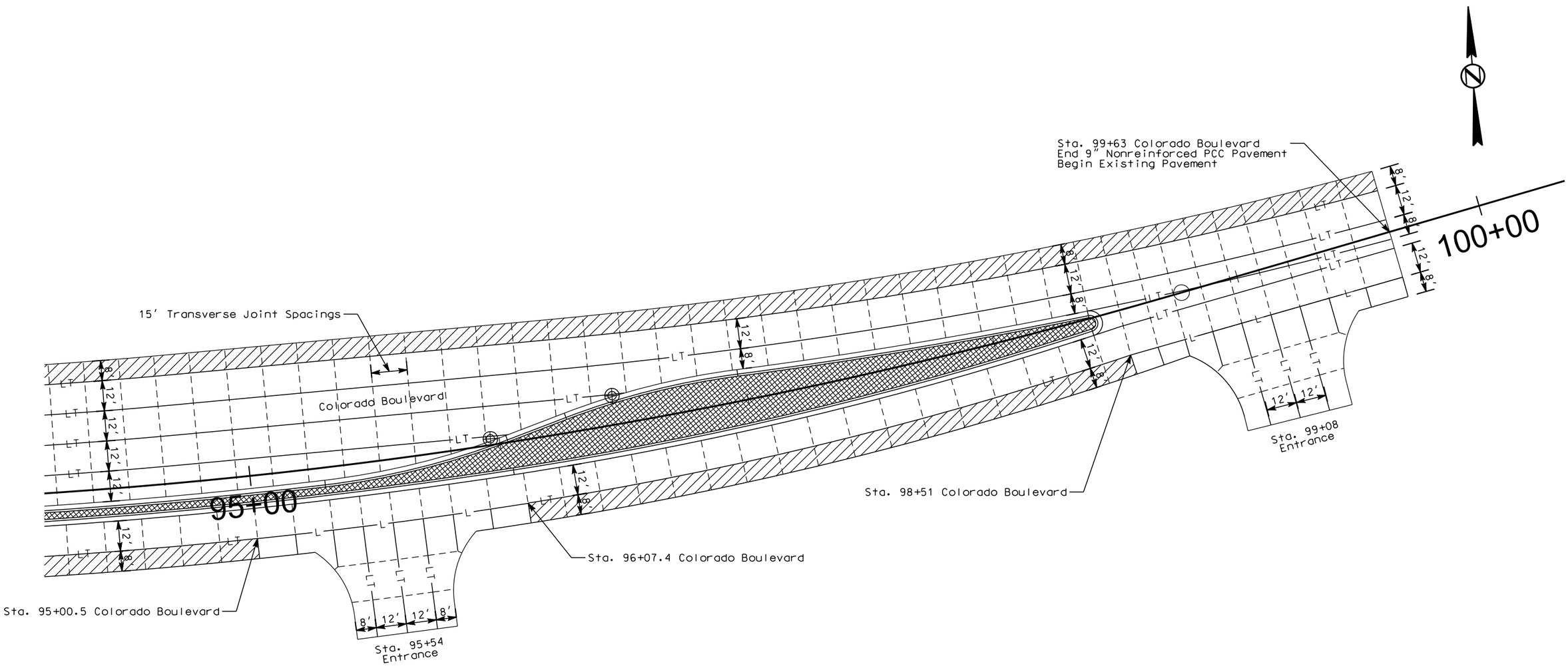

PLOT SCALE - 1:40.0001

PLOTTED FROM - TRPR16032

PLOT NAME - 43

FILE - ...\020U PCC PAVEMENT LAYOUT WORKS.DGN

MEMBRANE SEALANT EXPANSION JOINT

FOR BIDDING PURPOSES ONLY

STATE OF SOUTH DAKOTA	PROJECT	SHEET	TOTAL SHEETS
	IM 0901(162)14 & P 014A(11)8	F56	F69

Plotting Date: 01/14/2016

Revised: 24 Aug 15, RML

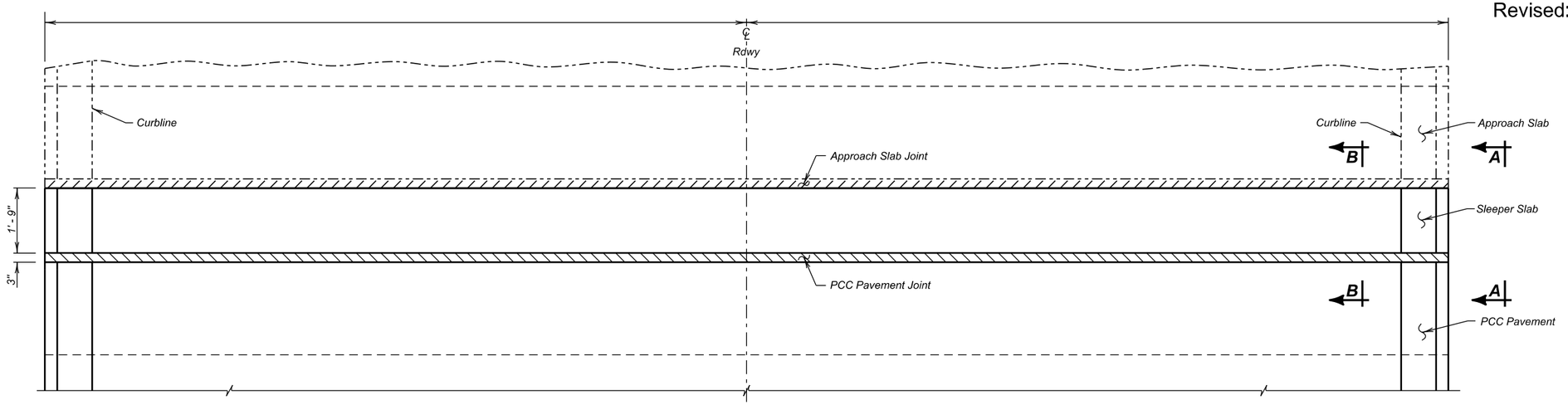

PLAN

GENERAL NOTES

1. The Membrane Sealant shall be on the approved product list for Membrane Sealant Expansion Joints.
2. The manufacturer shall supply the membrane sealant in packaging that precompresses the membrane sealant. The precompressed dimension shall be as recommended by the sealant manufacturer, however, in no case shall the precompressed dimension exceed 75% of the joint opening width. The foam sealant shall be slowly self expanding to permit workers ample time to install the membrane sealant before the membrane sealant exceeds the joint opening width.
3. The membrane sealant shall provide a water tight seal throughout a joint movement range of + 25% (minimum) from the specified joint opening dimension.
4. The membrane sealant shall be supplied in pieces a minimum of 5 feet in length. The foam sealant shall be ultra-violet and ozone resistant.
5. The bonding adhesive used to attach the membrane sealant to the adjacent concrete shall be approved by the membrane sealant manufacturer.
6. Adhesive used to join adjacent pieces of the membrane sealant shall be as recommended by the manufacturer.
7. If Styrofoam filler material is used in the construction, it shall be closed cell and water-tight as approved by the Engineer.
8. The minimum concrete air temperature at the time of joint installation and adhesive curing shall be 40° F.
9. A technical representative of the membrane sealant manufacturer shall be present at the jobsite during installation. The technical representative shall be knowledgeable in the correct procedures for the preparation and installation of the joint material to ensure the Contractor installs the joint to the Manufacturers recommendations.
10. Surfaces that will be in contact with the membrane sealant shall be thoroughly cleaned by abrasive blasting to remove all laitance and contaminants (such as oil, curing compounds, etc.) from the surface. At a minimum, two passes of abrasive blasting with the nozzle held at an angle to within 1 to 2 inches of the surface will be required. Cleaning of the surfaces with solvents, wire brushing, or grinding shall not be permitted.
11. After abrasive blasting, but immediately prior to membrane joint installation, the entire joint contact surface shall be air blasted. The air compressor used for joint cleaning shall be equipped with trap devices capable of providing moisture-free and oil-free air at a recommended pressure of 90 psi. To obtain complete bonding with the adhesive, the adjacent surfaces must be dry and clean. The contact surfaces for the joint shall be visually inspected by the Engineer immediately prior to joint installation to verify the surface is dry and clean.
12. Individual spliced sections shall be installed as per the manufacturers' recommendations. The membrane joint sealant manufacturer shall submit a detailed installation procedure to the Engineer at least 5 days prior to joint installation for his review.
13. Traffic shall not be allowed on the joint until the bonding adhesive has had time to cure, as recommended by the manufacturer.
14. Use plywood or other material to protect concrete adjacent to the joint from spalling before any equipment is moved across the joint. Any spall areas will be repaired at the Contractor's expense by breaking out and replacing adjacent concrete, as approved by the Engineer.
15. The Membrane Sealant Expansion Joint will be measured in feet to the nearest one-tenth foot, complete in place. Measurement will be made of the overall horizontal length. The Membrane Sealant Expansion Joint will be paid for at the contract unit price per foot complete in place. Payment for this item shall be full compensation for furnishing all the required materials in place, including labor, equipment and incidentals necessary to complete the work in accordance with the plans and the foregoing specifications.

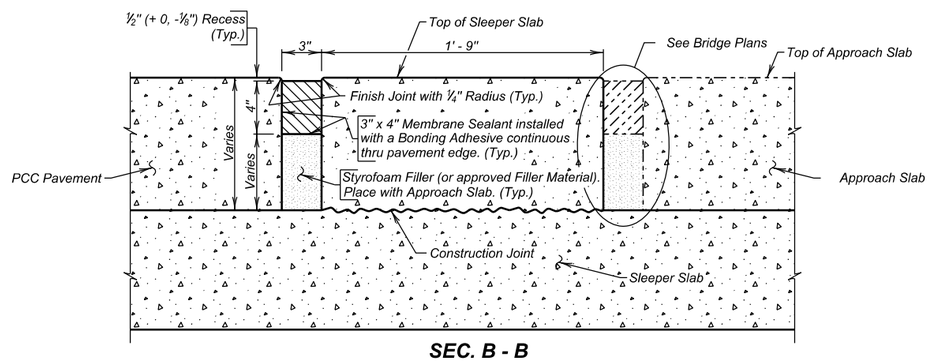

SEC. B - B

LOCATION	LENGTH feet
Sta. 19+80.4 (27th Str.)	91.0
Sta. 22+13.1 (27th Str.)	95.1
Sta. 13+03.2 (Ramp A)	39.8
Sta. 12+82.1 (Ramp B)	40.7
Sta. 33+48.4 (Ramp C)	39.8
Sta. 45+18.1 (Ramp D)	39.0
TOTAL	345.4

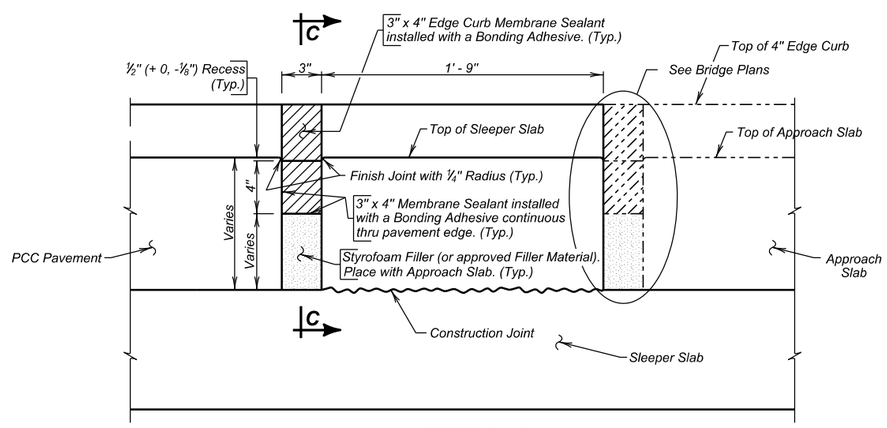

VIEW A - A

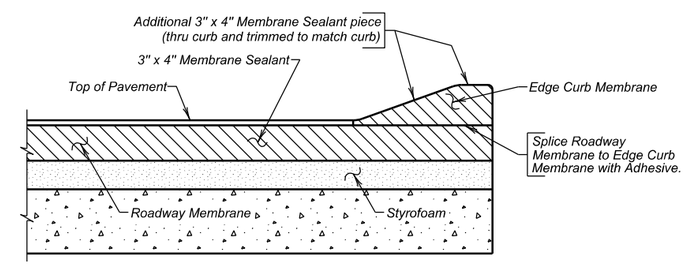

SEC. C - C

PLOT SCALE - 1:0.176
PLOTTED FROM - TRPR16032
PLOT NAME - 44
FILE - ...\MEMBRANE JOINT DETAIL.DGN

MANHOLE BOX - OUT DETAILS

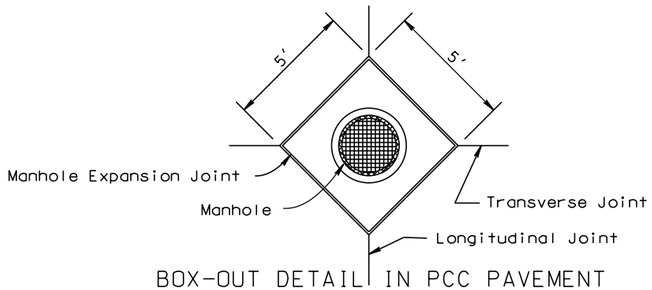

BOX-OUT DETAIL IN PCC PAVEMENT

Where the utility access is intersected
by the longitudinal and transverse joints

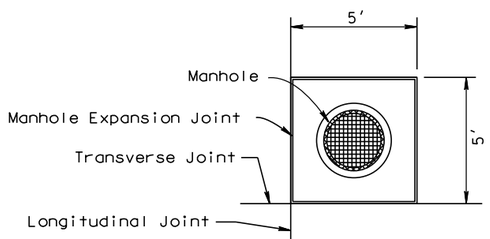

BOX-OUT DETAIL IN PCC PAVEMENT

Where the utility access is offset from
the longitudinal and transverse joints

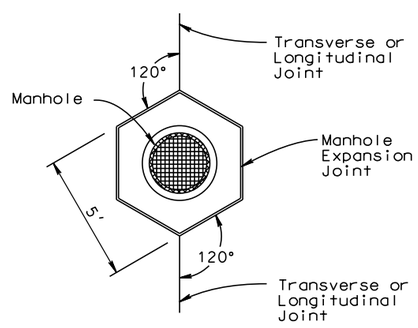

BOX-OUT DETAIL IN PCC PAVEMENT

Where no Longitudinal or Transverse joints are present
or at Longitudinal or Transverse joint.

MANHOLE EXPANSION JOINT DETAIL

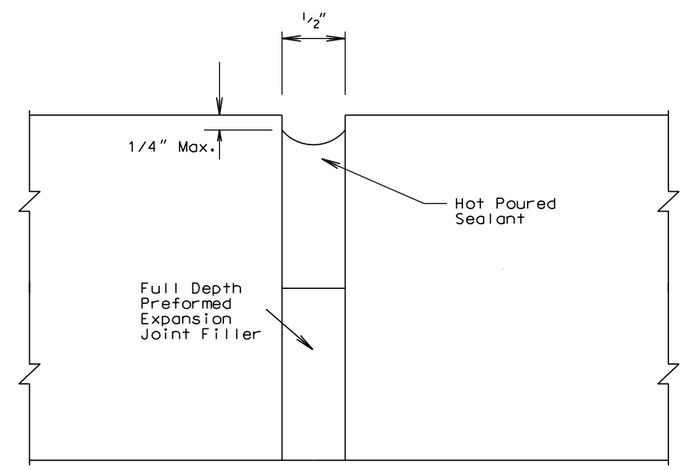

FOR BIDDING PURPOSES ONLY

MANHOLE BOX - OUT DETAILS

REBAR LAYOUTS IN PCC PAVEMENT WITH BOX-OUTS

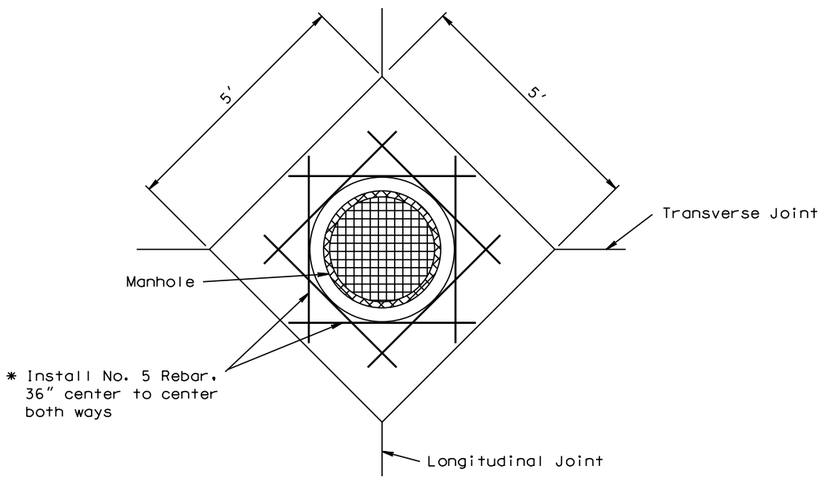

Where the utility access is intersected by the longitudinal and transverse joints

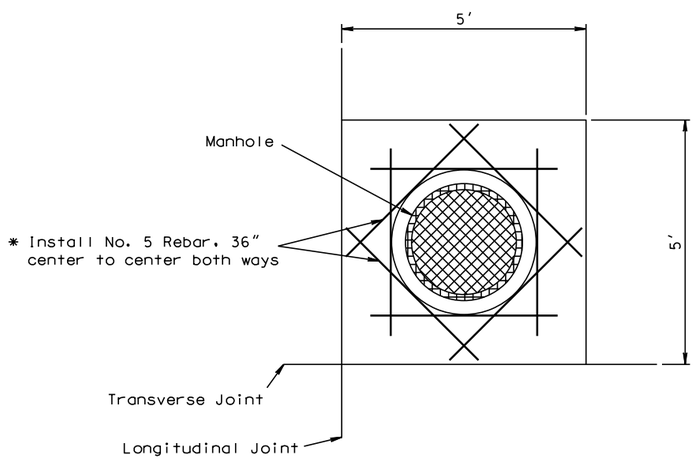

Where the utility access is offset from the longitudinal and transverse joints

REBAR LAYOUT IN PCC PAVEMENT WITH BOX-OUTS

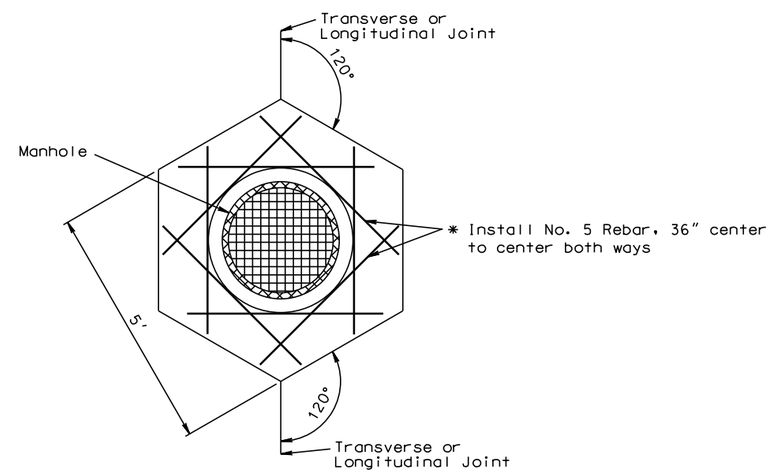

Where no Longitudinal or Transverse joints are present or at Longitudinal or Transverse joint.

* All rebar will be placed at the midpoint depth of the PCC Pavement. All cost associated with the installation of the rebar will be incidental to the contract unit price per square yard for the Nonreinforced PCC Pavement. When Box-Outs are used, the cost to construct them shall be incidental to the contract unit price per square yard for the Nonreinforced PCC Pavement

PLOT SCALE - 1:3.1
PLOTTED FROM - TRPR16032
PLOT NAME - 46
FILE - ...\LAWR020U\MANHOLE DETAIL.DGN

SPECIAL DETAILS

FOR BIDDING PURPOSES ONLY

STATE OF SOUTH DAKOTA	PROJECT	SHEET	TOTAL SHEETS
	IM 0901(162)14 & P 014A(11)8	F59	F69

Plotting Date: 01/14/2016

PCC PAVEMENT TRANSVERSE CONTRACTION JOINT SPACING

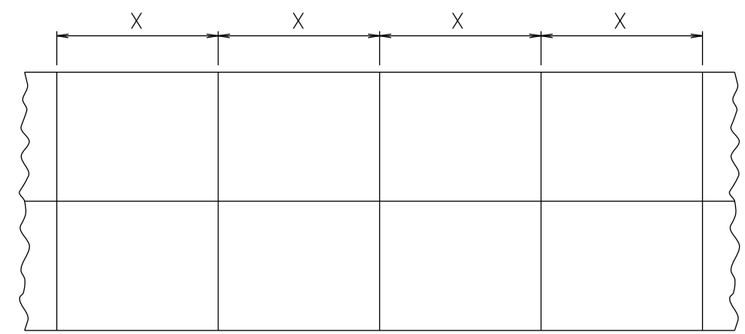

"X" is equal to 15' for PCCP thickness 9.5" or less.
See PCC Pavement Joint Layout sheets for location of 12' joint spacing on ramps.

"X" is equal to 20' for PCCP thickness 10" or thicker.

PLOT SCALE - 1:211.2
PLOTTED FROM - TRPR16032
PLOT NAME - 47
FILE - ...\SPECIAL DETAILS 020U.DGN

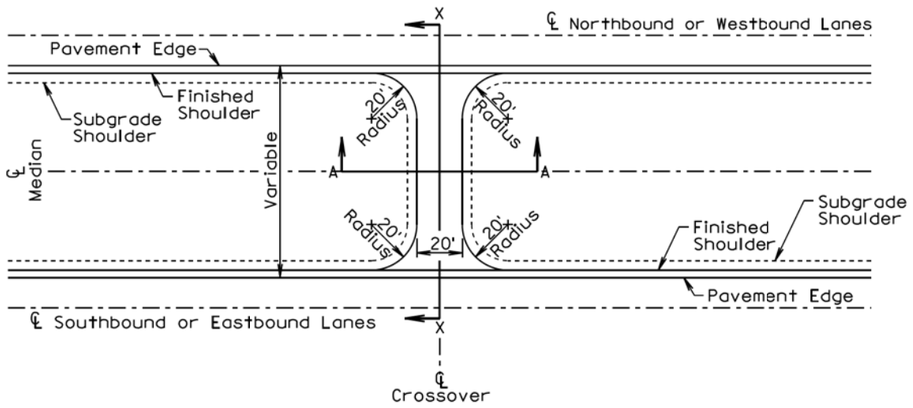

PLAN VIEW

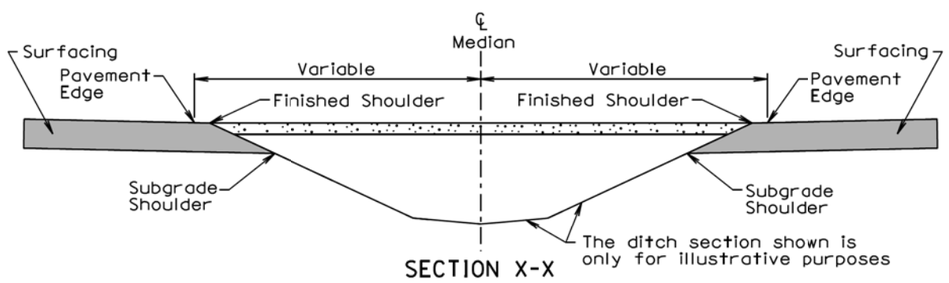

SECTION X-X

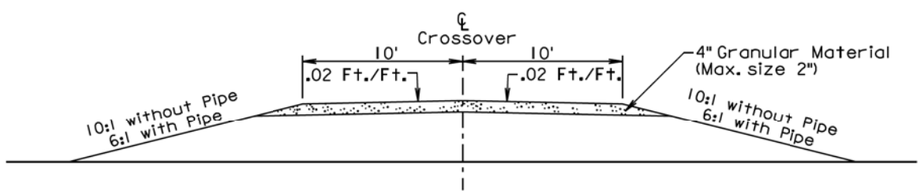

SECTION A-A

GENERAL NOTES:

The inslopes of the maintenance crossovers shall be 6:1 when there is a pipe, 10:1 without pipe, or as specified in the plans.

The quantities of materials necessary for construction of the maintenance crossovers are as provided in the plans and shall be paid for at their respective contract unit prices for the various materials used.

February 14, 2011

Published Date: 4th Qtr. 2015	SDDOT	STANDARD MAINTENANCE CROSSOVER FOR INTERSTATE HIGHWAYS	PLATE NUMBER 120.04
			Sheet 1 of 1

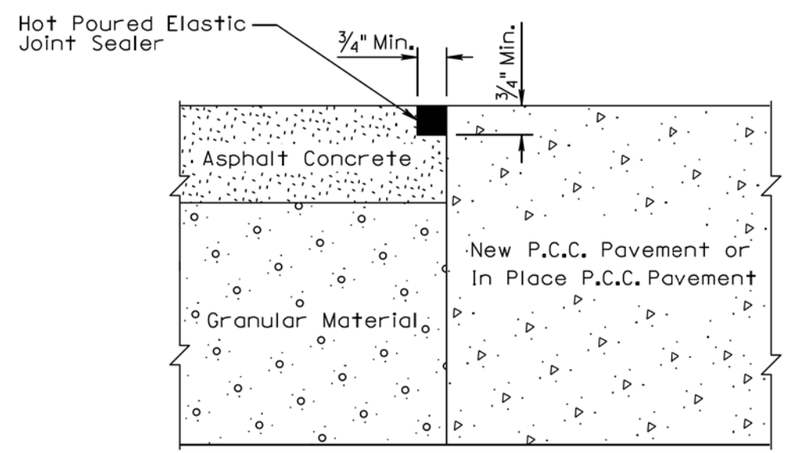

March 31, 2000

Published Date: 4th Qtr. 2015	SDDOT	ASPHALT CONCRETE SHOULDER JOINT ADJACENT TO PCC PAVEMENT	PLATE NUMBER 320.15
			Sheet 1 of 1

PLOT SCALE - 1:200
PLOT NAME - 48
FILE - ...\LAWR020U\STDPLATE 020U - 1.DGN
-PLOTTED FROM - TRPR16032

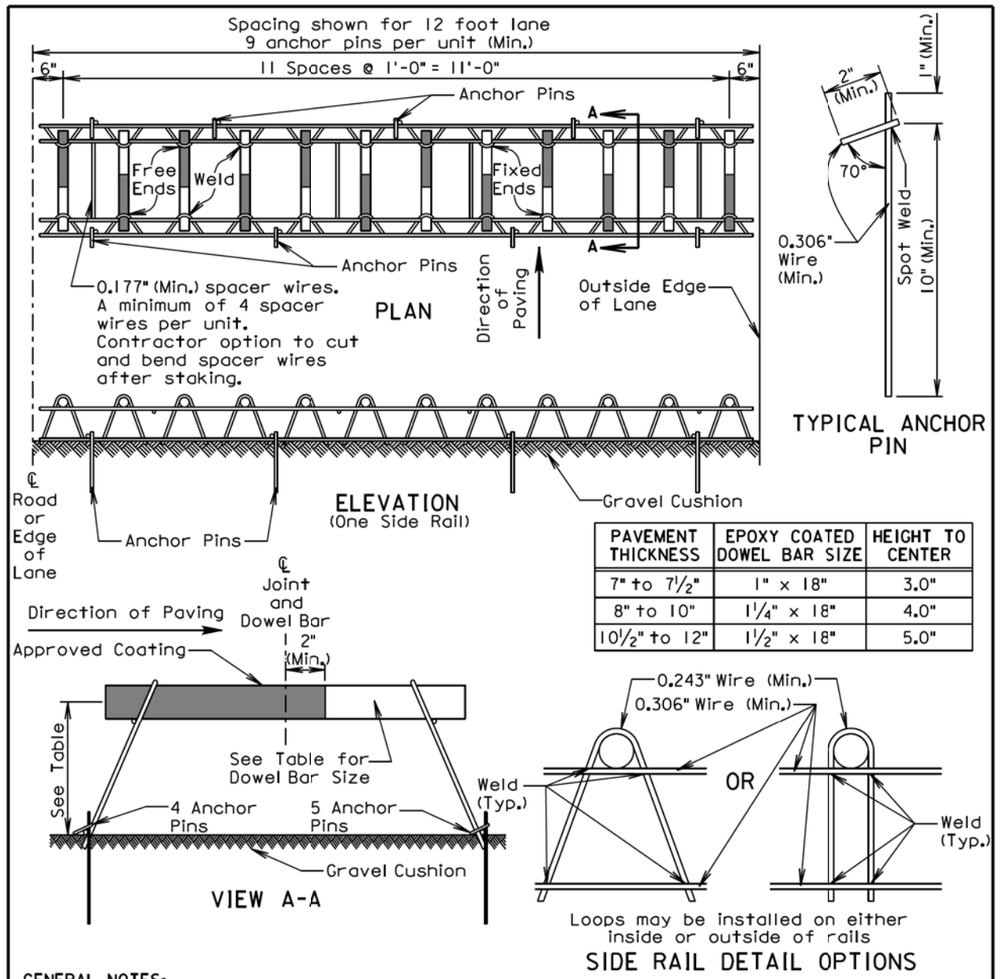

PAVEMENT THICKNESS	EPOXY COATED DOWEL BAR SIZE	HEIGHT TO CENTER
7" to 7½"	1" x 18"	3.0"
8" to 10"	1¼" x 18"	4.0"
10½" to 12"	1½" x 18"	5.0"

GENERAL NOTES:

Longitudinal joint tie bars shall be placed a minimum of 15 inches from the transverse contraction joint.

Centerline of individual dowel bars shall be parallel to top of subgrade ±1/8 inch in 18 inches and to all other dowel bars in the assembly ±1/16 inch in 18 inches.

Centerline of individual dowel bars shall be parallel to the centerline of the roadway ±1/2 inch in 18 inches.

The transverse contraction joints shall be sawed perpendicular to the centerline of the roadway and the dowel bars shall be centered on the sawed joint ±1 inch.

Supporting devices as shown on this sheet, or equivalent as approved by the Engineer, shall be used to maintain proper horizontal and vertical alignment of the dowel bars.

August 30, 2013

Published Date: 4th Qtr. 2015	SDDOT	**PCC PAVEMENT DOWEL BAR ASSEMBLY FOR TRANSVERSE CONTRACTION JOINTS 12 Bar Assembly on Granular Base Material**	*PLATE NUMBER* 380.01 — *Sheet 1 of 1*

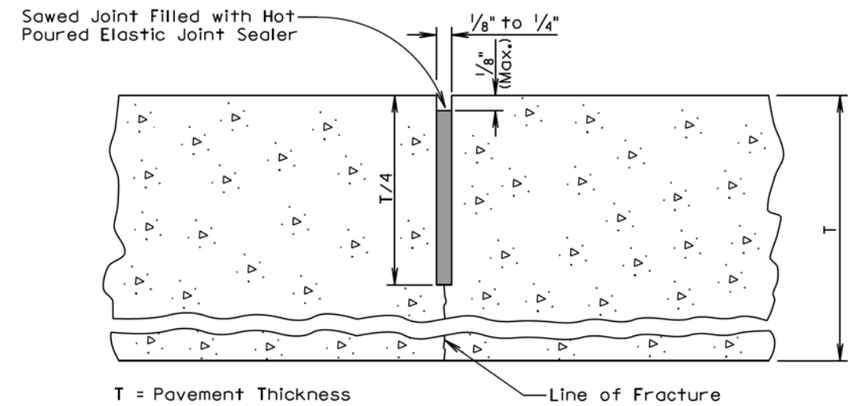

GENERAL NOTES:

If an early entrance sawcut does not develop the full transverse crack, then the saw cut to control cracking shall be a minimum of 1/4 the thickness of the pavement.

All hot poured elastic joint sealer material spilled on the surface of the concrete pavement shall be removed as soon as the material has cooled. The extent of removal of material shall be to the satisfaction of the Engineer. All costs for removal of the spilled joint sealer material shall be borne by the Contractor.

June 26, 2015

Published Date: 4th Qtr. 2015	SDDOT	**PCC PAVEMENT TRANSVERSE CONTRACTION JOINT WITH OR WITHOUT DOWEL BAR ASSEMBLY**	*PLATE NUMBER* 380.05 — *Sheet 1 of 1*

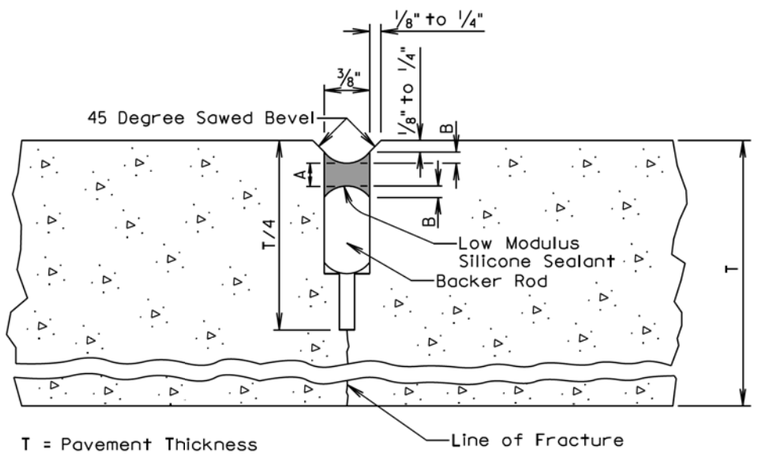

LOW MODULUS SILICONE SEALANT ALLOWABLE CONSTRUCTION TOLERANCES			
A (Min.) (In.)	A (Max.) (In.)	B (Min.) (In.)	B (Max.) (In.)
3/16	5/16	1/8	1/4

GENERAL NOTES:

The first saw cut to control cracking shall be a minimum of 1/4 the thickness of the pavement. Additional sawing for widening the saw cut to provide the width for the installation of the low modulus silicone joint sealant will be necessary.

The backer rod shall be a nonmoisture absorbing resilient material approximately 25% larger in diameter than the width of the joint to be sealed.

June 26, 2013

Published Date: 4th Qtr. 2015

SDDOT

PCC PAVEMENT BEVELED TRANSVERSE CONTRACTION JOINT WITH OR WITHOUT DOWEL BAR ASSEMBLY

PLATE NUMBER 380.06

Sheet 1 of 1

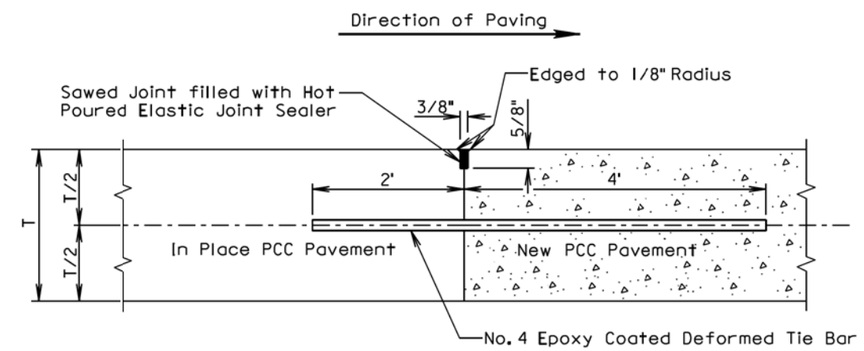

GENERAL NOTES:

No. 4 epoxy coated deformed tie bars shall be spaced 12 inches center to center and shall be a minimum of 3 inches and a maximum of 6 inches from the pavement edges.

The minimum distance between a transverse construction joint with tie bars and an adjacent transverse contraction joint shall be 5 feet.

When a transverse construction joint is made, paving will not be allowed in this area for 12 hours.

A transverse construction joint may be placed in lieu of the transverse contraction joint when shown in the plans.

The term "In Place PCC Pavement" in the above drawing indicates that the in place PCC pavement was placed on the current project.

June 26, 2013

Published Date: 4th Qtr. 2015

SDDOT

PCC PAVEMENT MID PANEL TRANSVERSE CONSTRUCTION JOINT

PLATE NUMBER 380.07

Sheet 1 of 1

PLOT SCALE - 1:200
PLOT NAME - 50
FILE -...\LAWR020U\STDPLATE 020U - 3.DGN
-PLOTTED FROM - TRPR16032

DETAIL A
TRANSVERSE CONSTRUCTION JOINT WITH TIE BARS

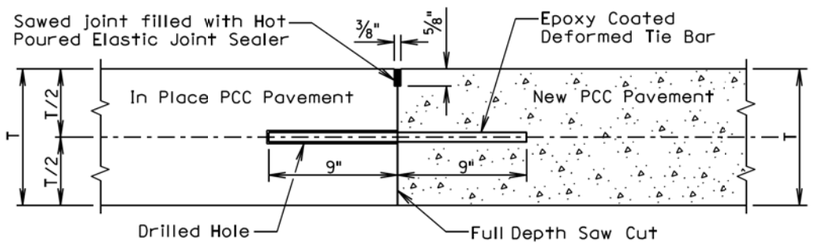

T = In Place PCC Pavement and New PCC Pavement Thickness

GENERAL NOTES:

The term "In Place PCC Pavement" in the above drawing indicates that the in place PCC pavement was placed on a previous project.

See sheet 2 of 2 of this standard plate to determine if Detail A shall be used.

The tie bars shall be embedded a minimum depth of 9 inches into the in place PCC pavement and anchored with an epoxy resin adhesive.

No. 9 epoxy coated deformed tie bars shall be used in 10 inch thickness and less PCC Pavement and No. 11 epoxy coated deformed tie bars shall be used in 10.5 inch thickness and greater PCC Pavement. The tie bar spacing shall be 18 inches center to center and shall be a minimum of 3 inches and a maximum of 9 inches from the pavement edges.

DETAIL B
TRANSVERSE CONSTRUCTION JOINT WITH DOWEL BARS

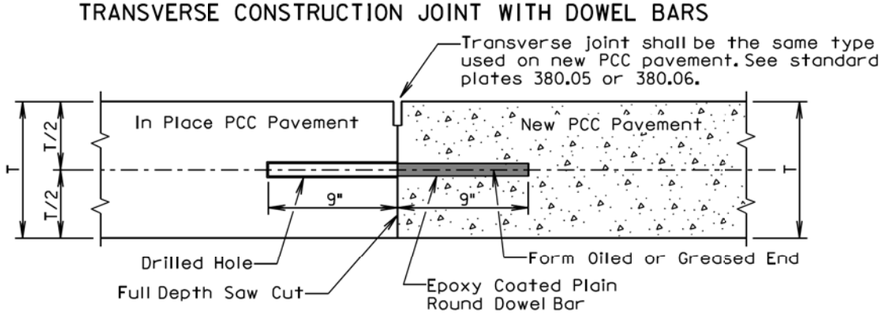

T = In Place PCC Pavement and New PCC Pavement Thickness

GENERAL NOTES:

The term "In Place PCC Pavement" in the above drawing indicates that the in place PCC pavement was placed on a previous project or current project.

See sheet 2 of 2 of this standard plate to determine if Detail B shall be used.

The plain round dowel bars shall be embedded a minimum depth of 9 inches into the in place PCC pavement and anchored with an epoxy resin adhesive.

The epoxy coated plain round dowel bar size, number, and spacing shall be the same as detailed on the corresponding dowel bar assembly standard plate (380.01, 380.02, 380.03, or 380.04). The epoxy coated plain round dowel bars shall be a minimum of 3 inches and a maximum of 6 inches from the pavement edges.

September 6, 2013

Published Date: 4th Qtr. 2015	SDDOT	PCC PAVEMENT TRANSVERSE CONSTRUCTION JOINTS WITH TIE BARS OR DOWEL BARS	PLATE NUMBER 380.08
			Sheet 1 of 2

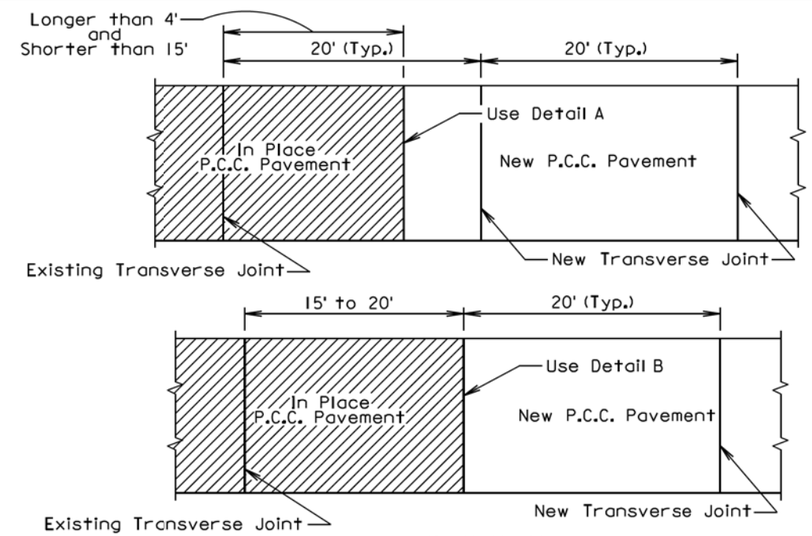

PLAN VIEW
(For typical transverse joint spacing of 20' on the current project)

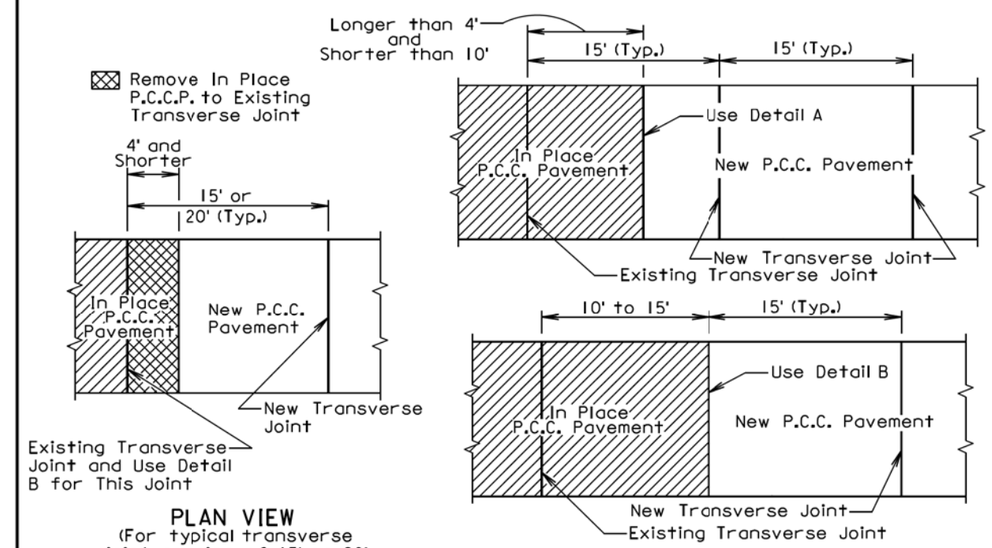

PLAN VIEW
(For typical transverse joint spacing of 15' or 20' on the current project)

PLAN VIEW
(For typical transverse joint spacing of 15' on the current project)

September 6, 2013

Published Date: 4th Qtr. 2015	SDDOT	PCC PAVEMENT TRANSVERSE CONSTRUCTION JOINTS WITH TIE BARS OR DOWEL BARS	PLATE NUMBER 380.08
			Sheet 2 of 2

PLOT SCALE - 1:200
PLOTTED FROM - TRPR16032
PLOT NAME - 51
FILE - ...\LAWR020U\STDPLATE 020U - 4.DGN

LONGITUDINAL CONSTRUCTION JOINT WITH TIE BARS
(DRILLED IN BARS)

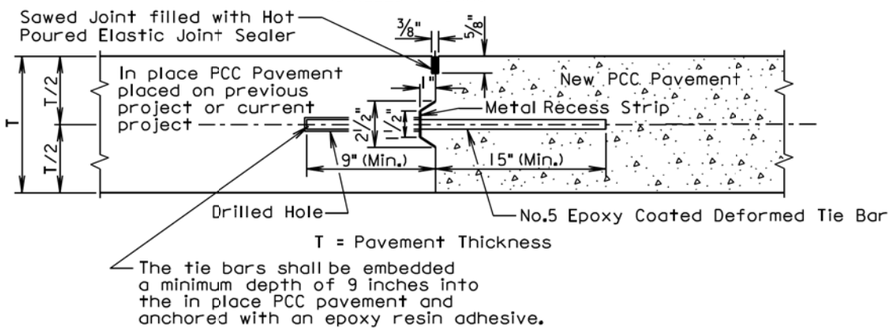

LONGITUDINAL CONSTRUCTION JOINT WITH TIE BARS
(INSERTED OR FORMED IN BARS)

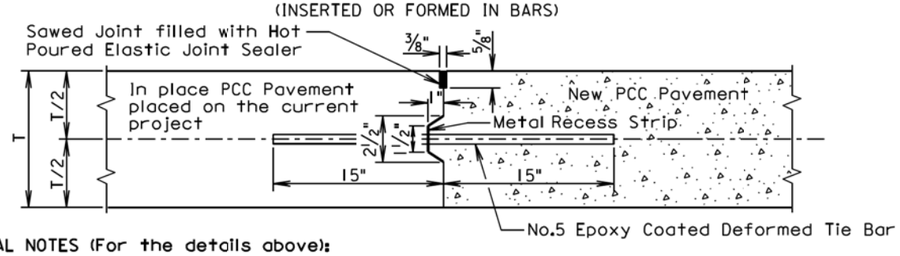

GENERAL NOTES (For the details above):

The epoxy coated deformed tie bars shall be spaced in accordance with the following tables:

Tie Bar Spacing 48" Maximum	
Transverse Contraction Joint Spacing	Number of Tie Bars
6.5' to 10'	2
10.5' to 14'	3
14.5' to 18'	4
18.5' to 22'	5

Tie Bar Spacing 30" Maximum	
Transverse Contraction Joint Spacing	Number of Tie Bars
5' to 7'	2
7.5' to 9.5'	3
10' to 12'	4
12.5' to 14.5'	5
15' to 17'	6
17.5' to 19.5'	7
20' to 22'	8

The tie bars shall be placed a minimum of 15 inches from transverse contraction joints.

The required number of tie bars as shown in the table shall be uniformly spaced within each panel. The uniformly spaced tie bars shall be spaced a maximum of 48 inches center to center for a female keyway and shall be spaced a maximum of 30 inches center to center for a vertical face and male keyway. The maximum tie bar spacing shall apply to tie bars within each panel.

The keyway illustrated in the above details depict a female keyway.

The keyway is optional and is not required. When concrete pavement is formed and a keyway is provided, a metal recess strip shall be used. When concrete pavement is slip formed, a metal recess strip is not required.

August 31, 2013

Published Date: 4th Qtr. 2015	SDDOT	PCC PAVEMENT LONGITUDINAL JOINTS WITH TIE BARS	PLATE NUMBER 380.10
			Sheet 1 of 2

SAWED LONGITUDINAL JOINT WITH TIE BARS
(POURED MONOLITHICALLY)

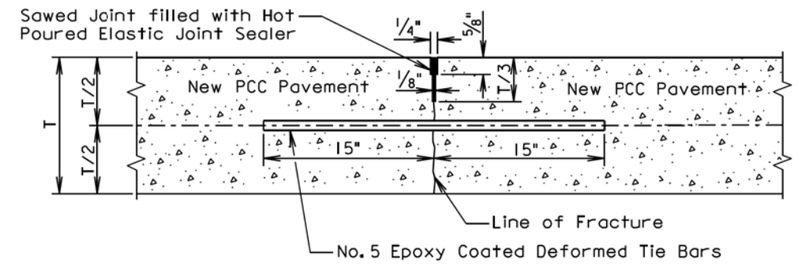

T = Pavement Thickness

GENERAL NOTES (For the detail above):

The epoxy coated deformed tie bars shall be spaced in accordance with the following table:

Tie Bar Spacing 48" Maximum	
Transverse Contraction Joint Spacing	Number of Tie Bars
6.5' to 10'	2
10.5' to 14'	3
14.5' to 18'	4
18.5' to 22'	5

The tie bars shall be placed a minimum of 15 inches from the transverse contraction joints.

The required number of tie bars as shown in the table shall be uniformly spaced within each panel with a maximum space of 48 inches center to center. The maximum tie bar spacing shall apply to tie bars within each panel.

The first saw cut to control cracking shall be a minimum of 1/3 the thickness of the pavement. Additional sawing for widening the saw cut to provide the width for the installation of the hot poured elastic joint sealer is necessary.

August 31, 2013

Published Date: 4th Qtr. 2015	SDDOT	PCC PAVEMENT LONGITUDINAL JOINTS WITH TIE BARS	PLATE NUMBER 380.10
			Sheet 2 of 2

PLOT SCALE - 1:200
PLOT NAME - 52
FILE - ...\LAWR020U\STDPLATE 020U - 5.DGN
PLOTTED FROM - TRPR16032

LONGITUDINAL CONSTRUCTION JOINT WITH TIE BARS
(Individually Formed)

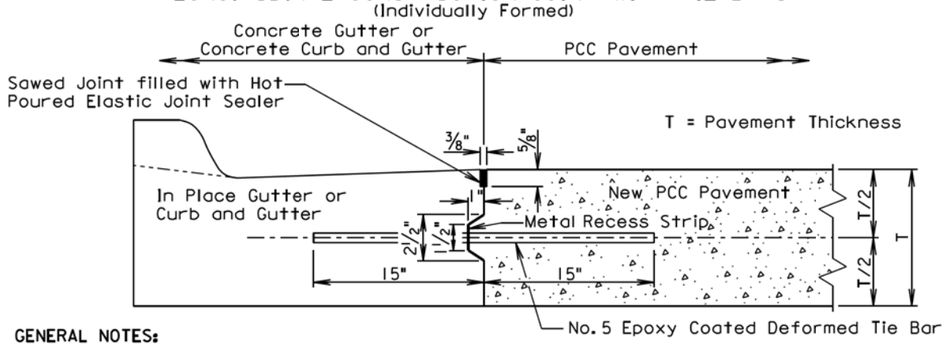

GENERAL NOTES:

No. 5 epoxy coated deformed tie bars shall be spaced 48 inches center to center. The keyway shown above is a female keyway.

The tie bars shall be placed a minimum of 15 inches from existing transverse contraction joints.

The keyway is optional and is not required. When concrete pavement is formed and a keyway is provided, a metal recess strip shall be used. When concrete pavement is slip formed, a metal recess strip is not required.

The transverse contraction joints in the concrete gutter or concrete curb and gutter shall be placed at each mainline PCC pavement transverse contraction joint. The transverse contraction joints in the concrete gutter or the concrete curb and gutter shall be 1 1/2 inches deep if formed in fresh concrete using a suitable grooving tool. If a saw is used to cut the transverse contraction joints, then the depth of the joint shall be at least 1/4 the thickness of the concrete gutter or concrete curb and gutter.

The term "In Place Gutter or Curb and Gutter" in the above drawing indicates that the in place concrete gutter and concrete curb and gutter was placed on the current project.

POURED MONOLITHICALLY

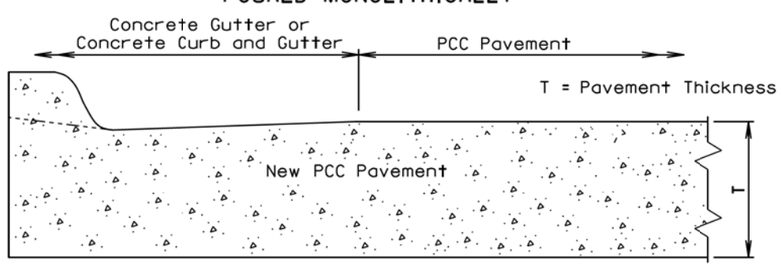

GENERAL NOTES:

The mainline curb and gutter may be placed monolithically with the PCC pavement if the mainline lane width is less than or equal to 12 feet. If this method of construction is used, the tie bars and the sawed joint between the curb and gutter and the PCC pavement shall be eliminated.

The gutter or curb and gutter shall be sawed transversely at each mainline transverse contraction joint. The transverse contraction joints in the gutter or curb and gutter shall be sawed and sealed same as the transverse contraction joints in the PCC pavement.

The slope of the gutter shall be the slope designated for the type of gutter or curb and gutter to be constructed. The bottom slope of the gutter or curb and gutter shall be constructed at the same slope as the mainline concrete pavement.

June 26, 2013

Published Date: 4th Qtr. 2015	SDDOT	PCC PAVEMENT LONGITUDINAL CONSTRUCTION JOINTS WITH CONCRETE GUTTER OR CONCRETE CURB AND GUTTER	PLATE NUMBER 380.11
			Sheet 1 of 1

LONGITUDINAL CONSTRUCTION JOINT WITHOUT TIE BARS

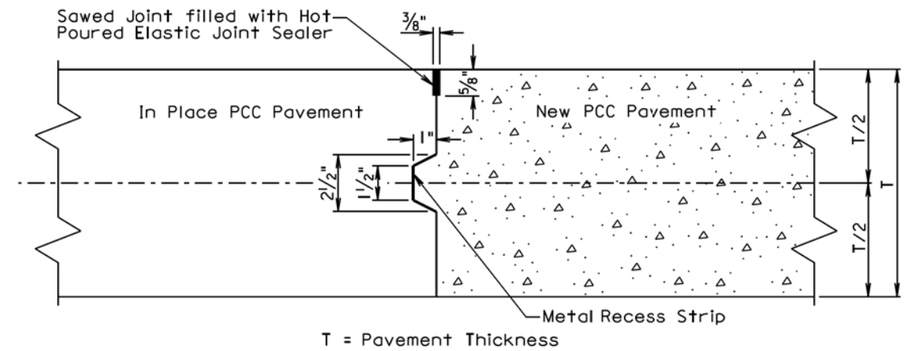

GENERAL NOTES:

When concrete pavement is formed and a keyway is provided, a metal recess strip shall be used. When concrete pavement is slip formed, a metal recess strip is not required.

The term "In Place PCC Pavement" in the above drawing indicates that the in place PCC pavement was placed on the current project.

LONGITUDINAL CONSTRUCTION JOINT WITHOUT TIE BARS

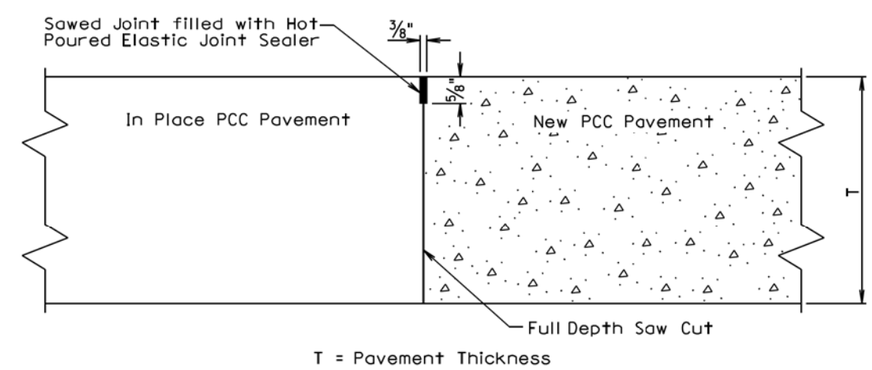

GENERAL NOTE:

The term "In Place PCC Pavement" in the above drawing indicates that the in place PCC pavement was placed on a previous project.

September 14, 2001

Published Date: 4th Qtr. 2015	SDDOT	PCC PAVEMENT LONGITUDINAL JOINTS WITHOUT TIE BARS	PLATE NUMBER 380.12
			Sheet 1 of 2

PLOT SCALE - 1:200
PLOT NAME - 53
FILE - ...\LAWR020U\STDPLATE 020U - 6.DGN
PLOTTED FROM - TRPR16032

SAWED LONGITUDINAL JOINT WITHOUT TIE BARS

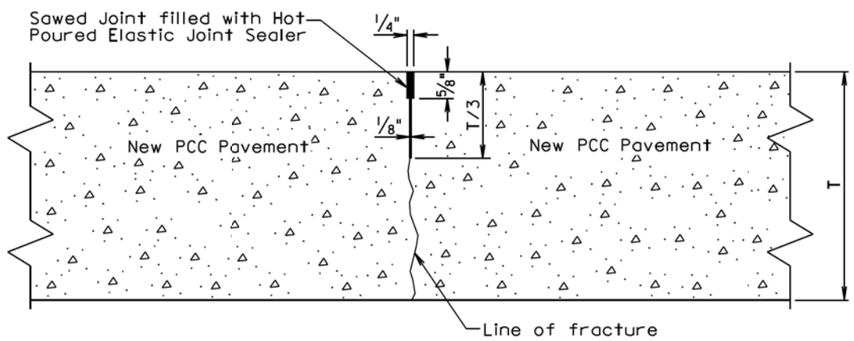

T = Pavement Thickness

GENERAL NOTE:

The first saw cut to control cracking shall be a minimum of 1/3 the thickness of the pavement. Additional sawing for widening the saw cut to provide the width for the installation of the hot poured elastic joint sealer will be necessary.

September 14, 2001

Published Date: 4th Qtr. 2015	SDDOT	PCC PAVEMENT LONGITUDINAL JOINTS WITHOUT TIE BARS	PLATE NUMBER 380.12 Sheet 2 of 2

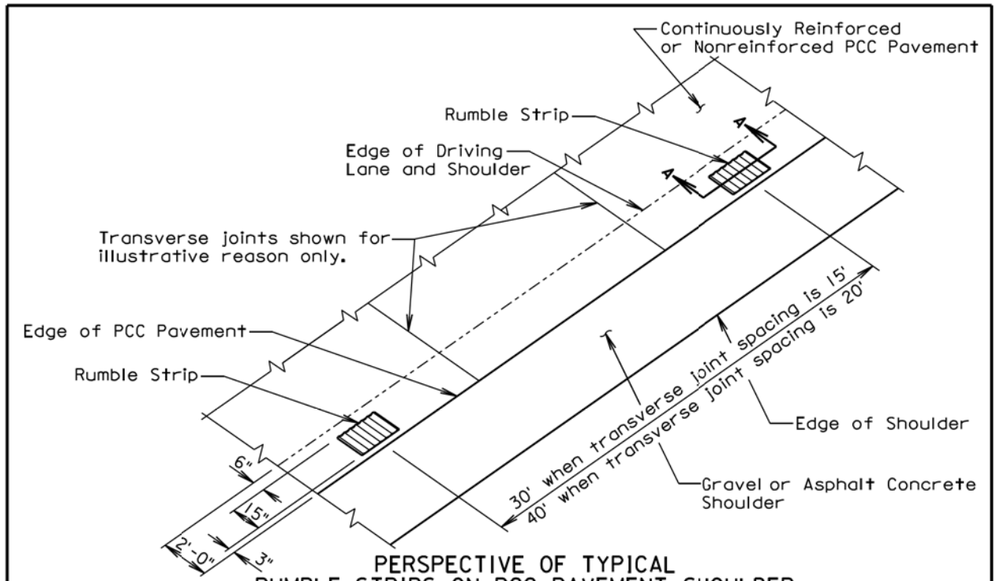

PERSPECTIVE OF TYPICAL
RUMBLE STRIPS ON PCC PAVEMENT SHOULDER
ADJACENT TO GRAVEL OR ASPHALT CONCRETE SHOULDER

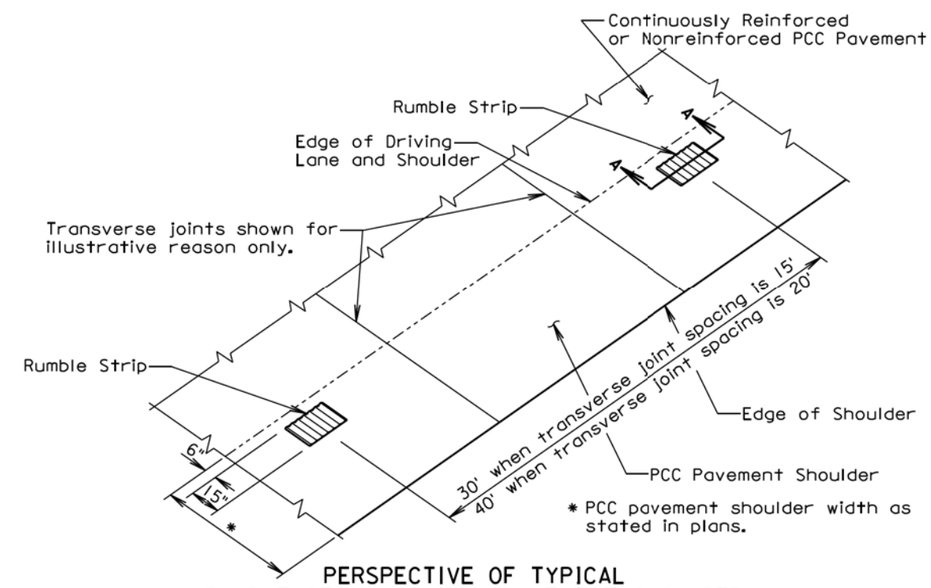

PERSPECTIVE OF TYPICAL
RUMBLE STRIPS ON PCC PAVEMENT SHOULDER

August 31, 2013

Published Date: 4th Qtr. 2015	SDDOT	RUMBLE STRIP ON PCC PAVEMENT SHOULDER	PLATE NUMBER 380.15 Sheet 1 of 2

PLOT SCALE - 1:200
PLOTTED FROM - TRPR16032
PLOT NAME - 54
FILE - ...\LAWR020U\STDPLATE 020U - 7.DGN

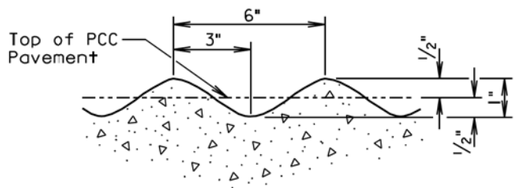

DETAIL B

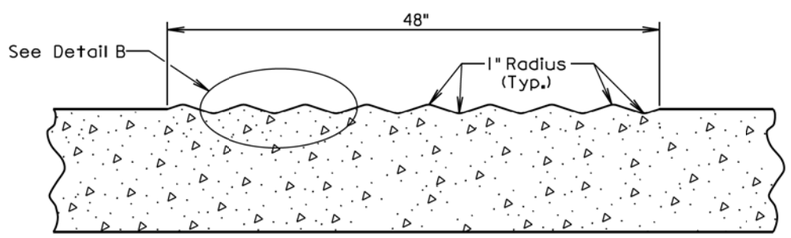

SECTION A-A

GENERAL NOTES:

The rumble strips shall be evenly spaced and shall not coincide with any transverse contraction joints.

The rumble strips shall NOT be placed along areas adjacent to entrance ramps, exit ramps, and gore areas.

Payment for constructing the PCC Pavement Rumble Strips shall be incidental to the contract unit price per square yard for the corresponding PCC Pavement bid item.

August 31, 2013

Published Date: 4th Qtr. 2015

SDDOT

RUMBLE STRIP ON PCC PAVEMENT SHOULDER

PLATE NUMBER 380.15

Sheet 2 of 2

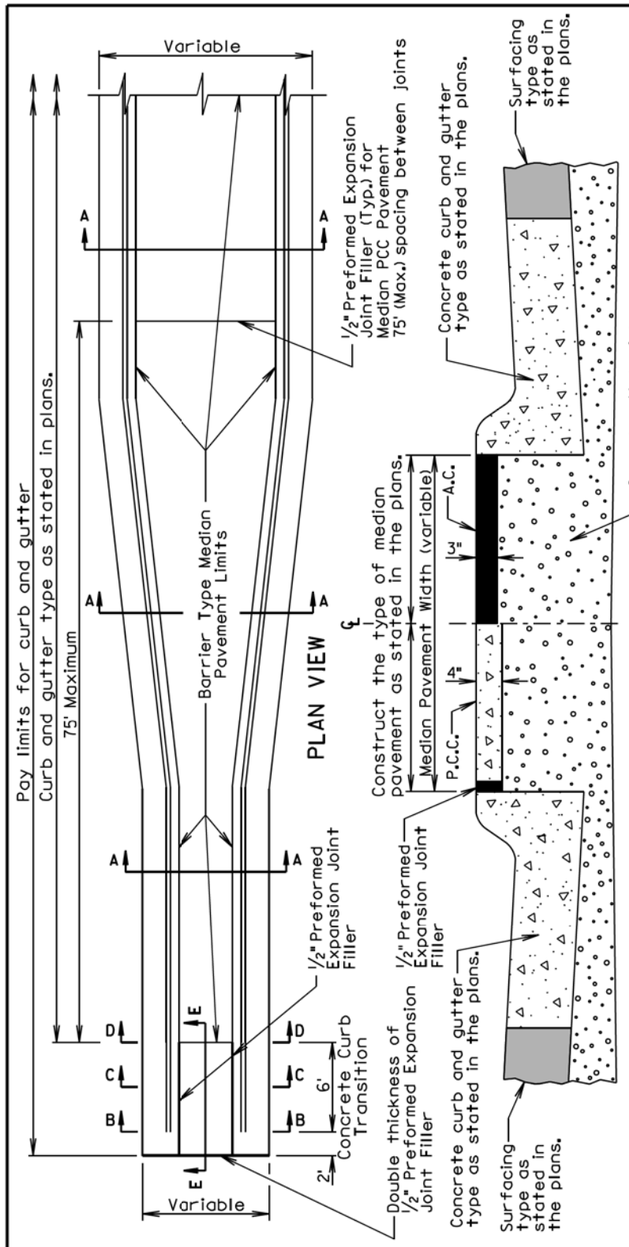

SECTION A-A

GENERAL NOTES:

Necessary excavation for construction of barrier type PCC and asphalt concrete median pavements and excavation for granular material will be measured and paid for as "Unclassified Excavation".

Concrete for barrier type median PCC pavement shall comply with the requirements of the Specifications for Class M6 Concrete. One-half inch expansion joint filler shall be placed transversely in the median PCC pavement at a maximum spacing of 75'. Where median PCC pavement is wider than 8', a longitudinal joint shall be sawed or grooved along the centerline of the median PCC pavement. Where the median PCC pavement is 4' or narrower and at width transitions, contraction joints shall be sawed or grooved at spacings as approved by the Engineer. All other contraction joints shall be sawed in square sections. All joints shall be sawed or grooved to a depth of 1/3 the thickness of the median PCC pavement.

All costs for labor, materials, and incidentals necessary for construction of the barrier type median pavement shall be incidental to the contract unit price per square yard for "Barrier Type Median PCC Pavement" or "Barrier Type Median Asphalt Concrete Pavement".

All costs for labor, materials, and incidentals necessary for construction of the 6' concrete curb transition (See Sections B-B, C-C, and D-D) and the adjacent 8" thick concrete (See Section E-E) shall be incidental to the contract unit price per foot for the corresponding curb and gutter bid item.

Granular material shall be paid for at the contract unit price for the respective granular material bid item.

June 26, 2015

Published Date: 4th Qtr. 2015

SDDOT

BARRIER TYPE MEDIAN PAVEMENT

PLATE NUMBER 380.22

Sheet 1 of 2

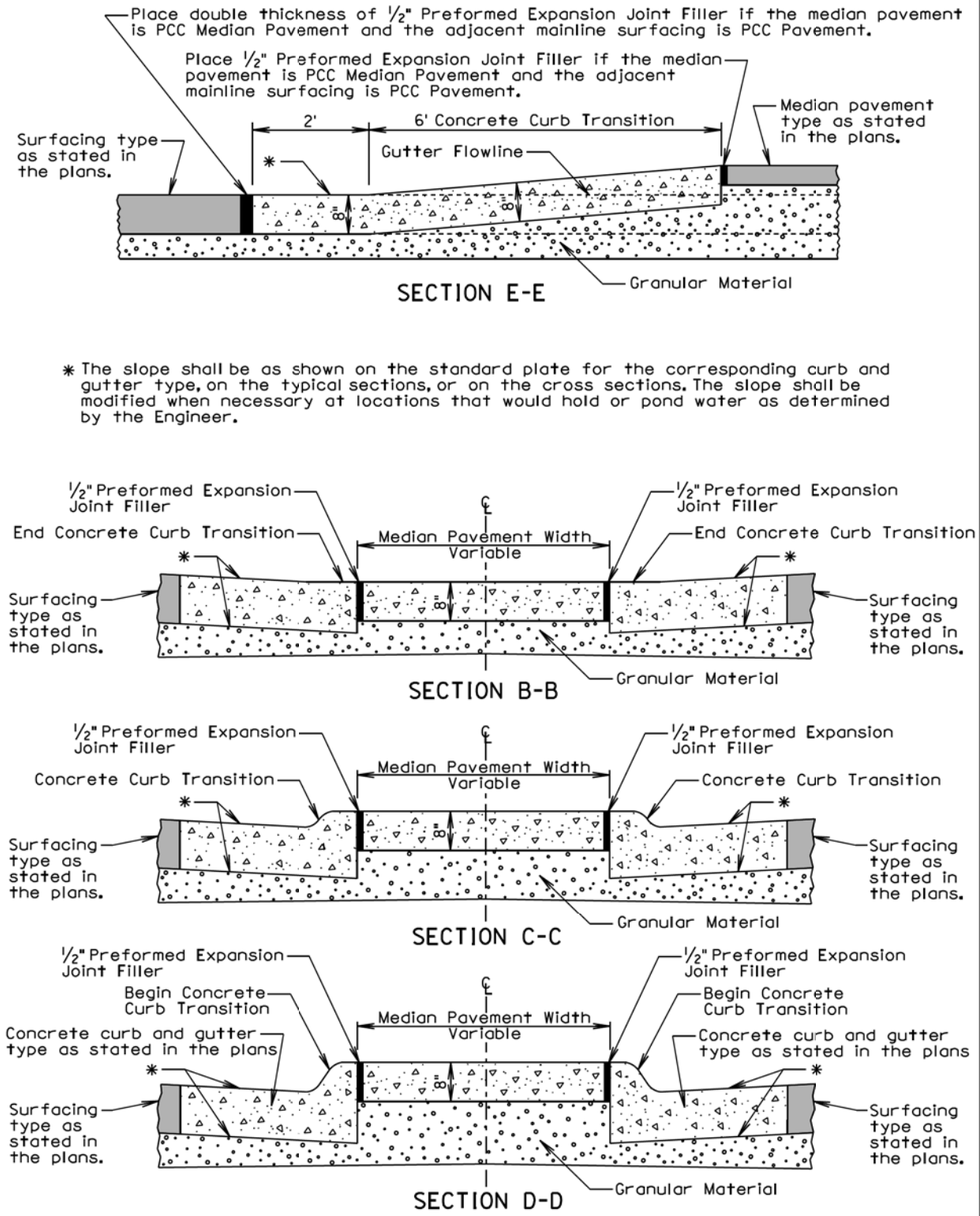

June 26, 2015

Published Date: 4th Qtr. 2015	SDDOT	BARRIER TYPE MEDIAN PAVEMENT	PLATE NUMBER 380.22
			Sheet 2 of 2

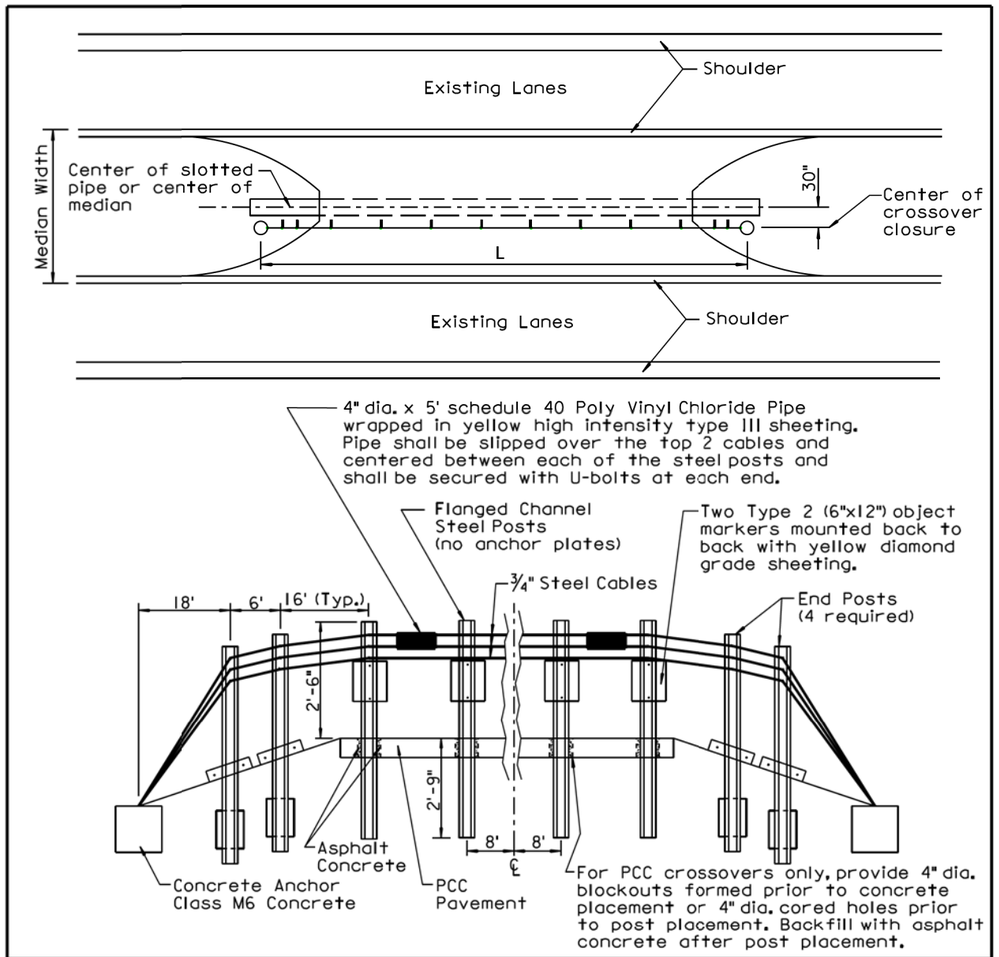

MEDIAN WIDTH	NO. OF PVC PIPES	NO. OF U-BOLTS	NO. OF FLANGED CHANNEL STEEL POSTS	NO. OF TYPE 2 OBJECT MARKERS	NO. OF BLOCKOUTS OR CORED HOLES (PCC CROSSOVERS)	PAY LENGTH L
60' and 66'	9	18	10	20	10	224'
80'	7	14	8	16	8	192'

GENERAL NOTES:

All costs for materials, backfilling holes with asphalt concrete, labor, equipment, and incidentals necessary to construct the crossover closure shall be incidental to the contract unit price per Ft for "Crossover Closure". The costs of coring holes or providing blockouts in the surfacing shall be incidental to the surfacing bid item(s).

The Crossover Closure shall be constructed using 3 cable guardrail hardware. For specific details of the 3 cable guardrail hardware and installation, see Standard Plate 629.01 sheets 1 through 6.

March 31, 2000

Published Date: 4th Qtr. 2015	SDDOT	CROSSOVER CLOSURE	PLATE NUMBER 629.40
			Sheet 1 of 1

PLOT SCALE - 1:200
PLOT NAME - 56
FILE - ...\LAWR020U\STDPLATE 020U - 9.DGN
PLOTTED FROM - TRPR16032

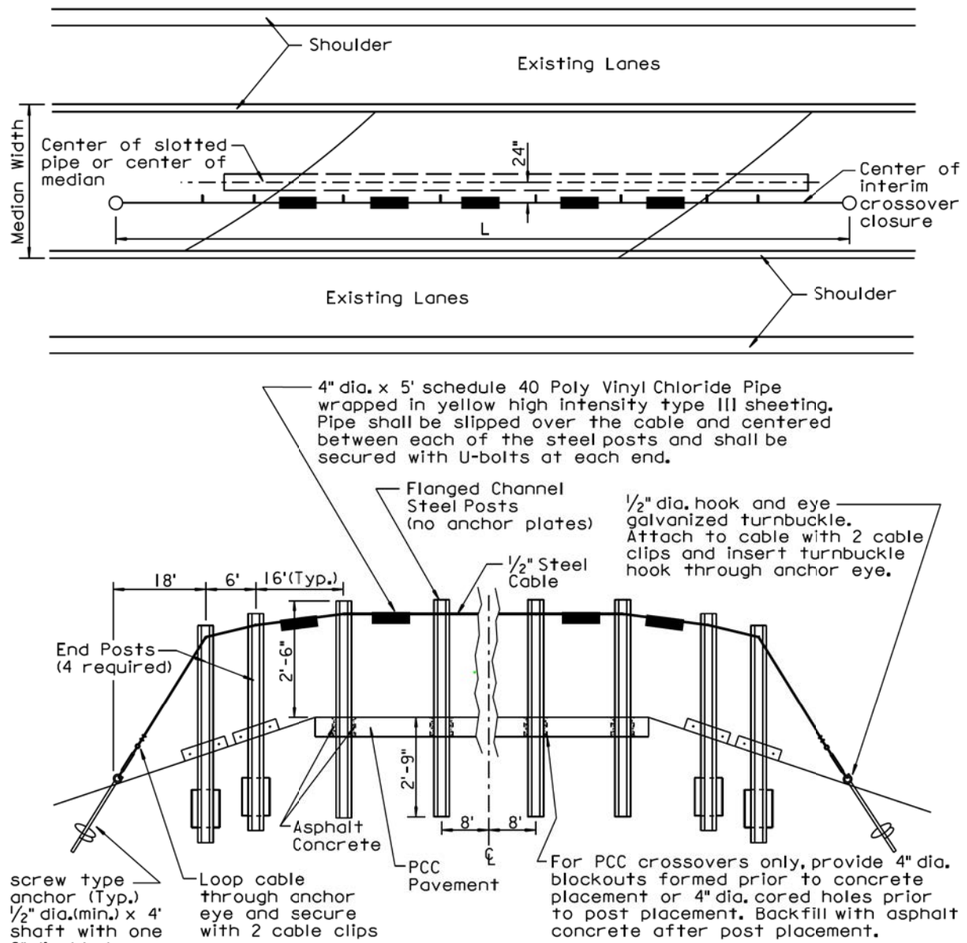

MEDIAN WIDTH	NO. OF PVC PIPES	NO. OF U-BOLTS	NO. OF FLANGED CHANNEL STEEL POSTS	PAY LENGTH L
60'	5	10	4	128'

GENERAL NOTES:

All costs for materials, backfilling holes with asphalt concrete, labor, equipment, and incidentals necessary to construct the interim crossover closure shall be incidental to the contract unit price per Ft for "Interim Crossover Closure". The costs of coring holes or providing blockouts in the surfacing shall be incidental to the surfacing bid item(s).

The Interim Crossover Closure shall be constructed using 3 cable guardrail posts with hook bolts. For specific details of the 3 cable guardrail hardware and installation, see Standard Plate 629.01 sheets 1 through 6.

March 31, 2000

Published Date: 4th Qtr. 2015 | SDDOT | **INTERIM CROSSOVER CLOSURE** | PLATE NUMBER 629.41 | Sheet 1 of 1

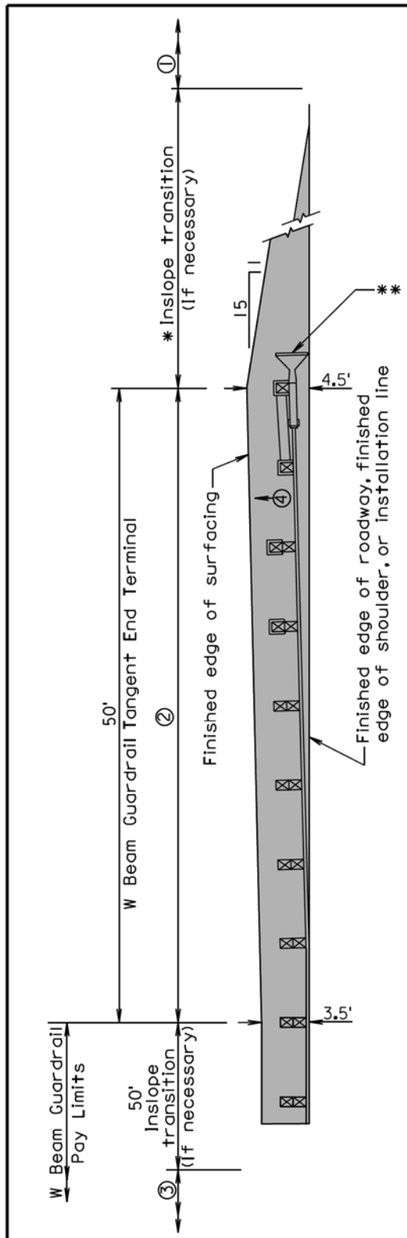

PLAN

2" Asphalt concrete surfacing with variable thickness granular material

① Same inslope as mainline inslope
② 4:1 inslope
③ 2:1 inslope or flatter, or inslope as specified in plans
④ Same slope as roadway cross slope

* The length of inslope transition varies with the amount of change between inslopes. The length of the transition shall change 100' for every whole number change in the inslope. For Example: If the inslope changes from a 5:1 to a 4:1 the length of the inslope transition would be 100'. If the inslope changes from a 6:1 to a 4:1 the length of the inslope transition would be 200'.

GENERAL NOTES:

The W beam guardrail tangent end terminal shall be installed according to the manufacturer's installation instructions.

**An adhesive object marker shall be placed on the end section buffer or extruder after placement of the end section buffer or extruder. The adhesive object marker dimensions may be 16" x 16" or other variation due to the shape of the end section buffer or extruder. A minimum of 256 square inches of object marker reflective sheeting area is required. The reflective sheeting shall be fluorescent yellow super or very high intensity. All costs for furnishing and installing the adhesive object marker shall be incidental to various contract items.

Asphalt concrete shall be the same type used elsewhere on the project or shall be as specified in the plans. If asphalt concrete is not specified in the plans, the asphalt concrete shall conform to the Specifications for "Asphalt Concrete Composite."

Granular material shall be the same type used elsewhere on the project or shall be as specified in the plans. If granular material type is not specified in the plans, the material shall conform to the Specifications for "Base Course". The granular material shall be placed the same thickness as the mainline surfacing or as specified in the plans.

December 16, 2014

Published Date: 4th Qtr. 2015 | SDDOT | **EMBANKMENT AND SURFACING FOR W BEAM GUARDRAIL TANGENT END TERMINAL** | PLATE NUMBER 630.46 | Sheet 1 of 1