Section L: Signal & Lighting Plans

FOR BIDDING PURPOSES ONLY

STATE OF SOUTH DAKOTA	PROJECT	SHEET	TOTAL SHEETS
	IM 0901(162)14 P 014A(11)8	L1	L63

Plotting Date: 8/28/2015
Revised Date: 8/28/2015 LCL

REGISTERED PROFESSIONAL ENGINEER
REG. NO. 9435
LYLE E. DeVRIES
SOUTH DAKOTA
1/8/16
Signal Responsibility

REGISTERED PROFESSIONAL ENGINEER
REG. NO. 11450
SANDRA C. SCANLON
SOUTH DAKOTA
1/6/16
Lighting Responsibility

INDEX OF SHEETS

L1	General Layout W/Index
L2-L5	Estimate of Quantities and General Notes
L6-L11	Table of Conduit and Cable Quantities
L12-L18	Existing and Proposed Signal Layouts
L19-L37	Conduit Layouts
L38-L49	Wiring Diagrams
L50-L52	Signal Timing
L53-L57	Drop Arm Gate Details
L58-L63	Standard Plates

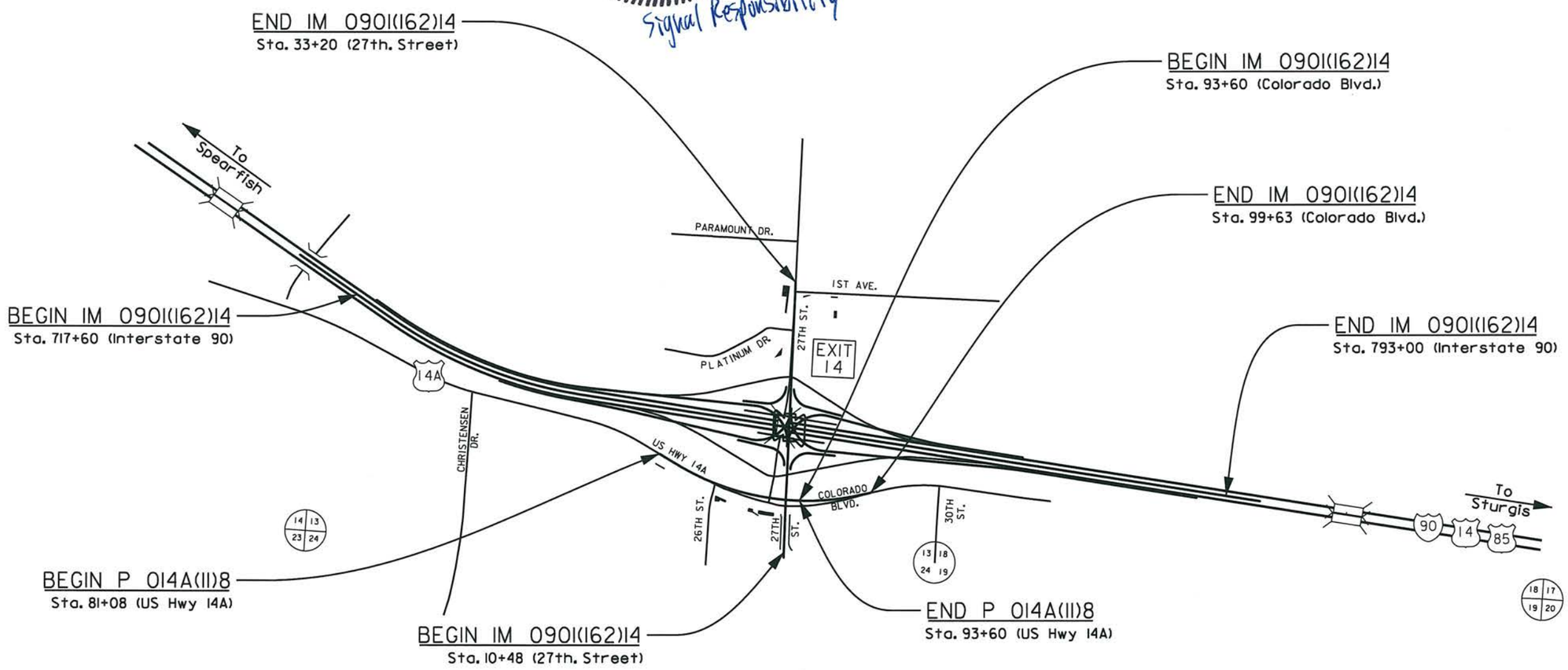

PLOT SCALE - 1:1000
PLOT NAME - 1
PLOTTED FROM - SOELLNER
FILE - ...\SECTION\L\TITLEL.DGN

SECTION L ESTIMATE OF QUANTITIES

FOR BIDDING PURPOSES ONLY

STATE OF SOUTH DAKOTA	PROJECT	SHEET	TOTAL SHEETS
	IM 0901 (162)14 / P014A (11)	L2	L63

Revised Date: 9/21/2015 LCL

PROJECT – IM 0901(162)14

BID ITEM NUMBER	ITEM	QUANTITY	UNIT
110E1510	Remove Luminaire Pole	1	Each
110E1520	Remove Signal Equipment	Lump Sum	LS
110E1530	Remove Signal Pole Footing	15	Each
110E1540	Remove Luminaire Pole Footing	1	Each
110E5100	Salvage Luminaire Pole	15	Each
110E5110	Salvage Signal Equipment	Lump Sum	LS
632E5000	Single Beam Sign Bridge	1	Each
635E0050	Breakaway Base Luminaire Pole with Arm, 50' Mounting Height	34	Each
635E2000	Pedestal Signal Pole	4	Each
635E2125	Signal Pole with 25' Mast Arm and Luminaire Arm	1	Each
635E2145	Signal Pole with 45' Mast Arm and Luminaire Arm	1	Each
635E2155	Signal Pole with 55' Mast Arm and Luminaire Arm	1	Each
635E2160	Signal Pole with 60' Mast Arm and Luminaire Arm	2	Each
635E2165	Signal Pole with 65' Mast Arm and Luminaire Arm	2	Each
635E3340	Roadway Luminaire, 400 Watt with Photoelectric Cell	44	Each
635E3530	Under Bridge Deck Luminaire, 250 Watt	14	Each
635E4030	3 Section Vehicle Signal Head	15	Each
635E4040	4 Section Vehicle Signal Head	15	Each
635E5020	2' Diameter Footing	298	Ft
635E5030	3' Diameter Footing	89	Ft
635E5100	Controller Cabinet Footing	1	Each
635E5301	Type 1 Electrical Junction Box	41	Each
635E5302	Type 2 Electrical Junction Box	18	Each
635E5303	Type 3 Electrical Junction Box	9	Each
635E5304	Type 4 Electrical Junction Box	3	Each
635E5360	Surface Mounted Junction Box	11	Each
635E5400	Electrical Service Cabinet	2	Each
635E5430	Traffic Signal Controller	3	Each
635E5440	Master Controller	1	Each
635E5500	Meter Socket	2	Each
635E5520	Video Detection System	3	Each
635E5560	Emergency Vehicle Preemption Unit	3	Each
635E5570	Optical Detector	11	Each
635E5900	Pedestrian Push Button	16	Each
635E5910	Pedestrian Push Button Pole	12	Each
635E5922	Pedestrian Signal Head with Countdown Timer	16	Each
635E5930	Pedestrian Crossing Sign	16	Each
635E7530	Relocate Signal Equipment	Lump Sum	LS
635E8020	2" Rigid Galvanized Steel Conduit	1720	Ft
635E8030	3" Rigid Galvanized Steel Conduit	1530	Ft
635E8120	2" Rigid Conduit, Schedule 40	11200	Ft
635E8130	3" Rigid Conduit, Schedule 40	1780	Ft
635E8140	4" Rigid Conduit, Schedule 40	70	Ft
635E8220	2" Rigid Conduit, Schedule 80	1720	Ft
635E8230	3" Rigid Conduit, Schedule 80	1530	Ft

PROJECT – IM 0901(162)14 (Continued)

BID ITEM NUMBER	ITEM	QUANTITY	UNIT
635E9012	1/C #2 AWG Copper Wire	18550	Ft
635E9014	1/C #4 AWG Copper Wire	20940	Ft
635E9016	1/C #6 AWG Copper Wire	8920	Ft
635E9020	1/C #10 AWG Copper Wire	31730	Ft
635E9202	2/C #12 AWG IMSA Copper Cable, K1	100	Ft
635E9204	4/C #12 AWG IMSA Copper Cable, K1	3350	Ft
635E9207	7/C #12 AWG IMSA Copper Cable, K1	2700	Ft
635E9212	12/C #12 AWG IMSA Copper Cable, K1	690	Ft
635E9219	19/C #12 AWG IMSA Copper Cable, K1	870	Ft
635E9224	24/C #12 AWG IMSA Copper Cable, K1	1360	Ft
635E9710	2/C #10 AWG Copper Pole and Bracket Cable	3140	Ft
635E9800	Preemption Cable	2570	Ft
635E9900	Video Cable	1720	Ft
635E9912	12 Strand Fiber Optic Cable	2120	Ft

PROJECT – P 014A(11)8

BID ITEM NUMBER	ITEM	QUANTITY	UNIT
110E1540	Remove Luminaire Pole Footing	4	Each
635E0050	Breakaway Base Luminaire Pole with Arm, 50' Mounting Height	4	Each
635E3340	Roadway Luminaire, 400 Watt with Photoelectric Cell	4	Each
635E5020	2' Diameter Footing	128	Ft
635E5301	Type 1 Electrical Junction Box	5	Each
635E5302	Type 2 Electrical Junction Box	4	Each
635E5400	Electrical Service Cabinet	2	Each
635E5500	Meter Socket	2	Each
635E7500	Remove and Reset Luminaire Pole	4	Each
635E8020	2" Rigid Galvanized Steel Conduit	820	Ft
635E8030	3" Rigid Galvanized Steel Conduit	530	Ft
635E8120	2" Rigid Conduit, Schedule 40	850	Ft
635E8220	2" Rigid Conduit, Schedule 80	820	Ft
635E8230	3" Rigid Conduit, Schedule 80	530	Ft
635E9012	1/C #2 AWG Copper Wire	3140	Ft
635E9014	1/C #4 AWG Copper Wire	8130	Ft
635E9016	1/C #6 AWG Copper Wire	1570	Ft
635E9020	1/C #10 AWG Copper Wire	7850	Ft
635E9710	2/C #10 AWG Copper Pole and Bracket Cable	600	Ft

REGISTERED PROFESSIONAL ENGINEER
REG. NO. 9435
LYLE E. DeVRIES
SOUTH DAKOTA
1/6/16

REGISTERED PROFESSIONAL ENGINEER
REG. NO. 11450
SANDRA C. SCANLON
SOUTH DAKOTA
1/6/16
Lighting Responsibility

SUPPLYING AS BUILT PLANS

If the traffic signal systems or roadway lighting systems are constructed differently than what is stated in the plans, the Contractor shall supply as built plans to the Engineer and a copy shall be sent to the Traffic Design Engineer. The as built plans may include conduit layouts, wiring diagrams, or other drawings depicting the changes from the original plans.

SHOP DRAWING AND CATALOG CUTS SUBMITTALS

The Contractor shall submit shop drawings and catalog cuts in accordance with Section 985 of the Specifications.

Adobe PDF submittals shall be sent to the following email addresses:

John.Less@state.sd.us
Pete.Longman@state.sd.us

ON-SITE INSPECTION

An on-site inspection of the traffic signals shall be conducted before acceptance of the project, once the traffic signals are completed and operational. The on-site inspection shall be conducted by the Project Engineer or Region Traffic Engineer with the Contractor, City Traffic Engineer, and the Traffic Design Engineer present.

SALVAGE SIGNAL EQUIPMENT

Existing signal equipment that is removed at the 27th Street/1st Avenue intersection shall be salvaged and delivered to the City of Spearfisinserh by the Contractor. Existing signal equipment that is removed at the other project intersections shall be salvaged and delivered to the South Dakota Department of Transportation. The Contractor shall notify the City and the State 5 days before the delivery of the salvaged signal equipment.

The State Contact is Monica Heller, Monica.Heller@state.sd.us

The City contact is Kyle Mathis at (605) 642-1333,
kyle.mathis@cityofspearfish.com

All costs for work involved in the salvage and delivery of the existing signal equipment shall be incidental to the contract lump sum price for "Salvage Signal Equipment".

SALVAGE LUMINAIRE POLE

Existing luminaires and associated signal strain poles EA1 - EA4, EB1 - EB4, EC1 - EC4, ED1 - ED2, and ED4 shall be salvaged and delivered to the City of Spearfish by the Contractor. The Contractor shall notify the City 5 days before the delivery of the salvaged luminaire poles. The City contact is Kyle Mathis at (605) 642-1333.

kyle.mathis@cityofspearfish.com

All costs for work involved in the salvage and delivery of the existing luminaire poles shall be incidental to the contract unit price per each for "Salvage Luminaire Pole".

Existing luminaire poles RL1-RL4 shall be salvaged and reset to the locations specified in the plans. All costs for work involved in the salvage and reset of the existing luminaire poles shall be incidental to the contract unit price per each for "Remove and Reset Luminaire Pole".

REMOVE LUMINAIRE POLE FOOTING

The footings of existing luminaire poles, as specified in the plans, shall be removed by the Contractor to a minimum of 2' below the ground surface. Restoration of the disturbed area shall be to the satisfaction of the Engineer.

All costs for removing the footings of the existing luminaire poles shall be incidental to the contract unit price per each for "Remove Luminaire Pole Footing".

REMOVE SIGNAL POLE FOOTING

The footings of existing signal poles, as specified in the plans shall be removed by the Contractor to a minimum of 2' below the ground surface. Restoration of the disturbed area shall be to the satisfaction of the Engineer.

All costs for removing the footings of the existing signal poles shall be incidental to the contract unit price per each for "Remove Signal Pole Footing".

TABLE OF FOOTING DATA

Site Designation	Footing Diameter	* Footing Depth	**Spiral Diameter	**Spiral Length	Vertical Reinforcement
A5, B5	2' - 0"	6' - 0"	1' - 8"	44' - 3"	8-#7 x 5' - 6"
AL1 – AL6 BL1 – BL6 CL1 – CL5 DL1 - DL6 EL1, GL1, HL1 ML1 – ML8 NL1 – NL4 RL1 – RL4 SG1 – SG3	2' - 0"	8' - 0"	1' - 8"	54' - 9"	8-#7 x 7' - 6"
B1, B4, B6	2' - 0"	9' - 0"	1' - 8"	60' - 0"	8-#7 x 8' - 6"
A1, D2	3' - 0"	11' - 0"	2' - 8"	112' - 6"	14-#8 x 10' -6"
A4, D1	3' - 0"	12' - 0"	2' - 8"	120' - 9"	14-#8 x 11' -6"
D4	3' - 0"	13' - 0"	2' - 8"	129' - 3"	14-#8 x 12' -6"
A2, A3	3' - 0"	15' - 0"	2' - 8"	145' - 9"	14-#8 x 14' -6"

* Footing depth shall be below ground level.
** The size of all spirals shall be #3.

Subsurface conditions within the project area consist of both fill and in-situ reddish brown silt-clay to gravelly clay-sand with occasional gravel layers throughout. Groundwater was measured at depths below the cylindrical footings.

Locations of cylindrical footings within the area of the reinforced subgrade shall be marked prior to placement of the geogrid. A 5' x 5' window shall be cut out of the geogrid at the footing location to prevent interference during the construction of the cylindrical footings.

Cylindrical footings located within the reinforced bridge end embankment shall be cased. Casing shall be of sufficient strength to withstand handling and installation procedures. The casing material may consist of sonotube, corrugated metal pipe, pvc, smooth metal pipe or any other material as approved by the Engineer. Casing shall be placed during the construction of the reinforced bridge end embankment and backfilled around.

During construction of the cylindrical footings, concrete placement operations should closely follow excavation procedures. The longer the excavations are left open the more likely caving may occur. If caving soils are encountered during excavation, casing may be required to construct the cylindrical footings.

Concrete shall not be dropped through standing water. If water is present in the excavation it shall be removed prior to concrete placement or the concrete shall be tremied. If caving occurs during dewatering the concrete shall be placed through a tremie or by means of a casing.

The boring logs and laboratory tests are available for review at the Central Office in Pierre. If questions arise or additional information is needed concerning the cylindrical footings contact the Geotechnical Engineering Activity in Pierre at 605.773.3401

POLES

Cantilever traffic signal supports, including anchor bolts, shall be designed for fatigue in accordance with Fatigue Importance Category III without galloping and truck induced gusts.

Signal poles shall have rotatable mast arms.

Luminaire extension(s) shall have a 50 Ft. mounting height with 8 Foot arm.

All new signal poles at the 27th Street/1st Avenue intersection shall be powder coated Black to match the existing signal pole in the northeast corner of the intersection.

LUMINAIRES

The accepted design for the roadway luminaires AL1 – AL6, BL1-BL6, CL1-CL5, DL1-DL6, EL1, HL1, GL1, ML1-ML8, NL1-NL-4 and SG1-SG-3 shall provide 1.2 and greater average maintained foot-candles and a uniformity ratio (average maintained to minimum maintained foot-candles) of 3:1 and less using the following parameters:

Setback:	15 Ft.
Lamp Loss Factor (LLF):	0.7
Width of Lighted Area:	15 Ft.
Spacing:	200 Ft.
Configuration:	One Sided
Mounting Height:	50 Ft.
Lamp:	400W HPS

REGISTERED PROFESSIONAL ENGINEER
REG. NO. 9435
LYLE DeVRIES
SOUTH DAKOTA
11/16

LUMINAIRES (Continued)

The following luminaires meet the requirements for this design:

a.) General Electric: MSRA-40-S-1-R-S3-F-U, High Pressure Sodium, Medium, Semi-cutoff, Type 3

b.) Hubbell: RLCD-40S7A-031-1, High Pressure Sodium, Medium, semi-cutoff, Type 3

c.) Cooper Lighting: OVY-40-S-W-2-3-E, High Pressure Sodium, Medium, semi-cutoff, Type 3

The accepted design for the roadway luminaires UL1-UL8 shall provide 1.2 and greater average maintained foot-candles and a uniformity ratio (average maintained to minimum maintained foot-candles) of 3:1 and less using the following parameters:

Setback:	15 Ft.
Lamp Loss Factor (LLF):	0.7
Width of Lighted Area:	15 to 35 Ft.
Spacing:	80 Ft.
Configuration:	Onside
Mounting Height:	18 Ft.
Lamp:	250W HPS

The following luminaires meet the requirements for this design:

a.) Holophane: MDWP250HP00X
High Pressure Sodium.
Medium, semi-cutoff

Three copies of the isofootcandle charts and utilization curves shall be furnished to the Engineer for approval. The Contractor must get approval from the Engineer prior to installation of the luminaires.

The approved isofootcandle data for each case shall be used to determine the correct socket position at each site. Each luminaire shall be installed with its lamp socket in the proper position and in a level attitude.

LIGHTING CONTROLS

Lighting controls for luminaires, AL1- AL5, BL1-BL5, CL1-CL4, DL1-DL6, EL1, HL1, GL1, ML1-ML8, NL1-NL-4 and SG1-SG-3 shall be achieved through integral photocells supplied with each luminaire.

Lighting controls for the under bridge deck luminaires, UL1 – UL8, shall be achieved through one photocell installed on northside of bridge structure.

LIGHTNING PROTECTION

All luminaire poles, tower lighting poles, and service cabinets shall be equipped with industrial lightning arrestors compliant with current NEMA and UL Standards for lightning arrestors. Cost for ground rods and lightning arrestors shall be incidental to the contract unit price for the corresponding luminaire pole, tower lighting pole, and service cabinet bid item.

TRAFFIC SIGNAL METER SOCKETS

The meter sockets provided for traffic signals by the Contractor shall be a 200 amp, positive by-pass.

SIGNAL BACKPLATES

Signal backplates shall extend not less than 5 inches from the edge of the signal head at the top, bottom, and sides. The bottom of the backplate on vehicle signal faces mounted directly above pedestrian signal indications shall be sized to permit the separate adjustment of the vehicle and pedestrian signal indication and may be less than 4 inches.

Signal backplates for all signal heads shall be polycarbonate, and shall be louvered.

TRAFFIC SIGNAL CONTROLLER

The controller shall be a solid state, digital, NEMA TS2 Type 1 compatible with the existing signal controller equipment and software utilized in the City of Spearfish.

All vehicle detection zones shall operate in the presence (non-locking) mode and shall have call delay timing capability. The call delay feature shall be inhibited by the controller. Set these detectors to 3 seconds delay.

Vehicle detectors shall have the ability to operate in the passage (locking) mode

The Contractor is responsible for programming controllers with the signal timings provided in these plans.

All costs for constructing the concrete pad and footing, materials, labor, and furnishing and installing the controller cabinet shall be incidental to the contract unit price per each for “Traffic Signal Controller”.

MASTER CONTROLLER

A master signal controller is required for this project with fiber optic cable interconnect that links each of the traffic signal controllers along 27th Street. A 12 Strand single-mode cable shall be installed.

The master controller shall be capable of operating by the time of day or traffic responsive.

The master controller shall be compatible with any new or existing equipment used by the City of Spearfish.

The master controller shall be located at the I-90 / 27th Street interchange.

CONTROLLER SOFTWARE

Two copies of controller software shall be provided. One copy of the software shall be supplied to the Spearfish City Engineer and the second copy of the software shall be supplied to the South Dakota Department of Transportation Traffic Design Engineer in the Office of Road Design.

The controller software shall provide communication between a personal computer and the controllers being supplied by the contractor. The controller software shall allow permanent storage of all controller input data on a hard disk drive. The controller software shall work with isolated intersections as well as a closed loop system.

All costs for the controller software shall be incidental to the contract unit price per each for “Master Controller”.

CONTROLLER PROGRAMMING

The Contractor shall furnish the Road Design Office with a copy of the data programmed into the Controller prior to the full operation of the Controller for approval. The address is as follows:

Pete Longman
Traffic Design Engineer
Office of Road Design
700 East Broadway
Pierre, SD 57501

ETHERNET OPTICAL TRANSCEIVERS

New controllers shall be equipped with Ethernet Optical Transceivers.

All costs for furnishing and installing Optical Transceivers in new controllers shall be incidental to the contract unit price per each for “Traffic Signal Controller”.

TELEPHONE MODEM AND PHONE LINE DROP

The Contractor shall provide a telephone modem and phone line drop for the master controller at the I-90 / 27th Street Interchange. The modem shall provide surge protection and all necessary hardware/software to provide remote communications. The modem shall be a minimum of 56.6 bps modem.

All costs for the modem and phone line drop shall be incidental to the contract unit price per each for “Master Controller”.

REGISTERED PROFESSIONAL ENGINEER
REG. NO. 9435
LYLE E. DeVRIES
SOUTH DAKOTA
11/8/16

FOR BIDDING PURPOSES ONLY

FIBER OPTIC CABLE

The fiber optic cable shall be a 12 strand fiber optic cable with 6 singlemode and 6 multimode with each buffer containing six fibers. The buffer tubes shall be color coded according to EIA/TIA specifications.

Fiber optic cable provided on this project shall meet the latest applicable EIA/TIA Specifications for multimode and REA PE-90 Specifications for single mode. All fiber optic cable shall be rated for outdoor use.

Multimode optical cable shall have the following optical and physical characteristics:

1. Core diameter of 62.5 µm +/- 3µm.
2. Cladding diameter of 125µm +/- 2µm.
3. Numerical aperture of 0.275 +/- 0.015.
4. The fibers shall be coated with a UV Acrylate.
5. The fibers shall be strippable, using mechanical methods.
6. The attenuation coefficient of 3.8 dB per kilometer or less at 850nm and 1.2 dB per kilometer or less at 1300 nm.
7. The Information Transmission Capacity (ITC) or bandwidth, of the cable shall be greater than or equal to 160 MHz per kilometer at 850 nm and 600 MHz per kilometer at 1300nm.
8. One factory fusion splice per kilometer per fiber shall be allowed.

Singlemode optical cable shall have the following optical and physical characteristics:

1. Cladding diameter of 125µm +/- 2µm.
2. Zero dispersion slope shall be 0.092 ps/ (nm^2•km) or less.
3. Zero dispersion wavelength, 1300 to 1322 nm.
4. Cutoff wavelength, less than 1250 nm.
5. Maximum attenuation at 1310 nm shall be 0.4 dB per Kilometer.
6. The outside diameter shall be less than 22.1 nm.
7. One factory fusion splice per kilometer per fiber shall be allowed.

The fiber optic cable shall have a seven-core configuration, dielectric central strength member, and thermoplastic tubes. The minimum bending radii of the cable shall be 209.5 mm under a static load and 419.1 mm during installation. The installation tensile load rating shall be 2.7 kPa.

The cable core interstices shall be filled with water blocking material. If a gel compound is used, the gel compound shall be readily removable with a nontoxic solvent.

Fiber optic cable shall be terminated in the controller cabinet with a wall mounted distribution enclosure. The distribution enclosure shall be dust and moisture resistant. The size of the distribution enclosure shall be adequate for the number of fibers to be used. The distribution enclosure shall be mounted in the controller cabinet where it does not interfere with normal cabinet maintenance. The fiber optic cable shall be prepared in accordance with the manufacturer's recommendations and have sufficient length to reach the interface panel. Only fibers needed to operate the equipment plus two spare shall be terminated with ST connectors with less than 0.9 dB loss for multimode and FC-PC connectors with less than 0.4 dB loss for singlemode. The connector loss after 1000 matings shall be less than 0.2 dB. The connector return loss shall not be greater than 45 dB for singlemode and greater than 35 dB for multimode. All other fibers shall be capped and sealed in accordance with the manufacturer's recommendations.

The fiber optic cable shall be installed in accordance with the manufacturer's recommendations and the NEC. Slack cable shall be left in each controller and junction box. All junction boxes except for the junction at the controller shall have 6.5' of slack. The junction box at the controller cabinet shall have 19.5' of slack. Controller cabinets shall have 2' of slack. Slack cable shall be coiled and tied in a minimum of three places around the coil. No splices shall be allowed in the fiber optic cable except in the controllers. Splices shall be of the epoxy/polish type.

The contractor shall test the fiber optic cable after the installation to verify the integrity of the fiber.

The supplier of the fiber optic cable shall supervise the installation and testing of the fiber optic cable. The supplier of the fiber optic cable shall provide training to personnel of the City in the installation and maintenance of the fiber optic cable.

The payment for supplying, installing, testing, and training of city personnel shall be incidental to the contract unit price per foot for "12 Strand Fiber Optic Cable".

SURFACE MOUNTED JUNCTION BOXES

Surface mounted junction boxes SMJ1 – SMJ11 shall comply with NEMA 4X stainless steel shall be UL-listed and, at a minimum, shall be sized according to Article 314 of the 2008 National Electrical Code. Stainless steel junction boxes shall have the cover held in place with a continuous hinge and kept closed with screws and clamps on the remaining three sides. The cover shall be removable by removing the pin with the continuous hinge. All seams shall be continuously welded. Gaskets shall be closed cell neoprene.

Surface Mounted Junction Boxes SMJ1 – SMJ11 shall have a fuse holder for underdeck luminaires.

Surface Mounted Junction Boxes SMJ6 and SMJ7 shall be equipped with a terminal block having a minimum of 24 positions and be UL approved.

All costs for the surface mounted junction box, fuse holders, and terminal blocks shall be incidental to the contract unit price per each for "Surface Mounted Junction Box".

ELECTRICAL JUNCTION BOXES

TYPE 1
A total of 46 Junction Boxes (JL3, JL4, JL6, JL7, JL9 – JL18, JL20, JL21, JL23, JL24, JL29, JL31, JL31a, JL32, JL35 – JL44, JL47, JL48, JL51, JL54, JL56, JL59 and JL65 – JL72) shall be TYPE 1 Electrical Boxes (or larger) for lighting cables.

TYPE 2
A total of 18 Junction Boxes (JA1, JA3, JA4, JB2 - JB5, JB8-15 and JD2 – JD4) shall be TYPE 2 Electrical Boxes (or larger) for signal and lighting cables.

A total of 4 Junction Boxes (JP1 – JP4) shall be TYPE 2 Electrical Boxes (or larger) for signal and lighting power cables.

TYPE 3
A total of 9 Junction Boxes (JF1 – JF9) shall be a TYPE 3 Electrical Boxes (or larger) for fiber optic cables.

TYPE 4
A total of 3 Junction Boxes (JA2, JB1 and JD1) shall be a TYPE 4 Electrical Box for traffic signal controller cabinet cables.

REGISTERED PROFESSIONAL ENGINEER
REG. NO. 9435
LYLE E. DeVRIES
SOUTH DAKOTA
11/8/16
Signal Responsibility

REGISTERED PROFESSIONAL ENGINEER
REG NO. 11450
SANDRA C. SCANLON
SOUTH DAKOTA
11/6/16
Lighting Responsibility

TABLE OF CONDUIT AND CABLE QUANTITIES

FOR BIDDING PURPOSES ONLY

STATE OF SOUTH DAKOTA	PROJECT	SHEET	TOTAL SHEETS
	IM 0901(162)14 P 014A(11)8	L6	L63

Revised Date: 8/28/2015 LCL

Location to Location		Rigid Conduit Schedule 40			Rigid Conduit Schedule 80		Rigid Galvanized Steel Conduit		Copper Wire										Pole and Bracket Cable		IMSA Copper Cable, K1 #12 AWG						Fiber Cable (12 Strand)	Video Cable	Preempt Cable
		2 Inch	3 Inch	4 Inch	2 Inch	3 Inch	2 Inch	3 Inch	1/C #1 AWG	1/C #2 AWG	1/C #3 AWG	1/C #4 AWG	1/C #5 AWG	1/C #6 AWG	1/C #7 AWG	1/C #8 AWG	1/C #9 AWG	1/C #10 AWG	2/C #8 AWG	2/C #10 AWG	2/C	4/C	7/C	12/C	19/C	24/C			
		Ft	Ft	Ft	Ft	Ft	Ft	Ft	Ft	Ft	Ft	Ft	Ft	Ft	Ft	Ft	Ft	Ft	Ft	Ft	Ft	Ft	Ft	Ft	Ft	Ft	Ft	Ft	Ft
LIGHTING - RAMP D																													
(DL1)	(DL2)	245										735																	
(DL2)	(DL3)	250										750																	
(DL3)	JL3	125										375																	
JL3	JL4	125										375																	
JL4	(DL4)				45							135																	
JL4	JL6	355										1065																	
JL6	JL7	355										1065																	
JL7	(DL5)	350										1050																	
(DL5)	JL9	155										465																	
JL9	JL10	70										210																	
LIGHTING - RAMP A																													
JL18	(AL5)	280										840																	
(AL5)	JL20	300										900																	
JL20	JL21	215										645																	
JL21	(AL4)	5			55							180																	
JL21	JL23	125										375																	
JL23	(AL3)	125										375																	
(AL3)	JL24	125										375																	
JL24	(AL2)	125										375																	
(AL2)	(AL1)	255										765																	
LIGHTING / GATE - RAMP C																													
SIGN	JL47 - (CL1)	40																120											
JL47 - (CL1)	(CL2)	250								750								750											
(CL2)	(CL3)	250								750								750											
(CL3)	JL43	255								765								765											
JL43	JL44 - (SG1)		10			40				150								600											
JL43	JL42		395							1185								4740											
JL42	JL41		300							900								3600											
JL41	JL40		160							480								1920											
JL40	JL39 - (CL4)		65							195								975											
JL39	JL38		145							435								2175											
LIGHTING - RAMP B																													
JL35	(BL5)	205								615																			
(BL5)	JL32	340								1020																			
JL32	JL31a	300								900																			
JL31a	JL31	300								900																			
JL31	JL29	180								540																			
JL29	(BL4)				45					135																			
JL29	(BL3)	250								750																			
(BL3)	(BL2)	250								750																			
(BL2)	(BL1)	250								750																			
Sheet 1 Total:		6455	1075	0	145	40	0	0	0	11970	0	11055	0	0	0	0	0	16395	0	0	0	0	0	0	0	0	0	0	0	0

REGISTERED PROFESSIONAL ENGINEER
REG NO.
11450
SANDRA C. SCANLON
SOUTH DAKOTA
1/6/16
Lighting/Gate/Conduit

TABLE OF CONDUIT AND CABLE QUANTITIES

FOR BIDDING PURPOSES ONLY

STATE OF SOUTH DAKOTA	PROJECT	SHEET	TOTAL SHEETS
	IM 0901(162)14 P 014A(11)8	L7	L63

Revised Date: 8/28/2015 LCL

Location to Location		Rigid Conduit Schedule 40			Rigid Conduit Schedule 80		Rigid Galvanized Steel Conduit		Copper Wire										Pole and Bracket Cable		IMSA Copper Cable, K1 #12 AWG						Fiber Cable (12 Strand)	Video Cable	Preempt Cable
		2 Inch	3 Inch	4 Inch	2 Inch	3 Inch	2 Inch	3 Inch	1/C #1 AWG	1/C #2 AWG	1/C #3 AWG	1/C #4 AWG	1/C #5 AWG	1/C #6 AWG	1/C #7 AWG	1/C #8 AWG	1/C #9 AWG	1/C #10 AWG	2/C #8 AWG	2/C #10 AWG	2/C	4/C	7/C	12/C	19/C	24/C			
		Ft	Ft	Ft	Ft	Ft	Ft	Ft	Ft	Ft	Ft	Ft	Ft	Ft	Ft	Ft	Ft	Ft	Ft	Ft	Ft	Ft	Ft	Ft	Ft	Ft	Ft	Ft	Ft
LIGHTING - 27TH s/o I-90																													
JP4	(ML1)		135							810		405		405				2025											
(ML1)	JL37		120							720		360		360				1800											
JL37	JL38		170							510		510		510				2550											
JL38	JL48				75					225		225		225															
JL48	(CL5)	10								30																			
JL48	(GL1)	110								330																			
JL48	JB1	70								210		210		210															
JB13	JL71	80								240								240											
JL71	(BL6)	10								30																			
JL71	JL70	85								255								510											
JL70	(SG3)	10								30																			
JL70	JL35				65					195								390											
JL35	JL36	40								120								240											
JL36	JL37					140				420								1260											
JL36	JL72	135																1215											
LIGHTING - 27TH n/o I-90																													
JB11	JL65	50												150															
JL65	(DL6)	10												30															
JL65	JL66	90												270															
JL66	(HL1)	10												30															
JL66	JL10				60									180															
JL10	JL11	65										195		195															
JL11	(ML5)	125										375		375															
(ML5)	JL12	155										465		465															
JL12	JL13				55													165											
JL12	(ML7)	155										465		465				465											
(ML7)	JL14	25										75		75				75											
JL14	Power Service	35										210		105				105											
JL14	JL16				105							315																	
JL16	JL15				115							345																	
JL15	(ML8)	30										90																	
JL16	(ML6)	160										480																	
(ML6)	JL17	280										840																	
JL17	JL18	75										225																	
JL18	JL67				65							195																	
JL67	(EL1)	10										30																	
JL67	JL68 - (ML4)	105										315																	
JL68	JL69 - (AL6)	120										360																	
Sheet 2 Total:		2050	425	0	540	140	0	0	0	4125	0	6690	0	4050	0	0	0	11040	0	0	0	0	0	0	0	0	0	0	0

REGISTERED PROFESSIONAL ENGINEER
REG NO. 11450
SANDRA C. SCANLON
SOUTH DAKOTA
1/6/16
Lighting Responsibility

TABLE OF CONDUIT AND CABLE QUANTITIES

FOR BIDDING PURPOSES ONLY

STATE OF SOUTH DAKOTA	PROJECT	SHEET	TOTAL SHEETS
	IM 0901(162)14 P 014A(11)8	L8	L63

Revised Date: 8/28/2015 LCL

Location to Location		Rigid Conduit Schedule 40			Rigid Conduit Schedule 80		Rigid Galvanized Steel Conduit		Copper Wire										Pole and Bracket Cable		IMSA Copper Cable, K1 #12 AWG						Fiber Cable (12 Strand)	Video Cable	Preempt Cable
		2 Inch	3 Inch	4 Inch	2 Inch	3 Inch	2 Inch	3 Inch	1/C #1 AWG	1/C #2 AWG	1/C #3 AWG	1/C #4 AWG	1/C #5 AWG	1/C #6 AWG	1/C #7 AWG	1/C #8 AWG	1/C #9 AWG	1/C #10 AWG	2/C #8 AWG	2/C #10 AWG	2/C	4/C	7/C	12/C	19/C	24/C			
		Ft	Ft	Ft	Ft	Ft	Ft	Ft	Ft	Ft	Ft	Ft	Ft	Ft	Ft	Ft	Ft	Ft	Ft	Ft	Ft	Ft	Ft	Ft	Ft	Ft	Ft	Ft	Ft
LIGHTING - HWY 14a																													
(RL1)	JL51	155										465																	
JL51	(RL2)				95							285																	
(RL2)	JL54	135										405																	
JL54	(RL3)				100							300																	
JL54	JP1	50										150																	
JP1	Control Cab.	30										90																	
Control Cab.	Power Service	15										45																	
JP1	(NL1)	120										360																	
(NL1)	JL56	70										210																	
JL56	(NL2)				110							330																	
JL56	(RL4)				150							450																	
(RL4)	JL59	160										480																	
JL59	(NL3)				95							285																	
JL59	(NL4)				160							480																	
Power Service	JP2					65				390		390		195				975											
JP2	JP3					290				1740		1740		870				4350											
JP3	JP4					100				600		600		300				1500											
LIGHTING																													
LIGHT POLE	AL1																			65									
LIGHT POLE	AL2																			65									
LIGHT POLE	AL3																			65									
LIGHT POLE	AL4																			65									
LIGHT POLE	AL5																			65									
LIGHT POLE	AL6																			65									
LIGHT POLE	EL1																			65									
LIGHT POLE	BL1																			65									
LIGHT POLE	BL2																			65									
LIGHT POLE	BL3																			65									
LIGHT POLE	BL4																			65									
LIGHT POLE	BL5																			65									
LIGHT POLE	BL6																			65									
LIGHT POLE	CL1																			65									
LIGHT POLE	CL2																			65									
LIGHT POLE	CL3																			65									
LIGHT POLE	CL4																			65									
LIGHT POLE	CL5																			65									
LIGHT POLE	GL1																			65									
Sheet 3 Total:		735	0	0	710	455	0	0	0	2730	0	7065	0	1365	0	0	0	6825	0	1235	0	0	0	0	0	0	0	0	0	0

REGISTERED PROFESSIONAL ENGINEER
REG NO.
11450
SANDRA C. SCANLON
SOUTH DAKOTA
Lighting Reports, 8/1/14

TABLE OF CONDUIT AND CABLE QUANTITIES

FOR BIDDING PURPOSES ONLY

STATE OF SOUTH DAKOTA	PROJECT	SHEET	TOTAL SHEETS
	IM 0901(162)14 P 014A(11)8	L9	L63

Revised Date: 8/28/2015 LCL

Location to Location		Rigid Conduit Schedule 40			Rigid Conduit Schedule 80		Rigid Galvanized Steel Conduit		Copper Wire										Pole and Bracket Cable		IMSA Copper Cable, K1 #12 AWG						Fiber Cable (12 Strand)	Video Cable	Preempt Cable
		2 Inch	3 Inch	4 Inch	2 Inch	3 Inch	2 Inch	3 Inch	1/C #1 AWG	1/C #2 AWG	1/C #3 AWG	1/C #4 AWG	1/C #5 AWG	1/C #6 AWG	1/C #7 AWG	1/C #8 AWG	1/C #9 AWG	1/C #10 AWG	2/C #8 AWG	2/C #10 AWG	2/C	4/C	7/C	12/C	19/C	24/C			
		Ft	Ft	Ft	Ft	Ft	Ft	Ft	Ft	Ft	Ft	Ft	Ft	Ft	Ft	Ft	Ft	Ft	Ft	Ft	Ft	Ft	Ft	Ft	Ft	Ft	Ft	Ft	Ft
LIGHTING																													
LIGHT POLE	DL1																			65									
LIGHT POLE	DL2																			65									
LIGHT POLE	DL3																			65									
LIGHT POLE	DL4																			65									
LIGHT POLE	DL5																			65									
LIGHT POLE	HL1																			65									
LIGHT POLE	SG3																			65									
SIG. LIGHT POLE	SG2 / B6																			65									
LIGHT POLE	ML1																			65									
SIG. LIGHT POLE	ML2 / B1																			65									
SIG. LIGHT POLE	ML3 / B4																			65									
LIGHT POLE	ML4																			65									
LIGHT POLE	ML5																			65									
LIGHT POLE	ML6																			65									
LIGHT POLE	ML7																			65									
LIGHT POLE	ML8																			65									
LIGHT POLE	RL1																			65									
LIGHT POLE	RL2																			65									
LIGHT POLE	RL3																			65									
LIGHT POLE	RL4																			65									
LIGHT POLE	NL1																			65									
LIGHT POLE	NL2																			65									
LIGHT POLE	NL3																			65									
LIGHT POLE	NL4																			65									
LIGHTING - UNDERDECK																													
JB14	SMJ2						20						60																
SMJ2	SMJ1						80						240																
SMJ1	UL1						20						60																
UL1	UL2						70						210																
UL2	UL3						85						255																
UL3	UL4						70						210																
JB15	SMJ10						20						60																
SMJ10	SMJ11						80						240																
SMJ11	UL5						20						60																
UL5	UL6						70						210																
UL6	UL7						85						255																
UL7	UL8						70						210																
SMJ1	SMJ11						10						30																
Sheet 4 Total:		0	0	0	0	0	700	0	0	0	0	0	0	2100	0	0	0	0	0	1560	0	0	0	0	0	0	0	0	0

REGISTERED PROFESSIONAL ENGINEER
REG NO.
11450
SANDRA C. SCANLON
NORTH DAKOTA
1/6/16
Lighting Responsibility

TABLE OF CONDUIT AND CABLE QUANTITIES

FOR BIDDING PURPOSES ONLY

STATE OF SOUTH DAKOTA	PROJECT	SHEET	TOTAL SHEETS
	IM 0901(162)14 P 014A(11)8	L10	L63

Revised Date: 8/28/2015 LCL

Location to Location		Rigid Conduit Schedule 40			Rigid Conduit Schedule 80		Rigid Galvanized Steel Conduit		Copper Wire										Pole and Bracket Cable		IMSA Copper Cable, K1 #12 AWG						Fiber Cable (12 Strand)	Video Cable	Preempt Cable
		2 Inch	3 Inch	4 Inch	2 Inch	3 Inch	2 Inch	3 Inch	1/C #1 AWG	1/C #2 AWG	1/C #3 AWG	1/C #4 AWG	1/C #5 AWG	1/C #6 AWG	1/C #7 AWG	1/C #8 AWG	1/C #9 AWG	1/C #10 AWG	2/C #8 AWG	2/C #10 AWG	2/C	4/C	7/C	12/C	19/C	24/C			
		Ft	Ft	Ft	Ft	Ft	Ft	Ft	Ft	Ft	Ft	Ft	Ft	Ft	Ft	Ft	Ft	Ft	Ft	Ft	Ft	Ft	Ft	Ft	Ft	Ft	Ft	Ft	Ft
SIGNAL A - 27TH at HWY 14																													
JA2	Controller Cab.			10								30										80	40	40		40			40	80
JA2	JP4	30										90		90																
JA2	SIGNAL POLE A2		15											45								160	120	15		15			80	130
JA2	PB Pole PA3	15																			10	15								
JA2	PB Pole PA4	25																			10	25								
JA2	JA3					160								480								320	160	160		160			160	320
JA3	SIGNAL POLE A3		15											45								120	135	15		15			80	130
JA3	PB Pole PA5	15																			10	15								
JA3	PB Pole PA6	15																			10	15								
JA1	JA2					150								450								600	300	300		300			300	600
JA1	SIGNAL POLE A1		15											45								165	110	15		15			80	130
JA1	PB Pole PA1	15																			10	15								
JA1	PB Pole PA2	15																			10	15								
JA1	JA4					130								390								260	130	130		130			130	260
JA4	SIGNAL POLE A4		15											45								105	15	190		15			80	130
JA4	PB Pole PA7	15																			10	15								
JA4	PB Pole PA8	20																			10	20								
JA4	JA3					150												150												
SIGNAL B - I-90 SPUI																														
JB1	Controller Cab.			15								45										60	60	30	30	30			30	30
JB1	SIGNAL POLE B1		15											45							10	45		15						
JB1	JB13					140																	140							
JB13	SG2 / SIGNAL B6		10							30								30				15	10							
JB1	JB2					80								240								240	240	80	160	160			160	160
JB2	JB14					25								75								75	75	25	50	50			50	50
JB14	JB3					15																45	45	15	30	30			30	30
JB3	SMJ3							20														20	20							
SMJ3	SIGNAL POLE B2							20													10	35	20							
JB3	JB4					55																110	110	55	110	110			110	110
JB4	JB5					120																			120	120				240
JB5	SMJ5							20																	20	20				40
SMJ5	SMJ6							85																	85	85				170
SMJ6	SIGNAL POLE B8							20														430			20	20				140
JB4	SMJ4							20														40	40	20	20	20			40	
SMJ4	SMJ7							85														170	170	85	85	85			170	
SMJ7	SIGNAL POLE B7							20														445			20	20			210	
SMJ7	SMJ8							80														160	160	80						
SMJ8	JB8							20														40	40	20						
JB8	JB9					55																110	110	55						
JB9	SMJ9							20														20	20							
SMJ9	SIGNAL POLE B3							30													10	45	30							
JB9	JB15					15																15	15	15						
JB15	JB10					25								75								25	25	25						
JB10	JB11					70								210								70	70	70						
JB11	SIGNAL POLE B4		10											30							10	40		10						
JB11	JB12					175																	175							
JB12	SIGNAL POLE B5		10																			15	10							
	Sheet 5 Total:	0	45	15	0	775	0	440	0	30	0	45	0	675	0	0	0	30	0	0	0	0	0	0	0	0	40	2270	1585	600	750	750	0	0	800	970

REGISTERED PROFESSIONAL ENGINEER
REG. NO. 9435
LYLE E. DeVRIES
SOUTH DAKOTA
1/8/16
Signal Responsibility

REGISTERED PROFESSIONAL ENGINEER
REG. NO. 11450
SANDRA C. SCANLON
SOUTH DAKOTA
1/6/16
Lighting Responsibility

TABLE OF CONDUIT AND CABLE QUANTITIES

FOR BIDDING PURPOSES ONLY

STATE OF SOUTH DAKOTA	PROJECT	SHEET	TOTAL SHEETS
	IM 0901(162)14 P 014A(11)8	L11	L63

Revised Date: 8/28/2015 LCL

Location to Location		Rigid Conduit Schedule 40			Rigid Conduit Schedule 80		Rigid Galvanized Steel Conduit		Copper Wire										Pole and Bracket Cable		IMSA Copper Cable, K1 #12 AWG						Fiber Cable (12 Strand)	Video Cable	Preempt Cable
		2 Inch	3 Inch	4 Inch	2 Inch	3 Inch	2 Inch	3 Inch	1/C #1 AWG	1/C #2 AWG	1/C #3 AWG	1/C #4 AWG	1/C #5 AWG	1/C #6 AWG	1/C #7 AWG	1/C #8 AWG	1/C #9 AWG	1/C #10 AWG	2/C #8 AWG	2/C #10 AWG	2/C	4/C	7/C	12/C	19/C	24/C			
		Ft	Ft	Ft	Ft	Ft	Ft	Ft	Ft	Ft	Ft	Ft	Ft	Ft	Ft	Ft	Ft	Ft	Ft	Ft	Ft	Ft	Ft	Ft	Ft	Ft	Ft	Ft	Ft
SIGNAL D - 27TH at 1ST																													
Power Service	JD1	130										390																	
Controller Cab.	JD1			10								30										40	40			40		40	80
JD1	SIGNAL POLE D1			10										30								120	95			10		75	120
JD1	PB POLE PA1	15																			10	15							
JD1	PB POLE PA2	20																			10	20							
JD1	JD2					80								240								80	160			160		160	320
JD2	SIGNAL POLE D2			10										30								70	75			10		75	120
JD2	PB POLE PA3	15																			10	15							
JD2	JD3					75								225									75			75		75	150
JD3	EJD3	10												30									10			10		10	20
EJD3	EXIST. SIG. POLE	10												30								60	85			10		75	120
JD1	JD4					105								315								105	105			105		105	210
JD4	SIGNAL POLE D4			10										30								105	110			10		75	120
JD4	PB POLE PA4	10																			10	10							
JD4	JD3					120												120											
SIGNAL - FIBER																													
Controller A	JF1	10																									10		
JF1	JF2	215																									215		
JF2	JF3				160																						160		
JF3	Controller B	10																									10		
JF3	JF4				185																						185		
JF4	JF5				305																						305		
JF5	JF6	120																									120		
JF6	JF7	440																									440		
JF7	JF8				160																						160		
JF8	JF9	220																									220		
JF9	Controller D	10																									10		
MISC LIGHTING - SIGNAL																													
SIG. LIGHT POLE	L1 / A1																		65										
SIG. LIGHT POLE	L2 / A2																		65										
SIG. LIGHT POLE	L3 / A3																		65										
SIG. LIGHT POLE	L4 / A4																		65										
SIG. LIGHT POLE	L5 / D1																		65										
SIG. LIGHT POLE	L6 / D4																		65										
SIG. LIGHT POLE	L7 / D2																		65										
Sheet 6 Total:		1235	0	40	810	380	0	0	0	0	0	420	0	930	0	0	0	120	0	455	0	0	0	0	0	40	640	755	0	0	430	0	1835	690	1260
PROJECT TOTAL:		10475	1545	55	2205	1790	700	440	0	18855	0	25275	0	9120	0	0	0	34410	0	3250	0	0	0	0	0	80	2910	2340	600	750	1180	0	1835	1490	2230
ADJUSTED TOTAL:		12050	1780	70	2540	2060	810	510	0	21690	0	29070	0	10490	0	0	0	39580	0	3740	0	0	0	0	0	100	3350	2700	690	870	1360	0	2120	1720	2570

REGISTERED PROFESSIONAL ENGINEER
REG. NO. 9435
LYLE E. DeVRIES
SOUTH DAKOTA
11/8/16
Signal Responsibility

REGISTERED PROFESSIONAL ENGINEER
REG NO. 11450
SANDRA C. SCANLON
SOUTH DAKOTA
11/8/16
Lighting Responsibility

EXISTING SIGNAL LAYOUT

27TH STREET & US HWY 14A/COLORADO BLVD.

FOR BIDDING PURPOSES ONLY

STATE OF SOUTH DAKOTA	PROJECT	SHEET	TOTAL SHEETS
	IM 0901(162)14 P 014A(11)8	L12	L63

Plotting Date: 9/22/2015
Revised Date: 9/09/2015 LCL

SCALE
1" = 40'

PLOT SCALE - 1:40

PLOT NAME - 2

FILE - ...\SECTIONL\27TH15ES.DGN

REMOVE SIGNAL EQUIPMENT	
KEY	ITEM
	5 SECTION VEHICLE SIGNAL HEAD
	5 SECTION VEHICLE SIGNAL HEAD DOGHOUSE
	PEDESTRIAN SIGNAL HEAD
PB	PEDESTRIAN PUSH BUTTON
TO CROSS STREET PUSH BUTTON WAIT FOR WALK SIGNAL	PEDESTRIAN SIGN
o	ROADWAY LUMINAIRE WITH 400W P.E.

SALVAGE SIGNAL EQUIPMENT	
KEY	ITEM
	SIGNAL POLE, SPAN WIRE SYSTEM & LUMIN EXT. (EA1-EA4)
	3 SECTION VEHICLE SIGNAL HEAD (3,4,5,8,9,13,14,17,18,19)

ESTIMATE OF QUANTITIES			
KEY	ITEM	UNIT	EST QUANT
	REMOVE SIGNAL EQUIPMENT	LS	LUMP SUM
	REMOVE SIGNAL POLE FOOTING (EA1-EA4)	EACH	4
	SALVAGE SIGNAL EQUIPMENT	LS	LUMP SUM

REGISTERED PROFESSIONAL ENGINEER
REG. NO. 9435
LYLE E. DeVRIES
SOUTH DAKOTA
11/8/16

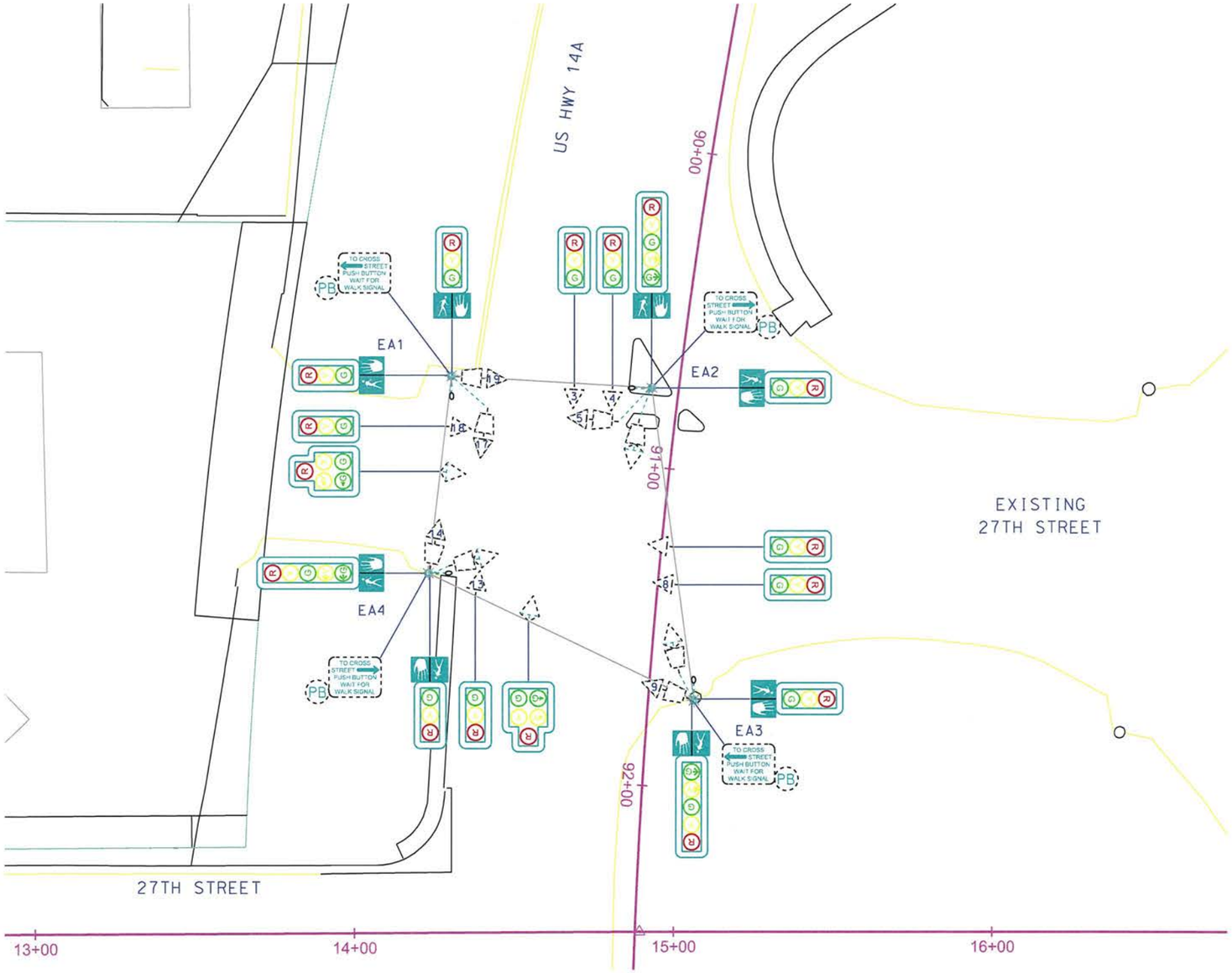

PLOTTED FROM - SOELLNER

SIGNAL LAYOUT

27TH STREET & US HWY 14A/COLORADO BLVD.

FOR BIDDING PURPOSES ONLY

STATE OF SOUTH DAKOTA	PROJECT	SHEET	TOTAL SHEETS
	IM 0901(162)14 P 014A(11)8	L13	L63

Plotting Date: 9/22/2015
Revised Date: 9/09/2015 LCL

PLOT SCALE - 1:40

PLOT NAME - 3

FILE -...\SECTIONL\27TH15S.DGN

PLOTTED FROM - SOELLNER

ESTIMATE OF QUANTITIES

KEY	ITEM	UNIT	EST QUANT
	SIGNAL POLE W/55' MAST ARM & LUMIN EXT W/8' ARM & 50' MT HT (A1)	EACH	1
	SIGNAL POLE W/60' MAST ARM & LUMIN EXT W/8' ARM & 50' MT HT (A4)	EACH	1
	SIGNAL POLE W/65' MAST ARM & LUMIN EXT W/8' ARM & 50' MT HT (A2, A3)	EACH	2
	SIGNAL PEDESTAL POLE (A5)	EACH	1
	3 SECTION VEHICLE SIGNAL HEAD	EACH	-
	4 SECTION VEHICLE SIGNAL HEAD (1,2,6,7,10,11,15,16)	EACH	8
	PEDESTRIAN SIGNAL HEAD W/COUNTDOWN TIMER (20-27)	EACH	8
	PEDESTRIAN PUSH BUTTON POLE (PA1-PA8) WITH 2.5'x4.0' CLEAR ZONE ACCESS	EACH	8
PB	PEDESTRIAN PUSH BUTTON (FACING CLEAR ZONE)	EACH	8
	PEDESTRIAN SIGN (R10-3E)	EACH	8
	ROADWAY LUMINAIRE WITH 400W P.E.	EACH	4
	EMERGENCY VEHICLE PREEMPTION UNIT (SYSTEM) (4-CHANNEL SYSTEM WITH 4 OPTICAL DETECTORS)	EACH	1
	VIDEO DETECTION SYSTEM (DETECTION CAMERA, 4 TOTAL)	EACH	1

RELOCATE SIGNAL EQUIPMENT

KEY	ITEM	UNIT	EST QUANT
	3 SECTION VEHICLE SIGNAL HEAD (3,4,5,8,9,13,14,17,18,19)	LS	LUMP SUM

VIDEO DETECTION ZONE = XX

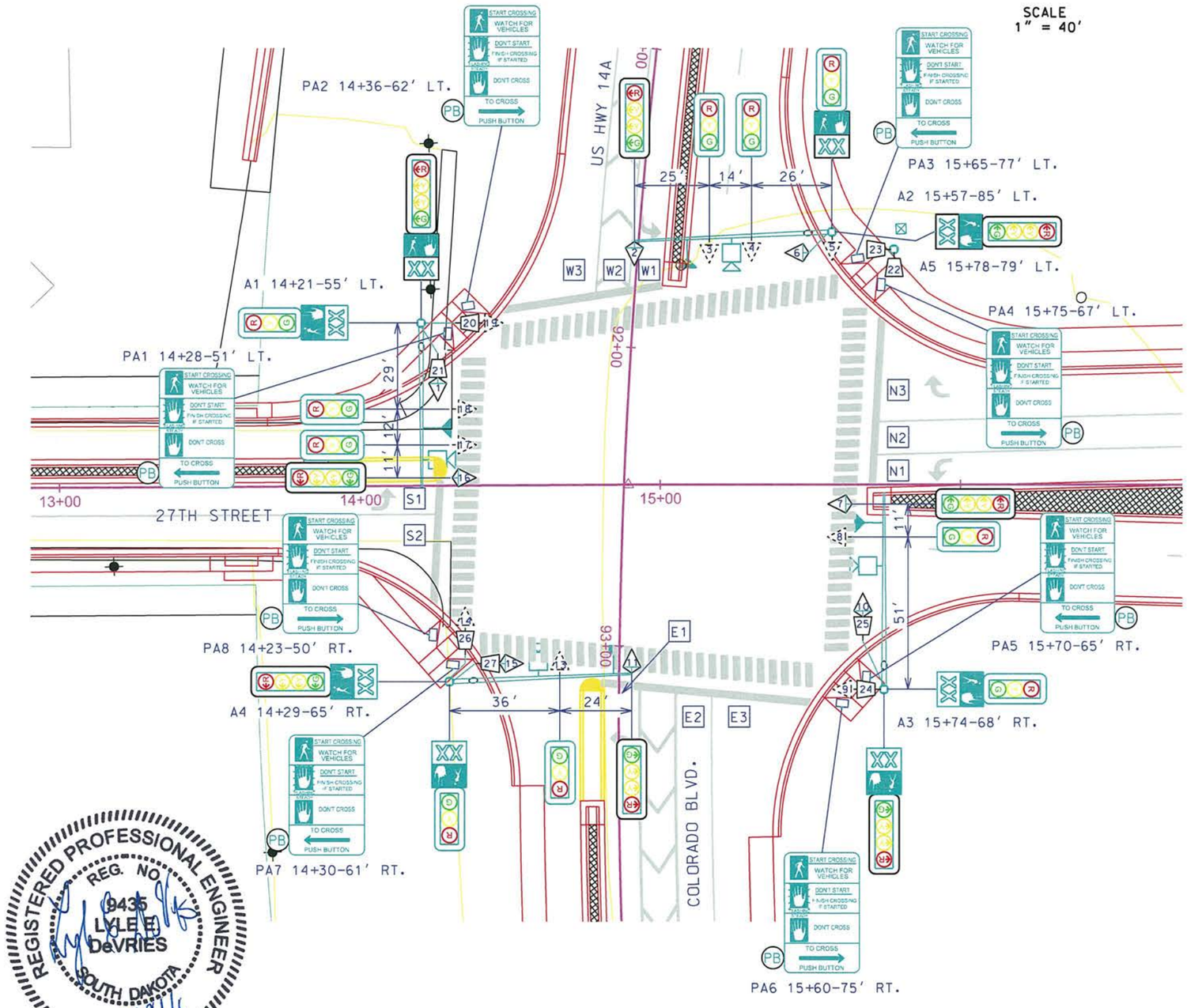

REGISTERED PROFESSIONAL ENGINEER
REG. NO.
9435
LYLE E.
DeVRIES
SOUTH DAKOTA
11/9/16

EXISTING SIGNAL LAYOUT

27TH STREET AT EXISTING RAMPS B & C

FOR BIDDING PURPOSES ONLY

STATE OF SOUTH DAKOTA	PROJECT	SHEET	TOTAL SHEETS
	IM 0901(162)14 P 014A(11)8	L14	L63

Plotting Date: 9/22/2015
Revised Date: 9/09/2015 LCL

SCALE
1" = 40'

REGISTERED PROFESSIONAL ENGINEER
REG. NO.
9435
LYLE E.
DeVRIES
SOUTH DAKOTA
11/8/16

REMOVE SIGNAL EQUIPMENT	
KEY	ITEM
	3 SECTION VEHICLE SIGNAL HEAD
	5 SECTION VEHICLE SIGNAL HEAD
	5 SECTION VEHICLE SIGNAL HEAD DOGHOUSE
	PEDESTRIAN SIGNAL HEAD
PB	PEDESTRIAN PUSH BUTTON
TO CROSS STREET PUSH BUTTON WAIT FOR WALK SIGNAL	PEDESTRIAN SIGN
o	ROADWAY LUMINAIRE WITH 400W P.E.

SALVAGE SIGNAL EQUIPMENT	
KEY	ITEM
	SIGNAL POLE, SPAN WIRE SYSTEM & LUMIN EXT. (EB1-EB4)
	3 SECTION VEHICLE SIGNAL HEAD (6,7,8,15,16,17)

ESTIMATE OF QUANTITIES			
KEY	ITEM	UNIT	EST. QUANT
	REMOVE SIGNAL EQUIPMENT	LS	LUMP SUM
	REMOVE SIGNAL POLE FOOTING (EB1-EB4)	EACH	4
	SALVAGE SIGNAL EQUIPMENT	LS	LUMP SUM

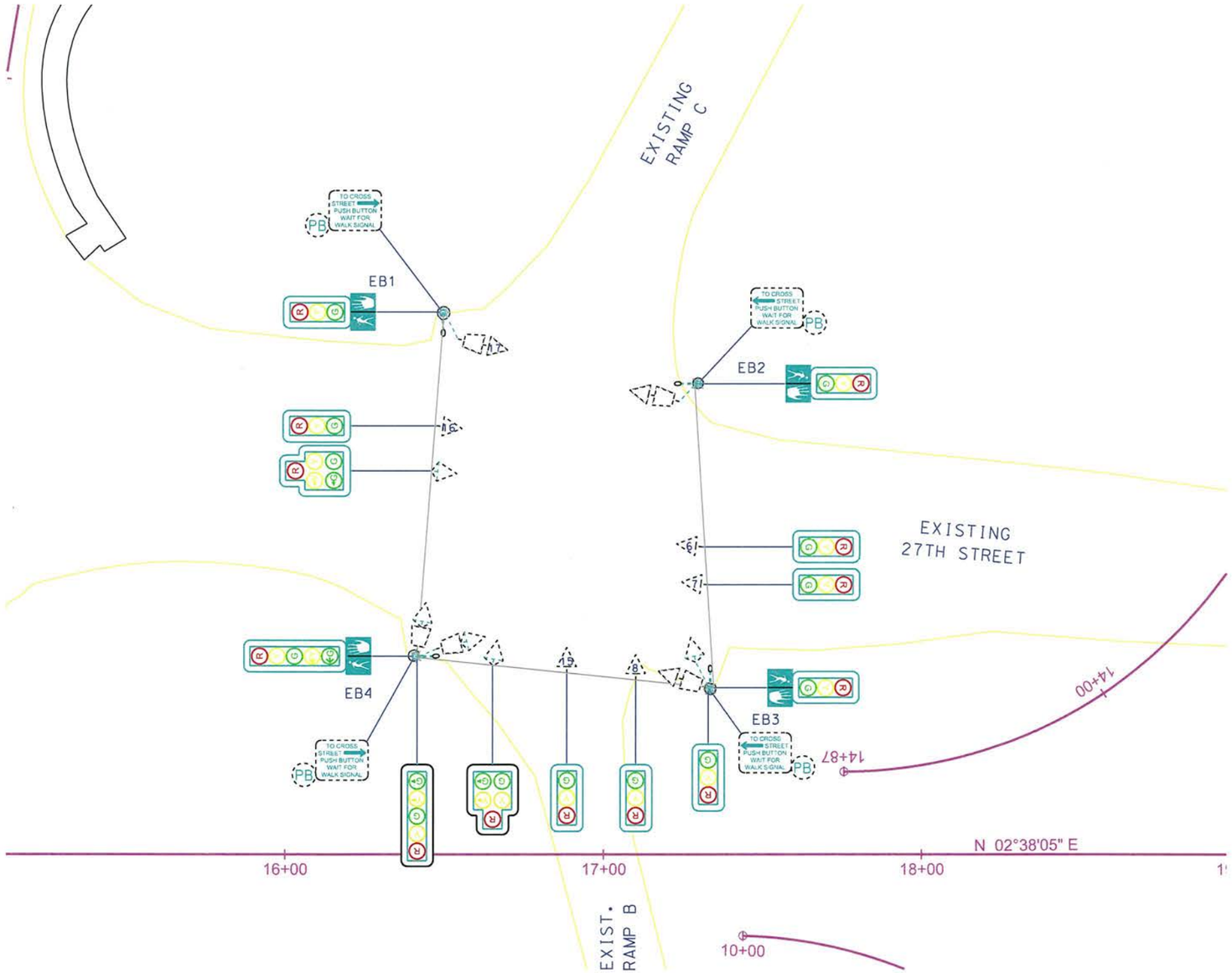

PLOT SCALE - 1:40
PLOT NAME - 1
PLOTTED FROM - LARRY
FILE - ...\SECTION\27TH17ES.DGN

SIGNAL LAYOUT

27TH STREET & I-90

FOR BIDDING PURPOSES ONLY

STATE OF SOUTH DAKOTA	PROJECT	SHEET	TOTAL SHEETS
	IM 0901(162)14 P 014A(11)8	L15	L63

Plotting Date: 9/22/2015
Revised Date: 9/09/2015 LCL

SCALE
1" = 40'

PLOT SCALE - 1:40

PLOT NAME - 1

FILE - ...\SECTION\L\27TH21S.DGN

PLOTTED FROM - LARRY

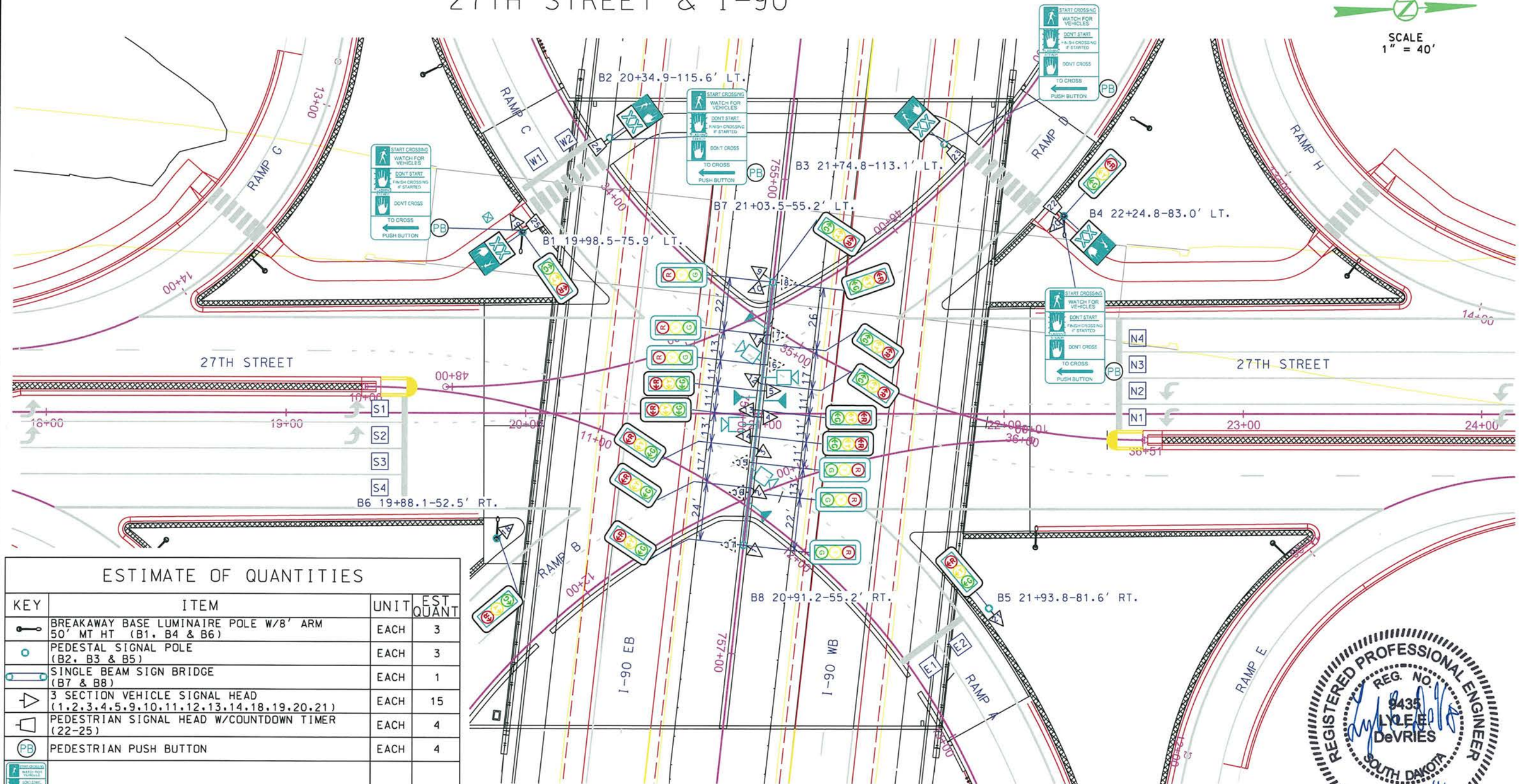

ESTIMATE OF QUANTITIES

KEY	ITEM	UNIT	EST QUANT
	BREAKAWAY BASE LUMINAIRE POLE W/8' ARM 50' MT HT (B1, B4 & B6)	EACH	3
	PEDESTAL SIGNAL POLE (B2, B3 & B5)	EACH	3
	SINGLE BEAM SIGN BRIDGE (B7 & B8)	EACH	1
	3 SECTION VEHICLE SIGNAL HEAD (1,2,3,4,5,9,10,11,12,13,14,18,19,20,21)	EACH	15
	PEDESTRIAN SIGNAL HEAD W/COUNTDOWN TIMER (22-25)	EACH	4
PB	PEDESTRIAN PUSH BUTTON	EACH	4
	PEDESTRIAN SIGN (R10-3E)	EACH	4
	ROADWAY LUMINAIRE WITH 400W P.E.	EACH	3
	EMERGENCY VEHICLE PREEMPTION UNIT (SYSTEM) (4-CHANNEL SYSTEM WITH 4 OPTICAL DETECTORS)	EACH	1
	VIDEO DETECTION SYSTEM (DETECTION CAMERA, 4 TOTAL)	EACH	1

RELOCATE SIGNAL EQUIPMENT

KEY	ITEM	UNIT	EST QUANT
	3 SECTION VEHICLE SIGNAL HEAD (6,7,8,15,16,17) (FROM EXISTING RAMP B/C) *	LS	LUMP SUM

VIDEO DETECTION ZONE = XX

* Contractor to supply mounting hardware necessary for the installation of the relocated signal equipment from Ramp B/C. This hardware shall be incidental to the Relocate Signal Equipment.

REGISTERED PROFESSIONAL ENGINEER
REG. NO. 9435
LYLE E. DeVRIES
SOUTH DAKOTA
1/8/16

EXISTING SIGNAL LAYOUT

27TH STREET AT EXISTING RAMPS A & D

FOR BIDDING PURPOSES ONLY

STATE OF SOUTH DAKOTA	PROJECT	SHEET	TOTAL SHEETS
	IM 0901(162)14 P 014A(11)8	L16	L63

Plotting Date: 9/22/2015
Revised Date: 9/09/2015 LCL

SCALE
1" = 40'

REMOVE SIGNAL EQUIPMENT	
KEY	ITEM
	3 SECTION VEHICLE SIGNAL HEAD
	5 SECTION VEHICLE SIGNAL HEAD
	5 SECTION VEHICLE SIGNAL HEAD DOGHOUSE
	PEDESTRIAN SIGNAL HEAD
PB	PEDESTRIAN PUSH BUTTON
TO CROSS STREET PUSH BUTTON WAIT FOR WALK SIGNAL	PEDESTRIAN SIGN
o	ROADWAY LUMINAIRE WITH 400W P.E.

SALVAGE SIGNAL EQUIPMENT	
KEY	ITEM
EC1-EC4	SIGNAL POLE, SPAN WIRE SYSTEM & LUMIN EXT. (EC1-EC4)

ESTIMATE OF QUANTITIES			
KEY	ITEM	UNIT	EST QUANT
	REMOVE SIGNAL EQUIPMENT	LS	LUMP SUM
	REMOVE SIGNAL POLE FOOTING (EC1-EC4)	EACH	4
	SALVAGE SIGNAL EQUIPMENT	LS	LUMP SUM

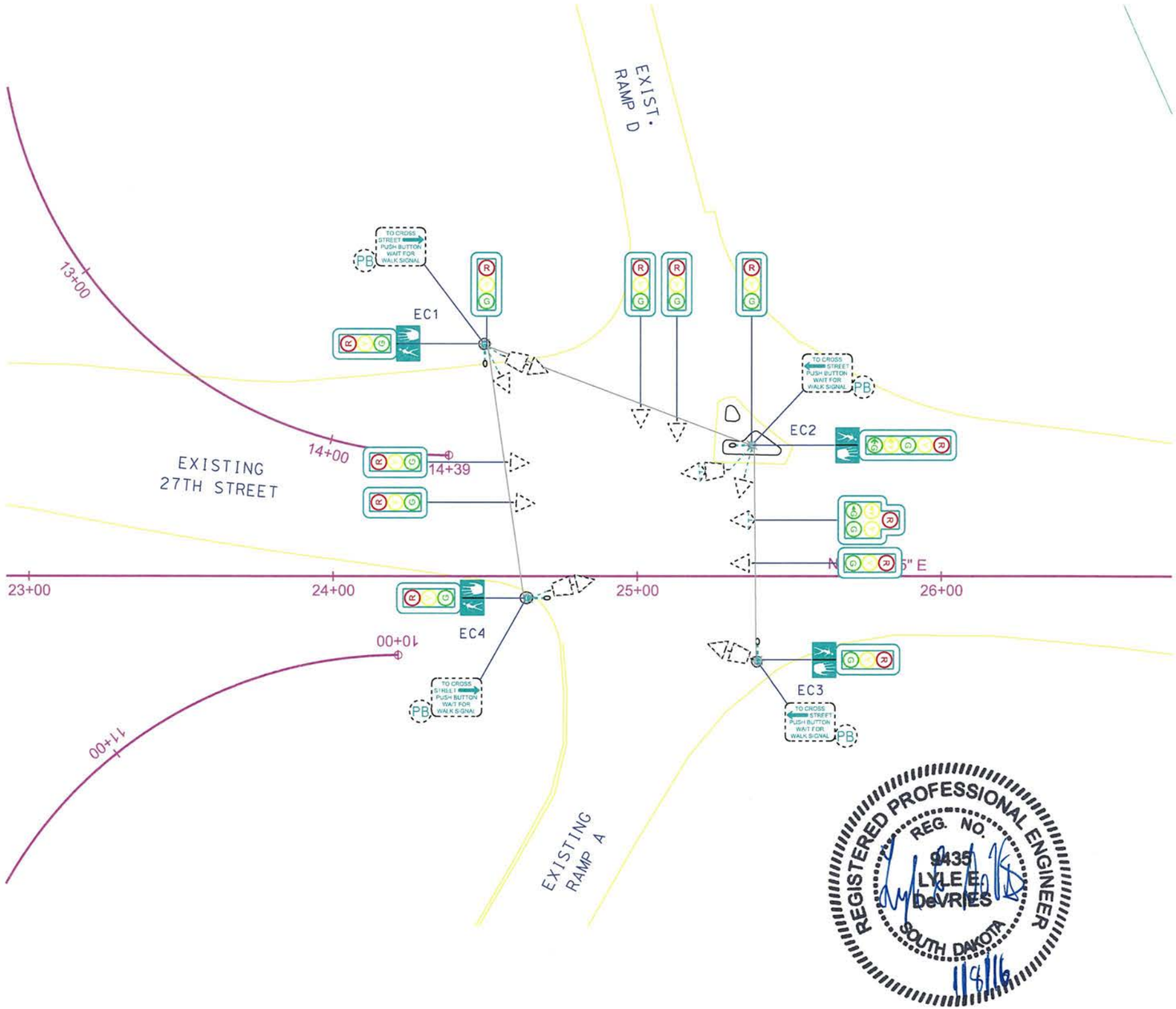

REGISTERED PROFESSIONAL ENGINEER
REG. NO. 9435
LYLE E. DeVRIES
SOUTH DAKOTA
11/4/16

PLOT SCALE - 1:40
PLOT NAME - 1
PLOTTED FROM - LARRY
FILE - ...\SECTION\27TH25ES.DGN

EXISTING SIGNAL LAYOUT

27TH STREET & 1ST AVENUE

FOR BIDDING PURPOSES ONLY

STATE OF SOUTH DAKOTA	PROJECT	SHEET	TOTAL SHEETS
	IM 0901(162)14 P 014A(11)8	L17	L63

Plotting Date: 9/22/2015
Revised Date: 9/09/2015 LCL

SCALE
1" = 40'

REMOVE SIGNAL EQUIPMENT	
KEY	ITEM
	3 SECTION VEHICLE SIGNAL HEAD
	5 SECTION VEHICLE SIGNAL HEAD
	5 SECTION VEHICLE SIGNAL HEAD DOGHOUSE
O	ROADWAY LUMINAIRE WITH 400W P.E.

SALVAGE SIGNAL EQUIPMENT	
KEY	ITEM
	SIGNAL POLE W/35' MAST ARM (EA1, EA2)
	SIGNAL POLE W/40' MAST ARM (EA4)
	3 SECTION VEHICLE SIGNAL HEAD (2,3,6,7,11,16)
	5 SECTION VEHICLE SIGNAL HEAD (15)
	VIDEO DETECTION SYSTEM (EXISTING DETECTION CAMERAS, 4 TOTAL)

ESTIMATE OF QUANTITIES			
KEY	ITEM	UNIT	EST QUANT
	REMOVE SIGNAL EQUIPMENT	LS	LUMP SUM
	REMOVE SIGNAL POLE FOOTING (ED1, ED2 & ED4)	EACH	4
	SALVAGE SIGNAL EQUIPMENT	LS	LUMP SUM

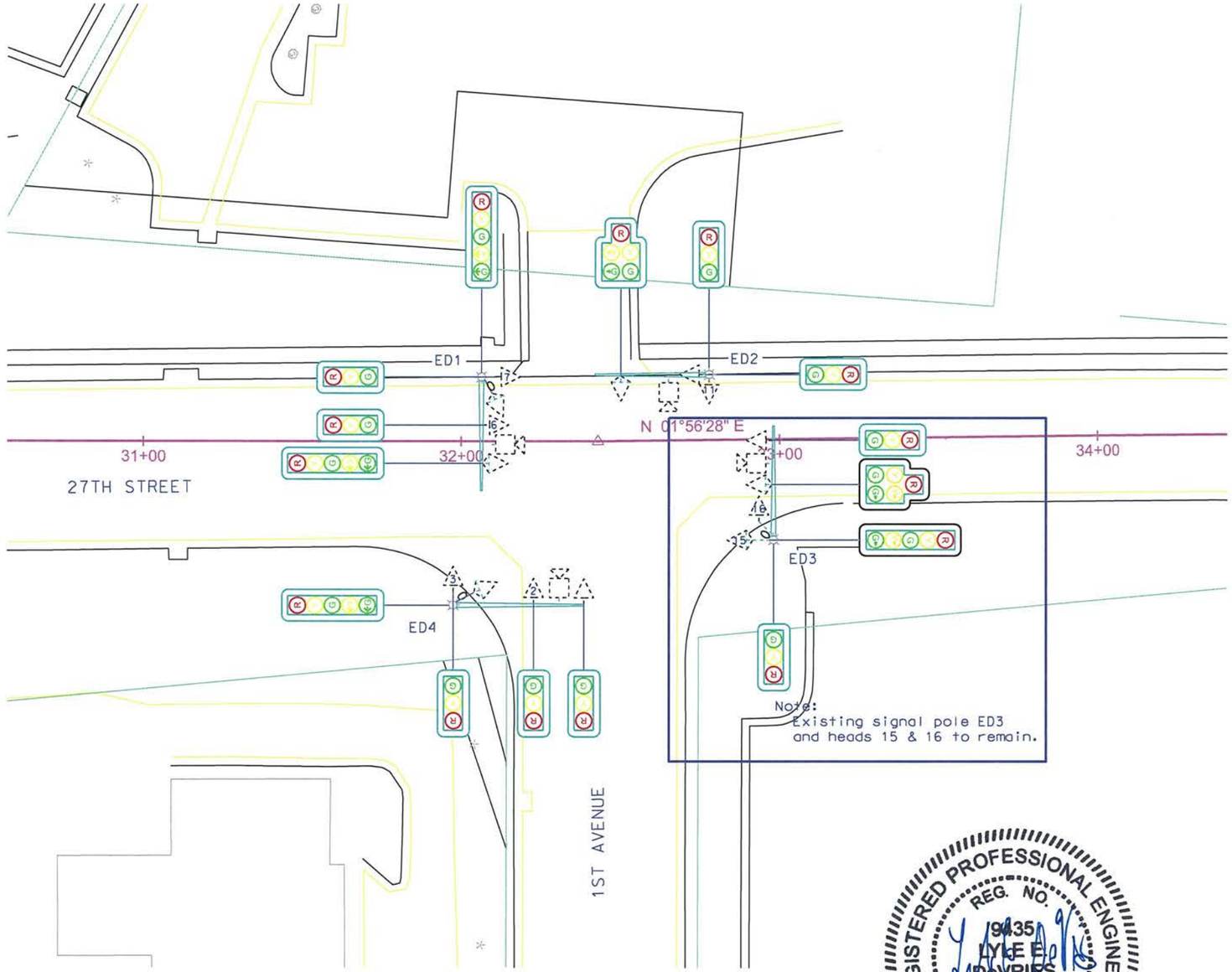

REGISTERED PROFESSIONAL ENGINEER
REG. NO.
9135
LYLE E.
DeVRIES
SOUTH DAKOTA
11/8/16

PLOT SCALE = 1:40
PLOT NAME = 7
PLOTTED FROM - SOELLNER
FILE -...\SECTIONL\27TH32ES.DGN

SIGNAL LAYOUT

27TH STREET & 1ST AVENUE

FOR BIDDING PURPOSES ONLY

STATE OF SOUTH DAKOTA	PROJECT	SHEET	TOTAL SHEETS
	IM 0901(162)14 P 014A(11)8	L18	L63

Plotting Date: 9/22/2015
Revised Date: 9/09/2015 LCL

SCALE
1" = 40'

PLOT SCALE - 1:40

PLOT NAME - 1

FILE - ...\SECTION_\27TH325.DGN

ESTIMATE OF QUANTITIES

KEY	ITEM	UNIT	EST QUANT
	SIGNAL POLE W/25' MAST ARM & LUMIN EXT W/8' ARM & 50' MT HT (D2)	EACH	1
	SIGNAL POLE W/45' MAST ARM & LUMIN EXT W/8' ARM & 50' MT HT (D1)	EACH	1
	SIGNAL POLE W/60' MAST ARM & LUMIN EXT W/8' ARM & 50' MT HT (D4)	EACH	1
	3 SECTION VEHICLE SIGNAL HEAD (10,14)	EACH	-
	4 SECTION VEHICLE SIGNAL HEAD (1,4,5,8,9,12,13,16)	EACH	8
	PEDESTRIAN SIGNAL HEAD W/COUNTDOWN TIMER (17,18,19,20)	EACH	4
	PEDESTRIAN PUSH BUTTON POLE (PA1-PA4) WITH 2.5'x4.0' CLEAR ZONE ACCESS	EACH	4
PB	PEDESTRIAN PUSH BUTTON (FACING CLEAR ZONE)	EACH	4
	PEDESTRIAN SIGN (R10-3E)	EACH	4
	ROADWAY LUMINAIRE WITH 400W P.E.	EACH	3
	EMERGENCY VEHICLE PREEMPTION UNIT (SYSTEM) (4-CHANNEL SYSTEM WITH 3 OPTICAL DETECTORS)	EACH	1

RELOCATE SIGNAL EQUIPMENT

KEY	ITEM	UNIT	EST QUANT
	3 SECTION VEHICLE SIGNAL HEAD (2,3,6,7,11)	LS	LUMP SUM
	5 SECTION VEHICLE SIGNAL HEAD (15)		
XX	VIDEO DETECTION SYSTEM (EXISTING DETECTION CAMERAS, 4 TOTAL)		

VIDEO DETECTION ZONE = XX

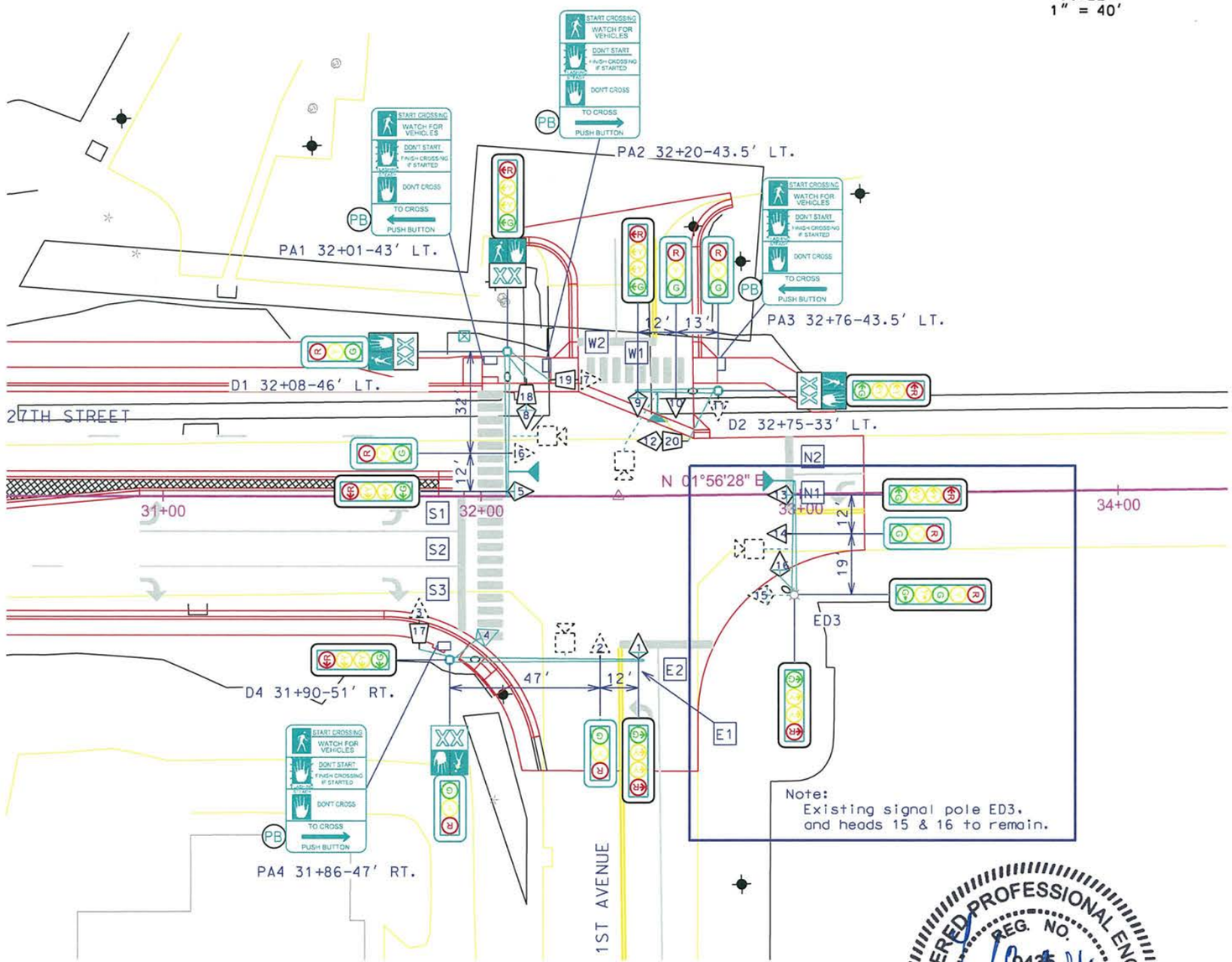

REGISTERED PROFESSIONAL ENGINEER
REG. NO.
9435
LYLE E.
DeVRIES
SOUTH DAKOTA
11/4/15

PLOTTED FROM - LARRY

CONDUIT LAYOUT

I-90

FOR BIDDING PURPOSES ONLY

STATE OF SOUTH DAKOTA	PROJECT	SHEET	TOTAL SHEETS
	IM 0901(162)14 P 014A(11)8	L19	L63

Plotting Date: 8/28/2015
Revised Date: 8/28/2015 LCL

REGISTERED PROFESSIONAL ENGINEER
REG NO. 11450
SANDRA C. SCANLON
SOUTH DAKOTA
Lighting Responsibility

SCALE
1" = 40'

2" SCH 40
3 #4

DL1 25+10-30' LT.

RAMP D

I-90 WB

I-90 EB

20+00 21+00 22+00 23+00 24+00 25+00

729+00 730+00 731+00 732+00 733+00 734+00 735+00

10+00 11+00 12+00 13+00

HO T/F P S T

PLOT SCALE = 1:40

PLOTTED FROM - SOELLNER

PLOT NAME = 9

FILE ...\SECTIONL\MAIN729C.DGN

CONDUIT LAYOUT

I-90

FOR BIDDING PURPOSES ONLY

STATE OF SOUTH DAKOTA	PROJECT	SHEET	TOTAL SHEETS
	IM 0901(162)14 P 014A(11)8	L20	L63

Plotting Date: 8/28/2015
Revised Date: 8/28/2015 LCL

REGISTERED PROFESSIONAL ENGINEER
REG NO. 11480
SANDRA Q. SCANLON
SOUTH DAKOTA
1/6/16
Lighting Responsibility

SCALE
1" = 40'

PLOT SCALE = 1:40

PLOT NAME = 10

FILE = ...\SECTIONL\MAIN735C.DGN

PLOTTED FROM = SOELLNER

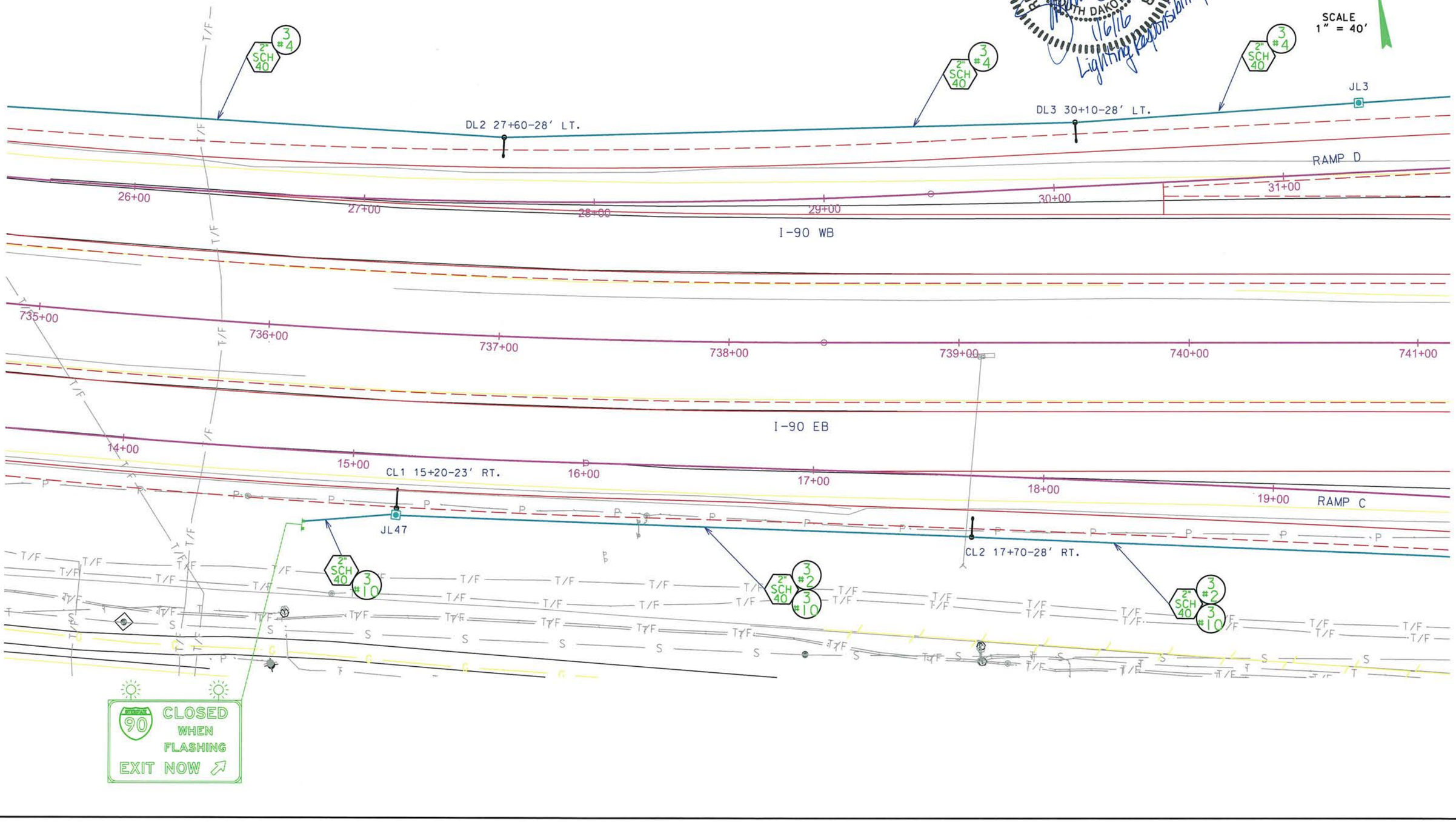

CONDUIT LAYOUT

I-90

FOR BIDDING PURPOSES ONLY

REGISTERED PROFESSIONAL ENGINEER
11450
SANDRA C. SCANLON
SOUTH DAKOTA
1/6/16

STATE OF SOUTH DAKOTA	PROJECT	SHEET	TOTAL SHEETS
	IM 0901(162)14 P 014A(11)8	L21	L63

Plotting Date: 8/28/2015
Revised Date: 8/28/2015 LCL

SCALE
1" = 40'

JL6

JL4

DL4 32+60-10' RT.

RAMP D

I-90 WB

I-90 EB

SG1 22+70-15' LT

JL44

JL43

CL3 20+20-27' RT

RAMP C

32+00 33+00 34+00 35+00 36+00 37+00

741+00 742+00 743+00 744+00 745+00 746+00 747+00

20+00 21+00 22+00 23+00 24+00 25+00

2" SCH 40 3 #4

2" SCH 80 3 #4

2" SCH 40 3 #2 3 #10

3" SCH 40 3 #2 9 #10

3" SCH 80 3 #2 12 #10

3" SCH 40 3 #2 12 #10

PLOT SCALE - 1:40

PLOT NAME - 11

PLOTTED FROM - SOELLNER

FILE - ...\SECTIONL\MAIN741C.DGN

CONDUIT LAYOUT

I-90

FOR BIDDING PURPOSES ONLY

STATE OF SOUTH DAKOTA	PROJECT	SHEET	TOTAL SHEETS
	IM 0901(162)14 P 014A(11)8	L22	L63

Plotting Date: 8/28/2015
Revised Date: 8/28/2015 LCL

SCALE
1" = 40'

HO HO HO HO HO HO

T/F T/F T/F T/F T/F T/F T/F T/F

T/F T/F T/F T/F T/F T/F T/F T/F

REGISTERED PROFESSIONAL ENGINEER
REG NO.
11450
SANDRA C. SCANLON
STATE OF SOUTH DAKOTA

Lighting Responsibility

3 #4 2" SCH 40

3 #4 2" SCH 40

3 #4 2" SCH 40

JL7

DL5 10+69-32' LT.

RAMP D

10+00 11+00

38+00 39+00 40+00 41+00 42+00 43+00

I-90 WB

747+00 748+00 749+00 750+00 751+00 752+00 753+00

PLOT SCALE = 1:40

PLOT NAME = 12

FILE = ...\SECTION_MAIN747NC.DGN

PLOTTED FROM - SOELLNER

FOR BIDDING PURPOSES ONLY

STATE OF SOUTH DAKOTA	PROJECT	SHEET	TOTAL SHEETS
	IM 0901(162)14 P 014A(11)8	L23	L63

Plotting Date: 8/28/2015
Revised Date: 8/28/2015 LCL

CONDUIT LAYOUT

I-90

PLOT SCALE - 1:40

PLOT NAME - 13

FILE - ...\SECTIONL\MAIN747SC.DGN

PLOTTED FROM - SOELLNER

CONDUIT LAYOUT

I-90

FOR BIDDING PURPOSES ONLY

STATE OF SOUTH DAKOTA	PROJECT	SHEET	TOTAL SHEETS
	IM 0901(162)14 P 014A(11)8	L24	L63

Plotting Date: 8/28/2015
Revised Date: 8/28/2015 LCL

REGISTERED PROFESSIONAL ENGINEER
REG. NO. 9435
LYLE E. DeVRIES
SOUTH DAKOTA
1/4/16
Signal Responsibility

REGISTERED PROFESSIONAL ENGINEER
REG. NO. 11450
SANDRA C. SCANLON
SOUTH DAKOTA
1/6/16
Lighting Responsibility

SCALE
1" = 40'

RAMP H
RAMP D
RAMP E
RAMP A
I-90 WB
27TH STREET

JF5
JF6
JL9
JL10
JL18
JL65
JL66
JL67
JL68
JL69
JB8
JB9
JB10
JB11
JB12
JB15
SMJ1
SMJ6
SMJ7
SMJ8
SMJ9
SMJ10
SMJ11
UL1
UL2
UL3
UL4
UL5
UL6
UL7
UL8
HL1 13+48-13' RT.
EL1 11+10-13' RT.
DL6 45+05-50' LT.
AL6 13+45-46' LT.
ML4 22+13-56' RT.
B4/ML3 22+24.8-83.0' LT.
B5

753+00
754+00
755+00
756+00
757+00
758+00
759+00

NOTE:
REFER TO THE 27TH STREET CONDUIT LAYOUT PLANS FOR ADDITIONAL WIRING AND CONDUIT DETAILS ASSOCIATED WITH THE I-90 BRIDGE STRUCTURE AND TRAFFIC SIGNAL.

PLOT SCALE - 1:40
PLOTTED FROM - SDELLNER
PLOT NAME - 14
FILE - ...\SECTION_MAIN753NC.DGN

CONDUIT LAYOUT

I-90

FOR BIDDING PURPOSES ONLY

STATE OF SOUTH DAKOTA	PROJECT	SHEET	TOTAL SHEETS
	IM 0901(162)14 P 014A(11)8	L25	L63

Plotting Date: 8/28/2015
Revised Date: 8/28/2015 LCL

REGISTERED PROFESSIONAL ENGINEER
REG. NO. 9435
LYLE E. DeVRIES
SOUTH DAKOTA
1/8/16

REGISTERED PROFESSIONAL ENGINEER
REG. NO. 11450
SANDRA C. SCANLON
SOUTH DAKOTA
1/6/16

SCALE
1" = 40'

753+00 754+00 755+00 756+00 757+00 758+00 759+00

SMJ11 SMJ1 SMJ7 SMJ6 SMJ2 SMJ3 SMJ4 SMJ5

UL5 UL1 UL6 UL2 UL7 UL3 UL8 UL4

I-90 EB

JF4 JB2 JB14 JB3 JB4 JB1 JB5 JB13

B1/ML2 19+98.7-75.9' LT.

B6/SG2 19+88.1-52.5' RT.

CONTROLLER CABINET B

JF3

RAMP C

RAMP B

RAMP G

RAMP F

CL5 33+23-48' RT. JL48

BL6 12+84-46' RT. JL71

CL4 11+30-29' RT. JL39

GL1 13+30-15' LT. JL38

SG3 11+05-15' RT. JL70

JL35

27TH STREET

N 02°38'05" E

Fiber

NOTE:
REFER TO THE 27TH STREET CONDUIT LAYOUT PLANS FOR ADDITIONAL WIRING AND CONDUIT DETAILS ASSOCIATED WITH THE I-90 BRIDGE STRUCTURE AND TRAFFIC SIGNAL.

PLOT SCALE - 1:40

PLOT NAME - 15

PLOTTED FROM - SOELLNER

FILE - ...\SECTION_MAIN753SC.DGN

CONDUIT LAYOUT

I-90

FOR BIDDING PURPOSES ONLY

REGISTERED PROFESSIONAL ENGINEER
REG NO
11450
SANDRA C. SCANLON
NORTH DAKOTA
1/6/16
Lighting Regions, Inc.

STATE OF SOUTH DAKOTA	PROJECT	SHEET	TOTAL SHEETS
	IM 0901(162)14 P 014A(11)8	L26	L63

Plotting Date: 8/28/2015
Revised Date: 8/28/2015 LCL

SCALE
1" = 40'

3 #4 2" SCH 40

3 #4 2" SCH 40

AL5 14+13-32' LT.

14+00

14+96

15+00

16+00

17+00

18+00

19+00

JL20

3 #4 2" SCH 40

20+00

RAMP A

JL21

2" SCH 80

3 #4

3 #4 2" SCH 40

21+0

AL4 20+30-20' RT.

I-90 WB

759+00

760+00

761+00

762+00

763+00

764+00

765+00

PLOTTED FROM - SOELLNER

PLOT SCALE - 1:40

PLOT NAME - 16

FILE - ...\SECTION_MAIN759NC.DGN

CONDUIT LAYOUT

I-90

FOR BIDDING PURPOSES ONLY

STATE OF SOUTH DAKOTA	PROJECT	SHEET	TOTAL SHEETS
	IM 0901(162)14 P 014A(11)8	L27	L63

Plotting Date: 8/28/2015
Revised Date: 8/28/2015 LCL

SCALE
1" = 40'

759+00 760+00 761+00 762+00 763+00 764+00 765+00

I-90 EB

15+00 16+00 17+00 18+00 19+00 20+00

RAMP B

14+00 14+50

JL32

BL5 13+50-38' RT.

2" SCH 40 3 #2

2" SCH 40 3 #2

2" SCH 40 3 #2

REGISTERED PROFESSIONAL ENGINEER
REG NO.
11450
SANDRA C. SCANLON
SOUTH DAKOTA

1/6/16

Lighting Responsibility

PLOT SCALE = 1:40

PLOT NAME = 17

FILE = ...\SECTIONL\MAIN759SC.DGN

PLOTTED FROM - SOELLNER

CONDUIT LAYOUT

I-90

STATE OF SOUTH DAKOTA	PROJECT	SHEET	TOTAL SHEETS
	IM 0901(162)14 P 014A(11)8	L28	L63

Plotting Date: 8/28/2015
Revised Date: 8/28/2015 LCL

REGISTERED PROFESSIONAL ENGINEER
11450
SANDRA C. SCANLON
SOUTH DAKOTA
8/28/15

FOR BIDDING PURPOSES ONLY

SCALE
1" = 40'

3 #4 2" SCH 40

JL23
AL3 22+80-30' LT.
JL24
AL2 25+30-30' LT.
RAMP A
21+00
22+00
23+00
24+00
25+00
26+00
27+00
I-90 WB
765+00
766+00
767+00
768+00
769+00
770+00
771+00
I-90 EB
BL4 25+80-10' LT.
JL30
JL29
JL31
JL31a
RAMP B
3 #2 2" SCH 40
3 #2 2" SCH 80
T/F

PLOT SCALE - 1:40
PLOT NAME - 18
PLOTTED FROM - SOELLNER
FILE - ...\SECTIONL\MAIN765C.DGN

CONDUIT LAYOUT

I-90

FOR BIDDING PURPOSES ONLY

REGISTERED PROFESSIONAL ENGINEER
REG NO. 11450
SANDRA C. SCANLON
SOUTH DAKOTA
11/6/15
Lighting Designs, Inc.

STATE OF SOUTH DAKOTA	PROJECT	SHEET	TOTAL SHEETS
	IM 0901(162)14 P 014A(11)8	L29	L63

Plotting Date: 8/28/2015
Revised Date: 8/28/2015 LCL

SCALE
1" = 40'

T/F

3 #4
2" SCH 40

AL1 27+80-20' LT.

RAMP A

27+00 28+00 29+00 I-90 WB 30+00 31+00 31+68

771+00 772+00 773+00 774+00 775+00 776+00 777+00

I-90 EB

27+00 RAMP B 28+00 29+00 30+00 31+00 32+00

BL3 28+30-30' RT.

BL2 30+80-30' RT.

3 #2
2" SCH 40

PLOT SCALE - 1:40

PLOTTED FROM - SOELLNER

PLOT NAME - 19

FILE - ...\SECTIONL\MAIN771C.DGN

CONDUIT LAYOUT

I-90

FOR BIDDING PURPOSES ONLY

STATE OF SOUTH DAKOTA	PROJECT	SHEET	TOTAL SHEETS
	IM 0901(162)14 P 014A(11)8	L30	L63

Plotting Date: 8/28/2015
Revised Date: 8/28/2015 LCL

PLOT SCALE = 1:40

PLOT NAME = 20

FILE = ...\SECTION\MAIN777C.DGN

SCALE
1" = 40'

T/F T/F T/F T/F T/F T/F T/F T/F T/F T/F T/F T/F T/F T/F T/F

I-90 WB

777+00 778+00 779+00 780+00 781+00 782+00 783+00

I-90 EB

33+00 34+00 35+00 36+00 37+00 38+00

BL1 33+30-30' RT.

3 #2
2" SCH 40

REGISTERED PROFESSIONAL ENGINEER
REG NO.
11450
SANDRA C. SCANLON
SOUTH DAKOTA

Little
Lighting Responsibility

PLOTTED FROM - SOELLNER

CONDUIT LAYOUT

27TH STREET

FOR BIDDING PURPOSES ONLY

STATE OF SOUTH DAKOTA	PROJECT	SHEET	TOTAL SHEETS
	IM 0901(162)14 P 014A(11)8	L31	L63

Plotting Date: 9/22/2015
Revised Date: 9/09/2015 LCL

SCALE
1" = 40'

REGISTERED PROFESSIONAL ENGINEER
REG. NO.
11450
SANDRA C. SCANLON
SOUTH DAKOTA
11/6/16
Lighting Responsibility

REGISTERED PROFESSIONAL ENGINEER
REG. NO.
9435
LYLE E. DeVRIES
SOUTH DAKOTA
11/8/16
Signal Responsibility

JP3
JP4
JA1
JA2
JA3
JA4
JF1
JF2
JL35
JL36
JL37
JL72
CONTROLLER A
A1/L1 14+21-55' LT.
A2/L2 15+57-85' LT.
A3/L3 15+74-68' RT.
A4/L4 14+29-65' RT.
A5 15+78-79' RT.
ML1 16+85-55' LT.
PA1 14+28-51' LT.
PA2 14+36-62' LT.
PA3 15+65-77' LT.
PA4 15+75-67' LT.
PA5 15+70-65' RT.
PA6 15+60-75' RT.
PA7 14+30-61' RT.
PA8 14+23-50' RT.
HO
Fiber
EAST CLOSED
DO NOT ENTER WHEN FLASHING
27TH STREET
COLORADO BLVD.
US HWY 14A
12+00
13+00
14+00
15+00
16+00
17+00
18+00
10+00
14+87

PLOT SCALE - 1:40
PLOTTED FROM - SOELLNER
PLOT NAME - 21
FILE - ...\SECTIONL\27TH12C.DGN

CONDUIT LAYOUT

FOR BIDDING PURPOSES ONLY

STATE OF SOUTH DAKOTA	PROJECT	SHEET	TOTAL SHEETS
	IM 0901(162)14 P 014A(11)8	L32	L63

Plotting Date: 8/28/2015
Revised Date: 8/28/2015 LCL

SCALE
1" = 40'

27TH STREET

REGISTERED PROFESSIONAL ENGINEER
REG. NO. 9435
LYLE E. DeVRIES
SOUTH DAKOTA
1/8/16
Signal Responsibility

RAMP C
RAMP D
RAMP G
RAMP H
RAMP F
RAMP E
RAMP A
RAMP B

JB1 JB2 JB3 JB4 JB5 JB8 JB9 JB10 JB11 JB12 JB13 JB14 JB15
JF2 JF3 JF6
JL10 JL18 JL35 JL36 JL37 JL48 JL49 JL65 JL66 JL67 JL68 JL70 JL71
DL6
CL5
BL6
CONTROLLER B

SMJ1 SMJ2 SMJ3 SMJ4 SMJ5 SMJ6 SMJ7 SMJ8 SMJ9 SMJ10 SMJ11

UL1 UL2 UL3 UL4 UL5 UL6 UL7 UL8

B1/ML2 19+98.5-75.9' LT.
B2 20+34.9-115.6' LT.
B3 21+74.8-113.1' LT.
B4/ML3 22+24.8-83.0' LT.
B5 21+93.8-81.6' RT.
B6/SG2 19+88.1-52.5' RT.
B7 21+03.5-55.2' LT.
B8 20+91.2-55.2' RT.
GL1 13+30-15' LT.
HL1 13+48-13' RT.
ML4 22+13-51' RT.
SG3 11+05-15' LT.
EL1 11+10-13' RT.

I-90 EB
I-90 WB

NOTE:
REFER TO THE I-90 CONDUIT LAYOUT PLANS
FOR ADDITIONAL WIRING AND CONDUIT DETAILS ASSOCIATED
WITH THE UNDERDECK LIGHTING AND THE I-90 RAMPS.

REGISTERED PROFESSIONAL ENGINEER
REG NO. 11450
SANDRA C. SCANLON
SOUTH DAKOTA
1/6/16
Lighting Responsibility

PLOT SCALE - 1:40
PLOTTED FROM - SOELLNER
PLOT NAME - 22
FILE - ...\SECTION_27TH18C.DGN

CONDUIT LAYOUT

27TH STREET

FOR BIDDING PURPOSES ONLY

STATE OF SOUTH DAKOTA	PROJECT	SHEET	TOTAL SHEETS
	IM 0901(162)14 P 014A(11)8	L33	L63

Plotting Date: 8/28/2015
Revised Date: 8/28/2015 LCL

SCALE
1" = 40'

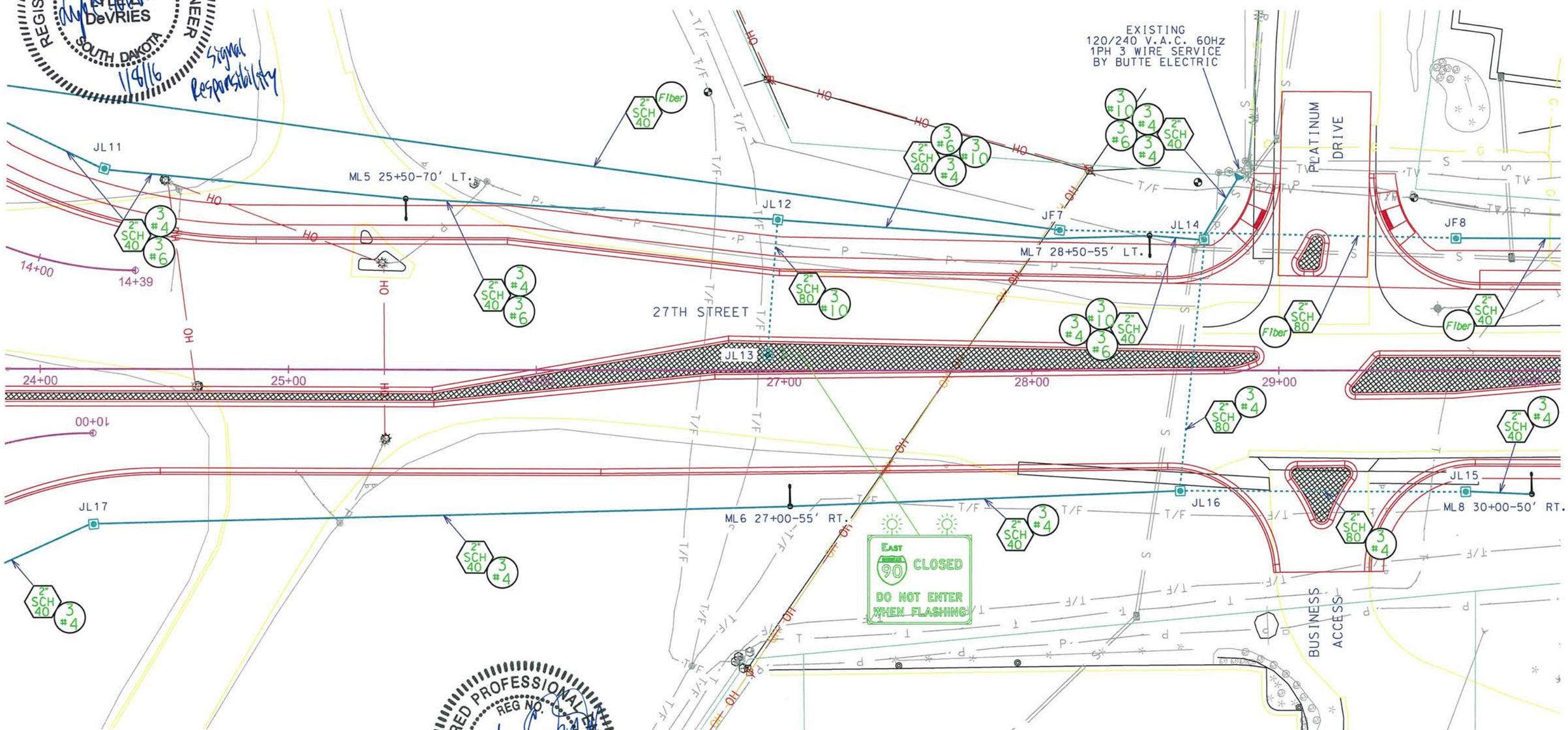

REGISTERED PROFESSIONAL ENGINEER
REG. NO. 09435
KYLE E. DeVRIES
SOUTH DAKOTA
1/8/16
Signal Responsibility

REGISTERED PROFESSIONAL ENGINEER
REG NO. 11450
SANDRA C. SCANLON
SOUTH DAKOTA
1/6/16
Lighting Responsibility

PLOT SCALE - 1:40
PLOTTED FROM - SOELLNER
PLOT NAME - 23
FILE - ...\SECTIONL\27TH24C.DGN

CONDUIT LAYOUT

27TH STREET

FOR BIDDING PURPOSES ONLY

STATE OF SOUTH DAKOTA	PROJECT	SHEET	TOTAL SHEETS
	IM 0901(162)14 P 014A(11)8	L34	L63

Plotting Date: 9/22/2015
Revised Date: 9/09/2015 LCL

SCALE
1" = 40'

EXISTING
120/240 V.A.C. 60Hz
1PH 3 WIRE SERVICE
BY BUTTE ELECTRIC

CONTROLLER CABINET D

2" SCH 40 Fiber

3 #4 | 2" SCH 40

4" SCH 40 | 4 24/c | 4 4/c | 4 7/c | 4 VC | 8 PC

3" SCH 80 | 2 24/c | 2 7/c | 2 VC | 4 PC

3 #6 | 1 4/c

2" SCH 40 | 1 4/c

3 #6 | 1 24/c | 2 PC | 1 7/c | 1 VC | 4" SCH 40

3 #6 | 1 24/c | 1 4/c | 2 PC | 1 7/c | 1 VC | 3" SCH 80

3 #6 | 1 24/c | 2 PC | 1 7/c | 1 VC | 4" SCH 40

1 #10 | 3" SCH 80

3 #6 | 1 24/c | 2 PC | 1 7/c | 1 VC | 3" SCH 80

3 #6 | 1 24/c | 2 PC | 1 7/c | 1 VC | 4" SCH 40

3 #6 | 1 24/c | 2 PC | 1 7/c | 1 VC | 3" SCH 40

2" SCH 40 | 1 4/c

JF9

JD1

PA1 32+08-46' LT.

PA2 32+20-43.5' LT.

PA3 32+76-43.5' LT.

D1/L5 32+08-46' LT.

D2/L7 32+75-33' LT.

JD2

27TH STREET

N 01°56'28" E

31+00 | 32+00 | 33+00 | 34+00 | 35+00 | 36+00

PA4 31+86-47' RT.

D4/L6 31+90-51' RT.

ML8 30+00-50' RT.

JD4

EJD3

JD3

EXISTING SIGNAL POLE

1ST AVENUE

REGISTERED PROFESSIONAL ENGINEER
REG. NO. 9435
LYLE E. DeVRIES
SOUTH DAKOTA
11/4/16
Signal Responsibility

REGISTERED PROFESSIONAL ENGINEER
REG NO. 11450
SANDRA C. SCANLON
SOUTH DAKOTA
11/6/16
Lighting Responsibility

PLOT SCALE - 1:40

PLOT NAME - 1

PLOTTED FROM - LARRY

FILE - ...\SECTION_27TH30C.DGN

CONDUIT LAYOUT

US HWY 14A

FOR BIDDING PURPOSES ONLY

STATE OF SOUTH DAKOTA	PROJECT	SHEET	TOTAL SHEETS
	IM 0901(162)14 P 014A(11)8	L35	L63

Plotting Date: 8/28/2015
Revised Date: 8/28/2015 LCL

SCALE
1" = 40'

3 #4
2" SCH 40

RL1 80+60-45' LT.

JL51

US HWY 14A

3 #4
2" SCH 80

77+00 78+00 79+00 80+00 81+00 82+00

RL2 82+30-45' RT.

3 #4
2" SCH 40

BUSINESS ACCESS

REGISTERED PROFESSIONAL ENGINEER
REG NO.
11450
SANDRA C. SCANLON
SOUTH DAKOTA

1/6/16
Lighting Responsibility

PLOT SCALE - 1:40

PLOTTED FROM - SOELLNER

PLOT NAME - 25

FILE - ...\SECTION_COBLVD77C.DGN

CONDUIT LAYOUT

US HWY 14A

FOR BIDDING PURPOSES ONLY

REGISTERED PROFESSIONAL ENGINEER
REG NO. 11460
SANDRA C. SCANLON
OF SOUTH DAKOTA
1/6/16

STATE OF SOUTH DAKOTA	PROJECT	SHEET	TOTAL SHEETS
	IM 0901(162)14 P 014A(11)8	L36	L63

Plotting Date: 8/28/2015
Revised Date: 8/28/2015 LCL

SCALE
1" = 40'

RL3 83+80-55' LT.

NL2 86+30-55' LT.

NL3 89+00-55' LT.

US HWY 14A

86+00

87+00

88+00

89+00

RL4 87+40-40' RT.

JL54

JP1

NL1 85+30-40' RT.

JL56

JL59

JP2

26TH STREET

EXISTING LIGHTING CONTROL CABINET TO BE RELOCATED HERE BY BUTTE ELECTRIC

EXISTING 120/240 V.A.C. 60Hz 1 PHASE, 3 WIRE SERVICE BY BUTTE ELECTRIC

TO EXISTING 120/240 V.A.C. 60Hz. 1 PHASE, 3 WIRE SERVICE BY BUTTE ELECTRIC

PLOT SCALE = 1:40

PLOTTED FROM - SOELLNER

PLOT NAME - 26

FILE -...\SECTIONL\COBLVD83C.DGN

CONDUIT LAYOUT

US HWY 14A / COLORADO BLVD.

FOR BIDDING PURPOSES ONLY

STATE OF SOUTH DAKOTA	PROJECT	SHEET	TOTAL SHEETS
	IM 0901(162)14 P 014A(11)8	L37	L63

Plotting Date: 9/22/2015
Revised Date: 9/09/2015 LCL

REGISTERED PROFESSIONAL ENGINEER
REG NO
11450
SANDRA C. SCANLON
SOUTH DAKOTA
1/6/16
Lighting Responsibility

SCALE
1" = 40'

NL3 88+80-55' LT.

JF1
JA2
JP4
JA3
JL59
JP3
JA1
JA4

2" SCH 80 3 #4
3" SCH 80 15 #10 6 #2 6 #4 3 #6

80+00
90+00
91+00
92+00
93+00
94+00
95+00
15+00
14+00

US HWY 14A
NL4 90+70-40' RT.
COLORADO BLVD.
27TH STREET

OH
HO

REGISTERED PROFESSIONAL ENGINEER
REG. NO.
9435
LYLE E.
DeVRIES
SOUTH DAKOTA
1/6/16
Signal Responsibility

NOTE:

REFER TO THE 27TH STREET CONDUIT LAYOUT PLANS FOR ADDITIONAL WIRING AND CONDUIT DETAILS ASSOCIATED WITH THE 27TH & COLORADO INTERSECTION.

PLOT SCALE - 1:40
PLOTTED FROM - SOELLNER
PLOT NAME - 27
FILE - ...\SECTIONL\COBLVD89C.DGN

WIRING DIAGRAM

27TH ST & US HWY 14A/COLORADO BLVD.

FOR BIDDING PURPOSES ONLY

STATE OF SOUTH DAKOTA	PROJECT	SHEET	TOTAL SHEETS
	IM 0901(162)14 P 014A(11)8	L38	L63

Plotting Date: 8/28/2015
Revised Date: 8/28/2015 LCL

PLOT SCALE - 1:40

PLOT NAME - 28

FILE - ...\SECTIONL\27TH15W.DGN

PLOTTED FROM - SOELLNER

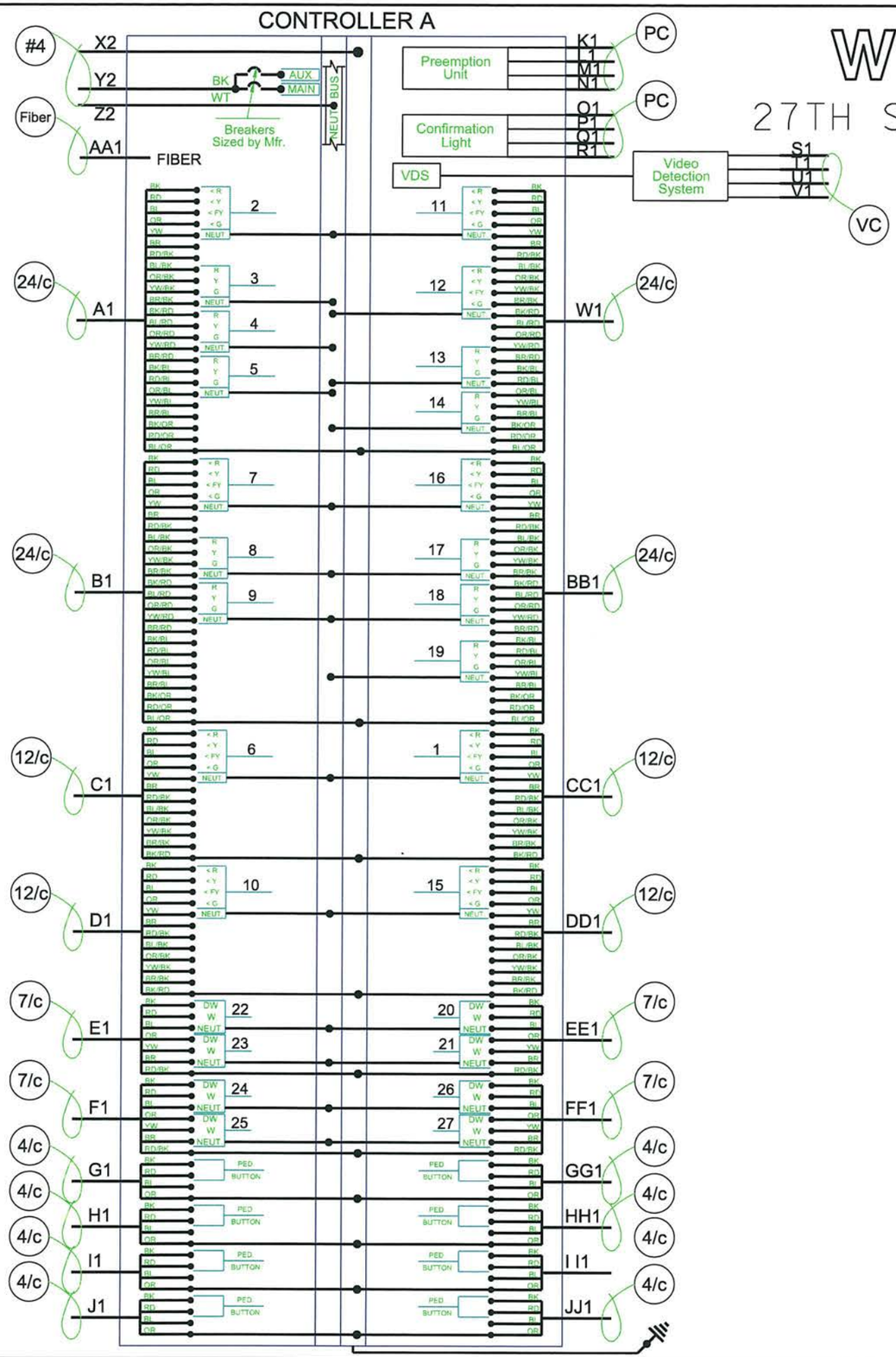

REFER TO THE I-90/27TH ST - SOUTH WIRING DIAGRAM FOR CONNECTION BETWEEN THE TRAFFIC SIGNAL CONTROLLER AND THE POWER SERVICE CABINET & METER

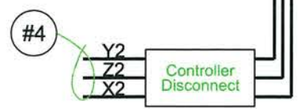

NOTE:
All circuits shall be bonded in accordance with the NATIONAL ELECTRICAL CODE. Quantities for bonding conductors are not included in these plans.

JA2

A1	A2
B1	B2
C1	C2
D1	D2
E1	E2
F1	F2
G1	G2
H1	H2
I1	I2
J1	J2
K1	K2
L1	L2
M1	M2
N1	N2
O1	O2
P1	P2
Q1	Q2
R1	R2
S1	S2
T1	T2
U1	U2
V1	V2
W1	W2
X2	X1
Y2	Y1
Z2	Z1
BB1	BB2
CC1	CC2
DD1	DD2
EE1	EE2
FF1	FF2
GG1	GG2
HH1	HH2
I I1	I I2
JJ1	JJ2

JA3

B2	B3
D2	D3
F2	F3
I2	I3
J2	J3
L2	L3
P2	P3
T2	T3

JA1

M2	M3
N2	N3
Q2	Q3
R2	R3
U2	U3
V2	V3
W2	W3
BB2	BB3
CC2	CC3
DD2	DD3
EE2	EE3
FF2	FF3
GG2	GG3
HH2	HH3
I I2	I I3
JJ2	JJ3

JA4

N3	N4
R3	R4
V3	V4
W3	W4
DD3	DD4
FF3	FF4
GG3	GG4
HH3	HH4

JF1

AA1	AA2

} TO JF2

WIRING DIAGRAM

27TH STREET & US HWY 14A/COLORADO BLVD.

FOR BIDDING PURPOSES ONLY

STATE OF SOUTH DAKOTA	PROJECT	SHEET	TOTAL SHEETS
	IM 0901(162)14 P 014A(11)8	L39	L63

Plotting Date: 8/28/2015
Revised Date: 8/28/2015 LCL

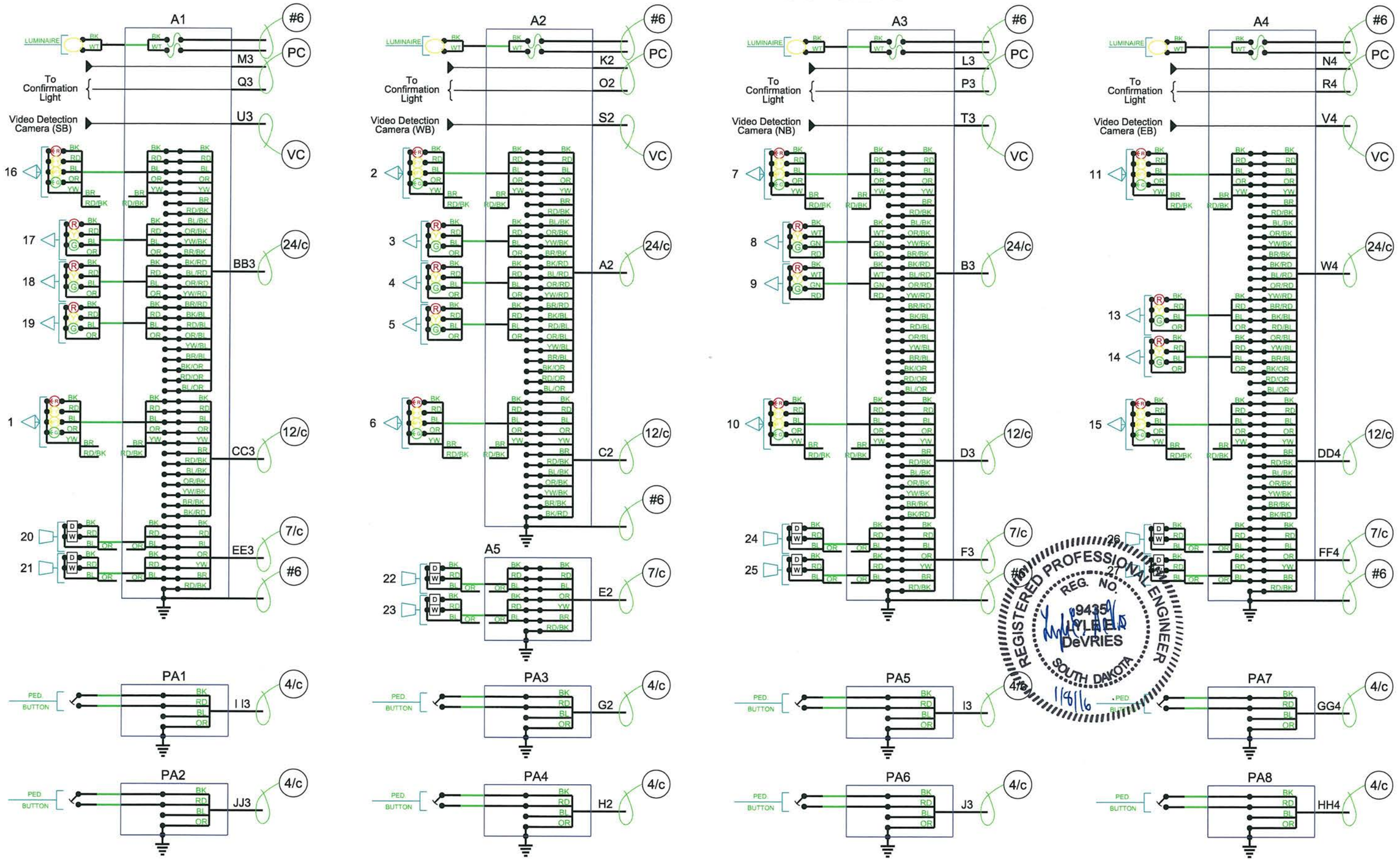

REGISTERED PROFESSIONAL ENGINEER
REG. NO. 9435
LYLE D. DeVRIES
SOUTH DAKOTA
1/31/16

PLOTTED FROM - SOELLNER
PLOT SCALE - 1:40
PLOT NAME - 29
FILE - ...\SECTION_27TH15W2.DGN

WIRING DIAGRAM

27TH STREET & I-90

FOR BIDDING PURPOSES ONLY

STATE OF SOUTH DAKOTA	PROJECT	SHEET	TOTAL SHEETS
	IM 0901(162)14 P 014A(11)8	L40	L63

Plotting Date: 8/28/2015
Revised Date: 8/28/2015 LCL

REGISTERED PROFESSIONAL ENGINEER
REG. NO. 9435
LYLE DeVRIES
SOUTH DAKOTA
11/6/16

CONTROLLER B

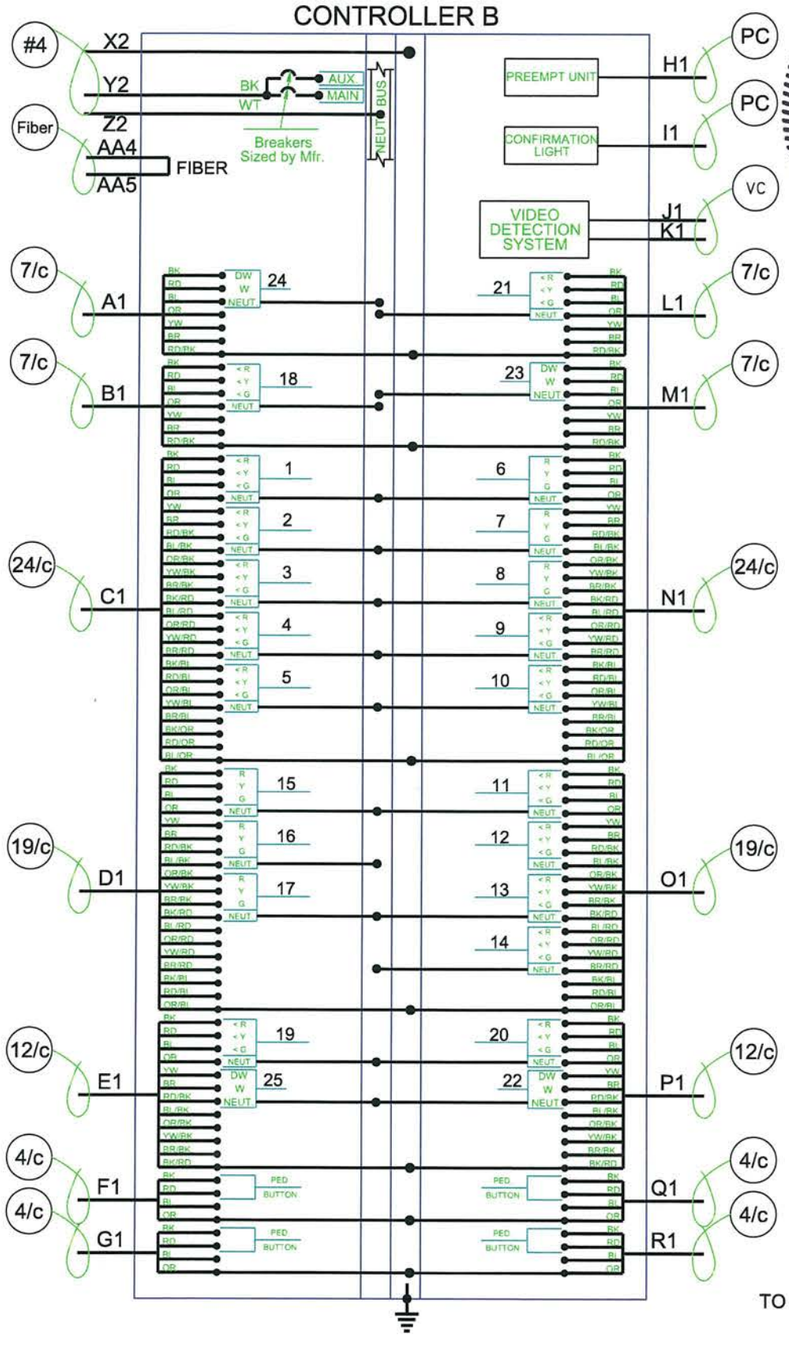

REFER TO THE I-90/27TH ST - SOUTH WIRING DIAGRAM FOR CONNECTION BETWEEN THE TRAFFIC SIGNAL CONTROLLER AND THE POWER SERVICE CABINET & METER

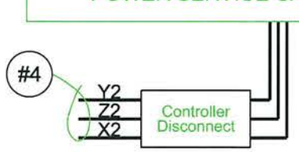

JB1

A1	A2
B1	B2
C1	C2
D1	D2
E1	E2
F1	F2
G1	G2
H1	H2
I1	I2
J1	J2
K1	K2
L1	L2
M1	M2
N1	N2
O1	O2
P1	P2
Q1	Q2
R1	R2
X2	X1
Y2	Y1
Z2	Z1

JB2

A2	A3
C2	C3
D2	D3
G2	G3
H2	H3
I2	I3
J2	J3
K2	K3
L2	L3
M2	M3
N2	N3
O2	O3
P2	P3
Q2	Q3
R2	R3

JB3

A3	A4
C3	C4
D3	D4
G3	G4
H3	H4
I3	I4
J3	J4
K3	K4
L3	L4
M3	M4
N3	N4
O3	O4
P3	P4
Q3	Q4
R3	R4

SMJ3

A4	A5
G4	G5

JB12

L12	L13

JB11

L11	L12
P11	P12
Q11	Q12

JB10

L10	L11
P10	P11
Q10	Q11

SMJ9

M10	M11
R10	R11

JB9

L9	L10
M9	M10
P9	P10
Q9	Q10
R9	R10

JB8

L8	L9
M8	M9
P8	P9
Q8	Q9
R8	R9

JB4

C4	C5
D4	D5
H4	H5
I4	I5
J4	J5
K4	K5
L4	L5
M4	M5
N4	N5
O4	O5
P4	P5
Q4	Q5
R4	R5

SMJ4

J5	J6
K5	K6
L5	L6
M5	M6
N5	N6
O5	O6
P5	P6
Q5	Q6
R5	R6

SMJ7

J6	J7
K6	K7
L6	L7
M6	M7
N6	N7
O6	O7
P6	P7
Q6	Q7
R6	R7

SMJ8

L7	L8
M7	M8
P7	P8
Q7	Q8
R7	R8

JB13

B2	B3

NOTE:
All circuits shall be bonded in accordance with the NATIONAL ELECTRICAL CODE. Quantities for bonding conductors are not included in these plans.

JB5

C5	C6
D5	D6
H5	H6
I5	I6

SMJ5

C6	C7
D6	D7
H6	H7
I6	I7

SMJ6

C7	C8
D7	D8
H7	H8
I7	I8

TO JF1 { **JF2** AA2 | AA3

JF3

AA3	AA4
AA5	AA6

JF4

AA6	AA7

JF5

AA7	AA8

JF6

AA8	AA9

} TO JF7

PLOT SCALE - 1:40
PLOTTED FROM - SOELLNER
PLOT NAME - 30
FILE - ...\SECTION\27TH21W.DGN

WIRING DIAGRAM

27TH STREET & I-90

FOR BIDDING PURPOSES ONLY

STATE OF SOUTH DAKOTA	PROJECT	SHEET	TOTAL SHEETS
	IM 0901(162)14 P 014A(11)8	L41	L63

Plotting Date: 8/28/2015
Revised Date: 8/28/2015 LCL

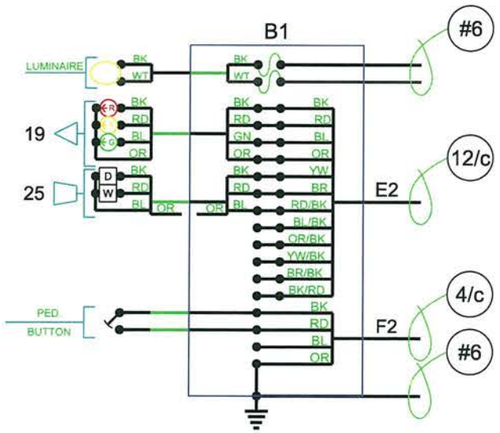

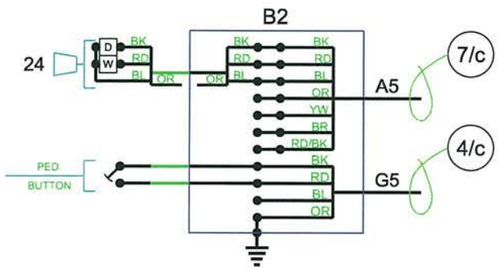

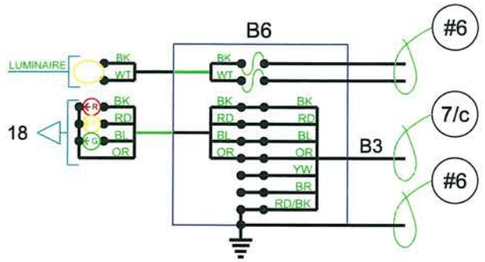

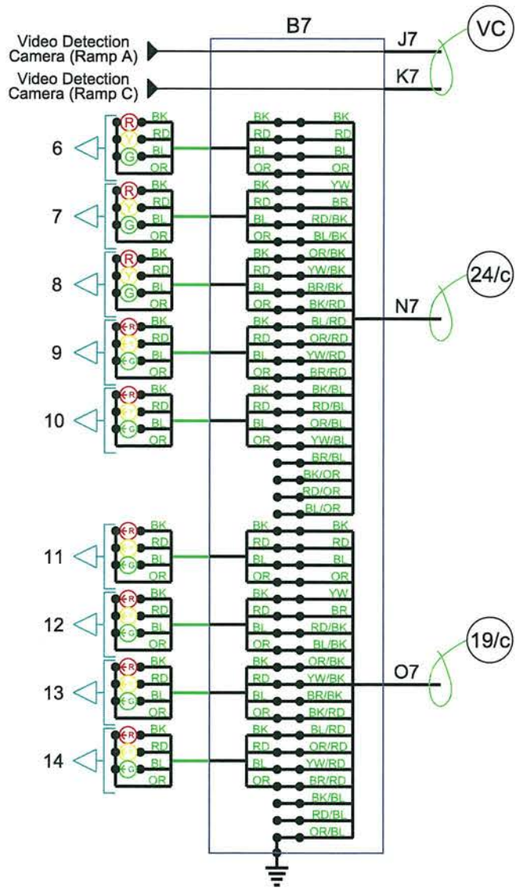

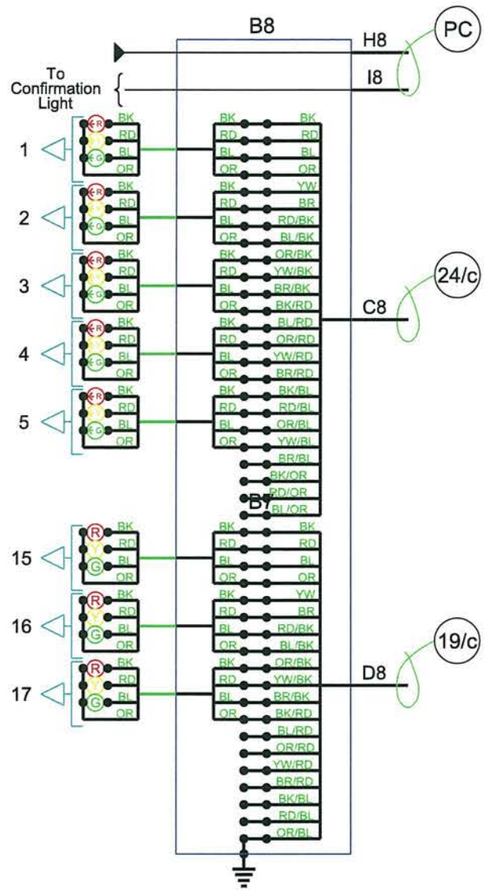

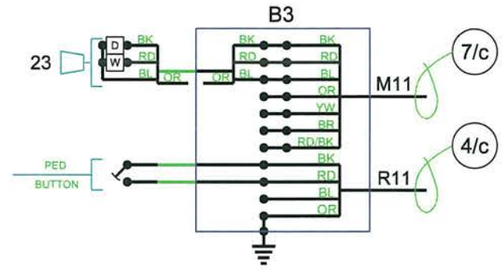

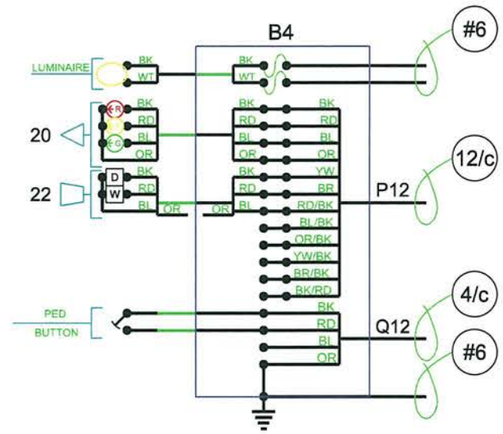

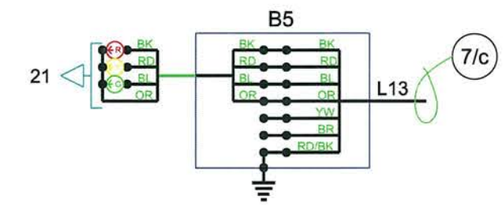

REGISTERED PROFESSIONAL ENGINEER
REG. NO. 9435
LYLE E. DeVRIES
SOUTH DAKOTA
1/8/16

LEGEND:

FUSE: 6 amp. Non-Time Delay
or
2 8/10 amp. Dual Element

LUMINAIRE: 400 watt High Pressure Sodium Lamp

PLOT SCALE - 1:40

PLOTTED FROM - SOELLNER

PLOT NAME - 31

FILE - ...\SECTIONL\27TH21W2.DGN

FOR BIDDING PURPOSES ONLY

WIRING DIAGRAM

27TH STREET & 1ST AVENUE

STATE OF SOUTH DAKOTA	PROJECT	SHEET	TOTAL SHEETS
	IM 0901(162)14 P 014A(11)8	L42	L63

Plotting Date: 8/28/2015
Revised Date: 8/28/2015 LCL

PLOT SCALE - 1:40

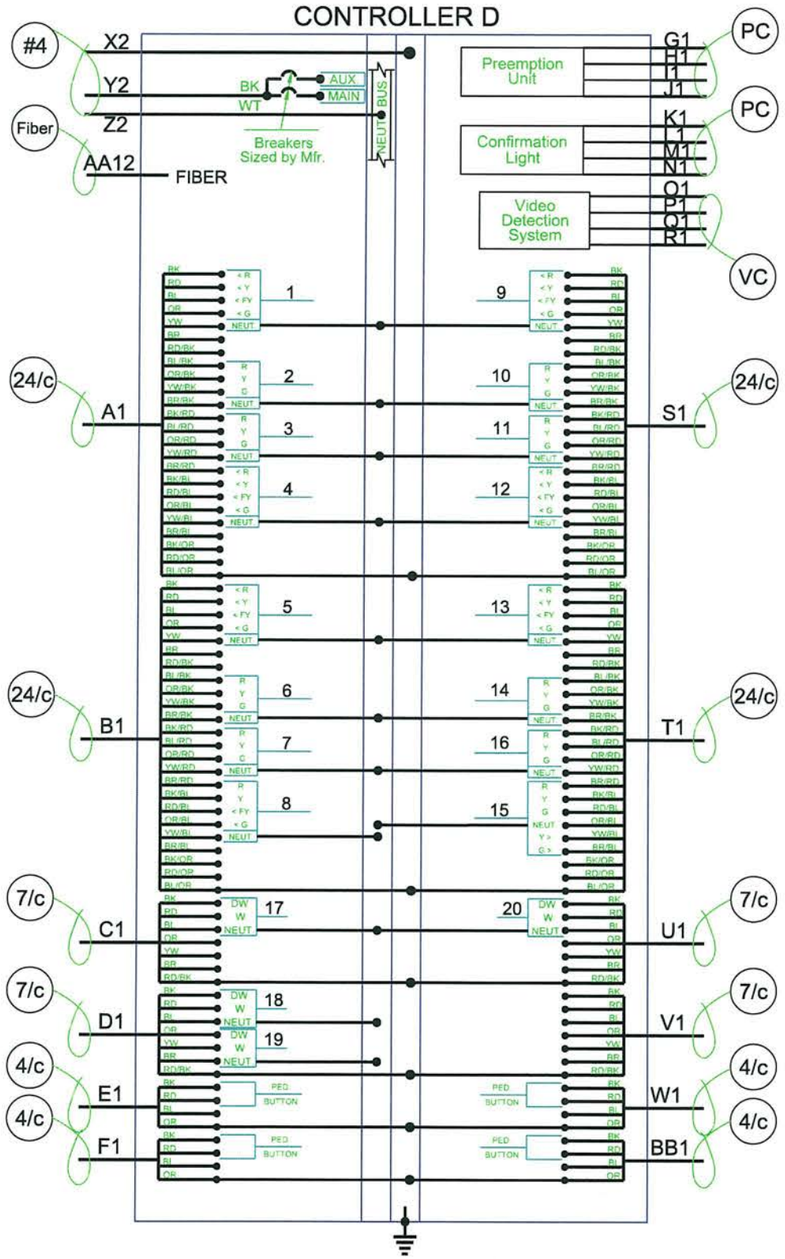

REFER TO THE 27TH STREET WIRING DIAGRAM FOR CONNECTION BETWEEN THE TRAFFIC SIGNAL CONTROLLER AND THE POWER SERVICE CABINET & METER

NOTE:
All circuits shall be bonded in accordance with the NATIONAL ELECTRICAL CODE. Quantities for bonding conductors are not included in these plans.

JD1

A1		A2
B1		B2
C1		C2
D1		D2
E1		E2
F1		F2
G1		G2
H1		H2
I1		I2
J1		J2
K1		K2
L1		L2
M1		M2
N1		N2
O1		O2
P1		P2
Q1		Q2
R1		R2
S1		S2
T1		T2
U1		U2
V1		V2
W1		W2
X2		X1
Y2		Y1
Z2		Z1
BB1		BB2

JD4

A2		A3
C2		C3
J2		J3
N2		N3
R2		R3
BB2		BB3

JD2

H2		H3
I2		I3
L2		L3
M2		M3
P2		P3
Q2		Q3
S2		S3
T2		T3
U2		U3
V2		V3
W2		W3

JD3

I3		I4
M3		M4
Q3		Q4
T3		T4
V3		V4

EJD3

I4		I5
M4		M5
Q4		Q5
T4		T5
V4		V5

TO JF6 {

JF7

AA9		AA10

JF8

AA10		AA11

JF9

AA11		AA12

PLOTTED FROM - SOELLNER

PLOT NAME - 32

FILE - ...\SECTION\27TH32W.DGN

WIRING DIAGRAM

27TH STREET & 1ST AVENUE

FOR BIDDING PURPOSES ONLY

STATE OF SOUTH DAKOTA	PROJECT	SHEET	TOTAL SHEETS
	IM 0901(162)14 P 014A(11)8	L43	L63

Plotting Date: 8/28/2015
Revised Date: 8/28/2015 LCL

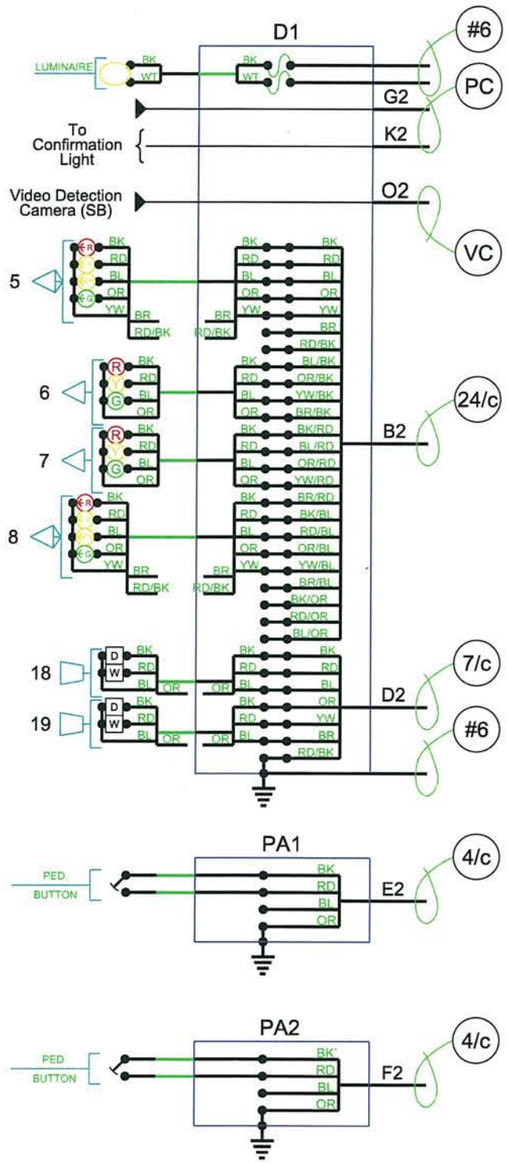

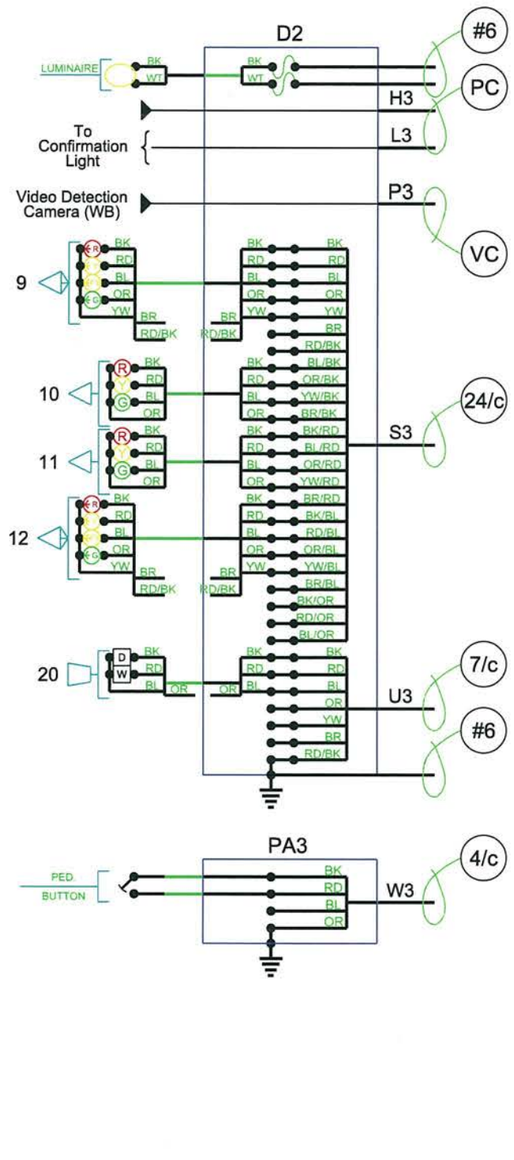

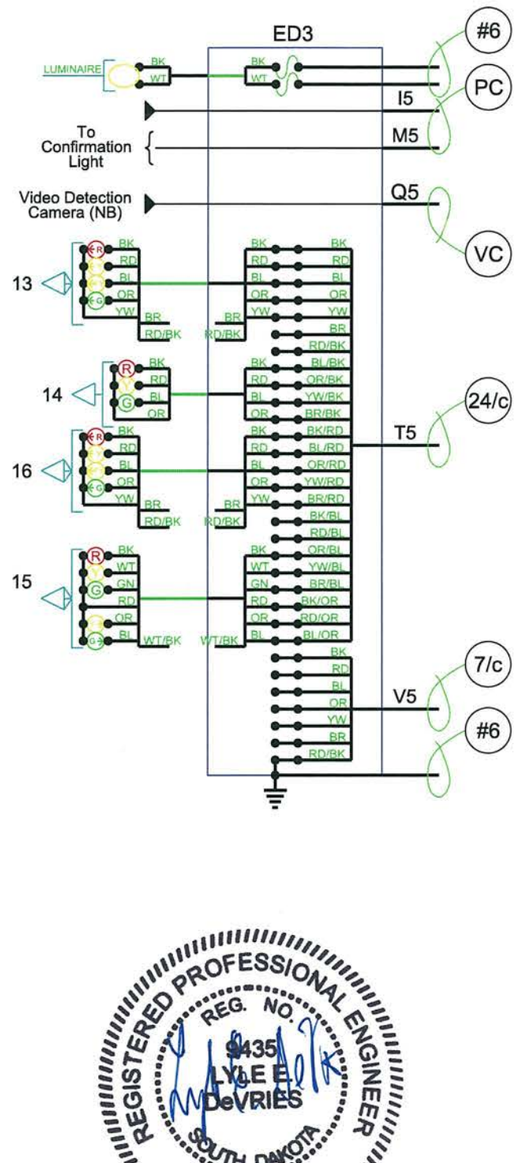

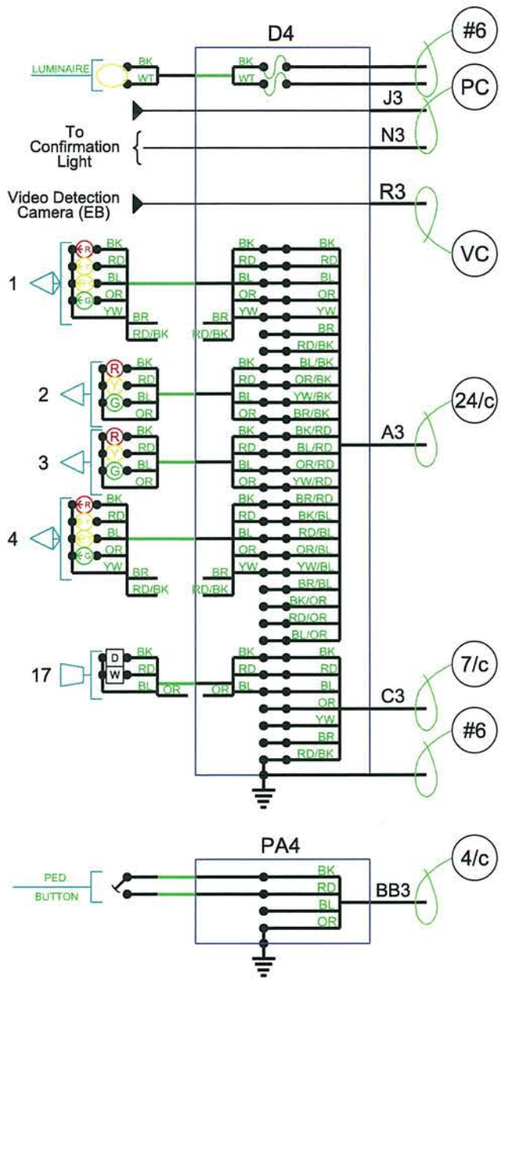

PLOT SCALE - 1:40

PLOTTED FROM - SOELLNER

PLOT NAME - 33

FILE - ...\SECTIONL\27TH32W2.DGN

FOR BIDDING PURPOSES ONLY

STATE OF SOUTH DAKOTA	PROJECT	SHEET	TOTAL SHEETS
	IM 0901(162)14 P 014A(11)8	L44	L63

Plotting Date: 8/28/2015
Revised Date: 8/28/2015 LCL

WIRING DIAGRAM
27TH STREET

NOTE:
All circuits shall be bonded in accordance with the NATIONAL ELECTRICAL CODE. Quantities for bonding conductors are not included in these plans.

LEGEND:

FUSE: 6 amp. Non-Time Delay
or
2 8/10 amp. Dual Element

LUMINAIRE: 400 watt High Pressure Sodium Lamp

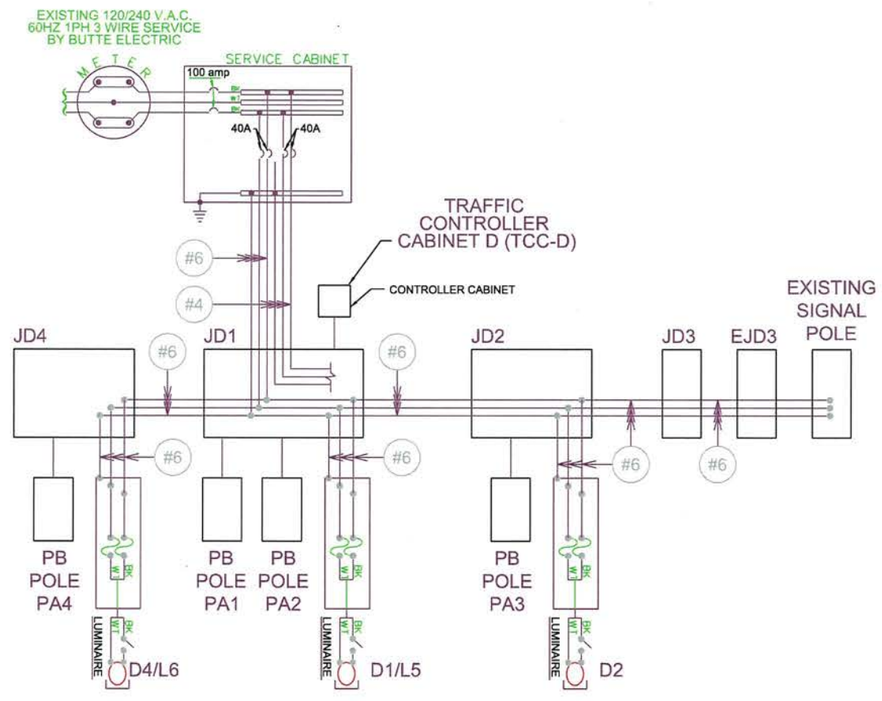

REGISTERED PROFESSIONAL ENGINEER
REG NO. 11450
SANDRA C. SCANLON
SOUTH DAKOTA
1/6/16
Lighting Responsibility

PLOT SCALE - 1:3.33333
PLOT NAME - 34
FILE - ...\SDWIRING DIAGRAM 27TH ST.DGN
PLOTTED FROM - SOELLNER

FOR BIDDING PURPOSES ONLY

STATE OF SOUTH DAKOTA	PROJECT	SHEET	TOTAL SHEETS
	IM 0901(162)14 P 014A(11)8	L45	L63

Plotting Date: 8/28/2015
Revised Date: 8/28/2015 LCL

WIRING DIAGRAM

I-90/27TH STREET - NORTH

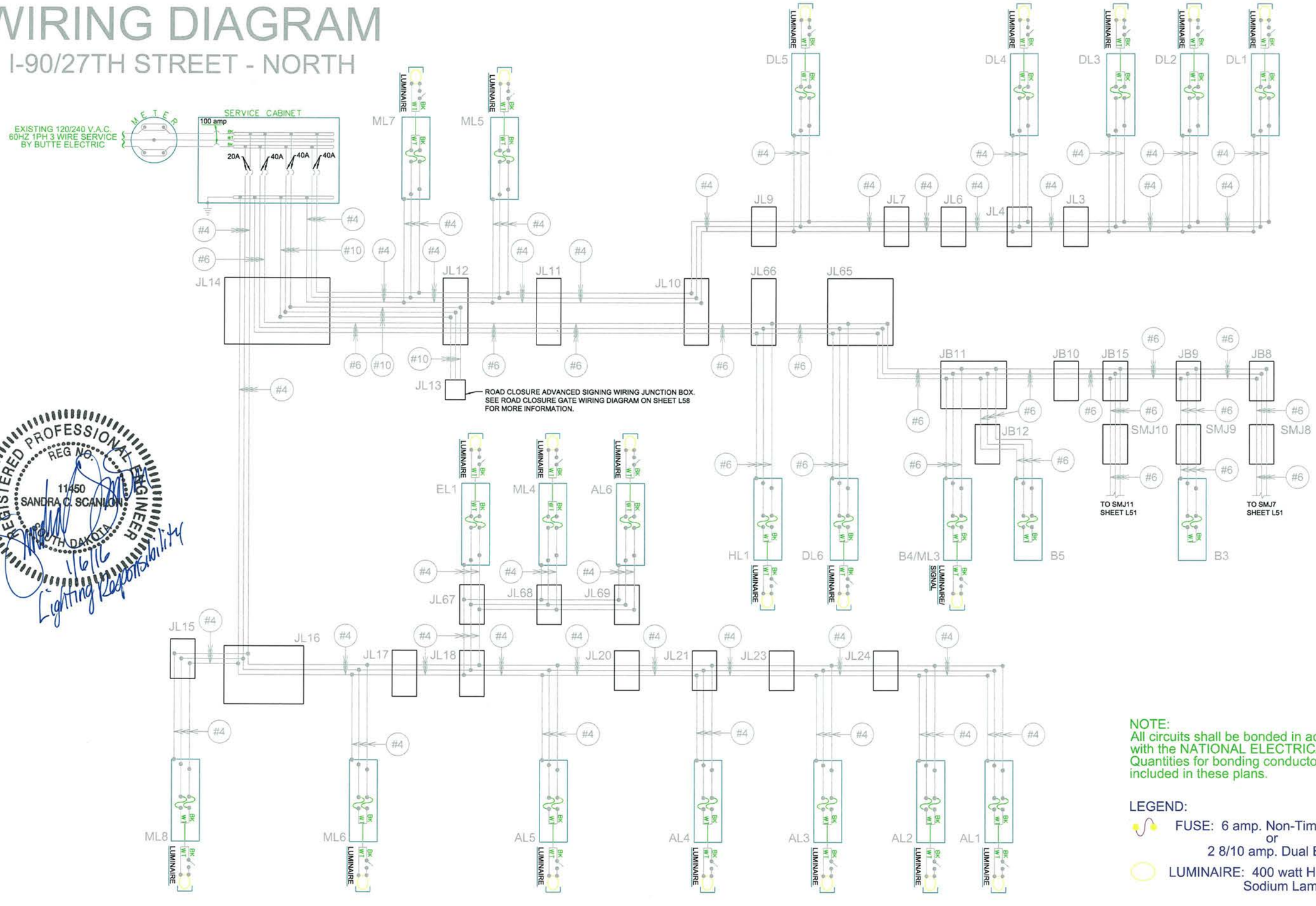

REGISTERED PROFESSIONAL ENGINEER
REG NO. 11450
SANDRA C. SCANLON
SOUTH DAKOTA
1/6/16
Lighting Responsibility

NOTE:
All circuits shall be bonded in accordance with the NATIONAL ELECTRICAL CODE. Quantities for bonding conductors are not included in these plans.

LEGEND:

FUSE: 6 amp. Non-Time Delay or 2 8/10 amp. Dual Element

LUMINAIRE: 400 watt High Pressure Sodium Lamp

PLOT SCALE - 1:3.33333

PLOTTED FROM - SOELLNER

PLOT NAME - 35

FILE - ...\SDWIRING DIAGRAM NORTH SERVICE.DGN

FOR BIDDING PURPOSES ONLY

STATE OF SOUTH DAKOTA	PROJECT	SHEET	TOTAL SHEETS
	IM 0901(162)14 P 014A(11)8	L46	L63

Plotting Date: 8/28/2015
Revised Date: 8/28/2015 LCL

WIRING DIAGRAM

I-90/27TH STREET - SOUTH

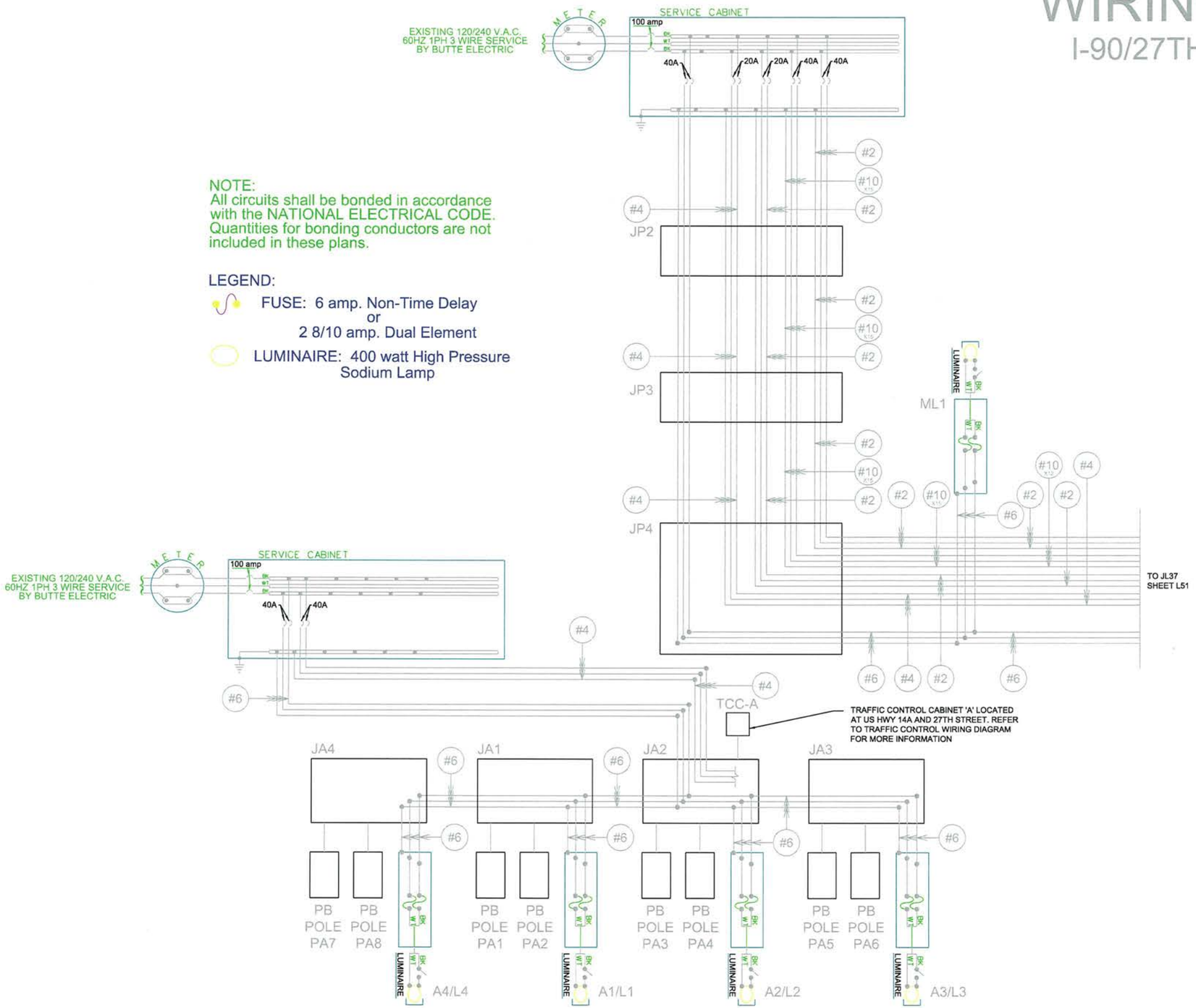

NOTE:
All circuits shall be bonded in accordance with the NATIONAL ELECTRICAL CODE. Quantities for bonding conductors are not included in these plans.

LEGEND:

FUSE: 6 amp. Non-Time Delay
or
2 8/10 amp. Dual Element

LUMINAIRE: 400 watt High Pressure Sodium Lamp

REGISTERED PROFESSIONAL ENGINEER
REG NO
11450
SANDRA C. SCANLON
SOUTH DAKOTA
1/6/16
Lighting Responsibility

PLOT SCALE - 1:3.33333
PLOTTED FROM - SOELLNER
PLOT NAME - 36
FILE - ...\SDWIRING DIAGRAM SOUTH SERVICE A.DGN

FOR BIDDING PURPOSES ONLY

STATE OF SOUTH DAKOTA	PROJECT	SHEET	TOTAL SHEETS
	IM 0901(162)14 P 014A(11)8	L47	L63

Plotting Date: 8/28/2015
Revised Date: 8/28/2015 LCL

WIRING DIAGRAM
I-90/27TH STREET - SOUTH

NOTE:
All circuits shall be bonded in accordance with the NATIONAL ELECTRICAL CODE. Quantities for bonding conductors are not included in these plans.

LEGEND:

FUSE: 6 amp. Non-Time Delay
or
2 8/10 amp. Dual Element

LUMINAIRE: 400 watt High Pressure Sodium Lamp

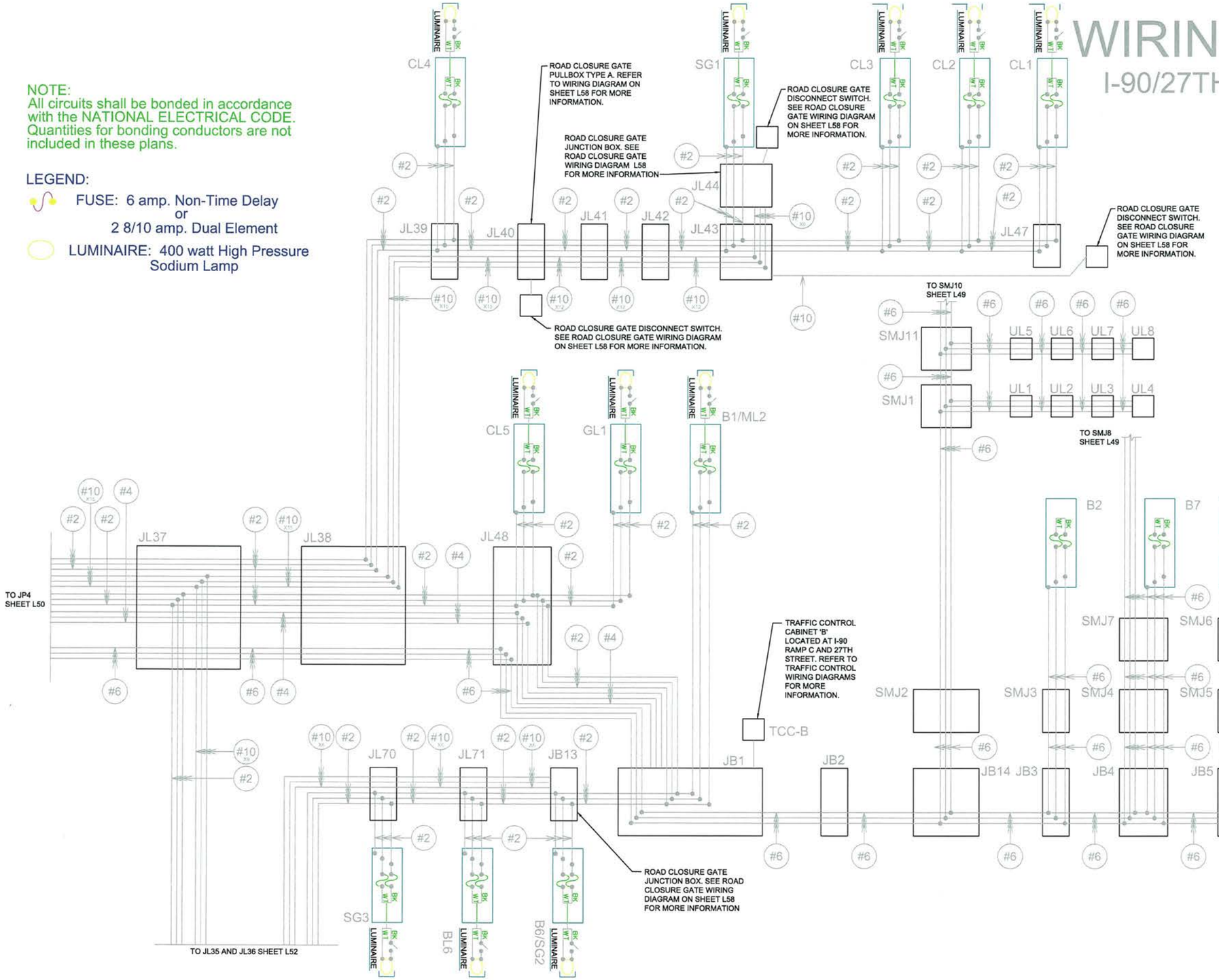

REGISTERED PROFESSIONAL ENGINEER
REG NO.
11450
SANDRA C. SCANLON
SOUTH DAKOTA
1/26/16
Lighting Responsibility

PLOT SCALE - 1:3.33333
PLOTTED FROM - SOELLNER
PLOT NAME - 37
FILE - ...\SDWIRING DIAGRAM SOUTH SERVICE B.DGN

FOR BIDDING PURPOSES ONLY

STATE OF SOUTH DAKOTA	PROJECT	SHEET	TOTAL SHEETS
	IM 0901(162)14 P 014A(11)8	L48	L63

Plotting Date: 8/28/2015
Revised Date: 8/28/2015 LCL

WIRING DIAGRAM

I-90/27TH STREET - SOUTH

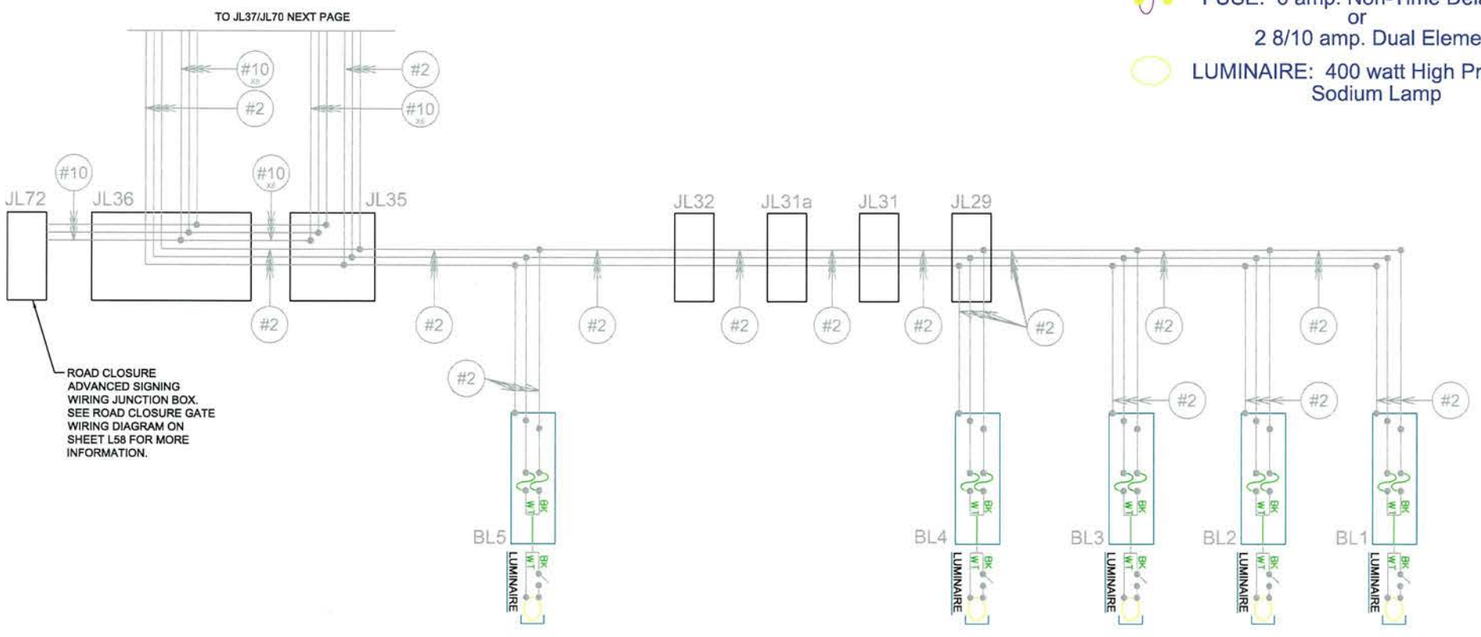

NOTE:
All circuits shall be bonded in accordance with the NATIONAL ELECTRICAL CODE. Quantities for bonding conductors are not included in these plans.

LEGEND:

FUSE: 6 amp. Non-Time Delay
or
2 8/10 amp. Dual Element

LUMINAIRE: 400 watt High Pressure Sodium Lamp

REGISTERED PROFESSIONAL ENGINEER
REG NO
11450
SANDRA C. SCANLON
SOUTH DAKOTA
1/6/16
Lighting Responsibility

PLOT SCALE - 1:3.33333
PLOT NAME - 38
FILE - ...\SDWIRING DIAGRAM SOUTH SERVICE C.DGN
PLOTTED FROM - SOELLNER

FOR BIDDING PURPOSES ONLY

STATE OF SOUTH DAKOTA	PROJECT	SHEET	TOTAL SHEETS
	IM 0901(162)14 P 014A(11)8	L49	L63

Plotting Date: 8/28/2015
Revised Date: 8/28/2015 LCL

WIRING DIAGRAM

US HWY 14A/RAMP A/TEMP LIGHTING

NOTE:
All circuits shall be bonded in accordance with the NATIONAL ELECTRICAL CODE. Quantities for bonding conductors are not included in these plans.

LEGEND:

FUSE: 6 amp. Non-Time Delay
or
2 8/10 amp. Dual Element

LUMINAIRE: 400 watt High Pressure Sodium Lamp

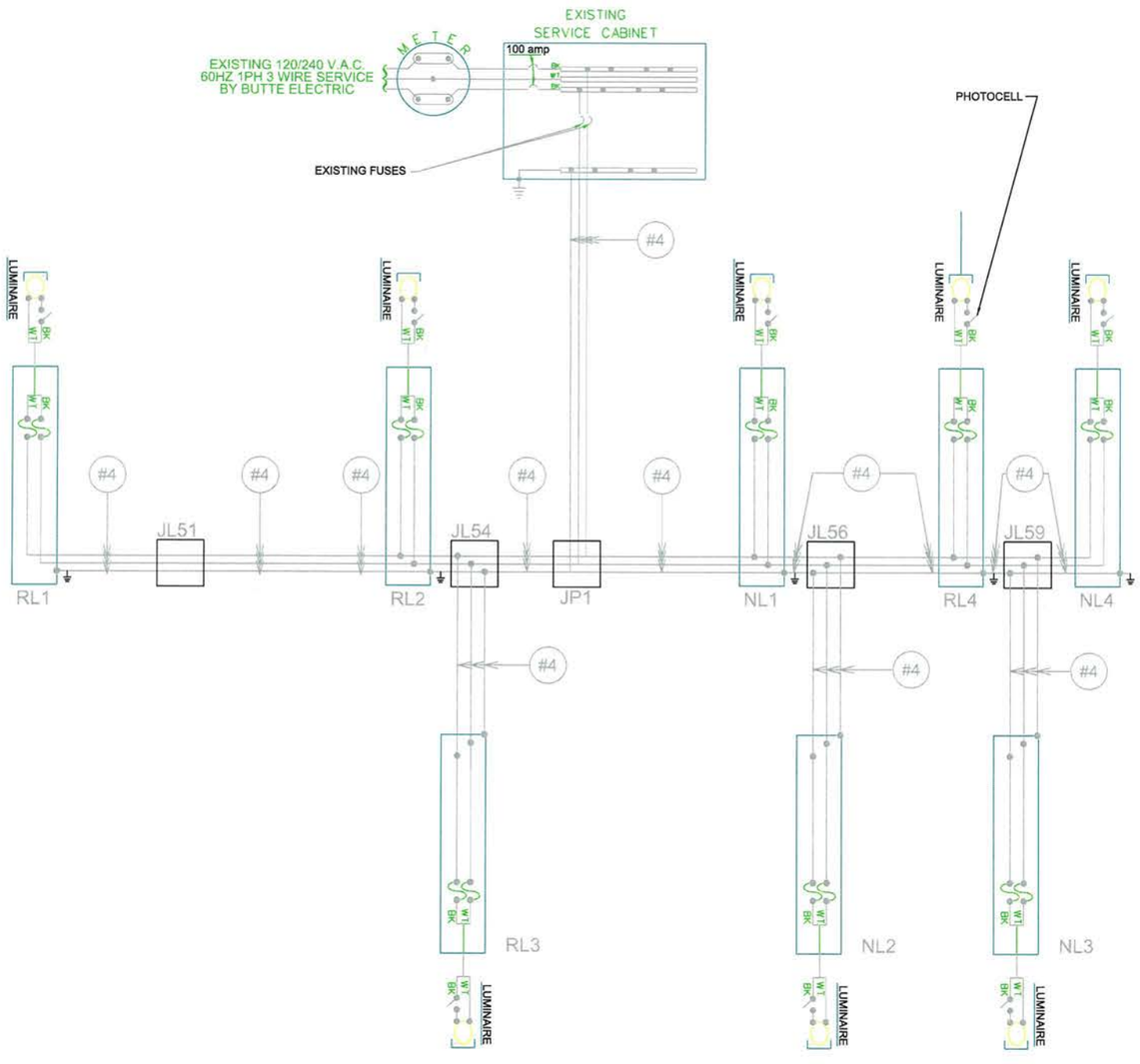

REGISTERED PROFESSIONAL ENGINEER
REG NO.
11450
SANDRA C. SCANLON
SOUTH DAKOTA

11/6/16
Lighting Responsibility

PLOT SCALE - 1:3.33333

PLOT NAME - 39

FILE - ...\SDWIRING DIAGRAM TEMPORARY LTG.DGN

PLOTTED FROM - SOELLNER

SIGNAL TIMINGS

27TH STREET & US HWY 14A/COLORADO BLVD.

FOR BIDDING PURPOSES ONLY

STATE OF SOUTH DAKOTA	PROJECT	SHEET	TOTAL SHEETS
	IM 0901(162)14 P 014A(11)8	L50	L63

Plotting Date: 8/28/2015
Revised Date: 8/28/2015 LCL

MOVEMENT	INTERVAL / SIGNAL HEAD NO.	SEQUENCING 1	2	3	4	5	6	7	8	9	10	SEQUENCING 11	12	13	14	15	16	17	18	19	20	FLASH
SBL	15, 16											<G	<Y		FY	<Y		FY	FY	<Y		Y
SBT	17, 18, 19											G	G		G	Y		G	G	Y		Y
NBL	6, 7														FY	<Y		FY	FY	<Y		Y
NBT	8, 9														G	Y		G	G	Y		Y
EBL	10, 11	<G	<Y		FY	<Y		FY	FY	<Y												R
EBT	13, 14				G	Y		G	G	Y												R
WBL	1, 2	<G	<Y		FY	<Y		FY	FY	<Y												R
WBT	3, 4, 5				G	Y		G	G	Y												R
N/S	PED 20,23,24,27	DW	DW	DW	DW	DW	DW	DW	DW	DW	DW	DW	DW	DW	DW	DW	DW	W	F DW	F DW	DW	NO DISPLAY
E/W	PED 21,22,25,26	DW	DW	DW	DW	DW	DW	W	F DW	F DW	DW	DW	DW	DW	DW	DW	DW	DW	DW	DW	DW	NO DISPLAY
	PHASE	ϕ4 & ϕ7			ϕ4 & ϕ8			4&8 PEDS				ϕ1 & ϕ6			ϕ2 & ϕ6			2&6 PEDS				
	MOVEMENT				OR										OR							

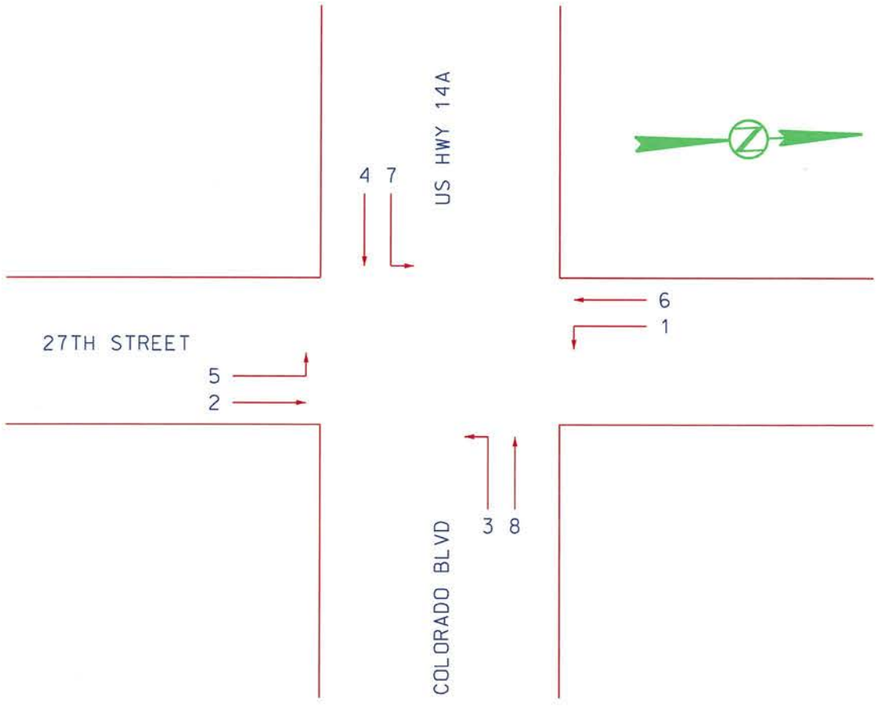

CONTROLLER TIMINGS (Free Operation)								
PHASE	1	2	3	4	5	6	7	8
MOVEMENT	SBL	NBT	WBL	EBT	NBL	SBT	EBL	WBT
MIN GREEN	7	12		7		12	7	7
ADDED INITIAL								
MAX INITIAL								
PASSAGE TIME	4			4			4	4
MAXIMUM 1	12	30		20		30	12	20
MAXIMUM 2	20	40		30		40	20	30
TIME BEFORE								
TIME TO REDUCE								
MINIMUM GAP								
YELLOW CHANGE	4.5	5.0		4.5		5.0	4.5	4.5
RED CLEARANCE		2.0		2.0		2.0		2.0
WALK		5		5		5		5
PED CLEARANCE		33		32		33		32

DETECTOR SETTINGS							
DETECTOR LABLE	AMPLIFIED CHANNEL DETECTOR	DETECTOR OPERATION: CALLS & EXTENDS	DETECTOR OPERATION: CALLS ONLY	DETECTOR OPERATION: EXTENDS ONLY	LOCKING CALL	MOVEMENT CALLED	MOVEMENT EXTENDED
E1	1	X				3	3
E2,E3	2	X				8	8
W1	3	X				7	7
W2,W3	4	X				4	4
N1	5	X				1	1
N2,N3	6	X				6	6
S1	7	X				5	5
S2	8	X				2	2

TIMING PLAN 1	
TIME OF DAY (TOD)	PATTERN (C/S/O)
6:00 - 23:00	111
23:00 - 6:00	FLASH

TIMING PLAN 2	
TIME OF DAY (TOD)	PATTERN (C/S/O)
6:00 - 23:00	FREE
23:00 - 6:00	FLASH

WEEKLY PROGRAM							
	SUN	MON	TUE	WED	THU	FRI	SAT
TIMING PLAN	2	1	1	1	1	1	2

COORDINATION TIMING								
CYCLE 1 = 120 SEC								
PHASE	1	2	3	4	5	6	7	8
MOVEMENT	SBL	NBT		EBT		SBT	EBL	WBT
TIME - SPLIT 1	11	46		63		57	20	43
COORDINATED PHASE		X				X		
OFFSET 1 = 13 SEC								

REGISTERED PROFESSIONAL ENGINEER
REG. NO. 9435
LYLE E. DeVRIES
SOUTH DAKOTA
11/8/16

PLOT SCALE - 1:40
PLOT NAME - 40
PLOTTED FROM - SOELLNER
FILE - ...\SECTIONL\27TH15TIME.DGN

SIGNAL TIMINGS

27TH STREET & I-90

FOR BIDDING PURPOSES ONLY

STATE OF SOUTH DAKOTA	PROJECT	SHEET	TOTAL SHEETS
	IM 0901(162)14 P 014A(11)8	L51	L63

Plotting Date: 8/28/2015
Revised Date: 8/28/2015 LCL

MOVEMENT	SIGNAL HEAD NO. / INTERVAL	SEQUENCING 1	2	3	4	5	6	7	8	9	10	11	12	13	14	15	16	SEQ. 17	18	19
NBL	10, 13, 14, 20	<G	<Y		<G	<Y														
NBT	15, 16, 17	G	G								G	Y		G	G	Y				
SBL	4, 5, 18				<G	<Y		<G	<Y											
SBT	6, 7, 8							G	G		G	Y		G	G	Y				
EBL	9, 11, 12, 19																	<G	<Y	
WBL	1, 2, 3, 21																	<G	<Y	
N/S	PED 22,23,24,25	DW	DW	DW	DW	DW	DW	DW	DW	DW	DW	DW	DW	W	F DW	F DW	DW	DW	DW	DW
	PHASE	φ2 & φ5			OR φ1 & φ5			OR φ1 & φ6			φ2 & φ6			OR 2&6 PEDS				φ4 & φ8		
	MOVEMENT																			

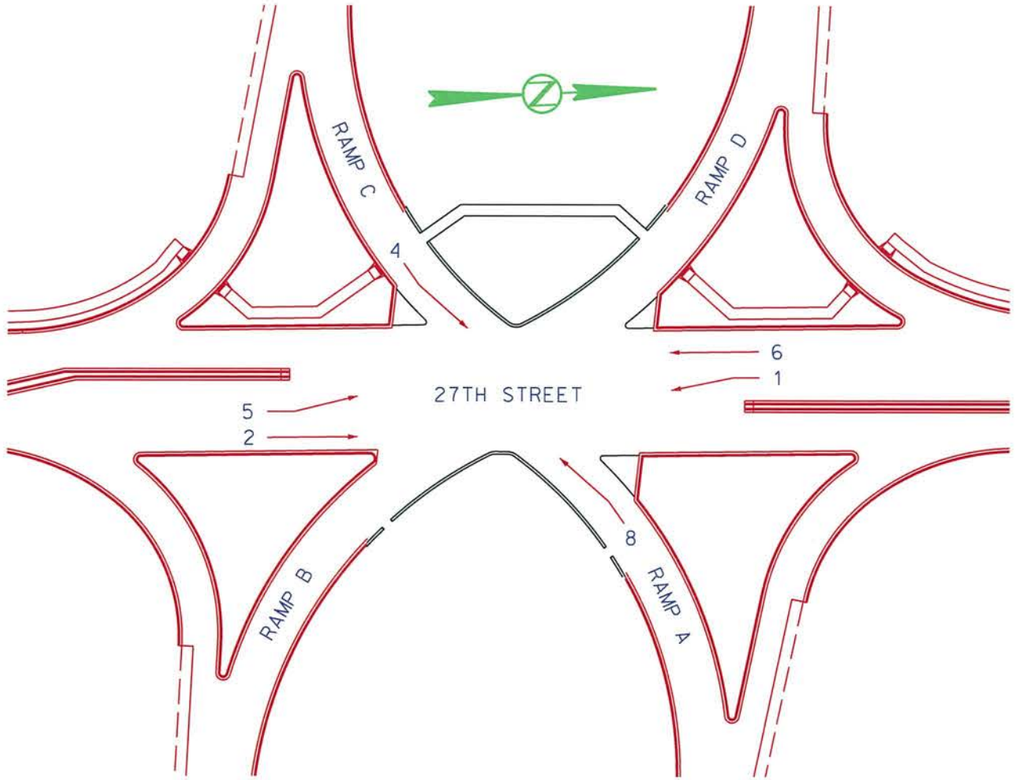

CONTROLLER TIMINGS (Free Operation)								
PHASE	1	2	3	4	5	6	7	8
MOVEMENT	SBL	NBT		EBL	NBL	SBT		WBL
MIN GREEN	7	10		7	7	10		7
ADDED INITIAL								
MAX INITIAL								
PASSAGE TIME	4			4	4			4
MAXIMUM 1	12	20		15	12	20		15
MAXIMUM 2	20	35		35	20	35		35
TIME BEFORE								
TIME TO REDUCE								
MINIMUM GAP								
YELLOW CHANGE	3.0	3.0		3.0	3.0	3.0		3.0
RED CLEARANCE	6.5	6.5		5.5	6.5	6.5		5.5
WALK		5				5		
PED CLEARANCE		7				7		

DETECTOR SETTINGS							
DETECTOR LABLE	AMPLIFIED CHANNEL DETECTOR	DETECTOR OPERATION: CALLS & EXTENDS	DETECTOR OPERATION: CALLS ONLY	DETECTOR OPERATION: EXTENDS ONLY	LOCKING CALL	MOVEMENT CALLED	MOVEMENT EXTENDED
E1,E2	1	X				8	8
W1,W2	2	X				4	4
N1,N2	3	X				1	1
N3,N4	4	X				6	6
S1,S2	5	X				5	5
S3,S4	6	X				2	2

TIMING PLAN 1	
TIME OF DAY (TOD)	PATTERN (C/S/O)
6:00 - 23:00	111
23:00 - 6:00	FREE

TIMING PLAN 2	
TIME OF DAY (TOD)	PATTERN (C/S/O)
6:00 - 23:00	FREE
23:00 - 6:00	FREE

COORDINATION TIMING								
CYCLE 1 = 120 SEC								
PHASE	1	2	3	4	5	6	7	8
MOVEMENT	SBL	NBT		EBL	NBL	SBT		WBL
TIME - SPLIT 1	31	49		40	34	46		40
COORDINATED PHASE		X				X		
OFFSET 1 = 0 SEC								

WEEKLY PROGRAM							
	SUN	MON	TUE	WED	THU	FRI	SAT
TIMING PLAN	2	1	1	1	1	1	2

REGISTERED PROFESSIONAL ENGINEER
REG. NO. 9435
LYLE E. DeVRIES
SOUTH DAKOTA
11/3/16

PLOT SCALE - 1:40
PLOT NAME - 41
PLOTTED FROM - SOELLNER
FILE - ...\SECTIONL\27TH21TIME.DGN

SIGNAL TIMINGS

27TH STREET & 1ST AVENUE

FOR BIDDING PURPOSES ONLY

STATE OF SOUTH DAKOTA	PROJECT	SHEET	TOTAL SHEETS
	IM 0901(162)14 P 014A(11)8	L52	L63

Plotting Date: 8/28/2015
Revised Date: 8/28/2015 LCL

MOVEMENT	SIGNAL HEAD NO. / INTERVAL	SEQUENCING 1	2	3	4	5	6	7	8	9	10	SEQUENCING 11	12	13	14	15	16	17	18	19	20	FLASH
SBL	4, 5	<G	<Y		FY	<Y		FY	FY	<Y												Y
SBT	6, 7				G	Y		G	G	Y												Y
NBL	12, 13	<G	<Y		FY	<Y		FY	FY	<Y												Y
NBT	14				G	Y		G	G	Y												Y
NBTR	15				G	Y		G	G	Y		<G	<Y									Y
EBL	1, 16														FY	<Y		FY	FY	<Y		R
EBT	2, 3														G	Y		G	G	Y		R
WBL	8, 9											<G	<Y		FY	<Y		FY	FY	<Y		R
WBT	10, 11											G	G		G	Y		G	G	Y		R
N/S	PED 19, 20	DW	DW	DW	DW	DW	DW	W	F DW	F DW	DW	DW	DW	DW	DW	DW	DW	DW	DW	DW	DW	NO DISPLAY
E/W	PED 17, 18	DW	DW	DW	DW	DW	DW	DW	DW	DW	DW	DW	DW	DW	DW	DW	DW	W	F DW	F DW	DW	NO DISPLAY
	PHASE	ϕ1 & ϕ5			ϕ2 & ϕ6			2&6 PEDS				ϕ3 & ϕ8			ϕ4 & ϕ8			4&8 PEDS				
	MOVEMENT	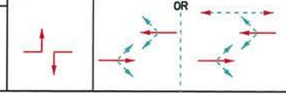						OR							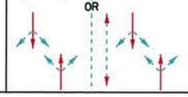			OR				

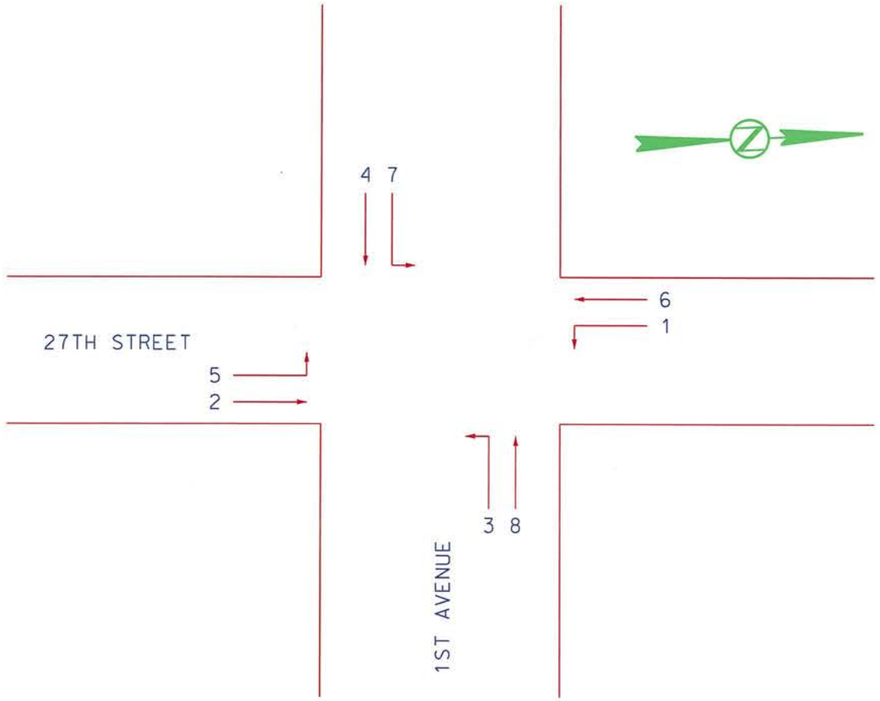

CONTROLLER TIMINGS (Free Operation)								
PHASE	1	2	3	4	5	6	7	8
MOVEMENT	SBL	NBT	WBL	EBT	NBL	SBT	EBL	WBT
MIN GREEN		12	7	7		12		7
ADDED INITIAL								
MAX INITIAL								
PASSAGE TIME			4	4			4	4
MAXIMUM 1		30	12	20		30		20
MAXIMUM 2		40	20	30		40		30
TIME BEFORE								
TIME TO REDUCE								
MINIMUM GAP								
YELLOW CHANGE	3.0	3.0	4.0	4.0	3.0	3.0		4.0
RED CLEARANCE		3.0		2.0		3.0		2.0
WALK						5		5
PED CLEARANCE						11		23

TIMING PLAN 1	
TIME OF DAY (TOD)	PATTERN (C/S/O)
6:00 - 23:00	111
23:00 - 6:00	FLASH

TIMING PLAN 2	
TIME OF DAY (TOD)	PATTERN (C/S/O)
6:00 - 23:00	FREE
23:00 - 6:00	FLASH

WEEKLY PROGRAM							
	SUN	MON	TUE	WED	THU	FRI	SAT
TIMING PLAN	2	1	1	1	1	1	2

DETECTOR SETTINGS							
DETECTOR LABLE	AMPLIFIED CHANNEL DETECTOR	DETECTOR OPERATION: CALLS & EXTENDS	DETECTOR OPERATION: CALLS ONLY	DETECTOR OPERATION: EXTENDS ONLY	LOCKING CALL	MOVEMENT CALLED	MOVEMENT EXTENDED
E1	1	X				3	3
E2	2	X				8	8
W1	3	X				7	7
W2	4	X				4	4
N1	5	X				1	1
N2	6	X				6	6
S1	7	X				5	5
S2,S3	8	X				2	2

COORDINATION TIMING								
CYCLE 1 = 120 SEC								
PHASE	1	2	3	4	5	6	7	8
MOVEMENT	SBL	NBT	WBL	EBT	NBL	SBT	EBL	WBT
TIME - SPLIT 1	9	43	45	23	9	43		68
COORDINATED PHASE		X				X		
OFFSET 1 = 20 SEC								

REGISTERED PROFESSIONAL ENGINEER
REG. NO.
9435
LYLE E. DeVRIES
SOUTH DAKOTA
1/8/16

PLOT SCALE - 1:40
PLOT NAME - 42
PLOTTED FROM - SOELLNER
FILE - ...\SECTION\L\27TH32TIME.DGN

FOR BIDDING PURPOSES ONLY

STATE OF SOUTH DAKOTA	PROJECT	SHEET	TOTAL SHEETS
	IM 0901(162)114 P 014A(11)8	L53	L63

Plotting Date: 08/28/2015
Revised Date: 8/28/2015 LCL

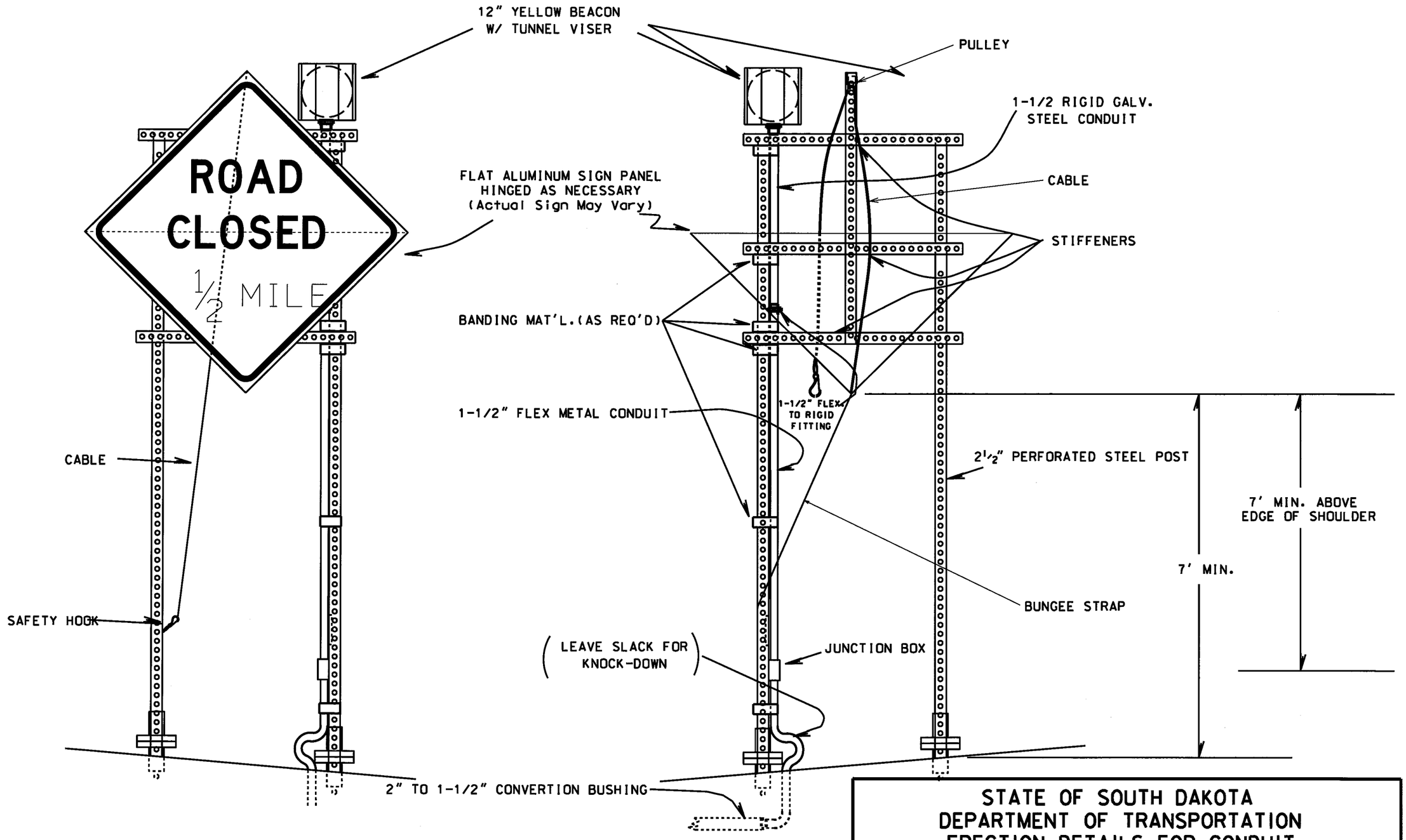

STATE OF SOUTH DAKOTA
DEPARTMENT OF TRANSPORTATION
ERECTION DETAILS FOR CONDUIT & FLASHING BEACON

PLOT SCALE - $$SCALE$$
PLOT NAME - $$PLOTNAME$$
PLOTTED FROM - $$USERNAME$$
FILE - $$FILENAME$$

PLOT SCALE - $$SCALE$$

ROAD CLOSURE WIRING DIAGRAMS

FOR BIDDING PURPOSES ONLY

STATE OF SOUTH DAKOTA	PROJECT	SHEET	TOTAL SHEETS
	IM 0901(162)114 P 014A(11)8	L54	L63

Plotting Date: 08/28/2015
Revised Date: 8/28/2015 LCL

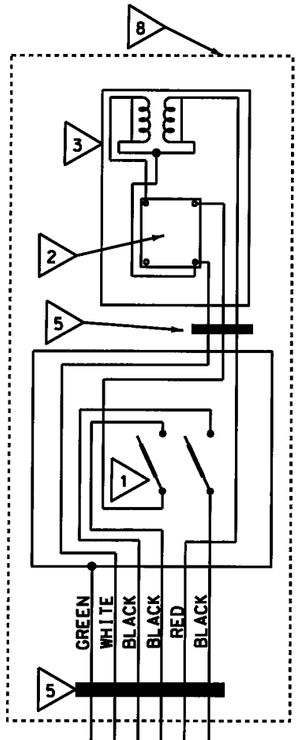

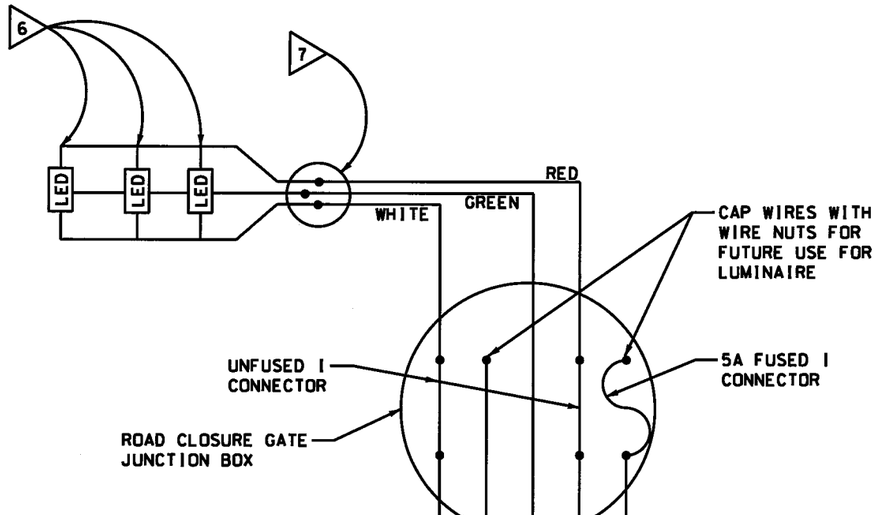

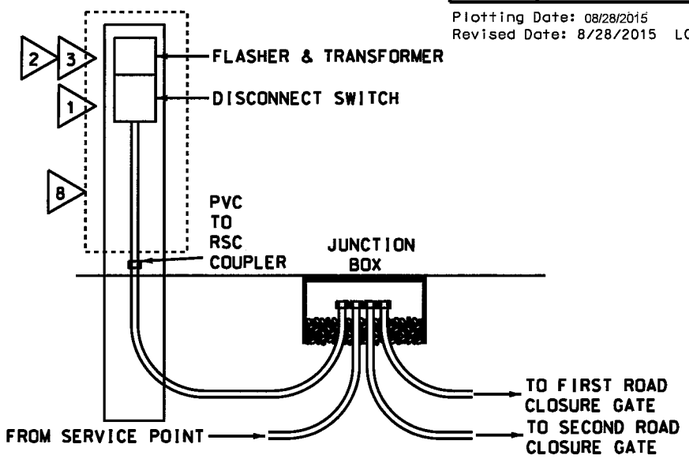

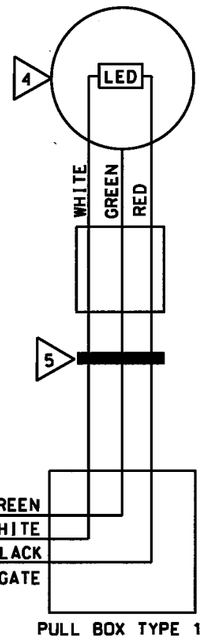

ADVANCED SIGNING WIRING

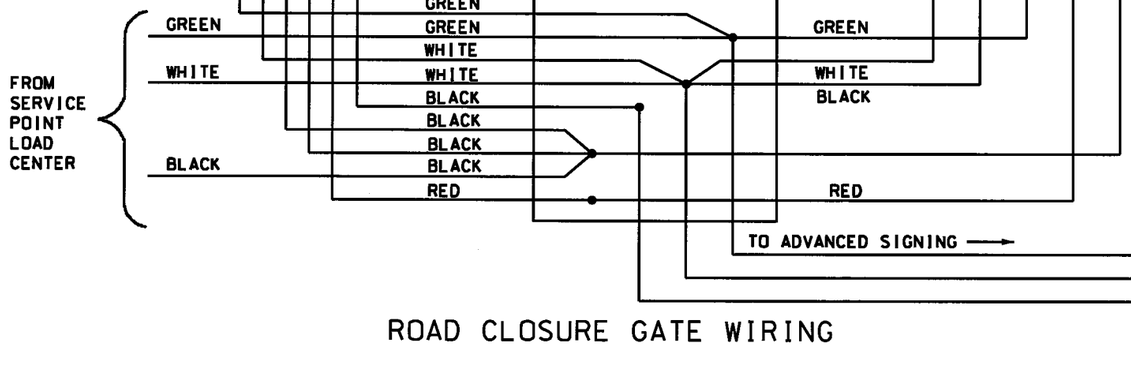

ROAD CLOSURE GATE WIRING

1. 30 AMP SAFETY SWITCH IN A NEMA 3R LOCKABLE ENCLOSURE. DPST FOR ROAD CLOSURE DROP GATE APPLICATIONS.
2. CUBE FLASHER MODEL 25DF AS MANUFACTURED BY TSC (or equal) IN LOCKABLE NEMA 3R ENCLOSURE.
3. 120/240 VOLT PRIMARY, 12/24 VOLT SECONDARY TRANSFORMER, E PART NO. 9T58K2873, (or equal) MOUNTED IN LOCKABLE NEMA 3R ENCLOSURE.
4. FLASHING YELLOW VEHICLE SIGNAL INDICATION 12 inch. THE HEADS SHALL BE SUPPLIED WITH SDDOT APPROVED LED 12 inch SIGNAL HEADS.
5. CONDUCTORS ARE #6 AWG. ALL EXPOSED CONDUIT SHALL BE 1½" RIGID STEEL CONDUIT.
6. THESE LAMP ASSEMBLIES ARE MANUFACTURED BY AURORA. PART NO. A30-944 (or equal) 12vAC LED GATE LIGHTS. 3 LAMP ASSEMBLIES SHALL BE MOUNTED ON EACH GATE.
7. THE CONTRACTOR SHALL INSTALL 2 CONDUCTOR NO. 14 AWG. "SO" CORD. CONNECTION OF THE "SO" CORD SHALL BE MADE IN A JUNCTION BOX MOUNTED ON THE GATE POST. THE JUNCTION BOX SHALL BE BANDED TO THE POST AND SHALL BE RAIN TIGHT AND WEATHERPROOF.
8. THE NEMA 3R ENCLOSURES AND RIGID STEEL CONDUIT SHALL BE MOUNTED TO A STEEL POST. THE POST SHALL BE BREAKAWAY TYPE. THE DISCONNECT SWITCH SHALL BE MOUNTED AT A HEIGHT OF 5 FT.

PLOTTED FROM - $$USERNAME$$
PLOT NAME - $$PLOTNAME$$
FILE - $$FILENAME$$

FOR BIDDING PURPOSES ONLY

STATE OF SOUTH DAKOTA	PROJECT	SHEET	TOTAL SHEETS
	IM 0901(162)114 P 014A(11)8	L55	L63

Plotting Date: 08/28/2015
Revised Date: 8/28/2015 LCL

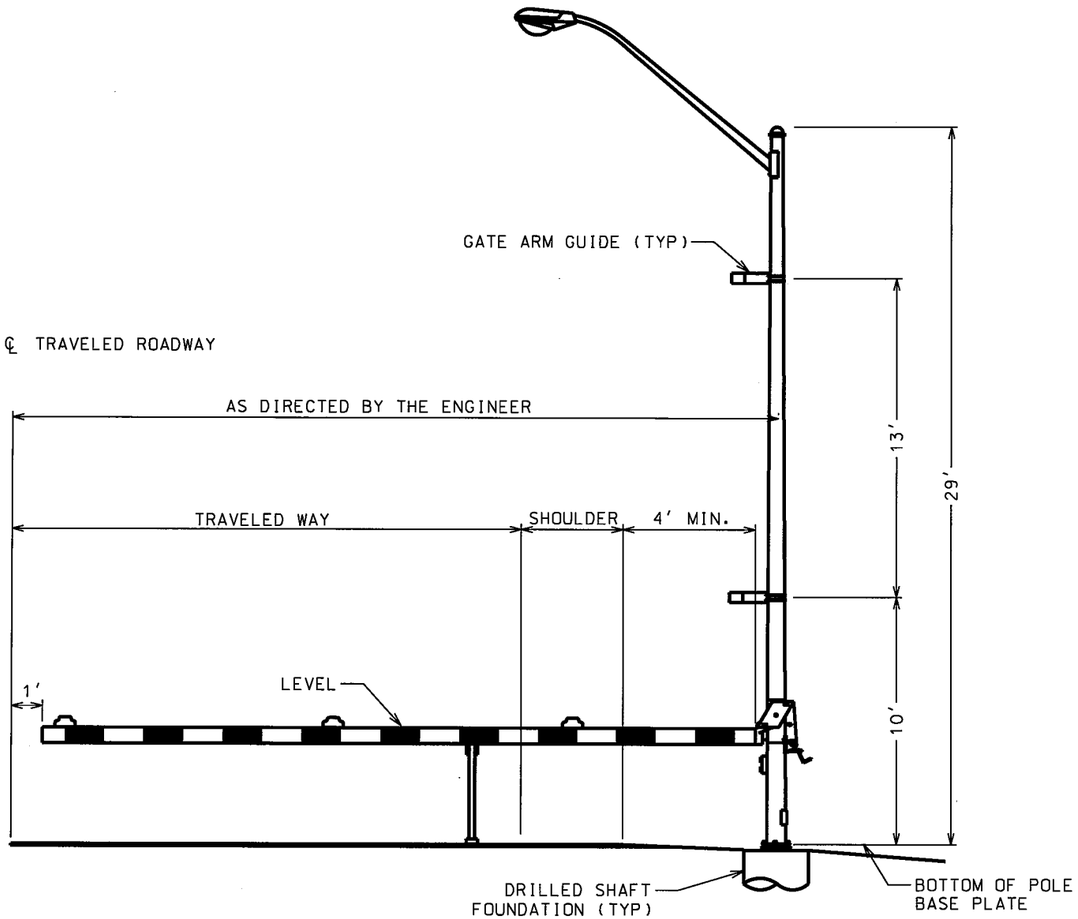

TYPICAL LOWERED POSITION

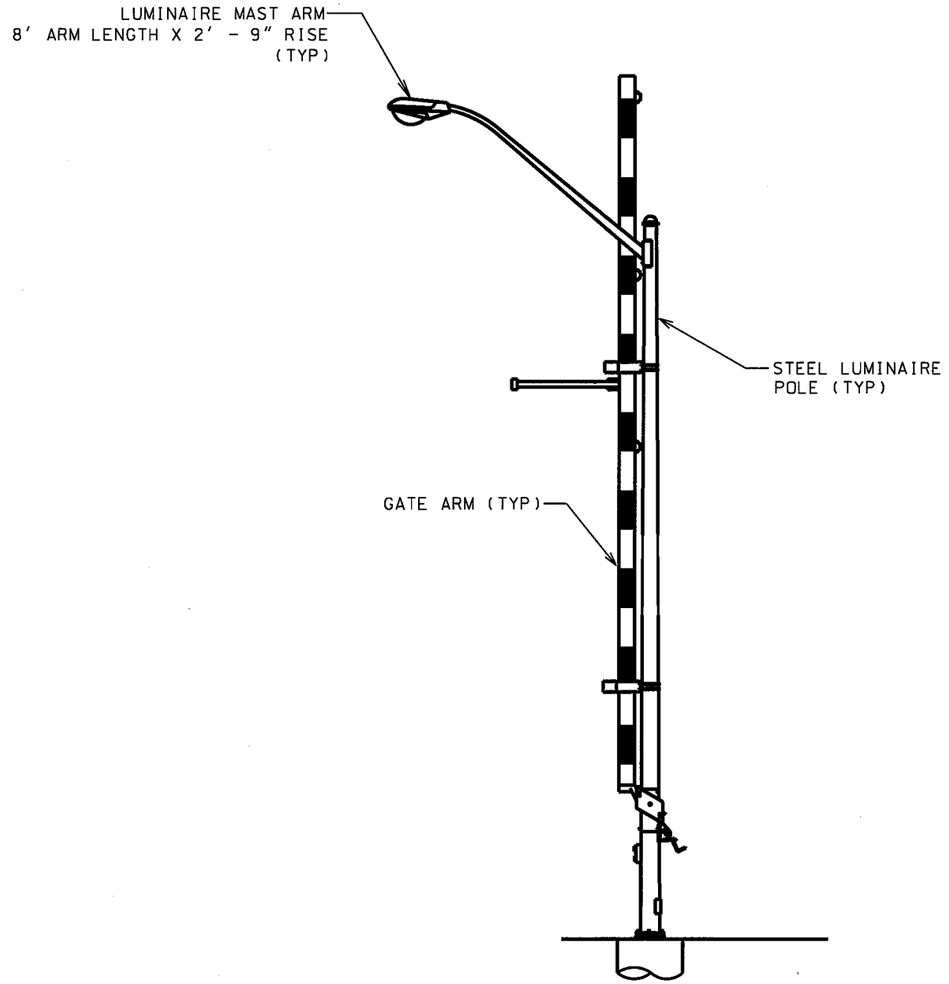

TYPICAL RAISED POSITION

PLOT SCALE - $$SCALE$$
PLOT NAME - $$PLOTNAME$$
PLOTTED FROM - $$USERNAME$$
FILE - $$FILENAME$$

FOR BIDDING PURPOSES ONLY

STATE OF SOUTH DAKOTA	PROJECT	SHEET	TOTAL SHEETS
	IM 0901(162)114 P 014A(1118)	L56	L63

Plotting Date: 08/28/2015
Revised Date: 8/28/2015 LCL

PLOT SCALE - $$SCALE$$
PLOT NAME - $$PLOTNAME$$
PLOTTED FROM - $$USERNAME$$
FILE - $$FILENAME$$

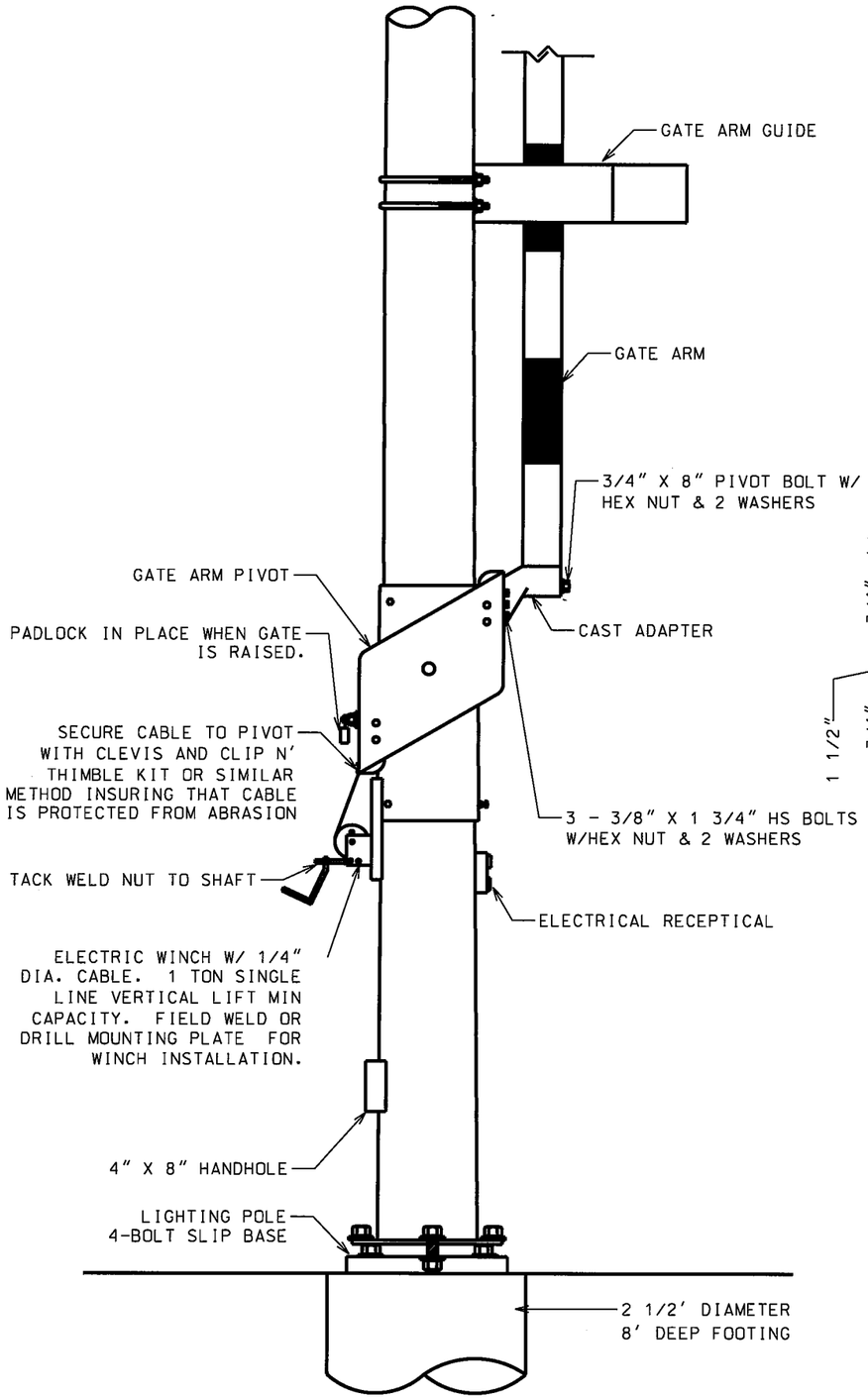

DROP GATE PIVOT ASSEMBLY

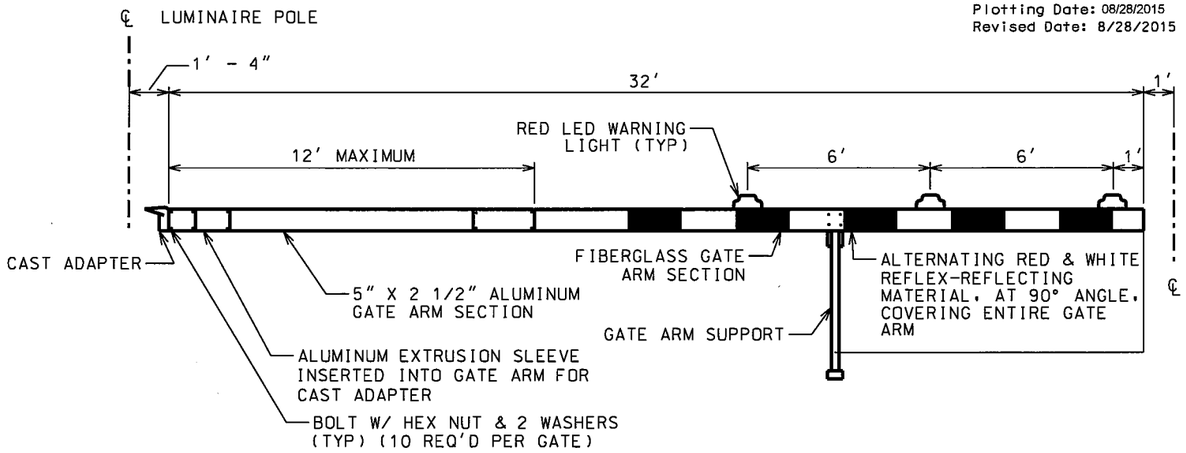

DROP GATE DETAIL

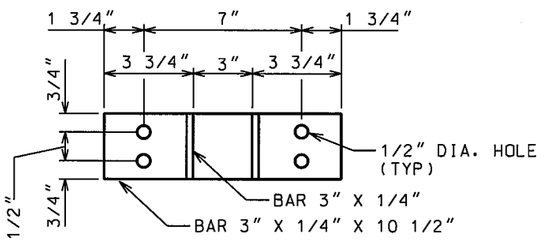

SECTION B-B

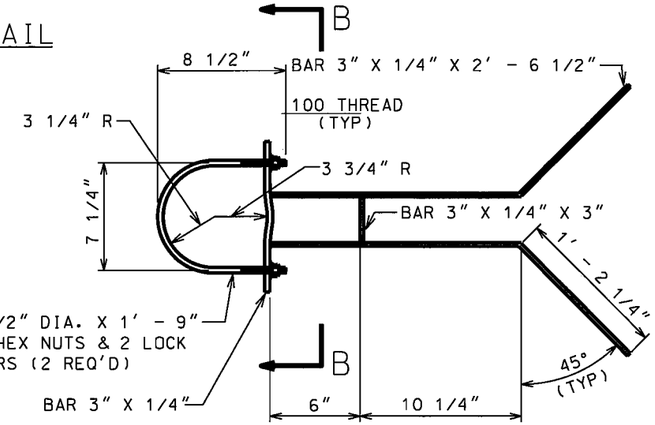

DROP GATE ARM GUIDE DETAIL

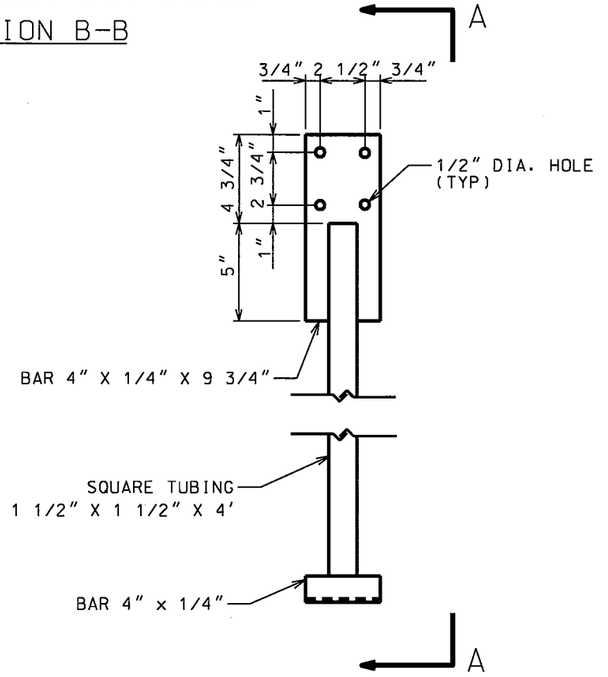

DROP GATE ARM SUPPORT DETAIL

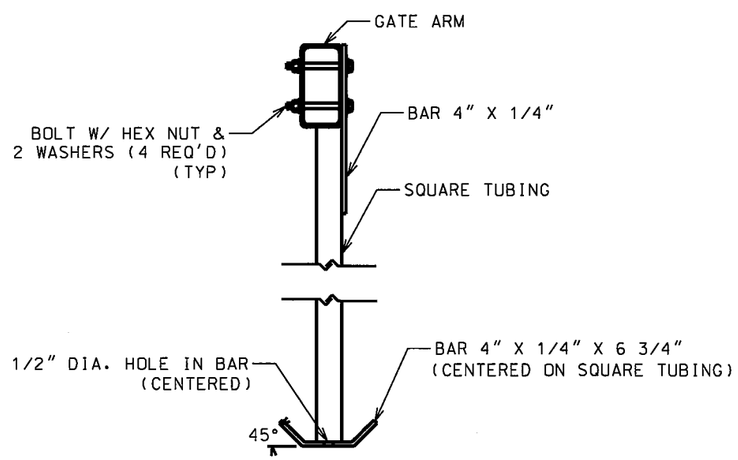

VIEW A-A

FOR BIDDING PURPOSES ONLY

STATE OF SOUTH DAKOTA	PROJECT	SHEET	TOTAL SHEETS
	IM 0901(162)114 P 014A(11)8	L57	L63

Plotting Date: 08/28/2015
Revised Date: 8/28/2015 LCL

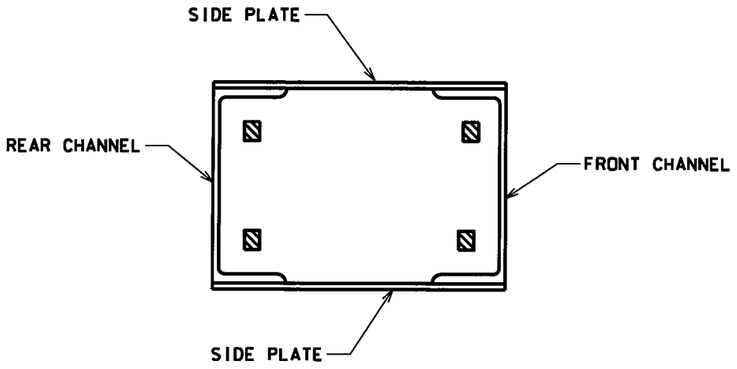

VIEW B-B

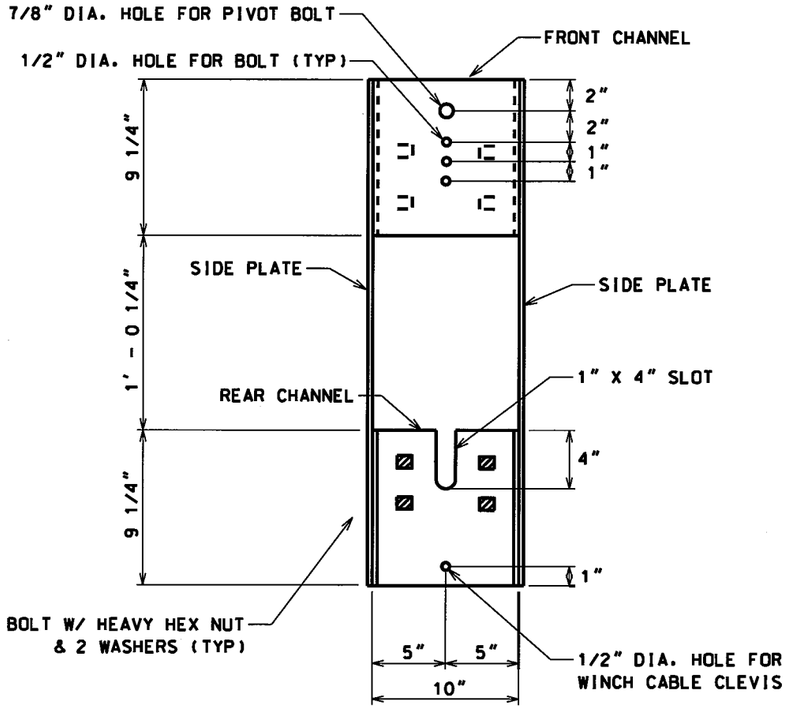

VIEW A-A

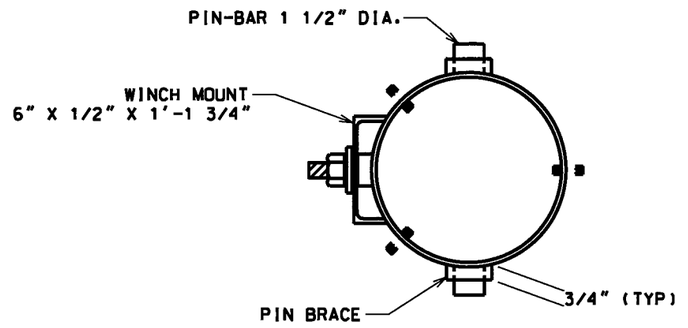

VIEW C-C

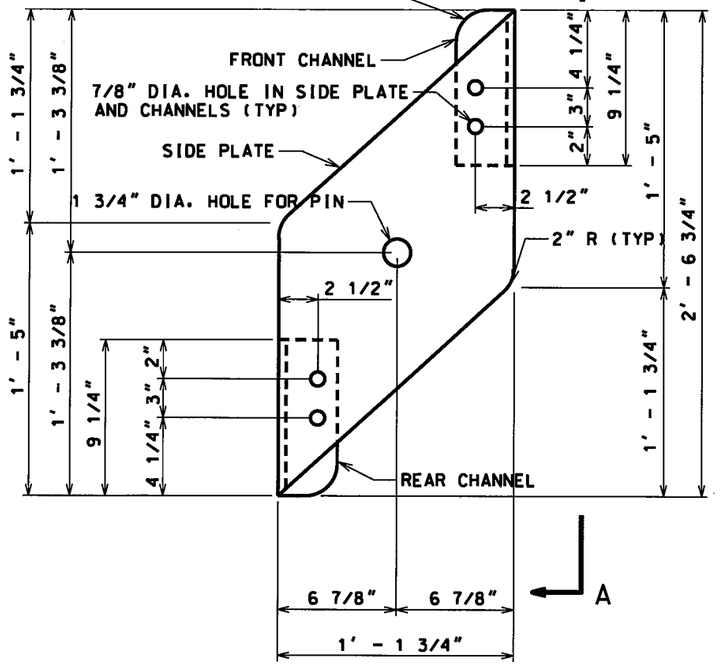

SIDE PLATE DETAIL

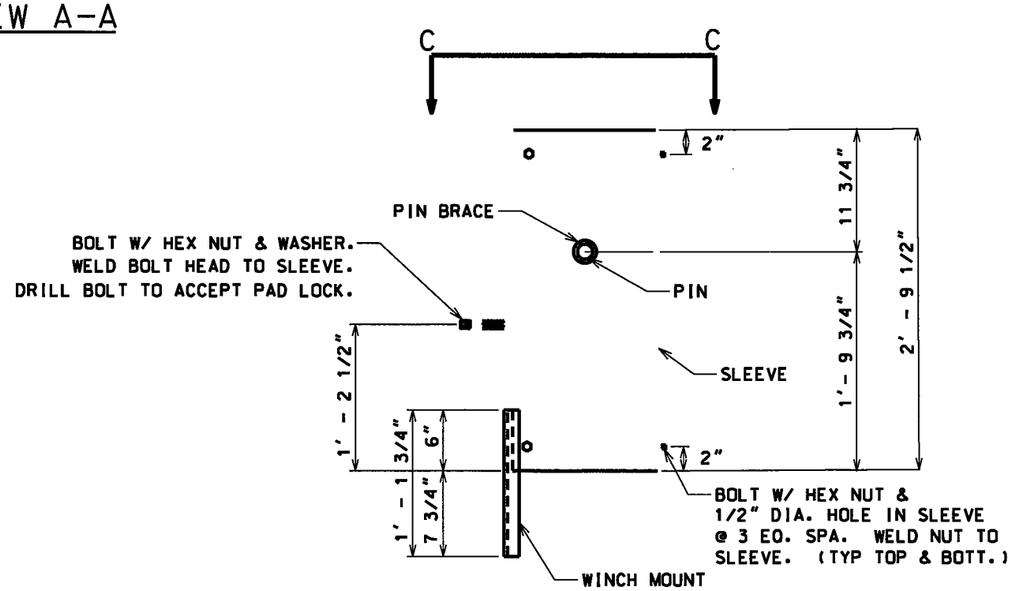

PIVOT SLEEVE DETAIL

PLOT SCALE - $$SCALE$$
PLOT NAME - $$PLOTNAME$$
PLOTTED FROM - $$USERNAME$$
FILE - $$FILENAME$$

FOR BIDDING PURPOSES ONLY

STATE OF SOUTH DAKOTA	PROJECT	SHEET	TOTAL SHEETS
	IM 0901(162)14 P 014A(11)8	L58	L63

Plotting Date: 8/28/2015
Revised Date: 8/28/2015 LCL

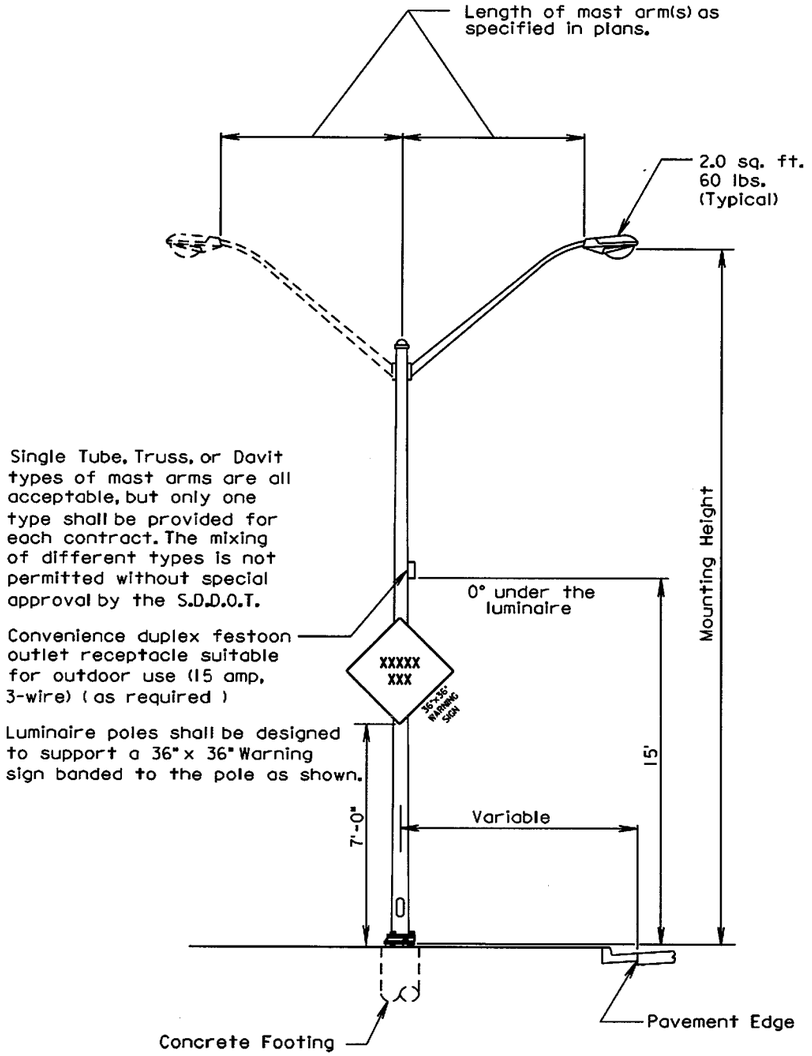

March 31, 2000

Published Date: 3rd Qtr. 2015	SDDOT	STEEL ROADWAY LUMINAIRE POLE WITH MAST ARM(S)	PLATE NUMBER 635.01
			Sheet 1 of 1

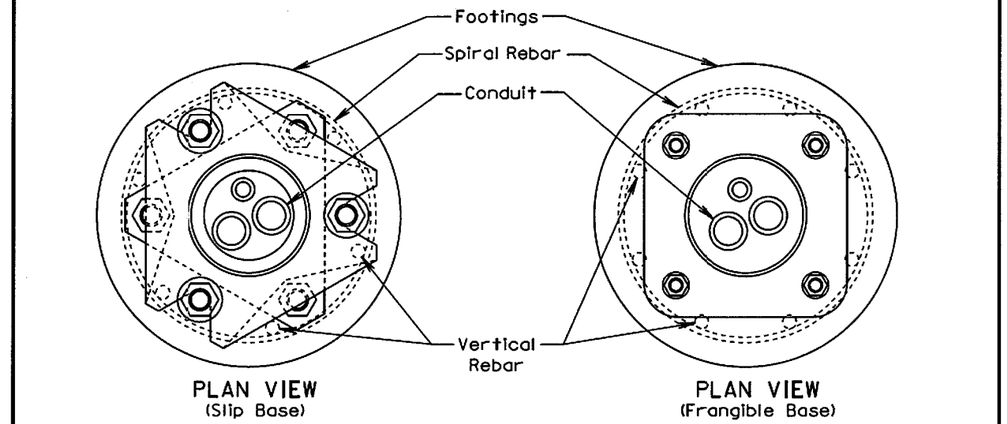

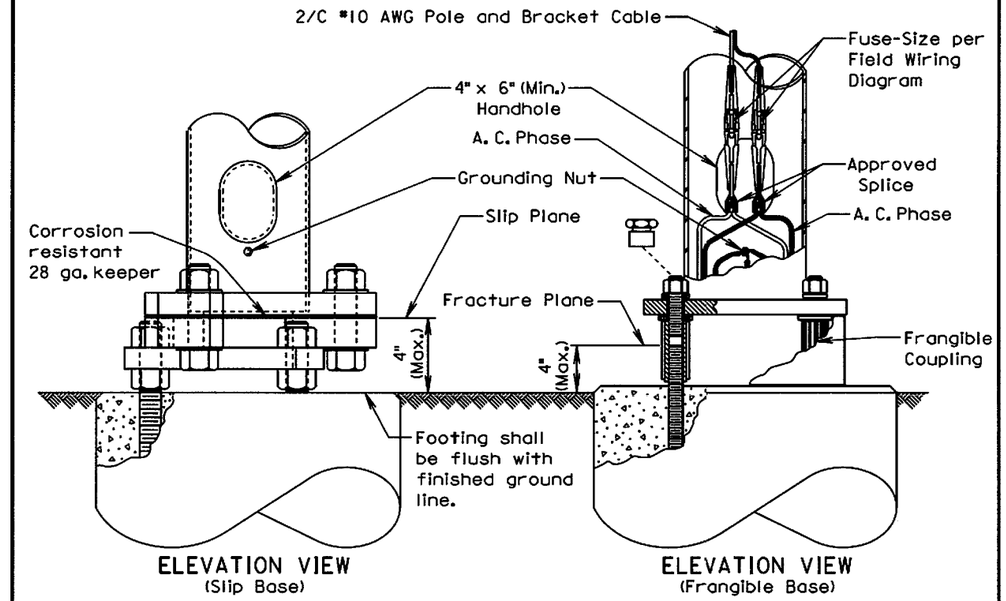

GENERAL NOTES:

The Contractor has the option of using either the Slip Base, Transformer Base, or Frangible Base.

Base details are provided for example only and are not intended to be a complete design.

Connectors shall be breakaway type.

June 26, 2013

Published Date: 3rd Qtr. 2015	SDDOT	ROADWAY LUMINAIRE POLE BREAKAWAY BASE	PLATE NUMBER 635.11
			Sheet 1 of 1

PLOT SCALE - 1:200
PLOT NAME - 48
FILE - ...\SECTION L STANDARD PLATES.DGN
-PLOTTED FROM - SOELLNER

FOR BIDDING PURPOSES ONLY

STATE OF SOUTH DAKOTA	PROJECT	SHEET	TOTAL SHEETS
	IM 0901(162)14 P 014A(11)8	L59	L63

Plotting Date: 8/28/2015
Revised Date: 8/28/2015 LCL

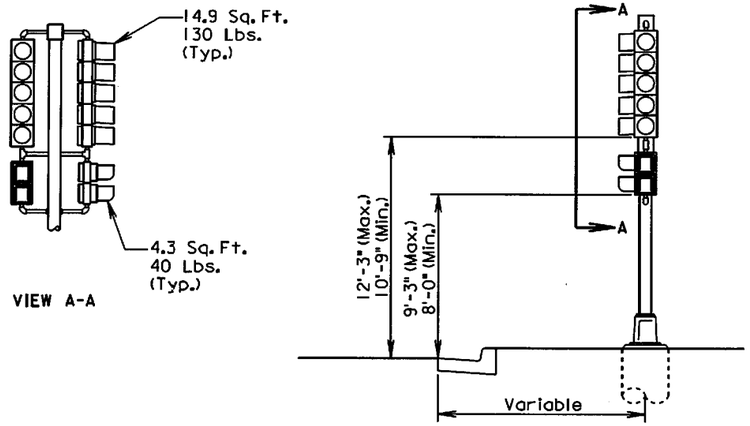

GENERAL NOTE:

The signal heads are shown with backplates removed so that the mounting hardware is visible.

October 15, 2007

	SDDOT	SIGNAL POLE (PEDESTAL)	PLATE NUMBER 635.30
Published Date: 3rd Qtr. 2015			Sheet 1 of 1

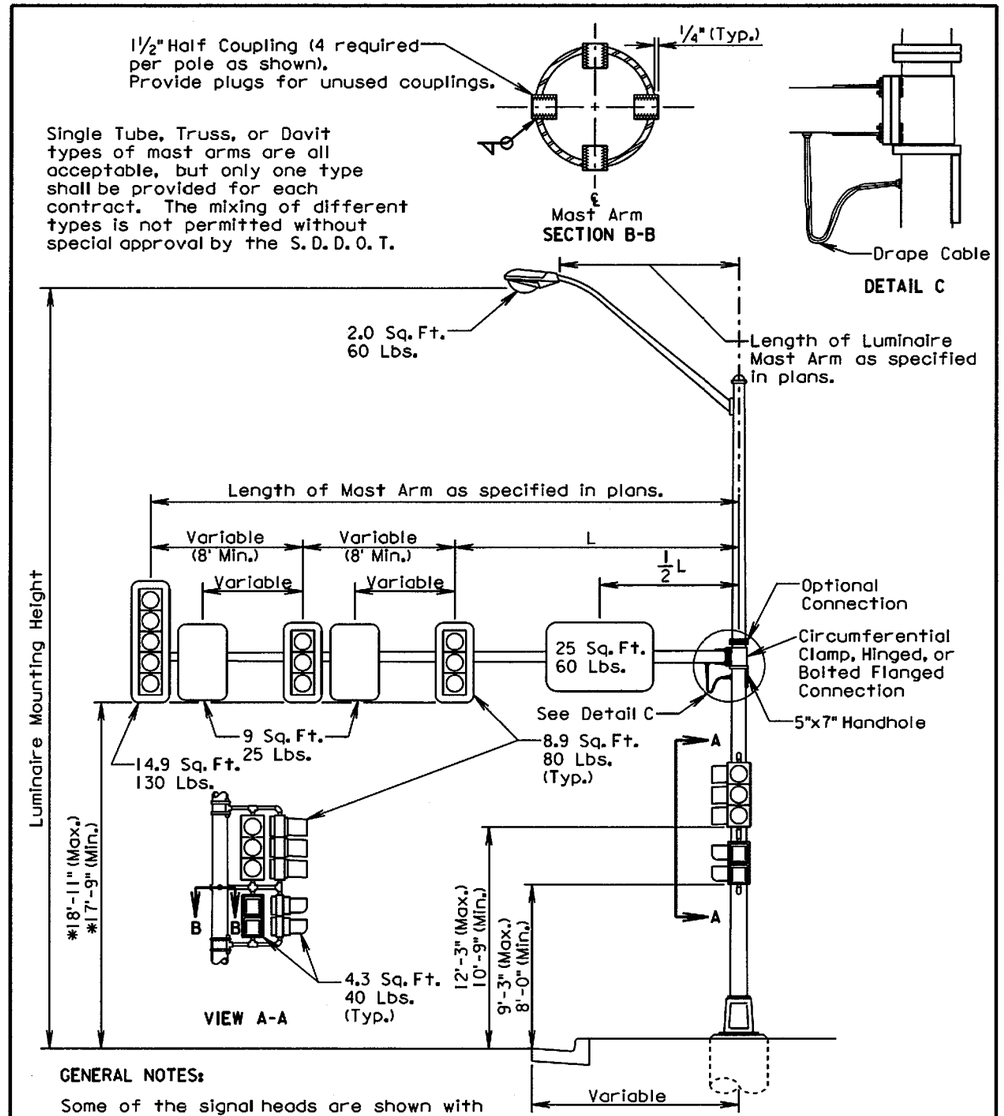

GENERAL NOTES:

Some of the signal heads are shown with backplates removed so that the mounting hardware is visible.

* The signal height allowances shown above are based on a horizontal distance greater than 53' between the signals and stop line. For horizontal distance of 53' and less between the signals and the stop line, the height allowances shall be as specified in Section 4D.15 of the MUTCD.

December 23, 2008

	SDDOT	SIGNAL POLE (WITH MAST ARM AND LUMINAIRE EXTENSION)	PLATE NUMBER 635.32
Published Date: 3rd Qtr. 2015			Sheet 1 of 1

PLOT SCALE - 1:200
PLOT NAME - 49
FILE - ...\SECTION L STANDARD PLATES.DGN
PLOTTED FROM - SOELLNER

FOR BIDDING PURPOSES ONLY

STATE OF SOUTH DAKOTA	PROJECT	SHEET	TOTAL SHEETS
	IM 0901(162)14 P 014A(11)8	L60	L63

Plotting Date: 8/28/2015
Revised Date: 8/28/2015 LCL

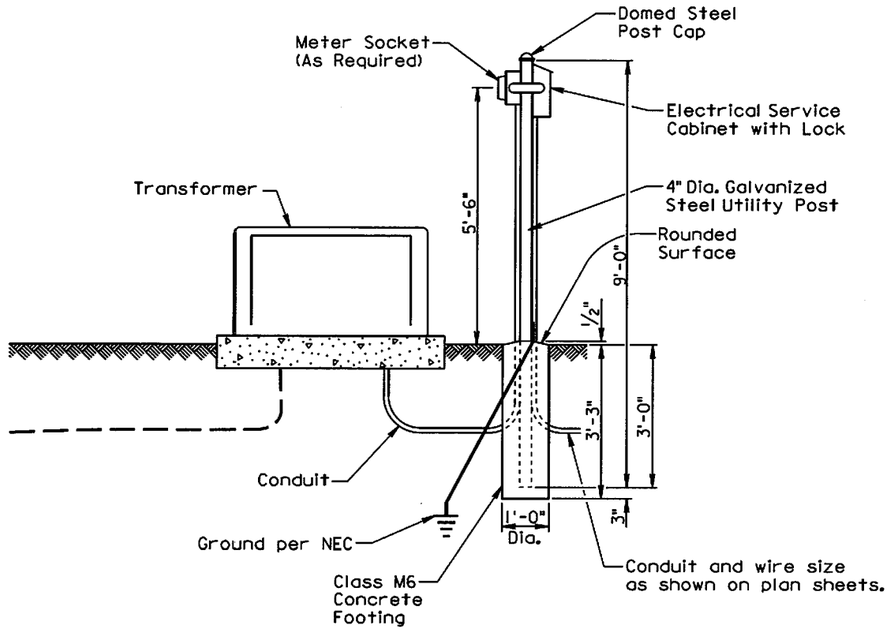

ELEVATION

GENERAL NOTES:

The concrete for the post footing shall be class M6 concrete.

The 4" diameter galvanized steel utility post shall be 9' long and shall be in conformance with AASHTO Standard Specifications M181. The post shall be Type 1 and either Grade 1 or Grade 2. The domed steel post cap shall be in conformance with AASHTO Standard Specifications M181 and shall be Type 1.

The Contractor shall contcct and coordinate his/her work with the Utility Companies regarding hookup requirements, fees, materials, and equipment necessary.

All costs for furnishing and installing all materials from the electrical service cabinet to the transformer including labor, equipment, hookup fees, all items within the cabinet, post, concrete footing, post cap, meter socket if required, conduit, and incidentals shall be incidental to the contract unit price per each for "Electrical Service Cabinet".

June 26, 2006

Published Date: 3rd Qtr. 2015	SDDOT	***SERVICE FROM PAD MOUNTED TRANSFORMER WITH METER ON A GALVANIZED STEEL UTILITY POST***	*PLATE NUMBER* 635.41 *Sheet 1 of 1*

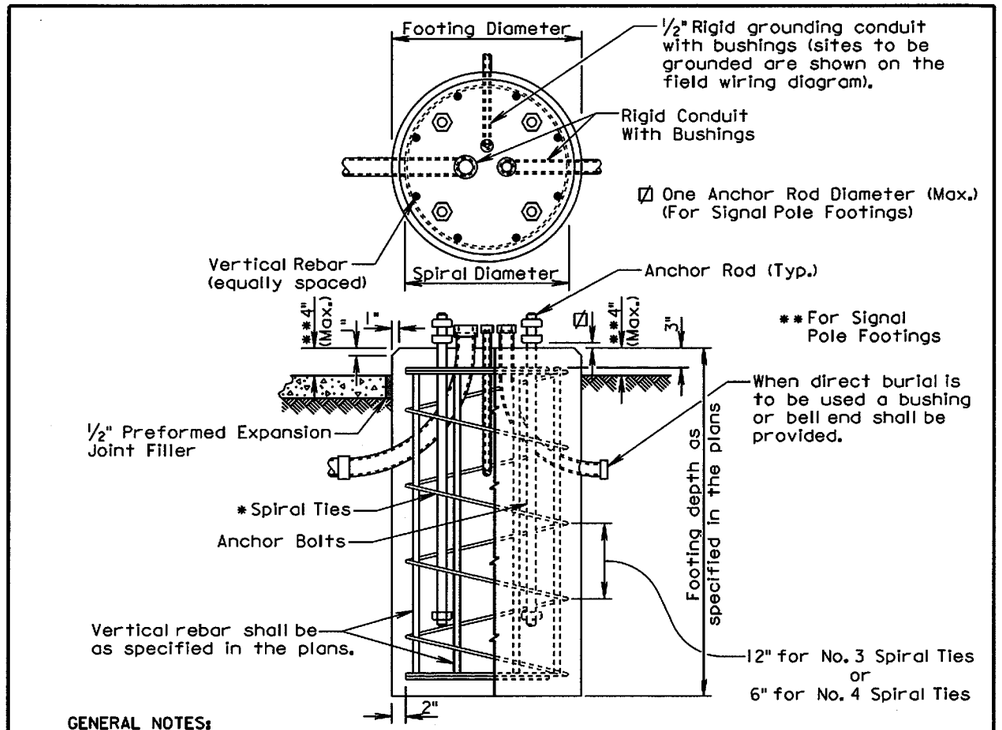

GENERAL NOTES:

* The tie sizes are specified in the plans. Circular ties may be used in lieu of the spiral ties. The No. 3 ties shall be spaced 12 inches apart except for the top two which shall be spaced 6 inches apart. The No. 4 ties shall be spaced 6 inches apart except for the top two which shall be spaced 3 inches apart. The ties shall be lapped 18 inches and the laps shall be staggered around the cage.

Spiral ties shall have 1-1/2 extra turns at each end.

See section 985 of the Standard Specifications for footing materials.

Conduits and bushings may project 2½ inches to 6 inches above footing for fixed base poles but shall not project above the slip plane or fracture plane for breakaway poles.

Conduits shall be sealed water-tight during all phases of construction until poles are in place.

The anchor rods shall fit inside the reinforcing steel cage. If the anchor rods designed by the Pole Manufacturer do not fit, contact the Office of Bridge Design for footing redesign. No additional payment will be made for the redesigned footing.

Costs of conduit and conduit bushings shown on footing detail shall be incidental to the footing bid item(s).

The pole shall not be installed until the concrete has attained design strength (4000 psi).

The contour of the area surrounding the breakaway pole shall be flat, though not necessarily level for a distance of 5 feet in all directions. The Contractor may be required to provide finish grading at some breakaway pole locations.

September 6, 2013

Published Date: 3rd Qtr. 2015	SDDOT	***POLE FOOTING***	*PLATE NUMBER* 635.55 *Sheet 1 of 1*

PLOT SCALE - 1:200
PLOTTED FROM - SOELLNER
PLOT NAME - 50
FILE ...\SECTION L STANDARD PLATES.DGN

FOR BIDDING PURPOSES ONLY

STATE OF SOUTH DAKOTA	PROJECT	SHEET	TOTAL SHEETS
	IM 0901(162)14 P 014A(11)8	L61	L63

Plotting Date: 8/28/2015
Revised Date: 8/28/2015 LCL

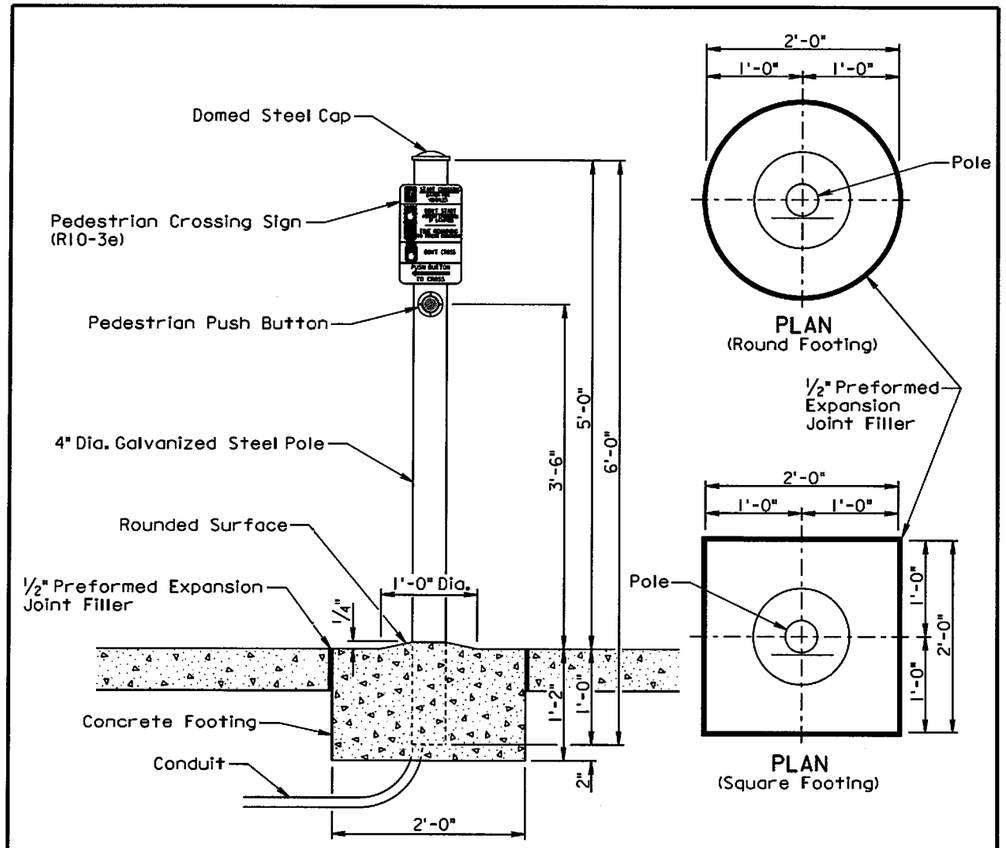

GENERAL NOTES:

The Contractor shall install either the round or the square concrete footing. For informational purpose, the quantity of concrete for one footing is 0.14 cubic yards for the round footing anc 0.17 cubic yards for the square footing.

The concrete for the footing shall be class M6 concrete.

The 4" diameter galvanized steel pole shall be 6' long and shall be in conformance with AASHTO Standard Specifications M181. The pole shall be Type 1 and either Grade 1 or Grade 2. The domed steel pole cap shall be in conformance with AASHTO Standard Specifications M181 and shall be Type 1.

All costs for furnishing and installing the pedestrian push button pole including labor, equipment, and materials including the pole, concrete footing, steel cap, and the conduit in the footing shall be incidental to the contract unit price per each for "Pedestrian Push Button Pole".

February 14, 2010

Published Date: 3rd Qtr. 2015	SDDOT	**PEDESTRIAN PUSH BUTTON POLE**	PLATE NUMBER 635.57 Sheet 1 of 1

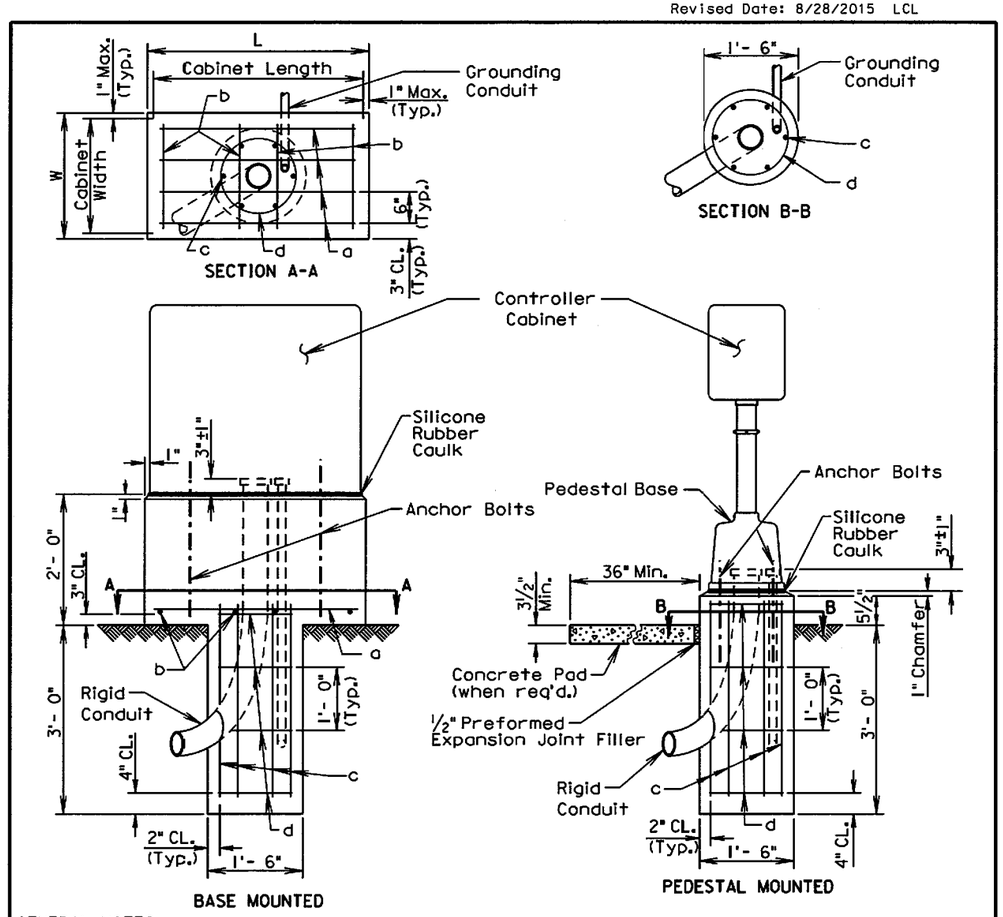

GENERAL NOTES:

The above ground portion of the footing shall conform to the base of the controller to the satisfaction of the Engineer.

Conduits shall be sealed and water-tight until the conductor cables are installed.

If the controller is not located within or adjacent to an existing sidewalk, the Contractor shall provide a concrete pad as directed by the Engineer.

Anchor bolts and related hardware shall conform to the controller manufacturer's requirements and recommendations.

A continuous bead of silicone rubber caulk shall provide a weather-tight seal between the base and the concrete.

Reinforcing Schedule (for one footing)

Mk.	No.	Size	Length	Type	Bending Detail
a	*	3	L - 4"	Str.	
b	*	3	W - 4"	Str.	
c	6	6	3'- 0"	Str.	
d	4	3	4'- 0"	T3	6" Min. Lap, 1'- 2", Type T3

Note: Dimensions are out to out of bar

* Vary number of bars as required by footing size.

March 31, 2000

Published Date: 3rd Qtr. 2015	SDDOT	**CONTROLLER CABINET AND FOOTING**	PLATE NUMBER 635.60 Sheet 1 of 1

PLOT SCALE - 1:200
PLOTTED FROM - SOELLNER
PLOT NAME - 51
FILE - ...\SECTION L STANDARD PLATES.DGN

FOR BIDDING PURPOSES ONLY

STATE OF SOUTH DAKOTA	PROJECT	SHEET	TOTAL SHEETS
	IM 0901(162)14 P 014A(11)8	L62	L63

Plotting Date: 8/28/2015
Revised Date: 8/28/2015 LCL

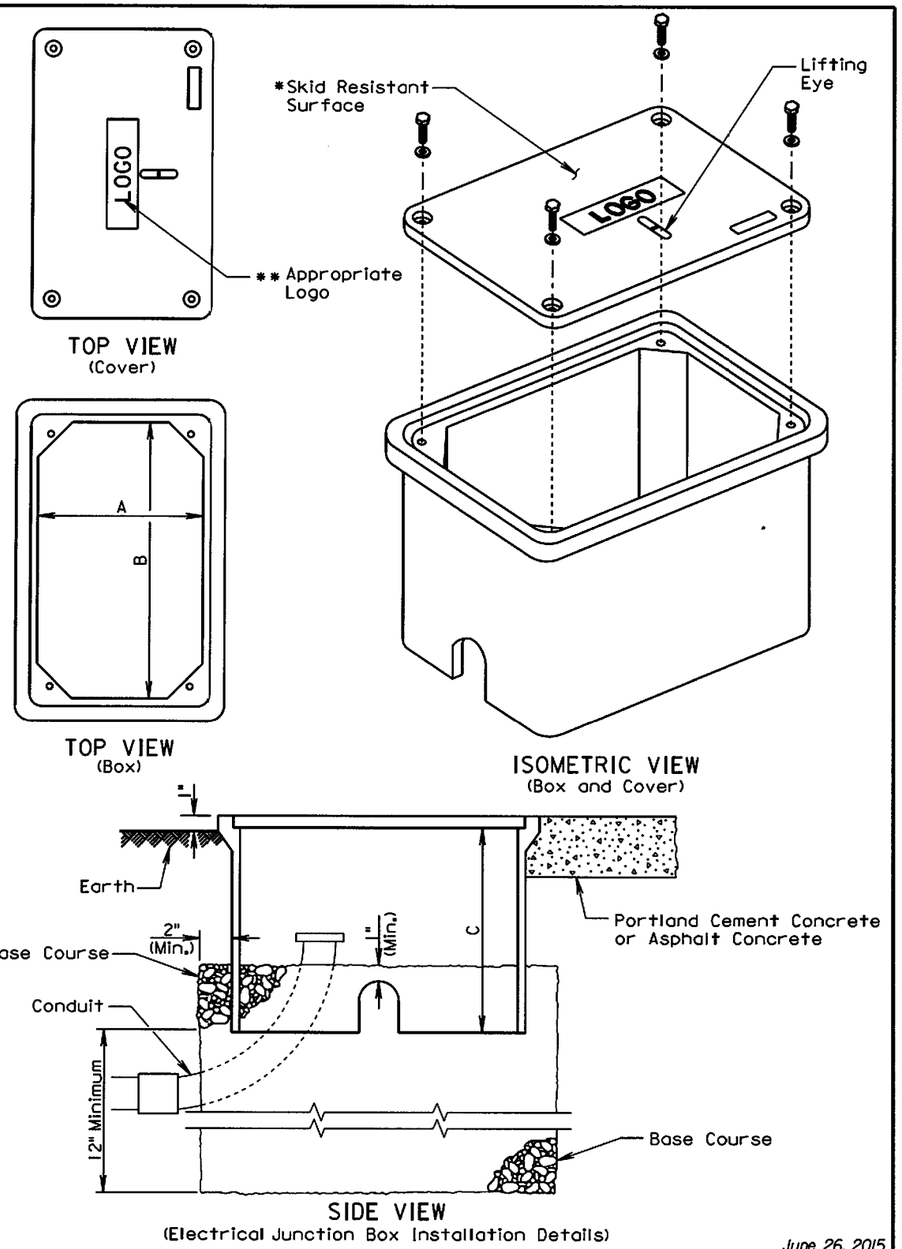

June 26, 2015

Published Date: 3rd Qtr. 2015	SDDOT	ELECTRICAL JUNCTION BOXES TYPE 1 THROUGH TYPE 4	PLATE NUMBER 635.65
			Sheet 1 of 2

ELECTRICAL JUNCTION BOX

TYPE	DESCRIPTION	DIMENSIONS		
		A	B	C
1	Open Bottom with Gasket	11"-15"	18"-21"	18" (Min.)
2	Open Bottom with Gasket	13"-18"	23"-28"	18" (Min.)
3	Open Bottom with Gasket	17"-22"	24"-30"	18" (Min.)
4	Open Bottom with Gasket	28"-33"	36"-48"	24" (Min.)

GENERAL NOTES:

The cover shall be gasketed with a minimum of two stainless steel bolts and washers.

The cover shall have a lifting eye.

* The surface of the cover shall have a minimum wet and dry coefficient of friction value of 0.5 as determined by ASTM F 609.

** The cover of the junction box shall have the appropriate logo in one inch size letters and shall be recessed. When the junction box contains cables or wires for a traffic signal then the logo shall be "Signal". When the junction box contains lighting conductors then the logo shall be "Lighting".

The electrical junction boxes shall comply with the American National Standards Institute (ANSI)/Society of Cable Telecommunications Engineers (SCTE) 77 2007 Specification for Underground Enclosure Integrity. The loading requirement for all the electrical junction boxes shall be Tier 8 of ANSI/SCTE 77 2007.

The electrical junction boxes shall be UL listed.

June 26, 2015

Published Date: 3rd Qtr. 2015	SDDOT	ELECTRICAL JUNCTION BOXES TYPE 1 THROUGH TYPE 4	PLATE NUMBER 635.65
			Sheet 2 of 2

PLOT SCALE - 1:200
PLOTTED FROM - SOELLNER
PLOT NAME - 52
FILE -...\SECTION L STANDARD PLATES.DGN

FOR BIDDING PURPOSES ONLY

STATE OF SOUTH DAKOTA	PROJECT	SHEET	TOTAL SHEETS
	IM 0901(162)14 P 014A(11)8	L63	L63

Plotting Date: 8/28/2015
Revised Date: 8/28/2015 LCL

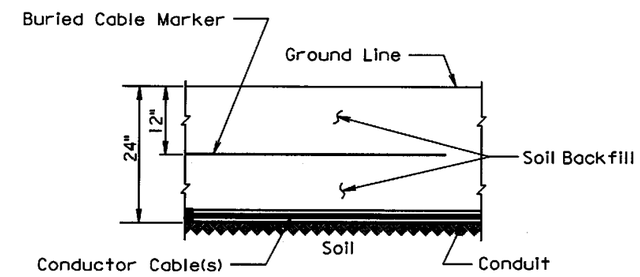

SECTION VIEW

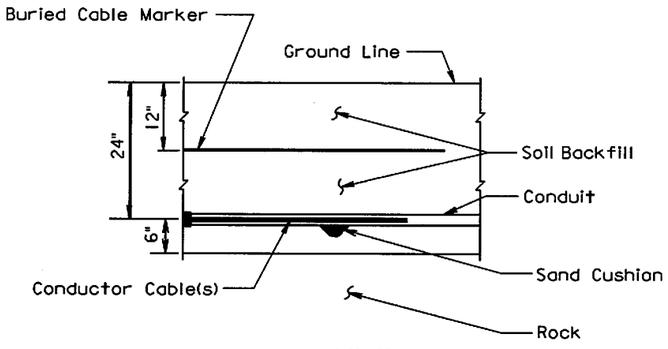

SECTION VIEW

GENERAL NOTE:

The Buried Cable Marker shall be plastic, approximately 6" wide, and shall be capable of sustaining a minimum of a 350% tolerance of elongation without tearing. The Buried Cable Marker shall have a life expectancy approximately equal to that of the conductor(s) beneath it. A phrase indicating the presence of a buried electric circuit below shall be printed in a contrasting color on the cable marker. The Buried Cable Marker shall be subject to approval by the Engineer. All costs associated with furnishing and installing the Buried Cable Marker shall be incidental to the contract unit price per Foot for the bid item used for the electrical conductor.

March 31, 2000

Published Date: 3rd Qtr. 2015	**SDDOT**	**CONDUIT INSTALLATION**	*PLATE NUMBER* 635.76 *Sheet 1 of 1*

PLOT SCALE - 1:200
PLOT NAME - 53
FILE - ...\SECTION L STANDARD PLATES.DGN
PLOTTED FROM - SOELLNER