Section S: Permanent Signing

FOR BIDDING PURPOSES ONLY

STATE OF SOUTH DAKOTA	PROJECT	SHEET	TOTAL SHEETS
	IM 0901(162)14 P 014A(11)8	S1	S43

Plotting Date: 8/11/2015

INDEX OF SHEETS

S1	General Layout W/Index
S2-S3	Estimate of Quantities and Notes
S4-S11	Table of Permanent Signing
S12-S23	Permanent Signing Layout
S24-S29	Sign Layouts
S30-S42	Typical Erection Details
S43	Delineator Erection Details

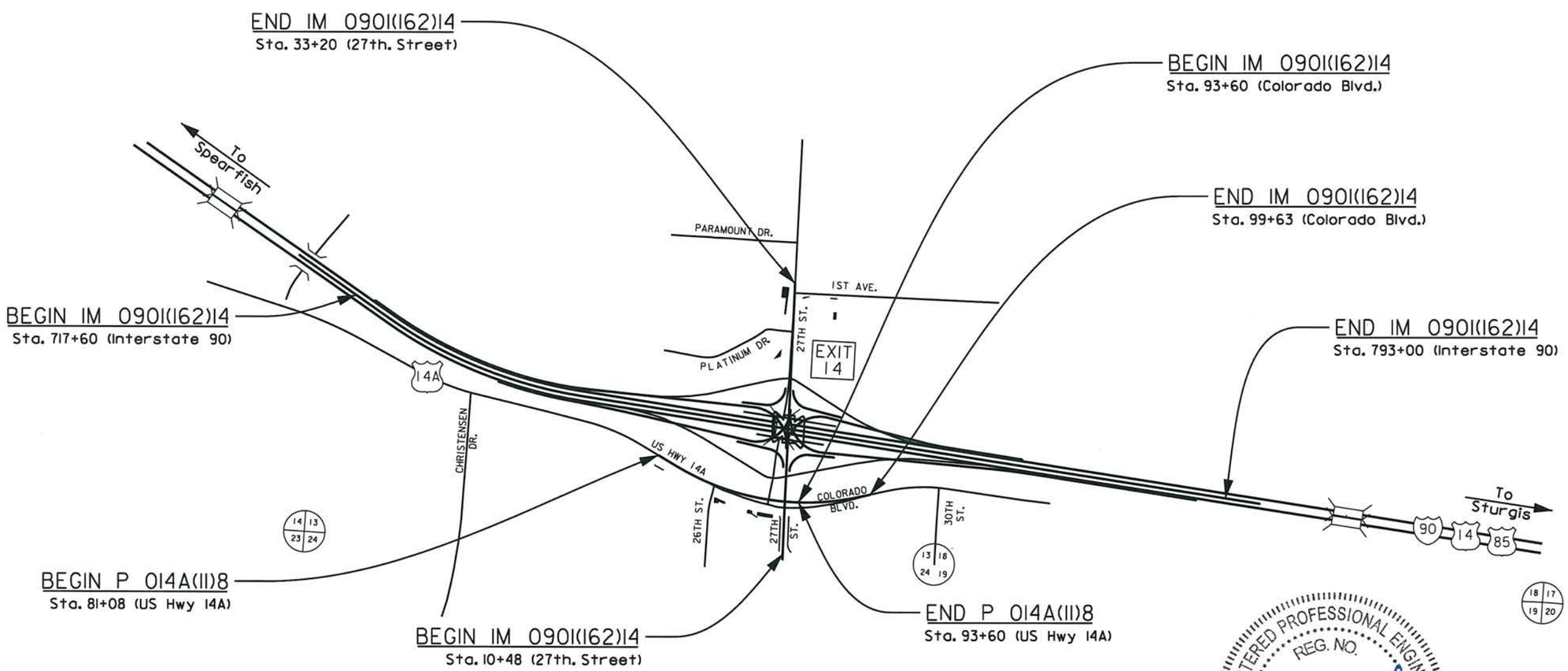

REGISTERED PROFESSIONAL ENGINEER
REG. NO.
11714
THOMAS W. ANZIA
SOUTH DAKOTA
1/8/16

PLOT SCALE - 1:1000
PLOTTED FROM - SOELLNER
PLOT NAME - 1
FILE - ...\SECTIONSVTITLES.DGN

FOR BIDDING PURPOSES ONLY

SECTION S ESTIMATE OF QUANTITIES

PROJECT - IM 0901(162)14

BID ITEM NUMBER	DESCRIPTION	QUANTITY	UNIT
110E0100	Remove Concrete Footing(s)	Lump Sum	LS
110E0130	Remove Traffic Sign	85	Each
632E0014	1.75' Diameter Breakaway Support Concrete Footing	72	Ft
632E0016	2' Diameter Breakaway Support Concrete Footing	36	Ft
632E1225	W6x12 Steel Post	232.1	Ft
632E1250	W8x24 Steel Post	45.4	Ft
632E1265	W10x33 Steel Post	113.9	Ft
632E1320	2.0"x2.0" Perforated Tube Post	756.6	Ft
632E1330	2.25"x2.25" Perforated Tube Post	106.2	Ft
632E1340	2.5"x2.5" Perforated Tube Post	297.2	Ft
632E2000	4"x4" Amber Delineator with 1.12 Lb/Ft Post	51	Each
632E2004	4"x8" Amber Delineator with 1.12 Lb/Ft Post	48	Each
632E2020	4"x4" White Delineator with 1.12 Lb/Ft Post	54	Each
632E2024	4"x8" White Delineator with 1.12 Lb/Ft Post	130	Each
632E2203	4" Tubular Amber Delineator Reflector	12	Each
632E2207	4" Tubular White Delineator Reflector	81	Each
632E2510	Type 2 Object Marker Back to Back	2	Each
632E2520	Type 2 Object Marker	2	Each
632E3003	Aluminum Overlay Sign, Non-Removable Copy High Intensity	63.0	Sq Ft
632E3203	Flat Aluminum Sign, Non-Removable Copy High Intensity	1969.8	Sq Ft
632E3205	Flat Aluminum Sign, Non-Removable Copy Super/Very High Intensity	163.4	Sq Ft
632E3520	Remove, Salvage, Relocate, and Reset Traffic Sign	9	Each
635E5980	Rectangular Rapid Flashing Beacon	4	Each
900E0041	Reset Road Closure Gate	2	Each
900E0045	Drop Arm Road Closure Gate	1	Each

PROJECT – P 014A(11)8

BID ITEM NUMBER	DESCRIPTION	QUANTITY	UNIT
110E0100	Remove Concrete Footing(s)	Lump Sum	LS
110E0130	Remove Traffic Sign	16	Each
632E1320	2.0"x2.0" Perforated Tube Post	201.5	Ft
632E2203	4" Tubular Amber Delineator Reflector	6	Each
632E2207	4" Tubular White Delineator Reflector	13	Each
632E3003	Aluminum Overlay Sign, Non-Removable Copy High Intensity	45.8	Sq Ft
632E3203	Flat Aluminum Sign, Non-Removable Copy High Intensity	140.3	Sq Ft
632E3205	Flat Aluminum Sign, Non-Removable Copy Super/Very High Intensity	5.2	Sq Ft
632E3520	Remove, Salvage, Relocate, and Reset Traffic Sign	5	Each

PERMANENT SIGNING

The Contractor shall furnish all signs, posts, stiffeners, bases, hardware, and labor for installation of permanent signs in size, type, and quantity as shown in these plans and/or as required by the Engineer.

All existing signs, posts, and hardware removed as per these plans remain property of the State of South Dakota and shall be transported to the Rapid City South Maintenance Yard by the Contractor. The Contractor shall notify the Engineer two days prior to time of delivery to the South Maintenance Yard so correct placement for storage and inventory of materials can be made upon receipt.

The Contractor shall provide all labor and equipment necessary to install permanent signing, remove existing signs, and reset existing signs as detailed in these plans and/or as required by the Engineer. Payment for furnishing and installing permanent signs will be paid for at the contract unit price for each type of sign based on sheeting requirements per square foot of sign. All signs shall have Type IV (High Intensity) or XI (Super/Very High Intensity) sheeting as noted on the sign detail sheets. Payment for new signposts, hardware, bases, and labor will be made at the contract unit price per foot for 2.0" x 2.0", 2.25" x 2.25" and 2.5" x 2.5" Perforated Tube Posts, W6x12 Steel Post, W8x24 Steel Post, and W10x33 Steel Post. See breakaway post details and fixed post details regarding posts, hardware, bases, and footings. Measurement of post lengths for payment will be for above ground post lengths as field measured. The sign post contract items shall include post bases and all hardware. The lengths of the posts in the sign tables are approximate lengths only. The post lengths shall be verified by the Contractor. The Contractor is urged to cut posts to length on job site after site by site verification of post length.

The Contractor shall use Telespar brand (or equals) posts and bases on all new standard highway signs as approved by the Engineer. All post materials shall conform to Section 982 of the Specifications, and be in accordance with ASTM specifications.

Signs designated as requiring a shear slip base in the table for Permanent Signing shall have a 4 foot long base assembly with a shear breakaway base (slip base anchor) connecting the base to the signpost. The height of the post shall not exceed the minimum height needed by more than 0.5 feet. Any portion that extends above the sign shall be cut off. No separate payment will be made for cutting the post or for that length cut off.

All posts shall by accompanied by Certificates of Compliance and shall meet all safety standards as set forth in the current edition of the Manual on Uniform Traffic Control Devices (MUTCD).

The Contractor shall install a state furnished date decal on each new sign installed on the project as detailed in these plans. The cost for labor and equipment to install date decal shall be incidental to other contract unit prices. The Contractor shall coordinate the removal of signs with Section C of these plans. Existing signing shall be replaced, left in place, or temporarily covered as needed to safely direct traffic through the project or as directed by the Engineer.

REGISTERED PROFESSIONAL ENGINEER
REG. NO.
11714
THOMAS W. ANZIA
SOUTH DAKOTA
1/8/16

REMOVE, SALVAGE, RELOCATE & RESET TRAFFIC SIGN

The Contractor shall remove signs, posts, and bases for reset as shown in the table for Permanent Signing. The Contractor shall reuse existing extruded aluminum panels, posts, footings, and hardware where specified as per the Existing/Proposed plan sheets.

All existing posts, bases, and signs listed in the table that are scheduled for Removal shall be dismantled and delivered to the Rapid City South Maintenance Yard. All bolts, nuts, and washers shall be placed in individual 5-gallon pails. Backing materials shall be separated from the signs and may be reused at the Contractor's discretion. Non-threaded connections (rivets) shall be cut when necessary to reduce sign sections to a 4' x 6' maximum size.

Wooden posts shall be carefully removed to avoid damage and cleaned of excess dirt and neatly stockpiled separate from the steel posts. The resultant holes in the ground from removal of wooden posts shall be backfilled to the satisfaction of the Engineer.

Payment for all existing signs to removed or reset shall include all cost for labor and equipment necessary to remove, dismantle, backfill holes (wooden posts only) and deliver signs and posts to the South Maintenance Yard shall be included in the contract unit price per each for REMOVE TRAFFIC SIGN or REMOVE, SALVAGE, RELOCATE & RESET TRAFFIC SIGN, respectively.

Payment for all delineation to be removed shall include all cost for labor and equipment necessary to remove and deliver delineators to the South Maintenance Yard shall be *incidental* to the contract unit price per each for REMOVE, SALVAGE, RELOCATE & RESET TRAFFIC SIGN.

HARDWARE

Aluminum U-Channel stiffeners shall be used on all standard highway signs greater than 36" in width and shall conform to Alloy 6063-T6 or 6061-T6. The U-Channel shall be 2 inches in width and free of holes. The U-Channel stiffeners shall also be used to connect various signs and perforated tube posts together so that an entire sign can be erected as a single installation. Stiffeners may be fastened to signs by use of 1/4" drive rivets with a minimum of one on each end and one centered between each post. Installation of the stiffeners shall be incidental to other contract items.

A 3/8" diameter straight bolt(Grade 8) shall be used in all breakaway shear bases for the 2.5" perforated tube posts. All other perforated tube signpost base material shall be fastened with 5/16" diameter corner bolts(Grade 2).

Slip Base Anchors for use with the 2.0" and 2.5" posts shall be Telespar Slip Base Anchor brand or equal meeting the requirements of NCHRP Report 350.

All 2.0" perforated tub sign posts shall have a soil stabilizer attached to the base. Soil stabilizers shall be MPJ sign wedge style or equivalent.

All signs mounted in concrete median, surfacing, or the bridge deck shall have a flush mount breakaway base. All flush mount breakaway base design shall be submitted to the Engineer for approval two weeks prior to installation and shall meet the requirements of NCHRP Report 350.

FOR BIDDING PURPOSES ONLY

FURNISH & INSTALL FLAT ALUMINUM SIGNS / NON-REMOVABLE COPY, HIGH INTENSITY & SUPER/VERY HIGH INTENSITY

Measurement of sign areas will include payment for the entire sign blank before trimming for rounded corners. The square unit measurement for each sign shall be as shown in the table of Permanent Signing. This payment for signs designated as Flat Alum. under the New Sign column in the table of Permanent Signing shall include all labor (including installing date decals), equipment, and materials to complete the work, and shall be paid for at the contract unit price per square foot for FLAT ALUMINUM SIGN / NON-REMOVABLE COPY HIGH INTENSITY and FLAT ALUMINUM SIGN / NON-REMOVABLE COPY SUPER/VERY HIGH INTENSITY.

FURNISH & INSTALL EXTRUDED ALUMINUM SIGN, REMOVABLE COPY HIGH INTENSITY

Measurement of sign areas will include payment for the entire sign blank and/or extruded aluminum sign backing. The square unit measurement for each sign shall be as shown in the table of Permanent Signing. This payment for signs designated as Extruded under the New Sign column in the table of Permanent Signing shall include all labor (including installing date decals), equipment, and materials to complete the work and shall be paid for at the contract unit price per square foot for EXTRUDED ALUMINUM SIGN, REMOVABLE COPY HIGH INTENSITY.

SHEETING REQUIREMENTS

All legend and border utilizing the color black shall be vinyl or screen printed black, non-reflectorized material. All other legend and border shall be of same type of sheeting as the background of the same sign.

GUIDE SIGNS

Guide signs shall be mounted with minimum clearances as shown in these plans. No sign shall be mounted to the post both above and below a breakaway section of the post. Any sign that covers or is below a breakaway section of the post shall be mounted to stiffeners attached to the sign above.

The Contractor shall remove all existing footings and bases with all guide signs that are scheduled to be removed as directed by the Engineer. Fixed base sign footings may be left in place provided the Contractor removes the top of footing and backfills to maintain a minimum of 2 feet of cover. Break-away base footings may also be left in place provided they are broken up to allow the removal of the stub post and then backfilled to maintain a minimum of 2 feet of cover. The Contractor shall take care in removal of any existing break-away base guide sign footings so as not to damage the sign base. Bases shall be reattached to the sign post and shall be tagged with their original location and delivered to the Rapid City South Maintenance Yard by the Contractor. Payment for removal and delivery of existing guide sign footings and bases, shall be incidental to the contract lump sum price for REMOVE CONCRETE FOOTINGS.

FURNISH AND INSTALL DELINEATOR

The Contractor shall lay out delineator locations and shall obtain Engineer approval of locations prior to installation. Upon removal of existing delineators, the Contractor shall install new delineators with new reflectors so that all sections of roadway carrying traffic are delineated by nightfall. Delineators shall be placed with the top of the reflector unit approximately 4 feet above the near roadway edge. They shall be located 2 feet outside the outer edge of the shoulder or the backside of the curb.

Where a roadside barrier or other obstruction intrudes into the space between the pavement edge and the extension of the line of delineators, the delineators shall be in line with the barrier or in line with the innermost edge of the obstruction.

The standard spacing between delineators on the same side of the roadway in tangent sections shall be 528 feet. When normal spacing is interrupted by structures, crossroads, or ramps, delineators falling within such areas may be moved in either direction a distance not exceeding one-quarter of the standard spacing. Delineators still falling within such areas should be eliminated.

Gore areas shall be delineated in the following manner: A Type 2 yellow object marker shall be placed at the off ramp gore point. Five 4"x8" white delineators shall be placed at 25' spacing on the gore side of mainline starting 25' from the Type 2 object marker. Five 4"x8" amber delineators shall be placed at 25' spacing on the gore side of the ramp starting 25' from the Type 2 object marker. 4"x8" white delineators shall be placed at 100' spacing along the shoulder side of an off ramp starting at beginning of ramp taper and ending at the intersection with the crossroad. 4"x8" white delineators shall be placed at 100' spacing beginning at the intersection with the crossroad and ending at the end of the ramp taper along mainline.

4" Tubular Delineators shall be placed with the top of the reflector unit approximately 4 feet above the near roadway edge. They shall be located on each post of all sign assemblies as required by the Engineer.

All cost for materials, labor and equipment necessary to furnish and install delineators shall be incidental to the contract unit price per each for 4"x4" AMBER DELINEATOR WITH 1.12 Lb/Ft POST, 4"x4" WHITE DELINEATOR WITH 1.12 Lb/Ft POST, 4"x8" AMBER DELINEATOR WITH 1.12 Lb/Ft POST, 4"x8" WHITE DELINEATOR WITH 1.12 Lb/Ft POST, and 4" TUBULAR AMBER or 4" WHITE DELINEATOR REFLECTOR.

Bridge approach delineation shall be provided at all structures and shall consist of a minimum of four delineators on each side of the roadway spaced 50 feet apart. Except where guardrail is in place, the delineators shall be located in a straight line beginning a minimum of 200 feet from the corner of the bridge and at the normal offset distance outside the shoulder edge and tapering to the inside edge of the obstruction. Where guardrail is present, bridge end delineators which fall within the guardrail section (located behind the guardrail) shall be placed against the nearest rail post, flush with the backside of the guardrail.

DELINEATORS

Delineator reflectors shall have Type XI sheeting. They shall be attached with two rivets each. The 4" Tubular delineator reflector shall be constructed of PVC with a Type XI reflective sheeting as shown in the erection details for one way signs. Tubular delineators shall be attached to sign posts with two rivets each.

The flexible delineator posts used on islands shall be a white post with a height of 42 inches. Each post shall have a minimum of two three inch-wide white bands of reflective sheeting (minimum equivalency of high intensity) placed a maximum of two inches from the top of the post with a maximum of six inches between the bands. The reflective sheeting shall be visible from 360 degrees around the post. Each post shall be anchored with a bolted system to the finished concrete surface.

REMOVE & RESET ROAD CLOSURE GATES

The Contractor shall remove and reset two (2) road closure gates and install LED lights, conduit, and wiring as detailed in these plans.

Payment for all cost for labor and equipment necessary to remove gate shall be incidental to the contract unit price for RESET ROAD CLOSURE GATE.

Payment for all cost for labor, materials, and equipment necessary to reset the gate and install lighting on gate to adjacent junction box shall be incidental to the contract unit price for RESET ROAD CLOSURE GATE.

ROAD CLOSURE GATE

The Contractor shall furnish and install one (1) new road closure gate with LED lights, conduit, and wiring as detailed in these plans.

Payment for all cost for labor, materials, and equipment necessary to furnish and install gate with lights and wiring on gate to adjacent junction box shall be incidental to the contract unit price for ROAD CLOSURE GATE.

ROAD CLOSURE ADVANCED WARNING SIGNS

The Contractor shall furnish and install two road closure advanced warning sign assemblies with LED lights as detailed in these plans.

Payment for Flashing Beacon assemblies, wiring and associated hardware shall be paid for at the contract unit price for RECTANGULAR RAPID FLASHING BEACON.

Payment for the road closure advanced warning signs shall be paid for at the contract unit price per square foot for FLAT ALUMINUM SIGN / NON-REMOVABLE COPY SUPER/VERY HIGH INTENSITY.

Payment for the road closure advanced warning signposts, hardware, bases, and labor will be made at the contract unit price per foot for 2.5" x 2.5" Perforated Tube Post.

REGISTERED PROFESSIONAL ENGINEER
REG. NO.
11714
THOMAS W. ANZIA
SOUTH DAKOTA
1/8/16

STATE OF	PROJECT	SHEET NO.	TOTAL SHEETS
SD	IM 0901(162)14 P 014A(11)8	S4	S43

Revised Date 8/28/2015 LCL

BREAKAWAY AND FIXED SIGN POST AND FOOTING DETAILS

FOR BIDDING PURPOSES ONLY

LOCATION	POST			FOOTING DIMENSIONS			ANCHOR BOLT / BASE PLATE REQUIREMENTS (FIXED ONLY)						Longitudinal Steel Quantities			Spiral Steel Quantities	
	Size	Estimated Length (ft)	Breakaway / Fixed	Diameter (ft)	Depth (ft)	Stub Post Length (ft)	"A" (in)	"E" (in)	Plate Thickness (in)	Bolt Diameter (in)	Bolt Length (in)	Embed. Length (in)	No.	Size	Length (ft)	Diameter (ft)	Length (ft)
EB I-90, STA. 735+20, 102.2 RIGHT	W10X33	26.4	Breakaway	2.0	9.0	3.0	-	-	-	-	-	-	8	#7 Bars	8.67	1.67	60.00
EB I-90, STA. 735+20, 112.8 RIGHT	W10X33	30.6	Breakaway	2.0	9.0	3.0	-	-	-	-	-	-	8	#7 Bars	8.67	1.67	60.00
EB I-90, STA. 736+20, 97.6 RIGHT	W6X12	16.5	Breakaway	1.75	4.0	2.0	-	-	-	-	-	-	8	#6 Bars	3.67	1.42	28.75
EB I-90, STA. 736+20, 102.4 RIGHT	W6X12	18.1	Breakaway	1.75	4.0	2.0	-	-	-	-	-	-	8	#6 Bars	3.67	1.42	28.75
WB I-90, STA. 781+50, 87.8 LEFT	W8X24	22.1	Breakaway	1.75	8.0	2.5	-	-	-	-	-	-	8	#6 Bars	7.67	1.42	46.75
WB I-90, STA. 781+50, 99.2 LEFT	W8X24	23.3	Breakaway	1.75	8.0	2.5	-	-	-	-	-	-	8	#6 Bars	7.67	1.42	46.75
WB I-90, STA. 781+50, 100.2 LEFT	W10X33	27.4	Breakaway	2.0	9.0	3.0	-	-	-	-	-	-	8	#7 Bars	8.67	1.67	60.00
WB I-90, STA. 781+50, 112.8 LEFT	W10X33	29.5	Breakaway	2.0	9.0	3.0	-	-	-	-	-	-	8	#7 Bars	8.67	1.67	60.00
EB I-90 RAMP C, STA. 26+00, 43.5 RIGHT	W6X12	14.8	Breakaway	1.75	4.0	2.0	-	-	-	-	-	-	8	#6 Bars	3.67	1.42	28.75
EB I-90 RAMP C, STA. 26+00, 52.0 RIGHT	W6X12	16.5	Breakaway	1.75	4.0	2.0	-	-	-	-	-	-	8	#6 Bars	3.67	1.42	28.75
EB I-90 RAMP C, STA. 27+50, 45.8 RIGHT	W6X12	16.7	Breakaway	1.75	4.0	2.0	-	-	-	-	-	-	8	#6 Bars	3.67	1.42	28.75
EB I-90 RAMP C, STA. 27+50, 51.8 RIGHT	W6X12	17.6	Breakaway	1.75	4.0	2.0	-	-	-	-	-	-	8	#6 Bars	3.67	1.42	28.75
EB I-90 RAMP C, STA. 30+50, 66.3 RIGHT	W6X12	16.7	Breakaway	1.75	4.0	2.0	-	-	-	-	-	-	8	#6 Bars	3.67	1.42	28.75
EB I-90 RAMP C, STA. 30+50, 72.3 RIGHT	W6X12	17.6	Breakaway	1.75	4.0	2.0	-	-	-	-	-	-	8	#6 Bars	3.67	1.42	28.75
WB I-90 RAMP D, STA. 17+00, 59.9 LEFT	W6X12	16.1	Breakaway	1.75	4.0	2.0	-	-	-	-	-	-	8	#6 Bars	3.67	1.42	28.75
WB I-90 RAMP D, STA. 17+00, 65.9 LEFT	W6X12	16.3	Breakaway	1.75	4.0	2.0	-	-	-	-	-	-	8	#6 Bars	3.67	1.42	28.75
WB I-90 RAMP D, STA. 19+00, 45.9 LEFT	W6X12	16.8	Breakaway	1.75	4.0	2.0	-	-	-	-	-	-	8	#6 Bars	3.67	1.42	28.75
WB I-90 RAMP D, STA. 19+00, 51.9 LEFT	W6X12	17.8	Breakaway	1.75	4.0	2.0	-	-	-	-	-	-	8	#6 Bars	3.67	1.42	28.75
WB I-90 RAMP D, STA. 21+00, 37.8 LEFT	W6X12	14.6	Breakaway	1.75	4.0	2.0	-	-	-	-	-	-	8	#6 Bars	3.67	1.42	28.75
WB I-90 RAMP D, STA. 21+00, 46.2 LEFT	W6X12	16.0	Breakaway	1.75	4.0	2.0	-	-	-	-	-	-	8	#6 Bars	3.67	1.42	28.75

REGISTERED PROFESSIONAL ENGINEER
REG. NO.
11714
THOMAS W.
ANZIA
SOUTH DAKOTA
1/8/16

STATE OF	PROJECT	SHEET NO.	TOTAL SHEETS
SD	IM 0901(162)14 P 014A(11)8	S5	S43

Revised Date 8/28/2015 LCL

PERMANENT SIGNING - INTERSTATE 90

FOR BIDDING PURPOSES ONLY

EXISTING STATION	NEW STATION	SIGN								POST					DESCRIPTION	REMARKS
		Width (in)	Height (in)	MUTCD No. or Type	Facing Traffic	New Sign	Remove Existing	Square Footage	Sheeting Type	New Post	Length (feet)	Size (in)	Posts	Shear Slip Base		
INTERSTATE 90 - Eastbound																
737+48; Right	735+20; Right	252	180	Exit Guide	EB	Yes	Yes	315	IV	Yes	See Breakaway Support Details				Exit 14 - US14A Spearfish Canyon Scenic Byway	Remove & Replace with New Sign and Posts at New Location
737+62; Right	736+20; Right	96	60	Regulatory	EB	Reset	Yes	-	IV	Yes	See Breakaway Support Details				I-90 Closed When Flashing, Exit Now (Flashing Beacons)	Remove & Reset on New Posts at Existing Location (including beacons)
745+67; Right	743+50; Right	108	30	E5-1a	EB	Yes	Yes	22.5	IV	Yes	10.5	2.5	2	Yes	Exit 14 Gore Sign	Remove and Replace with New Sign and Posts at New Location
754+75; RT (approx)	753+50; Right	-	-	Regulatory	EB	Reset	Yes	-	-	Yes	11.0	2	1	Yes	Adopt-A-Highway, Litter Control Courtesy of, ID Plaque	Remove & Reset on New Post at New Location
755+52; Right	Same	-	-	D10-2a	EB	Reset	Yes	-	-	No	8.0	2	1	-	Mile Marker 14.43	Reset
778+00; Right	788+00; Right	-	-	Special	EB	Reset	Yes	-	-	Yes	12.0	2.5	2	Yes	Don't Crowd the Plow / Highway Workers - Give'em A Brake (Flip Panel)	Remove & Reset on New Posts at New Location
781+03; Right	792+50; Right	30	15	M3-2i	EB	Yes	Yes	3.125	IV	Yes	14.0	2.5	1	Yes	Interstate Cardinal Direction Marker (EAST)	Remove and Replace with New Signs and Post at New Location
		36	36	M1-1 (90)	EB	Yes	Yes	9.0	IV						Interstate Shield (90)	
		24	12	M3-2	EB	Yes	Yes	2.0	IV						Cardinal Direction Marker (EAST)	
		24	24	M1-4 (14)	EB	Yes	Yes	4.0	IV						US Route Marker (14)	
		24	12	M3-3	EB	Yes	Yes	2.0	IV						Cardinal Direction Marker (SOUTH)	
		24	24	M1-4 (85)	EB	Yes	Yes	4.0	IV						US Route Marker (85)	
785+29; Right	Same	-	-	D10-2	EB	Reset	Yes	-	-	No	7.0	2	1	-	Mile Marker 15	Reset Sign and Post
791+00; Right	-	-	-	R8-4	EB	No	No	-	-	No	-	-	-	-	Emergency Parking Only	Existing - To Remain
INTERSTATE 90 - Westbound																
719+80; LT (approx)	-	-	-	Exit Guide	WB	No	No	-	-	No	-	-	-	-	Exit 12 - Jackson Blvd, Black Hills State Univ, 1 Mile	Existing - To Remain
734+12; LT (approx)	Same	-	-	D10-2	WB	Reset	Yes	-	-	No	7.0	2	1	-	Mile Marker 14	Reset Sign and Post
734+50; LT (approx)	717+50; Left	30	15	M3-4i	WB	Yes	Yes	3.125	IV	Yes	same	2.5	1	Yes	Interstate Cardinal Direction Marker (WEST)	Remove and Replace with New Signs and Post at New Location
		36	36	M1-1 (90)	WB	Yes	Yes	9.0	IV						Interstate Shield (90)	
		24	12	M3-4	WB	Yes	Yes	2.0	IV						Cardinal Direction Marker (WEST)	
		24	24	M1-4 (14)	WB	Yes	Yes	4.0	IV						US Route Marker (14)	
		24	12	M3-1	WB	Yes	Yes	2.0	IV						Cardinal Direction Marker (NORTH)	
		24	24	M1-4 (85)	WB	Yes	Yes	4.0	IV						US Route Marker (85)	
755+81; LT (approx)	758+00; Left	-	-	Regulatory	WB	Reset	Yes	-	-	Yes	11.0	2	1	Yes	Adopt-A-Highway, Litter Control Courtesy of, ID Plaque	Remove & Reset on New Post at New Location
755+52; Left	Same	-	-	D10-2a	WB	Reset	Yes	-	-	No	8.0	2	1	-	Mile Marker 14.43	Reset
764+40; Lt (approx)	766+00; Left	108	30	E5-1a	WB	Yes	Yes	22.5	IV	Yes	10.5	2.5	2	Yes	Exit 14 Gore Sign	Remove and Replace with New Sign and Posts at New Location
771+52; Left	771+50, Left	252	180	Exit Guide	WB	Yes	Yes	315	IV	Yes	See Breakaway Support Details				Exit 14 - I90 Business, US14A, Spearfish Canyon Scenic Byway	Remove and Replace with New Sign and Posts at New Location
777+50; (median)	-	-	-	Regulatory	WB/EB	-	Yes	-	-	No	-	-	-	-	Authorized Vehicles Only	Remove Signs and Post
781+36; Left	781+50: Left	228	132	Service	WB	Yes	Yes	209	IV	Yes	See Breakaway Support Details				Exit 14 - Gas, Camping Service Sign (3 Businesses)	Remove and Replace with New Sign and Posts at New Location
785+29; Left	-	-	-	D10-2	WB	No	No	-	-	No	-	-	-	-	Mile Marker 15	Existing - To Remain

REGISTERED PROFESSIONAL ENGINEER
REG. NO.
11714
THOMAS W. ANZIK
SOUTH DAKOTA

STATE OF	PROJECT	SHEET NO.	TOTAL SHEETS
SD	IM 0901(162)14 P 014A(11)8	S6	S43

Revised Date 8/28/2015 LCL

PERMANENT SIGNING - INTERSTATE 90 (EXIT 14) EASTBOUND RAMPS

FOR BIDDING PURPOSES ONLY

EXISTING STATION	NEW STATION	SIGN								POST					DESCRIPTION	REMARKS
		Width (in)	Height (in)	MUTCD No. or Type	Facing Traffic	New Sign	Remove Existing	Square Footage	Sheeting Type	New Post	Length (feet)	Size (in)	Posts	Shear Slip Base		
EB I-90 OFF RAMP C & G																
27+81; Right	26+00; Right	168	60	Guide	EB	Yes	Yes	70.0	IV	Yes	See Breakaway Support Details				Convention CTR (LT), Spearfish Canyon (RT), Heritage CTR (RT)	Remove & Replace with New Sign and Posts at New Location
28+90; Right	27+50; Right	120	84	Service	EB	Yes	Yes	70.0	IV	Yes	See Breakaway Support Details				Lodging Service Sign (6 Businesses)	Remove and Replace with New Sign and Post at New Location
30+00; Rt (approx)	29+00; Right	-	-	Guide	EB	Reset	Yes	-	-	Yes	11.0	2.0	1	No	Airport (Right Arrow)	Remove & Reset on New Post at New Location
31+50; Rt (approx)	30+50; Right	120	84	Service	EB	Yes	Yes	70.0	IV	Yes	See Breakaway Support Details				Food Service Sign (6 Businesses)	Remove and Replace with New Sign and Post at New Location
12+00; Rt (approx)	31+50; 66.0 Right	60	84	Service	EB	Yes	Yes	35.0	IV	Yes	15.7	2.5	1	Yes (T)	Gas Service Sign (3 Businesses)	Remove and Replace with New Sign and Post at New Location
	31+50; 69.0 Right									Yes	16.2	2.5	1	Yes (T)		
	31+50; 73.0 Right	60	84	Service	EB	Yes		35.0	IV	Yes	16.8	2.5	1	Yes (T)	Camping Service Sign (3 Businesses)	
	31+50; 76.0 Right										17.3	2.5	1	Yes (T)		
12+00; Lt. (approx)	30+50; Left	36	24	R5-1a	WB	Yes	Yes	6.0	XI	Yes	10.0	2.0	1	No	Wrong Way	Remove and Replace with New Sign and Post at New Location
-	33+78; Left	36	12	R6-1L	SB	Yes	No	3.0	IV	Yes	11.0	2.0	2	No	One Way (Left Arrow)	Install New Signs and Posts
	(Ramp C)	36	12	R6-1R	NB	Yes	No	3.0	IV						One Way (Right Arrow)	
		24	36	R10-6R	EB	Yes	No	6.0	IV						Stop Here on Red (Right Arrow)	
		36	36	R5-1	WB	Yes	No	9.0	XI						Do Not Enter	
-	33+78; Right	36	12	R6-1L	SB	Yes	No	3.0	IV	Yes	11.0	2.0	2	No	One Way (Left Arrow)	Install New Signs and Posts
	(Ramp C)	36	12	R6-1R	NB	Yes	No	3.0	IV						One Way (Right Arrow)	
		24	36	R10-6L	EB	Yes	No	6.0	IV						Stop Here on Red (Left Arrow)	
		36	36	R5-1	WB	Yes	No	9.0	XI						Do Not Enter	
13+00; LT (approx)	-	-	-	R10-6R	EB	No	Yes	-	-	No	-	-	-	-	Stop Here On Red (Right Arrow)	Remove Sign and Post
13+00; RT (approx)	-	-	-	R10-6L	EB	No	Yes	-	-	No	-	-	-	-	Stop Here On Red (Left Arrow)	Remove Sign and Post
13+00; RT (approx)	-	-	-	R5-1	WB	No	Yes	-	-	No	-	-	-	-	Do Not Enter	Remove Signs and Posts
		-	-	R6-1L	SB	No	Yes	-	-						One Way (Left Arrow)	
27th St./Ramp B	Sta. 12+50; Left	24	24	M1-4 (14A)	EB	Yes	Yes	4.0	IV	Yes	11	2.5	2	Yes	US Route 14A Marker	Remove and Replace with New Sign at New Location
(NE Corner)	(within island)	21	15	M6-1R	EB	Yes	Yes	2.2	IV						Directional Route Arrow (Right)	Remove and Replace with New Sign at New Location
		-	-	Guide	EB	No	Yes	-	-						Spearfish Convention Ctr (LT), High Plains Heritage Museum (RT)	Remove Sign and Post (Note: Guide Sign not shown on plans)
-	14+00; RT (Ramp G)	36	30	R1-2	EB	Yes	No	3.75	XI	Yes	10.5	2.0	1	No	Yield	Install New Sign and Post
EB I-90 ON RAMP B & F																
-	12+40; Left	36	36	W4-1R	EB	Yes	No	9.0	XI	Yes	10.5	2.0	2	No	Right Merge (Symbol)	Install New Sign and Post
-	13+50; Right	36	30	R1-2	EB	Yes	No	3.75	XI	Yes	10.5	2.0	1	No	Yield	Install New Sign and Post
-	14+50; Right	36	36	W4-2R	EB	Yes	No	9.0	XI	Yes	10.5	2.0	2	No	Lane Transition, Right Merge (Symbol)	Install New Sign and Post
-	26+00; Left	36	36	W4-1R	EB	Yes	No	9.0	XI	Yes	10.5	2.0	2	No	Right Merge (Symbol)	Install New Sign and Post
767+12; Right	-	-	-	R1-2	EB	No	Yes	-	-	No	-	-	-	-	Yield	Remove Sign and Post

(T) = Telescoped with 2.25" Post to bottom of sign.

REGISTERED PROFESSIONAL ENGINEER
REG. NO. 11714
THOMAS W. ANZIA
SOUTH DAKOTA
1/8/16

STATE OF	PROJECT	SHEET NO.	TOTAL SHEETS
SD	IM 0901(162)14 P 014A(11)8	S7	S43

Revised Date 8/28/2015 LCL

PERMANENT SIGNING - INTERSTATE 90 (EXIT 14) WESTBOUND RAMPS

FOR BIDDING PURPOSES ONLY

EXISTING STATION	NEW STATION	SIGN								POST					DESCRIPTION	REMARKS
		Width (in)	Height (in)	MUTCD No. or Type	Facing Traffic	New Sign	Remove Existing	Square Footage	Sheeting Type	New Post	Length (feet)	Size (in)	Posts	Shear Slip Base		
WB I-90 ON RAMP D & H																
-	33+00; Right	36	36	W4-1R	EB	Yes	No	9.0	XI	Yes	10.5	2.0	2	Yes	Right Merge (Symbol)	Install New Sign and Post
-	10+00; Left	36	36	W4-2R	EB	Yes	No	9.0	XI	Yes	10.5	2.0	2	No	Lane Transition, Right Merge (Symbol)	Install New Sign and Post
34+55; Left	11+00; Left	36	30	R1-2	WB	Yes	Yes	3.75	XI	Yes	10.5	2.0	1	No	Yield	Remove and Replace with New Sign and Post at New Location
-	12+20; Right	36	36	W4-1R	EB	Yes	No	9.0	XI	Yes	10.5	2.0	2	Yes	Right Merge (Symbol)	Install New Sign and Post
WB I-90 OFF RAMP A & E																
-	12+60; Left	36	12	R6-1L	NB	Yes	No	3.0	IV	Yes	11.0	2.0	2	No	One Way (Left Arrow)	Install New Signs and Posts
	(Ramp A)	36	12	R6-1R	SB	Yes	No	3.0	IV						One Way (Right Arrow)	
		24	36	R10-6L	WB	Yes	No	6.0	IV						Stop Here on Red (Left Arrow)	
		36	36	R5-1	EB	Yes	No	9.0	XI						Do Not Enter	
-	12+60; Right	36	12	R6-1L	NB	Yes	No	3.0	IV	Yes	11.0	2.0	2	No	One Way (Left Arrow)	Install New Signs and Posts
	(Ramp A)	36	12	R6-1R	SB	Yes	No	3.0	IV						One Way (Right Arrow)	
		24	36	R10-6R	WB	Yes	No	6.0	IV						Stop Here on Red (Right Arrow)	
		36	36	R5-1	EB	Yes	No	9.0	XI						Do Not Enter	
-	11+00; LT (Ramp E)	36	30	R1-2	WB	Yes	No	3.75	XI	Yes	10.5	2.0	1	No	Yield	Install New Sign and Post
27th St./Ramp D	12+50 (Ramp E)	24	24	M1-2 (90)	WB	Yes	Yes	4.0	IV	Yes	12.0	2.0	2	No	Interstate Business Loop (I-90)	Remove and Replace with New Sign at New Location
(SE Corner)	(within island)	21	15	M6-1L	WB	Yes	Yes	2.19	IV						Directional Route Arrow (Green)	Remove and Replace with New Sign at New Location
		24	24	M1-4 (14A)	WB	Yes	Yes	4.0	IV						US Route 14A Marker	Remove and Replace with New Sign at New Location
		21	15	M6-1L	WB	Yes	Yes	2.19	IV						Directional Route Arrow (White)	Remove and Replace with New Sign at New Location
		-	-	Guide	WB	No	Yes	-	IV						Spearfish Convention Ctr (RT), High Plains Heritage Museum (LT)	Remove Sign and Post (Note: Guide Sign not shown on plans)
27th St./Ramp D	-	-	-	R5-1	WB	No	Yes	-	-	No	-	-	-	-	Do Not Enter	Remove Signs and Posts
(NE Corner)		-	-	R6-1L	SB	No	Yes	-	-						One Way (Left Arrow)	
12+00; LT (approx)	16+00; Right	36	24	R5-1a	EB	Yes	Yes	6.0	XI	Yes	11.0	2	1	No	Wrong Way	Remove and Replace with New Sign and Post at New Location
11+50; LT (approx)	15+00; 66.1 Left	60	84	Service	WB	Yes	Yes	35.0	IV	Yes	15.7	2.5	1	Yes (T)	Gas Service Sign (3 Businesses)	Remove and Replace with New Sign and Post at New Location
	15+00; 69.1 Left										16.2	2.5	1	Yes (T)		
	15+00; 73.1 Left	60	84	Service	WB	Yes		35.0	IV	Yes	16.9	2.5	1	Yes (T)	Camping Service Sign (3 Businesses)	
	15+00; 76.1 Left										17.4	2.5	1	Yes (T)		
12+50; LT (approx)	17+00; Left	120	84	Service	WB	Yes	Yes	70.0	IV	Yes	See Breakaway Support Details				Food Service Sign (6 Businesses)	Remove and Replace with New Sign and Post at New Location
15+79; Left	19+00; Left	120	84	Service	WB	Yes	Yes	70.0	IV	Yes	See Breakaway Support Details				Lodging Service Sign (6 Businesses)	Remove and Replace with New Sign and Post at New Location
16+84; Left	21+00; Left	168	60	Guide	WB	Yes	Yes	70.0	IV	Yes	See Breakaway Support Details				Spearfish Canyon (LT), Heritage CTR (LT), Convention CTR (RT)	Remove & Replace with New Sign and Posts at New Location

(T) = Telescoped with 2.25" Post to bottom of sign.

REGISTERED PROFESSIONAL ENGINEER
REG. NO.
11714
THOMAS W. ANZIA
SOUTH DAKOTA
1/8/16

STATE OF	PROJECT	SHEET NO.	TOTAL SHEETS
SD	IM 0901(162)14 P 014A(11)8	S8	S43

Revised Date 8/28/2015 LCL

PERMANENT SIGNING - 27TH STREET

FOR BIDDING PURPOSES ONLY

EXISTING STATION	NEW STATION	SIGN								POST					DESCRIPTION	REMARKS
		Width (in)	Height (in)	MUTCD No. or Type	Facing Traffic	New Sign	Remove Existing	Square Footage	Sheeting Type	New Post	Length (feet)	Size (in)	Posts	Shear Slip Base		
27TH STREET																
10+00; Right	-	-	-	R1-1	NB	No	No	-	-	No	-	-	-	-	Stop Sign and Street Name Panels	Existing - To Remain
-	12+72; LT (median)	24	30	R4-7	NB	Yes	No	5.0	IV	Yes	9.5	2.0	1	No	Keep Right (Symbol)	Install New Sign and Post
-	13+83; LT (median)	24	30	R4-7	SB	Yes	No	5.0	IV	Yes	9.5	2.0	1	No	Keep Right (Symbol)	Install New Sign and Post
14+12; Right	-	-	-	R1-1	NB	No	Yes	-	-	No	-	-	-	-	Stop Sign and Street Name Panels	Remove Signs and Post
15+64; Left	-	-	-	R3-7R	NB	No	Yes	-	-	No	-	-	-	-	Right Lane Must Turn Right	Remove Sign and Post
-	15+78; RT (median)	24	30	R4-7	NB	Yes	No	5.0	IV	Yes	9.5	2.0	1	No	Keep Right (Symbol)	Install New Sign and Post
-	16+18; Left	24	24	M1-2	SB	Yes	No	4.0	IV	Yes	11.25	2.0	1	No	Interstate Business Loop (I-90)	Install New Signs and Post
		21	15	M6-1R	SB	Yes	No	2.2	IV						Directional Route Arrow (GREEN)	
		24	24	M1-4	SB	Yes	No	4.0	IV						US Route 14A Marker	
		21	15	M6-1R	SB	Yes	No	2.2	IV						Directional Route Arrow (WHITE)	
15+99; Left	-	-	-	Service	SB	No	Yes	-	-	No	-	-	-	-	Lodging (Left and Right)	Remove Signs and Post
				Guide	SB	No	Yes	-	-						Spearfish Canyon National Forest Scenic Byway (Right)	
				Guide	SB	No	Yes	-	-						Camping (Right)	
-	16+95; Left	24	24	D9-9	SB	Yes	No	4.0	IV	Yes	14.0	2.0	3	No	Lodging (Symbol)	Install New Signs and Posts
		21	15	M6-6Ri	SB	Yes	No	2.2	IV						Directional Arrow (BLUE)	
		24	24	D9-3	SB	Yes	No	4.0	IV						Camping (Symbol)	
		21	15	M6-1Ri	SB	Yes	No	2.2	IV						Directional Arrow (BLUE)	
		168	42	Guide	SB	Yes	No	49	IV						Heritage CTR (LT), Spearfish Canyon (RT)	
16+21; Left	17+15;Right	24	12	M3-2i	NB	Yes	Yes	2.0	IV	Yes	12.25	2.0	2	No	Interstate Cardinal Direction Marker (EAST)	Remove and Replace with New Signs and Post at New Location
		24	24	M1-1 (90)	NB	Yes	Yes	4.0	IV						Interstate Shield (90)	
		21	15	M6-1Ri	NB	Yes	Yes	2.2	IV						Directional Route Arrow (Interstate)	
-	17+15; Right	24	12	M3-2	NB	Yes	No	2.0	IV						Cardinal Direction Marker (EAST)	
-		24	24	M1-4 (14)	NB	Yes	No	4.0	IV						US Route Marker (14)	
16+21; Left	17+15; Right	24	12	M3-3	NB	Yes	Yes	2.0	IV						Cardinal Direction Marker (SOUTH)	
		24	24	M1-4 (85)	NB	Yes	Yes	4.0	IV						US Route Marker (85)	
		21	15	M6-1R	NB	Yes	No	2.2	IV						Directional Route Arrow (WHITE)	
-	16+50; Right	84	72	Regulatory	NB	Yes	No	42.0	IV	Yes	14.0	2.5	2	Yes (T)	East I-90 Closed, Do Not Enter When Flashing	Install New Sign, Posts and Flashing Beacons
-	17+25; Left	30	30	R3-7R	SB	Yes	No	6.25	IV	Yes	10.5	2.0	1	No	Right Lane Must Turn Right	Install New Sign and Post
18+37; Left	23+28; Left	24	12	M3-2i	SB	Yes	Yes	2.0	IV	Yes	12.25	2.0	2	No	Interstate Cardinal Direction Marker (EAST)	Remove and Replace with New Signs and Post at New Location
		24	24	M1-1 (90)	SB	Yes	Yes	4.0	IV						Interstate Shield (90)	
		-	-	M6-1Li	NB	No	Yes	-	-						Directional Route Arrow (Interstate)	
-		21	15	M6-2Li	SB	Yes	No	2.2	IV						Directional Route Arrow (Interstate)	
-	23+28; Left	24	12	M3-2	NB	Yes	No	2.0	IV						Cardinal Direction Marker (EAST)	
-		24	24	M1-4 (14)	NB	Yes	No	4.0	IV						US Route Marker (14)	
18+37; Left	23+28; Left	24	12	M3-3	SB	Yes	Yes	2.0	IV						Cardinal Direction Marker (SOUTH)	
		24	24	M1-4 (85)	SB	Yes	Yes	4.0	IV						US Route Marker (85)	
-		21	15	M6-2L	SB	Yes	No	2.2	IV						Directional Route Arrow (WHITE)	
23+85	19+00; Right	24	12	M3-4i	NB	Yes	Yes	2.0	IV						Interstate Cardinal Direction Marker (WEST)	Remove and Replace with New Signs and Post at New Location
		24	24	M1-1 (90)	NB	Yes	Yes	4.0	IV						Interstate Shield (90)	
		-	-	M6-1Li	NB	No	Yes	-	-						Directional Route Arrow (Interstate)	
-		21	15	M6-2Li	NB	Yes	No	2.2	IV						Directional Route Arrow (Interstate)	
23+46; Left	19+00; Right	24	12	M3-4	NB	Yes	Yes	2.0	IV	Yes	12.25	2.0	2	No	Cardinal Direction Marker (WEST)	
		24	24	M1-4 (14)	NB	Yes	Yes	4.0	IV						US Route Marker (14)	
		-	-	M6-1Li	NB	No	Yes	-	-						Directional Route Arrow (WHITE)	
-		21	15	M6-2L	NB	Yes	No	2.2	IV						Directional Route Arrow (WHITE)	
23+85	19+00; Right	24	12	M3-1	NB	Yes	Yes	2.0	IV						Cardinal Direction Marker (NORTH)	
		24	24	M1-4 (85)	NB	Yes	Yes	4.0	IV						US Route Marker (85)	
		-	-	M6-1Li	NB	No	Yes	-	-						Directional Route Arrow (Interstate)	
-	19+37; Left	36	36	W4-1R	SB	Yes	No	9.0	XI	Yes	12.0	2.0	2	No	Merge (Symbol)	Install New Sign and Posts
-	19+37; LT (median)	24	30	R4-7	SB	Yes	No	5.0	IV	Yes	9.5	2.0	1	No	Keep Right (Symbol)	Install New Sign and Post
-	19+48; Right	36	36	R5-1	SB	Yes	No	9.0	XI	Yes	10.0	2.0	2	No	Do Not Enter	Install New Sign and Posts

(T) = Telescoped with 2.25" Post to bottom of sign.

REGISTERED PROFESSIONAL ENGINEER
REG. NO.
11714
THOMAS W. ANZIA
SOUTH DAKOTA
1/8/16

STATE OF	PROJECT	SHEET NO.	TOTAL SHEETS
SD	IM 0901(162)14 P 014A(11)8	S9	S43

Revised Date 8/28/2015 LCL

PERMANENT SIGNING - 27TH STREET

FOR BIDDING PURPOSES ONLY

EXISTING STATION	NEW STATION	SIGN								POST					DESCRIPTION	REMARKS
		Width (in)	Height (in)	MUTCD No. or Type	Facing Traffic	New Sign	Remove Existing	Square Footage	Sheeting Type	New Post	Length (feet)	Size (in)	Posts	Shear Slip Base		
27TH STREET																
-	20+90; Right	30	30	R3-1	NB	Yes	No	6.25	IV	No	-	-	-	-	No Right Turn (Symbol)	Mount on Signal Pole
-	21+05; Left	30	30	R3-1	SB	Yes	No	6.25	IV	No	-	-	-	-	No Right Turn (Symbol)	Mount on Signal Pole
-	22+40; Left	36	36	R5-1	NB	Yes	No	9.0	XI	Yes	10.0	2.0	2	No	Do Not Enter	Install New Sign and Posts
-	22+56; Right	36	36	W4-1R	NB	Yes	No	9.0	XI	Yes	12.0	2.0	2	No	Merge (Symbol)	Install New Sign and Posts
-	22+59; RT (median)	24	30	R4-7	NB	Yes	No	5.0	IV	Yes	9.5	2.0	1	No	Keep Right (Symbol)	Install New Sign and Post
25+55; Left	-	-	-	R1-2	SB / WB	No	Yes	-	-	-	-	-	-	-	Yield	Remove Sign and Post
-	25+80; Left	30	30	R3-7R	SB	Yes	No	6.25	IV	Yes	9.5	2.0	1	No	Right Lane Must Turn Right	Install New Sign and Post
26+25; Left	27+25; Left	24	12	M3-4i	SB	Yes	Yes	2.0	IV	Yes	12.25	2.0	2	No	Interstate Cardinal Direction Marker (WEST)	Remove and Replace with New Signs and Post at New Location
		24	24	M1-1 (90)	SB	Yes	Yes	4.0	IV						Interstate Shield (90)	
		21	15	M6-1Ri	SB	Yes	Yes	2.2	IV						Directional Route Arrow (Interstate)	
		24	12	M3-4	SB	Yes	Yes	2.0	IV						Cardinal Direction Marker (WEST)	
		24	24	M1-4 (14)	SB	Yes	Yes	4.0	IV						US Route Marker (14)	
		21	15	M6-1R	SB	Yes	Yes	2.2	IV						Directional Route Arrow	
		24	12	M3-1	SB	Yes	Yes	2.0	IV						Cardinal Direction Marker (NORTH)	
		24	24	M1-4 (85)	SB	Yes	Yes	4.0	IV						US Route Marker (85)	
		21	15	M6-1R	SB	Yes	Yes	2.2	IV						Directional Route Arrow	
-	27+00; (median)	84	72	Regulatory	NB	Yes	No	42.0	IV	Yes	13.0	2.5	2	Yes (T)	East I-90 Closed, Do Not Enter When Flashing	Install New Sign, Posts and Flashing Beacons
27+65; Right	26+00; Right	24	30	R2-1 (35)	NB	Yes	Yes	5.0	IV	Yes	10.5	2.0	1	No	Speed Limit 25	Remove and Replace with New Sign and Post at New Location
		-	-	M4-14	NB	No	Yes	-	-						Supplemental BEGIN panel	Remove Supplemental Panel
28+93; Left	28+86; Left	30	30	R1-1	EB	Yes	Yes	5.18	XI	Yes	9.5	2.0	1	No	Stop Sign	Remove and Replace with New Sign and Post at New Location
-	29+35; RT (median)	24	30	R4-7	NB	Yes	No	5.0	IV	Yes	9.5	2.0	1	No	Keep Right (Symbol)	Install New Sign and Post
-	29+40; Left	24	24	R3-2	SB	Yes	No	4.0	IV	Yes	9.0	2.0	1	No	No Left Turn (Symbol)	
29+42; Right	29+44; Right	30	30	R1-1	WB	Yes	Yes	5.18	XI	Yes	9.5	2.0	1	No	Stop Sign	Remove and Replace with New Sign and Post at New Location
29+65; Left	28+00; Left	24	30	R2-1 (25)	SB	Yes	Yes	5.0	IV	Yes	9.5	2.0	1	No	Speed Limit 25	Remove Sign Panel from Light Pole
29+92; Right	29+80; Right	30	30	R3-7R	NB	Yes	Yes	6.25	IV	Yes	9.5	2.0	1	No	Right Lane Must Turn Right	Remove and Replace with New Sign and Post at New Location
31+15; RT (approx)	31+39; Right	30	30	R3-7R	NB	Yes	Yes	6.25	IV	Yes	9.5	2.0	1	No	Right Lane Must Turn Right	Remove and Replace with New Sign and Post at New Location
-	31+85; (median)	24	30	R4-7	SB	Yes	No	5.0	IV	Yes	9.5	2.0	1	No	Keep Right (Symbol)	Install New Sign and Post
33+28; Right	-	-	-	R3-9b	NB	No	No	-	-	No	-	-	-	-	Center Lane, 2-Way Left Turn, Only	Existing - To Remain
		-	-	No Parking	NB	No	No	-	-						Priority Route, No Parking During Snowfall	Existing - To Remain
27TH STREET / I-90 SPUI TRAFFIC SIGNAL																
-	Signal Bridge	30	36	SPECIAL	NB	Yes	No	7.5	IV	No	-	-	-	-	Left Turn Arrow with U-Turn Arrow, OK	Mount on Mast Arm and Align with NB Left-Turn Lane
-	Signal Bridge	30	36	R3-5L	NB	Yes	No	7.5	IV	No	-	-	-	-	Left Turn (Arrow), ONLY	Mount on Mast Arm and Align with NB Left-Turn Lane
-	Signal Bridge	30	36	SPECIAL	SB	Yes	No	7.5	IV	No	-	-	-	-	Left Turn Arrow with U-Turn Arrow, OK	Mount on Mast Arm and Align with SB Left-Turn Lane
-	Signal Bridge	30	36	R3-5L	SB	Yes	No	7.5	IV	No	-	-	-	-	Left Turn (Arrow), ONLY	Mount on Mast Arm and Align with SB Left-Turn Lane
27TH STREET / 1ST STREET TRAFFIC SIGNAL																
-	NW Mast Arm	30	36	R3-5L	WB	Yes	No	7.5	IV	No	-	-	-	-	Left Turn (Arrow), ONLY	Mount on Mast Arm and Align with WB Left-Turn Lane
-	NE Mast Arm	30	36	R3-5L	EB	Yes	No	7.5	IV	No	-	-	-	-	Left-Turn (Arrow), ONLY	Mount on Mast Arm and Align with NB Left-Turn Lane
-	NE Mast Arm	30	36	R3-5a	NB	Yes	No	7.5	IV	No	-	-	-	-	Through (Arrow), ONLY	Mount on Mast Arm and Align with NB Through Lane
-	NE Mast Arm	30	36	R3-5R	NB	Yes	No	7.5	IV	No	-	-	-	-	Right Turn (Arrow), ONLY	Mount on Mast Arm and Align with NB Right-Turn Lane
-	SE Mast Arm	30	36	R3-5L	EB	Yes	No	7.5	IV	No	-	-	-	-	Left-Turn (Arrow), ONLY	Mount on Mast Arm and Align with EB Left-Turn Lane
-	SW Mast Arm	30	36	R3-5L	SB	Yes	No	7.5	IV	No	-	-	-	-	Left Turn (Arrow), ONLY	Mount on Mast Arm and Align with SB Left-Turn Lane

REGISTERED PROFESSIONAL ENGINEER
REG. NO.
11714
THOMAS W.
ANZIA
SOUTH DAKOTA
1/8/16

STATE OF	PROJECT	SHEET NO.	TOTAL SHEETS
SD	IM 0901(162)14 P 014A(11)8	S10	S43

Revised Date 8/28/2015 LCL

PERMANENT SIGNING - HIGHWAY 14a / COLORADO BLVD

FOR BIDDING PURPOSES ONLY

EXISTING STATION	NEW STATION	SIGN Width (in)	Height (in)	MUTCD No. or Type	Facing Traffic	New Sign	Remove Existing	Square Footage	Sheeting Type	POST New Post	Length (feet)	Size (in)	Posts	Shear Slip Base	DESCRIPTION	REMARKS
US HWY 14A - COLORADO BLVD																
81+99; Right	82+00; Right	30	30	R1-1	NB	Yes	Yes	5.18	XI	Yes	9.5	2.0	1	No	Stop Sign	Remove and Replace with New Sign and Post at New Location
-	82+41; (median)	24	30	R4-7	EB	Yes	No	5.0	IV	Yes	9.5	2.0	1	No	Keep Right (Symbol)	Install New Sign and Post
85+42; Left	85+00; Left	24	30	R2-1 (45)	WB	Yes	Yes	5.0	IV	Yes	10.5	2.0	1	No	Speed Limit 45	Remove and Replace with New Sign and Post at New Location
-	85+84; Right	30	30	R3-7R	SB	Yes	No	6.25	IV	Yes	9.5	2.0	1	No	Right Lane Must Turn Right	Install New Sign and Post
-	85+67; LT. (median)	24	30	R4-7	WB	Yes	No	5.0	IV	Yes	9.5	2.0	1	No	Keep Right (Symbol)	Install New Sign and Post
86+75; Right	86+90; Right	-	-	R1-1	NB	Reset	Yes	-	-	Yes	12.0	2.0	1	No	Stop Sign and Street Name Panels	Remove & Reset on New Post at New Location
-	87+00; (median)	24	30	R4-7	EB	Yes	No	5.0	IV	Yes	9.5	2.0	1	No	Keep Right (Symbol)	Install New Sign and Post
87+49; Left	Same	-	-	City Limits	WB	Reset	Yes	-	-	Yes	14.0	2.0	2	No	Spearfish Pop. 9300	Remove & Reset Signs on New Posts, Offset at Same Location
		-	-	Special	WB	Reset	Yes	-	-						Governor Award of Excellence - Community of the Year	
		-	-	No Parking	WB	Reset	Yes	-	-						Priority Route, No Parking During Snowfall	
89+15; RT (approx)	88+00; Right	24	12	M4-5i	EB	Yes	Yes	2.0	IV	Yes	11.0	2.0	2	No	Interstate Marker (TO)	Remove and Replace with New Signs and Posts at New Location
		24	24	M1-1 (90)	EB	Yes	Yes	4.0	IV						Interstate Shield (90)	
		24	12	M6-1Li	EB	Yes	Yes	2.0	IV						Directional Route Arrow (Interstate)	
-	88+00; Right	24	12	M4-5	EB	Yes	No	2.0	IV						Highway Marker (TO)	
		24	24	M1-4 (14)	EB	Yes	No	4.0	IV						US Route 14 Marker	
		24	12	M6-1L	EB	Yes	No	2.0	IV						Directional Route Arrow (Highway)	
-	88+00; Right	24	24	M1-4 (85)	EB	Yes	No	4.0	IV						US Route 85 Marker	
89+40; LT (approx)	89+00; Left	-	-	Special	WB	Reset	Yes	-	-	Yes	12.0	2.0	1	No	Adopt-A-Highway, Litter Control Courtesy of, ID Plaque	Remove & Reset on New Post at New Location
-	89+90; Left	24	12	M3-4	WB	Yes	No	2.0	IV	Yes	10.0	2.0	1	No	Cardinal Direction Marker (WEST)	Install New Signs and Post
		24	24	M1-4 (14A)	WB	Yes	No	4.0	IV						US Route 14A Marker	
		24	24	M1-2 (90)	WB	Yes	No	4.0	IV						Interstate Business Loop (I-90)	
90+25; RT (approx)	-	-	-	M1-2 (90)	SB	No	Yes	-	-	No	-	-	-	-	Interstate Business Shield (90)	Remove Route Signs and Posts
		-	-	M6-1R	SB	No	Yes	-	-						Directional Route Arrow (Green)	
		-	-	M1-4 (14A)	SB	No	Yes	-	-						US Route 14A Marker	
		-	-	M6-1R	SB	No	Yes	-	-						Directional Route Arrow (White)	
90+40; Left	89+70; Left	24	24	R5-3	WB	Yes	Yes	4.0	IV	Yes	9.0	2.0	1	No	No Motor Vehicles	Remove and Replace with New R5-3 Panel at New Location
(Trailhead)	(Trailhead)	-	-	R1-1	EB	No	Yes	-	-						Stop Sign (backmounted)	Remove Panel
91+50: RT (approx)	-	-	-	Guide	SB	No	Yes	-	-	No	-	-	-	-	High Plains Heritage Museum (Left)	Remove Sign and Posts
-	91+70; (median)	24	30	R4-7	WB	Yes	No	5.0	IV	Yes	9.5	2.0	1	No	Keep Right (Symbol)	Install New Sign and Post
-	93+60; (median)	24	30	R4-7	EB	Yes	No	5.0	IV	Yes	9.5	2.0	1	No	Keep Right (Symbol)	Install New Sign and Post
92+00; RT (approx)	-	-	-	M1-2 (90)	EB	No	Yes	-	-	No	-	-	-	-	Interstate Business Loop (I-90)	Remove Route Signs and Posts
		-	-	No Parking	EB	No	Yes	-	-						Priority Route, No Parking During Snowfall	
		-	-	M3-2	EB	No	Yes	-	-						Cardinal Direction Marker (EAST)	
		-	-	M1-4 (14A)	EB	No	Yes	-	-						US Route 14A Marker	
-	97+00; Left	24	12	M4-5i	WB	Yes	No	2.0	IV	Yes	11.0	2.0	2	No	Interstate Marker (TO)	Install New Signs and Post
		24	24	M1-1 (90)	WB	Yes	No	4.0	IV						Interstate Shield (90)	
		24	12	M6-1Ri	WB	Yes	No	2.0	IV						Directional Route Arrow (Interstate)	
		24	12	M4-5	EB	Yes	No	2.0	IV						Highway Marker (TO)	
		24	24	M1-4 (14)	EB	Yes	No	4.0	IV						US Route 14 Marker	
		24	12	M6-1R	EB	Yes	No	2.0	IV						Directional Route Arrow (Highway)	
		24	24	M1-4 (85)	EB	Yes	No	4.0	IV						US Route 85 Marker	
-	98+28; (median)	24	30	R4-7	WB	Yes	No	5.0	IV	Yes	9.5	2.0	1	No	Keep Right (Symbol)	Install New Sign and Post
COLORADO BLVD / 27TH STREET TRAFFIC SIGNAL																
-	NW Mast Arm	30	36	R3-5L	WB	Yes	No	7.5	IV	No	-	-	-	-	Left Turn (Arrow), ONLY	Mount on Mast Arm and Align with WB Left-Turn Lane
-	SW Mast Arm	30	36	R3-5R	SB	Yes	No	7.5	IV	No	-	-	-	-	Right Turn (Arrow), ONLY	Mount on Mast Arm and Align with SB Right-Turn Lane
-	SW Mast Arm	30	36	R3-5a	SB	Yes	No	7.5	IV	No	-	-	-	-	Through (Arrow), ONLY	Mount on Mast Arm and Align with SB Through Lane
-	SW Mast Arm	30	36	R3-5L	SB	Yes	No	7.5	IV	No	-	-	-	-	Left-Turn (Arrow), ONLY	Mount on Mast Arm and Align with SB Left-Turn Lane
-	SE Mast Arm	30	36	R3-5L	EB	Yes	No	7.5	IV	No	-	-	-	-	Left-Turn (Arrow), ONLY	Mount on Mast Arm and Align with EB Left-Turn Lane
-	NE Mast Arm	30	36	R3-5L	NB	Yes	No	7.5	IV	No	-	-	-	-	Left Turn (Arrow), ONLY	Mount on Mast Arm and Align with NB Left-Turn Lane

REGISTERED PROFESSIONAL ENGINEER
REG. NO.
11714
THOMAS W. ANZIA
SOUTH DAKOTA
1/8/16

STATE OF	PROJECT	SHEET NO.	TOTAL SHEETS
SD	IM 0901(162)14 P 014A(11)8	S11	S43

Revised Date 8/28/2015 LCL

DELINEATORS

FOR BIDDING PURPOSES ONLY

Location		Station			Tangent or Curve	Curve Radius (Ft)	Section Length (Ft)	Maximum Spacing (Ft)	QUANTITIES (EACH) Delineators: Mainline Single (4"x4") White	Mainline Single (4"x4") Amber	Ramp/Gore Single (4"x8") White	Ramp/Gore Single (4"x8") Amber	Object Markers: Single (Type 2) Amber	BK-to-BK (Type 2) Amber
WB I-90	Mainline	714+82	to	720+10	Tangent	-	528	528	2	2	-	-	-	-
WB I-90	Mainline	720+10	to	738+41	Curve	3820	1831	185	11	11	-	-	-	-
WB I-90	Mainline	738+41	to	751+06	Tangent	-	1265	528	4	4	-	-	-	-
WB I-90 Median	Guardrail	751+06	to	757+73	Tangent	-	667	50	-	-	-	15	-	1
WB I-90 Median	Mainline	757+73	to	795+91	Tangent	-	3818	528	-	9	-	-	-	-
WB I-90	Mainline	751+06	to	795+91	Tangent	-	4485	528	10	-	-	-	-	-
EB I-90	Mainline	714+82	to	720+10	Tangent	-	528	528	2	2	-	-	-	-
EB I-90	Mainline	720+10	to	738+41	Curve	3820	1831	185	11	11	-	-	-	-
EB I-90	Mainline	738+41	to	753+24	Tangent	-	1483	528	4	4	-	-	-	-
EB I-90 Median	Guardrail	753+24	to	760+09	Tangent	-	685	50	-	-	-	15	-	1
EB I-90 Median	Mainline	760+09	to	795+91	Tangent	-	3582	528	-	8	-	-	-	-
EB I-90	Mainline	753+24	to	795+91	Tangent	-	4267	528	10	-	-	-	-	-
WB I-90 Off-Ramp	Exit Gore	-		-	-	-	125	25	-	-	5	5	1	-
	Ramp C	10+00	to	30+60	Both	-	2060	100	-	-	22	-	-	-
	Ramp G	10+00	to	12+81	Both	-	281	100	-	-	4	-	-	-
WB I-90 On-Ramp	Merge Gore	-		-	-	-	100	25	-	-	-	4	-	-
	Ramp B	15+56	to	46+08	Both	-	3052	100	-	-	32	-	-	-
	Ramp F	12+36	to	14+50	Both	-	214	100	-	-	4	-	-	-
EB I-90 Off-Ramp	Exit Gore	-		-	-	-	125	25	-	-	5	5	1	-
	Ramp A	16+00	to	31+68	Both	-	1568	100	-	-	17	-	-	-
	Ramp E	12+00	to	14+96	Both	-	296	100	-	-	4	-	-	-
EB I-90 On-Ramp	Merge Gore	-		-	-	-	100	25	-	-	-	4	-	-
	Ramp D	10+00	to	42+46	Both	-	3246	100	-	-	34	-	-	-
	Ramp H	10+00	to	12+00	Both	-	200	100	-	-	3	-	-	-
								TOTAL	54	51	130	48	2	2

REGISTERED PROFESSIONAL ENGINEER
REG. NO.
11714
THOMAS W. ANZIA
SOUTH DAKOTA
1/8/16

PERMANENT SIGNING LAYOUT

I-90

FOR BIDDING PURPOSES ONLY

STATE OF SOUTH DAKOTA	PROJECT	SHEET	TOTAL SHEETS
	IM 0901(162)14 P 014A(11)8	S12	S43

Plotting Date: 8/11/2015

PLOT SCALE - 1:200

SCALE
1" = 200'

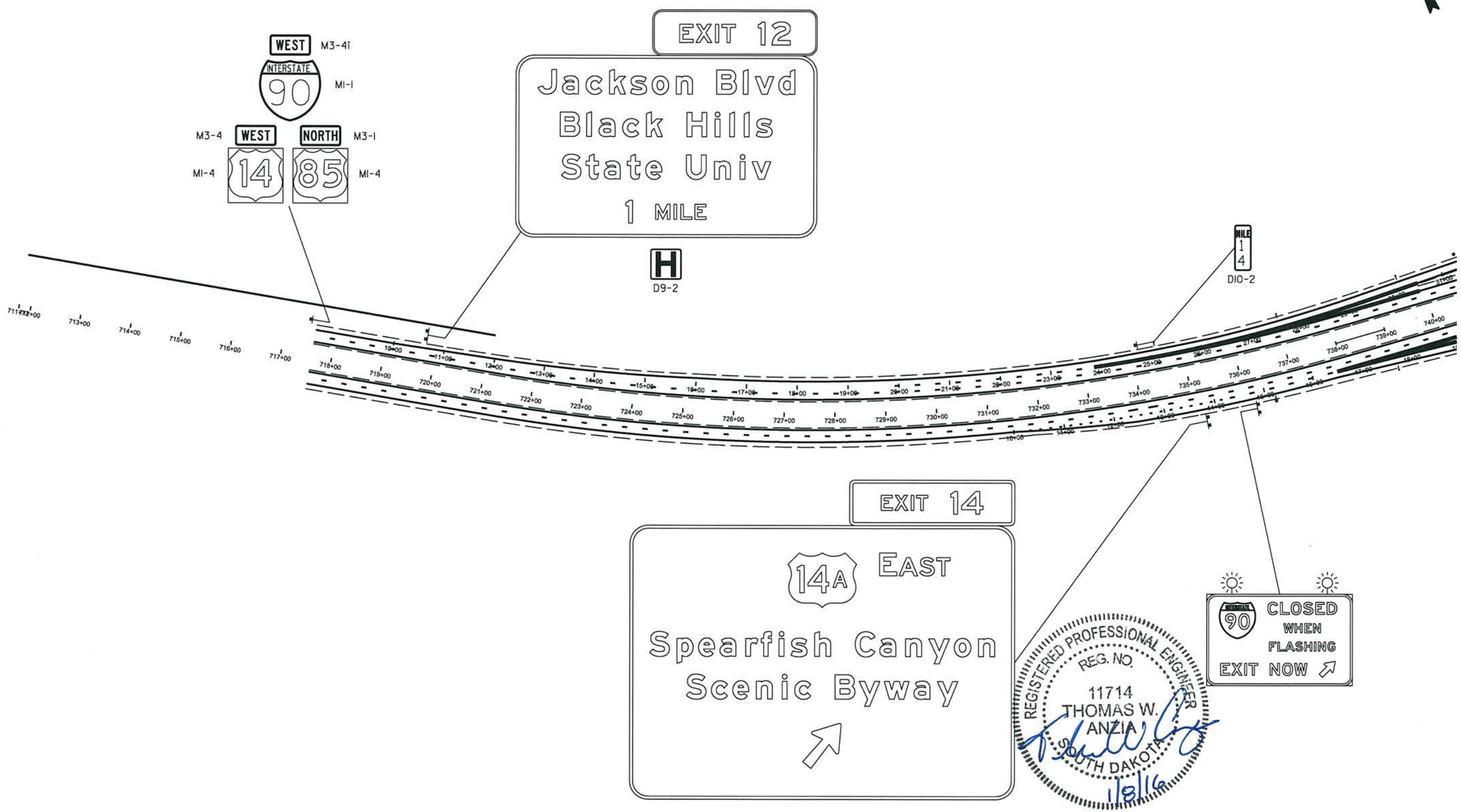

PLOTTED FROM - SOELLNER

PLOT NAME - 2

FILE - ...\SECTIONS\MAIN710PS.DGN

PERMANENT SIGNING LAYOUT

FOR BIDDING PURPOSES ONLY

STATE OF SOUTH DAKOTA	PROJECT	SHEET	TOTAL SHEETS
	IM 0901(162)14 P 014A(11)8	S13	S43

Plotting Date: 8/11/2015

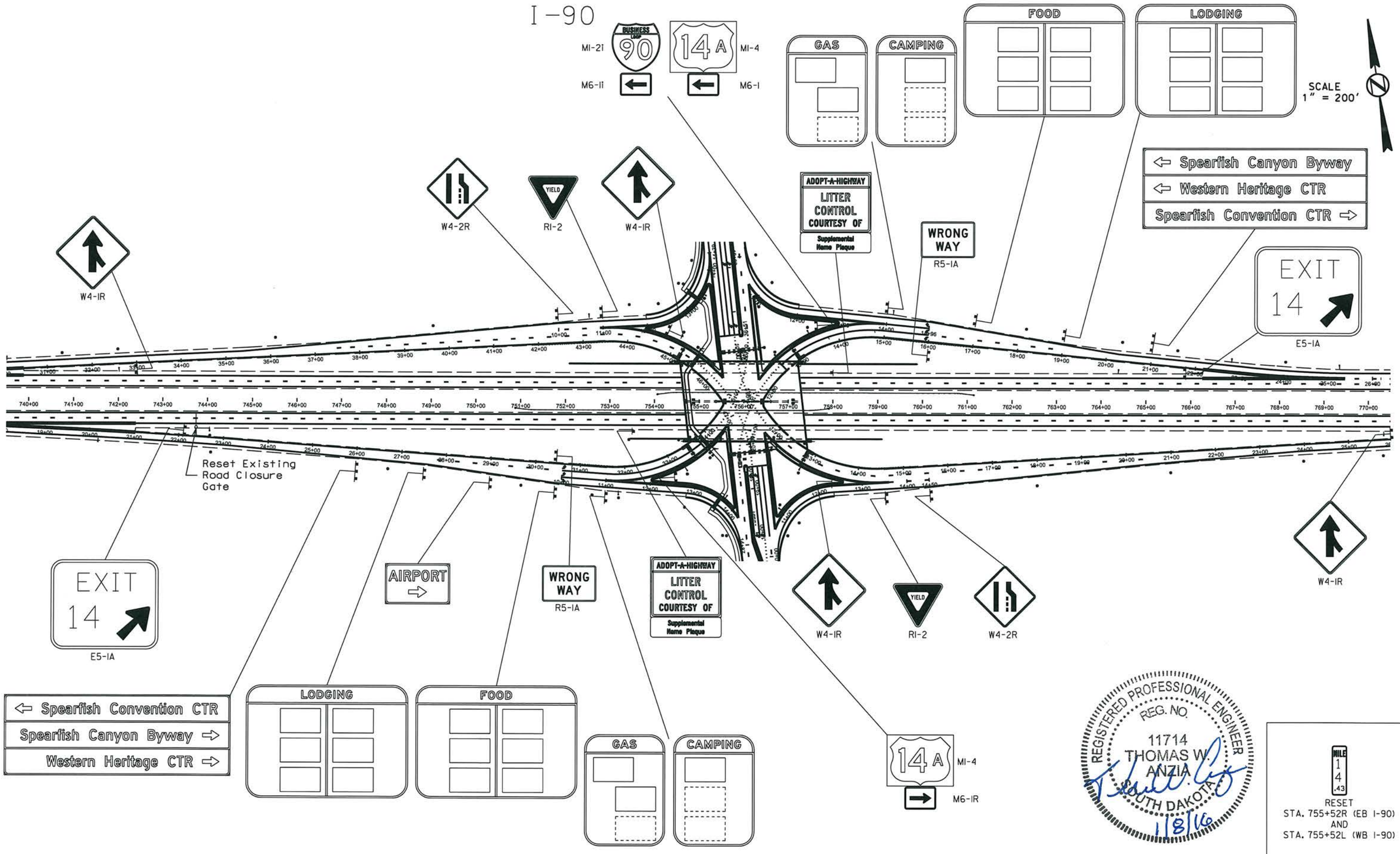

PLOT SCALE - 1:200

PLOT NAME - 3

FILE - ...\SECTIONS\MAIN740PS.DGN

PLOTTED FROM - SOELLNER

PERMANENT SIGNING LAYOUT

FOR BIDDING PURPOSES ONLY

STATE OF SOUTH DAKOTA	PROJECT	SHEET	TOTAL SHEETS
	IM 0901(162)14 P 014A(11)8	S14	S43

Plotting Date: 8/11/2015

I-90

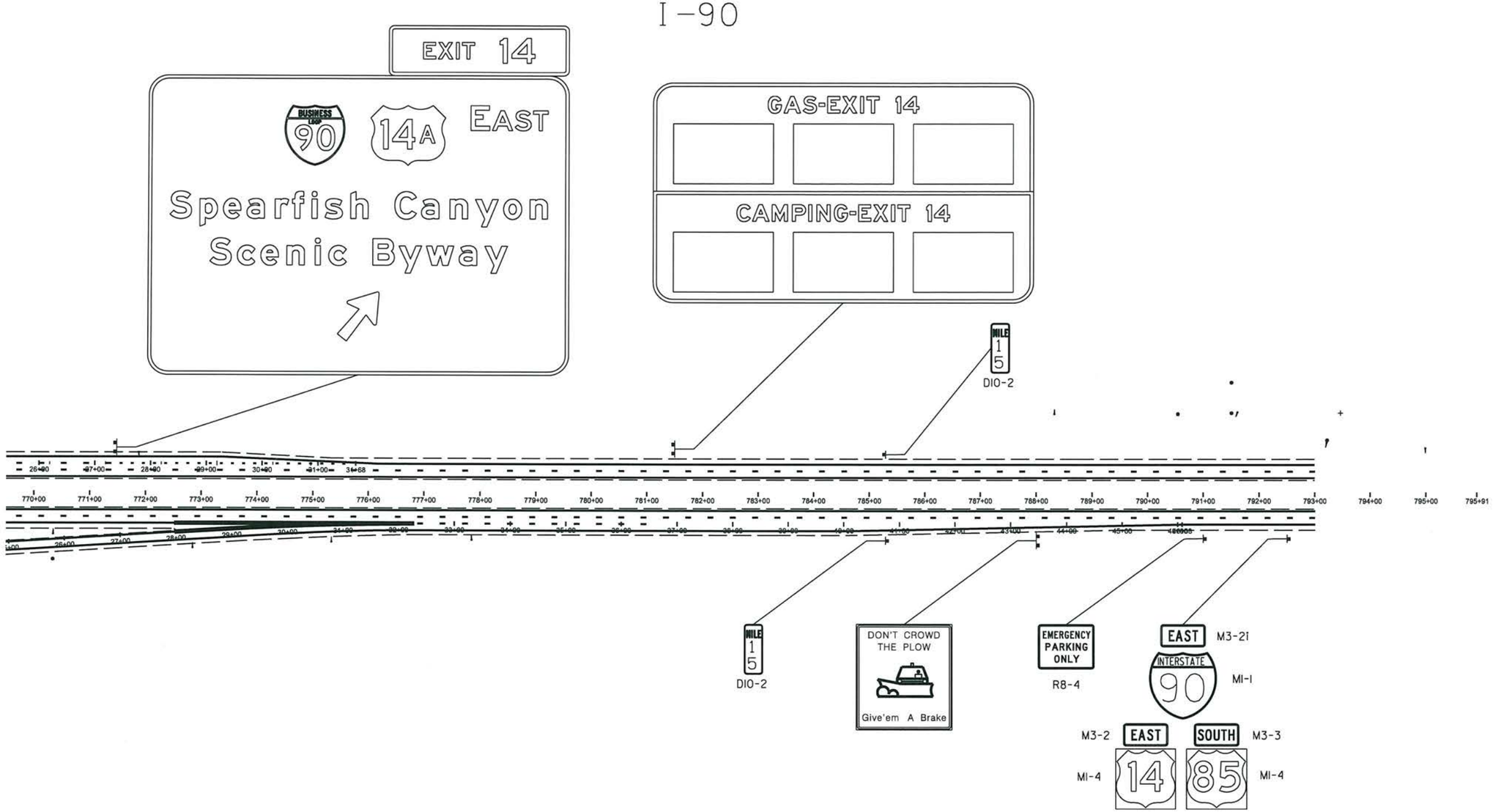

SCALE
1" = 200'

PLOT SCALE - 1:200

PLOT NAME - 4

FILE - ...\SECTIONS\MAIN770PS.DGN

PLOTTED FROM - SOELLNER

PERMANENT SIGNING LAYOUT

27TH STREET

FOR BIDDING PURPOSES ONLY

STATE OF SOUTH DAKOTA	PROJECT	SHEET	TOTAL SHEETS
	IM 0901(162)14 P 014A(11)8	S15	S43

Plotting Date: 8/11/2015

SCALE
1" = 40'

10+00

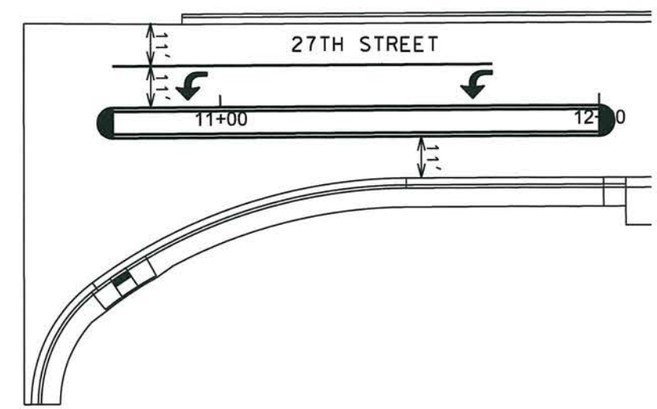

REGISTERED PROFESSIONAL ENGINEER
REG. NO.
11714
THOMAS W.
ANZIK
SOUTH DAKOTA
1/8/16

PLOT SCALE - 1:40

PLOTTED FROM - SOELLNER

PLOT NAME - 5

FILE - ...\SECTIONS\27TH6PS.DGN

PERMANENT SIGNING LAYOUT

FOR BIDDING PURPOSES ONLY

STATE OF SOUTH DAKOTA	PROJECT	SHEET	TOTAL SHEETS
	IM 0901(162)14 P 014A(11)8	S16	S43

Plotting Date: 8/11/2015

27TH STREET

SCALE
1" = 40'

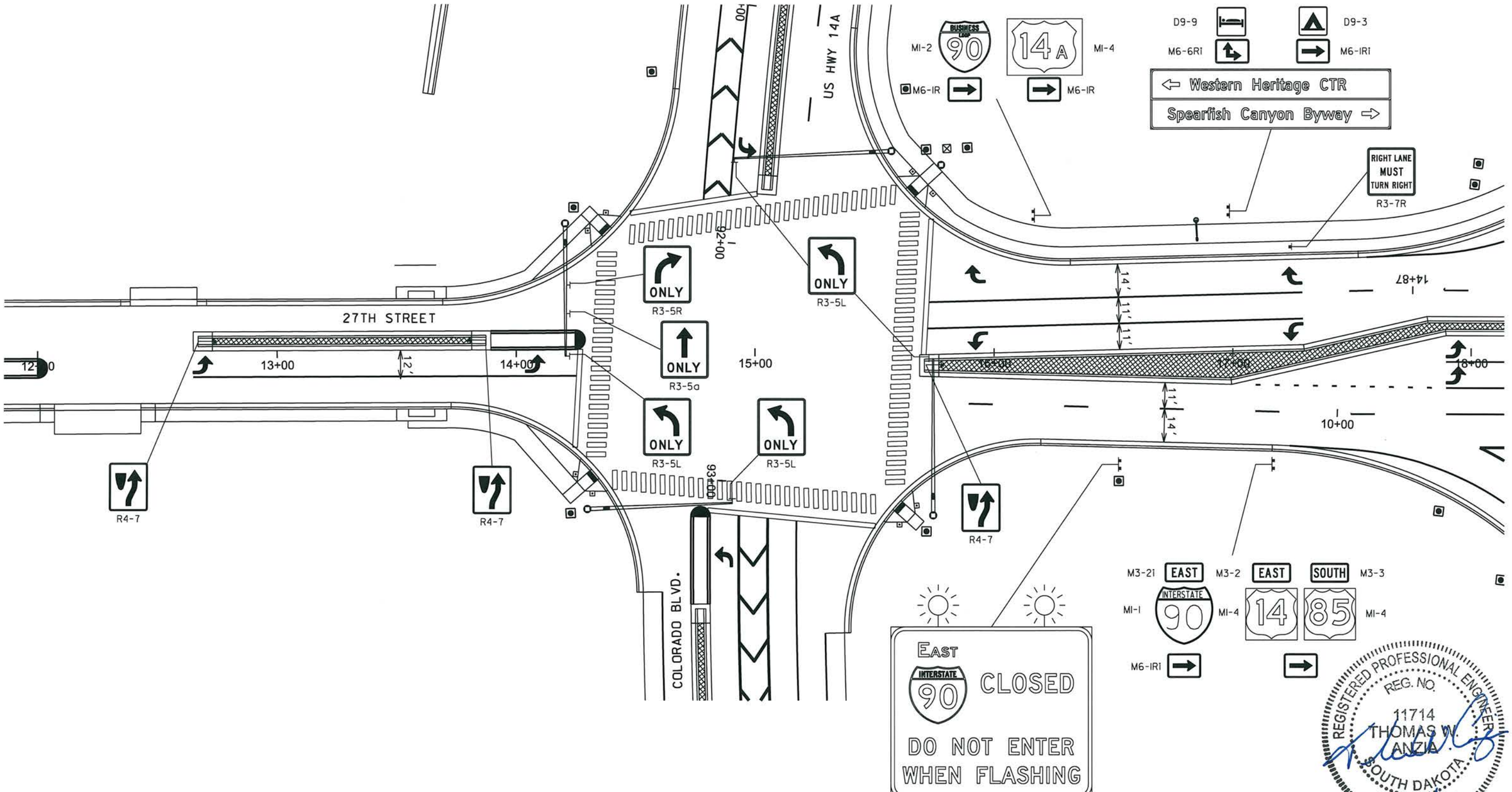

REGISTERED PROFESSIONAL ENGINEER
REG. NO.
11714
THOMAS W. ANZIA
SOUTH DAKOTA
1/8/16

PLOT SCALE - 1:40

PLOTTED FROM - SOELLNER

PLOT NAME - 6

FILE - ...\SECTIONS\27TH12PS.DGN

PERMANENT SIGNING LAYOUT

FOR BIDDING PURPOSES ONLY

STATE OF SOUTH DAKOTA	PROJECT	SHEET	TOTAL SHEETS
	IM 0901(162)14 P 014A(11)8	S17	S43

Plotting Date: 8/11/2015

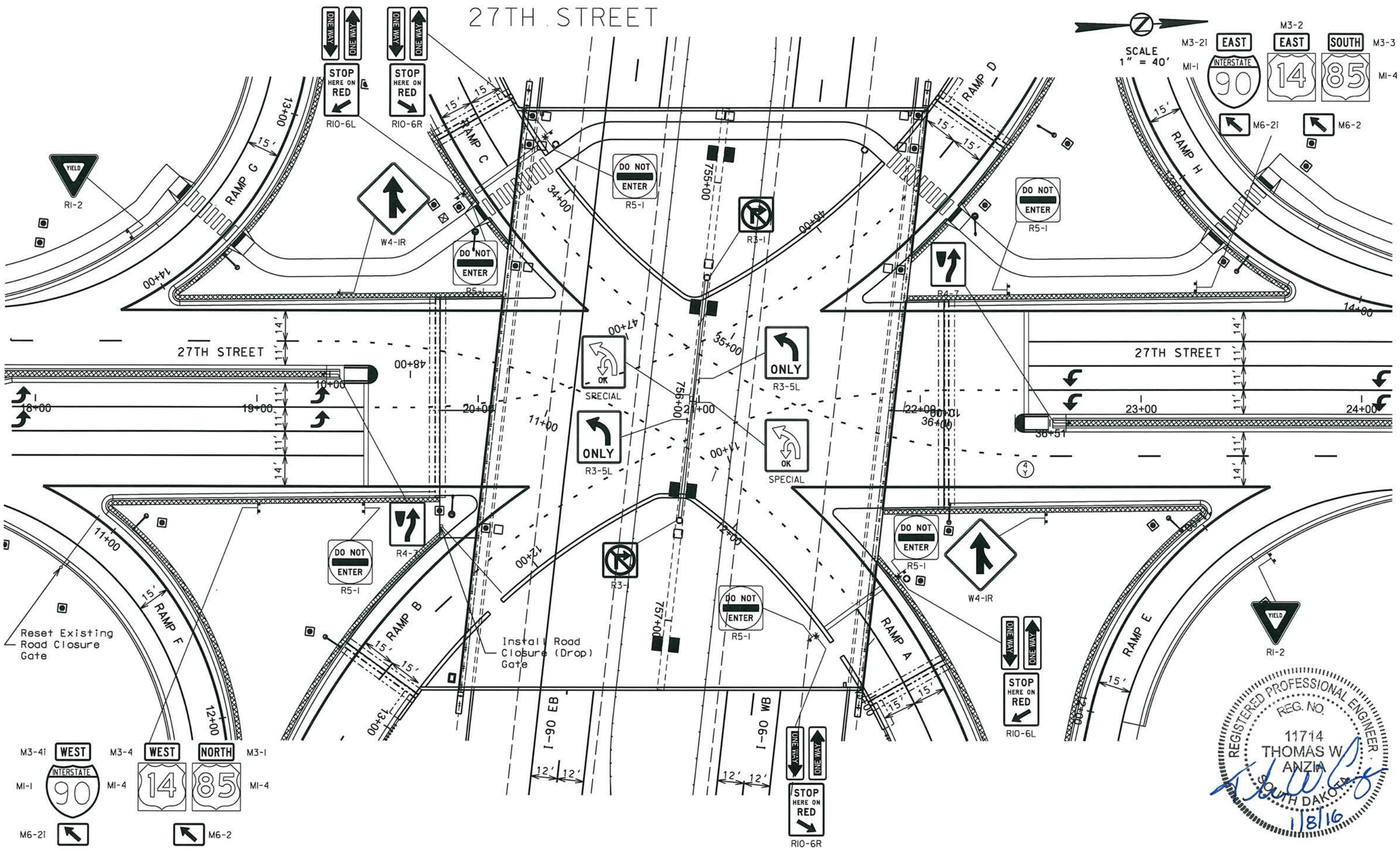

PLOT SCALE - 1:40

PLOT NAME - 7

FILE ...\SECTIONS\27TH18PS.DGN

PLOTTED FROM - SOELLNER

PERMANENT SIGNING LAYOUT

FOR BIDDING PURPOSES ONLY

STATE OF SOUTH DAKOTA	PROJECT	SHEET	TOTAL SHEETS
	IM 0901(162)14 P 014A(11)8	S18	S43

Plotting Date: 8/11/2015

27TH STREET

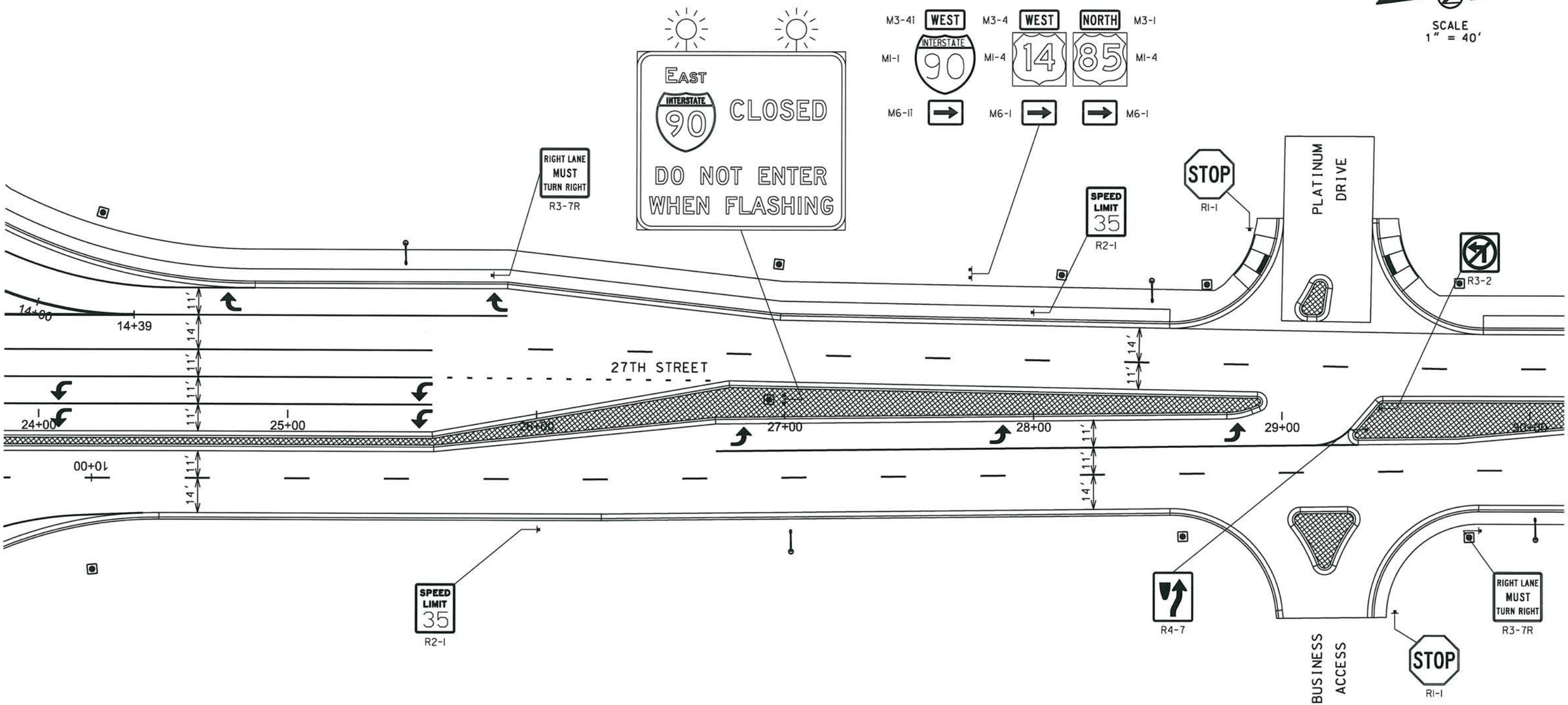

REGISTERED PROFESSIONAL ENGINEER
REG. NO.
11714
THOMAS W. ANZIA
SOUTH DAKOTA
1/8/16

PLOT SCALE - 1:40

PLOT NAME - 8

FILE - ...\SECTIONS\27TH24PS.DGN

PLOTTED FROM - SQELLNER

STATE OF SOUTH DAKOTA	PROJECT	SHEET	TOTAL SHEETS
	IM 0901(162)14 P 014A(11)8	S19	S43

FOR BIDDING PURPOSES ONLY

Plotting Date: 8/11/2015

PERMANENT SIGNING LAYOUT

27TH STREET

SCALE
1" = 40'

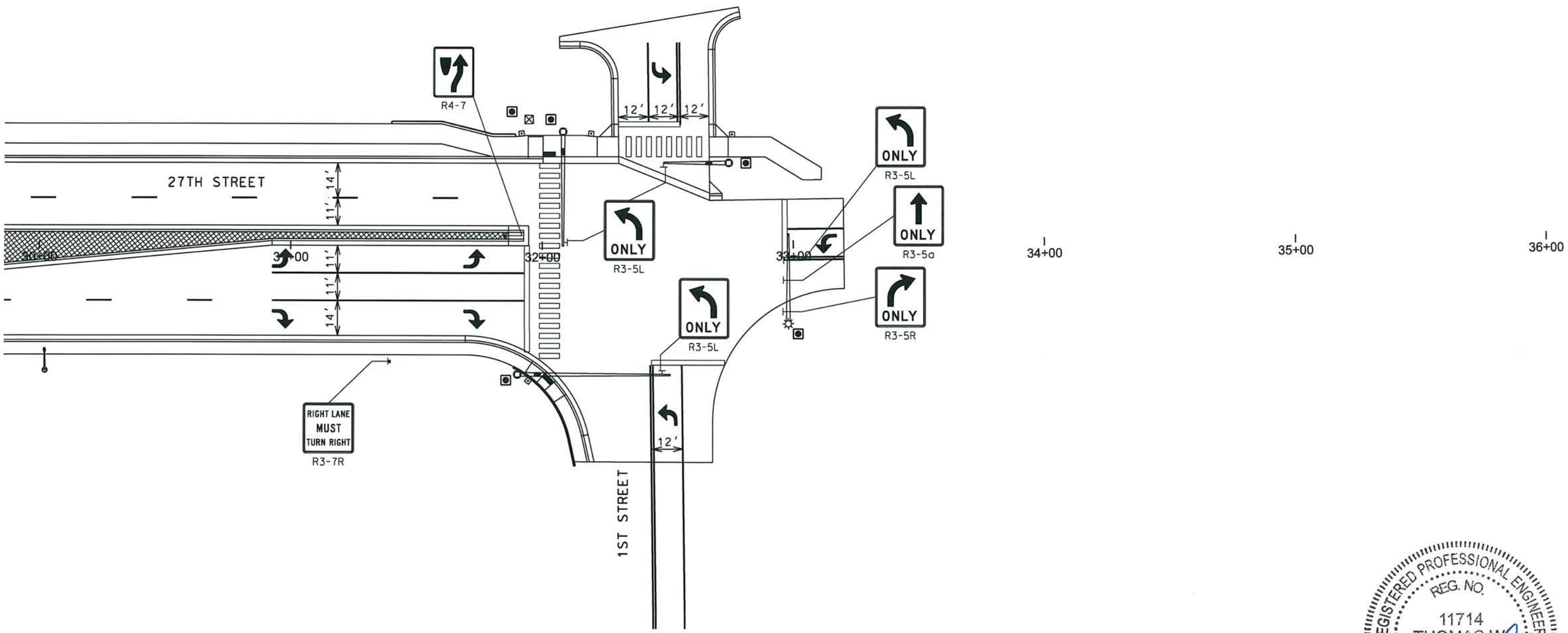

REGISTERED PROFESSIONAL ENGINEER
REG. NO.
11714
THOMAS W.
ANZIA
SOUTH DAKOTA
1/8/16

PLOT SCALE - 1:40

PLOT NAME - 9

FILE ...\SECTIONS\27TH30PS.DGN

PLOTTED FROM - SOELLNER

PERMANENT SIGNING LAYOUT

US HWY 14A

FOR BIDDING PURPOSES ONLY

STATE OF SOUTH DAKOTA	PROJECT	SHEET	TOTAL SHEETS
	IM 0901(162)14 P 014A(11)8	S20	S43

Plotting Date: 8/11/2015

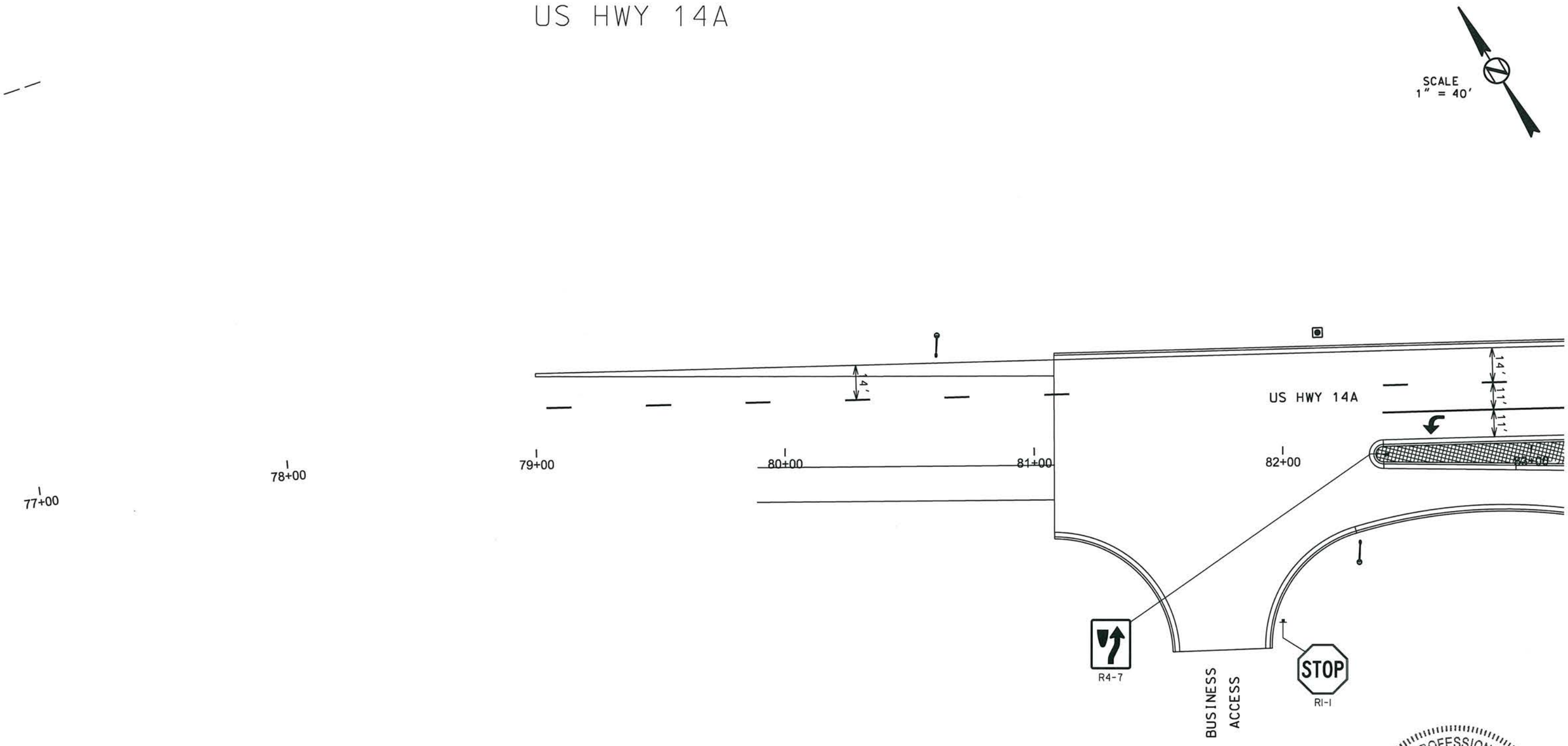

REGISTERED PROFESSIONAL ENGINEER
REG. NO.
11714
THOMAS W.
ANZIA
SOUTH DAKOTA
1/8/16

PLOT SCALE - 1:40

PLOTTED FROM - SOELLNER

PLOT NAME - 10

FILE - ...\SECTIONS\COBLVD77PS.DGN

PERMANENT SIGNING LAYOUT

US HWY 14A

FOR BIDDING PURPOSES ONLY

STATE OF SOUTH DAKOTA	PROJECT	SHEET	TOTAL SHEETS
	IM 0901(162)14 P 014A(11)8	S21	S43

Plotting Date: 8/11/2015

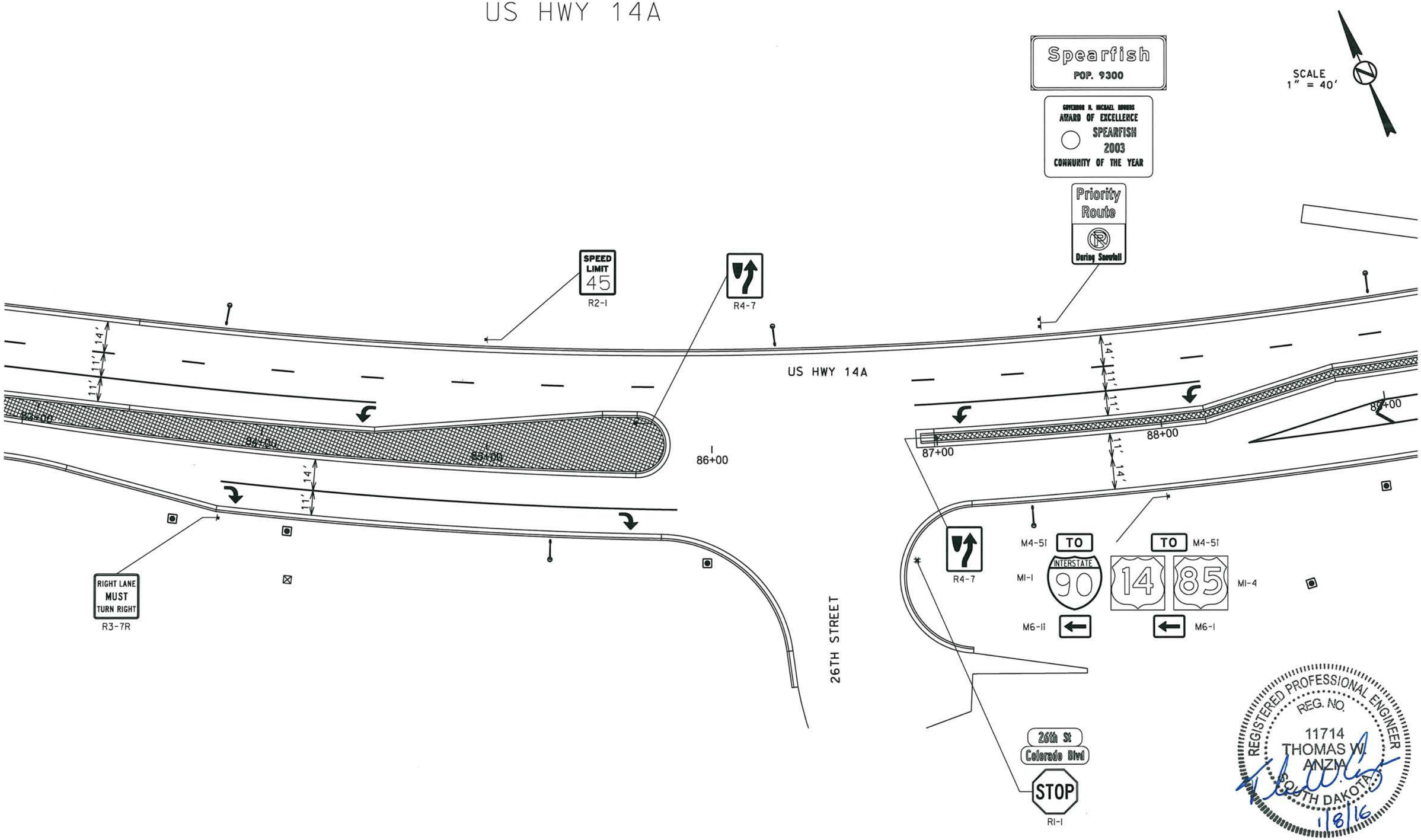

REGISTERED PROFESSIONAL ENGINEER
REG. NO.
11714
THOMAS W. ANZIA
SOUTH DAKOTA
1/8/16

PLOT SCALE - 1:40

PLOTTED FROM - SOELLNER

PLOT NAME - 11

FILE - ...\SECTIONS\COBLVD83PS.DGN

STATE OF SOUTH DAKOTA	PROJECT	SHEET	TOTAL SHEETS
	IM 0901(162)14 P 014A(11)8	S22	S43

Plotting Date: 8/11/2015

PERMANENT SIGNING LAYOUT

FOR BIDDING PURPOSES ONLY

US HWY 14A / COLORADO BLVD.

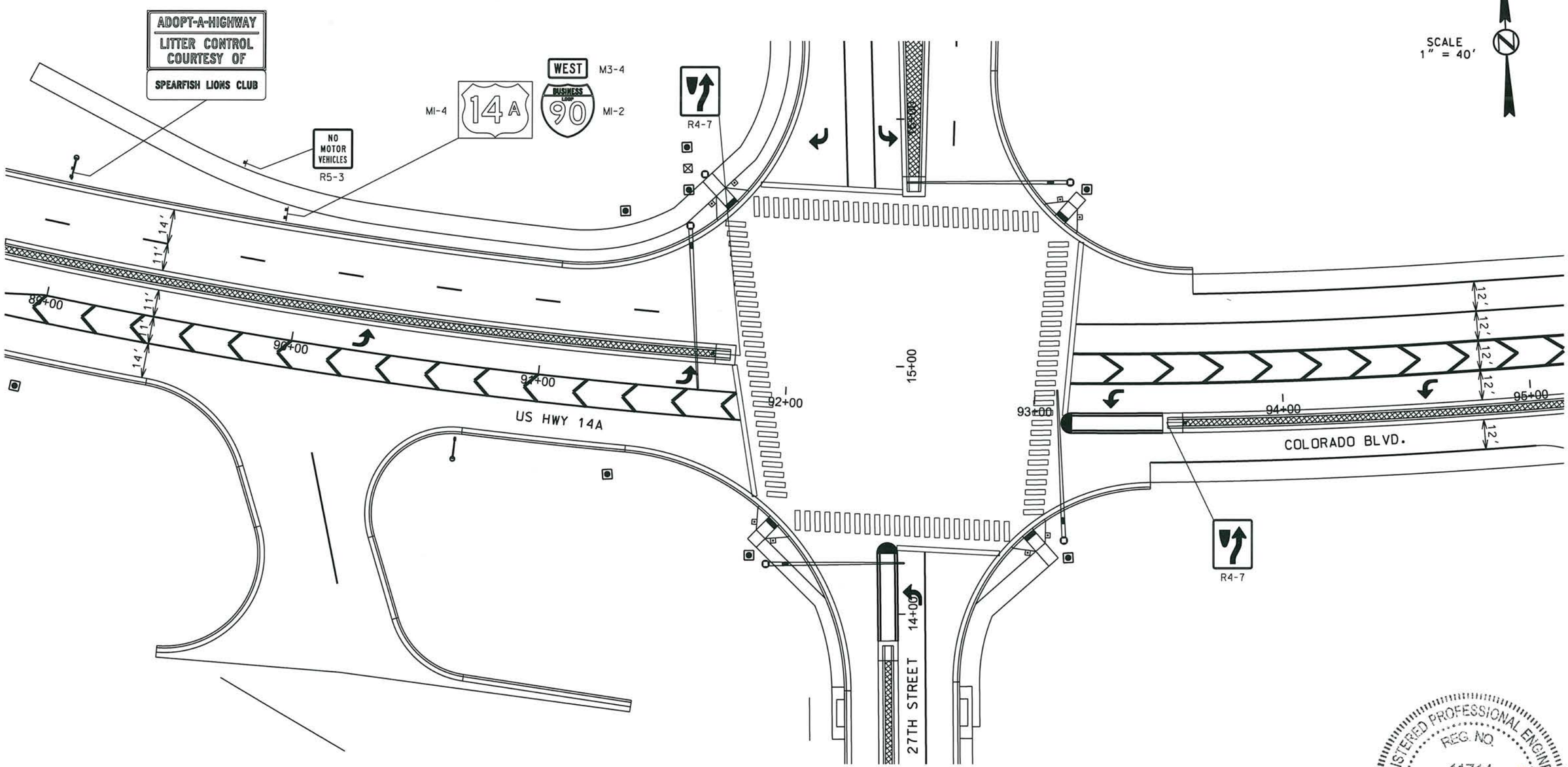

REGISTERED PROFESSIONAL ENGINEER
REG. NO.
11714
THOMAS W.
ANZIA
SOUTH DAKOTA
1/8/16

PLOT SCALE - 1:40

PLOTTED FROM - SOELLNER

PLOT NAME - 12

FILE - ...\SECTIONS\COBLVD89PS.DGN

STATE OF SOUTH DAKOTA	PROJECT	SHEET	TOTAL SHEETS
	IM 0901(162)14 P 014A(11)8	S23	S43

FOR BIDDING PURPOSES ONLY

Plotting Date: 8/11/2015

PERMANENT SIGNING LAYOUT

COLORADO BLVD.

SCALE
1" = 40'

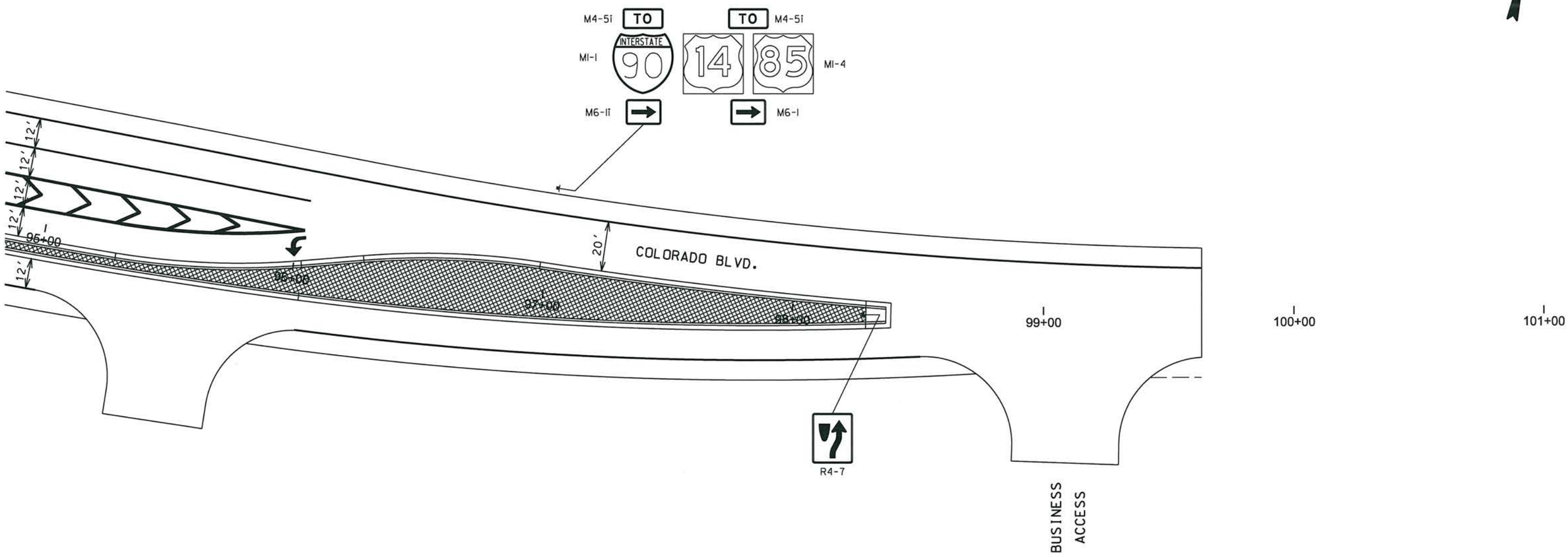

REGISTERED PROFESSIONAL ENGINEER
REG. NO.
11714
THOMAS W.
ANZIA
SOUTH DAKOTA
1/8/16

PLOT SCALE - 1:40

PLOT NAME - 13

FILE - ...\SECTIONS\COBLVD95PS.DGN

PLOTTED FROM - SOELLNER

SIGN LAYOUTS

FOR BIDDING PURPOSES ONLY

SIGN DETAIL

1:75

Panel Style: tab1.bsi
M.U.T.C.D.: 2009 Edition

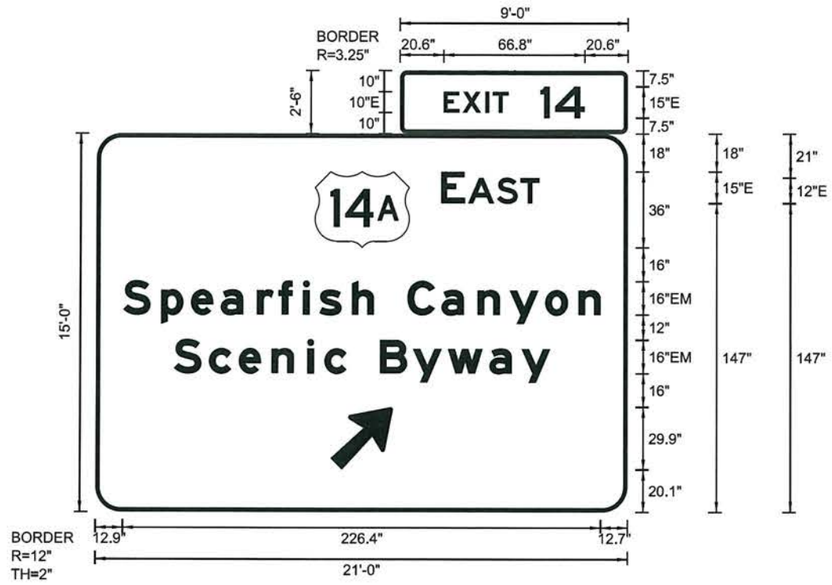

SIGN NUMBER	1	
WIDTH x HGHT.	21'–0" x 15'–0"	
BORDER WIDTH	2"	
CORNER RADIUS	12"	
MOUNTING	Ground	
BACKGROUND	TYPE:	Reflective
	COLOR:	Green
LEGEND/BORDER	TYPE:	Reflective
	COLOR:	White/White

SYMBOL	ROT	X	Y	WID	HT
M1_4	0	103.6	126	45	36.1
AR_Type A	315	111.1	20.2	24.1	37.9

Panel Style: guide_fwy_advance_b.ssi
Dimensions are in inches.tenths

Panel Style: guide_fwy_advance_b.ssi
M.U.T.C.D.: 2009 Edition

Letter locations are panel edge to lower left corner

LETTER POSITIONS (X)																					LENGTH	SERIES/SIZE
E	X	I	T	1	4																	E 2000
20.6	29.5	40.2	43.7	66.2	73.3																66.8	10,15
E	A	S	T																			E 2000
163.6	176.3	189.9	200.9																		46.4	15,12
S	p	e	a	r	f	i	s	h		C	a	n	y	o	n							EM 2000
12.9	30.8	44.9	59	76	86.2	97.9	105.7	121.2	131.8	147.8	163.8	180.8	196	212.8	228.6						226.4	16/12
S	c	e	n	i	c		B	y	w	a	y											EM 2000
37	53.4	67.5	83	100	108.2	118.7	134.7	150.4	166.9	186.4	201.6										178.3	16/12

REGISTERED PROFESSIONAL ENGINEER
REG. NO.
11714
THOMAS W.
ANZIA
SOUTH DAKOTA
1/8/16

PLOT SCALE - 1:200
PLOTTED FROM - SOELLNER
PLOT NAME - 14
FILE - ...\SECTIONS\SIGN LAYOUTS 01.DGN

SIGN LAYOUTS

FOR BIDDING PURPOSES ONLY

STATE OF SOUTH DAKOTA	PROJECT	SHEET	TOTAL SHEETS
	IM 0901(162)14 P 014A(11)8	S25	S43

Plotting Date: 8/11/2015

PLOT SCALE - 1:200

PLOT NAME - 15

FILE - ...\SECTIONS\SIGN LAYOUTS 02.DGN

PLOTTED FROM - SOELLNER

SIGN DETAIL
1:50

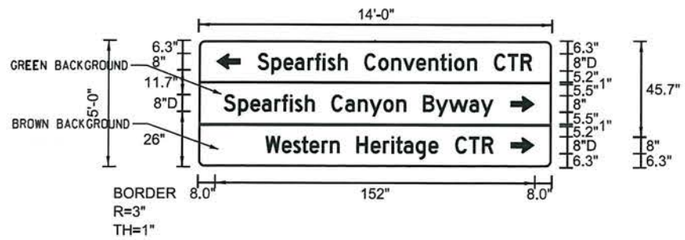

Panel Style: guide_con_destination.ssi
M.U.T.C.D.: 2009 Edition

Panel Style: guide_con_destination.ssi
Dimensions are in inches.tenths
Letter locations are panel edge to lower left corner

SIGN NUMBER	2
WIDTH x HGHT.	14'-0" x 5'-0"
BORDER WIDTH	1"
CORNER RADIUS	3"
MOUNTING	Ground
BACKGROUND	TYPE: Reflective
	COLOR: GreenBrown
LEGENDBORDER	TYPE: Reflective
	COLOR: WhiteWhite

SYMBOL	ROT	X	Y	WID	HT
AR_Type D	90	8	45.7	8	12
AR_Type D	270	148	26.0	8	12
AR_Type D	270	148	6.3	8	12

LETTER POSITIONS (X)																									LENGTH	SERIESSIZE
S	p	e	a	r	f	i	s	h		C	o	n	v	e	n	t	i	o	n		C	T	R			D 2000
27.7	34.3	40.1	45.5	51.6	55.1	59	61.4	66.2	70.9	78.9	85.6	91.8	97.4	103.7	109.5	115	119.1	121.7	127.8	132.6	140.6	147	153.2	131		86
S	p	e	a	r	f	i	s	h		C	a	n	y	o	n		B	y	w	a	y					D 2000
12	18.6	24.4	29.8	35.9	39.4	43.2	45.6	50.4	55.2	63.2	69.8	75.9	81.5	88.1	94.3	99	107	113	119.3	128.9	134.4			128.4		86
W	e	s	t	e	r	n		H	e	r	i	t	a	g	e		C	T	R							D 2000
31.7	39.5	44.9	49	52.7	58.6	62.6	67.3	75.3	82.2	88	92	94.2	97.8	103.6	109.7	114.4	122.4	128.9	135					108.8		86

SIGN DETAIL
1:50

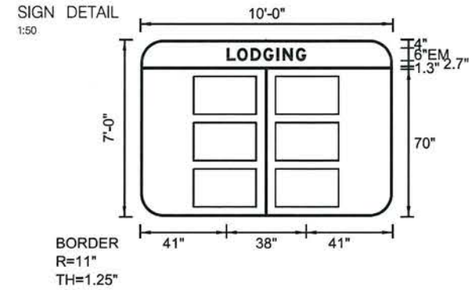

Panel Style: guide_fwy_general-services.ssi
M.U.T.C.D.: 2009 Edition

Panel Style: guide_fwy_general-services.ssi
Dimensions are in inches.tenths
Letter locations are panel edge to lower left corner

SIGN NUMBER	3
WIDTH x HGHT.	10'-0" x 7'-0"
BORDER WIDTH	1.25"
CORNER RADIUS	11"
MOUNTING	Ground
BACKGROUND	TYPE: Reflective
	COLOR: Blue
LEGENDBORDER	TYPE: Reflective
	COLOR: WhiteWhite

SYMBOL	ROT	X	Y	WID	HT

LETTER POSITIONS (X)																	LENGTH	SERIESSIZE
L	O	D	G	I	N	G												EM 2000
41	46.2	52.7	58.7	65	67.9	74.2											38	6

REGISTERED PROFESSIONAL ENGINEER
REG. NO.
11714
THOMAS W. LANZIA
SOUTH DAKOTA
1/8/16

SIGN DETAIL
1:50

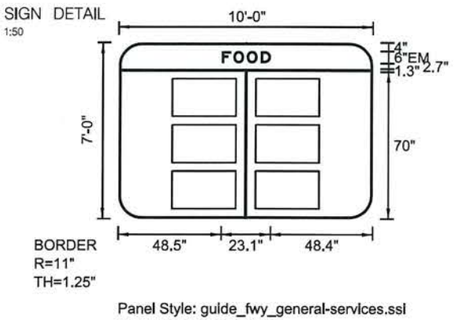

Panel Style: guide_fwy_general-services.ssi
M.U.T.C.D.: 2009 Edition

Panel Style: guide_fwy_general-services.ssi
Dimensions are in inches.tenths
Letter locations are panel edge to lower left corner

SIGN NUMBER	4
WIDTH x HGHT.	10'-0" x 7'-0"
BORDER WIDTH	1.25"
CORNER RADIUS	11"
MOUNTING	Ground
BACKGROUND	TYPE: Reflective
	COLOR: Blue
LEGENDBORDER	TYPE: Reflective
	COLOR: WhiteWhite

SYMBOL	ROT	X	Y	WID	HT

LETTER POSITIONS (X)																	LENGTH	SERIESSIZE
F	O	O	D															EM 2000
48.5	53.9	60.2	66.7														23.1	6

SIGN DETAIL
1:50

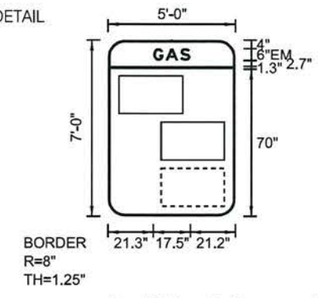

Panel Style: guide_fwy_general-services.ssi
M.U.T.C.D.: 2009 Edition

Panel Style: guide_fwy_general-services.ssi
Dimensions are in inches.tenths
Letter locations are panel edge to lower left corner

SIGN NUMBER	5
WIDTH x HGHT.	5'-0" x 7'-0"
BORDER WIDTH	1.25"
CORNER RADIUS	8"
MOUNTING	Ground
BACKGROUND	TYPE: Reflective
	COLOR: Blue
LEGENDBORDER	TYPE: Reflective
	COLOR: WhiteWhite

SYMBOL	ROT	X	Y	WID	HT

LETTER POSITIONS (X)																	LENGTH	SERIESSIZE
G	A	S																EM 2000
21.3	27	34															17.5	6

SIGN DETAIL
1:50

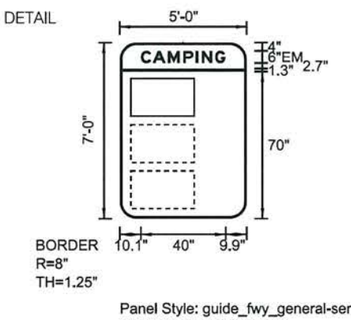

Panel Style: guide_fwy_general-services.ssi
M.U.T.C.D.: 2009 Edition

Panel Style: guide_fwy_general-services.ssi
Dimensions are in inches.tenths
Letter locations are panel edge to lower left corner

SIGN NUMBER	5
WIDTH x HGHT.	5'-0" x 7'-0"
BORDER WIDTH	1.25"
CORNER RADIUS	8"
MOUNTING	Ground
BACKGROUND	TYPE: Reflective
	COLOR: Blue
LEGENDBORDER	TYPE: Reflective
	COLOR: WhiteWhite

SYMBOL	ROT	X	Y	WID	HT

LETTER POSITIONS (X)																	LENGTH	SERIESSIZE
C	A	M	P	I	N	G												EM 2000
10.1	15.7	22.8	30.1	36	38.9	45.2											40	6

SIGN LAYOUTS

FOR BIDDING PURPOSES ONLY

SIGN DETAIL
1:75

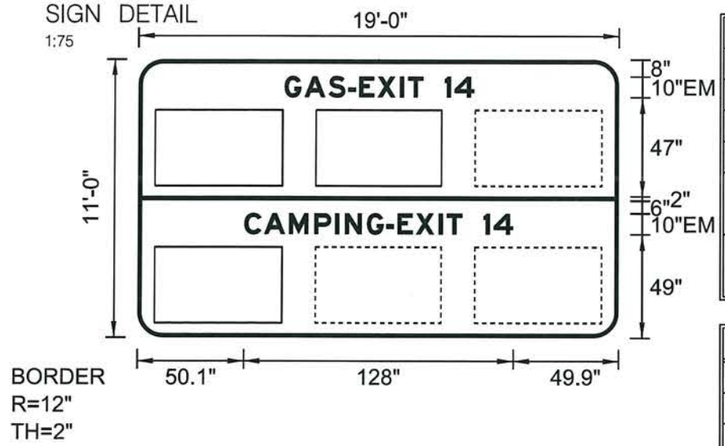

SIGN NUMBER	6	
WIDTH x HGHT.	19'–0" x 11'–0"	
BORDER WIDTH	2"	
CORNER RADIUS	12"	
MOUNTING	Ground	
BACKGROUND	TYPE:	Reflective
	COLOR:	Blue
LEGEND/BORDER	TYPE:	Reflective
	COLOR:	White/White

SYMBOL	ROT	X	Y	WID	HT

Panel Style: guide_fwy_general-services.ssi
M.U.T.C.D.: 2009 Edition

Panel Style: guide_fwy_general–services.ssi
Dimensions are in inches.tenths
Letter locations are panel edge to lower left corner

LETTER POSITIONS (X)																LENGTH	SERIES/SIZE
G	A	S	–	E	X	I	T		1	4							EM 2000
68.8	78.3	89.9	99.4	104.6	113.4	124.2	128	135.4	145.4	150.1						90.6	10
C	A	M	P	I	N	G	–	E	X	I	T		1	4			EM 2000
50.1	59.4	71.3	83.4	93.3	98.1	108.6	118	123.2	132	142.8	146.6	154	164	168.7	128		10

REGISTERED PROFESSIONAL ENGINEER
REG. NO.
11714
THOMAS W.
ANZIA
SOUTH DAKOTA
1/8/16

PLOT SCALE - 1:200
PLOTTED FROM - SOELLNER
PLOT NAME - 16
FILE - ...\SECTIONS\SIGN LAYOUTS 03.DGN

SIGN LAYOUTS

FOR BIDDING PURPOSES ONLY

Panel Style: tab1.bsi
M.U.T.C.D.: 2009 Edition

SIGN DETAIL
1:75

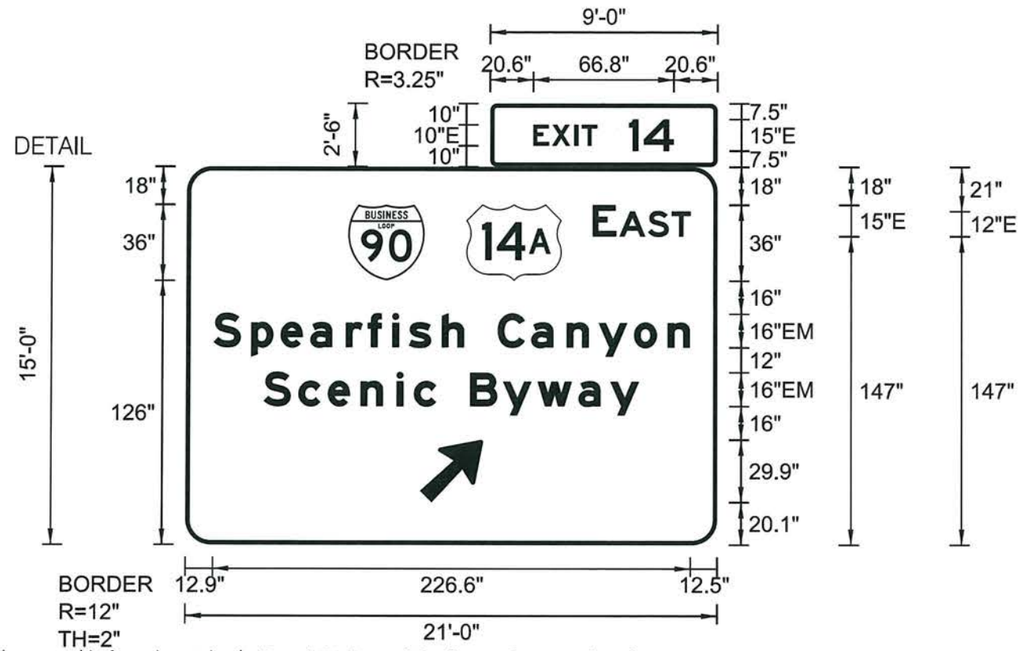

Panel Style: guide_fwy_advance_b.ssi
Dimensions are in inches.tenths

Panel Style: guide_fwy_advance_b.ssi
M.U.T.C.D.: 2009 Edition

Letter locations are panel edge to lower left corner

SIGN NUMBER	7	
WIDTH x HGHT.	21'-0" x 15'-0"	
BORDER WIDTH	2"	
CORNER RADIUS	12"	
MOUNTING	Ground	
BACKGROUND	TYPE:	Reflective
	COLOR:	Green
LEGEND/BORDER	TYPE:	Reflective
	COLOR:	White/White

SYMBOL	ROT	X	Y	WID	HT
M1_2	0	76.9	126	36.1	36.1
M1_4	0	133	126	45.1	36.1
AR_Type A	315	111.2	20.3	24.1	37.9

LETTER POSITIONS (X)

																					LENGTH	SERIES/SIZE
E	X	I	T	1	4																	E 2000
20.6	29.5	40.2	43.7	66.2	73.3																66.8	10,15
E	A	S	T																			E 2000
193.1	205.9	219.4	230.5																		46.4	15,12
S	p	e	a	r	f	i	s	h		C	a	n	y	o	n							EM 2000
12.9	30.9	44.9	59	76	86.2	97.9	105.7	121.3	131.8	147.8	163.8	180.8	196	212.8	228.6						226.3	16/12
S	c	e	n	i	c		B	y	w	a	y											EM 2000
37	53.5	67.6	83.1	100	108.2	118.8	134.8	150.4	166.9	186.4	201.6										178.3	16/12

REGISTERED PROFESSIONAL ENGINEER
REG. NO.
11714
THOMAS W. ANZIA
SOUTH DAKOTA
1/8/16

PLOT SCALE - 1:200
PLOTTED FROM - SOELLNER
PLOT NAME - 17
FILE - ...\SECTIONS\SIGN LAYOUTS 04.DGN

SIGN LAYOUTS

FOR BIDDING PURPOSES ONLY

SIGN DETAIL
1:50

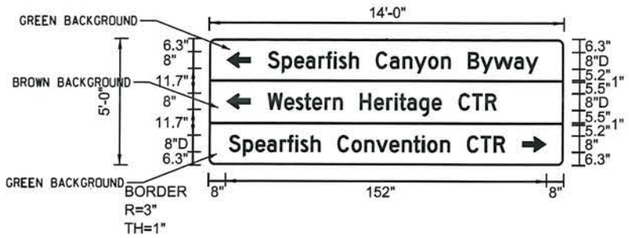

Panel Style: guide_con_destination.ssi
M.U.T.C.D.: 2009 Edition

Panel Style: guide_con_destination.ssi
Dimensions are in inches.tenths
Letter locations are panel edge to lower left corner

SIGN NUMBER	8
WIDTH x HGHT.	14'-0" x 5'-0"
BORDER WIDTH	1"
CORNER RADIUS	3"
MOUNTING	Ground
BACKGROUND	TYPE: Reflective
	COLOR: Green/Brown
LEGEND/BORDER	TYPE: Reflective
	COLOR: White/White

SYMBOL	ROT	X	Y	WID	HT
AR_Type D	90	8	45.7	8	12
AR_Type D	90	8	26	8	12
AR_Type D	270	148	6.3	8	12

LETTER POSITIONS (X)																								LENGTH	SERIES/SIZE
S	p	e	a	r	f	i	s	h		C	a	n	y	o	n		B	y	w	a	y				D 2000
27.7	34.3	40.1	45.5	51.6	55.1	59	61.4	66.2	70.9	78.9	85.5	91.6	97.2	103.8	110	114.7	122.7	128.7	135	144.6	150.1			128.4	8/6
W	e	s	t	e	r	n		H	e	r	l	t	a	g	e		C	T	R						D 2000
27.7	35.5	40.9	45	48.7	54.6	58.6	63.3	71.3	78.2	84	88	90.2	93.8	99.6	105.7	110.4	118.4	124.9	131					108.9	8/6
S	p	e	a	r	f	i	s	h		C	o	n	v	e	n	t	i	o	n		C	T	R		D 2000
9.6	16.2	22	27.4	33.5	37	40.9	43.3	48.1	52.8	60.8	67.5	73.7	79.3	85.6	91.4	97	101	103.6	109.8	114.5	122.5	129	135.1	131	8/6

SIGN DETAIL
1:50

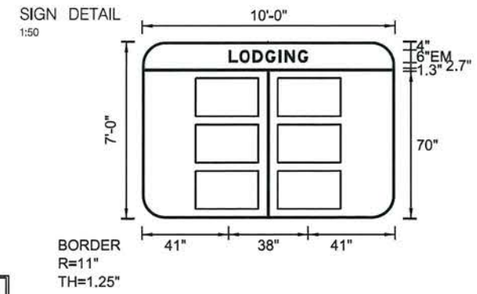

Panel Style: guide_fwy_general-services.ssi
M.U.T.C.D.: 2009 Edition

Panel Style: guide_fwy_general-services.ssi
Dimensions are in inches.tenths
Letter locations are panel edge to lower left corner

SIGN NUMBER	9
WIDTH x HGHT.	10'-0" x 7'-0"
BORDER WIDTH	1.25"
CORNER RADIUS	11"
MOUNTING	Ground
BACKGROUND	TYPE: Reflective
	COLOR: Blue
LEGEND/BORDER	TYPE: Reflective
	COLOR: White/White

SYMBOL	ROT	X	Y	WID	HT

LETTER POSITIONS (X)																		LENGTH	SERIES/SIZE
L	O	D	G	I	N	G													EM 2000
41	46.2	52.7	58.7	65	67.9	74.2												38	6

REGISTERED PROFESSIONAL ENGINEER
REG. NO.
11714
THOMAS W. ANZIA
SOUTH DAKOTA
1/8/16

SIGN DETAIL
1:50

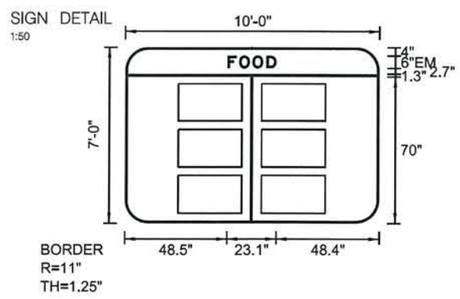

Panel Style: guide_fwy_general-services.ssi
M.U.T.C.D.: 2009 Edition

Panel Style: guide_fwy_general-services.ssi
Dimensions are in inches.tenths
Letter locations are panel edge to lower left corner

SIGN NUMBER	10
WIDTH x HGHT.	10'-0" x 7'-0"
BORDER WIDTH	1.25"
CORNER RADIUS	11"
MOUNTING	Ground
BACKGROUND	TYPE: Reflective
	COLOR: Blue
LEGEND/BORDER	TYPE: Reflective
	COLOR: White/White

SYMBOL	ROT	X	Y	WID	HT

LETTER POSITIONS (X)																		LENGTH	SERIES/SIZE
F	O	O	D																EM 2000
48.5	53.9	60.2	66.7															23.1	6

SIGN DETAIL
1:50

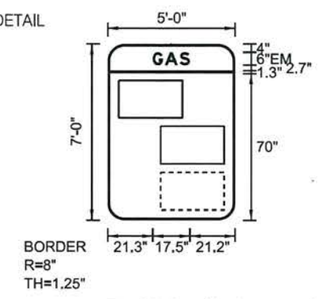

Panel Style: guide_fwy_general-services.ssi
M.U.T.C.D.: 2009 Edition

Panel Style: guide_fwy_general-services.ssi
Dimensions are in inches.tenths
Letter locations are panel edge to lower left corner

SIGN NUMBER	11
WIDTH x HGHT.	5'-0" x 7'-0"
BORDER WIDTH	1.25"
CORNER RADIUS	8"
MOUNTING	Ground
BACKGROUND	TYPE: Reflective
	COLOR: Blue
LEGEND/BORDER	TYPE: Reflective
	COLOR: White/White

SYMBOL	ROT	X	Y	WID	HT

LETTER POSITIONS (X)																		LENGTH	SERIES/SIZE
G	A	S																	EM 2000
21.3	27	34																17.5	6

SIGN DETAIL
1:50

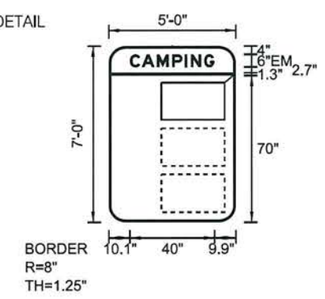

Panel Style: guide_fwy_general-services.ssi
M.U.T.C.D.: 2009 Edition

Panel Style: guide_fwy_general-services.ssi
Dimensions are in inches.tenths
Letter locations are panel edge to lower left corner

SIGN NUMBER	11
WIDTH x HGHT.	5'-0" x 7'-0"
BORDER WIDTH	1.25"
CORNER RADIUS	8"
MOUNTING	Ground
BACKGROUND	TYPE: Reflective
	COLOR: Blue
LEGEND/BORDER	TYPE: Reflective
	COLOR: White/White

SYMBOL	ROT	X	Y	WID	HT

LETTER POSITIONS (X)																		LENGTH	SERIES/SIZE
C	A	M	P	I	N	G													EM 2000
10.1	15.7	22.8	30.1	36	38.9	45.2												40	6

PLOT SCALE - 1:200
PLOT NAME - 18
FILE - ...\SECTIONS\SIGN LAYOUTS 05.DGN
PLOTTED FROM - SOELLNER

SIGN LAYOUTS

FOR BIDDING PURPOSES ONLY

STATE OF SOUTH DAKOTA	PROJECT	SHEET	TOTAL SHEETS
	IM 0901(162)14 P 014A(11)8	S29	S43

Plotting Date: 8/11/2015

SIGN DETAIL
1:50

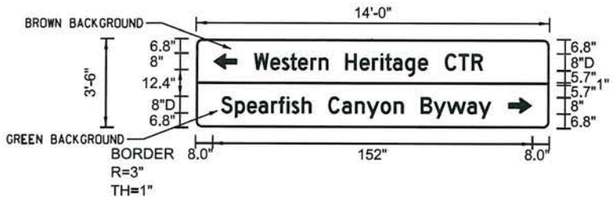

Panel Style: guide_con_destination.ssl
M.U.T.C.D.: 2009 Edition

Panel Style: guide_con_destination.ssl
Dimensions are In Inches.tenths

Letter locations are panel edge to lower left corner

SIGN NUMBER	12
WIDTH x HGHT.	14'-0" x 3'-6"
BORDER WIDTH	1"
CORNER RADIUS	3"
MOUNTING	Ground
BACKGROUND	TYPE: Reflective
	COLOR: Green/Brown
LEGEND/BORDER	TYPE: Reflective
	COLOR: White/White

SYMBOL	ROT	X	Y	WID	HT
AR_Type D	90	8	27.2	8	12
AR_Type D	270	148	6.8	8	12

LETTER POSITIONS (X)

																							LENGTH	SERIES/SIZE
W	e	s	t	e	r	n		H	e	r	i	t	a	g	e		C	T	R					D 2000
27.7	35.5	40.9	45	48.7	54.6	58.6	63.3	71.3	78.2	84	88	90.2	93.8	99.6	105.7	110.4	118.4	124.9	131			108.9	86	
S	p	e	a	r	f	i	s	h		C	a	n	y	o	n		B	y	w	a	y			D 2000
12	18.7	24.4	29.9	36	39.5	43.3	45.7	50.5	55.2	63.2	69.9	76	81.6	88.2	94.4	99.1	107.1	113.1	119.4	129	134.4	128.5	86	

REGISTERED PROFESSIONAL ENGINEER
REG. NO.
11714
THOMAS W.
ANZIA
SOUTH DAKOTA
1/8/16

PLOT SCALE - 1:200
PLOT NAME - 19
FILE - ...\SECTIONS\SIGN LAYOUTS 06.DGN
PLOTTED FROM - SOELLNER

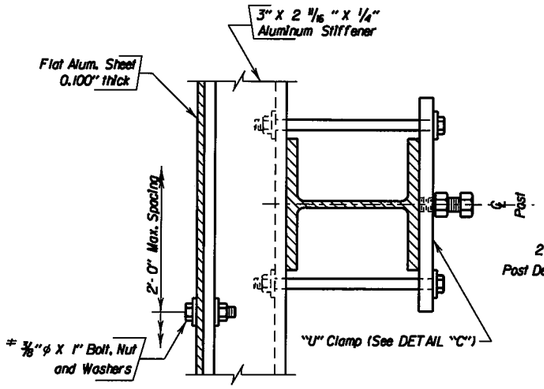

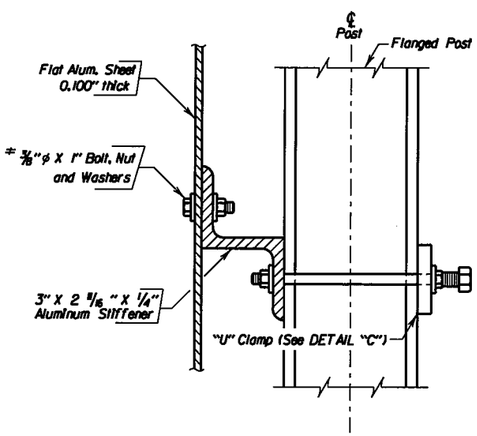

DETAILS FOR MOUNTING SHEET ALUMINUM SIGNS ON STEEL FLANGED POSTS

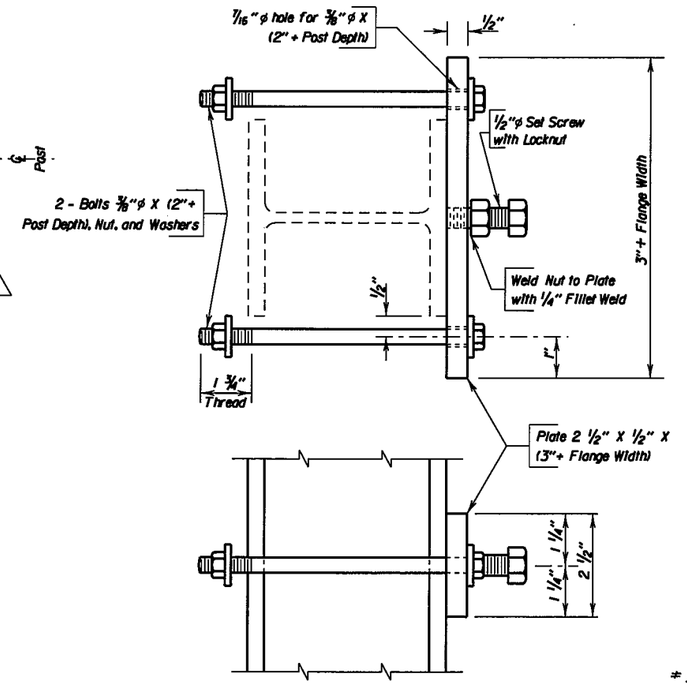

DETAIL "C"

A plastic washer, as recommended by the sheeting manufacturer, shall be installed between the sign face and the metal washer shown.

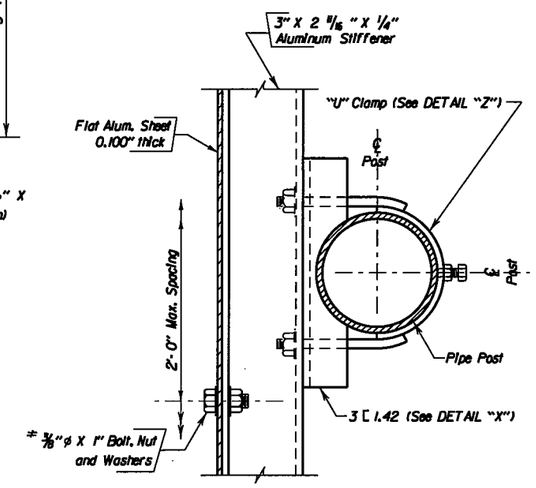

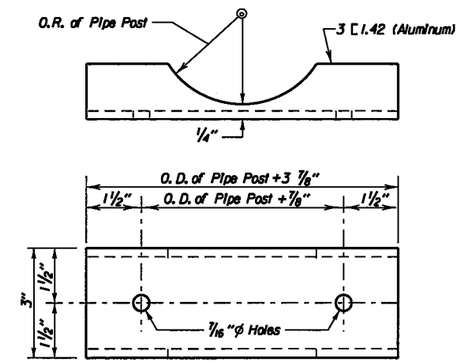

DETAIL "X"

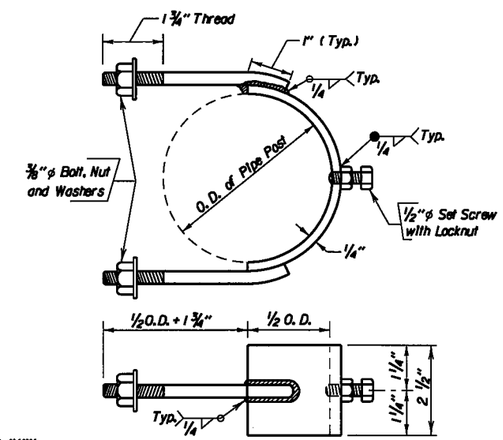

DETAIL "Z"

STIFFENER NOTES-

1. Stiffeners must always be used on multiple post breakaway signs regardless of type of sign face employed.
2. ϕ Number of stiffeners used, N, shall be as follows:
   - If H <= 2'-0" then N = 1
   - If 2'-0" < H <= 8'-0" then N = 2
   - If 8'-0" < H <= 15'-0" then N = 3

   where H equals the vertical dimension of the sign panel of sign cluster.
3. All stiffener Bolts and Nuts shall conform to ASTM A307. Washers shall conform to ASTM F436. All hardware shall be galvanized in accordance with ASTM A153.

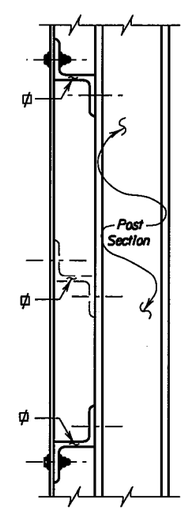

POSITIONING OF TOP AND BOTTOM STIFFENERS

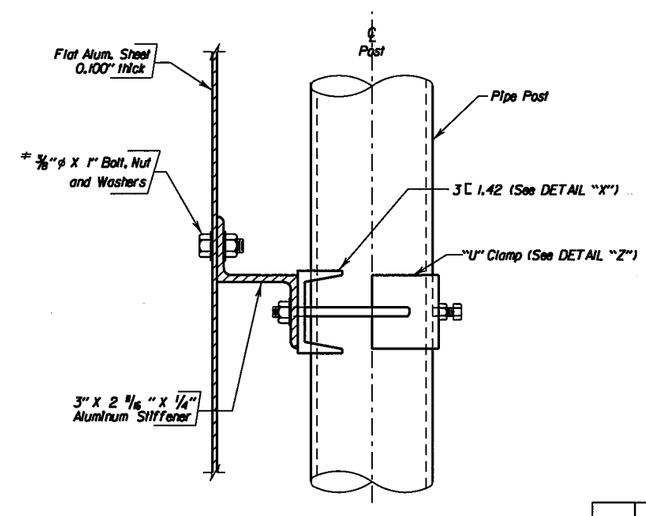

DETAILS FOR MOUNTING SHEET ALUMINUM SIGNS ON STEEL PIPE POSTS

ERECTION DETAILS
FOR
SHEET ALUMINUM SIGNS
(ON FLANGED AND PIPE POSTS)
S. D. DEPT. OF TRANSPORTATION
DECEMBER 1994

1 OF 1

MK	REVISION	DATED	BY

DESIGNED BY	DRAWN BY	CHECKED BY	APPROVED
RH/DM	RH/TB	RH/DM	John C. Cole
STANDARDS	BSTDSASI		BRIDGE ENGINEER

PLOT SCALE - 1:200
PLOTTED FROM - SOELLNER
PLOT NAME - 20
FILE - ...\TYPICAL ERECTION DETAILS.DGN

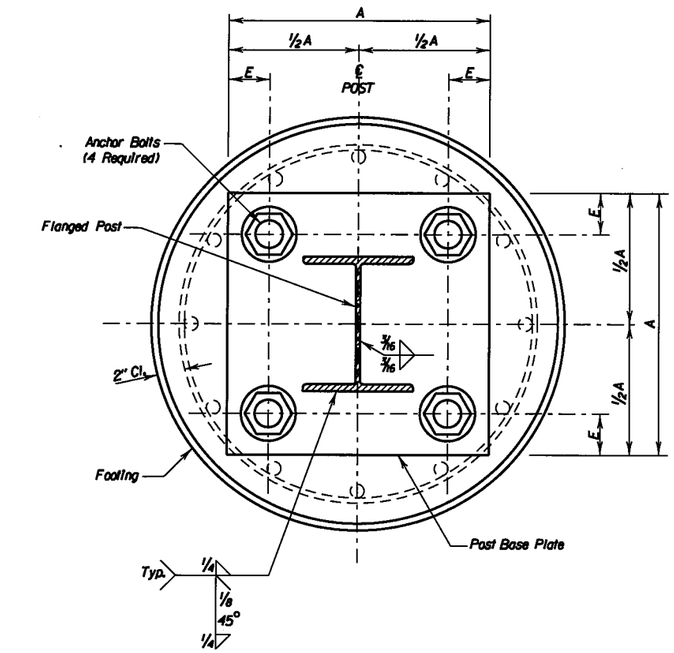

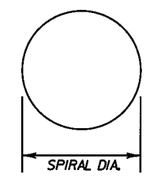

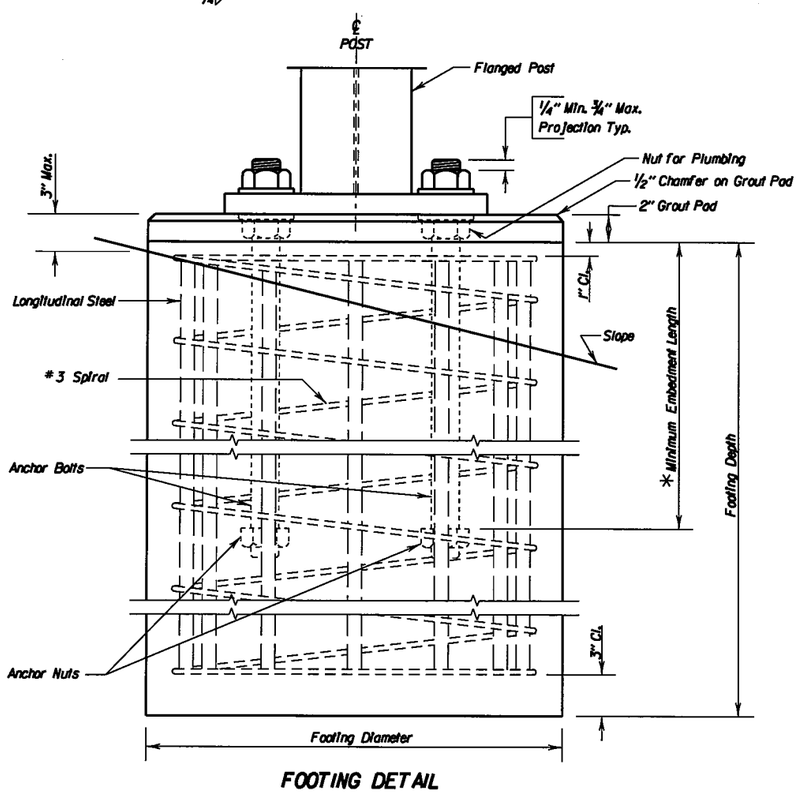

FOOTING DETAIL

NOTES--

Some supports shall be removed and reset as shown in these plans. All reset footings shall be backfilled with flowable fill as directed by the Engineer.

Spirals - Use 6" pitch and 1 ½ extra turns at each end. Use 1 ½ turns for lap at splice as required, or weld as approved by the Office of Bridge Design. Spirals may be smooth bars. Bar length shown does not include Splices.

✳ See Footing Detail

Dimensions are out to out of bars.

NOTES--

ø 1. Design Specification: AASHTO Standard Specifications for Structural Supports for Highway Signs, Luminaires and Traffic Signals, 2001 Edition with 2003 Interims.

2. Concrete Footings shall be Class M6 - fc = 4000 p.s.i.

3. Structural Steel shall comform to ASTM A36.

4. All Reinforcing Steel, except spirals, shall conform to ASTM A615 Grade 60.

5. Spiral Reinforcing Steel may be fabricated from cold drawn wire ASTM A82, or hot rolled plain or deformed bars conforming to the strength requirements of ASTM A615, Grade 60.

6. All Anchor Bolts shall conform to ASTM A307 having a minimum yield stress of 36000 p.s.i. Anchor Bolts shall be cleaned to remove any oil from the threading process before galvanizing.

7. Anchor Bolts shall have 7" thread length on both ends.

8. All nuts shall conform to ASTM A563, DH. All nuts shall be heavy hex. All washers shall conform to ASTM F436.

9. All structural steel including the Steel Posts shall be galvanized according to ASTM A123. The Nuts, Washers and 10" of one end of the Anchor Bolts shall be galvanized according to ASTM A153.

10. All Bolt Holes shall be drilled. All plate cuts shall preferably be Saw Cuts, however, Flame Cutting will be permitted providing all edges are ground smooth (metal projecting beyond the plane of the plate face will NOT be allowed).

11. All welding and weld inspection shall be in accordance with the latest edition of AWS D 1.1 Structural Welding Code.

SHOP PLANS-

The fabricator shall initially submit two (2) copies of the shop plans to the Office of Bridge Design for review. One reviewed copy will be sent back to the fabricator who will then make changes, if any, and then send the Office of Bridge Design six (6) final approved copies for distribution.

ERECTION DETAILS
FOR
FIXED SIGN SUPPORTS
S. D. DEPT. OF TRANSPORTATION
DECEMBER 1994

1 OF 2

MK	REVISION	DATED	BY
ø	Specification Update	7/11/05	AV

DESIGNED BY	DRAWN BY	CHECKED BY	APPROVED
RH/DM	RH/TB	RH/DM	John C. Cole
STANDARDS	BSTDFSSA		BRIDGE ENGINEER

PLOT SCALE - 1:200
PLOTTED FROM - SOELLNER
PLOT NAME - 21
FILE - ...\TYPICAL ERECTION DETAILS.DGN

FOR BIDDING PURPOSES ONLY

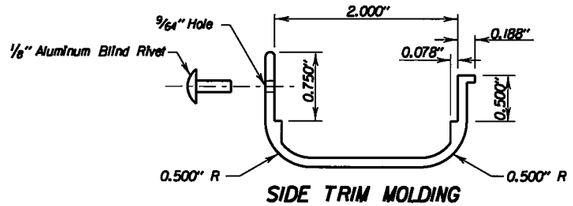

SIDE TRIM MOLDING

Side Trim Molding is required on all vertical edges of extruded panels. They shall be fastened at a minimum of one (1) rivet per panel.

NOTE- P = Number of Posts to be used
H = Vertical dimension of sign
L = Horizontal dimension of Main Sign

NOTE- 2 stiffeners are required when H is 8'-0" or less.
3 stiffeners are required when H is more than 8'-0".

△ Clear distance as recommended by latest edition of AASHTO ROADSIDE DESIGN GUIDE.

Φ Mounting height as recommended by latest edition of MANUAL ON UNIFORM TRAFFIC CONTROL DEVICES.

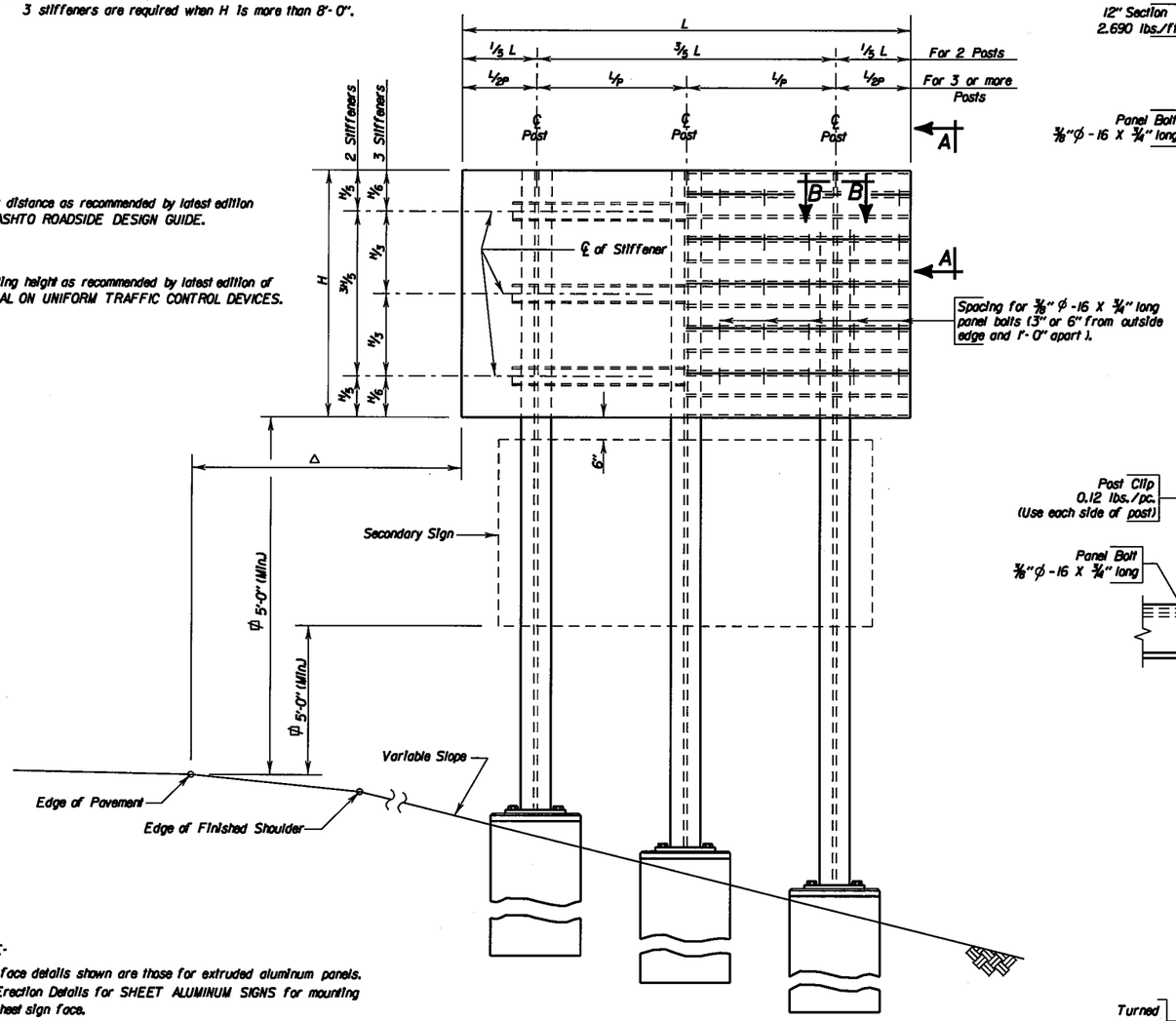

NOTE-
Sign face details shown are those for extruded aluminum panels. See Erection Details for SHEET ALUMINUM SIGNS for mounting flat sheet sign face.

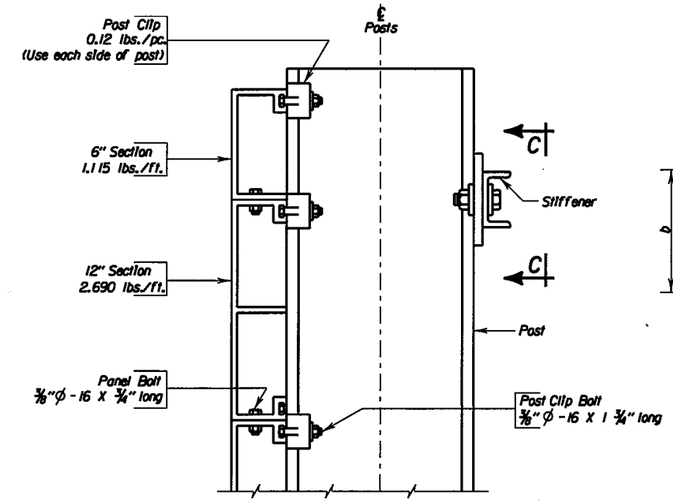

SEC. A-A

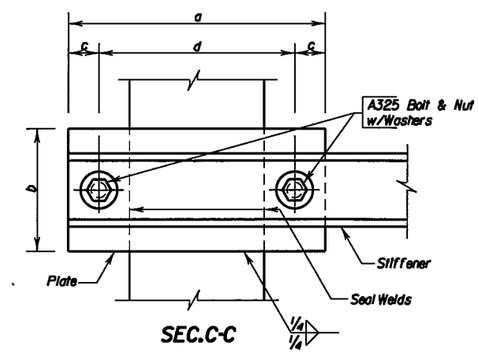

SEC. C-C

STIFFENER DATA							
Post	Stiffener	a	b	c	d	Bolt (A325)	Plate Thk.
S3X5.7 thru W8X21	C3X5	10 1/2"	5"	1 1/4"	8"	5/8" Φ	5/16"
W8X24 thru W10X45	C5X6.7	13 1/2"	6"	1 1/2"	10 1/2"	7/8" Φ	3/8"

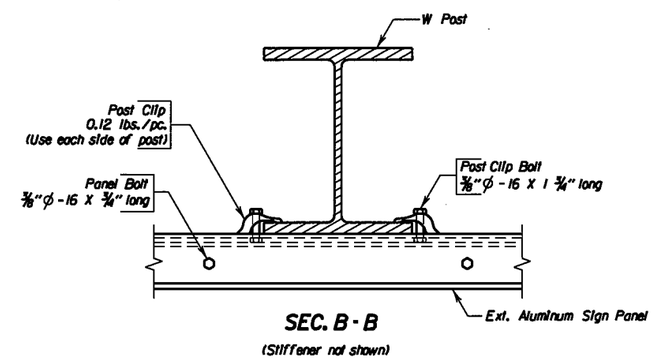

SEC. B-B

(Stiffener not shown)

STIFFENER BOLTING PROCEDURE-

1. High strength bolts shall be tightened so as to obtain a minimum residual tension by the use of load indicator washers.
2. High strength bolts may be tightened by the "Turn of the Nut" method as provided in Section 11.5.6.4.4 of the AASHTO Standard Specifications for Highway Bridges in lieu of #1 above.

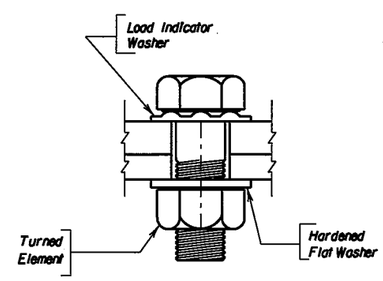

LOAD INDICATOR WASHER DETAIL

ERECTION DETAILS
FOR
FIXED SIGN SUPPORTS
S. D. DEPT. OF TRANSPORTATION
DECEMBER 1994

DESIGNED BY	DRAWN BY	CHECKED BY	APPROVED
RH/DM	RH/TB	RH/DM	John C. Cole
STANDARDS	BSTDFSSB		BRIDGE ENGINEER

PLOT SCALE - 1:200
PLOT NAME - 22
FILE - ...\TYPICAL ERECTION DETAILS.DGN
PLOTTED FROM - SOELLNER

FOR BIDDING PURPOSES ONLY

Plotting Date: 8/11/2015

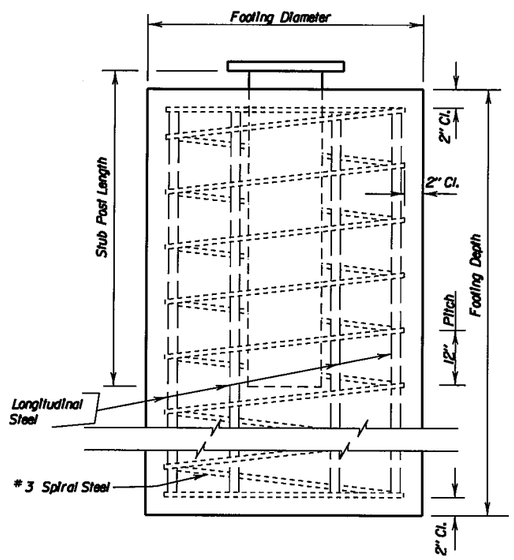

FOOTING DETAIL

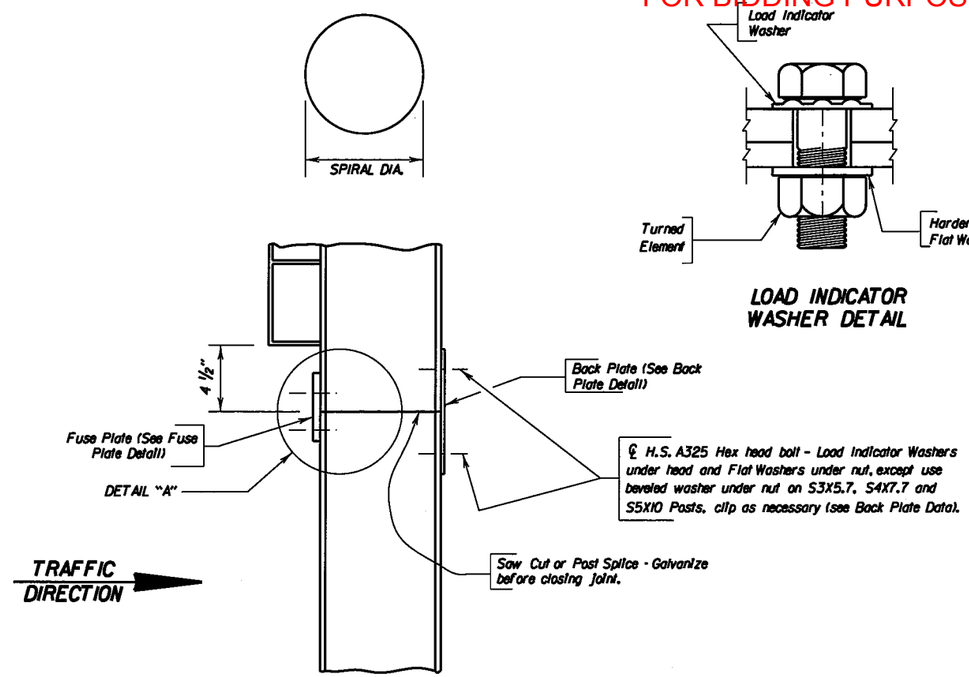

FUSE & BACK PLATE INSTALLATION

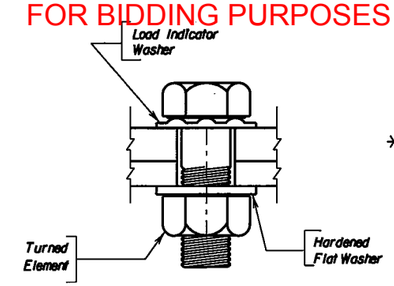

LOAD INDICATOR WASHER DETAIL

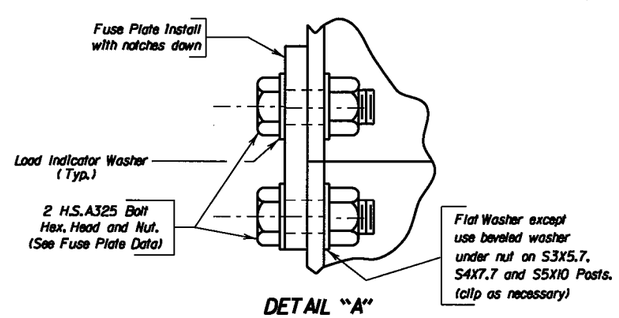

DETAIL "A"

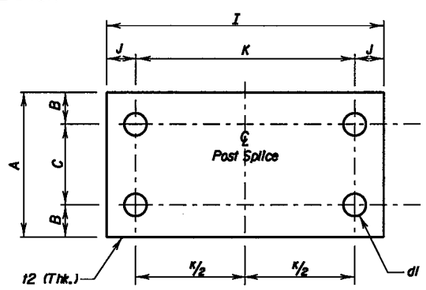

BACK PLATE DETAIL

NOTES-

* 1. Design Specification: AASHTO Standard Specifications for Structural Supports for Highway Signs, Luminaires and Traffic Signals, 2001 Edition with 2003 Interims.

2. Concrete Footings shall be Class M6 - fc = 4000 p.s.i.

3. Structural Steel shall comform to ASTM A36.

4. All Reinforcing Steel, except spirals, shall conform to ASTM 615 Grade 60.

5. Spiral Reinforcing Steel may be fabricated from cold drawn wire ASTM A82, or hot rolled plain or deformed bars conforming to the strength requirements of ASTM A615, Grade 60.

6. All Bolts and Nuts shall conform to ASTM A325 except that 1/2" diameter bolts may conform to either ASTM A325 or ASTM A449. Washers shall conform to ASTM F436. All hardware shall be galvanized in accordance with ASTM A153.

7. All structural steel including Posts and Post Stubs shall be galvanized in accordance with ASTM A123.

8. All Bolt Holes shall be drilled. All plate cuts shall preferably be saw cuts. However, Flame Cutting will be permitted providing all edges are ground smooth (metal projecting beyond the plane of the plate face will NOT be allowed).

9. All welding and weld inspection shall be in accordance with the latest edition of AWS D 1.1 Structural Welding Code.

PROCEDURE FOR ASSEMBLING SLIP BASE-

1. Place galvanized Sheet Metal Diaphrams on top of the lower slip plate.

2. Connect main post to Stub Post with clean unlubricated bolts and nuts with one Hardened Washer on each bolt between slip plates.

3. Plumb post by adding shims between slip plates.

4. Tighten bolts to a practical maximum, using a 12" - 15" wrench in order to bed surfaces and clean threads. DO NOT TIGHTEN TO PROOF LOAD.

5. Loosen all bolts and retighten in increments, using a systematic order, until each bolt has been tightened to the specified torque corresponding to the post size used (See Slip Base Plate Data). Tighten bolts only to the torque specified. DO NOT OVERTIGHTEN. Check torque on each bolt after entire sign has been erected.

ASSEMBLY OF FRICTION FUSE PLATES, BACK PLATES AND STIFFENERS-

1. High strength bolts shall be tightened so as to obtain a residual tension by the use of load indicator washers.

2. High strength bolts may be tightened by the "Turn of the Nut" method as provided in Section 11.5.6.4.4 of the AASHTO Standard Specifications for Highway Bridges in lieu of # 1 above.

SHOP PLANS-

The fabricator shall initially submit two (2) copies of the shop plans to the Office of Bridge Design for review. One reviewed copy will be sent back to the fabricator who will then make changes, if any, and then send the Office of Bridge Design six (6) final approved copies for distribution.

NOTES-

Some supports shall be removed and reset as shown in these plans. All reset footings shall be backfilled with flowable fill as directed by the Engineer.

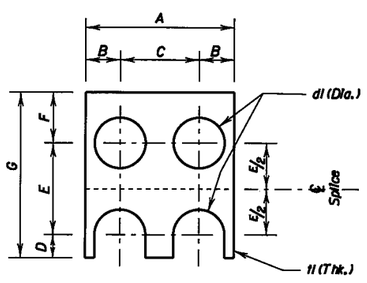

FUSE PLATE DETAIL

TABLE 1 - FUSE PLATE DATA

Post Size	A	B	C	D	E	F	G	dl	tl	Bolt Size
S3X5.7	2 5/8"	9/16"	1 1/2"	1/2"	1 1/2"	1 1/8"	3 1/8"	5/8" ø	1/4"	1/2" ø
S4X7.7	2 5/8"	9/16"	1 1/2"	1/2"	1 1/2"	1 1/8"	3 1/8"	5/8" ø	1/4"	1/2" ø
S5X10	3"	11/16"	1 5/8"	5/8"	2 1/4"	1 1/8"	4"	3/4" ø	5/8"	5/8" ø
W6X12	4"	15/16"	2 1/8"	5/8"	2 1/2"	1 3/8"	4 1/2"	3/4" ø	3/8"	5/8" ø
W6X15	6"	1 3/8"	3 1/4"	5/8"	2 1/2"	1 3/8"	4 1/2"	3/4" ø	3/8"	5/8" ø
W6X20	6"	1 3/8"	3 1/4"	5/8"	2 1/2"	1 3/8"	4 1/2"	3/4" ø	3/8"	5/8" ø
W8X18	5 1/4"	1 5/16"	2 5/8"	3/4"	2 1/2"	1 3/8"	4 5/8"	7/8" ø	1/2"	3/4" ø
W8X21	5 1/4"	1 5/16"	2 5/8"	3/4"	2 1/2"	1 3/8"	4 5/8"	7/8" ø	1/2"	3/4" ø
W8X24	6 1/2"	1 1/2"	3 1/2"	7/8"	3"	1 5/8"	5 1/2"	1" ø	9/16"	7/8" ø
W8X28	6 1/2"	1 9/16"	3 3/8"	7/8"	3"	1 3/4"	5 5/8"	1" ø	1/2"	7/8" ø
W8X31	8"	1 5/8"	4 3/4"	1"	3 1/2"	2"	6 1/2"	1 1/8" ø	5/8"	1" ø
W10X33	8"	1 7/8"	4 1/4"	1 1/8"	4 1/2"	2 1/4"	7 7/8"	1 1/4" ø	3/4"	1 1/8" ø

TABLE 5 - BACK PLATE DATA

Post Size	A	B	C	J	K	I	dl	t2	Bolt Size
S3X5.7	2 5/8"	9/16"	1 1/2"	1 1/4"	4 1/2"	7"	5/8" ø	1/4"	1/2" ø
S4X7.7	2 5/8"	9/16"	1 1/2"	1 1/4"	4 1/2"	7"	5/8" ø	1/4"	1/2" ø
S5X10	3"	11/16"	1 5/8"	1 1/4"	4 3/4"	7 1/4"	3/4" ø	1/4"	5/8" ø
W6X12	4"	15/16"	2 1/8"	1 1/4"	4 3/4"	7 1/4"	3/4" ø	1/4"	5/8" ø
W6X15	6"	1 3/8"	3 1/4"	1 1/4"	5 1/4"	7 3/4"	3/4" ø	1/4"	5/8" ø
W6X20	6"	1 3/8"	3 1/4"	1 1/4"	5 1/4"	7 3/4"	3/4" ø	1/4"	5/8" ø
W8X18	5 1/4"	1 5/16"	2 5/8"	1 3/8"	5 3/4"	8 1/2"	7/8" ø	1/4"	3/4" ø
W8X21	5 1/4"	1 5/16"	2 5/8"	1 3/8"	5 3/4"	8 1/2"	7/8" ø	1/4"	3/4" ø
W8X24	6 1/2"	1 1/2"	3 1/2"	1 5/8"	6"	9 1/4"	1" ø	5/16"	7/8" ø
W8X28	6 1/2"	1 9/16"	3 3/8"	1 3/4"	6"	9 1/2"	1" ø	3/8"	7/8" ø
W8X31	8"	1 5/8"	4 3/4"	2"	6 1/2"	10 1/2"	1 1/8" ø	3/8"	1" ø
W10X33	8"	1 7/8"	4 1/4"	2 1/2"	7"	1'-0"	1 1/4" ø	7/16"	1 1/8" ø

ERECTION DETAILS
FOR
TWO-POST ONE-DIRECTION BREAKAWAY SIGN SUPPORTS
S. D. DEPT. OF TRANSPORTATION
DECEMBER 1994

1 OF 2

MK	REVISION	DATED	BY
*	Specification Update	7/11/05	AV

DESIGNED BY	DRAWN BY	CHECKED BY	APPROVED
RH/DM	TB	RH/DM	John C. Cole
STANDARDS	BSTDBS2A		BRIDGE ENGINEER

PLOT SCALE - 1:200
PLOT NAME - 23
FILE - ...\TYPICAL ERECTION DETAILS.DGN
PLOTTED FROM - SQELLNER

FOR BIDDING PURPOSES ONLY

Plotting Date: 8/11/2015

NOTE-
Sign face details shown are those for extruded aluminum panels. See Erection Details for SHEET ALUMINUM SIGNS for mounting flat sheet sign face.

△ Mounting height as recommended by latest edition of AASHTO ROADSIDE DESIGN GUIDE.

ϕ Clear distance as recommended by latest edition of MANUAL ON UNIFORM TRAFFIC CONTROL DEVICES.

NOTE- N = Number of Stiffeners to be used
H = Vertical dimension of sign
L = Horizontal dimension of Main Sign

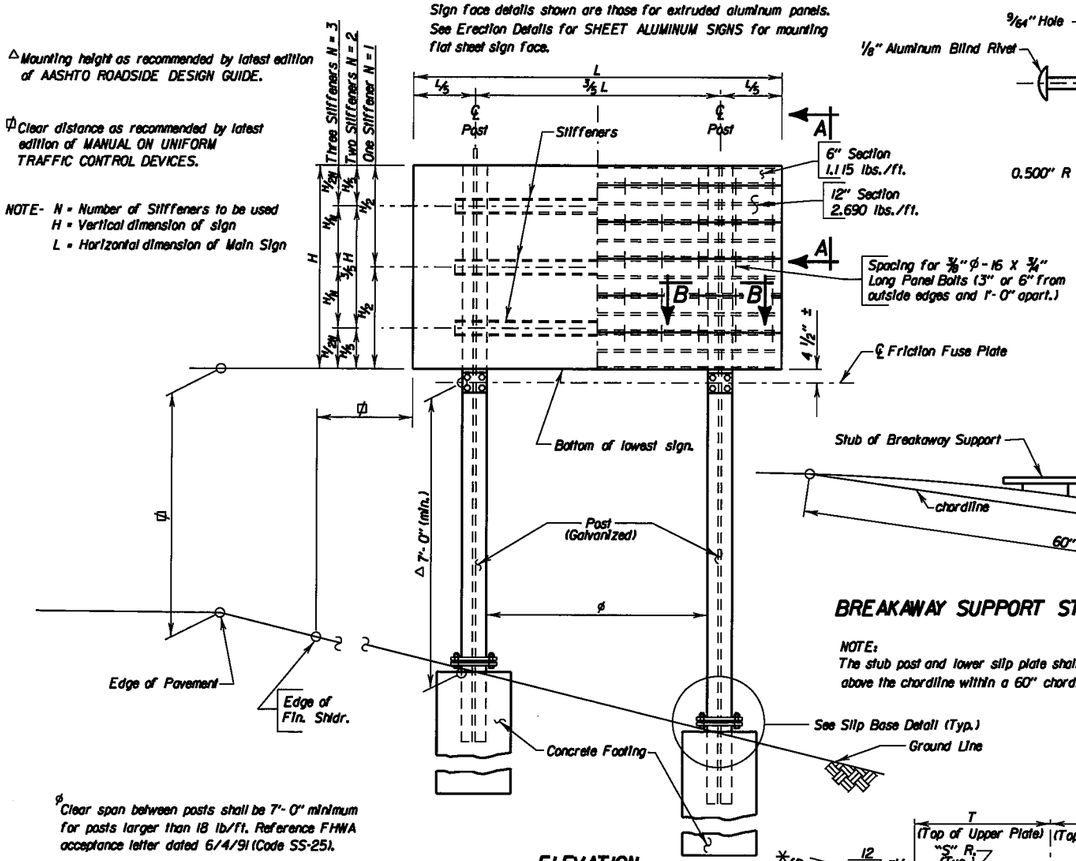

ϕ Clear span between posts shall be 7'- 0" minimum for posts larger than 18 lb/ft. Reference FHWA acceptance letter dated 6/4/91 (Code SS-25).

ELEVATION

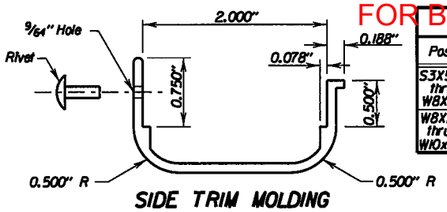

SIDE TRIM MOLDING

Side Trim Molding is required on all vertical edges of extruded panels. They shall be fastened at a minimum of one (1) rivet per panel.

STIFFENER DATA

Post	Stiffener	a	b	c	d	Bolt (A325)	Plate Thk.
S3X5.7 thru W8X21	C3X5	10 1/2"	5"	1 1/4"	8"	5/8" ϕ	5/16"
W8X24 thru W10X33	C5X6.7	13 1/2"	6"	1 1/2"	10 1/2"	7/8" ϕ	3/8"

STIFFENER NOTES-

1. Stiffeners must always be used on Two Post Breakaway signs regardless of type of sign face employed.
2. Number of stiffeners used, N, shall be as follows:
   If H <= 2'- 0" then N = 1
   If 2'- 0" < H <= 8'- 0" then N = 2
   If 8'- 0" < H <= 15'- 0" then N = 3
   where H equals the vertical dimension of the sign panel of sign cluster.

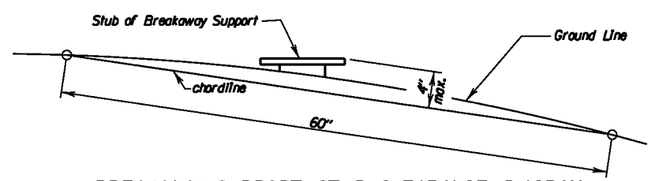

BREAKAWAY SUPPORT STUB CLEARANCE DIAGRAM

NOTE:
The stub post and lower slip plate shall NOT extend more than 4" max. above the chordline within a 60" chord.

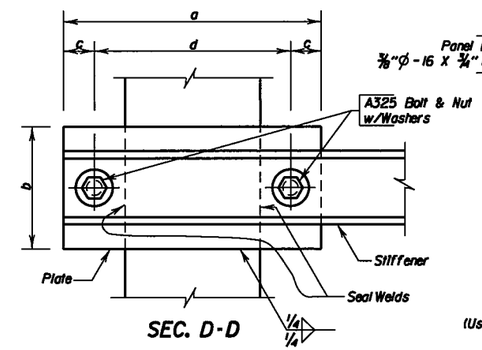

SEC. D-D

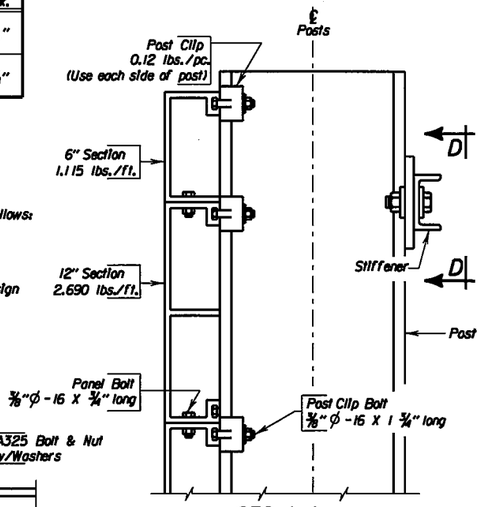

SEC. A-A

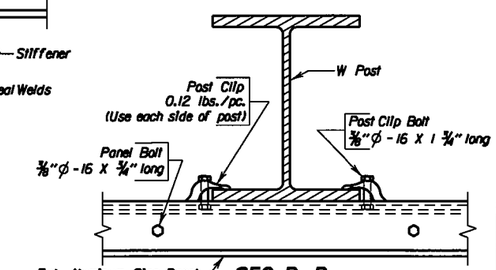

SEC. B-B
(Stiffener not shown)

Sees Erection Details for SLIP BASE ALTERNATE.

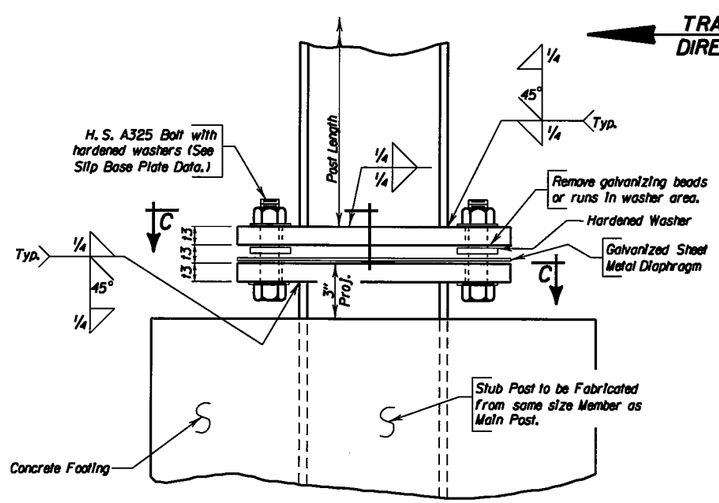

SLIP BASE DETAIL

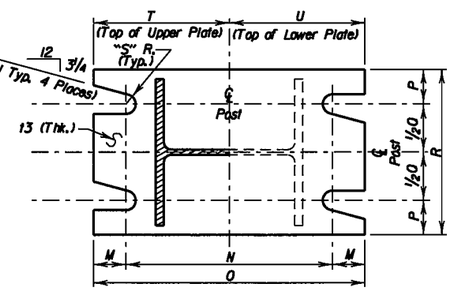

SEC. C-C

* NOTE:
Above Bevel is for Sign on Right Shoulder. Plate Bevels are Opposite hand for Sign on Left Shoulder.

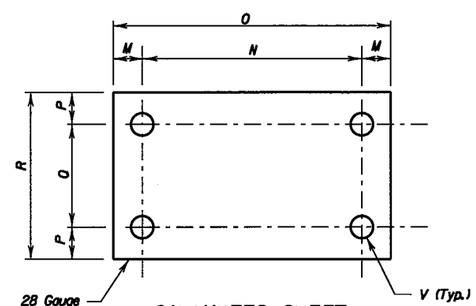

GALVANIZED SHEET METAL DIAPHRAGM

TABLE 3 - SHEET METAL DIAPHRAGM DATA

Post Size	M	N	O	P	Q	R	V
S3X5.7	3/4"	6"	7 1/2"	3/4"	1 1/2"	3"	5/8"
S4X7.7	3/4"	6"	7 1/2"	3/4"	1 1/2"	3"	5/8"
S5X10	7/8"	7 1/4"	9"	3/4"	2"	3 1/2"	3/4"
W6X12	7/8"	8 1/4"	10"	7/8"	2 3/4"	4 1/2"	7/8"
W6X15	1 1/8"	8 1/2"	10 3/4"	1 1/4"	4"	6 1/2"	7/8"
W6X20	1 1/8"	10"	1'- 0 1/4"	1 1/4"	4"	6 1/2"	7/8"
W8X18	1 1/8"	10 1/2"	1'- 0 3/4"	1 1/4"	3 1/2"	6"	7/8"
W8X21	1 1/4"	11 1/4"	1'- 1 3/4"	1 1/4"	3 1/2"	6"	1"
W8X24	1 1/2"	11"	1'- 2"	1 5/16"	4 1/4"	7 1/2"	1"
W8X28	1 5/16"	11 1/4"	1'- 2 1/2"	1 5/16"	4 1/4"	7 1/2"	1"
W8X31	1 3/4"	11 1/4"	1'- 2 3/4"	1 7/8"	5 1/4"	9"	1 1/8"
W10X33	1 3/4"	1'- 2"	1'- 5 1/2"	1 7/8"	5 1/4"	9"	1 1/8"

NOTE: Diaphragm need not be regalvanized after cutting to size and drilling of holes.

TABLE 4 - SLIP BASE PLATE DATA

Post Size	M	N	O	P	Q	R	S	T	U	13	Bolt Size	Bolt Torque
S3X5.7	3/4"	6"	7 1/2"	3/4"	1 1/2"	3"	9/32"	3 3/4"	3 3/4"	5/16"	1/2" ϕ	142" - #
S4X7.7	3/4"	6"	7 1/2"	3/4"	1 1/2"	3"	9/32"	3 3/4"	3 3/4"	5/16"	1/2" ϕ	142" - #
S5X10	7/8"	7 1/4"	9"	3/4"	2"	3 1/2"	11/32"	4 1/2"	4 1/2"	7/8"	5/8" ϕ	345"- #
W6X12	7/8"	8 1/4"	10"	7/8"	2 3/4"	4 1/2"	11/32"	5"	5"	7/8"	5/8" ϕ	345"- #
W6X15	1 1/8"	8 1/2"	10 3/4"	1 1/4"	4"	6 1/2"	13/32"	5 7/8"	5 7/8"	1"	3/4" ϕ	554"- #
W6X20	1 1/8"	10"	1'- 0 1/4"	1 1/4"	4"	6 1/2"	13/32"	6 1/8"	6 1/8"	1"	3/4" ϕ	554"- #
W8X18	1 1/8"	10 1/2"	1'- 0 3/4"	1 1/4"	3 1/2"	6"	13/32"	6 3/8"	6 3/8"	1"	3/4" ϕ	554"- #
W8X21	1 1/4"	11 1/4"	1'- 1 3/4"	1 1/4"	3 1/2"	6"	15/32"	6 7/8"	6 7/8"	1"	7/8" ϕ	645"- #
W8X24	1 1/2"	11"	1'- 2"	1 5/16"	4 1/4"	7 1/2"	15/32"	7"	7"	1"	7/8" ϕ	645"- #
W8X28	1 5/16"	11 1/4"	1'- 2 1/2"	1 5/16"	4 1/4"	7 1/2"	17/32"	7 1/4"	7 1/4"	1 1/8"	1" ϕ	735"- #
W8X31	1 3/4"	11 1/4"	1'- 2 3/4"	1 7/8"	5 1/4"	9"	17/32"	7 7/8"	7 7/8"	1 1/8"	1" ϕ	735"- #
W10X33	1 3/4"	1'- 2"	1'- 5 1/2"	1 7/8"	5 1/4"	9"	17/32"	8 3/4"	8 3/4"	1 1/4"	1" ϕ	735"- #

ERECTION DETAILS
FOR
TWO-POST ONE-DIRECTION
BREAKAWAY SIGN SUPPORTS
S. D. DEPT. OF TRANSPORTATION
DECEMBER 1994

(2) OF (2)

DESIGNED BY	DRAWN BY	CHECKED BY	APPROVED
RH/DM	TB	RH/DM	John C. Cole
STANDARDS	BSTDBS2B		BRIDGE ENGINEER

PLOT SCALE - 1:200
PLOT NAME - 24
FILE ....\TYPICAL ERECTION DETAILS.DGN
PLOTTED FROM - SOELLNER

FOR BIDDING PURPOSES ONLY

Plotting Date: 8/11/2015

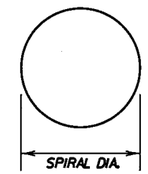

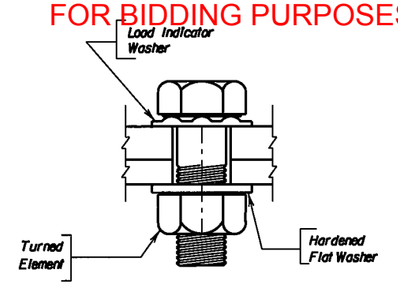

LOAD INDICATOR WASHER DETAIL

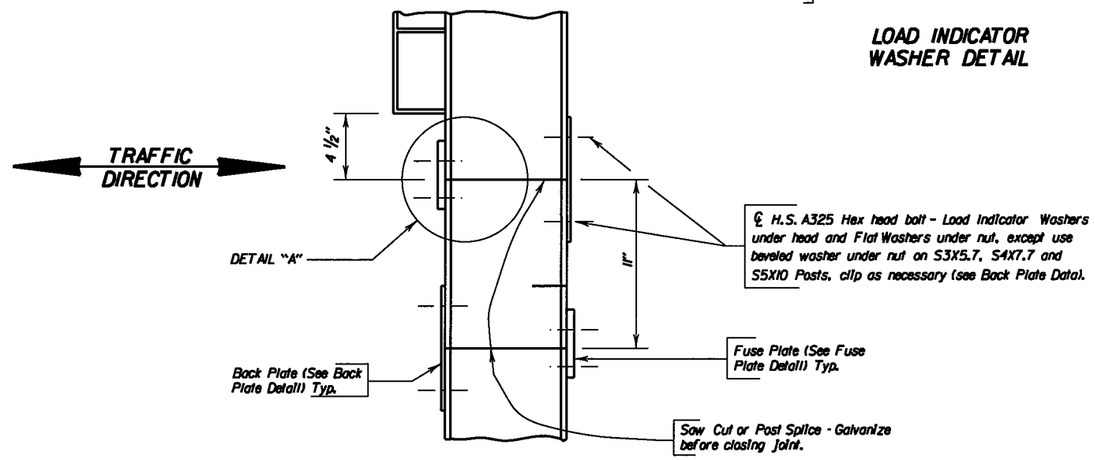

FUSE & BACK PLATE INSTALLATION

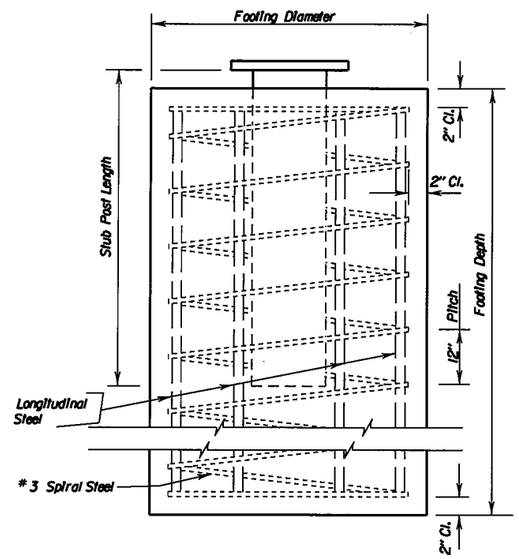

FOOTING DETAIL

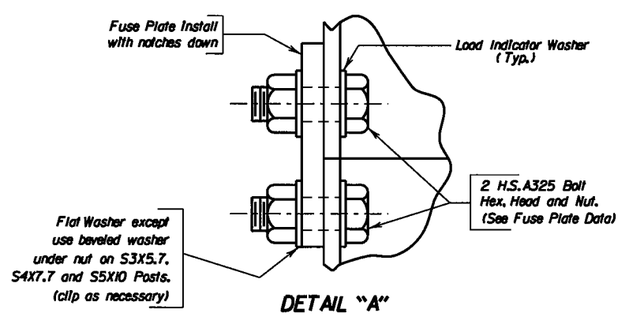

DETAIL "A"

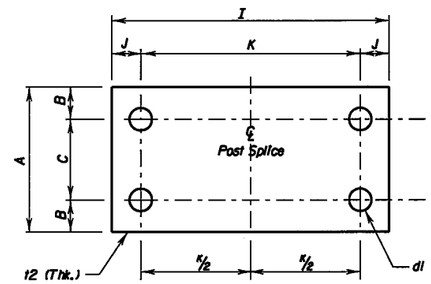

BACK PLATE DETAIL

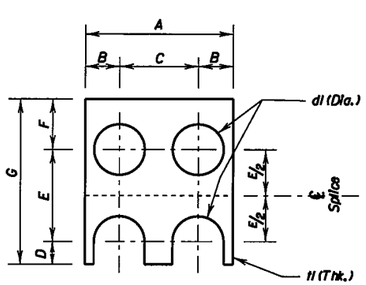

FUSE PLATE DETAIL

TABLE 1 - FUSE PLATE DATA

Post Size	A	B	C	D	E	F	G	dl	tl	Bolt Size
S3X5.7	2 5/16"	9/16"	1 1/2"	1/2"	1 1/2"	1 1/8"	3 1/8"	5/16" ø	1/4"	1/2" ø
S4X7.7	2 5/16"	9/16"	1 1/2"	1/2"	1 1/2"	1 1/8"	3 1/8"	5/16" ø	1/4"	1/2" ø
S5X10	3"	11/16"	1 5/8"	5/8"	2 1/4"	1 1/8"	4"	3/4" ø	3/8"	5/8" ø
W6X12	4"	15/16"	2 1/8"	5/8"	2 1/2"	1 3/8"	4 1/2"	3/4" ø	3/8"	5/8" ø
W6X15	6"	1 3/16"	3 1/4"	5/8"	2 1/2"	1 3/8"	4 1/2"	3/4" ø	3/8"	5/8" ø
W6X20	6"	1 3/16"	3 1/4"	5/8"	2 1/2"	1 3/8"	4 1/2"	3/4" ø	3/8"	5/8" ø
W8X18	5 1/4"	1 5/16"	2 5/8"	3/4"	2 1/2"	1 3/8"	4 5/8"	7/8" ø	1/2"	3/4" ø
W8X21	5 1/4"	1 5/16"	2 5/8"	3/4"	2 1/2"	1 3/8"	4 5/8"	7/8" ø	1/2"	3/4" ø
W8X24	6 1/2"	1 1/2"	3 1/2"	7/8"	3"	1 5/8"	5 1/2"	1" ø	9/16"	7/8" ø
W8X28	6 1/2"	1 9/16"	3 3/8"	7/8"	3"	1 3/4"	5 5/8"	1" ø	1/2"	7/8" ø
W8X31	8"	1 5/8"	4 3/4"	1"	3 1/2"	2"	6 1/2"	1 1/8" ø	5/8"	1" ø
W10X33	8"	1 7/8"	4 1/4"	1 1/8"	4 1/2"	2 1/4"	7 7/8"	1 1/4" ø	3/4"	1 1/8" ø

TABLE 5 - BACK PLATE DATA

Post Size	A	B	C	J	K	I	dl	t2	Bolt Size
S3X5.7	2 5/16"	9/16"	1 1/2"	1 1/4"	4 1/2"	7"	5/8" ø	1/4"	1/2" ø
S4X7.7	2 5/16"	9/16"	1 1/2"	1 1/4"	4 1/2"	7"	5/8" ø	1/4"	1/2" ø
S5X10	3"	11/16"	1 5/8"	1 1/4"	4 3/4"	7 1/4"	3/4" ø	1/4"	5/8" ø
W6X12	4"	15/16"	2 1/8"	1 1/4"	4 3/4"	7 1/4"	3/4" ø	1/4"	5/8" ø
W6X15	6"	1 3/16"	3 1/4"	1 1/4"	5 1/4"	7 3/4"	3/4" ø	1/4"	5/8" ø
W6X20	6"	1 3/16"	3 1/4"	1 1/4"	5 1/4"	7 3/4"	3/4" ø	1/4"	5/8" ø
W8X18	5 1/4"	1 5/16"	2 5/8"	1 3/8"	5 3/4"	8 1/2"	7/8" ø	1/4"	3/4" ø
W8X21	5 1/4"	1 5/16"	2 5/8"	1 3/8"	5 3/4"	8 1/2"	7/8" ø	1/4"	3/4" ø
W8X24	6 1/2"	1 1/2"	3 1/2"	1 5/8"	6"	9 1/4"	1" ø	5/16"	7/8" ø
W8X28	6 1/2"	1 9/16"	3 3/8"	1 3/4"	6"	9 1/2"	1" ø	3/8"	7/8" ø
W8X31	8"	1 5/8"	4 3/4"	2"	6 1/2"	10 1/2"	1 1/8" ø	3/8"	1" ø
W10X33	8"	1 7/8"	4 1/4"	2 1/2"	7"	1'-0"	1 1/4" ø	7/16"	1 1/8" ø

NOTES-

✳ 1. Design Specification: AASHTO Standard Specifications for Structural Supports for Highway Signs, Luminaires and Traffic Signals, 2001 Edition with 2003 Interims.

2. Concrete Footings shall be Class M6 fc 4000 p.s.i.

3. Structural Steel shall conform to ASTM A36.

4. All Reinforcing Steel, except spirals, shall conform to ASTM 615 Grade 60.

5. Spiral Reinforcing Steel may be fabricated from cold drawn wire ASTM A82, or hot rolled plain or deformed bars conforming to the strength requirements of ASTM A615, Grade 60.

6. All Bolts and Nuts shall conform to ASTM A325 except that 1/2" diameter bolts may conform to either ASTM A325 or ASTM A449. Washers shall conform to ASTM F436. All hardware shall be galvanized in accordance with ASTM A153.

7. All structural steel including Posts and Post Stubs shall be galvanized in accordance with ASTM A123.

8. All Bolt Holes shall be drilled. All plate cuts shall preferably be saw cuts. However, Flame Cutting will be permitted providing all edges are ground smooth (metal projecting beyond the plane of the plate face will NOT be allowed).

9. All welding and weld inspection shall be in accordance with the latest edition of AWS D 1.1 Structural Welding Code.

PROCEDURE FOR ASSEMBLING SLIP BASE-

1. Place galvanized Sheet Metal Diaphrams on top of the lower slip plate.

2. Connect main post to Stub Post with clean unlubricated bolts and nuts with one Hardened Washer on each bolt between slip plates.

3. Plumb post by adding shims between slip plates.

4. Tighten bolts to a practical maximum, using a 12" - 15" wrench in order to bed surfaces and clean threads. DO NOT TIGHTEN TO PROOF LOAD.

5. Loosen all bolts and retighten in increments, using a systematic order, until each bolt has been tightened to the specified torque corresponding to the post size used (See Slip Base Plate Data). Tighten bolts only to the torque specified. DO NOT OVERTIGHTEN. Check torque on each bolt after entire sign has been erected.

ASSEMBLY OF FRICTION FUSE PLATES, BACK PLATES AND STIFFENERS-

1. High strength bolts shall be tightened so as to obtain a residual tension by the use of load indicator washers.

2. High strength bolts may be tightened by the "Turn of the Nut" method as provided in Section 11.5.6.4.4 of the AASHTO Standard Specifications for Highway Bridges in lieu of # 1 above.

SHOP PLANS-

The fabricator shall initially submit two (2) copies of the shop plans to the Office of Bridge Design for review. One reviewed copy will be sent back to the fabricator who will then make changes, if any, and then send the Office of Bridge Design six (6) final approved copies for distribution.

ERECTION DETAILS
FOR
TWO-POST TWO-DIRECTION BREAKAWAY SIGN SUPPORTS

S. D. DEPT. OF TRANSPORTATION
DECEMBER 1994 (1) OF (2)

MK	REVISION	DATED	BY
✳	Specification Update	7/11/05	AV

DESIGNED BY	DRAWN BY	CHECKED BY	APPROVED
RH/DM	RH/TB	RH/DM	John C. Cole
CNTYPCEM	PCEMDSPG	BSTDBS2C	BRIDGE ENGINEER

PLOT SCALE - 1:200
PLOT NAME - 25
FILE - ...\TYPICAL ERECTION DETAILS.DGN
PLOTTED FROM - SOELLNER

FOR BIDDING PURPOSES ONLY

Plotting Date: 8/11/2015

NOTE-
Sign face details shown are those for extruded aluminum panels. See Erection Details for SHEET ALUMINUM SIGNS for mounting flat sheet sign face.

△Mounting height as recommended by latest edition of AASHTO ROADSIDE DESIGN GUIDE.

ϕClear distance as recommended by latest edition of MANUAL ON UNIFORM TRAFFIC CONTROL DEVICES.

NOTE- N = Number of Stiffeners to be used
H = Vertical dimension of sign
L = Horizontal dimension of Main Sign

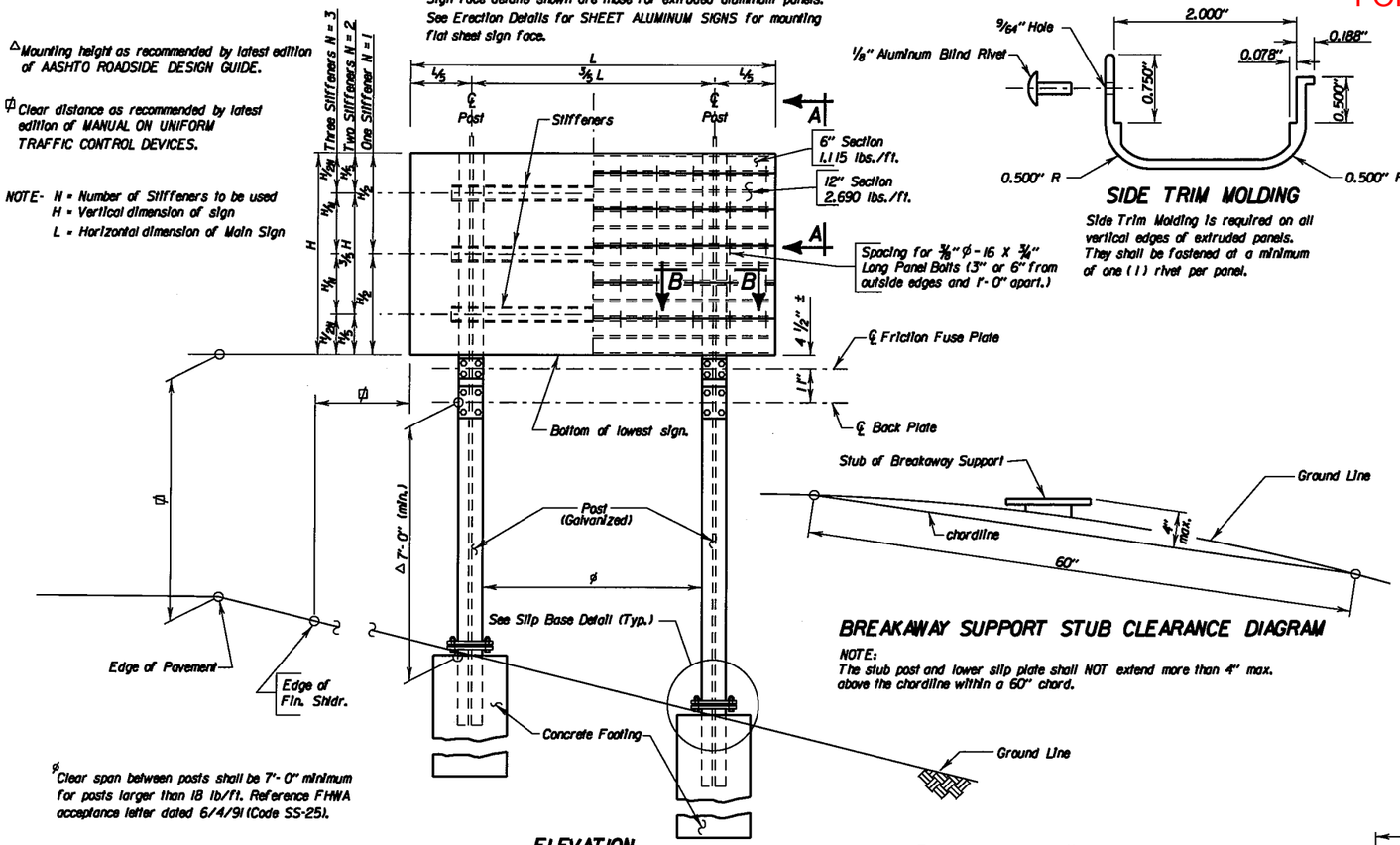

ϕClear span between posts shall be 7'-0" minimum for posts larger than 18 lb/ft. Reference FHWA acceptance letter dated 6/4/91 (Code SS-25).

ELEVATION

SIDE TRIM MOLDING

Side Trim Molding is required on all vertical edges of extruded panels. They shall be fastened at a minimum of one (1) rivet per panel.

BREAKAWAY SUPPORT STUB CLEARANCE DIAGRAM

NOTE:
The stub post and lower slip plate shall NOT extend more than 4" max. above the chordline within a 60" chord.

STIFFENER DATA							
Post	Stiffener	a	b	c	d	Bolt (A325)	Plate Thk.
S3X5.7 thru W8X21	C3X5	10 1/2"	5"	1 1/4"	8"	5/8" ϕ	5/16"
W8X24 thru W10X33	C5X6.7	13 1/2"	6"	1 1/2"	10 1/2"	7/8" ϕ	3/8"

STIFFENER NOTES-

1. Stiffeners must always be used on Two Post Breakaway signs regardless of type of sign face employed.
2. Number of stiffeners used, N, shall be as follows:
   If H <= 2'-0" then N = 1
   If 2'-0" < H <= 8'-0" then N = 2
   If 8'-0" < H <= 15'-0" then N = 3

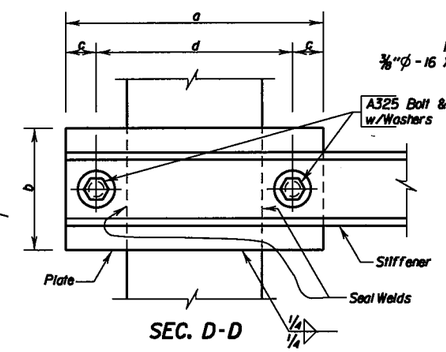

SEC. D-D

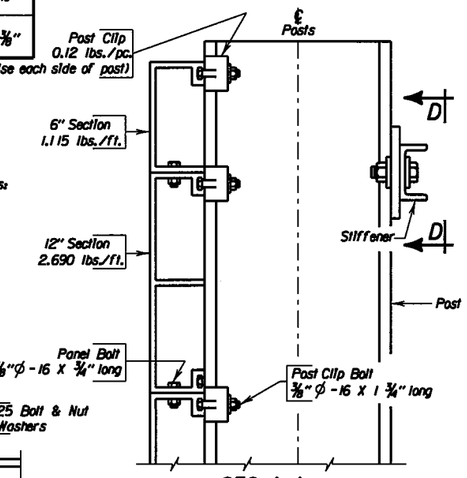

SEC. A-A

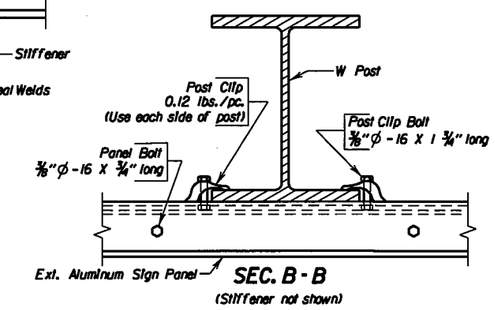

SEC. B-B
(Stiffener not shown)

Slip Base Detail

See Erection Details for SLIP BASE ALTERNATE.

TRAFFIC DIRECTION

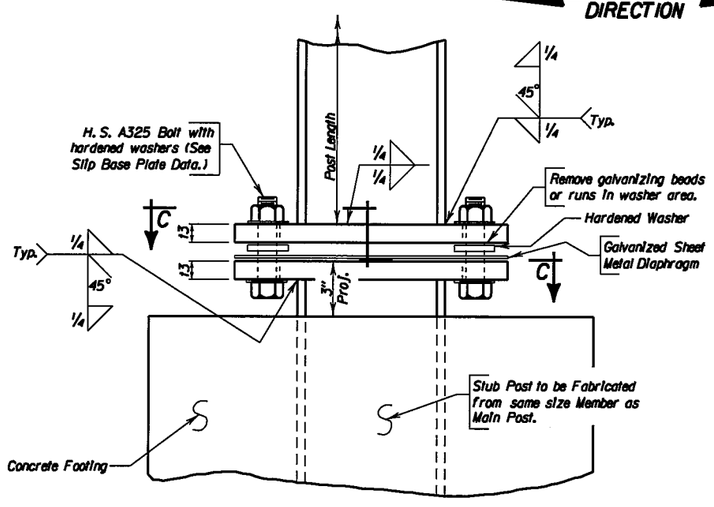

SLIP BASE DETAIL

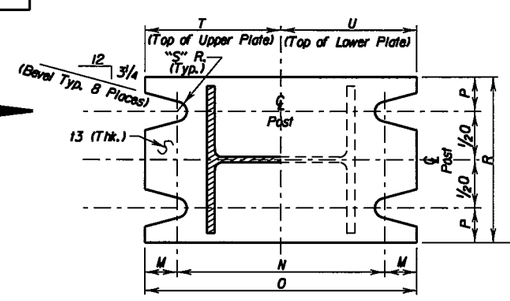

SEC. C-C

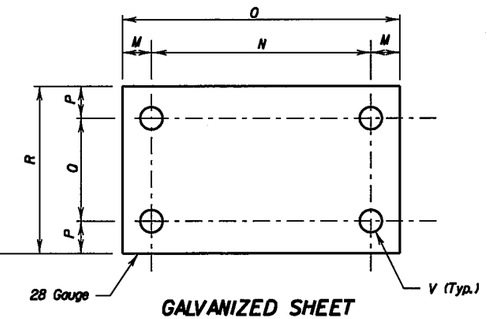

GALVANIZED SHEET METAL DIAPHRAGM

TABLE 3 - SHEET METAL DIAPHRAGM DATA							
Post Size	M	N	O	P	O	R	V
S3X5.7	3/4"	6"	7 1/2"	3/4"	1 1/2"	3"	5/8"
S4X7.7	3/4"	6"	7 1/2"	3/4"	1 1/2"	3"	5/8"
S5X10	7/8"	7 1/4"	9"	3/4"	2"	3 1/2"	3/4"
W6X12	7/8"	8 1/4"	10"	7/8"	2 3/4"	4 1/2"	3/4"
W6X15	1 1/8"	8 1/2"	10 3/4"	1 1/4"	4"	6 1/2"	7/8"
W6X20	1 1/8"	10"	1'-0 1/4"	1 1/4"	4"	6 1/2"	7/8"
W8X18	1 1/8"	10 1/2"	1'-0 3/4"	1 1/4"	3 1/2"	6"	7/8"
W8X21	1 1/4"	11 1/4"	1'-1 3/4"	1 1/4"	3 1/2"	6"	1"
W8X24	1 1/2"	11"	1'-2"	1 5/8"	4 1/4"	7 1/2"	1"
W8X28	1 5/8"	11 1/4"	1'-2 1/2"	1 5/8"	4 1/4"	7 1/2"	1"
W8X31	1 3/4"	11 1/4"	1'-2 3/4"	1 7/8"	5 1/4"	9"	1 1/8"
W10X33	1 3/4"	1'-2"	1'-5 1/2"	1 7/8"	5 1/4"	9"	1 1/8"

TABLE 4 - SLIP BASE PLATE DATA												
Post Size	M	N	O	P	O	R	S	T	U	13	Bolt Size	Bolt Torque
S3X5.7	3/4"	6"	7 1/2"	3/4"	1 1/2"	3"	9/32"	3 3/4"	3 3/4"	5/8"	1/2" ϕ	142" - #
S4X7.7	3/4"	6"	7 1/2"	3/4"	1 1/2"	3"	9/32"	3 3/4"	3 3/4"	5/8"	1/2" ϕ	142" - #
S5X10	7/8"	7 1/4"	9"	3/4"	2"	3 1/2"	11/32"	4 1/2"	4 1/2"	7/8"	5/8" ϕ	345"- #
W6X12	7/8"	8 1/4"	10"	7/8"	2 3/4"	4 1/2"	11/32"	5"	5"	7/8"	5/8" ϕ	345"- #
W6X15	1 1/8"	8 1/2"	10 3/4"	1 1/4"	4"	6 1/2"	13/32"	5 3/8"	5 3/8"	1"	3/4" ϕ	554"- #
W6X20	1 1/8"	10"	1'-0 1/4"	1 1/4"	4"	6 1/2"	13/32"	6 1/8"	6 1/8"	1"	3/4" ϕ	554"- #
W8X18	1 1/8"	10 1/2"	1'-0 3/4"	1 1/4"	3 1/2"	6"	13/32"	6 3/8"	6 3/8"	1"	3/4" ϕ	554"- #
W8X21	1 1/4"	11 1/4"	1'-1 3/4"	1 1/4"	3 1/2"	6"	15/32"	6 7/8"	6 7/8"	1"	7/8" ϕ	645" -#
W8X24	1 1/2"	11"	1'-2"	1 5/8"	4 1/4"	7 1/2"	15/32"	7"	7"	1"	7/8" ϕ	645" -#
W8X28	1 5/8"	11 1/4"	1'-2 1/2"	1 5/8"	4 1/4"	7 1/2"	17/32"	7 1/4"	7 1/4"	1 1/8"	1" ϕ	735" - #
W8X31	1 3/4"	11 1/4"	1'-2 3/4"	1 7/8"	5 1/4"	9"	17/32"	7 3/8"	7 3/8"	1 1/8"	1" ϕ	735" - #
W10X33	1 3/4"	1'-2"	1'-5 1/2"	1 7/8"	5 1/4"	9"	17/32"	8 3/4"	8 3/4"	1 1/4"	1" ϕ	735" - #

NOTE: Diaphragm need not be regalvanized after cutting to size and drilling of holes.

ERECTION DETAILS
FOR
TWO-POST TWO-DIRECTION
BREAKAWAY SIGN SUPPORTS
S. D. DEPT. OF TRANSPORTATION
DECEMBER 1994

(2) OF (2)

DESIGNED BY	DRAWN BY	CHECKED BY	APPROVED
RH/DM	TB	RH/DM	John C. Cole
CNTYPCEM	PCEMDSPG	BSTDBS2D	BRIDGE ENGINEER

PLOT SCALE - 1:200
PLOTTED FROM - SOELLNER
PLOT NAME - 26
FILE ....\TYPICAL ERECTION DETAILS.DGN

FOR BIDDING PURPOSES ONLY

Plotting Date: 8/11/2015

△ Select correct bracket number by selecting the intersection of sign height (vertical distance from bottom of sign to top of sign) and post length (vertical distance from bottom of post to top of sign) in the bracket selecion matrix. The intersection will be either zone 1, 2 or 3 which corresponds to bracket numbers 1, 2 or 3. All brackets to be permanently labeled with the appropriate bracket type and bracket selection number.

POST LENGTH

SIGN HEIGHT	10	11	12	13	14	15	16	17	18	19	20	21	22	23	24	25
3																
4																
5																
6																
7																
8																
9																
10																
11																
12																
13																
14																
15																

1 2 3

△ BRACKET SELECTION TABLE

(6" W-Shape)

POST LENGTH

SIGN HEIGHT	10	11	12	13	14	15	16	17	18	19	20	21	22	23	24	25
3																
4																
5																
6																
7																
8																
9																
10																
11																
12																
13																
14																
15																

1 2 3

△ BRACKET SELECTION TABLE

(8" W-Shape)

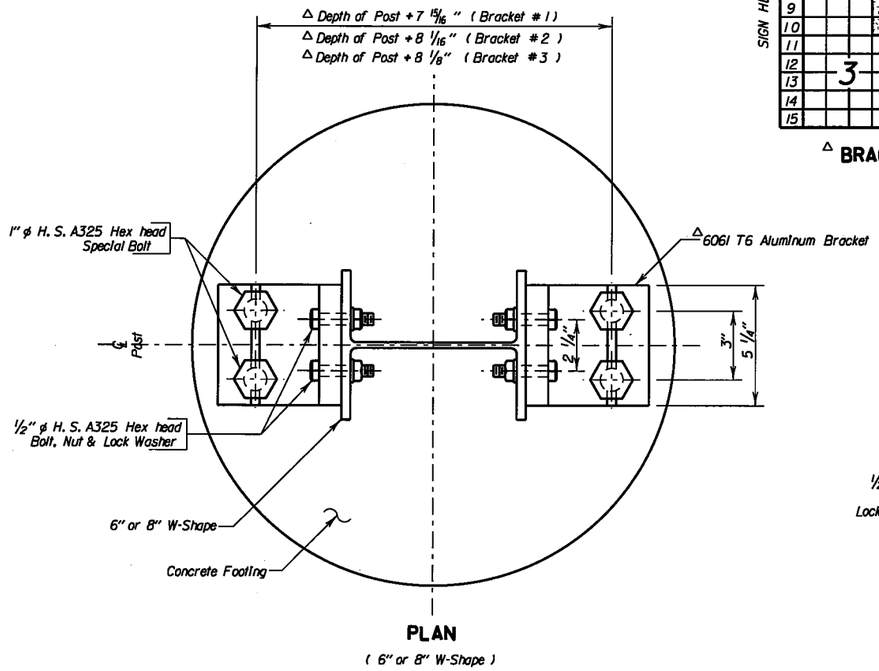

PLAN

(6" or 8" W-Shape)

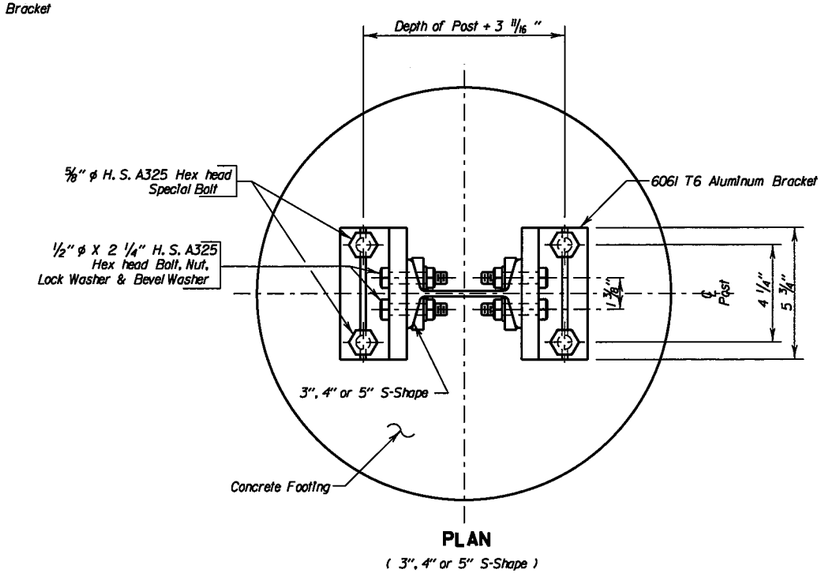

PLAN

(3", 4" or 5" S-Shape)

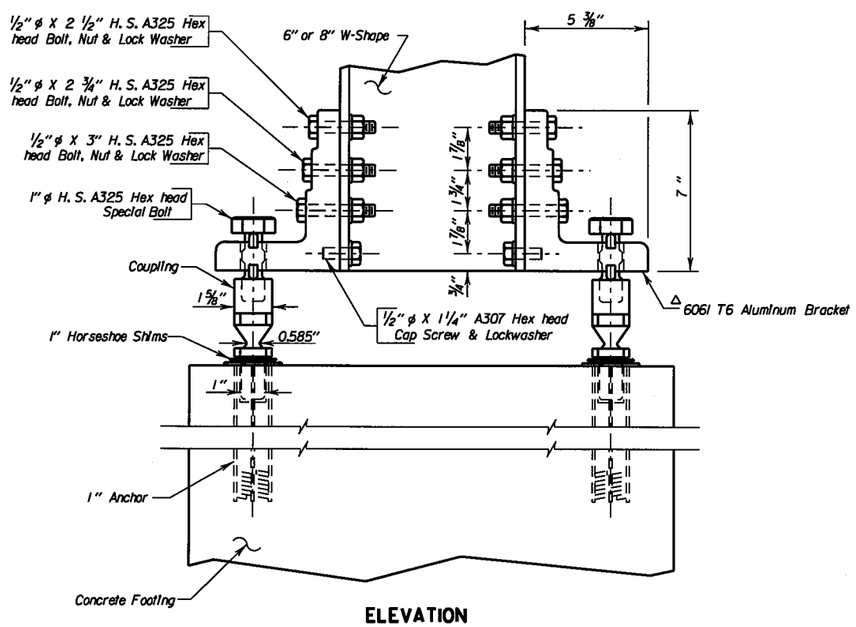

ELEVATION

(6" or 8" W-Shape)

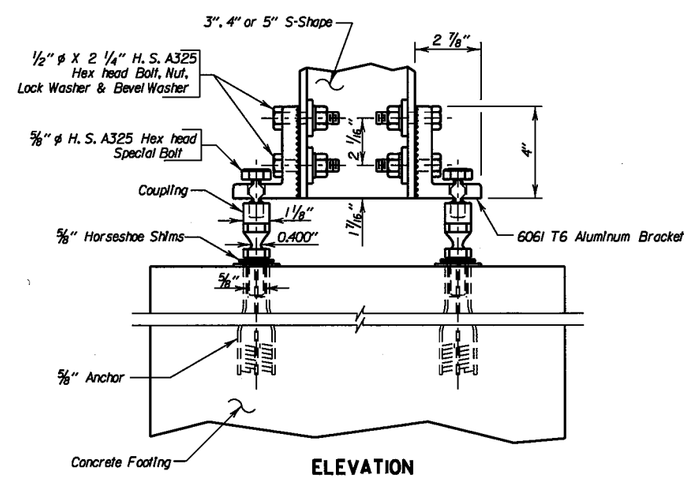

ELEVATION

(3", 4" or 5" S-Shape)

NOTES-

ø 1. Design Specification: AASHTO Standard Specifications for Structural Supports for Highway Signs, Luminaires and Traffic Signals, 2001 Edition with 2003 Interims.

2. Transpo Industries shall provide certification that the hardware furnished has essentially the same chemistry, mechanical properties, and geometry as that used in the FHWA tests, and that it will meet the FHWA change in velocity requirements. Reference FHWA acceptance letter dated 1/8/90 (Code SS-17).
3. Transpo Industries shall also provide certification that the "break-safe" system furnished meets the structural requirements set forth in the AASHTO Standard Specifications for Structural Supports for Highway Signs, Luminaires and Traffic Signals, 1994 Edition.
4. All structural steel shall be galvanized in accordance with ASTM A123.
5. All hardware shall be galvanized in accordance with ASTM A153.
6. Fasteners, except for special bolt and coupling, are installed with lockwashers or locknuts and do not have specific torque requirements. Fasteners should be made as tight as possible with conventional wrenches unless noted otherwise.
7. Square and level individual components to minimize need for shimming.
8. No more than two shims underneath any one coupling and no more than three shims underneath any two couplings.
9. Use of this slip base alternate is limited to situations where the TOTAL weight of all posts below the hinges is 45 lbs/ft.

ANCHOR ASSEMBLY-

1. Assemble coupling anchors to installation template (not shown).
2. Lower entire anchor assembly into fresh concrete and vibrate into position so that the tops of the individual anchors are flush with the finished top surface of the footings.

COUPLING ASSEMBLY-

1. Suspend post over footing and insert special bolts through brackets.
2. Below bracket, thread couplings into anchors but leave loose.
3. Lower post with special bolts onto loose couplings and thread special bolts into couplings. Thread couplings all the way into anchors.
4. Tighten special bolts with 1 5/8" wrench. Do NOT place torque across necked down portion of coupling. Wrench flats are provided on either side for proper tightening.
5. If post is not plumb, insert shims between couplings and anchors.

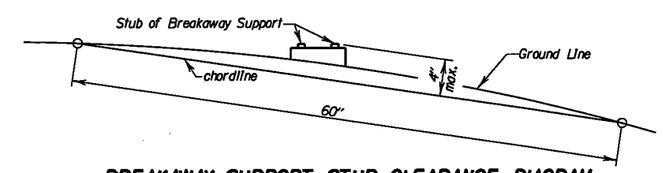

BREAKAWAY SUPPORT STUB CLEARANCE DIAGRAM

NOTE:
The stub shall NOT extend more than 4" max. above the chordline within a 60" chord.

ERECTION DETAILS
FOR
SLIP BASE ALTERNATE
(FOR BREAKAWAY SIGN SUPPORTS)
S. D. DEPT. OF TRANSPORTATION
DECEMBER 1994 (1) OF (1)

MK	REVISION	DATED	BY
ø	Specification Update	7/11/05	AV

DESIGNED BY	DRAWN BY	CHECKED BY	APPROVED
RH/DM	RH	RH/DM	BRIDGE ENGINEER
CNTYPCEM	PCEMDSPG	BSTDBST	

PLOT SCALE - 1:200

PLOTTED FROM - SQELLNER

PLOT NAME - 27

FILE - ...\TYPICAL ERECTION DETAILS.DGN

FOR BIDDING PURPOSES ONLY

Plotting Date: 8/11/2015

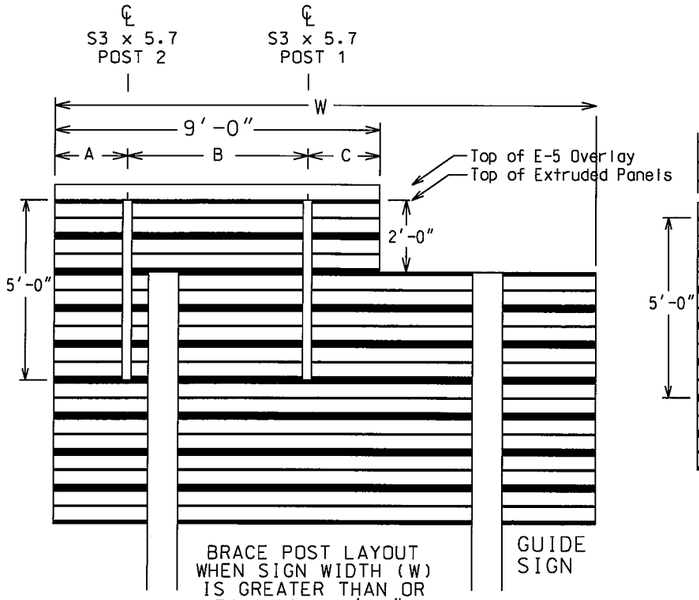

BRACE POST LAYOUT WHEN SIGN WIDTH (W) IS GREATER THAN OR EQUAL TO 12'-0".

Case 1

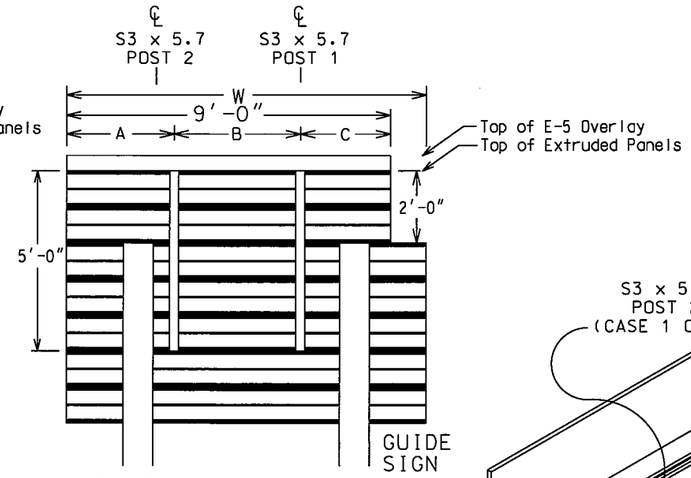

BRACE POST LAYOUT WHEN SIGN WIDTH (W) IS BETWEEN 9'-0" AND 11'-0".

Case 2

BRACE POST LOCATION TABLE				
	SIGN WIDTH (W)	• A	B	C
CASE 2	9'-0"	2'-6"	4'-0"	2'-6"
	10'-0" to 11'-0"	3'-0"	3'-6"	2'-6"
CASE 1	12'-0" to 13'-0"	1'-6"	5'-6"	2'-0"
	14'-0" and up	2'-0"	5'-0"	2'-0"

• The A dimension may be adjusted (1" max.) to allow room for post clips.

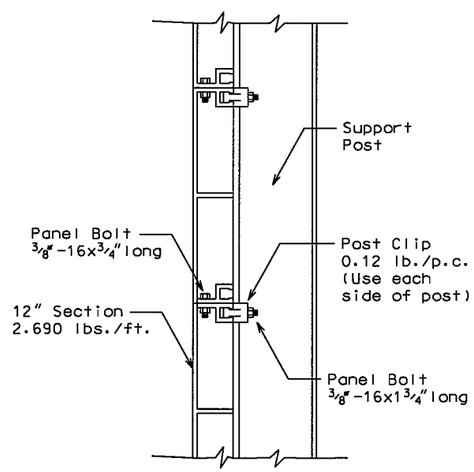

Section A-A

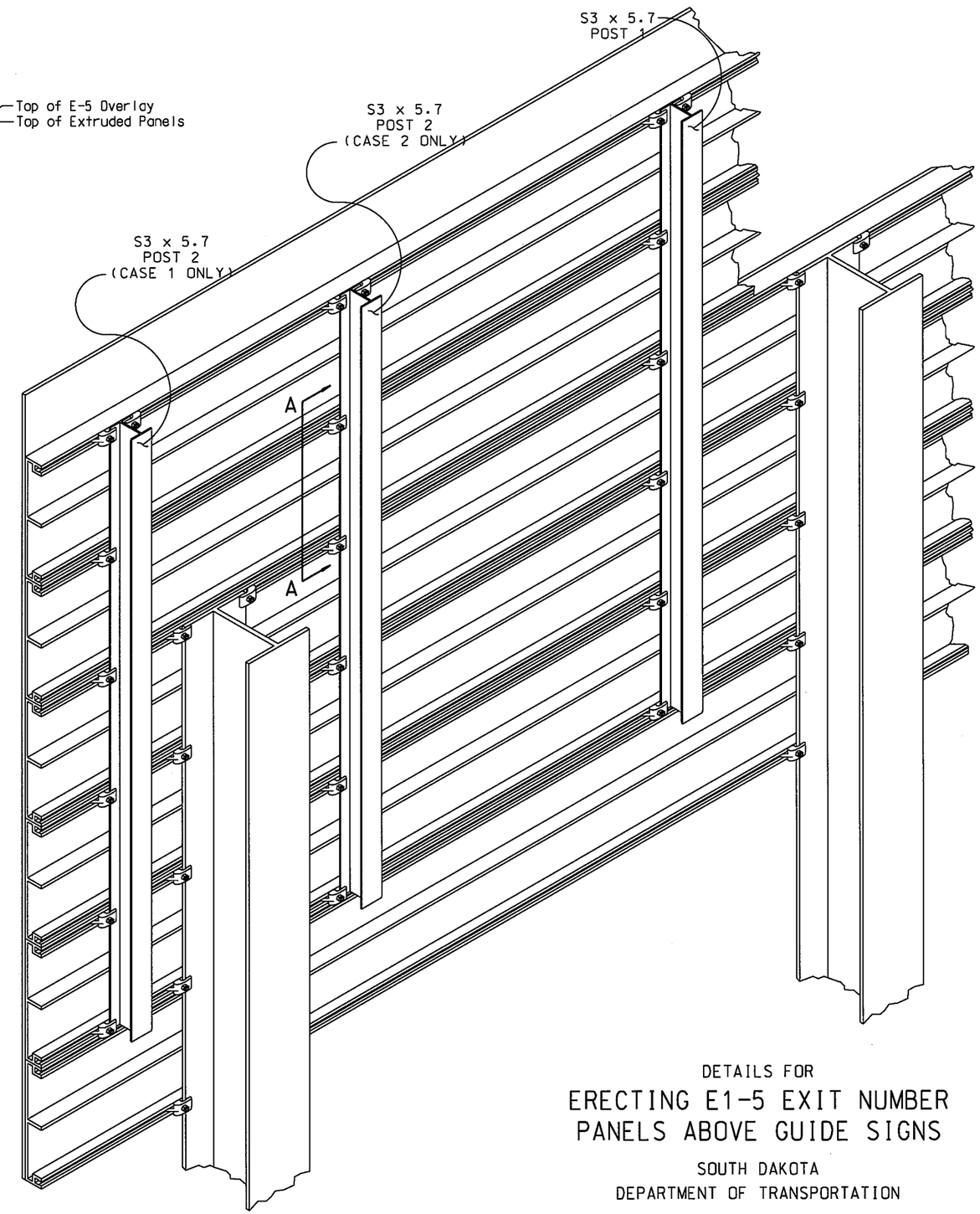

ESTIMATED BRACE POST QUANTITIES				
SIGN #/DESCRIPTION	STATION	LOCATION	LANE	FLANGED POST S3 X 5.7
Exit 8 Advanced Warning	8.000	Rt.	EB	10'
Exit 8 Exit Directional	8.509	Rt.	EB	10'
Exit 17 Advanced Warning	16.740	Rt.	EB	10'
Exit 14 Supplemental	15.237	Rt.	WB	10'
Exit 8 Advanced Warning	9.795	Rt.	WB	10'
Exit 8 Exit Directional	9.314	Rt.	WB	10'

DETAILS FOR

ERECTING E1-5 EXIT NUMBER PANELS ABOVE GUIDE SIGNS

SOUTH DAKOTA
DEPARTMENT OF TRANSPORTATION

PLOT SCALE - 1:200
PLOT NAME - 28
FILE ....\TYPICAL ERECTION DETAILS.DGN
PLOTTED FROM - SOELLNER

FOR BIDDING PURPOSES ONLY

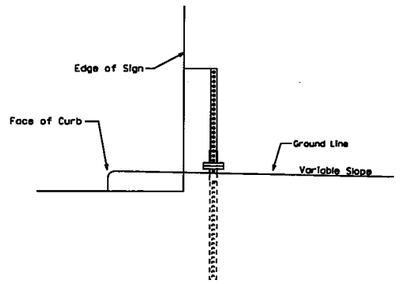

URBAN LOCATION WITH 1 POST
(Drawing shown from face of sign)

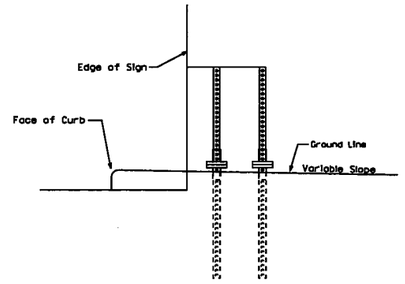

URBAN LOCATION WITH 2 POSTS
(Drawing shown from face of sign)

SIGN BASE DETAILS FOR A 2" SIGN POST

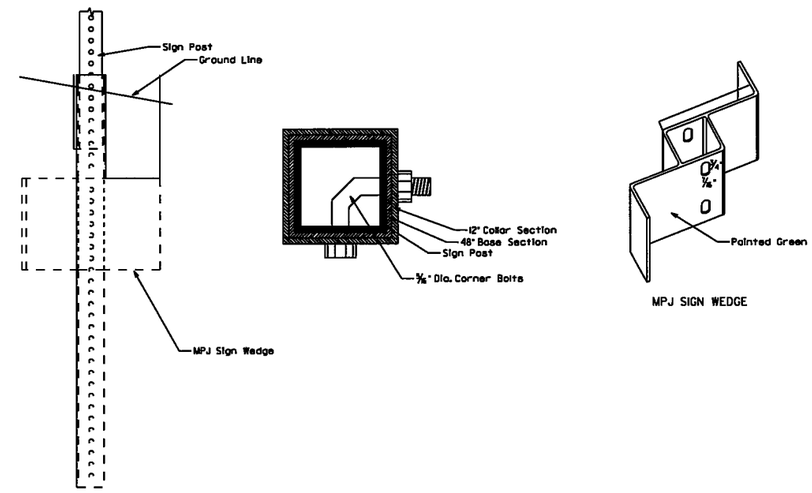

MPJ SIGN WEDGE

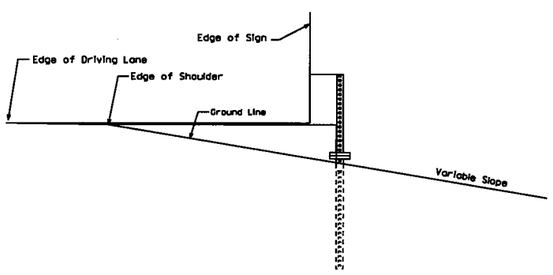

RURAL LOCATION WITH 1 POST
(Drawing shown from face of sign)

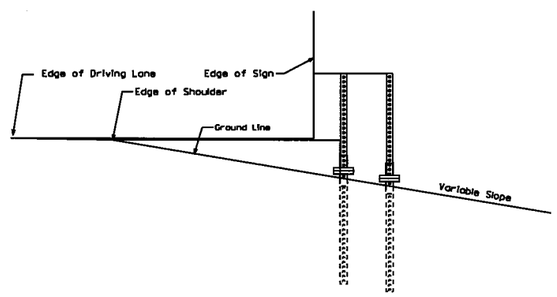

RURAL LOCATION WITH 2 POSTS
(Drawing shown from face of sign)

SIGN BASE DETAILS FOR A 2½" SIGN POST

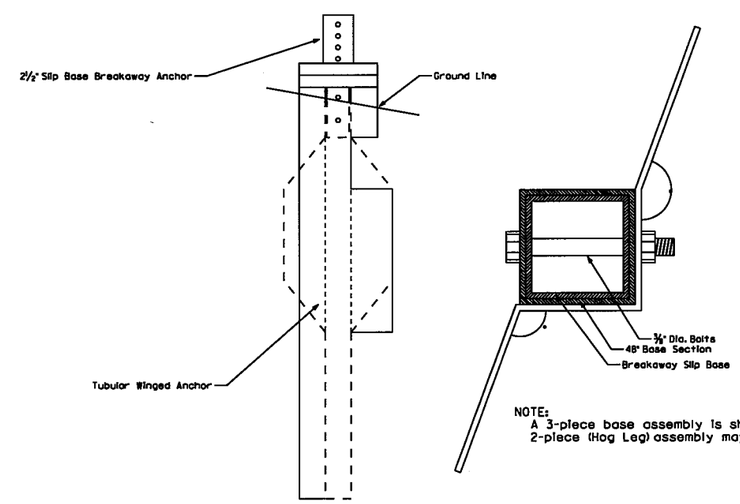

NOTE:
A 3-piece base assembly is shown, however, a 2-piece (Hog Leg) assembly may also be used.

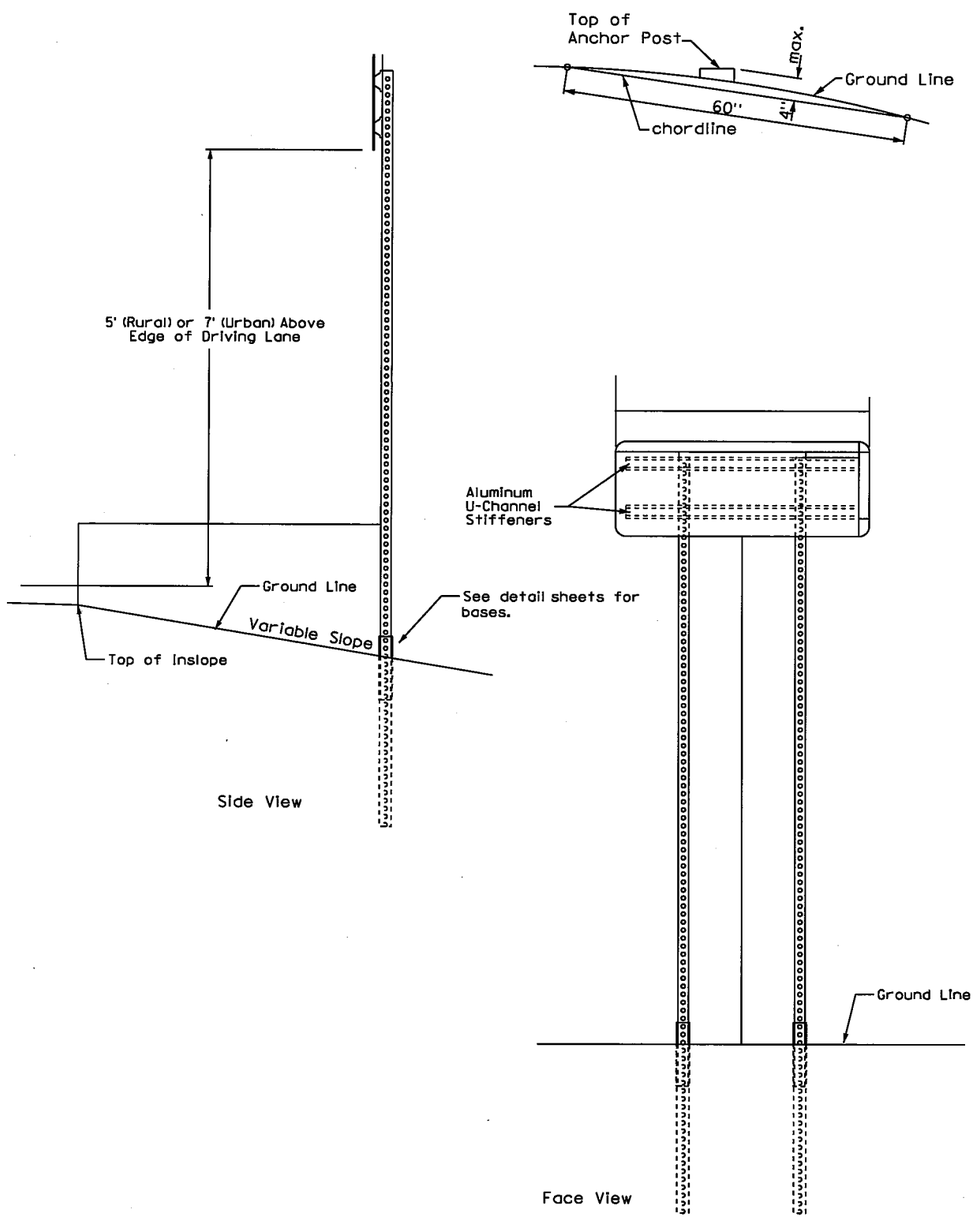

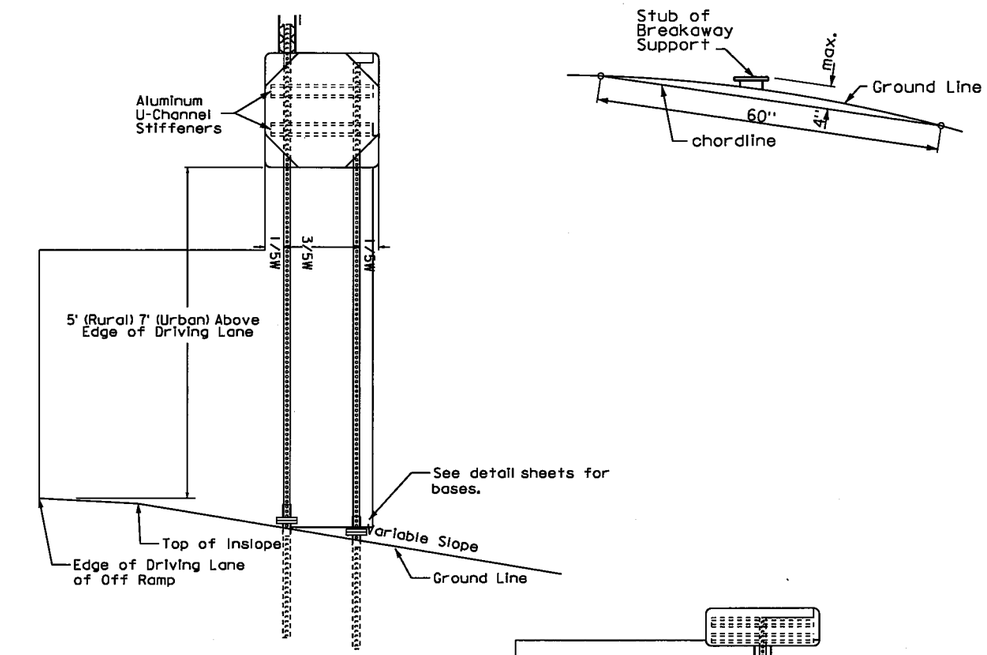

STOP SIGN WITH DO NOT ENTER SIGN AND ONE WAY SIGNS
RIGHT SIDE OF ROAD MOUNT
(One Ways to be on opposite post for left side mount)
(Drawing shown from face of Stop sign)

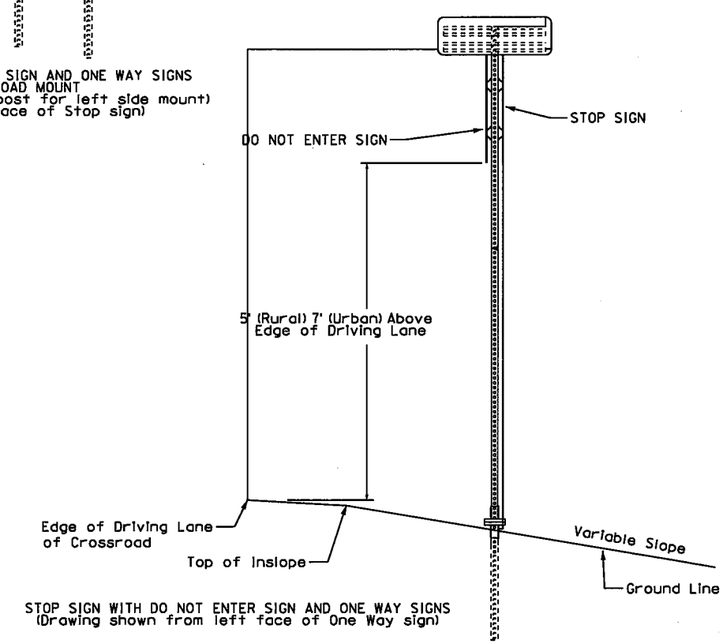

STOP SIGN WITH DO NOT ENTER SIGN AND ONE WAY SIGNS
(Drawing shown from left face of One Way sign)

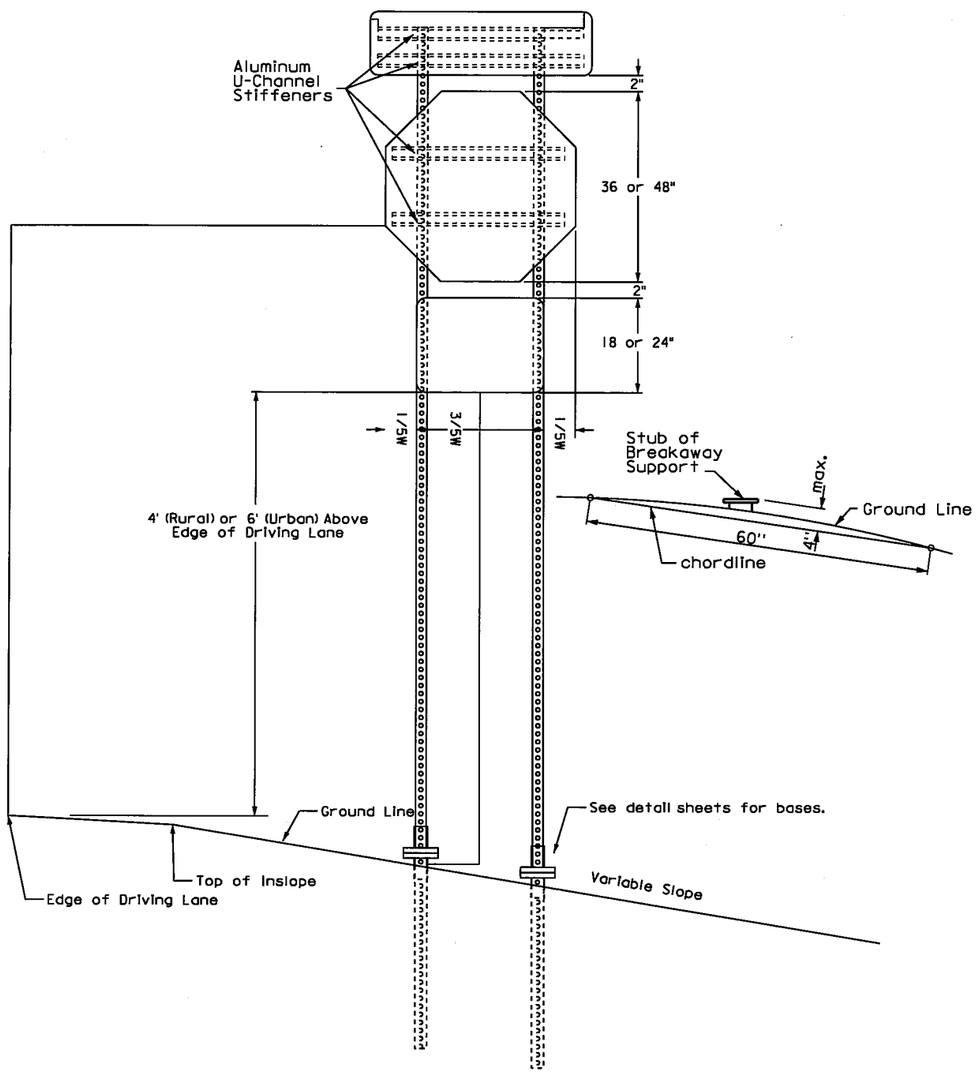

STOP SIGN WITH DIVIDED HIGHWAY SIGN AND ONE WAY SIGNS
(Drawing shown from face of sign)

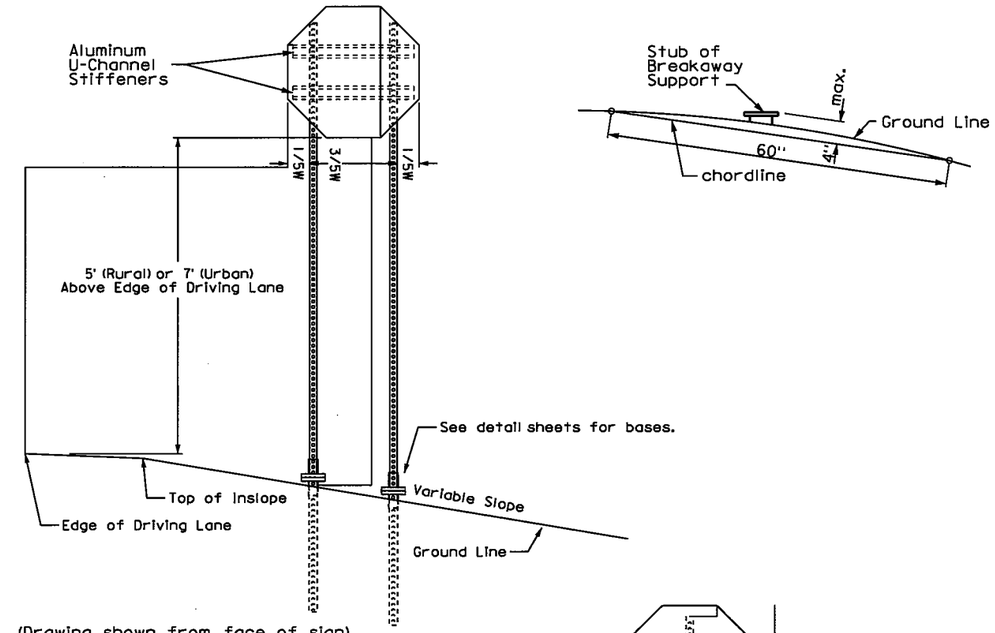

(Drawing shown from face of sign)
TWO-POST ASSEMBLY

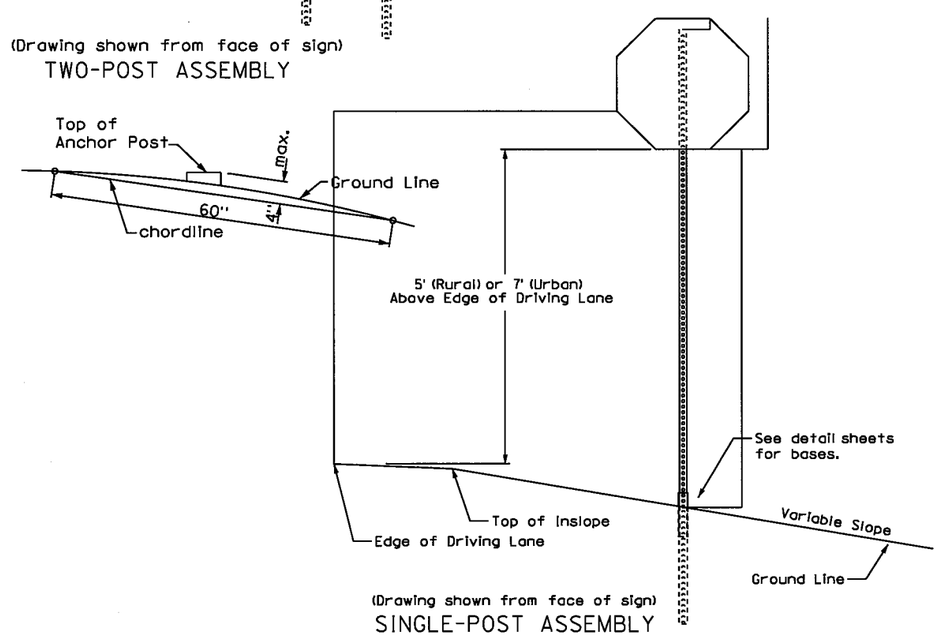

(Drawing shown from face of sign)
SINGLE-POST ASSEMBLY

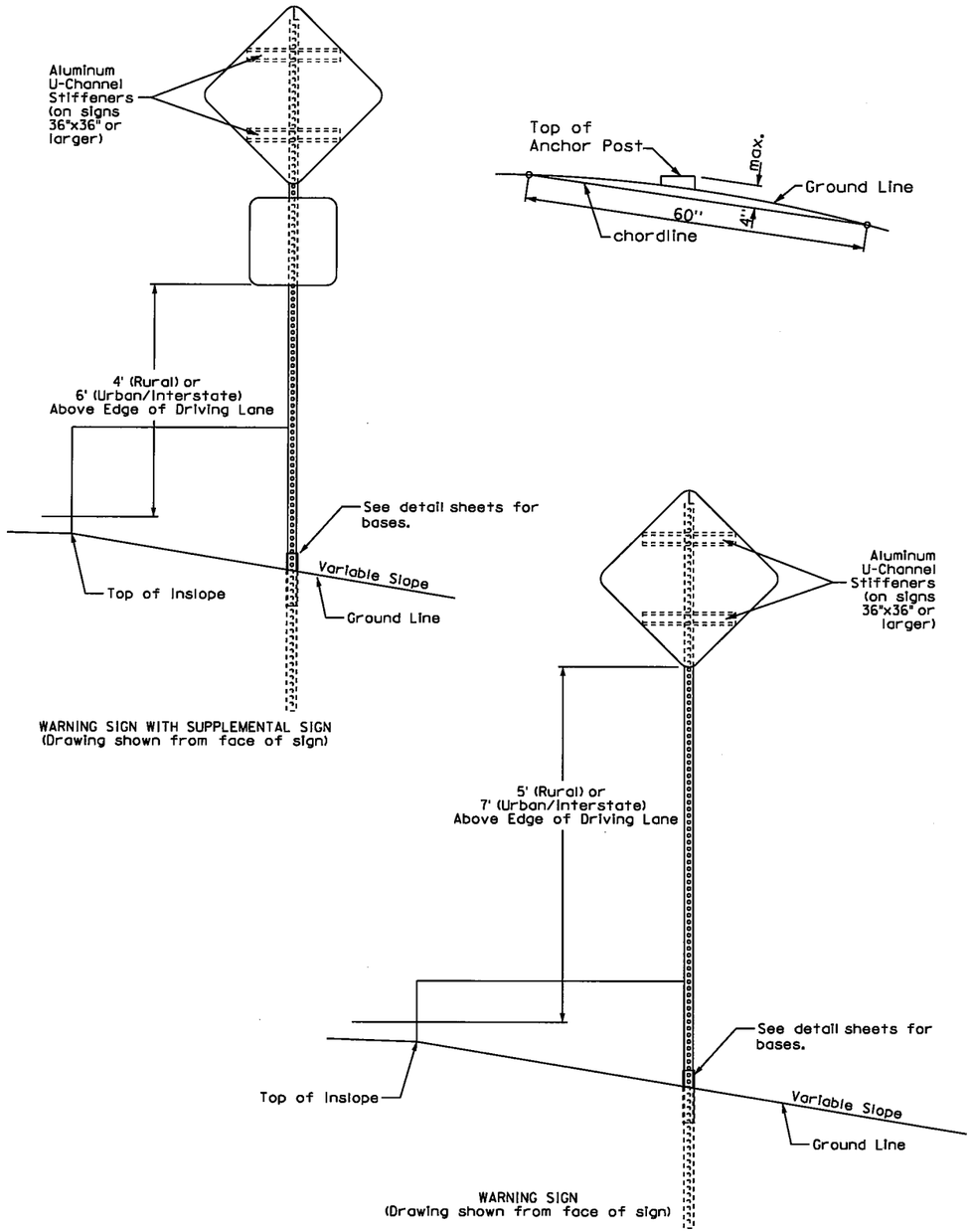
Aluminum U-Channel Stiffeners (on signs 36"x36" or larger)
4' (Rural) or 6' (Urban/Interstate) Above Edge of Driving Lane
See detail sheets for bases.
Variable Slope
Top of Inslope
Ground Line
WARNING SIGN WITH SUPPLEMENTAL SIGN
(Drawing shown from face of sign)
Top of Anchor Post
max.
Ground Line
60"
4"
chordline
Aluminum U-Channel Stiffeners (on signs 36"x36" or larger)
5' (Rural) or 7' (Urban/Interstate) Above Edge of Driving Lane
See detail sheets for bases.
Top of Inslope
Variable Slope
Ground Line
WARNING SIGN
(Drawing shown from face of sign)

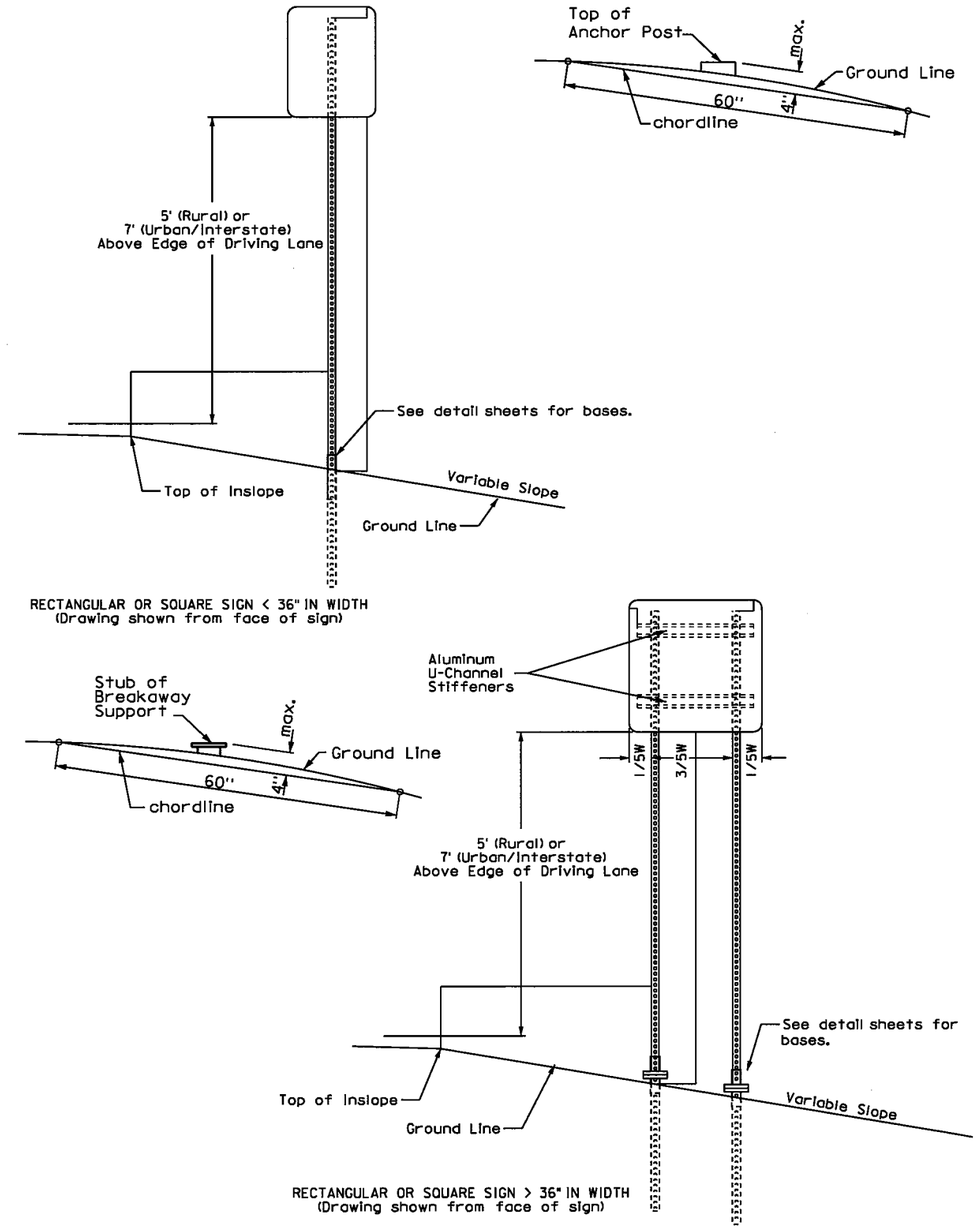
Top of Anchor Post
max.
Ground Line
60"
4"
chordline
5' (Rural) or 7' (Urban/Interstate) Above Edge of Driving Lane
See detail sheets for bases.
Top of Inslope
Variable Slope
Ground Line
RECTANGULAR OR SQUARE SIGN < 36" IN WIDTH
(Drawing shown from face of sign)
Stub of Breakaway Support
max.
Ground Line
60"
4"
chordline
Aluminum U-Channel Stiffeners
1/5W
3/5W
1/5W
5' (Rural) or 7' (Urban/Interstate) Above Edge of Driving Lane
See detail sheets for bases.
Top of Inslope
Ground Line
Variable Slope
RECTANGULAR OR SQUARE SIGN > 36" IN WIDTH
(Drawing shown from face of sign)

Delineator Erection Details

FOR BIDDING PURPOSES ONLY

STATE OF SOUTH DAKOTA	PROJECT	SHEET	TOTAL SHEETS
	IM 0901(162)14 P 014A(11)8	S43	S43

Plotting Date: 8/11/2015

4"x4" DELINEATORS
with Diamond Grade reflective sheeting

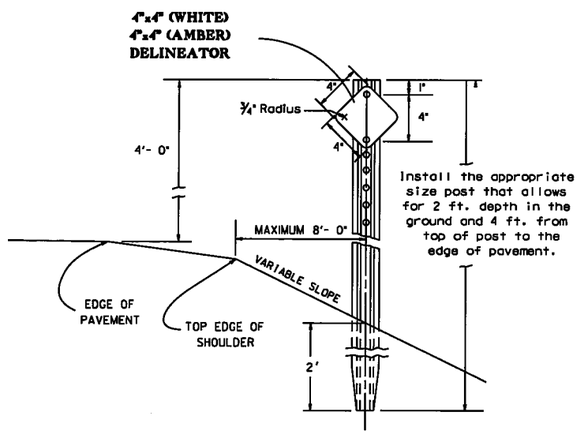

Mounting Holes in all Delineators to be 1/4" diameter

DETAIL FOR MOUNTING 4"x4" DELINEATORS BACK TO BACK ON POST

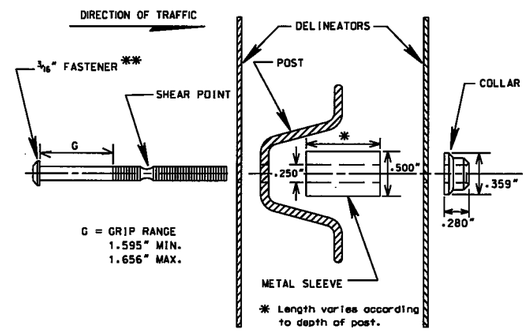

** Alternative methods of fastening, such as 3/4"- 7/8" Twin Rivets, may be approved by the Engineer.

DETAIL FOR SINGLE MOUNTING DELINEATORS ON POST

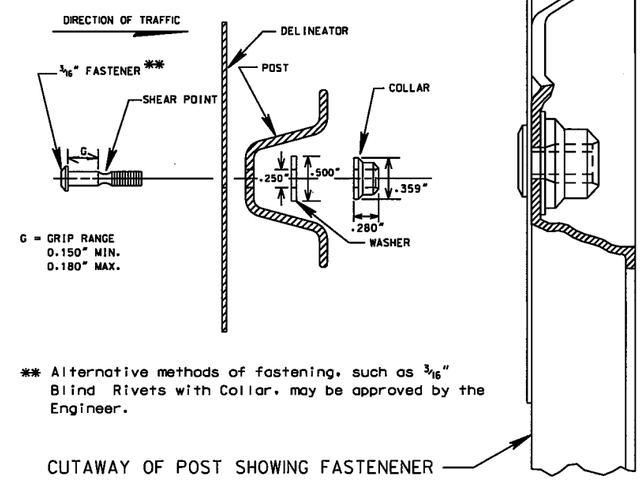

** Alternative methods of fastening, such as 3/16" Blind Rivets with Collar, may be approved by the Engineer.

POST DETAIL

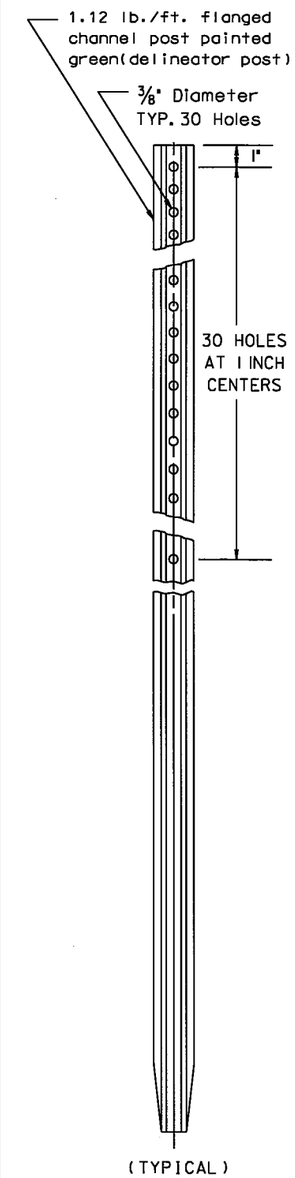

4" TUBULAR DELINEATORS
with Diamond Grade reflective sheeting

4" TUBULAR (WHITE)
4" TUBULAR (AMBER)

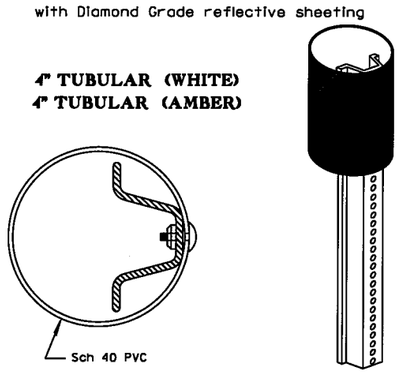

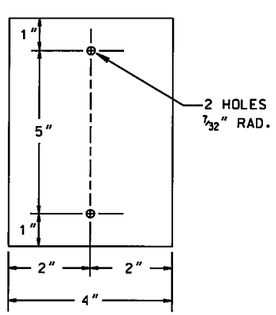

4"x4" DELINEATORS

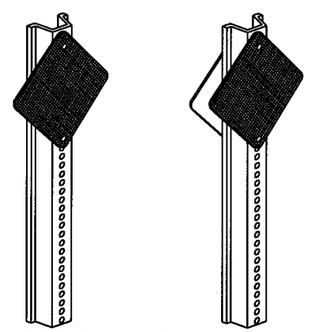

PLACEMENT BEHIND GUARDRAIL

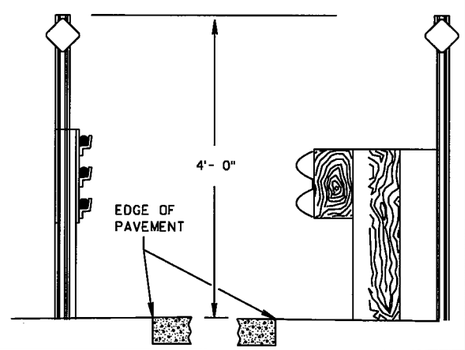

LOCATION DETAILS

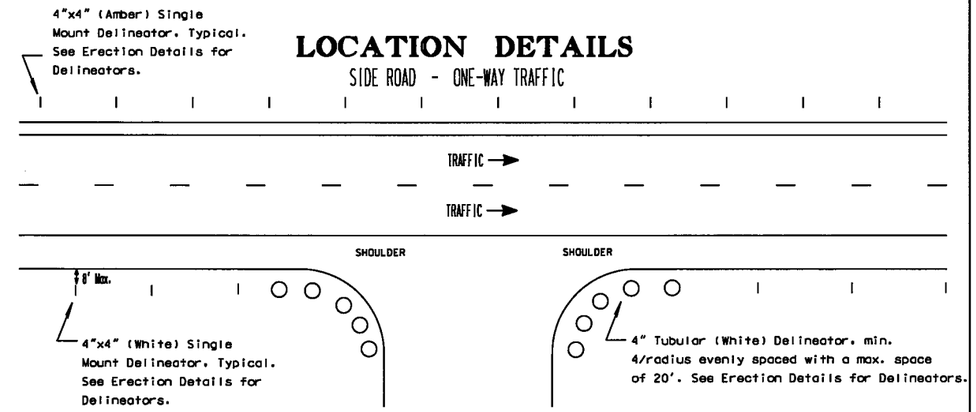

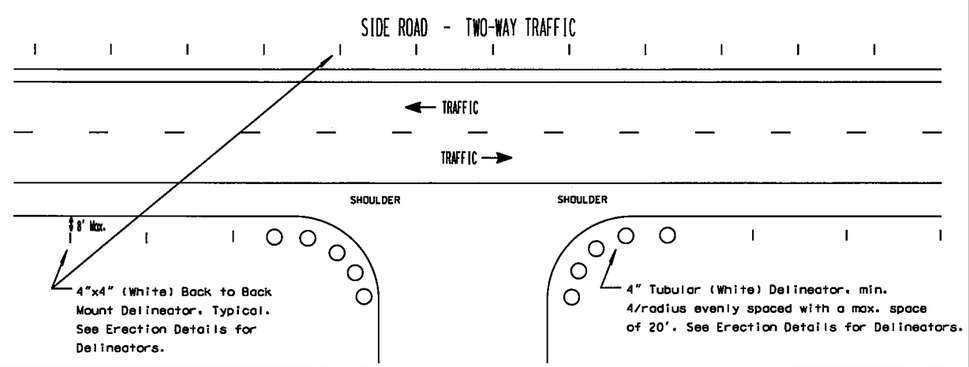

PLOT SCALE - 1:200

PLOTTED FROM - SOELLNER

PLOT NAME - 33

FILE ...\DELINEATOR ERECTION DETAILS.DGN