STATE OF SOUTH DAKOTA	PROJECT	SHEET	TOTAL SHEETS
	IM 0909(81)406	B1	B48

Plotting Date: 06/09/2016 Revised 02/16/2016 AR

Section B: Grading Plans

INDEX OF SHEETS

B1	General Layout W/Index
B2-B10	Estimate With General Notes and Tables
B11-B12	Typical Sections
B13	Horizontal Alignment & Control Data Sheet
B14	Toppography Symbology & Legend
B15-B17	Plan & Profile Sheets
B18-B22	Guardrail Layouts and Details
B23-B48	Standard Plates

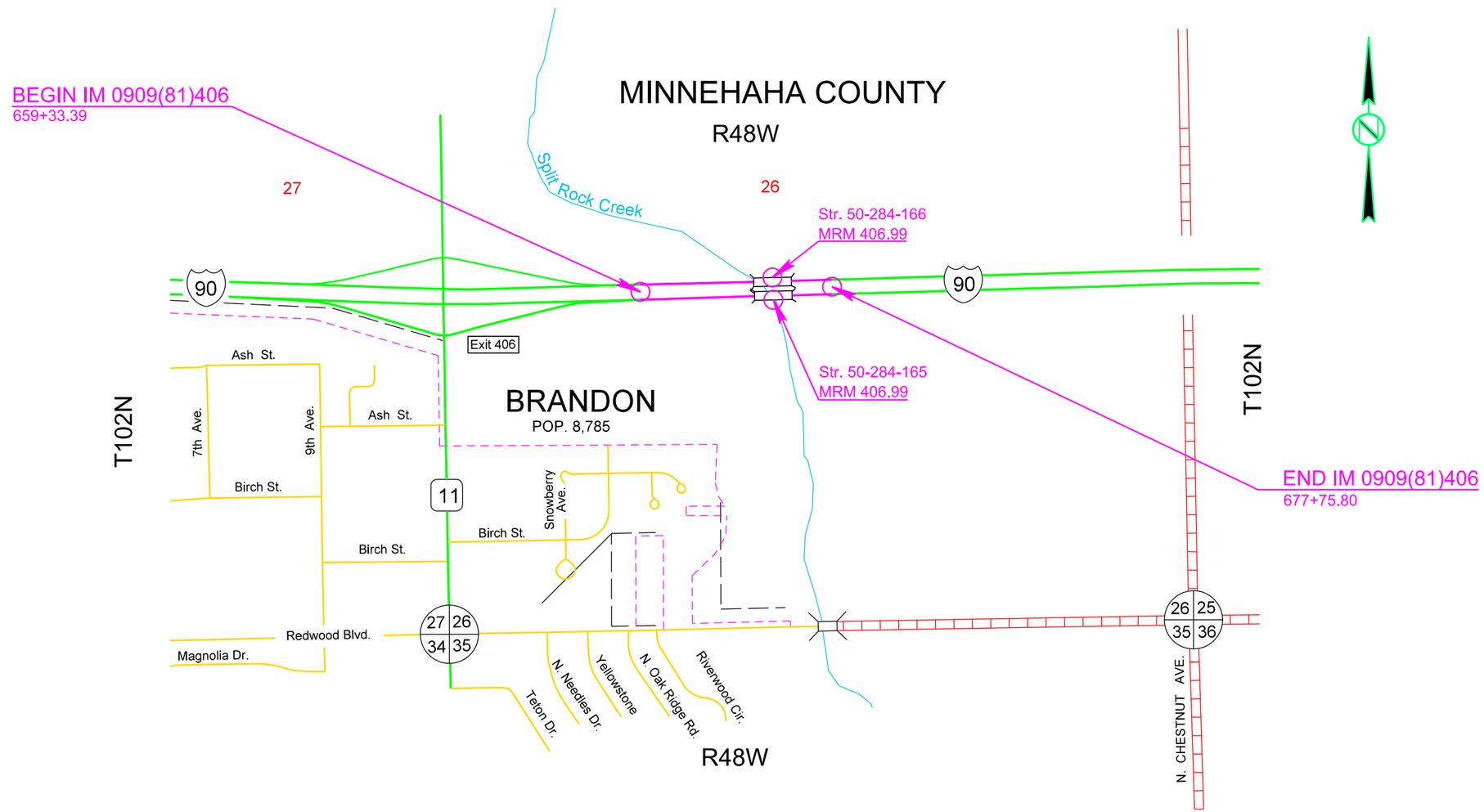

Plot Scale - 1:200

Plotted From - TRSF12141

File - U:\rdprj\Mhn\21X\TitleB.dgn

SECTION B ESTIMATE OF QUANTITIES

BID ITEM NUMBER	ITEM	QUANTITY	UNIT
009E0010	Mobilization	Lump Sum	LS
009E3230	Grade Staking	0.878	Mile
009E3250	Miscellaneous Staking	0.513	Mile
009E3280	Slope Staking	0.513	Mile
009E3290	Structure Staking	2	Each
009E3300	Three Man Survey Crew	40.0	Hour
100E0100	Clearing	Lump Sum	LS
110E0400	Remove Drop Inlet	4	Each
110E0600	Remove Fence	1,537	Ft
110E0700	Remove 3 Cable Guardrail	1,292	Ft
110E0730	Remove Beam Guardrail	328.0	Ft
110E0740	Remove 3 Cable Guardrail Anchor Assembly	6	Each
110E0745	Remove 3 Cable Guardrail Slip Base Anchor Assembly	2	Each
110E0770	Remove W Beam Guardrail Breakaway Cable Terminal	4	Each
110E1100	Remove Concrete Pavement	7,653.9	SqYd
110E4290	Salvage Beam Guardrail	275.1	Ft
110E4380	Salvage W Beam Guardrail Tangent End Terminal	2	Each
110E7020	Remove Interim Crossover Closure for Reset	640	Ft
120E0010	Unclassified Excavation	20,149	CuYd
120E0400	Select Subgrade Topping	12,109	CuYd
120E0600	Contractor Furnished Borrow Excavation	12,334	CuYd
120E6100	Water for Embankment	312.0	MGal
250E0020	Incidental Work, Grading	Lump Sum	LS
270E0040	Salvage and Stockpile Asphalt Mix and Granular Base Material	5,070.3	Ton
421E0100	Pipe Culvert Undercut	46	CuYd
450E0122	18" RCP Class 2, Furnish	86	Ft
450E0130	18" RCP, Install	86	Ft
450E0142	24" RCP Class 2, Furnish	190	Ft
450E0150	24" RCP, Install	190	Ft
450E2308	24" RCP Safety End, Furnish	4	Each
450E2311	24" RCP Safety End, Install	4	Each
450E4759	18" CMP 16 Gauge, Furnish	102	Ft
450E4760	18" CMP, Install	102	Ft
450E4769	24" CMP 16 Gauge, Furnish	78	Ft
450E4770	24" CMP, Install	78	Ft
450E5010	18" CMP Elbow, Furnish	4	Each
450E5011	18" CMP Elbow, Install	4	Each
450E5015	24" CMP Elbow, Furnish	2	Each
450E5016	24" CMP Elbow, Install	2	Each
450E5211	18" CMP Flared End, Furnish	2	Each
450E5212	18" CMP Flared End, Install	2	Each
450E5215	24" CMP Flared End, Furnish	1	Each
450E5216	24" CMP Flared End, Install	1	Each

BID ITEM NUMBER	ITEM	QUANTITY	UNIT
450E5410	24" CMP Safety End, Furnish	1	Each
450E5411	24" CMP Safety End, Install	1	Each
462E0100	Class M6 Concrete	3.1	CuYd
480E0100	Reinforcing Steel	477	Lb
600E0200	Type II Field Laboratory	1	Each
620E0020	Type 2 Right-of-Way Fence	1,445	Ft
620E0520	Type 2 Temporary Fence	400	Ft
620E1020	2 Post Panel	16	Each
620E1030	3 Post Panel	2	Each
629E0100	3 Cable Guardrail	1,384	Ft
629E0300	3 Cable Guardrail Slip Base Anchor Assembly	4	Each
629E0400	3 Cable Guardrail Anchor Assembly	4	Each
629E9060	Reset Interim Crossover Closure	640	Ft
630E0110	Straight Double Class A Thrie Beam Guardrail with Wood Posts	75.0	Ft
630E1010	Straight Class A W Beam Guardrail with Wood Posts	487.5	Ft
630E2000	W Beam to Thrie Beam Guardrail Transition	6	Each
630E2020	W Beam Guardrail Tangent End Terminal	2	Each
630E2030	W Beam Guardrail Breakaway Cable Terminal	4	Each
634E0700	Traffic Control Movable Concrete Barrier	33	Each
634E0750	Temporary Concrete Barrier End Protection	2	Each
634E0760	Temporary Concrete Barrier End Protection Module Set or Repair Kit	2	Each
650E4380	Type D48 Concrete Curb and Gutter	78	Ft
670E3200	Type D Frame and Grate	4	Each
670E5400	Precast Drop Inlet Collar	4	Each
680E0240	4" Corrugated Polyethylene Drainage Tubing	80	Ft
680E0440	4" Slotted Corrugated Polyethylene Drainage Tubing	675	Ft
680E2000	Concrete Headwall for Underdrain	2	Each
680E2500	Porous Backfill	378.0	Ton
720E1015	Bank and Channel Protection Gabion	9.0	CuYd

GRADING OPERATIONS

Water for Embankment is estimated at the rate of 10 gallons of water per cubic yard of Embankment minus Waste.

The estimated cubic yards of excavation and/or embankment required to construct outlet ditches, ditch blocks, and approaches are included in the earthwork balance notes on the profile sheets.

Special ditch grades and other sections of the roadway different than the typical section(s) shall be constructed to the limits shown on the cross sections. If significant changes to the cross sections are necessary during construction, the Engineer shall contact the Designer for the proposed change.

Generally, all shallow inlet and outlet ditches as noted on the plan sheets shall be cut with a 10-foot wide bottom with 5:1 backslopes. However, the Engineer may direct the Contractor to adjust the ditch width for proper alignment with the drainage structure.

Temporary fence and/or permanent fence shall be placed ahead of the grading operation unless otherwise directed by the Engineer.

TYPE II FIELD LABORATORY

The lab shall be equipped with an internet connection such as DSL, cable modem, or other approved service. The internet connection shall be provided with a multi-port wireless router. The internet connection shall be a minimum speed of 512 Kb unless limited by job location and approved by the DOT. Prior to installing the wireless router the Contractor shall submit the wireless router's technical data to the Area Office to check for compatibility with the state's computer equipment. The internet connection is intended for state personnel usage only. The Contractor's personnel are prohibited from using the internet connection unless pre-approved by the Project Engineer.

The Contractor shall submit a copy of each monthly bill for calls charged to this phone at the end of each month. The Project Engineer will then audit the bills to ensure all calls are legitimate and then initiate a Construction Change Order (CCO) to reimburse the Contractor for the actual phone calls made, including local and long distance calls. Reimbursement will not be made for fees associated with the purchase, installation, disconnection, monthly line charges, and incidentals involved in the installation, maintenance, and disconnection of the phone (including attachments). These items shall be incidental to the contract unit price per each for "Type II Field Laboratory".

UTILITIES

The Contractor shall be aware that the existing utilities shown in the plans were surveyed prior to the design of this project and might have been relocated or replaced by a new utility facility prior to construction of this project, might be relocated or replaced by a new utility facility during the construction of this project, or might not require adjustment and may remain in its current location. The Contractor shall contact each utility owner and confirm the status of all existing and new utility facilities. The utility contact information is provided elsewhere in the plans or bidding documents.

Warning OH Power Transmission Lines

The contractor shall maintain a minimum approach distance of 25' from conductors with any crane (or its load), boom, backhoe, etc.

Plot Scale - 1:200

Plotted From - trsf12145

File - ...\prj\Minn021X\NotesSectionB.dgn

SHRINKAGE FACTOR: Embankment +35% to +50% (Removed Surfacing used in Select Subgrade Topping is assumed -10% Swell)

TABLE OF EXCAVATION QUANTITIES BY BALANCES

Station to Station	Excavation (CuYd)	* Surfacing Removal (CuYd)	* Contractor Furnished Borrow Exc. (CuYd)	Select Subgrade Topping Exc. (CuYd)	Total Excavation (CuYd)	Out-of-Balance Exc. (CuYd)	Out-of-Balance Select Subgrade Topping Exc. (CuYd)	** Excavation Waste (CuYd)	** Surfacing Waste (CuYd)
WB I-90									
659+33 667+15	0	1640	3486	3312	8438	0	0	0	319
670+93 675+50	238	801	1450	2198	4687	380	0	0	23
675+50 677+21	136	0	0	309	445	0	94	123	0
EB I-90								0	0
659+33 667+63	811	1728	7398	3864	13801	0	0	0	67
671+41 675+50	831	720	0	2010	3561	0	0	445	26
675+50 677+76	41	0	0	416	457	188	151	0	0
Totals:	2057	4889	12334	12109	31389	568	245	568	435

* The quantities for these items are in the Estimate of Quantities under their respective bid items.
The Quantity for Surfacing Removal in this table is only the portion used in the select subgrade topping. It does not include the existing AC Shoulder and gravel under the shoulders as this will be used as gravel cushion in the final surfacing.

** The quantities for these items are for information only. Surfacing Waste is the excess Surfacing Removal not used in the Select Subgrade Topping.
Note: Placing of the select subgrade topping shall be paid for separately using the "Select Subgrade Topping" bid item.

TABLE OF UNCLASSIFIED EXCAVATION

Excavation	2057
Select Subgrade Topping Excavation	12109
Topsoil	3300
Salvaged Asphalt Mix and Granular Base Material (from cut sections)	2683
Total	20149

PROCEDURES FOR DETERMINING UNCLASSIFIED EXCAVATION QUANTITY

When plan quantities are used for payment, the Unclassified Excavation quantity shall be used for final payment.

The following paragraphs are general earthwork information and information in regards to computing the Unclassified Excavation quantity when final cross sections are taken in the field:

The Unstable Material Excavation quantity is included in the Excavation quantity listed in the Table of Unclassified Excavation. When finaling a project, the Unstable Material Excavation quantity shall be added to the Excavation quantity to compute the Unclassified Excavation quantity.

The Topsoil quantity in the Table of Unclassified Excavation is an estimate. When finaling a project, the total quantity of field measured Topsoil shall be used in place of the estimated Topsoil quantity. The quantity of Topsoil from the cuts will be paid for twice as Unclassified Excavation, as it will be in both the Excavation and Topsoil quantities. This will be full compensation for Excavation, which includes necessary undercutting to provide space for placement of topsoil.

The Excavation quantities from individual balances and the Table of Unclassified Excavation have been reduced by the volume of in place surfacing that will be removed and/or salvaged. The in place surfacing is paid for as Remove Concrete Surfacing and shall be used as defined in the "SELECT SUBGRADE TOPPING" note.

Salvaged Asphalt Mix and Granular Base Material shall be paid for once as Unclassified Excavation. When finaling a project, the quantities of Salvaged Asphalt Mix and Granular Base Material from fill sections and off-alignment roadways or obliterated old roads will not be adjusted according to field measurements. The quantity of Salvaged Asphalt Mix and Granular Base Material from cut sections will not be added to the Excavation quantity as it is already in the cuts on the final cross sections.

The volume of in place Concrete Surfacing removed will NOT be paid for as Unclassified Excavation.

The Excavation quantities from individual balances and the table above have been reduced by the volume of in place concrete pavement that will be removed.

When finaling a project, the estimated quantity of 4889 cubic yards of Concrete Pavement removed from the cut sections shall be subtracted from the Unclassified Excavation quantity for final payment. The quantity of Concrete Pavement from cut sections subtracted from the Unclassified Excavation quantity shall be plans quantity and will not be adjusted according to field measurements.

SELECT SUBGRADE TOPPING

After the existing PCCP and asphalt is removed, the existing gravel cushion/ base course shall be removed and stockpiled. The removed PCCP will be crushed to a minus 2.5 inch size. There are two layers of PCC pavement with a thin (1 to 2 inch) AC leveling course between them. It will not be required to remove this AC separately during the pavement removal. The AC leveling course may be crushed and included in the PCCP salvage, but the AC shoulders should be removed separately and not used in the subgrade.

In all cut sections, the subgrade will be undercut to a depth of 2 feet. The crushed PCCP and the salvaged gravel cushion/ base course will be blended with the soil taken from the undercut and used as Select Subgrade Topping to backfill the undercut. The blended backfill material will consist of a ratio of approximately 2:1 undercut soil to salvaged surfacing and gravel cushion/ base course (by volume).

In fill sections, the top 2 feet of subgrade will be constructed with the Select Subgrade Topping. To obtain the Select Subgrade Topping, the salvaged PCCP and granular material will be mixed with new embankment material at the same 2:1 rate as the undercut backfill. Shallow embankment sections, i.e. fills less than 2 feet in height measure at the finished subgrade shoulder, will be undercut to ensure the upper 2 of subgrade is constructed with Select Subgrade Topping.

Select Subgrade Topping Excavation shall be paid for once as Unclassified Excavation.

All cost associated with the crushing, mixing and placement of the Select Subgrade Topping material shall be included in the contract unit price per cubic yard for Select Subgrade Topping.

Select Subgrade Topping shall be compacted with sheepsfoot or other approved rollers. Compaction shall be as per 260.3.C. Additional test strips will be made as required by changes in soil types. Moisture requirements will be determined in accordance with SD 104, except the optimum and field moisture will be determined using material passing a ¾ inch sieve.

Density testing will be performed a minimum of 1 per lane per lift on each side (east and west) of the structure.

Moisture testing will be performed a minimum of 1 per day.

The plan shown quantity will be the basis of payment. However, if there are additional areas of Select Subgrade Topping Excavation other than what is shown in the plans, the Engineer shall direct removal of these areas and the additional areas will be measured according to the Engineer.

Plot Scale - 1:200
Plotted From - TRSF12141
File - ...\prj\Mlm021X\NotesSectionB.dgn

TABLE OF SELECT TOPPING EXCAVATION

Select Topping Excavation shall be paid for once as Unclassified Excavation

Station	to	Station	Quantity (CuYd)
WB I-90			
659+33		667+15	3312
670+93		675+50	2198
675+50		677+21	309
EB I-90			
659+33		667+63	3864
671+41		675+50	2010
675+50		677+76	416
		Total:	12109

UNSTABLE MATERIAL EXCAVATION

The areas of unstable material excavation are drawn on the cross sections with a normal depth of 2 feet. The estimated quantity of 811 cubic yards of unstable material excavation shall be paid for at the contract unit price per cubic yard for "Unclassified Excavation".

All areas designated as Unstable shall be excavated. The unstable material excavated on this project shall be placed outside the subgrade shoulder in fill sections or stockpiled and used as topsoil.

Field measurement of unstable material excavation shall not be made. However, if there are additional areas of unstable material excavation other than what is shown in the plans, the Engineer shall direct removal of these areas and the additional areas will be measured according to the Engineer.

TABLE OF UNSTABLE MATERIAL EXCAVATION

Station	to	Station	L/R	Depth (Ft)	Quantity (CuYd)
663+00		667+63	R	2	811
				Total:	811

SALVAGE AND STOCKPILE ASPHALT MIX AND GRANULAR BASE MATERIAL

An estimated 5070.3 tons (2683 Cubic Yards) of asphalt mix and granular base material shall be salvaged from the entire length of the existing highway and stockpiled at a site furnished by the Contractor and satisfactory to the Engineer.

The quantity of salvage asphalt mix and granular base material may vary from the plans. No adjustment will be made to the contract unit price for variations of the quantity of "Salvage and Stockpile Asphalt Mix and Granular Base Material."

Salvaged material shall be processed to provide material meeting the following gradation:

Sieve Size	*% Passing*
2 inch (50.0 mm)	*100*
1 inch (25.0 mm)	*70-100*

The following table is furnished for information only.

Location	Station	to Station	Direction	Salvaged Asphalt Mix and Granular Base Material (Ton)
Shoulder	659+33	664+12	EB	844.2
Shoulder	664+12	667+88	EB	665.1
Shoulder	671+66	675+42	EB	665.1
Shoulder	675+42	677+50	EB	367.0
Shoulder	659+33	663+84	WB	794.8
Shoulder	663+84	667+44	WB	636.8
Shoulder	671+29	674+89	WB	636.8
Shoulder	674+89	677+50	WB	460.4
			Total:	5070.2

CONTRACTOR FURNISHED BORROW EXCAVATION

The Contractor shall provide a suitable site for Contractor furnished borrow excavation material. The Contractor is responsible for obtaining all required permits and clearances for the borrow site. The borrow material shall be approved by the Engineer. The plans quantity for "Contractor Furnished Borrow Excavation" as shown in the Estimate of Quantities will be the basis of payment for this item.

Restoration of the Contractor furnished borrow excavation site shall be the responsibility of the Contractor.

TABLE OF PIPE CULVERT UNDERCUT

The Table of Pipe Culvert Undercut is intended to be used to establish an estimated quantity of Pipe Culvert Undercut for bidding purposes only. The depth of undercut is an estimate and the actual depth necessary shall be determined during construction. Pipes shown may or may not require undercutting and pipes not shown may require undercutting. The Engineer will determine which pipe shall be undercut in accordance with Section 421 of the Specifications.

Station	Undercut Depth (Ft)	Quantity (CuYd)
662+80 R	1	23
672+25 R	1	23
	Total:	46

The table contains the rate of pipe culvert undercut per foot of pipe length and should be used as an aid in determining the actual amount of undercut to be performed during construction. The table is derived from the drawing below and conforms to the Specifications. When calculating pipe culvert undercut, the length of pipe ends should be included in the overall pipe length.

Storm sewer and approach pipes do not require undercutting unless specified otherwise in these plans.

Pipe Diameter (In)	Round Pipe Undercut Rate for 1' Depth (CuYd/Ft)	Arch Pipe Undercut Rate for 1' Depth (CuYd/Ft)
24	0.2407	0.2577
30	0.2623	0.2847
36	0.2840	0.3110
42	0.3056	0.3337
48	0.3272	0.3596
54	0.3488	0.3827
60	0.3704	0.4105
66	0.3920	---
72	0.4136	0.4630
78	0.4352	---
84	0.4568	0.5123
90	0.4784	---

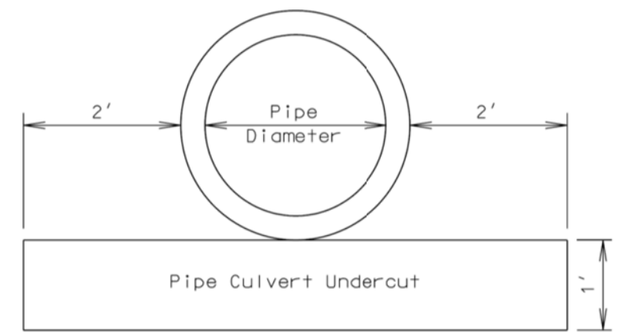

INCIDENTAL WORK, GRADING

Station	L/R	Remarks
663+86	L	Take Out 18"-76' RCP & 2 End Sections
667+53	L	Take Out 12"-29' RCP
667+53 to 667+77	L	Take Out 12"-84' CMP
663+10	R	Take Out 24"-88' RCP & 2 End Sections
667+97	R	Take Out 12"-29' RPC
667+97 to 668+18	R	Take Out 12"-59' CMP
671+06 to 671+78	R	Take Out 24"-75' CMP Downspout
671+83	R	Take Out 18"-73' RCP & 2 End Sections

Plot Scale - 1:200
Plotted From - TRSF12141
File - ...\prj\Minn021X\NotesSectionB.dgn

REMOVAL OF EXISTING CONCRETE PAVEMENT STA. 659+33.39 to STA. 662+75.00

Existing asphalt concrete and/or existing asphalt concrete patch work that was placed above the existing concrete pavement is included in the quantity for "Remove Concrete Pavement". The Contractor shall use the existing concrete pavement as Select Subgrade Topping material.

There are two distinct pavement sections. One is an 8" C.R.C. Pavement overlay with an Asphalt Bond Breaker over a 9" P.C.C. Pavement layer with an approximate 8" gravel subbase. The other section of pavement is between the terminal anchor and the bridge approach slab. This is an 11" P.C.C. Pavement layer over a gradually thinning 8" Gravel Cushion layer (8" by the terminal anchor and 0" by the approach slab) with an approximate 8" gravel subbase. Both pavement sections are typically 26 feet wide. The 11" P.C.C. Pavement section has joint spacing approximately every 20'.

The aggregate in the existing P.C.C. pavement is quartzite.

There are 4 terminal anchors, 2 in the EB Lanes and 2 in the WB Lanes. These terminal anchors have an embedded 26' long W14 x 61 beam into a sleeper slab in between the C.R.C. Pavement and the P.C.C. Pavement. Removal of these beams shall be incidental to the contract unit price per square yard for "Remove Concrete Pavement".

TABLE OF CONCRETE PAVEMENT REMOVAL

Station	to	Station	Description	Quantity (SqYd)
659+33		664+12	EB Lanes – 8" CRC Overlay Section from Beginning to Terminal	1651.6
664+12		667+92	EB Lanes – 11" PCP Section from Terminal to Approach Slab	1106.7
671+63		675+42	EB Lanes – 11" PCP Section from Approach Slab to Terminal	1101.0
675+42		675+50	EB Lanes – 8" CRC Overlay Section from Terminal to End of Mainline Grading	23.6
659+33		663+84	WB Lanes – 8" CRC Overlay Section from Beginning to Terminal	1483.5
663+84		667+48	WB Lanes – 11" PCP Section from Terminal to Approach Slab	1054.3
671+25		674+89	WB Lanes – 11" PCP Section from Approach Slab to Terminal	1055.9
674+89		675+50	WB Lanes – 8" CRC Overlay Section from Terminal to End of Mainline Grading	177.3
			Total:	7653.9

TABLE OF DROP INLET REMOVAL

All costs for removal of the frame and grate assembly shall be incidental to the contract unit price per each for "Remove Drop Inlet".

Station	L/R	Quantity (Each)
667+53	27' L	1
667+53	57' L	1
667+97	28' R	1
667+98	57' R	1
	Total:	4

UNDERDRAIN

An underdrain system shall be installed from Sta. 670+00 – 100' L to Sta. 674+50 – 110' L and outlet at Sta. 670+00 – 100' L. Also, an underdrain system from 671+60 – 156' R to 674+50 – 120' R and outlet at 671+60 – 156' R shall be installed. (see plans and cross sections for details).

The underdrain system will consist of 4 inch slotted corrugated polyethylene tubing placed in the bottom of a 2-foot wide by 6-foot deep trench. The trench will then be backfilled with 4 feet of porous backfill and 2 feet above that with normal fill. The last 30 feet for the northern underdrain and the last 50 feet for the southern underdrain attached to the headwalls shall be 4 inch corrugated polyethylene tubing and shall be backfilled with typical embankment material. The 300 cubic yards of excavation and the 4 inch polyethylene tee connector shall be incidental to the contract unit price per foot for the corresponding "Polyethylene Tubing" bid items.

Estimate of Quantities:

4 inch Slotted Corrugated Polyethylene Tubing	675	Ft
4 inch Corrugated Polyethylene Tubing	80	Ft
Porous Backfill	378	Ton
Concrete Headwall for Underdrain (See Standard Plate No. 680.01)	2	Each
Excavation	300	CuYd

CORRUGATED METAL PIPE

Corrugated metal pipes shall have 2 ⅔-inch X ½-inch corrugations for 42-inch and smaller round pipe and 48-inch and smaller arch pipe unless otherwise stated in the plans. Corrugated metal pipes shall have 3-inch X 1-inch or 5-inch X 1-inch corrugations for 48-inch and larger round pipe and 54-inch and larger arch pipe unless otherwise stated in the plans.

The gauge of the corrugated metal elbows and ends shall match the thickest gauge of corrugated metal pipe it is connected to.

PIPE FOR DOWNSPOUTS

If corrugated metal pipes are provided, the pipes shall be as specified in the CORRUGATED METAL PIPE note.

High density polyethylene pipe may be substituted for 36 inch and smaller pipe downspouts at no additional cost to the State. All necessary connections, transitions, and anchoring methods shall be in accordance with the manufacturer's recommendations and be approved by the Engineer. Bedding and backfill material and installation procedures shall conform to the manufacturer's design requirements.

If high density polyethylene pipe, corrugated polypropylene pipe, or steel reinforced polyethylene pipe are provided, then the end sections shall be metal, be compatible, and conform to the type of end section as shown in the plans.

CONCRETE PIPE CONNECTIONS

Pipe connections to existing pipes, manholes, junction boxes, and drop inlets shall be done by breaking a hole into the existing structure and inserting the pipe. A concrete collar shall then be poured around the pipe in the area of the connection.

When it is not possible to use a normal pipe joint (male-female ends), connections to existing pipe shall be made by placing a 2' wide by 6" thick M6 concrete collar around the outside of the connection. The concrete collar shall be reinforced with 6x6 W2.9 x W2.9 wire mesh.

All costs for constructing the concrete collars including materials and labor shall be incidental to the contract unit price per foot for the corresponding pipe bid item.

Plot Scale - 1:200
Plotted From - TRSF12141
File - ...\prj\Mlm021X\NotesSectionB.dgn

STORM SEWER

Reinforced concrete pipe may be either bell and spigot or tongue and groove. The pipe sections shall be adjoined such that the ends are fully entered and the inner surfaces are reasonably flush and even.

Lift holes in the reinforced concrete pipe shall be plugged with grout.

Watertight joints are required for reinforced concrete pipe, drop inlets, manholes, and junction boxes where storm sewers run parallel to and within 10 feet horizontally from existing or proposed water mains.

Watertight joints are required where reinforced concrete pipes, drop inlets, manholes, or junction boxes cross water mains and are separated a distance of 18 inches or less, above or below, the water main.

If watertight joints are required then the watertight joints shall extend for a distance of 10 feet beyond the water main. This measurement shall be from the sealed concrete joint to the outer most surface of the water main.

Watertight joint seals shall conform to the following requirements:

1. Reinforced Concrete Pipe (Circular): Gasketed pipe shall conform to the requirements of ASTM C443. Non-gasketed concrete pipe shall be sealed with a mastic joint seal conforming to the requirements of ASTM C990 and encased with a minimum 2' wide by 6" thick M6 concrete collar reinforced with 6x6 W2.9 x W2.9 wire mesh.

2. Reinforced Concrete Pipe (Arch): Joints shall be sealed with a waterstop seal meeting the requirements of ASTM C990. Waterstop seals shall consist of hydrophilic compounds such as Waterstop-RX or ConSeal CS-231.

3. Drop Inlets, Manholes, and Junction Boxes: Joints shall be sealed with a waterstop seal or seal wrap meeting the requirements of ASTM C990 or encased with a minimum 2' wide by 6" thick M6 concrete collar reinforced with 6x6 W2.9 x W2.9 wire mesh. Waterstop seal shall contain hydrophilic compounds such as Waterstop-RX or ConSeal CS-231. Seal wrap shall be a self adhesive external joint wrap such as ConWrap CS-217 or Mar Mac Seal Wrap.

Gaskets and seals (mastic, waterstop, and seal wraps) shall be installed in accordance with the manufacturer's recommendations.

The cost for furnishing and installing all gaskets, mastic joint seal, waterstop seal, seal wrap, concrete collars, and for plugging the lift holes shall be incidental to the contract unit price per foot for the corresponding pipe bid item.

DROP INLETS

Where drop inlets are constructed within areas of curb and gutter, the Contractor shall construct weep holes of at least 3 inches in diameter in the drop inlet walls. The weep holes shall be constructed at the same elevation as the adjacent top of the earthen subgrade and shall be maintained clean and open at all times until the permanent surfacing is placed. The drop inlets shall be covered throughout construction operations as necessary with an Engineer approved cover to prevent materials from entering the storm sewer system. After the permanent surfacing has been placed, the Contractor shall seal the weep holes with grout and remove all debris from the drop inlet. All costs involved with the coverings, weep holes, and removing debris from the drop inlets shall be incidental to the contract unit prices for the components of the drop inlets.

The plan shown quantities of the drop inlet components such as Class M6 Concrete, Reinforcing Steel, Type D Frame and Grate, and Precast Drop Inlet Collar, will be the basis of payment for these items.

If additions or reductions to the number of drop inlets are ordered by the Engineer, payment for the components required to construct the drop inlets will be made at the contract unit prices for the components of the drop inlets.

TABLE OF DROP INLETS AND QUANTITIES

Station	L/R	Drop Inlet Size	Drop Inlet Type	Class M6 Concrete (CuYd)	Reinf. Steel (Lb)	Precast Drop Inlet Collar (Each)	Frame and Grate/Lid Type
666+75.00	24.35' L	1.5'x3'	D	0.77	116	1	D
666+75.00	63.62' L	1.5'x3'	D	0.78	124	1	D
667+23.54	24.35' R	1.5'x3'	D	0.77	116	1	D
667+23.54	73.65' R	1.5'x3'	D	0.76	121	1	D
			Totals:	3.08	477	4	

Total Type D Frame and Grate Assembly 4

TABLE OF BANK AND CHANNEL PROTECTION GABIONS

Station	L/R	Quantity (CuYd)
666+75	L	4.5
667+24	R	4.5
	Total:	9.0

TEMPORARY FENCE

An estimated 400' of temporary fence has been included in the plans which may or may not be used on the project. If temporary fence is needed, the Contractor shall verify the location of the temporary fence with the landowner prior to installation of the fence.

BRACE PANELS FOR ROW FENCE

The E-Z Brace or an approved equal may be utilized as an alternate horizontal brace in the brace panels if approved by the Engineer. The E-Z Brace shall be attached to each wood post utilizing two 5/16" x 3" lag screws. Holes of appropriate diameter, based on wood post condition, shall be drilled before placement of lag screws. The following are contacts regarding the E-Z Brace:

Roger Papka
E-Z Brace
1160 Karen St.
Watertown, SD 57201
605-881-6142

Dennis Mack
E-Z Brace
108 18th St. NE
Watertown, SD 57201
605-881-4990

TABLE OF TYPE D48 CONCRETE CURB AND GUTTER

Station	L/R	Quantity (Ft)
666+67.00 to 666+85.40	62.27' L	18.4
666+67.00 to 666+85.40	25.76' L	18.4
667+15.54 to 667+36.20	25.73' R	20.7
667+15.54 to 667+36.20	72.27' R	20.7
	Total:	78.2

Plot Scale - 1:200
Plotted From - TRSF12141
File - ...\prj\Mhn0211X\NotesSectionB.dgn

TABLE OF GUARDRAIL

Location	Remove 3 Cable Guardrail (Ft)	Remove 3 Cable Guardrail Anchor Assembly (Each)	Remove 3 Cable Guardrail Slip Base Anchor Assembly (Each)	Remove Beam Guardrail (Ft)	Remove W Beam Guardrail Breakaway Cable Terminal (Each)	3 Cable Guardrail (Ft)	3 Cable Guardrail Anchor Assembly (Each)	3 Cable Guardrail Slip Base Anchor Assembly (Each)	Straight Double Class A Thrie Beam Guardrail with Wood Posts (Ft)	Straight Class A W Beam Guardrail with Wood Posts (Ft)	W Beam to Thrie Beam Guardrail Transition (Each)	W Beam Guardrail Breakaway Cable Terminal (Each)	W Beam Guardrail Tangent End Terminal (Each)	Traffic Control Movable Concrete Barrier (Each)	Temporary Concrete Barrier End Protection (Each)	Salvage Beam Guardrail (Ft)	Salvage W Beam Guardrail Tangent End Terminal (Each)
Structure No. 50-284-165																	
Begin Bridge Lt. (Temporary)														10	1		
Begin Bridge Rt. (Temporary)														23	1		
End Bridge Lt.	334	2		82	1	262	1	1	12.5	62.5	1	1					
End Bridge Rt.	310	1	1	82	1	390	1	1	12.5	62.5	1	1					
Structure No. 50-284-166																	
Begin Bridge Lt.	313	1	1	82	1	454	1	1	12.5	62.5	1	1					
Begin Bridge Rt.	335	2		82	1	278	1	1	12.5	62.5	1	1					
End Bridge Lt. (Temporary)									12.5	212.5	1		1			231.3	1
End Bridge Rt. (Temporary)									12.5	25	1		1			43.8	1
Totals:	1292	6	2	328	4	1384	4	4	75.0	487.5	6	4	2	33	2	275.1	2

BARRIER FOR TRAFFIC CONTROL

As described in Phase 1 in Section C, temporary concrete barrier will need to be installed on the west end of the existing bridge for the two way traffic on the westbound lanes as detailed in these plans.

As described in Phase 2 in Section C, guardrail will need to be installed on the east end of the newly constructed bridge for the two way traffic on the eastbound lanes as detailed in these plans.

SALVAGE BEAM GUARDRAIL

Steel beam rail, end terminals, and hardware items as noted shall become the property of the State and shall be removed, hauled, and neatly stacked at the Sioux Falls Area DOT Maintenance Yard as approved by the Engineer. Posts and blocks shall become the property of the Contractor and shall be removed from the project limits.

Payment for removing, hauling, and stacking the guardrail items shall be incidental to the contract unit price per foot for “Salvage Beam Guardrail”. The Tangent End Terminal items shall be incidental to the contract unit price per each for “Salvage W Beam Guardrail Tangent End Section”.

TRAFFIC CONTROL MOVABLE CONCRETE BARRIERS

Concrete barriers will be provided by the State and are available for pickup from the SDDOT Sioux Falls South Yard located in the Northwest corner of W. 69th Street and S. Solberg Avenue. The barriers shall be hauled back to the South Yard when they are no longer needed on the project.

Barriers to be adjusted or moved shall be disconnected from adjacent barriers to minimize damage to connecting pins. Pins damaged by the Contractor shall be replaced at no cost to the Department.

Concrete barrier sections shall be placed as depicted in the plans to comply with clear zone requirements and as required by the Engineer. The barriers shall be pinned and bolted together as directed by the Engineer.

Concrete barriers shall, at all times, be set on a flat surface for a minimum of 4’ behind the barrier. Where 4’ of flat surfacing is not attainable behind the barriers due to steep inslopes, the Contractor shall furnish and install Guardrail Post and Block behind the barriers at 6’-3” spacing. All costs associated with furnishing and installing Guardrail Post and Block shall be included in the contract unit price per each for “Traffic Control Moveable Concrete Barrier”.

All costs associated with picking up from the SDDOT Sioux Falls South Yard, transporting, setting, connecting, and hauling back to the SDDOT Sioux Falls South Yard shall be included in the contract unit price per each for “Traffic Control Movable Concrete Barrier”.

TEMPORARY CONCRETE BARRIER END PROTECTION

Crash attenuators meeting the requirements of NCHRP 350 or MASH Test Level 3 shall be furnished and installed by the Contractor. Attachment of the attenuators to the concrete barriers shall be by approved methods.

All costs associated with furnishing, transporting, initial setup, connecting, maintaining, and removal shall be incidental to the contract unit price per each for “Temporary Concrete Barrier End Protection”.

The Contractor shall have replacement hardware available so that, in the event that an attenuator is hit and made unusable, the attenuator can be made functional within 24 hours. The cost of replacement is included in the contract unit price per each for “Temporary Concrete Barrier End Module Set or Repair Kit”. No payment will be made for the Concrete Barrier End Module Set or Repair Kit in the event that no repairs are necessary. Upon completion of the project, crash attenuators shall remain the property of the Contractor.

TABLE OF INTERIM CROSSOVER CLOSURES

Location	Remove Interim Crossover Closure (Ft)	Reset Interim Crossover Closure (Ft)
MRM 406.55+0.187	384	384
MRM 407.00+0.500	256	256
Total	640	640

Plot Scale - 1:200
Plotted From - trsf12145
File - ...\prj\Minn021X\NotesSectionB.dgn

TABLE OF CONSTRUCTION STAKING

(See Special Provision for Contractor Staking)

Roadway and Description	Begin Station	End Station	Number of Lanes	Length (Ft)	Grade Staking: Length (Mile)	Grade Staking: Lane Factor	Grade Staking: *Sets of Stakes	Grade Staking: **Grade Staking Quantity (Mile)	Miscellaneous Staking Quantity (Mile)	Slope Staking Quantity (Mile)	Structure Staking Quantity (Each)
I 90 Eastbound (3 Lanes AC Pavement)	659+33	667+63	3	830	0.157	1.5	1	0.471	0.157	0.157	
I 90 Eastbound (Structure No. 50-284-166)	667+63	671+41	3	378							1
I 90 Eastbound (3 Lanes AC Pavement)	671+41	671+76	3	35	0.007	1.5	1	0.011	0.007	0.007	
I 90 Eastbound (Transition from 3 Lanes to 2 Lanes AC Pavement)	671+76	675+50	3	374	0.071	1.5	1	0.107	0.071	0.071	
I 90 Eastbound (Acceleration Lane Transition 4.5' to 0' AC Pavement)	675+50	677+76	1	226	0.043	0.5	1	0.021	0.043	0.043	
I 90 Westbound (Transition from 3 Lanes to 2 Lanes AC Pavement)	659+33	662+75	3	342	0.065	1.5	1	0.098	0.065	0.065	
I 90 Westbound (2 Lanes AC Pavement)	662+75	667+15	2	440	0.083	1	1	0.083	0.083	0.083	
I 90 Westbound (Structure No. 50-284-165)	667+15	670+93	2	378							1
I 90 Westbound (2 Lanes AC Pavement)	670+93	675+50	2	457	0.087	1	1	0.087	0.087	0.087	
							Totals:	0.878	0.513	0.513	2

* 1 = Blue Top Stakes Only (Asphalt Concrete Pavement)

** Grade Staking Quantity = (Length) x (Lane Factor) x (Sets of Stakes)

Plot Scale - 1:200

Plotted From - TRSF12141

File - ...\prj\Mnn021X\NotesSectionB.dgn

PIPE QUANTITIES

STATE OF SOUTH DAKOTA	PROJECT	SHEET	TOTAL SHEETS
	IM 0909(81)406	B9	B48

Plotting Date: 06/09/2016

	Reinforced Concrete						Corrugated Metal																													
	Circular				Circular Safety End			Circular				Circular Flared End				Circular Safety End			Circular Elbow																
	18" Cl. 2	24" Cl. 2			24"			18" 16 Ga	24" 16 Ga			18"	24"			24"			18" 12.5°	18" 15°	24" 25°													
Station Offset (L/R)	Ft	Ft			Each			Ft	Ft			Each	Each			Each			Each	Each	Each														
662+80 R		94			2																															
666+75.00-110.58' L to 666+75.00-24.35' L	38							44				1							2																	
667+23.54-135.36' R to 667+23.54-24.35' R	48							58				1								2																
671+40.71-187.83' R to 672+20.17-141.94' R									78				1			1					2															
672+25 R		96			2																															
Total:	86	190			4			102	78			2	1			1			2	2	2															

Plot Scale - 1:200

Plotted From - TRSF12141

File - ...\rd\prj\Minn021X\TablePipe.dgn

FENCE QUANTITIES

STATE OF SOUTH DAKOTA	PROJECT	SHEET	TOTAL SHEETS
	IM 0909(81)406	B10	B48

Plotting Date: 06/09/2016

Station to Station		Side (L/R)	Right-of-Way Fence					Temporary Fence			Post Panels			Gates					
															N.A.B.I.				
				Type 2 (Ft)					Type 2 (Ft)		2 Post Panel (Each)	3 Post Panel (Each)			16' Barbed Wire Gate (Each)				Remove Fence (Ft)
659+33	667+85	R		888					100		2	2							914
666+37	667+04	L		113					100		3								167
667+29	667+55	L/R		53							2				1				60
670+77	672+17	L		166					100		3								148
671+01	671+27	L/R		53							2								56
671+58	672+88	R		172					100		4								192
TOTALS:				1445					400		16	2			1				1537

Post Type and Sequence:
Right-of-way fence shall be constructed using alternate wood and steel posts except as noted.

Plot Scale - 1:200

Plotted From - TRSF12141

File - ...\rdprj\Minn021X\TableFence.dgn

TYPICAL GRADING SECTIONS

STATE OF SOUTH DAKOTA	PROJECT	SHEET	TOTAL SHEETS
	IM 0909(81)406	B11	B48

Plotting Date: 06/09/2016

WB INTERSTATE 90
659+33.39 to 662+75.00

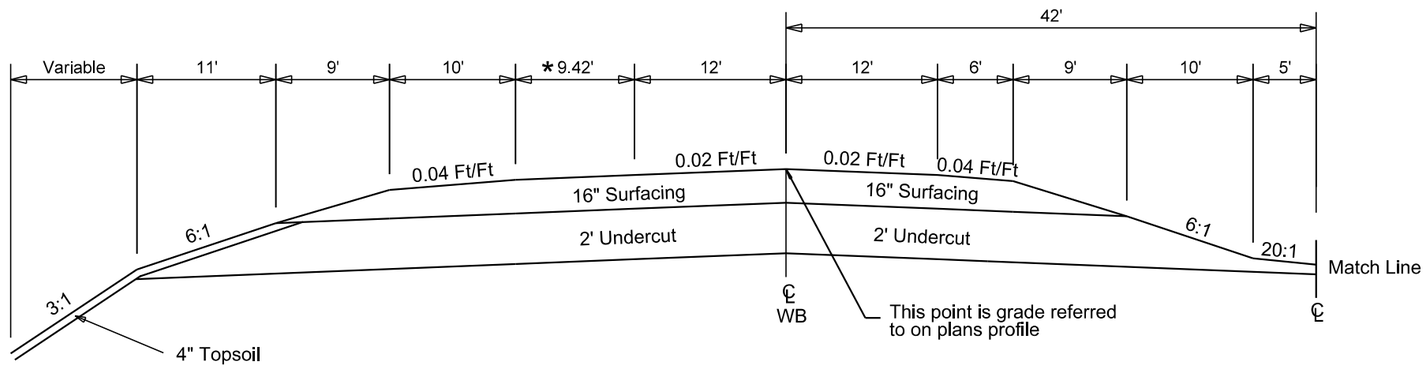

* 659+33.39 to 662+75.00
Transition Deceleration Lane 9.42' to 0'

WB INTERSTATE 90
662+75.00 to 675+50.00

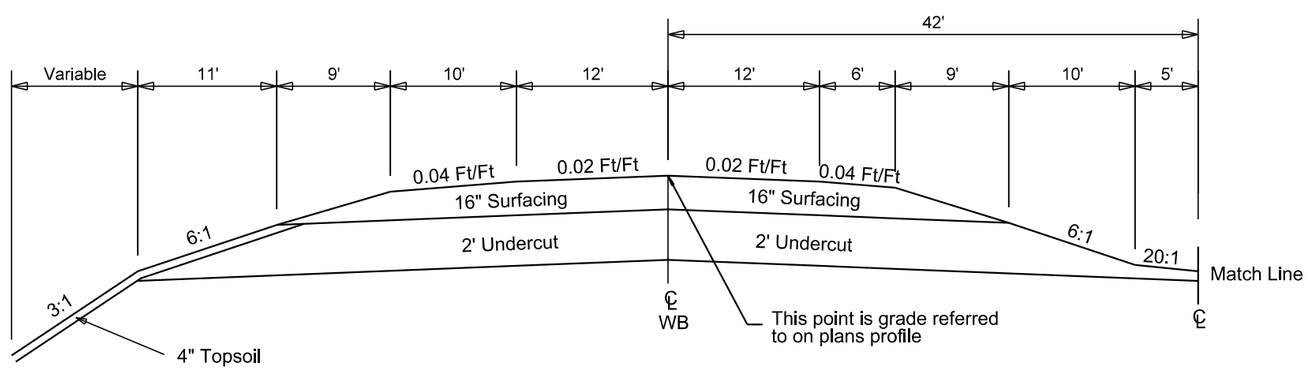

Plot Scale - 1:12
Plotted From - TRSF12141
File - U:\rdprj\Minn0212X\typ.dgn

TYPICAL GRADING SECTIONS

STATE OF SOUTH DAKOTA	PROJECT	SHEET	TOTAL SHEETS
	IM 0909(81)406	B12	B48

Plotting Date: 06/09/2016

EB INTERSTATE 90
659+33.39 to 675+50.00

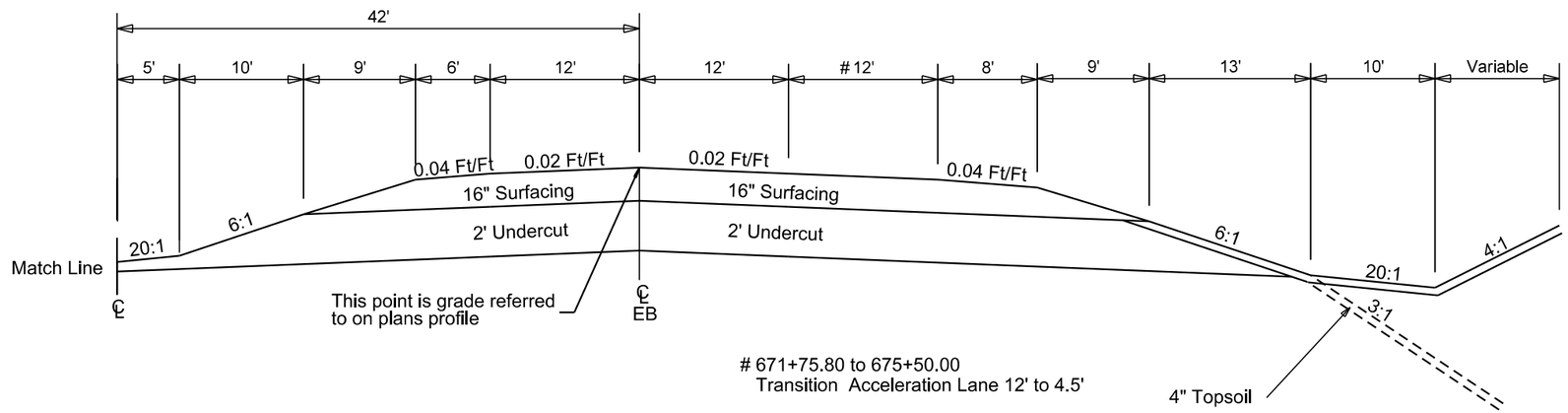

EB INTERSTATE 90
675+50.00 to 677+75.80

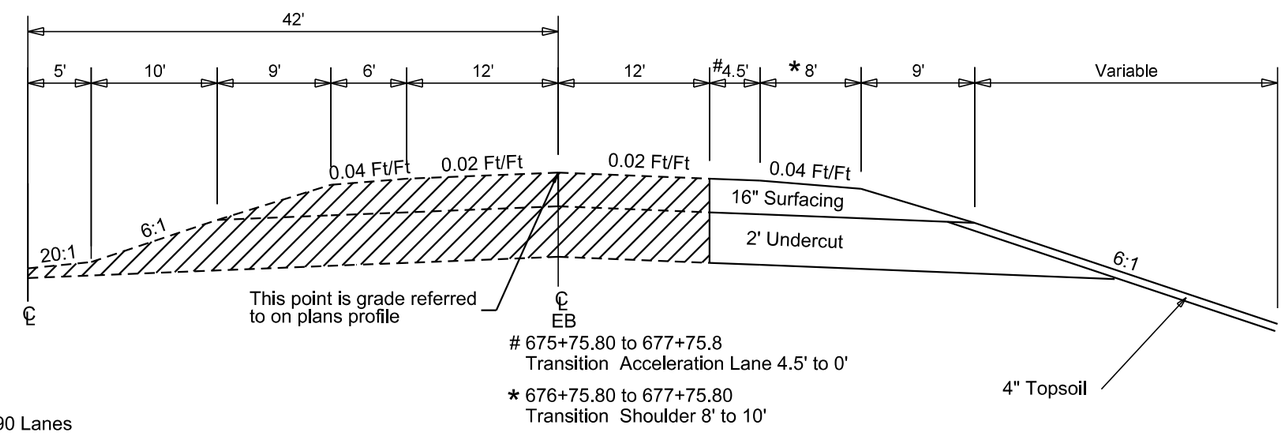

Existing EB I90 Lanes
Remain In Place

Plot Scale - 1:12

Plotted From - TRSF12141

File - U:\rdproj\Minn0217X\typ.dgn

HORIZONTAL ALIGNMENT & CONTROL DATA

STATE OF SOUTH DAKOTA	PROJECT	SHEET	TOTAL SHEETS
	IM 0909(81)406	B13	B48

Plotting Date: 06/09/2016

MAINLINE

Type	Station			Northing	Easting
POB	657+00.00			487368.087	2965280.008
		TL= 2600.00	N 87°25'20" E		
POE	683+00.00			487485.018	2967877.377

HORIZONTAL AND VERTICAL CONTROL POINTS

POINT	STATION	OFFSET	DESCRIPTION	NORTHING	EASTING	ELEVATION
CP 1	660+91	148' R	RT - 5/8" x 5' REBAR & CAP STAMPED "SDDOT CONTROL POINT" - MIDDLE OF 2 POST PANEL ALONG SOUTH ROW	487238.0430	2965677.3240	1323.11
CP 2	662+75	0' R	5/8" x 5' REBAR & CAP STAMPED "SDDOT CONTROL PT" - MIDDLE OF MEDIAN OF I-90 - 540'+/- WEST OF WEST END OF STRUCTURES	487393.5610	2965854.7280	1319.43
CP 3	668+12	24' R	RT - DURANAIL W/ WASHER STAMPED "SDDOT CONTROL PT" - TOP OF NW WINGWALL OF EASTBOUND STRUCTURE	487394.0070	2966392.2310	1330.81
CP 4	671+04	24' L	LT - DURANAIL & WASHER (UNSTAMPED) - TOP OF SE WINGWALL OF WESTBOUND STRUCTURE	487455.5190	2966681.4180	1339.61
CP 5	678+17	18' R	RT - 5/8" x 5' REBAR & CAP STAMPED "SDDOT CONTROL POINT"- IN SE CORNER OF CROSSOVER - 3'+/- NW OF DELINEATOR POST	487445.1840	2967395.7340	1359.85

The coordinates shown on this sheet are based on the South Dakota State Plane Coordinate System. South Zone (NAD 83/2007); epoch 2010; Geoid 12A; SF = 0.9998470155
The elevations shown on this sheet are based on NAVD 88.

Plot Scale - 1:200
Plotted From - TRSF12141
File - ...\Winn021X\DataHorz&Control.dgn

LEGEND

STATE OF SOUTH DAKOTA	PROJECT	SHEET	TOTAL SHEETS
	IM 0909(81)406	B14	B48

Plotting Date: 06/09/2016

Anchor
Antenna
Approach
Assumed Corner
Azimuth Marker
BBQ Grill/ Fireplace
Bearing Tree
Bench Mark
Box Culvert
Bridge
Brush
Buildings
Bulk Tank
Cattle Guard
Cemetery
Centerline
Cistern
Clothes Line
Commercial Sign Double Face
Commercial Sign One Post
Commercial Sign Overhead
Commercial Sign Two Post
Concrete Symbol
Creek Edge
Curb/Gutter
Curb
Dam Grade/Dike/Levee
Deck Edge
Ditch Block
Doorway Threshold
Drainage Profile
Drop Inlet
Edge Of Asphalt
Edge Of Concrete
Edge Of Gravel
Edge Of Other
Edge Of Shoulder
Elec. Trans./Power Jct. Box
Environmental Sensitive Site — ESS —
Fence Barbwire
Fence Chainlink
Fence Electric
Fence Misc.
Fence Rock
Fence Snow
Fence Wood
Fence Woven
Fire Hydrant
Flag Pole
Flower Bed
Gas Valve Or Meter
Gas Pump Island
Grain Bin
Guardrail
Guide Sign One Post
Guide Sign Two Post
Gutter
Guy Pole
Haystack

Hedge
Highway R.O.W. Marker
Interstate Close Gate
Iron Pin
Irrigation Ditch
Lake Edge
Lawn Sprinkler
Mailbox
Manhole Electric
Manhole Gas
Manhole Misc
Manhole Sanitary Sewer
Manhole Storm Sewer
Manhole Telephone
Manhole Water
Merry-Go-Round
Microwave Radio Tower
Misc. Line
Misc. Property Corner
Misc. Post
Overhang Or Encroachment
Overhead Utility Line — OH —
Parking Meter
Pipe With End Section
Pipe With Headwall
Pipe Without End Section
Playground Slide
Playground Swing
Power And Light Pole
Power And Telephone Pole
Power Meter
Power Pole
Power Pole And Transformer
Power Tower Structure
Propane Tank
Property Pipe
Property Pipe With Cap
Property Stone
Public Telephone
Railroad Crossing Signal
Railroad Milepost Marker
Railroad Profile
Railroad R.O.W. Marker
Railroad Signs
Railroad Switch
Railroad Track
Railroad Trestle
Rebar
Rebar With Cap
Reference Mark
Regulatory Sign One Post
Regulatory Sign Two Post
Retaining Wall
Riprap
River Edge
Rock And Wire Baskets
Rockpiles
Satellite Dish
Septic Tank

Shrub Tree
Sidewalk
Sign Face
Sign Post
Slough Or Marsh
Spring
Stream Gauge
Street Marker
Subsurface Utility Exploration Test Hole
Telephone Fiber Optics — T/F —
Telephone Junction Box
Telephone Pole
Television Cable Jct Box
Television Tower
Test Wells/Bore Holes
Traffic Signal
Trash Barrel
Tree Belt
Tree Coniferous
Tree Deciduous
Tree Stumps
Triangulation Station
Underground Electric Line — P —
Underground Gas Line — G —
Underground High Pressure Gas Line — HG —
Underground Sanitary Sewer — S —
Underground Storm Sewer — S —
Underground Tank
Underground Telephone Line — T —
Underground Television Cable — TV —
Underground Water Line — W —
Warning Sign One Post
Warning Sign Two Post
Water Fountain
Water Hydrant
Water Meter
Water Tower
Water Valve
Water Well
Weir Rock
Windmill
Wingwall
Witness Corner

State and National Line
County Line
Section Line
Quarter Line
Sixteenth Line
Property Line
Construction Line
R. O. W. Line
New R. O. W. Line
Cut and Fill Limits
Control of Access
New Control of Access
Proposed ROW (After Property Disposal)

Drainage Arrow

Remove Concrete Pavement
Remove Concrete Driveway Pavement
Remove Asphalt Concrete Pavement
Remove Concrete Sidewalk
Remove Concrete Approach Pavement
Remove Concrete Median Pavement

Remove Concrete Curb
Remove Concrete Curb and Gutter
Remove Concrete Gutter

Detectable Warning
Pedestrian Push Button Pole and 30" x 48" Clear Space with 1.5% slope

Plot Scale - 1:200
Plotted From - TRSF12141
File - U:\radprj\Mim0\21X\topsymb.dgn

STATE OF SOUTH DAKOTA	PROJECT	SHEET	TOTAL SHEETS
	IM 0909(81)406	B15	B48

Plotting Date: 06/09/2016 Revised 02/16/2016 AR

Remove 3 Cable Guardrail
at the following locations:
664+58 - 69' R to 667+92 - 62' R
664+79 - 6' R to 667+91 - 22' R
671+23- 62' L to 674+56 - 69' L
671+24 - 22' L to 674+32 - 7' L

Remove Beam Guardrail
at the following locations:
667+28 - 19' R to 668+13 - 27' R
667+28 - 62' R to 668+12 - 57' R
671+03 - 27' L to 671+88 - 18' L
671+03 - 58' L to 671+88 - 63' L

663+86 L
Take Out 18"-76' RCP
& 2 End Sections
(Incidental Work, Grading)

667+53 L
Take Out 12"-29' RCP
(Incidental Work, Grading)

667+53 - 57' L to 667+77 - 138' L
Take Out 12"- 84' CMP
(Incidental Work, Grading)

667+67 L to 671+04 L
Take Out 337' Steel Girder Bridge
(Incidental Work, Structure)

668+11 R to 671+41 R
Take Out 330' Steel Girder Bridge
(Incidental Work, Structure)

662+80 R
Install 24"-94' RCP
& 2 Safety Ends

666+75.00-110.58' L to 666+75.00-24.35' L
Install 18"- 38' RCP
& 18" - 44' CMP Downspout
(4', 32' & 8' Str Pipe)
& 2 - 12.5° Elbows
& 18" Flared End
(Between Drop Inlet and Inslope Toe)

666+75 L
Install Bank and Channel
Protection Gabions
(4.5 CY)

667+23.54-135.36' R to 667+23.54-24.35' R
Install 18"- 48' RCP
& 18" - 58' CMP Downspout
(8', 42' & 8' Str Pipe)
& 2 - 15° Elbows
& 18" Flared End
(Between Drop Inlet and Inslope Toe)

667+24 R
Install Bank and Channel
Protection Gabions
(4.5 CY)

672+25 R
Install 24"-96' RCP
& 2 Safety Ends

Install Type D48 Concrete
Curb and Gutter
at the following locations:
666+67.00 to 666+85.40 - 62.27' L
666+67.00 to 666+85.40 - 25.76' L
667+15.54 to 667+36.20 - 25.73' R
667+15.54 to 667+36.20 - 72.27' R

Remove Drop Inlets
at the following locations:
667+53 - 27' L
667+53 - 57' L
667+97 - 28' R
667+98 - 57' R

Install 1.5'x3' Type D Drop Inlets
with 6" Concrete Collar and
Type D Frame and Grate
at the following locations:
666+75.00 - 24.35' L
666+75.00 - 63.62' L
667+23.54 - 24.35' R
667+23.54 - 73.65' R

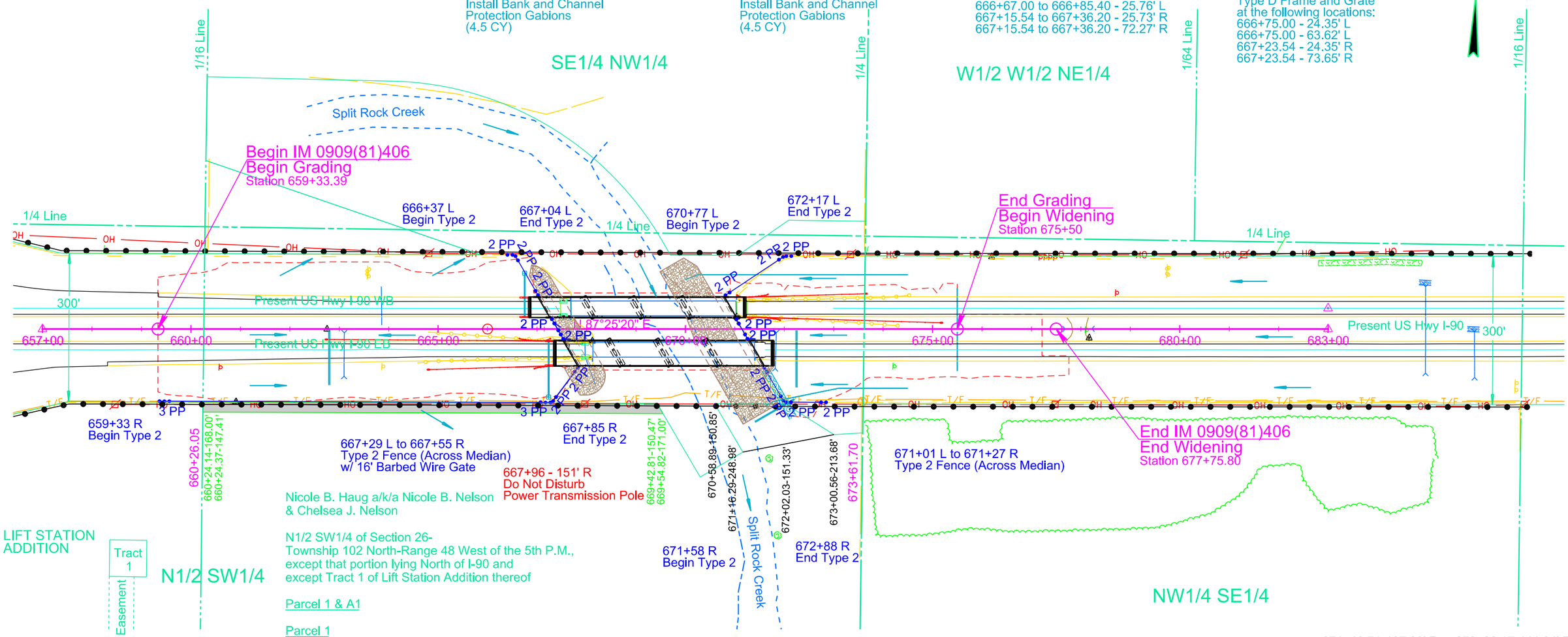

N1/2 SW1/4 of Section 26-
Township 102 North-Range 48 West of the 5th P.M.,
except that portion lying North of I-90 and
except Tract 1 of Lift Station Addition thereof

Parcel 1 & A1

Parcel 1
0.33 ac, R.O.W. Taking
(14493 sq ft), more or less

Sec. 26 - T102N - R48W

Install Guardrail
at the following locations:
662+70.9 to 667+45.4 R
664+77.4 to 667+75.8 R
670+86.0 to 673+68.3 L
671+10.6 to 675+20.9 L

667+14.52 L to 670+92.98 L
Install 378' - 5 1/2" Prestr. Girder Bridge
(See Section E)

667+63.02 R to 671+41.48 R
Install 378' - 5 1/2" Prestr. Girder Bridge
(See Section E)

670+00 - 100' L to 674+50 - 110' L
Install 4" - 455' Corrugated Polyethylene
Drainage Tubing (30' Solid & 425' Slotted)
& Concrete Headwall (680.01)

671+40.71-187.83' R to 672+20.17-141.94' R
Install 24" - 78' CMP Downspout
(20', 48' & 10' Str Pipe)
& 2 - 25° Elbows
& 1 - 24" Safety End (Inlet)
& 1 - 24" Flared End (Outlet)

671+60 - 156' R to 674+50 - 120' R
Install 4" - 300' Corrugated Polyethylene
Drainage Tubing (50' Solid & 250' Slotted)
& Concrete Headwall (680.01)

663+10 R
Take Out 24"-88' RCP
& 2 End Sections
(Incidental Work, Grading)

667+97 R
Take Out 12"-29' RCP
(Incidental Work, Grading)

667+97 - 57' R to 668+18 - 112' R
Take Out 12"-59' CMP
(Incidental Work, Grading)

671+06 - 147' R to 671+78 - 110' R
Take Out 24"-75' CMP Downspout
(Incidental Work, Grading)

671+83 R
Take Out 18"-73' RCP
& 2 End Sections
(Incidental Work, Grading)

Parcel A1

660+24.14 to 669+54.82 R
Temporary Easment Containing
0.5 acres, more or less

Plot Scale - 1:200
Plotted From - TRSF12141
File - U:\rdrpn\Minn021X\0657.dgn

STATE OF SOUTH DAKOTA	PROJECT	SHEET	TOTAL SHEETS
	IM 0909(81)406	B16	B48

Plotting Date: 06/09/2016

EB I-90

Exc	811	Emb	5,250
*Sel Top Exc	3,864	+35%	1,837
**Surfacing Removal	1,728	Sel Top (Exc)	3,693
***Contr Furn Borrow	7,398	+35%	1,293
Total	13,801	Sel Top (Surf)	1,846
		-10%	-185
		#Waste	67
		Total	13,801

Exc	831	Emb	169	
*Sel Top Exc	2,010	+40%	67	236
**Surfacing Removal	720	Sel Top (Exc)	1,543	
Total	3,561	+40%	617	2,160
		Sel Top (Surf)	771	
		-10%	-77	694
		#Waste		471
		Total		3,561

Exc	41	Emb	94	
*Sel Top Exc	416	+50%	47	141
**Out-of-Balance Exc	188	Sel Top (Exc)	336	
***Out-of-Balance Sel Top Exc	151	+50%	168	504
Total	796	Sel Top (Surf)	168	
		-10%	-17	151
		Total		796

* 811 CuYd of Unstable Material is included in the Excavation Quantity
* Paid for as Unclassified Excavation
** Paid for as Remove Concrete Surfacing
*** Contractor Furnished Borrow includes 7,087 CuYd for Embankment and 1,122 CuYd for the Select Topping Subgrade soil to be mixed with the crushed surfacing
\# Waste is additional surfacing removal that is not needed for Select Subgrade Topping Mixture

* Paid for as Unclassified Excavation
** Paid for as Remove Concrete Surfacing
\# Waste is 26 CuYd of additional surfacing removal that is not needed for Select Subgrade Topping Mixture and 445 CuYd of Excavation not used in Select Topping or Embankment

* Paid for as Unclassified Excavation
** Out-of-Balance Excavation is material from a previous balance that had waste
*** Out-of-Balance Select Topping Excavation is salvaged concrete surfacing material from a previous balance that had waste

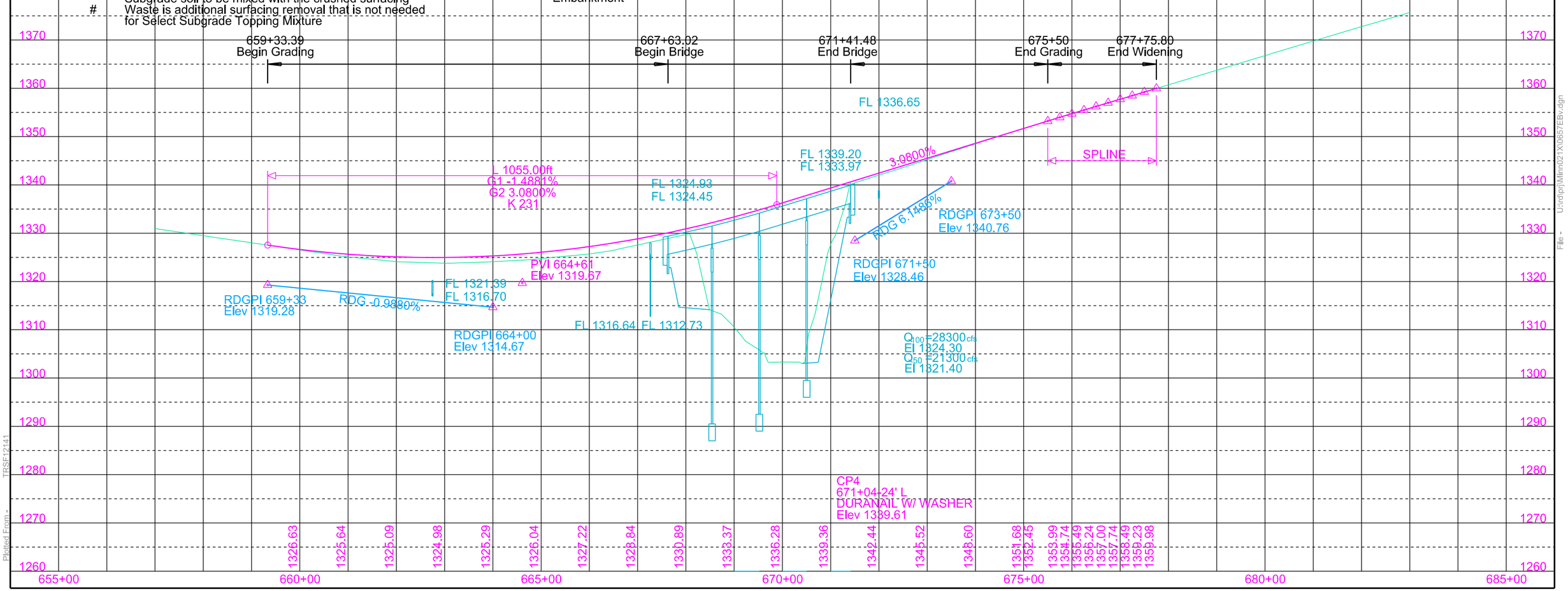

Plot Scale - 1:200
Plotted From - TRSF12141
File - U:\rdprj\Minnr021X\065\7EBv.dgn

STATE OF SOUTH DAKOTA	PROJECT	SHEET	TOTAL SHEETS
	IM 0909(81)406	B17	B48

Plotting Date: 06/09/2016

WB I-90

	Exc	0	Emb	2,099	
*Sel Top Exc		3,312	+35%	734	2,833
**Surfacing Removal		1,640	Sel Top (Exc)	2,937	
**Contr Furn Borrow		3,486	+35%	1,028	3,965
Total		8,438	Sel Top (Surf)	1,468	
			-10%	-147	1,321
			#Waste		319
			Total		8,438

* Paid for as Unclassified Excavation
** Paid for as Remove Concrete Surfacing
\# Waste is additional surfacing removal that is not needed for Select Subgrade Topping Mixture

	Exc	238	Emb	1,317	
*Sel Top Exc		2,198	+40%	527	1,844
**Surfacing Removal		801	Sel Top (Exc)	1,730	
**Contr Furn Borrow		1,450	+40%	692	2,422
# Out-of-Balance Exc		380	Sel Top (Surf)	865	
Total		5,067	-10%	-87	778
			#Waste		23
			Total		5,067

* Paid for as Unclassified Excavation
** Paid for as Remove Concrete Surfacing
*** Contractor Furnished Borrow includes 1226 CuYd for Embankment and 224 CuYd for the Select Topping Subgrade soil to be mixed with the crushed surfacing
\# Out-of-Balance Excavation is material from a previous balance that had waste
\# Waste is additional surfacing removal that is not needed for Select Subgrade Topping Mixture

	Exc	136	Emb	5	
*Sel Top Exc		309	50%	3	8
** Out-of-Balance Sel Top Exc		94	Sel Top (Exc)	209	
Total		539	+50%	105	314
			Sel Top (Surf)	104	
			-10%	-10	94
			#Waste		123
			Total		539

* Paid for as Unclassified Excavation
** Out-of-Balance Select Topping Excavation is salvaged concrete surfacing material from a previous balance that had waste
\# Waste is additional excavation not used in Select Topping or Embankment

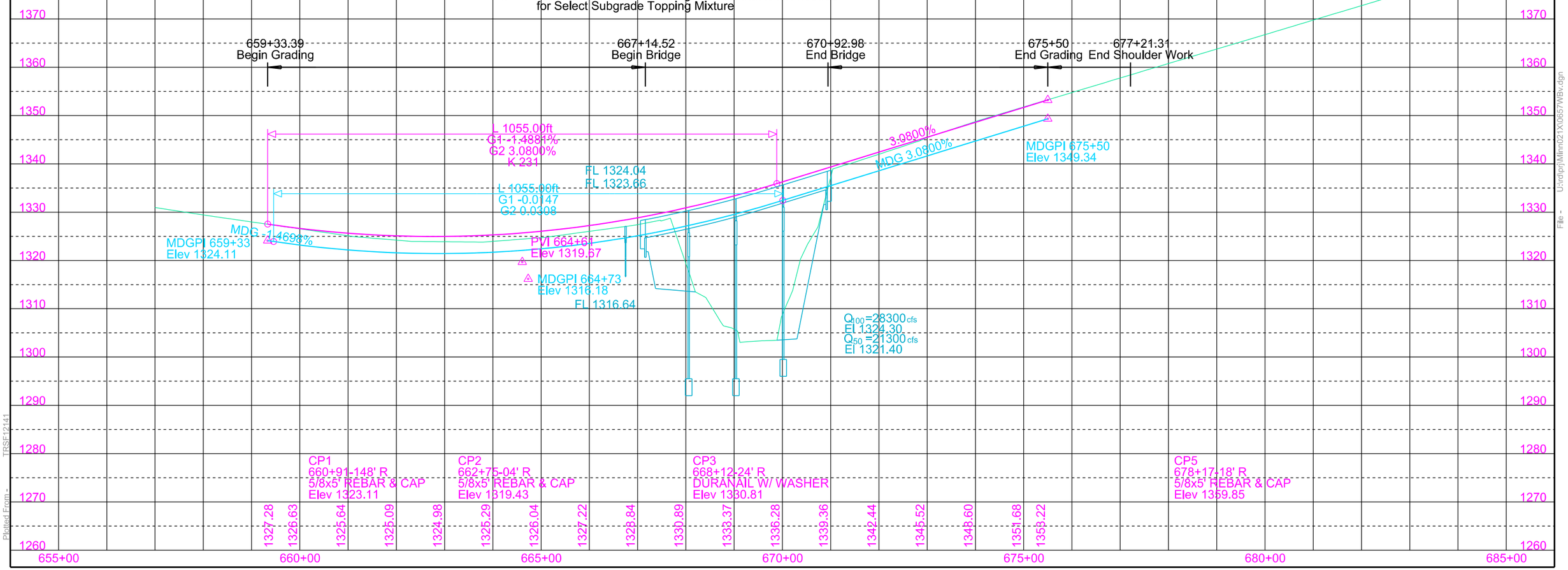

Plot Scale - 1:200
Plotted From - TRSF12141
File - U:\rdproj\Minn\0217X\0657WBV.dgn

STATE OF SOUTH DAKOTA	PROJECT	SHEET	TOTAL SHEETS
	IM 0909(81)406	B18	B48

Plotting Date: 06/09/2016

GUARDRAIL LAYOUT

I-90 Eastbound Structure No. 50-284-166

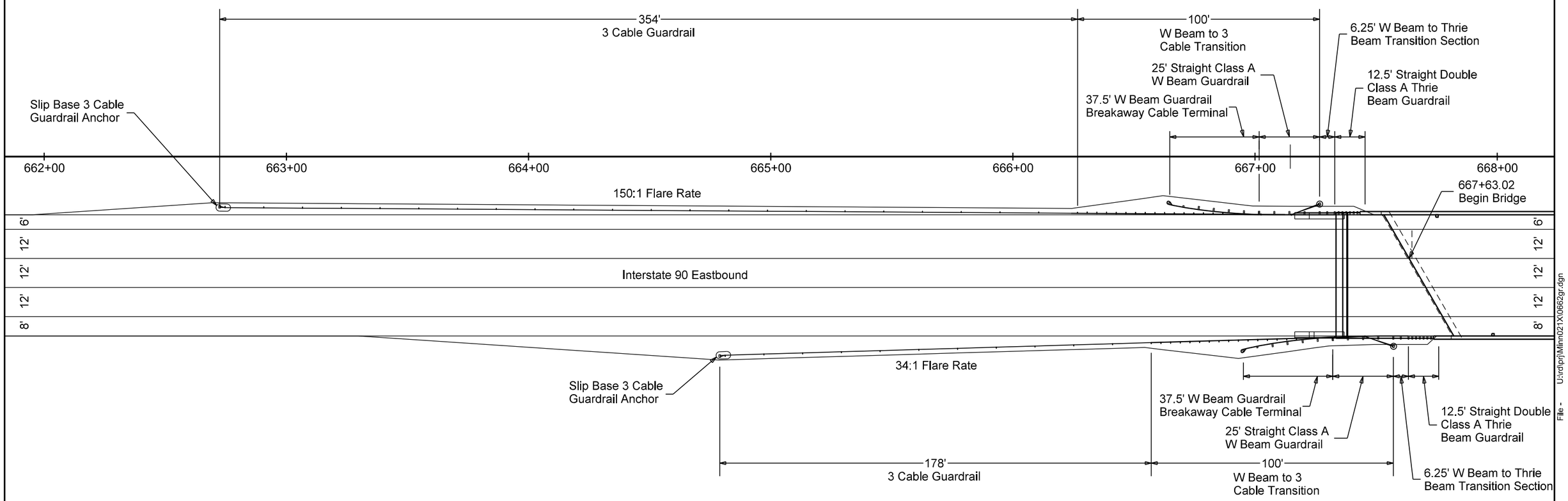

Plot Scale - 1:40

Plotted From - TRSF12141

File - U:\rdprj\Minn\021X\0662gr.dgn

STATE OF SOUTH DAKOTA	PROJECT	SHEET	TOTAL SHEETS
	IM 0909(81)406	B19	B48

Plotting Date: 06/09/2016

GUARDRAIL LAYOUT

I-90 Westbound Structure No. 50-284-165

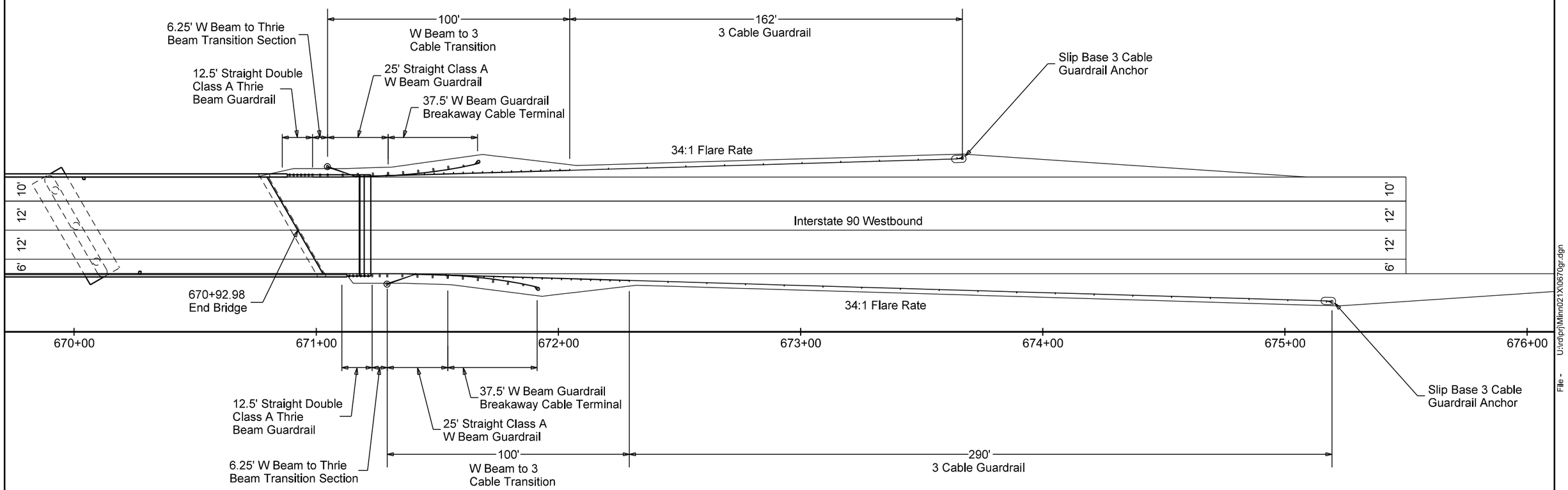

Plot Scale - 1:40

Plotted From - TRSF12141

File - U:\rdprj\Minn021X0670gr.dgn

STATE OF SOUTH DAKOTA	PROJECT	SHEET	TOTAL SHEETS
	IM 0909(81)406	B20	B48

Plotting Date: 06/09/2016

TEMPORARY GUARDRAIL LAYOUT

I-90 Westbound Structure No. 50-284-165

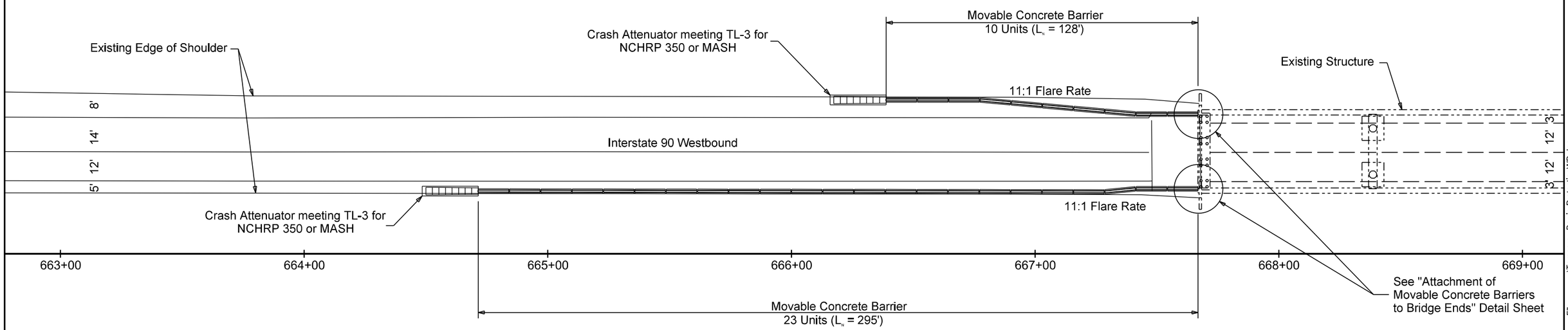

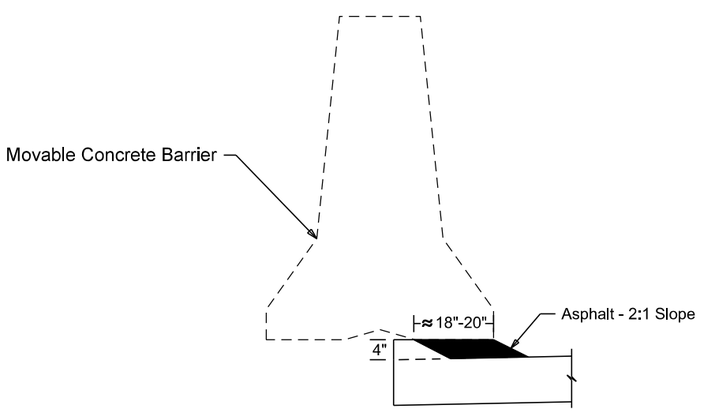

The existing curbs in the approach slab may need to be leveled with composite asphalt concrete for installation of the Movable Concrete Barriers. The detail above is an approximation. Placement of the barrier shall determine the actual amount of composite asphalt concrete needed if any. Any asphalt quantities needed for the leveling and labor shall be incidental to the contract unit price per each for "Traffic Control Movable Concrete Barrier". If the Type D Frame and Grates need to be covered prior to placement of any leveling asphalt, the work to cover the drop inlets will also be incidental to the contract unit price per each for "Traffic Control Movable Concrete Barrier".

Plot Scale - 1:40

Plotted From - TRSF12141

File - ...\TemporaryBarrierProtectionWB.dgn

STATE OF SOUTH DAKOTA	PROJECT	SHEET	TOTAL SHEETS
	IM 0909(81)406	B21	B48

Plotting Date: 06/09/2016

TEMPORARY GUARDRAIL LAYOUT

I-90 Eastbound Structure No. 50-284-166

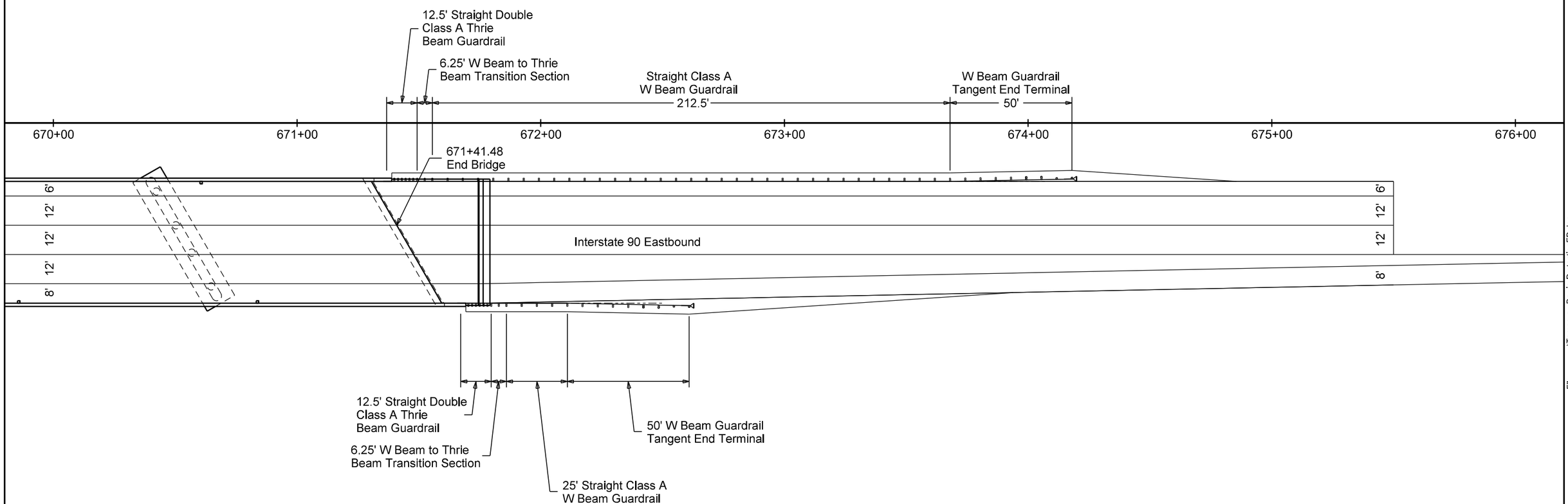

Note: All guardrail on this layout shall be salvaged once no longer needed. See general notes for more information.

Plot Scale - 1:40

Plotted From - TRSF12141

File - ...\TemporaryBarrierProtectionEB.dgn

The Contractor will ensure the entire width of the Barriers are installed on a level surface.

ATTACHMENT OF MOVABLE CONCRETE BARRIERS TO BRIDGE ENDS

STATE OF SOUTH DAKOTA	PROJECT	SHEET	TOTAL SHEETS
	IM 0909(81)406	B22	B48

Plotting Date: 06/09/2016

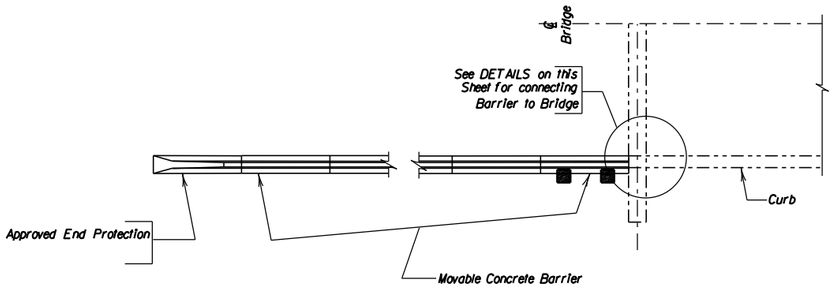

LAYOUT OF MOVABLE CONCRETE BARRIER AT BRIDGE ENDS

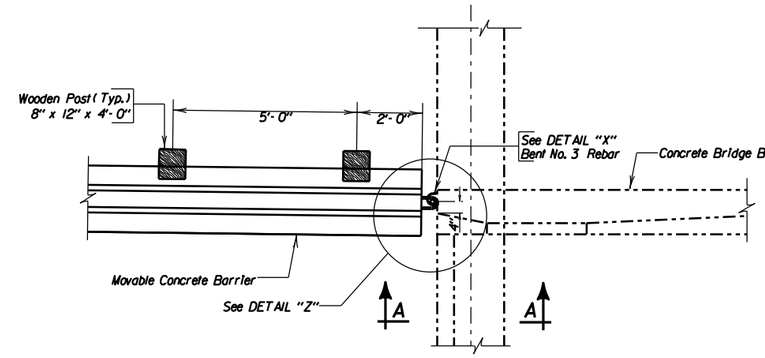

PLAN VIEW
MOVABLE BARRIER FASTENED TO CONCRETE BARRIER

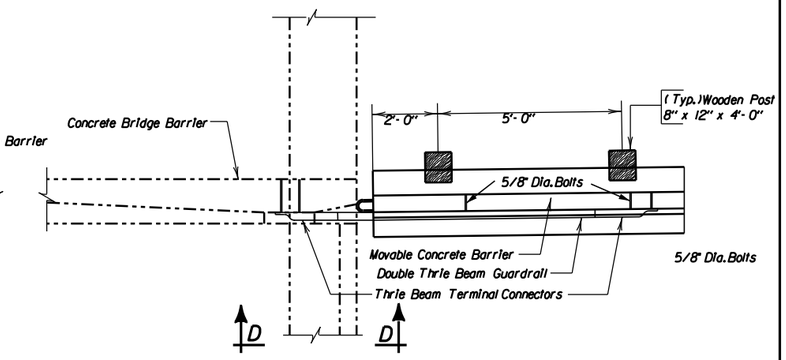

PLAN VIEW
MOVABLE BARRIER FASTENED TO CONCRETE BARRIER

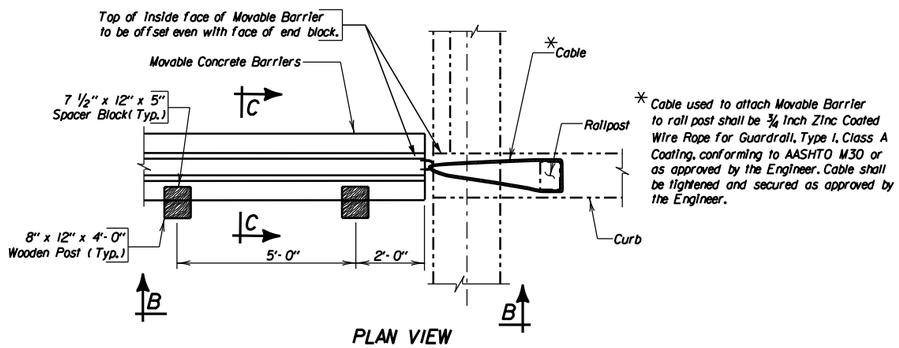

* Cable used to attach Movable Barrier to rail post shall be 3/4 inch Zinc Coated Wire Rope for Guardrail, Type I, Class A Coating, conforming to AASHTO M30 or as approved by the Engineer. Cable shall be tightened and secured as approved by the Engineer.

PLAN VIEW
MOVABLE BARRIER FASTENED TO BRIDGE RAIL POST

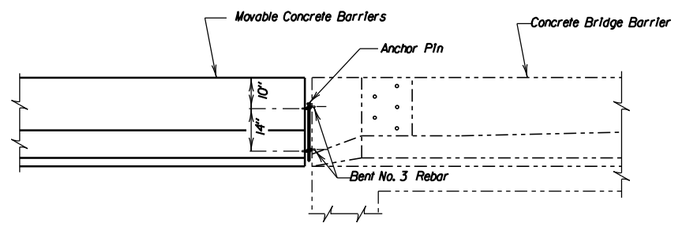

VIEW A - A

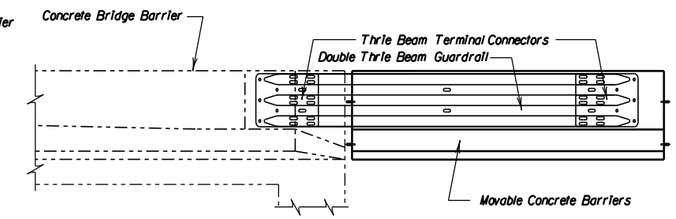

VIEW D - D

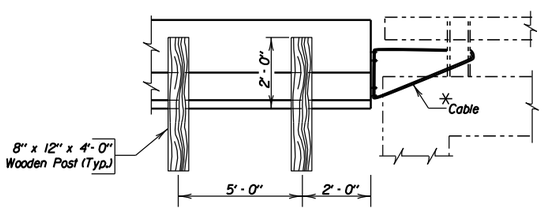

VIEW B - B

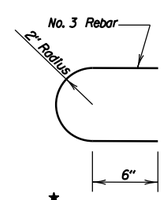

* Drill in and epoxy No. 3 Rebar. See notes under "Installing Dowels in Concrete". Minimum Embedment of 4".

* DETAIL "X"

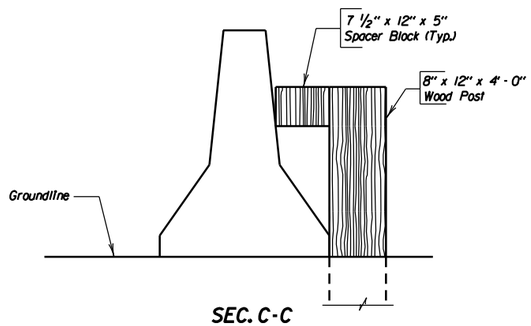

SEC. C-C

PLAN VIEW
MOVABLE BARRIER FASTENED TO BRIDGE END BLOCK

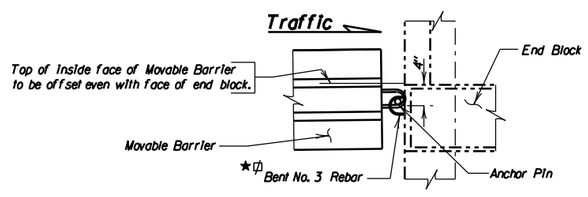

⌀ Use same spacing as shown in VIEW A - A.

DETAIL "Y"

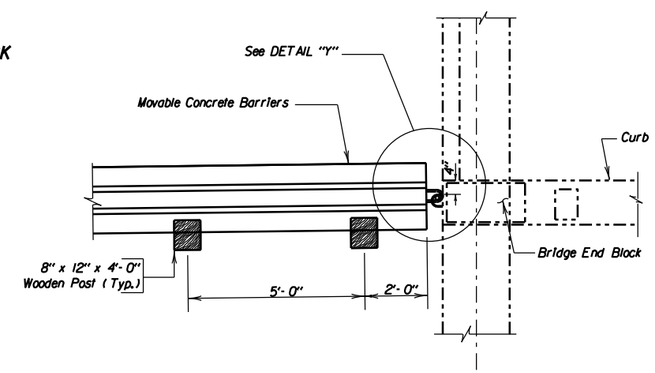

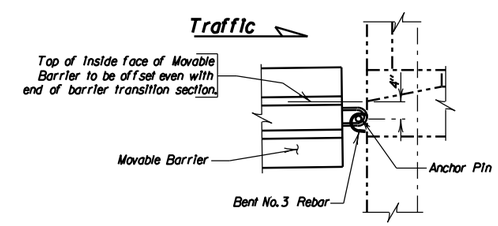

DETAIL "Z"

Plot Scale - 1:32.9427

Plotted From - TRSF12141

File - ...\Guardrail Movable Barriers.dgn

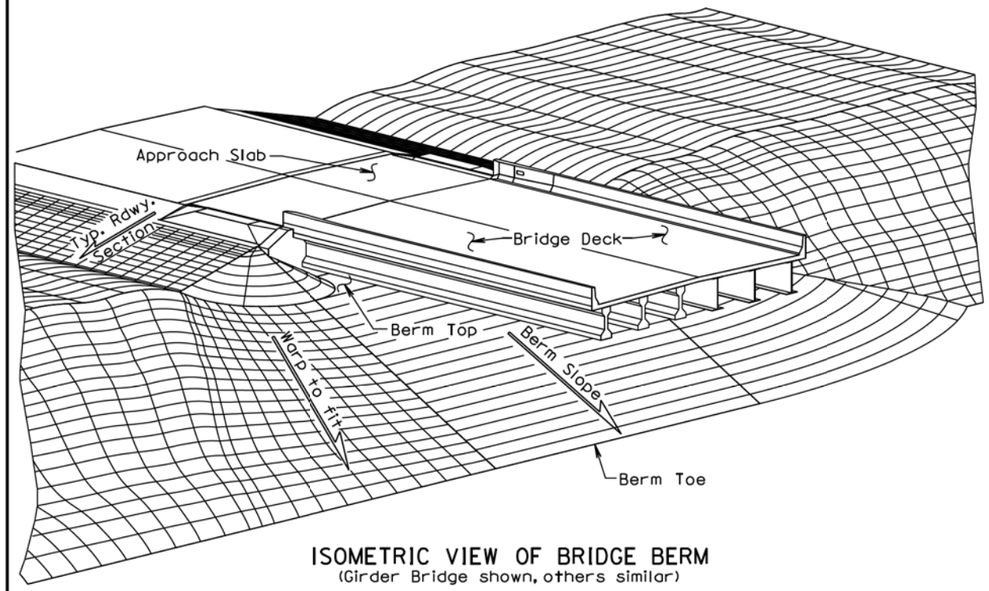

ISOMETRIC VIEW OF BRIDGE BERM
(Girder Bridge shown, others similar)

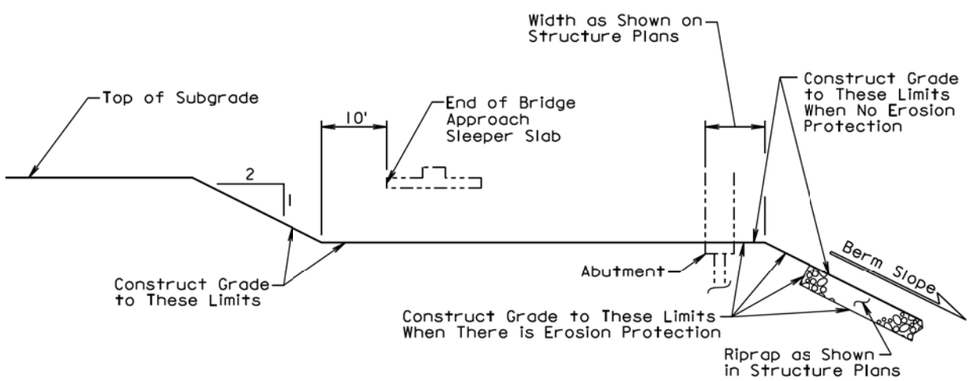

TYPICAL GRADING PROFILE AT BRIDGE BERM
(Normal to ℄ Abutment at ℄ Roadway)

GENERAL NOTE:

The bridge berm elevation and slope shall be as shown in the structure plans.

September 6, 2006

Published Date: 2nd Qtr. 2016	SDDOT	BRIDGE BERM (NONPROJECTING EMBANKMENT)	PLATE NUMBER 120.10 Sheet 1 of 1

TOLERANCES IN DIMENSIONS

Diameter: ±1.5% for 24" Dia. or less and ±1% or 3/8" whichever is more for 27" Dia. or greater.
Diameters at joints: ± 3/16" for 30" Dia. or less and ± 1/4" for 36" or greater.
Length of joint (J): ± 1/4".
Wall thickness (T): not less than design T by more than 5% or 3/16", whichever is greater.
Laying length: shall not underrun by more than 1/2".

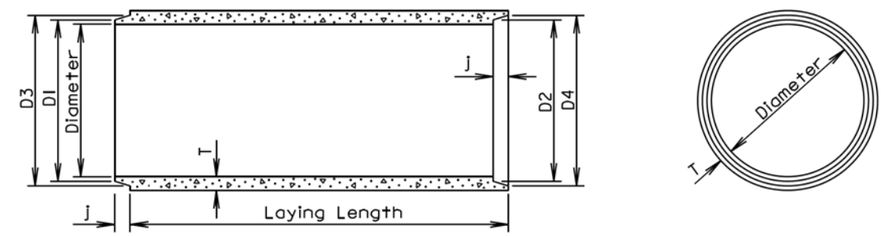

LONGITUDINAL SECTION

END VIEW

GENERAL NOTES:

Construction of R. C. P. shall conform to the requirements of Section 990 of the Specifications.

Not more than 2 four-foot sections shall be permitted near the ends of any culvert. Four-foot lengths shall be used only to secure the required length of culvert.

Diam. (in.)	Approx. Wt. /Ft. (lb.)	T (in.)	J (in.)	D1 (in.)	D2 (in.)	D3 (in.)	D4 (in.)
12	92	2	1 3/4	13 1/4	13 5/8	13 7/8	14 1/4
15	127	2 1/4	2	16 1/2	16 7/8	17 1/4	17 5/8
18	168	2 1/2	2 1/4	19 5/8	20	20 3/8	20 3/4
21	214	2 3/4	2 1/2	22 7/8	23 1/4	23 3/4	24 1/8
24	265	3	2 3/4	26	26 3/8	27	27 3/8
27	322	3 1/4	3	29 1/4	29 5/8	30 1/4	30 5/8
30	384	3 1/2	3 1/4	32 3/8	32 3/4	33 1/2	33 7/8
36	524	4	3 3/4	38 3/4	39 1/4	40	40 1/2
42	685	4 1/2	4	45 1/8	45 5/8	46 1/2	47
48	867	5	4 1/2	51 1/2	52	53	53 1/2
54	1070	5 1/2	4 1/2	57 7/8	58 3/8	59 3/8	59 7/8
60	1296	6	5	64 1/4	64 3/4	66	66 1/2
66	1542	6 1/2	5 1/2	70 5/8	71 1/8	72 1/2	73
72	1810	7	6	77	77 1/2	79	79 1/2
78	2098	7 1/2	6 1/2	83 3/8	83 7/8	85 5/8	86 1/8
84	2410	8	7	89 3/4	90 1/4	92 1/8	92 5/8
90	2740	8 1/2	7	95 3/4	96 1/4	98 1/8	98 5/8
96	2950	9	7	102 1/8	102 5/8	104 1/2	105
102	3075	9 1/2	7 1/2	109	109 1/2	111 1/2	112
108	3870	10	7 1/2	115 1/2	116	118	118 1/2

June 26, 2015

Published Date: 2nd Qtr. 2016	SDDOT	REINFORCED CONCRETE PIPE	PLATE NUMBER 450.01 Sheet 1 of 1

Plot Scale - 1:200
- Plotted From - TRSF12141
File - ...\prj\Mlm021X\s12010s72003.dgn

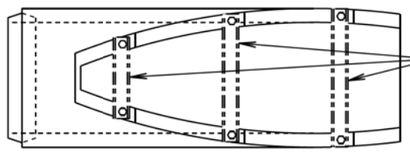

If bars are specified in the plans then provide HSS 2.5X2.5X.1875 Structural Steel Tubing in conformance with ASTM A500, Grade B or 3" Diameter Schedule 40 Pipe in conformance with ASTM A53, Grade B.

TOP VIEW

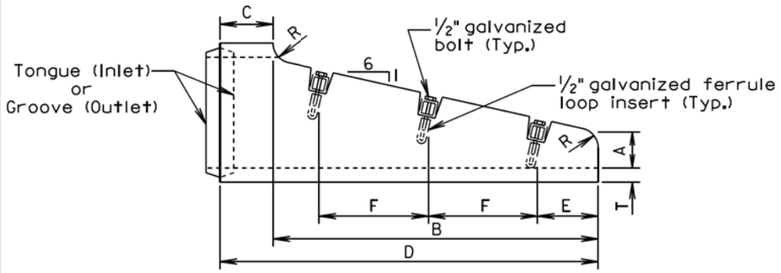

SIDE VIEW

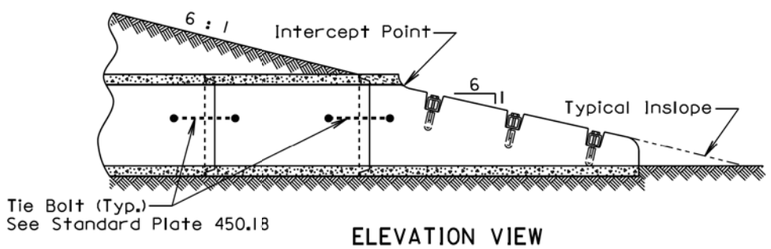

ELEVATION VIEW

Dia. (in.)	T (in.)	R (in.)	A (in.)	B (in.)	C (in.)	D (in.)	E (in.)	F (in.)	No. Sections	No. Bars
FOR CIRCULAR PIPE										
15	2 1/4	3	6	48	9	57	6	18	1	3
18	2 1/2	3	6	69	9	78	9	24	1	3
*24	3	3	6	111	9	120	6	24	1 or 2	5
FOR ARCH PIPE										
**18	2 1/2	1	6	39	33	72	6	24	1	2

*The use of 2 sections must be an approved design.
**Equivalent Diameter of Circular R. C. P.

GENERAL NOTES:

The length of concrete pipe shown on the plans is between safety ends.

Safety ends without bars are acceptable with or without the bar notches.

Bars shall be galvanized after fabrication in accordance with ASTM A123.

August 31, 2013

Published Date: 2nd Qtr. 2016	SDDOT	R. C. P. SAFETY ENDS WITH OR WITHOUT BARS	PLATE NUMBER 450.12 Sheet 1 of 1

Wall "t" (in.)	Rod Dia. (in.)	Pipe Sleeve Dia. (nominal)
≤ 3 1/4	5/8	3/4
3 1/2-6 1/2	3/4	1
≥ 7	1	1 1/4

GENERAL NOTES:

Tie bolts shall conform to ASTM F1554 Grade 36 or ASTM A36. Nuts shall be heavy hex conforming to ASTM A563. Washers shall conform to ASTM F436.

Pipe Sleeve shall conform to ASTM A500 or A53, Grade B.

Galvanize adjustible eye bolt tie assembly in accordance with ASTM A153.

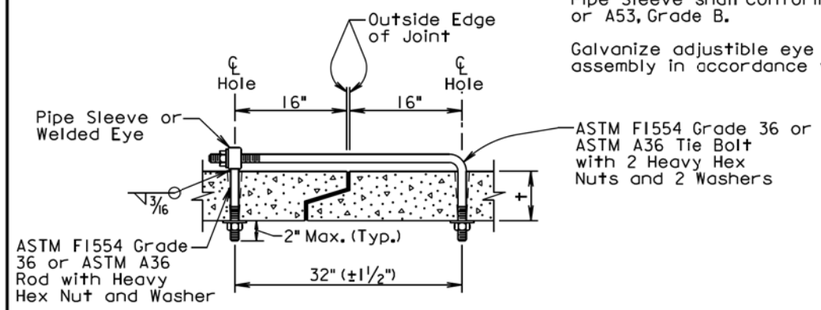

ADJUSTABLE EYE BOLT TIE

Pipe Dia. (in.)	"L" (in.)	Bolt Dia. (in.)
≤ 48	4	3/4
> 48	6	1

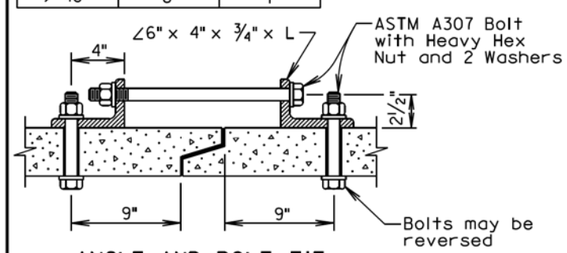

ANGLE AND BOLT TIE

GENERAL NOTES:

Angles shall conform to ASTM A36.

Bolts shall conform to ASTM A307. Nuts shall be heavy hex conforming to ASTM A563. Washers shall conform to ASTM F436.

Galvanize angles, bolts, nuts, and washers in accordance with ASTM A153.

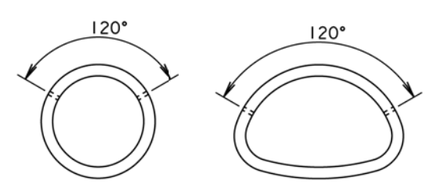

END VIEW "CIRCULAR"

END VIEW "ARCH"

GENERAL NOTES:

In lieu of the tie bolts detailed above other types of tie bolt connections may be installed as approved by the Office of Bridge Design.

All pipe sections of R.C.P. and R.C.P. Arch shall be tied with tie bolts except for pipe located between drop inlets, manholes, and junction boxes. All pipe sections of pipes that only enter or exit drop inlets, manhole, and junction boxes shall be tied with tie bolts.

There will be no separate measurement or payment for the tie bolts. The cost for furnishing and installing the tie bolts shall be incidental to the contract unit price per foot for the corresponding bid item for R.C.P. or R.C.P. Arch.

February 28, 2013

Published Date: 2nd Qtr. 2016	SDDOT	TIE BOLTS FOR R.C.P. AND R.C.P. ARCH	PLATE NUMBER 450.18 Sheet 1 of 1

Plot Scale - 1:200
- Plotted From - TRSF12141
File - ...\pp\Mnn021X\s12010s72003.dgn

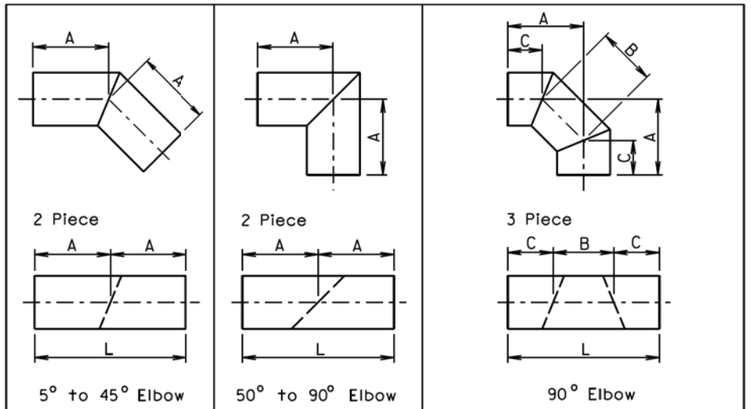

Diameter	A	L	Diameter	A	L	Diameter	A	B	C	L
Inches	Feet	Feet	Inches	Feet	Feet	Inches	Inches			Feet
12	1	2	12	2	4	12	25½	11	18½	4
15	1	2	15	2	4	15	26½	12	18	4
18	1	2	18	2	4	18	27	14	17	4
21	2	4	21	2	4	21	27	15	16½	4
24	2	4	24	2	4	24	27½	16	16	4
27	2	4	27	2	4	27	27½	17	15½	4
30	2	4	30	3	6	30	40	19	26½	6
33	2	4	33	3	6	33	40	20	26	6
36	2	4	36	3	6	36	40½	21	25½	6
42	2	4	42	3	6	42	41	23	24½	6
48	2	4	48	4	8	48	53½	26	35	8
54	3	6	54	4	8	54	54	28	34	8
60	3	6	60	4	8	60	54½	31	32½	8
66	3	6	66	4	8	66	54	33	31½	8
72	3	6	72	5	10	72	67½	36	42	10
78	3	6	78	5	10	78	68	39	40½	10
84	3	6	84	5	10	84	68½	41	39½	10
90	3	6	90	6	12	90	70	46	37	10
96	3	6	96	6	12	96	82	46	49	12

FABRICATED ELBOW LENGTHS FOR ALL CORRUGATIONS

GENERAL NOTES:

All dimensions shown are nominal.

L = Linear Feet of C.M.P. required to fabricate fitting.

June 26, 2001

Published Date: 2nd Qtr. 2016 | SDDOT | **C.M.P. FABRICATED LENGTHS FOR ELBOWS** | PLATE NUMBER 450.32 | Sheet 1 of 1

Alternate Type Connector Sections may be used with approval of the Engineer.

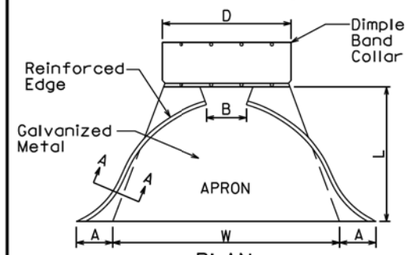

PLAN

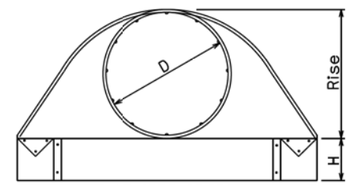

ELEVATION

Dia. D (in.)	Ga.	DIMENSIONS (in.) A	B	H	L	W	Approx. Slope	Body
12	16	6	6	6	21	24	2½:1	1 Pc.
15	16	7	8	6	26	30	2½:1	1 Pc.
18	16	8	10	6	31	36	2½:1	1 Pc.
21	16	9	12	6	36	42	2½:1	1 Pc.
24	16	10	13	6	41	48	2½:1	1 Pc.
30	14	12	16	8	46	60	2½:1	1 Pc.
36	14	14	19	9	51	72	2½:1	2 Pc.
42	12	16	22	11	60	84	2½:1	2 Pc.
48	12	18	27	12	69	90	2¼:1	2 Pc.
54	12	18	30	12	78	102	2:1	3 Pc.
60	12	18	33	12	84	114	1¾:1	3 Pc.
66	12	18	36	12	87	120	1½:1	3 Pc.
72	12	18	39	12	87	126	1⅓:1	3 Pc.
78	12	18	42	12	87	132	1¼:1	3 Pc.
84	12	18	45	12	87	138	1⅙:1	3 Pc.

STANDARD CONNECTIONS

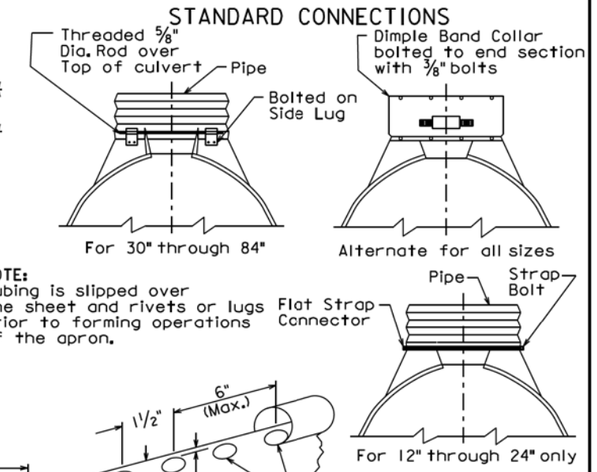

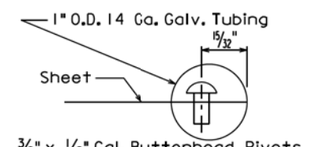

3/8" x 1/2" Gal. Buttonhead Rivets spaced 6" C. to C. Overall length of rivets=0.78"

TUBING ATTACHMENT DETAILS
SECTION A-A

NOTE:
Tubing is slipped over the sheet and rivets or lugs prior to forming operations of the apron.

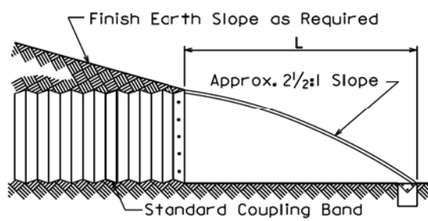

TYPICAL CROSS-SECTION

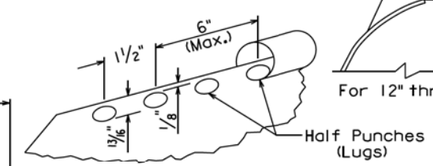

SECTION A-A (alternate)

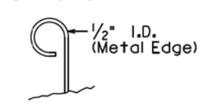

SECTION A-A (alternate)

GENERAL NOTES:

All 3 pc. bodies shall have 12 Ga. sides and 10 Ga. center panels. Width of center panels shall be greater than 20% of the pipe periphery. Multiple panel bodies to have lap seams tightly joined by 3/8" Dia. galvanized rivets or bolts.

For 60" through 84" sizes, reinforced edges shall be supplemented with galvanized stiffener angles. The angles will be 2" x 2" x 1/4" for 60" through 72" diameters and 2½" x 2½" x 1/4" for 78" and 84" diameters. The angles shall be attached by 3/8" diameter galvanized nuts and bolts.

Rivets and Bolts shall be 3/8" Dia. Min. for 10 Ga. and 12 Ga. sheet, and 5/16" Dia. Min. for 14 Ga. and 16 Ga. sheets. Tighten nuts with torque wrench to 25 lbs. torque.

March 31, 2000

Published Date: 2nd Qtr. 2016 | SDDOT | **C.M.P. FLARED ENDS** | PLATE NUMBER 450.35 | Sheet 1 of 1

Plot Scale - 1:200
- Plotted From - TRSF12141
File - ...\prj\Minn021X\s12010s72003.dgn

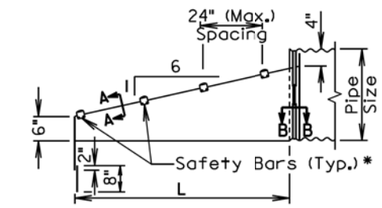

ELEVATION VIEW

*Number of bars required will vary depending on the length of the end section.

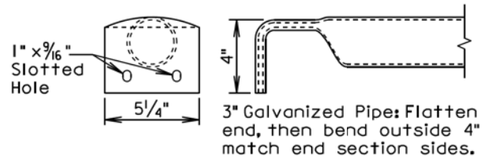

DETAIL OF SAFETY BARS

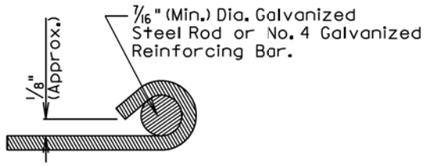

SECTION A-A

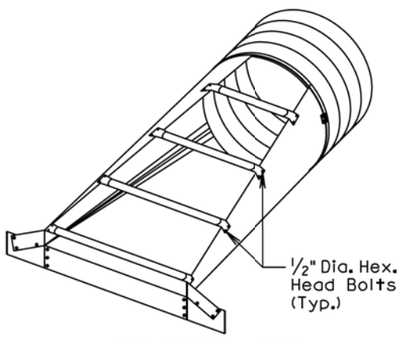

ISOMETRIC VIEW

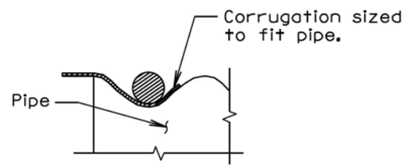

SECTION B-B

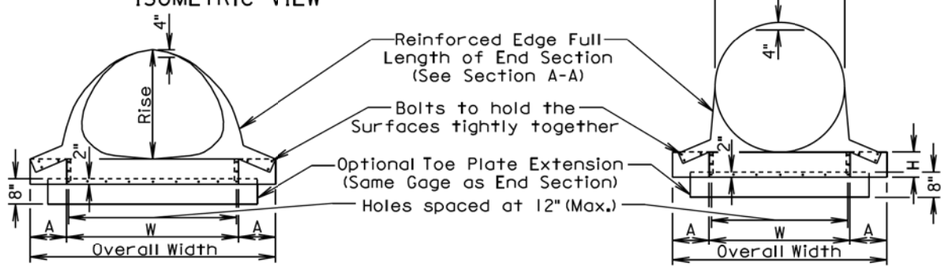

FRONT VIEW

FRONT VIEW

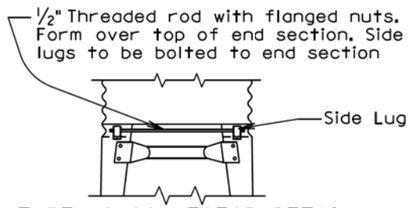

TYPE #2 CONNECTOR DETAIL
(For 30" and Larger)
(For 21" X 15" and Larger)

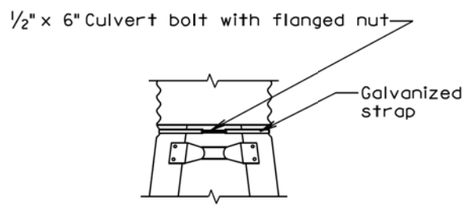

TYPE #1 CONNECTOR DETAIL
(For 15" Through 24")

June 26, 2015

Published Date: 2nd Qtr. 2016	SDDOT	C. M. P. SAFETY ENDS	PLATE NUMBER 450.38
			Sheet 1 of 2

ARCH C.M.P. SAFETY ENDS										
Equv. Dia. (Inch)	(Inches)		Min. Thick.		Dimensions (Inches)				L Dimensions	
	Span	Rise	Inch	Gage	A	H	W	Overall Width	Slope	Length (Inch)
18	21	15	.064	16	8	6	27	43	6:1	30
21	24	18	.064	16	8	6	30	46	6:1	48
24	28	20	.064	16	8	6	34	50	6:1	60
30	35	24	.079	14	12	9	41	65	6:1	84
36	42	29	.109	12	12	9	48	72	6:1	114
42	49	33	.109	12	16	12	55	87	6:1	138
48	57	38	.109	12	16	12	63	95	6:1	168
54	64	43	.109	12	16	12	70	102	6:1	198
60	71	47	.109	12	16	12	77	109	6:1	222
72	83	57	.109	12	16	12	89	121	6:1	282

CIRCULAR C.M.P. SAFETY ENDS								
Pipe Dia. (Inch)	Min. Thick.		Dimensions (Inches)				L Dimensions	
	Inch	Gage	A	H	W	Overall Width	Slope	Length (Inch)
15	.064	16	8	6	21	37	6:1	30
18	.064	16	8	6	24	40	6:1	48
21	.064	16	8	6	27	43	6:1	66
24	.064	16	8	6	30	46	6:1	84
30	.109	12	12	9	36	60	6:1	120
36	.109	12	12	9	42	66	6:1	156
42	.109	12	16	12	48	80	6:1	192
48	.109	12	16	12	54	86	6:1	228
54	.109	12	16	12	60	92	6:1	264
60	.109	12	16	12	66	98	6:1	300

GENERAL NOTES:

Safety ends shall be fabricated from galvanized steel conforming to the requirements of the Specifications.

Safety bars shall be fabricated from steel schedule 40 pipe in conformance with ASTM A53, grade B or HSS 3.5X.216 in conformance with ASTM A500, grade B.

Slotted holes for safety bar attachment shall be provided for all end sections.

Attachment to circular pipes 15" through 24" diameter shall be made with Type #1 straps. All other sizes shall be attached with Type #2 rods and lugs.

When stated in the plans, optional toe plate extension shall be punched and bolted to end section apron lip with 3/8" diameter galvanized bolts. Steel for toe plate extension shall be same gauge as end section. Dimensions shall be overall width less 6" by 8" high.

Installation shall be performed in accordance with the Specifications.

Cost of all work and materials required for fabrication and installation of safety ends shall be incidental to the bid items for the various sizes of safety ends.

June 26, 2015

Published Date: 2nd Qtr. 2016	SDDOT	C. M. P. SAFETY ENDS	PLATE NUMBER 450.38
			Sheet 2 of 2

Plot Scale - 1:200
Plotted From - TRSF12141
File - ...\prj\Mlm021X\s12010s72003.dgn

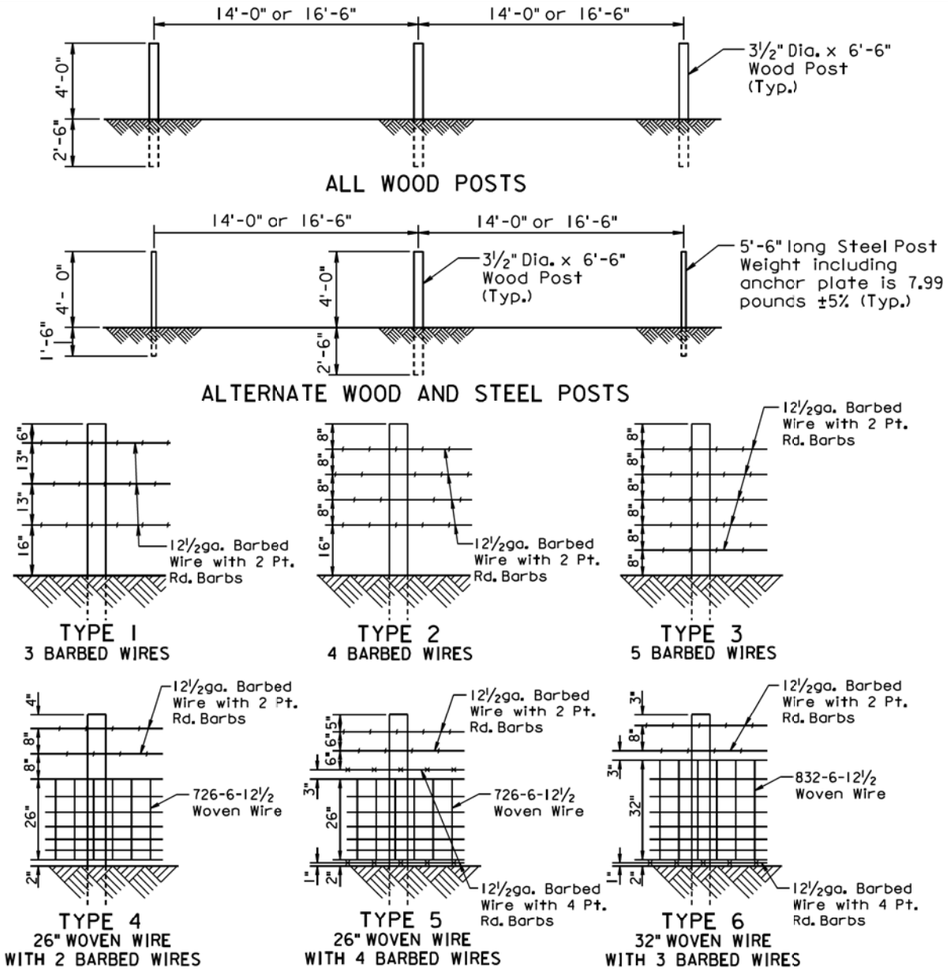

TYPE OF FENCE		LINE POST SPACING	BARBED WIRE		WOVEN WIRE
TYPE	DESCRIPTION		WIRE GAGE	NUMBER AND SHAPE OF BARBS	STYLE OR DESIGN NO.
1	3 Barbed Wires	16'-6"	12½	2 Point Round	—
2	4 Barbed Wires	16'-6"	12½	2 Point Round	—
3	5 Barbed Wires	16'-6"	12½	2 Point Round	—
4	26" Woven Wire with 2 Barbed Wires	14'-0"	12½	2 Point Round	726-6-12½
5	26" Woven Wire with 4 Barbed Wires	14'-0"	12½	2 wires with 2 Pt. Rd. 2 wires with 4 Pt. Rd.	726-6-12½
6	32" Woven Wire with 3 Barbed Wires	14'-0"	12½	2 wires with 2 Pt. Rd. 1 wire with 4 Pt. Rd.	832-6-12½

GENERAL NOTES:

Fence types designated on the plans that are followed by the letter S shall have smooth (barbless) wires.

When type 5S or 6S is designated the bottom wire may be barbed, smooth, or left off.

All degrees of curvature stated for fence are at centerline of roadway.

September 14, 2009

Published Date: 2nd Qtr. 2016

SDDOT

RIGHT-OF-WAY FENCE

PLATE NUMBER 620.01

Sheet 1 of 1

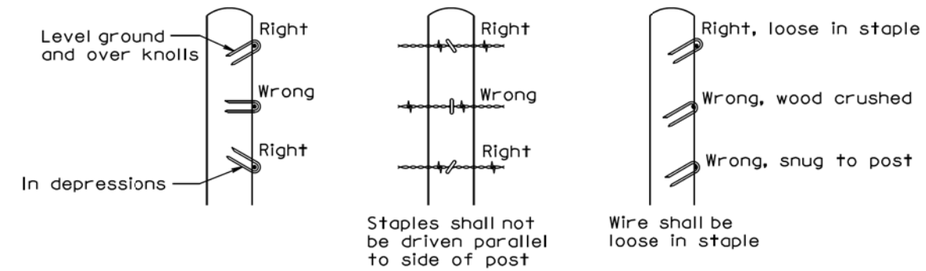

STAPLE INSTALLATION

GENERAL NOTES:

The Right-of-Way fence shall consist of barbed wire or a combination of woven wire and barbed wire. The barbed wire and/or woven wire shall be fastened to all wood posts or fastened to alternating wood and steel posts. Only wood posts shall be used for brace panels. Gates shall be of the type designated in the plans or as otherwise directed by the Engineer. Fence shall be constructed conforming to the details on the standard plates and in the plans unless otherwise directed by the Engineer.

Right-of-Way fence on Interstate Projects shall be constructed one foot within the Interstate Right-of-Way lines except at bridge openings, cattle passes, and as otherwise directed by the Engineer.

Right-of-Way fence other than on Interstate Projects shall be constructed within one foot of the Right-of-Way on the Landowner's side except at bridge openings, cattle passes, and as otherwise directed by the Engineer.

Barbs shall be fabricated from zinc coated 14 ga. wire. Two point barbs shall be wrapped twice around one main strand at 4" spacings and the four point barbs shall be interlocked and wrapped around both main strands at 5" spacings.

The gages of wire and wood post lengths and sizes are the minimum acceptable unless otherwise specified in the plans. The tolerances for steel posts shall be as stated in AASHTO M281. Woven wire shall conform to design and specifications of ASTM A116 and barbed wire shall conform to ASTM A121.

December 23, 2004

Published Date: 2nd Qtr. 2016

SDDOT

STAPLE INSTALLATION AND GENERAL RIGHT-OF-WAY FENCE NOTES

PLATE NUMBER 620.02

Sheet 1 of 1

Plot Scale - 1:200
- Plotted From - TRSF12141
File - ...\prj\Minn021X\s12010s72003.dgn

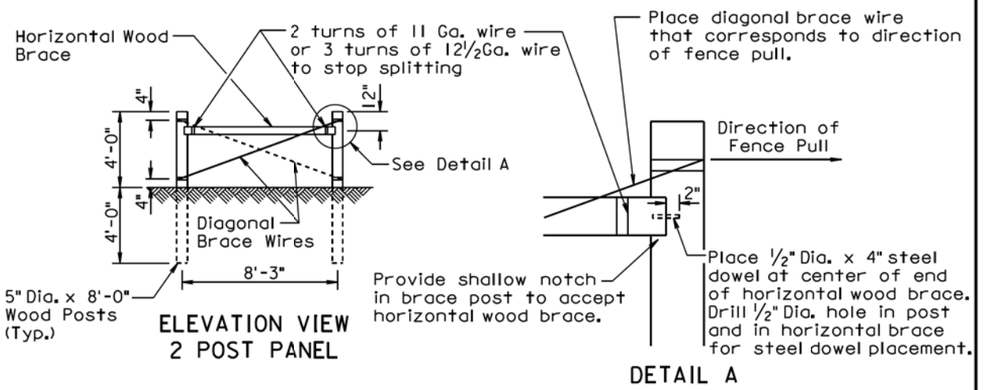

ELEVATION VIEW
2 POST PANEL

DETAIL A

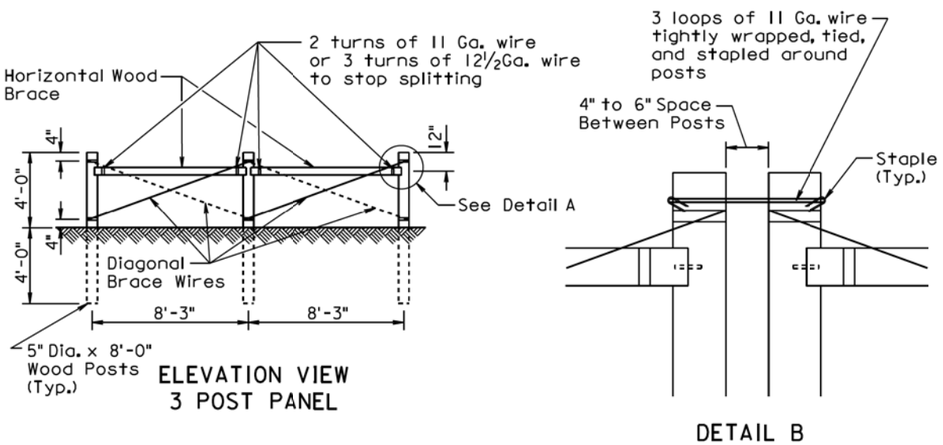

ELEVATION VIEW
3 POST PANEL

DETAIL B

GENERAL NOTES:

Two Post Panels shall be installed at least every 1320' between corners.

Two Post Panels shall be installed at any sharp vertical angle crest points and as directed by the Engineer.

Horizontal wood braces shall consist of 4" dia. x 8' wood posts or rough 4" x 4" x 8' timbers.

Diagonal brace wires shall be fabricated with 4 strands of 9 Ga. galvanized wire twisted tight. The diagonal brace wires shall be installed in accordance with the direction of the fence pull. Two diagonal brace wires are required if fence pull is in both directions.

December 23, 2004

Published Date: 2nd Qtr. 2016	SDDOT	BRACE PANELS AND APPLICATIONS OF BRACE PANELS	PLATE NUMBER 620.03
			Sheet 1 of 3

SPACING OF 2 POST PANELS WITHIN CURVES	
DEGREE OF CURVE	SPACING OF 2 POST PANEL
less than 3°15'	** 1320'
3°15' and greater	**At P.C., P.T., and at every 1320' between P.C. and P.T.

GENERAL NOTE:

All degrees of curvature stated for fence are at centerline of roadway.

* If fence length is less than 600' to next corner use a 2 post panel.
If fence length is greater than 600' to next corner use a 3 post panel.

** Fence lengths greater than 1320' and less than 2640' place 2 Post Panel approximately at midpoint.

① See Detail B on Sheet 1 of 3.

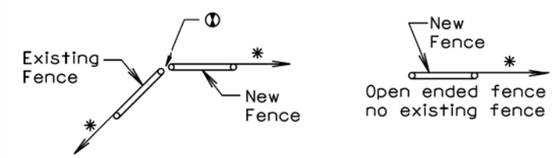

BEGIN OR END FENCE
(where new fence ties into existing fence)

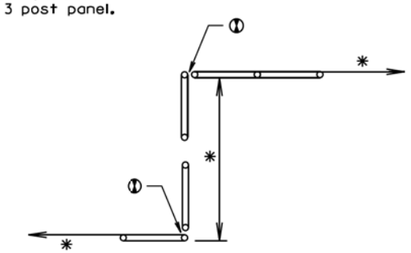

SHORT JOGS IN FENCE

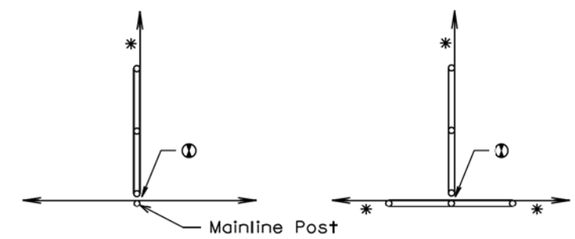

CROSS FENCE

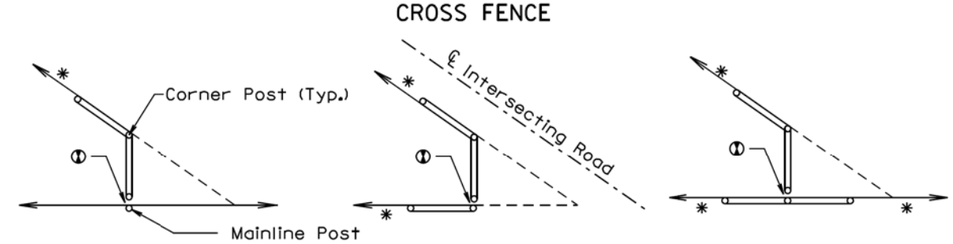

SHARP ANGLES IN CROSS FENCE

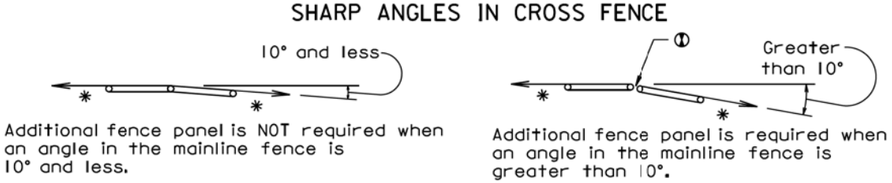

Additional fence panel is NOT required when an angle in the mainline fence is 10° and less.

Additional fence panel is required when an angle in the mainline fence is greater than 10°.

ANGLES IN MAINLINE FENCE

December 23, 2004

Published Date: 2nd Qtr. 2016	SDDOT	BRACE PANELS AND APPLICATIONS OF BRACE PANELS	PLATE NUMBER 620.03
			Sheet 2 of 3

Plot Scale - 1:200
- Plotted From - TRSF12141
File - ...\prj\Minn021X\s12010s72003.dgn

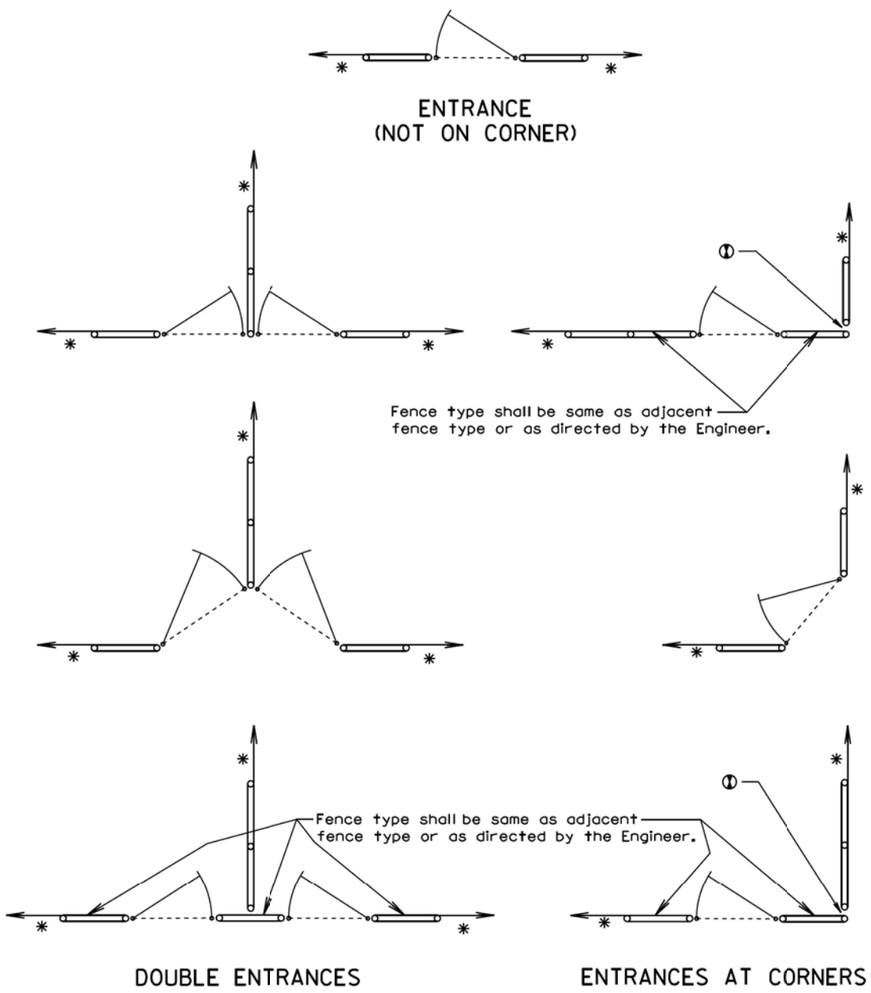

GATES

* If fence length is less than 600' to next corner use a 2 post panel.
If fence length is greater than 600' to next corner use a 3 post panel.

① See Detail B on Sheet 1 of 3.

December 23, 2004

Published Date: 2nd Qtr. 2016	SDDOT	BRACE PANELS AND APPLICATIONS OF BRACE PANELS	PLATE NUMBER 620.03
			Sheet 3 of 3

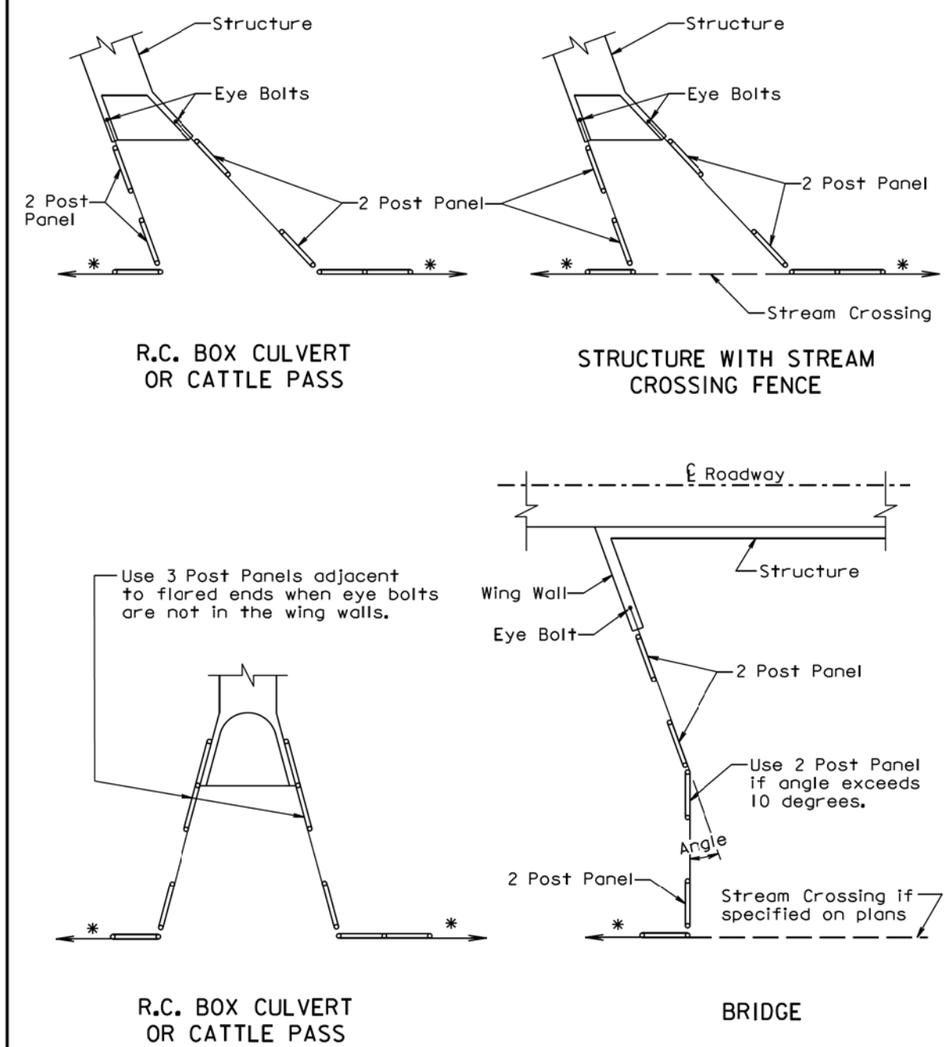

* If fence length is less than 600' to next corner use a 2 post panel.
If fence length is greater than 600' use a 3 post panel.

December 23, 2010

Published Date: 2nd Qtr. 2016	SDDOT	BRACE PANEL APPLICATIONS AT STRUCTURES	PLATE NUMBER 620.04
			Sheet 1 of 1

Plot Scale - 1:200
- Plotted From - TRSF12141
File - ...\pn\Minn021X\s12010s72003.dgn

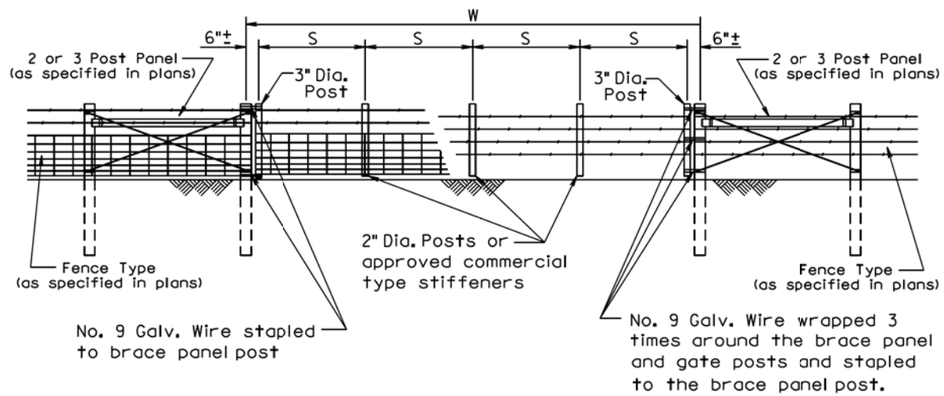

W Gate Width (ft.)	S Post Spacing
16	3 @ 5'-0" ±
20	4 @ 4'-9" ±
24	4 @ 5'-9" ±
30	5 @ 5'-10" ±
40	6 @ 6'-6" ±

GENERAL NOTES:

Creosote treatment of the gate posts will not be accepted.

The type of fencing in the gate shall be of the same type as specified for the adjacent Right-of-Way fence.

All costs for furnishing and constructing the wire gate(s) shall be incidental to the contract unit price per Ft for the respective Right-of-Way fence bid item.

March 31, 2000

Published Date: 2nd Qtr. 2016	SDDOT	WIRE GATES	PLATE NUMBER 620.20
			Sheet 1 of 1

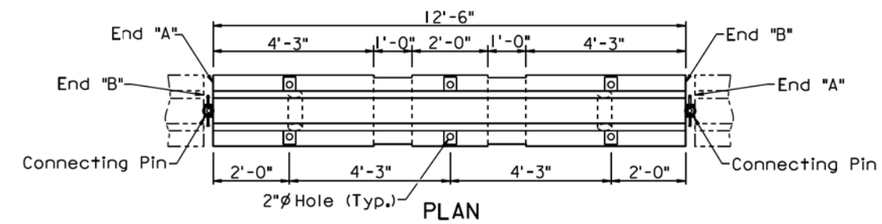

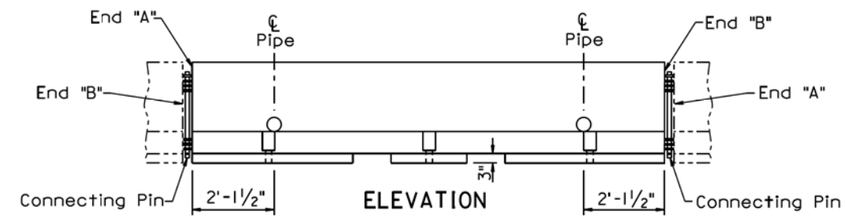

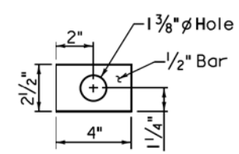

PLATE A

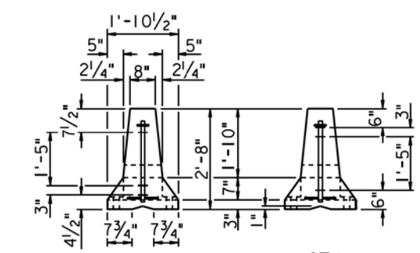

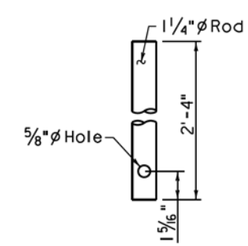

CONNECTING PIN DETAIL

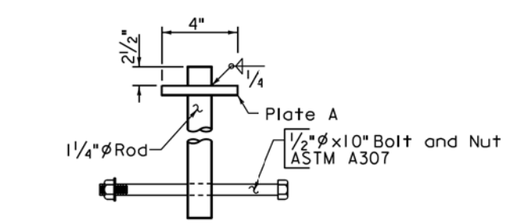

ASSEMBLED CONNECTING PIN

June 26, 2009

Published Date: 2nd Qtr. 2016	SDDOT	TRAFFIC CONTROL MOVABLE CONCRETE BARRIERS (F SHAPE INTERIOR SECTION)	PLATE NUMBER 628.01
			Sheet 1 of 2

Plot Scale - 1:200
- Plotted From - TRSF12141
File - ...\prj\Mlnn021X\s12010s72003.dgn

GENERAL NOTES:

The detailed drawings are for illustrative purpose and depicts the current version of the F shape concrete barrier. If new movable concrete barriers are requested on a project, they shall be constructed according to the F shape movable concrete barrier details on standard plate 628.10.

Each movable concrete barrier section weighs 5030 ± pounds.

Each movable concrete barrier section is detailed to provide end "A" to end "B" connection by insertion of a pin through steel loops.

The Jersey shape or any version of the F shape traffic control movable concrete barriers may be used on a project, however, only the same type or version shall be used for each run of barriers.

Movable concrete barrier sections shall be placed to provide uniform bearing of the sections with the paved surface as approved by the Engineer.

Movable concrete barrier sections shall never be moved or lifted using the end loops.

Movable concrete barrier sections that have been damaged shall not be used. Barrier sections are considered damaged if the loops are end welded onto existing damaged loops, loops are fractured, or there is exposed rebar from fractured concrete.

All cost for transporting the barriers from the specified location to the project site, installing, and returning the barriers to the specified location shall be incidental to the contract unit price per each for "Traffic Control Movable Concrete Barrier".

If the concrete barriers need to be moved and reset on the project, requiring the barriers to be transported by truck, all cost for removing, transporting, and resetting the barriers shall be incidental to the contract unit price per each for "Remove and Reset Traffic Control Movable Concrete Barrier". All cost for small shifts in alignment of the barriers, not requiring the barriers to be transported by truck, shall be incidental to various contract items.

June 26, 2009

Published Date: 2nd Qtr. 2016	SDDOT	TRAFFIC CONTROL MOVABLE CONCRETE BARRIERS (F SHAPE INTERIOR SECTION)	PLATE NUMBER 628.01
			Sheet 2 of 2

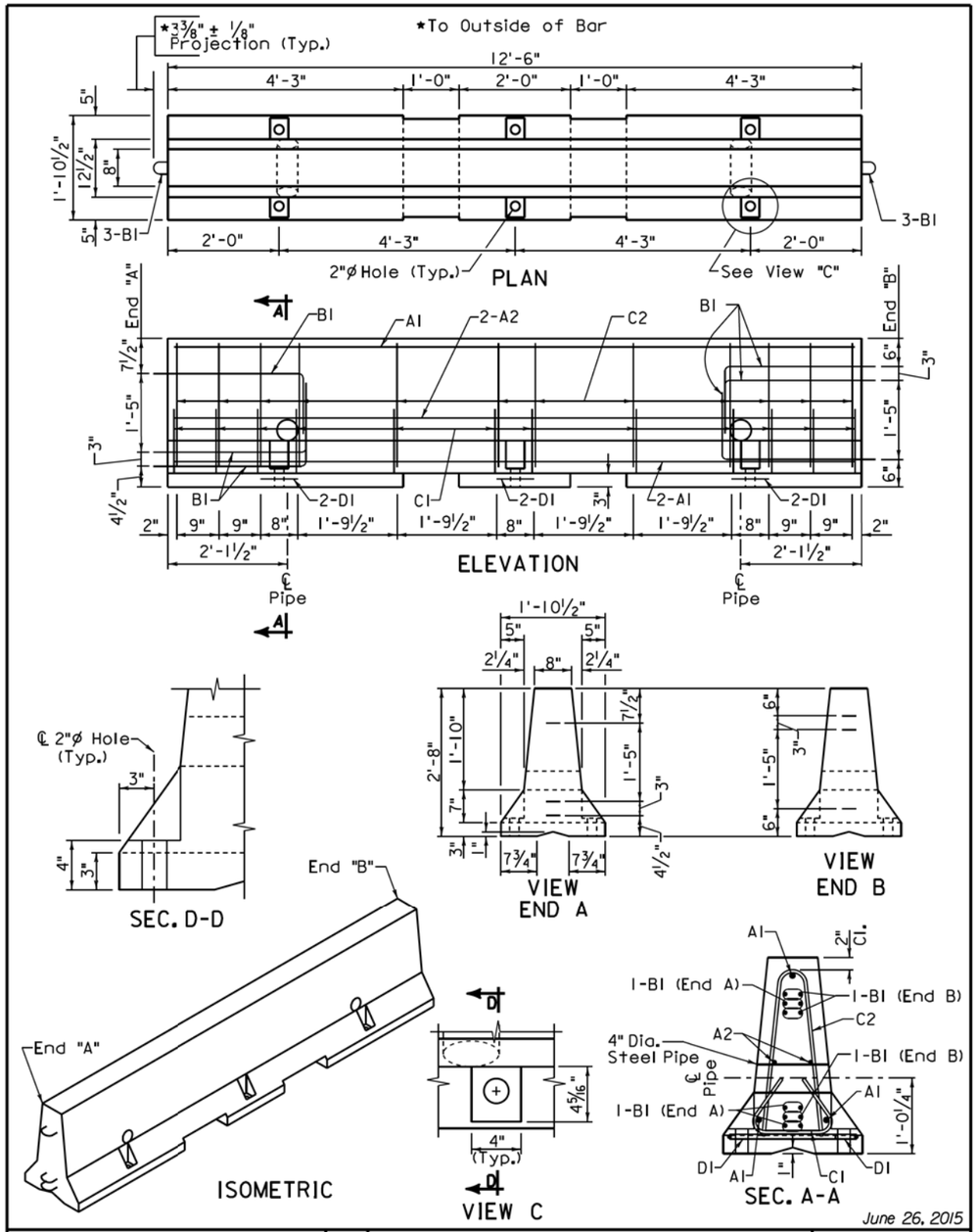

June 26, 2015

Published Date: 2nd Qtr. 2016	SDDOT	MOVABLE F SHAPE CONCRETE BARRIERS (INTERIOR SECTION)	PLATE NUMBER 628.10
			Sheet 1 of 2

Plot Scale - 1:200
- Plotted From - TRSF12141
File - ...\prj\Mnn021X\s12010s72003.dgn

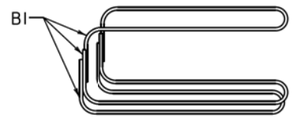

LOOP ASSEMBLY DETAILS

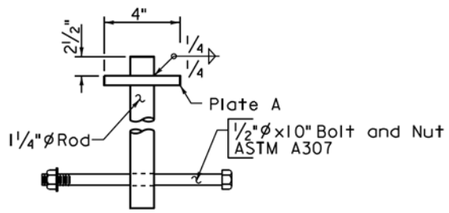

ASSEMBLED CONNECTING PIN

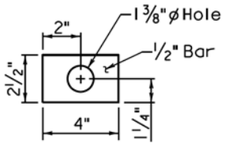

PLATE A

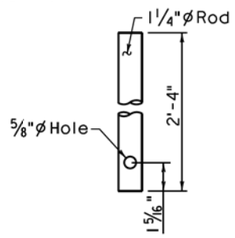

CONNECTING PIN DETAIL

REINFORCING SCHEDULE
(for one interior section)

Mk.	No.	Size	Length	Type	Bending Details
A1	3	5	12'-2"	Str.	
A2	2	4	12'-2"	Str.	
B1	6	6	8'-3"	S11B	
C1	12	4	2'-9"	13A	
C2	12	4	4'-6"	S11A	
D1	6	6	3'-0"	S11	

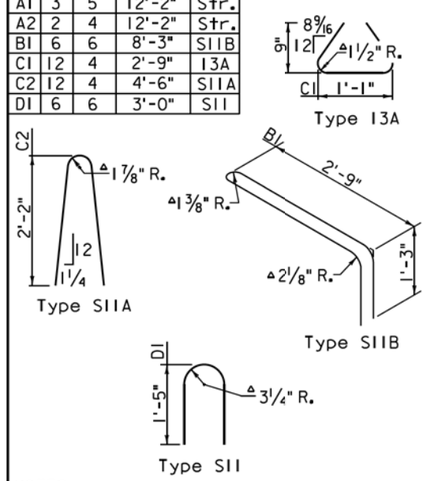

NOTES:
All dimensions are out to out of bars
△All radii are to inside of bars.

GENERAL NOTES:

Concrete shall be Class M6 in accordance with Section 462 of the Specifications. Type I, II, or III cement shall be used.

All reinforcing steel shall conform to ASTM A615 Grade 60, except B1 bars. The B1 loop bars shall be ¾ inch smooth steel bars with a minimum yield of 60 ksi, a tensile strength of not less than 1.25 times the yield strength but a minimum of 80 ksi, an 8 inch elongation of 14%, and passing a 180 degree bend test using a 3.5D pin bend diameter. The loops shall be installed within ⅛ inch of the plan dimensions.

Steel for pins shall conform to ASTM A36. Pipe shall be galvanized and conform to ASTM A53.

Galvanize the connecting pin assembly after fabrication in accordance with ASTM A123. Paint exposed portions of the loop assembly B1 bars with a zinc rich galvanizing paint.

All exposed edges shall be chamfered ¾ inch.

Use 2 inch clear cover on all reinforcing steel EXCEPT as shown.

Each movable concrete barrier section is detailed to provide End "A" to End "B" connection by insertion of a pin through loops formed by re-bars "B1".

All costs for materials, labor, equipment, and incidentals necessary for furnishing the complete movable concrete barrier interior section including one connecting pin assembly shall be incidental to the contract unit price per each for "Movable F Shape Concrete Barrier, Interior Section".

For informational purposes only, each movable concrete barrier interior section contains 1.3 Cu. Yds. of concrete and 214 Lbs. of reinforcing steel.

June 26, 2015

Published Date: 2nd Qtr. 2016	SDDOT	MOVABLE F SHAPE CONCRETE BARRIERS (INTERIOR SECTION)	PLATE NUMBER 628.10
			Sheet 2 of 2

GENERAL NOTES:

Either flanged channel steel posts or S3x5.7 steel I beam posts shall be used, but post type shall be consistent thoughout the project. The S3x5.7 Steel I Beam post shall be used for the end posts.

All costs associated with furnishing and constructing the 3 cable guardrail anchor assembly including the concrete anchor, cable anchor bracket, compensating device, steel turnbuckle cable assembly, and necessary hardware shall be incidental to the contract unit price per each for "3 Cable Guardrail Anchor Assembly".

All costs associated with furnishing and constructing the 3 cable guardrail including posts, cable, cable splices, and hardware shall be incidental to the contract unit price per foot for "3 Cable Guardrail".

The following table and criteria shall apply to the arrangement of the Spring Cable End Assemblies (Compensation Devices) and Turnbuckle Cable End Assemblies:

LENGTH OF CABLE RUN	CRITERIA FOR ARRANGEMENT OF THE SPRING CABLE END ASSEMBLIES (COMPENSATION DEVICES) AND TURNBUCKLE CABLE END ASSEMBLIES
Less than 500'	Use turnbuckle on the approaching traffic end and compensating device on the other end of each individual cable, except in the W Beam to 3 Cable Transition where all compensating devices shall be provided at the bridge ends.
Greater than 500' to 1000'	Use compensating device on each end of each individual cable.
Greater than 1000'	Start new run by interlacing at last parallel post as shown on sheet 2 of 6.

All Compensating Devices shall be attached to the cable anchor bracket when one end of the run is attached to a bridge.

Compensating Devices must have a spring rate of 450 ± 50 pounds per inch and shall have a total available travel of 6 inches minimum.

The cable shall be retensioned after the initial 2 week pretension period in accordance with the following table:

CABLE TENSIONING SPECIFICATIONS

Temperature Range (Degree F)	-20 to -11	-10 to -1	0 to 9	10 to 19	20 to 29	30 to 39	40 to 49	50 to 59	60 to 69	70 to 79	80 to 89	90 to 99	100 to 109	110 to 120
Spring Compression (Inch)	4¼	4	3¾	3½	3¼	3	2¾	2½	2¼	2	1¾	1½	1¼	1

POST SPACING FOR HORIZONTAL CURVES

Roadway ℄ Curvature	Maximum Post Spacing (Ft)
1° and Less	16'
Greater than 1° to 8°	12'
Greater than 8° to 13°	8'
Greater than 13°	NOT ALLOWED

December 16, 2015

Published Date: 2nd Qtr. 2016	SDDOT	3 CABLE GUARDRAIL (LOW TENSION)	PLATE NUMBER 629.01
			Sheet 1 of 6

Plot Scale - 1:200
- Plotted From - TRSF12141
File - ...\prj\Minn021X\s12010s72003.dgn

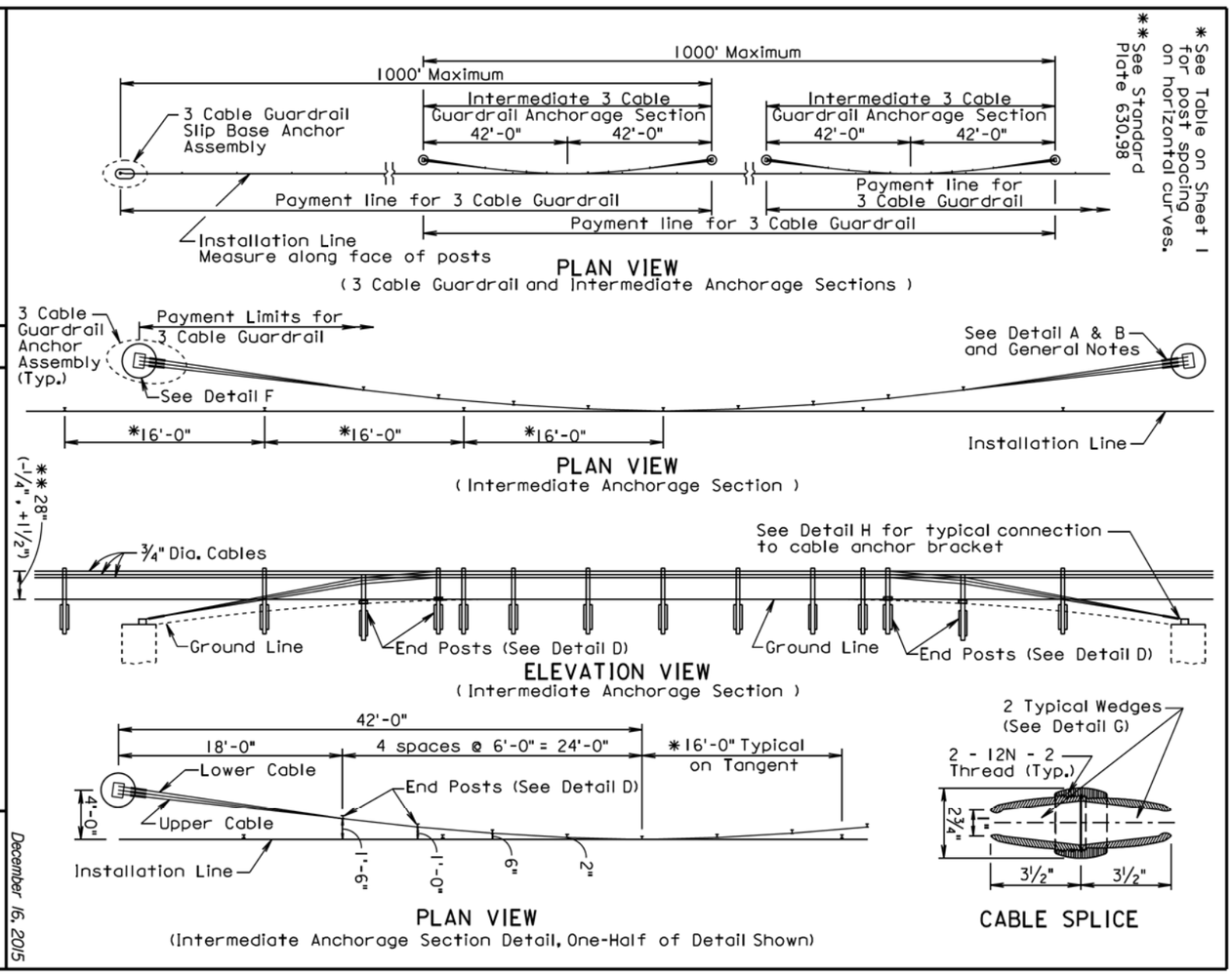

Published Date: 2nd Qtr. 2016

SDDOT

3 CABLE GUARDRAIL (LOW TENSION)

PLATE NUMBER 629.01

Sheet 2 of 6

December 16, 2015

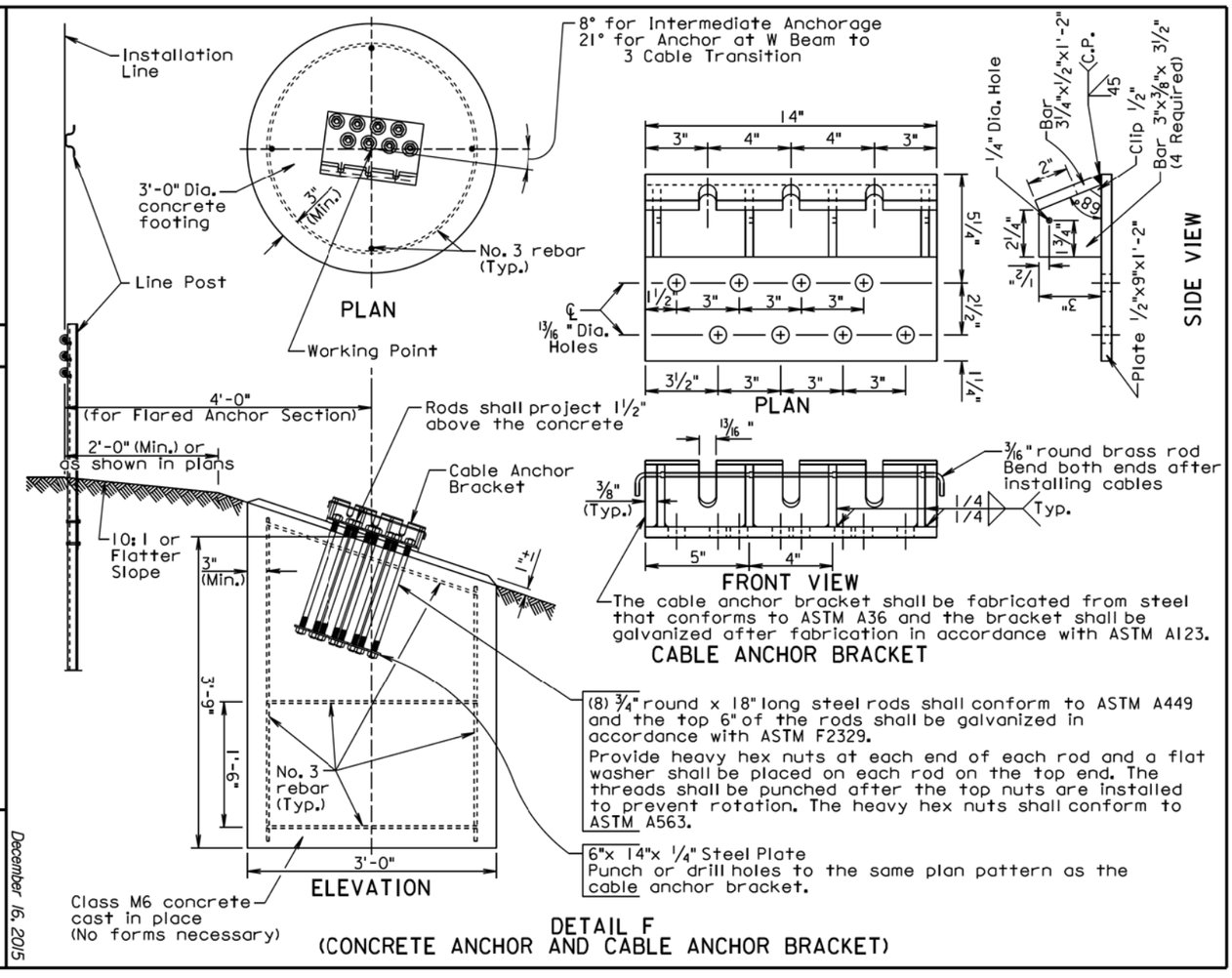

Published Date: 2nd Qtr. 2016

SDDOT

3 CABLE GUARDRAIL (LOW TENSION)

PLATE NUMBER 629.01

Sheet 3 of 6

December 16, 2015

STATE OF SOUTH DAKOTA

PROJECT IM 0909(81)406

Plotting Date: 06/09/2016

SHEET B33

TOTAL SHEETS B48

Published Date: 2nd Qtr. 2016

SDDOT

3 CABLE GUARDRAIL (LOW TENSION)

PLATE NUMBER 629.01

Sheet 4 of 6

December 16, 2015

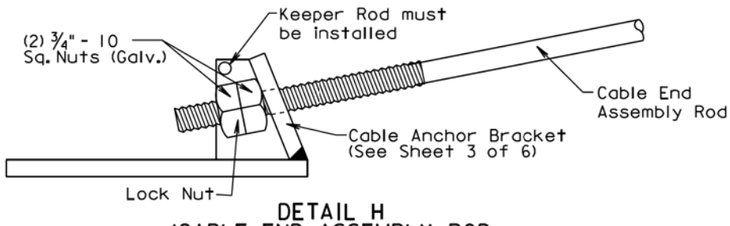

DETAIL H
(CABLE END ASSEMBLY ROD CONNECTION TO CABLE ANCHOR BRACKET)

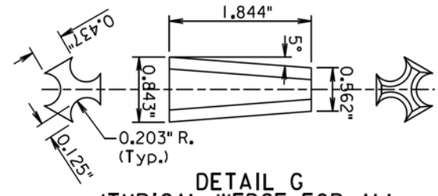

DETAIL G
(TYPICAL WEDGE FOR ALL SPLICES AND CABLE FITTINGS)

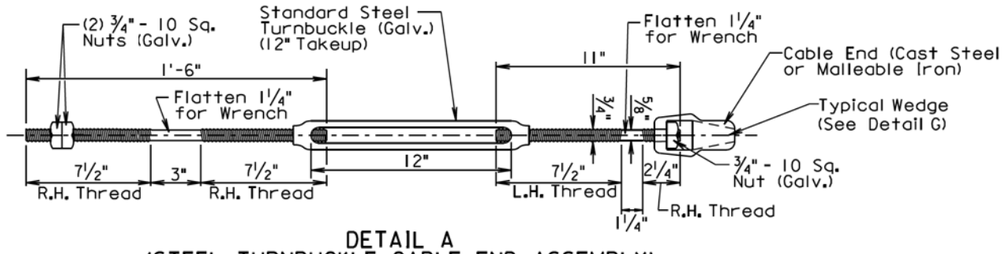

DETAIL A
(STEEL TURNBUCKLE CABLE END ASSEMBLY)
Minimum Tensile Strength = 25,000 Lbs.

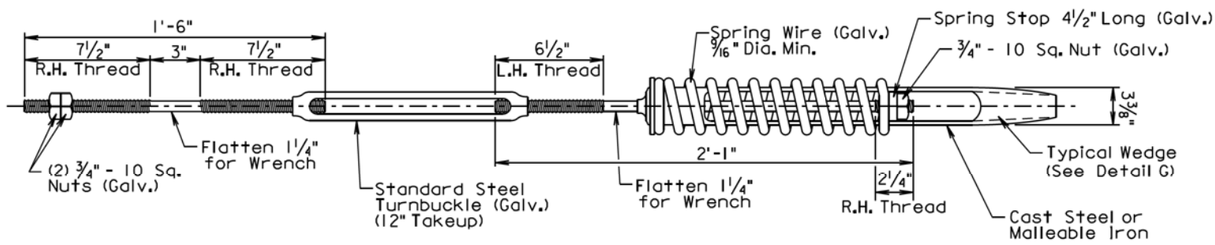

DETAIL B
(SPRING CABLE END ASSEMBLY WITH TURNBUCKLE)
(COMPENSATING DEVICE)

Published Date: 2nd Qtr. 2016

SDDOT

3 CABLE GUARDRAIL (LOW TENSION)

PLATE NUMBER 629.01

Sheet 5 of 6

December 16, 2015

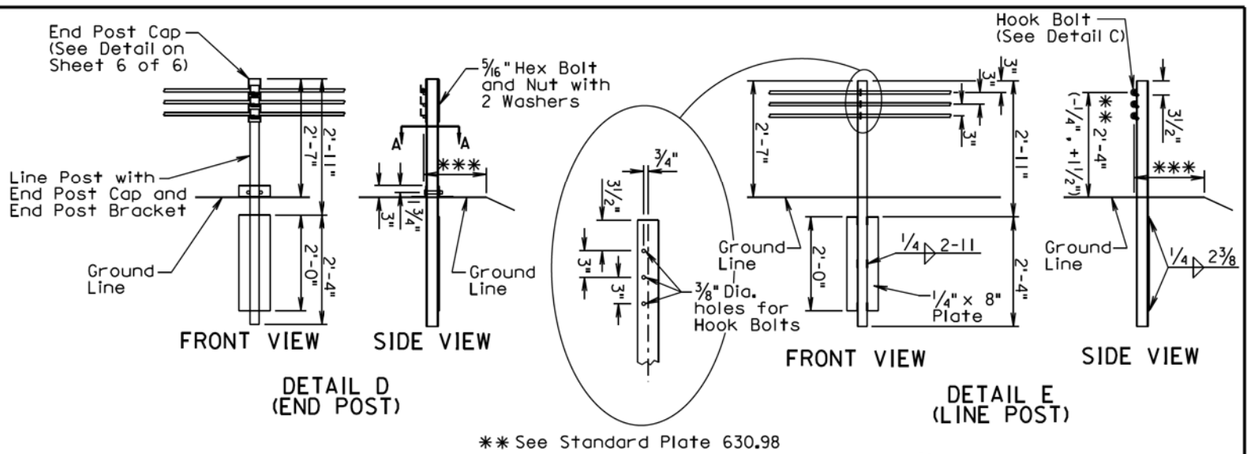

DETAIL D
(END POST)

DETAIL E
(LINE POST)

** See Standard Plate 630.98
*** 2' (Min.) or as shown in plans

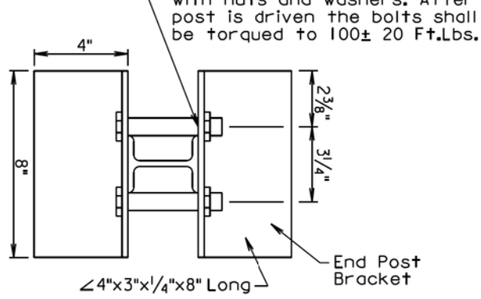

SECTION A-A

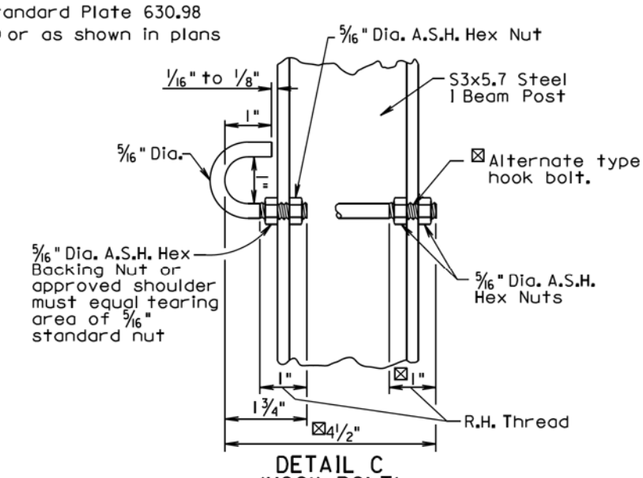

DETAIL C
(HOOK BOLT)

S3x5.7 STEEL I BEAM POST
FOR 3 CABLE GUARDRAIL

STATE OF SOUTH DAKOTA

PROJECT IM 0909(81)406

Plotting Date: 06/09/2016

SHEET B34

TOTAL SHEETS B48

Published Date: 2nd Qtr. 2016

SDDOT

3 CABLE GUARDRAIL (LOW TENSION)

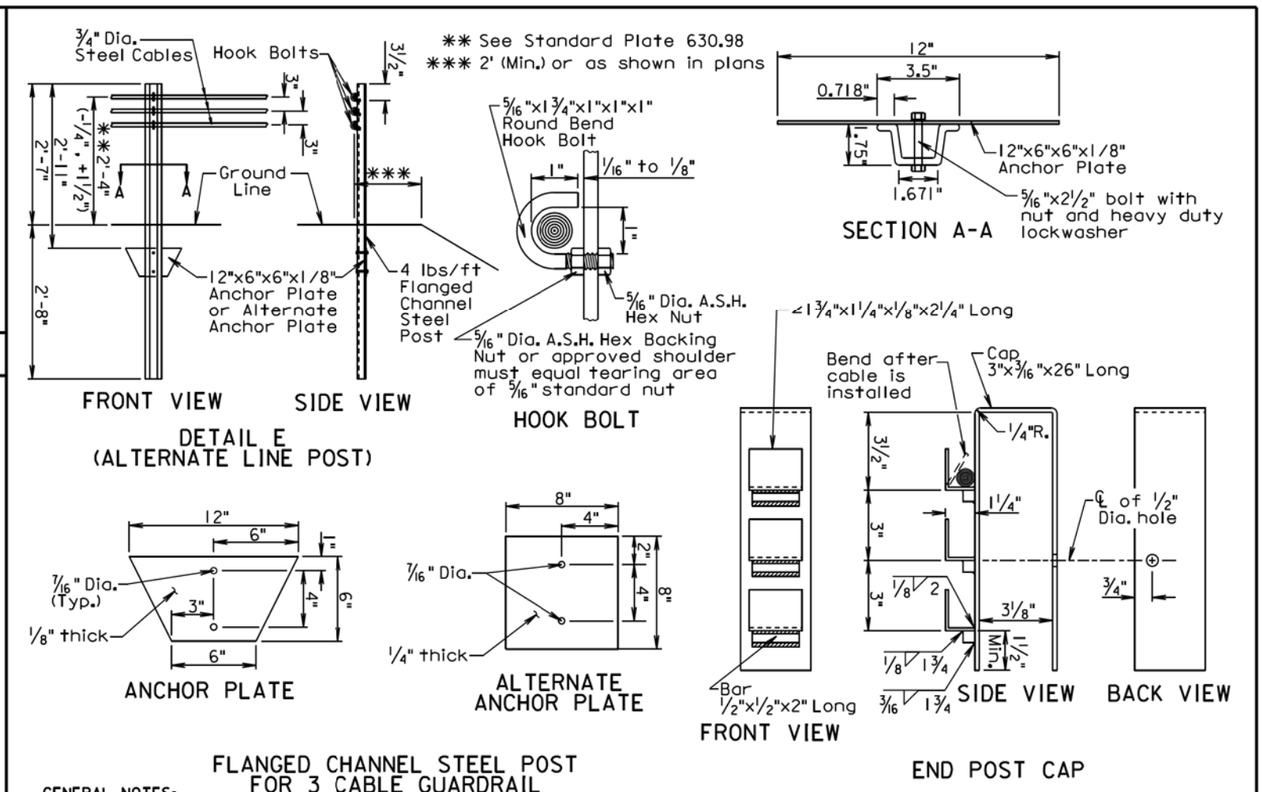

GENERAL NOTES:

Flanged channel steel posts shall be produced from high strength steel in accordance with ASTM A499, Grade 60.

Anchor plates shall be in conformance with ASTM A709, Grade 36.

Bolt shall be in conformance with ASTM A307. Nut shall be in conformance with ASTM A563 Grade DH.

Bolt shall be galvanized in accordance with ASTM F2329.

Finish for the post and anchor plate shall be a baked on high quality dark green enamel.

Alternate anchor plate may be unfinished.

PLATE NUMBER 629.01

Sheet 6 of 6

December 16, 2015

Published Date: 2nd Qtr. 2016

SDDOT

W BEAM TO 3 CABLE TRANSITION

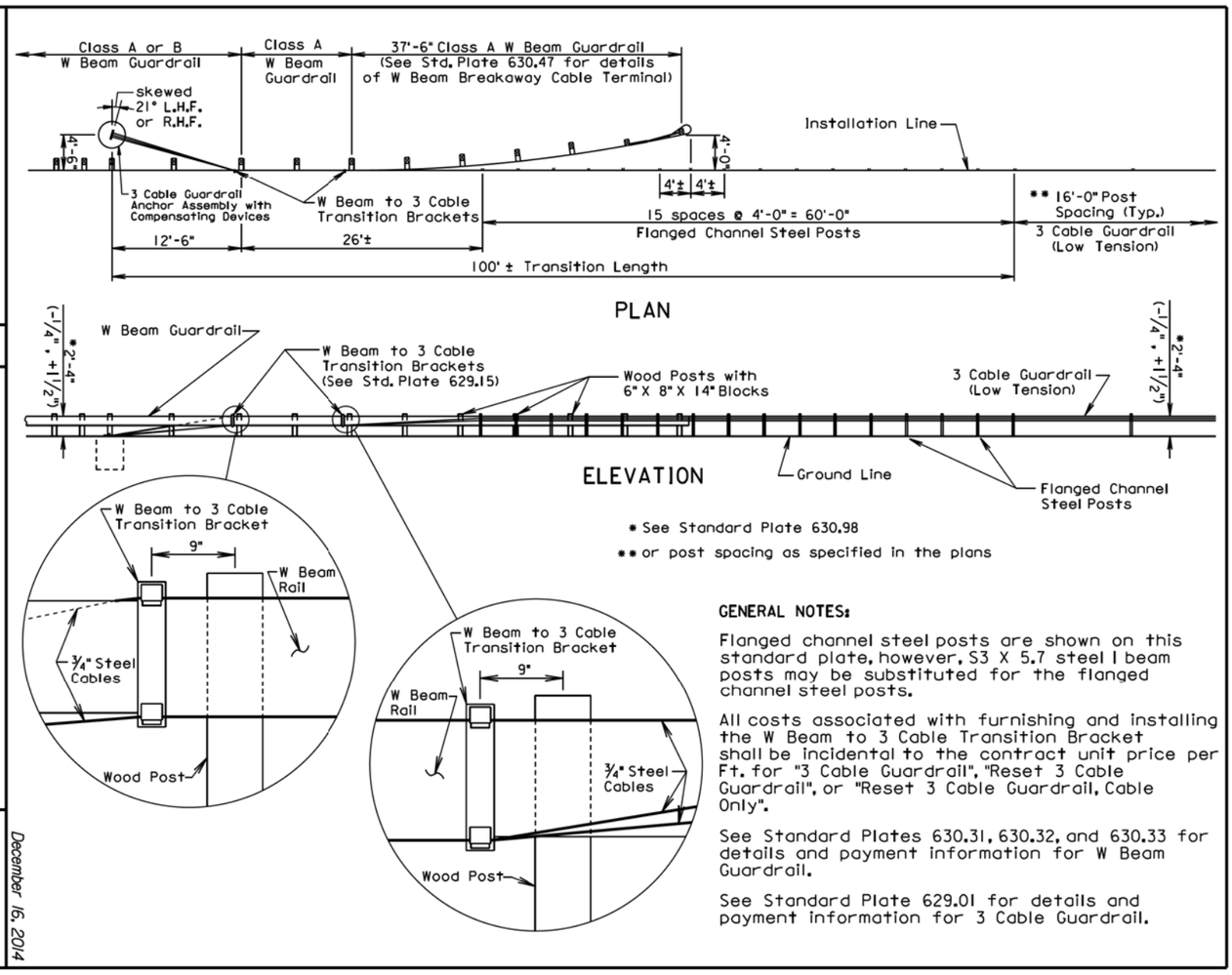

* See Standard Plate 630.98

** or post spacing as specified in the plans

GENERAL NOTES:

Flanged channel steel posts are shown on this standard plate, however, S3 X 5.7 steel I beam posts may be substituted for the flanged channel steel posts.

All costs associated with furnishing and installing the W Beam to 3 Cable Transition Bracket shall be incidental to the contract unit price per Ft. for "3 Cable Guardrail", "Reset 3 Cable Guardrail", or "Reset 3 Cable Guardrail, Cable Only".

See Standard Plates 630.31, 630.32, and 630.33 for details and payment information for W Beam Guardrail.

See Standard Plate 629.01 for details and payment information for 3 Cable Guardrail.

PLATE NUMBER 629.05

Sheet 1 of 1

December 16, 2014

STATE OF SOUTH DAKOTA	PROJECT	SHEET	TOTAL SHEETS
Plotting Date: 06/09/2016	IM 0909(81)406	B35	B48

Published Date: 2nd Qtr. 2016

SDDOT

3 CABLE GUARDRAIL SLIP BASE ANCHOR ASSEMBLY

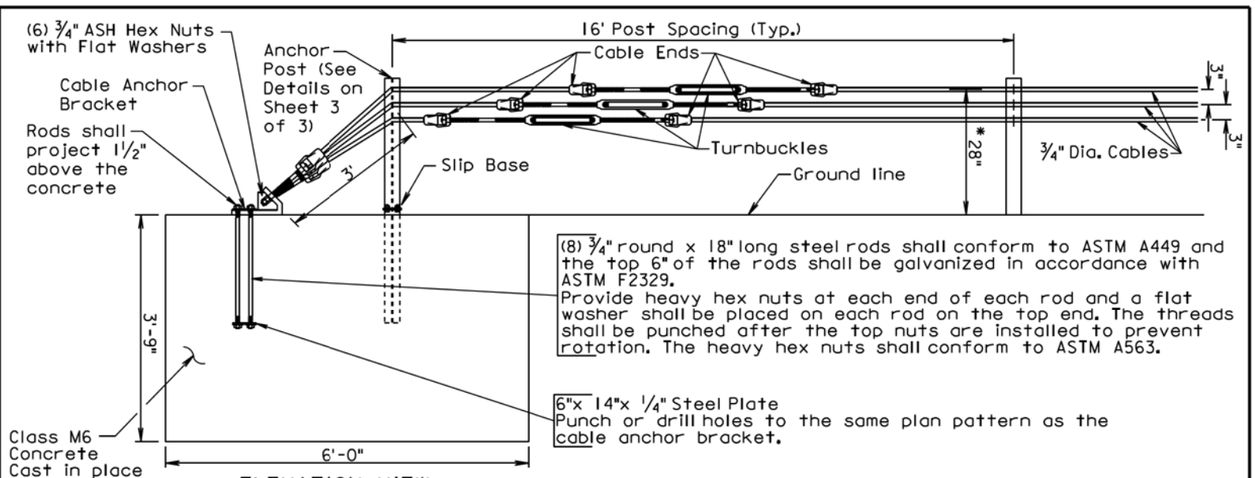

(8) ¾" round x 18" long steel rods shall conform to ASTM A449 and the top 6" of the rods shall be galvanized in accordance with ASTM F2329.
Provide heavy hex nuts at each end of each rod and a flat washer shall be placed on each rod on the top end. The threads shall be punched after the top nuts are installed to prevent rotation. The heavy hex nuts shall conform to ASTM A563.

6"x 14"x ¼" Steel Plate
Punch or drill holes to the same plan pattern as the cable anchor bracket.

ELEVATION VIEW
(Anchor Assembly)

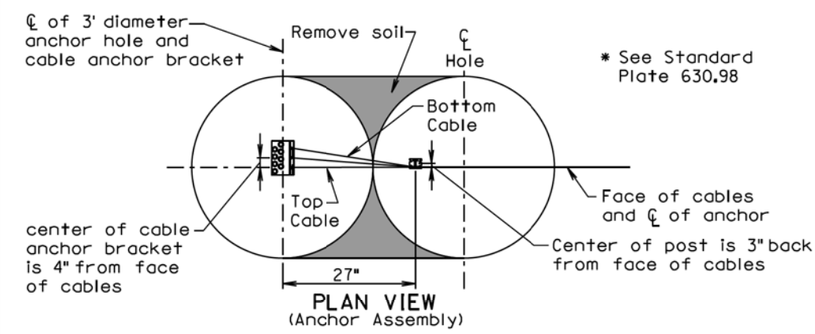

* See Standard Plate 630.98

PLAN VIEW
(Anchor Assembly)

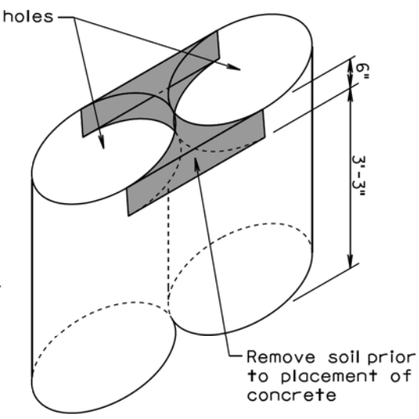

ISOMETRIC VIEW

ANCHOR CONSTRUCTION NOTES:

1. Auger two 3' diameter by 3'-9" deep holes tangent to each other.
2. Clean out the top 6 inches of soil between the holes.
3. Place concrete in holes with anchor bolts and slip base stub post in place.
4. For informational purposes the neat line concrete volume of the anchor is 1.9 cubic yards.

June 26, 2015

PLATE NUMBER 629.10

Sheet 1 of 3

Published Date: 2nd Qtr. 2016

SDDOT

3 CABLE GUARDRAIL SLIP BASE ANCHOR ASSEMBLY

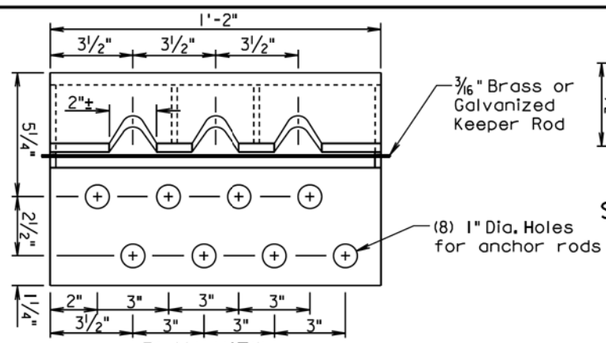

PLAN VIEW

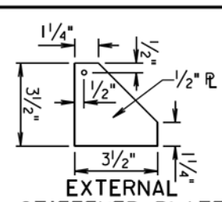

EXTERNAL STIFFENER PLATE

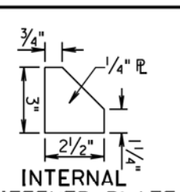

INTERNAL STIFFENER PLATE

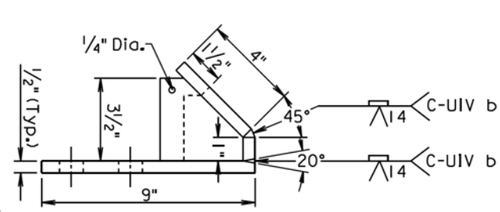

SIDE VIEW

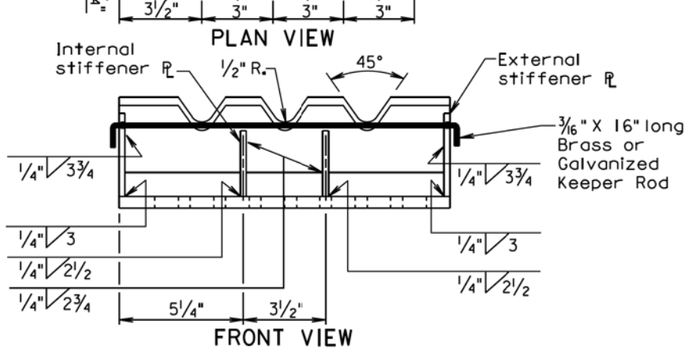

FRONT VIEW

CABLE ANCHOR BRACKET

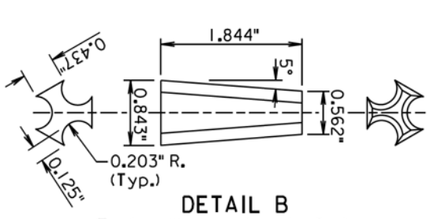

DETAIL B
(Typical Wedge for All Splices and Cable Fittings)

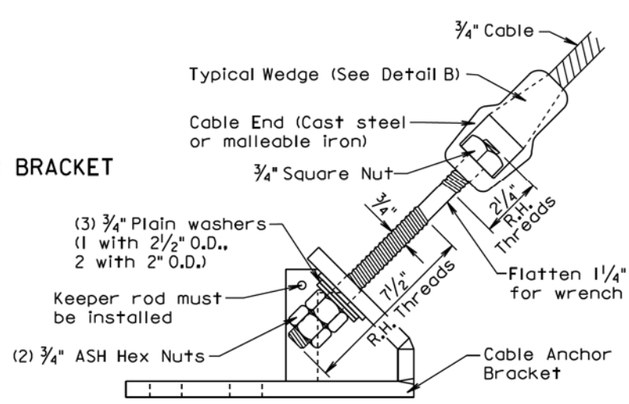

CABLE END ASSEMBLY ROD CONNECTION TO CABLE ANCHOR BRACKET

June 26, 2015

PLATE NUMBER 629.10

Sheet 2 of 3

Plotting Date: 06/09/2016

STATE OF SOUTH DAKOTA

PROJECT IM 0909(81)406

SHEET B36

TOTAL SHEETS B48

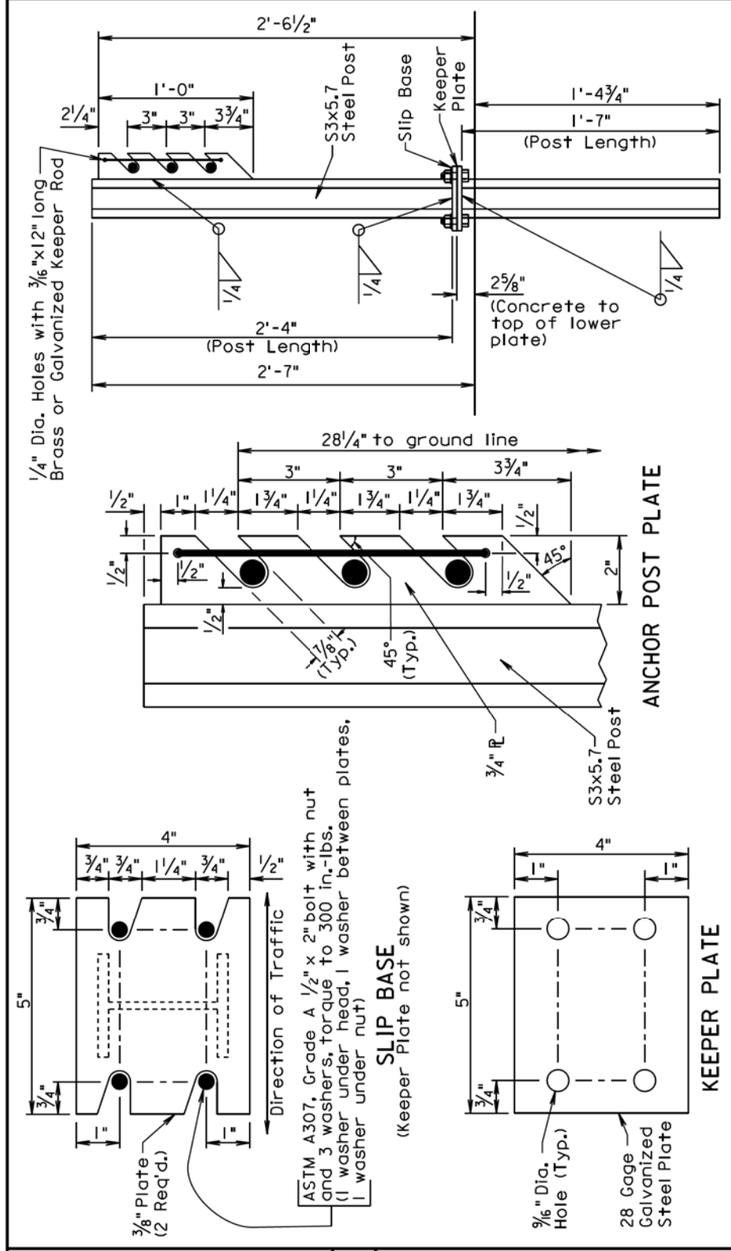

GENERAL NOTES:

Anchor post shall be a S3x5.7 rolled steel section. Post and plates shall conform to ASTM A709, Grade 36 and shall be galvanized in accordance with ASTM A123.

¾" round wire cable shall consist of three strands (7 wires per strand) and have a minimum tensile strength of 25,000 pounds.

Cast steel elements shall conform to AASHTO M103 (ASTM 27-73) grade U-60-30.

All costs associated with furnishing and constructing the 3 cable guardrail slip base anchor assembly including the concrete anchor, cable anchor bracket, anchor bolts, plates, slip base stub post, anchor post, steel turnbuckles, cable ends, U-bolt cable clips, and necessary hardware shall be incidental to the contract unit price per each for "3 Cable Guardrail Slip Base Anchor Assembly".

June 26, 2015

Published Date: 2nd Qtr. 2016	SDDOT	3 CABLE GUARDRAIL SLIP BASE ANCHOR ASSEMBLY	PLATE NUMBER 629.10
			Sheet 3 of 3

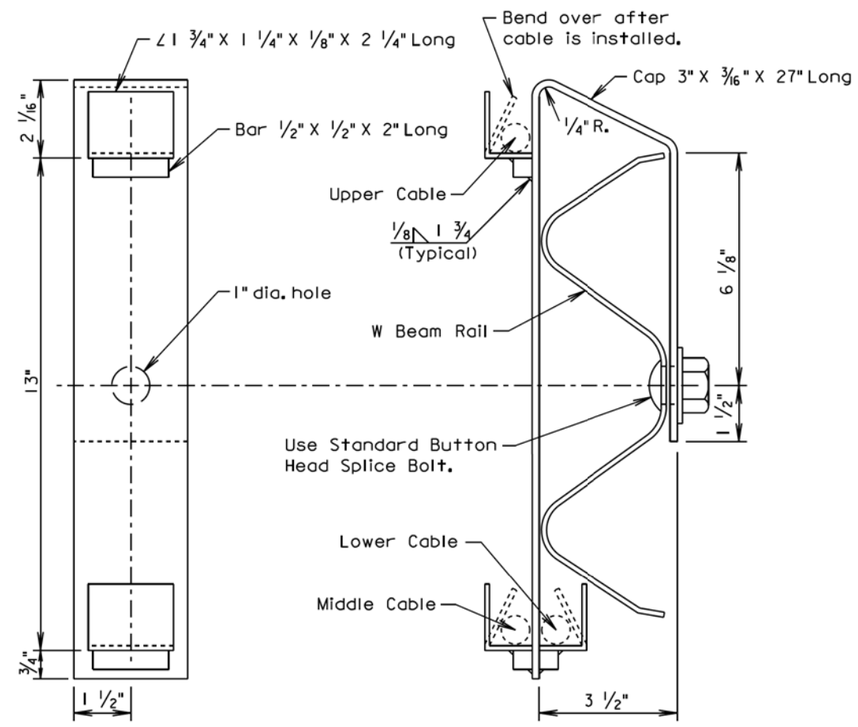

ELEVATION
(TRANSITION BRACKET)

END VIEW
(W BEAM RAIL AND TRANSITION BRACKET)

GENERAL NOTES:

Steel used in the fabrication of the bracket shall conform to ASTM A36 and the bracket shall be galvanized after fabrication in accordance with ASTM A123.

March 31, 2000

Published Date: 2nd Qtr. 2016	SDDOT	W BEAM TO 3 CABLE TRANSITION BRACKET	PLATE NUMBER 629.15
			Sheet 1 of 1

Plot Scale - 1:200
Plotted From - TRSF12141
File - ...\prj\Mnn021X\s12010s72003.dgn

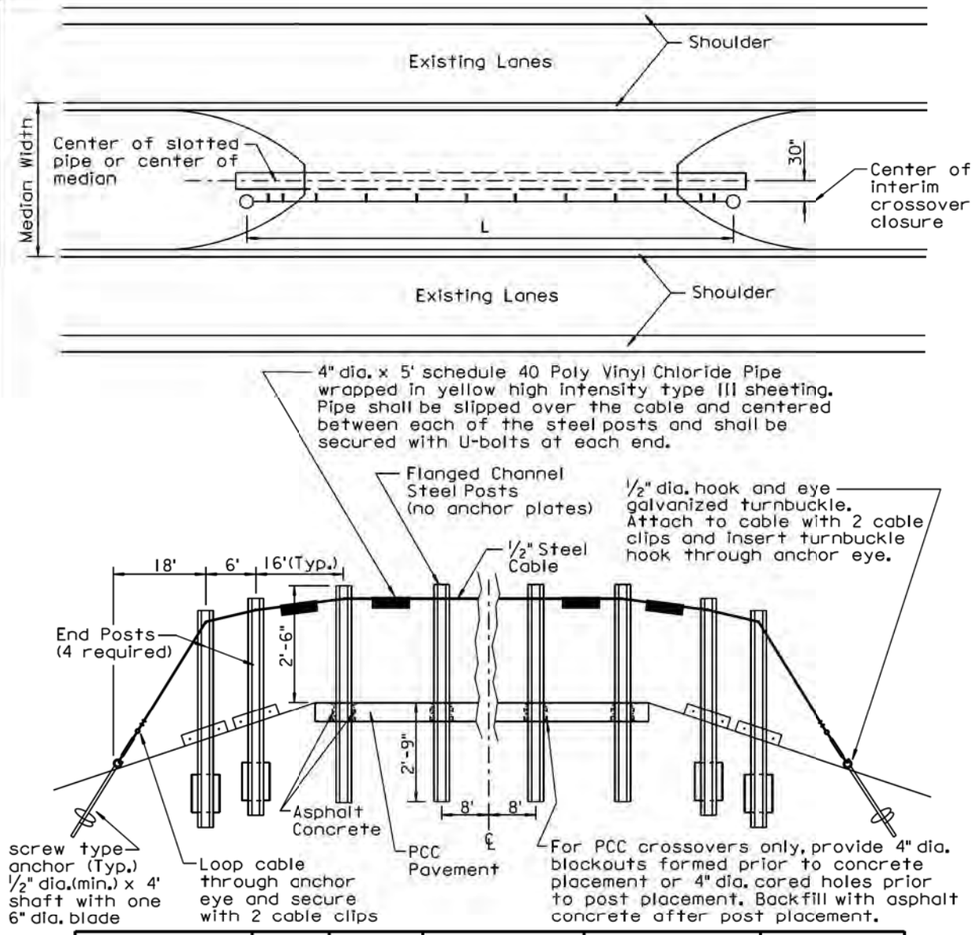

MEDIAN WIDTH	NO. OF PVC PIPES	NO. OF U-BOLTS	NO. OF FLANGED CHANNEL STEEL POSTS	NO. OF BLOCKOUTS OR CORED HOLES (PCC CROSSOVERS)	PAY LENGTH L
60' and 66'	11	18	10	10	224'
80'	9	14	8	8	192'

GENERAL NOTES:

All costs for materials, backfilling holes with asphalt concrete, labor, equipment, and incidentals necessary to construct the interim crossover closure shall be incidental to the contract unit price per Ft for "Interim Crossover Closure". The costs of coring holes or providing blockouts in the surfacing shall be incidental to the surfacing bid item(s).

The Interim Crossover Closure shall be constructed using 3 cable guardrail posts with hook bolts. For specific details of the 3 cable guardrail hardware and installation, see Standard Plate 629.01 sheets 1 through 6.

March 31, 2000

Published Date: 2nd Qtr. 2016	SDDOT	INTERIM CROSSOVER CLOSURE	PLATE NUMBER 629.42
			Sheet 1 of 1

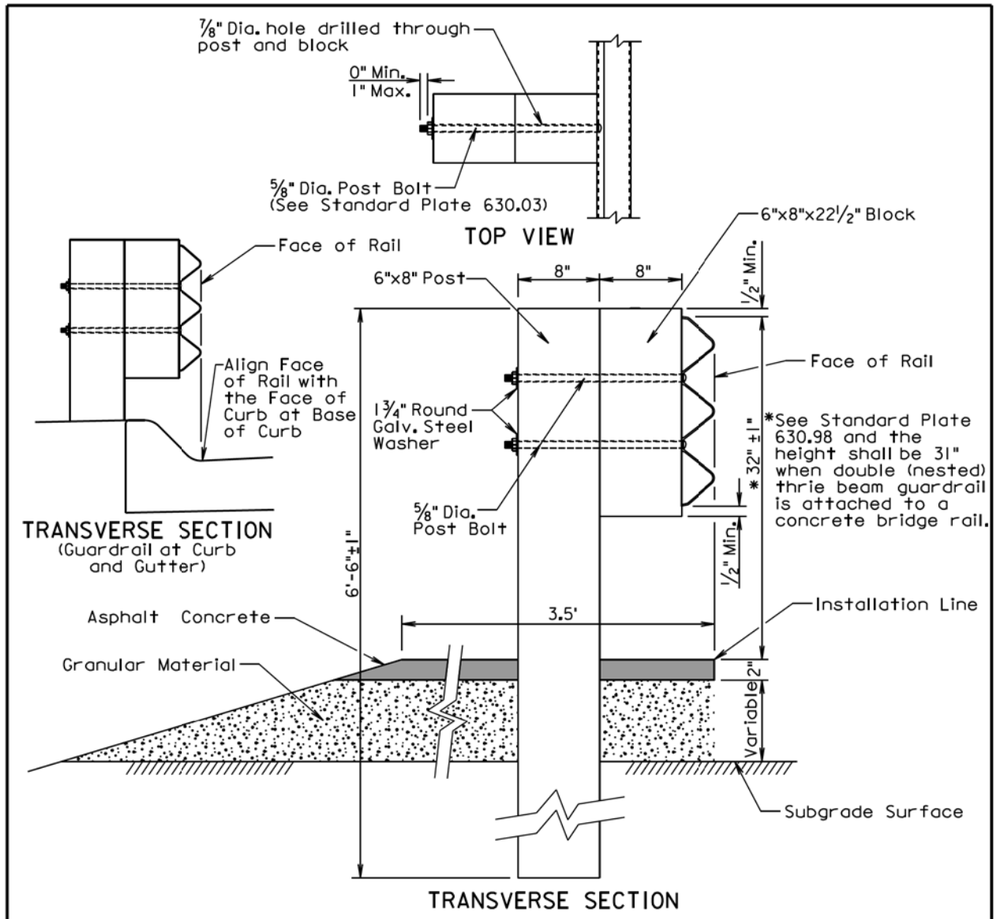

TRANSVERSE SECTION

GENERAL NOTES:

Asphalt concrete shall be the same type used elsewhere on the project or shall be as specified in the plans. If asphalt concrete is not specified in the plans, the asphalt concrete shall conform to the Specifications for "Asphalt Concrete Composite." For informational purposes, the Rate of Materials for the 3.5' wide section of asphalt concrete as shown above shall be 4.80 Tons per Station.

Granular material shall be the same type used elsewhere on the project or shall be as specified in the plans. If granular material type is not specified in the plans, the material shall conform to the Specifications for "Base Course". The granular material shall be placed the same thickness as the mainline surfacing or as specified in the plans.

The cross slope for the surfacing and subgrade surface shall be as specified in the plans (See Typical Sections and/or Cross Sections).

The top of post and top of block shall have a true square cut. The top of block shall be ±1 inch from the top of the post.

June 26, 2015

Published Date: 2nd Qtr. 2016	SDDOT	THRIE BEAM GUARDRAIL POST INSTALLATION	PLATE NUMBER 630.01
			Sheet 1 of 1

Plot Scale - 1:200
- Plotted From - TRSF12141
File - ...\pn\Minn021X\s12010s72003.dgn

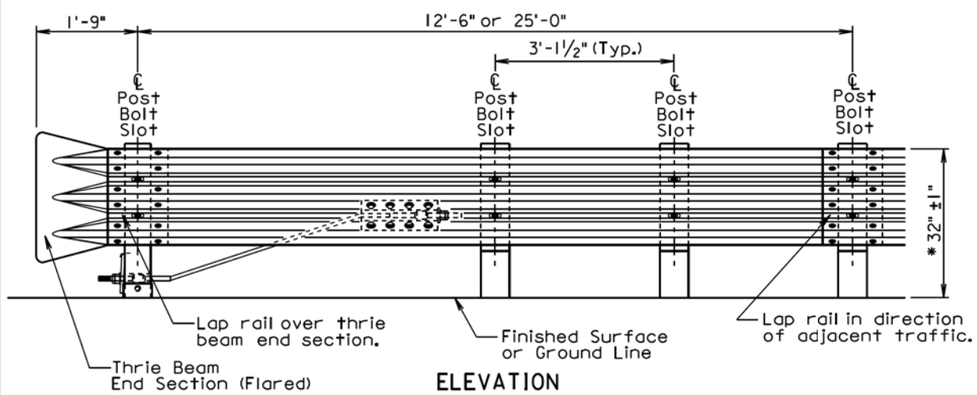

ELEVATION

* See Standard Plate 630.98 and the height shall be 31" when double (nested) thrie beam guardrail is attached to a concrete bridge rail.

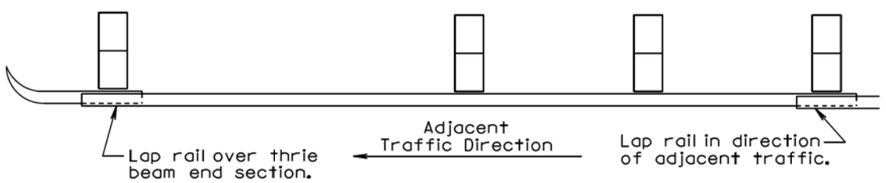

PLAN

THRIE BEAM GUARDRAIL DEFLECTION CRITERIA	
POST SPACING	MAXIMUM DEFLECTION
6'-3"	2'-6"
3'-1½"	1'-9"

For Informational Purposes Only

GENERAL NOTES:

All thrie beam rail shall be Type I.

There will be no separate payment for furnishing and installing Thrie Beam End Sections (Flared) and Thrie Beam Terminal Connectors. All costs for the Thrie Beam End Sections (Flared) and Thrie Beam Terminal Connectors shall be incidental to the contract unit price per foot for the respective "Thrie Beam Guardrail" bid item.

Thrie beam rail section lengths may be 12'-6" and/or 25'-0". The combination of section lengths used shall be compatible with the total length of rail per site as shown in the plans.

Thrie Beam End Sections (Flared) shall only be used in a one-way traffic situation. See Standard Plate 630.80 for Thrie Beam End Section (Flared) in the Beam Guardrail Trailing End Terminal.

All costs for constructing thrie beam guardrail including labor, equipment, and materials including all posts, blocks, steel beam rail, and hardware shall be incidental to the contract unit price per foot for the respective "Thrie Beam Guardrail" bid item.

June 26, 2015

Published Date: 2nd Qtr. 2016	SDDOT	THRIE BEAM GUARDRAIL INSTALLATION	PLATE NUMBER 630.02 Sheet 1 of 1

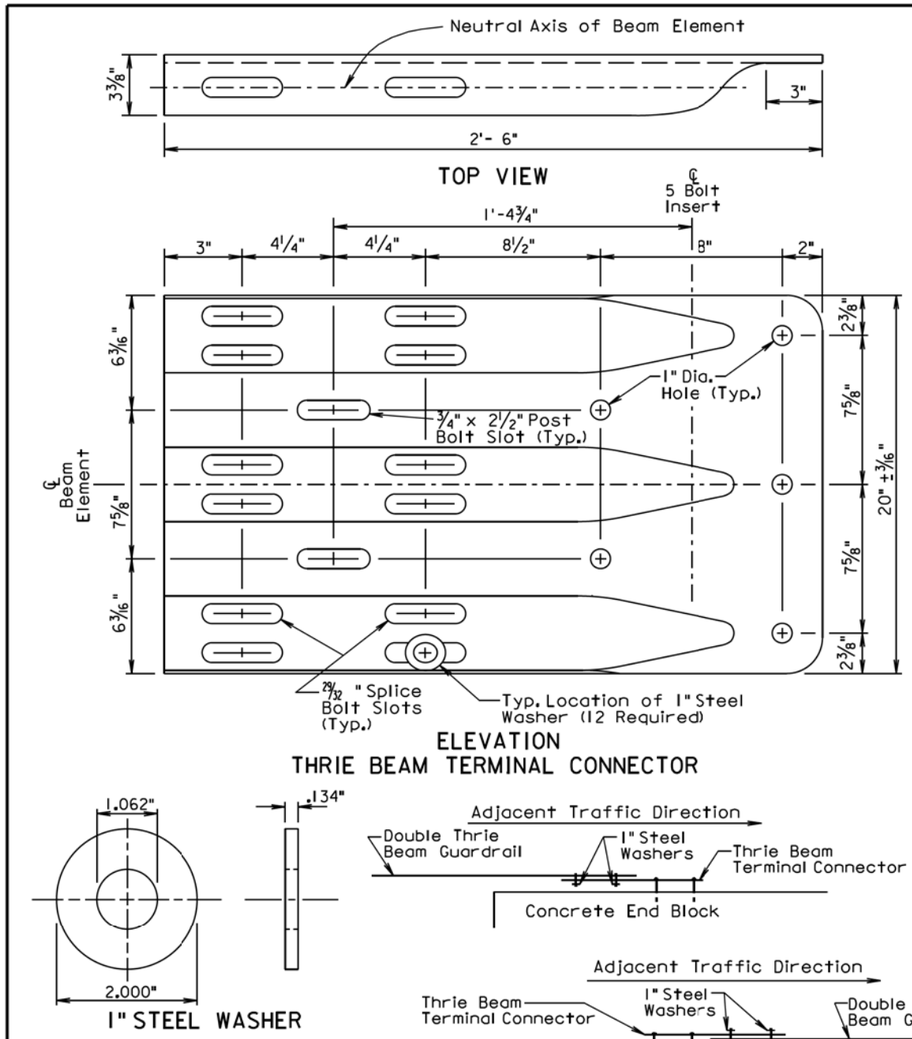

ELEVATION
THRIE BEAM TERMINAL CONNECTOR

1" STEEL WASHER

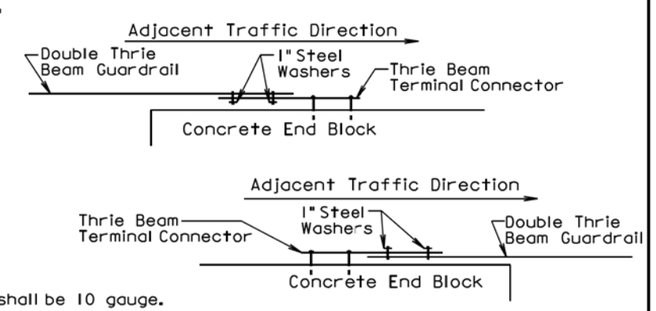

GENERAL NOTES:

Thrie Beam Terminal Connectors shall be 10 gauge.

When the thrie beam terminal connector is used to connect the rail to the bridge, 1" steel washers shall be used at the lap splice and the washers shall be in direct contact with the 3" slots of the thrie beam terminal connector. See the drawings above for the typical locations of the 1" steel washers.

There will be no separate payment for furnishing and installing the Thrie Beam Terminal Connector. All costs for the Thrie Beam Terminal Connector shall be incidental to the contract unit price per foot for the respective "Thrie Beam Guardrail" bid item.

September 14, 2001

Published Date: 2nd Qtr. 2016	SDDOT	THRIE BEAM TERMINAL CONNECTOR AND 1" STEEL WASHER	PLATE NUMBER 630.05 Sheet 1 of 1

Plot Scale - 1:200
- Plotted From - TRSF12141
File - ...\prj\Mlm021X\s12010s72003.dgn

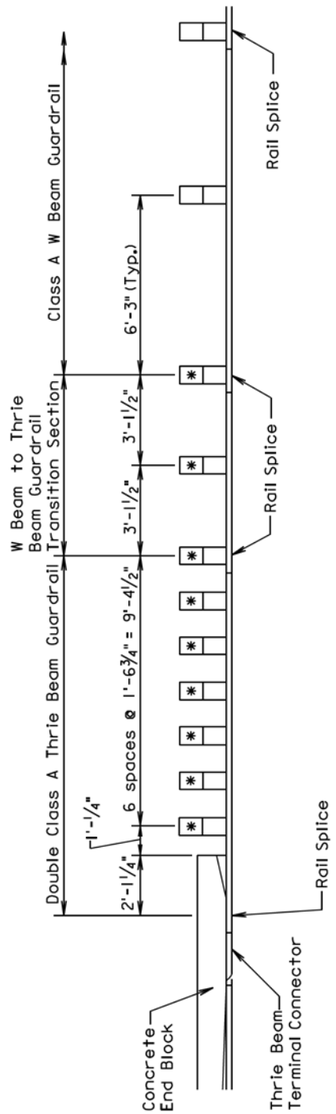

* 6" x 8" x 7' posts shall be used at these locations.

POST SPACING ARRANGEMENT FOR THRIE BEAM GUARDRAIL AT BRIDGE END

December 23, 2002

Published Date: 2nd Qtr. 2016	SDDOT	POST SPACING ARRANGEMENT FOR THRIE BEAM GUARDRAIL AT BRIDGE END	PLATE NUMBER 630.15 Sheet 1 of 1

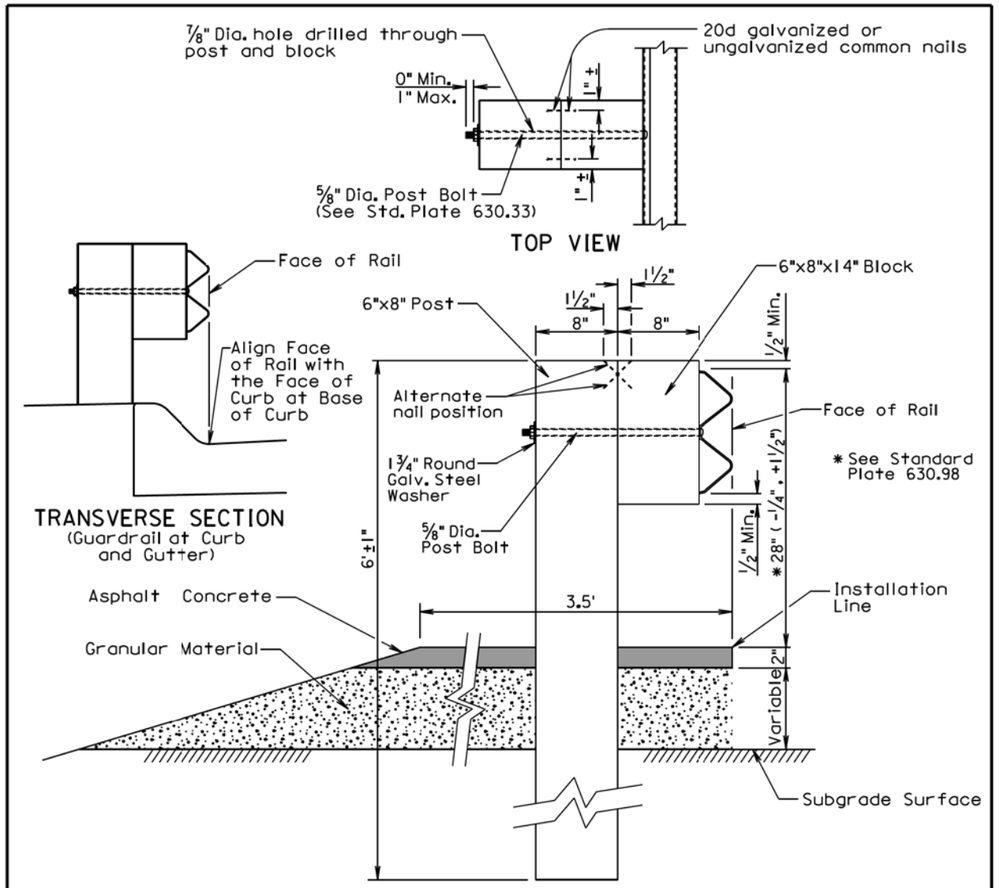

TRANSVERSE SECTION

GENERAL NOTES:

Asphalt concrete shall be the same type used elsewhere on the project or shall be as specified in the plans. If asphalt concrete is not specified in the plans, the asphalt concrete shall conform to the Specifications for "Asphalt Concrete Composite." For informational purposes, the Rate of Materials for the 3.5' wide section of asphalt concrete as shown above shall be 4.80 Tons per Station.

Granular material shall be the same type used elsewhere on the project or shall be as specified in the plans. If granular material type is not specified in the plans, the material shall conform to the Specifications for "Base Course". The granular material shall be placed the same thickness as the mainline surfacing or as specified in the plans.

The cross slope for the surfacing and subgrade surface shall be as specified in the plans (See Typical Sections and/or Cross Sections).

The top of post and top of block shall have a true square cut. The top of block shall be ±1 inch from the top of the post.

June 26, 2015

Published Date: 2nd Qtr. 2016	SDDOT	W BEAM GUARDRAIL POST INSTALLATION	PLATE NUMBER 630.31 Sheet 1 of 1

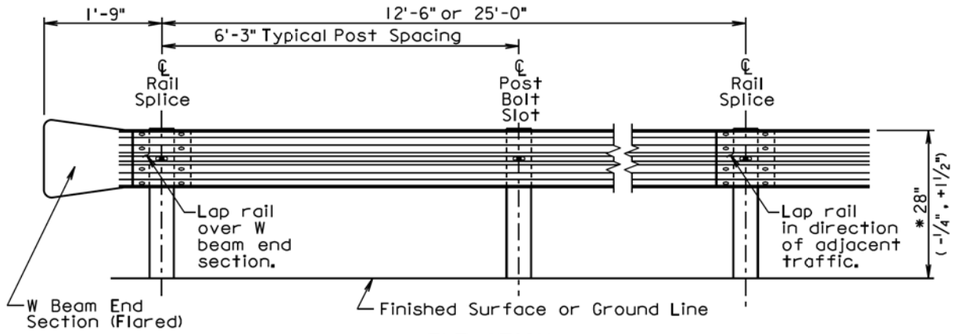

ELEVATION

*See Standard Plate 630.98

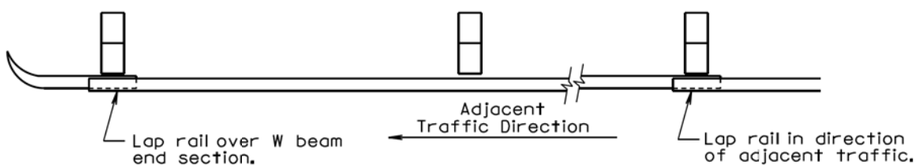

PLAN

W BEAM GUARDRAIL DEFLECTION CRITERIA	
POST SPACING	MAXIMUM DEFLECTION
6'-3"	5'-0"
3'-1 1/2"	3'-9"

For Informational Purposes Only

GENERAL NOTES:

All W beam rail shall be Type I.

There will be no separate payment for furnishing and installing W Beam End Sections (Flared) and W Beam Terminal Connectors. All costs for the W Beam End Sections (Flared) and W Beam Terminal Connectors shall be incidental to the contract unit price per foot for the respective "W Beam Guardrail" bid item.

W beam rail section lengths may be 12'-6" and/or 25'-0". The combination of section lengths used shall be compatible with the total length of rail per site as shown in the plans.

W Beam End Sections (Flared) shall only be used in a one way traffic situation. See Standard Plate 630.80 for W Beam End Section (Flared) in the Beam Guardrail Trailing End Terminal.

All costs for constructing W beam guardrail including labor, equipment, and materials including all posts, blocks, steel beam rail, and hardware shall be incidental to the contract unit price per foot for the respective "W Beam Guardrail" bid item.

June 26, 2015

Published Date: 2nd Qtr. 2016	SDDOT	W BEAM GUARDRAIL INSTALLATION	PLATE NUMBER 630.32
			Sheet 1 of 1

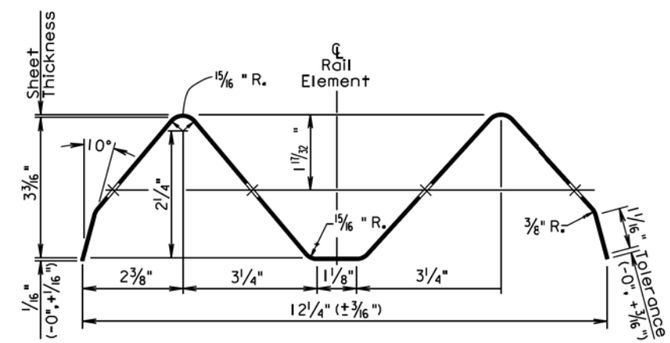

SECTION THROUGH W BEAM RAIL ELEMENT

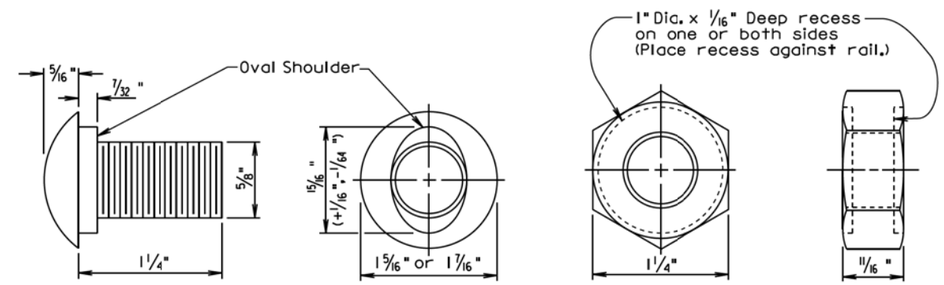

The Post Bolt is similar except the post bolt is 18" long.

SPLICE BOLT
(5/8" BUTTON HEAD BOLT AND RECESS NUT)

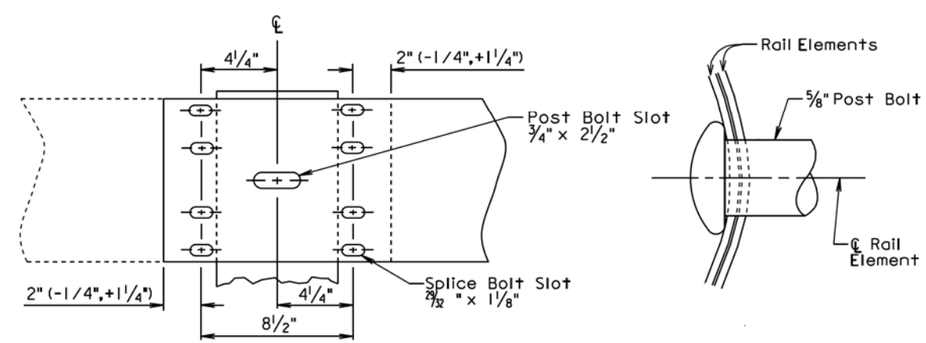

Lap in direction of traffic.

RAIL SPLICE

December 23, 2004

Published Date: 2nd Qtr. 2016	SDDOT	W BEAM RAIL, RAIL SPLICE, AND HARDWARE	PLATE NUMBER 630.33
			Sheet 1 of 1

Plot Scale - 1:200
- Plotted From - TRSF12141
File - ...\pn\Minn021X\s12010s72003.dgn

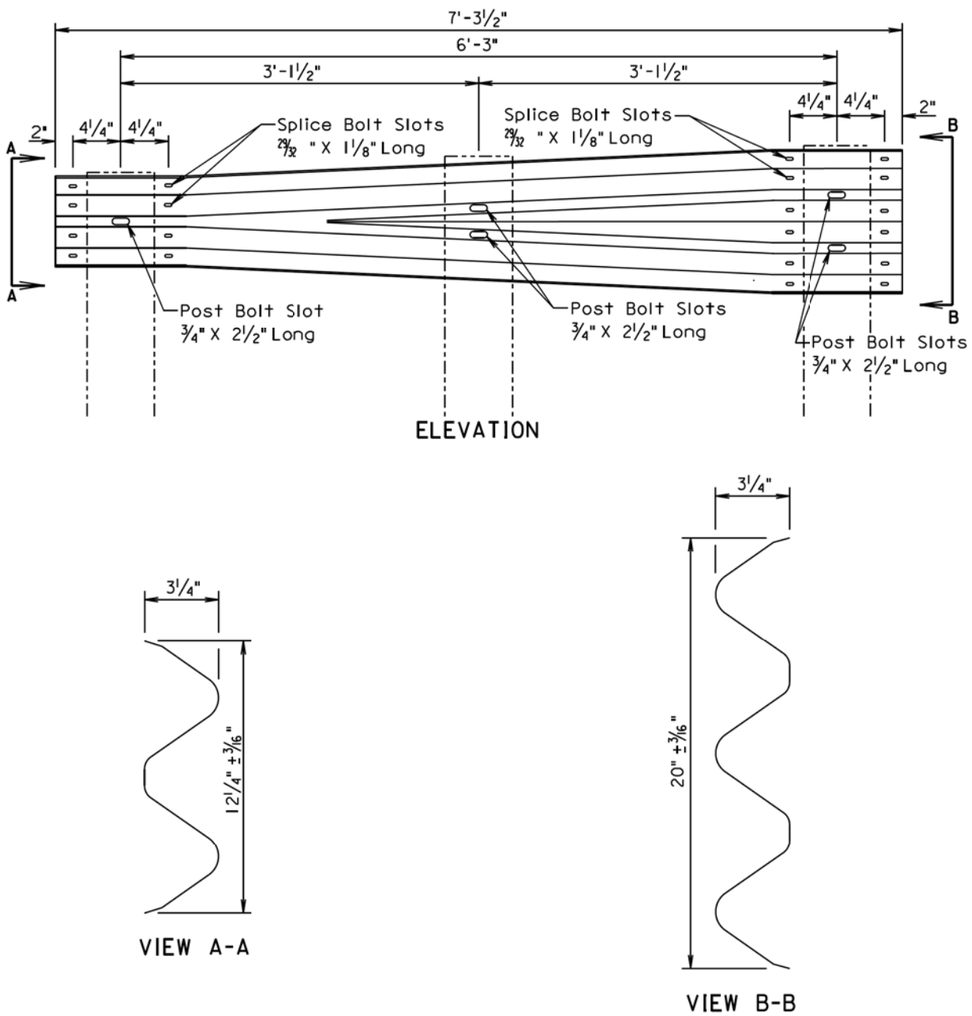

GENERAL NOTE:

All costs for constructing the W Beam to Thrie Beam Guardrail Transition including labor, equipment, and materials including two posts, two blocks, W beam to thrie beam transition section, and hardware shall be incidental to the contract unit price per each for "W Beam to Thrie Beam Guardrail Transition".

March 31, 2000

Published Date: 2nd Qtr. 2016	SDDOT	W BEAM TO THRIE BEAM GUARDRAIL TRANSITION SECTION	PLATE NUMBER 630.82
			Sheet 1 of 1

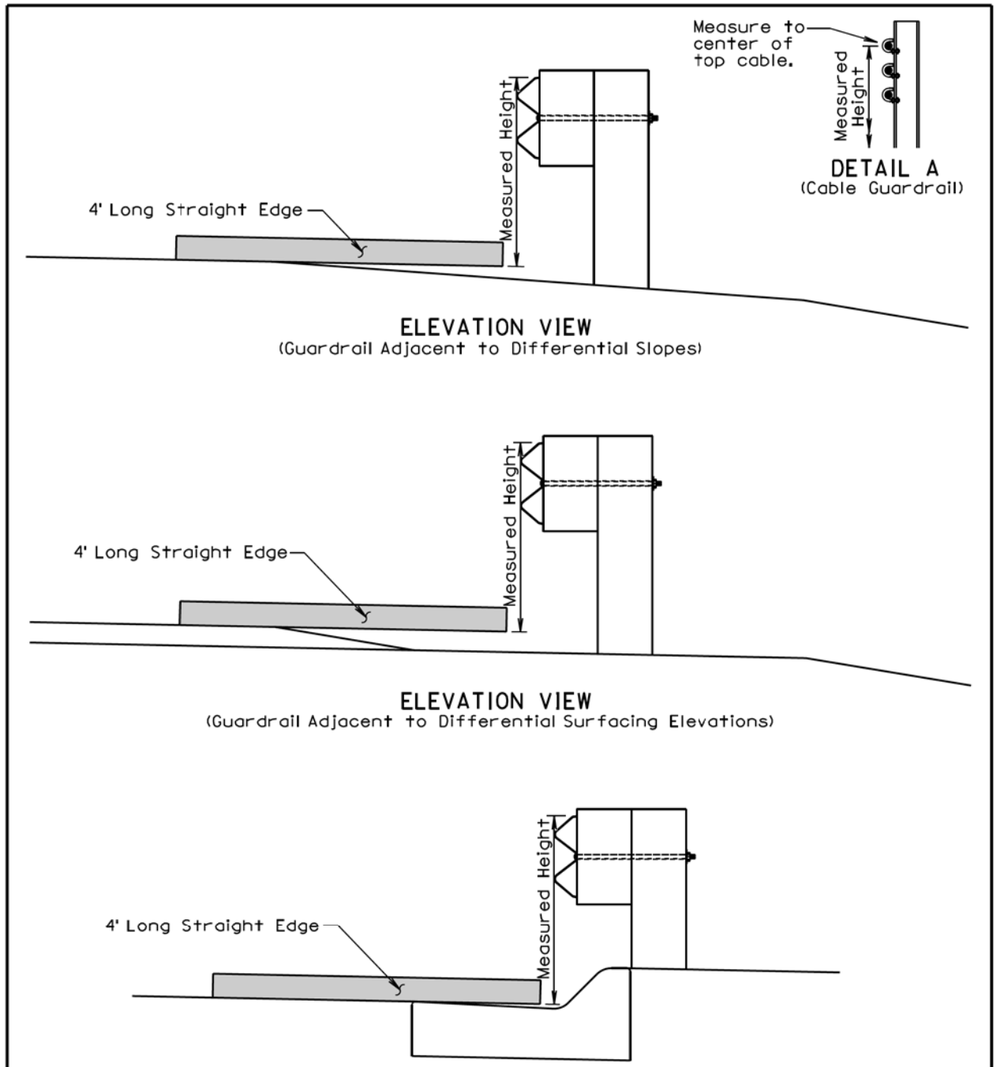

GENERAL NOTES:

The W Beam guardrail shown is for illustrative purpose. The guardrail height for all types of guardrail systems shall be measured in accordance with this standard plate.

When measuring height of cable guardrail or cable barrier the height shall be measured to the center of the top cable. See Detail A.

June 26, 2010

Published Date: 2nd Qtr. 2016	SDDOT	MEASURING GUARDRAIL HEIGHT	PLATE NUMBER 630.98
			Sheet 1 of 1

Plot Scale - 1:200
- Plotted From - TRSF12141
File - ...\prj\Mnn021X\s12010s72003.dgn

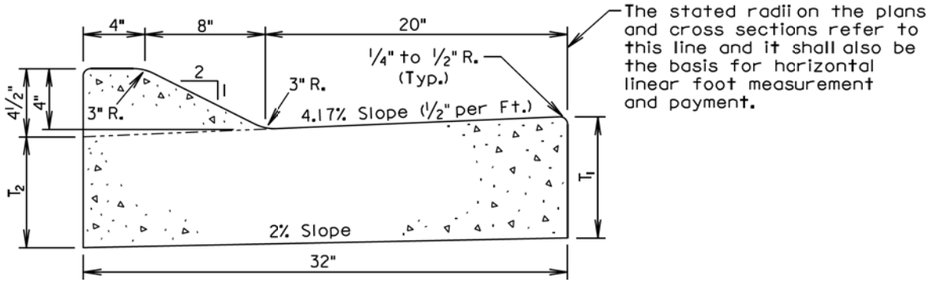

Type	T_1 (Inches)	T_2 (Inches)	Cu. Yd. Per Lin. Ft.	Lin. Ft. Per Cu. Yd.
D46	6	5 5/16	0.056	18.0
D47	7	6 5/16	0.064	15.7
D48	8	7 5/16	0.072	13.9
D48.5	8.5	7 13/16	0.076	13.1
D49	9	8 5/16	0.080	12.5
D49.5	9.5	8 13/16	0.084	11.9
D410	10	9 5/16	0.088	11.3
D410.5	10.5	9 13/16	0.093	10.8
D411	11	10 5/16	0.097	10.3
D411.5	11.5	10 13/16	0.101	9.9
D412	12	11 5/16	0.105	9.5

GENERAL NOTES:

When concrete curb and gutter longitudinally adjoins new concrete pavement, the method of attachment shall be by one of the methods shown on Standard Plate 380.11.

See Standard Plate 650.90 for expansion and contraction joints in the curb and gutter.

September 6, 2006

Published Date: 2nd Qtr. 2016	SDDOT	TYPE D CONCRETE CURB AND GUTTER	PLATE NUMBER 650.15
			Sheet 1 of 1

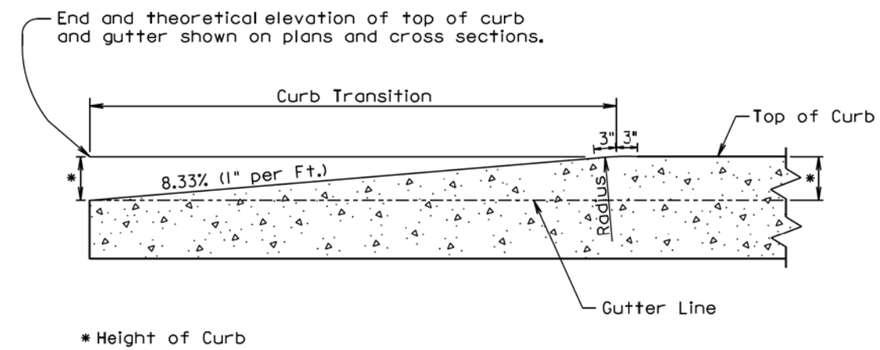

LONGITUDINAL SECTION OF CONCRETE CURB TAPER

September 14, 2005

Published Date: 2nd Qtr. 2016	SDDOT	CONCRETE CURB TAPER	PLATE NUMBER 650.35
			Sheet 1 of 1

Plot Scale - 1:200
Plotted From - TRSF12141
File - ...\prj\Minn021X\s12010s72003.dgn

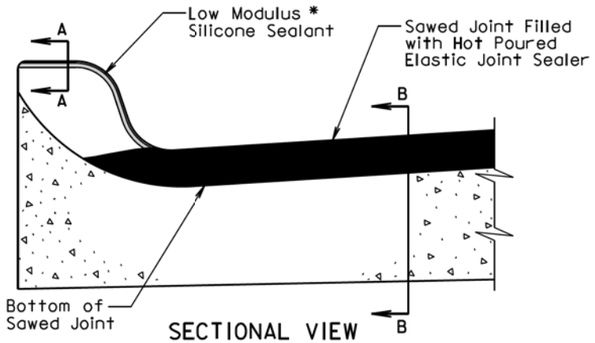

SECTIONAL VIEW

(Curb and Gutter Placed Monolithic with Adjacent Mainline PCC Pavement)

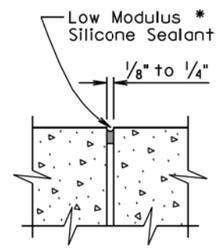

SECTION A-A

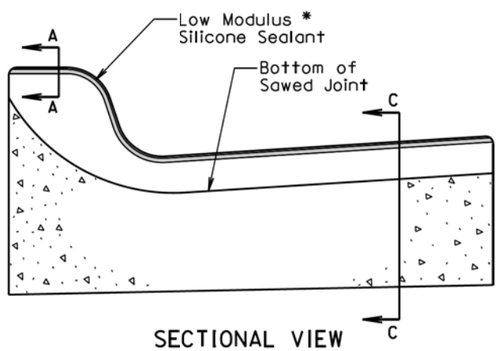

SECTIONAL VIEW

(Curb and Gutter not Placed Monolithic with Adjacent Mainline PCC Pavement or Mainline Surfacing is not PCC Pavement)

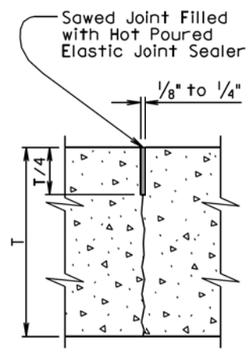

SECTION B-B

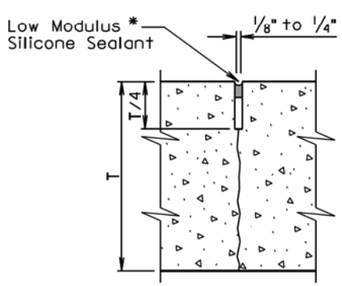

SECTION C-C

* The silicone sealant shall be placed such that it completely seals the joint and is bonded to the sides of the clean joint as approved by the Engineer.

September 6, 2013

Published Date: 2nd Qtr. 2016	SDDOT	JOINTS IN CONCRETE CURB AND GUTTER	PLATE NUMBER 650.90
			Sheet 1 of 2

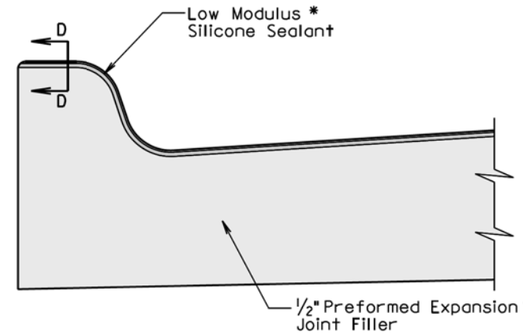

SECTIONAL VIEW

(Curb and Gutter at 1/2" Preformed Expansion Joint Filler Location)

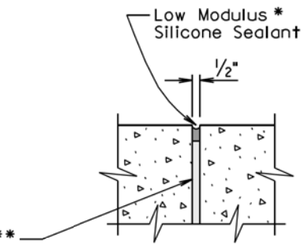

SECTION D-D

* The silicone sealant shall be placed such that it completely seals the joint and is bonded to the sides of the clean joint as approved by the Engineer.

GENERAL NOTES:

For illustrative reason, only the type B curb and gutter is shown.

** A 1/2" preformed expansion joint filler shall be placed transversely in the curb and gutter at the following locations:

1. At each junction between the radius return of curb and gutter and curb and gutter which is parallel to the project centerline.
2. At each junction between new curb and gutter and existing curb and gutter.

Transverse contraction joints shall be constructed at 10' intervals in the concrete curb and gutter except when the concrete curb and gutter is constructed adjacent to mainline PCC pavement. When concrete curb and gutter is constructed adjacent to mainline PCC pavement, a transverse contraction joint shall be constructed in the concrete curb and gutter at each mainline PCC pavement transverse contraction joint location.

When concrete curb and gutter is not placed monolithically with the mainline PCC pavement or when the adjacent mainline surfacing is not PCC concrete, the transverse contraction joints in the concrete curb and gutter shall be 1 1/2 inches deep if formed in the fresh concrete using a suitable grooving tool. If a saw is used to cut the contraction joints, then the depth of the joint shall be at least 1/4 the thickness of the concrete and the joint shall be sealed in accordance with the details shown above.

September 6, 2013

Published Date: 2nd Qtr. 2016	SDDOT	JOINTS IN CONCRETE CURB AND GUTTER	PLATE NUMBER 650.90
			Sheet 2 of 2

Plot Scale - 1:200
- Plotted From - TRSF12141
File - ...\bpj\Mnn021X\s12010s72003.dgn

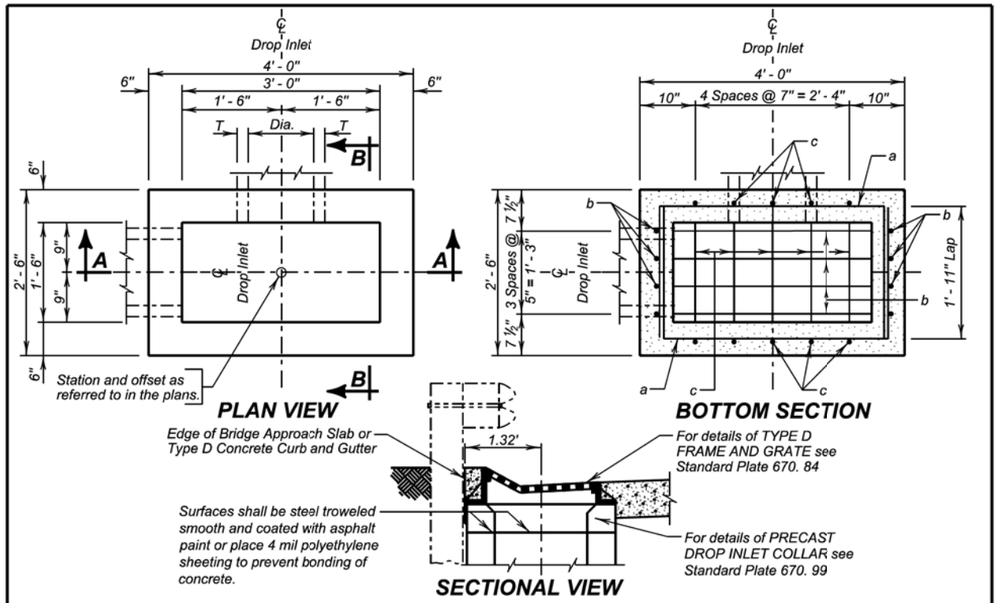

DROP INLETS FOR 12" TO 24" DIAMETER PIPE

ESTIMATED QUANTITIES

ITEM	UNIT	CONSTANT QUANTITY	VARIABLE QUANTITY
✳ Class M6 Concrete	Cu. Yd.	0.22	0.20H
Reinforcing Steel	Lb.	39.95	25.40H
Frame and Grate Assembly	Each	1	———

SPECIFICATIONS

Design Specifications: AASHTO LRFD Bridge Design Specifications, 2012 Edition.

Construction Specifications: South Dakota Standard Specifications for Roads and Bridges, Current Edition and required Provisions, Supplemental Specifications, and Special Provisions as included in the Proposal.

GENERAL NOTES:

Design Live Load: HL-93. No construction loading in excess of legal load was considered.

Reinforcing steel shall conform to ASTM A615 grade 60. The d bars shall be lapped 12 inches with the b and c bars. Cut and bend reinforcing steel as required to place pipe(s) through the drop inlet wall.

Drop inlet may be precast. If precast drop inlet details differ from this standard plate, submit a checked design done by a SD registered P.E. and shop plans to the Office of Bridge Design for approval.

✳ Reduce total quantities of concrete by the amount of concrete displaced by the pipe(s). The total quantity of concrete shall be computed to the nearest hundredth of a cubic yard. The total quantity of reinforcing steel shall be computed to the nearest pound.

Drop inlet shown may be modified by the addition or omission of connecting pipes as noted elsewhere in the plans. All pipes entering drop inlet must fit between the inside face of walls and shall not enter through the corners.

Maximum R.C.P. diameter shall not exceed 12 inches (No R. C. arch) on the 1-foot 6-inch wide side and shall not exceed 24 inches (24 inches for R. C. arch) on the 3-foot wide side of the drop inlet.

The dimension of H is in feet. Maximum H is 10 feet.

PIPE DISPLACEMENT REDUCTIONS

	Diameter (Inches)	Wall T (Inches)	Class M6 Concrete (Cu. Yd.)
R.C.P.	12	2	0.03
	15	2 ¼	0.04
	18	2 ½	0.05
	24	3	0.09
R.C. ARCH	18	2 ½	0.05
	24	3 ½	0.09

December 16, 2015

Published Date: 2nd Qtr. 2016

SDDOT

1.5' X 3' TYPE D REINFORCED CONCRETE DROP INLET

PLATE NUMBER 670.20

Sheet 1 of 2

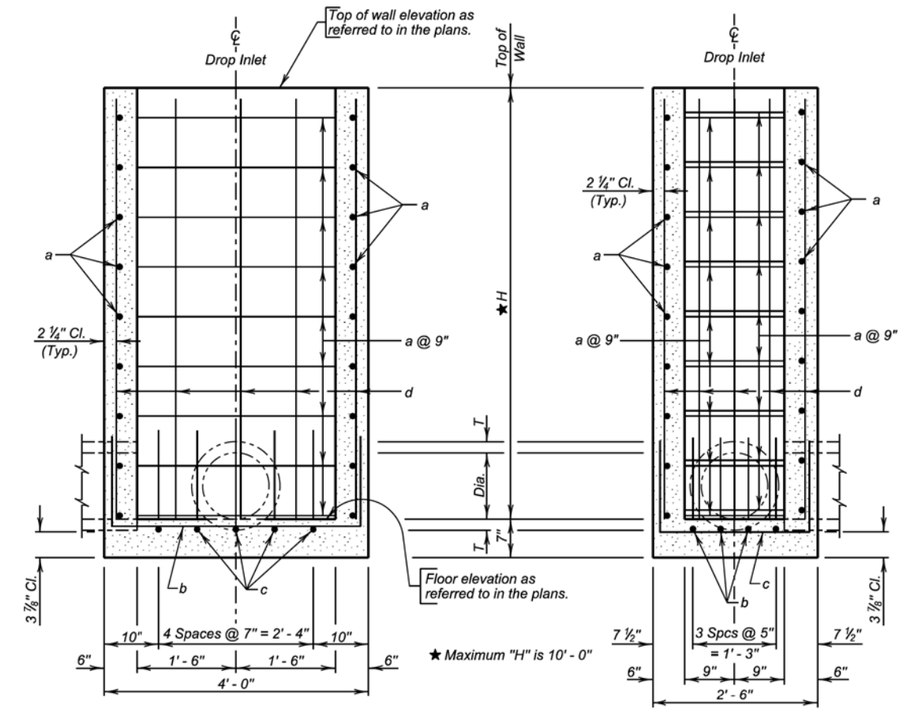

SEC. A - A

SEC. B - B

REINFORCING SCHEDULE

Mk.	No.	Size	Length	Type	Bending Details
a	2.67H	4	7' - 6"	17	
b	4	5	6' - 3"	17	
c	5	4	4' - 9"	17	
d	18	4	H - 2"	Str.	

NOTE:
All dimensions are out to out of bars.

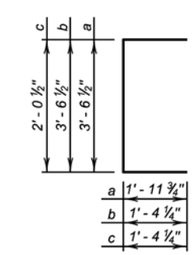

Type 17

December 16, 2015

Published Date: 2nd Qtr. 2016

SDDOT

1.5' X 3' TYPE D REINFORCED CONCRETE DROP INLET

PLATE NUMBER 670.20

Sheet 2 of 2

Plot Scale - 1:200

- Plotted From - TRSF12141

File - ...\pp\Minn021X\s12010s72003.dgn

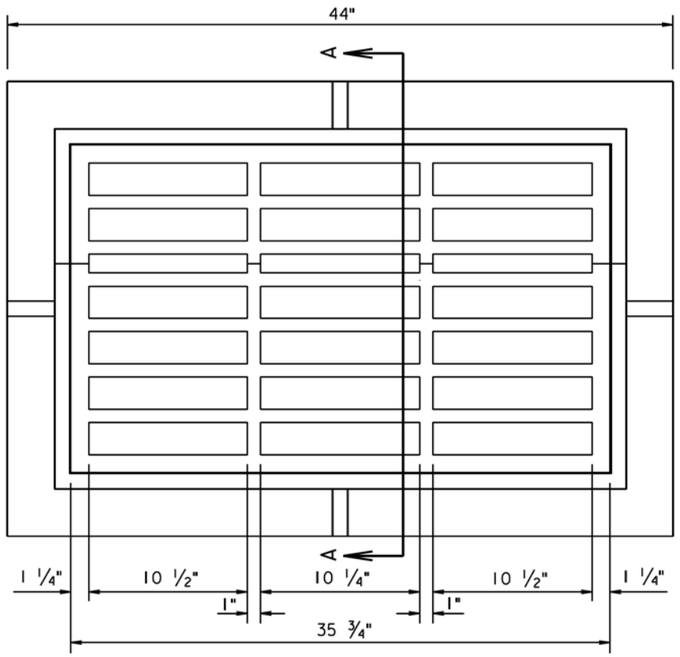

PLAN VIEW

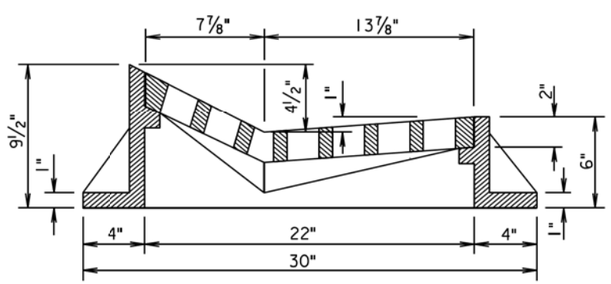

SECTION A-A

GENERAL NOTE:

The total weight of the frame and grate shall be 620 pounds minimum.

March 31, 2000

Published Date: 2nd Qtr. 2016	SDDOT	TYPE D FRAME AND GRATE	PLATE NUMBER 670.84
			Sheet 1 of 1

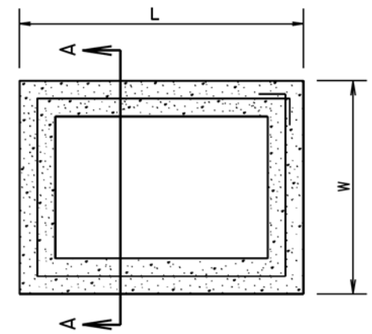

PLAN VIEW

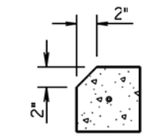

For Type D Drop Inlets only:
Use Precast Drop Inlet Collar with 2" chamfer on L sides only.

DETAIL B

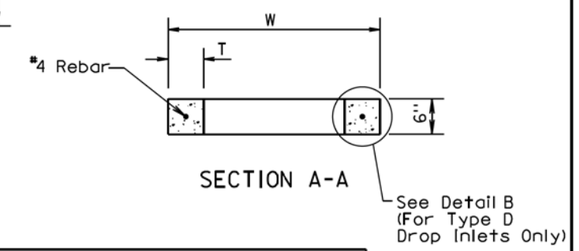

SECTION A-A

INFORMATIONAL QUANTITIES					
FRAME AND GRATE TYPE	L Ft-In	W Ft-In	T In	CLASS M6 CONCRETE CuYd	REINFORCING STEEL Lb
TYPE B	4'-0"	3'-0"	6	0.11	9
TYPE C	5'-0"	4'-0"	6	0.15	11
TYPE D	4'-0"	2'-6"	6	0.10	8

GENERAL NOTES:

All reinforcing steel shall conform to ASTM A615, Grade 60.

The 1/2" diameter bar shall lap 6" ± and shall be centered in the concrete.

The cost of furnishing and installing Precast Drop Inlet Collars, including labor, materials, and incidentals shall be incidental to the contract unit price per Each for "Precast Drop Inlet Collar".

March 31, 2000

Published Date: 2nd Qtr. 2016	SDDOT	PRECAST DROP INLET COLLAR	PLATE NUMBER 670.99
			Sheet 1 of 1

Plot Scale - 1:200
- Plotted From - TRSF12141
File - ...\pn\Minn021X\s12010s72003.dgn

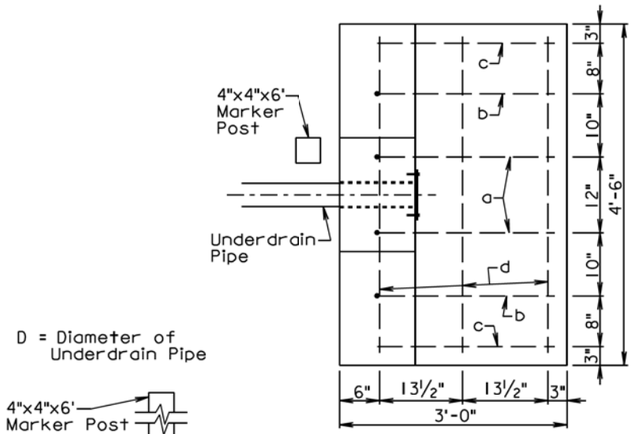

TOP VIEW

D = Diameter of Underdrain Pipe

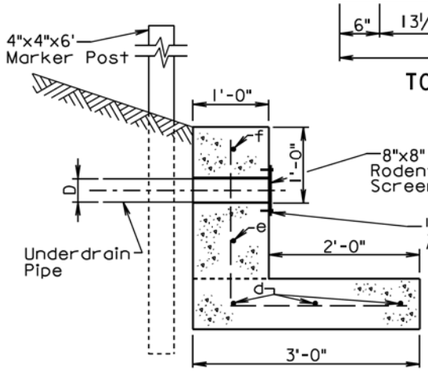

SECTION A-A

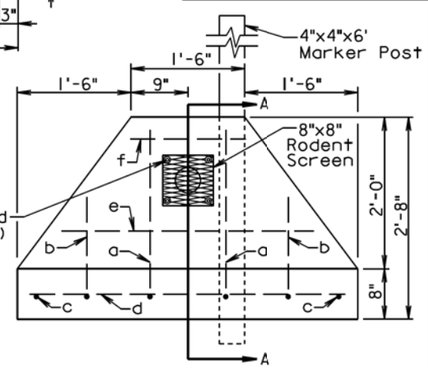

END VIEW

REINFORCING SCHEDULE

MK.	No.	Size	Length	Type
a	2	4	4'-6"	17A
b	2	4	3'-9"	17A
c	2	4	2'-4"	Str.
d	3	4	4'-2"	Str.
e	1	4	3'-4"	Str.
f	1	4	1'-6"	Str.

NOTE:
All dimensions are out to out of bars.

Bending Details

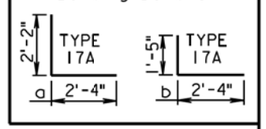

GENERAL NOTES:

The concrete shall be Class M6. The concrete shall conform to the requirements of Section 462 of the Specifications except the minimum curing time shall be 72 hours. It is estimated that 0.55 cubic yards of concrete is required for each unit.

Four cast-in-place or drilled-in 1/4" galvanized anchors shall be placed in the headwall. Each galvanized anchor shall be placed approximately 1" from the outside corner of the rodent screen. It is preferred that the anchor location be centered at an opening in the rodent screen.

All reinforcing steel shall conform to ASTM A615 Grade 60. It is estimated that 25.7 pounds of reinforcing steel is required for each unit.

The underdrain pipe shall be placed in the concrete headwall with the pipe end flush with the concrete surface adjacent to the rodent screen.

The 8"x8" rodent screen shall be galvanized 13 Ga. steel with a diamond shaped flattened mesh pattern. The size shall be 1/2". The size refers to the measurement across the smallest diamond shaped opening measured from the centers of the wires. The rodent screen shall be centered about the hole in the headwall and fastened to the headwall with the appropriate bolts or nuts with washers.

A 4"x4"x6' marker post shall be placed at the approximate location as depicted in the above drawings for each concrete headwall. The marker post shall project 3'± above the ground line. The marker post shall be cedar or treated with a wood preservative and shall be painted with two coats of white paint.

All costs for furnishing and installing the concrete headwall including equipment, labor, and materials including concrete, reinforcing steel, rodent screen, anchors, and marker post shall be incidental to the contract unit price per each for "Concrete Headwall for Underdrain".

June 26, 2015

Published Date: 2nd Qtr. 2016	SDDOT	CONCRETE HEADWALL FOR UNDERDRAIN	PLATE NUMBER 680.01
			Sheet 1 of 1

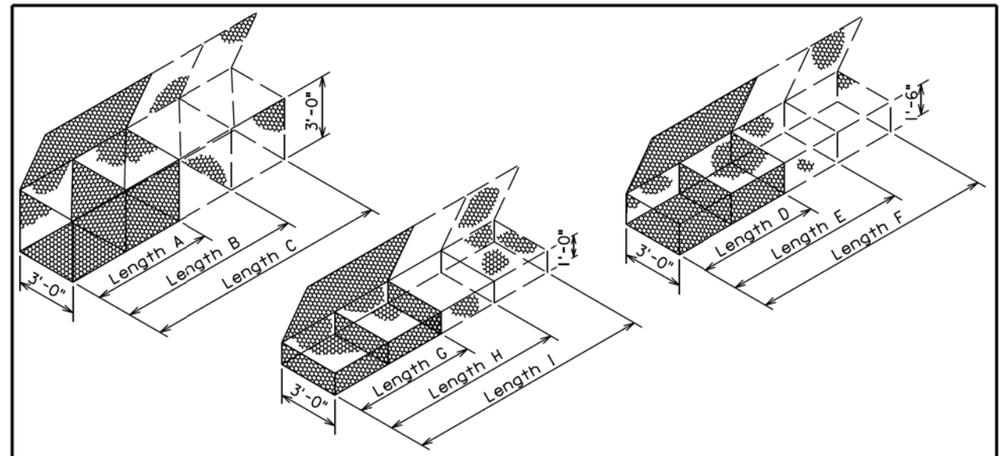

GABION DETAILS

STANDARD SIZES

SIZE	LENGTH	WIDTH	HEIGHT	NUMBER OF CELLS	CAPACITY, Cu. Yd.
A	6'-0"	3'-0"	3'-0"	2	2.0
B	9'-0"	3'-0"	3'-0"	3	3.0
C	12'-0"	3'-0"	3'-0"	4	4.0
D	6'-0"	3'-0"	1'-6"	2	1.0
E	9'-0"	3'-0"	1'-6"	3	1.5
F	12'-0"	3'-0"	1'-6"	4	2.0
G	6'-0"	3'-0"	1'-0"	2	0.7
H	9'-0"	3'-0"	1'-0"	3	1.0
I	12'-0"	3'-0"	1'-0"	4	1.3

Above Dimensions subject to mill tolerances.

GENERAL NOTES:

Lacing and internal connecting wire shall be 0.0866 inch diameter steel wire ASTM A641 Class 3 soft temper measured after galvanizing and for PVC coated gabions shall be 0.0866 inch diameter steel wire measured after galvanizing but before PVC coating.

The lacing procedure is as follows:

1. Cut a length of lacing wire approximately 1 1/2 times the distance to be laced but not exceeding 5 feet.
2. Secure the wire terminal at the corner by looping and twisting.
3. Proceed lacing with alternating single and double loops at a spacing not to exceed 6 inches.
4. Securely fasten the other lacing wire terminal.

Wire lacing or interlocking type fasteners shall be used for gabion cssembly and final construction of gabion structures. Interlocking fasteners for galvanized gabions shall be high tensile 0.120 inch diameter galvanized steel wire measured after galvanizing. The galvanizing shall conform to ASTM A641-92 Class 3 coating. Fasteners shall also be in accordance with ASTM A764, Class II, Type III.

Interlocking fasteners for PVC coated gabions shall be high tensile 0.120 inch diameter stainless steel wire conforming to ASTM A313, Type 302, Class 1. The spacing of the interlocking fasteners during all phases of assembly and construction shall not exceed 6 inches.
All fasteners shall be placed where the mesh weaves around the selvage wire at the vertical and horizontal joints.

June 26, 2001

Published Date: 2nd Qtr. 2016	SDDOT	BANK AND CHANNEL PROTECTION GABIONS	PLATE NUMBER 720.01
			Sheet 1 of 1

Plot Scale - 1:200
Plotted From - TRSF12141
File - ...\prj\Minn021X\s12010s72003.dgn

STATE OF SOUTH DAKOTA	PROJECT	SHEET	TOTAL SHEETS
	IM 0909(81)406	B48	B48

Plotting Date: 06/09/2016

12", 18", & 24" RCP & CMP
12", 18", & 24" RCP Arch & CMP Arch

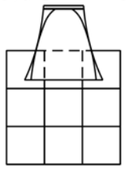

4.5 Cu. Yds.

30" & 36" RCP & CMP
30" & 36" RCP Arch & CMP Arch

6.0 Cu. Yds.

42" RCP & CMP
42" RCP Arch & CMP Arch

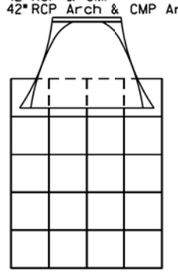

10.0 Cu. Yds.

48" & 54" RCP & CMP
48" & 54" RCP Arch & CMP Arch

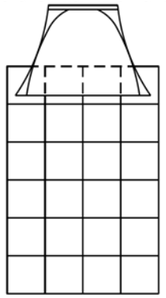

12.0 Cu. Yds.

60" RCP & CMP
60" RCP Arch & CMP Arch

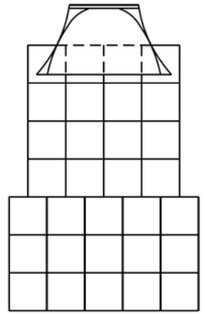

15.5 Cu. Yds.

66" RCP & CMP

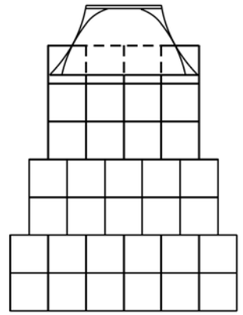

17.0 Cu. Yds.

72" RCP & CMP
72" RCP Arch & CMP Arch

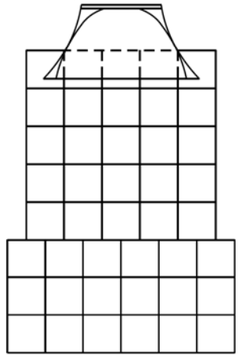

21.5 Cu. Yds.

78" RCP & CMP

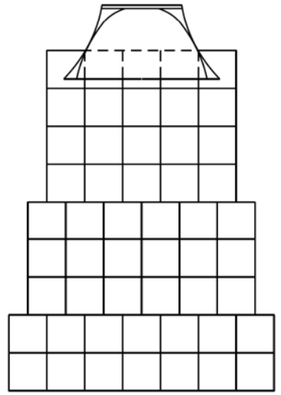

26.0 Cu. Yds.

84" RCP & CMP

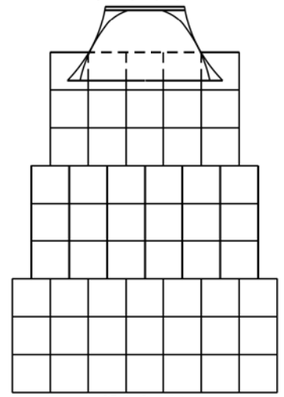

27.0 Cu. Yds.

GENERAL NOTES:

Gabions at outlets of C. M. pipe and R. C. pipe shall be placed under the end section a distance of 2' from the outlet end of the section. For C. M. pipe end section installations, the upper fabric of the gabions shall be modified to accommodate the metal end section in a manner approved by the Engineer.

Quantities shown on this standard plate are based on standard gabion sizes D, E, and F (See Standard Plate 720.01).

June 26, 2001

Published Date: 2nd Qtr. 2016	SDDOT	***BANK AND CHANNEL PROTECTION GABION PLACEMENT UNDER PIPE END SECTIONS***	*PLATE NUMBER* 720.03
			Sheet 1 of 1

Plot Scale - 1:200

Plotted From - TRSF12141

File - ...\prj\Mnn021X\s12010s72003.dgn