STATE OF SOUTH DAKOTA	PROJECT	SHEET	TOTAL SHEETS
	IM 0909(81)406	F1	F16

Plotting Date: 09/12/2016
Revised: 26 Jul 16, LLR

Section F: Surfacing Plans

INDEX OF SHEETS

F1	General Layout W/Index
F2-F3	Estimate with General Notes & Tables
F4	In Place Typical Sections
F5-F7	Typical Sections
F8-F10	Guardrail Surfacing Layouts
F11-14	Cutoff / Edge Drain Details
F15-F16	Standard Plates

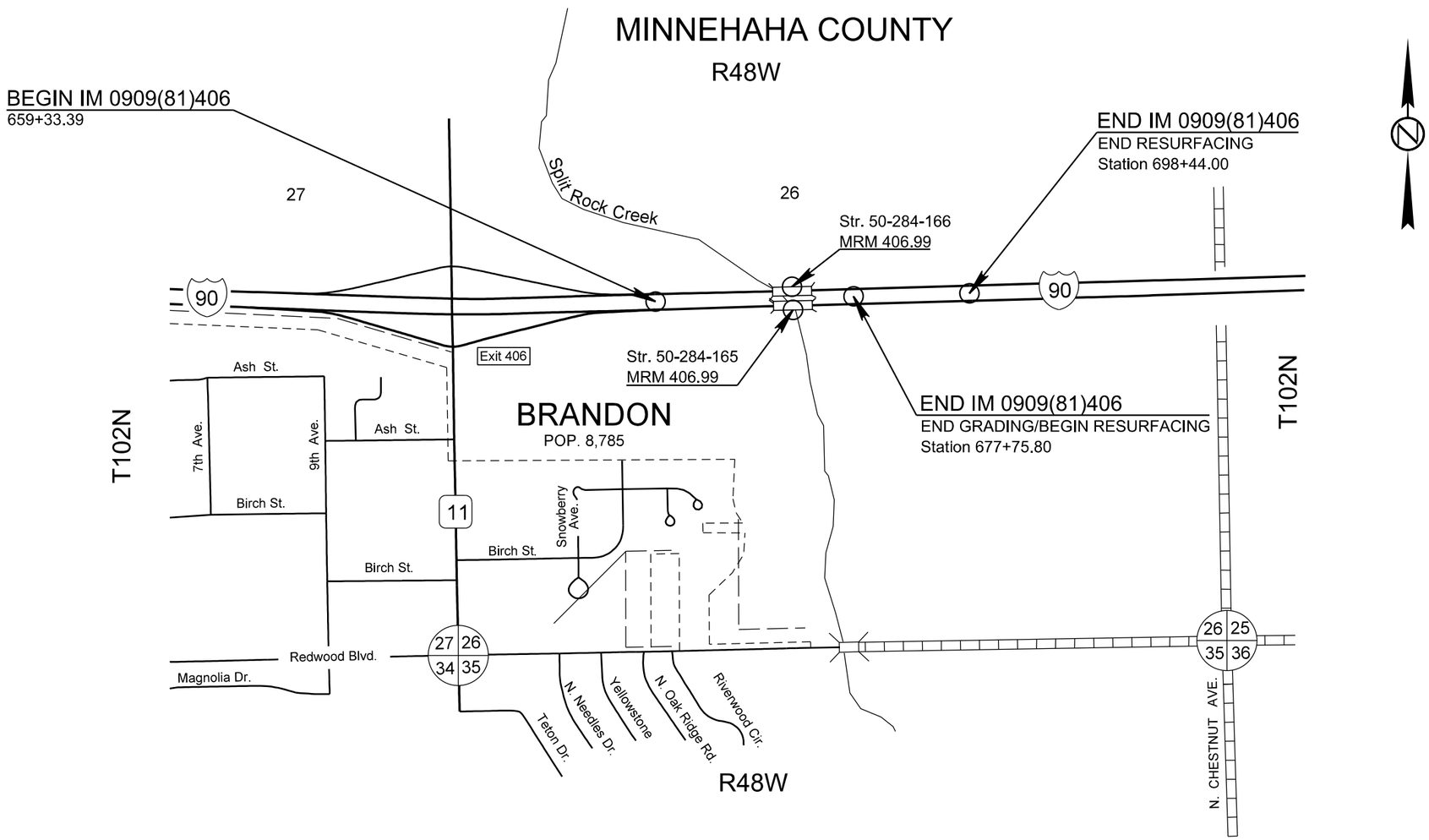

PLOT SCALE - 1:200
PLOTTED FROM - TRPR15123
PLOT NAME - 1
FILE - U:\MS\PRJ\MINN021\X\TITLE F.DGN

SECTION F – ESTIMATE OF QUANTITIES

BID ITEM NUMBER	ITEM	QUANTITY	UNIT
120E6200	Water for Granular Material	100.0	MGal
260E1010	Base Course	3,275.7	Ton
260E1030	Base Course, Salvaged	5,070.3	Ton
320E0008	PG 64-34 Asphalt Binder	529.4	Ton
320E1060	Class G Asphalt Concrete	9,729.8	Ton
320E3000	Compaction Sample	3	Each
320E4000	Hydrated Lime	96.3	Ton
330E0010	MC-70 Asphalt for Prime	19.1	Ton
330E0100	SS-1h or CSS-1h Asphalt for Tack	21.0	Ton
330E0210	SS-1h or CSS-1h Asphalt for Flush Seal	7.0	Ton
330E2000	Sand for Flush Seal	76.7	Ton
430E0700	Precast Concrete Headwall for Drain	22	Each
680E0010	Edge Drain	8,316	Ft
680E0015	Edge Drain Outlet	18	Each
680E0240	4" Corrugated Polyethylene Drainage Tubing	40	Ft
680E0440	4" Slotted Corrugated Polyethylene Drainage Tubing	115	Ft
680E2500	Porous Backfill	95.0	Ton
831E0400	Impermeable Plastic Membrane	50	SqYd

SURFACING THICKNESS DIMENSIONS

Plans quantity will be applied though the thickness may vary from that shown on the plans.

At those locations where material must be placed to achieve a required elevation, plans quantity may be varied to achieve the required elevation.

CLASS G ASPHALT CONCRETE

Mineral Aggregate for Class G Asphalt Concrete shall conform to the requirements for Class G, Type 1.

All other requirements for Class G Asphalt Concrete shall apply.

BASE COURSE, SALVAGED

Base Course, Salvaged estimated at 5,070.3 tons (for informational purposes only) is available from stockpile sites provided by the Contractor and may be used without further testing.

All other requirements for Base Course, Salvaged shall apply.

MEDIAN CROSSOVERS

The median crossovers will not be removed during project construction nor after project completion.

CUTOFF DRAINS

A Cutoff drain will be installed in each set of lanes in conjunction with the proposed grading and resurfacing. After reconstruction of the subgrade and placement of the base course has been completed install the underdrains and associated cutoff drains as follows:

A cutoff drain shall be installed perpendicular to centerline in both the Eastbound and Westbound lanes at approximately Station 675+50. The cutoff drains shall be installed at the east end of the proposed grading section adjacent to the inplace concrete surfacing section. The cutoff drains shall be installed in a trench 2 feet wide by 3 feet deep. The trench shall be graded to maintain a minimum of .01ft/ft or 1% drop from centerline to the median and outside ditches. Once the trench is excavated, place Impermeable Plastic Membrane on the trench bottom and against the downgrade side of the trench the entire width of the finished subgrade surface. The membrane will ultimately extend upward through the base course overlying the subgrade. The membrane shall be folded, not cut, to fit against the bottom and the downgrade side of the trench. This may be done by rolling out the membrane perpendicular to centerline, folding the membrane into the trench, and cutting off the excess membrane from the top of the trench after backfilling. After the membrane is placed into the trench, place 4" Slotted Corrugated PE Drainage Tubing on top of the membrane in the center of the trench bottom. Using a snap coupler, connect 4" Corrugated Polyethylene tubing to both ends of the Slotted Tubing and place in the center of the unlined trench. The solid tubing shall daylight at a headwall placed above the ditch bottom so as to provide positive drainage from the outlet and blend into the inslope. The depth of the trench may be adjusted to maintain the minimum grade needed to maintain positive drainage and proper placement of the headwalls. Backfill the membrane lined trench containing the 4" Slotted Corrugated PE Tubing with Porous Backfill and 8" of Base Course. The remainder of the trench from the edge of the subgrade top to the headwall shall be backfilled with compacted soil.

Estimate of Quantities:

Impermeable Plastic Membrane	50 sq yd
4 inch Corrugated Slotted Polyethylene Tubing	115 feet
4 inch Corrugated Polyethylene Tubing	40 feet
Porous Backfill	95 tons
Headwalls	4 each
(See Standard Plate No. 680.01)	

General

All existing underdrain systems associated with the existing surfacing shall be excavated and eliminated to prevent collection of water in abandoned tubing and/or porous backfilled trenches. All excavated drainage tubing shall be disposed of by the contractor.

The drain locations and depths given are based on the best information available to the Geotechnical Engineering Activity. The actual field conditions may require that adjustments be made by the Project Engineer to provide for sufficient drainage. The Geotechnical Engineering Activity will be available for onsite assistance if necessary.

Care must be taken to insure that the membrane and drainage tubing are not damaged during construction. Sufficient cover material is to be placed over the cutoff drain before heavy equipment is allowed to work over the underdrain.

EDGE DRAINS AND OUTLET INSTALLATION

The Contractor shall construct Edge Drains and Outlets in accordance with the Special Provision and Section F special details for Edge Drains.

See following table for quantity and location of Edge Drains and Outlets.

TABLE OF EDGE DRAINS AND OUTLETS

Location	Edge Drain	Edge Drain Outlet & Concrete Headwall
	Feet	Each
I 90 E		
Sta. 675+50 to 698+44 Outside	2,294	5
Sta. 675+50 to 694+14 Median	1,864	4
I 90 W		
Sta. 675+50 to 698+44 Outside	2,294	5
Sta. 675+50 to 694+14 Median	1,864	4
TOTAL	8,316	18

SUMMARY OF CLASS G ASPHALT CONCRETE COMPACTION

Location	With Specified Compaction (1st / 2nd / 3rd Lift)	Without Specified Compaction
	Ton	Ton
I 90 E Mainline		
Sta. 659+33.40 to 667+36.78	813.8 / 813.8 / 519.8	
Sta. 671+75.80 to 674+00.00	217.0 / 217.0 / 138.3	
Sta. 674+00.00 to 675+50.00	130.5 / 130.5 / 72.0	
Sta. 675+50.00 to 698+44.00	1,064.4 / 791.4	
I 90 W Mainline		
Sta. 659+33.40 to 662+83.10	354.2 / 354.2 / 235.3	
Sta. 662+83.10 to 664+83.10	184.0 / 184.0 / 122.0	
Sta. 664+83.10 to 665+23.10	33.1 / 33.1 / 21.9	
Sta. 665+23.10 to 666+86.00	128.7 / 128.7 / 85.2	
Sta. 671+19.23 to 674+00.00	221.8 / 221.8 / 146.8	
Sta. 674+00.00 to 675+50.00	115.1 / 114.5 / 73.8	
Sta. 675+50.00 to 698+44.00	1,064.4 / 791.4	
I 90 E Shoulder Widening		
Sta. 658+31.20 to 659+33.40	19.4 / 19.4 / 12.1	
Sta. 675+50.00 to 677+75.80	48.1 / 48.1 / 28.7	
Guardrail		
EBL – East end of structure		14.8
WBL – West end of structure		16.7
TOTALS	9,698.3	31.5

Revised: 26 Jul 16, LLR

TABLE OF QUANTITIES – IM 0909(81)406

Location – Description	Water for Granular Material	Base Course and Base Course, Salvaged	Class G Asphalt Concrete	PG 64-34 Asphalt Binder	Hydrated Lime	MC-70 Asphalt for Prime	SS-1h or CSS-1h Asphalt for Tack	SS-1h or CSS-1h Asphalt for Flush Seal	Sand for Flush Seal
	Mgal	Ton	Ton	Ton	Ton	Ton	Ton	Ton	Ton
I 90 E Mainline									
Sta. 659+33.40 to 667+36.78	28.9	2,418.2	813.8 / 813.8 / 519.8	44.2 / 44.2 / 28.1	8.0 / 8.0 / 4.8	6.4	1.6 / 1.6 / 1.6	0.8	12.1
Sta. 671+75.80 to 674+00.00	7.8	648.6	217.0 / 217.0 / 138.3	11.9 / 11.9 / 7.6	2.2 / 2.2 / 1.3	1.8	0.4 / 0.4 / 0.2	0.2	2.9
Sta. 674+00.00 to 675+50.00	5.9	492.8	130.5 / 130.5 / 72.0	7.1 / 7.1 / 3.9	1.4 / 1.4 / 0.8	1.1	0.3 / 0.3 / 0.2	0.2	2.0
Sta. 675+50.00 to 698+44.00			1,064.4 / 791.4	57.4 / 43.6	11.5 / 6.9		2.3 / 2.3	2.3	22.9
I 90 W Mainline									
Sta. 659+33.40 to 662+83.10	12.6	1,052.6	354.2 / 354.2 / 235.3	19.2 / 19.2 / 12.9	3.5 / 3.5 / 2.4	2.8	0.7 / 0.7 / 0.7	0.3	5.2
Sta. 662+83.10 to 664+83.10	6.6	555.4	184.0 / 184.0 / 122.0	10.0 / 10.0 / 6.6	1.8 / 1.8 / 1.2	1.6	0.4 / 0.4 / 0.2	0.2	2.4
Sta. 664+83.10 to 665+23.10	1.2	101.7	33.1 / 33.1 / 21.9	1.8 / 1.8 / 1.2	0.3 / 0.3 / 0.2	0.3	-- / --	--	0.4
Sta. 665+23.10 to 666+86.00	5.0	414.3	128.7 / 128.7 / 85.2	7.0 / 7.0 / 4.6	1.3 / 1.3 / 0.8	1.1	0.2 / 0.2 / 0.2	0.2	1.6
Sta. 671+19.23 to 674+00.00	8.7	714.0	221.8 / 221.8 / 146.8	12.1 / 12.1 / 7.9	2.2 / 2.2 / 1.4	2.0	0.3 / 0.3 / 0.3	0.3	2.8
Sta. 674+00.00 to 675+50.00	5.3	443.1	115.1 / 114.5 / 73.8	6.3 / 6.3 / 4.1	1.2 / 1.2 / 0.8	0.9	0.2 / 0.2 / 0.2	0.2	1.5
Sta. 675+50.00 to 698+44.00			1,064.4 / 791.4	57.4 / 43.6	11.5 / 6.9		2.3 / 2.3	2.3	22.9
I 90 E Shoulder Widening									
Sta. 658+31.20 to 659+33.40	0.9	75.1	19.4 / 19.4 / 12.1	1.0 / 1.0 / 0.6	0.2 / 0.2 / 0.1	0.2	-- / --	--	--
Sta. 675+50.00 to 677+75.80	2.0	173.9	48.1 / 48.1 / 28.7	2.7 / 2.7 / 1.6	0.5 / 0.5 / 0.2	0.5	-- / --	--	--
Guardrail									
EBL – East end of structure	5.2	429.7	14.8	0.8	0.1	0.2	--	--	
WBL – West end of structure	7.7	646.0	16.7	0.9	0.2	0.2	--	--	
Temporary Guardrail									
EBL – West end of structure	2.2	180.6							
TOTAL	100.0	8,346.0	9,729.8	529.4	96.3	19.1	21.0	7.0	76.7

INPLACE TYPICAL SECTIONS

STATE OF SOUTH DAKOTA	PROJECT	SHEET	TOTAL SHEETS
	IM 0909(81)406	F4	F16

Plotting Date: 09/12/2016

Salvage & Stockpile Asphalt Mix & Granular Base Material

Unclassified Excavation

Remove Concrete Pavement

Sta. 659+33.4 to Sta. 664+12.3 EBL
Sta. 675+41.8 to Sta. 677+50 EBL
Sta. 659+33.4 to Sta. 663+84.3 WBL
Sta. 674+88.8 to Sta. 677+50 WBL

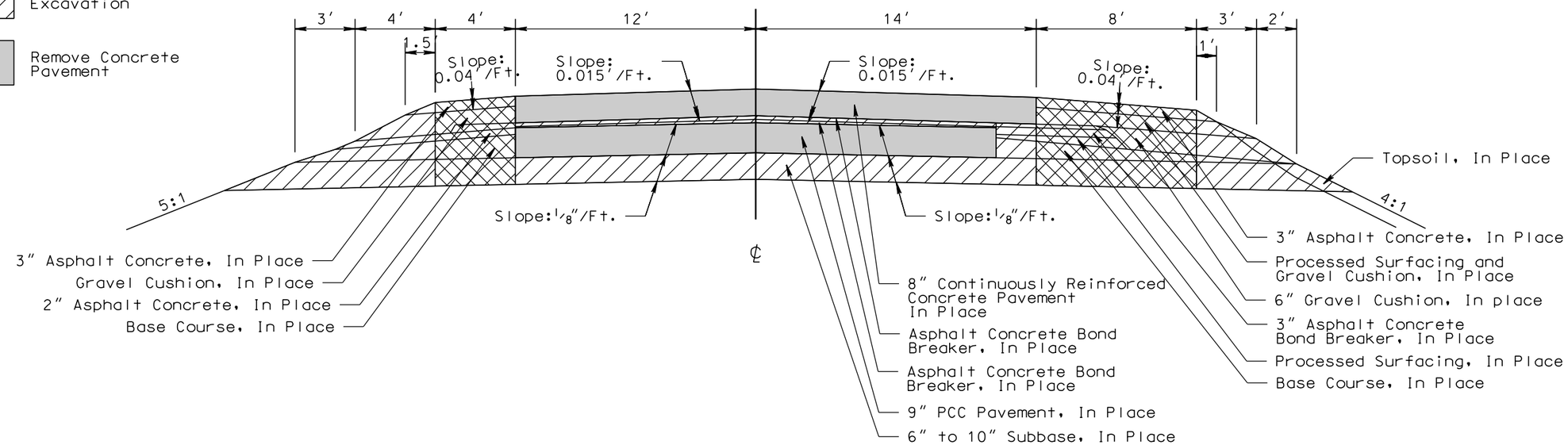

Sta. 664+12.3 to Sta. 667+88.3 EBL
Sta. 671+65.8 to Sta. 675+41.8 EBL
Sta. 663+84.3 to Sta. 667+44.3 WBL
Sta. 671+28.8 to Sta. 674+88.8 WBL

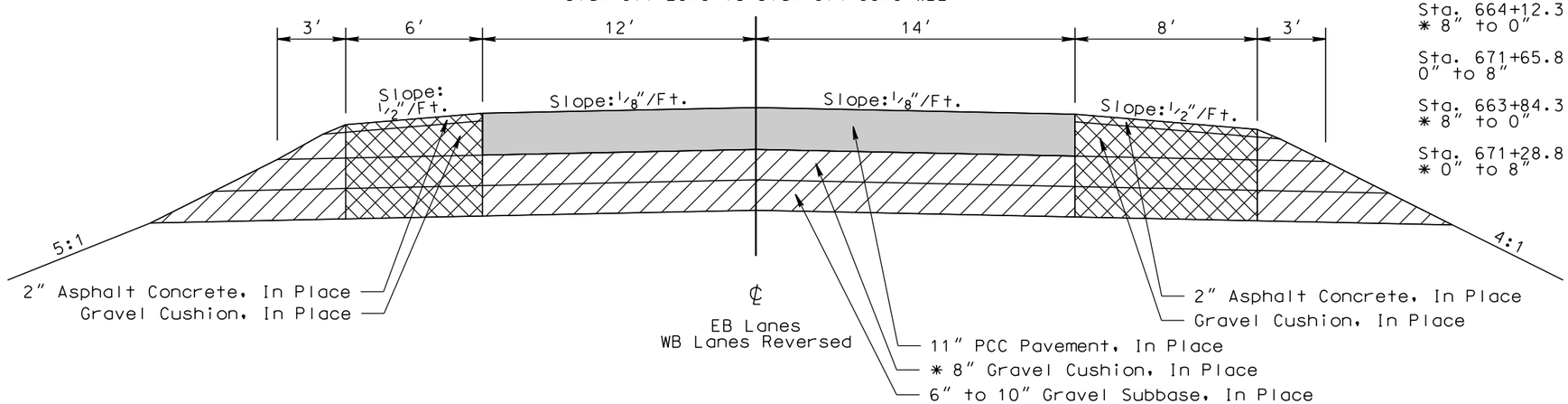

Transitions:

Sta. 664+12.3 to Sta. 667+88.3 EBL
* 8″ to 0″

Sta. 671+65.8 to Sta. 675+41.8 EBL
0″ to 8″

Sta. 663+84.3 to Sta. 667+44.3 WBL
* 8″ to 0″

Sta. 671+28.8 to Sta. 674+88.8 WBL
* 0″ to 8″

PLOT SCALE - 1:6.00001

PLOTTED FROM - TRPR15123

PLOT NAME - 2

FILE - ...\IN PLACE TYPICAL SECTIONS.DGN

TYPICAL SURFACING SECTIONS

STATE OF SOUTH DAKOTA	PROJECT	SHEET	TOTAL SHEETS
	IM 0909(81)406	F5	F16

Plotting Date: 09/12/2016
Revised: 26 Jul 16, LLR

EB Interstate 90
Sta. 658+31.2 to Sta. 659+33.4

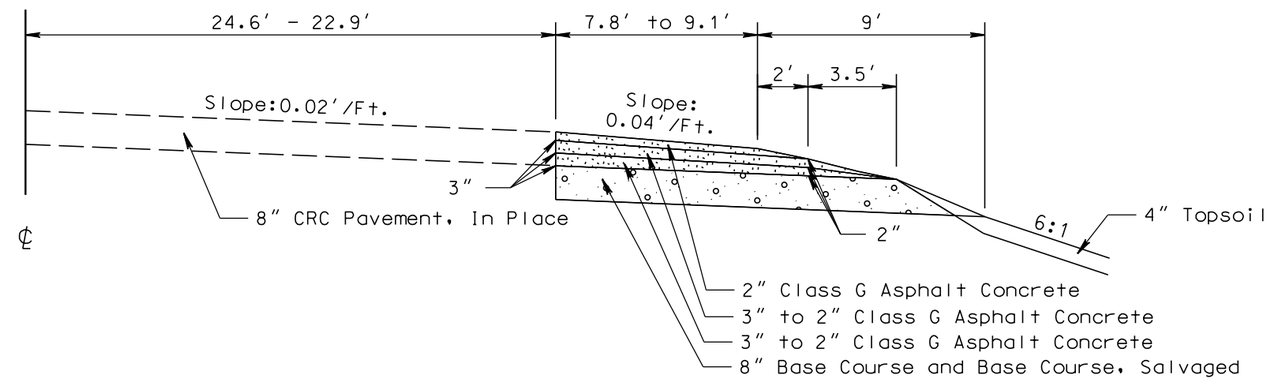

Transition:

Sta. 671+75.80 to Sta. 675+50.00
* 12′ to 4.5′

Sta. 674+00 to Sta. 675+50
** 8″ to 11.75″
# 2′ to 1′
3.5′ to 2′

EB Interstate 90
Sta. 659+33.39 to Sta. 667+36.78
Sta. 671+75.80 to Sta. 675+50

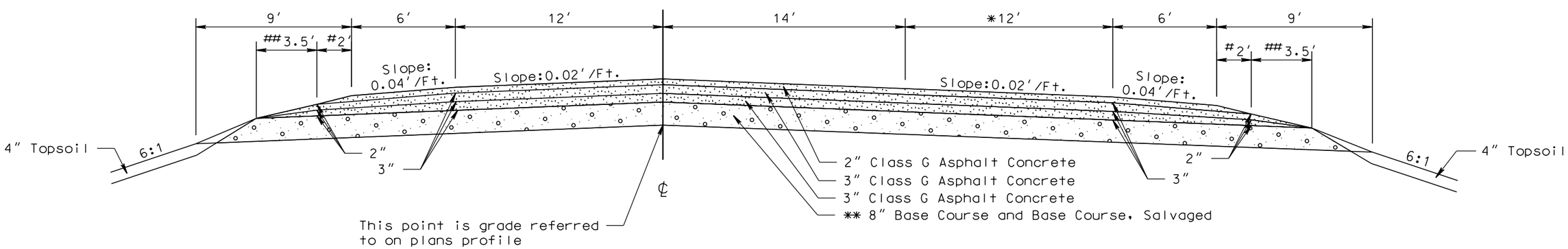

PLOT SCALE - 1:6.00001
PLOT NAME - 3
FILE -...\MINN021X\TYPICAL SECTIONS.DGN
PLOTTED FROM - TRPR15123

TYPICAL SURFACING SECTIONS

STATE OF SOUTH DAKOTA	PROJECT	SHEET	TOTAL SHEETS
	IM 0909(81)406	F6	F16

Plotting Date: 09/12/2016
Revised: 26 Jul 16, LLR

Transition:

Sta. 675+50.00 to Sta. 676+75.8
* 10.5′ to 8′

Sta. 675+50 to Sta. 677+75.8 EBL

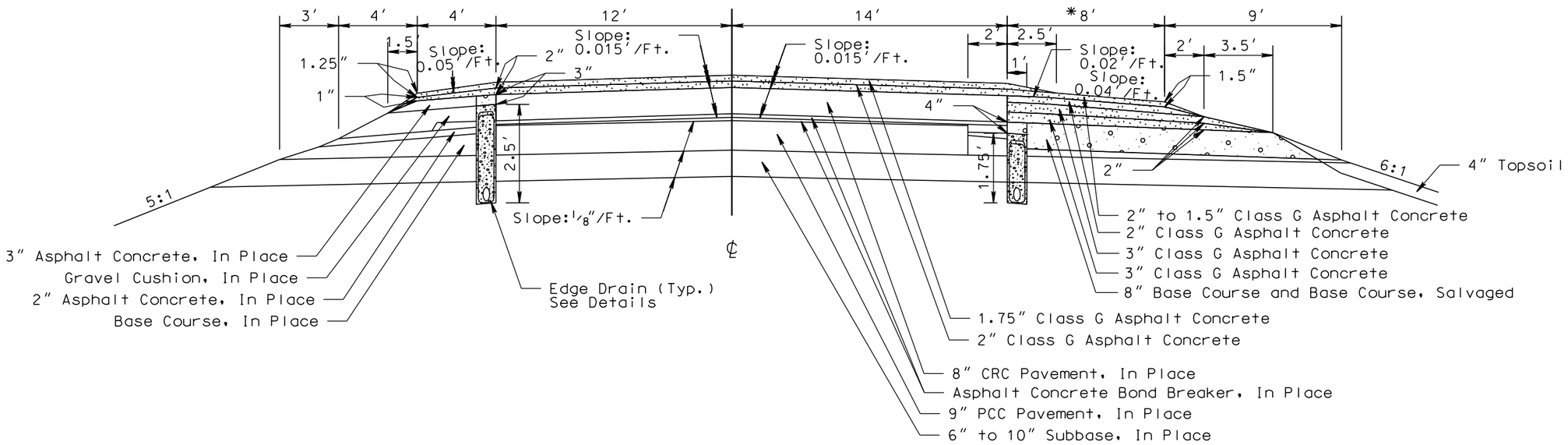

I 90
Sta. 677+75.8 to Sta. 698+44 EBL
Sta. 675+50 to Sta. 698+44 WBL

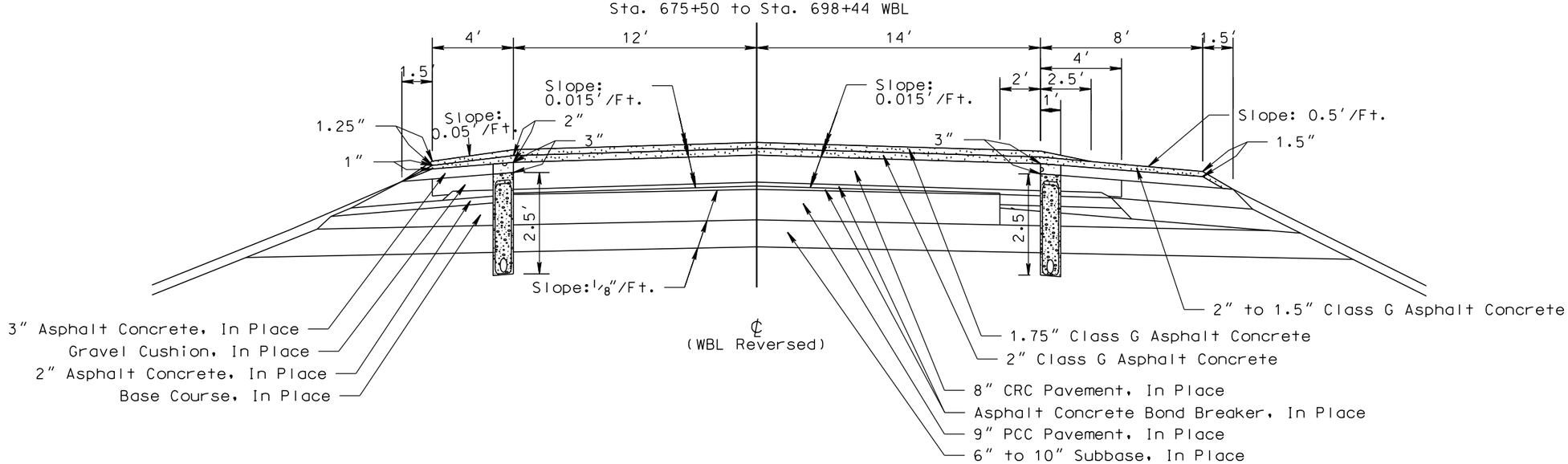

PLOT SCALE - 1:6.00001
PLOTTED FROM - TRPR15123
PLOT NAME - 4
FILE -...\MINN021X\TYPICAL SECTIONS.DGN

TYPICAL SURFACING SECTIONS

STATE OF SOUTH DAKOTA	PROJECT	SHEET	TOTAL SHEETS
	IM 0909(81)406	F7	F16

Plotting Date: 09/12/2016
Revised: 26 Jul 16, LLR

Transitions:

Sta. 662+83.1 to Sta. 664+83.1
* 12′ to 2′

Sta. 664+83.1 to Sta. 665+23.1
* 2′

WB Interstate 90
Sta. 659+33.4 to Sta. 665+23.1

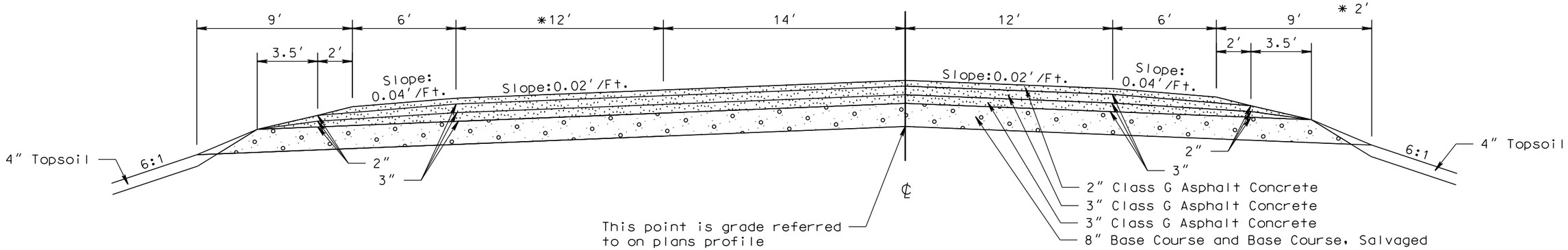

WB Interstate 90
Sta. 665+23.1 to Sta. 666+86.0
Sta. 671+19.23 to Sta. 675+50.00

Transition:

Sta. 674+00 to Sta. 675+50
* 8″ to 11.75″
# 2′ to 1′
3.5′ to 2′

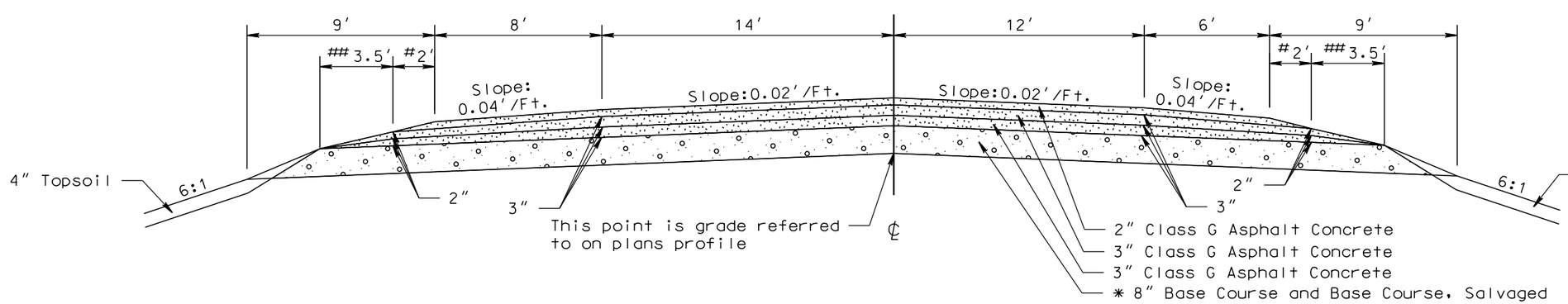

PLOT SCALE - 1:6.00001
PLOT NAME - 5
FILE -...\MINN021X\TYPICAL SECTIONS.DGN
PLOTTED FROM - TRPR15123

STATE OF SOUTH DAKOTA	PROJECT	SHEET	TOTAL SHEETS
	IM 0909(81)406	F8	F16

Plotting Date: 09/12/2016

GUARDRAIL LAYOUT

Scale 1 Inch = 40 Feet
Sheet 1 of 3 Sheets

I-90 Eastbound Structure No. 50-284-166

2" Class G Asphalt Concrete

14" Base Course and Base Course, Salvaged

16" Base Course and Base Course, Salvaged adjacent to edge of shoulder
Minimum depth = 6"

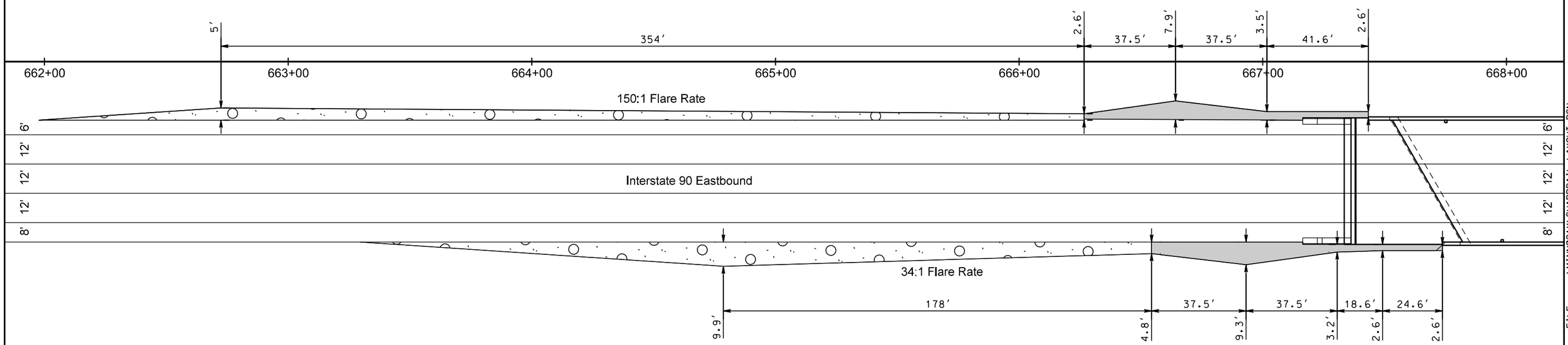

PLOT SCALE - 1:40

PLOT NAME - 6

FILE - ...\MINN021X\GUARDRAIL LAYOUT.DGN

PLOTTED FROM - TRPR15123

STATE OF SOUTH DAKOTA	PROJECT	SHEET	TOTAL SHEETS
	IM 0909(81)406	F9	F16

Plotting Date: 09/12/2016

GUARDRAIL LAYOUT

Scale 1 Inch = 40 Feet
Sheet 2 of 3 Sheets

I-90 Westbound Structure No. 50-284-165

2" Class G Asphalt Concrete

14" Base Course and Base Course, Salvaged

16" Base Course and Base Course, Salvaged adjacent to edge of shoulder Minimum depth = 6"

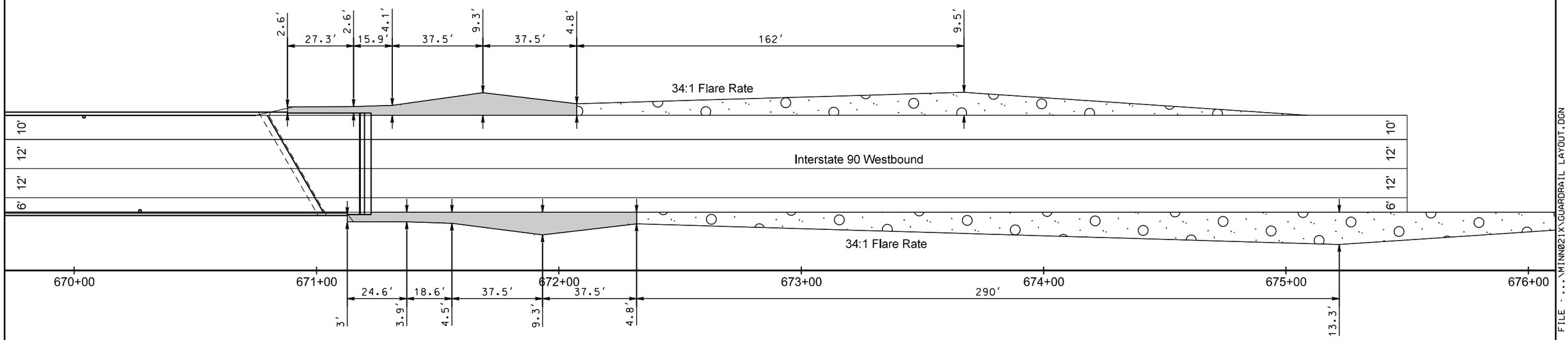

PLOT SCALE - 1:40

PLOT NAME - 7

FILE - ...\MINN021X\GUARDRAIL LAYOUT.DGN

PLOTTED FROM - TRPR15123

STATE OF SOUTH DAKOTA	PROJECT	SHEET	TOTAL SHEETS
	IM 0909(81)406	F10	F16

Plotting Date: 09/12/2016

GUARDRAIL LAYOUT

Scale 1 Inch = 40 Feet
Sheet 3 of 3 Sheets

I-90 Eastbound Structure No. 50-284-166

16" Base Course and Base Course, Salvaged adjacent to edge of shoulder
Minimum depth = 6"

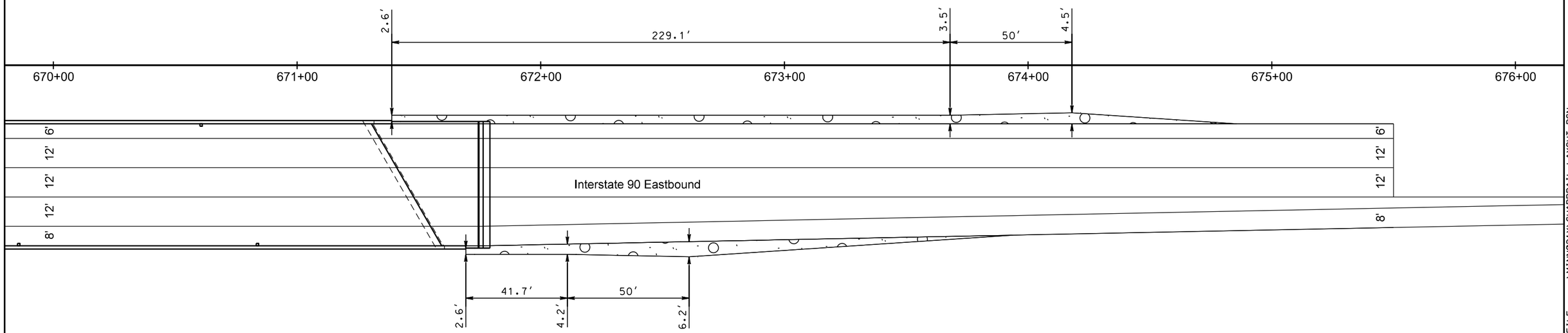

PLOT SCALE - 1:40

PLOT NAME - 8

FILE - ...\MINN021X\GUARDRAIL LAYOUT.DGN

PLOTTED FROM - TRPR15123

STATE OF SOUTH DAKOTA	PROJECT	SHEET	TOTAL SHEETS
	IM 0909(81)406	F11	F16

Plotting Date: 09/12/2016
Revised: 26 Jul 16, LLR

TYPICAL CUTOFF DRAIN INSTALLATION

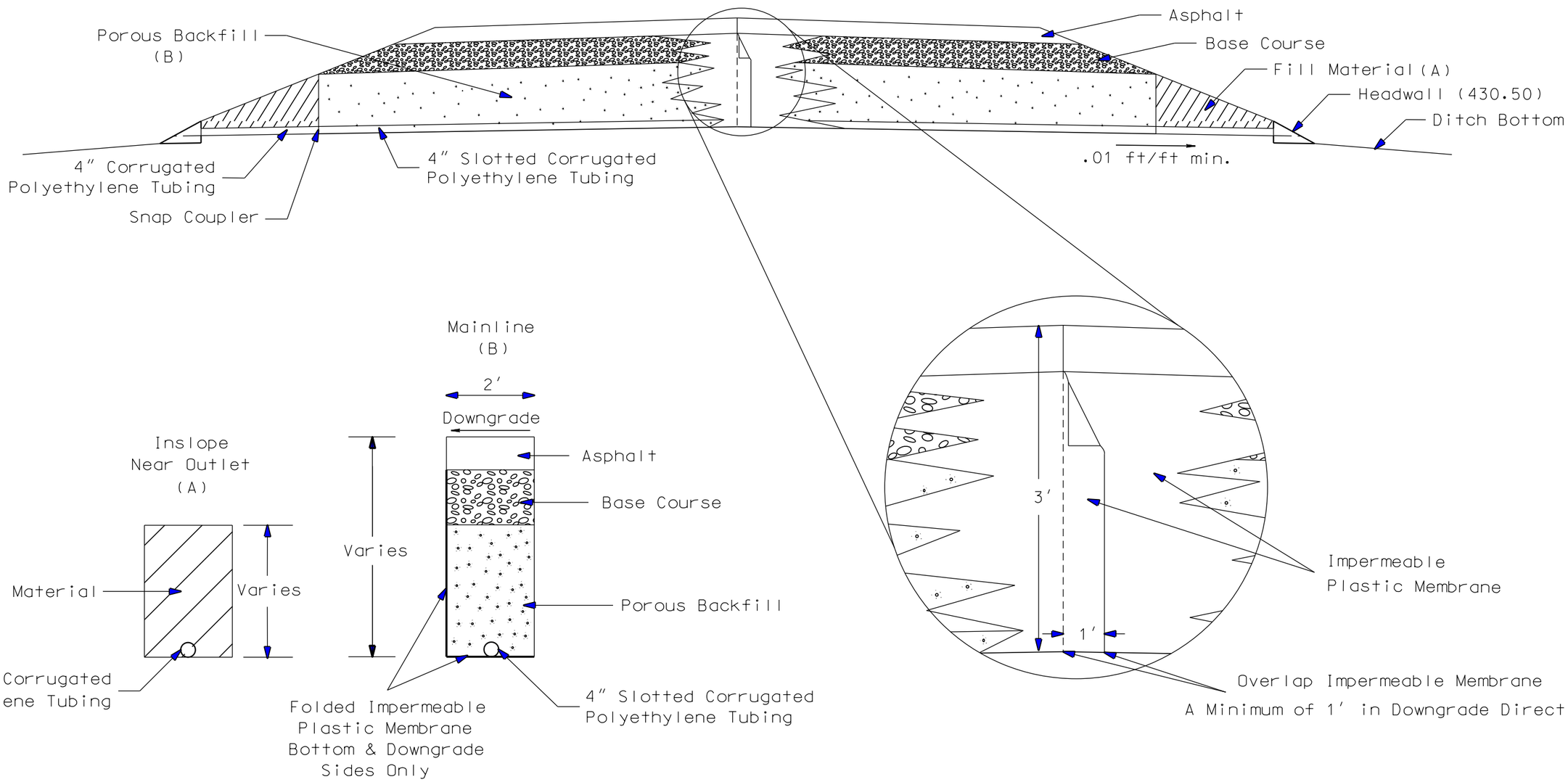

PLOT SCALE - 1:5

PLOT NAME - 9

FILE - ...\PRJ\MINN021X\CUTOFF DRAIN.DGN

PLOTTED FROM - TRPR15123

STATE OF SOUTH DAKOTA	PROJECT	SHEET	TOTAL SHEETS
	IM 0909(81)406	F12	F16

Plotting Date: 09/12/2016
Revised: 26 Jul 16, LLR

TYPICAL CUTOFF DRAIN INSTALLATION

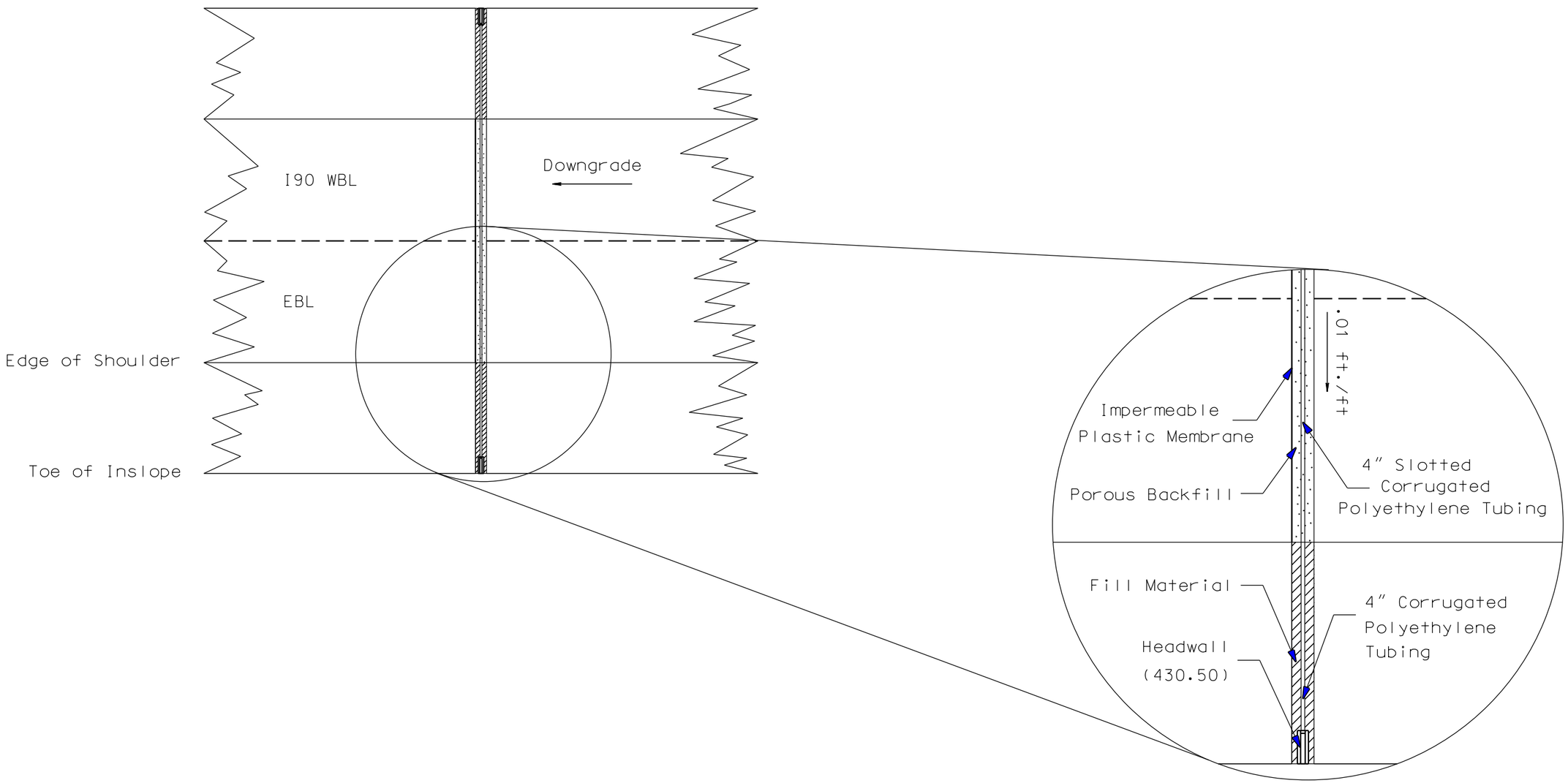

PLOT SCALE - 1:5
PLOTTED FROM - TRPR15123
PLOT NAME - 10
FILE -...\PRJMINN021X\CUTOFF DRAIN.DGN

TYPICAL EDGE DRAIN LAYOUT

STATE OF SOUTH DAKOTA	PROJECT	SHEET	TOTAL SHEETS
	IM 0909(81)406	F13	F16

Plotting Date: 09/12/2016
Revised: 26 Jul 16, LLR

TYPICAL SECTION SHOWING EDGE DRAIN PLACEMENT

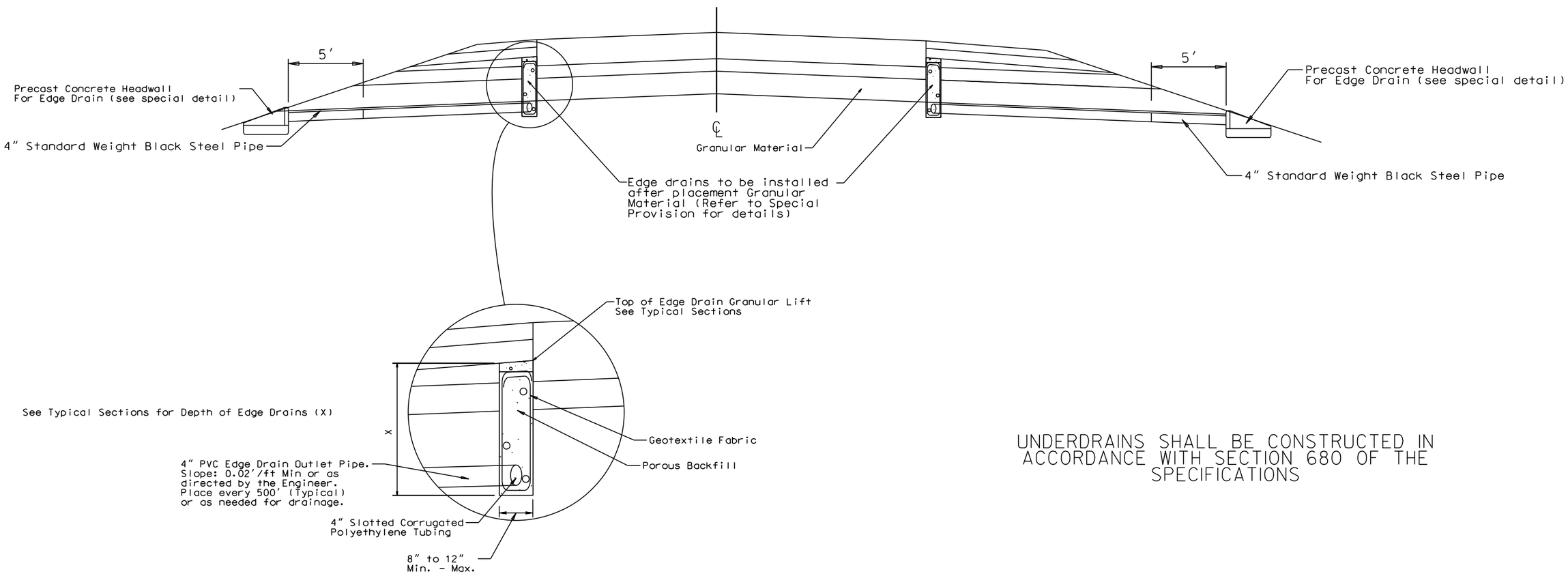

Detail for Edge Drain

UNDERDRAINS SHALL BE CONSTRUCTED IN ACCORDANCE WITH SECTION 680 OF THE SPECIFICATIONS

PLOT SCALE - 1:6.90481
PLOTTED FROM - TRPR15123
PLOT NAME - 11
FILE - ...\MINN021X\EDGE DRAIN DETAIL.DGN

SPECIAL DETAILS

STATE OF SOUTH DAKOTA	PROJECT	SHEET	TOTAL SHEETS
	IM 0909(81)406	F14	F16

Plotting Date: 09/12/2016
Revised: 26 Jul 16, LLR

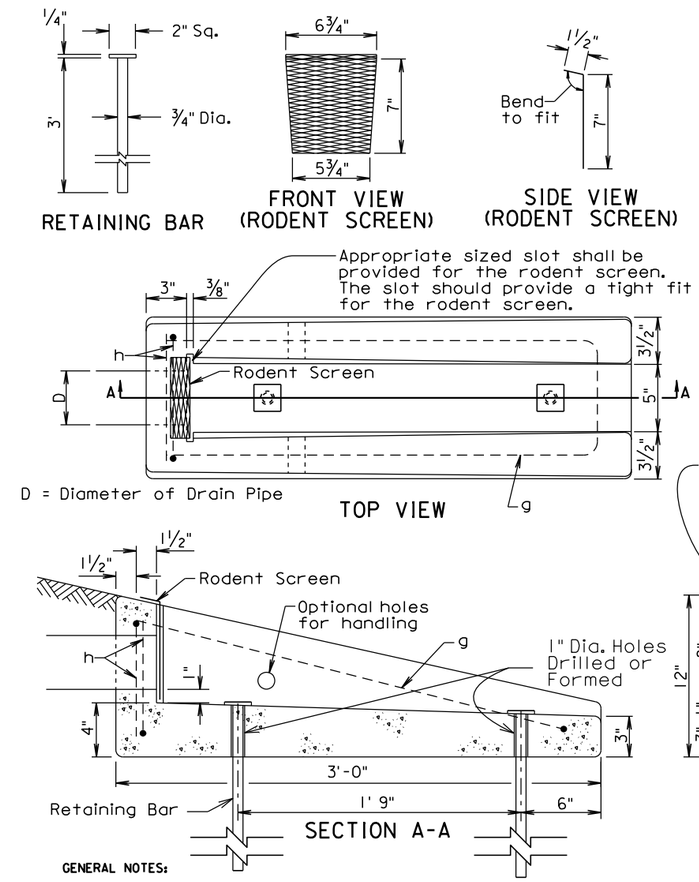

REINFORCING SCHEDULE

MK.	No.	Size	Length	Type
g	1	4	6'-3"	17
h	2	4	2'-4"	17

NOTE:
All dimensions are out to out of bars.

Bending Details

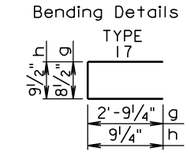

GENERAL NOTES:

The concrete shall be Class M6. The concrete shall conform to the requirements of section 462 of the Standard Specifications. It is estimated that each unit weighs approximately 210 pounds.

All reinforcing steel shall conform to ASTM A615 Grade 60 and shall be epoxy coated. The reinforcing steel shall be securely retained to prevent displacement during placement of concrete. It is estimated that 7.3 pounds of reinforcing steel is required for each unit.

The pipe shall be placed in the concrete headwall with the pipe end flush with the concrete surface adjacent to the rodent screen.

The rodent screen shall be galvanized 13 Ga. steel with a diamond shaped flattened mesh pattern. The size shall be 1/2". The size refers to the measurement across the smallest diamond shaped opening measured from the centers of the wires.

The drawing indicates using 1/2" fillets; however, 3/4" chamfers may be substituted for the 1/2" fillets.

The 3/4" Dia. Retaining Bar shall have a 1/4" x 2" x 2" steel plate end welded to one end and be galvanized in accordance with ASTM A123 after all shop welding has been completed.

All costs for furnishing and installing the concrete headwall including equipment, labor, and materials including concrete, reinforcing steel, retaining bar and rodent screen shall be incidental to the contract unit price per each for "Precast Concrete Headwall for Drain".

PRECAST CONCRETE HEADWALL FOR DRAIN

PLOT SCALE - 1:206.061
PLOTTED FROM - TRPR15123
PLOT NAME - 12
FILE - ...\SPECIAL HEADWALL DETAIL.DGN

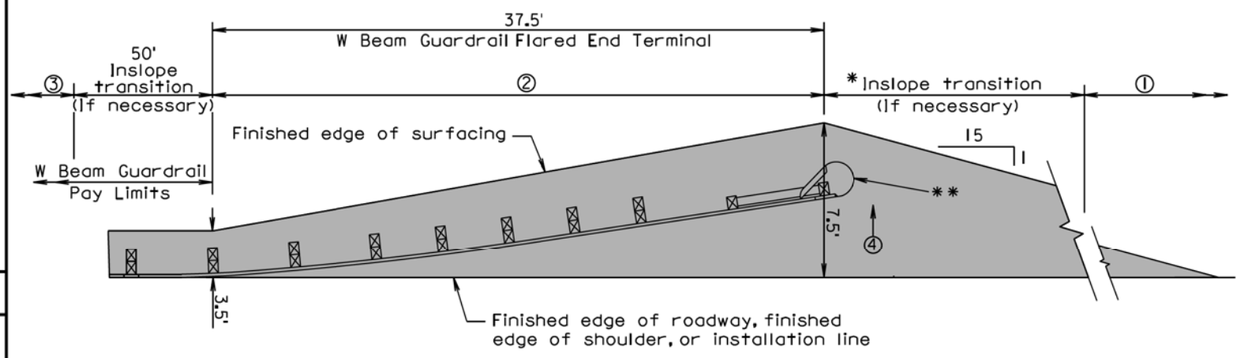

2" Asphalt concrete surfacing with variable thickness granular material

PLAN

① Same inslope as mainline inslope
② 4:1 inslope
③ 2:1 inslope or flatter, or inslope as specified in plans
④ Same slope as roadway cross slope

* The length of inslope transition varies with the amount of change between inslopes. The length of the transition shall change 100' for every whole number change in the inslope. For Example: If the inslope changes from a 5:1 to a 4:1 the length of the inslope transition would be 100'. If the inslope changes from a 6:1 to a 4:1 the length of the inslope transition would be 200'.

GENERAL NOTES:

The W beam guardrail flared end terminal shall be installed according to the manufacturer's installation instructions.

** An adhesive object marker shall be placed on the end section buffer or extruder after placement of the end section buffer or extruder. The adhesive object marker dimensions may be 16" x 16" or other variation due to the shape of the end section buffer or extruder. A minimum of 256 square inches of object marker reflective sheeting area is required. The reflective sheeting shall be fluorescent yellow super or very high intensity. All costs for furnishing and installing the adhesive object marker shall be incidental to various contract items.

Asphalt concrete shall be the same type used elsewhere on the project or shall be as specified in the plans. If asphalt concrete is not specified in the plans, the asphalt concrete shall conform to the Specifications for "Asphalt Concrete Composite."

Granular material shall be the same type used elsewhere on the project or shall be as specified in the plans. If granular material type is not specified in the plans, the material shall conform to the Specifications for "Base Course". The granular material shall be placed the same thickness as the mainline surfacing or as specified in the plans.

Published Date: 3rd Qtr. 2016

SDDOT

EMBANKMENT AND SURFACING FOR W BEAM GUARDRAIL FLARED END TERMINAL

PLATE NUMBER 630.45

Sheet 1 of 1

December 16, 2014

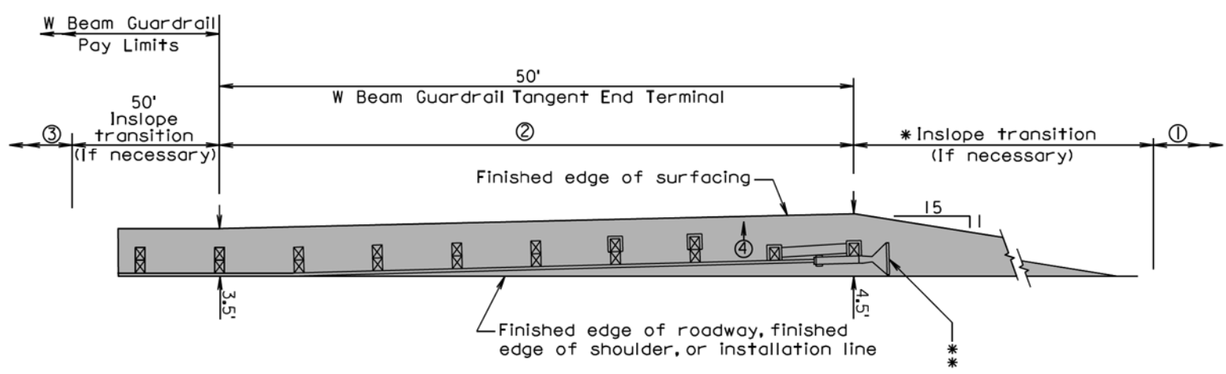

PLAN

2" Asphalt concrete surfacing with variable thickness granular material

① Same inslope as mainline inslope
② 4:1 inslope
③ 2:1 inslope or flatter, or inslope as specified in plans
④ Same slope as roadway cross slope

* The length of inslope transition varies with the amount of change between inslopes. The length of the transition shall change 100' for every whole number change in the inslope. For Example: If the inslope changes from a 5:1 to a 4:1 the length of the inslope transition would be 100'. If the inslope changes from a 6:1 to a 4:1 the length of the inslope transition would be 200'.

GENERAL NOTES:

The W beam guardrail tangent end terminal shall be installed according to the manufacturer's installation instructions.

** An adhesive object marker shall be placed on the end section buffer or extruder after placement of the end section buffer or extruder. The adhesive object marker dimensions may be 16" x 16" or other variation due to the shape of the end section buffer or extruder. A minimum of 256 square inches of object marker reflective sheeting area is required. The reflective sheeting shall be fluorescent yellow super or very high intensity. All costs for furnishing and installing the adhesive object marker shall be incidental to various contract items.

Asphalt concrete shall be the same type used elsewhere on the project or shall be as specified in the plans. If asphalt concrete is not specified in the plans, the asphalt concrete shall conform to the Specifications for "Asphalt Concrete Composite."

Granular material shall be the same type used elsewhere on the project or shall be as specified in the plans. If granular material type is not specified in the plans, the material shall conform to the Specifications for "Base Course". The granular material shall be placed the same thickness as the mainline surfacing or as specified in the plans.

Published Date: 3rd Qtr. 2016

SDDOT

EMBANKMENT AND SURFACING FOR W BEAM GUARDRAIL TANGENT END TERMINAL

PLATE NUMBER 630.46

Sheet 1 of 1

December 16, 2014

STATE OF SOUTH DAKOTA

PROJECT IM 0909(81)406

Plotting Date: 09/12/2016
Revised: 26 Jul 16, LLR

SHEET F15

TOTAL SHEETS F16

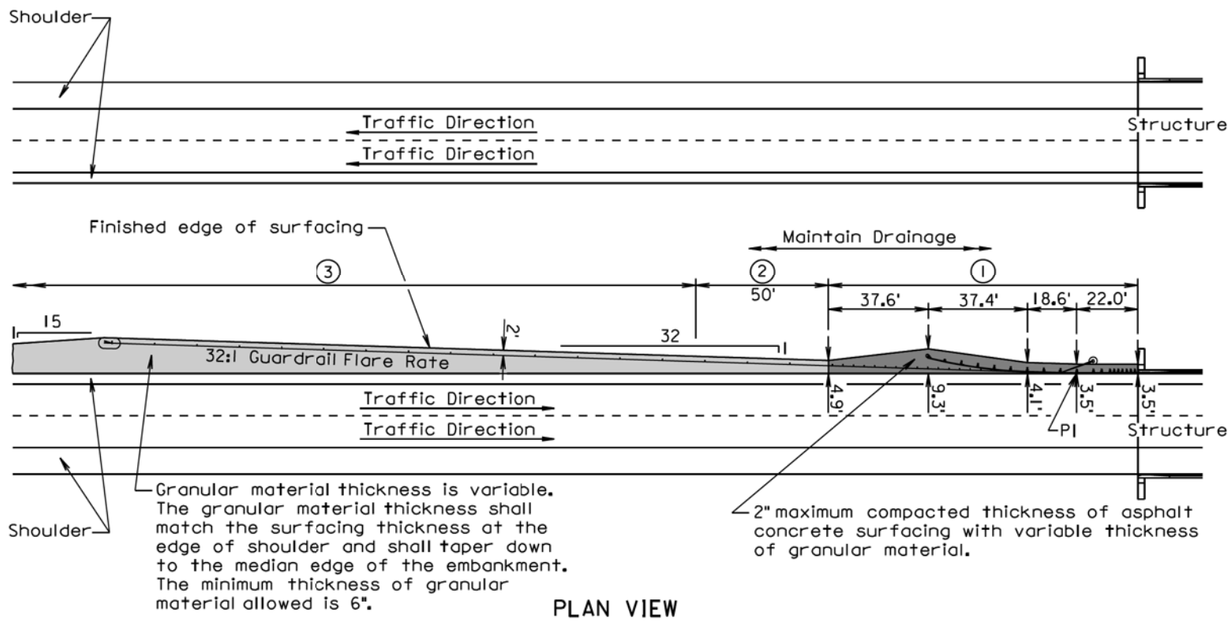

PLAN VIEW

1. Finished embankment surfacing cross slope shall be the same as the roadway cross slope.
2. Finished embankment surfacing cross slope transition.
3. Finished embankment surfacing cross slope shall be 10:1, however, a cross slope flatter than 10:1 may be used to obtain the 6" minimum thickness of granular material.

GENERAL NOTES:

Asphalt concrete shall be the same type used elsewhere on the project or shall be as specified in the plans. If asphalt concrete is not specified in the plans, the asphalt concrete shall conform to the Specifications for "Asphalt Concrete Composite."

Granular material shall be the same type used elsewhere on the project or shall be as specified in the plans. If granular material type is not specified in the plans, the material shall conform to the Specifications for "Base Course".

Published Date: 3rd Qtr. 2016

SDDOT

EMBANKMENT AND SURFACING FOR TYPICAL MEDIAN PROTECTION

February 10, 2014

PLATE NUMBER 630.99

Sheet 1 of 1

STATE OF SOUTH DAKOTA

PROJECT IM 0909(81)406

SHEET F16

TOTAL SHEETS F16

Plotting Date: 09/12/2016

Revised: 26 Jul 16 LLR