STATE OF	PROJECT	SHEET NO.	TOTAL SHEETS
S.D.	NH-P 0050(107)368	E1	E102

Section E: Structure Plans

INDEX OF SHEETS

E1	Layout Map and Index of Sheets
E2	Estimate of Structure Quantities
E3-E12	Str. 41-091-057
E13-E22	Str. 51-185-086
E23-E33	Str. 41-226-107
E34-E51	Str. 47-111-580
E52-E62	Str. 52-390-278
E63-E84	Str. 52-540-275
E85-E95	Str. 52-670-285
E96-E102	Str. 52-830-310

Str. No. 41 - 091 - 057
0.4 Mi. W US 85N INTERCHANGE
MRM 9.86

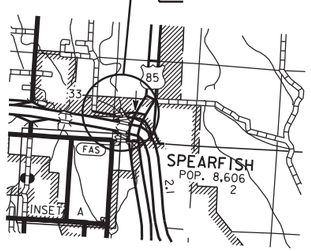

LAWRENCE COUNTY
SOUTH DAKOTA
PCN 0223

Str. No. 41-185-086
2.2 Mi. W SD 34N INTERCHANGE
MRM 21.56

Str. No. 41-226-107
2.4 Mi. SE SD 34N INTERCHANGE
MRM 26.14

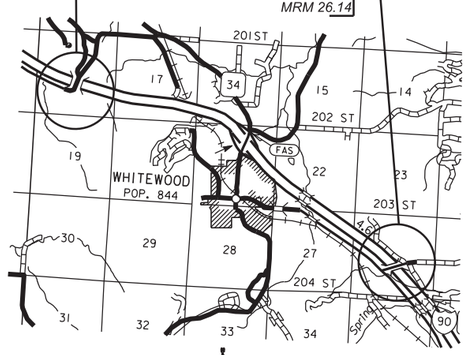

LAWRENCE COUNTY
SOUTH DAKOTA
PCN 0223

Str. No. 47-111-580
3.1 Mi. NW SD 231 INTERCHANGE
MRM 48.43

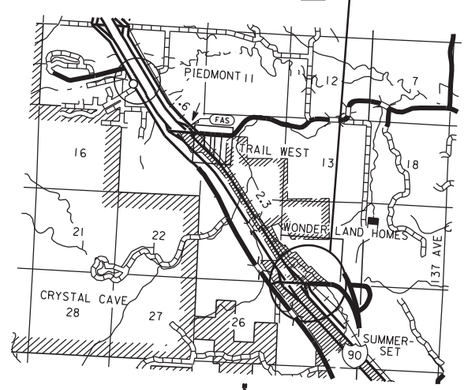

MEADE COUNTY
SOUTH DAKOTA
PCN 0223

Str. No. 52-390-278
DEADWOOD AVE INTERCHANGE
MRM 55.66

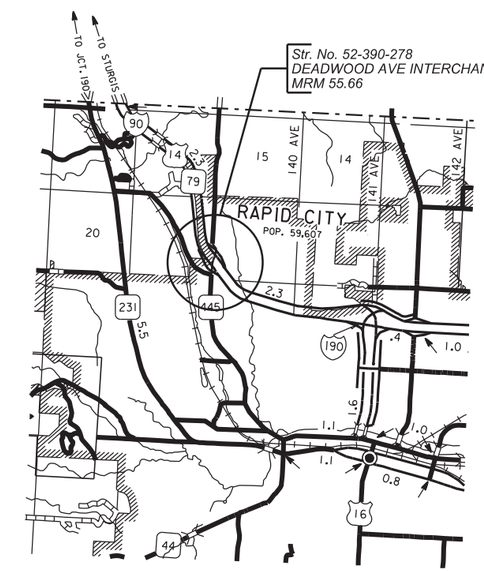

PENNINGTON COUNTY
SOUTH DAKOTA
PCN 0223

Str. No. 52-540-275
4.0 Mi. E BOX ELDER INTERCHANGE
MRM 71.13

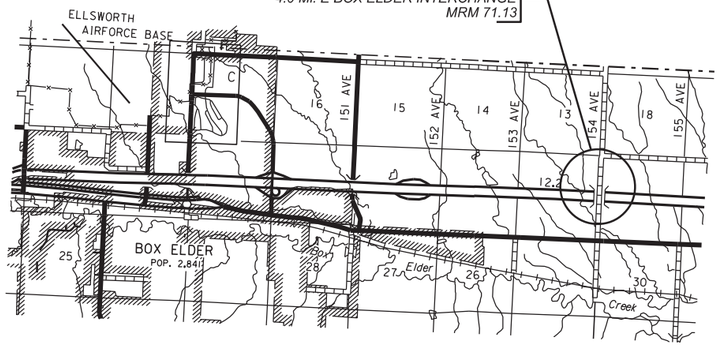

PENNINGTON COUNTY
SOUTH DAKOTA
PCN 0223

Str. No. 52-670-285
6.0 Mi. E NEW UNDERWOOD INTERCHANGE
MRM 84.25

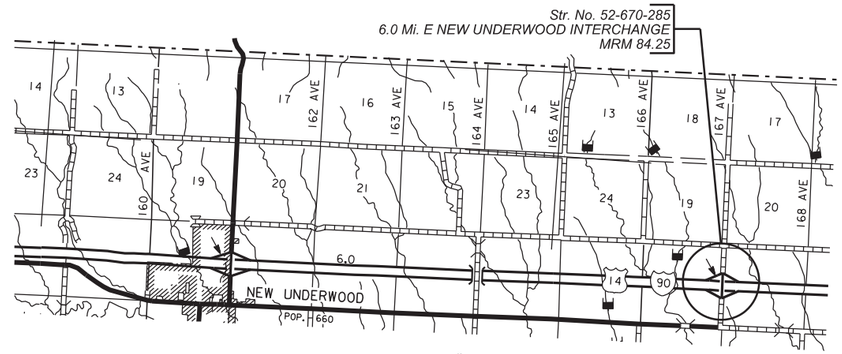

PENNINGTON COUNTY
SOUTH DAKOTA
PCN 0223

Str. No. 52-830-310
3.1 Mi. E WASTA INTERCHANGE
MRM 101.23

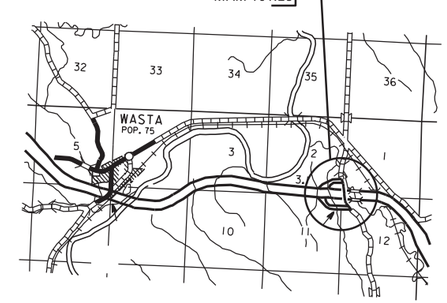

PENNINGTON COUNTY
SOUTH DAKOTA
PCN 0223

ESTIMATE OF STRUCTURE QUANTITIES

Revised by KH, 7/14/2014

STATE OF	PROJECT	SHEET NO.	TOTAL SHEETS
S.D.	IM 0901(163)9	E2	E102

PCN 0223 - IM 0901(163)9

Str. No. 41-091-057

Bid Item Number	Item	Quantity	Unit
410E0103	Fatigue Retrofit Steel Girder, Type C	30	Each
410E3010	Magnetic Particle Weld Inspection	36	In
412E0100	Bridge Repainting, Class I	Lump Sum	LS
412E0500	Paint Residue Containment	Lump Sum	LS
460E0170	Concrete Patching Material	47.4	CuFt
460E0300	Breakout Structural Concrete	1.0	CuYd
460E0380	Install Dowel in Concrete	16	Each
480E0200	Epoxy Coated Reinforcing Steel	62	Lb
491E0015	Two Coat Epoxy Bridge Deck Chip Seal	355.6	SqYd
491E0110	Abrasive Blasting of Bridge Deck	355.6	SqYd
491E0120	Bridge Deck Grinding	355.6	SqYd
491E0130	Concrete Removal, Class A	4.0	SqYd
491E0140	Concrete Removal, Class B	4.0	SqYd

Str. No. 41-185-086

Bid Item Number	Item	Quantity	Unit
110E0070	Remove Rubberized Asphalt Chip Seal	534.1	SqYd
410E0030	Structural Steel, Miscellaneous	Lump Sum	LS
410E0103	Fatigue Retrofit Steel Girder, Type C	60	Each
410E2600	Membrane Sealant Expansion Joint	26.4	Ft
410E3010	Magnetic Particle Weld Inspection	72	In
412E0100	Bridge Repainting, Class I	Lump Sum	LS
412E0500	Paint Residue Containment	Lump Sum	LS
460E0170	Concrete Patching Material	18.0	CuFt
491E0015	Two Coat Epoxy Bridge Deck Chip Seal	667.6	SqYd
491E0110	Abrasive Blasting of Bridge Deck	667.6	SqYd
491E0120	Bridge Deck Grinding	667.6	SqYd
491E0130	Concrete Removal, Class A	4.0	SqYd
491E0140	Concrete Removal, Class B	4.0	SqYd

Str. No. 41-226-107

Bid Item Number	Item	Quantity	Unit
110E0070	Remove Rubberized Asphalt Chip Seal	350.3	SqYd
120E3120	Bridge Berm Repair	1	Each
460E0070	Class A45 Concrete, Bridge Repair	10.9	CuYd
460E0170	Concrete Patching Material	40.8	CuFt
460E0300	Breakout Structural Concrete	1.0	CuYd
460E0380	Install Dowel in Concrete	28	Each
462E0200	Controlled Density Fill	4.0	CuYd
480E0200	Epoxy Coated Reinforcing Steel	1,590	Lb
491E0015	Two Coat Epoxy Bridge Deck Chip Seal	834.8	SqYd
491E0110	Abrasive Blasting of Bridge Deck	834.8	SqYd
491E0120	Bridge Deck Grinding	834.8	SqYd
491E0130	Concrete Removal, Class A	4.0	SqYd
491E0140	Concrete Removal, Class B	4.0	SqYd

Str. No. 47-111-580

Bid Item Number	Item	Quantity	Unit
009E3310	Bridge Elevation Survey	Lump Sum	LS
110E0070	Remove Rubberized Asphalt Chip Seal	937.9	SqYd
410E2600	Membrane Sealant Expansion Joint	84.0	Ft
460E0070	Class A45 Concrete, Bridge Repair	3.2	CuYd
460E0300	Breakout Structural Concrete	3.6	CuYd
462E0100	Class M6 Concrete	2.5	CuYd
462E0200	Controlled Density Fill	1.2	CuYd
480E0100	Reinforcing Steel	162	Lb
480E0200	Epoxy Coated Reinforcing Steel	346	Lb
480E0505	No. 5 Rebar Splice	8	Each
530E0435	Split Face Concrete Masonry Block Wall	50	SqFt
550E0010	Low Slump Dense Concrete Bridge Deck Overlay	75	CuYd
550E0100	Concrete Removal Type 1A	1,406.2	SqYd
550E0110	Concrete Removal Type 1B	140.6	SqYd
550E0120	Concrete Removal Type 1C	70.3	SqYd
550E0130	Concrete Removal Type 1D	70.3	SqYd
550E0140	Concrete Removal Type B	20.0	Ft
550E0200	Class A45 Concrete Fill	15.5	CuYd
550E0500	Finishing and Curing	1,406.2	SqYd

Str. No. 52-390-278

Bid Item Number	Item	Quantity	Unit
110E0070	Remove Rubberized Asphalt Chip Seal	146.8	SqYd
410E2600	Membrane Sealant Expansion Joint	83.0	Ft
460E0070	Class A45 Concrete, Bridge Repair	3.4	CuYd
460E0170	Concrete Patching Material	46.1	CuFt
460E0300	Breakout Structural Concrete	4.2	CuYd
480E0200	Epoxy Coated Reinforcing Steel	427	Lb
480E0505	No. 5 Rebar Splice	24	Each
491E0015	Two Coat Epoxy Bridge Deck Chip Seal	1,108.6	SqYd
491E0110	Abrasive Blasting of Bridge Deck	1,108.6	SqYd
491E0120	Bridge Deck Grinding	1,108.6	SqYd
491E0130	Concrete Removal, Class A	7.7	SqYd
491E0140	Concrete Removal, Class B	7.7	SqYd

Str. No. 52-540-275

Bid Item Number	Item	Quantity	Unit
110E0070	Remove Rubberized Asphalt Chip Seal	668.0	SqYd
120E3120	Bridge Berm Repair	1	Each
410E0030	Structural Steel, Miscellaneous	Lump Sum	LS
410E0103	Fatigue Retrofit Steel Girder, Type C	60	Each
410E0300	Modify Girder End	4	Each
410E0508	Field Weld	72	In
410E0512	Grind Weld	60	In
410E0560	Jack Superstructure and Shift Bearing Shoes	Lump Sum	LS
410E2220	Replace Expansion Device	2	Each
410E3010	Magnetic Particle Weld Inspection	98	In
412E0100	Bridge Repainting, Class I	Lump Sum	LS
412E0500	Paint Residue Containment	Lump Sum	LS
460E0070	Class A45 Concrete, Bridge Repair	13.8	CuYd
460E0170	Concrete Patching Material	18.0	CuFt
460E0300	Breakout Structural Concrete	13.8	CuYd
460E0310	Breakout and Replace Grout Pad	1	Each
460E0380	Install Dowel in Concrete	2	Each
462E0200	Controlled Density Fill	1.0	CuYd
480E0200	Epoxy Coated Reinforcing Steel	4,014	Lb
491E0015	Two Coat Epoxy Bridge Deck Chip Seal	668.0	SqYd
491E0110	Abrasive Blasting of Bridge Deck	668.0	SqYd
491E0120	Bridge Deck Grinding	668.0	SqYd
491E0130	Concrete Removal, Class A	4.0	SqYd
491E0140	Concrete Removal, Class B	4.0	SqYd

Str. No. 52-670-285

Bid Item Number	Item	Quantity	Unit
460E0070	Class A45 Concrete, Bridge Repair	0.3	CuYd
460E0170	Concrete Patching Material	87.8	CuFt
460E0300	Breakout Structural Concrete	1.1	CuYd
460E0380	Install Dowel in Concrete	16	Each
480E0200	Epoxy Coated Reinforcing Steel	56	Lb
480E5000	Galvanic Anode	6	Each
491E0015	Two Coat Epoxy Bridge Deck Chip Seal	846.6	SqYd
491E0110	Abrasive Blasting of Bridge Deck	846.6	SqYd
491E0120	Bridge Deck Grinding	846.6	SqYd
491E0130	Concrete Removal, Class A	4.0	SqYd
491E0140	Concrete Removal, Class B	4.0	SqYd

Str. No. 52-830-310

Bid Item Number	Item	Quantity	Unit
110E0070	Remove Rubberized Asphalt Chip Seal	683.3	SqYd
460E0170	Concrete Patching Material	105.8	CuFt
460E0300	Breakout Structural Concrete	0.8	CuYd
460E0380	Install Dowel in Concrete	16	Each
480E0200	Epoxy Coated Reinforcing Steel	56	Lb
491E0015	Two Coat Epoxy Bridge Deck Chip Seal	759.2	SqYd
491E0110	Abrasive Blasting of Bridge Deck	759.2	SqYd
491E0120	Bridge Deck Grinding	759.2	SqYd
491E0130	Concrete Removal, Class A	23.3	SqYd
491E0140	Concrete Removal, Class B	23.3	SqYd

DESIGNED BY	CK. DES. BY	DRAFTED BY	
KH	TK	KH	Kevin N. Goeden
LAWR0223	0223KA00		BRIDGE ENGINEER

STATE OF	PROJECT	SHEET NO.	TOTAL SHEETS
S.D.	IM 0901(163)9	E3	E102

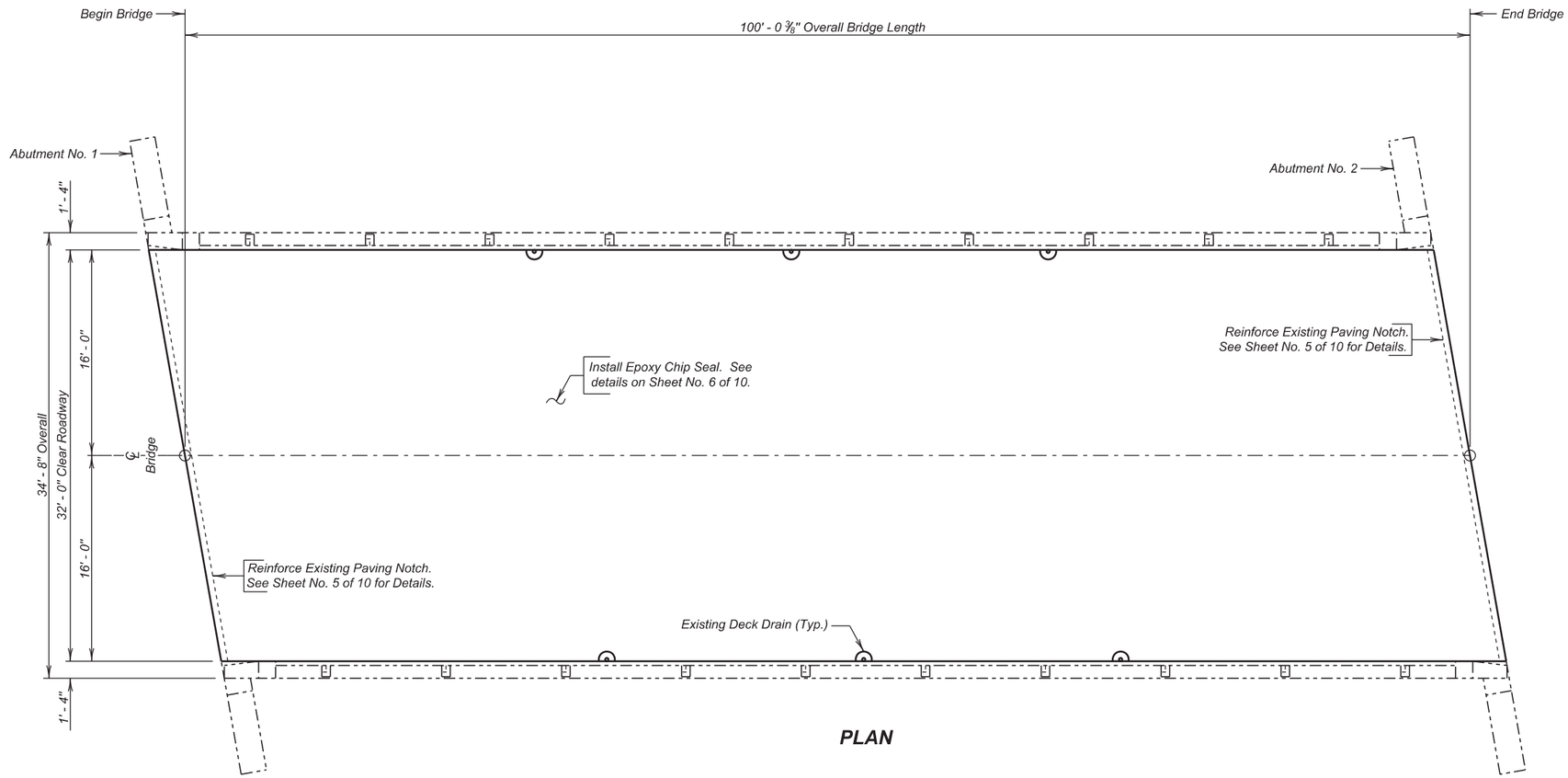

PLAN

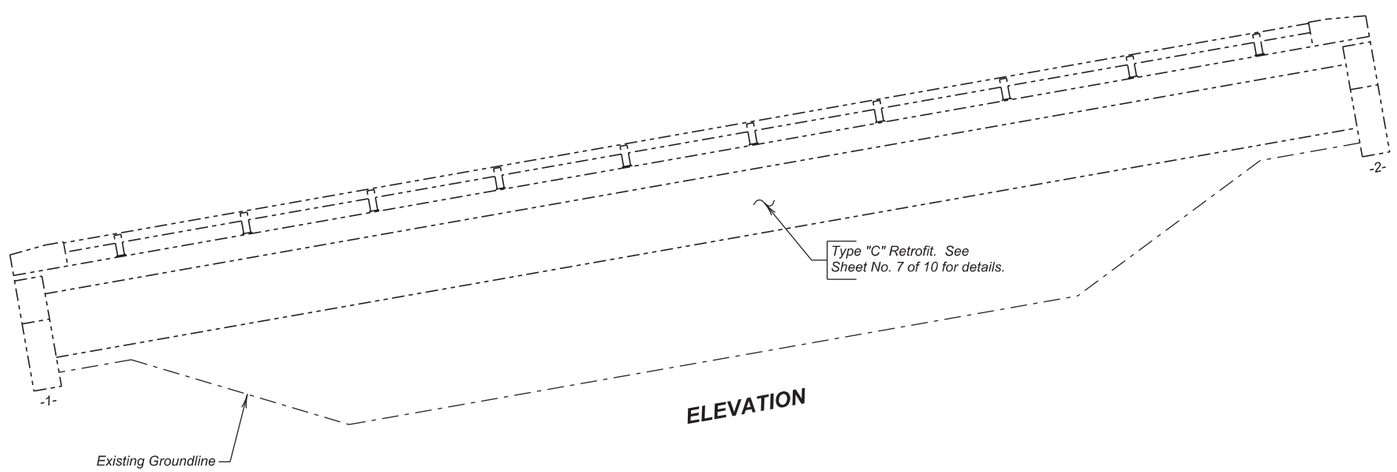

ELEVATION

INDEX OF BRIDGE SHEETS

Sheet No. 1 - Layout for Upgrading
Sheet No. 2 - Estimate of Structure Quantities and Notes
Sheet No. 3 - Notes (Continued)
Sheet No. 4 - Notes (Continued)
Sheet No. 5 - Existing Paving Notch Reinforcement
Sheet No. 6 - Two Coat Epoxy Chip Seal
Sheet No. 7 - Details of Fatigue Retrofit Type "C"
Sheet Nos. 8 thru 10 - Original Construction Plans

LAYOUT FOR UPGRADING

FOR

100' - 0 3/8" COMPOSITE GIRDER BRIDGE

32' - 0" ROADWAY — 10° SKEW RHF
OVER SPEARFISH CREEK — SEC. 34-T7N-R2E
STR. NO. 41-091-057 — IM 0901(163)9
PCN 0223

LAWERENCE COUNTY

S. D. DEPT. OF TRANSPORTATION

MARCH 2014

1 OF 10

PLANS BY :
OFFICE OF BRIDGE DESIGN, SOUTH DAKOTA DEPARTMENT OF TRANSPORTATION

DESIGNED BY	CK. DES. BY	DRAFTED BY	
KH	TK	JRK	Kevin N. Goeden
LAWR0223	0223KA01		BRIDGE ENGINEER

ESTIMATE OF STRUCTURE QUANTITIES

ITEM NO.	DESCRIPTION	QUANTITY	UNIT
410E0103	Fatigue Retrofit Steel Girder, Type C	30	Each
410E3010	Magnetic Particle Weld Inspection	36	In
412E0100	Bridge Repainting, Class I	Lump Sum	LS
412E0500	Paint Residue Containment	Lump Sum	LS
460E0170	Concrete Patching Material	47.4	CuFt
460E0300	Breakout Structural Concrete	1.0	CuYd
460E0380	Install Dowel in Concrete	16	Each
480E0200	Epoxy Coated Reinforcing Steel	62	Lb
491E0015	Two Coat Epoxy Bridge Deck Chip Seal	355.6	SqYd
491E0110	Abrasive Blasting of Bridge Deck	355.6	SqYd
491E0120	Bridge Deck Grinding	355.6	SqYd
491E0130	Concrete Removal, Class A	4.0	SqYd
491E0140	Concrete Removal, Class B	4.0	SqYd

SPECIFICATIONS

1. Design Specifications: AASHTO Standard Specifications for Highway Bridges 17th Edition using Working Stress Design.

2. Construction Specifications: South Dakota Standard Specifications for Roads and Bridges, 2004 Edition and Required Provisions, Supplemental Specifications and Special Provisions as included in the Proposal.

3. All Welding and Welding Inspection shall be in conformance with the AASHTO/AWS Bridge Welding Code D1.5M/D1.5:2010 unless otherwise noted in this plan set.

DETAILS AND DIMENSIONS OF EXISTING BRIDGE

All details and dimensions of the existing bridge, contained in these plans, are based on the original construction plans and shop plans. It is the Contractor's responsibility to inspect and verify the actual field conditions and any necessary as-built dimensions affecting the satisfactory completion of the work required for this project.

SCOPE OF BRIDGE WORK & SEQUENCE OF OPERATIONS

All work on this structure shall be accomplished with the traffic control shown elsewhere in the plans. Alternate sequence of operations may be submitted by the contractor for approval by the engineer a minimum of two weeks prior to the preconstruction meeting.

1. Perform bridge deck grinding and repair the bridge deck by removing all loose and delaminated concrete from the bridge deck surface for first and second phase of construction.

2. Clean the bridge deck surface with abrasive blasting for the first phase of construction.

3. Modify the existing paving notch for the first phase of construction.

4. Place a Two Coat Epoxy Bridge Deck Chip Seal for first phase of construction.

5. Switch traffic and repeat steps 2 through 4 for second phase of construction.

6. Modify the existing diaphragm to bottom flange connections by completing the type C retrofit.

7. Paint all affected areas as stated in the notes.

GENERAL CONSTRUCTION NOTES

1. All mild reinforcing steel shall conform to ASTM A615, Grade 60.

2. All exposed concrete corners and edges shall be chamfered 3/4" unless noted otherwise in the plans. Match existing chamfer if the existing chamfer differs.

3. Use 2" clear cover on all reinforcing steel except as shown otherwise.

4. Surfaces of fresh concrete at construction joints shall be rough floated sufficiently to consolidate the surface. All construction joints shall be cleaned of surface laitance, curing compounds and other foreign materials prior to placing fresh concrete against the joint.

CONCRETE BREAKOUT

1. The existing paving notch shall be broken out to the limits shown on the plans. Breakout limits shall be defined with a 3/4" deep sawcut (unless specified otherwise in these plans), where practical, as approved by the Engineer.

2. All broken out concrete, discarded reinforcing bars and expansion devices shall be disposed of by the Contractor. Any disposal of discarded material shall be in accordance with the Environmental Commitments.

3. The contract unit price per cubic yard for "Breakout Structural Concrete" shall include breaking out concrete, cleaning, straightening existing reinforcing steel, and disposal of all broken out material.

EPOXY COATING EXISTING REINFORCING STEEL

1. The existing resteel in the deck that is exposed during the removal of loose and delaminated concrete, and is to be reused, shall be epoxy coated in the field.

2. The reinforcing steel shall be abrasive blasted clean and then epoxy coated. The epoxy coating shall be inert in concrete and compatible with the coating applied to the new epoxy coated reinforcing steel. This coating shall be the epoxy touch up coating material supplied by an epoxy coating manufacturer who supplies coating material for new epoxy coated reinforcing steel. The abrasive blasted reinforcing steel shall be coated promptly and before detrimental oxidation occurs. The coating shall be allowed to cure for 24 hours or as per the manufacturer's recommendations, whichever is more stringent, before concrete can be placed. These bars shall be clean and free from all surface contaminants before coating.

3. The cost of cleaning and epoxy coating the existing reinforcing steel shall be incidental to the various bid items.

FATIGUE RETROFIT – STEEL GIRDER, TYPE "C"

1. This work consists of cleaning and removing paint in the areas where the existing diaphragm stiffeners bear on the bottom flanges of the main girder, welding the existing diaphragm stiffeners to the bottom flanges, and painting the finished welds to match the existing color.

2. Preparation of the base metal prior to welding shall be in accordance with Section 3 of the Bridge Welding Code. Existing paint shall be removed a distance of 3 inches from each side of the weld.

3. Preheat will be required. Preheat and interpass temperature requirements shall be in accordance with Section 4.2 of the Bridge Welding Code. The minimum preheat and interpass temperature shall be ***155*** degrees F determined from Annex VIII of the Bridge Welding Code for high restraint conditions. The use of temperature indicating crayons shall be a minimum acceptable method for monitoring preheat and interpass temperatures.

4. SMAW electrode atmospheric exposure requirements shall comply with Section 4.5 of the Bridge Welding Code. Electrodes shall be purchased in hermetically sealed containers. If the container shows evidence of damage, the electrodes shall be dried in a drying oven for at least one hour between 700 and 800 degrees F before they are used. Immediately after opening a hermetically sealed container, or removal from a drying oven, electrodes shall be stored in storage ovens at a temperature of 250 degrees F. Electrodes exposed to the atmosphere upon removal from drying, storage ovens or hermetically sealed containers shall be used within four hours maximum, or redried at 450 to 550 degrees F for two hours minimum. Electrodes exposed to the atmosphere for periods less than four hours may be returned to a storage oven and maintained at a minimum of 250 degrees F for a minimum of four hours before reissue. Electrodes shall be redried no more than one time. Electrodes which have been wet shall not be used.

ESTIMATE OF STRUCTURE QUANTITIES AND NOTES

FOR

100' - 0 3/8" COMPOSITE GIRDER BRIDGE

STR. NO. 41-091-057

MARCH 2014

DESIGNED BY	CK. DES. BY	DRAFTED BY	
KH	TK	KH	Kevin N. Goeden
LAWR0223	0223HA02		BRIDGE ENGINEER

FATIGUE RETROFIT – STEEL GIRDER, TYPE "C" (CONTINUED)

5. All welds shall be cleaned in accordance with Section 3.11 of the Bridge Welding Code. Completed welds and adjacent areas shall be cleaned of all weld spatter, slag, smoke and heat affected paint.

6. The Contractor shall submit a Welding Procedure Specification on Form III-2 (on page 189 of the Bridge Welding Code) and notify the Department of the Contractor's welding schedule thirty days prior to any Fatigue Retrofit welding.

7. All costs for labor, materials and incidentals necessary to prepare the weld area, complete the weld and provide access to each weld for Nondestructive Testing shall be paid for at the contract unit price bid per each for "Fatigue Retrofit Steel Girder, Type C".

8. Removal of work affected paint and repainting the work affected areas is covered and paid for in the Bridge Repainting, Class I and Paint Residue Removal and Containment notes on Sheet Nos. 4 of 10.

MAGNETIC PARTICLE INSPECTION

1. The Contractor shall be responsible for retaining a qualified Testing Agency to perform magnetic particle inspection (MT) and visual inspection on the fillet welds produced in the field under the payment item "Fatigue Retrofit Steel Girder, Type C". All of the MT and visual inspections shall be performed by an AWS Certified Welding Inspector qualified and certified in conformance with the provisions of AWS QC1. Additionally, personnel performing the Non Destructive testing (NDT) shall be qualified in conformance with the American Society for Nondestructive Testing's (ASNT) Recommended Practice No. SNT-TC-1A, or equivalent, as a NDT Level II inspector. The Testing Agency and inspectors provided shall be subject to the approval of the Bridge Construction Engineer.

2. Twenty percent of the weld locations will be tested using MT. A weld location is defined as 100% of the fillet weld length in one unit of "Fatigue Retrofit Steel Girder, Type C". The MT results shall be reported on Form III-6 in Annex III of the Bridge Welding Code. The MT Inspection shall be performed by the yoke method. The MT Inspection shall be in accordance with Section 6 of the Bridge Welding Code.

3. All of the completed fillet welds in "Fatigue Retrofit Steel Girder, Type C" shall be visually inspected for acceptance by the Testing Agency. The visual inspection shall be in accordance with Section 6 of the Bridge Welding Code. The Testing Agency shall record the locations of the visual inspection and the findings of the visual inspections together with detailed descriptions of all recommended repairs.

4. Based on the results of the Magnetic Particle Inspection and visual inspection, the Bridge Construction Engineer will determine the acceptability of the completed fillet welds and any recommended repairs. Any necessary repairs to the completed welds shall be accomplished in accordance with Chapter 12 of the Bridge Welding Code 2010 Edition. All weld repair procedures, should they be required, shall be approved prior to use by the Bridge Construction Engineer.

5. All costs incurred by the Magnetic Particle Inspection and visual inspection, including all labor, equipment, access provisions and any incidentals necessary to perform the inspection in accordance with these plans shall be incidental to the contract unit price per inch for "Magnetic Particle Weld Inspection".

INSTALLING DOWELS IN CONCRETE

1. Holes drilled in the existing concrete shall be true and normal or as shown in the plans. Drilling holes using a core drill shall not be allowed. Care shall be taken not to damage the existing reinforcing steel. It is likely that some of the existing reinforcing steel shown in the original construction plans may have been placed out of position during original construction. Therefore, prior to the start of drilling any holes in the concrete, an effort will be made by Department forces to mark on the concrete surface where practical any locations of the in-place reinforcing steel. In spite of this precaution, the Contractor can still expect to encounter and have to drill through reinforcing steel or shift the dowel spacing as approved by the Engineer to miss the existing reinforcing steel. If the Contractor shifts the dowel spacing, the unused drill holes shall be completely filled with the epoxy resin as approved by the Engineer.

2. The epoxy resin mixture shall be of a type for bonding steel to hardened concrete and shall conform to AASHTO M235 Type IV (Equivalent to ASTM C881, Type IV). Grade 1, 2 or 3 may be used for vertical dowels.

3. The diameter of the drilled holes shall not be less than 1/8 inch greater, nor more than 3/8 inch greater than the diameter of the dowels or as per the Manufacturer's recommendations. The drilled holes shall be blown out with compressed air using a device that will reach the back of the hole to ensure that all debris or loose material has been removed prior to epoxy injection.

4. Mix epoxy resin as recommended by the Manufacturer and apply by an injection method as approved by the Engineer. Beginning at the back of the drilled holes, fill the holes 1/3 to 1/2 full of epoxy, or as recommended by the Manufacturer, prior to insertion of the steel bar. Care shall be taken to prevent epoxy from running out of the horizontal holes prior to steel bar insertion. Rotate the steel bar during installation to eliminate voids and ensure complete bonding of the bar. Insertion of the bars by the dipping or painting method will not be allowed.

5. No loads shall be applied to the epoxy grouted dowel bars until the epoxy resin has had sufficient time to cure as specified by the epoxy resin manufacturer.

6. Dowel bars shall be deformed bars conforming to ASTM A615 Grade 60.

7. The cost of epoxy resin, dowels, installation and other incidental items shall be incidental to the contract unit price per each for "Install Dowel in Concrete".

REMOVAL OF LOOSE AND DELAMINATED CONCRETE

1. This work consists of preparation of the existing bridge deck for Two Coat Epoxy Bridge Deck Chip Seal by removing and replacing the loose and delaminated concrete.

2. Concrete used to repair the deck surface shall be in accordance with the Concrete Patching Material notes in this set of plans.

3. Concrete Removal on the bridge deck shall be divided into the following two classes:

   a. Concrete Removal, Class A: Concrete Removal, Class A shall consist of the removal of delaminated and visibly loose concrete and any bituminous patches (when present) from the top of existing bridge deck down to a depth no deeper than the top of the top mat of bridge deck reinforcing steel. When grinding is specified, the Concrete Removal, Class A shall be done after the bridge deck has been ground.

   b. Concrete Removal, Class B: Concrete Removal, Class B areas shall be determined after completion of the Concrete Removal, Class A has been accomplished. Concrete Removal, Class B shall consist of the removal of delaminated and visibly loose concrete that exists below the bottom limits of the Concrete Removal, Class A *(below the top of the top mat of reinforcing steel)*.

4. Concrete Removal shall be by jackhammers and chipping hammers or other methods as approved by the Engineer. Jackhammers and chipping hammers shall be used as follows:

   a. Jackhammers heavier than 30 pounds will not be permitted.

   b. Chipping hammers heavier than 15 pounds will not be permitted for removing concrete below the top of the top mat of reinforcing steel.

   c. Jackhammers and chipping hammers shall not be operated at an angle in excess of 45 degrees measured from the surface of the concrete.

   d. Extreme care shall be taken when using jackhammers and chipping hammers to assure that existing reinforcing steel is not damaged or debonded from the sound concrete.

5. Removal shall begin near the center of the loose or delaminated concrete and shall progress outwardly until the loose or delaminated concrete is removed and sound concrete is encountered such that the amount of concrete removal is minimized.

NOTES (CONTINUED)

FOR

100' - 0 3/8" COMPOSITE GIRDER BRIDGE

STR. NO. 41-091-057

MARCH 2014

DESIGNED BY	CK. DES. BY	DRAFTED BY	
KH	TK	KH	Kevin N. Goeden
LAWR0223	0223HA03		BRIDGE ENGINEER

REMOVAL OF LOOSE AND DELAMINATED CONCRETE (CONTINUED)

6. The edges of the resulting areas of removed concrete shall be nearly vertical or slightly tapered inward from the top down to a minimum depth of one inch. If this condition is not able to be achieved with jackhammers or chipping hammers, saw cutting the edges of the removal area may be required to attain satisfactory results.

7. Care shall be taken during concrete removal to not nick, gouge, or in any other way damage the in-place reinforcing steel. Any inadvertent damage to the in-place reinforcing steel shall be brought to the attention of the Bridge Construction Engineer and shall be repaired by the Contractor as directed by the Engineer at no additional cost to the Department.

8. Concrete Removal, Class A will be measured to the nearest 0.1 foot and the area computed to the nearest 0.1 square yard. Concrete Removal, Class A will be paid for at the contract unit price per square yard. Payment will be full compensation for all labor, equipment, materials, and all incidental work required to remove the specified concrete, concrete sawing, and disposing of removed material.

9. Concrete Removal, Class B will be measured to the nearest 0.1 foot and the area computed to the nearest 0.1 square yard. Concrete Removal, Class B will be paid for at the contract unit price per square yard. Payment will be full compensation for all labor, equipment, materials, and all incidental work required to remove the specified concrete, concrete sawing, and disposing of removed material.

CONCRETE PATCHING MATERIAL

1. Concrete patching material shall be used to repair the deck areas where loose and delaminated concrete was removed.

2. Concrete patching material shall be packaged, dry, rapid-hardening cementitious mortar or concrete materials conforming to the requirements of ASTM C 928, Type R-3 and shall contain no chlorides, magnesium or phosphates.

3. Water used for the concrete patching material shall be in conformance with Section 790 of the Construction Specifications.

4. Upon completion of the concrete removal and immediately prior to placing any concrete patching material into the concrete removal areas, the removal areas shall be thoroughly cleaned of loose and foreign material by abrasive blasting. The surface profile of the area to receive the patching material shall be in accordance with the manufacturer's recommendations. The abrasive blasting shall be to the extent that all surface laitance is removed. Abrasive blast cleaning shall expose the coarse aggregate and remove rust from any exposed reinforcing steel. After abrasive blasting, the surface shall be cleaned by the use of compressed air to the satisfaction of the Engineer. The air compressor used for cleaning shall be equipped with trap devices capable of providing moisture-free and oil-free air at a recommended pressure of 90 psi.

5. The existing surface at the time of placement of the concrete patching material shall be at least 40° F (4° C), measured by a thermometer placed against the concrete surface and covered with an insulating blanket. The concrete patching material shall be mixed and placed in accordance with the manufacturer's technical data sheet. The Contractor shall provide a manufacturer's technical data sheet to the Engineer prior to performing the work. The concrete patching material shall be maintained at or above 45° F (7° C) for at least 72 hours after placement.

6. Immediately after finishing the concrete patching material, the surface of the concrete patching material shall be covered with a double layer of wet burlap. Within one hour of covering with wet burlap, polyethylene sheeting shall be placed on the wet burlap. The surface shall be wet cured for a minimum of 48 hours or in accordance with the manufacturer's recommendations, whichever is more stringent. Following the wet cure, the burlap and polyethylene sheeting shall be removed and the surface allowed to air dry for a minimum of 48 hours after removal of the burlap and polyethylene sheeting before application of the epoxy chip seal is permitted.

7. Concrete Patching Material will be measured to nearest 0.1 cubic feet as determined from the theoretical yield per bag of Concrete Patching Material. Concrete Patching Material will be paid for at the contract unit price per cubic foot. Payment will be full compensation for all labor, equipment, materials, and all incidental work required to abrasive blast clean the removal areas, and furnish, place and cure the concrete patching material within the removal areas.

TWO COAT EPOXY BRIDGE DECK CHIP SEAL

The Epoxy Chip Seal shall be applied in accordance with the Special Provision for "Two Coat Epoxy Bridge Deck Chip Seal".

PAINT RESIDUE REMOVAL AND CONTAINMENT

1. Paint removal on the existing bridge shall be in accordance with Section 412 of the Construction Specification except as modified by these notes.

2. The Contractor shall plan his operations to prevent releases of lead-containing material and other particulate matter into the surrounding air, water, and onto the ground, soil, slope protection, and pavement. The Contractor shall be responsible for any corrective actions should a spill occur.

3. Collect all visible paint particles and blasting residue containing paint at the end of each workday from the work area. Inspect outside the containment and collect any paint particles or blasting residue that escaped the work area. Collect waste material by manual means, vacuum, or another method approved by the Engineer. Do not use air pressure or streaming water to assist in the waste collection process that could disperse the waste material.

4. In the event of a spill or inadvertent release, the Contractor shall immediately stop work, notify the Engineer, and report the release to the South Dakota Department of Environmental and Natural Resources (DENR). The Contractor shall be responsible for completing a spill reporting form and for all costs associated with appropriate corrective actions.

5. The Contractor shall haul and unload the 55 gallon containment drums with paint residue, blasting media, etc. to the SDDOT Maintenance Yard located in Rapid City for temporary storage. All costs associated with this work shall be included in the contract lump sum price for "Paint Residue Containment".

6. If the Contractor elects to use containers other than 55 gallon barrels to hold paint residue, the Contractor shall be responsible for all testing and disposal at a permitted regional landfill. The Contractor shall be responsible for compliance of laws and regulations regarding storage, handling and shipping. Copies of all tests shipping and disposal documents shall be provided to the Office of Bridge Design.

BRIDGE REPAINTING, CLASS I

1. The work affected area described below shall be painted in accordance with Section 412 of the Standard Specifications and in accordance with SSPC Standard PA1.

2. For informational purposes, 23 square feet of structural steel will require painting. The quantity shown includes the following:

   The flanges and stiffeners in the work affected areas for the fatigue retrofit. The quantity shown is for an area three inches on all sides of the work affected areas.

3. Paint color

   Top Coat – The paint color shall be an approved green color. Prior to ordering the paint, a paint chip of the green color shall be submitted to the Department for color approval.

   Primer Coat – Color shall sharply contrast with the top coat.

NOTES (CONTINUED)

FOR

100' - 0 3/8" COMPOSITE GIRDER BRIDGE

STR. NO. 41-091-057

MARCH 2014

DESIGNED BY	CK. DES. BY	DRAFTED BY	
KH	TK	KH	Kevin N. Goeden
LAWR0223	0223HA04		BRIDGE ENGINEER

Revised by KH, 7/14/2014

STATE OF	PROJECT	SHEET NO.	TOTAL SHEETS
S.D.	IM 0901(163)9	E7	E102

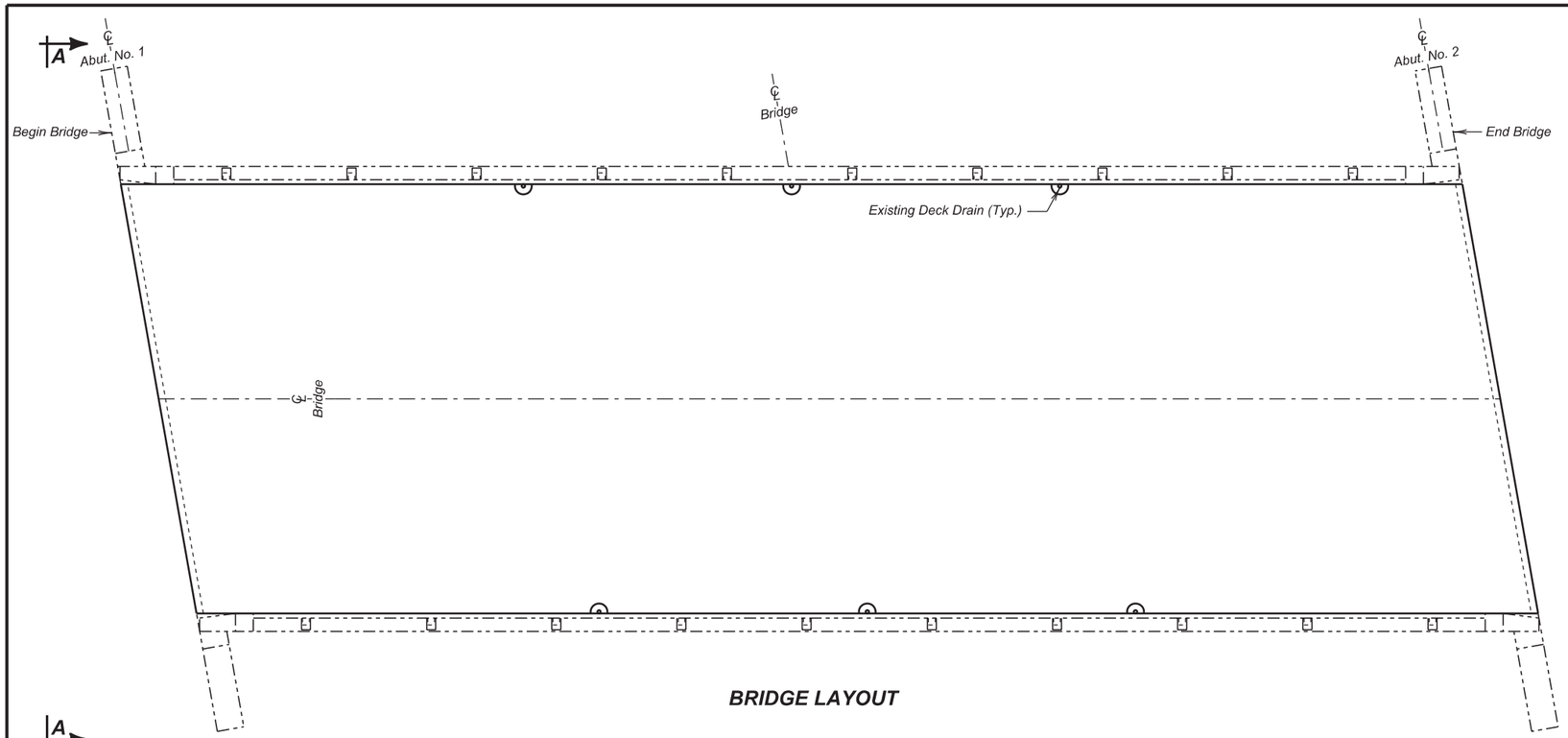

BRIDGE LAYOUT

REINFORCING SCHEDULE
(For Both Ends of Bridge)

	Mk.	No.	Size	Length	Type	Bending Details
PHASE I	△ z1	8	5	2' - 8"	17A	
	d1	4	5	7' - 4"	Str.	
PHASE 2	△ z1	8	5	2' - 8"	17A	
	d1	4	5	7' - 4"	Str.	

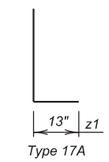

NOTES:
All Dimensions are out to out of bars.
All Bars to be Epoxy Coated.
△ Dowels

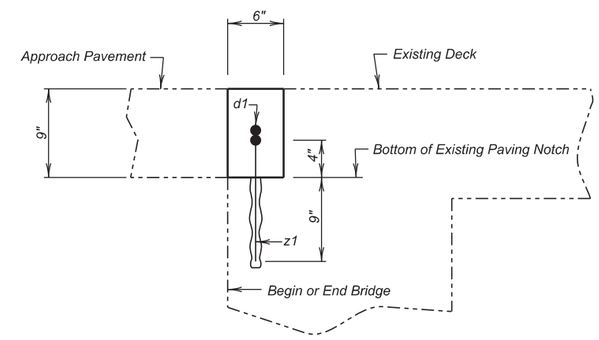

SECTION B - B

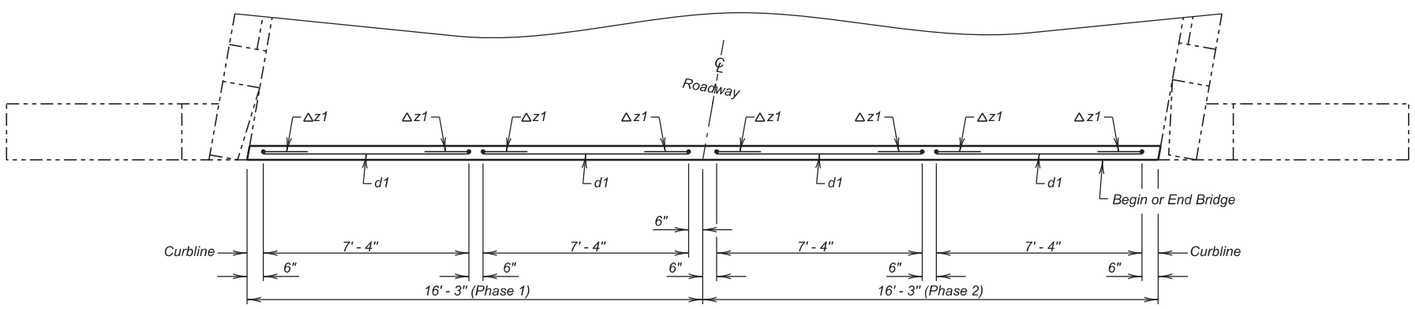

PLAN
(Abutment No. 1 shown, Abutment No. 2 identical)

✳ z1 Dowels are to be drilled in and grouted with epoxy.

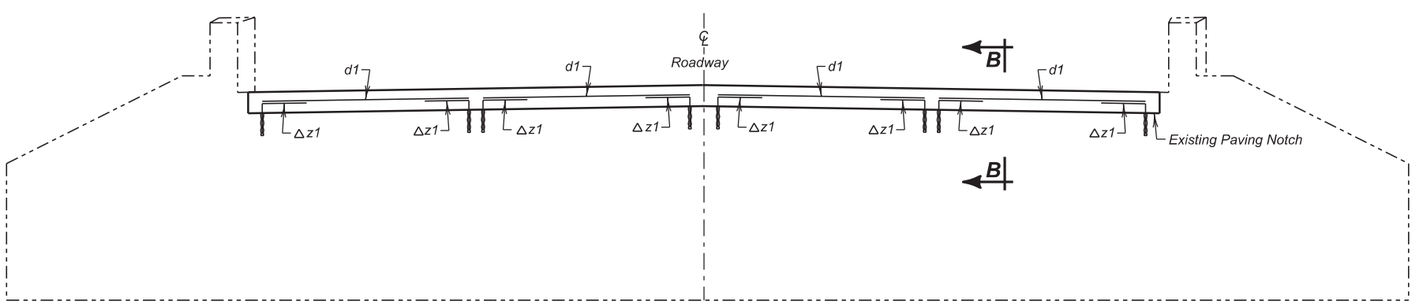

VIEW A - A
(Abutment No. 1 shown, Abutment No. 2 identical)

ESTIMATED QUANTITIES

	ITEM	UNIT	QUANTITY Phase I	QUANTITY Phase 2
	Install Dowel in Concrete	Each	8	8
✳	Epoxy Coated Reinforcing Steel	Lb	31	31
	Concrete Patching Material	Cu. Ft.	12.1	12.1
	Breakout Structural Concrete	Cu. Yd.	0.5	0.5

✳ Does not include the following quantities for z1 bars as these are paid for in the bid item "Install Dowel in Concrete".

PHASE I	PHASE 2
22 Lb.	22 Lb.

EXISTING PAVING NOTCH REINFORCEMENT
FOR
100' - 0 3/8" COMPOSITE GIRDER BRIDGE

32' - 0" ROADWAY — 10° SKEW RHF
OVER SPEARFISH CREEK — SEC. 34-T7N-R2E
STR. NO. 41-091-057 — IM 0901(163)9

LAWERENCE COUNTY
S. D. DEPT. OF TRANSPORTATION
MARCH 2014

DESIGNED BY	CK. DES. BY	DRAFTED BY	
KH	TK	JRK	Kevin N. Goeden
LAWR0223	0223KA05		BRIDGE ENGINEER

STATE OF	PROJECT	SHEET NO.	TOTAL SHEETS
S.D.	IM 0901(163)9	E8	E102

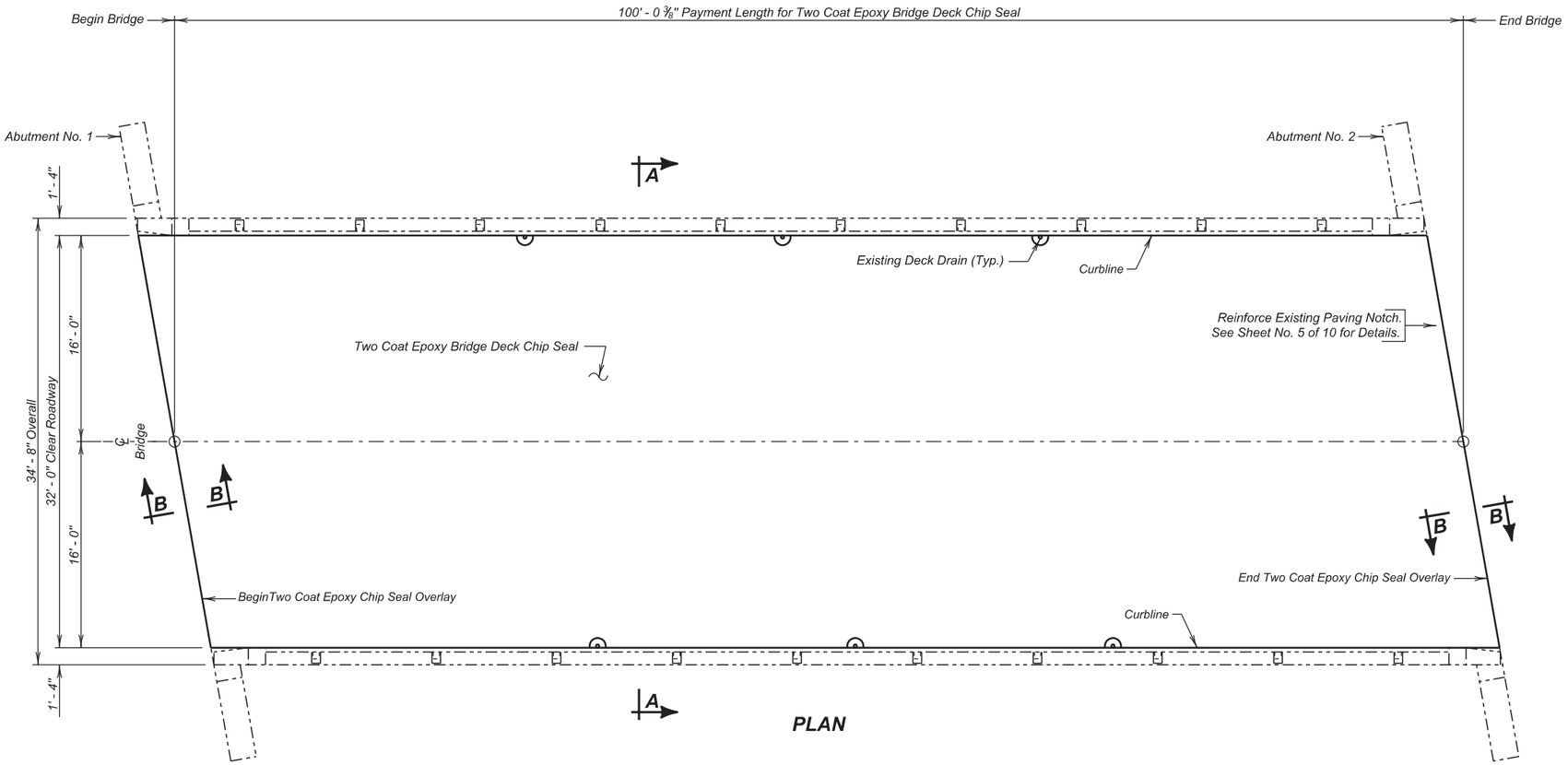

PLAN

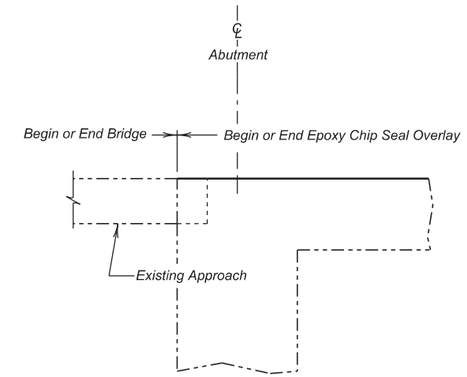

SECTION B - B

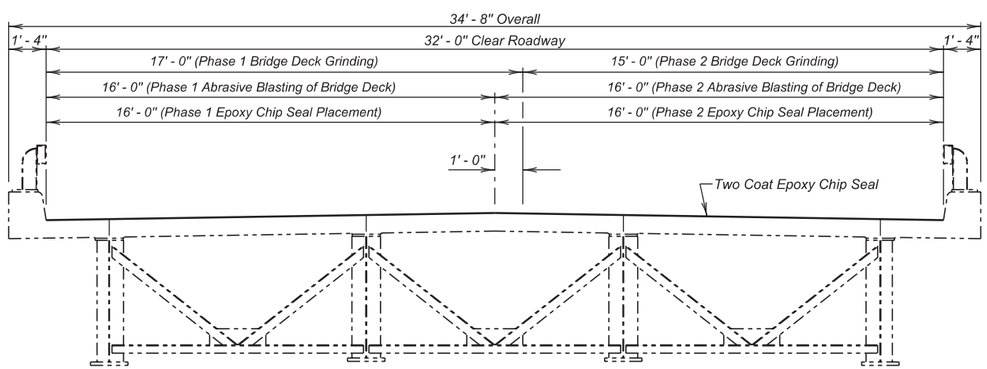

SECTION A - A

NOTE :
✳ Concrete Removal, Class A; Concrete Removal, Class B; and Concrete Patching Material may not be encountered and may be removed from the project at the direction of the Engineer.

ESTIMATED QUANTITIES

	ITEM	UNIT	QUANTITY PHASE 1	QUANTITY PHASE 2
	Two Coat Epoxy Bridge Deck Chip Seal	Sq. Yd.	177.8	177.8
	Abrasive Blasting of Bridge Deck	Sq. Yd.	177.8	177.8
	Bridge Deck Grinding	Sq. Yd.	188.9	166.7
✳	Concrete Patching Material	Cu. Ft.	11.6	11.6
✳	Concrete Removal, Class A	Sq. Yd.	2.0	2.0
✳	Concrete Removal, Class B	Sq. Yd.	2.0	2.0

TWO COAT EPOXY CHIP SEAL

FOR

100' - 0 3/8" COMPOSITE GIRDER BRIDGE

32' - 0" ROADWAY — 10° SKEW RHF
OVER SPEARFISH CREEK — SEC. 34-T7N-R2E
STR. NO. 41-091-057 — IM 0901(163)9

LAWERENCE COUNTY

S. D. DEPT. OF TRANSPORTATION

MARCH 2014

6 OF 10

DESIGNED BY	CK. DES. BY	DRAFTED BY	
KH	TK	JRK	Kevin N. Boeden
LAWR0223	0223KA06		BRIDGE ENGINEER

STATE OF	PROJECT	SHEET NO.	TOTAL SHEETS
S.D.	IM 0901(163)9	E9	E102

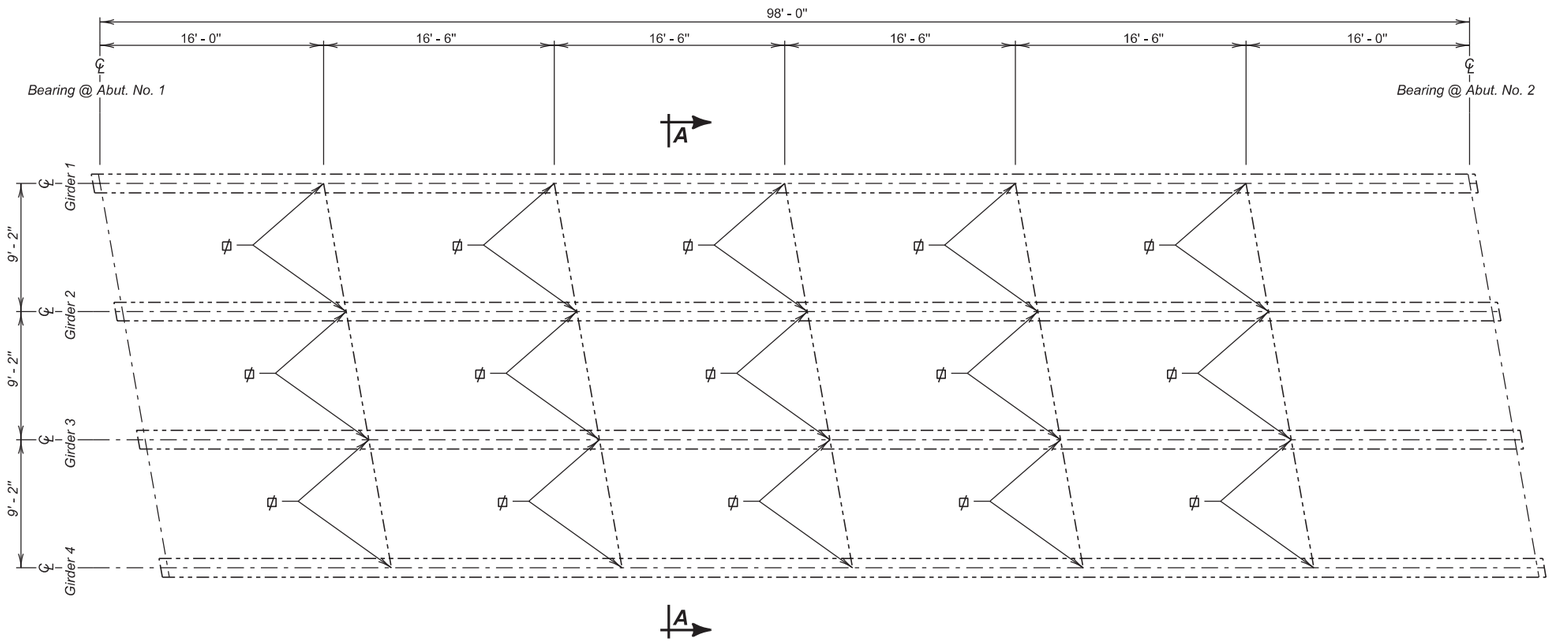

ϕ Diaphragm stiffener shall be welded to the bottom flange only.

PLAN

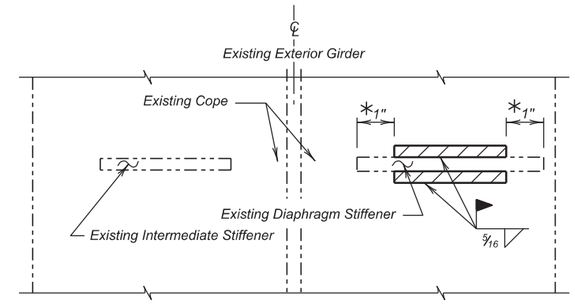

SECTION C - C

(One typical unit of Fatigue Retrofit is shown.)

* No Weld

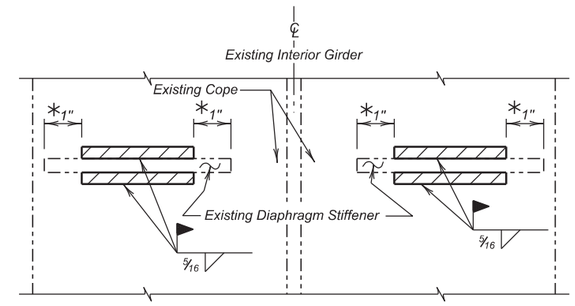

SECTION E - E

(Two typical units of Fatigue Retrofit are shown.)

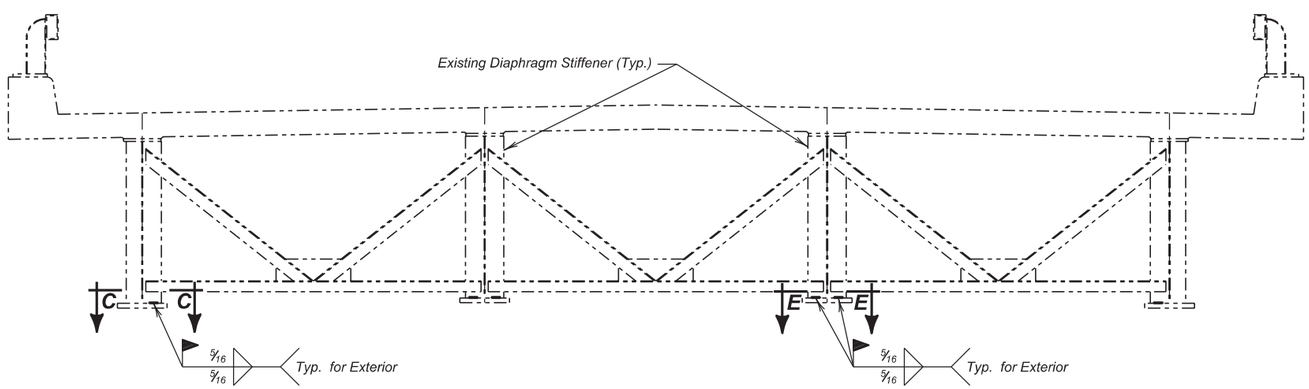

SECTION A - A

ESTIMATED QUANTITIES

ITEM	UNIT	QUANTITY
Fatigue Retrofit Steel Girder, Type C	Each	30
Magnetic Particle Weld Inspection	Inch	36
Bridge Repainting, Class I	LS	Lump Sum
Paint Residue Containment	LS	Lump Sum

NOTE: Welding both sides of one individual stiffener to a flange constitutes one unit of payment on a per each basis.

DETAILS OF FATIGUE RETROFIT TYPE "C"

FOR

100' - 0 3/8" COMPOSITE GIRDER BRIDGE

32' - 0" ROADWAY — 10° SKEW RHF
OVER SPEARFISH CREEK — SEC. 34-T7N-R2E
STR. NO. 41-091-057 — IM 0901(163)9

LAWERENCE COUNTY

S. D. DEPT. OF TRANSPORTATION

MARCH 2014

DESIGNED BY	CK. DES. BY	DRAFTED BY	
KH	TK	JRK	Kevin N. Goeden
LAWR0223	0223KA07		BRIDGE ENGINEER

-X071-

STATE OF	PROJECT	SHEET NO.	TOTAL SHEETS
S.D.	IM 0901(163)9	E10	E102

INDEX OF BRIDGE SHEETS —

Sheet No. 1 - General Drawing and Quantities.
Sheet No. 2 - Subsurface Investigation.
Sheet No. 3 - Details of Abutment No. 1.
Sheet No. 4 - Details of Abutment No. 2.
Sheet No. 5 - Superstructure Details.
Sheet No. 6 - Girder Layout.
Sheet No. 7 - Framing Diagram & Erection Data.
Sheet No. 8 - End Block Details.
Sheet No. 9 - Type RT-3A Steel Railing and Curb & Drain Details.
Sheet No. 10 - Details of Bridge End Backfill (Plan "E").
Sheet No. 11 - Details of Standard Plates No. 302 and No. 305.

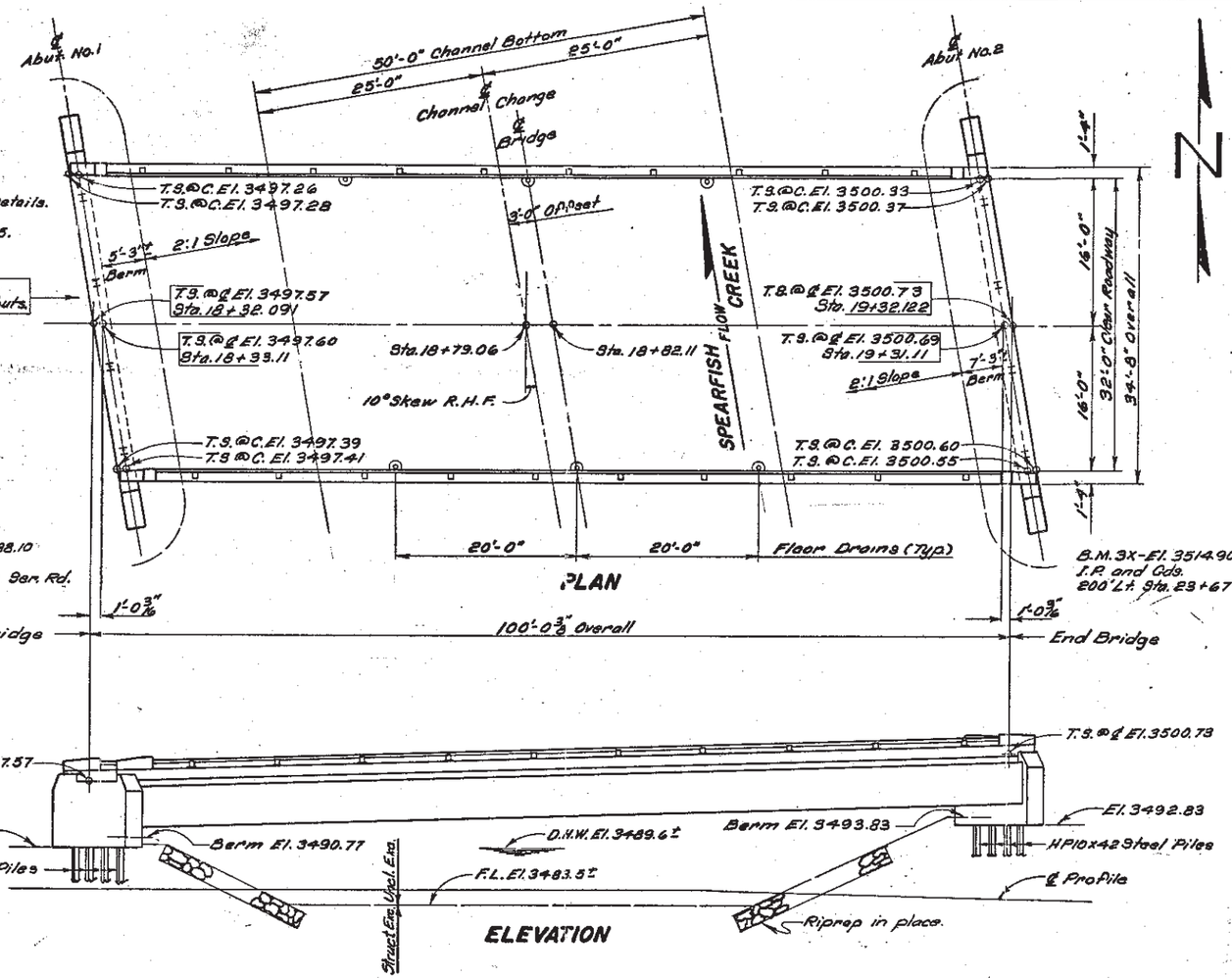

PLAN

Q_{50}	3,800 c.f.s.
A	372 sq. ft.
V	10.2 f.p.s.

NOTE:
T.S.@℄ El. = Top of Slab at Centerline Roadway Elevation.
T.S.@C. El. = Top of Slab at Curb Elevation.

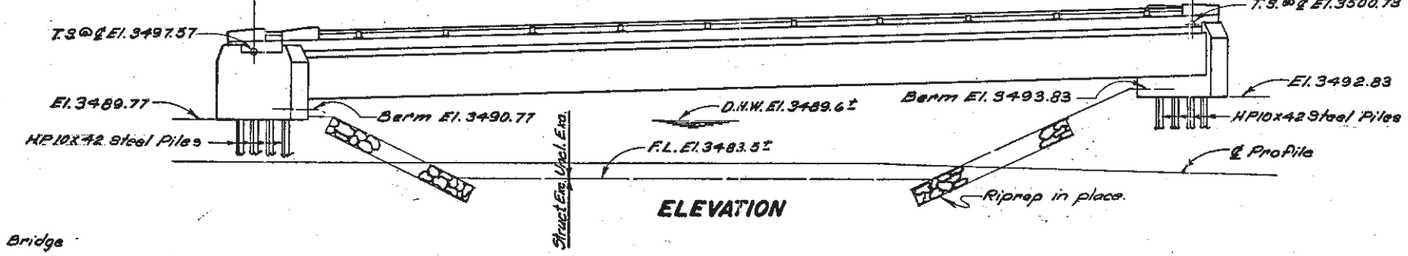

ELEVATION

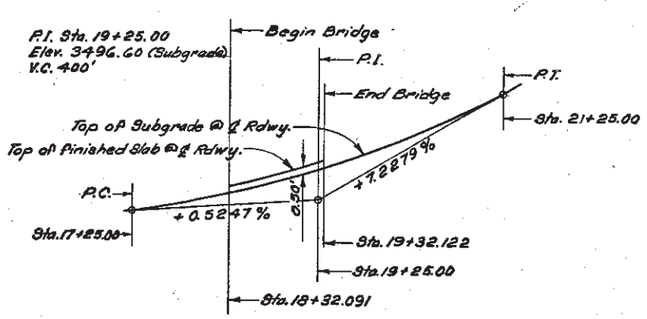

VERTICAL CURVE DATA

ESTIMATED QUANTITIES

ITEM	Class "A" Concrete Masonry	Reinforcing Conc. Masonry	Structural Steel	St. Railing Type RT-3A	Furn. Steel Test Pile HP10x42	Drive Steel Test Pile HP10x42	Furn. Steel Pile HP10x42	Drive Steel Pile HP10x42	Struct. Excav. Bridge	Unclass. Excav.	Bridge End Backfill
UNIT	Cu. Yds.	LB.	Lb.	L.F.	L.F.	L.F.	L.F.	L.F.	Cu. Yd.	Cu. Yd.	# L.S.
Superstructure	* 94.2	* 24,915	* 78,045	186.4							
Abutment No. 1	23.6	4,440	115		1@50'=50	1@50'=50	3@45'=135	3@45'=135	10		
Abutment No. 2	23.6	4,440	115		1@50'=50	1@50'=50	3@45'=135	3@45'=135	10		
Totals	141.4	33,795	78,275	186.4	100	♯ 100	270	270	20	♯ —	1 Lump Sum

♯ One Steel Bearing Test Pile shall be driven at Abutment No. 1 and No. 2 before the remaining piles are ordered.
△ Unclassified Excavation to be done by Grading Contractor.
∓ For information only the approximate volume of Granular Backfill will be 260 Cu. Yds. in place and the length of 6" Perforated Metal Pipe will be 140'. See Notes on sheet 10 of 11.
* Includes End Block Quantities. See Sheet No. 8 of 11 for End Block Quantities.

GENERAL NOTES —

1. Design Specifications: A.A.S.H.O. Specifications for Highway Bridges, 1969, with interim Specifications for 1970 and 1971.
2. See Notes on Sheets No. 1 thru. No. 11
3. Place Floor drains as shown in Plan (6 required).
4. Longitudinal elements of the Slab shall conform to the vertical Curve.
5. Rail post and end blocks shall be built normal to grade.
6. All reinforcing steel shall conform to A.S.T.M. A615, Grade 40.
7. Design Loading: HS20-44 A.A.S.H.O.
8. Furnish and install inserts and eyebolts as shown on Standard Plate No. 305.
9. The Contractor shall have sufficient pile splice material on hand before pile driving is started. See Standard Plate No. 302 for splice details.
10. The Contractor shall imprint on the structure the date of construction as specified and detailed on Standard Plate No. 308, which is on file with the ENGINEER.
11. The Standard Plates referred to in these plans are printed on Sheet No. 11 of 11 of these plans and are not intended to be referred to the Standard Plates Manual.
12. Preboring Piling is not required.

SPECIFICATION NOTE —

Use South Dakota Standard Specifications for Roads and Bridges, 1969 Edition, and Required Provisions, Supplemental Specifications and/or Special Provisions as included in the Proposal.

All Concrete shall be class "A", Type I or II cement, except that Type III cement shall be used in Abutment concrete, unless an acceptable alternate method of obtaining early strength is approved by the ENGINEER.

	St. Exc.	Furn. St. Test Pile	Dr. St. Test Pile	F. St. Pile	Dr. St. Pile
Abt. #1	9.8	50.0	40.0	120.0	100.3
Abt. #2	9.8	50.0	37.5	120.0	113.2
Totals	19.6	100.0	77.5	240.0	221.5

finaled 10-16-75 C.R.

ORIGINAL CONSTRUCTION PLANS

GENERAL DRAWING AND QUANTITES
FOR
100'-0 3/8" COMPOSITE GIRDER BRIDGE

32'-0" ROADWAY — 10° SKEW R.H.F
OVER SPEARFISH CREEK — SEC. 34-T7N-R2E
STA. 18+32.091 TO 19+32.122 — I 90-1(32)0
STR. NO. 41-091-057 LAWRENCE COUNTY
SOUTH DAKOTA — HS20-44
DEPARTMENT OF HIGHWAYS
JUNE 1970

-X071-

8 OF 10

DESIGNED BY	DRAWN BY	CHECKED BY	APPROVED
	Ed. L.	D. C.	R. H. Lahr, BRIDGE ENGINEER

1974

41-039

STATE OF	PROJECT	SHEET NO.	TOTAL SHEETS
S.D.	IM 0901(163)9	E11	E102

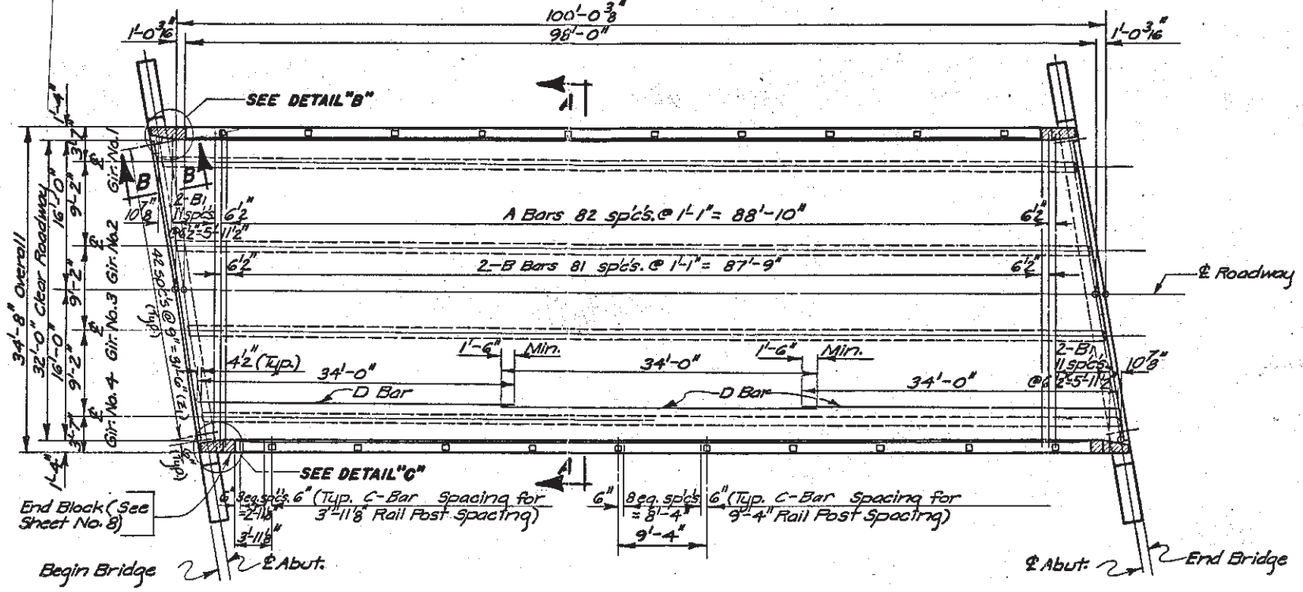

PLAN

REINFORCING SCHEDULE

Mk.	No.	Size	Length	Type
A	83	6	35'-3"	15
B	164	6	34'-3"	Str.
B1	24	6	37'-0"	Str.
C	178	4	5'-9"	T1
D	240	5	34'-0"	Str.
Z1	86	7	3'-6"	Str.

Bending Details

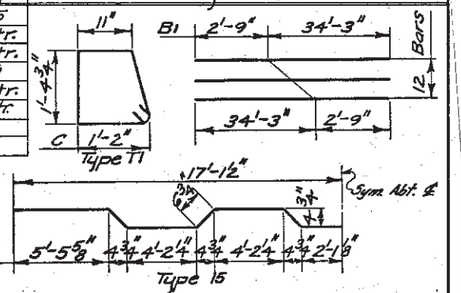

NOTE: All dimensions are out to out of bars.

ESTIMATED QUANTITIES

ITEM	UNIT	QUANTITY
Class "A" Concrete Bridge	Cu. Yd.	93.0
Reinforcement/Conc. Masonry	Lb.	23,975
Structural Steel	Lb.	77,900
Steel Railing Type RT-2A	L.F.	186.4

CONCRETE POURING NOTES—

SLAB CONCRETE—

1. Concrete slab shall be poured continuously provided concrete retarding agents are used and the contractor has demonstrated capacity for such continuous operations.
2. Curbs shall be poured after all the slab has been poured.

ABUTMENT CONCRETE—

1. Abutment concrete shall be placed at a time when a relatively stable temperature can be expected, as directed by the ENGINEER. This may require placing concrete at a time other than during the normal working day.
2. It will be necessary to secure the form work to the girders so that the forms will move longitudinally with the girders.
3. The girders shall be braced near Abutment end to prevent transverse movement during concrete placing.
4. Type III cement shall be used in Abutment concrete, unless acceptable alternate method of obtaining early strength is approved by the ENGINEER.

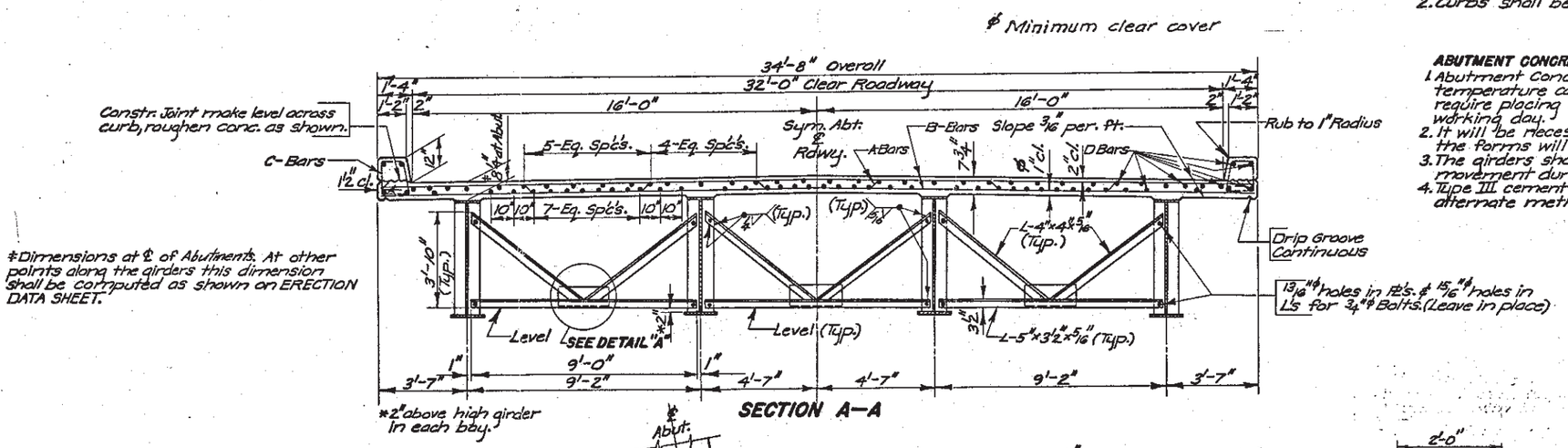

SECTION A—A

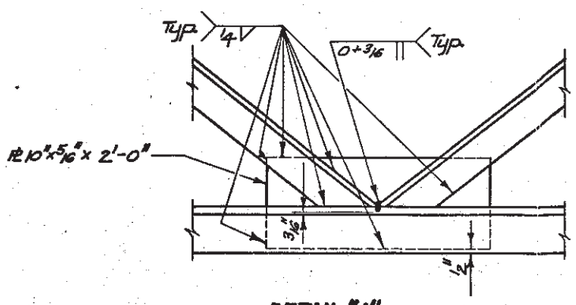

DETAIL "A"

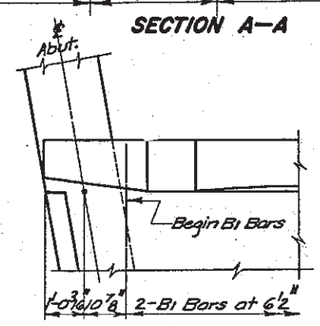

DETAIL "B"

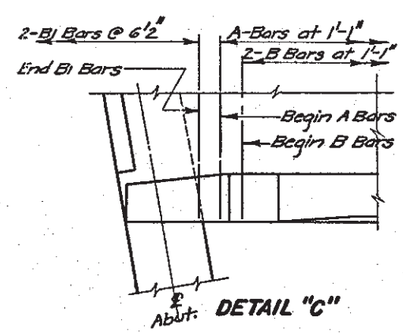

DETAIL "C"

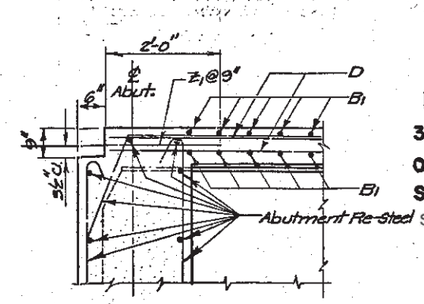

SEC. B—B

ORIGINAL CONSTRUCTION PLANS

SUPERSTRUCTURE DETAILS
FOR
100'-0 3/8" COMPOSITE GIRDER BRIDGE

32'-0" ROADWAY — 10° SKEW R.H.F.
OVER SPEARFISH CREEK — SEC. 34-T7N-R2E
STA. 18+32.091 TO 19+32.122 — I 90-1 (32)0
STR. NO. 41-091-057 LAWRENCE COUNTY
SOUTH DAKOTA HS20-44
DEPARTMENT OF HIGHWAYS
JUNE 1970

DESIGNED BY	DRAWN BY	CHECKED BY	APPROVED
	W.C.P.	M.G.P.	BRIDGE ENGINEER

41-039

STATE OF	PROJECT	SHEET NO.	TOTAL SHEETS
S.D.	IM 0901(163)9	E12	E102

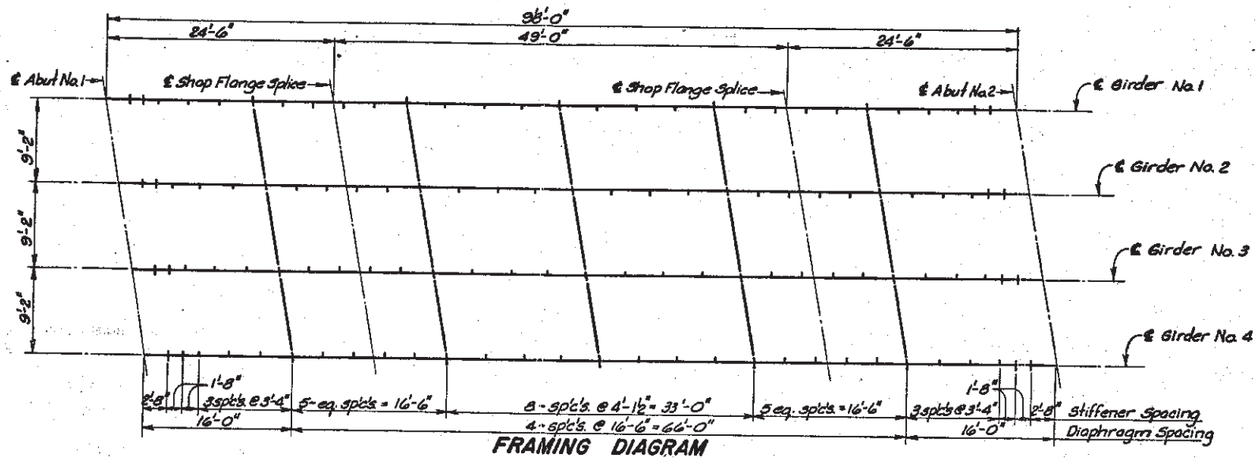

FRAMING DIAGRAM

SUPERSTRUCTURE NOTES—

1. Design Specifications: A.A.S.H.O. Specifications for Highway Bridges 1969, with interim Specifications for 1970 and 1971.
2. Design Loading: HS20-44 A.A.S.H.O.
3. Unit Stresses: Reinforcing Steel, fs = 20,000 p.s.i.
   Slab Concrete, fc = 4,000 p.s.i. n = 8, fc = 1950 p.s.i.
4. Structural Steel shall conform to ASTM-A36 Steel except flange plates between flange splices shall be A441 Steel. Material less than 4" thick may be A.S.T.M.-A570, Grade D.
5. Cost of welding shall be included in the unit price bid for Structural Steel.
6. All reinforcing steel shall conform to ASTM Specifications A615, Grade 40.
7. All exposed concrete edges shall be chamfered ¾" unless otherwise noted.
8. Bolts left in place at diaphragms shall be included in the structural steel quantity for payment.
9. The cost of painting shall be included in the unit price bid for Structural Steel.
10. Fillet welds shall be subject to magnetic partical inspection as provided in the Special Provisions.
11. Structural Steel shall be painted with one shop coat of Red Lead Paint (A.A.S.H.O. designation M72 Type I) or Red Lead Iron Oxide Paint (A.A.S.H.O. designation M72 Type III) and one field coat of gray paint followed by a coat of green paint.
12. All butt welded flange splices shall be radiographically or ultrasonically inspected as provided in the Special Provisions.

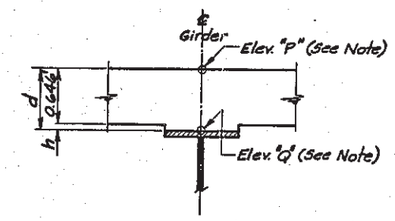

TABLE OF SLAB FORM ELEVATIONS AND COMPUTATIONS

		0	1	2	3	4	5	6	7	8	9	10
Girder No.1	Elev. "P"	3497.326	3497.631	3497.944	3498.259	3498.572	3498.880	3499.183	3499.481	3499.776	3500.075	3500.381
	(-) Elev. "Q"											
	(=) d											
	(-) 0.646											
	(=) h											
Girder No.2	Elev. "P"	3497.507	3497.814	3498.129	3498.447	3498.763	3499.074	3499.379	3499.680	3499.978	3500.279	3500.588
	(-) Elev. "Q"											
	(=) d											
	(-) 0.646											
	(=) h											
Girder No.3	Elev. "P"	3497.545	3497.854	3498.173	3498.493	3498.811	3499.126	3499.433	3499.736	3500.037	3500.340	3500.652
	(-) Elev. "Q"											
	(=) d											
	(-) 0.646											
	(=) h											
Girder No.4	Elev. "P"	3497.440	3497.752	3498.073	3498.396	3498.717	3499.033	3499.344	3499.650	3499.953	3500.269	3500.574
	(-) Elev. "Q"											
	(=) d											
	(-) 0.646											
	(=) h											

NOTE—

This table contains the necessary information to determine the depth of concrete, in feet, over the girders at the points shown. All calculations can be carried in the space provided. Elevation "P" is the elevation of the top of slab form before any concrete has been poured. This elevation includes correction for vertical curve and deflection due to all D.L. above girder. Elevation "Q" is a field measured elevation taken on top of girders at points shown. This elevation must be taken after girder erection is completed, but prior to placing any of the concrete. Girders shall not be supported by construction shoring while elevations are taken.

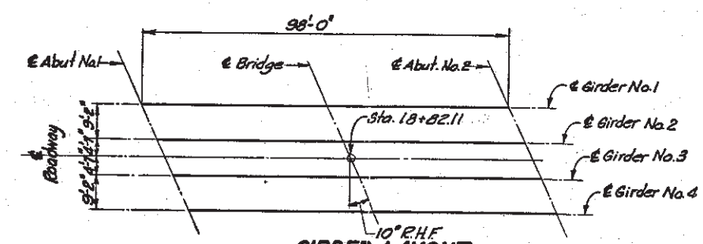

GIRDER LAYOUT

GIRDER ERECTION ELEVATIONS & SLOPES

Girder No.	Elevations (Top of Girder) "A"	"B"	Slopes %
1	3496.639	3499.693	3.11684
2	3496.819	3499.900	3.14388
3	3496.857	3499.965	3.17102
4	3496.752	3499.886	3.19816

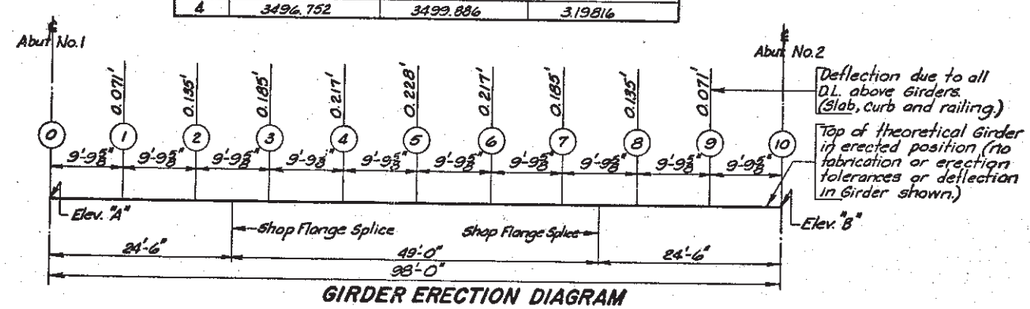

GIRDER ERECTION DIAGRAM

ORIGINAL CONSTRUCTION PLANS

FRAMING DIAGRAM & ERECTION DATA
AND
100'-0⅜" COMPOSITE GIRDER BRIDGE

32'-0" ROADWAY — 10° SKEW R.H.F.
OVER SPEARFISH CREEK — SEC. 34-T7N-R2E
STA. 18+32.091 TO 19+32.122 — I 90-1(32)0
STR. NO. 41-091-057 LAWRENCE COUNTY
SOUTH DAKOTA — HS 20-44
DEPARTMENT OF HIGHWAYS
JUNE 1970

(10) OF (10)

DESIGNED BY	DRAWN BY	CHECKED BY	APPROVED
	M.E.R.	D.P.	D. Hahn, BRIDGE ENGINEER

STATE OF	PROJECT	SHEET NO.	TOTAL SHEETS
S.D.	IM 0901(163)9	E13	E102

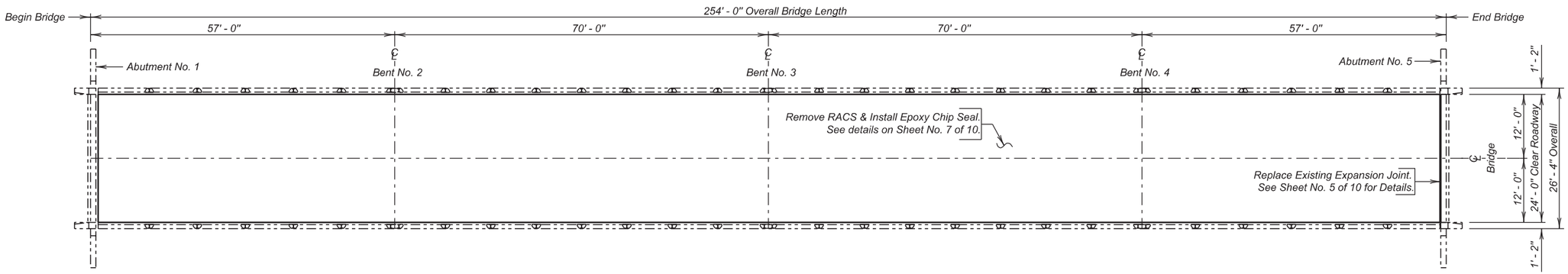

PLAN

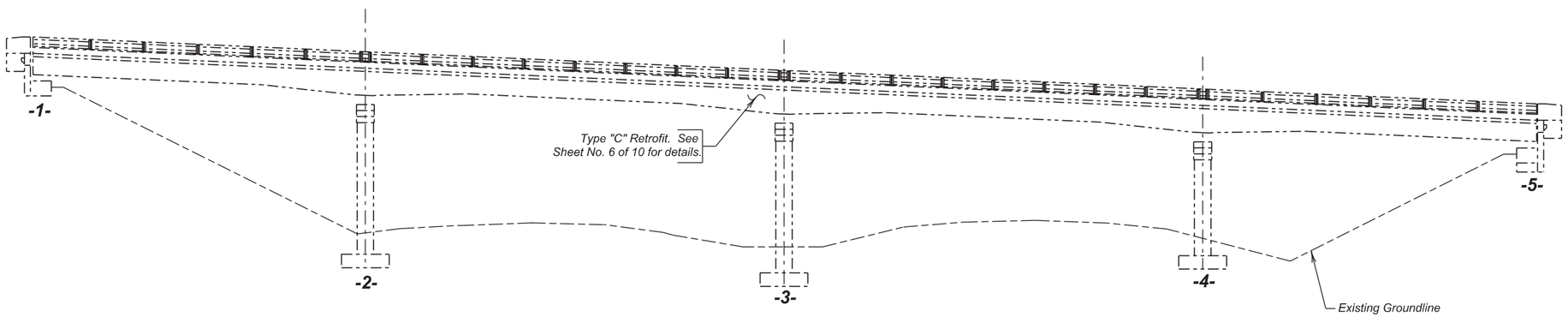

ELEVATION

INDEX OF BRIDGE SHEETS

Sheet No. 1 - Layout for Upgrading
Sheet No. 2 - Estimate of Structure Quantities and Notes
Sheet No. 3 - Notes (Continued)
Sheet No. 4 - Notes (Continued)
Sheet No. 5 - Abutment No. 5 Joint Replacement
Sheet No. 6 - Details of Fatigue Retrofit Type "C"
Sheet No. 7 - Two Coat Epoxy Chip Seal Details
Sheet Nos. 8 thru 10 - Original Construction Plans

LAYOUT FOR UPGRADING

FOR

254' - 0" CONT. COMPOSITE GIRDER BRIDGE

24' - 0" ROADWAY — 0° SKEW
OVER INTERSTATE 90 — SEC. 18-T6N-R4E
STR. NO. 41-185-086 — IM 0901(163)9
PCN 0223

LAWERENCE COUNTY

S. D. DEPT. OF TRANSPORTATION

MARCH 2014

PLANS BY :
OFFICE OF BRIDGE DESIGN, SOUTH DAKOTA DEPARTMENT OF TRANSPORTATION

DESIGNED BY	CK. DES. BY	DRAFTED BY	
KH	TK	JRK	Kevin N. Goeden
LAWR0223	0223KB01		BRIDGE ENGINEER

ESTIMATE OF STRUCTURE QUANTITIES

ITEM NO.	DESCRIPTION	QUANTITY	UNIT
110E0070	Remove Rubberized Asphalt Chip Seal	534.1	SqYd
410E0030	Structural Steel, Miscellaneous	Lump Sum	LS
410E0103	Fatigue Retrofit Steel Girder, Type C	60	Each
410E2600	Membrane Sealant Expansion Joint	26.4	Ft
410E3010	Magnetic Particle Weld Inspection	72	In
412E0100	Bridge Repainting, Class I	Lump Sum	LS
412E0500	Paint Residue Containment	Lump Sum	LS
460E0170	Concrete Patching Material	18.0	CuFt
491E0015	Two Coat Epoxy Bridge Deck Chip Seal	667.6	SqYd
491E0110	Abrasive Blasting of Bridge Deck	667.6	SqYd
491E0120	Bridge Deck Grinding	667.6	SqYd
491E0130	Concrete Removal, Class A	4.0	SqYd
491E0140	Concrete Removal, Class B	4.0	SqYd

SPECIFICATIONS

1. Design Specifications: AASHTO Standard Specifications for Highway Bridges 17th Edition using Working Stress Design.

2. Construction Specifications: South Dakota Standard Specifications for Roads and Bridges, 2004 Edition and Required Provisions, Supplemental Specifications and/or Special Provisions as included in the Proposal.

3. All Welding and Welding Inspection shall be in conformance with the AASHTO/AWS Bridge Welding Code D1.5M/D1.5:2010 unless otherwise noted in this plan set.

DETAILS AND DIMENSIONS OF EXISTING BRIDGE

All details and dimensions of the existing bridge, contained in these plans, are based on the original construction plans and shop plans. It is the Contractor's responsibility to inspect and verify the actual field conditions and any necessary as-built dimensions affecting the satisfactory completion of the work required for this project.

SCOPE OF BRIDGE WORK & SEQUENCE OF OPERATIONS

All work on this structure shall be accomplished with the traffic control shown elsewhere in the plans. Alternate sequence of operations may be submitted by the contractor for approval by the engineer a minimum of two weeks prior to the preconstruction meeting.

1. Remove the rubberized asphalt chip seal, perform bridge deck grinding and repair the bridge deck by removing all loose and delaminated concrete from the bridge deck surface for the first and second phase of construction.

2. Modify the existing joint at Abutment No. 5 by removing steel end dams for the first phase of construction.

3. Place Membrane Sealant Expansion Joint in the existing armor angle at Abutment No. 5 for the first phase of construction.

4. Clean the bridge deck surface with abrasive blasting for the first phase of construction.

5. Place a Two Coat Epoxy Bridge Deck Chip Seal for the first phase of construction.

6. Switch traffic and repeat steps 2 through 5 for the second phase of construction.

7. Modify the existing diaphragm to bottom flange connection by completing the type C retrofit.

8. Paint all work affected areas as stated in the notes.

GENERAL CONSTRUCTION NOTES

1. All mild reinforcing steel shall conform to ASTM A615, Grade 60.

2. All exposed concrete corners and edges shall be chamfered 3/4" unless noted otherwise in the plans. Match existing chamfer if the existing chamfer differs.

3. Use 2" clear cover on all reinforcing steel except as shown otherwise.

4. Surfaces of fresh concrete at construction joints shall be rough floated sufficiently to consolidate the surface. All construction joints shall be cleaned of surface laitance, curing compounds and other foreign materials prior to placing fresh concrete against the joint.

MEMBRANE SEALANT EXPANSION JOINT

1. All new structural steel shall conform to ASTM A709, Grade 36.

2. Install all membrane sealant expansion joints at the plan shown locations in conformance to the following notes.

3. The Membrane Sealant shall be one of the membrane sealant types from the approved product list for Membrane Sealant Expansion Joints.

4. The manufacturer shall supply the membrane sealant in packaging that precompresses the membrane sealant. The precompressed dimension shall be as recommended by the sealant manufacturer to provide a water tight seal throughout a joint movement range of + 25% (minimum) from the specified joint opening dimension. In no case shall the precompressed dimension exceed 75% of the joint opening width. The foam sealant shall be slowly self-expanding to permit workers ample time to install the membrane sealant before the membrane sealant exceeds the joint opening width.

5. The membrane sealant shall be supplied in pieces 5 feet in length or longer. The foam sealant shall be ultra-violet and ozone resistant.

6. The bonding adhesive used to attach the membrane sealant to the adjacent steel shall be approved by the membrane sealant manufacturer.

7. Adhesive used to join adjacent pieces of the membrane sealant shall be as recommended by the manufacturer.

8. If Styrofoam filler material is used in the construction, it shall be closed cell and water-tight as approved by the Engineer.

9. The minimum ambient air temperature at the time of joint installation and adhesive curing shall be 40° F.

10. A technical representative of the membrane sealant manufacturer shall be present at the jobsite during installation. The technical representative shall be knowledgeable in the correct procedures for the preparation and installation of the joint material to insure the Contractor installs the joint to the Manufacturers recommendations.

11. The joint opening shall be constant width and shall have smooth vertical sides. Surfaces of material adjacent to the joint shall be at the correct grade and crown as approved by the Engineer.

12. Individual spliced sections shall be installed as per the manufacturers' recommendations. The membrane joint sealant manufacturer shall submit a detailed installation procedure to the Engineer at least 5 days prior to joint installation for his review.

13. Traffic shall not be allowed on the joint for a minimum of 3 hours unless otherwise directed by the Engineer.

14. The Membrane Sealant Expansion Joint will be measured in feet to the nearest one-tenth foot, complete in place. Measurement will be made of the overall horizontal length. The Membrane Sealant Expansion Joint will be paid for at the contract unit price per foot complete in place. Payment for this item shall be full compensation for furnishing all the required materials in place, inclusive of labor, equipment and incidentals necessary to complete the work in accordance with the plans and the foregoing specifications.

FATIGUE RETROFIT – STEEL GIRDER, TYPE "C"

1. This work consists of cleaning and removing paint in the areas where the existing diaphragm stiffeners bear on the bottom flanges of the main girder, welding the existing diaphragm stiffeners to the bottom flanges, and painting the finished welds to match the existing color.

2. Preparation of the base metal prior to welding shall be in accordance with Section 3 of the Bridge Welding Code. Existing paint shall be removed a distance of 4 inches from each side of the weld.

ESTIMATE OF STRUCTURE QUANTITIES AND NOTES

FOR

254' - 0" CONT. COMPOSITE GIRDER BRIDGE

STR. NO. 41-185-086

MARCH 2014

DESIGNED BY	CK. DES. BY	DRAFTED BY	
KH	TK	KH	Kevin N. Goeden
LAWR0223	0223HB02		BRIDGE ENGINEER

FATIGUE RETROFIT – STEEL GIRDER, TYPE "C" (CONTINUED)

3. Preheat will be required. Preheat and interpass temperature requirements shall be in accordance with Section 4.2 of the Bridge Welding Code. The minimum preheat and interpass temperature shall be ***155*** degrees F determined from Annex VIII of the Bridge Welding Code for high restraint conditions. The use of temperature indicating crayons shall be a minimum acceptable method for monitoring preheat and interpass temperatures.

4. SMAW electrode atmospheric exposure requirements shall comply with Section 4.5 of the Bridge Welding Code. Electrodes shall be purchased in hermetically sealed containers. If the container shows evidence of damage, the electrodes shall be dried in a drying oven for at least one hour between 700 and 800 degrees F before they are used. Immediately after opening a hermetically sealed container, or removal from a drying oven, electrodes shall be stored in storage ovens at a temperature of 250 degrees F. Electrodes exposed to the atmosphere upon removal from drying, storage ovens or hermetically sealed containers shall be used within four hours maximum, or redried at 450 to 550 degrees F for two hours minimum. Electrodes exposed to the atmosphere for periods less than four hours may be returned to a storage oven and maintained at a minimum of 250 degrees F for a minimum of four hours before reissue. Electrodes shall be redried no more than one time. Electrodes which have been wet shall not be used.

5. All welds shall be cleaned in accordance with Section 3.11 of the Bridge Welding Code. Completed welds and adjacent areas shall be cleaned of all weld spatter, slag, smoke and heat affected paint.

6. The Contractor shall submit a Welding Procedure Specification on Form III-2 (on page 189 of the Bridge Welding Code) and notify the Department of the Contractor's welding schedule thirty days prior to any Fatigue Retrofit welding.

7. All costs for labor, materials and incidentals necessary to prepare the weld area, complete the weld and provide access to each weld for Nondestructive Testing shall be paid for at the Contract Unit Price bid per each for "Fatigue Retrofit Steel Girder, Type C".

8. Removal of work affected paint and repainting the work affected areas is covered and paid for in the Bridge Repainting and Paint Residue Removal and Containment notes on Sheet No. 4 of 10.

MAGNETIC PARTICLE INSPECTION

1. The Contractor shall be responsible for retaining a qualified Testing Agency to perform magnetic particle inspection (MT) and visual inspection on the fillet welds produced in the field under the payment item "Fatigue Retrofit Steel Girder, Type C". All of the MT and visual inspections shall be performed by an AWS Certified Welding Inspector qualified and certified in conformance with the provisions of AWS QC1. Additionally, personnel performing the Non Destructive testing (NDT) shall be qualified in conformance with the American Society for Nondestructive Testing's (ASNT) Recommended Practice No. SNT-TC-1A, or equivalent, as a NDT Level II inspector. The Testing Agency and inspectors provided shall be subject to the approval of the Bridge Construction Engineer.

2. Twenty percent of the weld locations will be tested using MT. A weld location is defined as 100% of the fillet weld length in one unit of "Fatigue Retrofit Steel Girder, Type C". The MT results shall be reported on Form III-6 in Annex III of the Bridge Welding Code. The MT Inspection shall be performed by the yoke method. The MT Inspection shall be in accordance with Section 6 of the Bridge Welding Code.

3. All of the completed fillet welds in "Fatigue Retrofit Steel Girder, Type C" shall be visually inspected for acceptance by the Testing Agency. The visual inspection shall be in accordance with Section 6 of the Bridge Welding Code. The Testing Agency shall record the locations of the visual inspection and the findings of the visual inspections together with detailed descriptions of all recommended repairs.

4. Based on the results of the Magnetic Particle Inspection and visual inspection, the Bridge Construction Engineer will determine the acceptability of the completed fillet welds and any recommended repairs. Any necessary repairs to the completed welds shall be accomplished in accordance with Chapter 12 of the Bridge Welding Code 2010 Edition. All weld repair procedures, should they be required, shall be approved prior to use by the Bridge Construction Engineer.

5. All costs incurred by the Magnetic Particle Inspection and visual inspection, including all labor, equipment, access provisions and any incidentals necessary to perform the inspection in accordance with these plans shall be incidental to the contract unit price per inch for "Magnetic Particle Weld Inspection".

REMOVE EXISTING RUBBERIZED ASPHALT CHIP SEAL

Remove the Rubberized Asphalt Chip Seal (RACS) from the deck surface in accordance with Section 491 of the Construction Specification. The Contractor has the option of removing the RACS for the full width of roadway instead of in phases. RACS removal will be paid for at the contract unit price per square yard for "Remove Rubberized Asphalt Chip Seal".

REMOVAL OF LOOSE AND DELAMINATED CONCRETE

1. This work consists of preparation of the existing bridge deck for Two Coat Epoxy Bridge Deck Chip Seal by removing and replacing the loose and delaminated concrete.

2. Concrete used to repair the deck surface shall be in accordance with the Concrete Patching Material notes in this set of plans.

3. Concrete Removal on the bridge deck shall be divided into two the following two classes:

   a. Concrete Removal, Class A: Concrete Removal, Class A shall consist of the removal of delaminated and visibly loose concrete and any bituminous patches (when present) from the top of existing bridge deck down to a depth no deeper than the top of the top mat of bridge deck reinforcing steel. When grinding is specified, the Concrete Removal, Class A shall be done after the bridge deck has been ground.

   b. Concrete Removal, Class B: Concrete Removal, Class B areas shall be determined after completion of the Concrete Removal, Class A has been accomplished. Concrete Removal, Class B shall consist of the removal of delaminated and visibly loose concrete that exists below the bottom limits of the Concrete Removal, Class A *(below the top of the top mat of reinforcing steel)*.

4. Concrete Removal shall be by jackhammers and chipping hammers or other methods as approved by the Engineer. Jackhammers and chipping hammers shall be used as follows:

   a. Jackhammers heavier than 30 pounds will not be permitted.

   b. Chipping hammers heavier than 15 pounds will not be permitted for removing concrete below the top of the top mat of reinforcing steel.

   c. Jackhammers and chipping hammers shall not be operated at an angle in excess of 45 degrees measured from the surface of the concrete.

   d. Extreme care shall be taken when using jackhammers and chipping hammers to assure that existing reinforcing steel is not damaged or debonded from the sound concrete.

5. Removal shall begin near the center of the loose or delaminated concrete and shall progress outwardly until the loose or delaminated concrete is removed and sound concrete is encountered such that the amount of concrete removal is minimized.

6. The edges of the resulting areas of removed concrete shall be nearly vertical or slightly tapered inward from the top down to a minimum depth of one inch. If this condition is not able to be achieved with jackhammers or chipping hammers, saw cutting the edges of the removal area may be required to attain satisfactory results.

7. Care shall be taken during concrete removal to not nick, gouge, or in any other way damage the in-place reinforcing steel. Any inadvertent damage to the in-place reinforcing steel shall be brought to the attention of the Bridge Construction Engineer and shall be repaired by the Contractor as directed by the Engineer at no additional cost to the Department.

NOTES (CONTINUED)

FOR

254' - 0" CONT. COMPOSITE GIRDER BRIDGE

STR. NO. 41-185-086

MARCH 2014

DESIGNED BY	CK. DES. BY	DRAFTED BY	
KH	TK	KH	Kevin N. Goeden
LAWR0223	0223HB03		BRIDGE ENGINEER

REMOVAL OF LOOSE AND DELAMINATED CONCRETE (CONTINUED)

8. Concrete Removal, Class A will be measured to the nearest 0.1 foot and the area computed to the nearest 0.1 square yard. Concrete Removal, Class A will be paid for at the contract unit price per square yard. Payment will be full compensation for all labor, equipment, materials, and all incidental work required to remove the specified concrete, concrete sawing, and disposing of removed material.

9. Concrete Removal, Class B will be measured to the nearest 0.1 foot and the area computed to the nearest 0.1 square yard. Concrete Removal, Class B will be paid for at the contract unit price per square yard. Payment will be full compensation for all labor, equipment, materials, and all incidental work required to remove the specified concrete, concrete sawing, and disposing of removed material.

TWO COAT EPOXY BRIDGE DECK CHIP SEAL

The Epoxy Chip Seal shall be applied in accordance with the Special Provision for "Two Coat Epoxy Bridge Deck Chip Seal".

CONCRETE PATCHING MATERIAL

1. Concrete patching material shall be used to repair the deck areas where loose and delaminated concrete was removed.

2. Concrete patching material shall be packaged, dry, rapid-hardening cementitious mortar or concrete materials conforming to the requirements of ASTM C 928, Type R-3 and shall contain no chlorides, magnesium or phosphates.

3. Water used for the concrete patching material shall be in conformance with Section 790 of the Construction Specifications.

4. Upon completion of the concrete removal and immediately prior to placing any concrete patching material into the concrete removal areas, the removal areas shall be thoroughly cleaned of loose and foreign material by abrasive blasting. The surface profile of the area to receive the patching material shall be in accordance with the manufacturer's recommendations. The abrasive blasting shall be to the extent that all surface laitance is removed. Abrasive blast cleaning shall expose the coarse aggregate and remove rust from any exposed reinforcing steel. After abrasive blasting, the surface shall be cleaned by the use of compressed air to the satisfaction of the Engineer. The air compressor used for cleaning shall be equipped with trap devices capable of providing moisture-free and oil-free air at a recommended pressure of 90 psi.

5. The existing surface at the time of placement of the concrete patching material shall be at least 40° F (4° C), measured by a thermometer placed against the concrete surface and covered with an insulating blanket. The concrete patching material shall be mixed and placed in accordance with the manufacturer's technical data sheet. The Contractor shall provide a manufacturer's technical data sheet to the Engineer prior to performing the work. The concrete patching material shall be maintained at or above 45° F (7° C) for at least 72 hours after placement.

6. Immediately after finishing the concrete patching material, the surface of the concrete patching material shall be covered with a double layer of wet burlap. Within one hour of covering with wet burlap, polyethylene sheeting shall be placed on the wet burlap. The surface shall be wet cured for a minimum of 48 hours or in accordance with the manufacturer's recommendations, whichever is more stringent. Following the wet cure, the burlap and polyethylene sheeting shall be removed and the surface allowed to air dry for a minimum of 48 hours after removal of the burlap and polyethylene sheeting before application of the epoxy chip seal is permitted.

7. Concrete Patching Material will be measured to nearest 0.1 cubic feet as determined from the theoretical yield per bag of Concrete Patching Material. Concrete Patching Material will be paid for at the contract unit price per cubic foot. Payment will be full compensation for all labor, equipment, materials, and all incidental work required to abrasive blast clean the removal areas, and furnish, place and cure the concrete patching material within the removal areas.

PAINT RESIDUE REMOVAL AND CONTAINMENT

1. Paint removal on the existing bridge shall be in accordance with Section 412 of the Construction Specification except as modified by these notes.

2. The Contractor shall plan his operations to prevent releases of lead-containing material and other particulate matter into the surrounding air, water, and onto the ground, soil, slope protection, and pavement. The Contractor shall be responsible for any corrective actions should a spill occur.

3. Collect all visible paint particles and blasting residue containing paint at the end of each workday from the work area. Inspect outside the containment and collect any paint particles or blasting residue that escaped the work area. Collect waste material by manual means, vacuum, or another method approved by the Engineer. Do not use air pressure or streaming water to assist in the waste collection process that could disperse the waste material.

4. In the event of a spill or inadvertent release, the Contractor shall immediately stop work, notify the Engineer, and report the release to the South Dakota Department of Environmental and Natural Resources (DENR). The Contractor shall be responsible for completing a spill reporting form and for all costs associated with appropriate corrective actions.

5. The Contractor shall haul and unload the 55 gallon containment drums with paint residue, blasting media, etc. to the SDDOT Maintenance Yard located in Rapid City for temporary storage. All costs associated with this work shall be included in the contract lump sum price for "Paint Residue Containment".

6. If the Contractor elects to use containers other than 55 gallon barrels to hold paint residue, the Contractor shall be responsible for all testing and disposal at a permitted regional landfill. The Contractor shall be responsible for compliance of laws and regulations regarding storage, handling and shipping. Copies of all tests shipping and disposal documents shall be provided to the Office of Bridge Design.

BRIDGE REPAINTING, CLASS I

1. The work affected area described below shall be painted in accordance with Section 412 of the Standard Specifications and in accordance with SSPC Standard PA1.

2. For informational purposes, 54 square feet of structural steel will require painting. The quantity shown includes the following:

   The steel surfaces to be painted are the flanges, webs and bearings in the work affected areas for the girder end modification and weld removal and replacement. The quantity shown is for an area four inches on all sides of the work affected areas.

3. Paint color

   Top Coat – The paint color shall be an approved green color. Prior to ordering the paint, a paint chip of the green color shall be submitted to the Department for color approval.

   Primer Coat – Color shall sharply contrast with the top coat.

NOTES (CONTINUED)

FOR

254' - 0" CONT. COMPOSITE GIRDER BRIDGE

STR. NO. 41-185-086

MARCH 2014

DESIGNED BY	CK. DES. BY	DRAFTED BY	
KH	TK	KH	Kevin N. Goeden
LAWR0223	0223HB04		BRIDGE ENGINEER

STATE OF	PROJECT	SHEET NO.	TOTAL SHEETS
S.D.	IM 0901(163)9	E17	E102

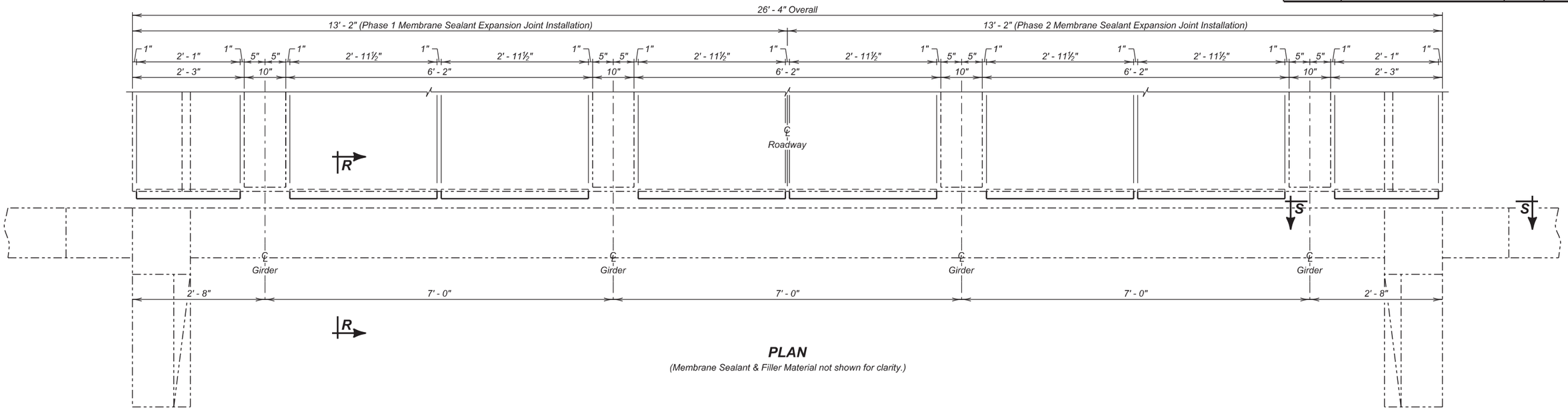

PLAN

(Membrane Sealant & Filler Material not shown for clarity.)

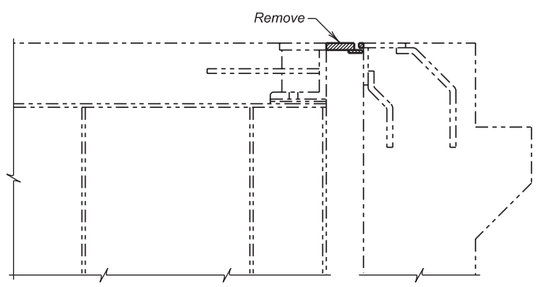

TYPICAL SECTION

(EXISTING)

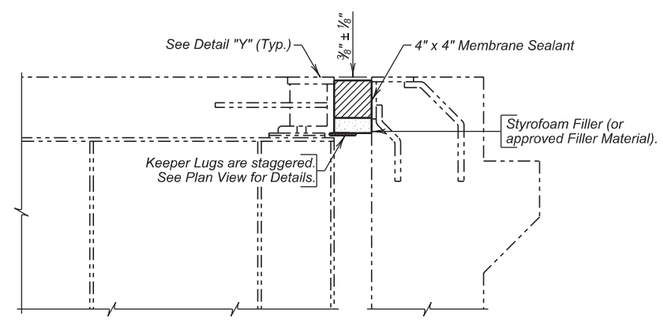

SECTION R - R

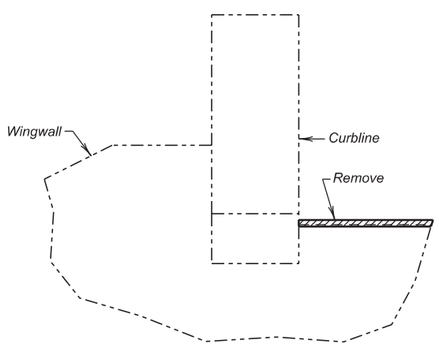

SECTION S - S

(Existing Section showing Removal Limits.)

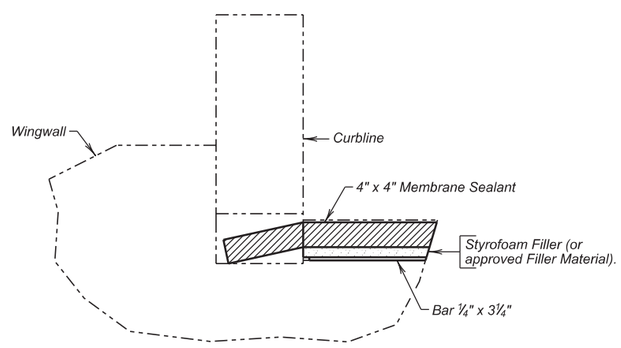

SECTION S - S

(New Construction Shown)

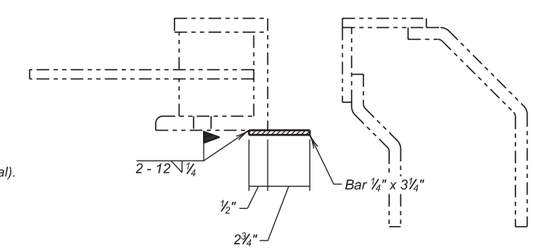

DETAIL "Y"

ESTIMATED QUANTITIES

ITEM	UNIT	QUANTITY	
		Phase I	Phase 2
Membrane Sealant Expansion Joint	Ft	13.2	13.2
Structural Steel, Miscellaneous	LS	Lump Sum	Lump Sum

Items are approximate quantities contained in the above bid item and are for information only.

	PHASE I	PHASE 2
Structural Steel.	30 Lb.	30 Lb.

ABUTMENT NO. 5 JOINT REPLACEMENT

FOR

254' - 0" CONT. COMPOSITE GIRDER BRIDGE

24' - 0" ROADWAY — 0° SKEW

OVER INTERSTATE 90 — SEC. 18-T6N-R4E

STR. NO. 41-185-086 — IM 0901(163)9

LAWERENCE COUNTY

S. D. DEPT. OF TRANSPORTATION

MARCH 2014

DESIGNED BY	CK. DES. BY	DRAFTED BY	
KH	TK	JRK/KH	Kevin N. Goeden BRIDGE ENGINEER
LAWR0223	0223KB05		

STATE OF	PROJECT	SHEET NO.	TOTAL SHEETS
S.D.	IM 0901(163)9	E18	E102

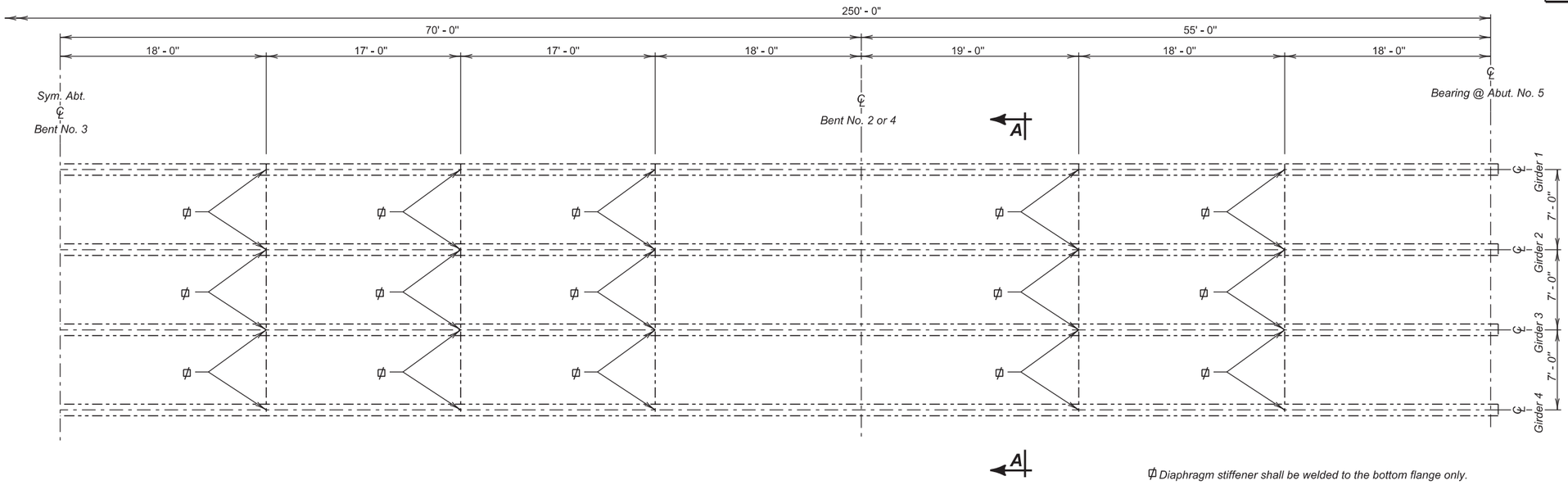

PLAN

(Symmetric about Bent No. 3)

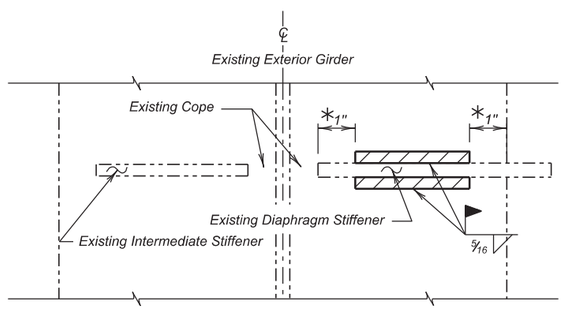

SECTION C - C

(One typical unit of Fatigue Retrofit is shown.)

* No Weld

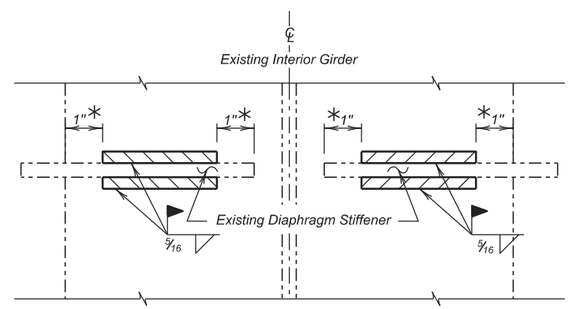

SECTION E - E

(Two typical units of Fatigue Retrofit are shown.)

* No Weld

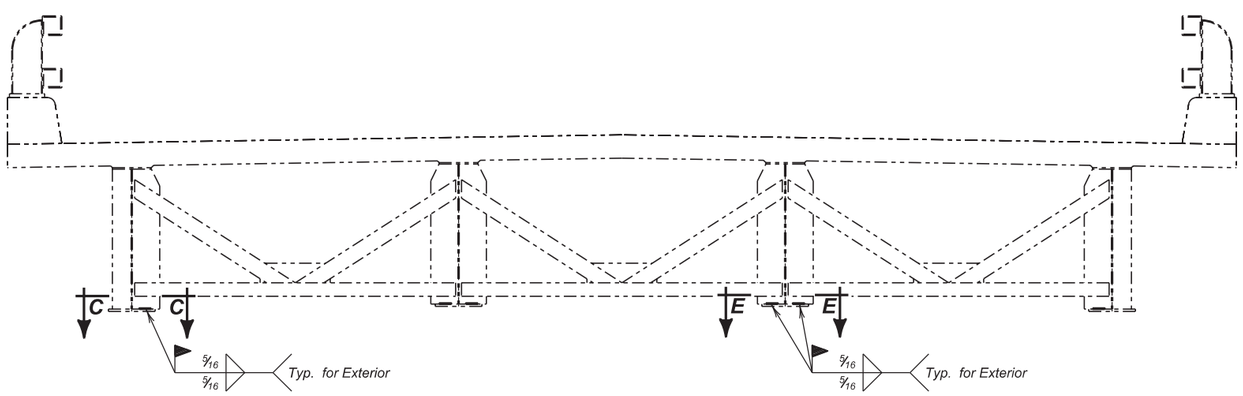

SECTION A - A

ESTIMATED QUANTITIES

ITEM	UNIT	QUANTITY
Fatigue Retrofit Steel Girder, Type C	Each	60
Magnetic Particle Weld Inspection	Inch	72
Bridge Repainting, Class I	LS	Lump Sum
Paint Residue Containment	LS	Lump Sum

NOTE: Welding both sides of one individual stiffener to a flange constitutes one unit of payment on a per each basis.

DETAILS OF FATIGUE RETROFIT TYPE "C"

FOR

254' - 0" CONT. COMPOSITE GIRDER BRIDGE

24' - 0" ROADWAY — 0° SKEW

OVER INTERSTATE 90 — SEC. 18-T6N-R4E

STR. NO. 41-185-086 — IM 0901(163)9

LAWERENCE COUNTY

S. D. DEPT. OF TRANSPORTATION

MARCH 2014

DESIGNED BY	CK. DES. BY	DRAFTED BY	
KH	TK	JRK	Kevin N. Goeden
LAWR0223	0223KB06		BRIDGE ENGINEER

STATE OF	PROJECT	SHEET NO.	TOTAL SHEETS
S.D.	IM 0901(163)9	E19	E102

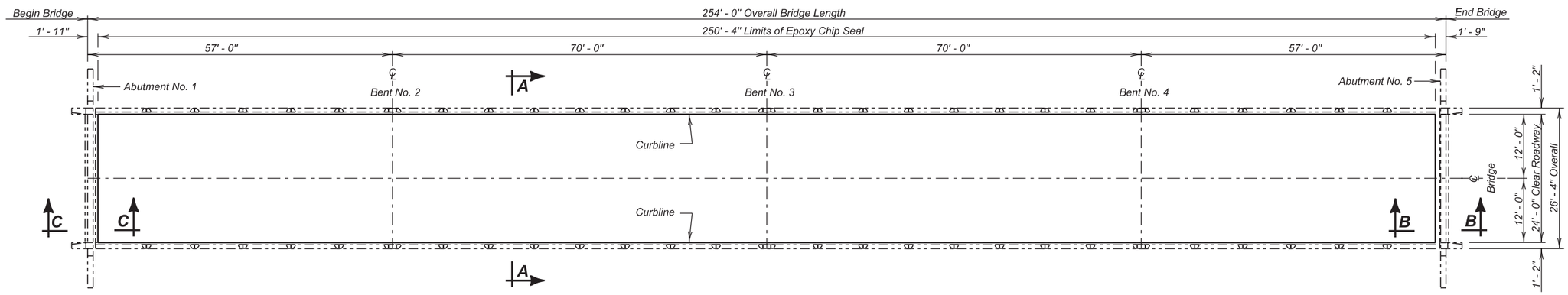

PLAN

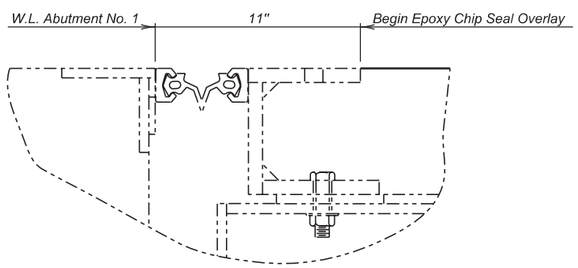

SECTION C - C

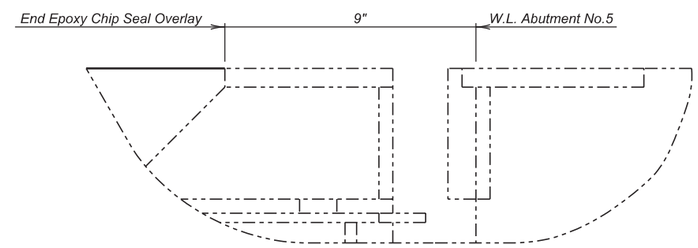

SECTION B - B

ESTIMATED QUANTITIES

	ITEM	UNIT	QUANTITY PHASE 1	QUANTITY PHASE 2
	Two Coat Epoxy Bridge Deck Chip Seal	Sq. Yd.	333.8	333.8
	Abrasive Blasting of Bridge Deck	Sq. Yd.	333.8	333.8
	Bridge Deck Grinding	Sq. Yd.	361.6	306.0
✳	Concrete Patching Material	Cu. Ft.	9.0	9.0
✳	Concrete Removal, Class A	Sq. Yd.	2.0	2.0
✳	Concrete Removal, Class B	Sq. Yd.	2.0	2.0
◊	Remove Rubberized Asphalt Chip Seal	Sq. Yd.	289.3	244.8

NOTE :

✳ Concrete Removal, Class A; Concrete Removal, Class B; and Concrete Patching Material may not be encountered and may be removed from the project at the direction of the Engineer.

◊ Quantity shown is an approximation and is based on a visual examination. Payment for this item will be based on plans quantity.

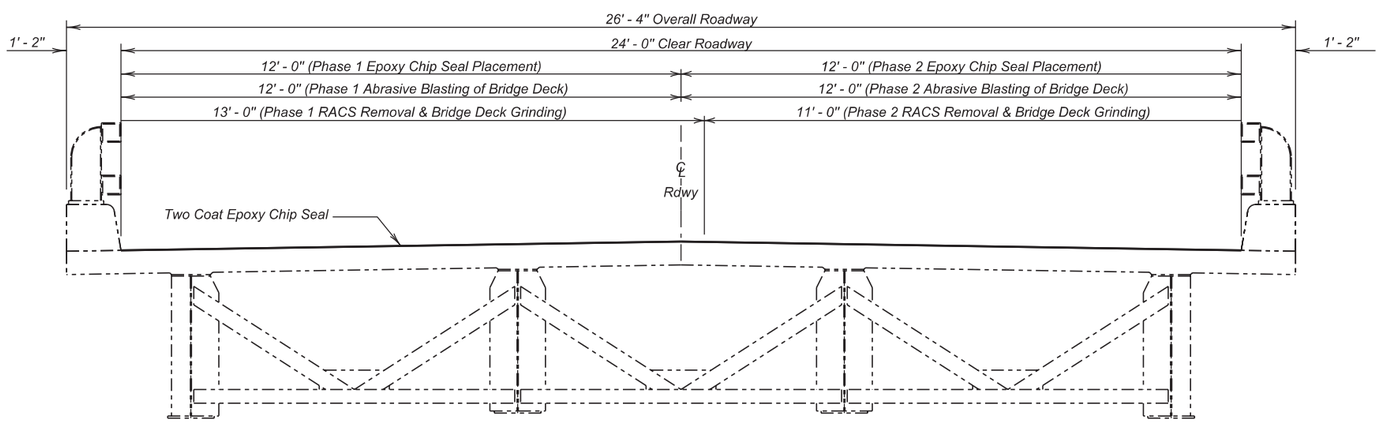

SEC. A - A

TWO COAT EPOXY CHIP SEAL DETAILS

FOR

254' - 0" CONT. COMPOSITE GIRDER BRIDGE

24' - 0" ROADWAY — 0° SKEW

OVER INTERSTATE 90 — SEC. 18-T6N-R4E

STR. NO. 41-185-086 — IM 0901(163)9

LAWERENCE COUNTY

S. D. DEPT. OF TRANSPORTATION

MARCH 2014

DESIGNED BY	CK. DES. BY	DRAFTED BY	
KH	TK	JRK	Kevin N. Goeden
LAWR0223	0223KB07		BRIDGE ENGINEER

STATE OF	PROJECT	SHEET NO.	TOTAL SHEETS
S.D.	IM 0901(163)9	E20	E102

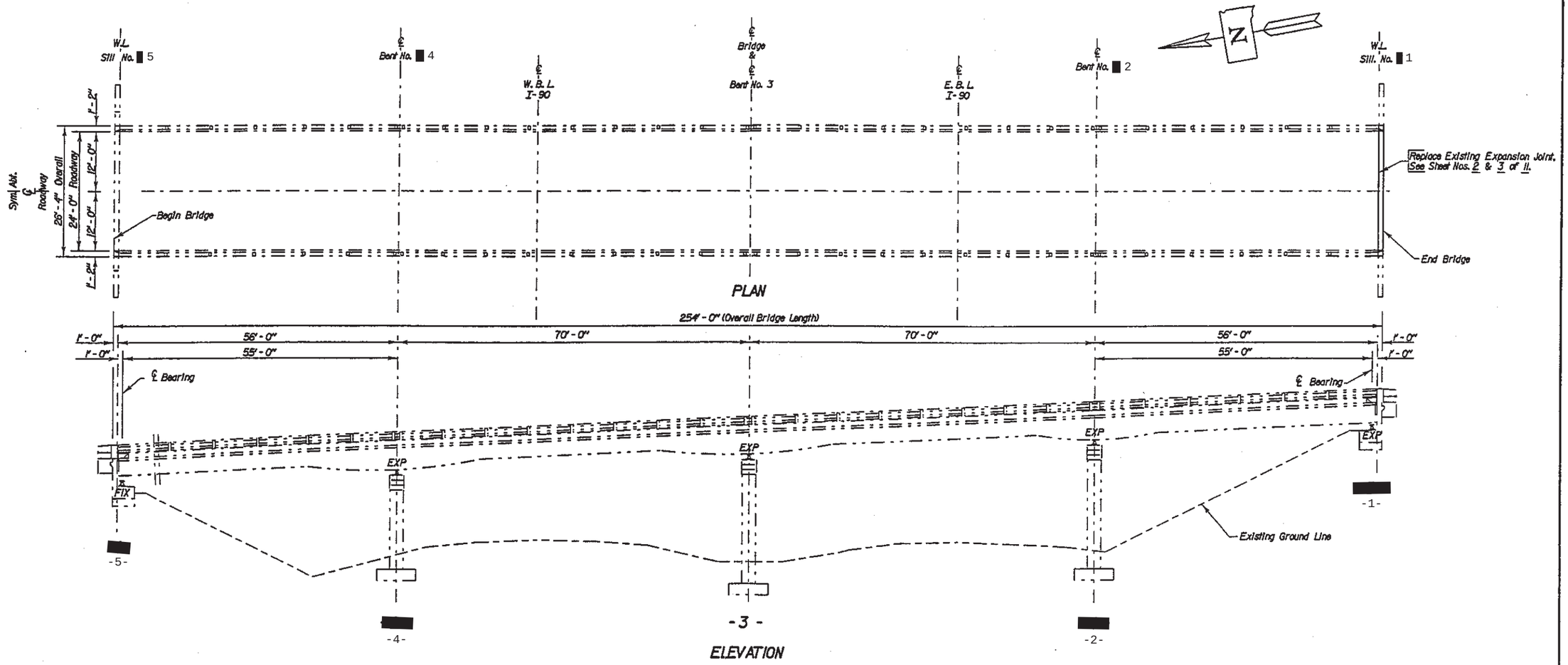

INDEX OF BRIDGE SHEETS-

Sheet No. 1 : Layout for Upgrading
Sheet No. 2 : Replace Expansion Joint at Abutment No.5
Sheet No. 3 : Replace Expansion Joint at Abutment No.5 (Continued)
Sheet Nos. 4 - 11 : Original Construction Plans

ORIGINAL CONSTRUCTION PLANS

LAYOUT FOR UPGRADING

254'-0" CONT. COMP. GIRDER BRIDGE

24'-0" ROADWAY — 0° SKEW
STR. NO. 41-185-086 — SEC. 18-T6N-R4E
OVER INTERSTATE 90 — IM 90-1(00) 12
PCEM 4775

LAWRENCE COUNTY
S. D. DEPT. OF TRANSPORTATION
JANUARY 2000

8 OF 10

-X271-

PLANS BY :
OFFICE OF BRIDGE DESIGN, SOUTH DAKOTA DEPARTMENT OF TRANSPORTATION

DESIGNED BY	DRAWN BY	CHECKED BY	APPROVED
MEL	REM	DPV	BRIDGE ENGINEER
LAWR4775	4775LA01		

STATE OF	PROJECT	SHEET NO.	TOTAL SHEETS
S.D.	IM 0901(163)9	E21	E102

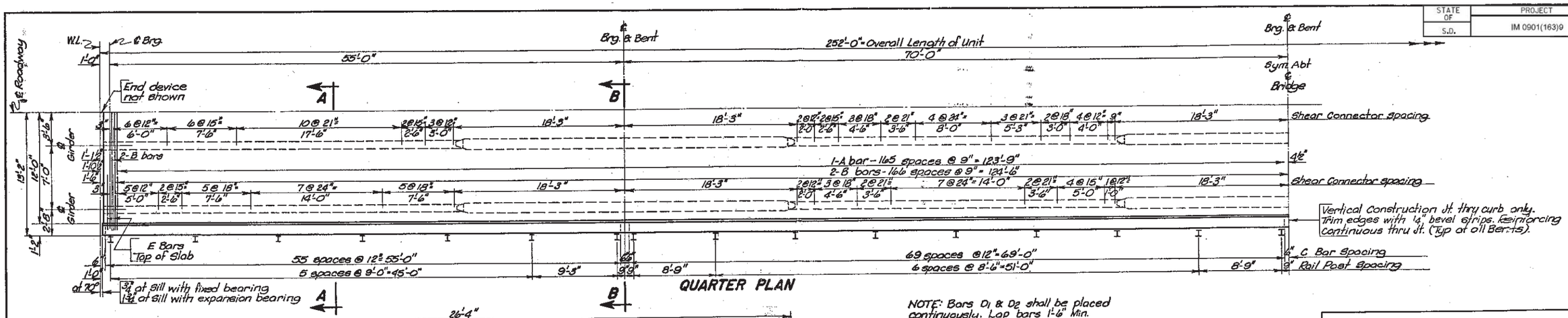

QUARTER PLAN

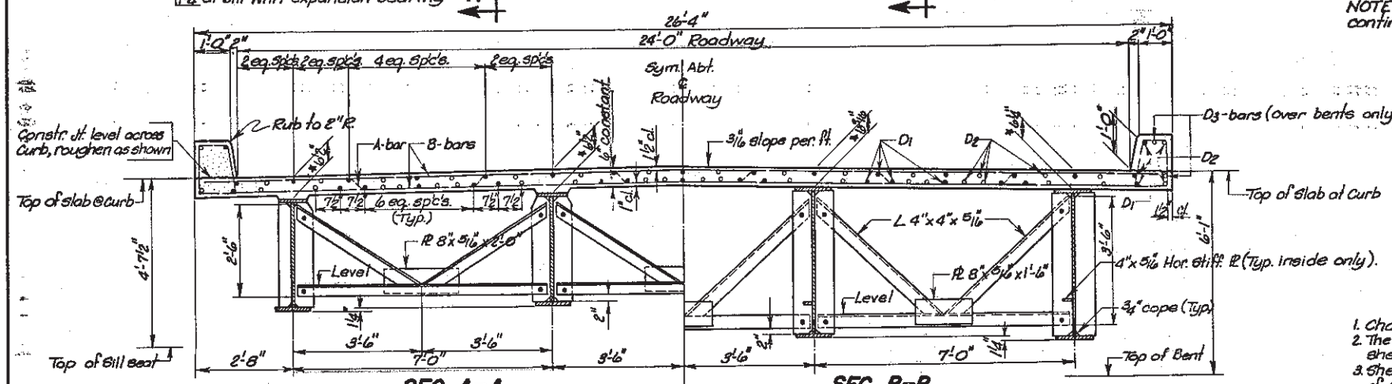

NOTE: Bars D1 & D2 shall be placed continuously. Lap bars 1'-6" Min.

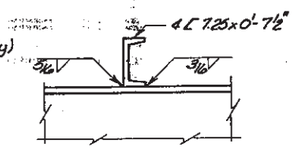

CHANNEL SHEAR CONNECTORS

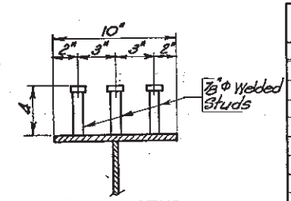

WELDED STUD SHEAR CONNECTORS

DETAIL FOR SHEAR CONNECTORS

1. Channel or welded stud shear connector are spaced as shown on Quarter Plan.
2. The Contractor may substitute a row of 7/8" Φ welded studs for each channel shear connector shown.
3. Shear Connectors will be paid for as structural steel based on the weight of channels, regardless of type of connectors used.
4. Channels shall be placed on girders facing in the directions shown on the girder layout.

REINFORCING SCHEDULE

MK	No.	Size	Length	Type	Bending Details
A	332	5	26'-9"	15	
B	668	5	26'-0"	Str.	
C	504	4	5'-3"	T1	
D1	272	5	32'-9"	Str.	
D2	266	5	37'-3"	Str.	
D3	12	5	18'-0"	Str.	
E	8	6	6'-0"	Str.	

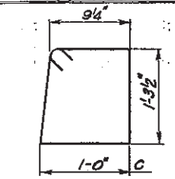

Type T1

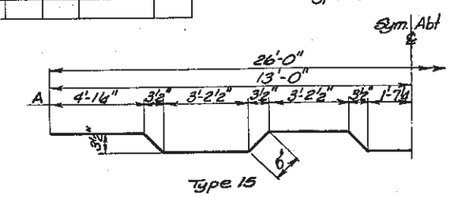

Type 15

NOTE: All dimensions are out to out of bars.

ESTIMATED QUANTITIES

ITEM	UNIT	QUANTITY
Class "A" Concrete	Cu. Yds.	1462
Reinforcing Steel	Lbs.	49,070
Structural Steel	Lbs.	109,900
Railing	Lin. Ft.	508

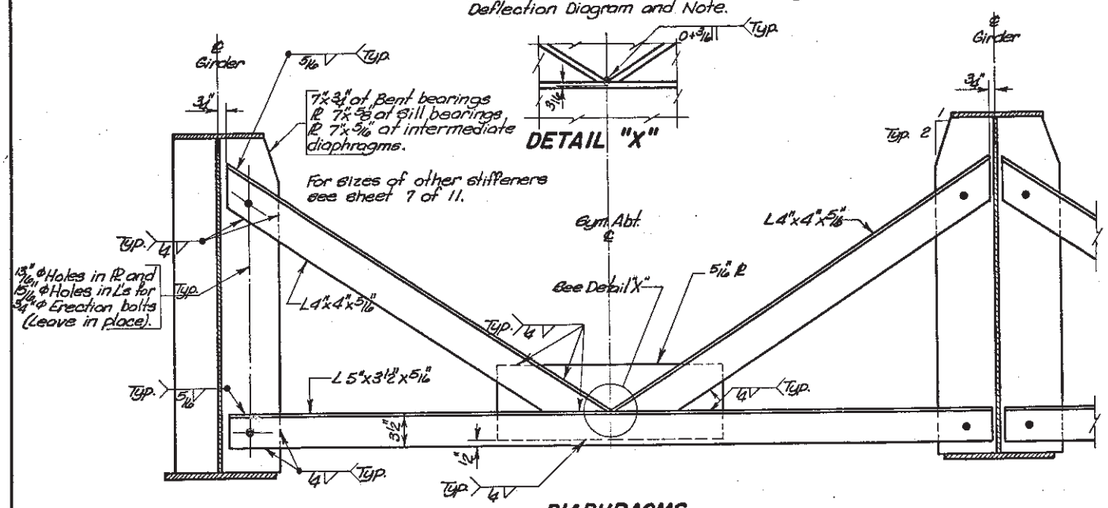

DIAPHRAGMS

* Dimensions at ℄ of bearings. At interior points dimensions must be corrected according to D.L. Deflection Diagram and Note.

CONCRETE SLAB POURING NOTES—

1. Concrete slab may be poured continuous, provided approved concrete retarders are used and the contractor has demonstrated capacity for such continuous operations.
2. Transverse construction joints are permitted in the slab and shall be positioned near the girder field splices or at approximately the 1/4 points from the center line of bents.
3. If tranverse construction joints are used, the contractor shall submit to the Bridge Section for approval, plans and details of proposed construction Joint as well as proposed sequence of pouring.
4. Curbs shall be poured after all of the slab has been poured.
5. When a liquid polysulfide polymer, two componet compound joint sealer is used, the bonding surfaces of the concrete and or metal shall be cleaned and be free of paint according to recommendations of the manufacturer.

SUPERSTRUCTURE NOTES—

1. Design Specifications: AASHO Specification for Highway Bridges, 1961 with Interim Specifications for 1961, 1962, 1963 and 1964.
2. Design Loading: HS20-44 AASHO
3. Structural steel shall conform to A.S.T.M.-A36 steel. Steel produced under other specifications, but shown to posses, the chemical and physical properties of A36 steel will be accepted for use where the latter is specified.
4. Steel for pins shall conform to structural steel A.S.T.M. -A235 or equivalent as specified in the A.A.S.H.O. Standard Specifications for Highway Bridges under Article 1.4.2.
5. Structural steel for bearing shall conform to A.S.T.M. -A36.
6. All reinforcing steel bars shall conform to A.S.T.M. Specifications A305 and A15, Intermediate Grade.
7. Structural steel shall be painted with one shop coat of Red Lead Paint (A.A.S.H.O. designation M72 Type I) or Red Lead Iron Oxide Paint (A.A.S.H.O. designation M72 Type III) and shall be field painted with one coat of gray paint, followed by a coat of green paint in accordance with special Provisions. The cost of painting shall be included in the unit price bid for Structural Steel.
8. The cost of canvas, and Red Lead or preformed fabric pads, under bearing plates shall be included in the unit price bid for Structural Steel.
9. All exposed concrete edges shall be chamfered 1" unless otherwise noted.
10. The weight of erection bolts left in place at diaphrams shall be included in the structural steel quantity for payment.
11. Butt welded girder splices, shop or field, shall radiographically inspected.
12. Fillet welds shall be subjected to magnetic particle inspection as specified in the supplemental specifications for steel structures, dated June 29, 1965.
13. When the contractor elects to use the alternate bolted girder splice, the weight of necessary bolts and plates will not be measured for payment.
14. Joint sealer for bridges shall be approved liquid, polysulfide polymer, two component compound, suitable for sealing vertical and horizontal joints in concrete and metal. The cost of joint sealer shall be included in the unit price bid for class "A" concrete.
15. See Railing sheet for details of rail and curb.
16. All swedge Bolts shall be as shown on the substructure sheets and are listed as structural steel in the superstructure quantities.
17. Expansion shoe shall be set vertical at 70°F.
18. Beams do not require mill cambering.

ORIGINAL CONSTRUCTION PLANS

SUPERSTUCTURE DETAILS
FOR
254'-0" CONT. COMP. GIRDER VIADUCT
24'-0" ROADWAY

OVER I.S. NO.90 STA.185+95.52 E.B.L. SEC.18-T6N-R4E
STA.72+63.37 TO 75+17.37 I 90-1(15)19
STR. NO. 41-185-086 LAWRENCE COUNTY
SOUTH DAKOTA HS20-44
DEPARTMENT OF HIGHWAYS
AUG. 1966 (9) OF (10)

DESIGNED BY	DRAWN BY	CHECKED BY	APPROVED
	M.E.R.	A.S.	BRIDGE ENGINEER

41002

STATE OF	PROJECT	SHEET NO.	TOTAL SHEETS
S.D.	IM 0901(163)9	E22	E102

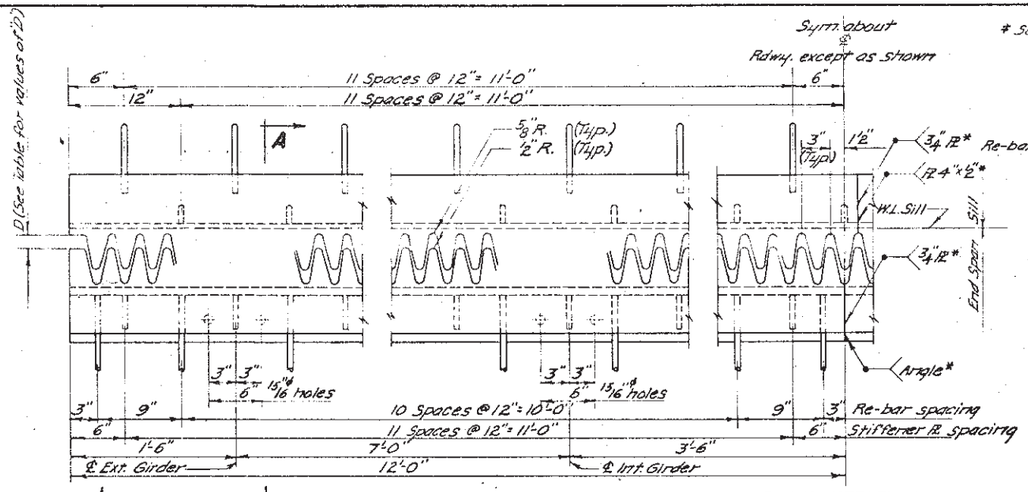

A HALF PLAN OF EXPANSION AT SILL (AT EXPANSION BEARING)

* See Table for values of "D"

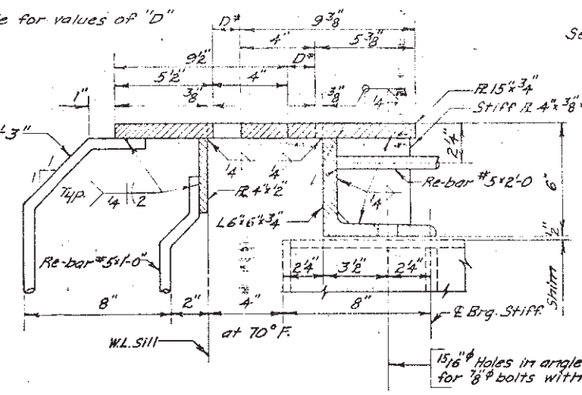

SECTION A-A

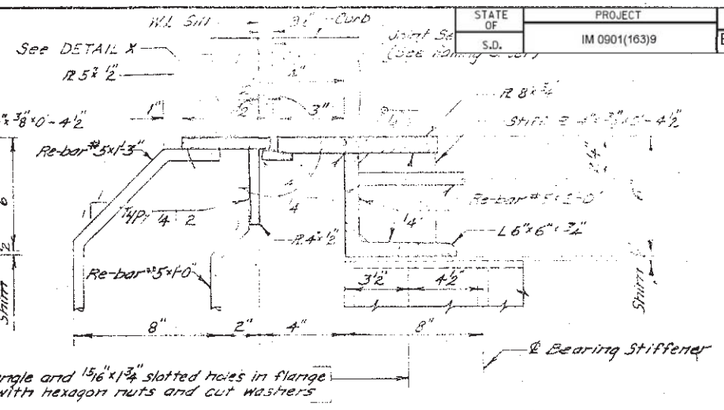

SECTION B-B

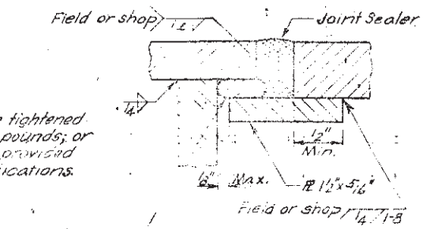

DETAIL X

* WELDING NOTE: The two shop fabricated pieces of an expansion device or armored joint shall be joined in the field by butt welds in accordance with the latest Specifications of the American Welding Society. Type of welds shall be shown on shop plans for the Bridge Department's approval.

NOTE: 3/4" high strength bearing (interference-body) bolts shall be tightened to a minimum tension of 28,400 pounds; or by "turn of the nut" method as provided in Sec. 2.10.20 of AASHTO specifications.

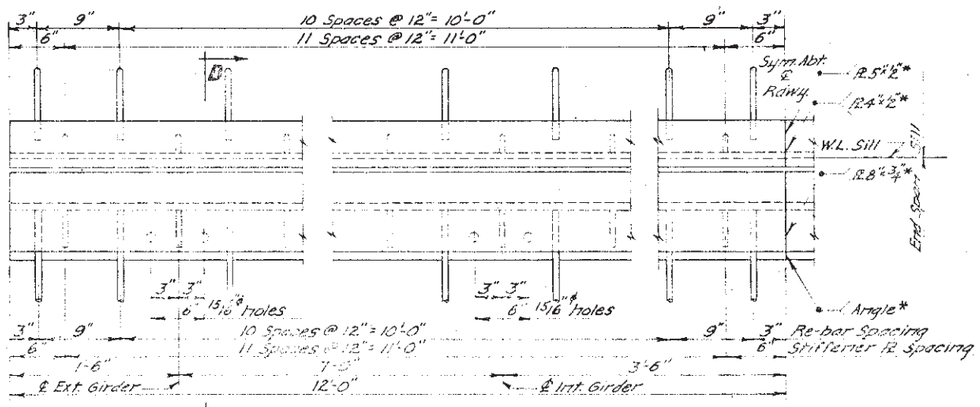

B HALF PLAN OF ARMORED JOINT AT SILL (AT FIXED BEARING)

NOTE: Holes for the 3/4" ϕ High Strength bearing bolts shall be sub-punched 11/16" ϕ and, after assembling, reamed to 13/16" ϕ and match marked.

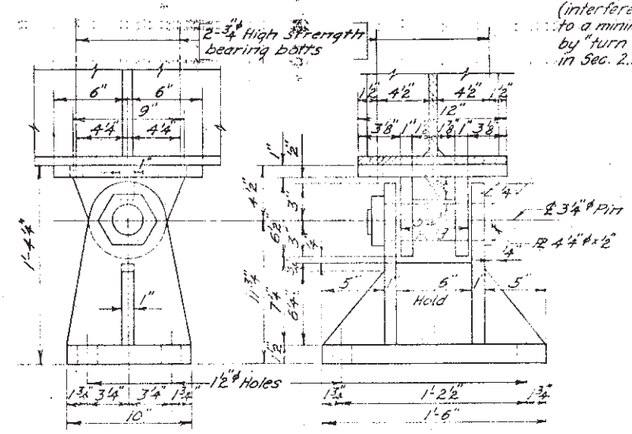

INTERIOR FIXED SHOE

NOTE: Except as shown, use 5/16" fillet welds in fabrication of Shoes and Rockers. Surfaces in contact shall be milled to bear before welding.

SHIM

NOTE: Provide 32"x14" thick, 32" x 6" thick Shims.

TABLE FOR VALUES OF "D"			
Location of Fixed Shoe at Sill #1	Approximate Temp.	Stiff. Dim. "D" at Sill #5	
At Sill #1		-30°F	D = 3 1/2"
		0°F	D = 2 1/2"
		+20°F	D = 2"
At Bent #2	D = 3 3/8"	[illegible]	D = 3"
	D = 2"	-30°F	D = 3"
	D = 1 1/4"	0°F	D = 3"
		+20°F	D = 3 1/4"
At Bent #3	D = 3 3/4"	[illegible]	D = 2 1/2"
	D = 2 1/2"	-30°F	D = 2"
	D = 1 1/4"	+20°F	D = 1"
At Bent #4	D = 3"	-30°F	D = 2 3/16"
	D = 1 1/2"	0°F	D = 1 1/2"
	D = 3/4"	+20°F	D = 1 1/4"
At Sill #5	D = 3 1/2"	-30°F	Armored Joint
	D = 1 1/2"	0°F	
	D = 0"	+20°F	

℄ See General Drawing for position of Fixed Shoes.

NOTE: The Expansion Device or Armored Joint shall be completely shop assembled, adjusted to the position it will take in the structure and the pieces match marked for field erection. The top surface of the expansion device or armored joint shall conform to the roadway crown.

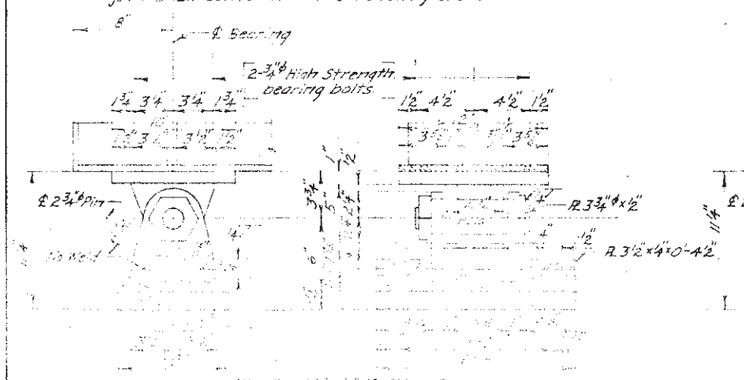

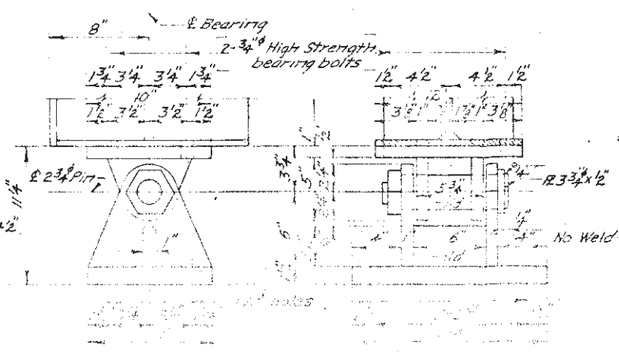

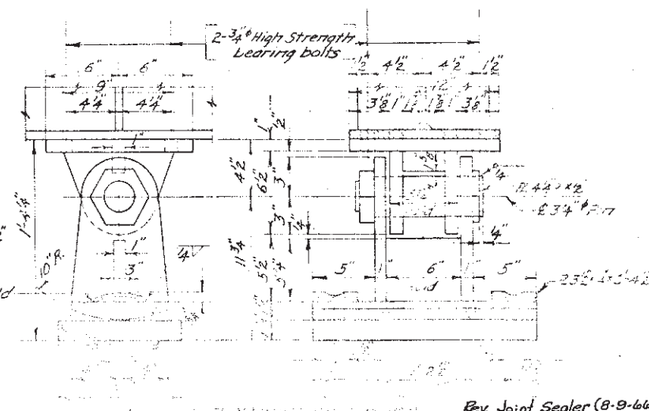

Rev. Joint Sealer (8-9-66)

ORIGINAL CONSTRUCTION PLANS

SUPERSTRUCTURE DETAILS
FOR
STANDARD 250'-0" CONTINUOUS
WELDED PLATE GIRDER UNIT
COMPOSITE SECTION

24'-0" ROADWAY — 4-SPAN UNIT

STR. NO. 41-185-086 SOUTH DAKOTA
DEPARTMENT OF HIGHWAYS

STATE OF	PROJECT	SHEET NO.	TOTAL SHEETS
S.D.	IM 0901(163)9	E23	E102

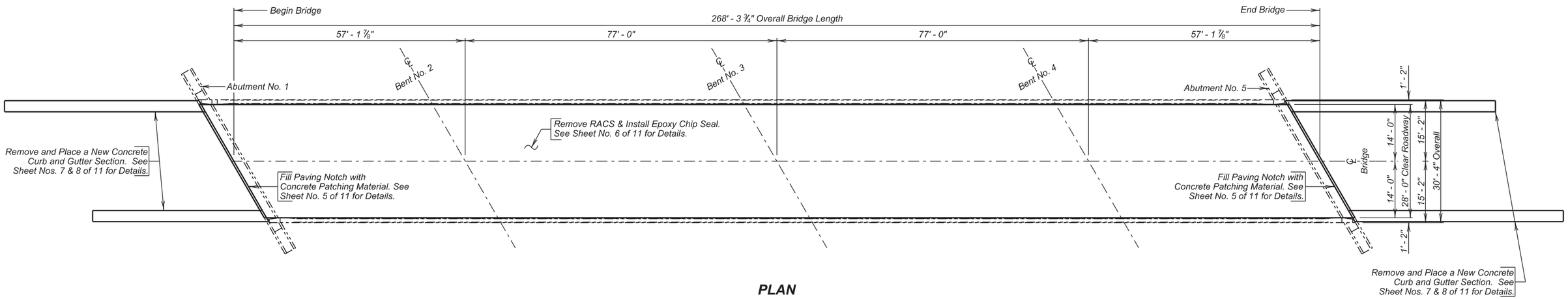

PLAN

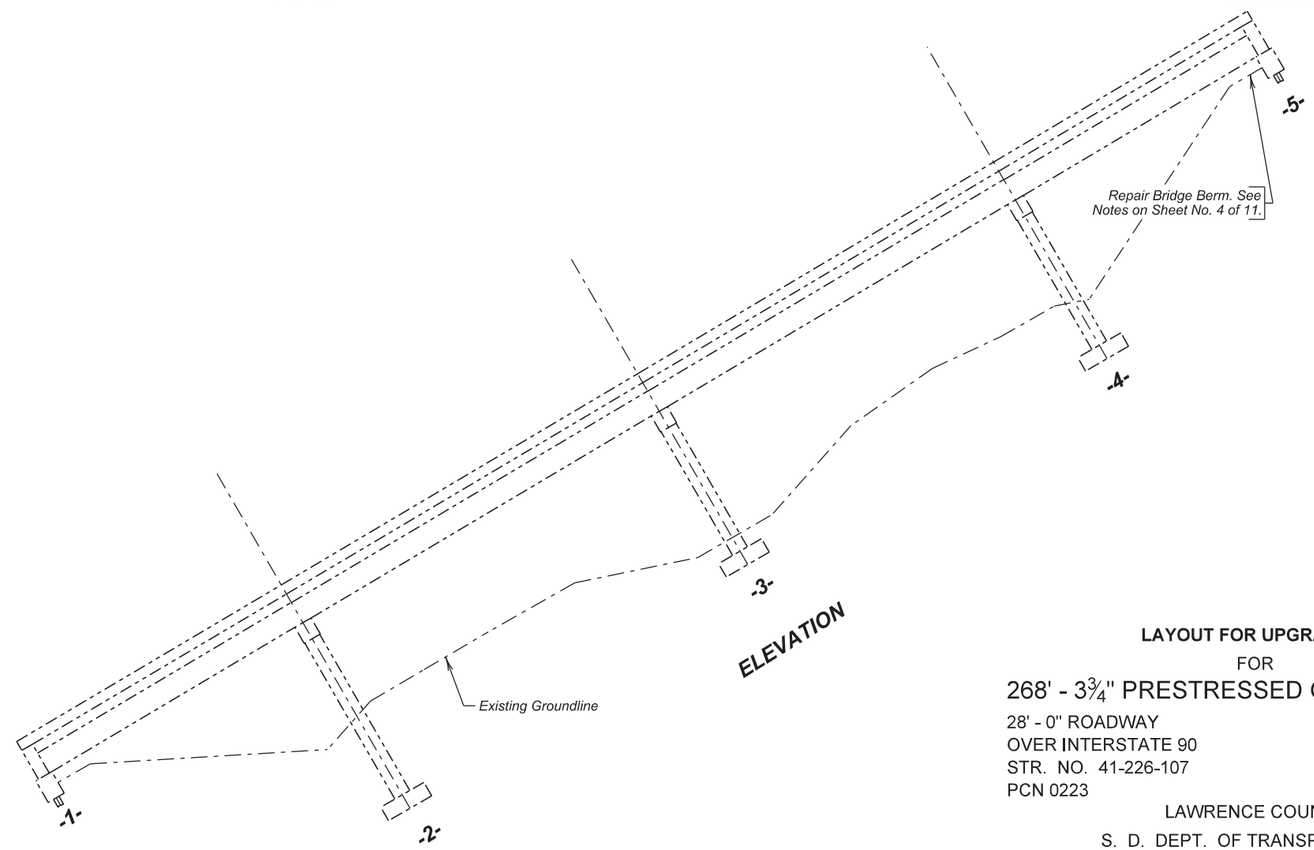

ELEVATION

INDEX OF BRIDGE SHEETS

Sheet No. 1 - Layout for Upgrading
Sheet No. 2 - Estimate of Structure Quantities and Notes
Sheet No. 3 - Notes (Continued)
Sheet No. 4 - Notes (Continued)
Sheet No. 5 - Paving Notch Reinforcement
Sheet No. 6 - Two Coat Epoxy Chip Seal Details
Sheet No. 7 - Gutter Extension Layout & Details
Sheet No. 8 - Gutter Extension Layout & Details (Continued)
Sheet No. 9-11 - Original Construction Plans

LAYOUT FOR UPGRADING

FOR

268' - 3¾" PRESTRESSED GIRDER BRIDGE

28' - 0" ROADWAY — 30° SKEW RHF
OVER INTERSTATE 90 — SEC. 26-T6N-R4E
STR. NO. 41-226-107 — IM 0901(163)9
PCN 0223

LAWRENCE COUNTY

S. D. DEPT. OF TRANSPORTATION

JANUARY 2014

1 OF 11

PLANS BY :
OFFICE OF BRIDGE DESIGN, SOUTH DAKOTA DEPARTMENT OF TRANSPORTATION

DESIGNED BY	CK. DES. BY	DRAFTED BY	
KH	TK	JRK	Kevin N. Goeden
LAWR0223	0223KC01		BRIDGE ENGINEER

ESTIMATE OF STRUCTURE QUANTITIES

ITEM NO.	DESCRIPTION	QUANTITY	UNIT
110E0070	Remove Rubberized Asphalt Chip Seal	350.3	SqYd
120E3120	Bridge Berm Repair	1	Each
460E0070	Class A45 Concrete, Bridge Repair	10.9	CuYd
460E0170	Concrete Patching Material	40.8	CuFt
460E0300	Breakout Structural Concrete	1.0	CuYd
460E0380	Install Dowel in Concrete	28	Each
462E0200	Controlled Density Fill	4.0	CuYd
480E0200	Epoxy Coated Reinforcing Steel	1590	Lb
491E0015	Two Coat Epoxy Bridge Deck Chip Seal	834.8	SqYd
491E0110	Abrasive Blasting of Bridge Deck	834.8	SqYd
491E0120	Bridge Deck Grinding	834.8	SqYd
491E0130	Concrete Removal, Class A	4.0	SqYd
491E0140	Concrete Removal, Class B	4.0	SqYd

SPECIFICATIONS

1. Design Specifications: AASHTO Standard Specifications for Highway Bridges 17th Edition using Working Stress Design.

2. Construction Specifications: South Dakota Standard Specifications for Roads and Bridges, 2004 Edition and Required Provisions, Supplemental Specifications and/or Special Provisions as included in the Proposal.

DETAILS AND DIMENSIONS OF EXISTING BRIDGE

All details and dimensions of the existing bridge, contained in these plans, are based on the original construction plans and shop plans. It is the Contractor's responsibility to inspect and verify the actual field conditions and any necessary as-built dimensions affecting the satisfactory completion of the work required for this project.

SCOPE OF BRIDGE WORK & SEQUENCE OF OPERATIONS

All work on this structure shall be accomplished with the traffic control shown elsewhere in the plans. Alternate sequence of operations may be submitted by the contractor for approval by the engineer a minimum of two weeks prior to the preconstruction meeting.

1. Remove the Rubberized Asphalt Chip Seal, perform bridge deck grinding and repair the bridge deck by removing all loose and delaminated concrete from the bridge deck surface for the first and second phase of construction.

2. Clean the bridge deck surface with abrasive blasting for the first phase of construction.

3. Modify the existing paving notch for the first phase of construction.

4. Place a Two Coat Epoxy Bridge Deck Chip Seal for the first phase of construction.

5. Remove and replace curb and gutter on both bridge ends for the first phase of construction.

6. Switch traffic and repeat steps 2 through 5 for Phase 2 of construction.

7. Place Controlled Density Fill under the abutment seat and regrade the berm slopes and spill cones around the wing walls at Abutment No. 5.

GENERAL CONSTRUCTION NOTES

1. All mild reinforcing steel shall conform to ASTM A615, Grade 60.

2. All exposed concrete corners and edges shall be chamfered 3/4" unless noted otherwise in the plans. Match existing chamfer if the existing chamfer differs.

3. Use 2" clear cover on all reinforcing steel except as shown otherwise.

4. Surfaces of fresh concrete at construction joints shall be rough floated sufficiently to consolidate the surface. All construction joints shall be cleaned of surface laitance, curing compounds and other foreign materials prior to placing fresh concrete against the joint.

CONCRETE BREAKOUT

1. The existing paving notch shall be broken out to the limits shown on the plans. Breakout limits shall be defined with a 3/4" deep sawcut (unless specified otherwise in these plans), where practical, as approved by the Engineer.

2. All broken out concrete, discarded reinforcing bars and expansion devices shall be disposed of by the Contractor. Any disposal of discarded material shall be in accordance with the Environmental Commitments.

3. During concrete removal operations, no broken out concrete shall be allowed to fall onto Interstate 90.

4. The contract unit price per cubic yard for "Breakout Structural Concrete" shall include breaking out concrete, cleaning, straightening existing reinforcing steel, removal of the existing armored device, and disposal of all broken out material.

EPOXY COATING EXISTING REINFORCING STEEL

1. The existing resteel in the deck that is exposed during the removal of loose and delaminated concrete, and is to be reused, shall be epoxy coated in the field.

2. The reinforcing steel shall be abrasive blasted clean and then epoxy coated. The epoxy coating shall be inert in concrete and compatible with the coating applied to the new epoxy coated reinforcing steel. This coating shall be the epoxy touch up coating material supplied by an epoxy coating manufacturer who supplies coating material for new epoxy coated reinforcing steel. The abrasive blasted reinforcing steel shall be coated promptly and before detrimental oxidation occurs. The coating shall be allowed to cure for 24 hours or as per the manufacturer's recommendations, whichever is more stringent, before concrete can be placed. These bars shall be clean and free from all surface contaminants before coating.

3. The cost of cleaning and epoxy coating the existing reinforcing steel shall be incidental to the various bid items.

DESIGN MIX OF CONCRETE

1. The type of cement, concrete strength requirements, aggregate requirements, slump and air requirements for the contract items Class A45 Concrete Bridge Repair shall conform to the requirements of Section 460 of the Construction Specifications.

INSTALLING DOWELS IN CONCRETE

1. Holes drilled in the existing concrete shall be true and normal or as shown in the plans. Drilling holes using a core drill shall not be allowed. Care shall be taken not to damage the existing reinforcing steel. It is likely that some of the existing reinforcing steel shown in the original construction plans may have been placed out of position during original construction. Therefore, prior to the start of drilling any holes in the concrete, an effort will be made by Department forces to mark on the concrete surface where practical any locations of the in-place reinforcing steel. In spite of this precaution, the Contractor can still expect to encounter and have to drill through reinforcing steel or shift the dowel spacing as approved by the Engineer to miss the existing reinforcing steel. If the Contractor shifts the dowel spacing, the unused drill holes shall be completely filled with the epoxy resin as approved by the Engineer.

2. The epoxy resin mixture shall be of a type for bonding steel to hardened concrete and shall conform to AASHTO M235 Type IV (Equivalent to ASTM C881, Type IV). Grade 1, 2 or 3 may be used for vertical dowels.

ESTIMATE OF STRUCTURE QUANTITIES AND NOTES

FOR

268' - 3¾" PRESTRESSED GIRDER BRIDGE

STR. NO. 41-226-107

MARCH 2014

DESIGNED BY	CK. DES. BY	DRAFTED BY	
KH	TK	KH	Kevin N. Goeden
LAWR0223	0223HC02		BRIDGE ENGINEER

INSTALLING DOWELS IN CONCRETE

3. The diameter of the drilled holes shall not be less than 1/8 inch greater, nor more than 3/8 inch greater than the diameter of the dowels or as per the Manufacturer's recommendations. The drilled holes shall be blown out with compressed air using a device that will reach the back of the hole to ensure that all debris or loose material has been removed prior to epoxy injection.

4. Mix epoxy resin as recommended by the Manufacturer and apply by an injection method as approved by the Engineer. Beginning at the back of the drilled holes, fill the holes 1/3 to 1/2 full of epoxy, or as recommended by the Manufacturer, prior to insertion of the steel bar. Care shall be taken to prevent epoxy from running out of the horizontal holes prior to steel bar insertion. Rotate the steel bar during installation to eliminate voids and ensure complete bonding of the bar. Insertion of the bars by the dipping or painting method will not be allowed.

5. No loads shall be applied to the epoxy grouted dowel bars until the epoxy resin has had sufficient time to cure as specified by the epoxy resin manufacturer.

6. Dowel bars shall be deformed bars conforming to ASTM A615 Grade 60.

7. The cost of epoxy resin, dowels, installation and other incidental items shall be incidental to the contract unit price per each for "Install Dowel in Concrete".

REMOVE EXISTING RUBBERIZED ASPHALT CHIP SEAL

Remove the Rubberized Asphalt Chip Seal (RACS) from the deck surface in accordance with Section 491 of the Construction Specification. The Contractor has the option of removing the RACS for the full width of roadway instead of in phases. RACS removal will be paid for at the contract unit price per square yard for "Remove Rubberized Asphalt Chip Seal".

REMOVAL OF LOOSE AND DELAMINATED CONCRETE

1. This work consists of preparation of the existing bridge deck for Two Coat Epoxy Bridge Deck Chip Seal by removing and replacing the loose and delaminated concrete.

2. Concrete used to repair the deck surface shall be in accordance with the Concrete Patching Material notes in this set of plans.

3. Concrete Removal on the bridge deck shall be divided into two the following two classes:

   a. Concrete Removal, Class A: Concrete Removal, Class A shall consist of the removal of delaminated and visibly loose concrete and any bituminous patches (when present) from the top of existing bridge deck down to a depth no deeper than the top of the top mat of bridge deck reinforcing steel. When grinding is specified, the Concrete Removal, Class A shall be done after the bridge deck has been ground.

   b. Concrete Removal, Class B: Concrete Removal, Class B areas shall be determined after completion of the Concrete Removal, Class A has been accomplished. Concrete Removal, Class B shall consist of the removal of delaminated and visibly loose concrete that exists below the bottom limits of the Concrete Removal, Class A *(below the top of the top mat of reinforcing steel)*.

4. Concrete Removal shall be by jackhammers and chipping hammers or other methods as approved by the Engineer. Jackhammers and chipping hammers shall be used as follows:

   a. Jackhammers heavier than 30 pounds will not be permitted.

   b. Chipping hammers heavier than 15 pounds will not be permitted for removing concrete below the top of the top mat of reinforcing steel.

   c. Jackhammers and chipping hammers shall not be operated at an angle in excess of 45 degrees measured from the surface of the concrete.

   d. Extreme care shall be taken when using jackhammers and chipping hammers to assure that existing reinforcing steel is not damaged or debonded from the sound concrete.

5. Removal shall begin near the center of the loose or delaminated concrete and shall progress outwardly until the loose or delaminated concrete is removed and sound concrete is encountered such that the amount of concrete removal is minimized.

6. The edges of the resulting areas of removed concrete shall be nearly vertical or slightly tapered inward from the top down to a minimum depth of one inch. If this condition is not able to be achieved with jackhammers or chipping hammers, saw cutting the edges of the removal area may be required to attain satisfactory results.

7. Care shall be taken during concrete removal to not nick, gouge, or in any other way damage the in-place reinforcing steel. Any inadvertent damage to the in-place reinforcing steel shall be brought to the attention of the Bridge Construction Engineer and shall be repaired by the Contractor as directed by the Engineer at no additional cost to the Department.

8. Concrete Removal, Class A will be measured to the nearest 0.1 foot and the area computed to the nearest 0.1 square yard. Concrete Removal, Class A will be paid for at the contract unit price per square yard. Payment will be full compensation for all labor, equipment, materials, and all incidental work required to remove the specified concrete, concrete sawing, and disposing of removed material.

9. Concrete Removal, Class B will be measured to the nearest 0.1 foot and the area computed to the nearest 0.1 square yard. Concrete Removal, Class B will be paid for at the contract unit price per square yard. Payment will be full compensation for all labor, equipment, materials, and all incidental work required to remove the specified concrete, concrete sawing, and disposing of removed material.

CONCRETE PATCHING MATERIAL

1. Concrete patching material shall be used to repair the deck areas where loose and delaminated concrete was removed.

2. Concrete patching material shall be packaged, dry, rapid-hardening cementitious mortar or concrete materials conforming to the requirements of ASTM C 928, Type R-3 and shall contain no chlorides, magnesium or phosphates.

3. Water used for the concrete patching material shall be in conformance with Section 790 of the Construction Specifications.

4. Upon completion of the concrete removal and immediately prior to placing any concrete patching material into the concrete removal areas, the removal areas shall be thoroughly cleaned of loose and foreign material by abrasive blasting. The surface profile of the area to receive the patching material shall be in accordance with the manufacturer's recommendations. The abrasive blasting shall be to the extent that all surface laitance is removed. Abrasive blast cleaning shall expose the coarse aggregate and remove rust from any exposed reinforcing steel. After abrasive blasting, the surface shall be cleaned by the use of compressed air to the satisfaction of the Engineer. The air compressor used for cleaning shall be equipped with trap devices capable of providing moisture-free and oil-free air at a recommended pressure of 90 psi.

5. The existing surface at the time of placement of the concrete patching material shall be at least 40° F (4° C), measured by a thermometer placed against the concrete surface and covered with an insulating blanket. The concrete patching material shall be mixed and placed in accordance with the manufacturer's technical data sheet. The Contractor shall provide a manufacturer's technical data sheet to the Engineer prior to performing the work. The concrete patching material shall be maintained at or above 45° F (7° C) for at least 72 hours after placement.

6. Immediately after finishing the concrete patching material, the surface of the concrete patching material shall be covered with a double layer of wet burlap. Within one hour of covering with wet burlap, polyethylene sheeting shall be placed on the wet burlap. The surface shall be wet cured for a minimum of 48 hours or in accordance with the manufacturer's recommendations, whichever is more stringent. Following the wet cure, the burlap and polyethylene sheeting shall be removed and the surface allowed to air dry for a minimum of 48 hours after removal of the burlap and polyethylene sheeting before application of the epoxy chip seal is permitted.

NOTES (CONTINUED)

FOR

268' - 3¾" PRESTRESSED GIRDER BRIDGE

STR. NO. 41-226-107

MARCH 2014

DESIGNED BY	CK. DES. BY	DRAFTED BY	
KH	TK	KH	Kevin N. Goeden
LAWR0223	0223HC03		BRIDGE ENGINEER

CONCRETE PATCHING MATERIAL (CONTINUED)

7. Concrete Patching Material will be measured to nearest 0.1 cubic feet as determined from the theoretical yield per bag of Concrete Patching Material. Concrete Patching Material will be paid for at the contract unit price per cubic foot. Payment will be full compensation for all labor, equipment, materials, and all incidental work required to abrasive blast clean the removal areas, and furnish, place and cure the concrete patching material within the removal areas.

TWO COAT EPOXY BRIDGE DECK CHIP SEAL

The Epoxy Chip Seal shall be applied in accordance with the Special Provision for "Two Coat Epoxy Bridge Deck Chip Seal".

BRIDGE BERM REPAIR

1. The bridge berm at Abutment No. 5 has experienced settlement and/or has erosion channels on the berm slope. The bridge berm shall be rebuilt and reshaped to its' original template.

2. Reconstruct the berms to at least one foot above the bottom of the abutment backwall seat and fill in erosion channels on the berm slope. The berm slope will be benched into stable embankment during reshaping and reconstruction. The soil shall be placed in horizontal lifts perpendicular to the centerline of the structure. Shape the fill in front of the wing walls to divert runoff from the inslopes away from the face of the berm slope. Compaction of the reconstructed embankment will be governed by the Ordinary Compaction Method.

3. At the upper part of the berm slope clearance between the structure and berm will prohibit the use of compaction equipment. The soil in this area will be placed by a method approved by and compacted to the satisfaction of the Engineer.

4. Soil used to reconstruct the berm slope shall be furnished by the Contractor. The soil will have a maximum of 70% passing the #4 sieve, have a maximum Liquid Limit (LL) of 45 and a Plastic Index (PI) greater than 10 but less than 25. The contractor shall be responsible for one gradation, LL and PI test for each borrow source for berm reconstruction. The results shall be supplied to the Engineer in writing.

5. The cost of the berm reconstruction and reshaping shall be incidental to the contract unit price per each for "Bridge Berm Repair" This payment shall be full compensation for furnishing all materials, labor, tools, and equipment necessary or incidental to the reconstruction and reshaping of the bridge berm.

CONTROLLED DENSITY FILL

1. Controlled Density Fill shall be placed in the voids under the abutment. The largest area is on the east side of the bridge at Abutment No. 5.

2. Controlled Density Fill shall be a flowable mortar material. Material and mixing shall be in accordance with the Section 462 of the Specifications, except as modified below. The mix shall be as follows:

Mix Design:

Material	Rate per Cubic Yard
Portland Cement, Type II	100 Lb
Fine Aggregate	2,600 Lb
Coarse Aggregate	None
Water	60 Gal
Fly Ash, Type C	300 Lb

Alternative Mix Design with Controlled Low Strength Material (CLSM):

Material	Rate per Cubic Yard
Portland Cement, Type II	200 Lb
Fine Aggregate	2,600 Lb
Coarse Aggregate	None
Water	35 Gal
W.R. Grace - Darafill (or approved equal)	1 (3 oz.)* capsule (or equivalent)

*One 3oz. Darafill capsule or equivalent CLSM performance additive (foaming admixture).

3. The fine aggregate shall be natural sand consisting of mineral aggregate particles conforming to the following gradation requirements:

Passing a 3/8 Inch Sieve	100%
Passing a No. 200 Sieve	0-10%

4. Either mix shown above is designed to produce a minimum compressive strength of 100 psi. The Engineer may allow adjustments to the proportion of water at the site to provide the necessary consistency of the mix.

5. Controlled Density Fill shall be contained within the required limits with sandbags or other methods approved by the Engineer.

6. Cost for furnishing and installing the Controlled Density Fill, including sandbags, labor, material, equipment and incidentals necessary to complete the work shall be included in the contract unit price per cubic yard for "Controlled Density Fill".

7. The quantity included in the plans is only an estimate. Actual field conditions may vary.

8. Do not place Controlled Density Fill during inclement weather, e.g. rain, when the subgrade is frozen, or when the subgrade contains an abnormal amount of moisture from recent rainfall as evidenced by standing water on the pavement or in joints or cracks. Do not place Controlled Density Fill when ambient air temperature of 40°F or less is anticipated in the 24 hour period following proposed placement. Produce and deliver the flowable fill at a minimum temperature of 50° F. Protect flowable fill from freezing for a period of 36 hours after placement.

Revised by KH, 7/14/2014

STATE OF	PROJECT	SHEET NO.	TOTAL SHEETS
S.D.	IM 0901(163)9	E27	E102

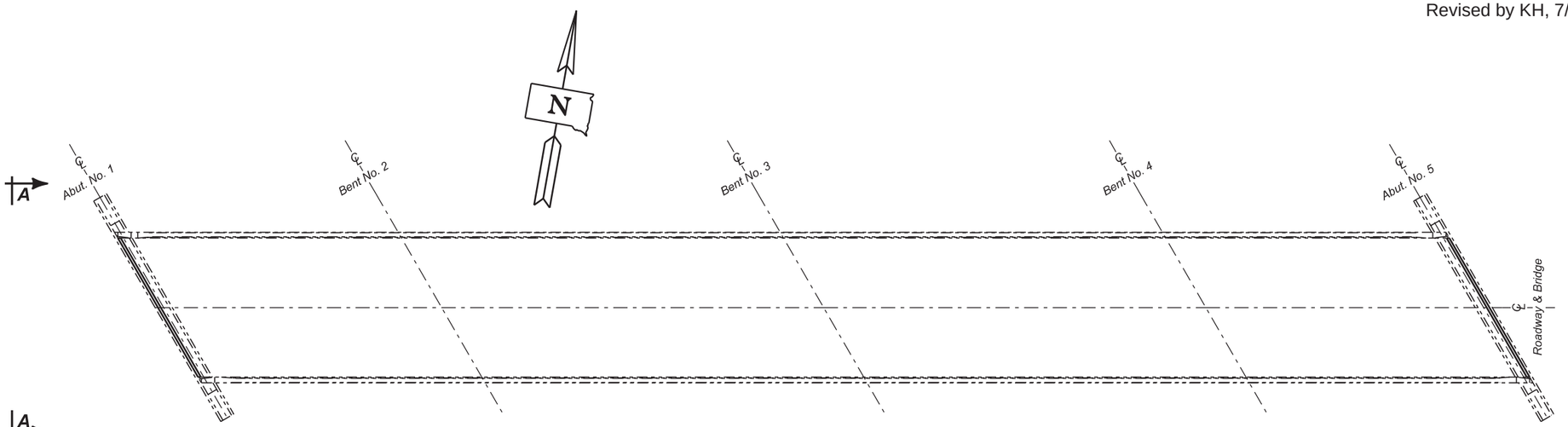

BRIDGE LAYOUT

REINFORCING SCHEDULE
(For Both Ends of Bridge)

	Mk.	No.	Size	Length	Type	Bending Details
PHASE I	Δ z1	8	5	2' - 8"	17A	
	d1	4	5	7' - 3"	Str.	
PHASE 2	Δ z1	8	5	2' - 8"	17A	
	d1	4	5	7' - 3"	Str.	

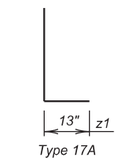

NOTES:
All Dimensions are out to out of bars.
All Bars to be Epoxy Coated.
Δ Dowels

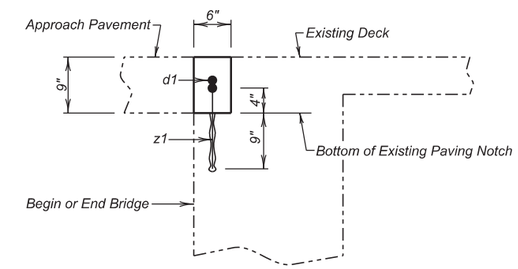

SECTION B - B

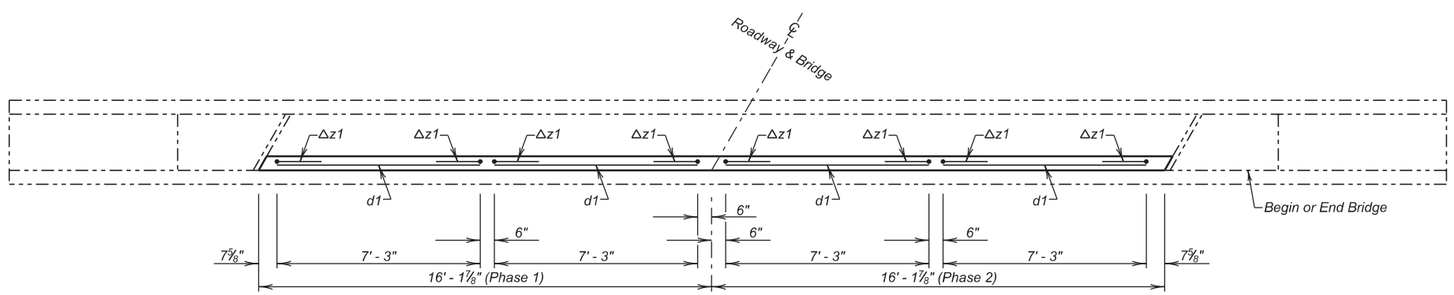

PLAN

✳ z1 Dowels are to be drilled in and grouted with epoxy.

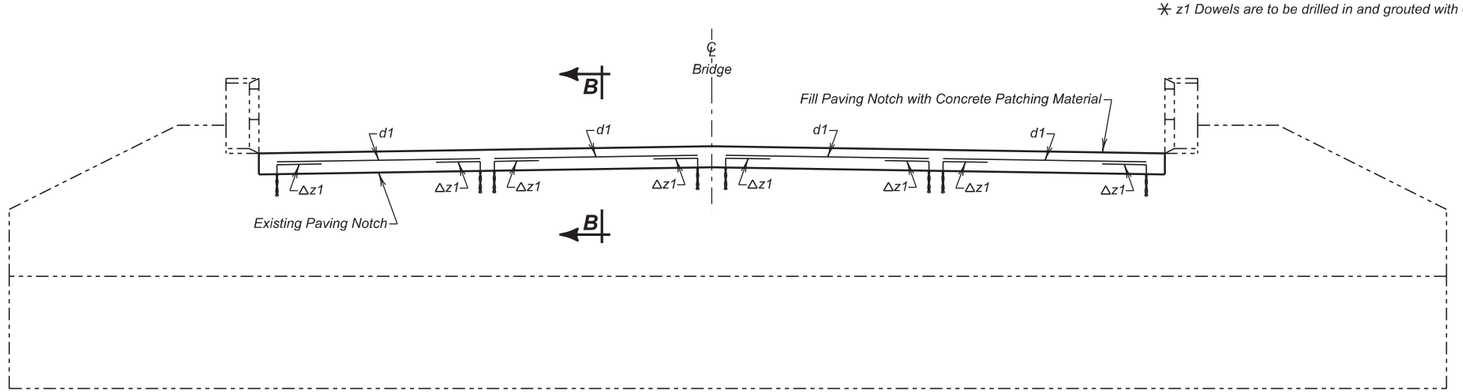

VIEW A - A

ESTIMATED QUANTITIES

	ITEM	UNIT	QUANTITY Phase I	QUANTITY Phase 2
	Concrete Patching Material	Cu. Ft.	11.4	11.4
	Breakout Structural Concrete	Cu. Yd.	0.5	0.5
	Install Dowel in Concrete	Each	8	8
✳	Epoxy Coated Reinforcing Steel	Lb.	30	30

✳ Does not include the following quantities for z1 bars as these are paid for in the bid item "Install Dowel in Concrete".

PHASE I	PHASE 2
22 Lb.	22 Lb.

PAVING NOTCH REINFORCEMENT

FOR

268' - 3¾" PRESTRESSED GIRDER BRIDGE

28' - 0" ROADWAY — 30° SKEW RHF
OVER INTERSTATE 90 — SEC. 26-T6N-R4E
STR. NO. 41-226-107 — IM 0901(163)9

LAWRENCE COUNTY
S. D. DEPT. OF TRANSPORTATION
MARCH 2014

DESIGNED BY	CK. DES. BY	DRAFTED BY	
KH	TK	JRK	Kevin N. Goeden
LAWR0223	0223KC05		BRIDGE ENGINEER

STATE OF	PROJECT	SHEET NO.	TOTAL SHEETS
S.D.	IM 0901(163)9	E28	E102

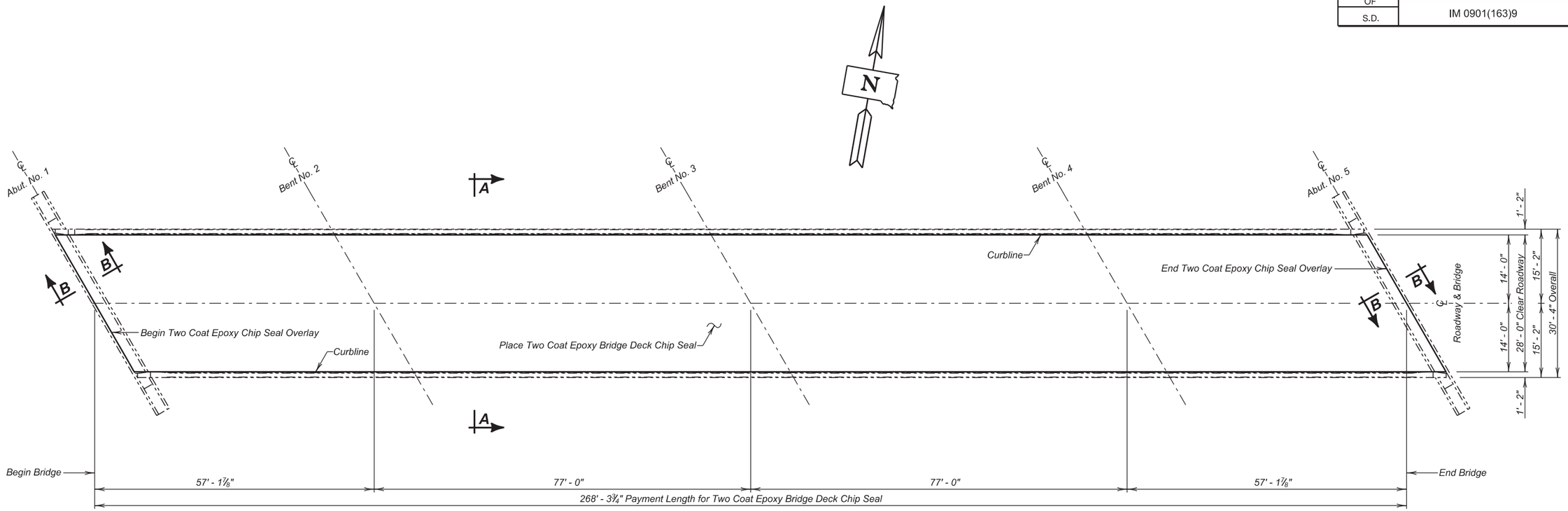

PLAN

ESTIMATED QUANTITIES

	ITEM	UNIT	QUANTITY Phase I	QUANTITY Phase 2
	Two Coat Epoxy Bridge Deck Chip Seal	Sq. Yd.	417.4	417.4
	Abrasive Blasting of Bridge Deck	Sq. Yd.	417.4	417.4
	Bridge Deck Grinding	Sq. Yd.	447.2	387.6
✳	Concrete Patching Material	Cu. Ft.	9.0	9.0
✳	Concrete Removal, Class A	Sq. Yd.	2.0	2.0
✳	Concrete Removal, Class B	Sq. Yd.	2.0	2.0
◊	Remove Rubberized Asphalt Chip Seal	Sq. Yd.	156.5	193.8

NOTE:

✳ Concrete Removal, Class A; Concrete Removal, Class B; and Concrete Patching Material may not be encountered and may be removed from the project at the direction of the Engineer.

◊ Quantity shown is an approximation and is based on a visual examination. Payment for this item will be based on plans quantity.

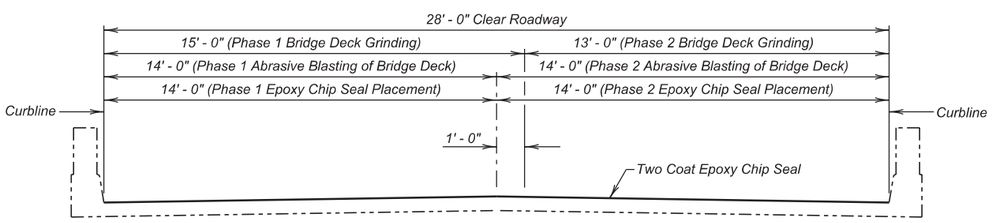

SECTION A - A

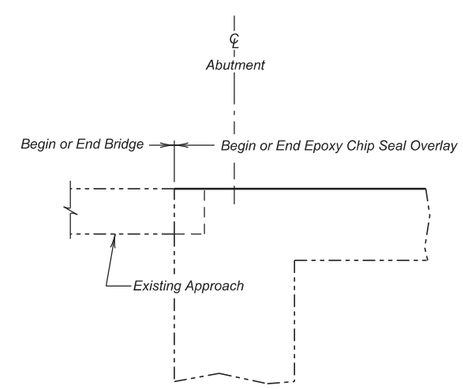

SECTION B - B

TWO COAT EPOXY CHIP SEAL DETAILS

FOR

268' - 3¾" PRESTRESSED GIRDER BRIDGE

28' - 0" ROADWAY — 30° SKEW RHF

OVER INTERSTATE 90 — SEC. 26-T6N-R4E

STR. NO. 41-226-107 — IM 0901(163)9

LAWRENCE COUNTY

S. D. DEPT. OF TRANSPORTATION

MARCH 2014

6 OF 11

DESIGNED BY	CK. DES. BY	DRAFTED BY	
KH	TK	JRK	Kevin N. Goeden
LAWR0223	0223KC06		BRIDGE ENGINEER

STATE OF	PROJECT	SHEET NO.	TOTAL SHEETS
S.D.	IM 0901(163)9	E29	E102

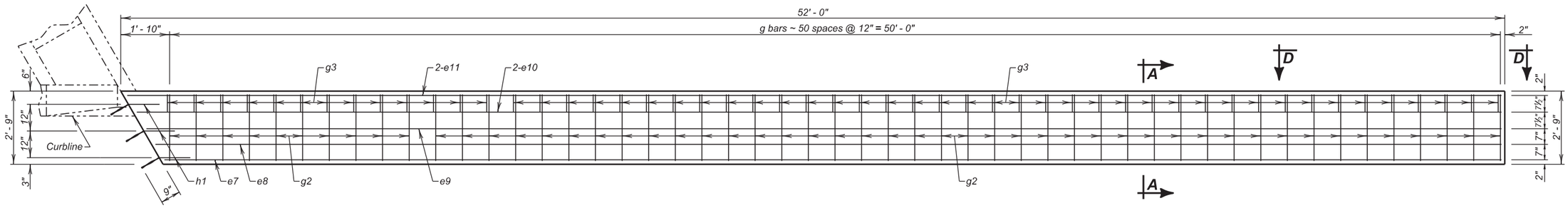

PLAN

(Northeast Corner Shown)

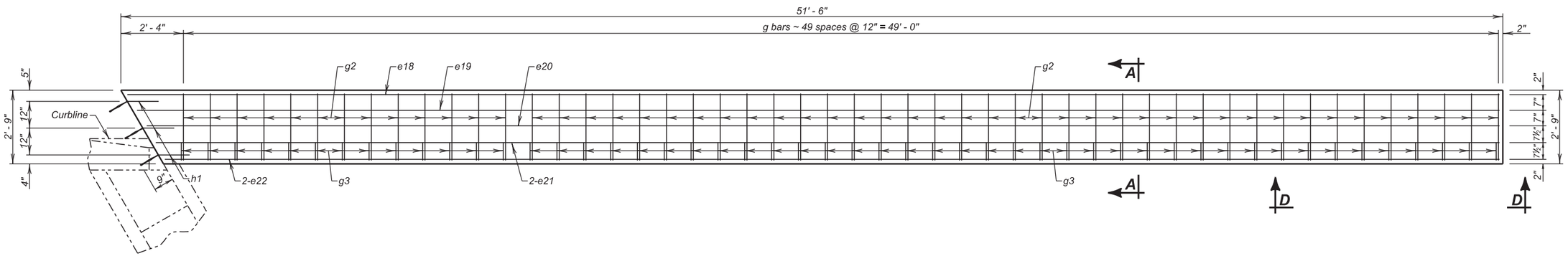

PLAN

(Southeast Corner Shown)

NOTE :
This sheet is to be used in conjunction with Sheet 8 of 11.

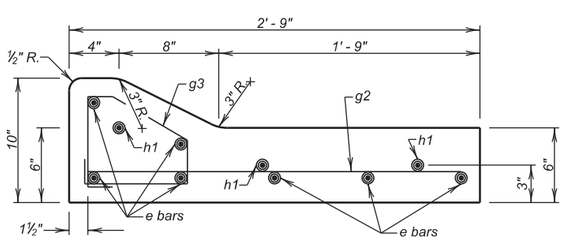

SECTION A - A

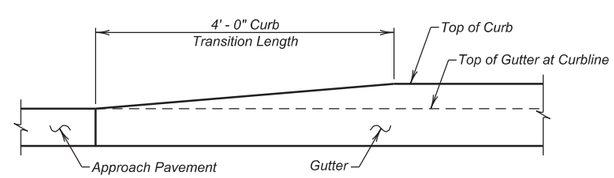

VIEW D - D

GUTTER EXTENSION LAYOUT & DETAILS

FOR

268' - 3¾" PRESTRESSED GIRDER BRIDGE

28' - 0" ROADWAY — 30° SKEW RHF
OVER INTERSTATE 90 — SEC. 26-T6N-R4E
STR. NO. 41-226-107 — IM 0901(163)9

LAWRENCE COUNTY
S. D. DEPT. OF TRANSPORTATION
MARCH 2014

DESIGNED BY	CK. DES. BY	DRAFTED BY	
KH	TK	JRK/KH	Kevin N. Goeden
LAWR0223	0223KC07		BRIDGE ENGINEER

STATE OF	PROJECT	SHEET NO.	TOTAL SHEETS
S.D.	IM 0901(163)9	E30	E102

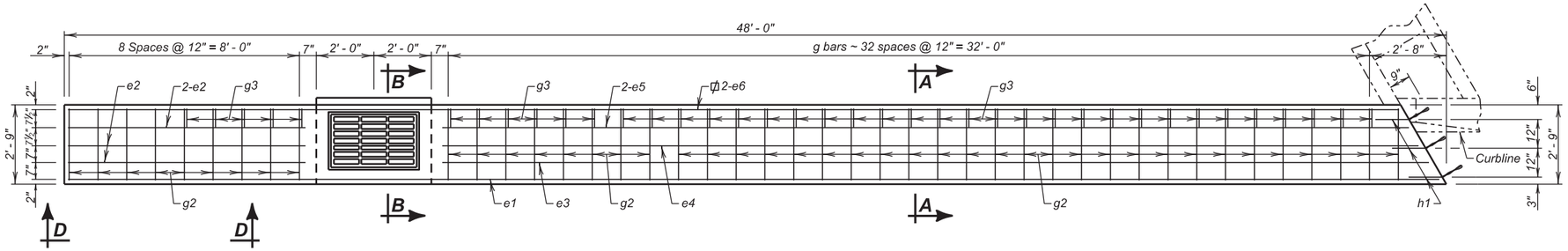

PLAN

(Northwest Corner Shown)

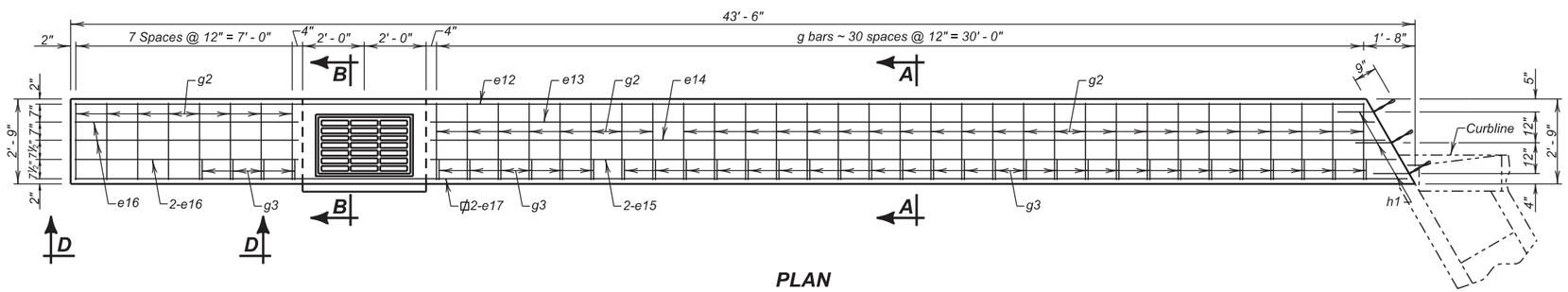

PLAN

(Southwest Corner Shown)

REINFORCING SCHEDULE

	Mk.	No.	Size	Length	Type
PHASE I	e1	1	4	47' - 7"	Str.
	e2	4	4	8' - 3"	Str.
	e3	1	4	34' - 3"	Str.
	e4	1	4	33' - 10"	Str.
	e5	2	4	33' - 6"	Str.
	e6	2	4	46' - 2"	Str.
	e7	1	4	50' - 2"	Str.
	e8	1	4	50' - 5"	Str.
	e9	1	4	50' - 10"	Str.
	e10	2	4	51' - 3"	Str.
	e11	2	4	51' - 7"	Str.
	g2	94	4	2' - 6"	Str.
	g3	89	4	3' - 1"	T1
	△h1	6	4	2' - 0"	19A
PHASE 2	e12	1	4	41' - 8"	Str.
	e13	1	4	30' - 6"	Str.
	e14	1	4	30' - 10"	Str.
	e15	2	4	30' - 3"	Str.
	e16	4	4	7' - 3"	Str.
	e17	2	4	43' - 1"	Str.
	e18	1	4	51' - 1"	Str.
	e19	1	4	50' - 9"	Str.
	e20	1	4	50' - 4"	Str.
	e21	2	4	50' - 0"	Str.
	e22	2	4	49' - 8"	Str.
	g2	89	4	2' - 6"	Str.
	g3	85	4	3' - 1"	T1
	△h1	6	4	2' - 0"	19A

Bending Details

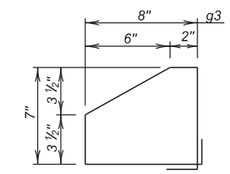

Type T1

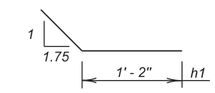

Type 19A

NOTES:
All Dimensions are out to out of bars.
All Bars to be Epoxy Coated.
△ Dowels

Bend Bar where necessary to maintain 2" clear cover.

ESTIMATED QUANTITIES

	ITEM	UNIT	QUANTITY Phase I	QUANTITY Phase 2
	Class A45 Concrete, Bridge Repair	Cu. Yd.	5.6	5.3
*	Epoxy Coated Reinforcing Steel	Lb	785	745
	Install Dowel in Concrete	Each	6	6

* Does not include the following quantities for h1 bars as these are paid for in the Bid Item "Install Dowel in Concrete".

PHASE I	PHASE 2
8.0 Lb.	8.0 Lb.

NOTE :
This sheet is to be used in conjunction with Sheet 7 of 11.

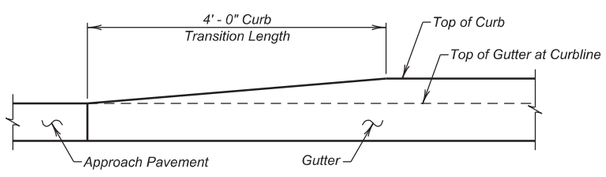

VIEW D - D

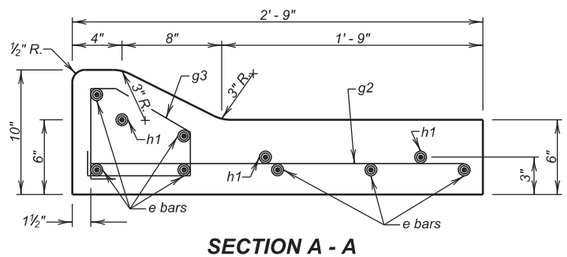

SECTION A - A

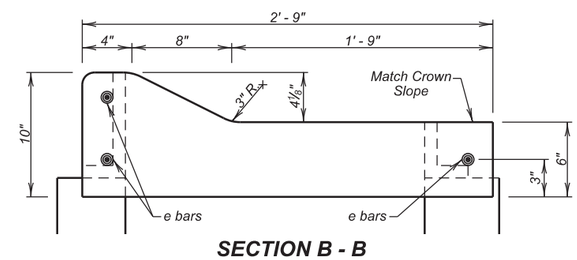

SECTION B - B

GUTTER EXTENSION LAYOUT & DETAILS (CONTINUED)

FOR

268' - 3¾" PRESTRESSED GIRDER BRIDGE

28' - 0" ROADWAY — 30° SKEW RHF
OVER INTERSTATE 90 — SEC. 26-T6N-R4E
STR. NO. 41-226-107 — IM 0901(163)9

LAWRENCE COUNTY
S. D. DEPT. OF TRANSPORTATION
MARCH 2014

DESIGNED BY	CK. DES. BY	DRAFTED BY	
KH	TK	JRK/KH	Kevin N. Boeden BRIDGE ENGINEER
LAWR0223	0223KC08		

41010

STATE OF	PROJECT	SHEET NO.	TOTAL SHEETS
S.D.	IM 0901(163)9	E31	E102

-X781-

INDEX OF BRIDGE SHEETS—

Sheet No. 1 — General Drawing and Quantities
Sheet No. 2 — Subsurface Investigations
Sheet No. 3 — Abutment and Abutment-Diaphragm Details
Sheet No. 4 — Details of Bents No. 2, No. 3, and No. 4
Sheet No. 5 — Beam Details
Sheet No. 6 — Superstructure and Diaphragm Details
Sheet No. 7 — Superstructure Details
Sheet No. 8 — Erection Data
Sheet No. 9 — Type RRA-1 Steel Railing

B.M. No. 28 - El. 3638.72
Iron Pin and Guards in N & S Fence Line
11' Rt. Sta. 396+50

B.M. No. 30 - El. 3588.57
2x2 and Guards
P.I. Sta. 421+39.07

NOTE:
T.S. @ ℄ El. = Top of Slab at Centerline Elevation.
T.S. @ C. El. = Top of Slab at Curb Elevation.

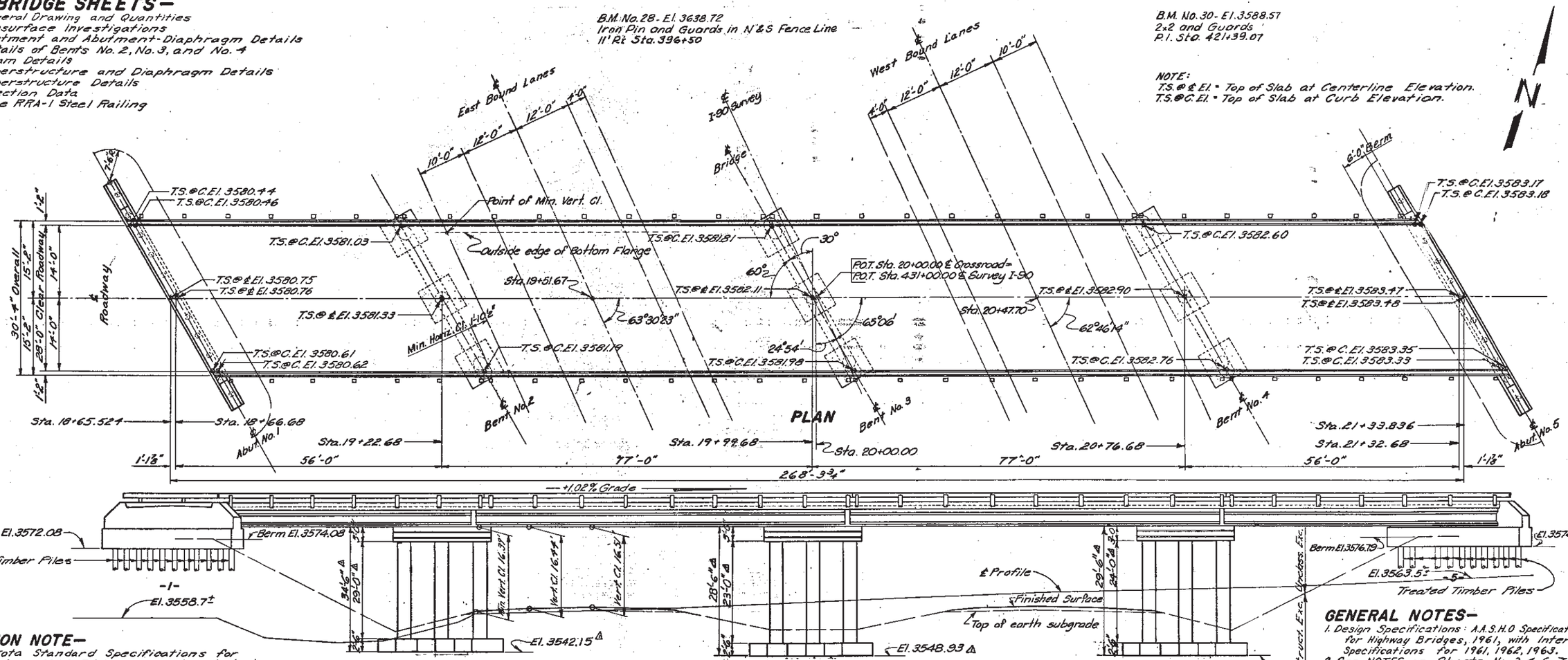

ELEVATION

SPECIFICATION NOTE—

Use South Dakota Standard Specifications for Roads and Bridges 1963 Edition, approved as Standard Sept. 21, 1964, and Required Provisions, Supplemental Specifications and/or Special Provisions as included in the Proposal.

GENERAL NOTES (CONT.)—

6. Bridge Contractor shall furnish and install 1⅛" x 7½" sleeve nut units in wing walls as shown on Standard Plate No. 304.
7. In the event Pile Shoes are used, see Standard Plate No. 301 for details.

EXCAVATION NOTES—

1. Footings for Bents No. 2, 3, and 4 shall be cast against solid undisturbed Clay and carried into same approximately the depth of footings. Limits of Clay excavation for these footings shall be bounded as nearly as practicable by the neat lines as shown in the details of footings for Bents No. 2, 3, and 4 on Sheet No. 4 of 9.
2. Clay shall develop a minimum bearing value of 5.0 tons per sq. ft. If the bearing value is less than 5.0 tons per sq. ft., communicate with the Bridge Section.
3. Final footing elevations for Bents No. 2, 3, and 4 shall be established before ordering column reinforcing steel for the respective Bents.

ESTIMATED QUANTITIES

ITEM	Cl. "A" Conc. Cu. Yds.	Re/Steel Lbs.	Type III P.C. Beams-No. 55'-4½"	76'-3"	Type "A" Steel Railing-Lin. Ft.	Timber Piles - Lin. Ft. Treated Timber	⊕ Test	Excavation-Cu. Yds. Struct.	△ Unclass.
Superstructure	189.6	68,685	10	10	538.5				
Abutment No. 1	38.9	4,325				10 @ 35'=350'	1 @ 40'=40'	25	
Bent No. 2	48.7 △	11,720 △						220 △	
Bent No. 3	44.8 △	10,360 △						100 △	
Bent No. 4	48.4 △	10,585 △						115 △	
Abutment No. 5	38.8	4,325				10 @ 30'=300'	1 @ 35'=35'	25	
Totals	406.3 △	105,000 △	10	10	538.5	650	⊕ 75	485 △	△ —

⊕ One Treated Timber Test Pile shall be driven at each Abutment before remaining piles are ordered.
△ To be done by others.

GENERAL NOTES—

1. Design Specifications: A.A.S.H.O Specifications for Highway Bridges, 1961, with Interim Specifications for 1961, 1962, 1963.
2. See NOTES on Sheets No. 3, 4, 6, 7, & 8.
3. The contractor shall have sufficient pile splice material on hand before pile driving is started. See Standard Plate No. 303.1 for details as included in Special Provisions for Piling dated Nov. 19, 1966.
4. Prebored holes for piles at abuts shall be back-filled with granular material acceptable to the Engineer and compacted as specified by the Engineer. The cost of granular material in place shall be included in the unit price bid for the piles.
5. Rail posts shall be built vertical.

GENERAL DRAWING AND QUANTITIES
FOR
268'-3¾" PRESTRESSED GIRDER VIADUCT
28'-0" ROADWAY — 30° SKEW R.H.F.
OVER I.S. NO. 90 STA. 431+00.00 SEC. 26-T6N-R4E
STA. 18+65.524 TO 21+33.836 — I 90-1(15)19
STR. NO. 41-226-107 LAWRENCE COUNTY
SOUTH DAKOTA — HS20-44
DEPARTMENT OF HIGHWAYS
JULY 1964

(9) OF (11)

-X781-

DESIGNED BY	DRAWN BY	CHECKED BY	APPROVED
	M.C.F. Rev. by P.A.H.	F.M. Recd. K.R.S.	R. H. Lahiff, BRIDGE ENGINEER

ORIGINAL CONSTRUCTION PLANS

△ Rev. 11-9-67

41-226-107

STATE OF	PROJECT	SHEET NO.	TOTAL SHEETS
S.D.	IM 0901(163)9	E32	E102

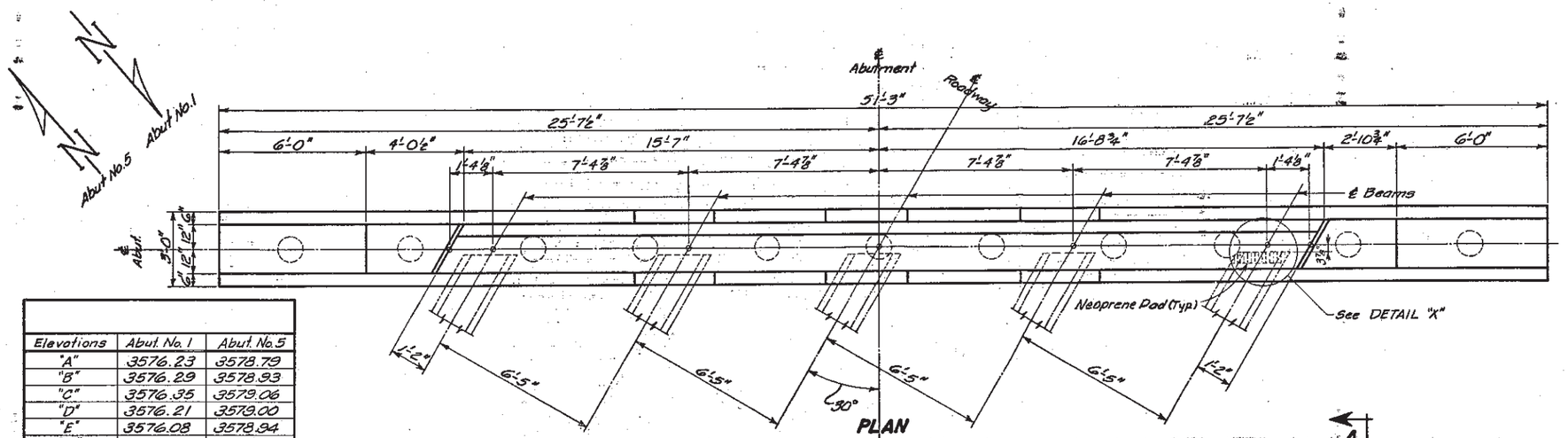

PLAN

Elevations	Abut. No. 1	Abut. No. 5
"A"	3576.23	3578.79
"B"	3576.29	3578.93
"C"	3576.35	3579.06
"D"	3576.21	3579.00
"E"	3576.08	3578.94
"F"	3572.08	3574.79

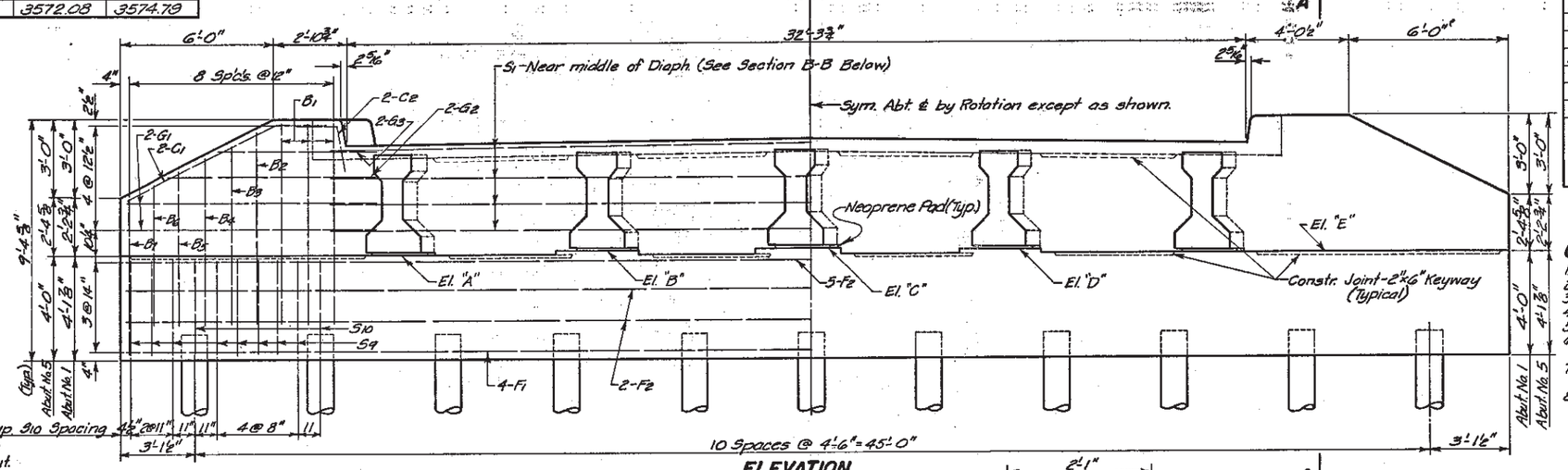

ELEVATION

REINFORCING SCHEDULE
(For One Abutment & One Abutment Diaphragm)

Mk.	No.	Size	Length	Type	Bending Details
B1	6	5	17'-0"	S10	
B2	2	5	16'-3"		
B3	2	5	15'-3"		
B4	2	5	14'-3"		
B5	2	5	13'-3"		
B6	2	5	12'-3"		
B7	2	5	13'-6"	S10	
C1	4	5	9'-0"	19A	
C2	4	5	4'-9"	19A	
F1	4	8	51'-0"	Str.	
F2	9	6	51'-0"		
G1	8	5	11'-0"		
G2	4	5	8'-3"		
G3	4	5	6'-3"		
S1	4	7	34'-9"		
S2	4	5	5'-9"		
S3	8	5	6'-9"		
S4	3	6	34'-9"		
S5	4	5	5'-3"	Str.	
*S6	49	5	9'-3"	14A	
S7	49	5	4'-0"	Str.	
S8	63	6	6'-9"	Str.	
S9	56	5	13'-3"	T1	
S10	11	5	10'-9"	S9	

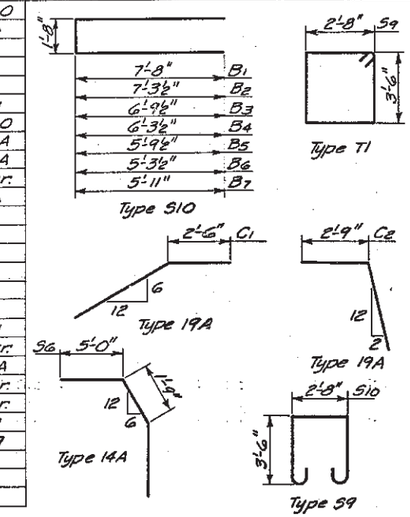

*Bend in field where necessary.
Note: All dimensions are out to out of bars.

GENERAL NOTES—

1. All exposed edges shall be chamfered 1" except as shown.
2. Use 2" clear cover on all reinforcing steel except as shown.
3. Piling shall develop a minimum bearing value of 24 tons per pile.
4. See General Drawing for lengths of Treated Timber Piles.
5. Design Loading: HS20-44
6. Unit Stresses: Re-Steel f_s = 20,000 p.s.i.
   Concrete f'_c = 1,600 p.s.i.
7. All reinforcing steel bars shall conform to A.S.T.M. Specifications A305 and A15 Intermediate Grade.
8. Use Class "A" Concrete (f'_c = 5000 p.s.i.) for Abutment Diaphragms. (Includes all concrete above bridge seat- approx. 16.1 Cu.Yds., and is included in quantity below.)

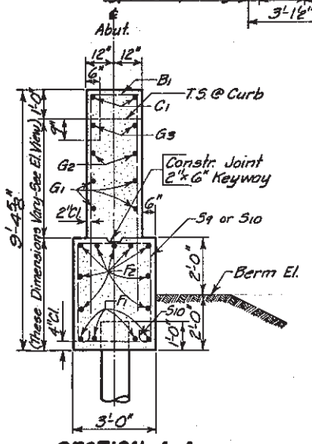

SECTION A-A

Note: See Gen. Drawing for length of Berm.

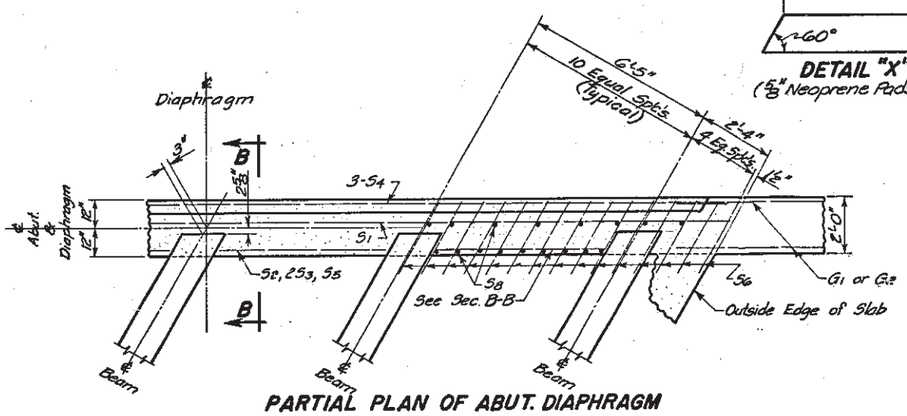

PARTIAL PLAN OF ABUT. DIAPHRAGM

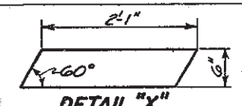

DETAIL "X"
(5/8" Neoprene Pads)

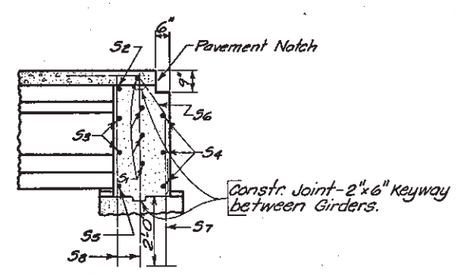

SECTION B-B

ESTIMATED QUANTITIES

ITEM	UNIT	QUANTITY
Class "A" Concrete	Cu.Yds.	38.9
Reinforcing Steel	Lbs.	4,325
Treated Timber Piles	No.	11
Structure Excavation	Cu.Yds.	25

*Includes slab and curbs above Abutment Diaphragm.

ABUT. & ABUT. DIAPHRAGM DETAILS
FOR
268'-3¾" PRESTRESSED GIRDER VIADUCT

28'-0" ROADWAY — 30° SKEW R.H.F.
OVER I.S. NO. 90 STA. 431+00.00 SEC. 26-T6N-R4E
STA. 18+65.524 TO 21+33.836 — I 90-1(15) 19
STR. NO. 41-226-107 LAWRENCE COUNTY
SOUTH DAKOTA HS20-44
DEPARTMENT OF HIGHWAYS
JULY 1964

ORIGINAL CONSTRUCTION PLANS

DESIGNED BY	DRAWN BY	CHECKED BY	APPROVED
	D.C.	F.M.	BRIDGE ENGINEER

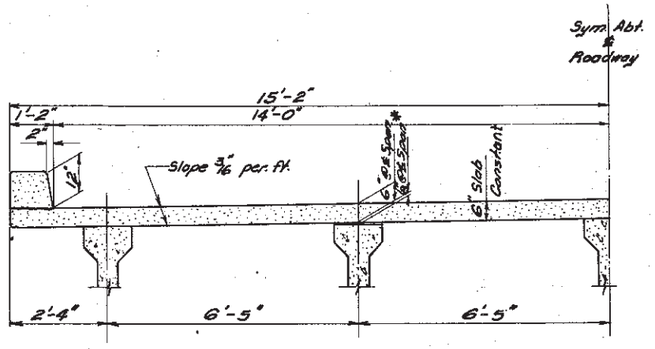

HALF SLAB SECTION

Showing dimensions.

* 6'⅛" dimensions will increase toward end of Span.

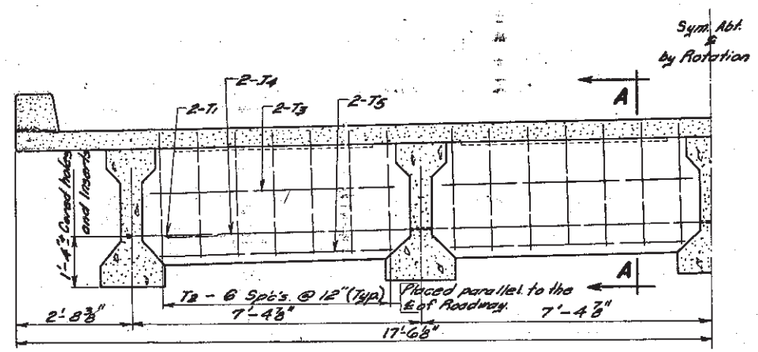

INTERMEDIATE DIAPHRAGM

(On 30° Skew)

REINFORCING SCHEDULE

Mk.	No.	Size	Length	Type
A1	80	5	33'-3"	Str.
A2	594	5	30'-0"	Str.
B	298	5	31'-0"	15
C	538	4	5'-3"	T1
D1	16	5	30'-0"	Str.
D2	503	5	39'-0"	Str.
D3	156	5	29'-0"	Str.
D4	12	5	24'-0"	Str.
E1	102	5	3'-6"	Str.
E2	72	4	18'-6"	T15
E3	9	7	31'-6"	Str.
E4	24	5	5'-6"	Str.
E5	48	5	6'-6"	Str.
E6	24	5	5'-0"	Str.
T1	24	8	4'-0"	Str.
T2	168	4	10'-3"	S4
T3	48	4	6'-6"	Str.
T4	12	7	26'-0"	Str.
T5	48	6	5'-6"	Str.

Bending Details

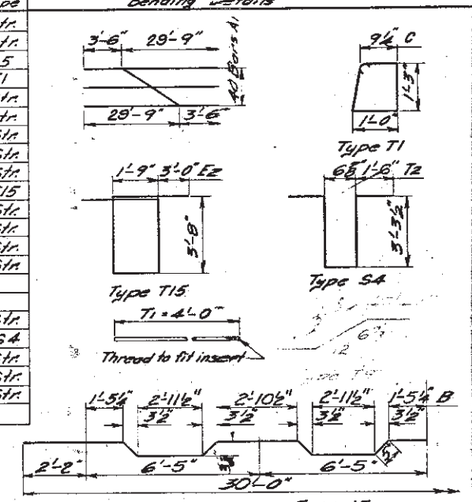

NOTES:
* Bend in field where necessary.
All dimensions are out to out of bars.

ESTIMATED QUANTITIES

ITEM	UNIT	QUANTITY
Class "A" Concrete	Cu. Yds.	189.6 ⊖
Reinforcing Steel	Lbs.	63,685
Precast Beams 90'-4⅝"	No.	10
Precast Beams 76'-3"	No.	10
Type R.R.A.-1 Steel Railing	Lin. Ft.	538.6

⊖ Includes 18.8 Cu. Yds. Concrete, f'c = 5000 psi., used in Diaphragms.

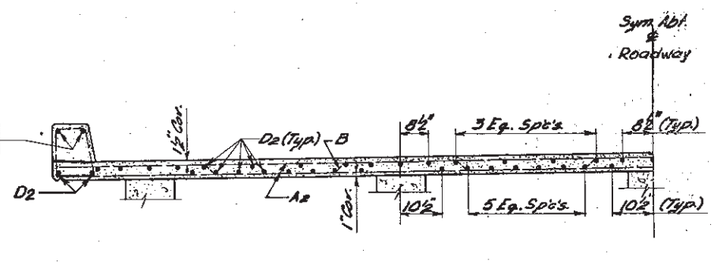

HALF SLAB SECTION

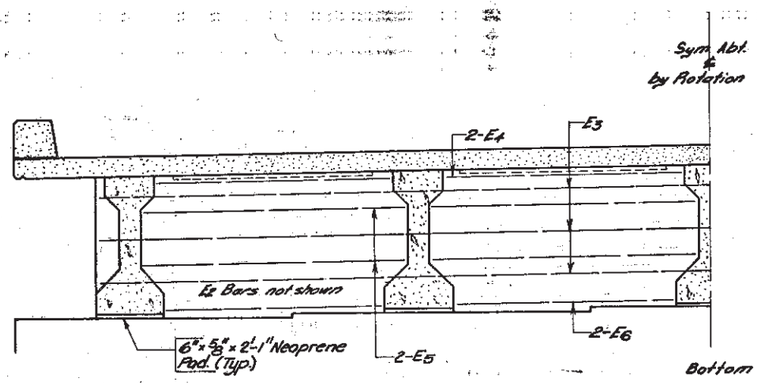

HALF ELEVATION - BENT DIAPHRAGM

(On 30° Skew)

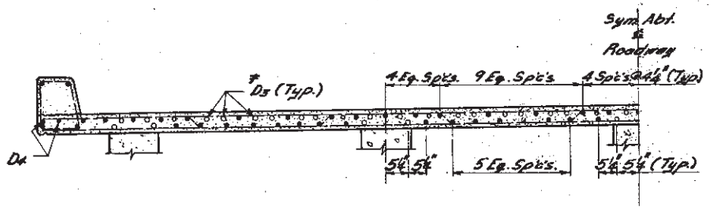

HALF SLAB SECTION

Showing reinforcing steel on Bent No. 2, No. 3 and No. 4.

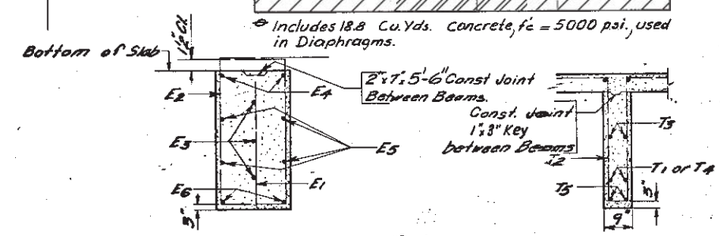

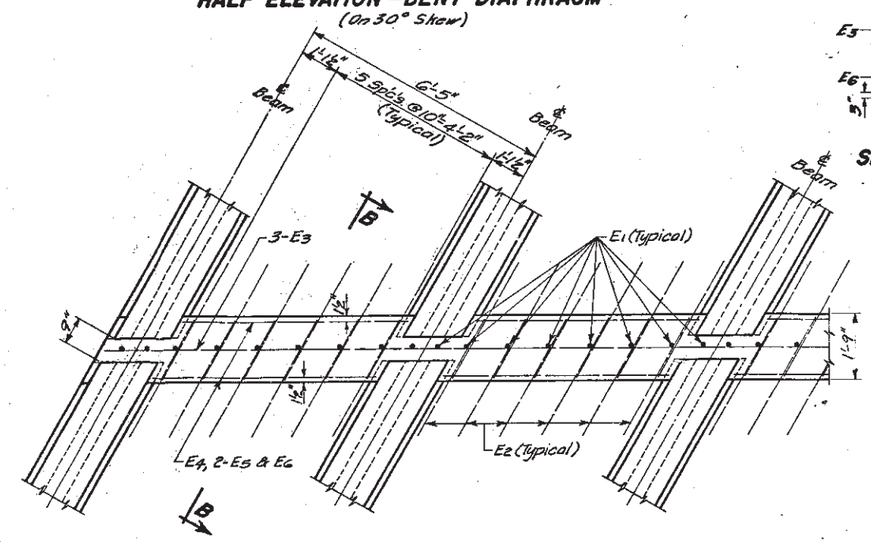

HALF PLAN - BENT DIAPHRAGM

GENERAL NOTES —

1. Beams shall be aligned and rigidly held in place until after the diaphragm concrete has set.
2. Diaphragms in any section shall be poured and allowed to set at least 48 hours before the remaining slab section is poured.
3. Insert T4 Bars before placing outer beams.
4. Use Class "A" Concrete (f'c = 5000 psi.) for diaphragms on Bents and Abutments.
5. One end of each beam shall be constructed according to View A-A and the other end according to View B-B
6. Holes and inserts to accommodate the diaphragm bars shall be provided in the beams at locations as shown on the Sheets No. 5 of 9 and No. 7 of 9
7. Holes which are left when the form supports are removed shall be filled with mortar.
8. Bars E1 are to be smooth round mild steel bars. Wrap upper half with aluminum foil before pouring diaphragm concrete.

ORIGINAL CONSTRUCTION PLANS

SUPERSTRUCTURE AND DIAPHRAGM DETAILS

FOR

268'-3¾" PRESTRESSED GIRDER VIADUCT

28'-0" ROADWAY **30° SKEW R.H.F.**

OVER I.S. NO. 90 STA. 431+00.00 **SEC. 26-T6N-R4E**

STA. 18+65.524 TO 21+33.836 **190-1(15) 19**

STR. NO. 41-226-107 **LAWRENCE COUNTY**

SOUTH DAKOTA **HS20-44**

DEPARTMENT OF HIGHWAYS

JULY 1964 (11) OF (11)

DESIGNED BY	DRAWN BY	CHECKED BY	APPROVED
	F.T.A. Rev. by: D.T.P.	F.N. Chk'd by: F.M.	BRIDGE ENGINEER

Rev. from Brule Co. I 90-6(7)269 (7-7-64)

STATE OF	PROJECT	SHEET NO.	TOTAL SHEETS
S.D.	IM 0901(163)9	E34	E102

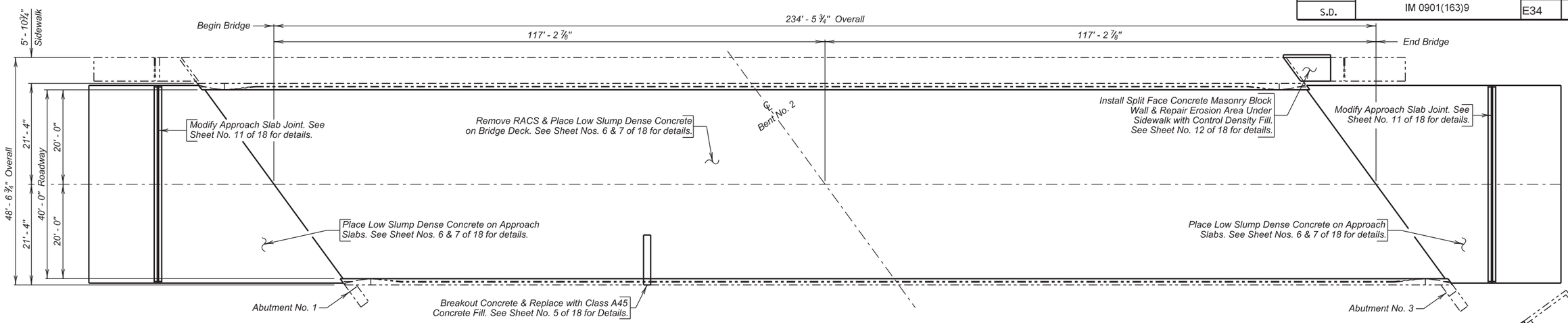

PLAN

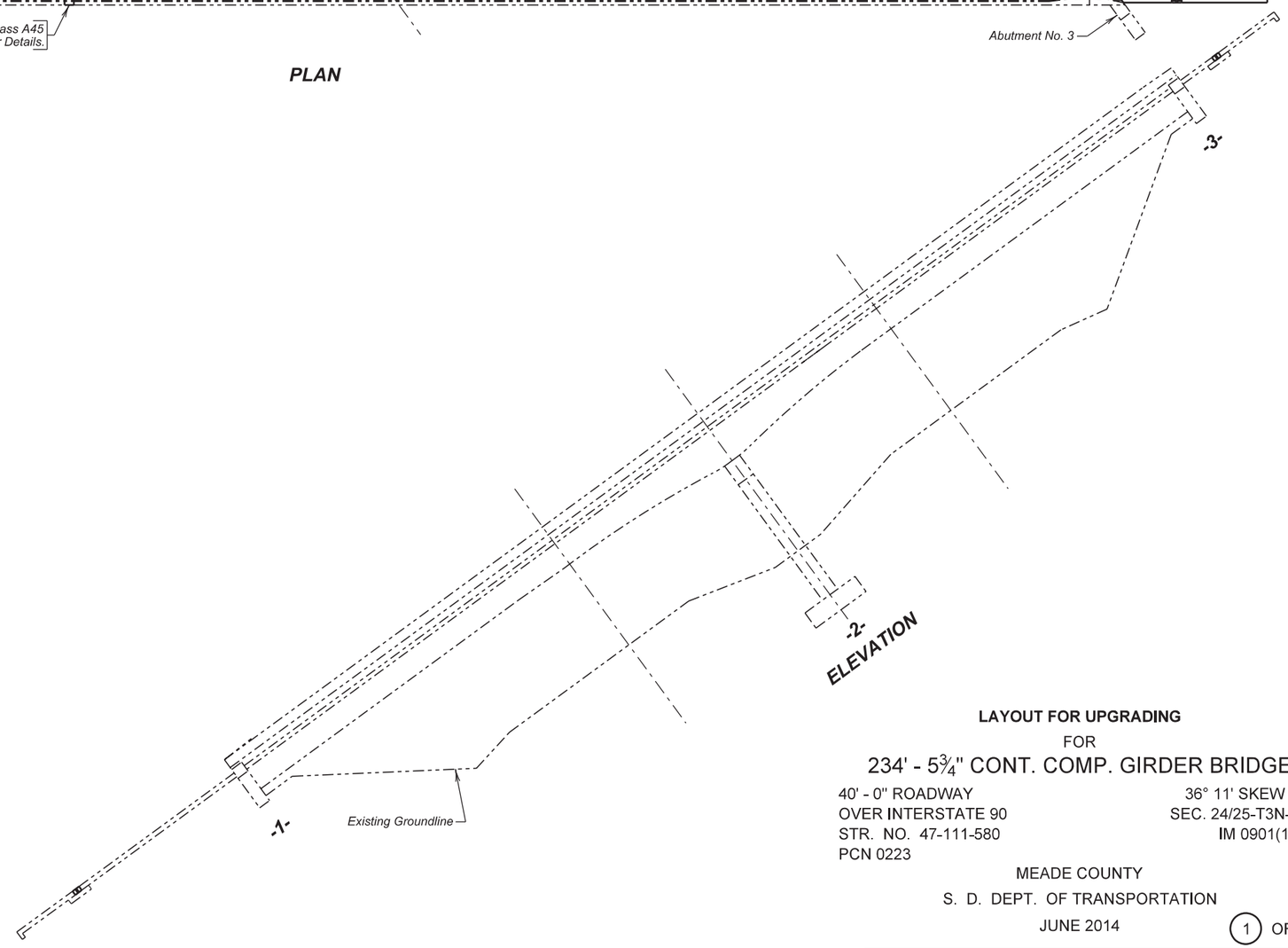

ELEVATION

INDEX OF BRIDGE SHEETS

Sheet No. 1 - Layout for Upgrading
Sheet No. 2 - Estimate of Structure Quantities and Notes
Sheet No. 3 - Notes (Continued)
Sheet No. 4 - Notes (Continued)
Sheet No. 5 - Bridge Deck Breakout
Sheet No. 6 - Deck Profiles for Low Slump Dense Concrete Overlay
Sheet No. 7 - Deck Profiles for Low Slump Dense Concrete Overlay (Continued)
Sheet No. 8 - As - Built Elevation Survey
Sheet No. 9 - As - Built Elevation Survey (Continued)
Sheet No. 10 - As - Built Elevation Survey (Continued)
Sheet No. 11 - Approach Slab Joint Replacement
Sheet No. 12 - Concrete Masonry Block Wall
Sheet Nos. 13 thru 18 - Original Construction Plans

LAYOUT FOR UPGRADING

FOR

234' - 5¾" CONT. COMP. GIRDER BRIDGE

40' - 0" ROADWAY
OVER INTERSTATE 90
STR. NO. 47-111-580
PCN 0223

36° 11' SKEW RHF
SEC. 24/25-T3N-R6E
IM 0901(163)9

MEADE COUNTY

S. D. DEPT. OF TRANSPORTATION

JUNE 2014

PLANS BY :
OFFICE OF BRIDGE DESIGN, SOUTH DAKOTA DEPARTMENT OF TRANSPORTATION

DESIGNED BY	CK. DES. BY	DRAFTED BY	
KH	TK	JRK	Kevin N. Boeden
MEAD0223	0223KD01		BRIDGE ENGINEER

ESTIMATE OF STRUCTURE QUANTITIES

ITEM NO.	DESCRIPTION	QUANTITY	UNIT
009E3310	Bridge Elevation Survey	Lump Sum	LS
110E0070	Remove Rubberized Asphalt Chip Seal	937.9	SqYd
410E2600	Membrane Sealant Expansion Joint	84.0	Ft
460E0070	Class A45 Concrete, Bridge Repair	3.2	CuYd
460E0300	Breakout Structural Concrete	3.6	CuYd
462E0100	Class M6 Concrete	2.5	CuYd
462E0200	Controlled Density Fill	1.2	CuYd
480E0100	Reinforcing Steel	162	Lb
480E0200	Epoxy Coated Reinforcing Steel	346.0	Lb
480E0505	No. 5 Rebar Splice	8	Each
530E0435	Split Face Concrete Masonry Block Wall	49.8	SqFt
550E0010	Low Slump Dense Concrete Bridge Deck Overlay	75.0	CuYd
550E0100	Concrete Removal Type 1A	1406.2	SqYd
550E0110	Concrete Removal Type 1B	140.6	SqYd
550E0120	Concrete Removal Type 1C	70.3	SqYd
550E0130	Concrete Removal Type 1D	70.3	SqYd
550E0140	Concrete Removal Type B	20.0	Ft
550E0200	Class A45 Concrete Fill	15.5	CuYd
550E0500	Finishing and Curing	1406.2	SqYd

SPECIFICATIONS

1. Design Specifications: AASHTO Standard Specifications for Highway Bridges 17th Edition using Working Stress Design.

2. Construction Specifications: South Dakota Standard Specifications for Roads and Bridges, 2004 Edition and Required Provisions, Supplemental Specifications and Special Provisions as included in the Proposal.

DETAILS AND DIMENSIONS OF EXISTING BRIDGE

All details and dimensions of the existing bridge, contained in these plans, are based on the original construction plans and shop plans. It is the Contractor's responsibility to inspect and verify the actual field conditions and any necessary as-built dimensions affecting the satisfactory completion of the work required for this project.

SCOPE OF BRIDGE WORK & SEQUENCE OF OPERATIONS

All work on this structure shall be accomplished with the traffic control shown elsewhere in the plans. Alternate sequence of operations may be submitted by the contractor for approval by the engineer a minimum of two weeks prior to the preconstruction meeting.

1. Remove Rubberized Asphalt Chip Seal and scarify the existing bridge deck for the first phase of construction. Traffic will not be allowed on scarified bridge deck.

2. Accomplish all Concrete Removal Type 1A, 1B, 1C, 1D and B and place Class A45 Concrete Fill to the satisfaction of the Engineer for the first phase of construction.

3. Breakout bridge deck and replace with Class A45 Concrete Fill as shown in plans.

4. Overlay the first phase of the bridge deck and approach slabs with a two inch minimum thickness of Low Slump Dense Concrete.

5. Remove and replace joints between approach slabs for the first phase of construction.

6. Switch traffic and repeat steps 1, 2, 4 & 5 for the second phase of construction.

7. Construct Split Face Concrete Masonry Block Wall as shown in plans.

GENERAL CONSTRUCTION NOTES

1. All mild reinforcing steel shall conform to ASTM A615, Grade 60.

2. All exposed concrete corners and edges shall be chamfered 3/4" unless noted otherwise in the plans. Match existing chamfer if the existing chamfer differs.

3. Use 2" clear cover on all reinforcing steel except as shown otherwise.

4. Surfaces of fresh concrete at construction joints shall be rough floated sufficiently to consolidate the surface. All construction joints shall be cleaned of surface laitance, curing compounds and other foreign materials prior to placing fresh concrete against the joint.

5. Request for construction joints or resteel splices at points other than those shown, must be submitted to the Engineer for prior approval. If additional splices are approved, no payment will be allowed for the added quantity of reinforcing steel.

CONCRETE BREAKOUT

1. The existing bridge deck and approach slabs shall be broken out to the limits shown on the plans. Breakout limits shall be defined with a 3/4" deep sawcut (unless specified otherwise in these plans), where practical, as approved by the Engineer. Reinforcing steel that is exposed and is scheduled for use in the new construction shall be cleaned and straightened to the satisfaction of the Engineer. Care shall be taken not to damage the existing reinforcing steel that is to be reused in the new construction during concrete breakout. Any reinforcing steel that is damaged during concrete breakout shall be replaced or repaired, as approved by the Engineer, by the Contractor at no cost to the Department. The existing reinforcing steel that is to be reused in the new construction and that is exposed during concrete breakout shall be epoxy coated in accordance with the "Epoxy Coating Existing Reinforcing Steel" notes.

2. All broken out concrete, discarded reinforcing bars and expansion devices shall be disposed of by the Contractor. Any disposal of discarded material shall be in accordance with the Environmental Commitments.

3. During concrete removal operations, no broken out concrete shall be allowed to fall onto Interstate 90.

4. Extreme care shall be taken during concrete removal to not nick, gouge, or in any other way damage the steel girders. Any inadvertent damage to the steel girders shall be brought to the attention of the Bridge Construction Engineer and shall be repaired by the Contractor as directed by the Engineer at no additional cost to the department.

5. The contract unit price per cubic yard for "Breakout Structural Concrete" shall include breaking out concrete, cleaning, straightening existing reinforcing steel, removal of the existing armored device, and disposal of all broken out material.

EPOXY COATING REINFORCING STEEL

1. The existing resteel in the bridge deck and approach slabs that is exposed during concrete breakout, and is to be reused, shall be epoxy coated in the field. This does not include rebar exposed while doing Concrete Removal Type 1A through 1D or Concrete Removal Type B.

2. The reinforcing steel shall be abrasive blasted clean and then epoxy coated. The epoxy coating shall be inert in concrete and compatible with the coating applied to the new epoxy coated reinforcing steel. This coating shall be the epoxy touch up coating material supplied by an epoxy coating manufacturer who supplies coating material for new epoxy coated reinforcing steel. The abrasive blasted reinforcing steel shall be coated promptly and before detrimental oxidation occurs. The coating shall be allowed to cure for 24 hours or as per the manufacturer's recommendations, whichever is more stringent, before concrete can be placed. These bars shall be clean and free from all surface contaminants before coating.

3. The cost of cleaning and epoxy coating the existing reinforcing steel shall be incidental to the various bid items.

REMOVE EXISTING RUBBERIZED ASPHALT CHIP SEAL

Remove the Rubberized Asphalt Chip Seal (RACS) from the deck surface in accordance with Section 491 of the Construction Specifications. The Contractor has the option of removing the RACS for the full width of roadway instead of in phases. RACS removal will be paid for at the contract unit price per square yard for "Remove Rubberized Asphalt Chip Seal".

ESTIMATE OF STRUCTURE QUANTITIES AND NOTES

FOR

234' - 5¾" CONT. COMP. GIRDER BRIDGE

STR. NO. 47-111-580

JUNE 2014

DESIGNED BY	CK. DES. BY	DRAFTED BY	
KH	TK	KH	Kevin N. Goeden
LAWR0223	0223HD02		BRIDGE ENGINEER

BRIDGE DECK OVERLAY

1. The preparation for resurfacing the entire bridge deck and both approach slabs consists of Concrete Removal Type 1A on the entire bridge deck and Type 1B, Type 1C, Type 1D and Type B over the deck surface as detailed on the plan sheets. Such removal shall be in conformance with these plans and Section 550 of the Construction Specifications. Extreme care shall be taken during the Concrete Removal 1A to assure that the existing resteel is not damaged. In the event that resteel damage inadvertently occurs, the Bridge Construction Engineer shall be immediately notified. Any damaged resteel shall be repaired by the Contractor, as approved by the Engineer, at no additional cost to the Department.

2. Concrete Removal Type 1C, Concrete Removal Type 1D, Concrete Removal Type B and Class A45 Concrete Fill may not be encountered and may be omitted from the project as determined by the Engineer.

3. Concrete Removal Type 1C, Concrete Removal Type 1D and Class A45 Concrete Fill is not anticipated to exceed the plan shown quantities. If the Engineer determines that Concrete Removal Type 1C, Concrete Removal Type 1D and/or Class A45 Concrete Fill in excess of the plan shown quantity is necessary, payment for the additional quantity shall be conformance with Section 550.5 of the Construction Specifications.

4. A minimum thickness of 2" of Low Slump Dense Concrete shall be maintained on the bridge deck.

5. It will be necessary for the Contractor to shape the surface of the Low Slump Dense Concrete Bridge Deck Overlay within one foot of the curb as detailed in the plans to insure that water drains to the floor drains or off the ends of the bridge.

6. Concrete for final deck overlay shall be as specified for Low Slump Dense Concrete in Section 550 of the Construction Specifications.

7. No traffic will be allowed to operate on the scarified portion of the bridge deck. If it appears that the entire Low Slump Dense Concrete Overlay cannot be completed prior to winter, the Type 1A, 1B, 1C, 1D and Type B removal shall not be done until work resumes in the spring. In the event that scarification has been started and due to unforeseen circumstances it becomes impossible to complete the placement of the Low Slump Dense Concrete Overlay on the entire surface of the structure prior to winter, the Office of Bridge Design shall be notified. Recommendations for handling winter traffic will then be made. These recommendations may include, but are not limited to, filling extra depth removal areas with Class A45 Concrete, placing an asphalt overlay on the uncompleted area so that the entire roadway width may be opened to traffic, removal of the asphalt overlay when work is resumed and scarifying an additional 1/4" of depth on the bridge deck. The cost of this work, including asphalt overlay, scarification, Class A45 Concrete, extra Low Slump Dense Concrete, and all other items incidental to this work, shall be at the expense of the Contractor.

DESIGN MIX OF CONCRETE

1. The Type of cement, concrete strength requirements, aggregate requirements, slump and air requirements for the contract items Class A45 Concrete Bridge Repair shall conform to the requirements of Section 460 of the Construction Specification.

MEMBRANE SEALANT EXPANSION JOINT

1. Install all membrane sealant expansion joints at the plan shown locations in conformance to the following notes.

2. The Membrane Sealant shall be one of the membrane sealant types from the approved product list for Membrane Sealant Expansion Joints.

3. The manufacturer shall supply the membrane sealant in packaging that precompresses the membrane sealant. The precompressed dimension shall be as recommended by the sealant manufacturer to provide a water tight seal throughout a joint movement range of + 25% (minimum) from the specified joint opening dimension. In no case shall the precompressed dimension exceed 75% of the joint opening width. The foam sealant shall be slowly self-expanding to permit workers ample time to install the membrane sealant before the membrane sealant exceeds the joint opening width.

4. The membrane sealant shall be supplied in pieces 5 feet in length or longer. The foam sealant shall be ultra-violet and ozone resistant.

5. The bonding adhesive used to attach the membrane sealant to the adjacent concrete shall be approved by the membrane sealant manufacturer.

6. Adhesive used to join adjacent pieces of the membrane sealant shall be as recommended by the manufacturer.

7. If Styrofoam filler material is used in the construction, it shall be closed cell and water-tight as approved by the Engineer.

8. Use plywood or other material to protect concrete adjacent to the joint from spalling before any equipment is moved across the joint. Any spall areas will be repaired at the Contractor's expense by breaking out and replacing adjacent concrete, as approved by the Engineer.

9. The minimum ambient air temperature at the time of joint installation and adhesive curing shall be 40° F.

10. A technical representative of the membrane sealant manufacturer shall be present at the jobsite during installation. The technical representative shall be knowledgeable in the correct procedures for the preparation and installation of the joint material to insure the Contractor installs the joint to the Manufacturers recommendations.

11. The joint opening shall be constant width and shall have smooth vertical sides. Surfaces of material adjacent to the joint shall be at the correct grade and crown as approved by the Engineer.

12. Concrete surfaces that will be in contact with the membrane sealant shall be thoroughly cleaned by abrasive blasting to remove all laitance and contaminants (such as oil, curing compounds, etc.) from the concrete surface. At a minimum two passes of abrasive blasting with the nozzle held at an angle to within 1 to 2 inches of the concrete surface will be required. Cleaning of the concrete surfaces with solvents, wire brushing, or grinding shall not be permitted.

13. After abrasive blasting, but immediately prior to membrane joint installation, the entire joint contact surface shall be air blasted. The air compressor used for joint cleaning shall be equipped with trap devices capable of providing moisture-free and oil-free air at a recommended pressure of 90 psi. To obtain complete bonding with the adhesive, the adjacent concrete surfaces must be dry and clean. The contact surfaces for the joint shall be visually inspected by the Engineer immediately prior to joint installation to verify the surface is dry and clean.

14. Individual spliced sections shall be installed as per the manufacturers' recommendations. The membrane joint sealant manufacturer shall submit a detailed installation procedure to the Engineer at least 5 days prior to joint installation for his review.

15. Traffic shall not be allowed on the joint for a minimum 3 hours unless otherwise directed by the Engineer.

16. Forms for the joint shall be left in place for a minimum of 7 days. No construction equipment or traffic shall be allowed on the joint until the concrete has reached design strength. The joint edges shall be protected from damage by equipment and traffic.

17. The Membrane Sealant Expansion Joint will be measured in feet to the nearest one-tenth foot, complete in place. Measurement will be made of the overall horizontal length. The Membrane Sealant Expansion Joint will be paid for at the contract unit price per foot complete in place. Payment for this item shall be full compensation for furnishing all the required materials in place, inclusive of labor, equipment and incidentals necessary to complete the work in accordance with the plans and the foregoing specifications.

CLASS M6 CONCRETE

Requirements for the contract Item Class M6 Concrete shall conform to the requirements of Section 462 of the Construction Specification except at noted below.

1. The minimum 28 day compressive strength shall be 4500 psi.

2. Coarse Aggregate to be used in concrete shall consist of either crushed quartzite or other crushed ledge rock. If crushed ledge rock other than quartzite is to be used, it shall be from a source approved by the Engineer.

3. The Contractor may substitute a bag mix for the Class M6 Concrete provided the bag mix meets the requirements of Section 462 and items listed above. The Contractor must submit the bag mix to the Office of Bridge Design for Approval a minimum of seven days before performing any concrete work.

NOTES (CONTINUED)

FOR

234' - 5¾" CONT. COMP. GIRDER BRIDGE

STR. NO. 47-111-580

JUNE 2014

DESIGNED BY	CK. DES. BY	DRAFTED BY	
KH	TK	KH	Kevin N. Goeden
LAWR0223	0223HG03		BRIDGE ENGINEER

CONTROLLED DENSITY FILL

1. Controlled Density Fill shall be placed in the void under the sidewalk at the north east corner of the bridge adjacent to Abutment No. 3. The void shall be filled prior to constructing the split face masonry block wall.

2. Controlled Density Fill shall be a flowable mortar material. Material and mixing shall be in accordance with the Section 462 of the Specifications, except as modified below. The mix shall be as follows:

Material	Rate per Cubic Yard
Portland Cement, Type II	200 Lb
Fine Aggregate	2,600 Lb
Coarse Aggregate	None
Water	35 Gal
W.R. Grace - Darafill (or approved equal)	1 (3 oz.)* capsule (or equivalent)

*One 3oz. Darafill capsule or equivalent CLSM performance additive (foaming admixture).

3. The fine aggregate shall be natural sand consisting of mineral aggregate particles conforming to the following gradation requirements:

Passing a 3/8 Inch Sieve	100%
Passing a No. 200 Sieve	0-10%

4. The mix shown above is designed to produce a minimum compressive strength of 100 psi. The Engineer may allow adjustments to the proportion of water at the site to provide the necessary consistency of the mix.

5. The construction method used to place the flowable fill will be submitted to the Engineer, in writing, 14 days prior to construction for approval by the Office of Bridge Design. The construction method explanation shall provide the following information:

   a. Form method installed flush with the sidewalk and abutment edge. The forms shall be capable of holding the Controlled Density fill with no material leakage for a period of three days. It will not be an option to use the split face concrete masonry block wall as a forming method.

   b. Proposed access points where the flowable fill will be placed under the sidewalk. Access holes may be created in the sidewalk of a size and location to minimize damage to the existing reinforcing steel in the sidewalk.

   c. Method used to clean and seal the access holes in the sidewalk, if any, after placement of the flowable fill is complete. Sealing material shall be flush with the sidewalk surface.

6. Do not place flowable fill during inclement weather, e.g. rain, when the subgrade is frozen, or when the subgrade contains an abnormal amount of moisture from recent rainfall as evidenced by standing water on the pavement or in joints or cracks. Do not place flowable fill when ambient air temperature of 40° F or less is anticipated in the 24 hour period following proposed placement. Produce and deliver the flowable fill at a minimum temperature of 50° F. Protect flowable fill from freezing for a period of 36 hours after placement.

7. The quantity included in the plans is only an estimate. Actual field conditions may vary from plan shown details.

8. Cost for furnishing and installing the Controlled Density Fill, including forming, labor, material, equipment and incidentals necessary to complete the work and plug access ports shall be included in the contract unit price per cubic yard for "Controlled Density Fill".

SPLIT FACE CONCRETE MASONRY BLOCK WALL

1. This work consists of placement of concrete masonry unit (CMU) blocks along sidewalk adjacent to Abutment No. 3 as shown in the plans.

2. The hollow concrete masonry unit (CMU) blocks shall have a minimum compressive strength of 4,000 psi and a water absorption limit of 5 percent. Documentation of a freeze-thaw test (ASTM C1262-10) shall be provided to assess the durability of the CMU and ensure it follows the standard specification (ASTM C1372).

3. All mild reinforcing steel shall conform to ASTM A615, Grade 60.

4. Fill material used in the hollow CMU shall be Class M6 Concrete of a type as specified by the plan notes.

5. Styrofoam material used in the construction shall be closed cell and water tight as approved by the Engineer.

6. The polyethylene sheet placed between the newly placed flowable fill and the masonry block wall shall be Dura Skrim 12BV as manufactured by Raven Industries. Contact information for the supplier is as follows:

   Engineered Films Division
   P. O. Box 5107
   Sioux Falls, SD 57117-5107
   Ph: (800) 635-3456
   Fx: (605) 331-0333
   Web Site: www.ravenefd.com

7. Construction Requirements:

   a. Formwork used to contain the flowable fill shall remain in place for a minimum of three days before removal for the construction of the masonry block wall.

   b. The Contractor shall minimize the disturbance to the area adjacent to the construction. The Contractor shall use extreme caution when constructing the masonry block wall that no damage to the new flowable fill occurs from the placement of the block wall. Any damage to the flowable fill created by the construction of the block wall shall be repaired by the Contractor as approved by the Engineer at no additional cost to the Department.

   c. The wall shall be constructed off of a smooth and level ground surface as approved by the Engineer. The finished wall shall have a 0° face batter.

   d. A number six rebar shall be positioned in the center of each void in the masonry block wall as shown in the plans. Each bar shall be imbedded into the underlying soil a minimum of 2 feet. Maintain the location of the bar during the M6 concrete placement in the voids.

   e. Fill all voids in the masonry block wall with M6 concrete. The top surface of the M6 concrete shall be struck off level with the top surface of the top most block of the masonry block wall.

   f. After wall construction is complete fill in all excavated areas adjacent to the newly constructed wall to natural ground or as directed by the Engineer.

8. Split Face Concrete Masonry Block Wall will be paid for at the contract unit price per square foot for "Split Face Concrete Masonry Block Wall". Payment will be full compensation for all labor, equipment and incidentals for furnishing and installing CMU Blocks, excavating material to place wall and shape support surface, install reinforcing bars, furnish and install polyethylene sheet and backfill material around completed wall.

AS – BUILT SURVEY

The Contractor shall be responsible for recording the As-built deck elevations at the locations shown on the Table of As-Built Elevations shown in the plans. The elevations to be recorded in these tables shall be based on the National Geodetic Survey (NGS) North American Vertical Datum of 1988 (NAVD88). The Engineer shall provide the Contractor with a description, elevation and location of the nearest benchmark that has a NAVD88 established elevation for the Contractor's use. The benchmark shown in the plans has not been tied to the NAVD88. The Contractor shall be responsible for establishing a NAVD88 elevation for the benchmark provided in the plans. All costs associated with obtaining the NAVD88 elevations at the locations shown in the table and for the benchmark shown in the plans, including all equipment, labor and any incidentals required shall be incidental to the contract lump sum price for Bridge Elevation Survey.

NOTES (CONTINUED)

FOR

234' - 5¾" CONT. COMP. GIRDER BRIDGE

STR. NO. 47-111-580

JUNE 2014

DESIGNED BY	CK. DES. BY	DRAFTED BY	
KH	TK	KH	Kevin N. Goeden
LAWR0223	0223HD04		BRIDGE ENGINEER

STATE OF	PROJECT	SHEET NO.	TOTAL SHEETS
S.D.	IM 0901(163)9	E38	E102

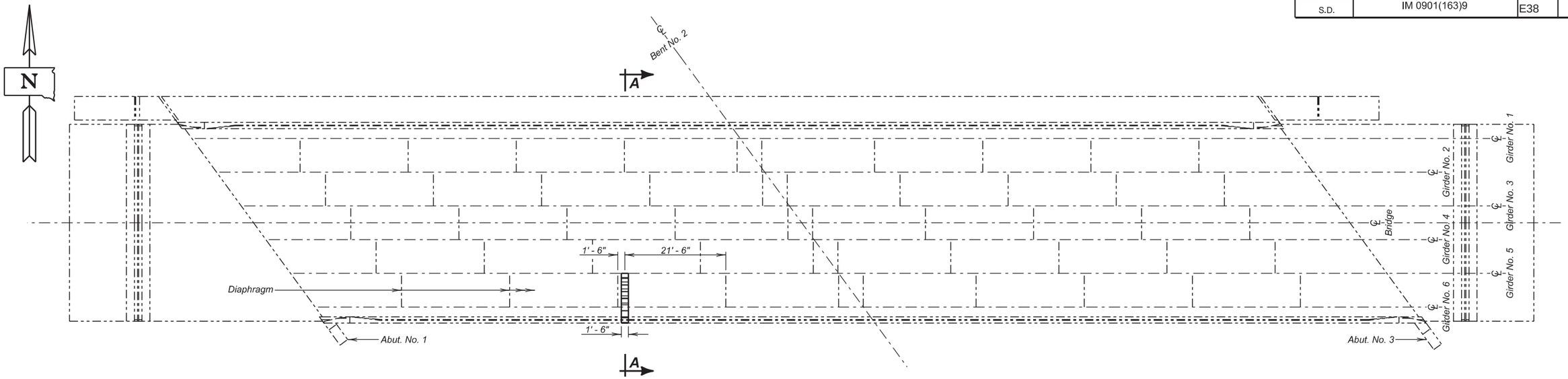

PLAN

ESTIMATED QUANTITIES

ITEM	UNIT	QUANTITY
Breakout Structural Concrete	Cu. Yd.	0.4
Class A45 Concrete Fill	Cu. Yd.	0.4

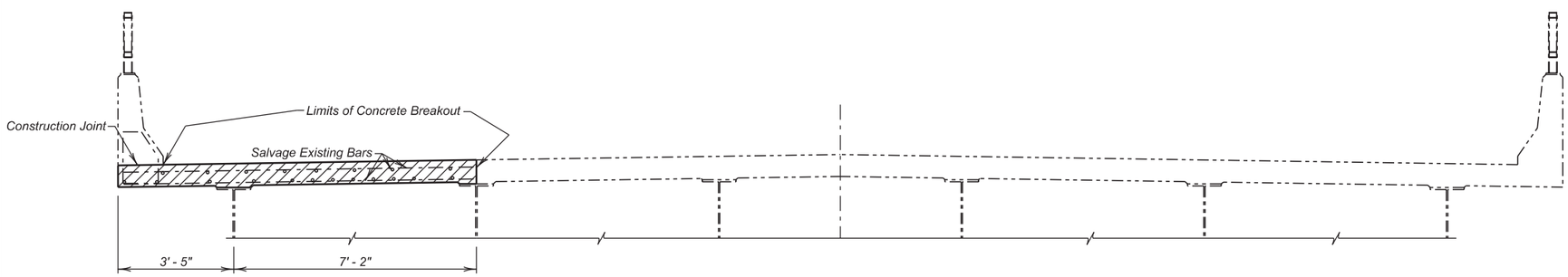

SECTION A - A

(Existing section showing removal limits.)

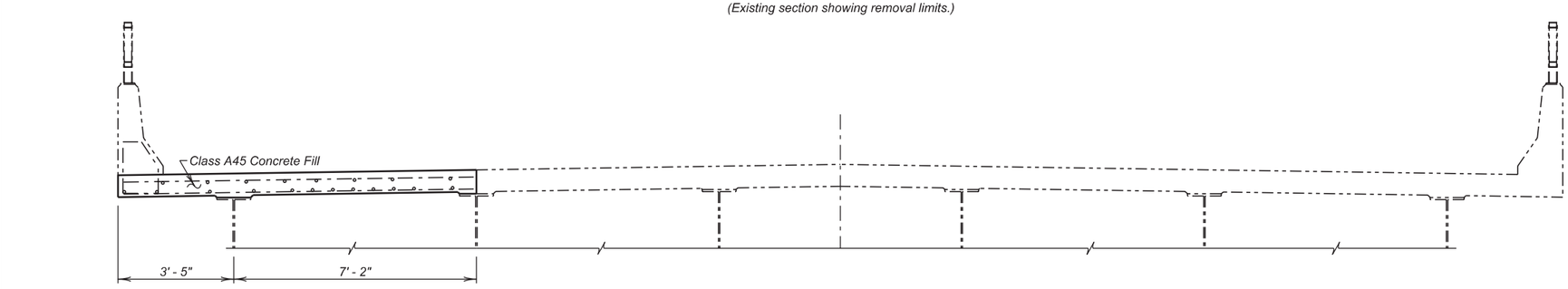

SECTION A - A

(New Construction Shown.)

Shaded areas indicate limits of concrete breakout.

BRIDGE DECK BREAKOUT

FOR

234' - 5¾" CONT. COMP. GIRDER BRIDGE

40' - 0" ROADWAY
OVER INTERSTATE 90
STR. NO. 47-111-580

36° 11' SKEW RHF
SEC. 24/25-T3N-R6E
IM 0901(163)9

MEADE COUNTY

S. D. DEPT. OF TRANSPORTATION

JUNE 2014

DESIGNED BY	CK. DES. BY	DRAFTED BY	
KH	TK	KH	Kevin N. Goeden
MEAD0223	0223KD05		BRIDGE ENGINEER

STATE OF	PROJECT	SHEET NO.	TOTAL SHEETS
S.D.	IM 0901(163)9	E39	E102

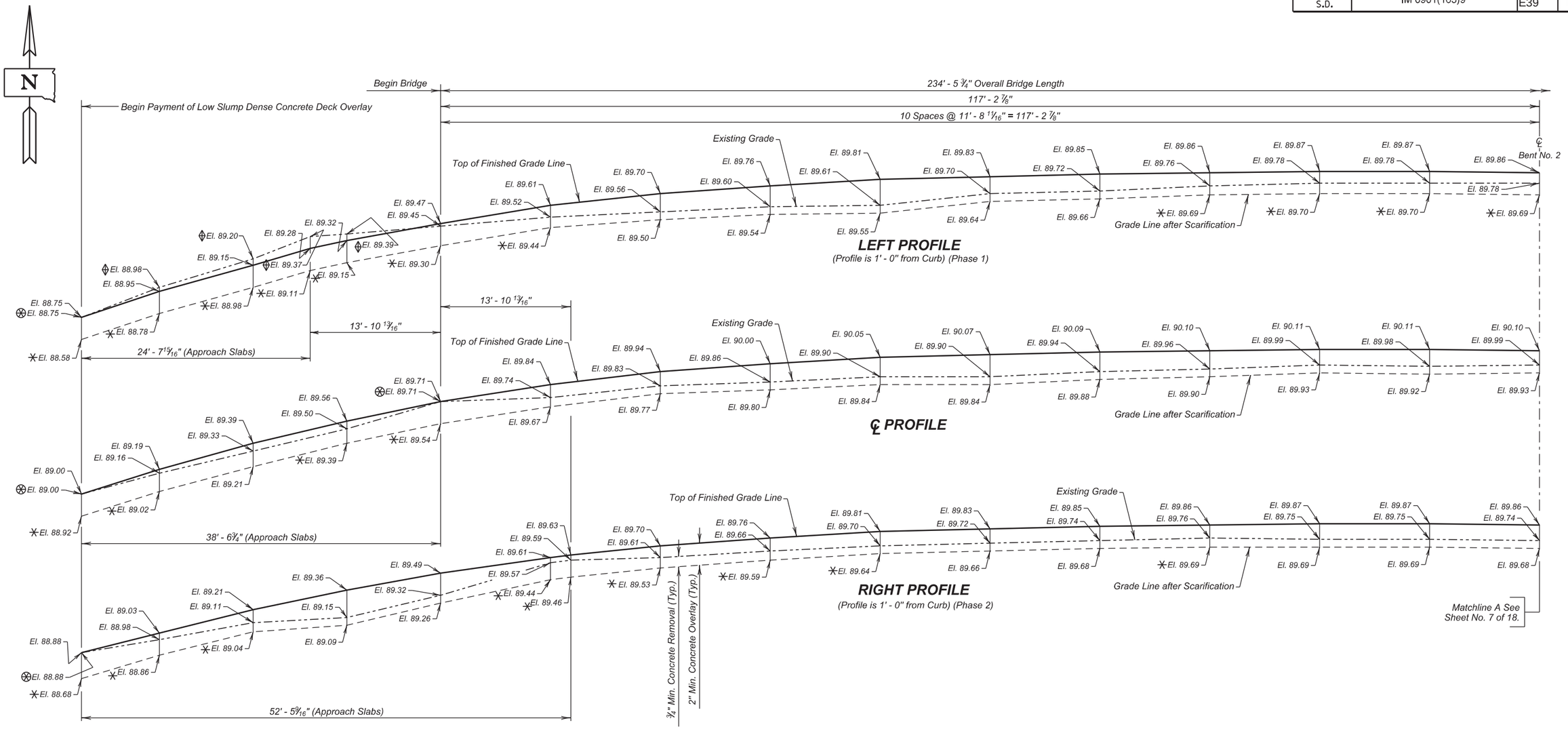

0' .25' .5' 1.00'

VERTICAL SCALE

Benchmark Description:

B.M. # 1
"X" on southwest wingwall
Elevation 3590.02

B.M. # 2
"X" on southeast wingwall
Elevation 3589.18

NOTE :

Add 3500.00 to all elevations shown on profiles.

✳ Scarify in excess of 3/4" in these areas.

⊗ Existing Elevation is the same as the Finished Surface Elevation.

◊ Existing Elevation is higher than the Finished Surface Elevation.

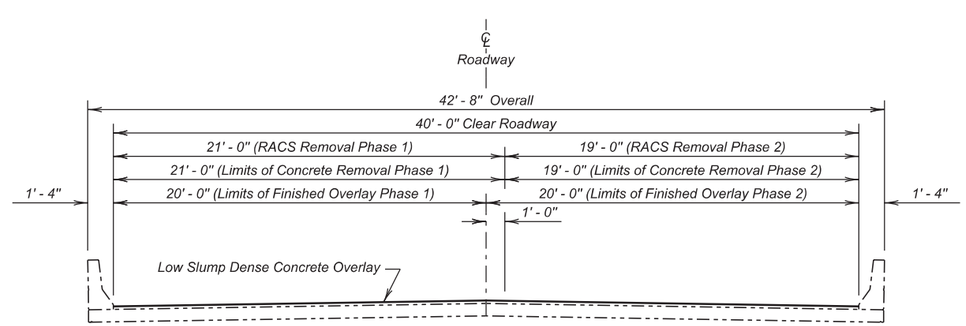

TYPICAL SECTION

(Rail Not Shown)

DECK PROFILES FOR LOW SLUMP DENSE CONCRETE OVERLAY
FOR
234' - 5 3/4" CONT. COMP. GIRDER BRIDGE

40' - 0" ROADWAY
OVER INTERSTATE 90
STR. NO. 47-111-580

36° 11' SKEW RHF
SEC. 24/25-T3N-R6E
IM 0901(163)9

MEADE COUNTY
S. D. DEPT. OF TRANSPORTATION
JUNE 2014

DESIGNED BY	CK. DES. BY	DRAFTED BY	
KH	TK	KR	Kevin N. Boeder
MEAD0223	0223RD06		BRIDGE ENGINEER

STATE OF	PROJECT	SHEET NO.	TOTAL SHEETS
S.D.	IM 0901(163)9	E40	E102

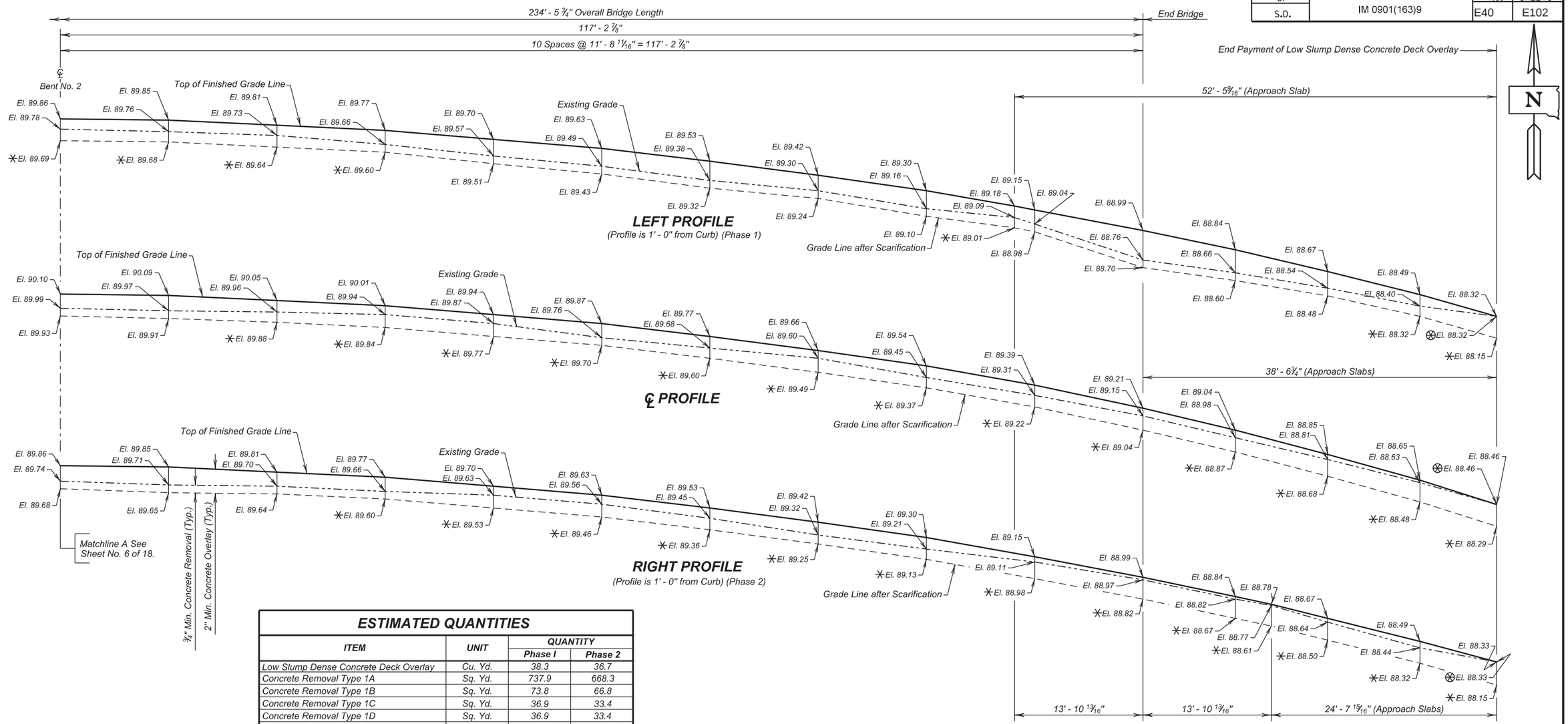

ESTIMATED QUANTITIES

ITEM	UNIT	QUANTITY	
		Phase I	Phase 2
Low Slump Dense Concrete Deck Overlay	Cu. Yd.	38.3	36.7
Concrete Removal Type 1A	Sq. Yd.	737.9	668.3
Concrete Removal Type 1B	Sq. Yd.	73.8	66.8
Concrete Removal Type 1C	Sq. Yd.	36.9	33.4
Concrete Removal Type 1D	Sq. Yd.	36.9	33.4
Concrete Removal Type B	Ft.	10.0	10.0
Class A45 Concrete Fill	Cu. Yd.	7.9	7.2
Finishing and Curing	Sq. Yd.	703.1	703.1
⊕ Remove Rubberized Asphalt Chip Seal	Sq. Yd.	492.4	445.5

⊕ Quantity shown is an approximation and is based on a visual examination. Payment for this item will be based on plans quantity.

0' .25' .5' 1.00'

VERTICAL SCALE

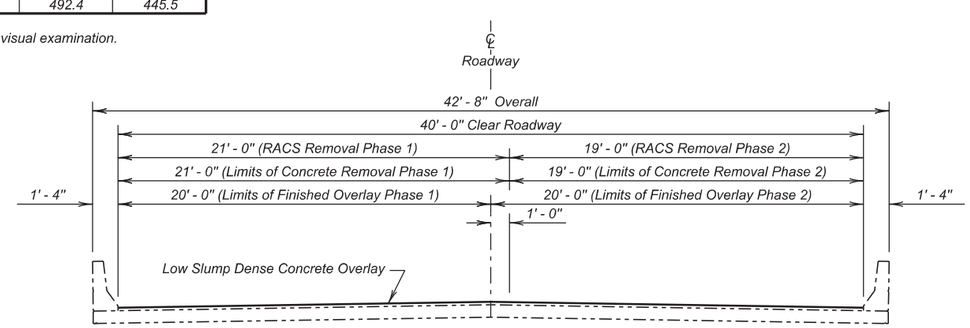

TYPICAL SECTION
(Rail Not Shown)

Benchmark Description:

B.M. # 1
"X" on southwest wingwall
Elevation 3590.02

B.M. # 2
"X" on southeast wingwall
Elevation 3589.18

NOTE :
Add 3500.00 to all elevations shown on profiles.
✳ Scarify in excess of 3/4" in these areas.
⊗ Existing Elevation is the same as the Finished Surface Elevation.
⊕ Existing Elevation is higher than the Finished Surface Elevation.

DECK PROFILES FOR LOW SLUMP DENSE CONCRETE OVERLAY (CONTINUED)
FOR
234' - 5 3/4" CONT. COMP. GIRDER BRIDGE

40' - 0" ROADWAY
OVER INTERSTATE 90
STR. NO. 47-111-580

36° 11' SKEW RHF
SEC. 24/25-T3N-R6E
IM 0901(163)9

MEADE COUNTY
S. D. DEPT. OF TRANSPORTATION
JUNE 2014

7 OF 18

DESIGNED BY	CK. DES. BY	DRAFTED BY	
KH	TK	KR	Kevin N. Goeden
MEAD0223	0223RD07		BRIDGE ENGINEER

STATE OF	PROJECT	SHEET NO.	TOTAL SHEETS
S.D.	IM 0901(163)9	E41	E102

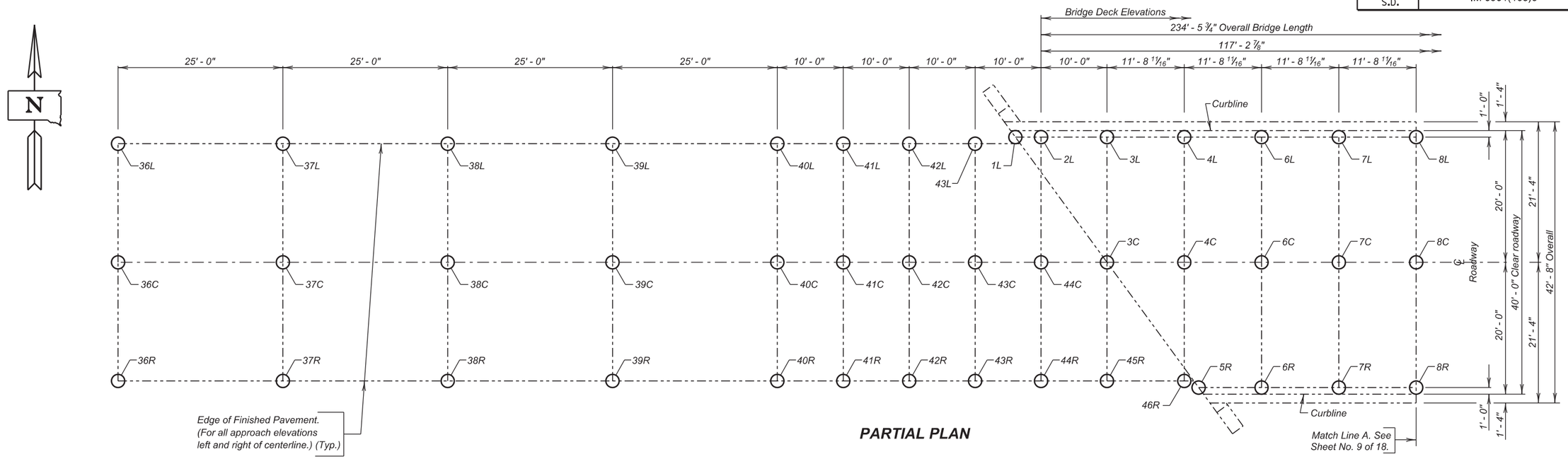

PARTIAL PLAN

Table of Elevations - Bridge Deck

Location	Rod Reading	Elevation	Location	Rod Reading	Elevation	Location	Rod Reading	Elevation
1L								
2L								
3L			3C					
4L			4C					
						5R		
6L			6C			6R		
7L			7C			7R		
8L			8C			8R		

Table of Elevations - Approach Roadway

Location	Rod Reading	Elevation	Location	Rod Reading	Elevation	Location	Rod Reading	Elevation
36L			36C			36R		
37L			37C			37R		
38L			38C			38R		
39L			39C			39R		
40L			40C			40R		
41L			41C			41R		
42L			42C			42R		
43L			43C			43R		
			44C			44R		
						45R		
						46R		

NOTE:
The Contractor shall be responsible for producing the As - Built Elevation Survey soon after construction is complete and before the bridge is completely opened to traffic.
The As - Built Elevations of the overlay shall be based on the National Geodetic Survey North American Vertical Datum of 1988 *and shall be taken and recorded at the locations shown by the table on this sheet. The completed table shall be given to the Engineer who will forward this copy to the Bridge Maintenance Engineer in the Office of Bridge Design and the Region Bridge Maintenance Engineer.*

Benchmark Description:

B.M. # 1
"X" on southwest wingwall
Elevation 3590.02

B.M. # 2
"X" on southeast wingwall
Elevation 3589.18

AS - BUILT ELEVATION SURVEY

FOR

234' - 5 3/4" CONT. COMP. GIRDER BRIDGE

40' - 0" ROADWAY — 36° 11' SKEW RHF
OVER INTERSTATE 90 — SEC. 24/25-T3N-R6E
STR. NO. 47-111-580 — IM 0901(163)9

MEADE COUNTY

S. D. DEPT. OF TRANSPORTATION

JUNE 2014

DESIGNED BY	CK. DES. BY	DRAFTED BY	
KH	TK	KH	Kevin N. Goeden
MEAD0223	0223KD08		BRIDGE ENGINEER

STATE OF	PROJECT	SHEET NO.	TOTAL SHEETS
S.D.	IM 0901(163)9	E42	E102

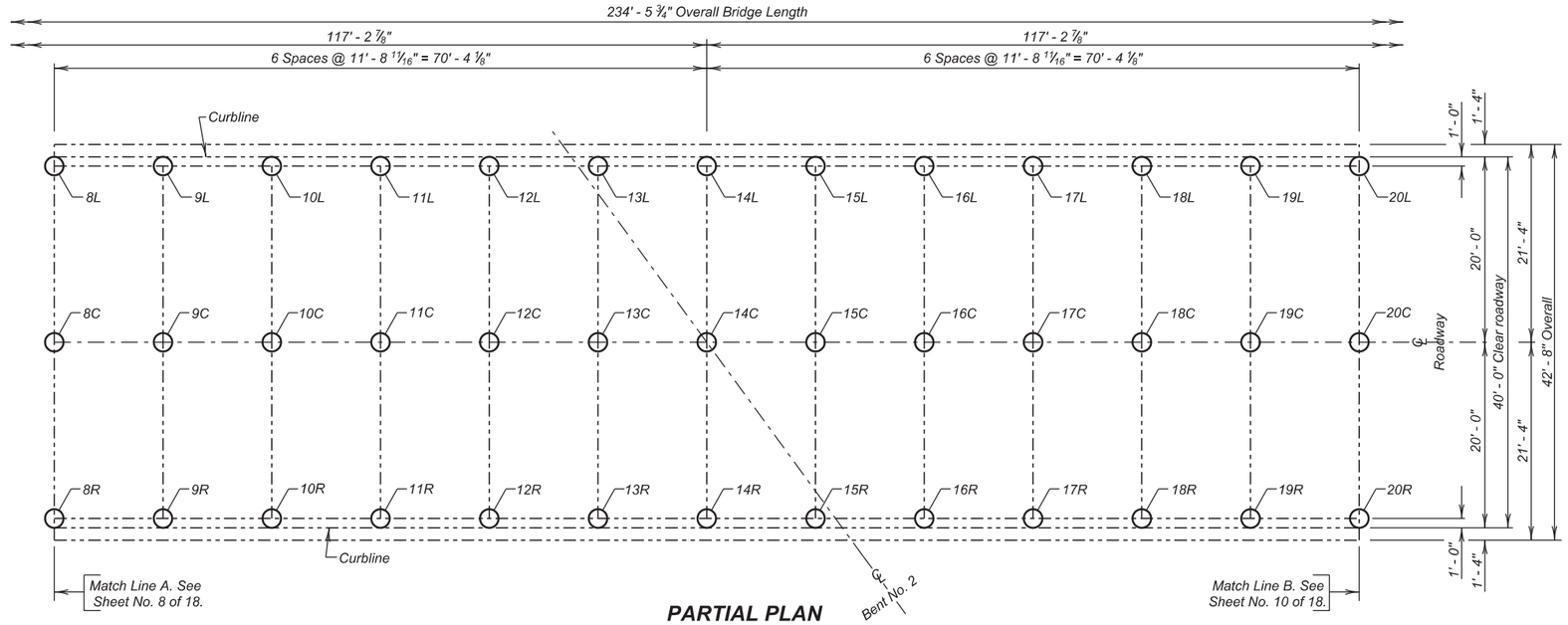

PARTIAL PLAN

Table of Elevations - Bridge Deck								
Location	Rod Reading	Elevation	Location	Rod Reading	Elevation	Location	Rod Reading	Elevation
8L			8C			8R		
9L			9C			9R		
10L			10C			10R		
11L			11C			11R		
12L			12C			12R		
13L			13C			13R		
14L			14C			14R		

Table of Elevations - Bridge Deck								
Location	Rod Reading	Elevation	Location	Rod Reading	Elevation	Location	Rod Reading	Elevation
15L			15C			15R		
16L			16C			16R		
17L			17C			17R		
18L			18C			18R		
19L			19C			19R		
20L			20C			20R		

NOTE:
The Contractor shall be responsible for producing the As - Built Elevation Survey soon after construction is complete and before the bridge is completely opened to traffic.
The As - Built Elevations of the overlay shall be based on the National Geodetic Survey North American Vertical Datum of 1988 *and shall be taken and recorded at the locations shown by the table on this sheet. The completed table shall be given to the Engineer who will forward this copy to the Bridge Maintenance Engineer in the Office of Bridge Design and the Region Bridge Maintenance Engineer.*

Benchmark Description:

B.M. # 1
"X" on southwest wingwall
Elevation 3590.02

B.M. # 2
"X" on southeast wingwall
Elevation 3589.18

AS - BUILT ELEVATION SURVEY (CONTINUED)

FOR

234' - 5 ¾" CONT. COMP. GIRDER BRIDGE

40' - 0" ROADWAY — 0° SKEW
OVER INTERSTATE 90 — SEC. 24/25-T3N-R6E
STR. NO. 47-111-580 — IM 0901(163)9

MEADE COUNTY

S. D. DEPT. OF TRANSPORTATION

JUNE 2014

DESIGNED BY	CK. DES. BY	DRAFTED BY	
KH	TK	KH	Kevin N. Goeden
MEAD0223	0223KD09		BRIDGE ENGINEER

STATE OF	PROJECT	SHEET NO.	TOTAL SHEETS
S.D.	IM 0901(163)9	E43	E102

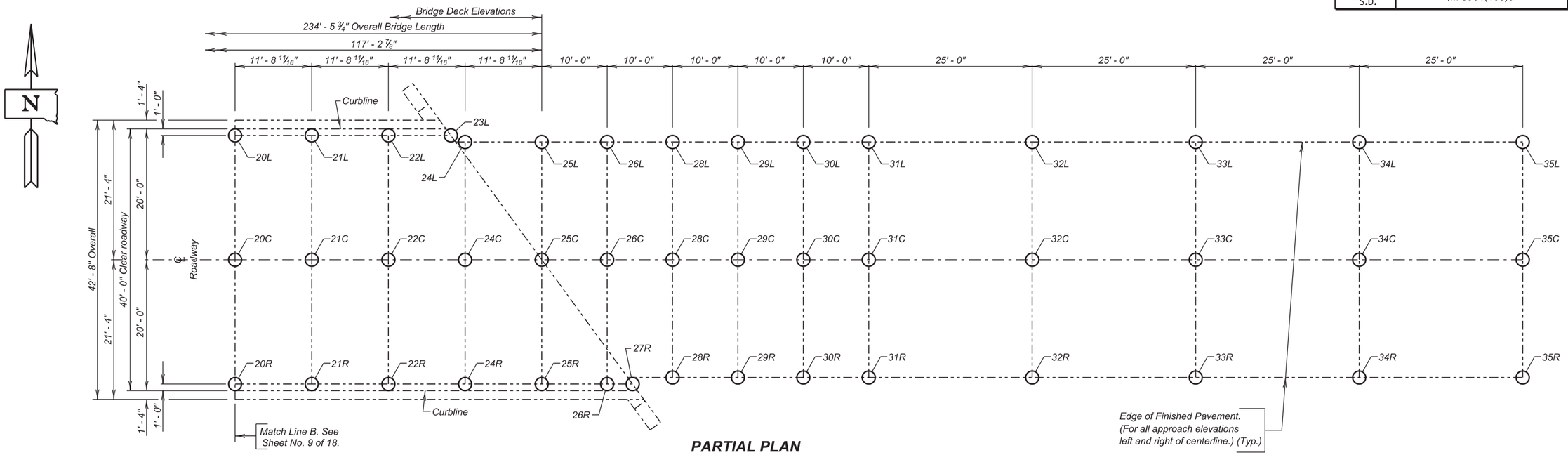

PARTIAL PLAN

Table of Elevations - Bridge Deck

Location	Rod Reading	Elevation	Location	Rod Reading	Elevation	Location	Rod Reading	Elevation
20L			20C			20R		
21L			21C			21R		
22L			22C			22R		
23L								
			24C			24R		
			25C			25R		
						26R		
						27R		

Table of Elevations - Approach Roadway

Location	Rod Reading	Elevation	Location	Rod Reading	Elevation	Location	Rod Reading	Elevation
24L								
25L								
26L			26C					
28L			28C			28R		
29L			29C			29R		
30L			30C			30R		
31L			31C			31R		
32L			32C			32R		
33L			33C			33R		
34L			34C			34R		
35L			35C			35R		

NOTE:
The Contractor shall be responsible for producing the As - Built Elevation Survey soon after construction is complete and before the bridge is completely opened to traffic.
The As - Built Elevations of the overlay shall be based on the National Geodetic Survey North American Vertical Datum of 1988 and shall be taken and recorded at the locations shown by the table on this sheet. The completed table shall be given to the Engineer who will forward this copy to the Bridge Maintenance Engineer in the Office of Bridge Design and the Region Bridge Maintenance Engineer.

Benchmark Description:

B.M. # 1
"X" on southwest wingwall
Elevation 3590.02

B.M. # 2
"X" on southeast wingwall
Elevation 3589.18

ESTIMATED QUANTITIES

ITEM	UNIT	QUANTITY
Bridge Elevation Survey	L.S.	Lump Sum

AS - BUILT ELEVATION SURVEY (CONTINUED)

FOR

234' - 5 ¾" CONT. COMP. GIRDER BRIDGE

40' - 0" ROADWAY — 36° 11' SKEW RHF
OVER INTERSTATE 90 — SEC. 24/25-T3N-R6E
STR. NO. 47-111-580 — IM 0901(163)9

MEADE COUNTY

S. D. DEPT. OF TRANSPORTATION

JUNE 2014

DESIGNED BY	CK. DES. BY	DRAFTED BY	
KH	TK	KH	Kevin N. Boeden
MEAD0223	0223KD10		BRIDGE ENGINEER

STATE OF	PROJECT	SHEET NO.	TOTAL SHEETS
S.D.	IM 0901(163)9	E44	E102

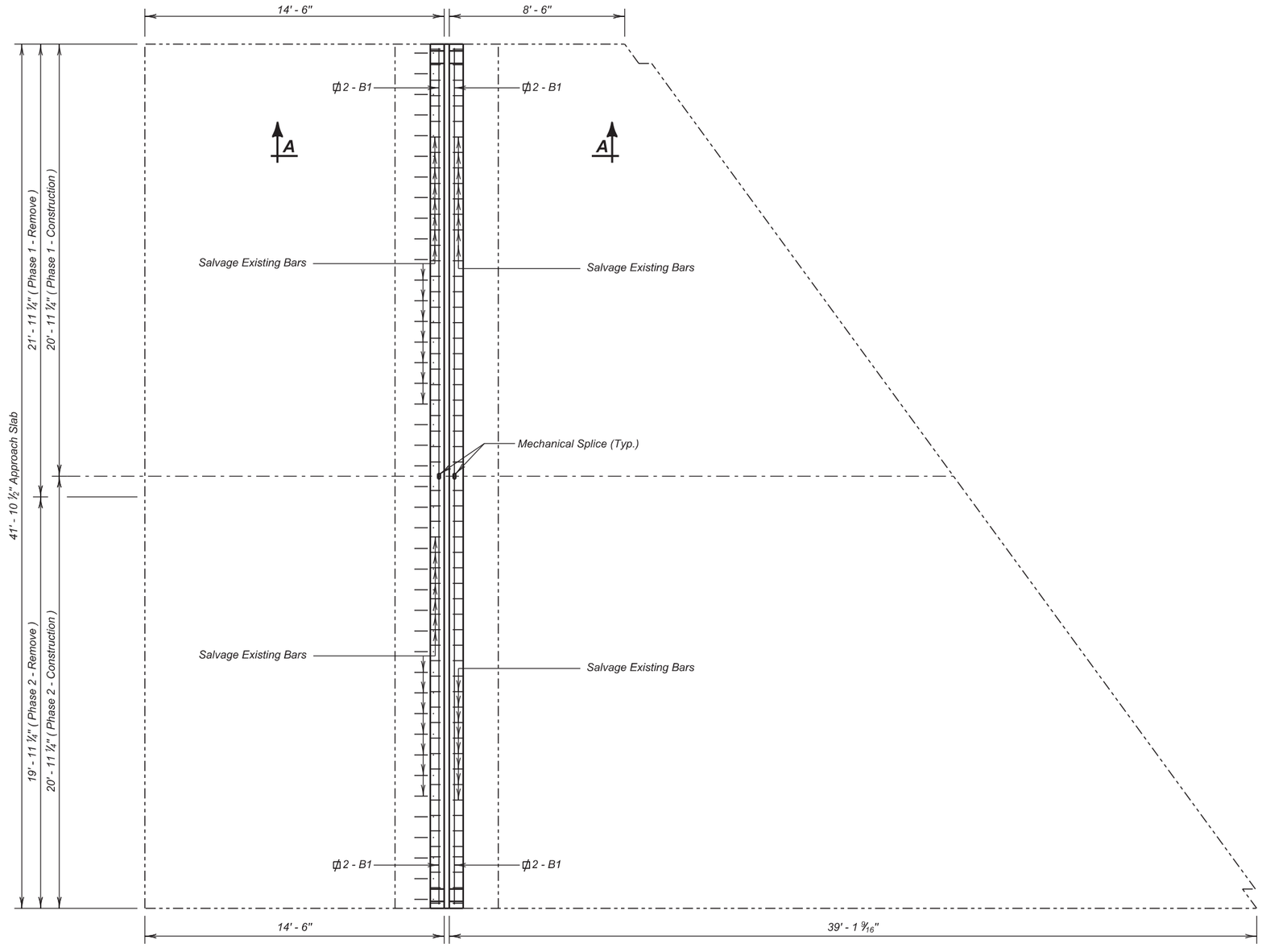

PLAN

REINFORCING SCHEDULE
(For Two Approach and Sleeper Slabs)

	Mk.	No.	Size	Length	Type	Bending Details
PHASE 1	ϕB1	8	5	20' - 9"	Str.	
PHASE 2	ϕB1	8	5	20' - 9"	Str.	

NOTES:
All Dimensions are out to out of bars.
All Bars to Epoxy Coated.

ϕ These bars shall be spliced with mechanical splice devices
Equivalent Splice Lengths

No. 4 - 2' - 0"
No. 5 - 2' - 6"
No. 6 - 3' - 0"

ESTIMATED QUANTITIES

ITEM	UNIT	QUANTITY Phase I	QUANTITY Phase 2
Breakout Structural Concrete	Cu. Yd.	1.7	1.5
Class A45 Concrete, Bridge Repair	Cu. Yd.	1.6	1.6
Epoxy Coated Reinforcing Steel	Lb.	173	173
Membrane Sealant Expansion Joint	Ft.	42	42
No. 5 Rebar Splice	Each	8	—

Shaded areas indicate limits of concrete breakout.

Class A45 Concrete

Low Slump Dense Concrete

3" x 4" Membrane Sealant installedwith a Bonding Adhesive continuous across approach slab.

Styrofoam Filler (or approved Filler Material). Place with A45 Concrete, Bridge Repair.

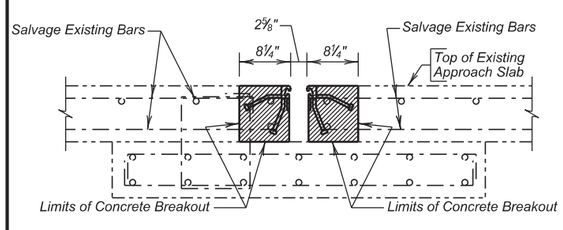

SECTION A - A
(Existing Section showing Removal Limits)

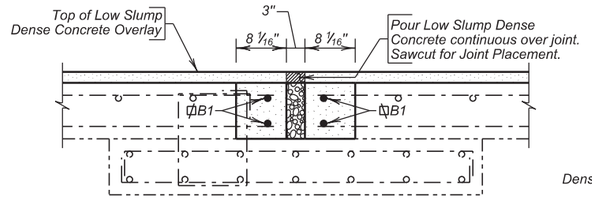

SECTION A - A
(New Construction Shown)

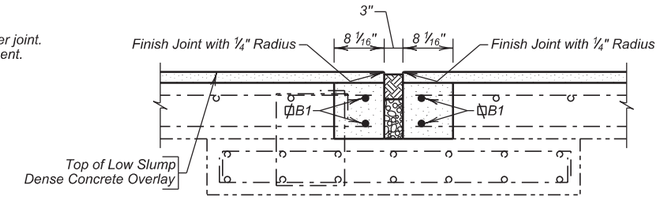

SECTION A - A
(New Construction Shown)

APPROACH SLAB JOINT REPLACEMENT

FOR

234' - 5¾" CONT. COMP. GIRDER BRIDGE

40' - 0" ROADWAY
OVER INTERSTATE 90
STR. NO. 47-111-580

36° 11' SKEW RHF
SEC. 24/25-T3N-R6E
IM 0901(163)9

MEADE COUNTY

S. D. DEPT. OF TRANSPORTATION

JUNE 2014

DESIGNED BY	CK. DES. BY	DRAFTED BY	
KH	TK	KR	Kevin N. Coeden BRIDGE ENGINEER
MEAD0223	0223RD11		

STATE OF	PROJECT	SHEET NO.	TOTAL SHEETS
S.D.	IM 0901(163)9	E45	E102

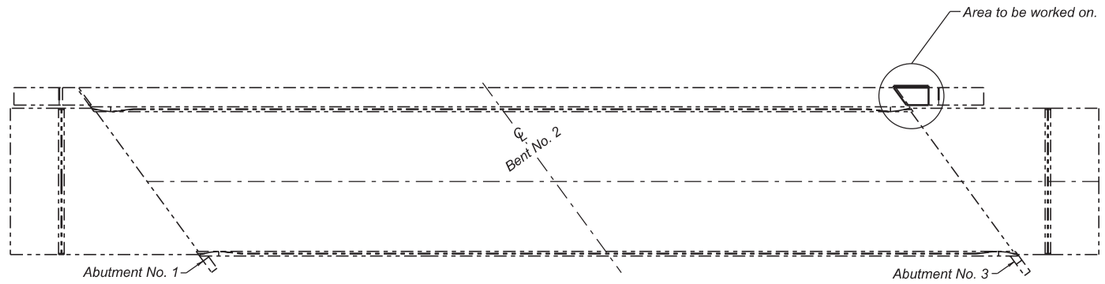

REINFORCING SCHEDULE

Mk.	No.	Size	Length	Type	Bending Details
a1	4	6	4' - 6"	Str.	
b1	4	6	5' - 10"	Str.	
c1	4	6	7' - 2"	Str.	
d1	4	6	8' - 6"	Str.	

NOTES:
All Dimensions are out to out of bars.
All Bars to be Black Steel.

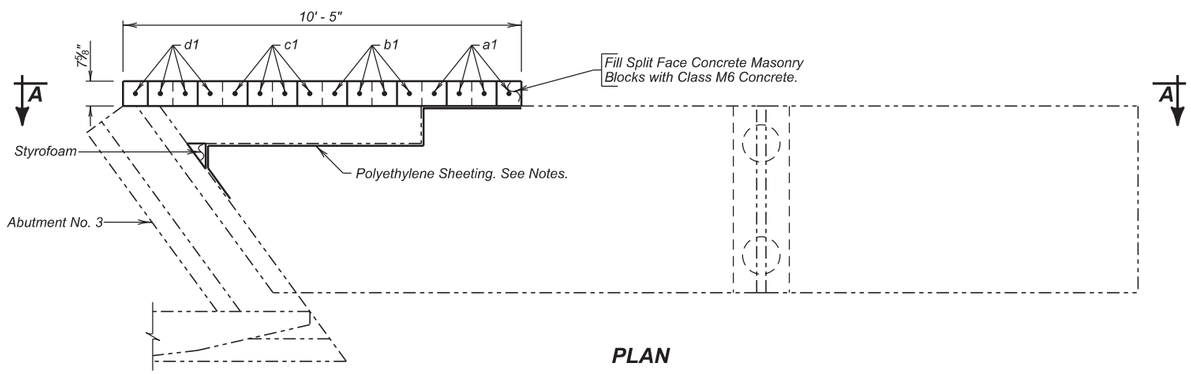

PLAN

ESTIMATED QUANTITIES

	ITEM	UNIT	QUANTITY
*	Split Face Concrete Masonry Block Wall	Sq. Ft.	49.8
	Reinforcing Steel	Lb.	162
	Class M6 Concrete	Cu. Yd.	2.5
	Controlled Density Fill	Cu. Yd.	1.2

* Items 1 thru 6 are approximate quantities contained in the above bid item and are for information only.

	TOTAL
1. Polyethylene Sheeting.	45 Sq. Ft.
2. Excavation for Concrete Wall.	2.0 Cu. Yd.

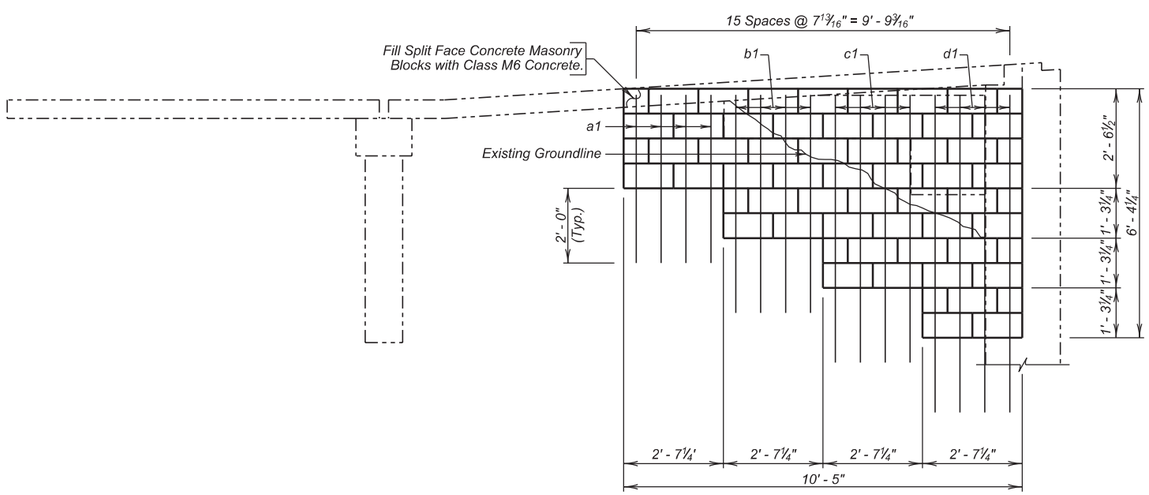

SEC. A - A

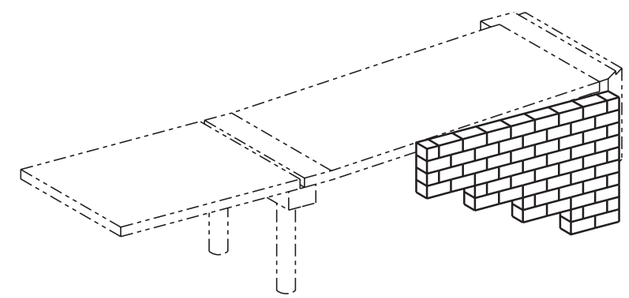

ISOMETRIC VIEW

CONCRETE MASONRY BLOCK WALL
FOR
234' - 5¾" CONT. COMP. GIRDER BRIDGE

40' - 0" ROADWAY
OVER INTERSTATE 90
STR. NO. 47-111-580

36° 11' SKEW RHF
SEC. 24/25-T3N-R6E
IM 0901(163)9

MEADE COUNTY
S. D. DEPT. OF TRANSPORTATION
JUNE 2014

DESIGNED BY	CK. DES. BY	DRAFTED BY	
KH	TK	KH	Kevin N. Goeden
MEAD0223	0223KD12		BRIDGE ENGINEER

STATE OF	PROJECT	SHEET NO.	TOTAL SHEETS
S.D.	IM 0901(163)9	E46	E102

Bench Mark: C&GS N-361 1962 El. 3586.23
12' South of the Bridge centerline, 1.0' above the decking of the Bridge, and set in the top of the South end of the east abutment of the Bridge. NOTE: This Bench Mark may have been reset by the time of construction.

NOTE:-
T.S. at ℄ El. = Top of Slab at Centerline Roadway Elevation
T.S. at C. El. = Top of Slab at Curb Elevation

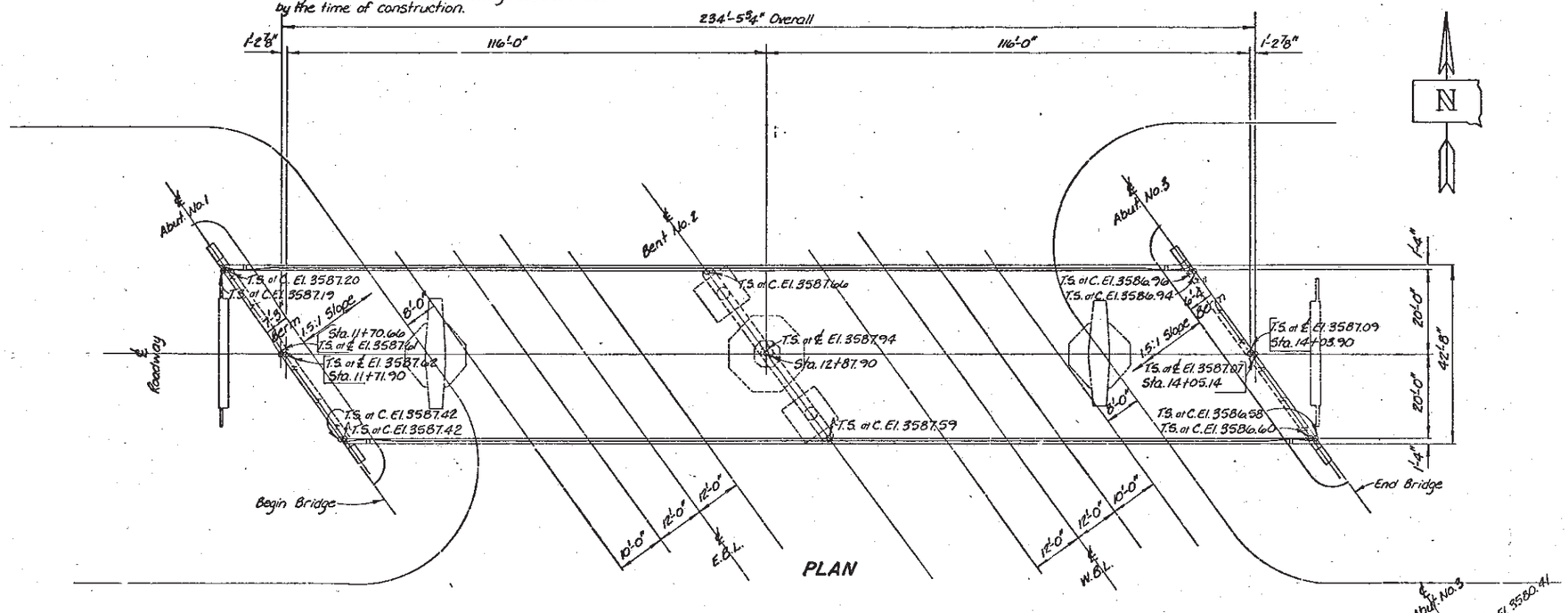

PLAN

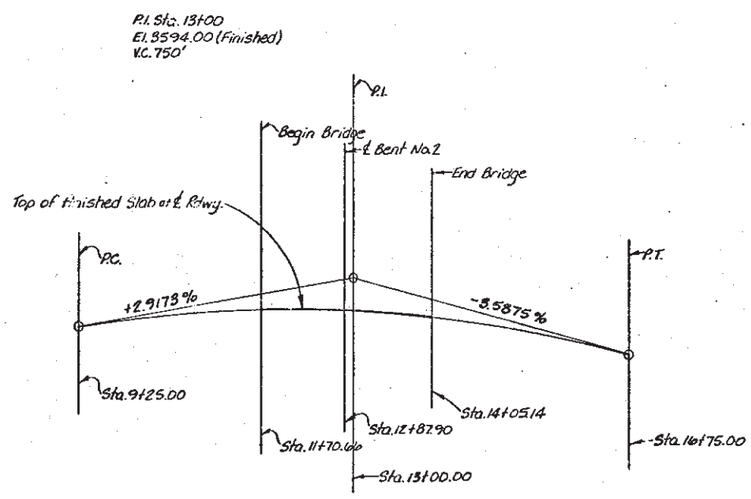

VERTICAL CURVE DATA

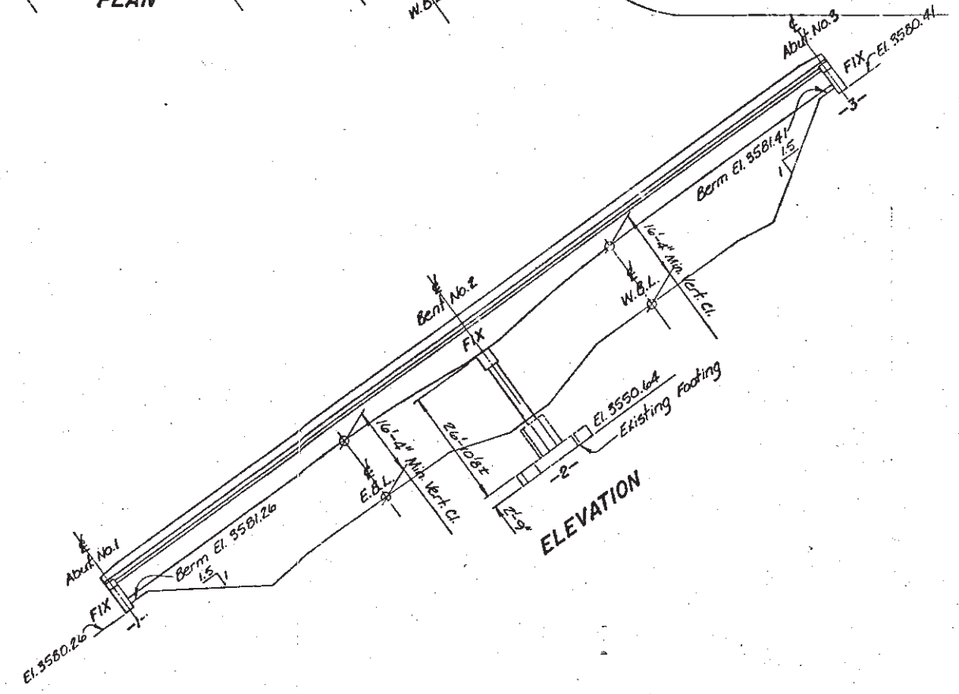

ELEVATION

—X271—
INDEX OF BRIDGE SHEETS—

Sheet No. 1 – General Drawing
Sheet No. 2 – Estimate of Structure Quantities and Notes
Sheet No. 3 – Structural Notes
Sheet No. 4 – Subsurface Investigations and Piling Layout
Sheet No. 5 – Details of Abutment No. 1
Sheet No. 6 – Details of Abutment No. 3
Sheet No. 7 – Details of Bent No. 2
Sheet No. 8 – Slab Details
Sheet No. 9 – End Block and Barrier Curb Details
Sheet No. 10 – Barrier Railing Details
Sheet No. 11 – Diaphragm Details
Sheet No. 12 – Diaphragm Details
Sheet No. 13 – Diaphragm Details
Sheet No. 14 – Girder Layout and Details
Sheet No. 15 – Framing Diaphragm and Erection Data
Sheet No. 16 – Details of Field Splices and Bearings
Sheet No. 17 – Details of Bridge End Backfill
Sheet No. 18 – Standard Plate No. 302
Sheet No. 19 – Details of Approach Slab Adjacent to Bridge
Sheet No. 20 – Strip Seal Expansion Joint
Sheet No. 21 – Drop Inlet and Pipe Installation Sheet
Sheet No. 22 – Drop Inlet and Pipe Installation Sheet
Sheet No. 23 Standard Plate No. 308

ORIGINAL CONSTRUCTION PLANS

GENERAL DRAWING
FOR
234'-5¾" CONT. COMP. GIRDER BRIDGE

40'-0" ROADWAY — 36° 11' SKEW R.H.F.
OVER I-90 STA. 897+42.52 — SEC. 24/25-T 3 N-R 6 E
STA. 11+70.66 TO STA. 14+05.14 — I-90-1(43)48
STR. NO. 47-111-580 — HS 20-44 (& ALT.)
MEADE COUNTY

S. D. DEPT. OF TRANSPORTATION
DIVISION OF HIGHWAYS
AUGUST 1979

—X271—

(13) OF (18)

PLANS BY:
BRIDGE SEC. S.DAK. DEPT. HWYS.

DESIGNED BY	DRAWN BY	CHECKED BY	APPROVED
	R. LeBeau	f.a.k.	K. C. Wilson, BRIDGE ENGINEER

STATE OF	PROJECT	SHEET NO.	TOTAL SHEETS
S.D.	IM 0901(163)9	E47	E102

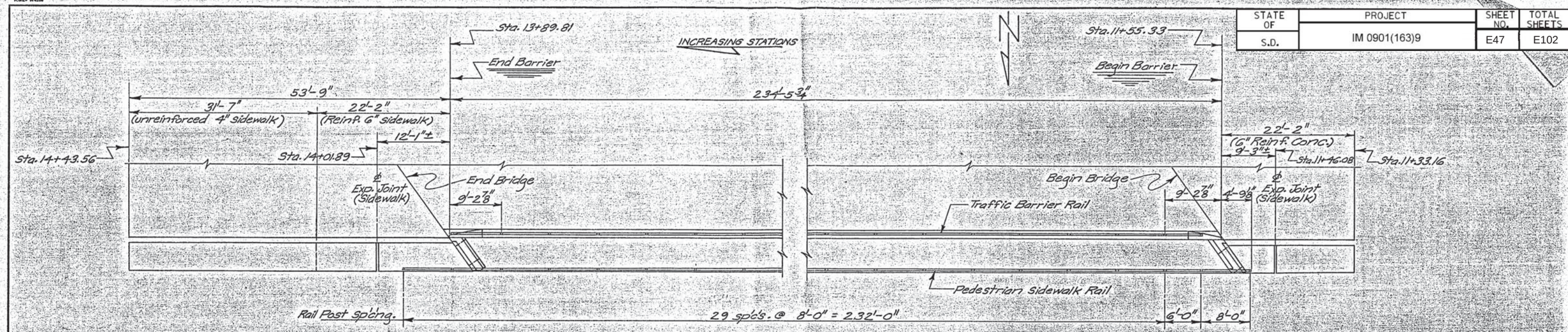

PLAN

INDEX OF SIDEWALK SHEETS—

Sheet No. 1 – General Drawing of Sidewalk
Sheet No. 2 – Estimate of Quantities and Notes
Sheet No. 3 – Details of Wingwall Modifications at Abut. No. 1
Sheet No. 4 – Details of Wingwall Modifications at Abut. No. 3
Sheet No. 5 – Sidewalk Details
Sheet No. 6 – Sidewalk Details

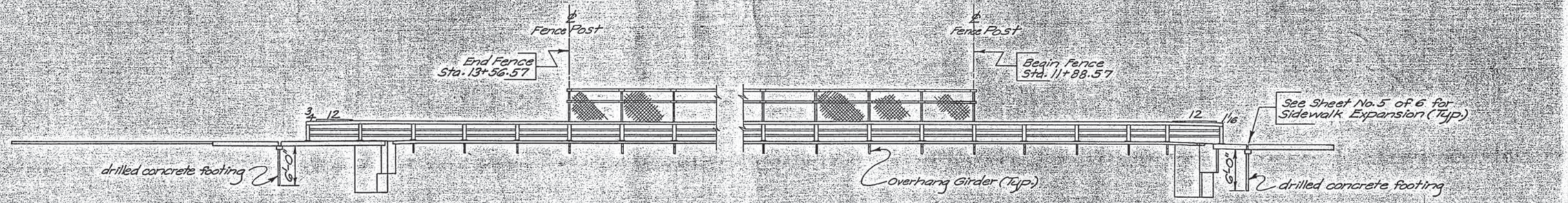

ELEVATION

(Barrier and Traffic Barrier Rail not shown in Elevation View)

ORIGINAL CONSTRUCTION PLANS

CONSTRUCTION CHANGE

GENERAL DRAWING OF SIDEWALK
FOR
234'-5¾" CONT. COMP. GIRDER BRIDGE

40'-0" ROADWAY — 36° 11' SKEW R.H.F.
OVER I-90 STA. 897+42.52 — SEC. 24/25-T3 N-R6E
STA. 11+70.66 TO STA. 14+05.14 — I-90-1(43)48
STR. NO. 47-111-580 — HS20-44 (& ALT.)
MEADE COUNTY

S. D. DEPT. OF TRANSPORTATION
DIVISION OF HIGHWAYS
JUNE 1980

DESIGNED BY	DRAWN BY	CHECKED BY	APPROVED
	W.C.P.		BRIDGE ENGINEER

47-02

STATE OF	PROJECT	SHEET NO.	TOTAL SHEETS
S.D.	IM 0901(163)9	E48	E102

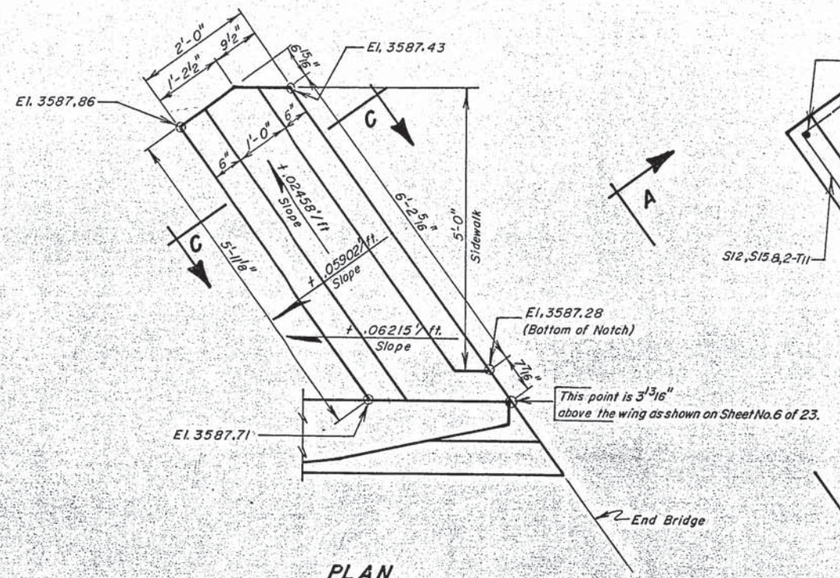

PLAN

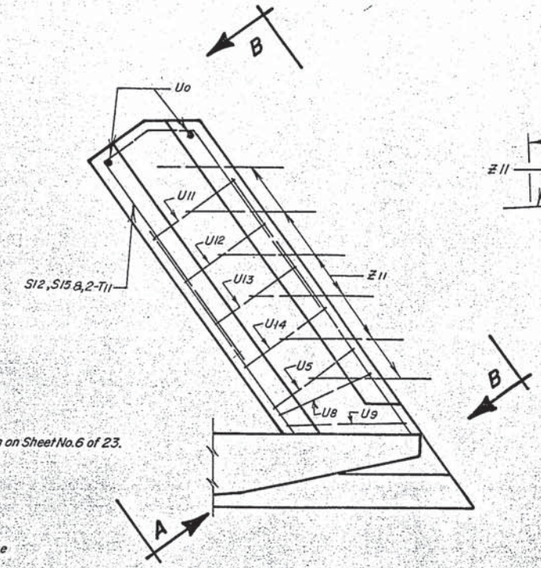

PLAN

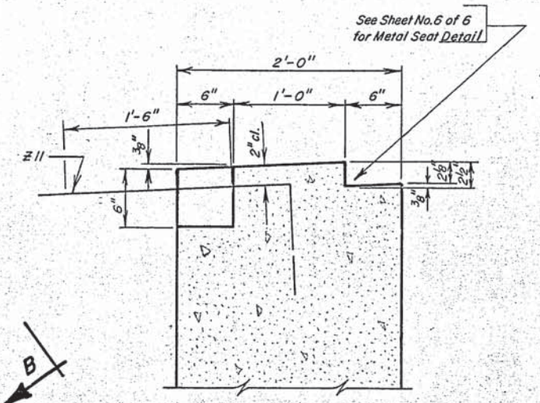

SEC. C-C

Note: Use 2" clear cover on Re-Steel except as Shown.

REINFORCING SCHEDULE
(For One Wingwall Modification)

Mk	No.	Size	Length	Type	Bending Details
S12	1	6	12'-6"	S10A	
S15	1	6	14'-0"	S10A	
T11	3	6	8'-6"	S10A	
U0	2	6	4'-2"	Str.	
U11	1	6	8'-6"	S10	
U12	1	6	7'-8"	S10	
U13	1	6	7'-0"	S10	
U14	1	6	6'-2"	S10	
Z11	6	6	3'-0"	17A	

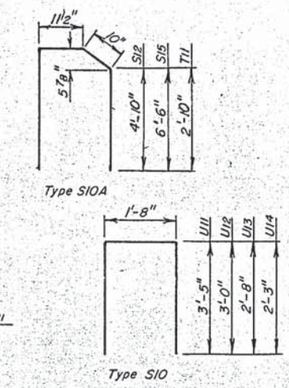

NOTE: All dimensions are out to out of bars.

ESTIMATED QUANTITIES
(For One Wingwall Modification)

ITEM	UNIT	QUANTITY
Class "A" Concrete - Bridge	Cu. Yds.	0.9
Reinforcement Concrete Masonry	Lbs.	162

The S4, S5 and associated rebars shown on Sheet No. 6 of 23 may have to be lowered from the location shown on Sheet No. 6 of 23 to provide 1" minimum clear cover below the 6" sidewalk notch.

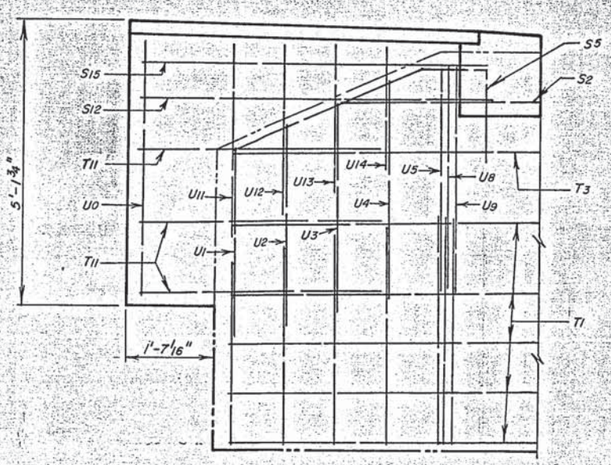

ELEVATION
VIEW A-A

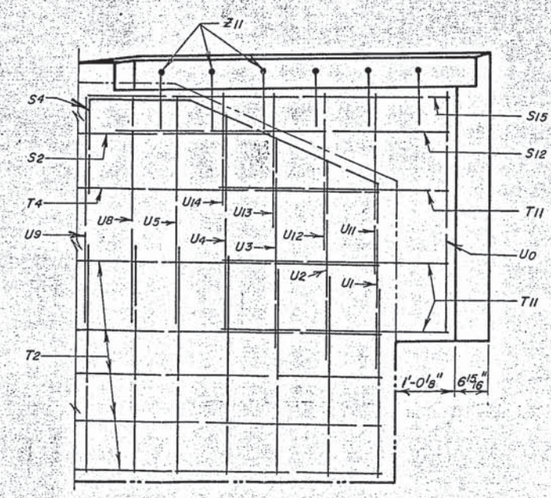

ELEVATION
VIEW B-B

ORIGINAL CONSTRUCTION PLANS

CONSTRUCTION CHANGE

DETAILS OF WINGWALL MODIFICATIONS
AT ABUT. NO. 3
FOR

234'-5¾" CONT. COMP. GIRDER BRIDGE

40'-0" ROADWAY — 36° 11' SKEW R.H.F.
OVER I-90 STA. 897+42.52 — SEC. 24/25-T3 N-R6E
STA. 11+70.66 TO STA. 14+05.14 — I-90-1(43)48
STR. NO. 47-111-580 — HS 20-44 (& ALT.)

MEADE COUNTY

S. D. DEPT. OF TRANSPORTATION
DIVISION OF HIGHWAYS
JULY 1980

15 OF 18

DESIGNED BY	DRAWN BY	CHECKED BY	APPROVED
	L.M.	f.a.k.	BRIDGE ENGINEER

STATE OF	PROJECT	SHEET NO.	TOTAL SHEETS
S.D.	IM 0901(163)9	E49	E102

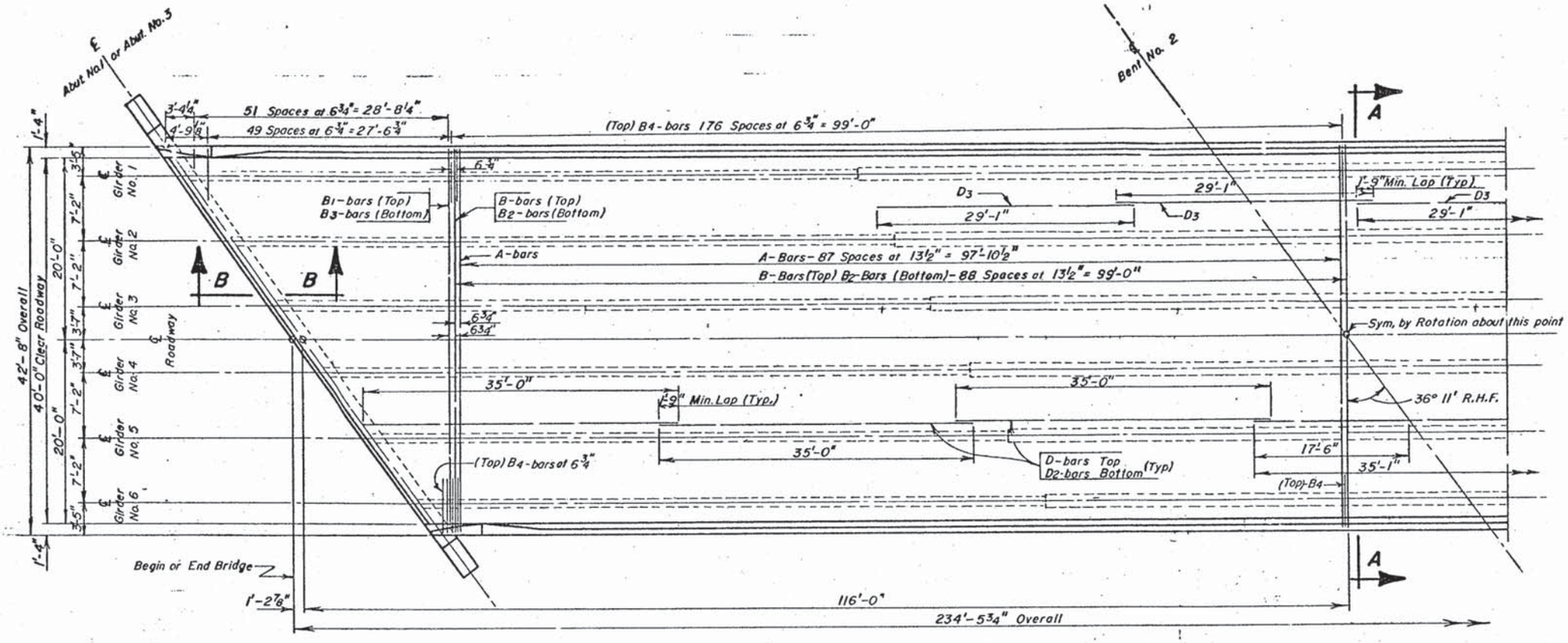

HALF PLAN

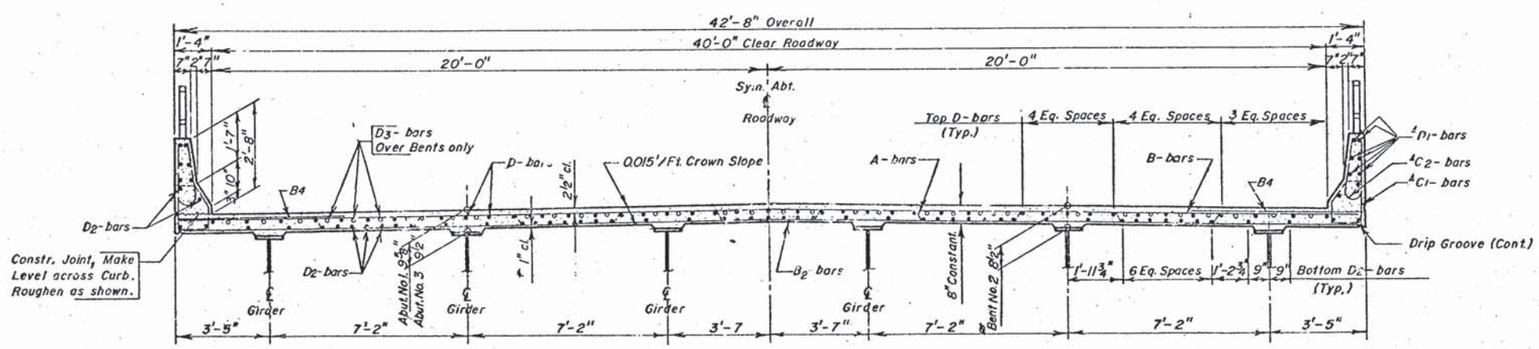

SEC. A-A

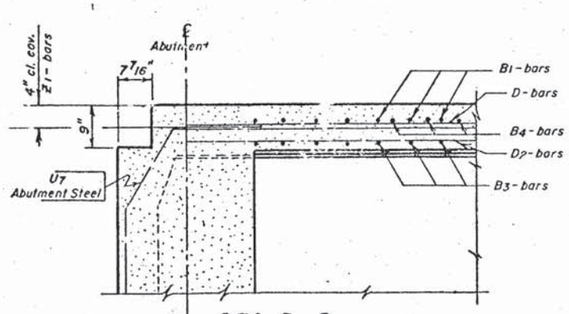

SEC. B-B

* Minimum Clear Cover.

ø Dimensions are at ℄ Bearings. At other points along the Girders this dimension shall be computed as shown on the ERECTION DATA SHEET

Δ For spacing of barrier curb re-steel, See Sheet No. 9 of 23.

NOTE —

In lieu of the bent epoxy coated "A" reinforcing bars, the Contractor has the option of substituting for each "A" bar, one straight "B2" bar and one straight epoxy coated "B" bar, with the epoxy coated "B" bar being placed in the top mat of reinforcing steel.

If the Contractor elects to substitute "B" and "B2" bars for the "A" bars, he shall do so at no additional cost to the State. For payment, weight will be based on that of "A" bars without regard to the weight of bars that may be substituted for them.

REINFORCING SCHEDULE

MK.	No.	Size	Length	Type
# A	176	5	43'-11"	15
# B	177	5	42'-5"	Str.
# B1	52	5	44'-6"	Str.
B2	177	5	42'-5"	Str.
B3	52	5	44'-6"	Str.
B15	12	5	14'-3"	Str.
B17	4	4	7'-7"	19A
B18	4	4	2'-6"	Str.
B19	12	8	8'-0"	19B
B21	12	6	3'-2"	17A
B22	12	5	2'-3"	Str.
# C1	450	5	5'-10"	T2A
C2	422	5	5'-1"	S11
C3	4	5	6'-7"	T1
C4	4	5	6'-10"	T1
C5	12	5	7'-1"	T1
C6	4	5	7'-4"	T1
C7	4	5	7'-7"	T1
C8	4	5	7'-9"	T1
# C9	4	5	5'-7"	T7
# C10	4	6	4'-9"	17
# C11	4	6	4'-8"	17
# C12	4	6	4'-5"	17
C13	4	5	5'-7"	17
C14	4	5	5'-6"	17
C15	4	5	5'-3"	17
# D	301	5	35'-0"	Str.
D1	72	4	36'-1"	Str
D2	385	5	35'-0"	Str.
# D3	102	5	29'-1"	Str.
ø Z1	98	7	4'-0"	Str.
Δ B4	808	6	6'-0"	Str.

Bending Details

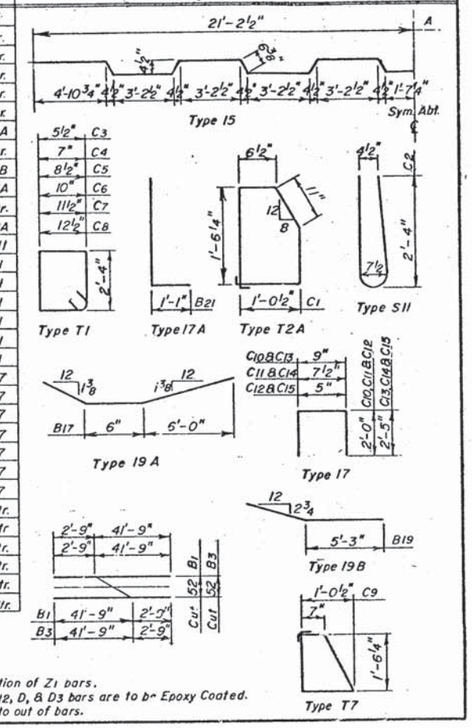

ø See Sheet No. 19 of 23 for location of Z1 bars.

All A, B, B1, B4, C1, C9, C10, C11, C12, D, & D3 bars are to be Epoxy Coated.

NOTE: All dimensions are cut to out of bars.

ESTIMATED QUANTITIES

ITEM	UNIT	QUANTITY
Class "A" Concrete, Bridge Deck	Cu. Yds.	291.0
Reinforcement Concrete Masonry	Lbs.	29,927
★ Structural Steel	Lump Sum	Lump Sum
Epoxy Coated Reinforcing Steel	Lbs.	42,519

★ For informational purposes the estimated weight of the Structural Steel is 296,954 Pounds.

ORIGINAL CONSTRUCTION PLANS

SLAB DETAILS
FOR

234'-5¾" CONT. COMP. GIRDER BRIDGE

40'-0" ROADWAY — 36° 11' SKEW R.H.F.
OVER I-90 STA. 897+42.52 — SEC. 24/25-T3N-R6E
STA. 11+70.66 TO STA. 14+05.14 — I-90-1(43)48
STR. NO. 47-111-580 — HS 20-44 (& ALT.)

MEADE COUNTY

S. D. DEPT. OF TRANSPORTATION
DIVISION OF HIGHWAYS
AUGUST 1979

DESIGNED BY	DRAWN BY	CHECKED BY	APPROVED
	L.M.	F.A.K.	K.C. Wilson, BRIDGE ENGINEER

STATE OF	PROJECT	SHEET NO.	TOTAL SHEETS
S.D.	IM 0901(163)9	E50	E102

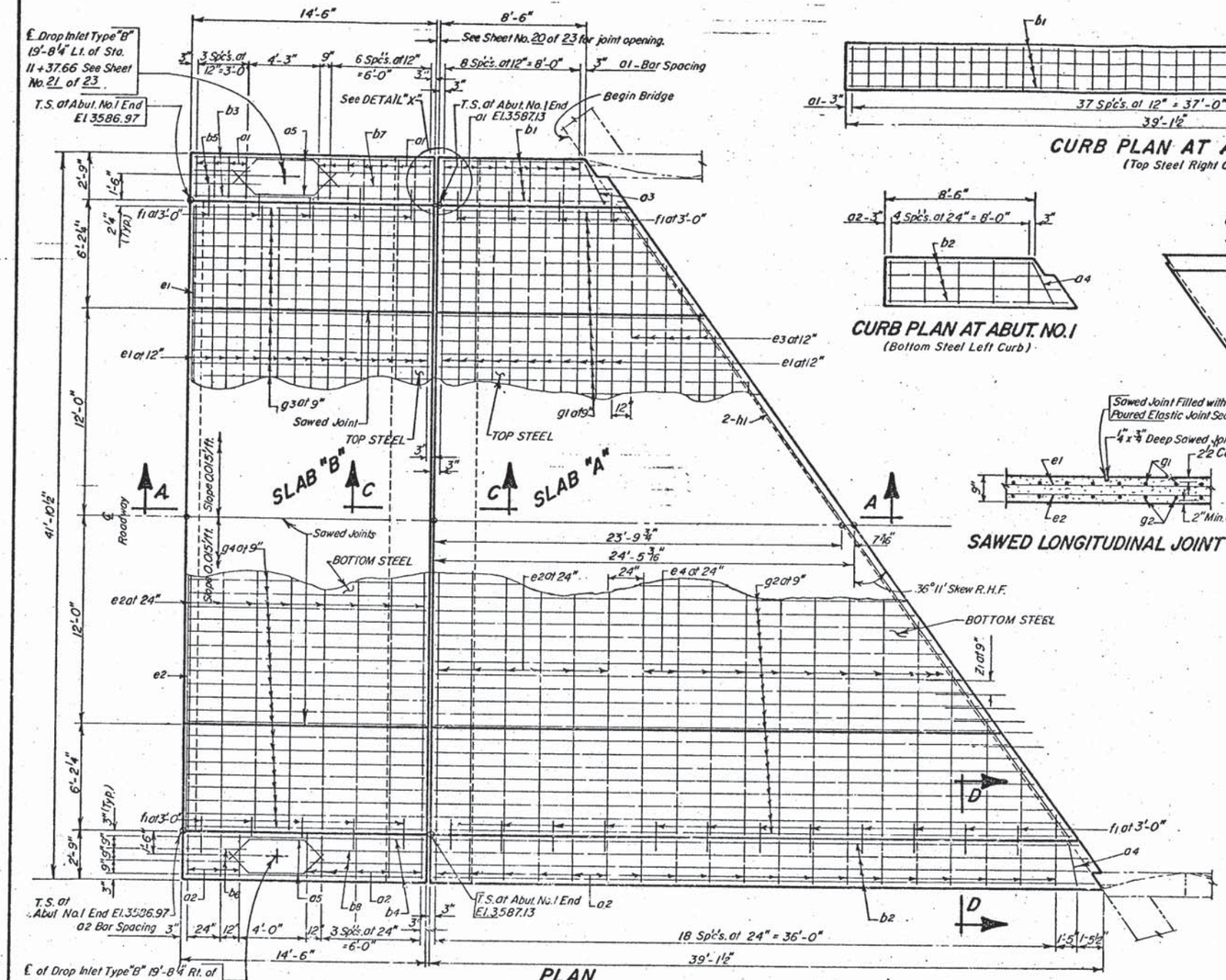

PLAN

(Shown adjacent to Abut. No. 1 Abut. No. 3 is similar except as noted.)

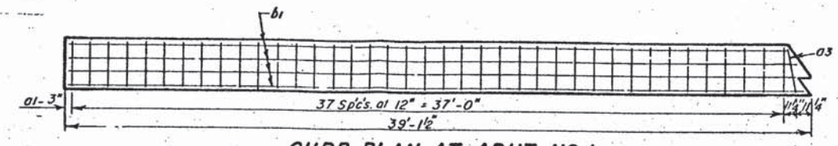

CURB PLAN AT ABUT. NO. 1

(Top Steel Right Curb)

CURB PLAN AT ABUT. NO. 1

(Bottom Steel Left Curb)

SAWED LONGITUDINAL JOINT

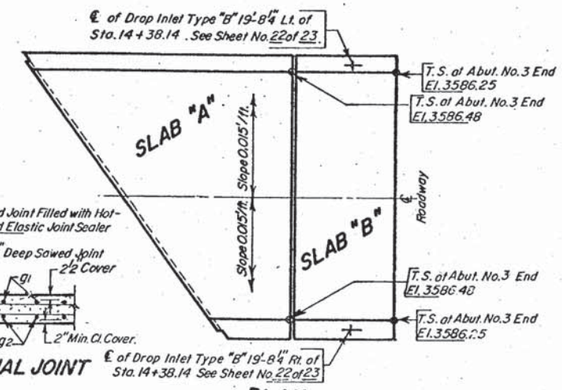

PLAN

(At Abutment No. 3 End)

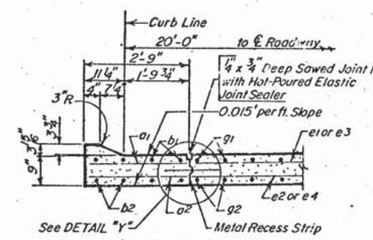

SEC. D-D
LONGITUDINAL CONSTRUCTION JOINT WITH TIE BARS

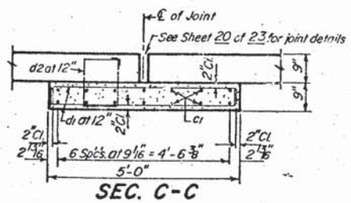

SEC. C-C

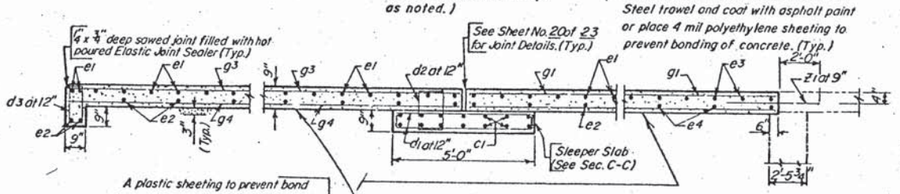

A plastic sheeting to prevent bond to cushion shall be placed between cushion and slab in this area between Bridge and Exp. Joints. (Typ.)

Gravel Cushion shall be constructed to a depth of three inches under the Concrete Approach Pavement and Gutters. The quantity of gravel shown in the Estimate of Quantities is based on a rate of 0.167 ton per square yard. Gravel Cushion shall be watered and compacted to the satisfaction of the Engineer. The cost of water for compaction shall be absorbed in the various pay items of the contract.

SEC. A-A

NOTE—

The 9" cut-off wall is considered a part of the approach slab and all work and material involved in constructing this, including excavation and disposal of excavated, and surplus material, shall be absorbed in the unit price bid for the concrete approach slab.

The portion of the sleeper slab directly under the movable slabs shall be smooth. Steel trowel and coat with asphalt paint or place 4 mil polyethylene sheeting to prevent bonding of concrete. (Typ.)

NOTE—

Slab "A" plus Slab "B" at each end of bridge constitutes one Approach Slab in above schedule and estimates.

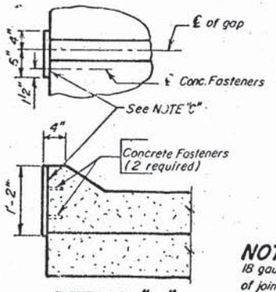

DETAIL "X"

NOTE "C"

18 gauge galv. sheet metal. Attach to one side of joint only, after slabs "A" and "B" are poured. Use fasteners that will not spall the concrete as approved by the Engineer.

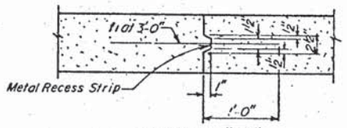

DETAIL "Y"

NOTE—

If proposed, approval of alternate designs of Metal Strips will be considered by the Engineer.

REINFORCING SCHEDULE

(For Two Approach Slabs.)

MK.	No.	Size	Length	Type
a1	142	3	2'-5"	Str.
a2	80	5	2'-5"	Str.
a3	4	3	3'-0"	Str.
a4	4	5	3'-0"	Str.
a5	16	3	7'-4"	19A
*b1	8	3	48'-3"	Str.
*b2	8	7	48'-3"	Str.
b3	8	3	14'-2"	Str.
b4	8	7	14'-2"	Str.
b5	8	3	3'-2"	Str.
b6	8	7	3'-2"	Str.
b7	8	3	6'-9"	Str.
b8	8	7	6'-9"	Str.
c1	28	5	41'-6"	Str.
d1	168	4	5'-6"	2
d2	84	4	4'-11"	T2
d3	74	4	3'-11"	T2
e1	54	3	36'-0"	Str.
e2	30	5	36'-0"	Str.
e3	25	3	36'-9"	Str.
e4	13	5	35'-7"	Str.
f1	52	4	2'-0"	Str.
g1	49	3	48'-2"	Str.
g2	49	7	48'-2"	Str.
g3	98	3	14'-2"	Str.
g4	98	7	14'-2"	Str.
h1	4	5	44'-9"	Str.

Bending Details

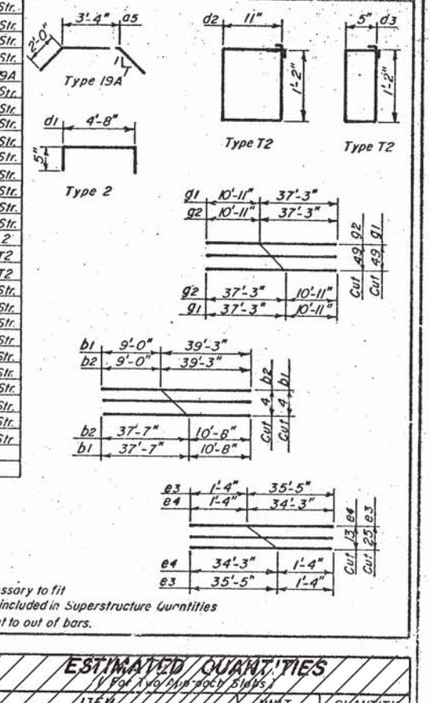

* Cut or bend in field as necessary to fit
NOTE: Z1 bars are listed and included in Superstructure Quantities
NOTE: All dimensions are out to out of bars.

ESTIMATED QUANTITIES

(For Two Approach Slabs.)

ITEM	UNIT	QUANTITY
Gravel Cushion	Sq. Yds.	304.8
Conc. Appr. Slab Adjacent to Bridge	Sq. Yds.	331.7
Conc. Gutter Type "D-9" (Modified)	L.F.	155.7
Bridge Appr. Sleeper Slab	Sq. Yds.	46.5

1. 80.2 Cu. Yds. Concrete in Approach Slab.
2. 12,207 Lbs. re-steel in Approach Slab (Includes Dowels).
3. 13.0 Cu. Yds. Concrete in Gutter.
4. 1,792 Lbs. re-steel in Gutter.
5. 50.6 Tons of Gravel Cushion.
6. 11.6 Cu. Yds. Concrete in Sleeper Slab.
7. 2,105 Lbs. re-steel in Sleeper Slab.

ORIGINAL CONSTRUCTION PLANS

DETAILS OF APPROACH SLAB ADJACENT TO BRIDGE FOR

234'-5¾" CONT. COMP. GIRDER BRIDGE

40'-0" ROADWAY — 36° 11' SKEW R.H.F.

OVER I-90 STA. 897+42.52 — SEC. 24/25-T3N-R6E

STA. 11+70.66 TO STA. 14+05.14 — I-90-1(43)48

STR. NO. 47-111-580 — HS 20-44 (& ALT.)

MEADE COUNTY

S. D. DEPT. OF TRANSPORTATION
DIVISION OF HIGHWAYS
AUGUST 1979

DESIGNED BY	DRAWN BY	CHECKED BY	APPROVED
	I.a.k.	L.M.	K.C. Wilson BRIDGE ENGINEER

STATE OF	PROJECT	SHEET NO.	TOTAL SHEETS
S.D.	IM 0901(163)9	E51	E102

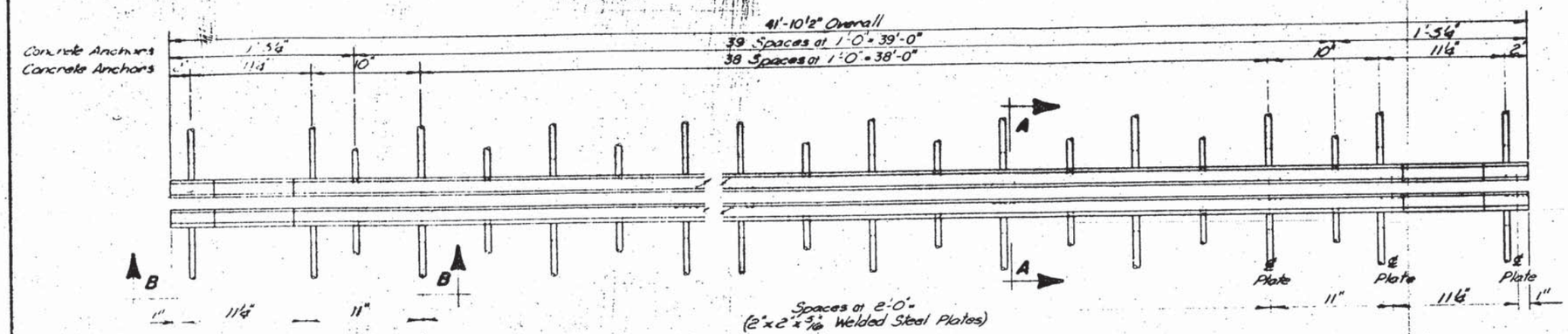

PLAN OF STRIP SEAL

① TEMP	DIMENSION "X"
30°	3⅛"
40°	3"
50°	2⅞"
60°	2¾"
70°	2⅝"
80°	2½"
90°	2⅜"

GENERAL NOTES—

1 Material for Steel Extrusion shall conform to A.S.T.M.-A-36, A242 or 588.

2 Material for Neoprene Extrusion shall conform to that specified in Section 870 of the S Dak Standard Specifications. No Splices will be permitted in the Neoprene Strip.

3 The installation of the Strip Seal shall be as recommended by its manufacturer and approved by the Engineer, but in general shall be as follows: The Neoprene Extrusion shall be installed and bonded to the Steel Extrusion with a high-solids lubricant adhesive. The portion of the Steel Extrusion in Contact with the Neoprene Extrusion shall be sand blasted to a white finish prior to the installation of the Neoprene Strip. The Neoprene Surfaces shall be roughened with a wire brush before the application of the lubricant-adhesive. The Neoprene Strip may be installed either prior to or after the time the Steel Extrusions are concreted in the Approach slabs. The sand blasting may be done at the Shop provided the sand blasted surfaces are dry, clean, free from dirt, grease and contaminants at the time the Neoprene Strip is installed. The surface of the Steel Extrusions, except the portions in contact with the Neoprene Strip, and the surfaces of the 2x2"x5/16" steel plates welded to the Steel Extrusions shall be painted with an approved Galvanizing Paint.

4 Due to the length of the Steel Extrusions, Shop Welds are permitted. No welds shall be permitted in internal section of extrusion where Neoprene Strip is located. Weld details shall be shown on the Shop Plans for approval by the Engineer.

5 The thickness and shape of the Neoprene Extrusion may vary from the sketch shown (Detail C on this Sheet) according to the manufacturer's design, however, the wedge lugs must properly fit the groove in the Steel Extrusion. Before installation, shop plans of the proposed strip seal showing, in addition to fixed dimensions, thickness of Neoprene Extrusion and dimensions pertinent to the fit of the Neoprene Extrusion in the Steel Extrusion shall be submitted to and approved by the Engineer.

6a. Strip Seal will be measured in linear feet, to the nearest one-tenth foot, complete in place; measurements will be made of the overall horizontal length.
Strip Seal will be paid for at the Contract unit price per linear foot complete in place. Payment for this item shall be full compensation for furnishing all the required materials in place, inclusive of labor, equipment and incidentals necessary to complete the work in accordance with plans and the foregoing Specifications.

7. The lubricant-adhesive may be one or two component at the supplier's option. The Neoprene Strip seal and lubricant-adhesive should be supplied or recommended by the same source as they must be compatible. The lubricant-adhesive must have a solids content by weight of at least 65 percent and 250 percent minimum elongation. It may not contain solvents with a Flash point below 80°F.

8 The Contractor has the option of using 5/16"x5"x7¾" plates with a #5 Re-bar as shown in the Supplemental Detail instead of the ½"ø x 6" welded Concrete anchors. If the plates are to be used, they shall be shown and detailed on the shop plans for approval by the ENGINEER.

9. Since the configuration and dimensions of the steel extrusion may vary according to each manufacturer's design, they need not conform exactly to that shown in DETAIL B; however, any deviations from the plan shown configuration or dimensions must be approved by the Bridge Program.

*ESTIMATED QUANTITY		
ITEM	UNIT	QUANTITY
Strip Seal Expansion Joint	Lin Ft	* 83.8

* For two approach slabs

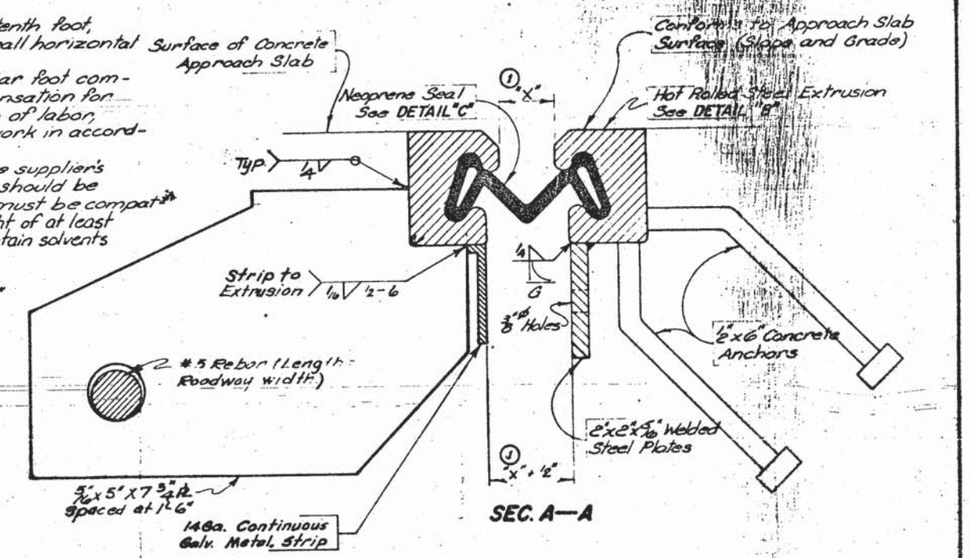

SUPPLEMENTAL DETAIL

The above 5/16"x5"x7¾" PL with #5 Rebar may be used instead of the ½"ø x 6" welded concrete anchors. See Note No. 8

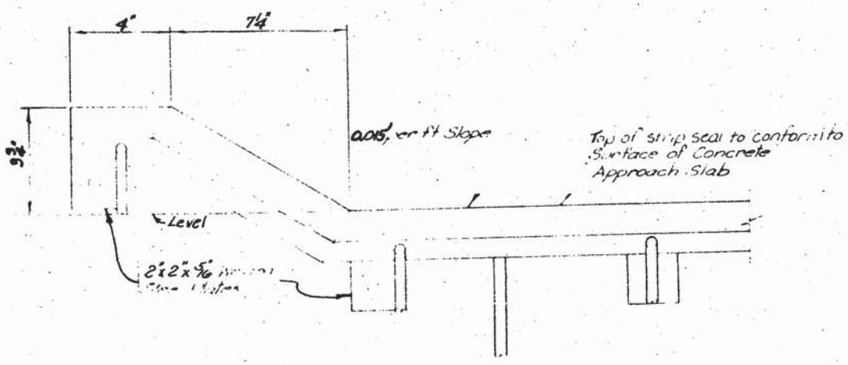

VIEW B—B

DETAIL "C"

Neoprene Seal Shall have a 4" movement capability

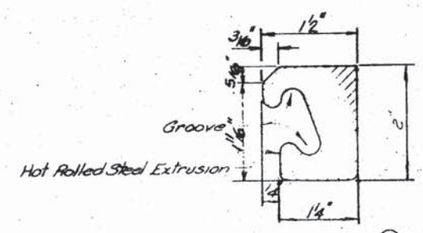

DETAIL "B" ②

② Rev. 1-16-76
① Rev. 8-1-74

ORIGINAL CONSTRUCTION PLANS

STRIP SEAL EXPANSION JOINT
FOR
234'-5¾" CONT. COMP. GIRDER BRIDGE

40'-0" ROADWAY — 36° 11' SKEW R.H.F.
OVER I-90 STA. 897+42.52 — SEC. 24/25-T 3 N-R 6 E
STA. 11+70.66 TO STA. 14+05.14 — I-90-1(43)48
STR. NO. 47-111-580 — HS20-44 (8 ALT.)
MEADE COUNTY
SOUTH DAKOTA
DEPARTMENT OF HIGHWAYS
AUGUST 1979

DESIGNED BY	DRAWN BY	CHECKED BY	APPROVED
	G.W.W. C.H.S.	M.V.W.	R.C. Wilson BRIDGE ENGINEER

STATE OF	PROJECT	SHEET NO.	TOTAL SHEETS
S.D.	IM 0901(163)9	E52	E102

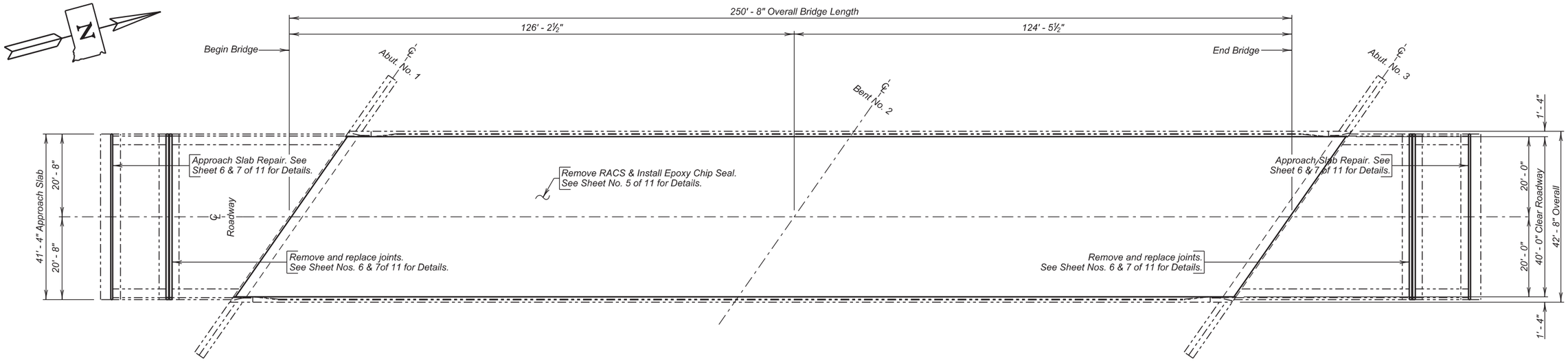

PLAN

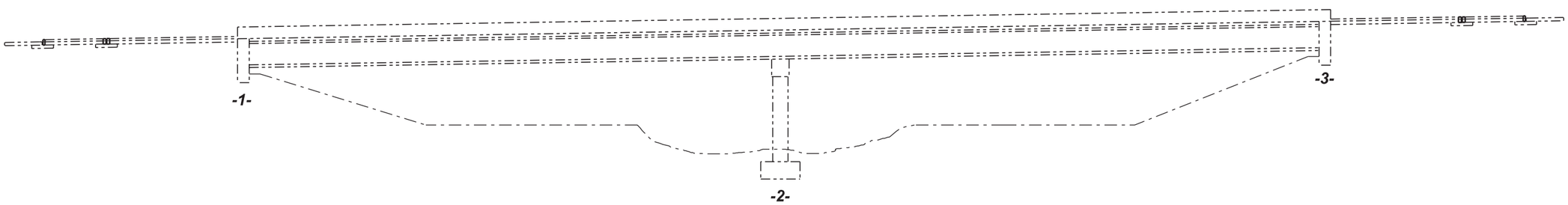

ELEVATION

INDEX OF BRIDGE SHEETS -

Sheet No. 1 - Layout for Upgrading
Sheet No. 2 - Estimate of Structure Quantities and Notes
Sheet No. 3 - Notes (Continued)
Sheet No. 4 - Notes (Continued)
Sheet No. 5 - Two Coat Epoxy Chip Seal
Sheet No. 6 - Approach Slab Joint Replacement
Sheet No. 7 - Approach Slab Joint Replacement (Continued)
Sheet No. 8-11 - Original Construction Plans

LAYOUT FOR UPGRADING

FOR

250' - 8" CONT. COMP. PRESTR. CONC. GIRDER BRIDGE

40' - 0" ROADWAY
OVER INTERSTATE 90
STR. NO. 52-390-278
PCN 0223

35° SKEW L.H.F.
SEC. 22-T2N-R7E
IM 0901(163)9

PENNINGTON COUNTY

S. D. DEPT. OF TRANSPORTATION

MARCH 2014

1 OF 11

PLANS BY :
OFFICE OF BRIDGE DESIGN, SOUTH DAKOTA DEPARTMENT OF TRANSPORTATION

DESIGNED BY	CK. DES. BY	DRAFTED BY	
KH	TK	JRK	Kevin N. Goeden
PENN0223	0223KE01		BRIDGE ENGINEER

ESTIMATE OF STRUCTURE QUANTITIES

ITEM NO.	DESCRIPTION	QUANTITY	UNIT
110E0070	Remove Rubberized Asphalt Chip Seal	146.8	SqYd
410E2600	Membrane Sealant Expansion Joint	83	Ft
460E0070	Class A45 Concrete, Bridge Repair	3.4	CuYd
460E0170	Concrete Patching Material	46.1	CuFt
460E0300	Breakout Structural Concrete	4.2	CuYd
480E0200	Epoxy Coated Reinforcing Steel	427	Lb
480E0505	No. 5 Rebar Splice	24	Each
491E0015	Two Coat Epoxy Bridge Deck Chip Seal	1108.6	SqYd
491E0110	Abrasive Bridge Deck Grinding	1108.6	SqYd
491E0120	Bridge Deck Grinding	1108.6	SqYd
491E0130	Concrete Removal, Class A	7.7	SqYd
491E0140	Concrete Removal, Class B	7.7	SqYd

SPECIFICATIONS

1. Design Specifications: AASHTO Standard Specifications for Highway Bridges 17th Edition using Working Stress Design.

2. Construction Specifications: South Dakota Standard Specifications for Roads and Bridges, 2004 Edition and Required Provisions, Supplemental Specifications and Special Provisions as included in the Proposal.

DETAILS AND DIMENSIONS OF EXISTING BRIDGE

All details and dimensions of the existing bridge, contained in these plans, are based on the original construction plans and shop plans. It is the Contractor's responsibility to inspect and verify the actual field conditions and any necessary as-built dimensions affecting the satisfactory completion of the work required for this project.

SCOPE OF BRIDGE WORK & SEQUENCE OF OPERATIONS

All work on this structure shall be accomplished with the traffic control shown elsewhere in the plans. Alternate sequence of operations may be submitted by the contractor for approval by the engineer a minimum of two weeks prior to the preconstruction meeting.

1. Remove Rubberized Asphalt Chip Seal, perform bridge deck grinding and repair the deck by removing all loose and delaminated concrete from the bridge deck surface for the first, second and third phase of construction.

2. Clean bridge deck surface with abrasive blasting for the first phase of construction.

3. Place a Two Coat Epoxy Bridge Deck Chip Seal for the first phase of construction.

4. Remove and replace joints between both approach slabs for the first phase of construction.

5. Switch traffic and repeat steps 2 through 5 for the second and third phase of construction.

GENERAL CONSTRUCTION NOTES

1. All mild reinforcing steel shall conform to ASTM A615, Grade 60.

2. All exposed concrete corners and edges shall be chamfered 3/4" unless noted otherwise in the plans. Match existing chamfer if the existing chamfer differs.

3. Use 2" clear cover on all reinforcing steel except as shown otherwise.

4. Surfaces of fresh concrete at construction joints shall be rough floated sufficiently to consolidate the surface. All construction joints shall be cleaned of surface laitance, curing compounds and other foreign materials prior to placing fresh concrete against the joint.

5. Request for construction joints or resteel splices at points other than those shown, must be submitted to the Engineer for prior approval. If additional splices are approved, no payment will be allowed for the added quantity of reinforcing steel.

CONCRETE BREAKOUT

1. The existing approach slabs shall be broken out to the limits shown on the plans. Breakout limits shall be defined with a 3/4" deep sawcut (unless specified otherwise in these plans), where practical, as approved by the Engineer. Reinforcing steel that is exposed and is scheduled for use in the new construction shall be cleaned and straightened to the satisfaction of the Engineer. Care shall be taken not to damage the existing reinforcing steel that is to be reused in the new construction during concrete breakout. Any reinforcing steel that is damaged during concrete breakout shall be replaced or repaired, as approved by the Engineer, by the Contractor at no cost to the Department. The existing reinforcing steel that is to be reused in the new construction and that is exposed during concrete breakout shall be epoxy coated in accordance with the "Epoxy Coating Existing Reinforcing Steel" notes.

2. All broken out concrete, discarded reinforcing bars and expansion devices shall be disposed of by the Contractor. Any disposal of discarded material shall be in accordance with the Environmental Commitments.

3. The contract unit price per cubic yard for "Breakout Structural Concrete" shall include breaking out concrete, cleaning, straightening existing reinforcing steel, removal of the existing armored device, and disposal of all broken out material.

EPOXY COATING EXISTING REINFORCING STEEL

1. The existing resteel in the approach slabs that is exposed during concrete breakout, and is to be reused, shall be epoxy coated in the field.

2. The reinforcing steel shall be abrasive blasted clean and then epoxy coated. The epoxy coating shall be inert in concrete and compatible with the coating applied to the new epoxy coated reinforcing steel. This coating shall be the epoxy touch up coating material supplied by an epoxy coating manufacturer who supplies coating material for new epoxy coated reinforcing steel. The abrasive blasted reinforcing steel shall be coated promptly and before detrimental oxidation occurs. The coating shall be allowed to cure for 24 hours or as per the manufacturer's recommendations, whichever is more stringent, before concrete can be placed. These bars shall be clean and free from all surface contaminants before coating.

3. The cost of cleaning and epoxy coating the existing reinforcing steel shall be incidental to the various bid items.

DESIGN MIX OF CONCRETE

1. The Type of cement, concrete strength requirements, aggregate requirements, slump and air requirements for the contract items Class A45 Concrete Bridge Repair shall conform to the requirements of Section 460 of the Construction Specifications.

REMOVE EXISTING RUBBERIZED ASPHALT CHIP SEAL

Remove the Rubberized Asphalt Chip Seal (RACS) from the deck surface in accordance with Section 491 of the Construction Specifications. The Contractor has the option of removing the RACS for the full width of roadway instead of in phases. RACS removal will be aid for at the contract unit price per square yard for "Remove Rubberized Asphalt Chip Seal".

ESTIMATE OF STRUCTURE QUANTITIES AND NOTES

FOR

250' - 8" CONT. COMP. PRESTR.
CONC. GIRDER BRIDGE

STR. NO. 52-390-278

MARCH 2014

DESIGNED BY	CK. DES. BY	DRAFTED BY	
KH	TK	KH	Kevin N. Goeden
PENN0223	0223HE02		BRIDGE ENGINEER

REMOVAL OF LOOSE AND DELAMINATED CONCRETE

1. This work consists of preparation of the existing bridge deck for Two Coat Epoxy Bridge Deck Chip Seal by removing and replacing the loose and delaminated concrete.

2. Concrete used to repair the deck surface shall be in accordance with the Concrete Patching Material notes in this set of plans.

3. Concrete Removal on the bridge deck shall be divided into two the following two classes:

   a. Concrete Removal, Class A: Concrete Removal, Class A shall consist of the removal of delaminated and visibly loose concrete and any bituminous patches (when present) from the top of existing bridge deck down to a depth no deeper than the top of the top mat of bridge deck reinforcing steel. When grinding is specified, the Concrete Removal, Class A shall be done after the bridge deck has been ground.

   b. Concrete Removal, Class B: Concrete Removal, Class B areas shall be determined after completion of the Concrete Removal, Class A has been accomplished. Concrete Removal, Class B shall consist of the removal of delaminated and visibly loose concrete that exists below the bottom limits of the Concrete Removal, Class A *(below the top of the top mat of reinforcing steel)*.

4. Concrete Removal shall be by jackhammers and chipping hammers or other methods as approved by the Engineer. Jackhammers and chipping hammers shall be used as follows:

   a. Jackhammers heavier than 30 pounds will not be permitted.

   b. Chipping hammers heavier than 15 pounds will not be permitted for removing concrete below the top of the top mat of reinforcing steel.

   c. Jackhammers and chipping hammers shall not be operated at an angle in excess of 45 degrees measured from the surface of the concrete.

   d. Extreme care shall be taken when using jackhammers and chipping hammers to assure that existing reinforcing steel is not damaged or debonded from the sound concrete.

5. Removal shall begin near the center of the loose or delaminated concrete and shall progress outwardly until the loose or delaminated concrete is removed and sound concrete is encountered such that the amount of concrete removal is minimized.

6. The edges of the resulting areas of removed concrete shall be nearly vertical or slightly tapered inward from the top down to a minimum depth of one inch. If this condition is not able to be achieved with jackhammers or chipping hammers, saw cutting the edges of the removal area may be required to attain satisfactory results.

7. Care shall be taken during concrete removal to not nick, gouge, or in any other way damage the in-place reinforcing steel. Any inadvertent damage to the in-place reinforcing steel shall be brought to the attention of the Bridge Construction Engineer and shall be repaired by the Contractor as directed by the Engineer at no additional cost to the Department.

8. Concrete Removal, Class A will be measured to the nearest 0.1 foot and the area computed to the nearest 0.1 square yard. Concrete Removal, Class A will be paid for at the contract unit price per square yard. Payment will be full compensation for all labor, equipment, materials, and all incidental work required to remove the specified concrete, concrete sawing, and disposing of removed material.

9. Concrete Removal, Class B will be measured to the nearest 0.1 foot and the area computed to the nearest 0.1 square yard. Concrete Removal, Class B will be paid for at the contract unit price per square yard. Payment will be full compensation for all labor, equipment, materials, and all incidental work required to remove the specified concrete, concrete sawing, and disposing of removed material.

CONCRETE PATCHING MATERIAL

1. Concrete patching material shall be used to repair the deck areas where loose and delaminated concrete was removed.

2. Concrete patching material shall be packaged, dry, rapid-hardening cementitious mortar or concrete materials conforming to the requirements of ASTM C 928, Type R-3 and shall contain no chlorides, magnesium or phosphates.

3. Water used for the concrete patching material shall be in conformance with Section 790 of the Construction Specifications.

4. Upon completion of the concrete removal and immediately prior to placing any concrete patching material into the concrete removal areas, the removal areas shall be thoroughly cleaned of loose and foreign material by abrasive blasting. The surface profile of the area to receive the patching material shall be in accordance with the manufacturer's recommendations. The abrasive blasting shall be to the extent that all surface laitance is removed. Abrasive blast cleaning shall expose the coarse aggregate and remove rust from any exposed reinforcing steel. After abrasive blasting, the surface shall be cleaned by the use of compressed air to the satisfaction of the Engineer. The air compressor used for cleaning shall be equipped with trap devices capable of providing moisture-free and oil-free air at a recommended pressure of 90 psi.

5. The existing surface at the time of placement of the concrete patching material shall be at least 40° F (4° C), measured by a thermometer placed against the concrete surface and covered with an insulating blanket. The concrete patching material shall be mixed and placed in accordance with the manufacturer's technical data sheet. The Contractor shall provide a manufacturer's technical data sheet to the Engineer prior to performing the work. The concrete patching material shall be maintained at or above 45° F (7° C) for at least 72 hours after placement.

6. Immediately after finishing the concrete patching material, the surface of the concrete patching material shall be covered with a double layer of wet burlap. Within one hour of covering with wet burlap, polyethylene sheeting shall be placed on the wet burlap. The surface shall be wet cured for a minimum of 48 hours or in accordance with the manufacturer's recommendations, whichever is more stringent. Following the wet cure, the burlap and polyethylene sheeting shall be removed and the surface allowed to air dry for a minimum of 48 hours after removal of the burlap and polyethylene sheeting before application of the epoxy chip seal is permitted.

7. Concrete Patching Material will be measured to nearest 0.1 cubic feet as determined from the theoretical yield per bag of Concrete Patching Material. Concrete Patching Material will be paid for at the contract unit price per cubic foot. Payment will be full compensation for all labor, equipment, materials, and all incidental work required to abrasive blast clean the removal areas, and furnish, place and cure the concrete patching material within the removal areas.

TWO COAT EPOXY BRIDGE DECK CHIP SEAL

The Epoxy Chip Seal shall be applied in accordance with the Special Provision for "Two Coat Epoxy Bridge Deck Chip Seal".

MEMBRANE SEALANT EXPANSION JOINT

1. Install all membrane sealant expansion joints at the plan shown locations in conformance to the following notes.

2. The Membrane Sealant shall be one of the membrane sealant types from the approved product list for Membrane Sealant Expansion Joints.

3. The manufacturer shall supply the membrane sealant in packaging that precompresses the membrane sealant. The precompressed dimension shall be as recommended by the sealant manufacturer to provide a water tight seal throughout a joint movement range of + 25% (minimum) from the specified joint opening dimension. In no case shall the precompressed dimension exceed 75% of the joint opening width. The foam sealant shall be slowly self-expanding to permit workers ample time to install the membrane sealant before the membrane sealant exceeds the joint opening width.

NOTES (CONTINUED)

FOR

250' - 8" CONT. COMP. PRESTR.
CONC. GIRDER BRIDGE

STR. NO. 52-390-278

MARCH 2014

DESIGNED BY	CK. DES. BY	DRAFTED BY	
KH	TK	KH	Kevin N. Goeden
PENN0223	0223HE03		BRIDGE ENGINEER

MEMBRANE SEALANT EXPANSION JOINT (CONTINUED)

4. The membrane sealant shall be supplied in pieces 5 feet in length or longer. The foam sealant shall be ultra-violet and ozone resistant.

5. The bonding adhesive used to attach the membrane sealant to the adjacent concrete shall be approved by the membrane sealant manufacturer.

6. Adhesive used to join adjacent pieces of the membrane sealant shall be as recommended by the manufacturer.

7. If Styrofoam filler material is used in the construction, it shall be closed cell and water-tight as approved by the Engineer.

8. Use plywood or other material to protect concrete adjacent to the joint from spalling before any equipment is moved across the joint. Any spall areas will be repaired at the Contractor's expense by breaking out and replacing adjacent concrete, as approved by the Engineer.

9. The minimum ambient air temperature at the time of joint installation and adhesive curing shall be 40° F.

10. A technical representative of the membrane sealant manufacturer shall be present at the jobsite during installation. The technical representative shall be knowledgeable in the correct procedures for the preparation and installation of the joint material to insure the Contractor installs the joint to the Manufacturers recommendations.

11. The joint opening shall be constant width and shall have smooth vertical sides. Surfaces of material adjacent to the joint shall be at the correct grade and crown as approved by the Engineer.

12. Concrete surfaces that will be in contact with the membrane sealant shall be thoroughly cleaned by abrasive blasting to remove all laitance and contaminants (such as oil, curing compounds, etc.) from the concrete surface. At a minimum two passes of abrasive blasting with the nozzle held at an angle to within 1 to 2 inches of the a concrete surface will be required. Cleaning of the concrete surfaces with solvents, wire brushing, or grinding shall not be permitted.

13. After abrasive blasting, but immediately prior to membrane joint installation, the entire joint contact surface shall be air blasted. The air compressor used for joint cleaning shall be equipped with trap devices capable of providing moisture-free and oil-free air at a recommended pressure of 90 psi. To obtain complete bonding with the adhesive, the adjacent concrete surfaces must be dry and clean. The contact surfaces for the joint shall be visually inspected by the Engineer immediately prior to joint installation to verify the surface is dry and clean.

14. Individual spliced sections shall be installed as per the manufacturers' recommendations. The membrane joint sealant manufacturer shall submit a detailed installation procedure to the Engineer at least 5 days prior to joint installation for his review.

15. Traffic shall not be allowed on the joint for a minimum 3 hours unless otherwise directed by the Engineer.

16. Forms for the joint shall be left in place for a minimum of 7 days. No construction equipment or traffic shall be allowed on the joint until the concrete has reached design strength. The joint edges shall be protected from damage by equipment and traffic.

17. The Membrane Sealant Expansion Joint will be measured in feet to the nearest one-tenth foot, complete in place. Measurement will be made of the overall horizontal length. The Membrane Sealant Expansion Joint will be paid for at the contract unit price per foot complete in place. Payment for this item shall be full compensation for furnishing all the required materials in place, inclusive of labor, equipment and incidentals necessary to complete the work in accordance with the plans and the foregoing specifications.

NOTES (CONTINUED)

FOR

250' - 8" CONT. COMP. PRESTR.
CONC. GIRDER BRIDGE

STR. NO. 52-390-278

MARCH 2014

DESIGNED BY	CK. DES. BY	DRAFTED BY	
KH	TK	KH	Kevin N. Goeden
PENN0223	0223HE04		BRIDGE ENGINEER

STATE OF	PROJECT	SHEET NO.	TOTAL SHEETS
S.D.	IM 0901(163)9	E56	E102

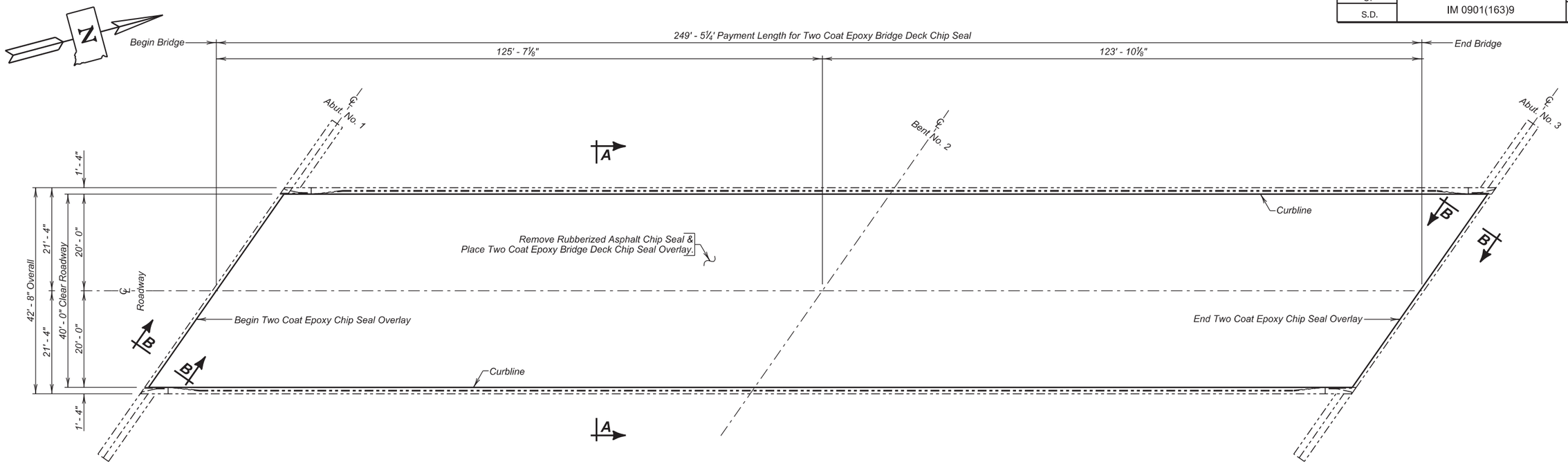

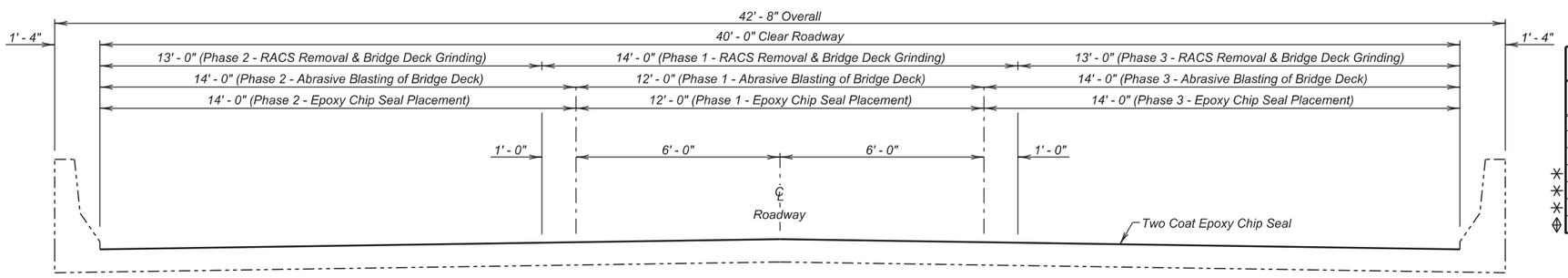

SECTION A - A

ESTIMATED QUANTITIES

ITEM	UNIT	QUANTITY Phase I	Phase 2	Phase 3
Two Coat Epoxy Bridge Deck Chip Seal	Sq. Yd.	332.6	388.0	388.0
Abrasive Blasting of Bridge Deck	Sq. Yd.	332.6	388.0	388.0
Bridge Deck Grinding	Sq. Yd.	388.0	360.3	360.3
✳ Concrete Removal, Class A	Sq. Yd.	2.7	2.5	2.5
✳ Concrete Removal, Class B	Sq. Yd.	2.7	2.5	2.5
✳ Concrete Patching Material	Cu. Ft.	16.1	15.0	15.0
◊ Remove Rubberized Asphalt Chip Seal	Sq. Yd.	38.8	54.0	54.0

NOTE:
✳ Concrete Removal, Class A; Concrete Removal, Class B; and Concrete Patching Material may not be encountered and may be removed from the project at the direction of the Engineer.

◊ Quantity shown is an approximation and is based on a visual examination. Payment for this item will be based on plans quantity.

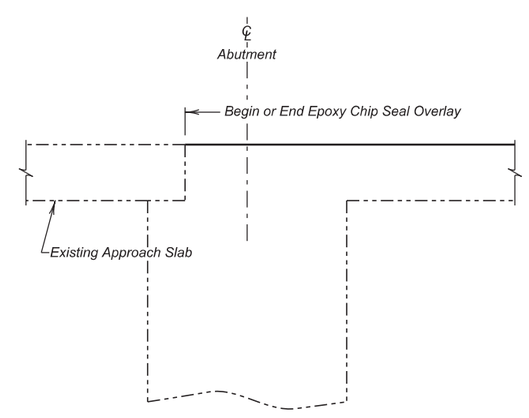

SECTION B - B

TWO COAT EPOXY CHIP SEAL

FOR

250' - 8" CONT. COMP. PRESTR.
CONC. GIRDER BRIDGE

40' - 0" ROADWAY
OVER INTERSTATE 90
STR. NO. 52-390-278

35° SKEW L.H.F.
SEC. 22-T2N-R7E
IM 0901(163)9

PENNINGTON COUNTY

S. D. DEPT. OF TRANSPORTATION

MARCH 2014

5 OF 11

DESIGNED BY	CK. DES. BY	DRAFTED BY	
KH	TK	JRK	Kevin N. Goeden
PENN0223	0223KE05		BRIDGE ENGINEER

STATE OF	PROJECT	SHEET NO.	TOTAL SHEETS
S.D.	IM 0901(163)9	E57	E102

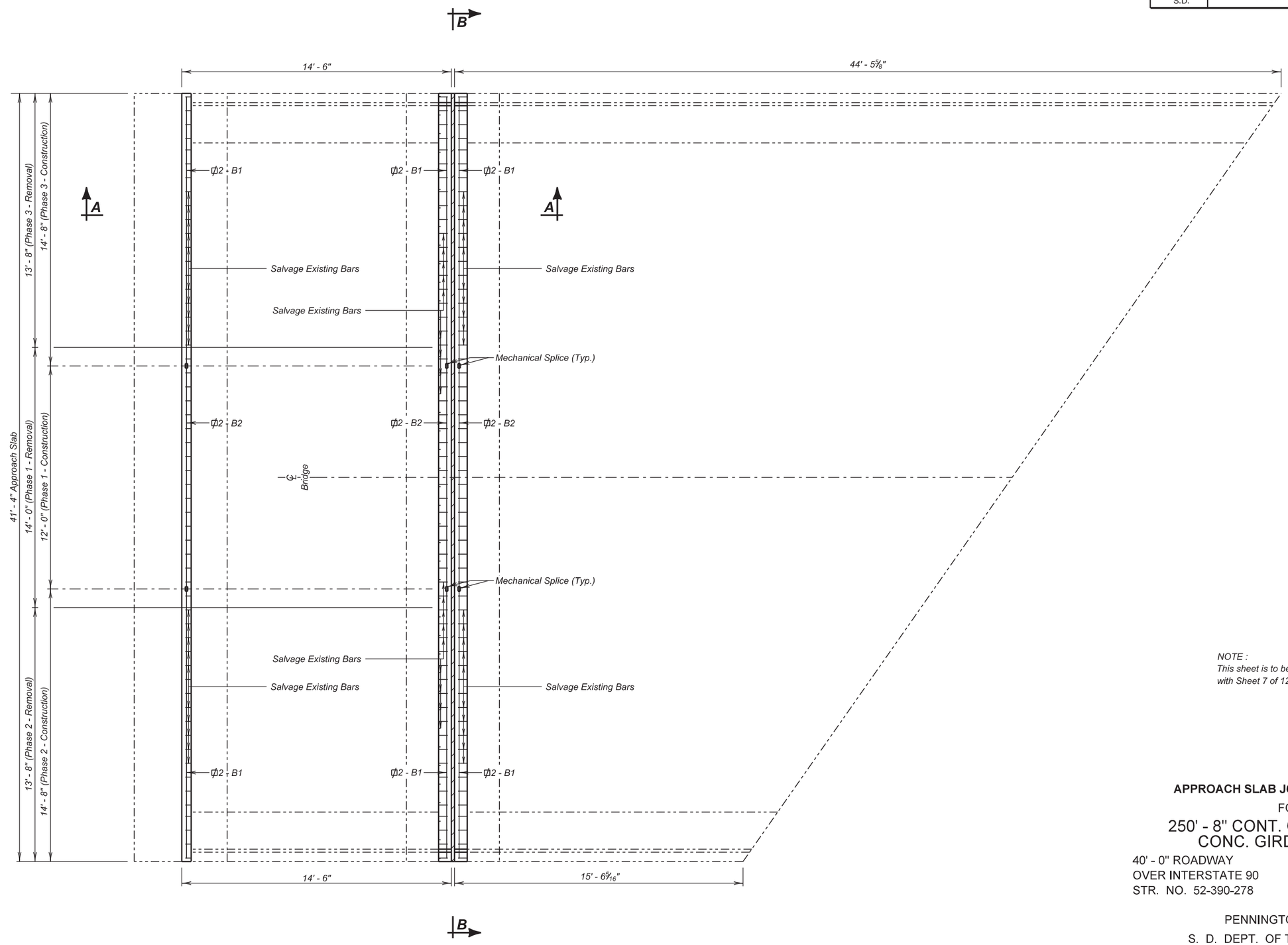

PLAN

(Abut. No. 1 shown, Abut. No. 3 similar by rotation.)

NOTE :
This sheet is to be used in conjunction with Sheet 7 of 12.

APPROACH SLAB JOINT REPLACEMENT

FOR

250' - 8" CONT. COMP. PRESTR.
CONC. GIRDER BRIDGE

40' - 0" ROADWAY
OVER INTERSTATE 90
STR. NO. 52-390-278

35° SKEW L.H.F.
SEC. 22-T2N-R7E
IM 0901(163)9

PENNINGTON COUNTY
S. D. DEPT. OF TRANSPORTATION
MARCH 2014

6 OF 11

DESIGNED BY	CK. DES. BY	DRAFTED BY	
KH	TK	JRK/KH	Kevin N. Goeden
PENN0223	0223KE06		BRIDGE ENGINEER

STATE OF	PROJECT	SHEET NO.	TOTAL SHEETS
S.D.	IM 0901(163)9	E58	E102

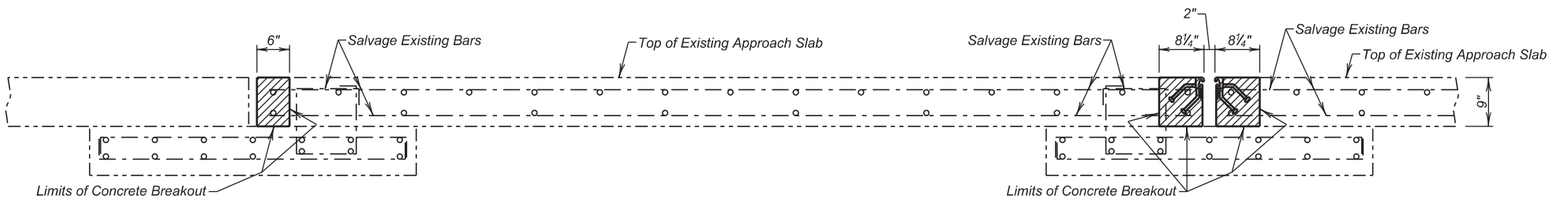

SECTION A - A
(Existing Section showing Removal Limits)

REINFORCING SCHEDULE
(For Both Joints)

	Mk.	No.	Size	Length	Type	Bending Details
PHASE I	⌀B2	10	5	12' - 0"	Str.	
PHASE 2	⌀B1	10	5	14' - 6"	Str.	
PHASE 3	⌀B1	10	5	14' - 6"	Str.	

NOTES:
All Dimensions are out to out of bars.
All Bars to be Epoxy Coated.
△ Dowels
⌀ These bars shall be spliced with mechanical splice devices
Equivalent Splice Lengths
No. 4 - 2' - 0"
No. 5 - 2' - 6"
No. 6 - 3' - 0"

NOTE :
This sheet is to be used in conjunction with Sheet 6 of 12.

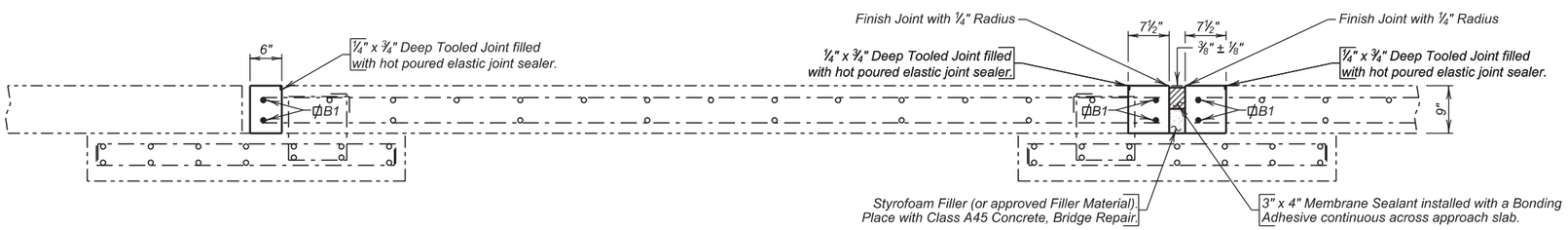

SECTION A - A
(New Construction Shown)

ESTIMATED QUANTITIES

ITEM	UNIT	PHASE I QUANTITY	PHASE 2 QUANTITY	PHASE 2 QUANTITY
Breakout Structural Concrete	Cu. Yd.	1.4	1.4	1.4
Class A45 Concrete, Bridge Repair	Cu. Yd.	1.0	1.2	1.2
Epoxy Coated Reinforcing Steel	Lb.	125	151	151
Membrane Sealant Expansion Joint	Ft.	24	29.5	29.5
No. 5 Rebar Splice	Each	24	--	--

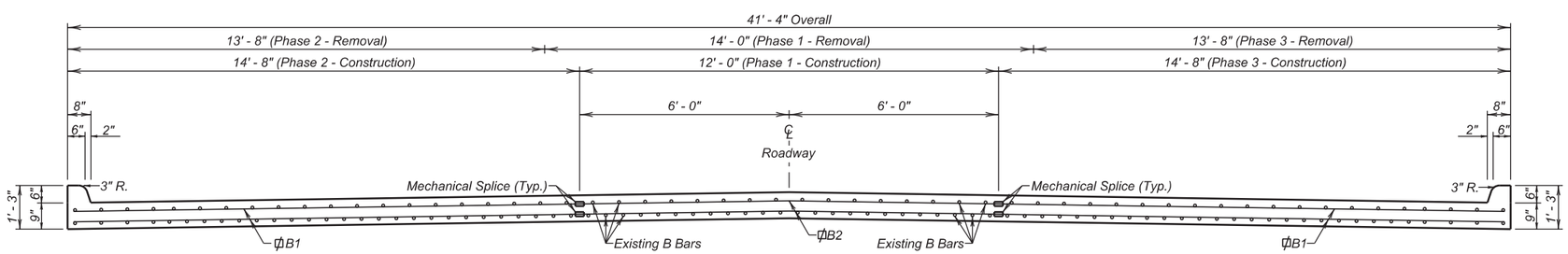

SECTION B - B
(New Construction Shown)

APPROACH SLAB JOINT REPLACEMENT (CONTINUED)

FOR

250' - 8" CONT. COMP. PRESTR.
CONC. GIRDER BRIDGE

40' - 0" ROADWAY
OVER INTERSTATE 90
STR. NO. 52-390-278

35° SKEW LHF
SEC. 22-T2N-R7E
IM 0901(163)9

PENNINGTON COUNTY
S. D. DEPT. OF TRANSPORTATION
MARCH 2014

DESIGNED BY	CK. DES. BY	DRAFTED BY	
KH	TK	JRK/KH	Kevin N. Boeden BRIDGE ENGINEER
PENN0223	0223KE07		

STATE OF	PROJECT	SHEET NO.	TOTAL SHEETS
S.D.	IM 0901(163)9	E59	E102

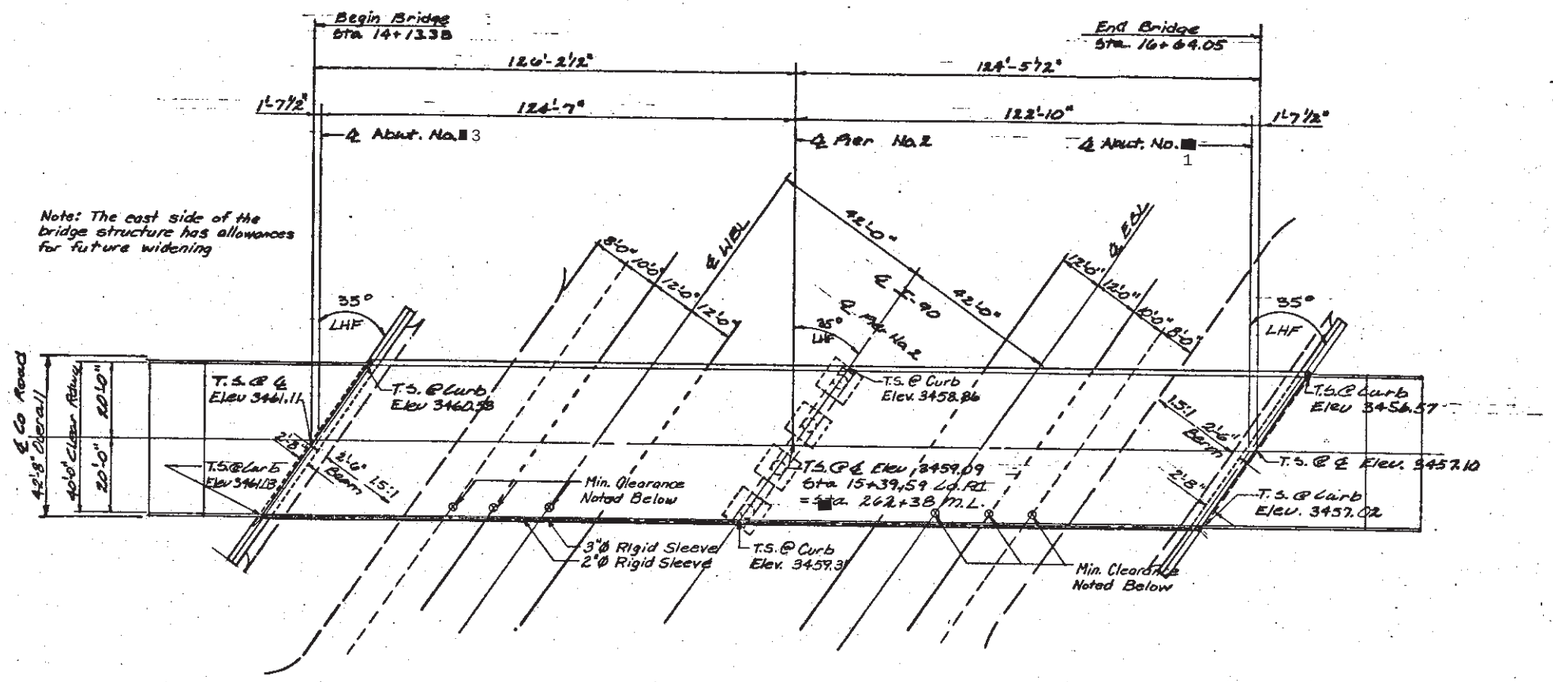

PLAN

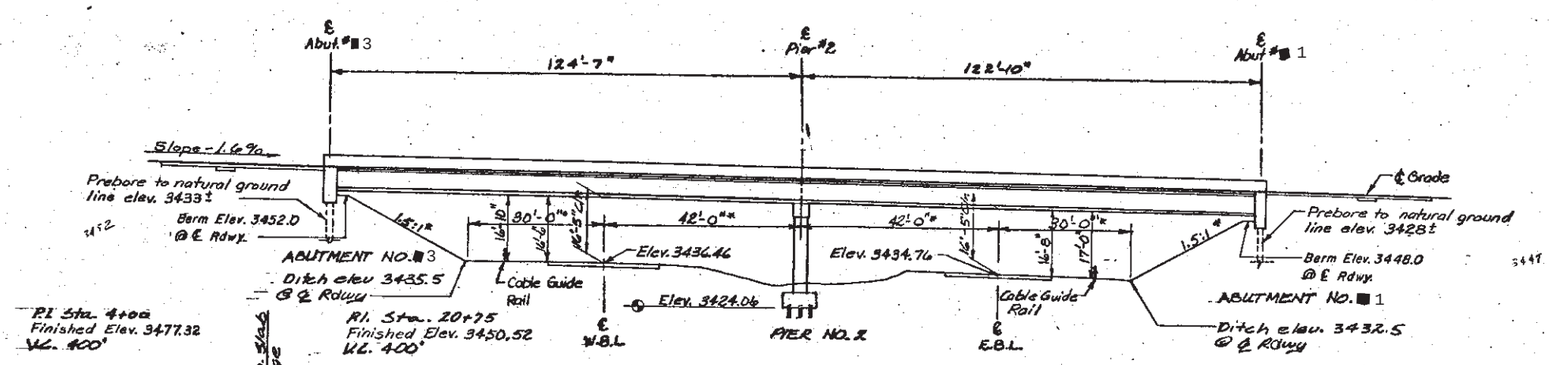

ELEVATION

* Note: Measured normal to I-90 mainline

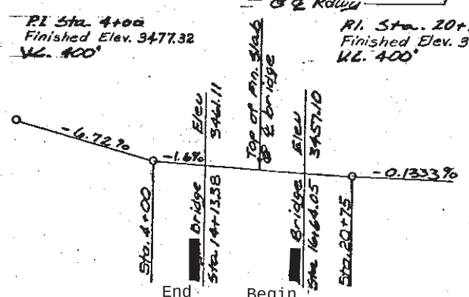

VERTICAL CURVE DATA

INDEX OF BRIDGE SHEETS

SHEET NO.
1 GENERAL DRAWING
2 ESTIMATE OF STRUCTURE QUANTITIES AND NOTES
3 SITE PLAN AND SUBSURFACE PROFILE
4 DETAILS OF ABUTMENT NO. 1 AND NO. 3
5 DETAILS OF ABUTMENT NO. 1 AND NO. 3
6 DETAILS OF PIER NO. 2
7 DETAILS OF PIER NO. 2
8 FRAMING PLAN
9 ERECTION DATA
10 GIRDER LAYOUT
11 GIRDER LAYOUT
12 SLAB DETAILS
13 BARRIER CURB DETAILS
14 SLAB AND BARRIER CURB QUANTITIES AND FOUR BOLT INSERT ASSEMBLY DETAILS
15 DETAILS OF APPROACH SLAB
16 APPROACH SLAB JOINT DETAILS
17 DETAILS OF BRIDGE END BACKFILL
18 PILE SPLICE DETAILS (STEEL) AND WEAR PLATE DETAILS

ORIGINAL CONSTRUCTION PLANS

GENERAL DRAWING

FOR

CONTINUOUS COMP. PRESTR. CONC. GIRDER BRIDGE

40'-0" ROADWAY — 35° SKEW L.H.F.

STA. 14+13.38 to 16+64.05 — 250'-8" LENGTH

OVER INTERSTATE HIGHWAY NO. 90 — SEC.22-T2N-R7E

PROJECT NO. IR-90-2(72)55 — HS20-44 & ALTERNATE

STR. NO. 52-390-278

PENNINGTON COUNTY

SOUTH DAKOTA DEPARTMENT OF TRANSPORTATION
DIVISION OF HIGHWAYS

BELL, GALYAROT & ASSOCIATES, INC.
ARCHITECTS / ENGINEERS
JANUARY 1981

8 OF 11

STR. NO. 52-390-278

DESIGNED BY	DRAWN BY	CHECKED BY	APPROVED BY
KLL	SJN	KAQ	BRIDGE ENGINEER

SHEET NO.

STATE OF	PROJECT	SHEET NO.	TOTAL SHEETS
S.D.	IM 0901(163)9	E60	E102

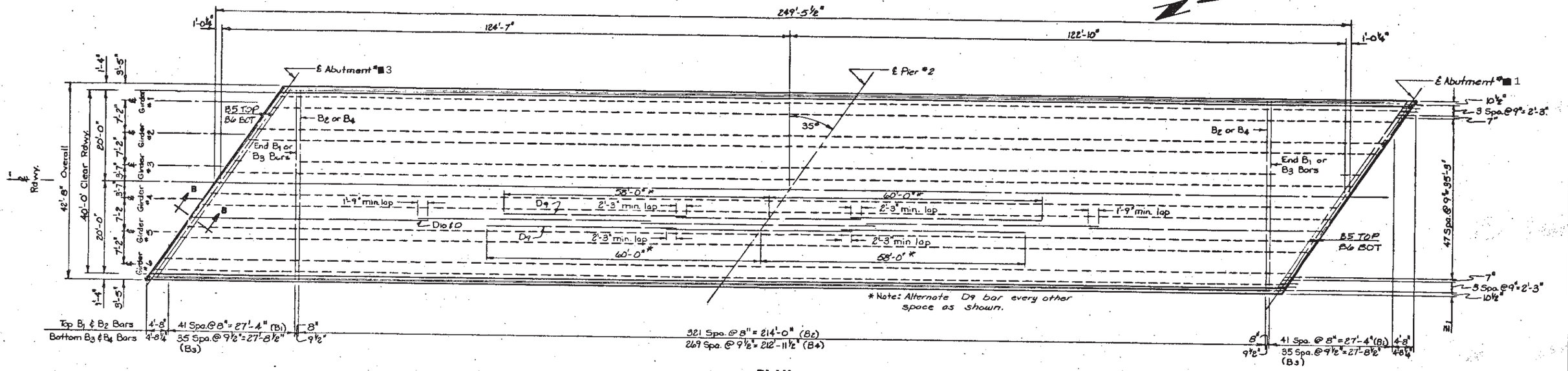

PLAN

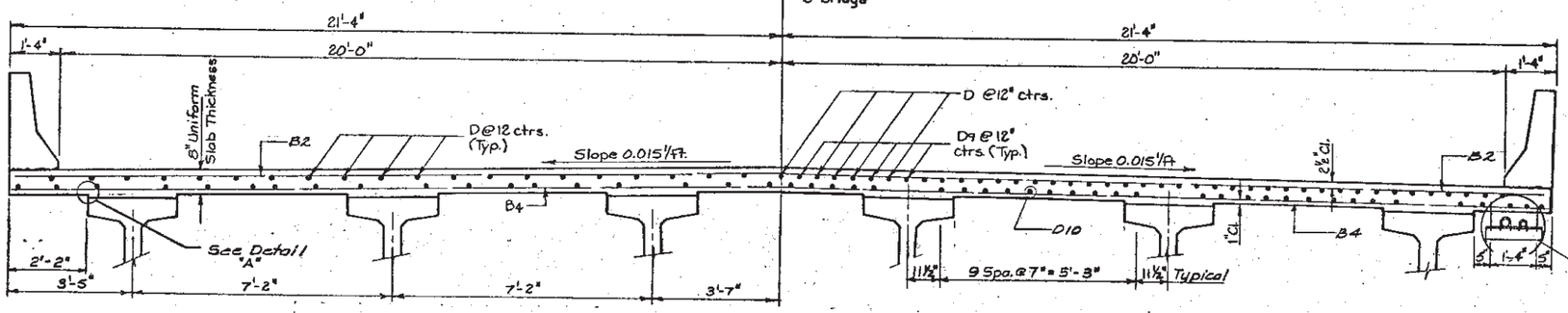

EAST HALF SECTION NEAR CENTER LINE SPAN

WEST HALF SECTION NEAR PIER NO. 2

ELEVATION

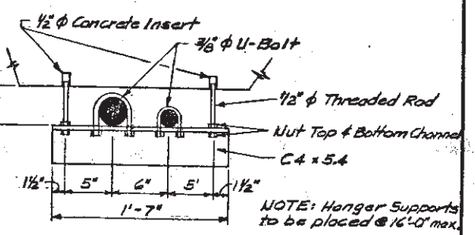

DETAIL "B"

ORIGINAL CONSTRUCTION PLANS

NOTES:

1. 1/2" Ø CONCRETE INSERTS SHALL BE INTERNALLY THREADED FOR USE WITH A STANDARD MACHINE BOLT THREAD AND SHALL BE OF SUCH DESIGN THAT WHEN INSTALLED IN THE CONCRETE WILL BE CAPABLE OF SUSTAINING A WORKING LOAD IN TENSION OF 2,000 LBS. AND A SAFETY FACTOR OF 3. THE INSERTS SHALL BE GALVANIZED OR MADE OF A CORROSION RESISTANT MATERIAL. THE COST OF FURNISHING AND INSTALLING THE INSERTS SHALL BE ABSORBED IN THE LUMP SUM PRICE BID FOR 2" AND 3" RIGID STEEL SLEEVE. BID ITEMS INCLUDED WITH THE ESTIMATE OF GRADING QUANTITIES.

2. STEEL SLEEVE HANGER ASSEMBLIES SHALL BE PAINTED WITH AN APPROVED ZINC-RICH GALVANIZED PAINT. COST OF FURNISHING AND INSTALLING HANGER ASSEMBLIES SHALL BE ABSORBED IN THE LUMP SUM PRICE BID FOR 2" AND 3" RIGID STEEL SLEEVE.

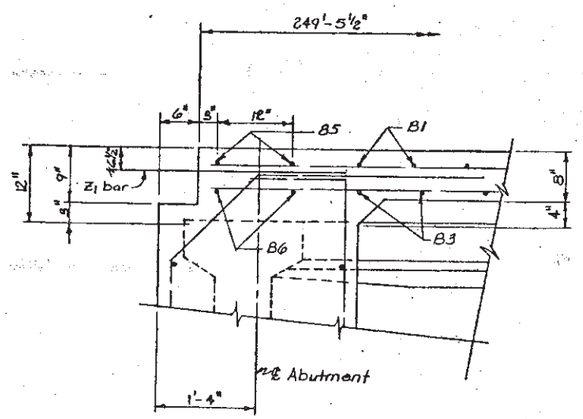

SECTION B-B

NOTE:
1. See sheet 13 of 18 for barrier curb details.
2. See sheet 14 of 18 for reinforcerning schedule of slab and barrier curbs.
3. The 24 ga. galv. sheet metal along the east side, underside of slab is to aid in removal of slab along this line in anticipation of future bridge widening.

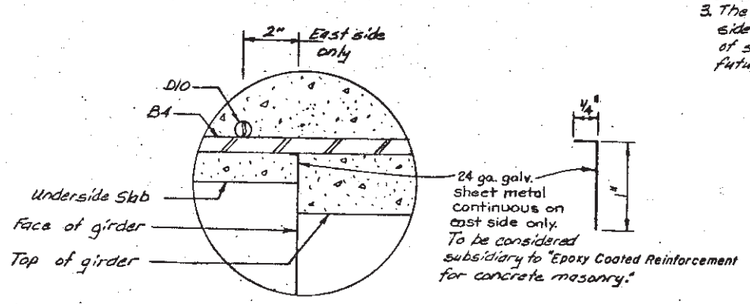

DETAIL "A"

SLAB DETAILS

FOR

CONTINUOUS COMP. PRESTR. CONC. GIRDER BRIDGE

40'-0" ROADWAY
35° SKEW L.H.F.
STA. 14+13.38 to 16+64.05
250'-8" LENGTH
OVER INTERSTATE HIGHWAY NO. 90
SEC.22-T2N-R7E
PROJECT NO. IR 90-2(72)55
HS20-44 & ALTERNATE
STR. NO. 52-390-278
PENNINGTON COUNTY
SOUTH DAKOTA DEPARTMENT OF TRANSPORTATION
DIVISION OF HIGHWAYS

BELL, GALYARDT & ASSOCIATES, INC.
ARCHITECTS / ENGINEERS
JANUARY 1981

STR. NO. 52-390-278

9 OF 11

DESIGNED BY	DRAWN BY	CHECKED BY	APPROVED BY
KAQ	SJN	KLL	

BRIDGE ENGINEER

SHEET NO.

POINT	A		B		C		D		E		F		G	
	STA.	ELEV.	STA.	ELEV.	STA.	ELEV.	STA.	ELEV.	STA.	ELEV.	STA.	ELEV.	STA.	ELEV.
ABUT. 1	13+69.32	3461.81	13+83.99	3461.58	14+13.99	3461.10	13+69.32 - 18' Lt. 18' Rt.	3461.63 3461.54	13+82.99 - 18' Lt & Rt	3461.31	13+99.99 - 18' Rt	3461.05	14+37.99 - 18' Lt	3460.60
ABUT. 3	17+08.11	3456.39	16+93.44	3456.62	16+63.44	3457.10	17+08.11 - 18' Lt. & Rt.	3456.12	16+93.44 - 18' Lt & Rt	3456.35	16+77.44 - 18' Lt	3456.61	16+49.44 - 18' Rt	3457.06

STATE OF	PROJECT	SHEET NO.	TOTAL SHEETS
S.D.	IM 0901(163)9	E61	E102

REINFORCING SCHEDULE
(TWO APPROAGH SLABS)

MARK	NO.	SIZE	LENGTH	TYPE
A1	48	3	59'-2"	Str.
A2	66	3	35'-6"	Str.
A3	24	3	35'-8"	Str.
A4	112	3	14'-0"	Str.
A5	2	4	43'-4"	Str.
A6	173	3	2'-4"	Str.
A7	4	3	31'-11"	Str.
A8	4	3	86'-2"	Str.
A9	4	5	7'-6"	17
B1	72	8	59'-2"	Str.
B2	34	5	35'-6"	Str.
B3	12	5	37'-1"	Str.
B4	112	7	14'-0"	Str.
B5	92	5	2'-4"	Str.
B6	4	7	31'-11"	Str.
B7	4	7	86'-2"	Str.
E1	168	4	4'-8"	T2
E2	336	4	5'-4"	2
E3	56	5	41'-0"	Str.
F1	94	4	2'-0"	Str.

BENDING DETAILS

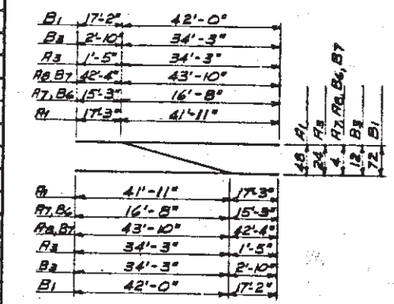

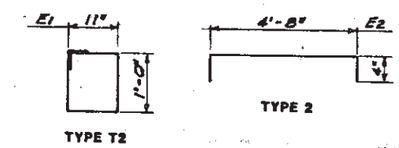

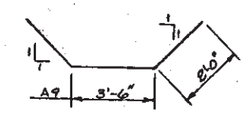

All Dimensions are out-to-out of Bars.

ESTIMATED QUANTITIES (TWO APPROACH SLABS)

ITEM	UNITS	QUANTITIES
Conc. Approach Slab adjacent to Bridge	Sq. Yds.	3540
Bridge Approach Sleeper Slab	Sq. Yds.	919
Conc. Curb & Gutter, Type B69 (Straight)	Lin. Ft.	1780

1. 89.0 Cu. Yds. Conc. in Approach Slabs.
2. 18,204 Lbs. Re-steel in Approach Slabs (Includes Dowels)
3. 23.0 Cu. Yds. Conc. in Sleeper Slabs.
4. 4116 Lbs. Re-steel in Sleeper Slabs.
5. 14.8 Cu. Yds. Concrete in Gutter.
6. 2061 Lbs. Re-steel in Gutter.

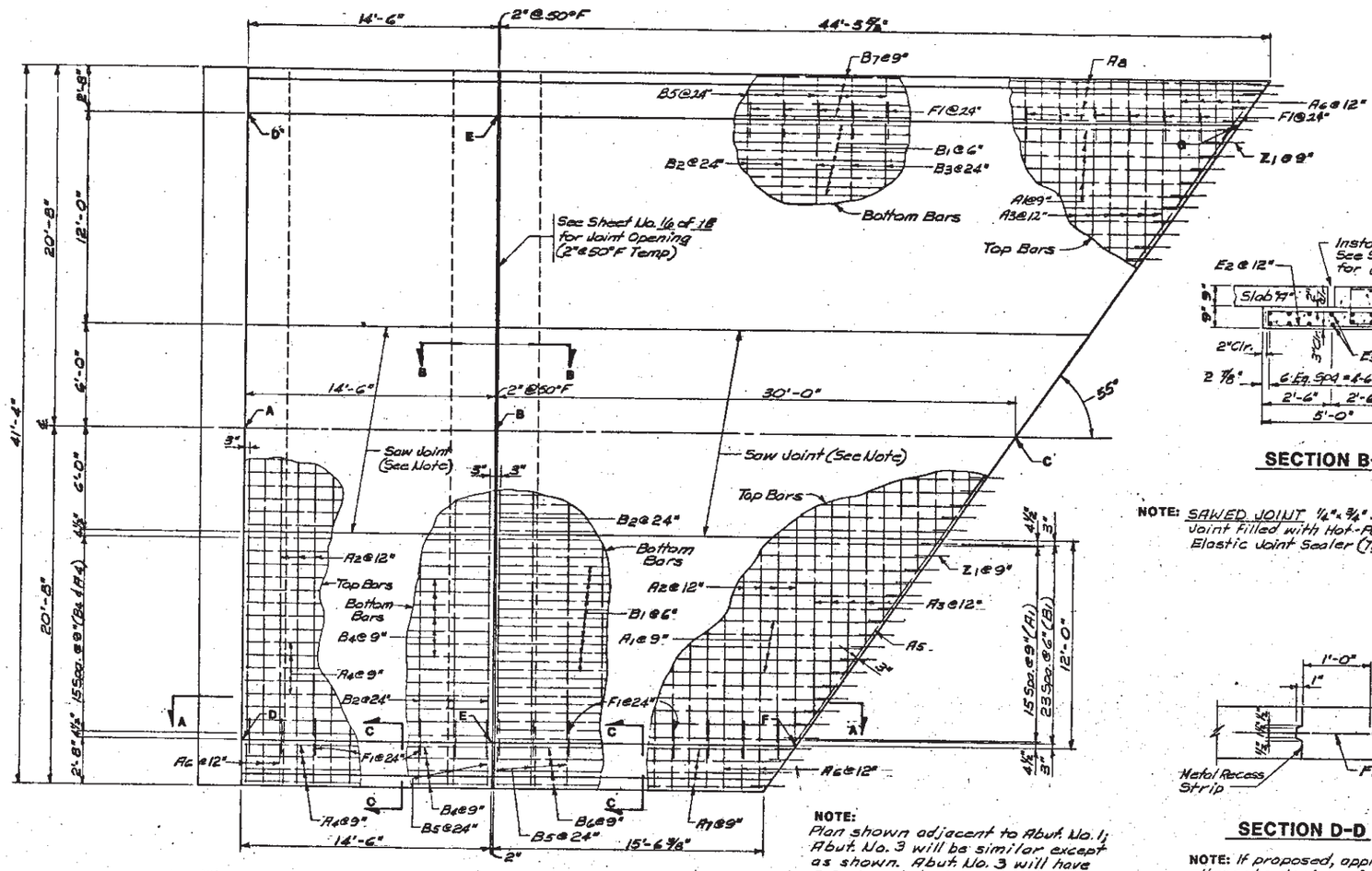

PLAN

NOTE:
Plan shown adjacent to Abut. No. 1; Abut. No. 3 will be similar except as shown. Abut. No. 3 will have 2 Drop Inlets. See Sheet 17 of 142 for Drop Inlet Locations. See detail "A" Sheet 16 of 18 for additional reinforcement.

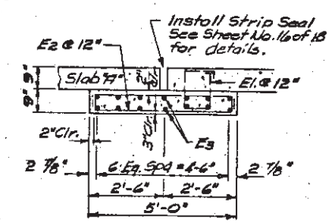

SECTION B-B

NOTE: SAWED JOINT 1/4" x 3/4" Sawed Joint Filled with Hot-Poured Elastic Joint Sealer (Typ.)

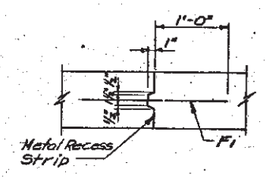

SECTION D-D

NOTE: If proposed, approval of alternate designs of Metal Strips will be considered by the Engineer.

The Portion of the Sleeper Slab directly under the movable Slabs, shall be smooth Steel trowel and coat with Asphalt Paint or place 4 mil. Polyethylene Sheeting to prevent bonding of Concrete. (Typ.)

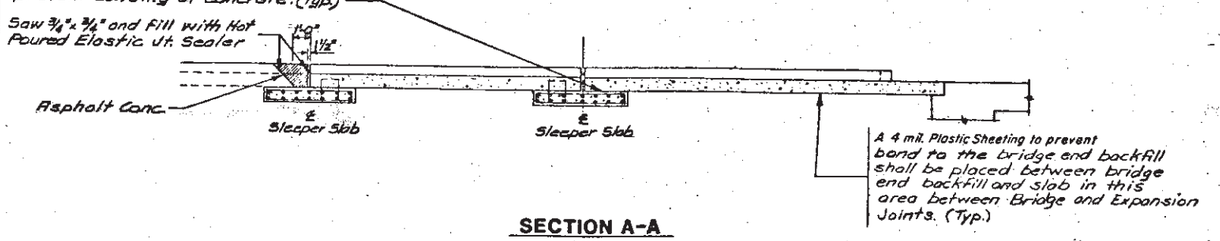

SECTION A-A

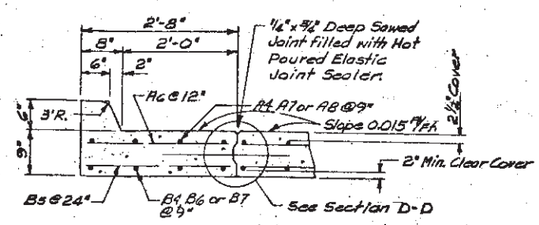

SECTION C-C

ORIGINAL CONSTRUCTION PLANS

DETAILS OF APPROACH SLAB
FOR
CONTINUOUS COMP. PRESTR. CONC. GIRDER BRIDGE

40'-0" ROADWAY — 35° SKEW L.H.F.
STA. 14+13.38 to 16+64.05 — 250'-8" LENGTH
OVER INTERSTATE HIGHWAY NO. 90 — SEC. 22-T2N-R7E
PROJECT NO. IR 90-2(72)55 — HS20-44 & ALTERNATE
STR. NO. 52-390-278 PENNINGTON COUNTY

SOUTH DAKOTA DEPARTMENT OF TRANSPORTATION
DIVISION OF HIGHWAYS

BELL, GALYARDT & ASSOCIATES, INC.
ARCHITECTS / ENGINEERS
JANUARY 1981

STR. NO. 52-390-278

(10) OF (11)

DESIGNED BY	DRAWN BY	CHECKED BY	APPROVED BY
KLL	KHB	KAG	BRIDGE ENGINEER

SHEET NO.

STATE OF	PROJECT	SHEET NO.	TOTAL SHEETS
S.D.	IM 0901(163)9	E62	E102

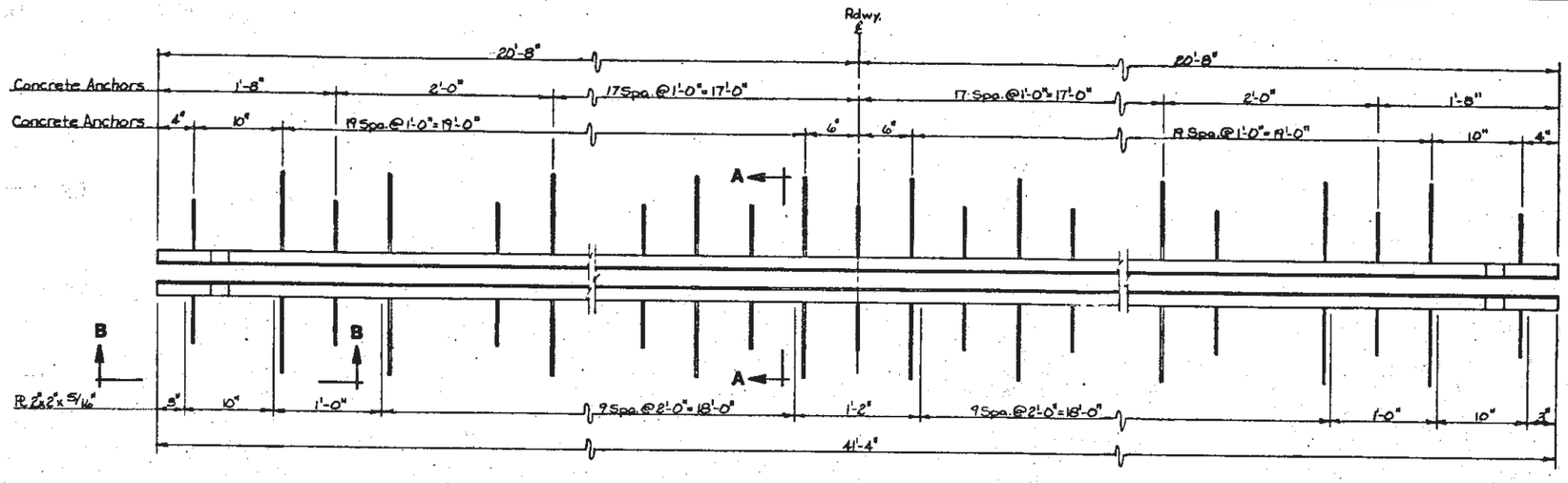

PLAN OF STRIP SEAL

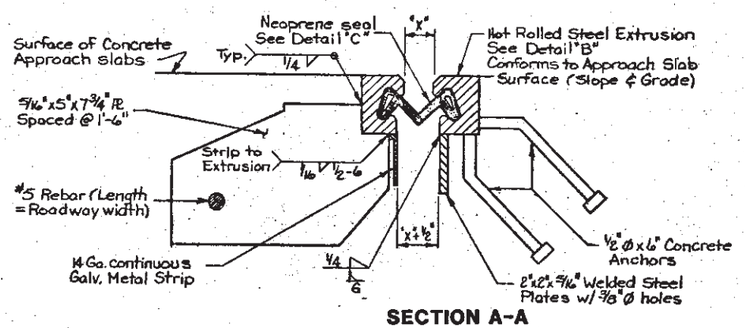

SECTION A-A

SUPPLEMENTAL DETAIL

The above 5/16"x5"x7 3/4" PL with #5 Rebar may be used instead of the 1/2"Øx6" welded concrete anchors. See Note No. 8

TEMP.	DIMENSION "X"
30° F	2 1/8"
40° F	2 1/8"
50° F	2"
60° F	1 7/8"
70° F	1 7/8"
80° F	1 3/4"
90° F	1 5/8"

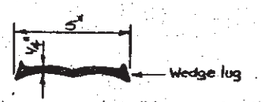

Neoprene seal shall have a 3 inch movement capability.

DETAIL "C"

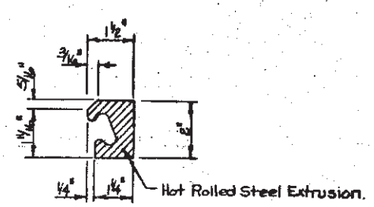

DETAIL "B"

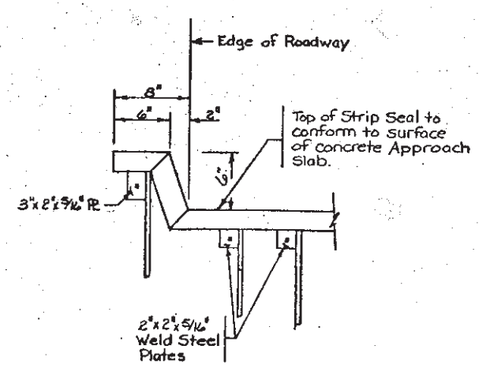

VIEW B-B

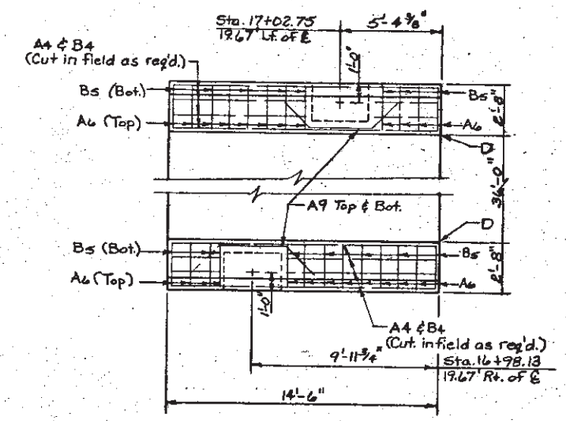

DETAIL "A"

(DROP INLET LOCATIONS)

ESTIMATED QUANTITIES		
ITEM	UNIT	QUANTITY
Strip Seal Expansion joint	Lin Ft	84.8

GENERAL NOTES

1. MATERIAL FOR EXTRUSION SHALL CONFORM TO ASTM A36, A242 OR A588.
2. MATERIAL FOR NEOPRENE EXTRUSION SHALL CONFORM TO THAT SPECIFIED IN SECTION 870 OF THE SOUTH DAKOTA STANDARD SPECIFICATIONS. NO SPLICES WILL BE PERMITTED IN THE NEOPRENE STRIP.
3. THE INSTALLATION OF THE STRIP SEAL SHALL BE AS RECOMMENDED BY ITS MANUFACTURER AND APPROVED BY THE ENGINEER, BUT IN GENERAL SHALL BE AS FOLLOWS: THE NEOPRENE EXTRUSION SHALL BE INSTALLED AND BONDED TO THE STEEL EXTRUSION WITH A HIGH SOLIDS LUBRICANT-ADHESIVE.

   THE NEOPRENE SURFACES SHALL BE ROUGHENED WITH A WIRE BRUSH BEFORE THE APPLICATION OF THE LUBRICANT-ADHESIVE.

   THE NEOPRENE STRIP MAY BE INSTALLED EITHER PRIOR TO OR AFTER THE TIME THE STEEL EXTRUSIONS ARE CONCRETED IN THE APPROACH SLABS. GALVANIZE THE STEEL EXTRUSIONS AND ANYTHING WELDED TO THEM AFTER ALL WELDING IS COMPLETED. THEY SHALL BE GALVANIZED IN ACCORDANCE WITH AASHTO - M111(ASTM - A123). IF WELDED SPLICES ARE USED SUBSEQUENT TO GALVANIZING THE WELD DETAILS AND THE PROCEDURES FOR PREPARING THE SURFACE FOR WELDING AND REPAIRING THE GALVANIZING AFTER WELDING SHALL BE INCLUDED WITH THE SHOP PLANS. THE STEEL EXTRUSIONS SHALL BE DRY, CLEAN, FREE FROM DIRT GREASE AND CONTAMINANTS AT THE TIME THE NEOPRENE STRIP IS INSTALLED.
4. DUE TO THE LENGTH OF THE STEEL EXTRUSIONS. SPLICES ARE PERMITTED. NO WELDS SHALL BE PERMITTED IN INTERNAL SECTION OF EXTRUSION WHERE NEOPRENE STRIP IS LOCATED. Weld DETAILS SHALL BE SHOWN ON THE SHOP PLANS FOR APPROVAL BY THE ENGINEER.
5. THE THICKNESS AND SHAPE OF THE NEOPRENE EXTRUSION MAY VARY FROM THE SKETCH SHOWN (DETAIL "C" OF THIS SHEET) ACCORDING TO THE MANUFACTURER"S DESIGN, HOWEVER, THE WEDGE LUGS MUST PROPERLY FIT THE GROOVE IN THE STEEL EXTRUSION. BEFORE INSTALLATION, SHOP PLANS OF THE PROPOSED STRIP SEAL SHOWING, IN ADDITION TO FIXED DIMENSIONS, THICKNESS OF NEOPRENE EXTRUSION AND DIMENSIONS PERTINENT TO THE FIT OF THE NEOPRENE EXTRUSION IN THE STEEL EXTRUSION SHALL BE SUBMITTED TO AND APPROVED BY THE ENGINEER.
6. STRIP SEAL WILL BE MEASURED IN LINEAR FEET, TO THE NEAREST ONE-TENTH FOOT, COMPLETE IN PLACE, MEASUREMENTS WILL BE MADE OF THE OVERALL HORIZONTAL LENGTH. STRIP SEAL WILL BE PAID FOR AT THE CONTRACT UNIT PRICE PER LINEAR FOOT COMPLETE IN PLACE. PAYMENT FOR THIS ITEM SHALL BE FULL COMPENSATION FOR FURNISHING ALL THE REQUIRED MATERIALS IN PLACE, INCLUSIVE OF LABOR, EQUIPMENT AND INCIDENTALS NECESSARY TO COMPLETE THE WORK IN ACCORDANCE WITH PLANS AND THE FOREGOING SPECIFICATIONS.
7. THE LUBRICANT-ADHESIVE MAY BE ONE OR TWO COMPONENTS AT THE SUPPLIER'S OPTION. THE NEOPRENE STRIP SEAL AND LUBRICANT-ADHESIVE SHOULD BE SUPPLIED OR RECOMMENDED BY THE SAME SOURCE AS THEY MUST BE COMPATIBLE. THE LUBRICANT-ADHESIVE MUST HAVE A SOLIDS CONTENT BY WEIGHT OF AT LEAST 65 PERCENT AND 250 PERCENT MINIMUM ELONGATION. IT MAY NOT CONTACT SOLVENTS WITH A FLASH POINT BELOW 80 DEGREES F.
8. THE CONTRACTOR HAS THE OPTION OF USING 5/16"x7 3/4"x5" PLATES WITH A #5 REBAR AS SHOWN IN THE SUPPLEMENTAL DETAIL INSTEAD OF THE 1/2"Ø x 0'-6" WELDED CONCRETE ANCHORS. IF THE PLATES ARE TO BE USED, THEY SHALL BE SHOWN AND DETAILED ON THE SHOP PLANS FOR APPROVAL BY THE ENGINEER.
9. SINCE THE CONFIGURATION AND DIMENSIONS OF THE STEEL EXTRUSION MAY VARY ACCORDING TO EACH MANUFACTURER"S DESIGN, THEY NEED NOT CONFORM EXACTLY TO THAT SHOWN IN DETAIL "B". HOWEVER, ANY DEVIATIONS FROM THE PLAN SHOWN CONFIGURATION OR DIMENSIONS MUST BE APPROVED BY THE BRIDGE PROGRAM.

ORIGINAL CONSTRUCTION PLANS

APPROACH SLAB JOINT DETAILS

FOR

CONTINUOUS COMP. PRESTR. CONC. GIRDER BRIDGE

40'-0" ROADWAY — 35° SKEW L.H.F.

STA. 14+13.38 to 16+64.05 — 250'-8" LENGTH

OVER INTERSTATE HIGHWAY NO. 90 — SEC.22-T2N-R7E

PROJECT NO. IR 90-2(72)55 — HS20-44 & ALTERNATE

STR. NO. 52-390-278 — PENNINGTON COUNTY

SOUTH DAKOTA DEPARTMENT OF TRANSPORTATION
DIVISION OF HIGHWAYS

BELL, GALYARDT & ASSOCIATES, INC.
ARCHITECTS / ENGINEERS
JANUARY 1991

(11) OF (11)

STR. NO. 52-390-278

DESIGNED BY	DRAWN BY	CHECKED BY	APPROVED BY
KLL	SJN	KAO	BRIDGE ENGINEER

SHEET NO.

STATE OF	PROJECT	SHEET NO.	TOTAL SHEETS
S.D.	IM 0901(163)9	E63	E102

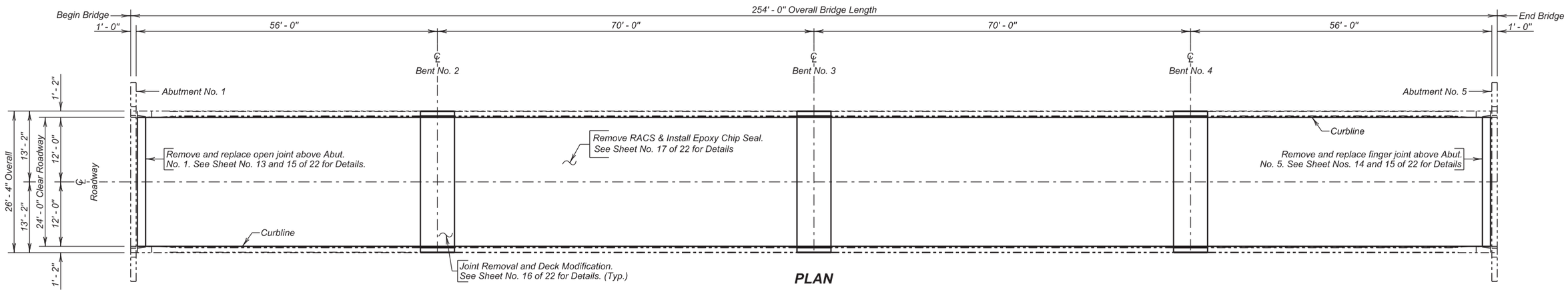

PLAN

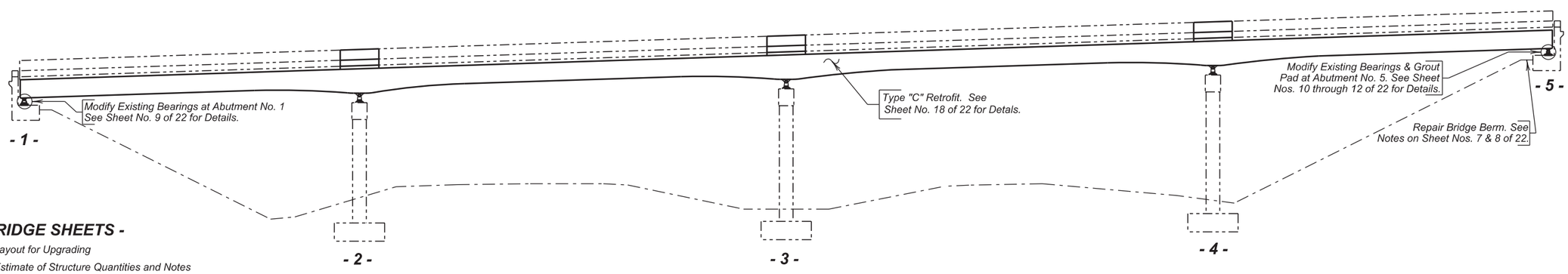

ELEVATION

INDEX OF BRIDGE SHEETS -

Sheet No. 1 - Layout for Upgrading
Sheet No. 2 - Estimate of Structure Quantities and Notes
Sheet No. 3 - Notes (Continued)
Sheet No. 4 - Notes (Continued)
Sheet No. 5 - Notes (Continued)
Sheet No. 6 - Notes (Continued)
Sheet No. 7 - Notes (Continued)
Sheet No. 8 - Notes (Continued)
Sheet No. 9 - Abutment No. 1 Bearing Weld Replacement
Sheet No. 10 - Reset Bearing at Girder No. 1 at Abutment No. 5
Sheet No. 11 - Modify Abutment No. 5 Grout Pads
Sheet No. 12 - Reset Bearings at Girder Nos. 2, 3 & 4 at Abutment No. 5
Sheet No. 13 - Abutment No. 1 Joint Replacement
Sheet No. 14 - Abutment No. 5 Joint Replacement
Sheet No. 15 - Joint Replacement Details
Sheet No. 16 - Slab Modification Over Bents
Sheet No. 17 - Two Coat Epoxy Chip Seal
Sheet No. 18 - Details of Fatigue Retrofit Type "C"
Sheet No. 19-22 - Original Construction Plans

LAYOUT FOR UPGRADE

FOR

254' - 0" CONT. COMPOSITE GIRDER BRIDGE

24' - 0" ROADWAY — 0° SKEW
OVER I90 — SEC. 34-T7N-R2E
STR. NO. 52-540-275 — IM 0901(163)9
PCN 0223

PENNINGTON COUNTY

S. D. DEPT. OF TRANSPORTATION

MARCH 2014

PLANS BY :
OFFICE OF BRIDGE DESIGN, SOUTH DAKOTA DEPARTMENT OF TRANSPORTATION

DESIGNED BY	CK. DES. BY	DRAFTED BY	
KH	TK	KR	Kevin N. Goeden
PENN0223	0223RF01		BRIDGE ENGINEER

ESTIMATE OF STRUCTURE QUANTITIES

ITEM NO.	DESCRIPTION	QUANTITY	UNIT
110E0070	Remove Rubberized Asphalt Chip Seal	668.0	SqYd
120E3120	Bridge Berm Repair	1	Each
410E0030	Structural Steel, Miscellaneous	Lump Sum	LS
410E0103	Fatigue Retrofit Steel Girder, Type C	60	Each
410E0300	Modify Girder End	4	Each
410E0508	Field Weld	72	In
410E0512	Grind Weld	60	In
410E0560	Jack Superstructure and Shift Bearing Shoes	Lump Sum	LS
410E2220	Replace Expansion Device	2	Each
410E3010	Magnetic Particle Weld Inspection	98	In
412E0100	Bridge Repainting, Class I	Lump Sum	LS
412E0500	Paint Residue Containment	Lump Sum	LS
460E0070	Class A45 Concrete, Bridge Repair	13.8	CuYd
460E0170	Concrete Patching Material	18.0	CuFt
460E0300	Breakout Structural Concrete	13.8	CuYd
460E0310	Breakout and Replace Grout Pad	1	Each
460E0380	Install Dowel in Concrete	2	Each
462E0200	Controlled Density Fill	1.0	CuYd
480E0200	Epoxy Coated Reinforcing Steel	4014	Lb
491E0015	Two Coat Epoxy Bridge Deck Chip Seal	668.0	SqYd
491E0110	Abrasive Blasting of Bridge Deck	668.0	SqYd
491E0120	Bridge Deck Grinding	668.0	SqYd
491E0130	Concrete Removal, Class A	4.0	SqYd
491E0140	Concrete Removal, Class B	4.0	SqYd

SPECIFICATIONS

1. Design Specifications: AASHTO Standard Specifications for Highway Bridges 17th Edition using Working Stress Design.

2. Construction Specifications: South Dakota Standard Specifications for Roads and Bridges, 2004 Edition and Required Provisions, Supplemental Specifications and/or Special Provisions as included in the Proposal.

3. All Welding and Welding Inspection shall be in conformance with the AASHTO/AWS Bridge Welding Code D1.5M/D1.5:2010 unless otherwise noted in this plan set.

DETAILS AND DIMENSIONS OF EXISTING BRIDGE

All details and dimensions of the existing bridge, contained in these plans, are based on the original construction plans and shop plans. It is the Contractor's responsibility to inspect and verify the actual field conditions and any necessary as-built dimensions affecting the satisfactory completion of the work required for this project.

SCOPE OF BRIDGE WORK & SEQUENCE OF OPERATIONS

All work on this structure shall be accomplished with the traffic control shown elsewhere in the plans. Alternate sequence of operations may be submitted by the contractor for approval by the engineer a minimum of two weeks prior to the preconstruction meeting.

1. Modify the girder ends and reset the rocker bearings at Abutment No. 5 (Do this in conjunction with Step No. 2).

2. Modify the grout pad on Girder 1 at Abutment No. 5 (Do this in conjunction with Step No. 1.)

3. Remove and replace the welds on the bearings at Abutment No. 1.

4. Replace the joint at Abutment No. 1 and 5.

5. Remove and replace open joints over Bent No. 2, 3 & 4.

6. Remove the rubberized asphalt chip seal, perform bridge deck grinding and repair the bridge deck by removing all loose and delaminated concrete from the bridge deck surface.

7. Clean the bridge deck surface with abrasive blasting.

8. Place a Two Coat Epoxy Bridge Deck Chip Seal.

9. Modify the existing diaphragm to stiffener connections by completing the type C retrofit.

10. Reshape berm in front of Abutment No. 5 and remove drainage trough.

11. Paint all affected areas as stated in the notes.

GENERAL CONSTRUCTION NOTES

1. All mild reinforcing steel shall conform to ASTM A615, Grade 60.

2. All exposed concrete corners and edges shall be chamfered 3/4" unless noted otherwise in the plans. Match existing chamfer if the existing chamfer differs.

3. Use 2" clear cover on all reinforcing steel except as shown otherwise.

4. Surfaces of fresh concrete at construction joints shall be rough floated sufficiently to consolidate the surface. All construction joints shall be cleaned of surface laitance, curing compounds and other foreign materials prior to placing fresh concrete against the joint.

CONCRETE BREAKOUT

1. The existing deck shall be broken out to the limits shown on the plans. Breakout limits shall be defined with a 3/4" deep sawcut (unless specified otherwise in these plans), where practical, as approved by the Engineer. Reinforcing steel that is exposed and is scheduled for use in the new construction shall be cleaned and straightened to the satisfaction of the Engineer. Care shall be taken not to damage the existing reinforcing steel that is to be reused in the new construction during concrete breakout. Any reinforcing steel that is damaged during concrete breakout shall be replaced or repaired, as approved by the Engineer, by the Contractor at no cost to the Department. The existing reinforcing steel that is to be reused in the new construction and that is exposed during concrete breakout shall be epoxy coated in accordance with the "Epoxy Coating Existing Reinforcing Steel" notes.

2. Extreme care shall be used not to nick, gouge, scratch, or damage in any other way, the existing steel girders when breaking out the concrete deck and curbs. Prior to deck removal, the limits of the girder top flanges shall be marked on top of the bridge deck. The Contractor shall not be allowed to use any impact type breakout equipment larger than power driven hand tools for slab removal within six inches of the actual limits of the top flange. At no time shall the use of any breakout method that will nick, gouge, or scratch the flange, or any other structural steel component to be reused, be allowed. In the event that any nicks, gouges, scratches, or other damage occur, the Office of Bridge Design shall be immediately notified. All damage shall be repaired by the Contractor as recommended by the Office of Bridge Design. All costs involved in repairing any damage, including any non-destructive testing that may be required, shall be at the expense of the Contractor.

3. All broken out concrete, discarded reinforcing bars and expansion devices shall be disposed of by the Contractor. Any disposal of discarded material shall be in accordance with the Environmental Commitments.

4. During concrete removal operations, no broken out concrete shall be allowed to fall onto Interstate 90.

5. The contract unit price per cubic yard for "Breakout Structural Concrete" shall include breaking out concrete, cleaning, straightening existing reinforcing steel, removal of the existing armored device, and disposal of all broken out material.

ESTIMATE OF STRUCTURE QUANTITIES AND NOTES

FOR

254' - 0" CONT. COMP. GIRDER BRIDGE

STR. NO. 52-540-275

MARCH 2014

DESIGNED BY	CK. DES. BY	DRAFTED BY	
KH	TK	KH	Kevin N. Goeden
PENN0223	0223HF02		BRIDGE ENGINEER

EPOXY COATING EXISTING REINFORCING STEEL

1. The existing resteel in the deck that is exposed during concrete breakout, and is to be reused, shall be epoxy coated in the field.

2. The reinforcing steel shall be abrasive blasted clean and then epoxy coated. The epoxy coating shall be inert in concrete and compatible with the coating applied to the new epoxy coated reinforcing steel. This coating shall be the epoxy touch up coating material supplied by an epoxy coating manufacturer who supplies coating material for new epoxy coated reinforcing steel. The abrasive blasted reinforcing steel shall be coated promptly and before detrimental oxidation occurs. The coating shall be allowed to cure for 24 hours or as per the manufacturer's recommendations, whichever is more stringent, before concrete can be placed. These bars shall be clean and free from all surface contaminants before coating.

3. The cost of cleaning and epoxy coating the existing reinforcing steel shall be incidental to the various bid items.

REPLACE EXPANSION DEVICE

1. All new structural steel plates and bars shall conform to ASTM A709, Grade 36. Material less than 1/4 inch thick may be ASTM A1011, Grade 36. The 1/2 inch diameter end welded deformed bar anchors shall be a commercially available Fluxed Deformed Bar Anchor Stud, automatically end welded, with material conforming to ASTM A496.

2. The end welded concrete anchors shall conform to Section 7 of the latest edition of the AWS D1.1 Structural Welding Code-Steel.

3. All steel components, steel plates, bars and structural shapes shall be galvanized after shop welding in accordance with ASTM A123.

4. The Membrane Sealant shall be one of the membrane sealant types from the approved products list for Membrane Sealant Expansion Joints.

5. The manufacturer shall supply the membrane sealant in packaging that precompresses the membrane sealant. The precompressed dimension shall be as recommended by the sealant manufacturer to provide a water tight seal throughout a joint movement range of +25% (minimum) from the specified joint opening dimensions. If no case shall be precompressed dimension exceed 75% of the joint opening width. The foam sealant shall be slowly self-expanding to permit workers ample time to install the membrane sealant before the membrane sealant exceeds the joint opening width.

6. The membrane sealant shall be supplied in pieces 5 feet in length or longer. The foam sealant shall be ultra-violet and ozone resistant.

7. The bonding adhesive used to attach the membrane sealant to the adjacent concrete or steel shall be approved by the membrane sealant supplier.

8. Adhesive used to join adjacent pieces of the membrane sealant shall be as recommended by the manufacturer.

9. If Styrofoam filler material is used in the construction, it shall be closed cell and water-tight as approved by the Engineer.

10. The minimum ambient air temperature at the time of joint installation and adhesive curing shall be 40° F.

11. Splices in the steel components will be required at the centerline of the roadway. Welded field splice details and the procedures for preparing the surfaces of the entire fabricated joint for welding and repairing the galvanizing after welding shall be included in the shop plans. Repair of galvanizing shall be by the zinc-based solder method in conformance with ASTM A780.

12. A technical representative of the membrane sealant supplier shall be present at the jobsite during construction.

13. Steel surfaces that will be in contact with the membrane sealant shall be thoroughly cleaned to remove all contaminants (such as oil, rust, etc.) Cleaning of the steel surfaces with wire brushing or grinding shall be permitted.

14. Immediately prior to membrane joint installation, the entire joint contact surface shall be air blasted. The air compressor used for joint cleaning shall be equipped with trap devices capable of providing moisture-free and oil-free air at a recommended pressure of 90 psi. To obtain complete bonding with the adhesive, the adjacent surfaces must be dry and clean. The contact surfaces for the joint shall be visually inspected by the Engineer immediately prior to joint installation to verify the surface is dry and clean.

15. Individual spliced sections shall be installed as per the manufacturers' recommendations. The membrane joint sealant supplier shall submit a detailed installation procedure to the Engineer at least 5 days prior to joint installation for his review.

16. Traffic shall not be allowed on the joint for a minimum 3 hours unless otherwise directed by the Engineer.

17. The deck shall be broken out and rebuilt to the limits shown on the plans. Reinforcing steel that is exposed and is scheduled for use in the new construction shall be cleaned and straightened to the satisfaction of the Engineer.

18. The transverse reinforcing steel noted on the plan sheet shall be spliced with mechanical splice devices. Mechanical rebar splices shall be in accordance with Section 480 of the Construction Specifications.

19. The new concrete surfaces of the bridge deck in the area of the expansion joint replacement shall be finished in accordance with Sections 460.3.M.4.b of the Construction Specifications.

20. The complete expansion device shall be set at the correct grade and crown slope and securely supported during placement of Class A45 Concrete. Care shall be taken to ensure that the correct grade is maintained across the joint.

21. The cost of concrete breakout, furnishing, galvanizing, welding, and installing all required materials including labor, equipment and incidentals necessary to complete the work in accordance with the plans shall be incidental to the contract unit price per each for "Replace Expansion Device".

FATIGUE RETROFIT – STEEL GIRDER, TYPE "C"

1. This work consists of cleaning and removing paint in the areas where the existing diaphragm stiffeners bear on the bottom flanges of the main girder, welding the existing diaphragm stiffeners to the bottom flanges, and painting the finished welds to match the existing color.

2. Preparation of the base metal prior to welding shall be in accordance with Section 3 of the Bridge Welding Code. Existing paint shall be removed a distance of 4 inches from each side of the weld.

3. Preheat will be required. Preheat and interpass temperature requirements shall be in accordance with Section 4.2 of the Bridge Welding Code. The minimum preheat and interpass temperature shall be ***155*** degrees F determined from Annex VIII of the Bridge Welding Code for high restraint conditions. The use of temperature indicating crayons shall be a minimum acceptable method for monitoring preheat and interpass temperatures.

4. SMAW electrode atmospheric exposure requirements shall comply with Section 4.5 of the Bridge Welding Code. Electrodes shall be purchased in hermetically sealed containers. If the container shows evidence of damage, the electrodes shall be dried in a drying oven for at least one hour between 700 and 800 degrees F before they are used. Immediately after opening a hermetically sealed container, or removal from a drying oven, electrodes shall be stored in storage ovens at a temperature of 250 degrees F. Electrodes exposed to the atmosphere upon removal from drying, storage ovens or hermetically sealed containers shall be used within four hours maximum, or redried at 450 to 550 degrees F for two hours minimum. Electrodes exposed to the atmosphere for periods less than four hours may be returned to a storage oven and maintained at a minimum of 250 degrees F for a minimum of four hours before reissue. Electrodes shall be redried no more than one time. Electrodes which have been wet shall not be used.

5. All welds shall be cleaned in accordance with Section 3.11 of the Bridge Welding Code. Completed welds and adjacent areas shall be cleaned of all weld spatter, slag, smoke and heat affected paint.

6. The Contractor shall submit a Welding Procedure Specification on Form III-2 (on page 189 of the Bridge Welding Code) and notify the Department of the Contractor's welding schedule thirty days prior to any Fatigue Retrofit welding.

NOTES (CONTINUED)

FOR

254' - 0" CONT. COMP. GIRDER BRIDGE

STR. NO. 52-540-275

MARCH 2014

DESIGNED BY	CK. DES. BY	DRAFTED BY	
KH	TK	KH	Kevin N. Goeden BRIDGE ENGINEER
PENN0223	0223HF03		

FATIGUE RETROFIT – STEEL GIRDER, TYPE "C"

7. All costs for labor, materials and incidentals necessary to prepare the weld area, complete the weld and provide access to each weld for Nondestructive Testing shall be paid for at the contract unit price per each for "Fatigue Retrofit Steel Girder, Type C".

8. Removal of work affected paint and repainting the work affected areas is covered and paid for in the Bridge Repainting and Paint Residue Removal and Containment notes on Sheet Nos. 7 of 22.

MAGNETIC PARTICLE INSPECTION

1. The Contractor shall be responsible for retaining a qualified Testing Agency to perform magnetic particle inspection (MT) and visual inspection on the fillet welds produced in the field under the payment item "Fatigue Retrofit Steel Girder, Type C". All of the MT and visual inspections shall be performed by an AWS Certified Welding Inspector qualified and certified in conformance with the provisions of AWS QC1. Additionally, personnel performing the Non Destructive testing (NDT) shall be qualified in conformance with the American Society for Nondestructive Testing's (ASNT) Recommended Practice No. SNT-TC-1A, or equivalent, as a NDT Level II inspector. The Testing Agency and inspectors provided shall be subject to the approval of the Bridge Construction Engineer.

2. Twenty percent of the weld locations will be tested using MT. A weld location is defined as 100% of the fillet weld length in one unit of "Fatigue Retrofit Steel Girder, Type C". The MT results shall be reported on Form III-6 in Annex III of the Bridge Welding Code. The MT Inspection shall be performed by the yoke method. The MT Inspection shall be in accordance with Section 6 of the Bridge Welding Code.

3. All of the completed fillet welds in "Fatigue Retrofit Steel Girder, Type C" shall be visually inspected for acceptance by the Testing Agency. The visual inspection shall be in accordance with Section 6 of the Bridge Welding Code. The Testing Agency shall record the locations of the visual inspection and the findings of the visual inspections together with detailed descriptions of all recommended repairs.

4. Based on the results of the Magnetic Particle Inspection and visual inspection, the Bridge Construction Engineer will determine the acceptability of the completed fillet welds and any recommended repairs. Any necessary repairs to the completed welds shall be accomplished in accordance with Chapter 12 of the Bridge Welding Code 2010 Edition. All weld repair procedures, should they be required, shall be approved prior to use by the Bridge Construction Engineer.

5. All costs incurred by the Magnetic Particle Inspection and visual inspection, including all labor, equipment, access provisions and any incidentals necessary to perform the inspection in accordance with these plans shall be incidental to the contract unit price per inch for "Magnetic Particle Weld Inspection".

VERTICAL JACKS

1. Vertical jacks shall be used to carry the girder reactions at Abutment No. 5 during the time of rocker bearing repositioning and grout pad modification. The intent of the jacking procedure is to transfer the girder reaction to the jack during the bearing repositioning process and grout pad modification while keeping the vertical movement of the girder to the minimum amount necessary, as approved by the Engineer.

2. The vertical jack shall have a lock nut for mechanical load holding with hydraulic pressure released.

3. The vertical jack shall be able to safely support a load of 35 kips for the entire time required to modify the grout pad and shift the existing bearing shoe into its new position while allowing for the longitudinal girder movements due to temperature induced expansion and contraction.

4. Caution shall be exercised when transferring the girder reactions to and from the jacks to insure that no damage to any of the existing structural components will occur due to the jacking procedure. Any damage to any of the structural components of the bridge caused by the jacking procedure will be repaired as approved by the Engineer at no cost to the Department.

5. Each jack shall have the bearing plate at both ends of sufficient area and thickness to limit the bearing stress on the loaded area of concrete to not more than 1800 psi and to limit the bearing stress on the loaded area of steel to not more than 20,000 psi.

6. Jacks shall be kept as close to the end of the girders as is possible to still adequately perform the construction required. No live load will be allowed directly over the jack after the lock nut for the mechanical load holding is engaged. If the Contractor cannot adequately complete the load transfer operations within the specified period, he shall submit his preferred time requirements in writing to the Engineer at the preconstruction meeting for consideration for approval.

7. The Contractor shall be required to submit a detailed set of plans outlining his jacking procedure to the Engineer a minimum of 30 days prior to use for approval by the Bridge Construction Engineer. Included in this procedure will be the name of the jack used, the load monitoring method for the jack, and details of bearing plates used to limit the bearing stress on the concrete and steel. This shall be submitted by a registered SD engineer.

8. All costs for materials, labor, equipment and incidentals necessary to perform the vertical jacking as shown by these plans shall be included in the contract lump sum price for "Jack Superstructure and Shift Bearing Shoes".

GROUT PAD REPAIR

1. Any girder supported by jacking shall not be allowed to transfer any portion of its load to the newly constructed portion of the grout pad until the newly constructed portion of the grout pad has attained a minimum compressive strength of 2000 psi.

2. After the temporary girder supports have been established, portions of the existing grout pad shall be removed and rebuilt to the dimensions detailed on Sheet No 11 of 22. Define the limits of removal with a 3/4 inch deep sawcut where possible. The existing grout pad recess shall be cleaned out to the depth of the original grout pad recess.

3. The elevation of the new grout pad shall match the existing grout pad and maintain the existing elevation at the top of the deck slab after all grout pad repair work is completed.

4. The grout used in the partial replacement of the grout pad shall be in accordance with Section 460.3.S of the Construction Specifications.

5. The cost of all labor, materials, equipment and any incidentals required including partially removing existing grout pad and furnishing and placing grout shall be included in the contract unit price per each for "Breakout and Replace Grout Pad".

SHIFT BEARING SHOES AT ABUTMENT NO. 5

1. There are three existing rocker bearings requiring repositioning as shown by the plans.

2. Prior to the start of any bearing repositioning operation, all of the existing bearings shall be checked for ease of movement as approved by the Engineer. No more than one rocker bearing shall be repositioned at a time.

3. Jacks used to support the girder at the temporary support locations will be locked in position when carrying the girder reaction so the jack will stay in position if the hydraulics is lost.

4. Remove the welds connecting the bearing to the bottom flange using the air carbon arc, plasma cutting process or grinding.

5. The bearings shall be re-welded to the bottom flange as shown in the plans and in accordance with the Field Welding Procedure notes.

6. Before any bearings are repositioned, the location must be approved by the Engineer. Rocker bearings will be located so that at a girder temperature of 45 degrees Fahrenheit the rocker is vertical. For any other girder temperature the plate should be located such that the rocker inclination is in accordance with Temperature – Dimension Table and Rocker Inclination Detail on sheet 10 of 22.

7. All costs for materials, labor, equipment and any incidentals necessary to reposition the rocker bearings as shown by these plans shall be included in the contract lump sum price for "Jack Superstructure and Shift Bearing Shoes".

NOTES (CONTINUED)

FOR

254' - 0" CONT. COMP. GIRDER BRIDGE

STR. NO. 52-540-275

MARCH 2014

DESIGNED BY	CK. DES. BY	DRAFTED BY	
KH	TK	KH	Kevin N. Goeden BRIDGE ENGINEER
PENN0223	0223HF04		

AIR CARBON ARC CUTTING AND GOUGING

1. All removal of web sections, transverse stiffeners, diaphragms gusset plates, and welds called for by the plans shall be accomplished using the air carbon arc process unless noted otherwise. Plasma cutting will be allowed. If the contractor plans to use a plasma cutting, the Bridge Construction Engineer shall be notified and will be provide the Contractor with any additional requirements for this cutting method.

2. Before any air carbon arc cutting or gouging begins, lay out all lines on the steel surfaces using a marker that will be visible during the cutting process.

3. When grinding to a specified shape or dimension is required after air carbon arc cutting, lay out the shape on the steel surface with a visible marker and grind to the layout line. Air carbon arc gouging shall be done using DC, electrode positive.

4. Extreme care shall be exercised during the cutting or gouging process so that absolutely no damage (such as nicks, gouges, splattering) to the surrounding metal occurs. Any damage caused by the air carbon arc process shall be repaired by the Contractor to the satisfaction of the Engineer at no cost to the Department.

5. Grind all surfaces cut or gouged with the air carbon arc process to remove high carbon deposits, provide a smooth finish, and prepare metal for welding and/or to accept paint.

BEARING MODIFICATION AT ABUTMENT NO. 5

1. The expansion bearing at girder 1 at abutment 5 will be modified as shown in the plans. Modification will consist of removing existing masonry plate and anchors, resetting rockers and replacing masonry plate and anchors.

2. The anchor rods shall conform to ASTM A449 or ASTM F1554 Gr. 55 and be fully threaded. Anchor rods shall be doweled into the abutment seat according to the notes for Installing Dowels in Concrete. Each anchor rod will require 1 heavy hex nut and 1 standard washer.

3. The new masonry plate detailed in the plans shall conform to ASTM A709 Grade 36 and shall be painted in accordance with Section 411 of the Standard Specification. The paint color shall be an approved green color.

4. The interior holes on the new masonry plate shall be cut and threaded to accept a new 1 ¼" diameter A325 heavy hex bolt galvanized according to ASTM A153. The holes shall be fully threaded through the thickness of the plate.

5. Before any anchor rods or masonry plate are installed, the location must be approved by the Engineer. The new masonry plate will be located so that at a girder temperature of 45 degrees Fahrenheit the rocker is vertical. For any other girder temperature the plate should be located such that the rocker inclination is in accordance with Temperature – Dimension Table and Rocker Inclination Detail on sheet 10 of 22.

6. All costs associated with Bearing Modification at Abutments shall be incidental to the contract lump sum price for "Jack Superstructure and Shift Bearing Shoes".

GIRDER END MODIFICATION AT ABUTMENTS

1. This work shall consist of a section of the girder ends at the expansion abutments.

2. The girder removal method shall be oxyacetylene cutting. Any other method shall meet the approval of the Bridge Construction Engineer.

3. Prior to painting girder ends shall be ground smooth.

4. All costs for labor, materials, equipment and any incidentals necessary shall be incidental to the Contract Unit Price for "Modify Girder End".

5. Removal of work affected paint and repainting the work affected areas will be paid for in the Bridge Repainting and Paint Residue Removal and Containment notes.

MODIFY BEARING WELD AT ABUTMENT NO. 1

1. There are four existing fixed bearing requiring weld removal and replacement. No more than one fixed bearing shall be repositioned at a time.

2. Remove the weld connecting the bearing to the bottom flange using the air carbon arc, plasma cutting process or grinding.

3. The bearing shall be re-welded to the bottom flange as shown in the plans and in accordance with the Field Welding Procedure notes.

4. All labor, equipment, materials and incidentals necessary including air carbon arc removal, plasma cutting and grinding of welds shall be incidental to the contract unit price per inch for "Grind Weld".

5. All labor, equipment, materials and incidentals necessary to re-weld the bearings shall be incidental to the contract unit price per inch for "Field Weld".

FIELD WELDING PROCEDURES

1. Approved Welding Procedure Specifications (WPS) will be required for this project, using the Shielded Metal Arc Welding (SMAW) process and an approved E7018 electrode from Table 4.1 of the Bridge Welding Code. The proposed WPS's for this project shall be submitted on Form N-2, from Annex N of the Bridge Welding Code, to the Bridge Construction Engineer for approval at least 2 weeks prior to construction.

2. Welders shall be qualified in accordance with Section 410.3.D of the Construction Specifications.

3. Preparation of the base metal prior to welding shall be in accordance with Clause 3 of the Bridge Welding Code. Existing paint shall be removed a distance of 2 inches from each side of the welding.

4. Preheat will be required. Preheat and interpass temperature requirements shall be in accordance with Clause 4.2 of the Bridge Welding Code. The minimum preheat and interpass temperature shall be 320 degrees F for welds to the 1" and ½" girder flanges and 300 degrees F for welds to the 5/16" girder web as determined from Annex G of the Bridge Welding Code for high restraint conditions. Temperature indicating crayons shall be the minimum acceptable method for monitoring preheat and interpass temperatures.

5. SMAW electrode atmospheric exposure requirements shall comply with Clause 4.5 of the Bridge Welding Code. Electrodes shall be purchased in hermetically sealed containers. If the container shows evidence of damage, the electrodes shall be dried in a drying oven for at least one hour at temperatures between 700 and 800 degrees F before they are used. Immediately after opening a hermetically sealed container or removal of the electrodes from a drying oven, electrodes shall be stored in ovens at a temperature of at least 250 degrees F. Electrodes exposed to the atmosphere upon removal from drying or storage ovens or hermetically sealed containers shall be used within four hours maximum or redried at 450 to 550 degrees F for two hours minimum. Electrodes exposed to the atmosphere for periods less than four hours may be returned to a storage oven and maintained at a minimum of 250 degrees F for a minimum of four hours before reissue. Electrodes shall be redried no more than one time. Electrodes which have been wet shall not be used.

6. All welds shall be cleaned in accordance with Clause 3.11 of the Bridge Welding Code. Completed welds and adjacent areas shall be cleaned of all weld splatter, slag, smoke and heat affected paint. No intermittent or "stitch" welds will be allowed.

7. E7018 electrodes shall be used for tack welds. The size of tack welds shall not be greater than 5/16". Tack welds shall be positioned so they will be incorporated into, and re-melted by, the final weld. This applies to run-off tabs also. Tack welds shall be thoroughly cleaned prior to any weld placement.

8. Groove joint fit-up tolerances shall be +1/16", -1/8" for root opening and +10º, -5º for the bevel angle for Joint Designation B-U2 as per Clause 3.3.4 of the Bridge Welding Code. The removal dimensions of the damaged web material and the dimensions of the new web plates shall be closely controlled to achieve the specified fit-up tolerances. All groove welds shall be ground to a flush contour. Grinding shall be longitudinal. Transverse grinding will not be allowed.

NOTES (CONTINUED)

FOR

254' - 0" CONT. COMP. GIRDER BRIDGE

STR. NO. 52-540-275

MARCH 2014

DESIGNED BY	CK. DES. BY	DRAFTED BY	
KH	TK	KH	Kevin N. Goeden
PENN0223	0223HF05		BRIDGE ENGINEER

INSTALLING DOWELS IN CONCRETE

1. Holes drilled in the existing concrete shall be true and normal or as shown in the plans. Drilling holes using a core drill shall not be allowed. Care shall be taken not to damage the existing reinforcing steel. It is likely that some of the existing reinforcing steel shown in the original construction plans may have been placed out of position during original construction. Therefore, prior to the start of drilling any holes in the concrete, an effort will be made by Department forces to mark on the concrete surface where practical any locations of the in-place reinforcing steel. In spite of this precaution, the Contractor can still expect to encounter and have to drill through reinforcing steel or shift the dowel spacing as approved by the Engineer to miss the existing reinforcing steel. If the Contractor shifts the dowel spacing, the unused drill holes shall be completely filled with the epoxy resin as approved by the Engineer.

2. The epoxy resin mixture shall be of a type for bonding steel to hardened concrete and shall conform to AASHTO M235 Type IV (Equivalent to ASTM C881, Type IV). Grade 1, 2 or 3 may be used for vertical dowels.

3. The diameter of the drilled holes shall not be less than 1/8 inch greater, nor more than 3/8 inch greater than the diameter of the dowels or as per the Manufacturer's recommendations. The drilled holes shall be blown out with compressed air using a device that will reach the back of the hole to ensure that all debris or loose material has been removed prior to epoxy injection.

4. Mix epoxy resin as recommended by the Manufacturer and apply by an injection method as approved by the Engineer. Beginning at the back of the drilled holes, fill the holes 1/3 to 1/2 full of epoxy, or as recommended by the Manufacturer, prior to insertion of the steel bar. Care shall be taken to prevent epoxy from running out of the horizontal holes prior to steel bar insertion. Rotate the steel bar during installation to eliminate voids and ensure complete bonding of the bar. Insertion of the bars by the dipping or painting method will not be allowed.

5. No loads shall be applied to the epoxy grouted dowel bars until the epoxy resin has had sufficient time to cure as specified by the epoxy resin manufacturer.

6. The cost of epoxy resin, dowels, installation and other incidental items shall be incidental to the contract unit price per each for "Install Dowel in Concrete".

REMOVE EXISTING RUBBERIZED ASPHALT CHIP SEAL

Remove the Rubberized Asphalt Chip Seal (RACS) from the deck surface in accordance with Section 491 of the Construction Specification. The Contractor has the option of removing the RACS for the full width of roadway instead of in phases. RACS removal will be paid for at the contract unit price per square yard for "Remove Rubberized Asphalt Chip Seal".

REMOVAL OF LOOSE AND DELAMINATED CONCRETE

1. This work consists of preparation of the existing bridge deck for Two Coat Epoxy Bridge Deck Chip Seal by removing and replacing the loose and delaminated concrete.

2. Concrete used to repair the deck surface shall be in accordance with the Concrete Patching Material notes in this set of plans.

3. Concrete Removal on the bridge deck shall be divided into two the following two classes:

   a. Concrete Removal, Class A: Concrete Removal, Class A shall consist of the removal of delaminated and visibly loose concrete and any bituminous patches (when present) from the top of existing bridge deck down to a depth no deeper than the top of the top mat of bridge deck reinforcing steel. When grinding is specified, the Concrete Removal, Class A shall be done after the bridge deck has been ground.

   b. Concrete Removal, Class B: Concrete Removal, Class B areas shall be determined after completion of the Concrete Removal, Class A has been accomplished. Concrete Removal, Class B shall consist of the removal of delaminated and visibly loose concrete that exists below the bottom limits of the Concrete Removal, Class A *(below the top of the top mat of reinforcing steel)*.

4. Concrete Removal shall be by jackhammers and chipping hammers or other methods as approved by the Engineer. Jackhammers and chipping hammers shall be used as follows:

   a. Jackhammers heavier than 30 pounds will not be permitted.

   b. Chipping hammers heavier than 15 pounds will not be permitted for removing concrete below the top of the top mat of reinforcing steel.

   c. Jackhammers and chipping hammers shall not be operated at an angle in excess of 45 degrees measured from the surface of the concrete.

   d. Extreme care shall be taken when using jackhammers and chipping hammers to assure that existing reinforcing steel is not damaged or debonded from the sound concrete.

5. Removal shall begin near the center of the loose or delaminated concrete and shall progress outwardly until the loose or delaminated concrete is removed and sound concrete is encountered such that the amount of concrete removal is minimized.

6. The edges of the resulting areas of removed concrete shall be nearly vertical or slightly tapered inward from the top down to a minimum depth of one inch. If this condition is not able to be achieved with jackhammers or chipping hammers, saw cutting the edges of the removal area may be required to attain satisfactory results.

7. Care shall be taken during concrete removal to not nick, gouge, or in any other way damage the in-place reinforcing steel. Any inadvertent damage to the in-place reinforcing steel shall be brought to the attention of the Bridge Construction Engineer and shall be repaired by the Contractor as directed by the Engineer at no additional cost to the Department.

8. Concrete Removal, Class A will be measured to the nearest 0.1 foot and the area computed to the nearest 0.1 square yard. Concrete Removal, Class A will be paid for at the contract unit price per square yard. Payment will be full compensation for all labor, equipment, materials, and all incidental work required to remove the specified concrete, concrete sawing, and disposing of removed material.

9. Concrete Removal, Class B will be measured to the nearest 0.1 foot and the area computed to the nearest 0.1 square yard. Concrete Removal, Class B will be paid for at the contract unit price per square yard. Payment will be full compensation for all labor, equipment, materials, and all incidental work required to remove the specified concrete, concrete sawing, and disposing of removed material.

CONCRETE PATCHING MATERIAL

1. Concrete patching material shall be used to repair the deck areas where loose and delaminated concrete was removed.

2. Concrete patching material shall be packaged, dry, rapid-hardening cementitious mortar or concrete materials conforming to the requirements of ASTM C 928, Type R-3 and shall contain no chlorides, magnesium or phosphates.

3. Water used for the concrete patching material shall be in conformance with Section 790 of the Construction Specifications.

4. Upon completion of the concrete removal and immediately prior to placing any concrete patching material into the concrete removal areas, the removal areas shall be thoroughly cleaned of loose and foreign material by abrasive blasting. The surface profile of the area to receive the patching material shall be in accordance with the manufacturer's recommendations. The abrasive blasting shall be to the extent that all surface laitance is removed. Abrasive blast cleaning shall expose the coarse aggregate and remove rust from any exposed reinforcing steel. After abrasive blasting, the surface shall be cleaned by the use of compressed air to the satisfaction of the Engineer. The air compressor used for cleaning shall be equipped with trap devices capable of providing moisture-free and oil-free air at a recommended pressure of 90 psi.

NOTES (CONTINUED)

FOR

254' - 0" CONT. COMP. GIRDER BRIDGE

STR. NO. 52-540-275

MARCH 2014

DESIGNED BY	CK. DES. BY	DRAFTED BY	
KH	TK	KH	Kevin N. Goeden
PENN0223	0223HF06		BRIDGE ENGINEER

CONCRETE PATCHING MATERIAL (CONTINUED)

5. The existing surface at the time of placement of the concrete patching material shall be at least 40° F (4° C), measured by a thermometer placed against the concrete surface and covered with an insulating blanket. The concrete patching material shall be mixed and placed in accordance with the manufacturer's technical data sheet. The Contractor shall provide a manufacturer's technical data sheet to the Engineer prior to performing the work. The concrete patching material shall be maintained at or above 45° F (7° C) for at least 72 hours after placement.

6. Immediately after finishing the concrete patching material, the surface of the concrete patching material shall be covered with a double layer of wet burlap. Within one hour of covering with wet burlap, polyethylene sheeting shall be placed on the wet burlap. The surface shall be wet cured for a minimum of 48 hours or in accordance with the manufacturer's recommendations, whichever is more stringent. Following the wet cure, the burlap and polyethylene sheeting shall be removed and the surface allowed to air dry for a minimum of 48 hours after removal of the burlap and polyethylene sheeting before application of the epoxy chip seal is permitted.

7. Concrete Patching Material will be measured to nearest 0.1 cubic feet as determined from the theoretical yield per bag of Concrete Patching Material. Concrete Patching Material will be paid for at the contract unit price per cubic foot. Payment will be full compensation for all labor, equipment, materials, and all incidental work required to abrasive blast clean the removal areas, and furnish, place and cure the concrete patching material within the removal areas.

DESIGN MIX OF CONCRETE

1. The Type of cement, concrete strength requirements, aggregate requirements, slump and air requirements for the contract items Class A45 Concrete Bridge Repair, Breakout and Replace Grout Pad and Replace Expansion Device shall conform to the requirements of Section 460 of the Construction Specification.

TWO COAT EPOXY BRIDGE DECK CHIP SEAL

The Epoxy Chip Seal shall be applied in accordance with the Special Provision for "Two Coat Epoxy Bridge Deck Chip Seal".

PAINT RESIDUE REMOVAL AND CONTAINMENT

1. Paint removal on the existing bridge shall be in accordance with Section 412 of the Construction Specification except as modified by these notes.

2. The Contractor shall plan his operations to prevent releases of lead-containing material and other particulate matter into the surrounding air, water, and onto the ground, soil, slope protection, and pavement. The Contractor shall be responsible for any corrective actions should a spill occur.

3. Collect all visible paint particles and blasting residue containing paint at the end of each workday from the work area. Inspect outside the containment and collect any paint particles or blasting residue that escaped the work area. Collect waste material by manual means, vacuum, or another method approved by the Engineer. Do not use air pressure or streaming water to assist in the waste collection process that could disperse the waste material.

4. In the event of a spill or inadvertent release, the Contractor shall immediately stop work, notify the Engineer, and report the release to the South Dakota Department of Environmental and Natural Resources (DENR). The Contractor shall be responsible for completing a spill reporting form and for all costs associated with appropriate corrective actions.

5. The Contractor shall haul and unload the 55 gallon containment drums with paint residue, blasting media, etc. to the SDDOT Maintenance Yard located in Rapid City for temporary storage. All costs associated with this work shall be included in the contract lump sum price for "Paint Residue Containment".

6. If the Contractor elects to use containers other than 55 gallon barrels to hold paint residue, the Contractor shall be responsible for all testing and disposal at a permitted regional landfill. The Contractor shall be responsible for compliance of laws and regulations regarding storage, handling and shipping. Copies of all tests shipping and disposal documents shall be provided to the Office of Bridge Design.

BRIDGE REPAINTING, CLASS I

1. The work affected area described below shall be painted in accordance with Section 412 of the Standard Specifications and in accordance with SSPC Standard PA1.

2. For informational purposes, 30 square feet of structural steel will require painting. The quantity shown includes the following:

   The steel surfaces to be painted are the flanges, webs and bearings in the work affected areas for the girder end modification and weld removal and replacement. The quantity shown is for an area four inches on all sides of the work affected areas.

3. Paint color

   Top Coat – The paint color shall be an approved green color. Prior to ordering the paint, a paint chip of the green color shall be submitted to the Department for color approval.

   Primer Coat – Color shall sharply contrast with the top coat.

BRIDGE BERM REPAIR

1. The bridge berm at Abutment No. 5 has experienced settlement and/or has erosion channels on the berm slope. The bridge berm shall be rebuilt and reshaped to its' original template.

2. Reconstruct the berms to at least one foot above the bottom of the abutment backwall seat and fill in erosion channels on the berm slope. The berm slope will be benched into stable embankment during reshaping and reconstruction. The soil shall be placed in horizontal lifts perpendicular to the centerline of the structure. Shape the fill in front of the wing walls to divert runoff from the inslopes away from the face of the berm slope. Compaction of the reconstructed embankment will be governed by the Ordinary Compaction Method.

3. At the upper part of the berm slope clearance between the structure and berm will prohibit the use of compaction equipment. The soil in this area will be placed by a method approved by and compacted to the satisfaction of the Engineer.

4. Soil used to reconstruct the berm slope shall be furnished by the Contractor. The soil will have a maximum of 70% passing the #4 sieve, have a maximum Liquid Limit (LL) of 45 and a Plastic Index (PI) greater than 10 but less than 25. The contractor shall be responsible for one gradation, LL and PI test for each borrow source for berm reconstruction. The results shall be supplied to the Engineer in writing.

5. The cost of the berm reconstruction, reshaping and drainage trough removal shall be incidental to the contract unit price per each for "Bridge Berm Repair" This payment shall be full compensation for furnishing all materials, labor, tools, and equipment necessary or incidental to the reconstruction and reshaping of the bridge berm.

NOTES (CONTINUED)

FOR

254' - 0" CONT. COMP. GIRDER BRIDGE

STR. NO. 52-540-275

MARCH 2014

DESIGNED BY	CK. DES. BY	DRAFTED BY	
KH	TK	KH	Kevin N. Goeden
PENN0223	0223HF07		BRIDGE ENGINEER

CONTROLLED DENSITY FILL

1. Controlled Density Fill shall be placed in the voids under the abutments. The largest area is on the south side of Abutment No. 5.

2. Controlled Density Fill shall be a flowable mortar material. Material and mixing shall be in accordance with the Section 462 of the Specifications, except as modified below. The mix shall be as follows:

Mix Design:

Material	Rate per Cubic Yard
Portland Cement, Type II	100 Lb
Fine Aggregate	2,600 Lb
Coarse Aggregate	None
Water	60 Gal
Fly Ash, Type C	300 Lb

Alternative Mix Design with Controlled Low Strength Material (CLSM):

Material	Rate per Cubic Yard	
Portland Cement, Type II	200 Lb	
Fine Aggregate	2,600 Lb	
Coarse Aggregate	None	
Water	35 Gal	
W.R. Grace - Darafill (or approved equal)	1 (3 oz.)* capsule	(or equivalent)

*One 3oz. Darafill capsule or equivalent CLSM performance additive (foaming admixture).

3. The fine aggregate shall be natural sand consisting of mineral aggregate particles conforming to the following gradation requirements:

Passing a 3/8 Inch Sieve	100%
Passing a No. 200 Sieve	0-10%

4. Either mix shown above is designed to produce a minimum compressive strength of 100 psi. The Engineer may allow adjustments to the proportion of water at the site to provide the necessary consistency of the mix.

5. Controlled Density Fill shall be contained within the required limits with sandbags or other methods approved by the Engineer.

6. Cost for furnishing and installing the Controlled Density Fill, including sandbags, labor, material, equipment and incidentals necessary to complete the work shall be included in the contract unit price per cubic yard for "Controlled Density Fill".

7. The quantity included in the plans is only an estimate. Actual field conditions may vary.

8. Do not place Controlled Density Fill during inclement weather, e.g. rain, when the subgrade is frozen, or when the subgrade contains an abnormal amount of moisture from recent rainfall as evidenced by standing water on the pavement or in joints or cracks. Do not place Controlled Density Fill when ambient air temperature of 40°F or less is anticipated in the 24 hour period following proposed placement. Produce and deliver the flowable fill at a minimum temperature of 50° F. Protect flowable fill from freezing for a period of 36 hours after placement.

NOTES (CONTINUED)

FOR

254' - 0" CONT. COMP. GIRDER BRIDGE

STR. NO. 52-540-275

MARCH 2014

DESIGNED BY	CK. DES. BY	DRAFTED BY	
KH	TK	KH	Kevin N. Goeden
PENN0223	0223HF08		BRIDGE ENGINEER

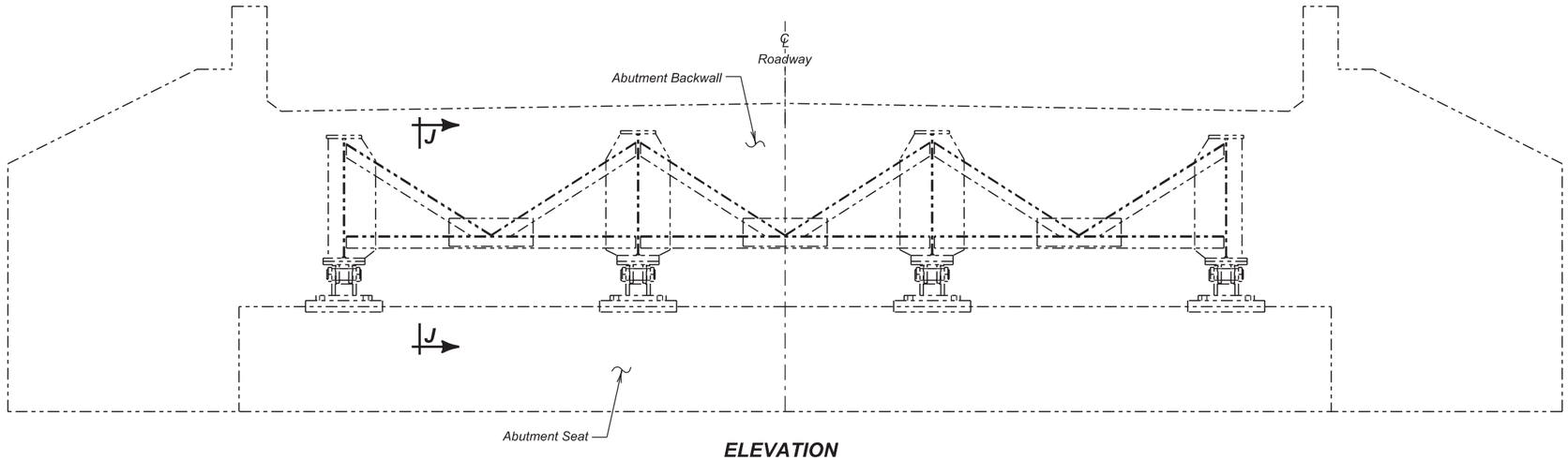

ELEVATION

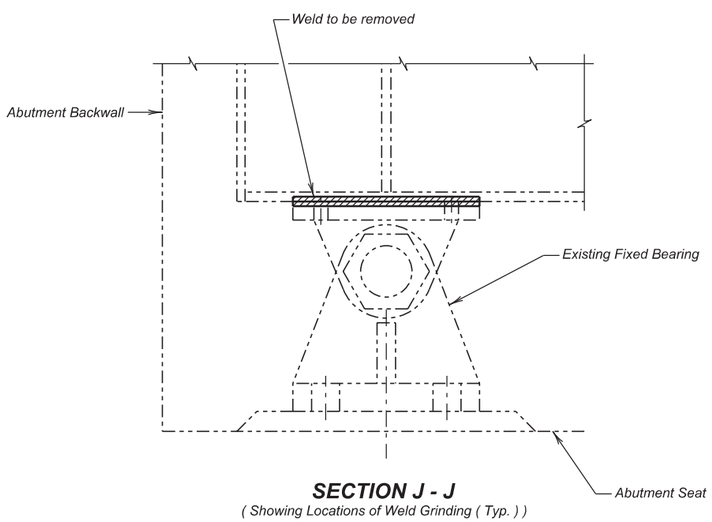

SECTION J - J
(Showing Locations of Weld Grinding (Typ.))

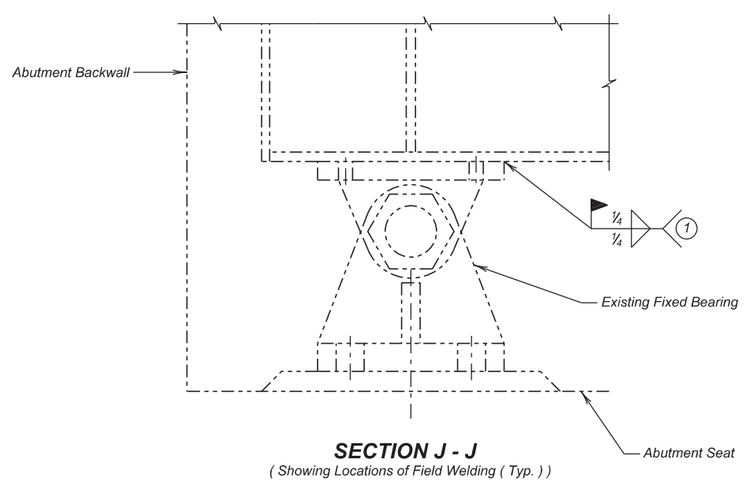

SECTION J - J
(Showing Locations of Field Welding (Typ.))

1 *All fillet welds attaching flange to bearing shall terminate ½" from edge to flange.*

ESTIMATED QUANTITIES

ITEM	UNIT	QUANTITY
Grind Weld	In	60
Field Weld	In	72

ABUTMENT NO. 1 BEARING WELD REPLACEMENT

FOR

254' - 0" CONT. COMPOSITE GIRDER BRIDGE

24' - 0" ROADWAY — 0° SKEW
OVER I90 — SEC. 34-T7N-R2E
STR. NO. 52-540-275 — IM 0901(163)9

PENNINGTON COUNTY

S. D. DEPT. OF TRANSPORTATION

MARCH 2014

DESIGNED BY	CK. DES. BY	DRAFTED BY	
KH	TK	KR	Kevin N. Goeden BRIDGE ENGINEER
PENN0223	0223RF09		

STATE OF	PROJECT	SHEET NO.	TOTAL SHEETS
S.D.	IM 0901(163)9	E72	E102

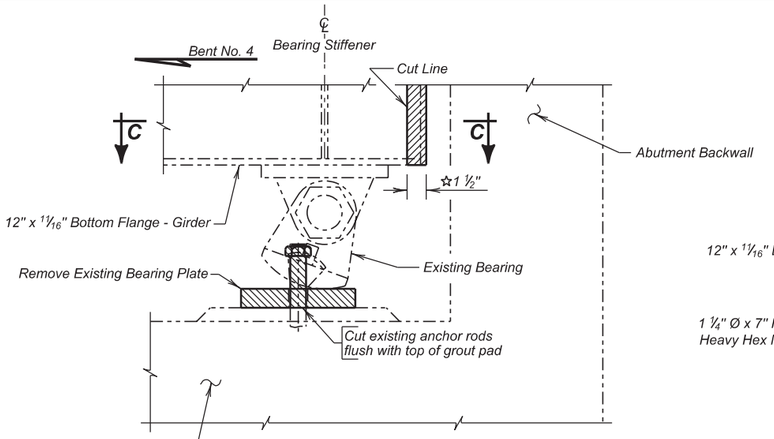

EXISTING ROCKER POSITION

☆ Cut 1½" for full depth of girder

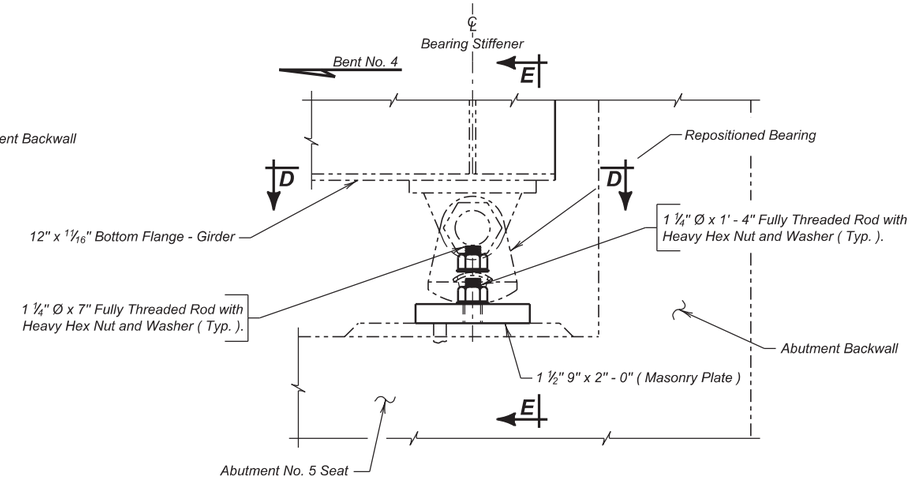

✳NEW ROCKER POSITION

(Shown at 45° Installation Temperature)

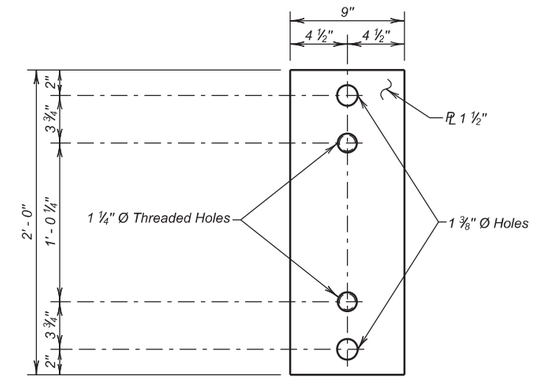

MASONRY PLATE DETAIL

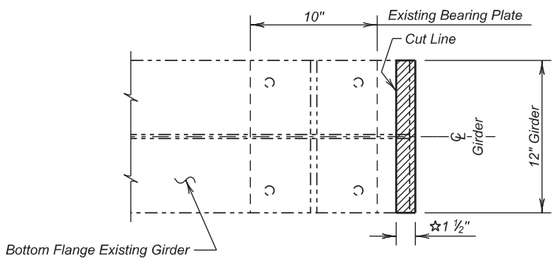

SECTION C - C

✳ Bearing will be repositioned to vertical only at a 45° installation temperature. The bearings will be adjusted from vertical for all other temperatures, see temperature adjustment table and Detail "W"

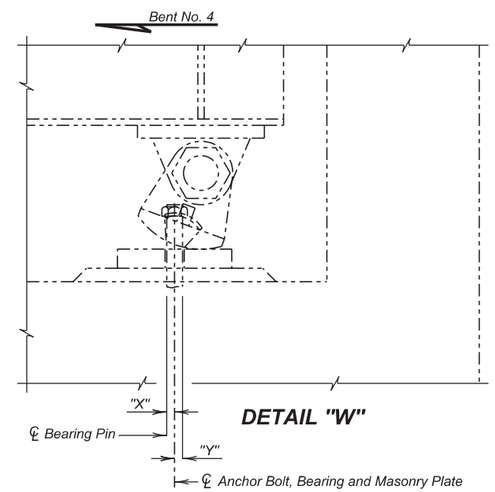

DETAIL "W"

△TEMPERATURE - DIMENSION TABLE		
⌀ Temp.	Dimension "X"	Dimension "Y"
35°	-	3/16"
45°	0"	0"
55°	3/16"	-
65°	⅜"	-
75°	9/16"	-
85°	¾"	-
95°	15/16"	-

⌀ Average Steel Girder temperatures

△ Reset bearings to vertical position, then adjust position based on average girder temperature.

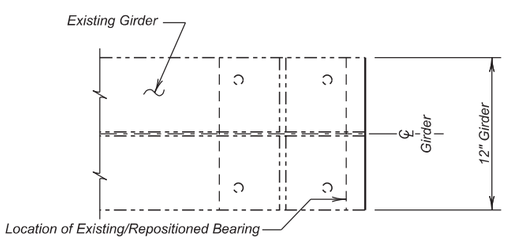

SECTION D - D

ESTIMATED QUANTITIES		
ITEM	UNIT	QUANTITY
Jack Superstructure and Shift Bearing Shoes	LS	Lump Sum
Modify Girder End	Each	1
⊕ Structural Steel, Miscellaneous	LS	Lump Sum
Install Dowel in Concrete	Each	2

⊕ For informational purposes only, the quantity of Structural Steel is 89 lbs.

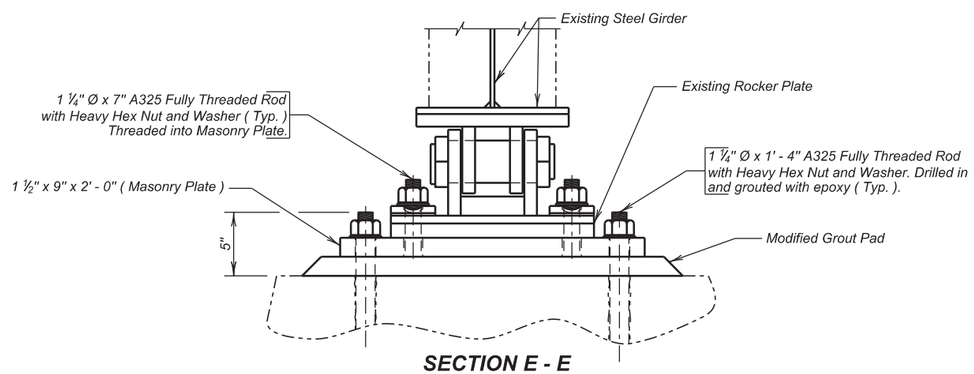

SECTION E - E

RESET BEARING AT GIRDER NO. 1
AT ABUTMENT NO. 5

FOR

254' - 0" CONT. COMPOSITE GIRDER BRIDGE

24' - 0" ROADWAY — 0° SKEW
OVER I90 — SEC. 34-T7N-R2E
STR. NO. 52-540-275 — IM 0901(163)9

PENNINGTON COUNTY
S. D. DEPT. OF TRANSPORTATION
MARCH 2014

DESIGNED BY	CK. DES. BY	DRAFTED BY	
KH	TK	KR	Kevin N. Goeden BRIDGE ENGINEER
PENN0223	0223RF10		

STATE OF	PROJECT	SHEET NO.	TOTAL SHEETS
S.D.	IM 0901(163)9	E73	E102

Portion of existing grout pad to be removed.
Increase existing grout pad recess width by this amount.

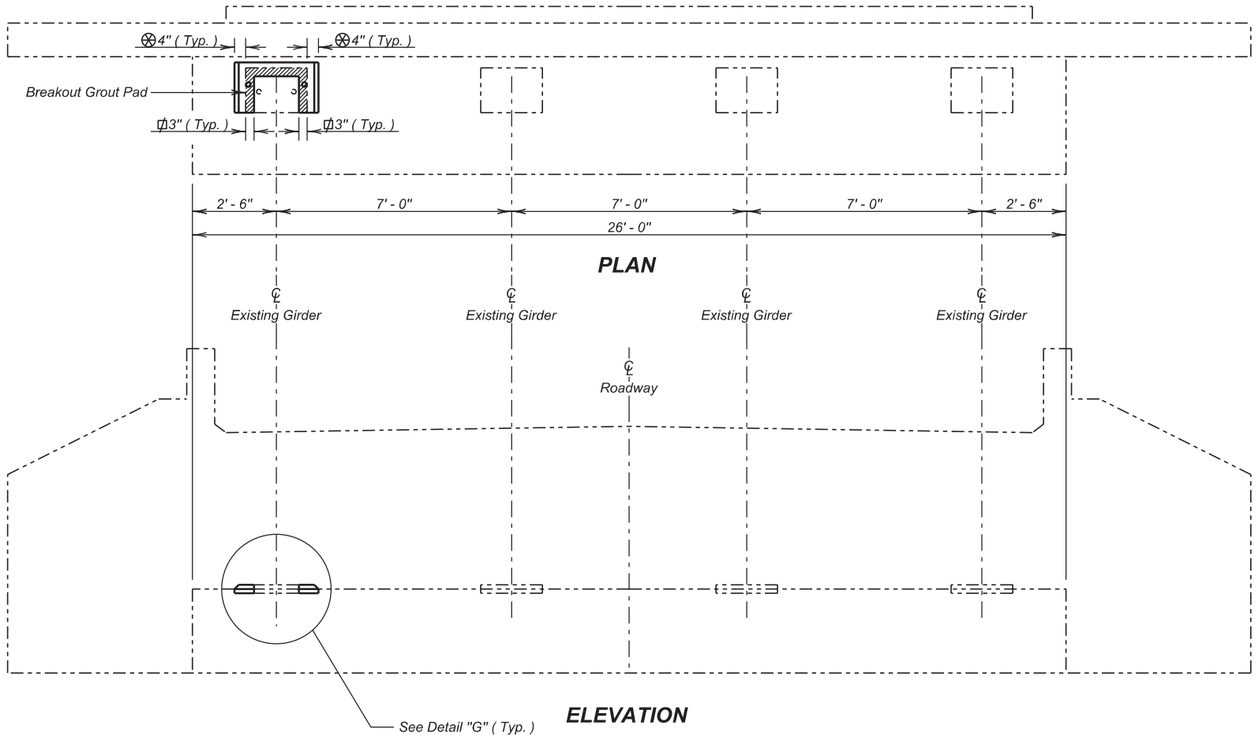

Shaded areas indicate limits of existing grout pad breakout for replacement. See notes on Sheet No. 4 of 22.

NOTE:
The partial grout pad replacement at Abut. No. 5 shall be placed to the same elevation as the existing grout pad.

ESTIMATED QUANTITIES

ITEM	UNIT	QUANTITY
Breakout and Replace Grout Pad	Each	1

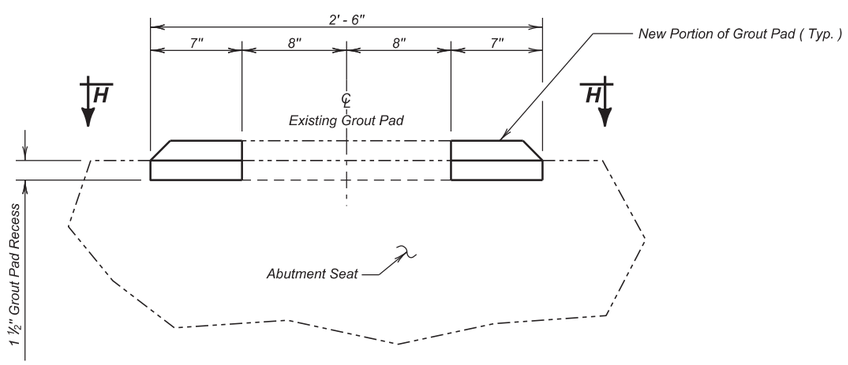

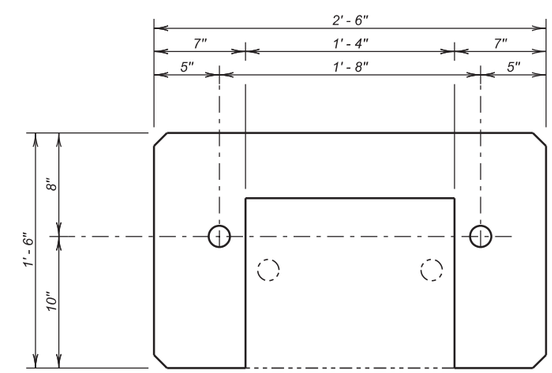

MODIFY GROUT PAD AT GIRDER NO. 1 AT ABUTMENT NO. 5
FOR
254' - 0" CONT. COMPOSITE GIRDER BRIDGE

24' - 0" ROADWAY — 0° SKEW
OVER I90 — SEC. 34-T7N-R2E
STR. NO. 52-540-275 — IM 0901(163)9

PENNINGTON COUNTY
S. D. DEPT. OF TRANSPORTATION
MARCH 2014

DESIGNED BY	CK. DES. BY	DRAFTED BY	
KH	TK	KR	Kevin N. Goeden
PENN0223	0223RF11		BRIDGE ENGINEER

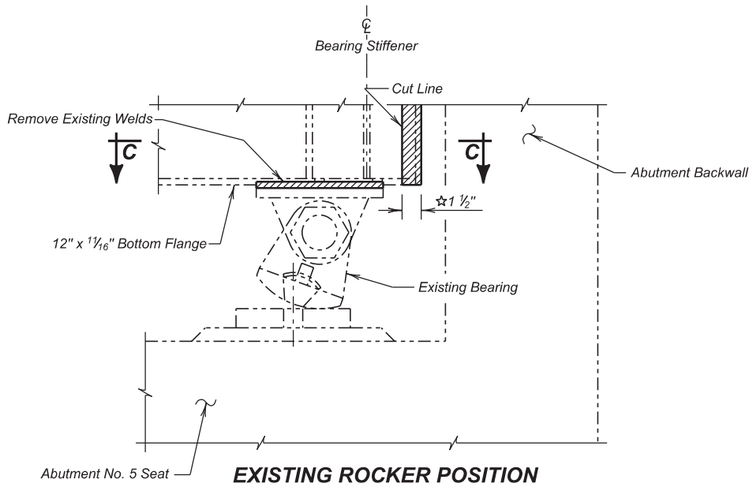

EXISTING ROCKER POSITION

☆ Cut 1½" for full depth of girder

(Rocker has been shifted once before.)

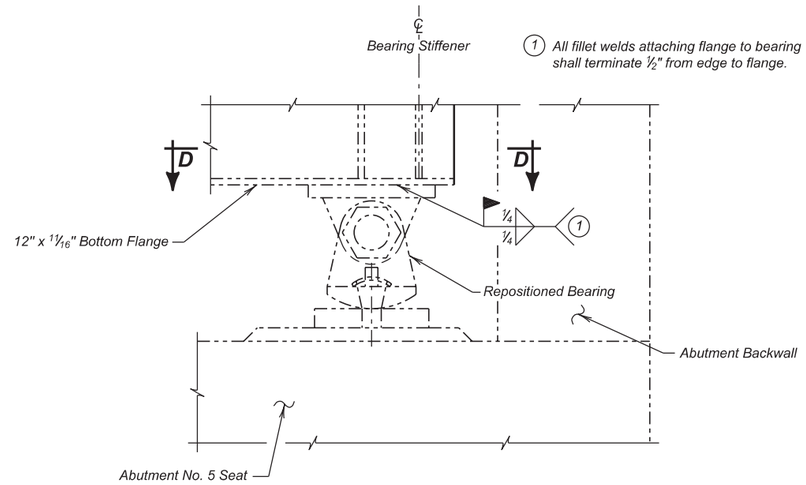

*** NEW ROCKER POSITION**

(Shown at 45° Installation Temperature)

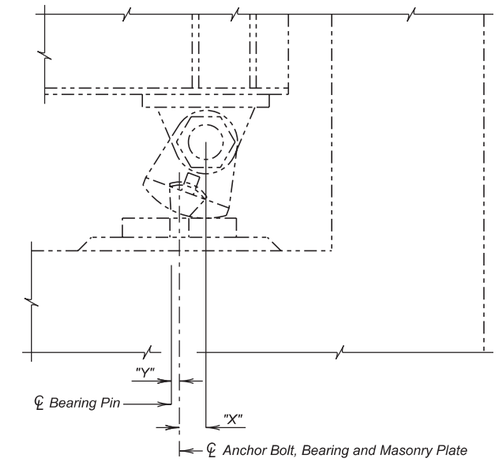

DETAIL "W"

✳ Bearing will be repositioned to vertical only at a 45° installation temperature. The bearings will be adjusted from vertical for all other temperatures, see temperature adjustment table and Detail "W"

△ **TEMPERATURE - DIMENSION TABLE**

⌀ Temp.	Dimension "X"	Dimension "Y"
35°	-	3/16"
45°	0"	0"
55°	3/16"	-
65°	7/8"	-
75°	9/16"	-
85°	3/4"	-
95°	15/16"	-

⌀ Average Steel Girder temperatures

△ Reset bearings to vertical position, then adjust position based on average girder temperature.

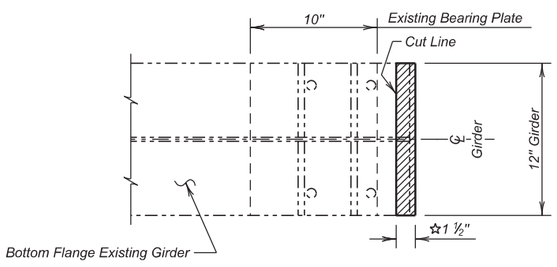

SECTION C - C

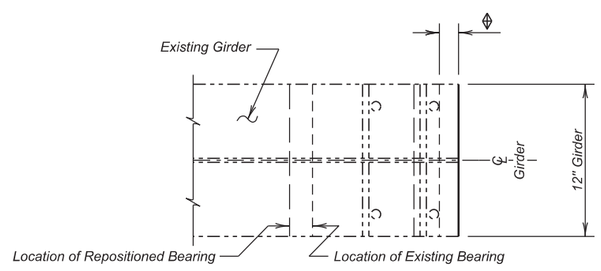

SECTION D - D

⌀ Dimension based on temperature. See temperature adjustment table and Detail "W"

ESTIMATED QUANTITIES

ITEM	UNIT	QUANTITY
Jack Superstructure and Shift Bearing Shoes	LS	Lump Sum
Modify Girder End	Each	3

RESET BEARINGS AT GIRDER NOS. 2, 3 & 4
AT ABUTMENT NO. 5

FOR

254' - 0" CONT. COMPOSITE GIRDER BRIDGE

24' - 0" ROADWAY — 0° SKEW
OVER I90 — SEC. 34-T7N-R2E
STR. NO. 52-540-275 — IM 0901(163)9

PENNINGTON COUNTY

S. D. DEPT. OF TRANSPORTATION

MARCH 2014

DESIGNED BY	CK. DES. BY	DRAFTED BY	
KH	TK	KR	Kevin N. Goeden
PENN0223	0223RF12		BRIDGE ENGINEER

STATE OF	PROJECT	SHEET NO.	TOTAL SHEETS
S.D.	IM 0901(163)9	E75	E102

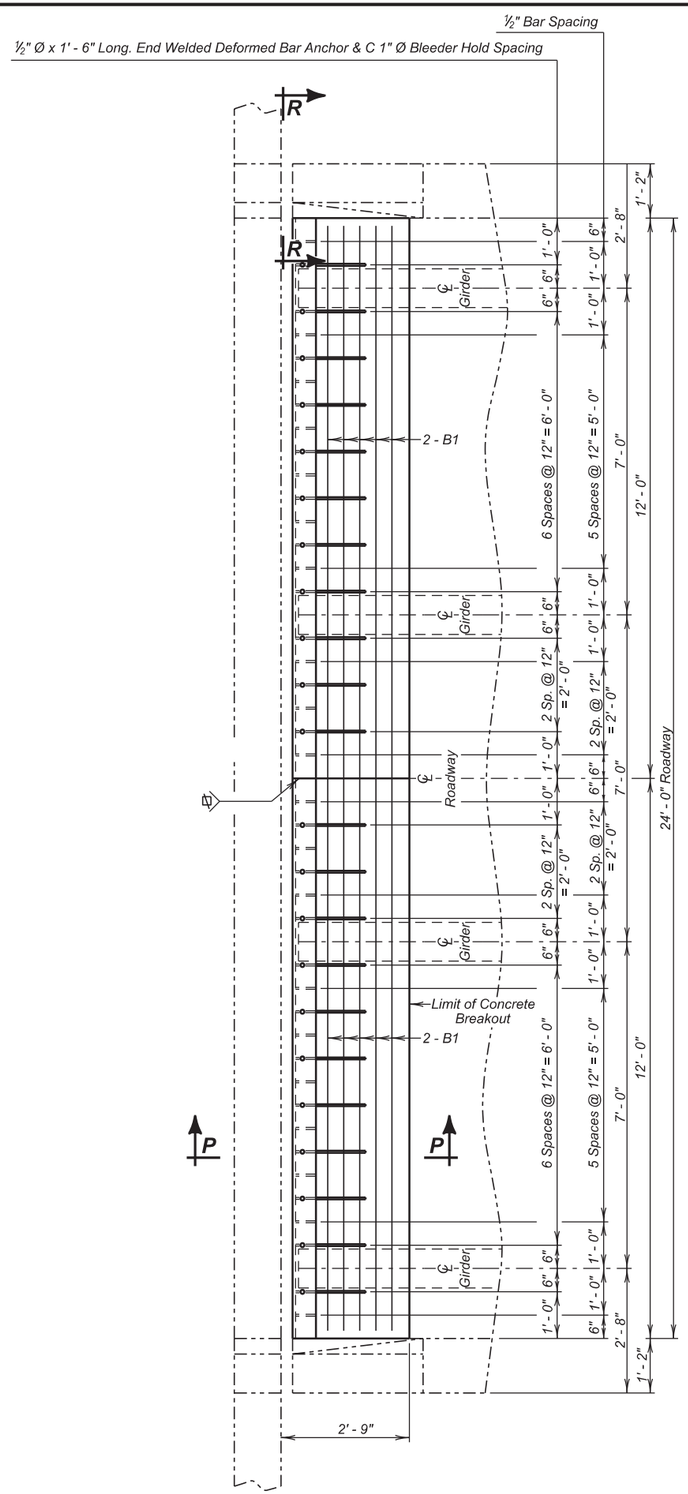

PLAN

(Salvaged longitudinal resteel not shown for clarity.)

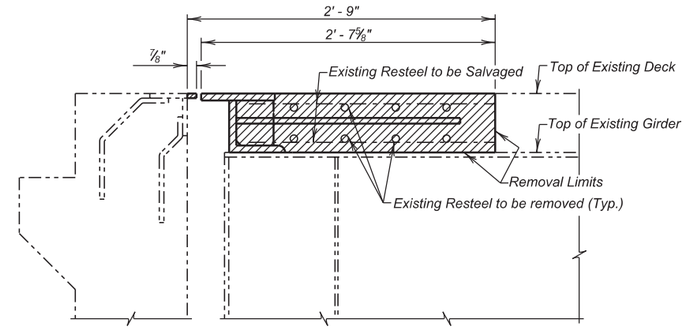

SECTION P - P

(Existing Section showing Removal Limits.)

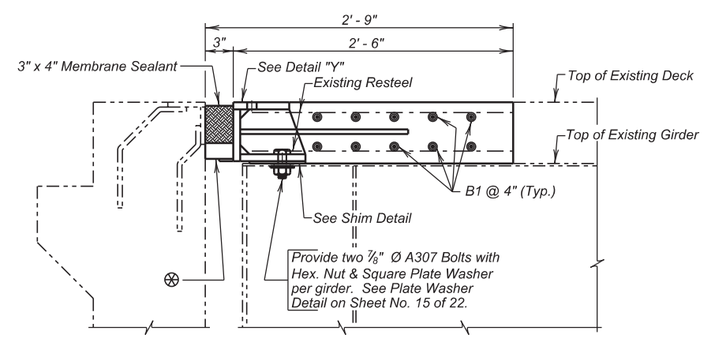

SECTION P - P

(New Construction Shown)

⊗ Styrofoam filler (or approved filler material). Place with membrane sealant.

REINFORCING SCHEDULE

(For Both Phases)

Mk.	No.	Size	Length	Type	Bending Details
B1	10	5	23' - 8"	Str.	

NOTES:
All dimensions are out to out of bars.
All Reinforcing Steel is to be epoxy coated.

ESTIMATED QUANTITIES

ITEM	UNIT	QUANTITY
Replace Expansion Device	Each	1

Items 1 thru 6 are approximate quantities contained in the above bid item and are for information only.

	PHASE I	PHASE 2
1. Class A45 Concrete.	0.6 Cu. Yd.	0.6 Cu. Yd.
2. Structural Steel.	619 Lb.	619 Lb.
3. Breakout Structural Concrete.	0.6 Cu. Yd.	0.5 Cu. Yd.
4. Epoxy Coated Reinforcing Steel.	123 Lb.	123 Lb.
5. Membrane Sealant Expansion Joint.	13.2 Ft.	13.2 Ft.

NOTE :
This sheet is to be used in conjunction with Sheet 15 of 22.

Complete Joint Penetration Butt Splice at construction joint to be shown on shop plans for approval.

ABUTMENT NO. 1 JOINT REPLACEMENT

FOR

254' - 0" CONT. COMPOSITE GIRDER BRIDGE

24' - 0" ROADWAY — 0° SKEW
OVER I90 — SEC. 34-T7N-R2E
STR. NO. 52-540-275 — IM 0901(163)9

PENNINGTON COUNTY
S. D. DEPT. OF TRANSPORTATION
MARCH 2014

DESIGNED BY	CK. DES. BY	DRAFTED BY	
KH	TK	KH	Kevin N. Goeden
PENN0223	0223RF13		BRIDGE ENGINEER

STATE OF	PROJECT	SHEET NO.	TOTAL SHEETS
S.D.	IM 0901(163)9	E76	E102

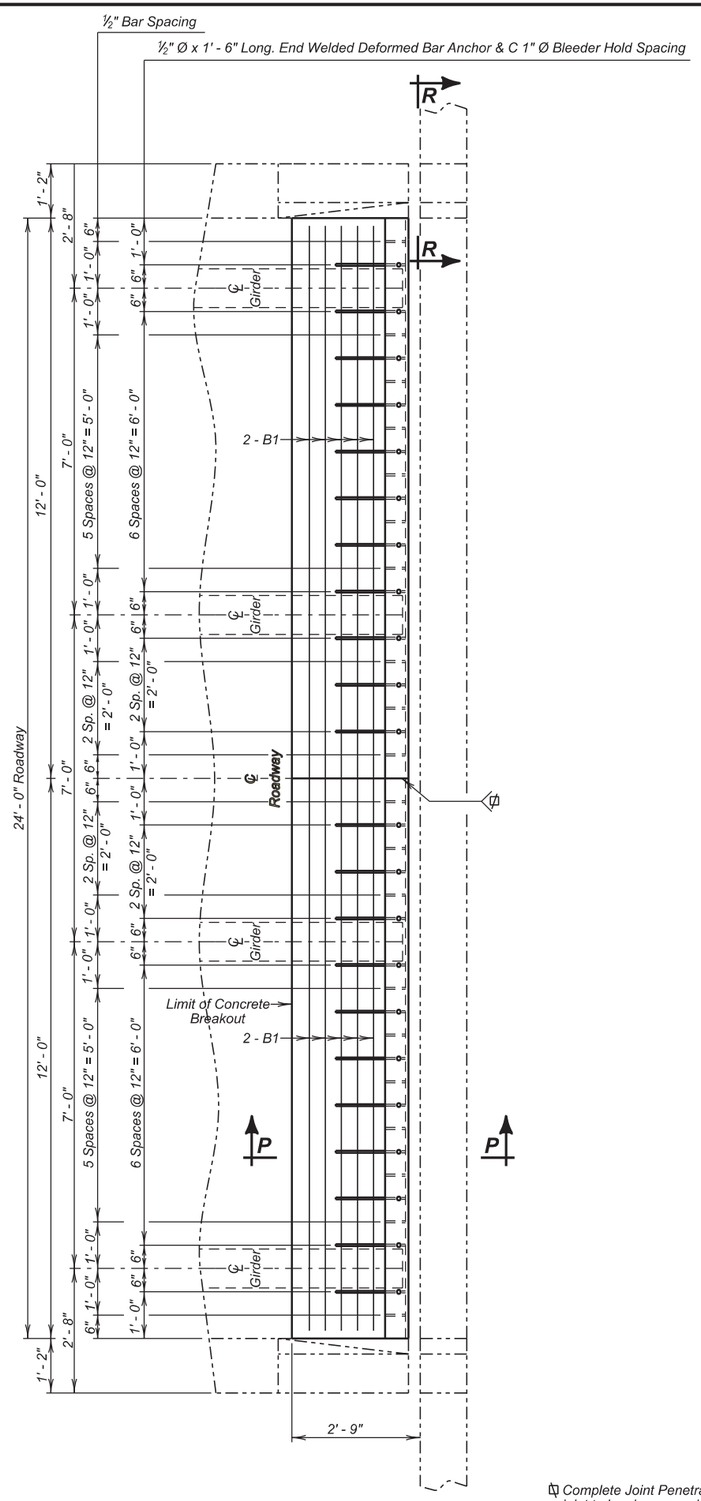

PLAN

(Salvaged longitudinal resteel not shown for clarity.)

Complete Joint Penetration Butt Splice at construction joint to be shown on shop plans for approval.

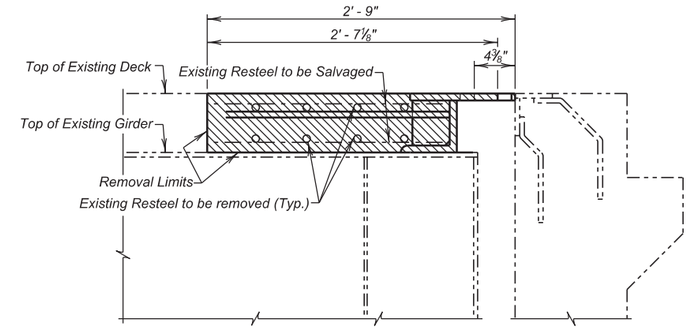

SECTION P - P

(Existing Section showing Removal Limits.)

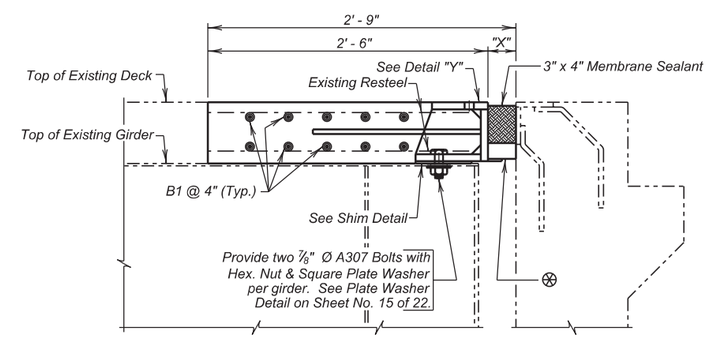

SECTION P - P

(New Construction Shown)

⊛ Styrofoam filler (or approved filler material). Place with membrane sealant.

REINFORCING SCHEDULE

(For Both Phases)

Mk.	No.	Size	Length	Type	Bending Details
B1	10	5	23' - 8"	Str.	

NOTES:
All dimensions are out to out of bars.
All Reinforcing Steel is to be epoxy coated.

ESTIMATED QUANTITIES

ITEM	UNIT	QUANTITY
Replace Expansion Device	Each	1

Items 1 thru 6 are approximate quantities contained in the above bid item and are for information only.

	PHASE I	PHASE 2
1. Class A45 Concrete.	0.6 Cu. Yd.	0.6 Cu. Yd.
2. Structural Steel.	619 Lb.	619 Lb.
3. Breakout Structural Concrete.	0.6 Cu. Yd.	0.5 Cu. Yd.
4. Epoxy Coated Reinforcing Steel.	123 Lb.	123 Lb.
5. Membrane Sealant Expansion Joint.	13.2 Ft.	13.2 Ft.

TEMPERATURE - DIMENSION TABLE

Temp.	Dimension "X"
30°	3 5/16"
40°	3⅛"
50°	2 15/16"
60°	2¾"
70°	2 9/16"
80°	2 5/16"
90°	2 1/16"
100°	1 15/16"

NOTE :
This sheet is to be used in conjunction with Sheet 15 of 22.

ABUTMENT NO. 5 JOINT REPLACEMENT

FOR

254' - 0" CONT. COMPOSITE GIRDER BRIDGE

24' - 0" ROADWAY — 0° SKEW
OVER I90 — SEC. 34-T7N-R2E
STR. NO. 52-540-275 — IM 0901(163)9

LAWERENCE COUNTY
S. D. DEPT. OF TRANSPORTATION
MARCH 2014

DESIGNED BY	CK. DES. BY	DRAFTED BY	
KH	TK	KH	Kevin N. Goeden
PENN0223	0223RF14		BRIDGE ENGINEER

STATE OF	PROJECT	SHEET NO.	TOTAL SHEETS
S.D.	IM 0901(163)9	E77	E102

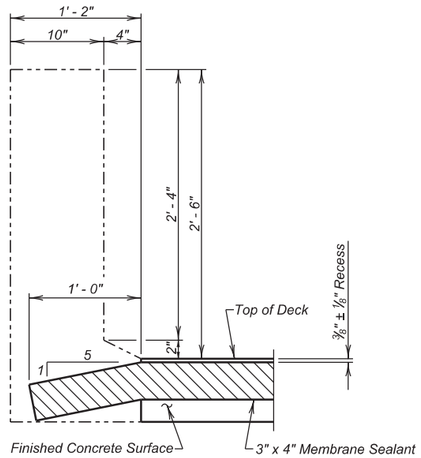

SECTION R - R

(Membrane Sealant Shown)
(Fabricated device shown in Detail "Y" stops at curbline)

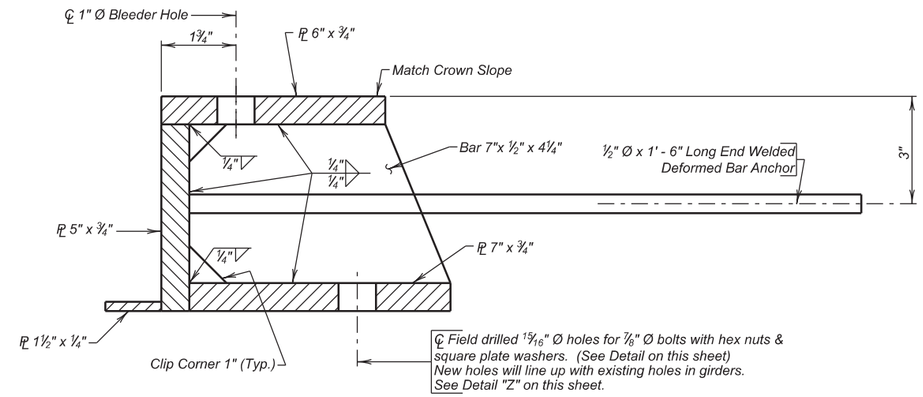

DETAIL "Y"

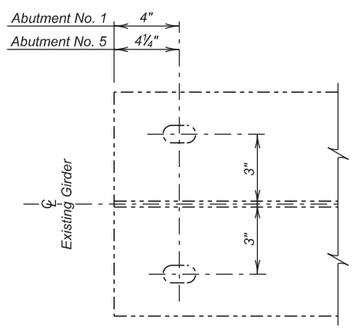

DETAIL " Z "

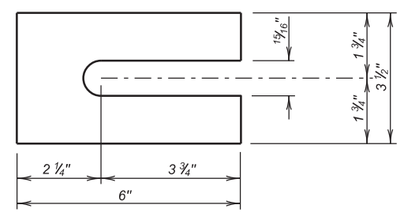

SHIM DETAIL

Provide: 1/2" = 8
1/4" = 8
1/8" = 16
1/16" = 32

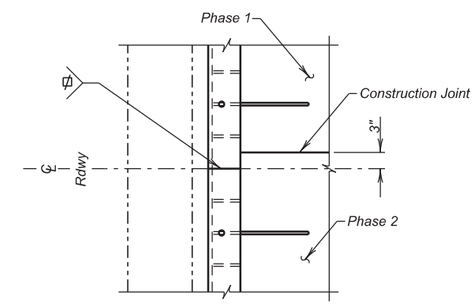

BLOCK OUT DETAIL

(Abutment No. 1 shown, Abutment No. 5 similar by detail.)

Complete Joint Penetration Butt Splice at construction joint to be shown on shop plans for approval.

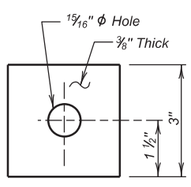

SQUARE PLATE WASHER

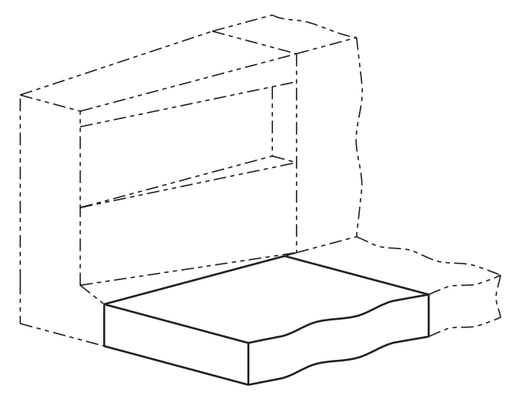

ISOMETRIC VIEW

NOTE :
This sheet is to be used in conjunction with Sheets 13 & 14 of 22.

JOINT REPLACEMENT DETAILS

FOR

254' - 0" CONT. COMPOSITE GIRDER BRIDGE

24' - 0" ROADWAY — 0° SKEW
OVER I90 — SEC. 34-T7N-R2E
STR. NO. 52-540-275 — IM 0901(163)9

LAWERENCE COUNTY
S. D. DEPT. OF TRANSPORTATION
MARCH 2014

DESIGNED BY	CK. DES. BY	DRAFTED BY	
KH	TK	KH	Kevin N. Goeden
PENN0223	0223RF15		BRIDGE ENGINEER

STATE OF	PROJECT	SHEET NO.	TOTAL SHEETS
S.D.	IM 0901(163)9	E78	E102

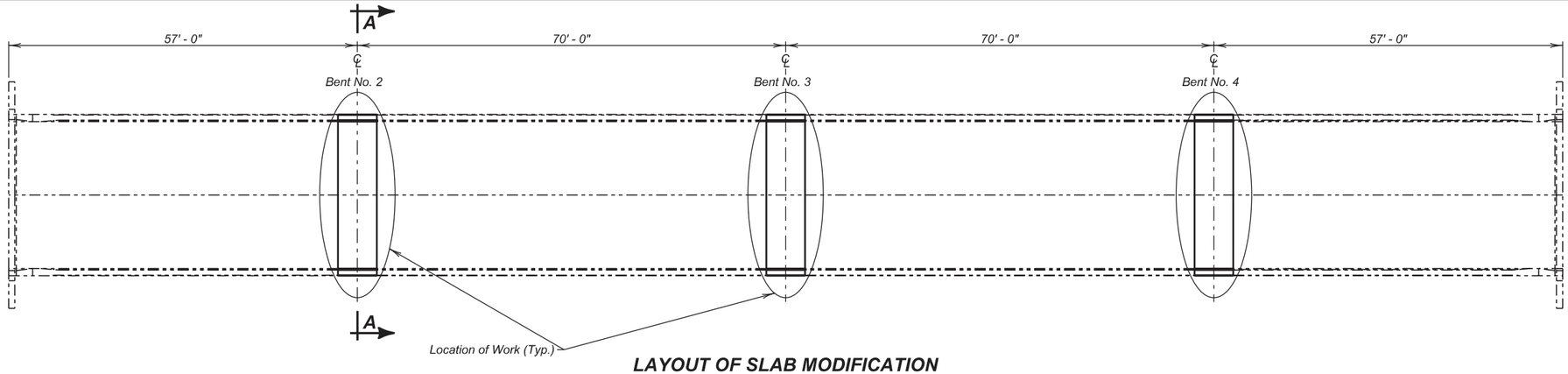

LAYOUT OF SLAB MODIFICATION

REINFORCING SCHEDULE
(For 3 Bents)

	Mk.	No.	Size	Length	Type
Phase 1	A1	12	4	7' - 1"	T2
	⊗B1	57	5	26' - 0"	Str.
	C1	30	4	5' - 0"	T8
	E1	78	4	6' - 0"	Str.
Phase 2	A1	12	4	7' - 1"	T2
	⊗B1	57	5	26' - 0"	Str.
	C1	30	4	5' - 0"	T8
	E1	78	4	6' - 0"	Str.

Bending Details

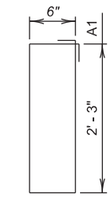

Type T2

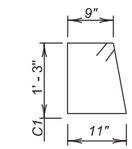

Type T8

NOTES :
All bars are epoxy coated.
All dimensions are out to out of bars.

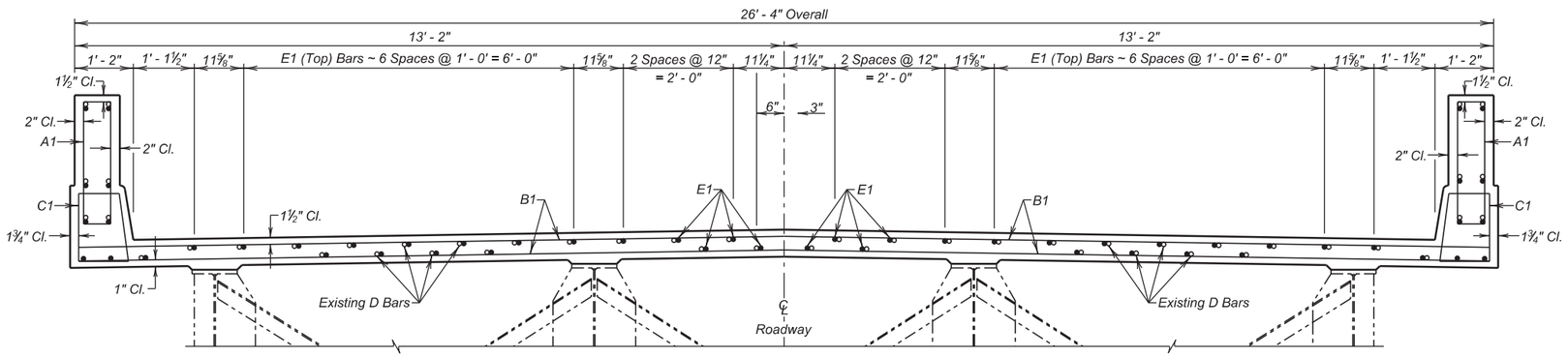

SECTION A - A

ESTIMATED QUANTITIES
(For 3 Bents)

ITEM	UNIT	QUANTITY Phase I	QUANTITY Phase 2
Breakout Structural Concrete	Cu.Yd.	7.1	6.7
Class A45 Concrete, Bridge Repair	Cu.Yd.	6.9	6.9
Epoxy Coating Reinforcing Steel	Lb.	2007	2007

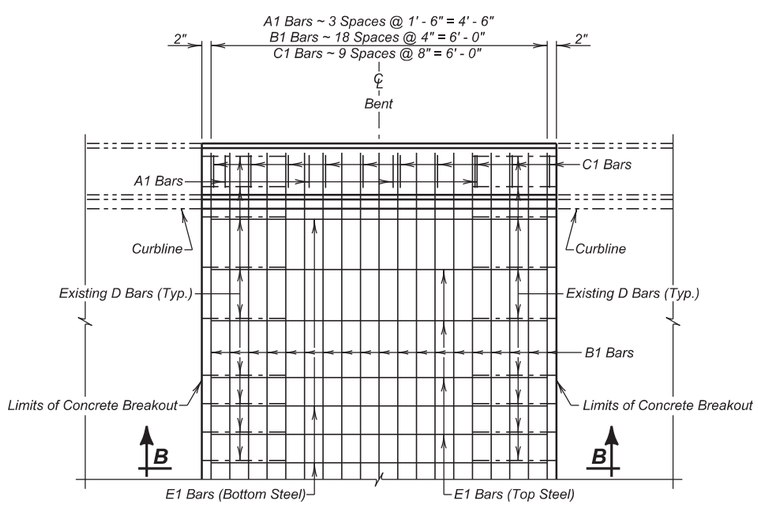

PLAN VIEW OF CURB AT BENTS

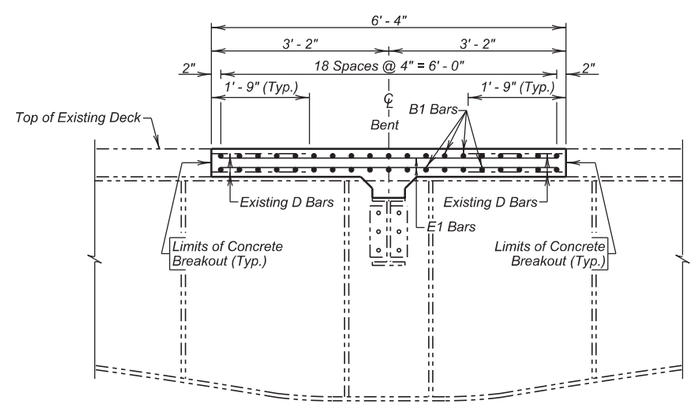

SECTION B - B

SLAB MODIFICATION OVER BENTS

FOR

254' - 0" CONT. COMPOSITE GIRDER BRIDGE

24' - 0" ROADWAY — 0° SKEW
OVER I90 — SEC. 34-T7N-R2E
STR. NO. 52-540-275 — IM 0901(163)9

LAWERENCE COUNTY
S. D. DEPT. OF TRANSPORTATION
MARCH 2014

DESIGNED BY	CK. DES. BY	DRAFTED BY	
KH	TK	KH	Kevin N. Goeden
PENN0223	0223RF16		BRIDGE ENGINEER

STATE OF	PROJECT	SHEET NO.	TOTAL SHEETS
S.D.	IM 0901(163)9	E79	E102

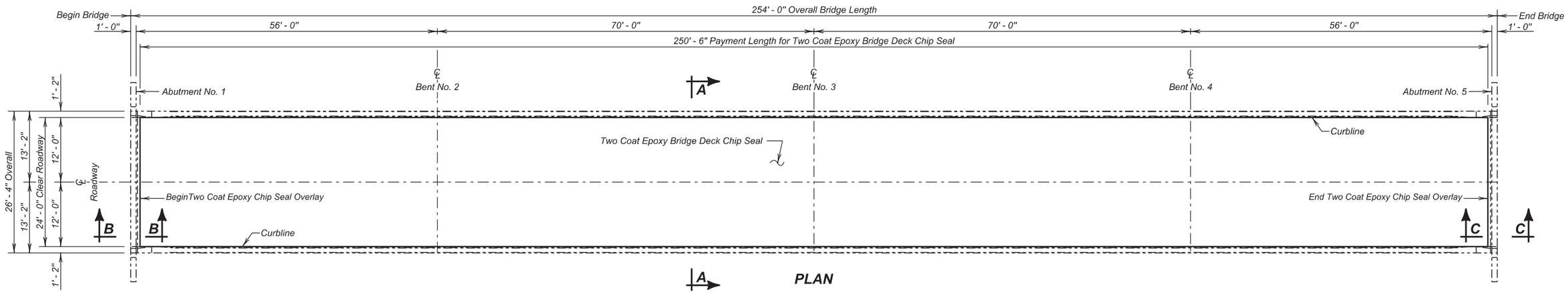

PLAN

NOTE :
✳ Concrete Removal, Class A; Concrete Removal, Class B; and Concrete Patching Material may not be encountered and may be removed from the project at the direction of the Engineer.

ESTIMATED QUANTITIES

	ITEM	UNIT	QUANTITY PHASE 1	QUANTITY PHASE 2
	Two Coat Epoxy Bridge Deck Chip Seal	Sq. Yd.	334.0	334.0
	Abrasive Blasting of Bridge Deck	Sq. Yd.	334.0	334.0
	Bridge Deck Grinding	Sq. Yd.	361.8	306.2
✳	Concrete Patching Material	Cu. Ft.	9.0	9.0
✳	Concrete Removal, Class A	Sq. Yd.	2.0	2.0
✳	Concrete Removal, Class B	Sq. Yd.	2.0	2.0
	Remove Rubberized Asphalt Chip Seal	Sq. Yd.	361.8	306.2

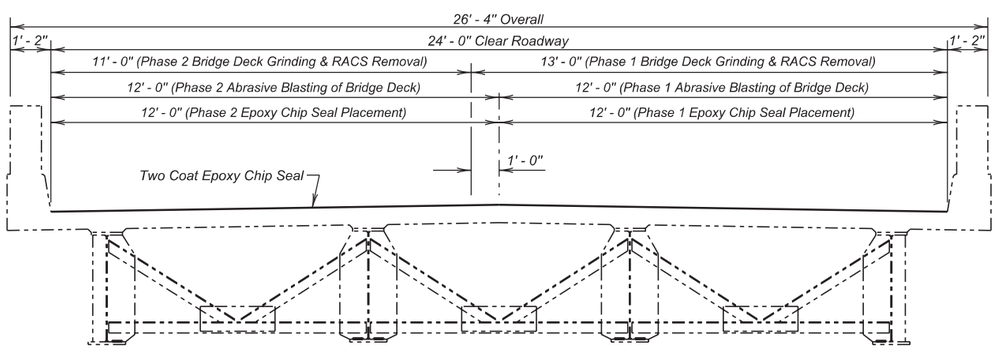

SECTION A - A

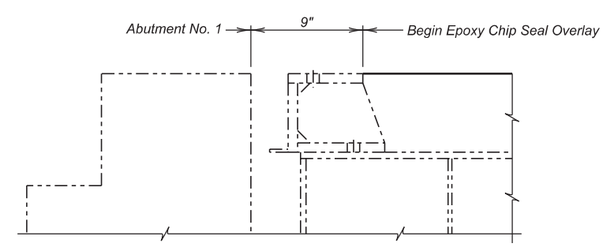

SECTION B - B

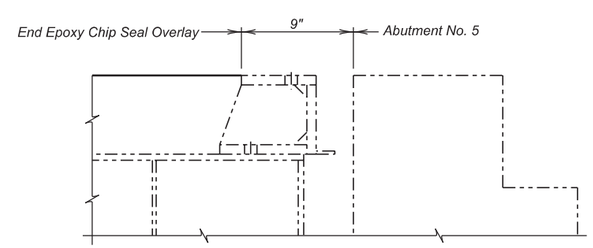

SECTION C - C

TWO COAT EPOXY CHIP SEAL

FOR

254' - 0" CONT. COMPOSITE GIRDER BRIDGE

24' - 0" ROADWAY — 0° SKEW
OVER I90 — SEC. 34-T7N-R2E
STR. NO. 52-540-275 — IM 0901(163)9

PENNINGTON COUNTY
S. D. DEPT. OF TRANSPORTATION
MARCH 2014

DESIGNED BY	CK. DES. BY	DRAFTED BY	
KH	TK	KR	Kevin N. Goeden
PENN0223	0223RF17		BRIDGE ENGINEER

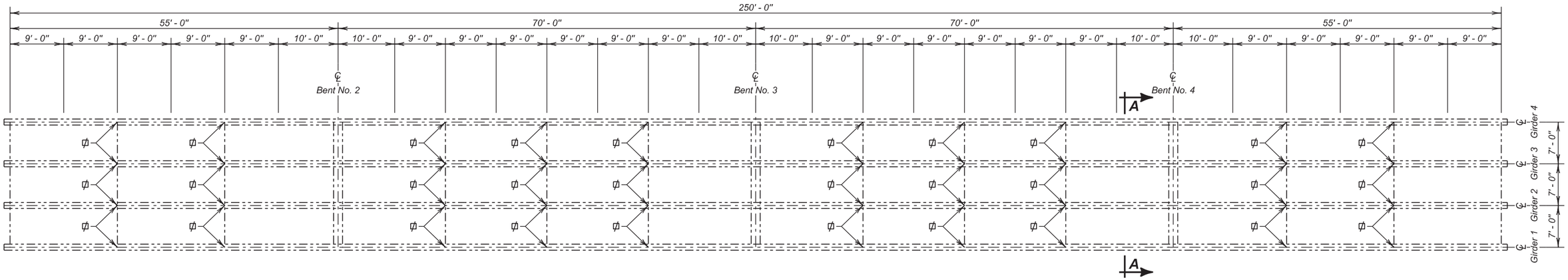

∅ Diaphragm stiffener shall be welded to the bottom flange only.

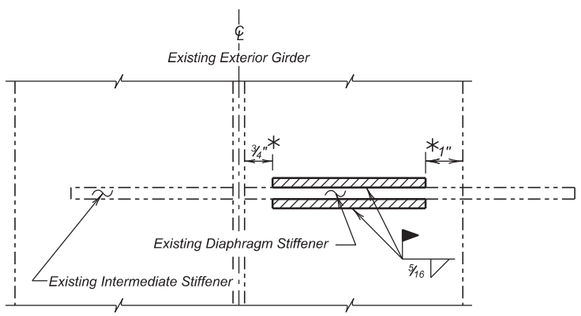

SECTION C - C

(One typical unit of Fatigue Retrofit is shown.)

∗ No Weld

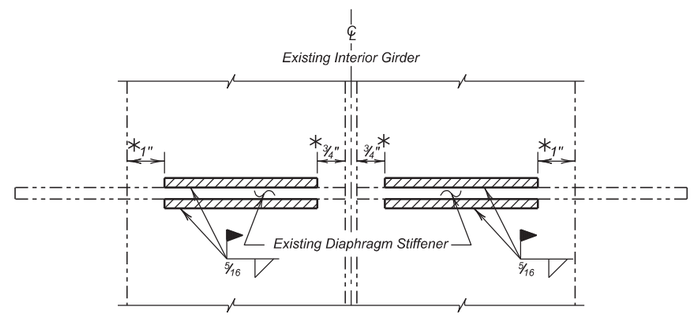

SECTION E - E

(Two typical units of Fatigue Retrofit are shown.)

∗ No Weld

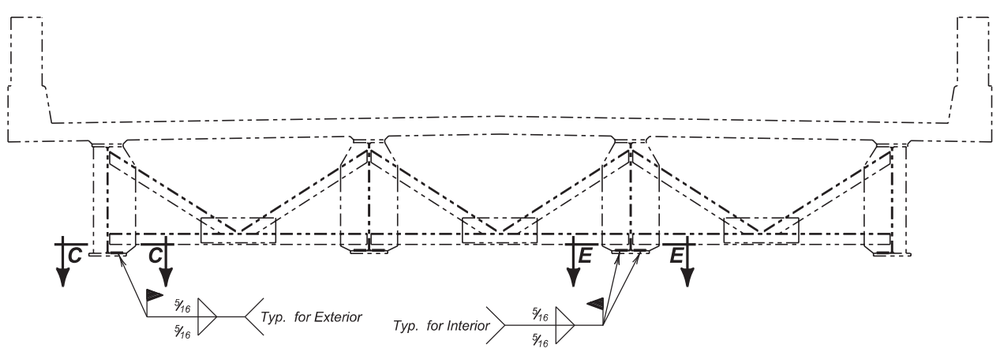

SECTION A - A

ESTIMATED QUANTITIES

ITEM	UNIT	QUANTITY
Fatigue Retrofit Steel Girder, Type C	Each	60
Magnetic Particle Weld Inspection	Inch	98
Bridge Repainting, Class I	LS	Lump Sum
Paint Residue Containment	LS	Lump Sum

NOTE: Welding both sides of one individual stiffener to a flange constitutes one unit of payment on a per each basis.

DETAILS OF FATIGUE RETROFIT TYPE "C"

FOR

254' - 0" CONT. COMPOSITE GIRDER BRIDGE

24' - 0" ROADWAY — 0° SKEW

OVER I90 — SEC. 34-T7N-R2E

STR. NO. 52-540-275 — IM 0901(163)9

PENNINGTON COUNTY

S. D. DEPT. OF TRANSPORTATION

MARCH 2014

DESIGNED BY	CK. DES. BY	DRAFTED BY	
KH	TK	KR	Kevin N. Goeden
PENN0223	0223RF18		BRIDGE ENGINEER

STATE OF	PROJECT	SHEET NO.	TOTAL SHEETS
S.D.	IM 0901(163)9	E81	E102

INDEX OF BRIDGE SHEETS —

Sheet No. 1 - General Drawing and Quantities
Sheet No. 2 - Subsurface Investigations
Sheet No. 3 - Special Details
Sheet No. 4 - Details for Std. Reinf. Conc. Sill **WP-252-24-00** (5-2-60)
Sheet No. 5 - Details for Std. Reinf. Conc. Bent **CB-252-24-00**
Sheet No. 6 - Superstructure Details **4CWG-252-24-00-1-3** (11-2-60)
Sheet No. 7 - Superstructure Details **4CWG-252-24-00-2-3**
Sheet No. 8 - Superstructure Details **4CWG-252-24-00-3-3** (9-9-59)
Sheet No. 9 - Std. Railing and Drain Details **RA-1** (12-4-51)

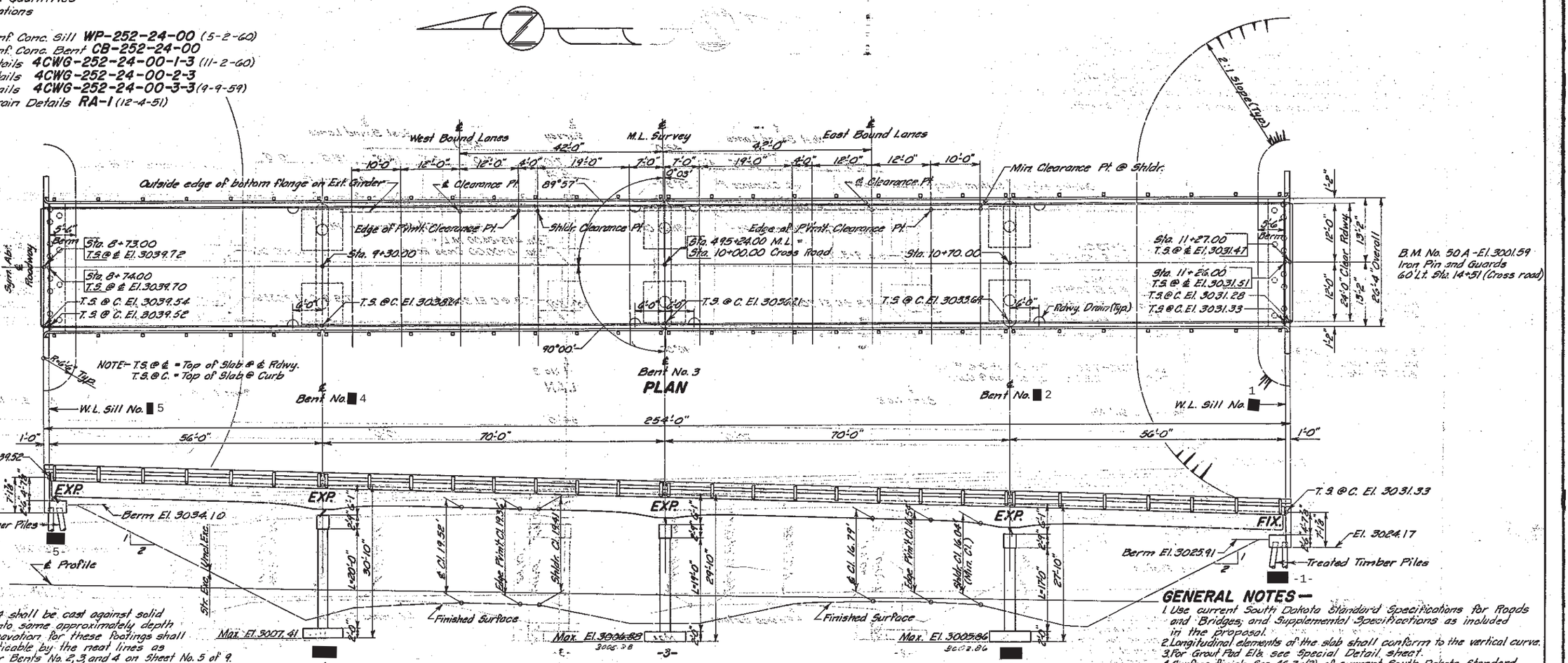

EXCAVATION NOTES —

1. Footings for Bents No. 2, 3, and 4 shall be cast against solid undisturbed shale and carried into same approximately depth of footings. Limits of shale excavation for these footings shall be bounded as nearly as practicable by the neat lines as shown in details of footings for Bents No. 2, 3 and 4 on Sheet No. 5 of 9.
2. Shale shall develop a minimum bearing value of 3.0 tons per sq. ft. If the bearing value is less than 3.0 tons per sq. ft. communicate with the BRIDGE DIVISION.
3. Final footing elevations for Bents No. 2, 3, and 4 shall be established before ordering column reinforcing steel for the respective Bents.

GENERAL NOTES —

1. Use current South Dakota Standard Specifications for Roads and Bridges, and Supplemental Specifications as included in the proposal.
2. Longitudinal elements of the slab shall conform to the vertical curve.
3. For Grout Pad El's see Special Detail sheet.
4. Surface Finish, Sec. 46.3.x(3) of current South Dakota Standard Specifications, shall include such portions of the structure which are visible from any traveled lane.
5. Rail posts shall be built vertical.
6. Place roadway drains as shown in PLAN Drawing, 8 required.

ESTIMATED QUANTITIES

ITEM	El. "A" Conc. Cu. Yds.	Steel - Lbs. Reinf.	Steel - Lbs. Struct.	Type RA-1 Steel Railing - Lin. Ft.		©Treated Timber Piles - Lin. Ft.	Excavation - Cu. Yds. Struct.	Excavation - Cu. Yds. △Unclass.	Fill Cu. Yds.	Structural Earth Exc.
Superstructure	145.2	36,255	16,000	510.3		291.5			18.5	
Sill No. 1	18.8	1,680	640		6	12 @ 25 = 300	14		67.8	13.3
Sill No. 5	18.8	1,730	400		12	12 @ 18 = 180	14			13.6
Bent No. 2	24.5	6,820				325.5	32			75.3
Bent No. 3	22.2	6,440					123			31.6
Bent No. 4	22.2	6,280					45			12.9
Totals	250.7	54,405	17,040	510.3	24	1,180	230		86.3	162.2

©One Treated Timber Test Pile shall be driven at Sills No. 1 & No. 5 before the remaining piles are ordered.
△See Grading Plans for Unclassified Excavation.
PILE NOTE - Piles driven at Sills No. 1 & No. 5, including test piles, shall obtain their full bearing (18 tons) in the natural ground below the new embankment elevation 3018.2± and 3013.5± respectively. Pre-bored holes thru the fill are required and shall have a minimum diameter 2" larger than the nominal diameter (3' from butt) of the pile.

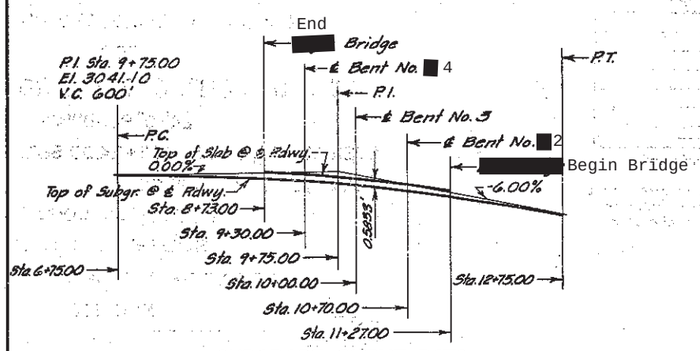

SUBGRADE CURVE DATA

ORIGINAL CONSTRUCTION PLANS

GENERAL DRAWING AND QUANTITIES
FOR
254'-0" CONT. COMP. GIRDER VIADUCT
24'-0" ROADWAY
OVER I.S. NO. 90 STA. 495+24.00 SEC. 24/19-T2N-R9/10E
STA. 8+73.00 TO 11+27.00 I 90-2(4)68
STR. NO. 52-540-275 PENNINGTON COUNTY
SOUTH DAKOTA H20-44
DEPARTMENT OF HIGHWAYS
NOV. 1960

-X731-

DESIGNED BY	DRAWN BY	CHECKED BY	APPROVED
	D.Q.	B.D.M.	R.K. Sauer, BRIDGE ENGINEER

F.E. 9-13-62 R.D.J.

52-540-275

STATE OF S.D.	PROJECT	SHEET NO.	TOTAL SHEETS
	IM 0901(163)9	E82	E102

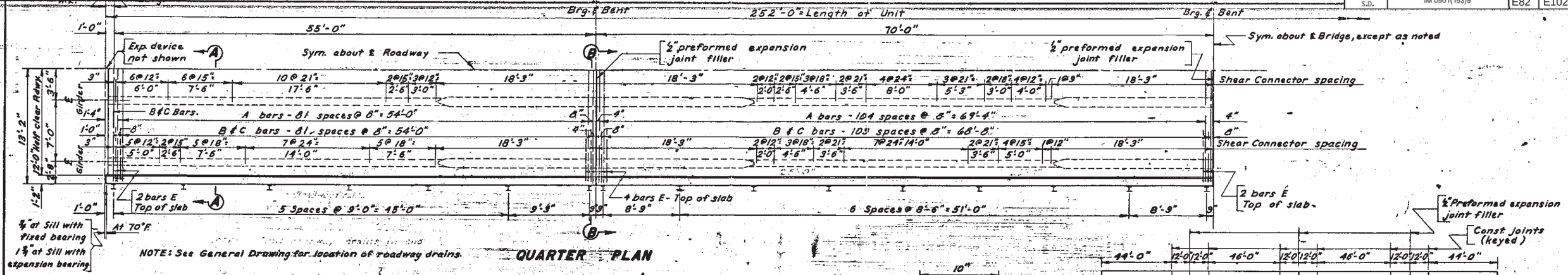

NOTE: See General Drawing for location of roadway drains.

QUARTER PLAN

ORDER FOR PLACING CONCRETE

Curb shall be poured after all of slab has been poured.

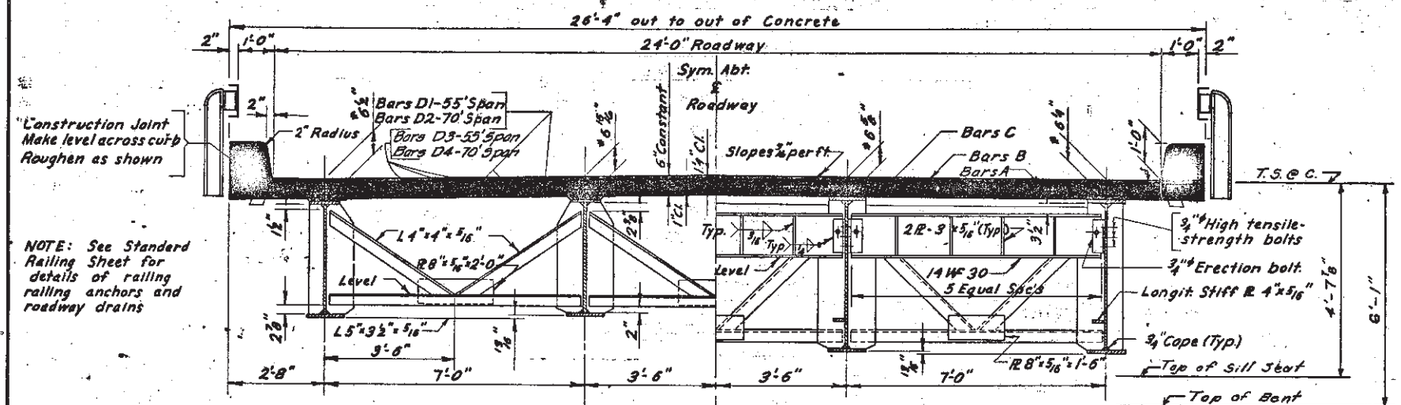

SECTION A-A SECTION B-B

* Dimensions at ℄ of bearings. At interior points dimensions must be corrected according to D.L. Deflection Diagram and Note.

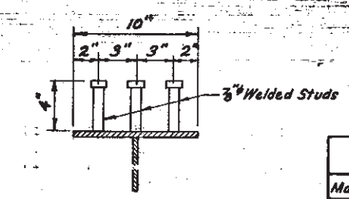

WELDED STUD SHEAR CONNECTORS

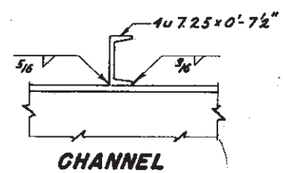

CHANNEL SHEAR CONNECTOR

REINFORCING SCHEDULE

Mark	No.	Size	Length	Type
A	374	5	28'-9"	15
B	374	4	27'-9"	2
C	374	4	29'-0"	4
D1	136	5	28'-3"	Str.
D2	136	5	35'-6"	Str.
E	32	6	6'-0"	Str.
D3	36	4	28'-3"	Str.
D4	36	4	35'-6"	Str.

All dimensions are out to out of bar.

Figures in circles show types.

Bending Details

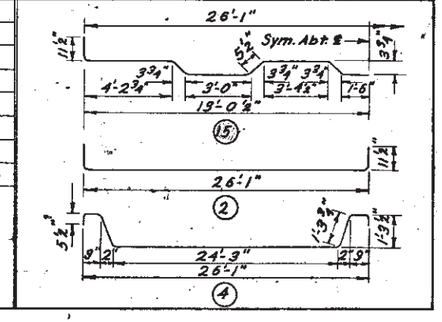

ESTIMATED QUANTITIES

ITEM	UNIT	QUANTITY
Class "A" Concrete	Cu. Yd.	146.7
Reinforcing Steel	Lb.	54,255
Structural Steel	Lb.	116,000
Railing	Lin. Ft.	510.3

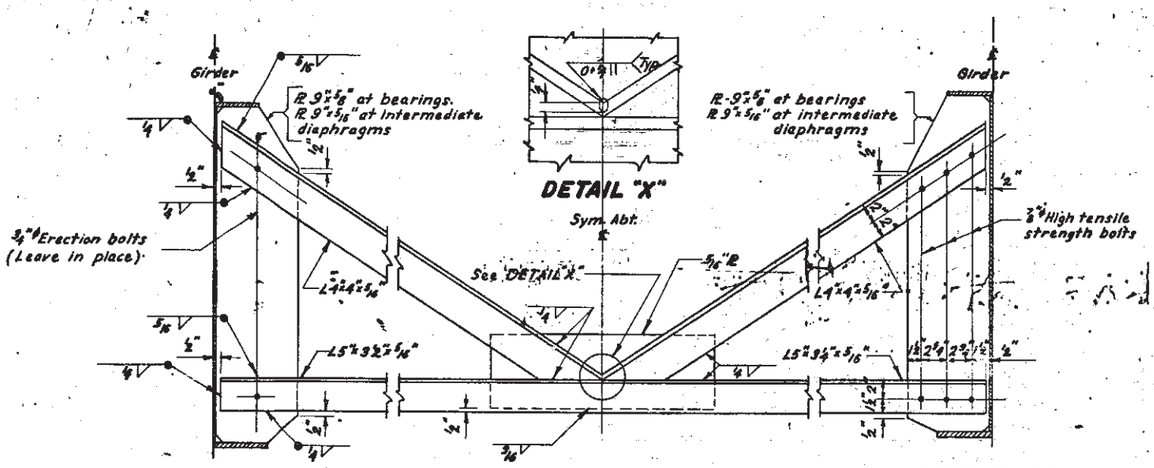

DIAPHRAGMS

NOTE: Diaphragms shall be attached to girders either by welding or bolting as shown, at option of Contractor.

DETAILS FOR SHEAR CONNECTORS

Channel or welded stud shear connectors are spaced as shown above in Quarter Plan.

The Contrator may substitute a row of 3-⅞"ϕ welded studs for each channel shear connector.

Shear connectors will be paid for as structural steel based on the weight of channels, regardless of type of connector used.

SUPERSTRUCTURE NOTE

Structural members which are to be welded shall conform to A.S.T.M. A-373 (current) steel. Steel produced under other specifications, but shown to possess the physical and chemical properties of A373 (current) steel will be accepted for use where the latter is specified. Steel for pins shall conform to structural steel A.S.T.M. A235 (current) or equivalent.

The cost of welding shall be absorbed in the unit price bid for Structural Steel.

All exposed steel surfaces shall be painted with one shop coat of red lead paint and two field coats of aluminum or other approved paint.

All exposed concrete edges shall be chamfered 1" unless otherwise noted.

All expansion rockers shall be set so as to be vertical at 70°F.

Design Loading: H20-44 (Current) A.A.S.H.O.

Unit Stresses: Concrete, fc = 1,800 p.s.i.
Re-steel, fs = 20,000 p.s.i. (intermediate grade)
Struct. steel, fs = 18,000 p.s.i.

ORIGINAL CONSTRUCTION PLANS

SUPERSTRUCTURE DETAILS FOR STANDARD 252'-0" CONTINUOUS WELDED PLATE GIRDER UNIT

COMPOSITE SECTION

24'-0" ROADWAY **4-SPAN UNIT**

STR. NO. 52-540-275 SOUTH DAKOTA DEPARTMENT OF HIGHWAYS

1959

(20) OF (22)

Rev. Superstr. Note 12-16-60
Rev. Slab Re-Steel 11-2-60
Rev. for grout pad 5-2-60
Rev. for 7½" Crown 9-9-59

DESIGNED BY	DRAWN BY	CHECKED BY	APPROVED
ASF E.K.	ASF TRACED BY W.C.P.	R.W.J.	K. R. Sewin BRIDGE ENGINEER

40WG-252-24-00-1-3

STATE OF	PROJECT	SHEET NO.	TOTAL SHEETS
S.D.	IM 0901(163)9	E83	E102

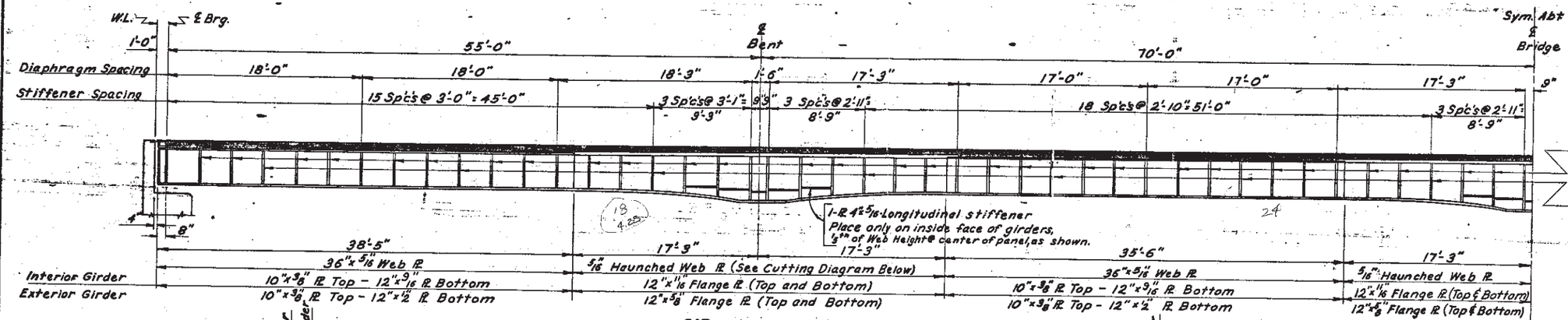

GIRDER LAYOUT

NOTE

Other transverse stiffeners are as noted in Sections below and as detailed on Roadway Section.

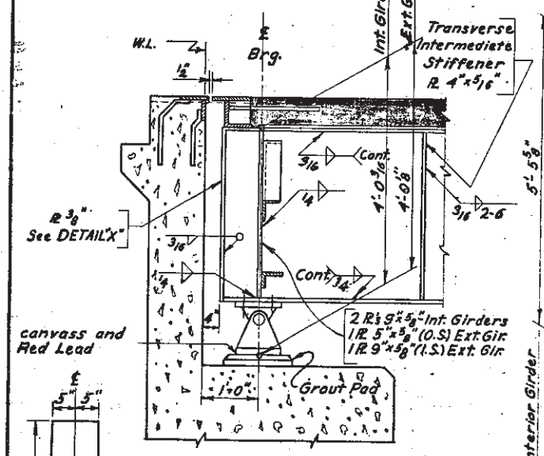

SECTION AT SILL
FIXED BEARING

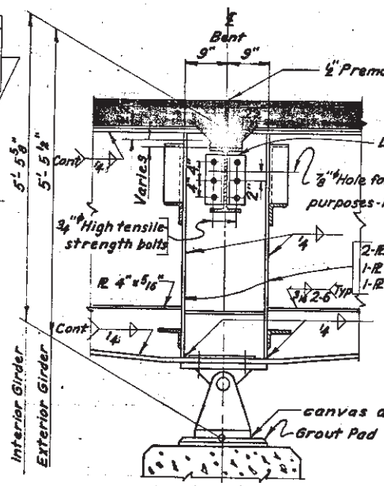

SECTION AT BENT
FIXED BEARING

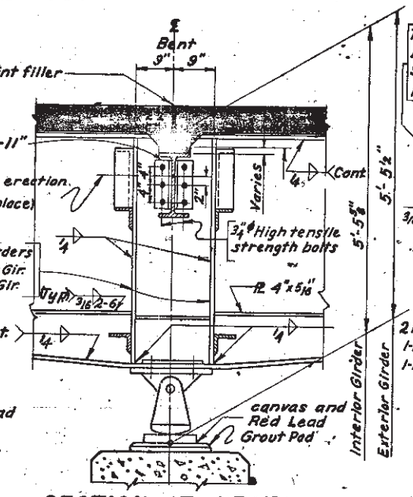

SECTION AT BENT
EXPANSION BEARING

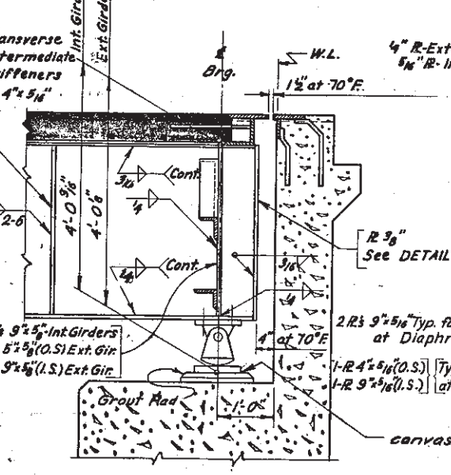

SECTION AT SILL
EXPANSION BEARING

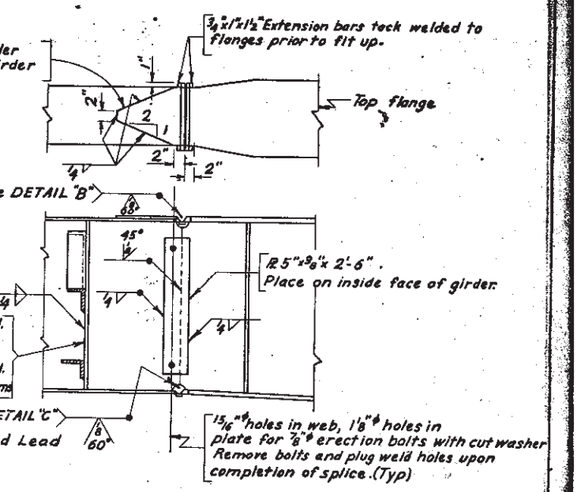

TYPICAL FIELD SPLICE

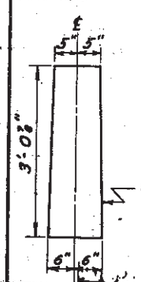

DETAIL "X"
END PLATE

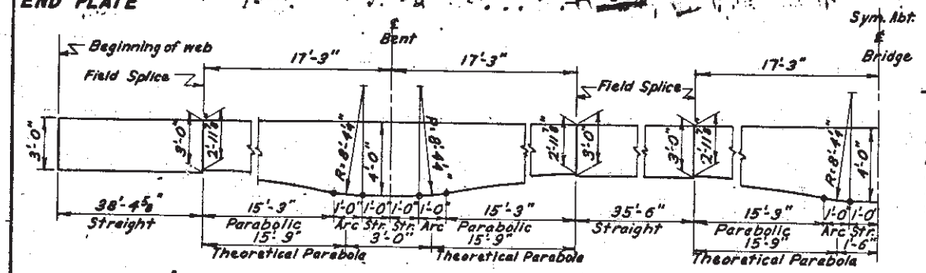

WEB CUTTING DIAGRAM

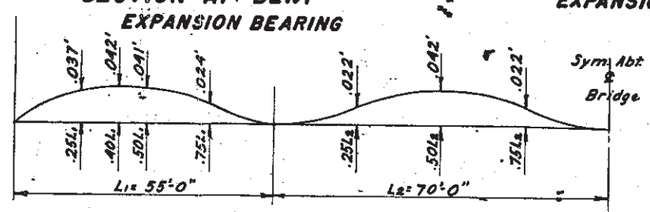

D.L. DEFLECTION DIAGRAM

NOTE

The D.L. Deflection Diagram shown shall be used to determine the depth of haunch required at interior points. Elevations top of girders shall be established after the girders, with diaphragms, have been erected and welded, but prior to pouring of slab. Girders shall not be supported by construction shoring while elevations are established. The depth of haunch required at any interior point equals (=) the proposed top of slab, minus (-) the elevation of top of girder, minus (-) slab thickness (6"), plus (+) D.L. Deflection.

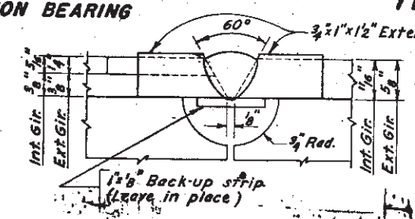

DETAIL "B"

NOTE

All welds on flange shall start and stop on extension bars. The bars shall be of mild steel. After weld is completed, extension bars shall be burned off flush.

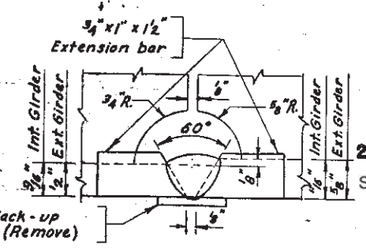

DETAIL "C"

ORIGINAL CONSTRUCTION PLANS

SUPERSTRUCTURE DETAILS
FOR
STANDARD 252'-0" CONTINUOUS WELDED PLATE GIRDER UNIT
COMPOSITE SECTION

24'-0" ROADWAY **4-SPAN UNIT**

STR. NO. 52-540-275 SOUTH DAKOTA

DEPARTMENT OF HIGHWAYS

1959

DESIGNED BY	DRAWN BY	CHECKED BY	APPROVED
ASF E.K.	ASF TRACED BY W.C.P.	R.W.J.	R. Dean BRIDGE ENGINEER

4CWG-252-24-00-2-3

STATE OF	PROJECT	SHEET NO.	TOTAL SHEETS
S.D.	IM 0901(163)9	E84	E102

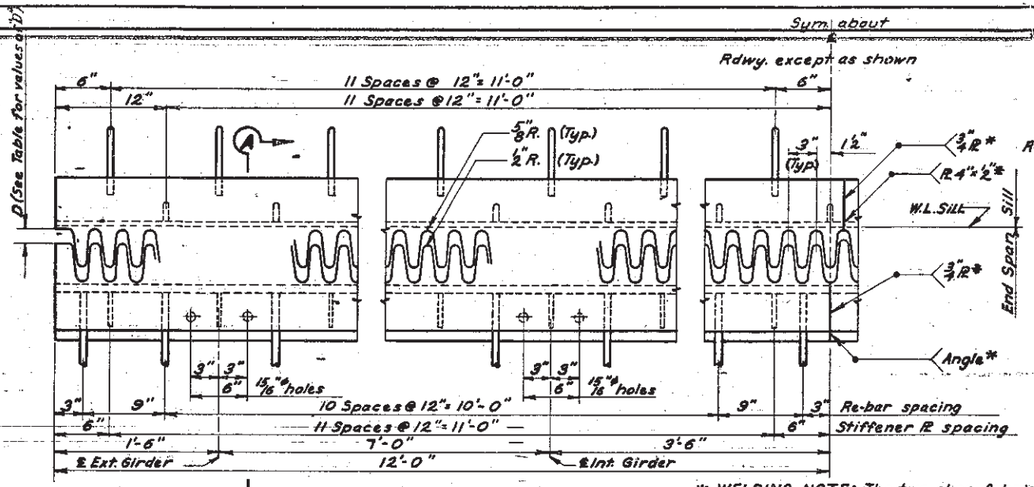

HALF PLAN OF EXPANSION DEVICE AT SILL (AT EXPANSION BEARING)

* WELDING NOTE: The two shop fabricated pieces of an expansion device or armored joint shall be joined in the field by butt welds in accordance with the latest Specifications of the American Welding Society. Type of welds shall be shown on shop plans for the Bridge Department's approval.

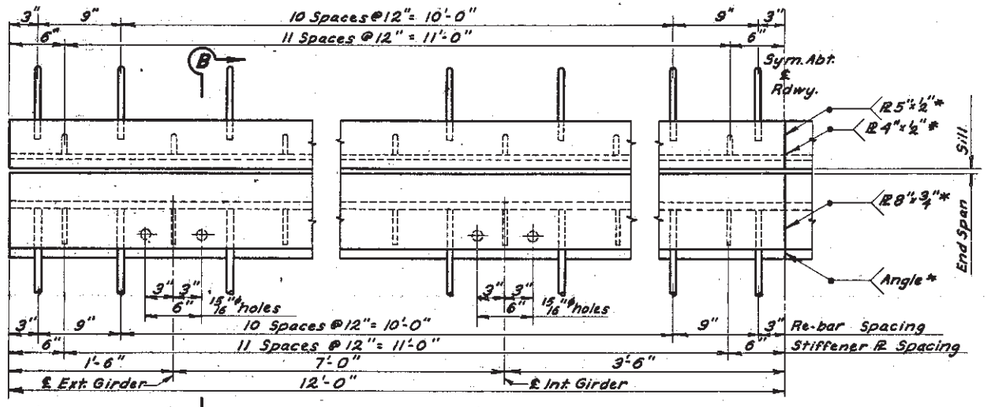

HALF PLAN OF ARMORED JOINT AT SILL (AT FIXED BEARING)

NOTE: The Expansion Device or Armored Joint shall be completely shop assembled, adjusted to the position it will take in the structure and the pieces match marked for field erection. The top surface of the expansion device or armored joint shall conform to the roadway crown.

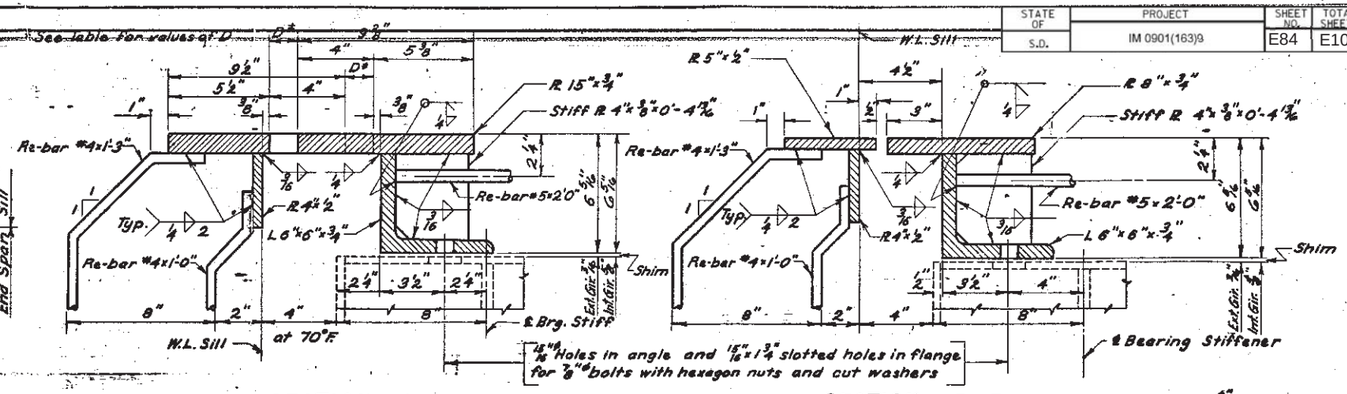

SECTION A-A

SECTION B-B

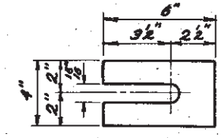

SHIM

NOTE: Provide 24-1/8" thick, 32-1/16" thick and 8-1/4" thick Shims.

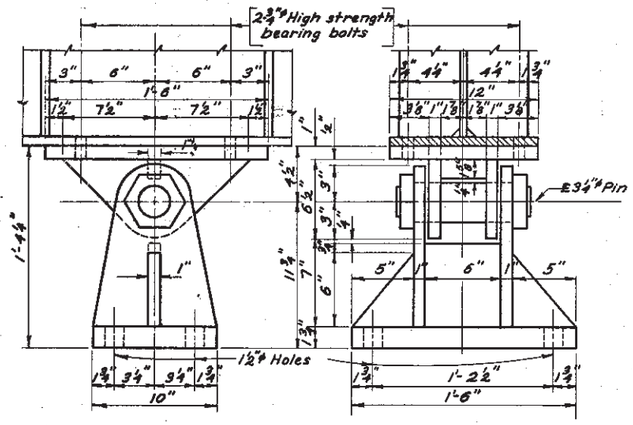

INTERIOR FIXED SHOE

NOTE: Except as shown, use 5/16" fillet welds in fabrication of Shoes and Rockers. Surfaces in contact shall be milled to bear before welding.

TABLE FOR VALUES OF "D"

Δ Position of Fixed Shoes	For Exp. Device at Sill #1	Temp.	For Exp. Device at Sill #5
At Sill #1	Armored Joint	-30°F	D = 3 1/2"
		+70°F	D = 1 1/2"
		+120°F	D = 1/2"
At Bent #2	D = 2 3/16"	-30°F	D = 3"
	D = 1 1/2"	+70°F	D = 1 1/2"
	D = 1 1/4"	+120°F	D = 3/4"
At Bent #3	D = 2 1/2"	-30°F	D = 2 1/2"
	D = 1 1/2"	+70°F	D = 1 1/2"
	D = 1"	+120°F	D = 1"
At Bent #4	D = 3"	-30°F	D = 2 3/16"
	D = 1 1/2"	+70°F	D = 1 1/2"
	D = 3/4"	+120°F	D = 1 1/4"
At Sill #5	D = 3 1/2"	-30°F	Armored Joint
	D = 1 1/2"	+70°F	
	D = 1/2"	+120°F	

Δ See General Drawing for position of Fixed Shoes.

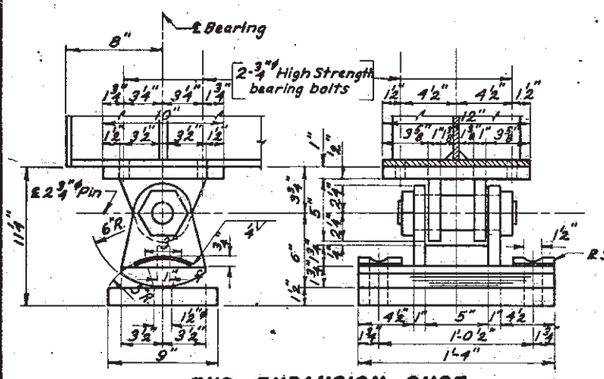

END EXPANSION SHOE

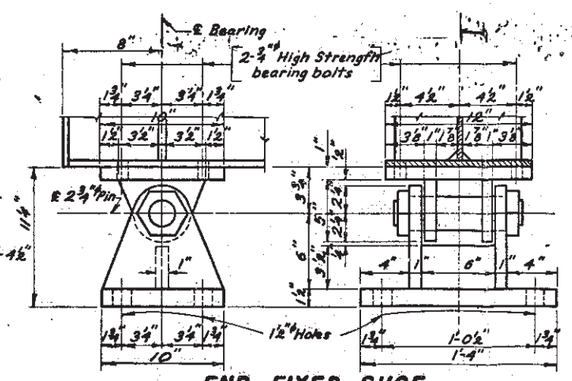

END FIXED SHOE

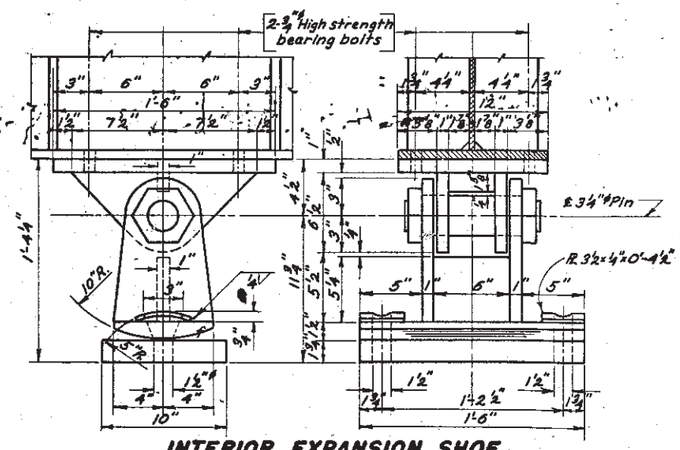

INTERIOR EXPANSION SHOE

Rev. for 3/4" Crown 9-9-59

ORIGINAL CONSTRUCTION PLANS

SUPERSTRUCTURE DETAILS FOR STANDARD 252'-0" CONTINUOUS WELDED PLATE GIRDER UNIT

COMPOSITE SECTION

24'-0" ROADWAY **4-SPAN UNIT**

STR. NO. 52-540-275 SOUTH DAKOTA DEPARTMENT OF HIGHWAYS

1959 (22) OF (22)

DESIGNED BY	DRAWN BY	CHECKED BY	APPROVED
B.K.	ASF TRACED BY W.C.P	R.W.J.	BRIDGE ENGINEER

4CWG -252-24-00-3-3

STATE OF	PROJECT	SHEET NO.	TOTAL SHEETS
S.D.	IM 0901(163)9	E85	E102

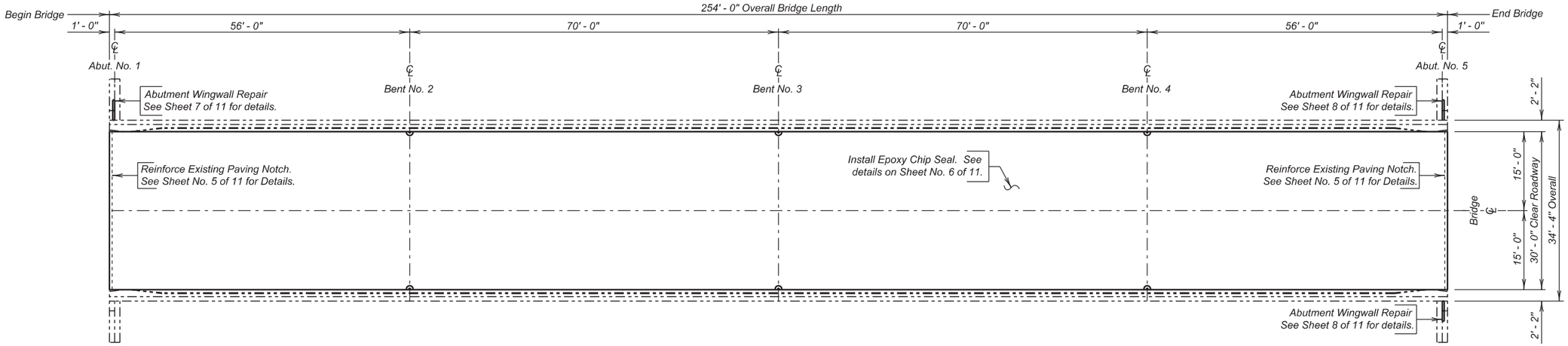

PLAN

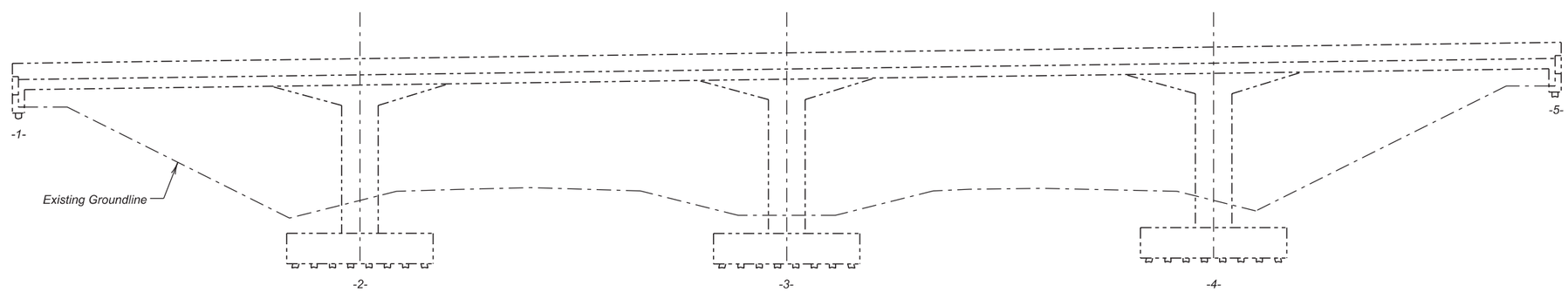

ELEVATION

INDEX OF BRIDGE SHEETS

Sheet No. 1 - Layout for Upgrading
Sheet No. 2 - Estimate of Structure Quantities and Notes
Sheet No. 3 - Notes (Continued)
Sheet No. 4 - Notes (Continued)
Sheet No. 5 - Existing Paving Notch Reinforcement
Sheet No. 6 - Two Coat Epoxy Chip Seal
Sheet No. 7 - Abutment Wingwall Repair
Sheet No. 8 - Abutment Wingwall Repair (Continued)
Sheet Nos. 9 thru 11 - Original Construction Plans

LAYOUT FOR UPGRADING

FOR

254' - 0" CONTINUOUS CONCRETE BRIDGE

30' - 0" ROADWAY — 0° SKEW
OVER INTERSTATE 90 — SEC. 30/29-T2N-R12E
STR. NO. 52-670-285 — IM 0901(163)9
PCN 0223

PENNINGTON COUNTY

S. D. DEPT. OF TRANSPORTATION

FEBRUARY 2014

PLANS BY :
OFFICE OF BRIDGE DESIGN, SOUTH DAKOTA DEPARTMENT OF TRANSPORTATION

DESIGNED BY	CK. DES. BY	DRAFTED BY	
KH	TK	JRK	Kevin N. Goeden
PENN0223	0223KG01		BRIDGE ENGINEER

ESTIMATE OF STRUCTURE QUANTITIES

ITEM NO.	DESCRIPTION	QUANTITY	UNIT
460E0070	Class A45 Concrete, Bridge Repair	0.3	CuYd
460E0170	Concrete Patching Material	87.8	CuFt
460E0300	Breakout Structural Concrete	1.1	CuYd
460E0380	Install Dowel in Concrete	16	Each
480E0200	Epoxy Coated Reinforcing Steel	56	Lb
480E5000	Galvanic Anode	6	Each
491E0015	Two Coat Epoxy Bridge Deck Chip Seal	846.6	SqYd
491E0110	Abrasive Blasting of Bridge Deck	846.6	SqYd
491E0120	Bridge Deck Grinding	846.6	SqYd
491E0130	Concrete Removal, Class A	4.0	SqYd
491E0140	Concrete Removal, Class B	4.0	SqYd

SPECIFICATIONS

1. Design Specifications: AASHTO Standard Specifications for Highway Bridges 17th Edition using Working Stress Design.

2. Construction Specifications: South Dakota Standard Specifications for Roads and Bridges, 2004 Edition and Required Provisions, Supplemental Specifications and/or Special Provisions as included in the Proposal.

DETAILS AND DIMENSIONS OF EXISTING BRIDGE

All details and dimensions of the existing bridge, contained in these plans, are based on the original construction plans and shop plans. It is the Contractor's responsibility to inspect and verify the actual field conditions and any necessary as-built dimensions affecting the satisfactory completion of the work required for this project.

SCOPE OF BRIDGE WORK & SEQUENCE OF OPERATIONS

All work on this structure shall be accomplished with the traffic control shown elsewhere in the plans. Alternate sequence of operations may be submitted by the contractor for approval by the engineer a minimum of two weeks prior to the preconstruction meeting.

1. Preform bridge deck grinding and repair the deck by removing all loose and delaminated concrete from the bridge deck surface for the first and second phase of construction.

2. Clean the bridge deck surface with abrasive blasting for the first phase of construction.

3. Modify the paving notch for the first phase of construction.

4. Place a Two Coat Epoxy Bridge Deck Chip Seal for the first phase of construction.

5. Switch Traffic and repeat steps 2 through 4 for the second phase of construction.

6. Repair broken wing wall on abutment one on the southwest corner of bridge.

GENERAL CONSTRUCTION – BRIDGE

1. All mild reinforcing steel shall conform to ASTM A615, Grade 60.

2. Use 2" clear cover on all reinforcing steel except as shown otherwise.

3. Request for construction joints or resteel splices at points other than those shown, must be submitted to the Engineer for prior approval. If additional splices are approved, no payment will be allowed for the added quantity of reinforcing steel.

4. Surfaces of fresh concrete at construction joints shall be rough floated sufficiently to consolidate the surface. All construction joints shall be cleaned of surface laitance, curing compounds and other foreign materials prior to placing fresh concrete against the joint.

CONCRETE BREAKOUT

1. The existing paving notch and wing wall shall be broken out to the limits shown on the plans. Breakout limits shall be defined with a 3/4" deep sawcut (unless specified otherwise in these plans), where practical, as approved by the Engineer. Reinforcing steel that is exposed and is scheduled for use in the new construction shall be cleaned and straightened to the satisfaction of the Engineer. Care shall be taken not to damage the existing reinforcing steel that is to be reused in the new construction during concrete breakout. Any reinforcing steel that is damaged during concrete breakout shall be replaced or repaired, as approved by the Engineer, by the Contractor at no cost to the Department.

2. All broken out concrete, discarded reinforcing bars and expansion devices shall be disposed of by the Contractor. Any disposal of discarded material shall be in accordance with the Environmental Commitments.

3. The contract unit price per cubic yard for "Breakout Structural Concrete" shall include breaking out concrete, cleaning, straightening existing reinforcing steel, and disposal of all broken out material.

EPOXY COATING REINFORCING STEEL

1. The existing resteel in the wing wall that is exposed during the concrete breakout, and is to be reused, shall be epoxy coated in the field.

2. The reinforcing steel shall be abrasive blasted clean and then epoxy coated. The epoxy coating shall be inert in concrete and compatible with the coating applied to the new epoxy coated reinforcing steel. This coating shall be the epoxy touch up coating material supplied by an epoxy coating manufacturer who supplies coating material for new epoxy coated reinforcing steel. The abrasive blasted reinforcing steel shall be coated promptly and before detrimental oxidation occurs. The coating shall be allowed to cure for 24 hours or as per the manufacturer's recommendations, whichever is more stringent, before concrete can be placed. These bars shall be clean and free from all surface contaminants before coating.

3. The cost of cleaning and epoxy coating the existing reinforcing steel shall be incidental to the various bid items.

DESIGN MIX OF CONCRETE

1. The Type of cement, concrete strength requirements, aggregate requirements, slump and air requirements for the contract items Class A45 Concrete Bridge Repair shall conform to the requirements of Section 460 of the Construction Specification.

INSTALLING DOWELS IN CONCRETE

1. Holes drilled in the existing concrete shall be true and normal or as shown in the plans. Drilling holes using a core drill shall not be allowed. Care shall be taken not to damage the existing reinforcing steel. It is likely that some of the existing reinforcing steel shown in the original construction plans may have been placed out of position during original construction. Therefore, prior to the start of drilling any holes in the concrete, an effort will be made by Department forces to mark on the concrete surface where practical any locations of the in-place reinforcing steel. In spite of this precaution, the Contractor can still expect to encounter and have to drill through reinforcing steel or shift the dowel spacing as approved by the Engineer to miss the existing reinforcing steel. If the Contractor shifts the dowel spacing, the unused drill holes shall be completely filled with the epoxy resin as approved by the Engineer

2. The epoxy resin mixture shall be of a type for bonding steel to hardened concrete and shall conform to AASHTO M235 Type IV, (Equivalent to ASTM C881, Type IV). Grade 1, 2 or 3 may be used for vertical dowels.

3. The diameter of the drilled holes shall not be less than 1/8 inch greater, nor more than 3/8 inch greater than the diameter of the dowels or as per the Manufacturer's recommendations. The drilled holes shall be blown out with compressed air using a device that will reach the back of the hole to ensure that all debris or loose material has been removed prior to epoxy injection.

4. Mix epoxy resin as recommended by the Manufacturer and apply by an injection method as approved by the Engineer. Beginning at the back of the drilled holes, fill the holes 1/3 to 1/2 full of epoxy, or as recommended by the Manufacturer, prior to insertion of the steel bar. Rotate the steel bar during installation to eliminate voids and ensure complete bonding of the bar. Insertion of the bars by the dipping or painting method will not be allowed.

INSTALLING DOWELS IN CONCRETE (CONTINUED)

5. No loads shall be applied to the epoxy grouted dowel bars until the epoxy resin has had sufficient time to cure as specified by the epoxy resin manufacturer.

6. Dowel bars shall be deformed bars conforming to ASTM A615 Grade 60.

7. The cost of epoxy resin, dowels, installation and other incidental items shall be incidental to the contract unit price per each for "Install Dowel in Concrete".

REMOVAL OF LOOSE AND DELAMINATED CONCRETE

1. This work consists of preparation of the existing bridge deck for Two Coat Epoxy Bridge Deck Chip Seal by removing and replacing the loose and delaminated concrete.

2. Concrete used to repair the deck surface shall be in accordance with the Concrete Patching Material notes in this set of plans.

3. Concrete Removal on the bridge deck shall be divided into two the following two classes:

   a. Concrete Removal, Class A: Concrete Removal, Class A shall consist of the removal of delaminated and visibly loose concrete and any bituminous patches (when present) from the top of existing bridge deck down to a depth no deeper than the top of the top mat of bridge deck reinforcing steel. When grinding is specified, the Concrete Removal, Class A shall be done after the bridge deck has been ground.

   b. Concrete Removal, Class B: Concrete Removal, Class B areas shall be determined after completion of the Concrete Removal, Class A has been accomplished. Concrete Removal, Class B shall consist of the removal of delaminated and visibly loose concrete that exists below the bottom limits of the Concrete Removal, Class A *(below the top of the top mat of reinforcing steel)*.

4. Concrete Removal shall be by jackhammers and chipping hammers or other methods as approved by the Engineer. Jackhammers and chipping hammers shall be used as follows:

   a. Jackhammers heavier than 30 pounds will not be permitted.

   b. Chipping hammers heavier than 15 pounds will not be permitted for removing concrete below the top of the top mat of reinforcing steel.

   c. Jackhammers and chipping hammers shall not be operated at an angle in excess of 45 degrees measured from the surface of the concrete.

   d. Extreme care shall be taken when using jackhammers and chipping hammers to assure that existing reinforcing steel is not damaged or debonded from the sound concrete.

5. Removal shall begin near the center of the loose or delaminated concrete and shall progress outwardly until the loose or delaminated concrete is removed and sound concrete is encountered such that the amount of concrete removal is minimized.

6. The edges of the resulting areas of removed concrete shall be nearly vertical or slightly tapered inward from the top down to a minimum depth of one inch. If this condition is not able to be achieved with jackhammers or chipping hammers, saw cutting the edges of the removal area may be required to attain satisfactory results.

7. Care shall be taken during concrete removal to not nick, gouge, or in any other way damage the in-place reinforcing steel. Any inadvertent damage to the in-place reinforcing steel shall be brought to the attention of the Bridge Construction Engineer and shall be repaired by the Contractor as directed by the Engineer at no additional cost to the Department.

8. Concrete Removal, Class A will be measured to the nearest 0.1 foot and the area computed to the nearest 0.1 square yard. Concrete Removal, Class A will be paid for at the contract unit price per square yard. Payment will be full compensation for all labor, equipment, materials, and all incidental work required to remove the specified concrete, concrete sawing, and disposing of removed material.

9. Concrete Removal, Class B will be measured to the nearest 0.1 foot and the area computed to the nearest 0.1 square yard. Concrete Removal, Class B will be paid for at the contract unit price per square yard. Payment will be full compensation for all labor, equipment, materials, and all incidental work required to remove the specified concrete, concrete sawing, and disposing of removed material.

CONCRETE PATCHING MATERIAL

1. Concrete patching material shall be used to repair the deck areas where loose and delaminated concrete was removed.

2. Concrete patching material shall be packaged, dry, rapid-hardening cementitious mortar or concrete materials conforming to the requirements of ASTM C 928, Type R-3 and shall contain no chlorides, magnesium or phosphates.

3. Water used for the concrete patching material shall be in conformance with Section 790 of the Construction Specifications.

4. Upon completion of the concrete removal and immediately prior to placing any concrete patching material into the concrete removal areas, the removal areas shall be thoroughly cleaned of loose and foreign material by abrasive blasting. The surface profile of the area to receive the patching material shall be in accordance with the manufacturer's recommendations. The abrasive blasting shall be to the extent that all surface laitance is removed. Abrasive blast cleaning shall expose the coarse aggregate and remove rust from any exposed reinforcing steel. After abrasive blasting, the surface shall be cleaned by the use of compressed air to the satisfaction of the Engineer. The air compressor used for cleaning shall be equipped with trap devices capable of providing moisture-free and oil-free air at a recommended pressure of 90 psi.

5. The existing surface at the time of placement of the concrete patching material shall be at least 40° F (4° C), measured by a thermometer placed against the concrete surface and covered with an insulating blanket. The concrete patching material shall be mixed and placed in accordance with the manufacturer's technical data sheet. The Contractor shall provide a manufacturer's technical data sheet to the Engineer prior to performing the work. The concrete patching material shall be maintained at or above 45° F (7° C) for at least 72 hours after placement.

6. Immediately after finishing the concrete patching material, the surface of the concrete patching material shall be covered with a double layer of wet burlap. Within one hour of covering with wet burlap, polyethylene sheeting shall be placed on the wet burlap. The surface shall be wet cured for a minimum of 48 hours or in accordance with the manufacturer's recommendations, whichever is more stringent. Following the wet cure, the burlap and polyethylene sheeting shall be removed and the surface allowed to air dry for a minimum of 48 hours after removal of the burlap and polyethylene sheeting before application of the epoxy chip seal is permitted.

7. Concrete Patching Material will be measured to nearest 0.1 cubic feet as determined from the theoretical yield per bag of Concrete Patching Material. Concrete Patching Material will be paid for at the contract unit price per cubic foot. Payment will be full compensation for all labor, equipment, materials, and all incidental work required to abrasive blast clean the removal areas, and furnish, place and cure the concrete patching material within the removal areas.

TWO COAT EPOXY BRIDGE DECK CHIP SEAL

The Epoxy Chip Seal shall be applied in accordance with the Special Provision for "Two Coat Epoxy Bridge Deck Chip Seal."

NOTES (CONTINUED)

FOR

254' - 0" CONTINUOUS CONCRETE BRIDGE

STR. NO. 52-670-285

FEBRUARY 2014

DESIGNED BY	CK. DES. BY	DRAFTED BY	
KH	TK	KH	Kevin N. Goeden
MODY01SB	01SBHB03		BRIDGE ENGINEER

GALVANIC ANODE

1. The Contractor shall place galvanic anodes in the patched area of the wing wall of the abutment. Galvashield XP+ or an approved equivalent as approved by the Office of Bridge Design shall be used. Galvashield XP+ is manufactured by:

   Vector Corrosion Technologies
   474B Dovercourt Drive
   Winnepeg, MB, Canada R3Y 1G4
   Phone: (204) 489-6300

2. The anodes shall be placed in accordance with manufacturer's recommendations and as approved by the Engineer. The anodes have not been shown on the drawings. The Contractor shall provide shop drawings of the galvanic anode installation including locations of the individual anodes to the Office of Bridge Design.

3. The anodes shall be placed with a minimum ¾" cover and shall be set in Embedding Mortar per the manufacturer's recommendations. The anodes shall be fully encased in the concrete repair material. Where adequate cover does not exist, a concrete pocket shall be chipped out behind the anode to provide sufficient cover. The Contractor may need to chip around the reinforcing bar locally at the anode installation to make the electrical connection. The reinforcing steel at the connection location shall be cleaned per the manufacturer's recommendations to provide sufficient electrical connection and mechanical bond.

4. The electrical continuity of the electrical connections and reinforcing steel shall be confirmed per the manufacturer's recommendations.

5. The Contractor shall provide manufacturer's product literature and installation instructions to the Engineer 10 days prior to installation.

6. All costs associated with placing anodes including labor, equipment, materials and incidentals shall be included in the contract unit price per each for "Galvanic Anode".

NOTES (CONTINUED)

FOR

254' - 0" CONTINUOUS CONCRETE BRIDGE

STR. NO. 52-670-285

FEBRUARY 2014

DESIGNED BY	CK. DES. BY	DRAFTED BY	
KH	TK	KH	Kevin N. Goeden
MODY01SB	01SBHB04		BRIDGE ENGINEER

Revised by KH, 7/14/2014

STATE OF	PROJECT	SHEET NO.	TOTAL SHEETS
S.D.	IM 0901(163)9	E89	E102

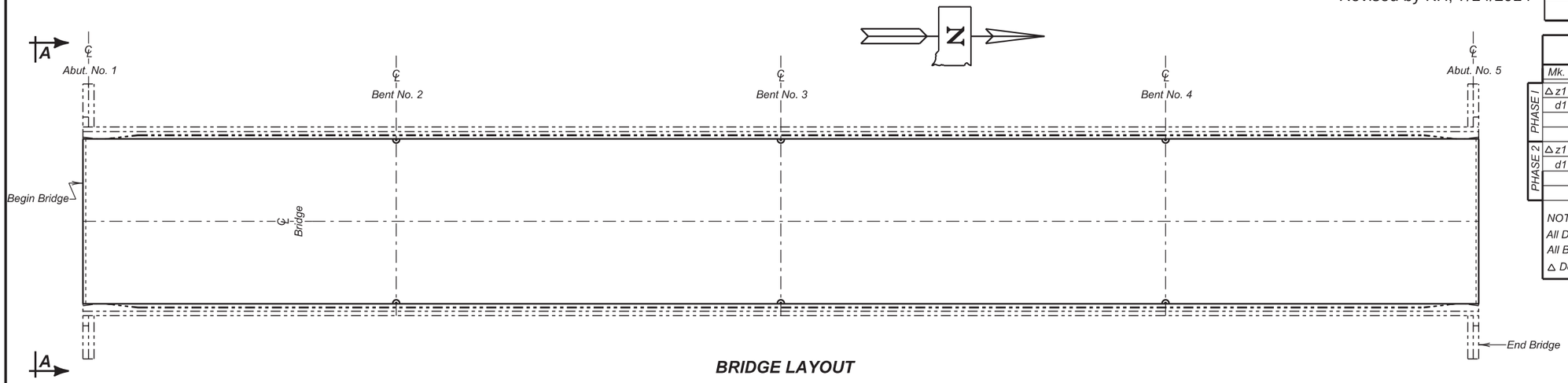

BRIDGE LAYOUT

REINFORCING SCHEDULE
(For Both Ends of Bridge)

	Mk.	No.	Size	Length	Type	Bending Details
PHASE I	△ z1	8	5	2' - 8"	17A	
	d1	4	5	6' - 9"	Str.	
PHASE 2	△ z1	8	5	2' - 8"	17A	
	d1	4	5	6' - 9"	Str.	

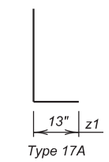

Type 17A

NOTES:
All Dimensions are out to out of bars.
All Bars to be Epoxy Coated.
△ Dowels

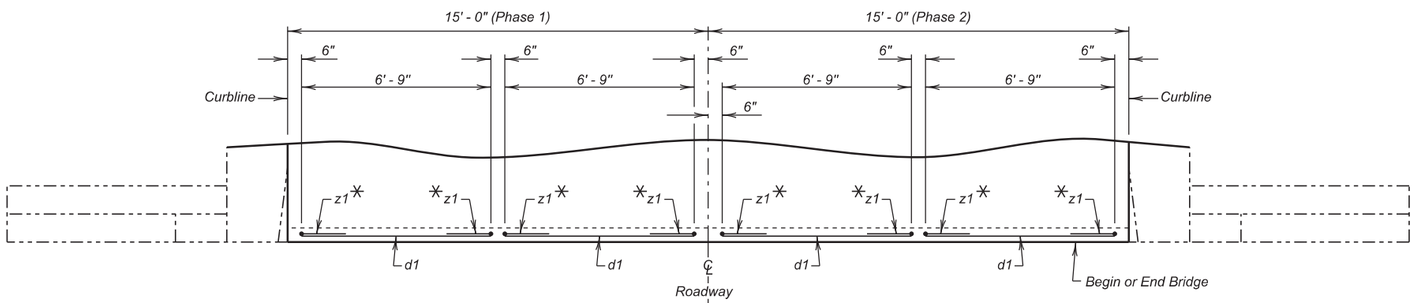

PLAN
(Abutment No. 1 shown, Abutment No. 5 identical)

✳ z1 Dowels are to be drilled in and grouted with epoxy.

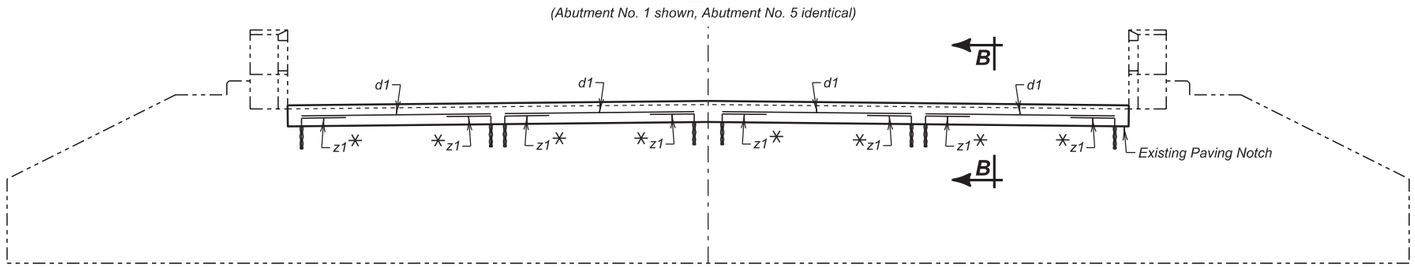

VIEW A - A
(Abutment No. 1 shown, Abutment No. 5 identical)

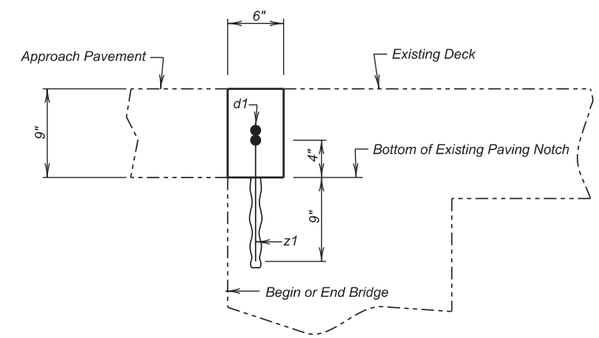

SECTION B - B

ESTIMATED QUANTITIES

ITEM	UNIT	QUANTITY Phase I	QUANTITY Phase 2
Install Dowel in Concrete	Each	8	8
◊ Epoxy Coated Reinforcing Steel	Lb	28	28
Concrete Patching Material	Cu. Ft.	11.3	11.3
Breakout Structural Concrete	Cu. Yd.	0.4	0.4

◊ Does not include the following quantities for z1 bars as these are paid for in the bid item "Install Dowel in Concrete".

PHASE I	PHASE 2
22 Lb.	22 Lb.

EXISTING PAVING NOTCH REINFORCEMENT

FOR

254' - 0" CONTINUOUS CONCRETE BRIDGE

30' - 0" ROADWAY — 0° SKEW
OVER INTERSTATE 90 — SEC. 30/29-T2N-R12E
STR. NO. 52-670-285 — IM 0901(163)9

PENNINGTON COUNTY
S. D. DEPT. OF TRANSPORTATION
FEBRUARY 2014

DESIGNED BY	CK. DES. BY	DRAFTED BY	
KH	TK	JRK	Kevin N. Goeden BRIDGE ENGINEER
PENN0223	0223KG05		

STATE OF	PROJECT	SHEET NO.	TOTAL SHEETS
S.D.	IM 0901(163)9	E90	E102

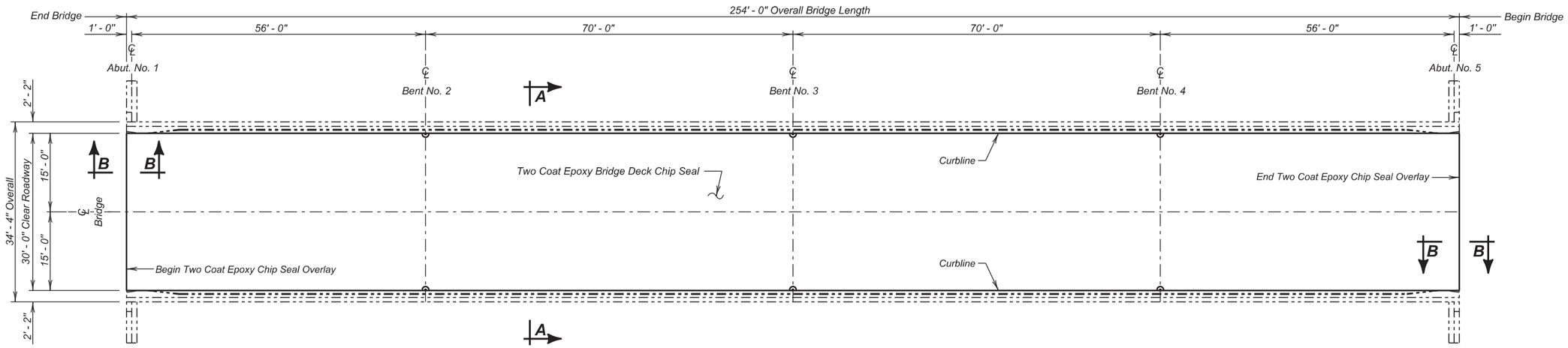

BRIDGE LAYOUT

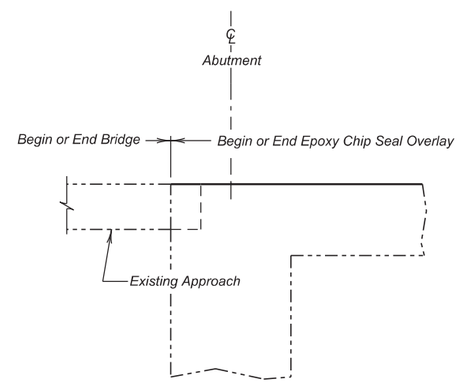

SECTION B - B

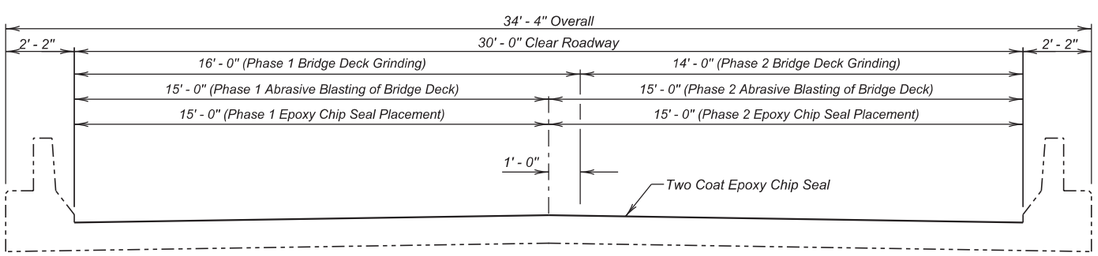

SECTION A - A

NOTE :
✳ Concrete Removal, Class A; Concrete Removal, Class B; and Concrete Patching Material may not be encountered and may be removed from the project at the direction of the Engineer.

ESTIMATED QUANTITIES

	ITEM	UNIT	QUANTITY PHASE 1	QUANTITY PHASE 2
	Two Coat Epoxy Bridge Deck Chip Seal	Sq. Yd.	423.3	423.3
	Abrasive Blasting of Bridge Deck	Sq. Yd.	423.3	423.3
	Bridge Deck Grinding	Sq. Yd.	451.6	395.0
✳	Concrete Patching Material	Cu. Ft.	32.6	32.6
✳	Concrete Removal, Class A	Sq. Yd.	2.0	2.0
✳	Concrete Removal, Class B	Sq. Yd.	2.0	2.0

TWO COAT EPOXY CHIP SEAL

FOR

254' - 0" CONTINUOUS CONCRETE BRIDGE

30' - 0" ROADWAY — 0° SKEW
OVER INTERSTATE 90 — SEC. 30/29-T2N-R12E
STR. NO. 52-670-285 — IM 0901(163)9

PENNINGTON COUNTY
S. D. DEPT. OF TRANSPORTATION
FEBRUARY 2014

DESIGNED BY	CK. DES. BY	DRAFTED BY	
KH	TK	JRK	Kevin N. Goeden
PENN0223	0223KG06		BRIDGE ENGINEER

STATE OF	PROJECT	SHEET NO.	TOTAL SHEETS
S.D.	IM 0901(163)9	E91	E102

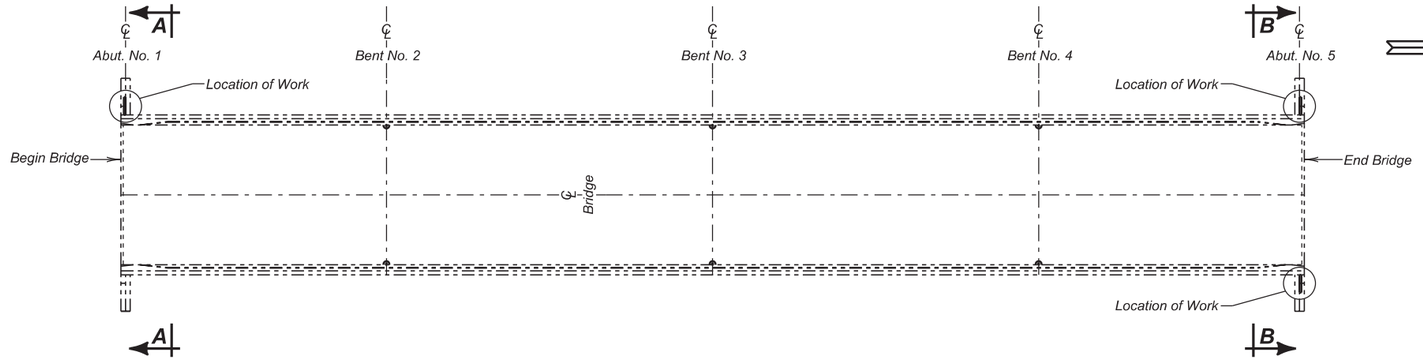

BRIDGE LAYOUT

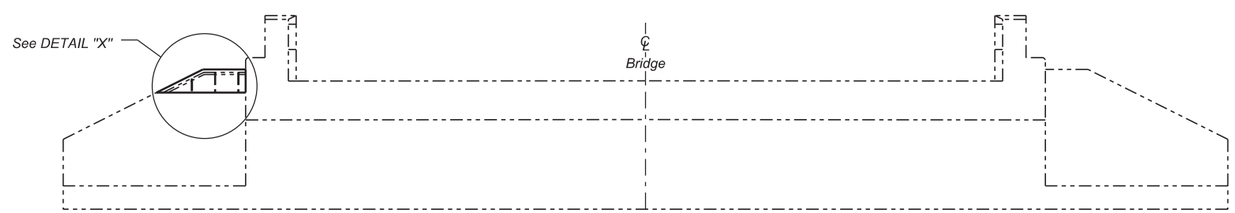

SECTION A - A

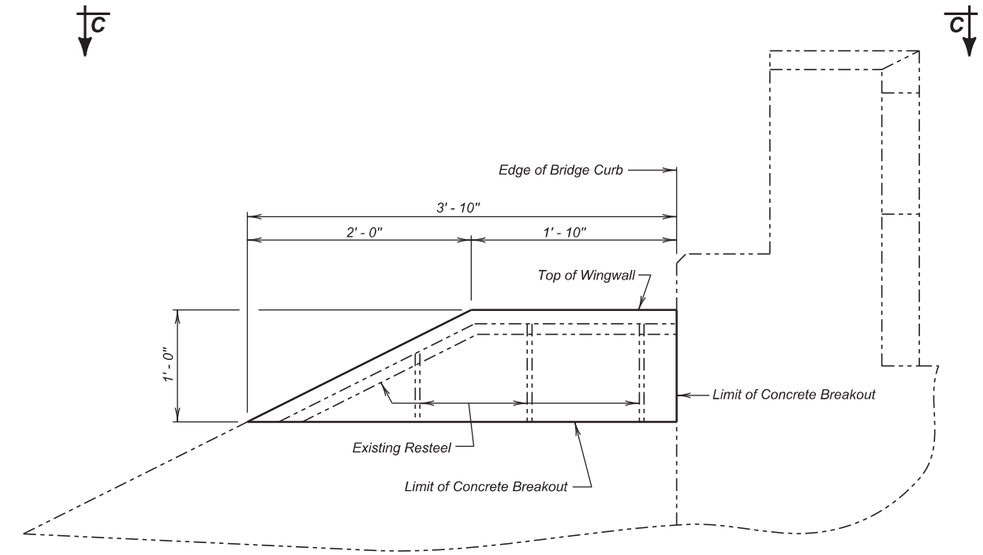

DETAIL "X"

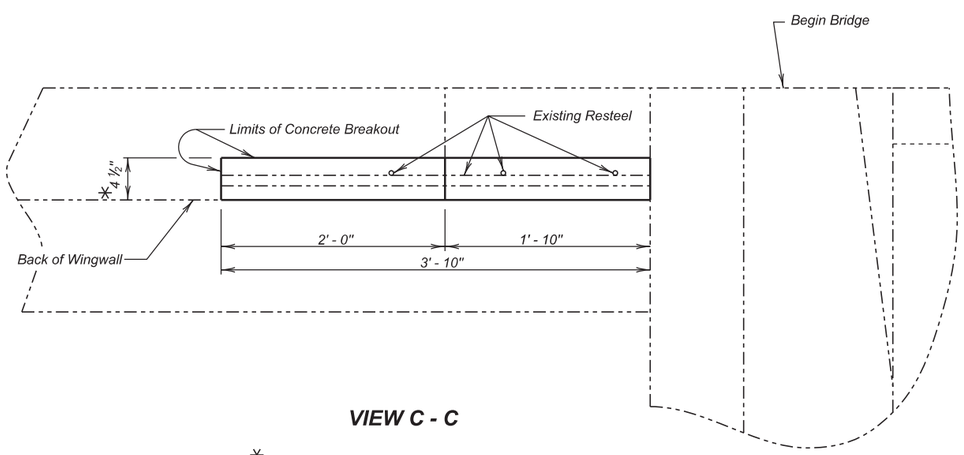

VIEW C - C

*Limits of Concrete Breakout should be at least 1" beyond resteel

NOTE :
This sheet is to be used in conjunction with Sheet 8 of 11.

ABUTMENT WING WALL REPAIR

FOR

254' - 0" CONTINUOUS CONCRETE BRIDGE

30' - 0" ROADWAY — 0° SKEW
OVER INTERSTATE 90 — SEC. 30/29-T2N-R12E
STR. NO. 52-670-285 — IM 0901(163)9

PENNINGTON COUNTY
S. D. DEPT. OF TRANSPORTATION
FEBRUARY 2014

DESIGNED BY	CK. DES. BY	DRAFTED BY	
KH	TK	JRK	Kevin N. Goeden
PENN0223	0223KG07		BRIDGE ENGINEER

STATE OF	PROJECT	SHEET NO.	TOTAL SHEETS
S.D.	IM 0901(163)9	E92	E102

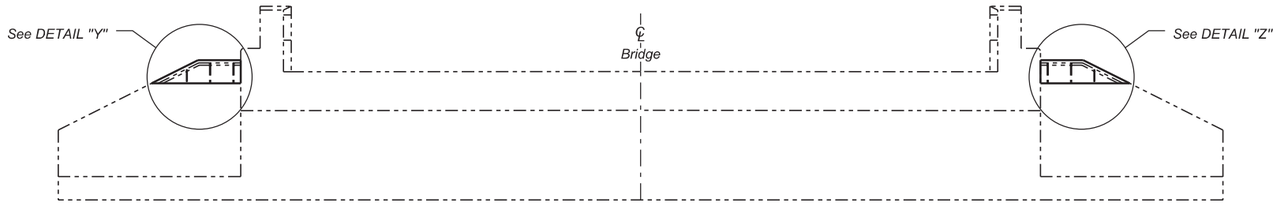

SECTION B - B

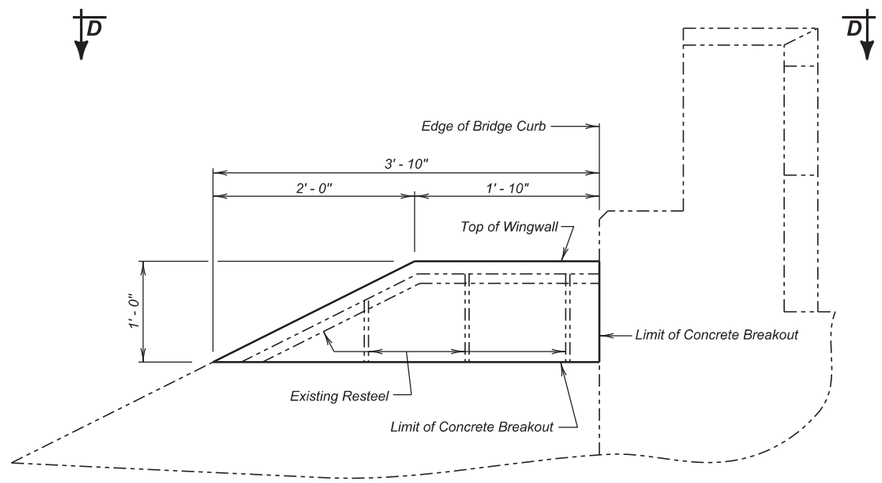

DETAIL "Y"

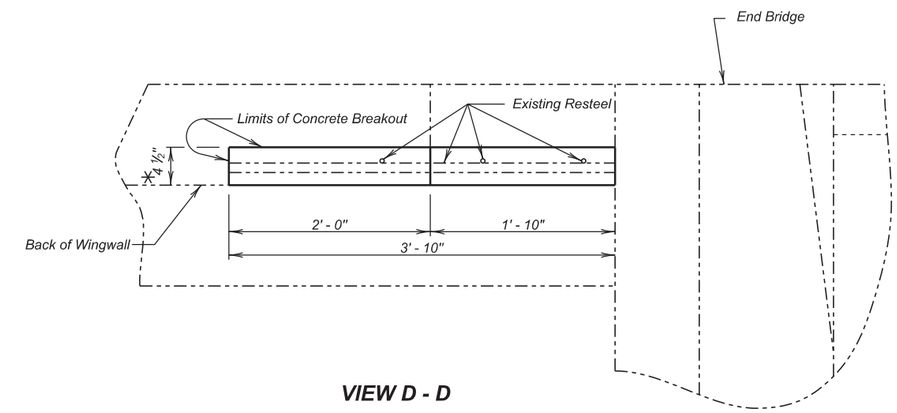

VIEW D - D

*Limits of Concrete Breakout should be at least 1" beyond resteel

NOTE :
This sheet is to be used in conjunction with Sheet 7 of 11.

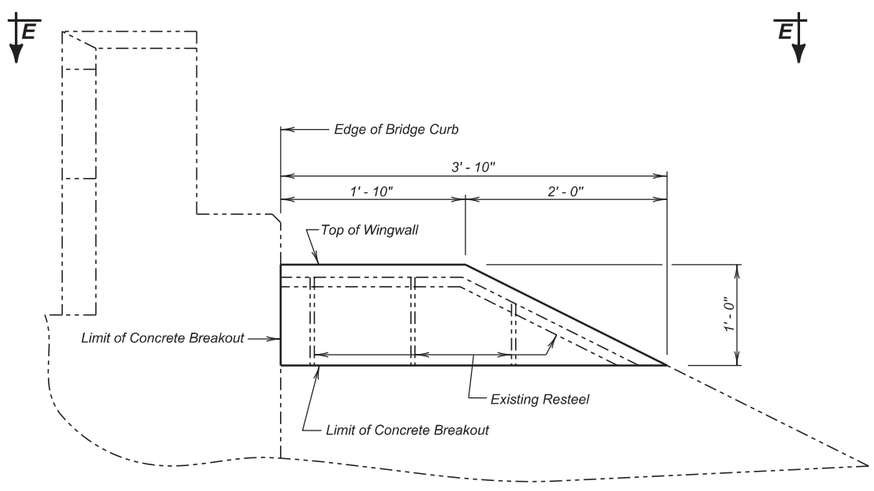

DETAIL "Z"

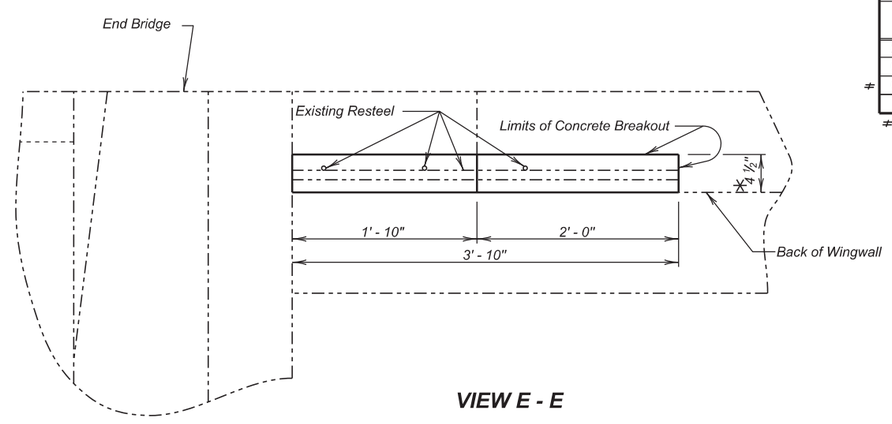

VIEW E - E

*Limits of Concrete Breakout should be at least 1" beyond resteel

ESTIMATED QUANTITIES

ITEM	UNIT	QUANTITY
Breakout Structural Concrete	Cu.Yd.	0.3
Class A45 Concrete, Bridge Repair	Cu.Yd.	0.3
# Galvanic Anode	Each	6

Not shown on this sheet. See notes for details.

ABUTMENT WING WALL REPAIR (CONTINUED)

FOR

254' - 0" CONTINUOUS CONCRETE BRIDGE

30' - 0" ROADWAY — 0° SKEW
OVER INTERSTATE 90 — SEC. 30/29-T2N-R12E
STR. NO. 52-670-285 — IM 0901(163)9

PENNINGTON COUNTY
S. D. DEPT. OF TRANSPORTATION
FEBRUARY 2014

DESIGNED BY	CK. DES. BY	DRAFTED BY	
KH	TK	JRK	Kevin N. Goeden BRIDGE ENGINEER
PENN0223	0223KG08		

52071

STATE OF	PROJECT	SHEET NO.	TOTAL SHEETS
S.D.	IM 0901(163)9	E93	E102

-X720-

INDEX OF BRIDGE SHEETS.—

Sheet No. 1 - General Drawing & Quantities.
Sheet No. 2 - Details of Std. Superstructure. SCS-30-00-254-1-3 (12-20-58)
Sheet No. 3 - Details of Std. Substructure. SCS-30-00-254-2-3 (9-11-58)
Sheet No. 4 - Type-B Railing & Drain Details. SR-SCS-30-00-254-3-3 (12-30-58)

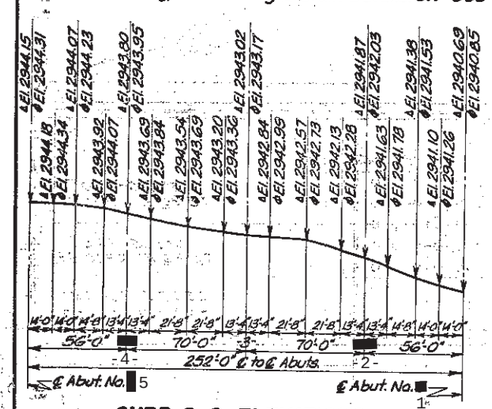

CURB & ℄ ELEVATIONS

NOTE: △ equals Top of Slab @ Curb.
◊ equals Top of Slab @ ℄ Roadway.

NOTE: Elevations shown above are top of finished slab at curb and ℄ Roadway. These elevations provide camber for dead load and plastic flow. Do not use camber dimensions shown on Sheet No. 2 of bridge plans.

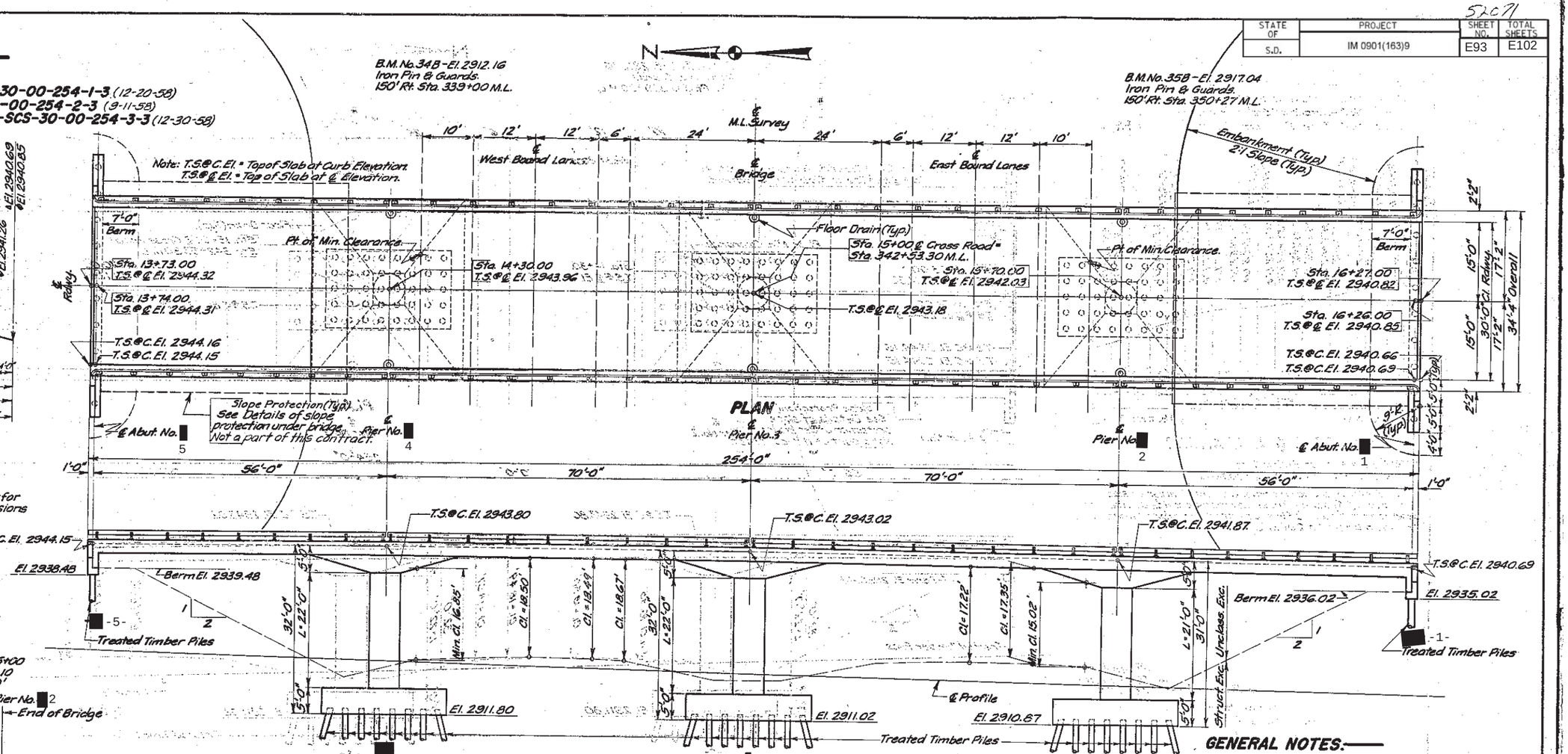

ELEVATION

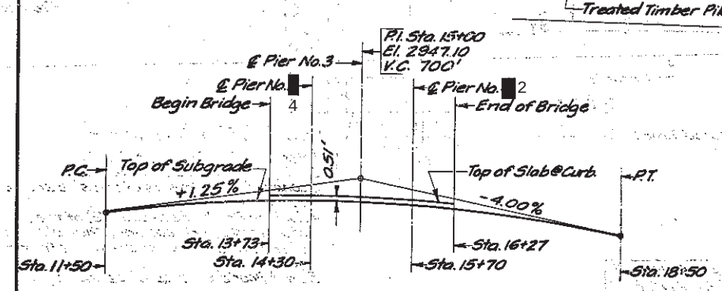

SUBGRADE CURVE DATA

SPECIFICATION NOTE:—

Use current South Dakota Standard Specifications for Roads and Bridges; and the Supplemental Specification for Timber Bearing Piles dated September 1, 1959.

NOTE: THESE PLANS HAVE RESTRICTED CLEARANCE. To be modified by CCO to provide 16.0± clearance.

GENERAL NOTES:—

1. See NOTES on Sheets No. 2, 3 & 4.
2. Rail posts shall be built vertical.
3. Longitudinal elements of the slab shall conform to the vertical curve.
4. Surface finish, Sec. 4G.3.x(3) of the current South Dakota Standard Specifications, shall also include such portions of the structure which are visible from any traveled lane.
5. Omit floor drains except as shown.

TEST HOLE DATA

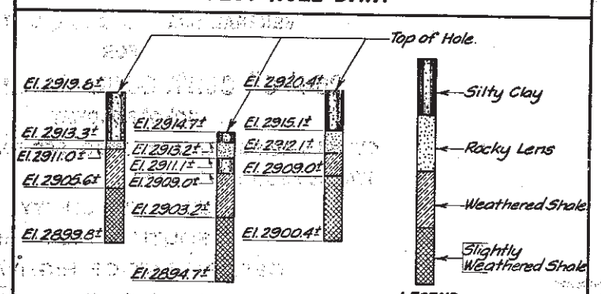

Test Hole No. F4	Test Hole No. F5	Test Hole No. F6
on ℄ of M.L.	122 Rt. ℄ of M.L.	120' Lt. ℄ of M.L.
Sta. 342+89.3	Sta. 342+74.3	Sta. 342+75.3

ESTIMATED QUANTITIES

ITEM	Concrete - Cu. Yds. Class "A"	Concrete - Cu. Yds. Lightweight	Steel - Lbs. Reinf.	Steel - Lbs. Struct.	Type "B" Steel Railing - Lin. Ft.	Treated Timber Piles @ Lin. Ft.	Excavation - Cu. Yds. Struct.	Excavation - Cu. Yds. ◊Unclass.	Pile Shoes * No.
Superstructure	334.7	313.7	189,450	50	510.3				
Abut. No. 1	18.6		1,570	480		10@35'=350'	10		10
Abut. No. 5	18.6		1,570	480		10@40'=400'	10		10
Pier No. 2	89.7		11,875	40		40@10'=400'	150		40
Pier No. 3	88.7		11,875	40		40@10'=400'	130		40
Pier No. 4	89.7		11,620	40		40@15'=600'	185		40
Totals	680.0	313.7	177,960	1,130	510.3	◊ 2,150	455	◊ —	* —

◊ One Treated Timber Test Pile shall be driven at Abuts. No. 1 & 5 and at Piers No. 2, 3 & 4 before remaining piles are ordered.
△ See Grading Plans for Unclassified Excavation.
* American No. 1 All Steel Pile Shoes or Equivalent shall be used. The cost shall be included in the unit price bid for Treated Timber Piles.
★ See Supplemental Specifications dated Feb. 1, 1958.
PILE NOTE:- Piles driven at Abuts. No. 1 & 5 including test piles, shall obtain their full bearing (20 Tons) in the natural ground below the new embankments elevations 2924.2± and 2916.7± respectively. Pre bored holes thru the fill to natural ground are authorized and shall be a minimum diameter 2" larger than the nominal diameter (3" from butt) of the pile.

ORIGINAL CONSTRUCTION PLANS

GENERAL DRAWING AND QUANTITIES
FOR
254'-0" CONT. CONC. SLAB BRIDGE
30'-0" ROADWAY
OVER I.S. NO. 90 STA. 342+53.30 SEC. 30/29-T2N-R12E
STA. 13+73.00 TO 16+27.00 I 90-2(8)77
STR. NO. 52-670-285 PENNINGTON COUNTY
SOUTH DAKOTA H20-S16-44 (8 ALT.)
DEPARTMENT OF HIGHWAYS
NOV. 1958 (9) OF (11)

-X720-

DESIGNED BY	DRAWN BY	CHECKED BY	APPROVED
	R.C.M.	B.D.M.	BRIDGE ENGINEER

52-670-285

STATE OF	PROJECT	SHEET NO.	TOTAL SHEETS
S.D.	IM 0901(163)9	E94	E102

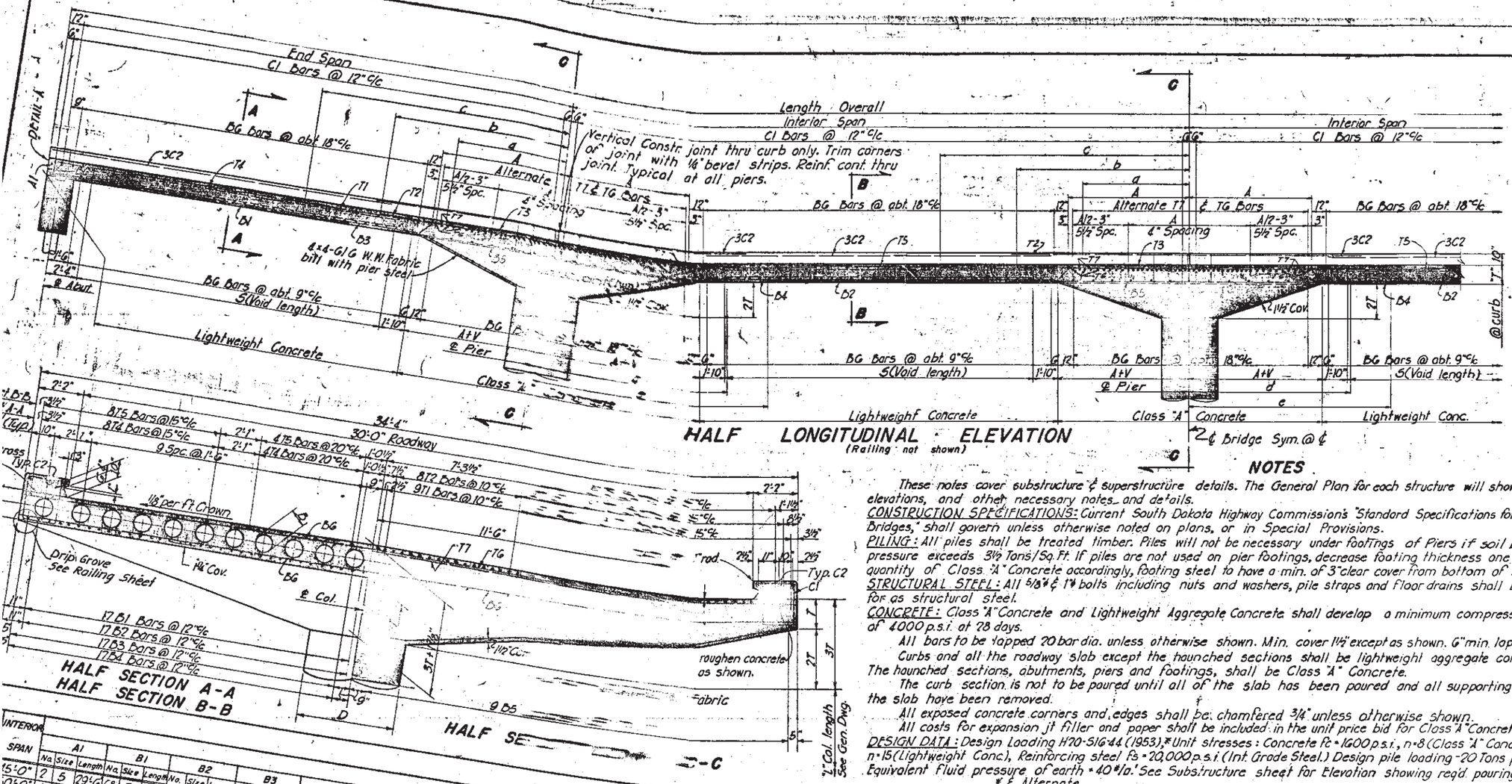

Note: Reinf. to be cont thru joint.

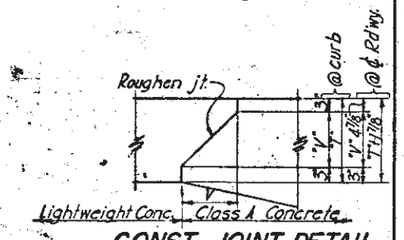

CONST. JOINT DETAIL

ORIGINAL CONSTRUCTION PLANS

NOTES

These notes cover substructure & superstructure details. The General Plan for each structure will show spans, elevations, and other necessary notes and details.

CONSTRUCTION SPECIFICATIONS: Current South Dakota Highway Commission's "Standard Specifications for Roads and Bridges," shall govern unless otherwise noted on plans, or in Special Provisions.

PILING: All piles shall be treated timber. Piles will not be necessary under footings of Piers if soil bearing pressure exceeds 3 1/2 Tons/Sq. Ft. If piles are not used on pier footings, decrease footing thickness one foot, change quantity of Class "A" Concrete accordingly, footing steel to have a min. of 3" clear cover from bottom of footing.

STRUCTURAL STEEL: All 5/8"φ & 1"φ bolts including nuts and washers, pile straps and floor drains shall be paid for as structural steel.

CONCRETE: Class "A" Concrete and Lightweight Aggregate Concrete shall develop a minimum compressive strength of 4000 p.s.i. at 28 days.

All bars to be lapped 20 bar dia. unless otherwise shown. Min. cover 1 1/2" except as shown. 6" min. lap for W.W. Fabric.

Curbs and all the roadway slab except the haunched sections shall be lightweight aggregate concrete. The haunched sections, abutments, piers and footings, shall be Class "A" Concrete.

The curb section is not to be poured until all of the slab has been poured and all supporting forms for the slab have been removed.

All exposed concrete corners and edges shall be chamfered 3/4" unless otherwise shown.

All costs for expansion jt filler and paper shall be included in the unit price bid for Class "A" Concrete.

DESIGN DATA: Design Loading H20-S16-44 (1953), * Unit stresses: Concrete fc = 1600 p.s.i., n = 8 (Class "A" Conc.) n = 15 (Lightweight Conc.), Reinforcing steel fs = 20,000 p.s.i. (Int. Grade Steel.) Design pile loading - 20 Tons per pile. Equivalent fluid pressure of earth = 40#/ft.² See Substructure sheet for Elevation showing req'd. pouring sequence.

* & Alternate

5/8"φ x 12" galv. bolts with wrought iron washers @ 3'-8" ctrs. 18 Req'd. for each bridge. Wrap end with tar paper.

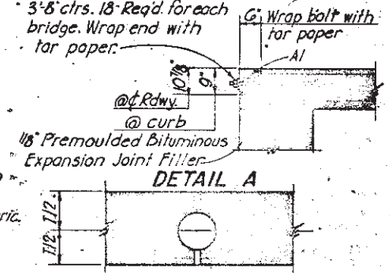

Note: One 3/8"φ weephole shall be provided near each end of each void. Weepholes shall be placed in straight lines normal to ℄ roadway and shall be kept positively open down to and thru the bottom forms for breather holes during the casting & curing period for slabs. Void forms to be tied securely in place during casting period.

SLAB DATA

REINFORCING SCHEDULE

T2 Size	Length	No.	T3 Size	Length	No.	T4 Size	Length	No.	T5 Size	Length	No.	T6 Size	Length	No.	T7 Size	Length	No.	C1 Size	Length	"E"	No.	C2 Size	Length
8	25'-0"	48	8	15'-6"	48	5	20'-0"	48	5	11'-9"	69	9	34'-0"	66	9	23'-0"	328	4	8'-0"	1'-11"	82	5	27'-6"
9	28'-0"		9	17'-6"			22'-0"			12'-3"	78	9		72	9		364		8'-3"	2'-0"			30'-0"
10	30'-6"		10	19'-0"			23'-0"			12'-9"	84	9		81	9		400		8'-3"	2'-1"			30'-0"
10	33'-6"		10	21'-0"			25'-0"			13'-3"	90	8		87	8		436		8'-6"	2'-2"			32'-9"
11	36'-6"		11	22'-6"			27'-0"			13'-9"	96	8		96	8		472		8'-9"	2'-3"			35'-3"
11	39'-0"	48	11	24'-6"	48	5	29'-0"	48	5	14'-3"	105	8	34'-0"	102	8	23'-0"	508	4	8'-9"	2'-4"	42	5	37'-9"

DIMENSIONS

"B"	"S"	"T"	"2T"	"A"	"V"	A+V	"D"	"a"	"b"	"c"	"d"	"e"
7"	22'-4"	1'-3"	2'-6"	8'-9"	9"	9'-6"	4'-0"	7'-9"	12'-6"	18'-0"	11'-6"	14'-0"
8"	25'-4"	1'-4"	2'-8"	9'-8"	10"	10'-6"	4'-4"	8'-9"	14'-0"	20'-3"	12'-6"	12'-6"
9"	28'-4"	1'-5"	2'-10"	10'-7"	11"	11'-6"	4'-8"	9'-6"	15'-3"	22'-6"	13'-6"	16'-0"
10"	31'-4"	1'-6"	3'-0"	11'-6"	12"	12'-6"	5'-0"	10'-6"	16'-9"	24'-6"	14'-6"	18'-0"
11"	34'-4"	1'-7"	3'-2"	12'-5"	1'-1"	13'-6"	5'-6"	11'-3"	18'-3"	27'-0"	15'-6"	20'-3"
12"	37'-4"	1'-8"	3'-4"	13'-4"	1'-2"	14'-6"	6'-0"	12'-3"	19'-6"	29'-0"	17'-0"	21'-0"

BAR BENDS

Note: All dimensions are out to out.

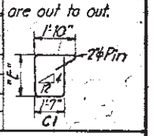

ABUTMENTS

Span	No. of Piles	Struct. Steel LBS.	Class A Conc. Comfort Quantity	Cu. Yds. Lin. Ft. Per 3' Pier	W.W. Fabric LBS.	Reinf. Steel LBS.	No. of Floor Drains	Steel LBS.	No. of Piles	Class A Conc. Cu. Yds.	Light-Weight Conc. Cu. Yds.	Reinf. Steel LBS.	1/8" φ Bolts	No. of Floor Drains	Struct. Steel LBS.
18	865	75.01	1.396	9.845	692	54	6	85	40	162.9	85.4	6,360	18	16	
18	865	90.1	1.639	11.615	754	6	85	66	192.7	27.4	13,340	9,555		16	
18	865	120.0	1.901	13.615	814	6	110	72	223.8	127.3		104,200		16	
20	960	127.5	2.187	14.445	874	6	110	90	257.8	208.9		124,650		20	
20	960	157.5	2.440	17.445	837	6	145	105	294.9	289.9		139,250	18	20	420
20	960	200.0	3.142	18.645	772	6	128	126	334.7	313.7				24	

ESTIMATED QUANTITIES

THREE PIERS — SLABS & CURBS

Span	Class A Conc. Cu. Yds.	Light-Weight Conc. Cu. Yds.	Reinf. Steel LBS.	1/8" φ Bolts	No. of Floor Drains	Struct. Steel LBS.
1(F)(QL)	185.1	13,340(PL)		78	1"	1566
2(R)(W)	211.4	98,590		84	8"	2280
3(A.B.)	237.8	108,800		90	9"	2494
4(S.B.)	263.9	112,085		110	10"	2758
5(D)	289.3	146,450		125	11"	3024
6(E.B.)	317.7	161,230	1596	140	12"	3236

* Includes W.W. Fabric
* Includes wt. of 4 Spacer bars per pier.

TOTALS, Exclusive of Railing & Excavation

Span	Class A Conc. Cu. Yds.	Light-Weight Conc. Cu. Yds.	Reinf. Steel LBS.	Struct. Steel LBS.	No. of Piles	Void "B"	Void V.L.F.
1(F)(QL)	185.1	13,340(PL)			78	1"	1566
2(R)(W)	211.4	98,590			84	8"	2280
3(A.B.)	237.8	108,800			90	9"	2494
4(S.B.)	263.9	112,085			110	10"	2758
5(D)	289.3	146,450			125	11"	3024
6(E.B.)	317.7	161,230	1596		140	12"	3236

* Cost of Voids to be included in the unit bid price for Lightweight Concrete.

* Weights are for round c... (See All Railing sheet fo... when rectangle drains a... ...ains only. ...weights

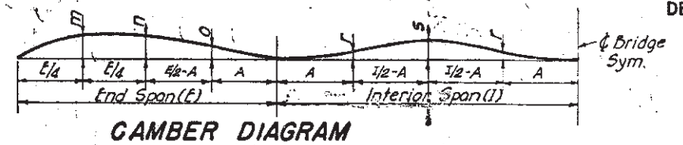

CAMBER DIAGRAM

End Span	m	n	o	r	s
36'	5/16"	1/4"	1/32"	1/32"	7/16"
40'	7/16"	5/16"	1/16"	1/16"	3/8"
44'	5/8"	7/16"	1/16"	1/16"	9/16"
48'	3/4"	9/16"	1/8"	1/16"	11/16"
52'	1"	3/4"	1/8"	1/8"	1"
56	1 1/8"	13/16"	3/16"	1/8"	1"

Camber is calculated for dead load plus plastic flow. The values shown for camber shall be added to the proposed grade elevations at the respective stations to establish the elevation of the top of the finished roadway slab.

Camber Diagram B Drains Rev. 12-20-58
Slab Re-Steel & Quantities Rev. 11-8-58

DETAILS OF STANDARD SUPERSTRUCTURE FOR

4-SPAN CONTINUOUS CONCRETE SLAB BRIDGES

WITH

SINGLE COLUMN PIERS ON PILES

30'-0" ROADWAY 164'-0" TO 254'-0" OVERALL LENGTH

AUGUST 1957 SOUTH DAKOTA H20-S16-44 & ALT.

DEPARTMENT OF HIGHWAYS

KIRKHAM, MICHAEL & ASSOCIATES CONSULTING ENGINEERS

STR. NO. 52-670-285 (10) OF (11)

DESIGNED BY	DRAWN BY	CHECKED BY	APPROVED
C.L.U.	E.C.H.	K.L.J.	

STATE OF	PROJECT	SHEET NO.	TOTAL SHEETS
S.D.	IM 0901(163)9	E95	E102

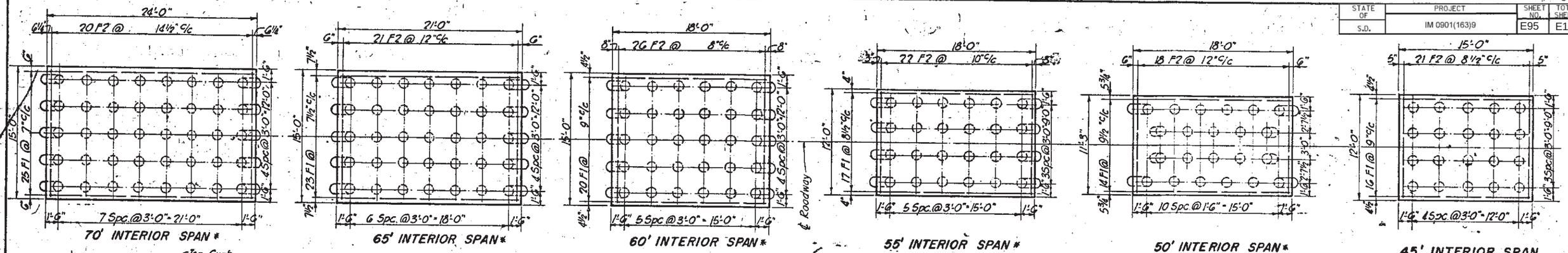

FOOTING DETAILS

*-Piles in end rows to be battered at 3 on 12 as shown. (See Typical Pier Elevation.)

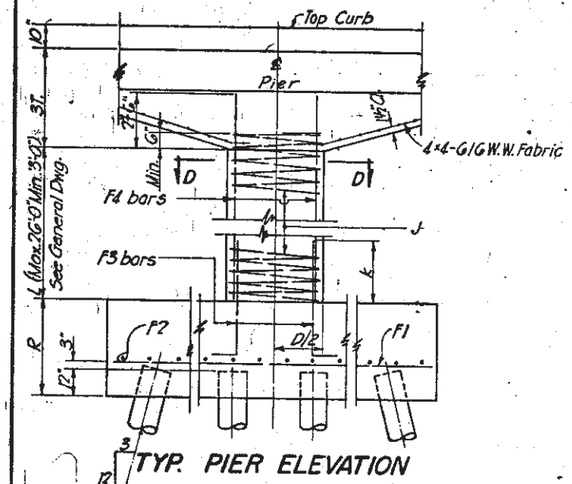

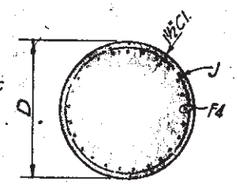

DATA FOR ONE PIER

LENGTH OF INTERIOR SPAN	REINFORCING SCHEDULE (ONE PIER)																			DIMENSIONS				BAR BENDS
	# W.W.F.	F1			F2			F3				F4				J								
	4X4-6/6	No	Size	Length	No	Size	Length	No	Size	"Y"	Length	No	Size	Length	No	Size	Pitch	Length ‡		R	K	D	L	
45'	465 *	16	10	14'-6"	21	7	11'-6"	32	11	4'-5"	5'-0"	32	11	L+2'-6"	1	4	2½"	70+56.5L		3'-9"	2'-0"	4'-0"	See General Drawing	"Y" F3
50'	516 *	14	11	17'-6"	18	7	10'-9"	39	↓	4'-8"	5'-3"	39	↓	↓	↓	↓	↓	75+61.5L		4'-0"	↓	4'-4"		
55'	565 *	17	11	17'-6"	22	6	11'-6"	42	↓	4'-11"	5'-6"	42	↓	↓	↓	↓	↓	85+66.5L		4'-3"	↓	4'-8"		
60'	660 *	20	10	17'-6"	26	7	12'-6"	44	↓	4'-11"	5'-6"	44	↓	↓	↓	↓	↓	90+71.5L		4'-3"	↓	5'-0"		
65'	660 *	23	11	20'-6"	21	8	14'-6"	42	↓	5'-2"	5'-9"	42	↓	↓	↓	↓	↓	100+79.2L		4'-6"	↓	5'-6"		
70'	705 *	25	11	23'-6"	20	7	14'-6"	37	11	5'-8"	6'-3"	37	11	L+2'-6"	1	4	2½"	110+86.5L		5'-0"	2'-0"	6'-0"		

* Includes 15% for laps and waste. ‡ Includes length of 1½ turns top & bot.

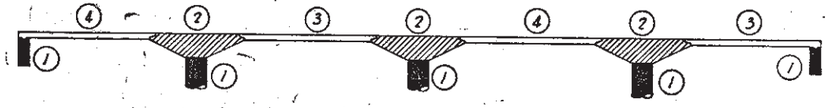

REQUIRED PLACING SEQUENCE

(Req'd. Min. 72 Hrs. between pours 3 & 4)

Curb to be poured after all the deck has been placed and all supporting forms removed.

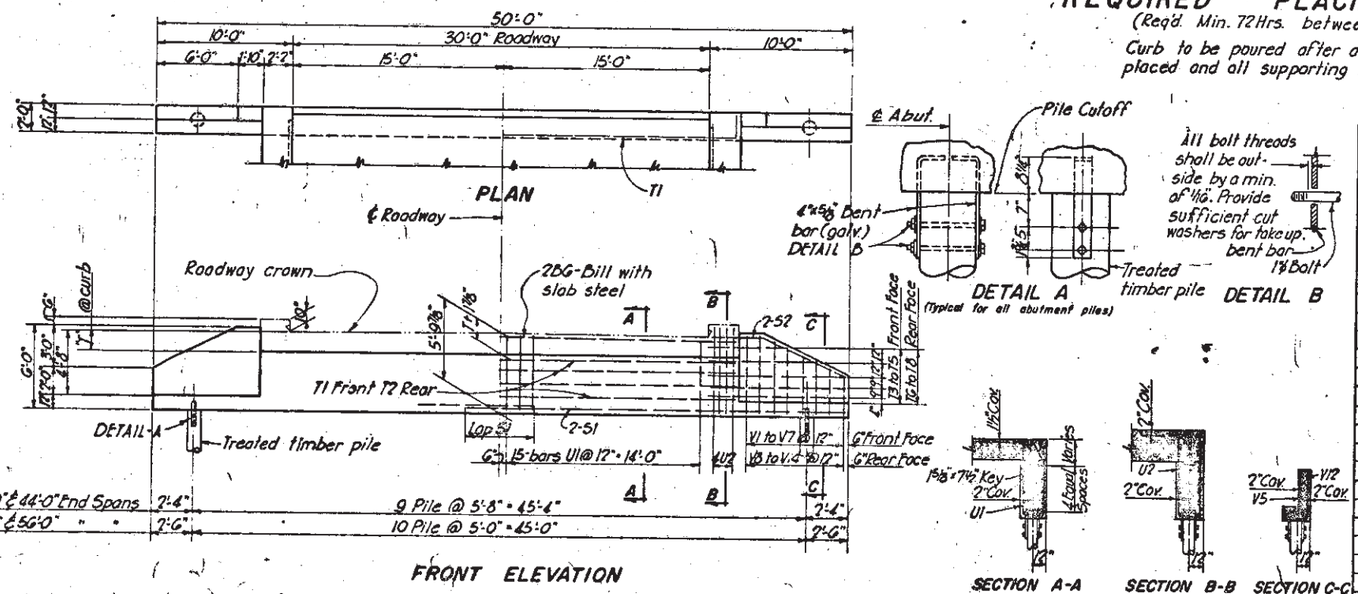

DETAILS OF ABUTMENT

REINFORCING SCHEDULE

(For two abutments)

No.	Size	Length	Mark	Type	A
8	9	26'-9"	S1	Str.	—
8	9	9'-9"	S2	16	—
8	5	37'-0"	T1	2	—
8	5	34'-0"	T2	Str.	—
12	4	9'-9"	T3	↑	—
4	4	7'-9"	T4	↑	—
4	4	5'-9"	T5	↑	—
12	5	10'-0"	T6	↑	—
4	5	8'-0"	T7	↑	—
4	5	6'-0"	T8	Str.	—
60	4	18'-0"	U1	17	—
16	5	18'-6"	U2	18	—
8	4	4'-9"	V1	Str.	—
4	↑	4'-6"	V2	↑	—
4	↑	4'-0"	V3	↑	—
4	↑	3'-6"	V4	↑	—
4	↑	3'-0"	V5	↑	—
4	↑	2'-6"	V6	↑	—
4	↑	2'-0"	V7	Str.	—
8	↑	8'-0"	V8	19	5'-8"
4	↑	7'-9"	V9	↑	5'-5"
4	↑	7'-3"	V10	↑	4'-11"
4	↑	6'-9"	V11	↑	4'-5"
4	↑	6'-3"	V12	↑	3'-11"
4	↑	5'-9"	V13	↑	3'-5"
4	4	5'-3"	V14	19	2'-11"

BAR BENDS

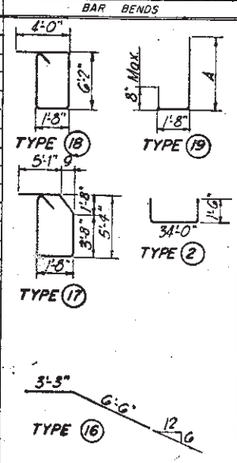

Note: All dimensions are out to out.

ORIGINAL CONSTRUCTION PLANS

DETAILS OF STANDARD SUBSTRUCTURE FOR

4-SPAN CONTINUOUS

CONCRETE SLAB BRIDGES

WITH

SINGLE COLUMN PIERS ON PILES

30'-0" ROADWAY 164'-0" TO 254'-0" OVERALL LENGTH

AUGUST, 1957 SOUTH DAKOTA H20-S16-44 & ALT

DEPARTMENT OF HIGHWAYS

KIRKHAM, MICHAEL & ASSOCIATES CONSULTING ENGINEERS

STR. NO. 52-670-285 (11) OF (11)

DESIGNED BY	DRAWN BY	CHECKED BY	APPROVED
C.J.N.	F.C.H.	K.A.R.	K.R. Lewis BRIDGE ENGINEER

Footing & Quantities Rev. 9-11-58

STATE OF	PROJECT	SHEET NO.	TOTAL SHEETS
S.D.	IM 0901(163)9	E96	E102

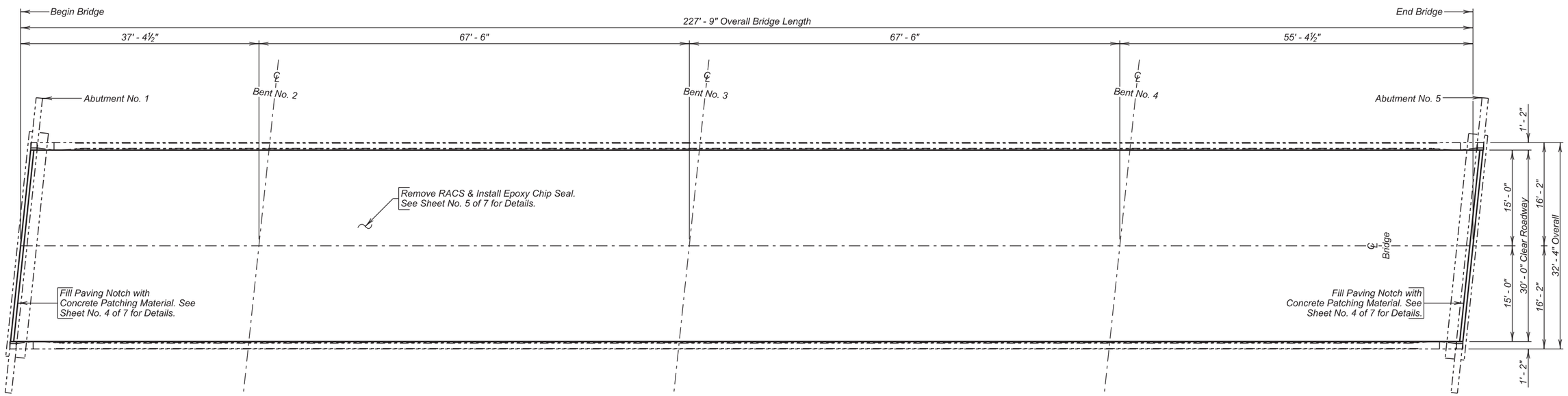

PLAN

INDEX OF BRIDGE SHEETS

Sheet No. 1 - Layout for Upgrading
Sheet No. 2 - Estimate of Structure Quantities and Notes
Sheet No. 3 - Notes (Continued)
Sheet No. 4 - Paving Notch Reinforcement
Sheet No. 5 - Two Coat Epoxy Chip Seal Details
Sheet Nos. 6 & 7 - Original Construction Plans

LAYOUT FOR UPGRADING

FOR

227' - 9" PRESTRESSED BEAM BRIDGE

30' - 0" ROADWAY — 6° SKEW LHF
OVER I-90 — SEC. 01-T1N-R14E
STR. NO. 52-830-310 — IM 0901(163)9
PCN 0223

PENNINGTON COUNTY

S. D. DEPT. OF TRANSPORTATION

MAY 2014

1 OF 7

PLANS BY :
OFFICE OF BRIDGE DESIGN, SOUTH DAKOTA DEPARTMENT OF TRANSPORTATION

DESIGNED BY	CK. DES. BY	DRAFTED BY	
KH	TK	KH	Kevin N. Goeden
PENN0223	0223KH01		BRIDGE ENGINEER

ESTIMATE OF STRUCTURE QUANTITIES

ITEM NO.	DESCRIPTION	QUANTITY	UNIT
110E0070	Remove Rubberized Asphalt Chip Seal	683.3	Sq. Yd.
460E0170	Concrete Patching Material	127.6	Cu. Ft.
460E0300	Breakout Structural Concrete	0.8	Cu. Yd.
460E0380	Install Dowel in Concrete	16	Each
480E0200	Epoxy Coated Reinforcing Steel	56	Lb.
491E0015	Two Coat Epoxy Bridge Deck Ship Seal	759.2	Sq. Yd.
491E0110	Abrasive Bridge Deck Blasting	759.2	Sq. Yd.
491E0120	Bridge Deck Grinding	759.2	Sq. Yd.
491E0130	Concrete Removal, Class A	23.3	Sq. Yd.
491E0140	Concrete Removal, Class B	23.3	Sq. Yd.

SPECIFICATIONS

1. Design Specifications: AASHTO Standard Specifications for Highway Bridges 17th Edition using Working Stress Design.

2. Construction Specifications: South Dakota Standard Specifications for Roads and Bridges, 2004 Edition and Required Provisions, Supplemental Specifications and Special Provisions as included in the Proposal.

DETAILS AND DIMENSIONS OF EXISTING BRIDGE

All details and dimensions of the existing bridge, contained in these plans, are based on the original construction plans and shop plans. It is the Contractor's responsibility to inspect and verify the actual field conditions and any necessary as-built dimensions affecting the satisfactory completion of the work required for this project.

SCOPE OF BRIDGE WORK & SEQUENCE OF OPERATIONS

All work on this structure shall be accomplished with the traffic control shown elsewhere in the plans. Alternate sequence of operations may be submitted by the contractor for approval by the engineer a minimum of two weeks prior to the preconstruction meeting.

1. Remove the Rubberized Asphalt Chip Seal, perform bridge deck grinding and repair the bridge deck by removing all loose and delaminated concrete from the bridge deck surface for the first and second phase of construction.

2. Clean the bridge deck surface with abrasive blasting for the first phase of construction.

3. Modify the existing paving notch for the first phase of construction.

4. Place a Two Coat Epoxy Bridge Deck Chip Seal for the first phase of construction.

5. Switch traffic and repeat steps 2 through 4 for the second phase of construction.

GENERAL CONSTRUCTION NOTES

1. All mild reinforcing steel shall conform to ASTM A615, Grade 60.

2. All exposed concrete corners and edges shall be chamfered 3/4" unless noted otherwise in the plans. Match existing chamfer if the existing chamfer differs.

3. Use 2" clear cover on all reinforcing steel except as shown otherwise.

CONCRETE BREAKOUT

1. The existing paving notches shall be broken out to the limits shown on the plans. Breakout limits shall be defined with a 3/4" deep sawcut (unless specified otherwise in these plans), where practical, as approved by the Engineer. Reinforcing steel that is exposed and is scheduled for use in the new construction shall be cleaned and straightened to the satisfaction of the Engineer. Care shall be taken not to damage the existing reinforcing steel that is to be reused in the new construction during concrete breakout. Any reinforcing steel that is damaged during concrete breakout shall be replaced or repaired, as approved by the Engineer, by the Contractor at no cost to the Department. The existing reinforcing steel that is to be reused in the new construction and that is exposed during concrete breakout shall be epoxy coated in accordance with the "Epoxy Coating Existing Reinforcing Steel" notes.

2. All broken out concrete, discarded reinforcing bars and expansion devices shall be disposed of by the Contractor. Any disposal of discarded material shall be in accordance with the Environmental Commitments.

3. The contract unit price per cubic yard for "Breakout Structural Concrete" shall include breaking out concrete, cleaning, straightening existing reinforcing steel, and disposal of all broken out material.

EPOXY COATING EXISTING REINFORCING STEEL

1. The existing resteel in the bridge deck that is exposed during the removal of loose and delaminated concrete, and is to be reused, shall be epoxy coated in the field.

2. The reinforcing steel shall be abrasive blasted clean and then epoxy coated. The epoxy coating shall be inert in concrete and compatible with the coating applied to the new epoxy coated reinforcing steel. This coating shall be the epoxy touch up coating material supplied by an epoxy coating manufacturer who supplies coating material for new epoxy coated reinforcing steel. The abrasive blasted reinforcing steel shall be coated promptly and before detrimental oxidation occurs. The coating shall be allowed to cure for 24 hours or as per the manufacturer's recommendations, whichever is more stringent, before concrete can be placed. These bars shall be clean and free from all surface contaminants before coating.

3. The cost of cleaning and epoxy coating the existing reinforcing steel shall be incidental to the various bid items.

INSTALLING DOWELS IN CONCRETE

1. Holes drilled in the existing concrete shall be true and normal or as shown in the plans. Drilling holes using a core drill shall not be allowed. Care shall be taken not to damage the existing reinforcing steel. It is likely that some of the existing reinforcing steel shown in the original construction plans may have been placed out of position during original construction. Therefore, prior to the start of drilling any holes in the concrete, an effort will be made by Department forces to mark on the concrete surface where practical any locations of the in-place reinforcing steel. In spite of this precaution, the Contractor can still expect to encounter and have to drill through reinforcing steel or shift the dowel spacing as approved by the Engineer to miss the existing reinforcing steel. If the Contractor shifts the dowel spacing, the unused drill holes shall be completely filled with the epoxy resin as approved by the Engineer.

2. The epoxy resin mixture shall be of a type for bonding steel to hardened concrete and shall conform to AASHTO M235 Type IV, (Equivalent to ASTM C881, Type IV). Grade 1, 2 or 3 may be used for vertical dowels.

3. The diameter of the drilled holes shall not be less than 1/8 inch greater, nor more than 3/8 inch greater than the diameter of the dowels or as per the Manufacturer's recommendations. The drilled holes shall be blown out with compressed air using a device that will reach the back of the hole to ensure that all debris or loose material has been removed prior to epoxy injection.

4. Mix epoxy resin as recommended by the Manufacturer and apply by an injection method as approved by the Engineer. Beginning at the back of the drilled holes, fill the holes 1/3 to 1/2 full of epoxy, or as recommended by the Manufacturer, prior to insertion of the steel bar. Care shall be taken to prevent epoxy from running out of the horizontal holes prior to steel bar insertion. Rotate the steel bar during installation to eliminate voids and ensure complete bonding of the bar. Insertion of the bars by the dipping or painting method will not be allowed.

5. No loads shall be applied to the epoxy grouted dowel bars until the epoxy resin has had sufficient time to cure as specified by the epoxy resin manufacturer.

6. Dowel bars shall be deformed bars conforming to ASTM A615 Grade 60.

7. The cost of epoxy resin, dowels, installation and other incidental items shall be incidental to the contract unit price per each for "Install Dowel in Concrete".

ESTIMATE OF STRUCTURE QUANTITIES AND NOTES

FOR

227' - 9" PRESTRESSED BEAM BRIDGE

STR. NO. 52-830-310

MAY 2014

DESIGNED BY	CK. DES. BY	DRAFTED BY	
KH	TK	KH	Kevin N. Goeden
PENN0223	0223HH02		BRIDGE ENGINEER

REMOVE EXISTING RUBBERIZED ASPHALT CHIP SEAL

Remove the Rubberized Asphalt Chip Seal (RACS) from the deck surface in accordance with Section 491 of the Construction Specifications. The Contractor has the option of removing the RACS for the full width of roadway instead of in phases. RACS Removal will be paid for at the contract unit price per square yard for "Remove Rubberized Asphalt Chip Seal."

REMOVAL OF LOOSE AND DELAMINATED CONCRETE

1. This work consists of preparation of the existing bridge deck for Two Coat Epoxy Bridge Deck Chip Seal by removing and replacing the loose and delaminated concrete.

2. Concrete used to repair the deck surface shall be in accordance with the Concrete Patching Material notes in this set of plans.

3. Concrete Removal on the bridge deck shall be divided into two the following two classes:

   a. Concrete Removal, Class A: Concrete Removal, Class A shall consist of the removal of delaminated and visibly loose concrete and any bituminous patches (when present) from the top of existing bridge deck down to a depth no deeper than the top of the top mat of bridge deck reinforcing steel. When grinding is specified, the Concrete Removal, Class A shall be done after the bridge deck has been ground.

   b. Concrete Removal, Class B: Concrete Removal, Class B areas shall be determined after completion of the Concrete Removal, Class A has been accomplished. Concrete Removal, Class B shall consist of the removal of delaminated and visibly loose concrete that exists below the bottom limits of the Concrete Removal, Class A *(below the top of the top mat of reinforcing steel)*.

4. Concrete Removal shall be by jackhammers and chipping hammers or other methods as approved by the Engineer. Jackhammers and chipping hammers shall be used as follows:

   a. Jack hammers heavier than 30 pounds will not be permitted.

   b. Chipping hammers heavier than 15 pounds will not be permitted for removing concrete below the top of the top mat of reinforcing steel.

   c. Jackhammers and chipping hammers shall not be operated at an angle in excess of 45 degrees measured from the surface of the concrete.

   d. Extreme care shall be taken when using jackhammers and chipping hammers to assure that existing reinforcing steel is not damaged or debonded from the sound concrete.

5. Removal shall begin near the center of the loose or delaminated concrete and shall progress outwardly until the loose or delaminated concrete is removed and sound concrete is encountered such that the amount of concrete removal is minimized.

6. The edges of the resulting areas of removed concrete shall be nearly vertical or slightly tapered inward from the top down to a minimum depth of one inch. If this condition is not able to be achieved with jackhammers or chipping hammers, saw cutting the edges of the removal area may be required to attain satisfactory results.

7. Care shall be taken during concrete removal to not nick, gouge, or in any other way damage the in-place reinforcing steel. Any inadvertent damage to the in-place reinforcing steel shall be brought to the attention of the Bridge Construction Engineer and shall be repaired by the Contractor as directed by the Engineer at no additional cost to the Department.

8. Concrete Removal, Class A will be measured to the nearest 0.1 foot and the area computed to the nearest 0.1 square yard. Concrete Removal, Class A will be paid for at the contract unit price per square yard. Payment will be full compensation for all labor, equipment, materials, and all incidental work required to remove the specified concrete, concrete sawing, and disposing of removed material.

9. Concrete Removal, Class B will be measured to the nearest 0.1 foot and the area computed to the nearest 0.1 square yard. Concrete Removal, Class B will be paid for at the contract unit price per square yard. Payment will be full compensation for all labor, equipment, materials, and all incidental work required to remove the specified concrete, concrete sawing, and disposing of removed material.

CONCRETE PATCHING MATERIAL

1. Concrete patching material shall be used to repair the deck areas where loose and delaminated concrete was removed.

2. Concrete patching material shall be packaged, dry, rapid-hardening cementitious mortar or concrete materials conforming to the requirements of ASTM C 928, Type R-3 and shall contain no chlorides, magnesium or phosphates.

3. Water used for the concrete patching material shall be in conformance with Section 790 of the Construction Specifications.

4. Upon completion of the concrete removal and immediately prior to placing any concrete patching material into the concrete removal areas, the removal areas shall be thoroughly cleaned of loose and foreign material by abrasive blasting. The surface profile of the area to receive the patching material shall be in accordance with the manufacturer's recommendations. The abrasive blasting shall be to the extent that all surface laitance is removed. Abrasive blast cleaning shall expose the coarse aggregate and remove rust from any exposed reinforcing steel. After abrasive blasting, the surface shall be cleaned by the use of compressed air to the satisfaction of the Engineer. The air compressor used for cleaning shall be equipped with trap devices capable of providing moisture-free and oil-free air at a recommended pressure of 90 psi.

5. The existing surface at the time of placement of the concrete patching material shall be at least 40° F (4° C), measured by a thermometer placed against the concrete surface and covered with an insulating blanket. The concrete patching material shall be mixed and placed in accordance with the manufacturer's technical data sheet. The Contractor shall provide a manufacturer's technical data sheet to the Engineer prior to performing the work. The concrete patching material shall be maintained at or above 45° F (7° C) for at least 72 hours after placement.

6. Immediately after finishing the concrete patching material, the surface of the concrete patching material shall be covered with a double layer of wet burlap. Within one hour of covering with wet burlap, polyethylene sheeting shall be placed on the wet burlap. The surface shall be wet cured for a minimum of 48 hours or in accordance with the manufacturer's recommendations, whichever is more stringent. Following the wet cure, the burlap and polyethylene sheeting shall be removed and the surface allowed to air dry for a minimum of 48 hours after removal of the burlap and polyethylene sheeting before application of the epoxy chip seal is permitted.

7. Concrete Patching Material will be measured to nearest 0.1 cubic feet as determined from the theoretical yield per bag of Concrete Patching Material. Concrete Patching Material will be paid for at the contract unit price per cubic foot. Payment will be full compensation for all labor, equipment, materials, and all incidental work required to abrasive blast clean the removal areas, and furnish, place and cure the concrete patching material within the removal areas.

TWO COAT EPOXY BRIDGE DECK CHIP SEAL

The Epoxy Chip Seal shall be applied in accordance with the Special Provision for "Two Coat Epoxy Bridge Deck Chip Seal".

NOTES (CONTINUED)

FOR

227' - 9" PRESTRESSED BEAM BRIDGE

STR. NO. 52-830-310

MAY 2014

DESIGNED BY	CK. DES. BY	DRAFTED BY	
KH	TK	KH	Kevin N. Goeden
LAWR0223	0223HH03		BRIDGE ENGINEER

Revised by KH, 7/14/2014

STATE OF	PROJECT	SHEET NO.	TOTAL SHEETS
S.D.	IM 0901(163)9	E99	E102

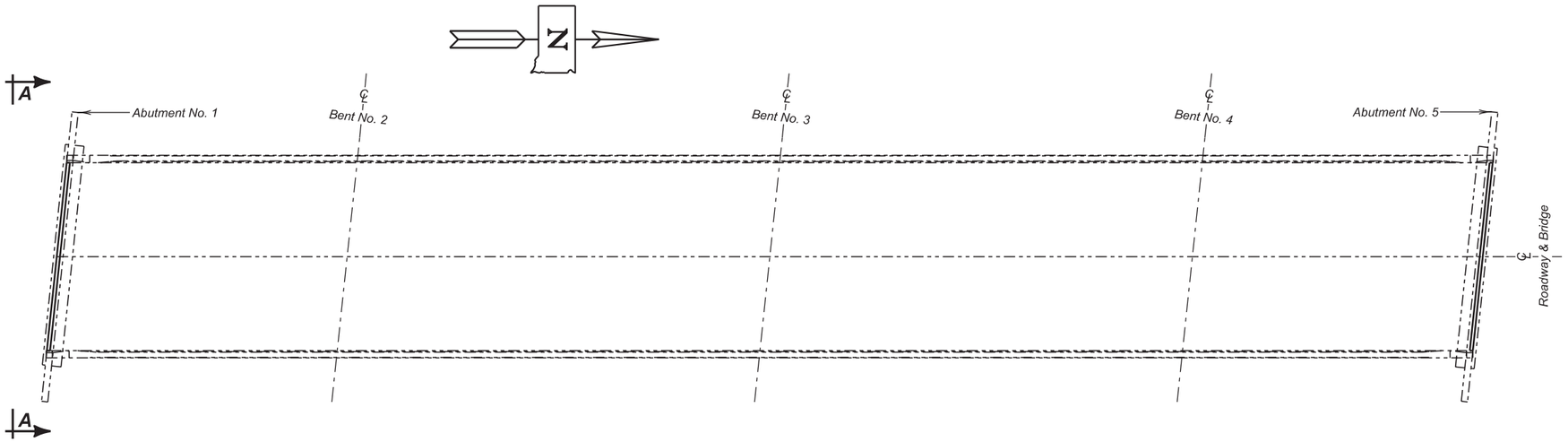

BRIDGE LAYOUT

REINFORCING SCHEDULE
(For Both Ends of Bridge)

	Mk.	No.	Size	Length	Type	Bending Details
PHASE I	△z1	8	5	2' - 8"	17A	
	d1	4	5	6' - 9"	Str.	
PHASE 2	△z1	8	5	2' - 8"	17A	
	d1	4	5	6' - 9"	Str.	

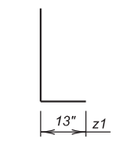

Type 17A

NOTES:
All Dimensions are out to out of bars.
All Bars to be Epoxy Coated.
△ Dowels

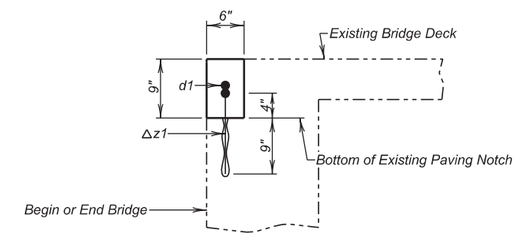

SECTION B - B

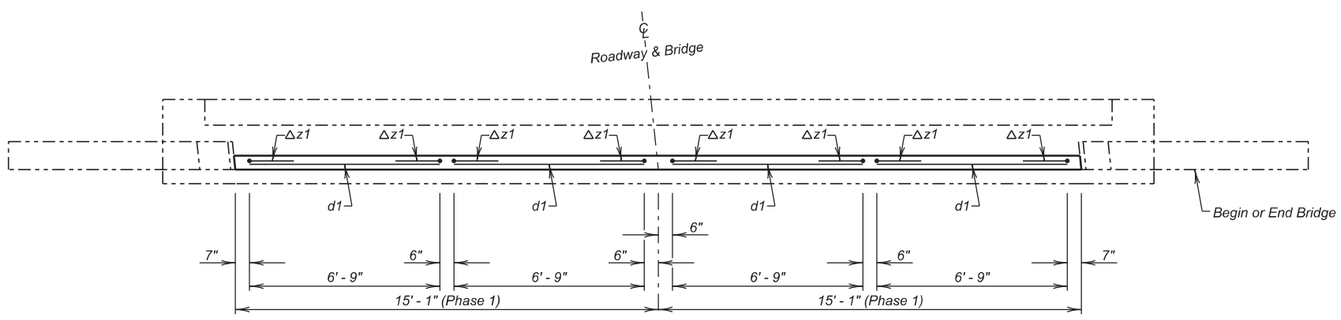

PLAN

✳ z1 Dowels are to be drilled in and grouted with epoxy.

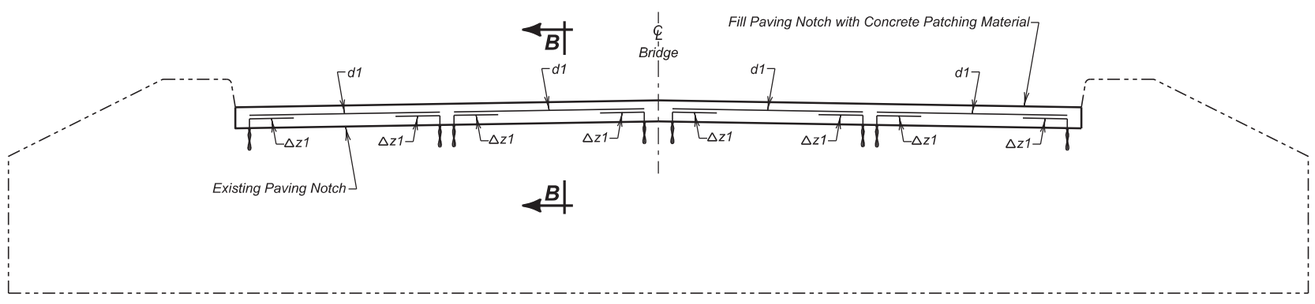

VIEW A - A

ESTIMATED QUANTITIES

ITEM	UNIT	QUANTITY Phase I	QUANTITY Phase 2
Concrete Patching Material	Cu. Ft.	11.3	11.3
Breakout Structural Concrete	Cu. Yd.	0.4	0.4
Install Dowel in Concrete	Each	8	8
✳ Epoxy Coated Reinforcing Steel	Lb.	28	28

✳ Does not include the following quantities for z1 bars as these are paid for in the bid item "Install Dowel in Concrete".

PHASE I	PHASE 2
22 Lb.	22 Lb.

PAVING NOTCH REINFORCEMENT

FOR

227' - 9" PRESTRESSED BEAM BRIDGE

30' - 0" ROADWAY — 6° SKEW LHF
OVER I-90 — SEC. 01-T1N-R14E
STR. NO. 52-830-310 — IM 0901(163)9

PENNINGTON COUNTY
S. D. DEPT. OF TRANSPORTATION
MAY 2014

DESIGNED BY	CK. DES. BY	DRAFTED BY	
KH	TK	KH	Kevin N. Goeden
PENN0223	0223KH04		BRIDGE ENGINEER

STATE OF	PROJECT	SHEET NO.	TOTAL SHEETS
S.D.	IM 0901(163)9	E100	E102

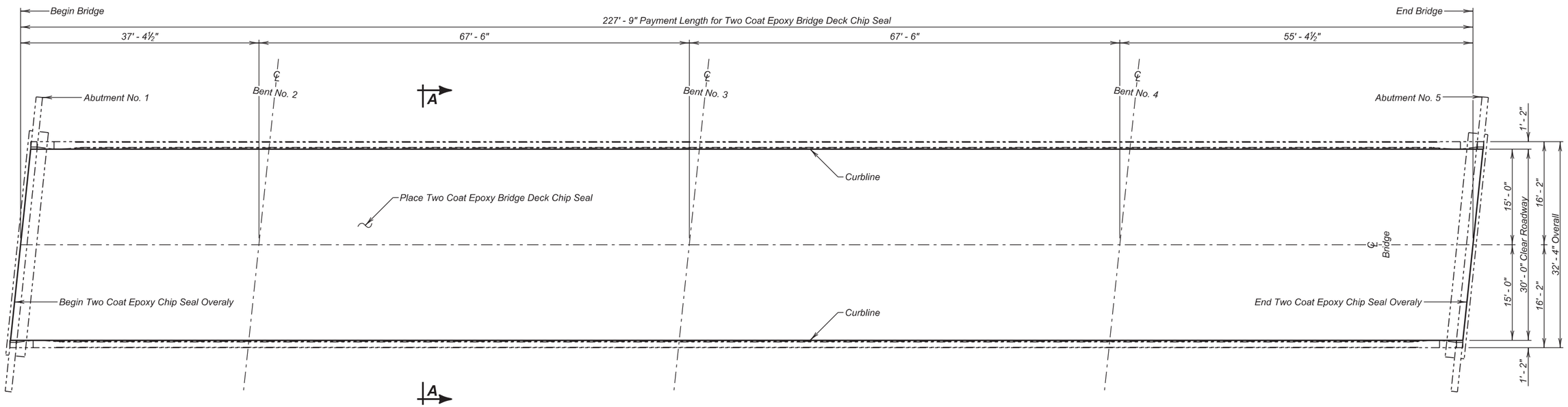

PLAN

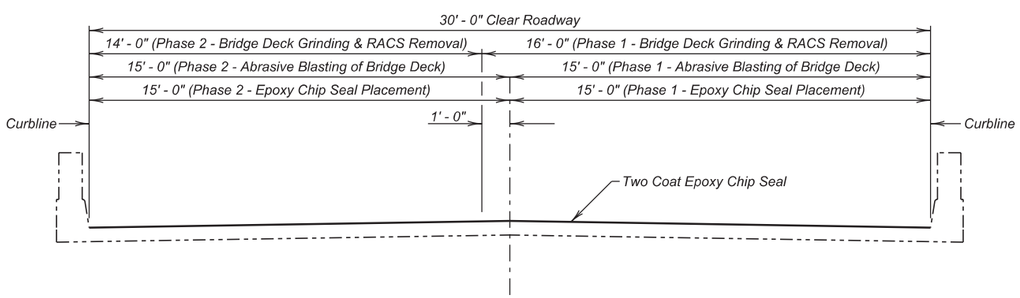

SECTION A - A

ESTIMATED QUANTITIES

	ITEM	UNIT	QUANTITY Phase I	QUANTITY Phase 2
	Two Coat Epoxy Bridge Deck Chip Seal	Sq. Yd.	379.6	379.6
	Abrasive Blasting of Bridge Deck	Sq. Yd.	379.6	379.6
	Bridge Deck Grinding	Sq. Yd.	404.9	354.3
✳	Concrete Patching Material	Cu. Ft.	56.0	49.0
✳	Concrete Removal, Class A	Sq. Yd.	12.4	10.9
✳	Concrete Removal, Class B	Sq. Yd.	12.4	10.9
◊	Remove Rubberized Asphalt Chip Seal	Sq. Yd.	364.4	318.9

NOTE:

✳ *Concrete Removal, Class A; Concrete Removal, Class B; and Concrete Patching Material may not be encountered and may be removed from the project at the direction of the Engineer.*

◊ *Quantity shown is an approximation and is based on a visual examination. Payment for this item will be based on plans quantity.*

TWO COAT EPOXY CHIP SEAL DETAILS

FOR

227' - 9" PRESTRESSED BEAM BRIDGE

30' - 0" ROADWAY — 6° SKEW LHF

OVER I-90 — SEC. 01-T1N-R14E

STR. NO. 52-830-310 — IM 0901(163)9

PENNINGTON COUNTY

S. D. DEPT. OF TRANSPORTATION

MAY 2014

DESIGNED BY	CK. DES. BY	DRAFTED BY	
KH	TK	KH	Kevin N. Goeden
PENN0223	0223KH05		BRIDGE ENGINEER

52063

STATE OF	PROJECT	SHEET NO.	TOTAL SHEETS
S.D.	IM 0901(163)9	E101	E102

—X-281—

INDEX OF BRIDGE SHEETS

Sheet No. 1 General Drawing & Estimated Quantities
Sheet No. 2 Subsurface Investigation
Sheet No. 3 Details of Sill No. 1
Sheet No. 4 Details of Sill No. 5
Sheet No. 5 Details of Bent No. 2
Sheet No. 6 Details of Bent No. 3
Sheet No. 7 Details of Bent No. 4
Sheet No. 8 Details of Superstructure Sheet No. 1
Sheet No. 9 Details of Superstructure Sheet No. 2
Sheet No. 10 Details of Superstructure Sheet No. 3
Sheet No. 11 Details of Prestressed Beams Sheet No. 1
Sheet No. 12 Details of Prestressed Beams Sheet No. 2
Sheet No. 13 Type RA-1M Steel Railing Details

Note:
T.S. @ ℄ El. = Top of Slab at Center Line Rdwy. Elevation.

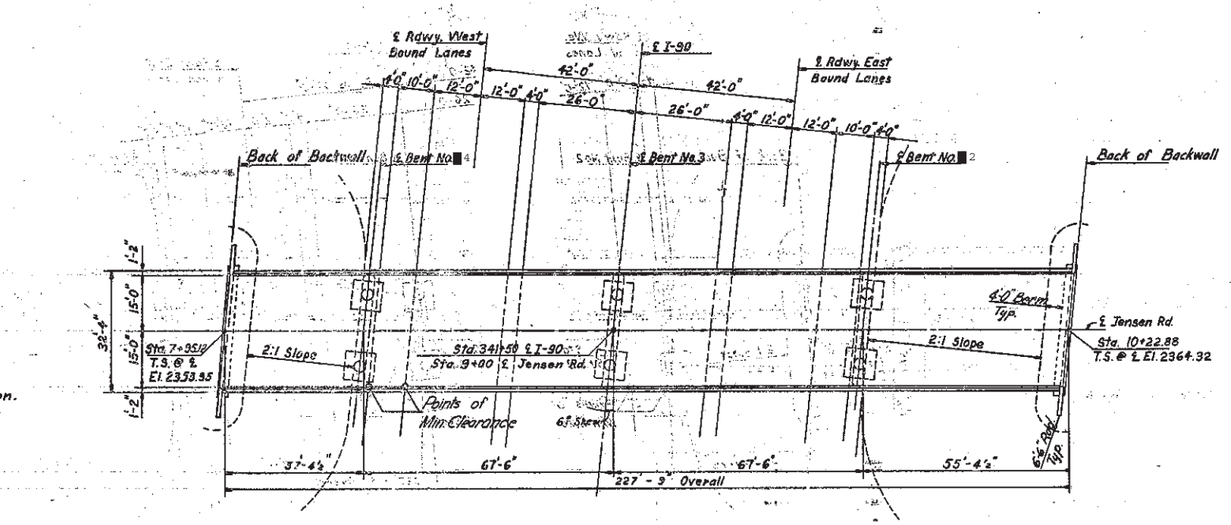

PLAN

B.M. #32 Elev. 2359.13
Iron Pin & Guards 150' Rt.
Sta. 340+68.50 in Fence Line

B.M. #33 Elev. 2314.16
Iron Pin & Guards 150' Lt
Sta. 350+36

EXCAVATION NOTES—

1. Footings for Bents No. 2,3 & 4 shall be cast against solid undisturbed shale and carried into some approximately the depth of the footings. Limits of shale excavation for these footings shall be bounded as nearly as practicable by the neat lines as shown in the details of footings for Bents No. 2,3 & 4 on Sheet No. 5,6 & 7 respectively, of the plans.
2. Shale shall develop a minimum bearing value of 3.3 tons per sq. ft. If the bearing value is less than 3.3 tons per sq. ft, communicate with the BRIDGE SECTION.
3. Final footing elevations for Bents No. 2,3 & 4 shall be established before ordering column reinforcing steel for the respective Bents.

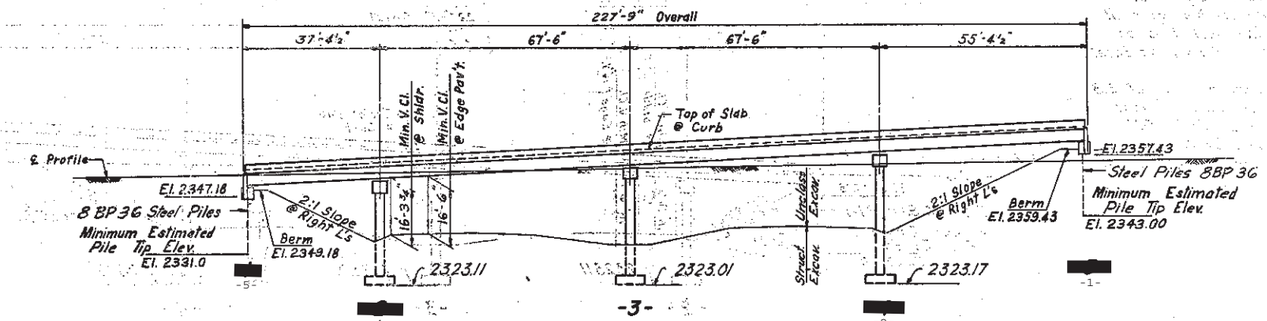

ELEVATION

Scale: 1" = 20'

SPECIFICATION NOTE—

Use Current South Dakota Standard Specifications for Roads and Bridges, and the Supplemental Specifications as Included in the Proposal.

GENERAL NOTES —

1. Longitudinal Elements of the Slab shall Conform to the Vertical Curve.
2. Rail Posts shall be built vertical.
3. Cost of all Premolded Expansion Joint Filler and Neoprene Pads shall be included in the unit price bid for Class "A" Concrete.

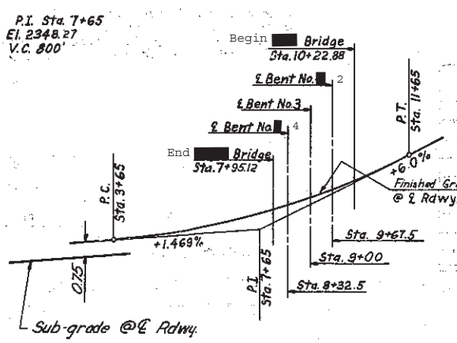

VERTICAL CURVE DATA

ESTIMATED QUANTITIES

ITEM	Cl. "A" Concrete Cu. Yds.	Reinf. Steel Lbs.	Prestressed Beams 67'-0"	Prestressed Beams 56'-6"	Prestressed Beams 36'-0"	Type "A" Steel Railing Lin. Ft.	Steel Piles - Lbs. Steel Piles - 8BP36	Excavation - Cu. Yds. Struct.	Excavation - Cu. Yds. a Unclass.
Superstr.	163.6	48,945	14	6	5	457.8	374 14,124		
Sill No. 1	15.3	1,045					5 @ 20'-10" x 36" 3600	211.92	
Bent No. 2	33.2	6,108						83.27	
Bent No. 3	34.6	6,447						38.84	
Bent No. 4	35.9	6,810					403.46 14,573	54.10	85
Sill No. 5	19.3	1,045					6 @ 20'-10" x 36" 4,320	211.20	31
Totals	327.1	70,393 71,722	14	6	5	457.8	9 7,920 28,707	196.34	116

F.E. 2/10/65 RWS

a All unclassified excavation to be done by others.
One 8BP36 Steel Bearing Test Pile shall be driven at Sills No. 1 and No. 5 before remaining piles are ordered.

ORIGINAL CONSTRUCTION PLANS

GENERAL DRAWING & ESTIMATED QUANTITIES
FOR
227'-9" PRESTRESSED BEAM BRIDGE

30'-0" ROADWAY — 6° SKEW L.H.F.
OVER I-90 STA. 341+50 — SEC. 12-T1N-R14E
STA. 7+95.12 TO STA. 10+22.88 JENSEN RD.
STR. NO. 52-830-310 PENNINGTON COUNTY H20-S16-44
SOUTH DAKOTA I-90-2(22)96
DEPARTMENT OF HIGHWAYS
1963

6 OF 7

-X-281-

NYROP, TIDWELL & ASSOC. INC. SIOUX FALLS, SOUTH DAKOTA	DESIGNED BY H.F.	DRAWN BY R.L.W.	CHECKED BY W.E.N.	APPROVED BRIDGE ENGINEER

52-830-310

52063

STATE OF	PROJECT	SHEET NO.	TOTAL SHEETS
S.D.	IM 0901(163)9	E102	E102

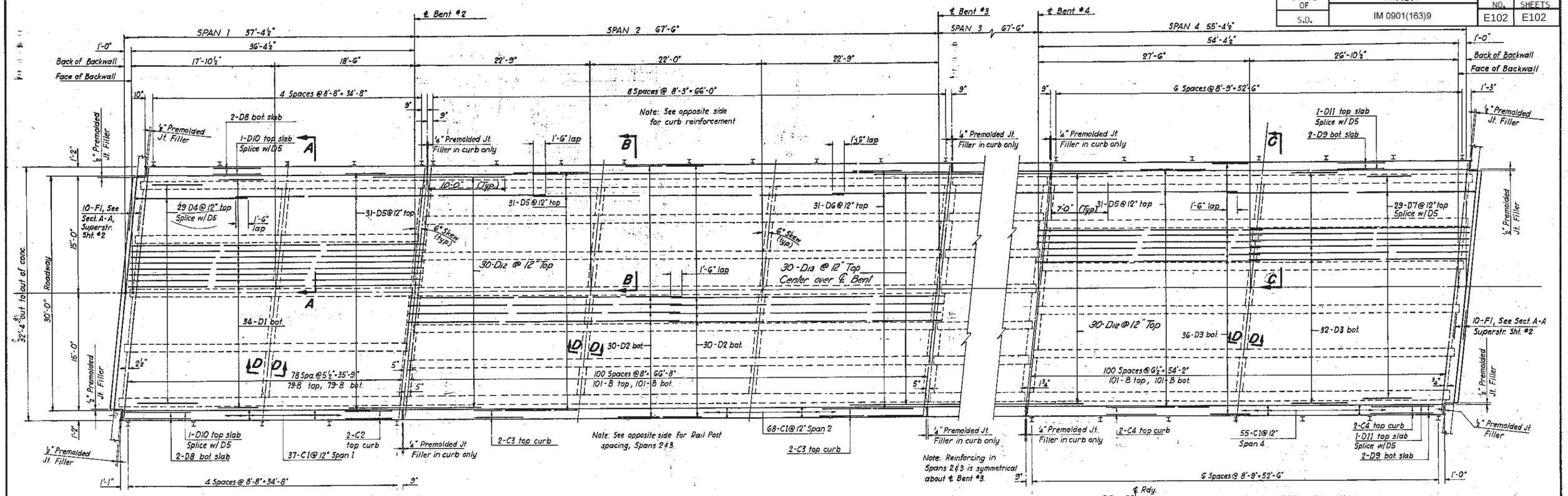

PLAN

Scale: 1/16" = 1'-0"

CONCRETE PLACING NOTES

The concrete slab shall preferably be placed in one continuous pour. However, if the contractor deems it advisable to use construction joints, a plan showing type of joint and pouring procedure shall be submitted to the BRIDGE SECTION for approval.

The curbs shall be poured after all the slab has been poured.

Diaphragms at sills and bents shall be poured and the concrete shall attain 75 percent of its required 28-day strength prior to placing of deck concrete.

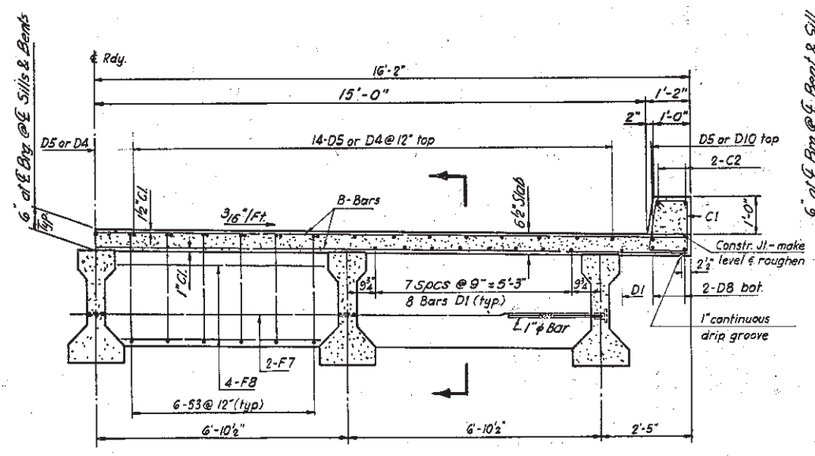

SECTION A-A

Scale: ½" = 1'-0"

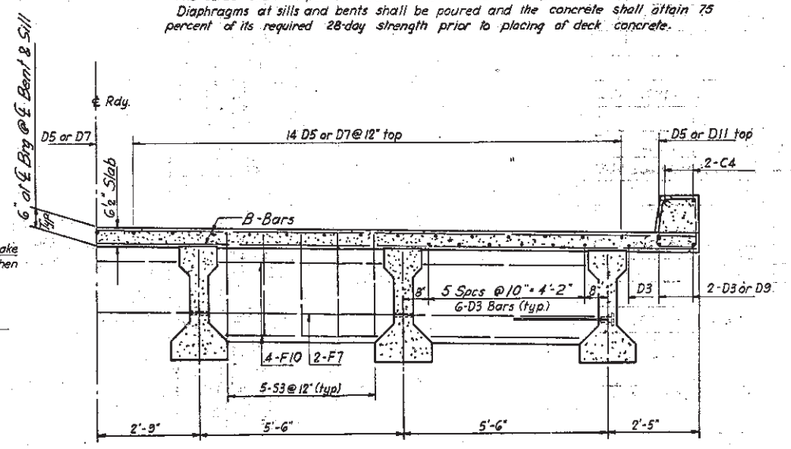

Note: See Sec. A-A for details not shown.

SECTION C-C

Scale: ½" = 1'-0"

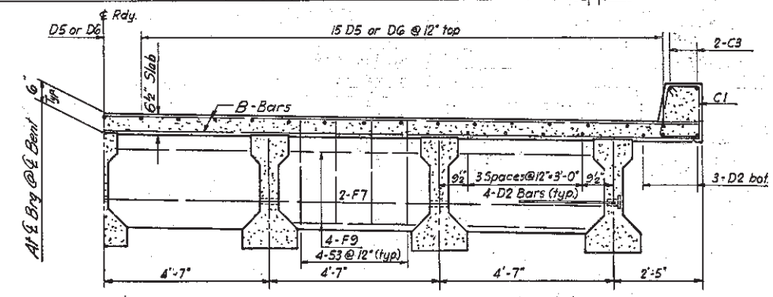

Note: See Sec. A-A for details not shown.

SECTION B-B

Scale ½" = 1'-0"

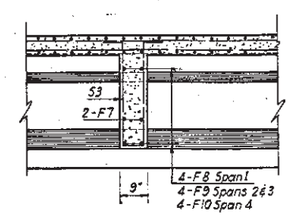

SECTION D-D

Scale ½" = 1'-0"

ORIGINAL CONSTRUCTION PLANS

DETAILS OF SUPERSTRUCTURE SHEET NO. 1
FOR
227'-9" PRESTRESSED BEAM BRIDGE

30'-0" ROADWAY — 6° SKEW L.H.F.
OVER I-90 STA. 341+50 — SEC. 12-T1N-14E
STA. 7+95.12 TO STA. 10+22.88 JENSEN ROAD
STR. NO. 52-830-310 PENNINGTON COUNTY — H20-S16-44

SOUTH DAKOTA I-90-2(22)96
DEPARTMENT OF HIGHWAYS
1963

7 OF 7

-X-281-

NYROP, TIDWELL & ASSOC. INC. SIOUX FALLS, SOUTH DAKOTA	DESIGNED BY H.F.	DRAWN BY D.B.	CHECKED BY W.E.N.	APPROVED R.L. Schuett BRIDGE ENGINEER