STATE OF SOUTH DAKOTA	PROJECT	SHEET	TOTAL SHEETS
	P 0037(119)129	F1	F27

Plotting Date: 09/22/2015

SECTION F: SURFACING PLANS

INDEX OF SHEETS

F1	General Layout W/Index
F2 to F4	Estimate With General Notes, Rates & Tables
F5 to F7	Typical Surfacing Sections
F8 to F12	Driving Surface Transition Details
F13	Surfacing Layout for Intersection of Mainline and Intersecting Roads at Sta. 0+00 L. & R.
F14	Layout Showing Removal and Surfacing Limits for Residential Entrances
F15	Details for Surfacing of Intersecting Roads and Entrances and Details for PCC Pavement Transverse Contraction Joint
F16	Details for PCC Overlay Transverse Construction Joint with Tie Bars and Details for PCC Pavement Sawed Longitudinal Joint
F17	Details for PCC Pavement Sawed Longitudinal Joint with Tie Bars
F18	Details for PCC Pavement Typical Joint Spacing and Details for 12" Rumble Strip or Stripe in PCC Pavement on Nondivided Highway Shoulders
F19 to F20	Standard Plates
F21 to F27	PCC Overlay Centerline Profile Sheets

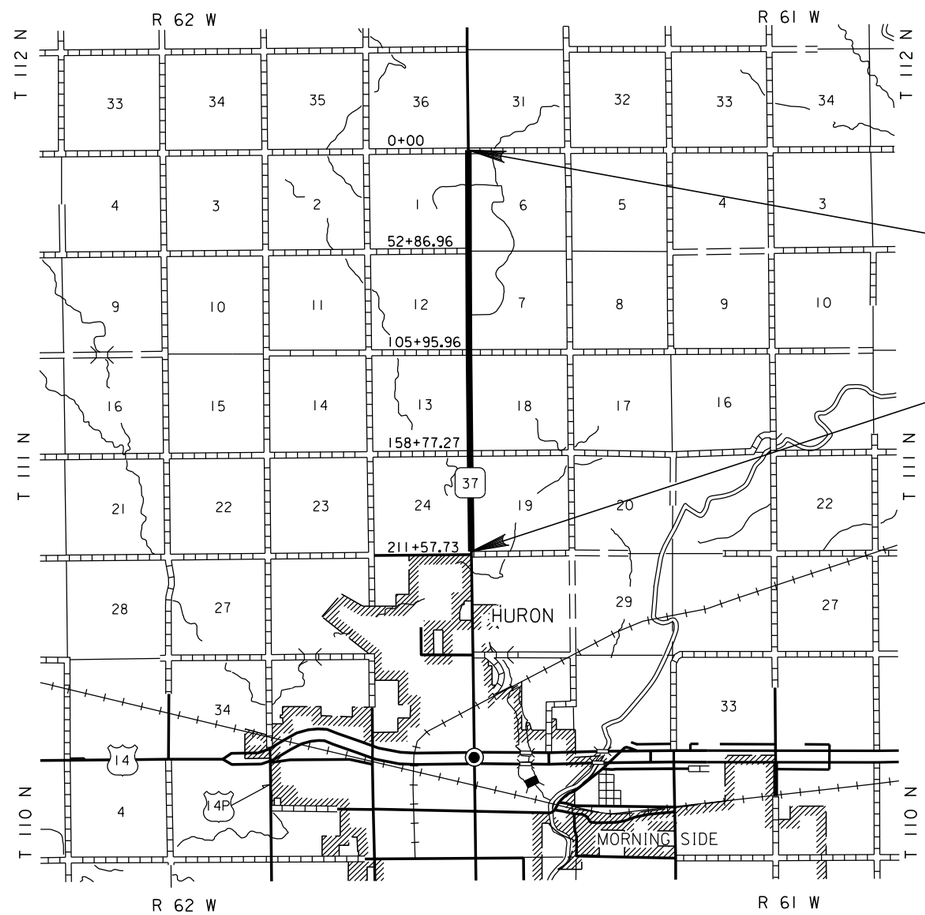

PLOT SCALE - 1:7920

PLOTTED FROM - TRPR18388

PLOT NAME - 1

FILE - ...\PRJ\BEAD0232\0232 TITLEF.DGN

SECTION F ESTIMATE OF QUANTITIES

BID ITEM NUMBER	ITEM	QUANTITY	UNIT
009E0010	Mobilization	Lump Sum	LS
009E3230	Grade Staking	3.836	Mile
009E3240	Graded Centerline Staking	3.836	Mile
009E3250	Miscellaneous Staking	3.836	Mile
009E3300	Three Man Survey Crew	40.0	Hour
260E1010	Base Course	4,103.7	Ton
320E1200	Asphalt Concrete Composite	576.0	Ton
332E0010	Cold Milling Asphalt Concrete	1,273	SqYd
380E1500	PCC Overlay, Furnish	13,773.4	CuYd
380E1550	5" PCC Overlay, Placement	90,028.5	SqYd
380E6450	Saw Joint in PCC Pavement	216,068.4	Ft
380E6545	Grind 12" Rumble Strip or Stripe in PCC Pavement	7.6	Mile
380E9010	Temporary Gravel Crossing	3	Each
600E0300	Type III Field Laboratory	1	Each
831E1500	Geotextile Bond Breaker Fabric	99,032	SqYd
900E0010	Refurbish Single Mailbox	17	Each
900E0012	Refurbish Double Mailbox	1	Each

SURFACING THICKNESS DIMENSIONS

Plans tonnage will be applied even though the thickness may vary from that shown on the plans.

At those locations where material must be placed to achieve a required elevation, plans tonnage may be varied to achieve the required elevation.

WATER FOR COMPACTION

The cost of water for compaction of the granular material shall be incidental to the various other contract items. Six percent plus or minus moisture will be required at the time of compaction unless otherwise directed by the Engineer.

UTILITIES

The Contractor shall contact the involved utility companies through South Dakota One Call (1-800-781-7474) prior to starting work. It shall be the responsibility of the Contractor to coordinate work with the utility owners to avoid damage to existing facilities.

Utilities are not planned to be affected on this project. If utilities are identified near the improvement area through the SD One Call Process as required by South Dakota Codified Law 49-7A and Administrative Rule Article 20:25, the Contractor shall contact the Project Engineer to determine modifications that will be necessary to avoid utility impacts.

TYPE III FIELD LABORATORY

Substitution of a cellular telephone for the hard-wired touch-tone telephone is not allowed, as state personnel need the ability to download information over direct phone lines. The phone is intended for state personnel usage only. Contractor personnel are prohibited from using this phone unless pre-approved by the Project Engineer. The Contractor shall submit a copy of each monthly bill for calls charged to this phone at the completion of the project. The Project Engineer will then audit the bills to ensure all calls are legitimate and then initiate a Construction Change Order (CCO) to reimburse the Contractor for the actual phone calls made, including local and long distance calls. Reimbursement will not be made for fees associated with the purchase, installation, disconnection, monthly line charges, and incidentals involved in the installation, maintenance, and disconnection of the phone (including attachments). These items shall be incidental to the contract unit price per each for TYPE III FIELD LABORATORY.

The lab shall be equipped with an internet connection such as DSL, cable modem, or other approved service. The internet connection shall be provided with a multi-port wireless router. The internet connection shall be a minimum speed of 512 Kb unless limited by job location and approved by the DOT. Prior to installing the wireless router the Contractor shall submit the wireless router's technical data to the Area Office to check for compatibility with the state's computer equipment. The internet connection is intended for state personnel usage only. The Contractor's personnel are prohibited from using the internet connection unless pre-approved by the Project Engineer.

In addition to the specifications for Type III Field Laboratory, an extra thermostatically controlled oven shall be supplied for Testing Room II of the Laboratory.

The Contractor shall construct a 4'x6'x4" thick level concrete pad to be placed outside of the lab. All materials, labor and incidentals necessary to construct the concrete pad shall be incidental to the contract unit price per each for TYPE III FIELD LABORATORY.

EXISTING PCC PAVEMENT

The existing pavement, from Sta. 0+44 to Sta. 203+00.42, is 7.5" Nonreinforced PCC Pavement, 24' wide with 7.5" to 6" PCC Shoulders, 10' wide.

Existing transverse contraction joints are on a repetitive random spacing of 18', 12', 13', 19', 18', 12', 13', etc., and are skewed.

The aggregate in the existing PCC Pavement is gravel or crushed gravel.

REPAIR OF SPALLS IN EXISTING PCC PAVEMENT

Included in the Table of Additional Quantities are 50 tons of Asphalt Concrete Composite for repair of spalls in the existing surface to fill and level joints, cracks and other surface irregularities designated by the Engineer.

Handwork may be required when placing the Asphalt Concrete Composite.

Any loose concrete material shall be removed and disposed of by the Contractor prior to placing the Asphalt Concrete Composite.

The cost for removing and disposing of the loose material and placing the Asphalt Concrete Composite, labor and equipment shall be incidental to the contract unit price per ton for ASPHALT CONCRETE COMPOSITE.

COLD MILLING ASPHALT CONCRETE

In order to construct the new surfacing flush with the existing or new surfacing at the begin and end of work, it will be necessary to mill the existing asphalt concrete at the locations listed in the Table of Cold Milling Asphalt Concrete.

It is estimated that 36.6 tons of cold milling asphalt concrete material will be generated from the cold milling operations. The cold milled asphalt concrete material will become the property of the Contractor for disposal and may not be reused on the project.

TABLE OF COLD MILLING ASPHALT CONCRETE

Location	Cold Milling Asphalt Concrete SqYd	Width of Cold Milling Asphalt Concrete Feet	Depth of Cold Milling Asphalt Concrete Inches
Mainline			
Sta. -1+56 to Sta. -0+76	298	35.2 to 32	2 to 0
Sta. 201+00.42 to Sta. 203+00.42	889	40	0 to 5
2 – Residential Entrances	86	Variable	0 to 2
Total:	1,273		

See Typical Surfacing Sections and Driving Surface Transition Details for additional details and limits.

SUMMARY OF ASPHALT CONCRETE COMPACTION

Location	Asphalt Concrete Composite Without Specified Density
	Ton
Mainline	
Sta. -1+56 to Sta. 0+44	185
Intersecting Roads	275
Residential Entrances	66
Repair of Spalls in Existing PCC Pavement	50
Total:	576

BASE COURSE

Compaction of the Base Course adjacent to the PCC Overlay shall be to the satisfaction of the Engineer.

TABLE OF GEOTEXTILE BOND BREAKER FABRIC

Location	Geotextile Bond Breaker Fabric SqYd
Mainline	
Sta. 0+44 to Sta. 203+00.42	99,032

PCC OVERLAY CENTERLINE PROFILE

The PCC Overlay centerline profile shall be constructed with a minimum of 5 inches of PCC at all locations.

The PCC Overlay, Furnished, quantity shown in these plans shall be used for bidding purposes only.

The Contractor shall create a PCC Overlay centerline profile in accordance with the Special Provision for Contractor Staking.

PCC OVERLAY

The fine and coarse aggregate may require screening as determined by the Engineer.

Refer to the list of known fine aggregate sources and the average corresponding 14 day expansion values.

The concrete mix shall conform to the Special Provision for Contractor Furnished Mix Design for PCC Pavement.

The transverse contraction joints shall be perpendicular to the centerline as detailed in the special detail for PCC Pavement Typical Contraction Joint Spacing and standard plate for PCC Pavement Dowel Bar Assembly for Transverse Contraction Joints. In multilane areas the transverse contraction joints shall be perpendicular to the centerline and be in a straight line across the width of the pavement. In special situations the Engineer may pre-approve transverse contraction joints that do not meet these requirements. All nonconforming transverse contraction joints shall be removed at the Contractor's expense. Any method of placement that cannot produce these requirements shall not be allowed to continue.

The surface of the mainline paving shall be longitudinally tined. All other areas shall be tined as directed by the Engineer.

The longitudinal construction joint shall be tooled on each side of the joint provided the radius does not exceed ¼ inch. All other requirements of Section 380.3.J.7 shall apply.

ALKALI SILICA REACTIVITY

Fine aggregate shall conform to Section 800.2 D. Alkali Silica Reactivity (ASR) Requirements.

Below is a list of known fine aggregate sources and the average corresponding 14 day expansion values:

Source	Location	Expansion Value
Bachman	Winner, SD	0.335*
Bitterman	Delmont, SD	0.316*
Concrete Materials	Corson, SD	0.170
Croell	Hot Springs, SD	0.089
Croell	Wasta, SD	0.212
Emme Sand & Gravel	Oneil, NE	0.217
Fisher S&G – Mickelson Pit	E. of Nisland, SD	0.129
Fisher S&G - Vallery Pit	Nisland, SD	0.110
Fisher S&G	Rapid City, SD	0.092
Fisher S&G	Spearfish, SD	0.053
Fisher S&G	Wasta, SD	0.159
Fuchs	Pickstown, SD	0.275*
Higman	Akron, IA	0.203
Higman	Hudson, SD	0.187
Hilde	Madison, SD	0.116
Jensen	Herried, SD	0.276*
L.G. Everist	Brookings, SD	0.186
L.G. Everist	Hawarden, IA	0.166
L.G. Everist	Summit, SD	0.178
Morris	Blunt, SD	0.192
Morris - Richards Pit	Onida, SD	0.188
Myrl & Roys – Ode Pit	E Sioux Falls, SD	0.214
Myrl & Roys - Nelson Pit	NE Sioux Falls, SD	0.156
Northern Concrete Agg.	Rauville, SD	0.113
Northern Concrete Agg.	Luverne, MN	0.133
Opperman - Gunvordahl Pit	Burke, SD	0.362*
Opperman - Cahoy Pit	Herrick, SD	0.307*
Opperman - Jones Pit	Burke, SD	0.321*
Opperman - Randall Pit	Pickstown, SD	0.239
Pete Lien & Sons	Creston, SD	0.158
Pete Lien & Sons	Oral, SD	0.129
Pete Lien & Sons	Wasta, SD	0.192
Thorpe Pit	Britton, SD	0.098
Wagner Building Supplies	Pickstown (Wagner), SD	0.241
Winter Brothers- Whitehead Pit	Brookings, SD	0.197

* These sources will require Type V cement in the concrete mix design and Class F (Modified) fly ash as specified.

The Department will use the running average of the last three known expansion test results or less for determining acceptability of source and the required Type of cement. These expansion results are reported in the preceding table. Additional testing, when requested by the Contractor, will be performed by the Department at the Contractor's expense.

The values listed in the table are intended for use in bidding. If a previously tested pit by SDDOT with acceptable test values (less than 0.250) is discovered after letting to require Type V cement (greater than 0.250) the Department will accept financial responsibility for the change from Type II to Type V cement.

Type II or Type V cement will not change the requirement for the fly ash. The cost for either type of cement shall be subsidiary to the contract item.

TABLE OF PCC OVERLAY

Location	PCC Overlay, Furnish CuYd	5" PCC Overlay, Placement SqYd
Mainline		
Sta. 0+44 to Sta. 203+00.42	13,773.4	90,028.5

PAVEMENT SMOOTHNESS

The mainline pavement from Sta. 0+44 to Sta. 201+00.42 shall be tested for smoothness in accordance with the Special Provision for IRI PCC Pavement Smoothness.

RUMBLE STRIPS

Rumble strips shall be placed on the outside shoulders as detailed in the details for 12 Inch Rumble Strip or Stripe in PCC Pavement on Nondivided Highway Shoulders located elsewhere in these plans. It is estimated that 7.6 miles of GRIND 12" RUMBLE STRIP OR STRIPE IN PCC PAVEMENT will be required for the shoulders.

SAW JOINTS IN PCC PAVEMENT

The Contractor shall saw the Transverse Contraction Joints and Sawed Longitudinal Joints as shown in the details located elsewhere in these plans.

This project will NOT require sawing of the centerline longitudinal construction joint and any transverse construction joints.

This project will NOT require sealing of the joints.

TABLE OF SAW JOINTS IN PCC PAVMENT

Location	Saw Joint In PCC Pavement (Transverse) Ft	Saw Joint In PCC Pavement (Longitudinal) Ft
Mainline		
Sta. 0+44 to Sta. 203+00.42	135,042.8	81,025.6
Total:	216,068.4	

TEMPORARY GRAVEL CROSSINGS

Included in the Estimate of Quantities are 3 temporary gravel crossings to be used if required and placed as directed by the Engineer.

MAILBOXES

The Contractor shall reset the existing mailboxes on new posts with the necessary support hardware for single mailbox assemblies. The local Postmaster will determine the recommended mounting height of the mailboxes throughout the project. The Contractor shall coordinate with the Engineer on the proper postal representative to contact.

All costs for removing existing mailboxes, providing temporary mailboxes, and resetting mailboxes with new posts and necessary support hardware shall be incidental to the contract unit price per each for REFURBISH SINGLE MAILBOX or REFURBISH DOUBLE MAILBOX.

TABLE OF REFURBISH MAILBOX

Station	L/R	Single Each	Double Each
Sta.3+78	L	1	
Sta. 51+12	L	1	
Sta. 59+96	L	1	
Sta. 61+77	L	1	
Sta. 108+87	L	1	
Sta. 128+31	L	1	
Sta. 131+92	L	1	
Sta. 134+55	L	1	
Sta. 145+72	L	1	
Sta. 148+61	L	1	
Sta. 150+18	L	1	
Sta. 161+46	L	1	
Sta. 163+82	L	1	
Sta. 180+88	L	1	
Sta. 182+71	L	1	
Sta. 188+39	L		1
Sta. 198+82	L	1	
Sta. 199+47	L	1	
	Total:	17	1

RATES OF MATERIALS

The Estimate of Surfacing Quantities is based on the following quantities of materials per station.

MAINLINE SHOULDERS – RATES ARE FOR ONE SHOULDER ONLY

Sta. 0+44 Rt. to Sta. 203+00.42 Rt.
Sta. 0+44 Lt. to Sta. 203+00.42 Lt.

BASE COURSE

Crushed Aggregate 6.82 tons

TABLE OF ADDITIONAL QUANTITIES

Location	Base Course Ton	Asphalt Concrete Composite Ton	Depth of Granular Material Inches	Depth of Asphalt Material Inches
Mainline				
Driving Surface Transitions				
Sta. -1+56. to Sta. 0+44.	---	185		2 to 5
Repair of Spalls in Existing PCC Pavement	---	50		Variable
Intersecting Roads				
Sta. 0+00 L	87.5	104	12 & 5 to 0	5
Sta. 0+00 R.	30.7	51	5 to 0	5
5 - Intersecting Roads	108.0	120	3 to 0	5 to 3
2 – Residential Entrances	---	66		
38 - Farm & Field Entrances	1,114.5	---	5 to 0	
Totals:	1,340.7	576		

See Typical Surfacing Sections, Surfacing Layout for Intersection of Mainline and Intersecting Roads Sta. 0+00 L. & R., and Driving Surface Transition Details, located elsewhere in these plans, for additional surfacing details and limits.

TABLE OF CONSTRUCTION STAKING

(See Special Provision for Contractor Staking)

Roadway and Description	Begin Station	End Station	Number of Lanes	Length (Ft)	Grade Staking: Length (Mile)	Grade Staking: Lane Factor	Grade Staking: *Sets of Stakes	Grade Staking: **Grade Staking Quantity (Mile)	Graded Centerline Staking Quantity (Mile)	Miscellaneous Staking Quantity (Mile)
SD 37 (2 Lanes PCC Overlay)	0+44	203+00.42	2	20,256.42	3.836	1	1	3.836	3.836	3.836
							Totals:	3.836	3.836	3.836

* 1 = Paving Hub Stakes Only (PCC Pavement)

** Grade Staking Quantity = (Length) x (Lane Factor) x (Sets of Stakes)

TYPICAL SURFACING SECTIONS

STATE OF SOUTH DAKOTA	PROJECT	SHEET	TOTAL SHEETS
	P 0037(119)129	F5	F27

Plotting Date: 09/22/2015

See Driving Surface Transition Details and Surfacing Layout for Intersection of Mainline and Intersecting Roads Sta. 0+00 L. & R., located elsewhere in these plans, for additional details for removal and surfacing.

Sta. -1+56 to Sta. 0+44

Typical Section Showing Materials In Place

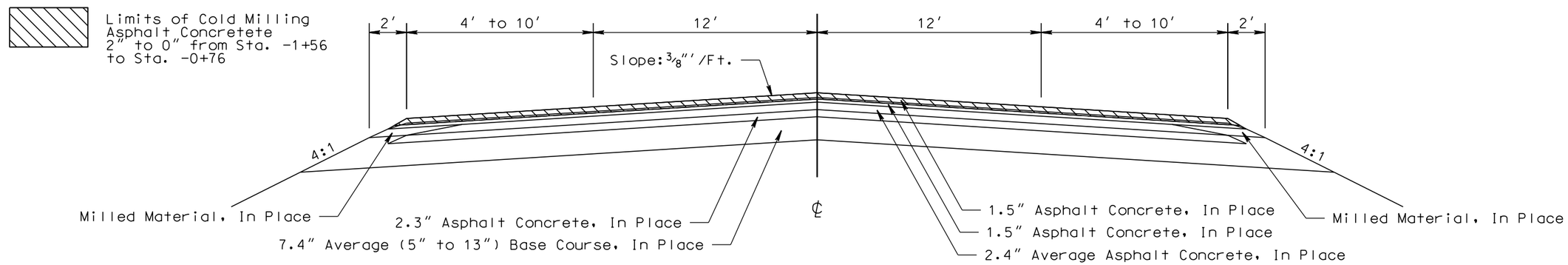

Sta. -1+56 to Sta. 0+44

Typical Surfacing Section

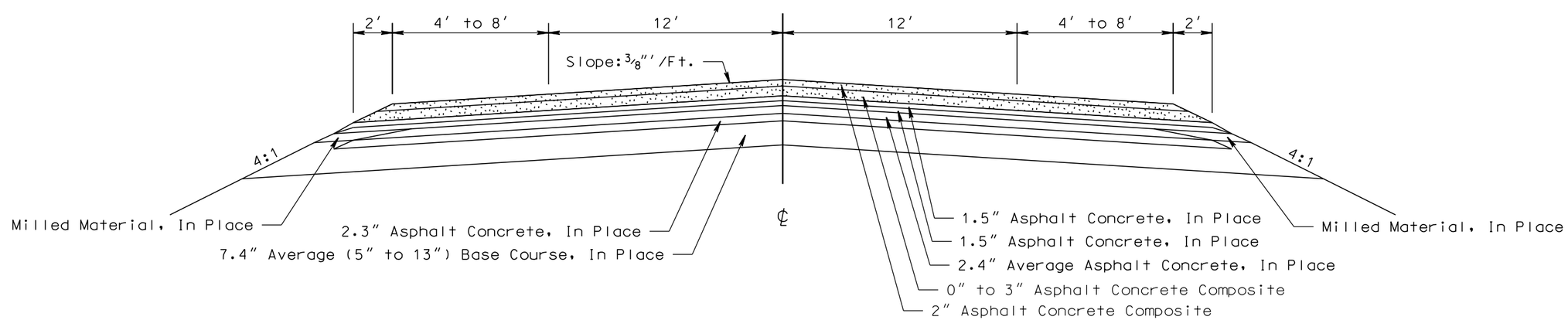

PLOT SCALE - 1:6.00001

PLOT NAME - 2

FILE -...\BEAD0232\TYPICAL SECTIONS.DGN

PLOTTED FROM - TRPR18388

TYPICAL SURFACING SECTIONS

STATE OF SOUTH DAKOTA	PROJECT	SHEET	TOTAL SHEETS
	P 0037(119)129	F6	F27

Plotting Date: 09/22/2015

See Driving Surface Transition Details, located elsewhere in these plans, for additional details for removal and surfacing.

Sta. 0+44 to Sta. 201+00.42

Typical Section Showing Materials In Place

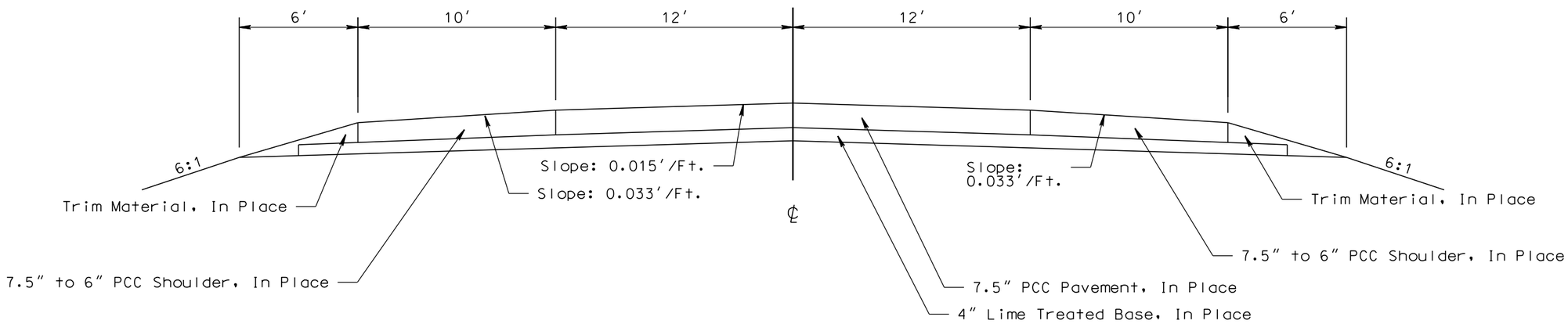

Limits of Cold Milling Asphalt Concretete

Sta. 201+00.42 to Sta. 203+00.42

Typical Section Showing Materials In Place

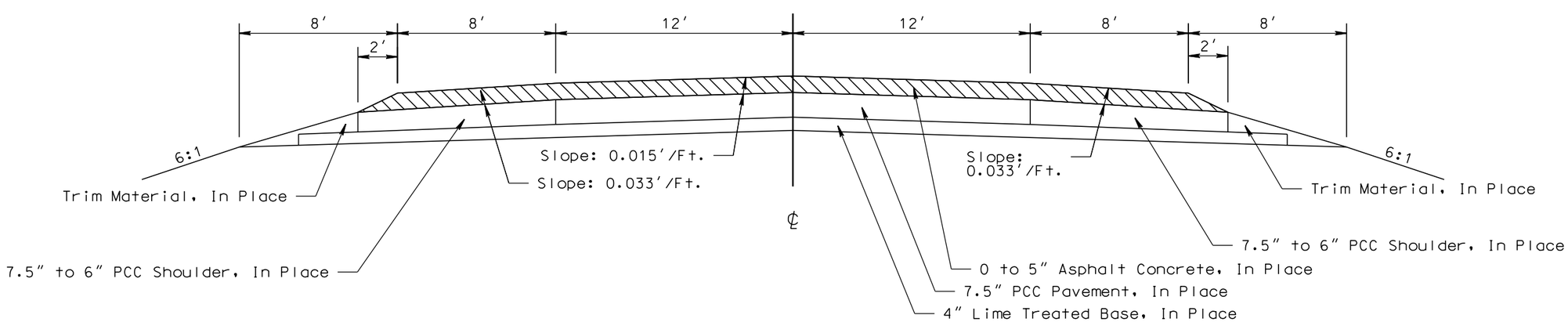

PLOT SCALE - 1:6.00001

PLOT NAME - 3

FILE - ...\BEAD0232\TYPICAL SECTIONS.DGN

PLOTTED FROM - TRPR18388

TYPICAL SURFACING SECTIONS

STATE OF SOUTH DAKOTA	PROJECT	SHEET	TOTAL SHEETS
	P 0037(119)129	F7	F27

Plotting Date: 09/22/2015

Sta. 0+44 to Sta. 203+00.42

Typical Surfacing Section

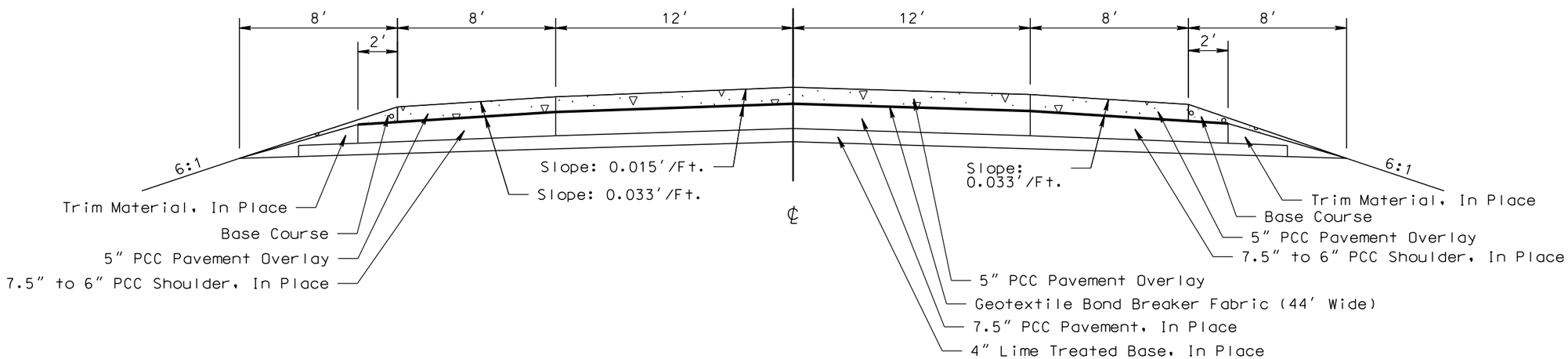

PLOT SCALE - 1:6.00001

PLOTTED FROM - TRPR19388

PLOT NAME - 4

FILE - ...\BEAD0232\TYPICAL SECTIONS.DGN

DRIVING SURFACE TRANSITION DETAILS

STATE OF SOUTH DAKOTA	PROJECT	SHEET	TOTAL SHEETS
	P 0037(119)129	F8	F27

Plotting Date: 09/22/2015

Sheet 1 of 5 Sheets
NOT TO SCALE

See Typical Surfacing Sections and Surfacing Layout for Intersection of Mainline and Intersecting Roads Sta. 0+00 L. & R., located elsewhere in these plans, for additional details for removal and surfacing.

Limits of Cold Milling Asphalt Concrete

MAINLINE STA. -1+56 TO STA. 0+44

LONGITUDINAL SECTION AT CENTERLINE SHOWING REMOVAL OF IN PLACE SURFACING

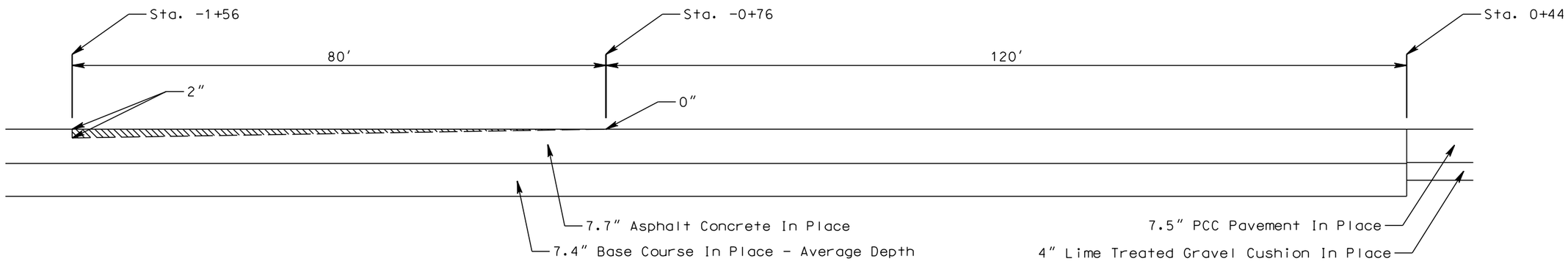

LONGITUDINAL SECTION AT CENTERLINE SHOWING SURFACING

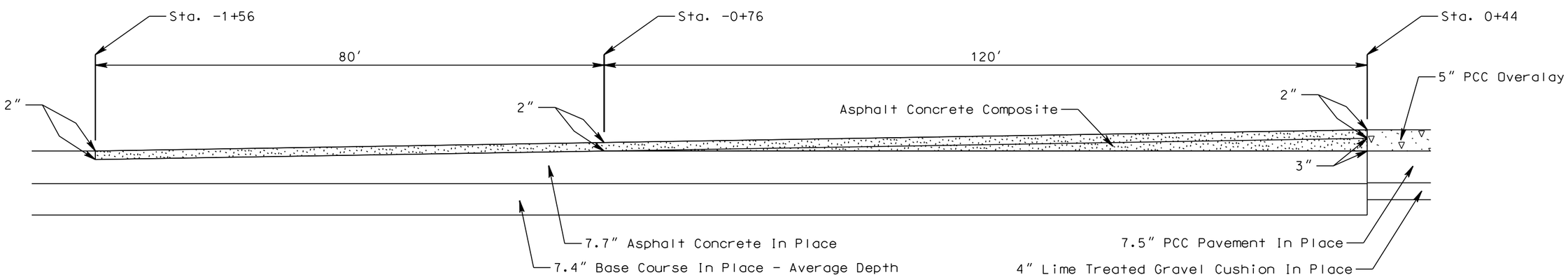

PLOT SCALE - 1:25

PLOTTED FROM - TRPR18388

PLOT NAME - 5

FILE - ...\0232 DR SURF TRANS.DGN

DRIVING SURFACE TRANSITION DETAILS

STATE OF SOUTH DAKOTA	PROJECT	SHEET	TOTAL SHEETS
	P 0037(119)129	F9	F27

Plotting Date: 09/22/2015

Sheet 2 of 5 Sheets
NOT TO SCALE

See Typical Surfacing Sections, located elsewhere in these plans, for additional details for removal and surfacing.

Limits of Cold Milling Asphalt Concrete

MAINLINE STA. 201+00.42 TO STA. 203+00.42

LONGITUDINAL SECTION AT CENTERLINE SHOWING REMOVAL OF IN PLACE SURFACING

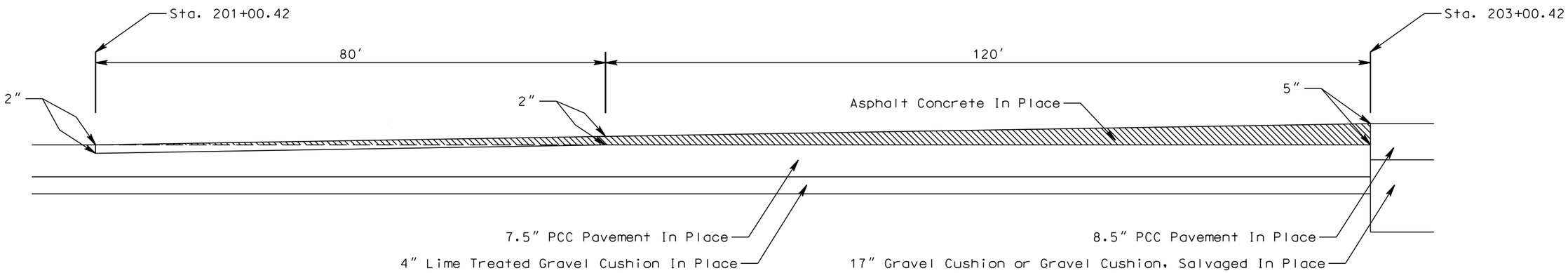

LONGITUDINAL SECTION AT CENTERLINE SHOWING SURFACING

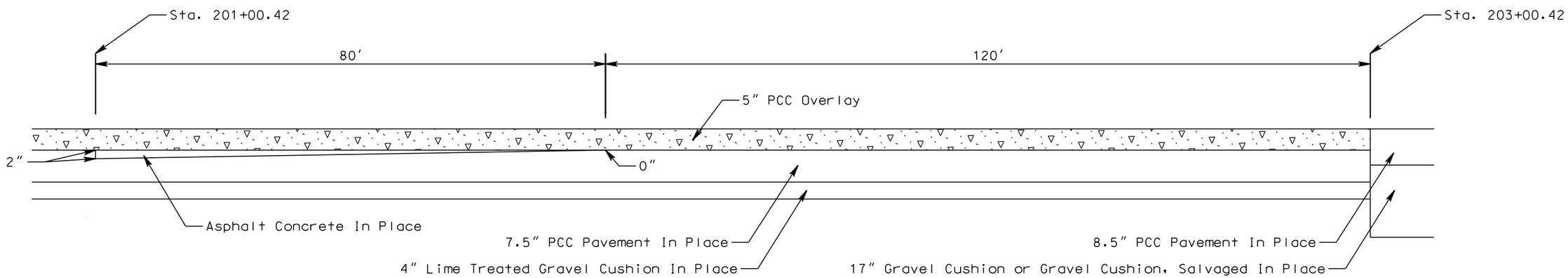

PLOT SCALE - 1:25
PLOT NAME - 6
FILE - ...\0232 DR SURF TRANS.DGN
PLOTTED FROM - TRPR18388

DRIVING SURFACE TRANSITION DETAILS

STATE OF SOUTH DAKOTA	PROJECT	SHEET	TOTAL SHEETS
	P 0037(119)129	F10	F27

Plotting Date: 09/22/2015

Sheet 3 of 5 Sheets
NOT TO SCALE

INTERSECTING ROAD - ML STA. 0+00 L.

LONGITUDINAL SECTION AT CENTERLINE SHOWING SURFACING

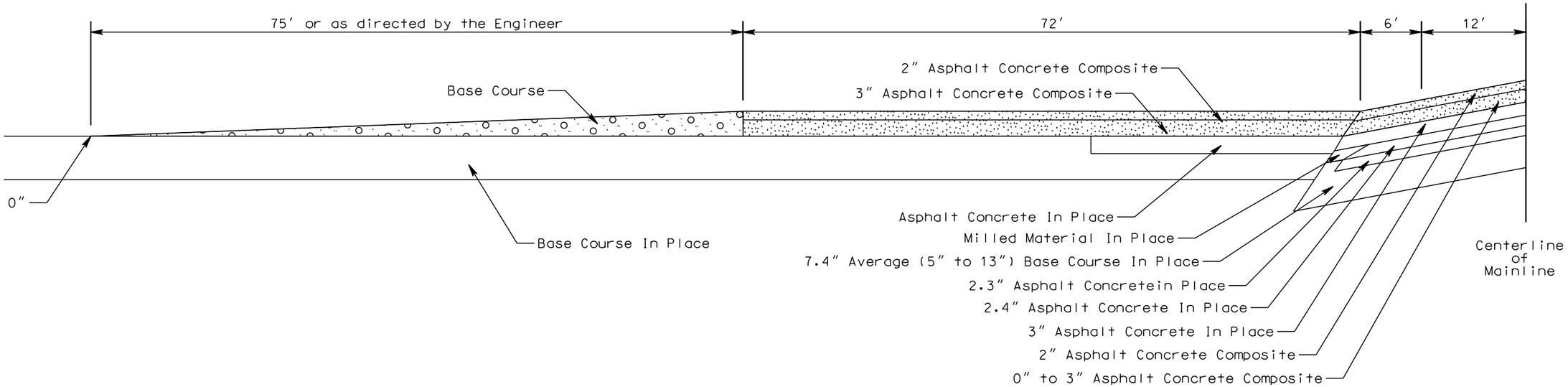

INTERSECTING ROAD - ML STA. 0+00 R.

LONGITUDINAL SECTION AT CENTERLINE SHOWING SURFACING

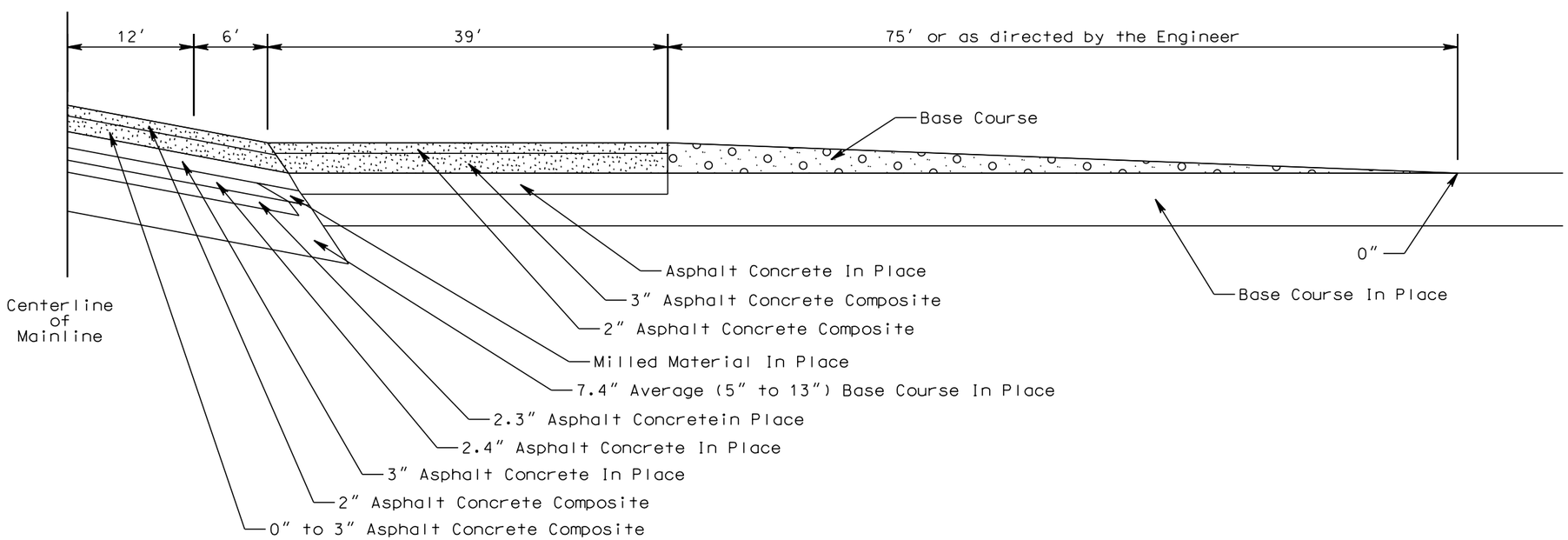

PLOT SCALE - 1:25
PLOT NAME - 7
FILE - ...\0232 DR SURF TRANS.DGN
PLOTTED FROM - TRPR18388

DRIVING SURFACE TRANSITION DETAILS

STATE OF SOUTH DAKOTA	PROJECT	SHEET	TOTAL SHEETS
	P 0037(119)129	F11	F27

Plotting Date: 09/22/2015

Sheet 4 of 5 Sheets
NOT TO SCALE

5 - INTERSECTING ROADS - GRAVEL BEYOND ROW

LONGITUDINAL SECTION AT CENTERLINE SHOWING SURFACING

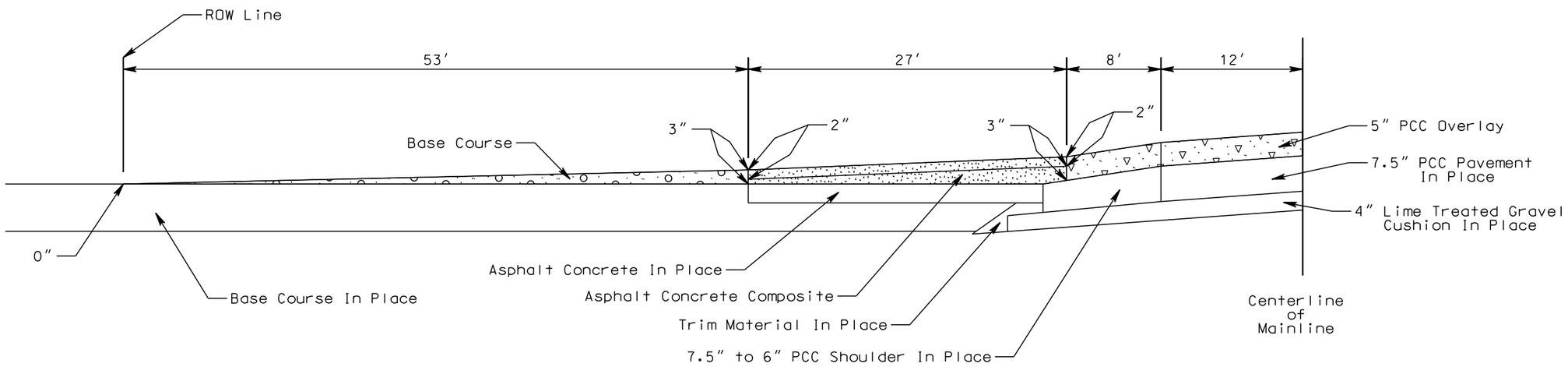

38 - FARM & FIELD ENTRANCES - GRAVEL BEYOND ROW

LONGITUDINAL SECTION AT CENTERLINE SHOWING SURFACING

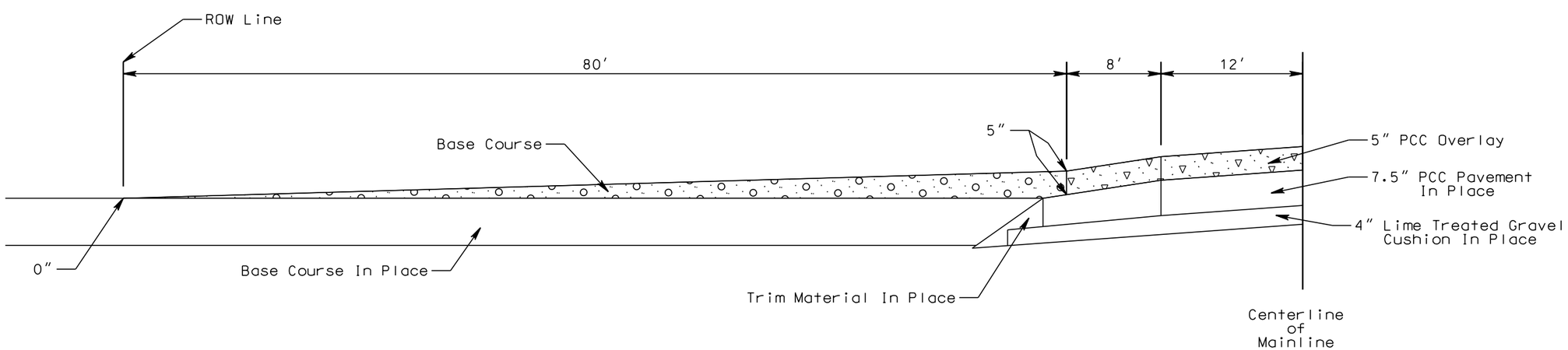

PLOT SCALE - 1:25

PLOTTED FROM - TRPR18388

PLOT NAME - 8

FILE - ...\0232 DR SURF TRANS.DGN

DRIVING SURFACE TRANSITION DETAILS

STATE OF SOUTH DAKOTA	PROJECT	SHEET	TOTAL SHEETS
	P 0037(119)129	F12	F27

Plotting Date: 09/22/2015

Sheet 5 of 5 Sheets
NOT TO SCALE

Limits of Cold Milling Asphalt Concrete

See Typical Surfacing Layout for Residential Entrances, located elsewhere in these plans, for additional details for removal and surfacing.

RESIDENTAL ENTRANCES - ML STA. 109+20 L & STA. 128+10 L

LONGITUDINAL SECTION AT CENTERLINE SHOWING REMOVAL OF IN PLACE SURFACING

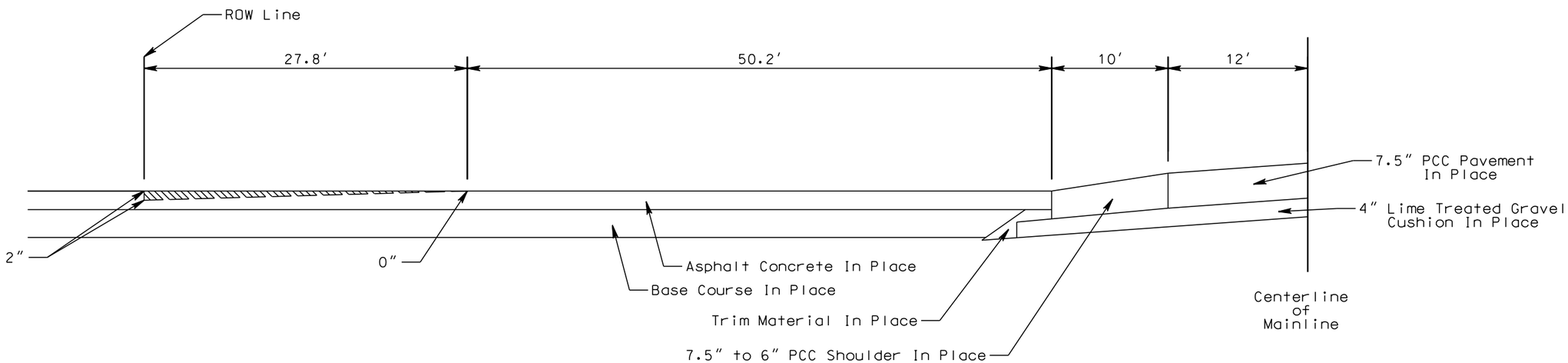

LONGITUDINAL SECTION AT CENTERLINE SHOWING SURFACING

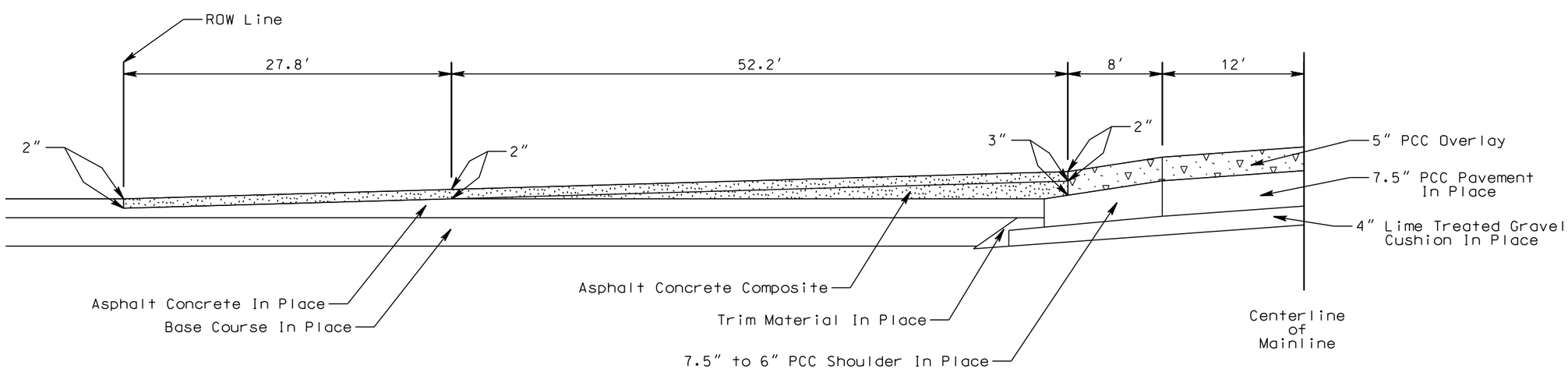

PLOT SCALE - 1:25

PLOT NAME - 9

FILE - ...\0232 DR SURF TRANS.DGN

PLOTTED FROM - TRPR18388

STATE OF SOUTH DAKOTA	PROJECT	SHEET	TOTAL SHEETS
	P 0037(119)129	F13	F27

Plotting Date: 09/22/2015

SURFACING LAYOUT FOR INTERSECTION OF MAINLINE AND INTERSECTING ROADS AT STA. 0+00 L. & R.

NOT TO SCALE

Area to be surfaced with 0" to 5" Base Course

Area to be surfaced with 5" Asphalt Concrete Composite

Area to be surfaced with 12" Base Course and 5" Asphalt Concrete Composite. The existing embankment shall be shaped, as directed by the Engineer, to allow for the placement of 12" Base Course. Cost for shaping the embankment, including labor and equipment shall be incidental to the contract unit price per ton for Base Course.

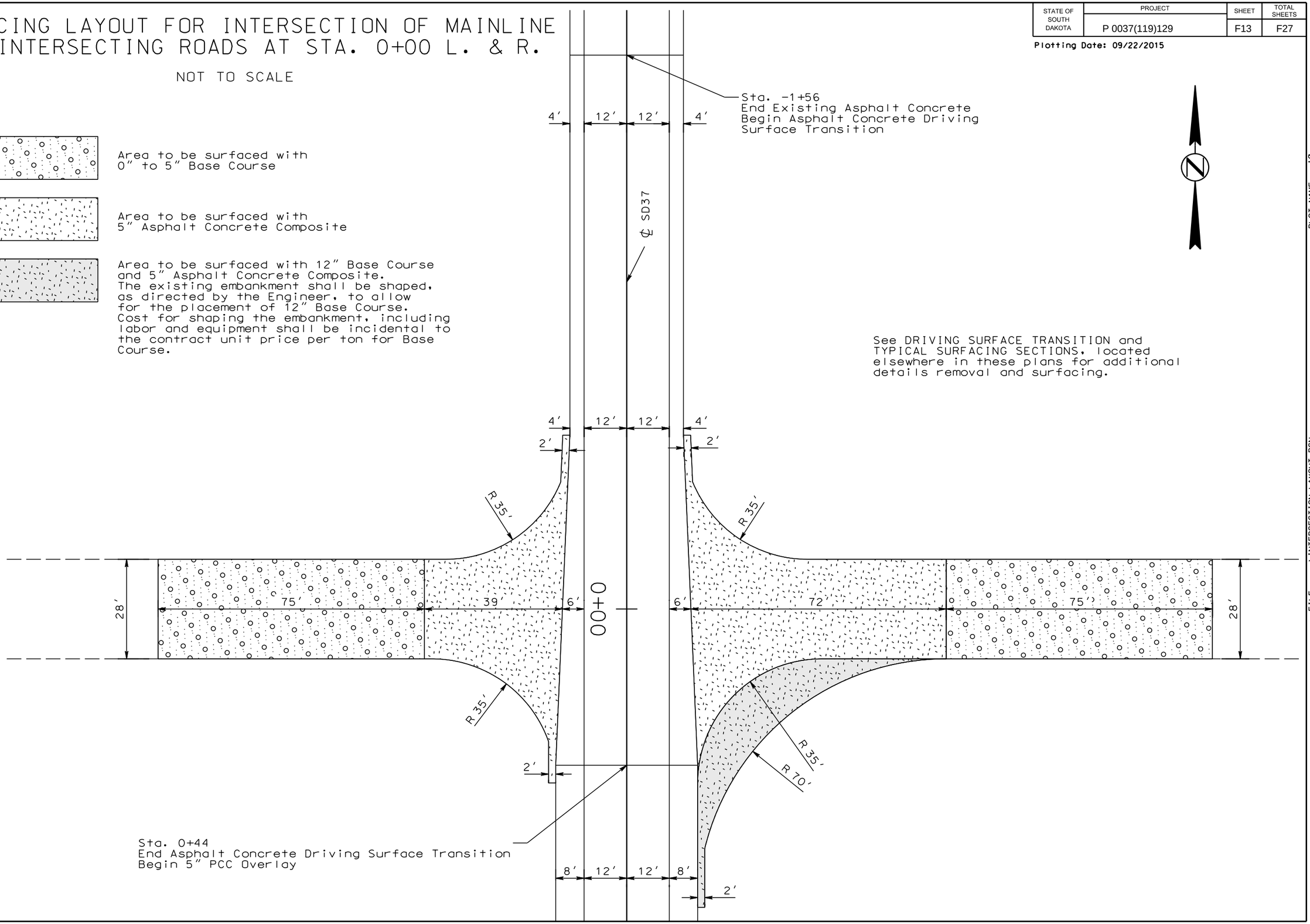

PLOT SCALE - 1:25

PLOTTED FROM - TRPR18398

PLOT NAME - 10

FILE - ...\INTERSECTION LAYOUT.DGN

LAYOUT SHOWING REMOVAL AND SURFACING LIMITS FOR RESIDENTIAL ENTRANCES

NOT TO SCALE

See DRIVING SURFACE TRANSITION DETAILS located elsewhere in these plans for additional details for removal and surfacing.

REDSIDENTIAL ENTRANCES
ML STA. 109+20 L. AND STA. 128+10 L.

Area to be surfaced with 2" to 5" Asphalt Concrete Composite

Area to receive 2" to 0" Cold Milling Asphalt Concrete and surfaced with 2" Asphalt Concrete Composite.

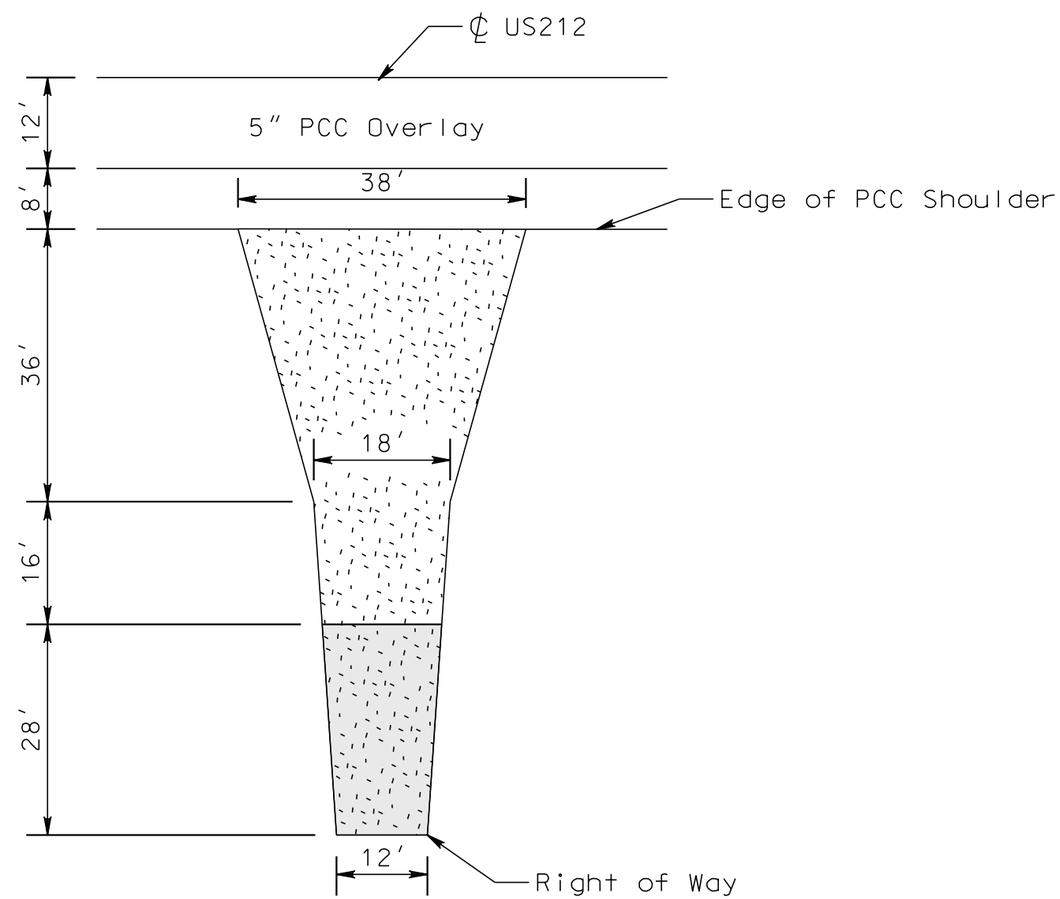

PLOT SCALE - 1:20
PLOTTED FROM - TRPR19388
PLOT NAME - 11
FILE - ...\RESIDENTAL ENTRANCES.DGN

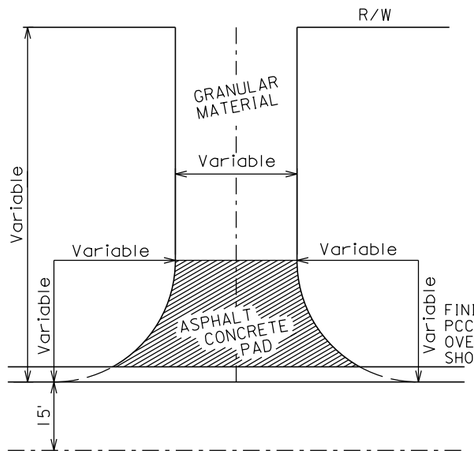

INTERSECTING ROAD
NO ASPHALT CONCRETE SURFACING BEYOND R/W

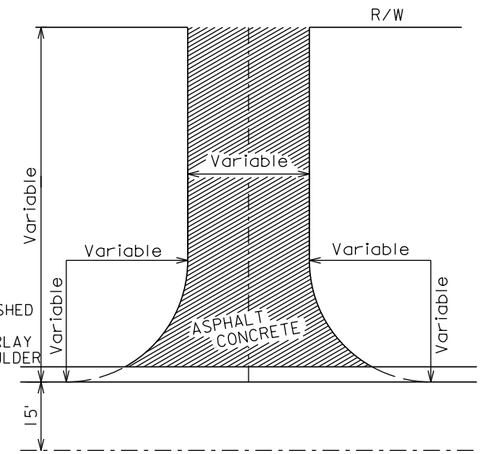

INTERSECTING ROAD
ASPHALT CONCRETE SURFACING BEYOND R/W

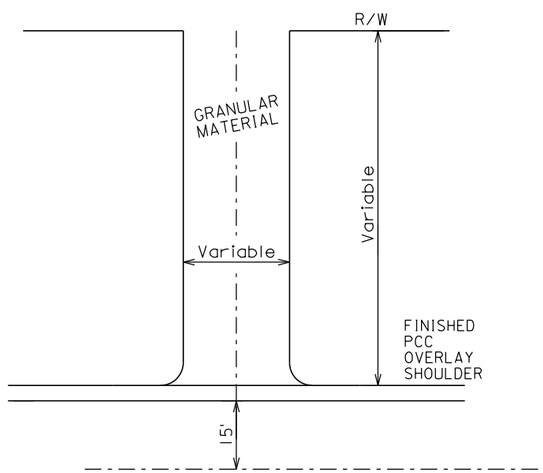

ENTRANCE

The surfacing details shown on this sheet are provided as a guide for surfacing these facilities. The precise construction limits for situations other than the standards shown will be determined by the Engineer, at the time of construction.

ROADWAY WITH SHOULDER

SURFACING OF INTERSECTING ROADS AND ENTRANCES

Sheet 1 of 1

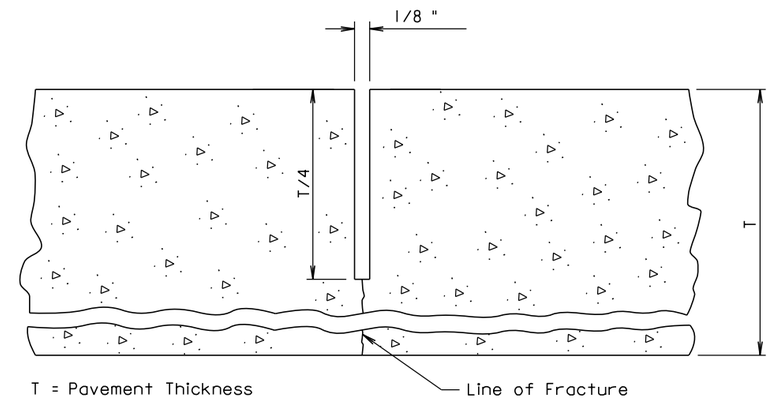

GENERAL NOTES:

The saw cut to control cracking shall be a minimum of ¼ the thickness of the pavement.

PCC PAVEMENT TRANSVERSE CONTRACTION JOINT

Sheet 1 of 1

PLOT SCALE - 1:199.401
PLOTTED FROM - TRPR18388
PLOT NAME - 12
FILE - ...\0232 SPECIAL PLATES.DGN

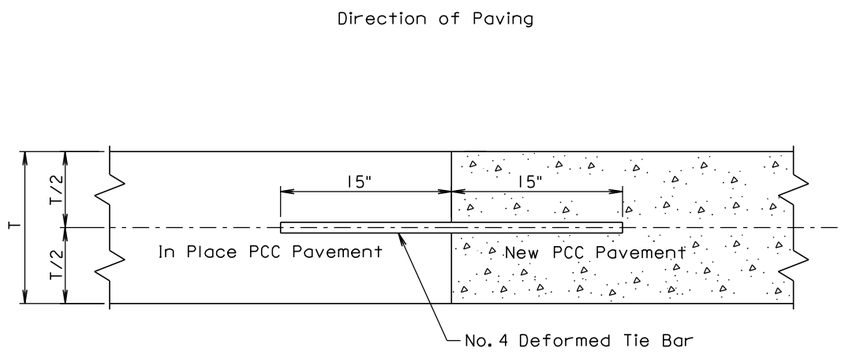

GENERAL NOTES:

No. 4 epoxy coated deformed tie bars shall be spaced 12 inches center to center and shall be a minimum of 3 inches and a maximum of 6 inches from the pavement edges.

When a transverse construction joint is made, paving will not be allowed in this area for 12 hours.

The transverse construction joint shall not be located less than 17 inches from other transverse joints. The transverse construction joint will not require tooling, will not be saw cut and will not be sealed.

A transverse construction joint may be placed in lieu of the transverse contraction joint when shown in the plans.

The term "In Place PCC Pavement" in the above drawing indicates that the in place PCC pavement was placed on the current project.

PCC OVERLAY TRANSVERSE CONSTRUCTION JOINT WITH TIE BARS

Sheet 1 of 1

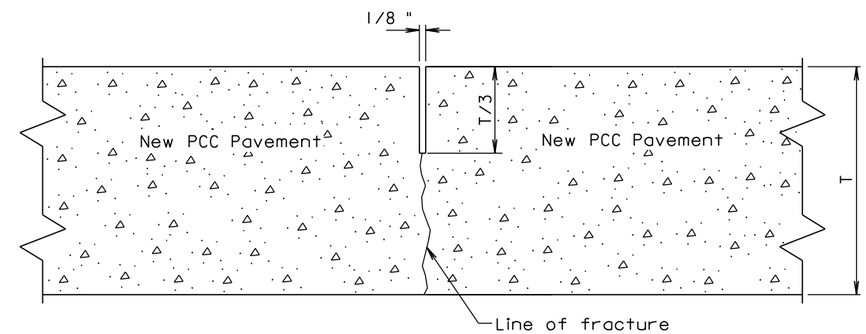

GENERAL NOTE:

The first saw cut to control cracking shall be a minimum of 1/3 the thickness of the pavement.

PCC PAVEMENT SAWED LONGITUDINAL JOINT

Sheet 1 of 1

PLOT SCALE - 1:199.401
PLOTTED FROM - TRPR18388
PLOT NAME - 13
FILE -...\0232 SPECIAL PLATES.DGN

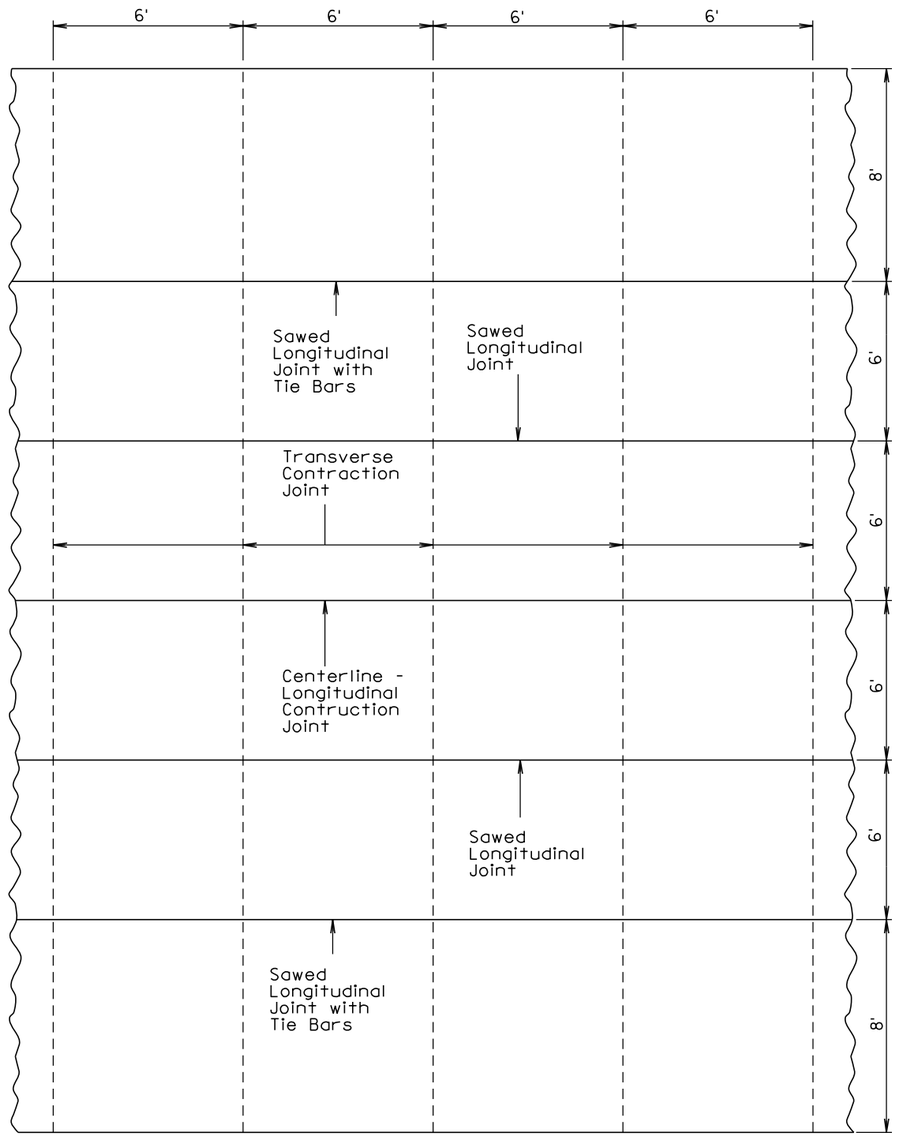

PCC PAVEMENT TYPICAL JOINT SPACING

Sheet 1 of 1

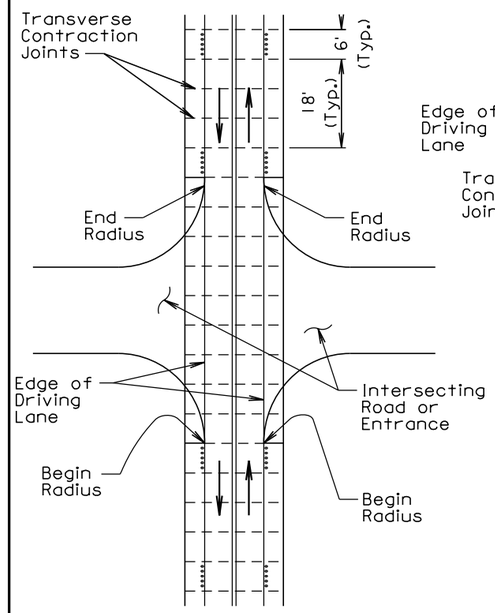

PLAN VIEW

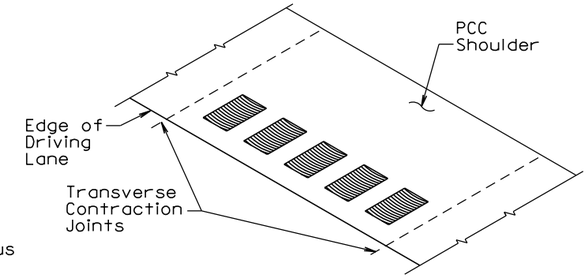

PERSPECTIVE OF TYPICAL RUMBLE STRIP IN PCC PAVEMENT

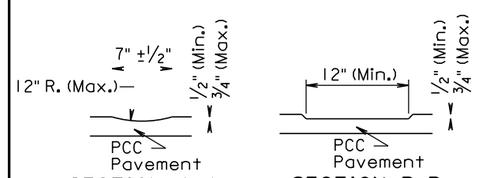

SECTION A-A SECTION B-B

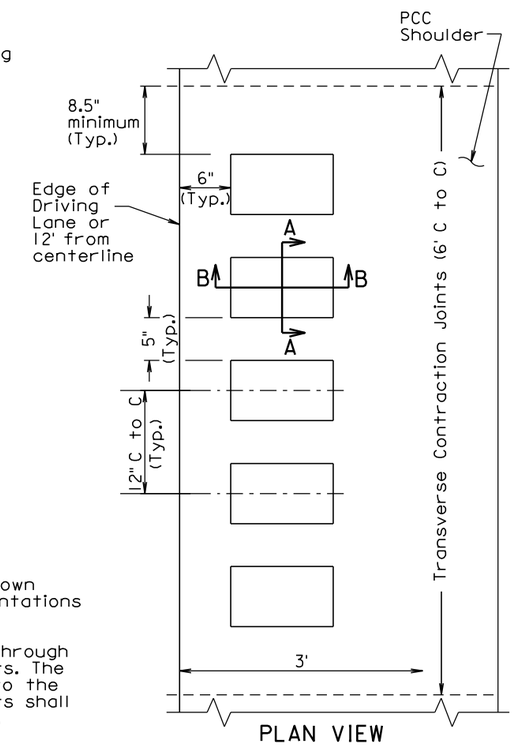

PLAN VIEW
TYPICAL RUMBLE STRIP IN PCC PAVEMENT

GENERAL NOTES:

A rumble strip shall be constructed as shown in the details by grinding continuous indentations in the PCC Pavement.

A rumble strip shall not be constructed through intersecting roads, entrances, and turnouts. The locations of the rumble strips adjacent to the intersecting roads, entrances, and turnouts shall be adjusted as approved by the Engineer.

Prior to constructing the rumble strip the Contractor shall submit to the Engineer, for approval, the proposed method of constructing the rumble strip.

Payment for constructing the rumble strip shall be incidental to the contract unit price per mile for GRIND 12" RUMBLE STRIP OR STRIPE IN PCC PAVEMENT.

12" RUMBLE STRIP OR STRIPE IN PCC PAVEMENT ON NONDIVIDED HIGHWAY SHOULDERS

Sheet 1 of 1

PLOT SCALE - 1:199.401
PLOTTED FROM - TRPR18388
PLOT NAME - 14
FILE - ...\0232 SPECIAL PLATES.DGN

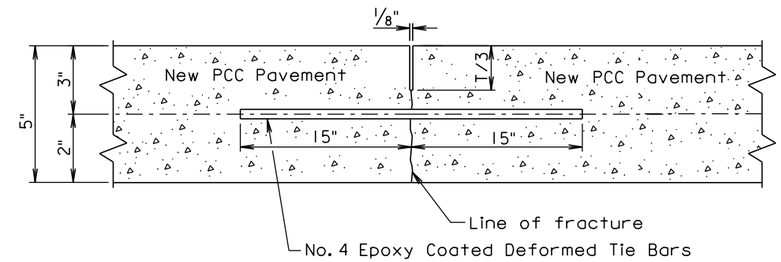

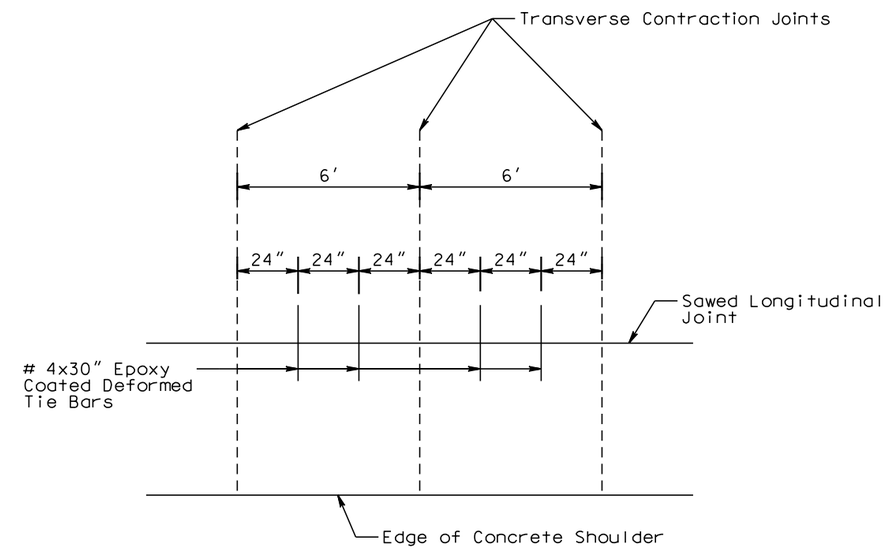

GENERAL NOTES:

No. 4 epoxy coated deformed tie bars shall be spaced as shown above.

The tie bars shall be placed a minimum of 24 inches from the existing transverse contraction joints.

The saw cut to control cracking shall be a minimum of 1/3 the thickness of the pavement.

PCC PAVEMENT SAWED LONGITUDINAL JOINT WITH TIE BARS (POURED MONOLITHICALLY)

Sheet 1 of 1

PLOT SCALE - 1:199.401

PLOTTED FROM - TRPR18388

PLOT NAME - 15

FILE - ...\0232 SPECIAL PLATES.DGN

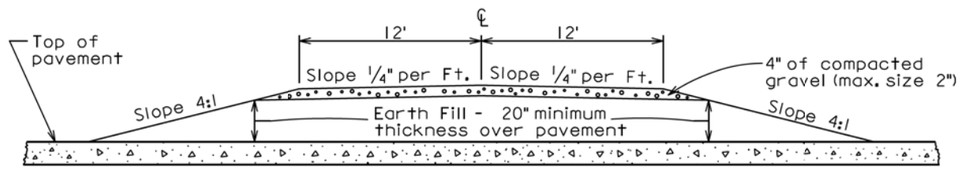

TRANSVERSE SECTION OF CROSSING

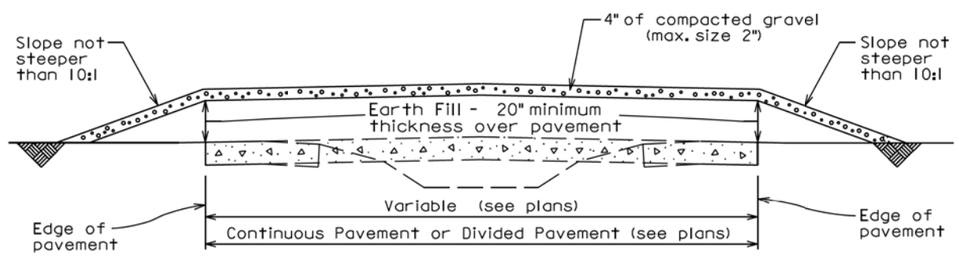

LONGITUDINAL SECTION ALONG CENTERLINE OF CROSSING

GENERAL NOTES:

Temporary Earth Crossing shall be constructed and satisfactorily maintained in accordance with the details shown above. When the need for the crossing no longer exists the contractor shall, at the direction of the Engineer, remove the crossing and dispose of the materials therein to the satisfaction of the Engineer.

All costs for furnishing and placing all materials, labor, and equipment necessary for constructing and removing the Temporary Earth Crossing shall be incidental to the contract unit price per Each for "Temporary Earth Crossing."

When the plans specify that the fill over the pavement be entirely of gravel, instead of earth and gravel as shown by the details above, all except the upper 4 inches of the gravel may be pit run material. In these cases the item becomes "Temporary Gravel Crossing" instead of "Temporary Earth Crossing", but otherwise the requirements stated above for "Temporary Earth Crossing" shall apply.

March 31, 2000

Published Date: 3rd Qtr. 2015	SDDOT	TEMPORARY EARTH OR GRAVEL CROSSING	PLATE NUMBER 380.30
			Sheet 1 of 1

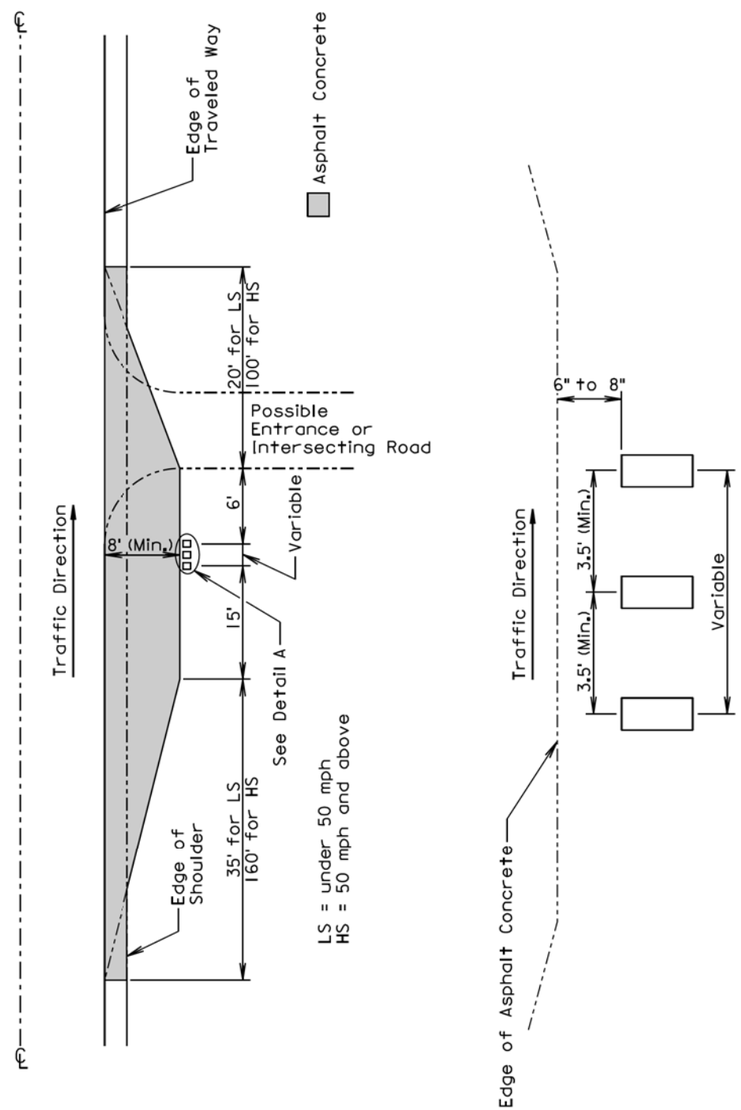

August 31, 2013

Published Date: 3rd Qtr. 2015	SDDOT	MAILBOX TURNOUT	PLATE NUMBER 900.01
			Sheet 1 of 1

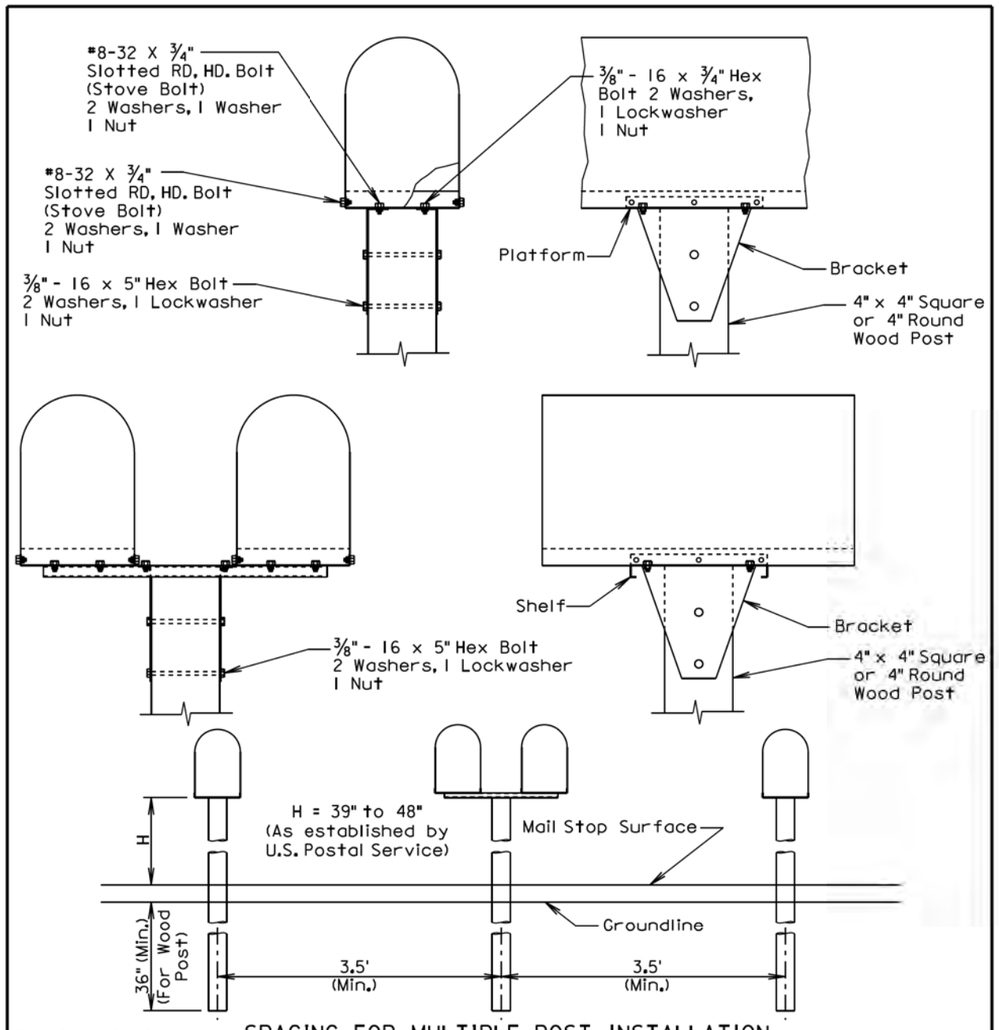

SPACING FOR MULTIPLE POST INSTALLATION

GENERAL NOTES:

The post support assemblies provided should be consistant throughout the project.

Single and double mailboxes may be in any sequence.

Post support assemblies shall be one from the approved products list, a 4"x4" or 4" round wood post, or an alternate post support assembly that meets the test level 3 crash testing requirements of NCHRP 350 or MASH.

Alternate mailbox support assemblies shall be approved by the Engineer prior to installation. The Contractor shall provide the Engineer written certification that the mailbox support assembly has met the crash testing requirements and will be installed in accordance with the manufacturer's installation instructions.

September 6, 2013

Published Date: 3rd Qtr. 2015	SDDOT	**SINGLE AND DOUBLE MAILBOX ASSEMBLIES**	PLATE NUMBER 900.02
			Sheet 1 of 1

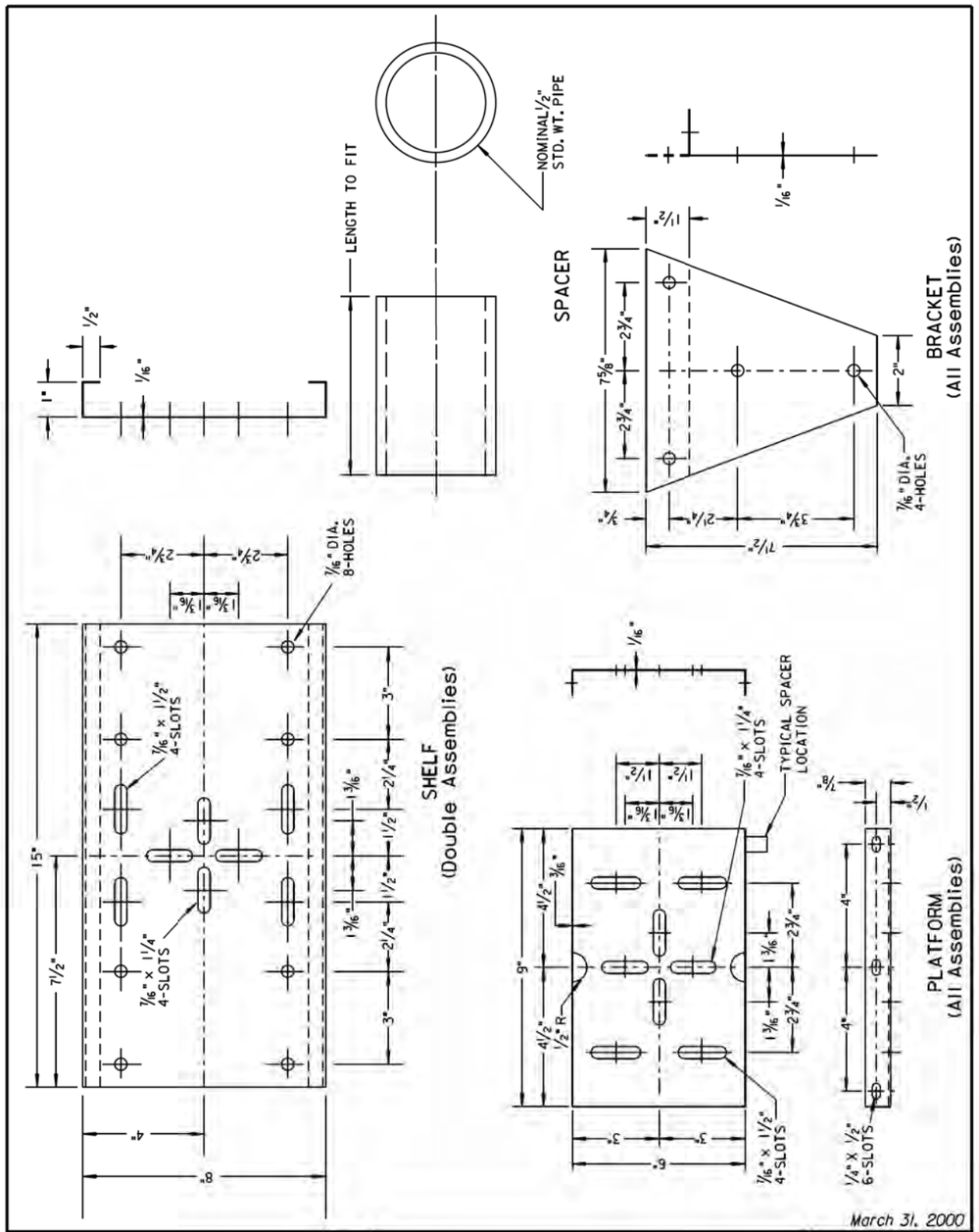

March 31, 2000

Published Date: 3rd Qtr. 2015	SDDOT	**MAILBOX SUPPORT HARDWARE**	PLATE NUMBER 900.03
			Sheet 1 of 1

PLOT SCALE - 1:200

PLOT NAME - 17

FILE - ...\MS\PRJ\BEAD0232\STDPLATE2.DGN

-PLOTTED FROM - TRPR18388

PCC OVERLAY CENTERLINE PROFILE

The PCC Overlay centerline profile shown in these plans was used to calculate the cubic yards for the PCC Overlay furnished.
The PCC Overlay centerline profile was designed so that there will be a minimum of 5 inches of PCC at all locations of the typical sections.
The PCC Overlay centerline profile sheets are included in the plans for information only.
The Contractor shall create a new PCC Overlay centerline profile in accordance with the Special Provision for Contractor Staking.
The elevations shown are the top of the PCC Overlay at Centerline.
Profile North of Huron begins at N 212491.553 E 2435156.386 Station 0+44 and ends at N 232742.460 E 2434742.578 Station 203+00.42

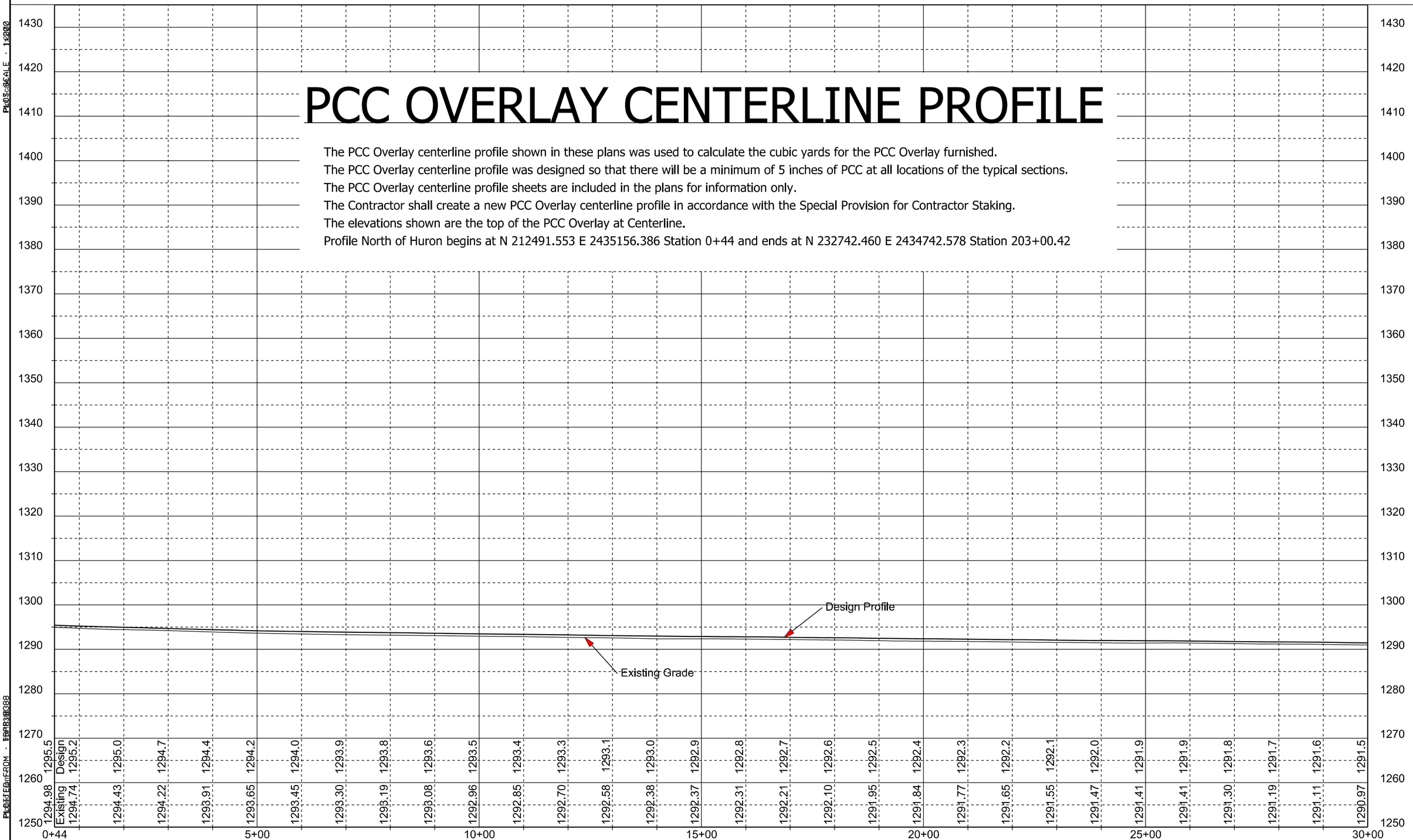

	0+44	5+00	10+00	15+00	20+00	25+00	30+00
Design	1295.5	1295.2	1295.0	1294.7	1294.4	1294.2	1294.0
Existing	1294.98	1294.74	1294.43	1294.22	1293.91	1293.65	1293.45

	0+44	5+00	10+00	15+00	20+00	25+00	30+00
Design	1293.9	1293.8	1293.6	1293.5	1293.4	1293.3	1293.1
Existing	1293.30	1293.19	1293.08	1292.96	1292.85	1292.70	1292.58

	0+44	5+00	10+00	15+00	20+00	25+00	30+00
Design	1293.0	1292.9	1292.8	1292.7	1292.6	1292.5	1292.4
Existing	1292.38	1292.37	1292.31	1292.21	1292.10	1291.95	1291.84

	0+44	5+00	10+00	15+00	20+00	25+00	30+00
Design	1292.3	1292.2	1292.1	1292.0	1291.9	1291.9	1291.8
Existing	1291.77	1291.65	1291.55	1291.47	1291.41	1291.41	1291.30

	0+44	5+00	10+00	15+00	20+00	25+00	30+00
Design	1291.7	1291.6	1291.5				
Existing	1291.19	1291.11	1290.97				

Plotting Date: 09/22/2015

PCC OVERLAY CENTERLINE PROFILE

The PCC Overlay centerline profile shown in these plans was used to calculate the cubic yards for the PCC Overlay furnished.
The PCC Overlay centerline profile was designed so that there will be a minimum of 5 inches of PCC at all locations of the typical sections.
The PCC Overlay centerline profile sheets are included in the plans for information only.
The Contractor shall create a new PCC Overlay centerline profile in accordance with the Special Provision for Contractor Staking.
The elevations shown are the top of the PCC Overlay at Centerline.
Profile North of Huron begins at N 212491.553 E 2435156.386 Station 0+44 and ends at N 232742.460 E 2434742.578 Station 203+00.42

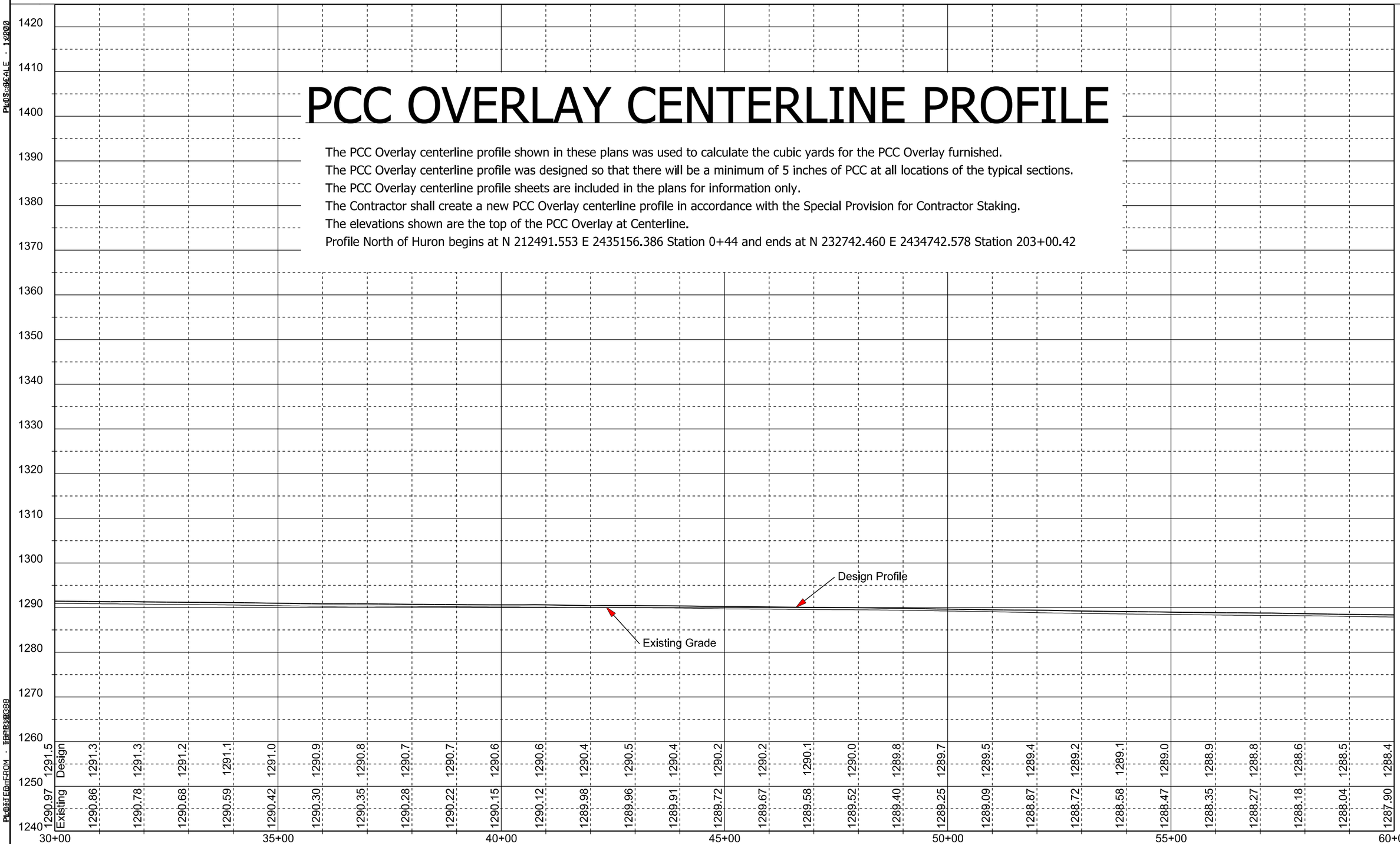

Design	1291.5	1291.3	1291.3	1291.2	1291.1	1291.0	1290.9	1290.8	1290.7	1290.7	1290.6	1290.6	1290.4	1290.5	1290.4	1290.2	1290.2	1290.1	1290.0	1289.8	1289.7	1289.5	1289.4	1289.2	1289.1	1289.0	1288.9	1288.8	1288.6	1288.5	1288.4
Existing	1290.97	1290.86	1290.78	1290.68	1290.59	1290.42	1290.30	1290.35	1290.28	1290.22	1290.15	1290.12	1289.98	1289.96	1289.91	1289.72	1289.67	1289.58	1289.52	1289.40	1289.25	1289.09	1288.87	1288.72	1288.58	1288.47	1288.35	1288.27	1288.18	1288.04	1287.90

STATE OF SOUTH DAKOTA	PROJECT	SHEET	TOTAL SHEETS
	P 0037(119)129	F23	F27

Plotting Date: 09/22/2015

PCC OVERLAY CENTERLINE PROFILE

The PCC Overlay centerline profile shown in these plans was used to calculate the cubic yards for the PCC Overlay furnished.
The PCC Overlay centerline profile was designed so that there will be a minimum of 5 inches of PCC at all locations of the typical sections.
The PCC Overlay centerline profile sheets are included in the plans for information only.
The Contractor shall create a new PCC Overlay centerline profile in accordance with the Special Provision for Contractor Staking.
The elevations shown are the top of the PCC Overlay at Centerline.
Profile North of Huron begins at N 212491.553 E 2435156.386 Station 0+44 and ends at N 232742.460 E 2434742.578 Station 203+00.42

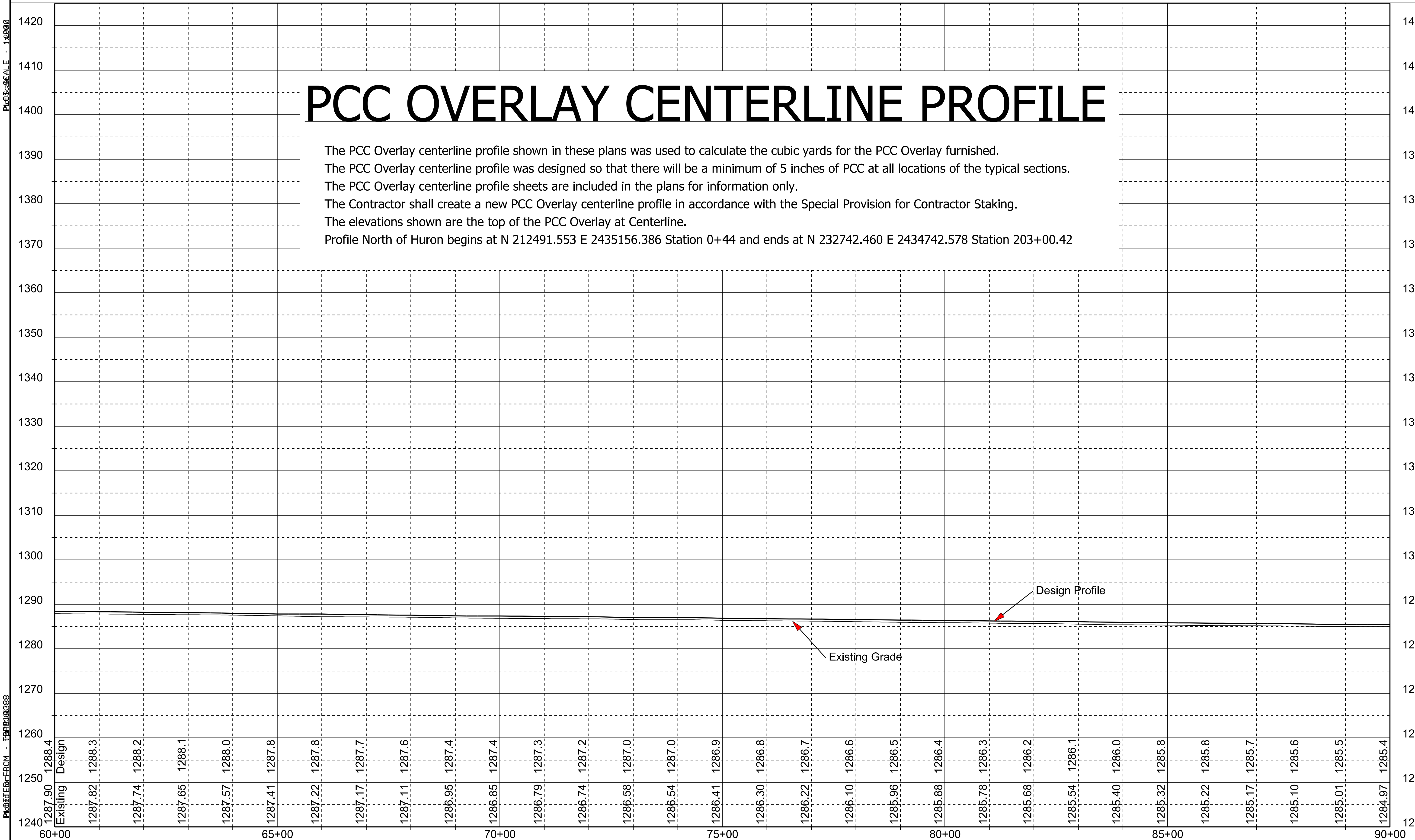

Design	1288.4	1288.3	1288.2	1288.1	1288.0	1287.8	1287.8	1287.7	1287.6	1287.4	1287.4	1287.3	1287.2	1287.0	1287.0	1286.9	1286.8	1286.7	1286.6	1286.5	1286.4	1286.3	1286.2	1286.1	1286.0	1285.8	1285.8	1285.7	1285.6	1285.5	1285.4
Existing	1287.90	1287.82	1287.74	1287.65	1287.57	1287.41	1287.22	1287.17	1287.11	1286.95	1286.85	1286.79	1286.74	1286.58	1286.54	1286.41	1286.30	1286.22	1286.10	1285.96	1285.88	1285.78	1285.68	1285.54	1285.40	1285.32	1285.22	1285.17	1285.10	1285.01	1284.97

STATE OF SOUTH DAKOTA	PROJECT	SHEET	TOTAL SHEETS
	P 0037(119)129	F24	F27

Plotting Date: 09/22/2015

PCC OVERLAY CENTERLINE PROFILE

The PCC Overlay centerline profile shown in these plans was used to calculate the cubic yards for the PCC Overlay furnished.
The PCC Overlay centerline profile was designed so that there will be a minimum of 5 inches of PCC at all locations of the typical sections.
The PCC Overlay centerline profile sheets are included in the plans for information only.
The Contractor shall create a new PCC Overlay centerline profile in accordance with the Special Provision for Contractor Staking.
The elevations shown are the top of the PCC Overlay at Centerline.
Profile North of Huron begins at N 212491.553 E 2435156.386 Station 0+44 and ends at N 232742.460 E 2434742.578 Station 203+00.42

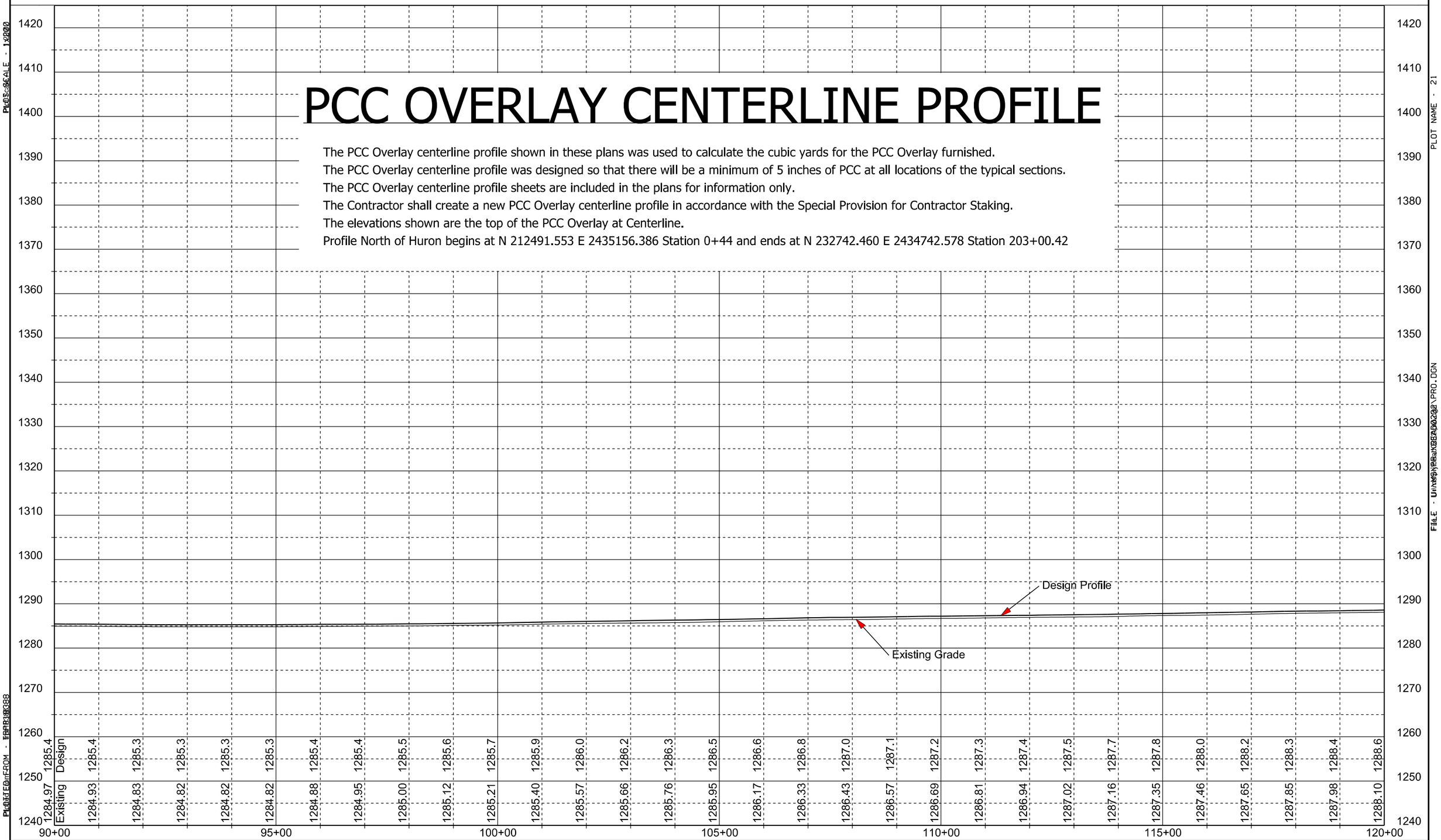

Design	1285.4	1285.4	1285.3	1285.3	1285.3	1285.3	1285.4	1285.4	1285.5	1285.6	1285.7	1285.9	1286.0	1286.2	1286.3	1286.5	1286.6	1286.8	1287.0	1287.1	1287.2	1287.3	1287.4	1287.5	1287.7	1287.8	1288.0	1288.2	1288.3	1288.4	1288.6
Existing	1284.97	1284.93	1284.83	1284.82	1284.82	1284.82	1284.88	1284.95	1285.00	1285.12	1285.21	1285.40	1285.57	1285.66	1285.76	1285.95	1286.17	1286.33	1286.43	1286.57	1286.69	1286.81	1286.94	1287.02	1287.16	1287.35	1287.46	1287.65	1287.85	1287.98	1288.10

STATE OF SOUTH DAKOTA	PROJECT	SHEET	TOTAL SHEETS
	P 0037(119)129	F25	F27

Plotting Date: 09/22/2015

PCC OVERLAY CENTERLINE PROFILE

The PCC Overlay centerline profile shown in these plans was used to calculate the cubic yards for the PCC Overlay furnished.
The PCC Overlay centerline profile was designed so that there will be a minimum of 5 inches of PCC at all locations of the typical sections.
The PCC Overlay centerline profile sheets are included in the plans for information only.
The Contractor shall create a new PCC Overlay centerline profile in accordance with the Special Provision for Contractor Staking.
The elevations shown are the top of the PCC Overlay at Centerline.
Profile North of Huron begins at N 212491.553 E 2435156.386 Station 0+44 and ends at N 232742.460 E 2434742.578 Station 203+00.42

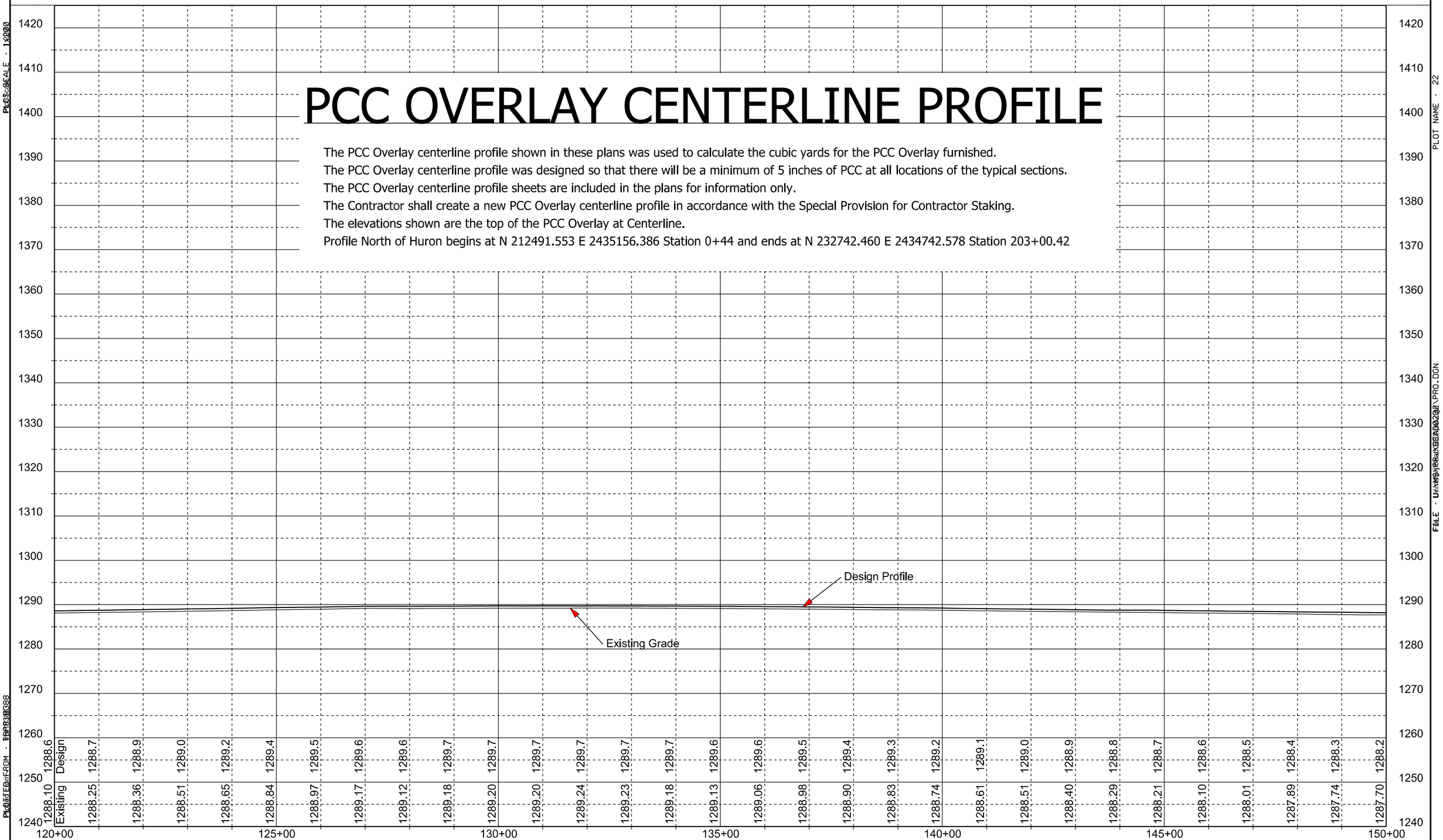

Design	1288.6	1288.7	1288.9	1289.0	1289.2	1289.4	1289.5	1289.6	1289.6	1289.7	1289.7	1289.7	1289.7	1289.7	1289.7	1289.6	1289.6	1289.5	1289.4	1289.3	1289.2	1289.1	1289.0	1288.9	1288.8	1288.7	1288.6	1288.5	1288.4	1288.3	1288.2
Existing	1288.10	1288.25	1288.36	1288.51	1288.65	1288.84	1288.97	1289.17	1289.12	1289.18	1289.20	1289.20	1289.24	1289.23	1289.18	1289.13	1289.06	1288.98	1288.90	1288.83	1288.74	1288.61	1288.51	1288.40	1288.29	1288.21	1288.10	1288.01	1287.89	1287.74	1287.70

STATE OF SOUTH DAKOTA	PROJECT	SHEET	TOTAL SHEETS
	P 0037(119)129	F26	F27

Plotting Date: 09/22/2015

PCC OVERLAY CENTERLINE PROFILE

The PCC Overlay centerline profile shown in these plans was used to calculate the cubic yards for the PCC Overlay furnished.
The PCC Overlay centerline profile was designed so that there will be a minimum of 5 inches of PCC at all locations of the typical sections.
The PCC Overlay centerline profile sheets are included in the plans for information only.
The Contractor shall create a new PCC Overlay centerline profile in accordance with the Special Provision for Contractor Staking.
The elevations shown are the top of the PCC Overlay at Centerline.
Profile North of Huron begins at N 212491.553 E 2435156.386 Station 0+44 and ends at N 232742.460 E 2434742.578 Station 203+00.42

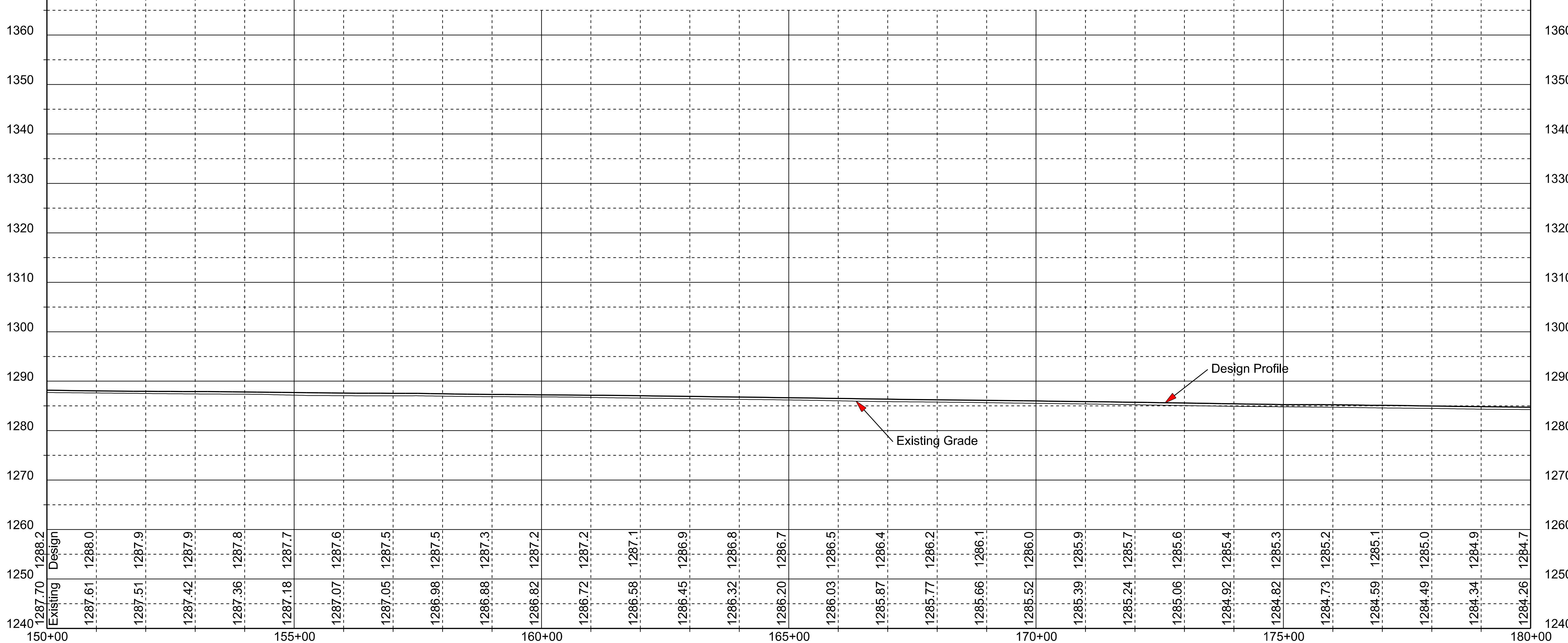

PLOT NAME - 23

STATE OF SOUTH DAKOTA	PROJECT	SHEET	TOTAL SHEETS
	P 0037(119)129	F27	F27

Plotting Date: 09/22/2015

PCC OVERLAY CENTERLINE PROFILE

The PCC Overlay centerline profile shown in these plans was used to calculate the cubic yards for the PCC Overlay furnished.
The PCC Overlay centerline profile was designed so that there will be a minimum of 5 inches of PCC at all locations of the typical sections.
The PCC Overlay centerline profile sheets are included in the plans for information only.
The Contractor shall create a new PCC Overlay centerline profile in accordance with the Special Provision for Contractor Staking.
The elevations shown are the top of the PCC Overlay at Centerline.
Profile North of Huron begins at N 212491.553 E 2435156.386 Station 0+44 and ends at N 232742.460 E 2434742.578 Station 203+00.42

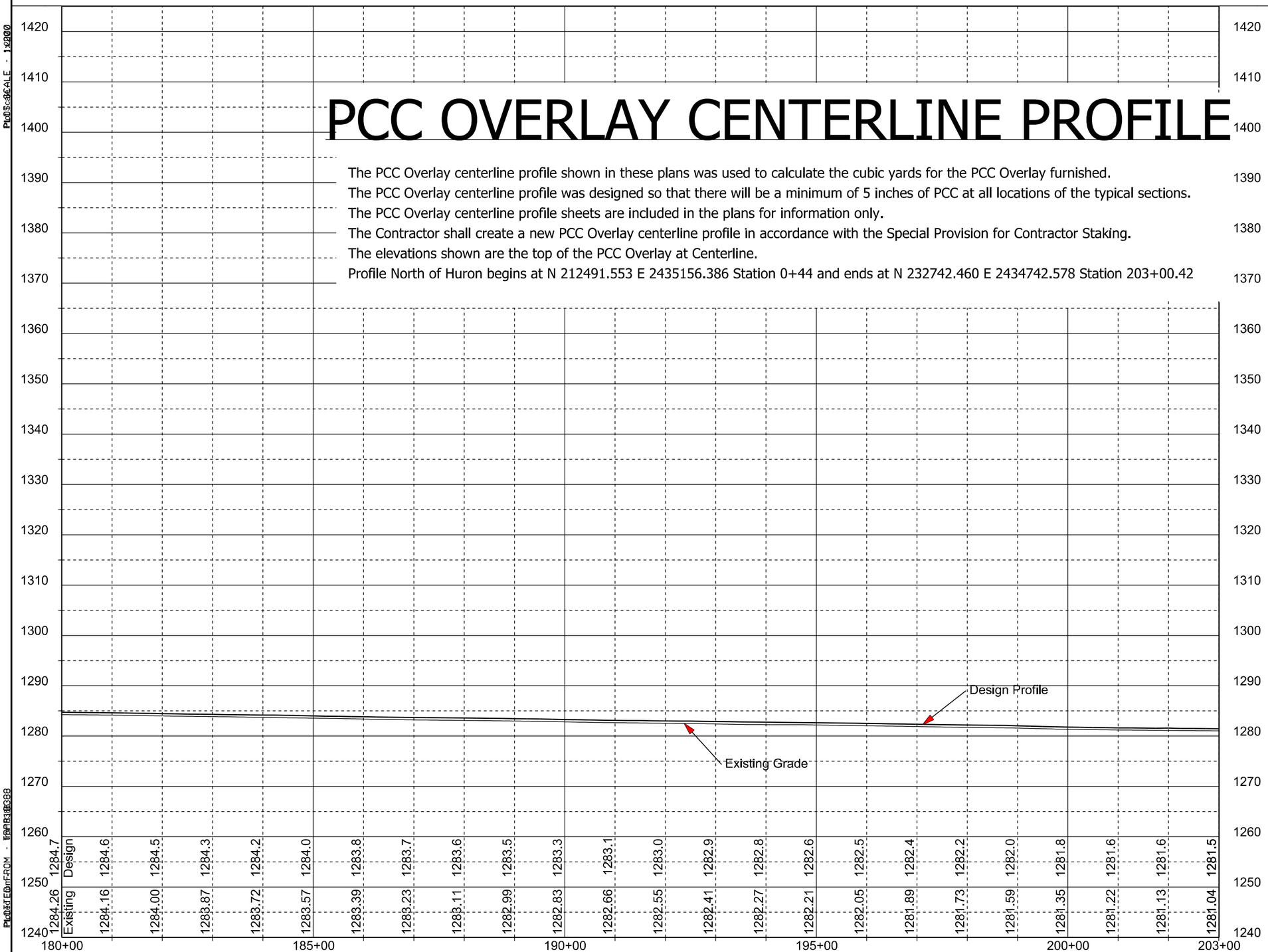

Design	1284.7	1284.6	1284.5	1284.3	1284.2	1284.0	1283.8	1283.7	1283.6	1283.5	1283.3	1283.1	1283.0	1282.9	1282.8	1282.6	1282.5	1282.4	1282.2	1282.0	1281.8	1281.6	1281.6	1281.5
Existing	1284.26	1284.16	1284.00	1283.87	1283.72	1283.57	1283.39	1283.23	1283.11	1282.99	1282.83	1282.66	1282.55	1282.41	1282.27	1282.21	1282.05	1281.89	1281.73	1281.59	1281.35	1281.22	1281.13	1281.04

PLOT NAME - 24