STATE OF SOUTH DAKOTA	PROJECT	SHEET NO.	TOTAL SHEETS
	NH 0212(156)306 NH 0281(99)152	F1	F28

Plotting Date: 07/08/2015

SECTION F: SURFACING PLANS

INDEX OF SHEETS

F1	General Layout with Index
F2-F5	Estimate of Quantities, Notes and Tables
F6-F7	Rates of Materials
F8-F9	Table of Additional Quantities
F10	Summary of Asphalt Concrete
F11	Table of Stationing and Quantities
F12-F22	Typical Resurfacing Sections
F23-F25	Transition Details
F26-F28	Standard Plates

Equation (US 212)
Sta. a 4+55.40 Bk
Sta. b 0+00.0 Ah
(East of Main St)

End Project
End Resurfacing
NH 0281(99)152, PCN 03HS
Sta. 368+66.16
MRM 153.90 +0.508

Begin Resurfacing
NH 0281(99)152,
PCN 03HS
Sta. 395+47.60

End Exception
NH 0281(99)152, PCN 03HS
Sta. 395+77.4 (Reverse Sta)
MRM 153.89 +0.000 (US281)

Equation(US 212)
Sta. b12+50.0Bk (US212) =
Sta. c 0+00 Ah (US212)
Sta. 395+77.40 Ah (US281)

Begin Resurfacing
NH 0212(156)306, PCN 023T
Sta. a -2+49.73
Equation (US 212)
Sta. 57+19.76 Bk
Sta. a -2+49.73 Ah
(East of 2nd St W.)

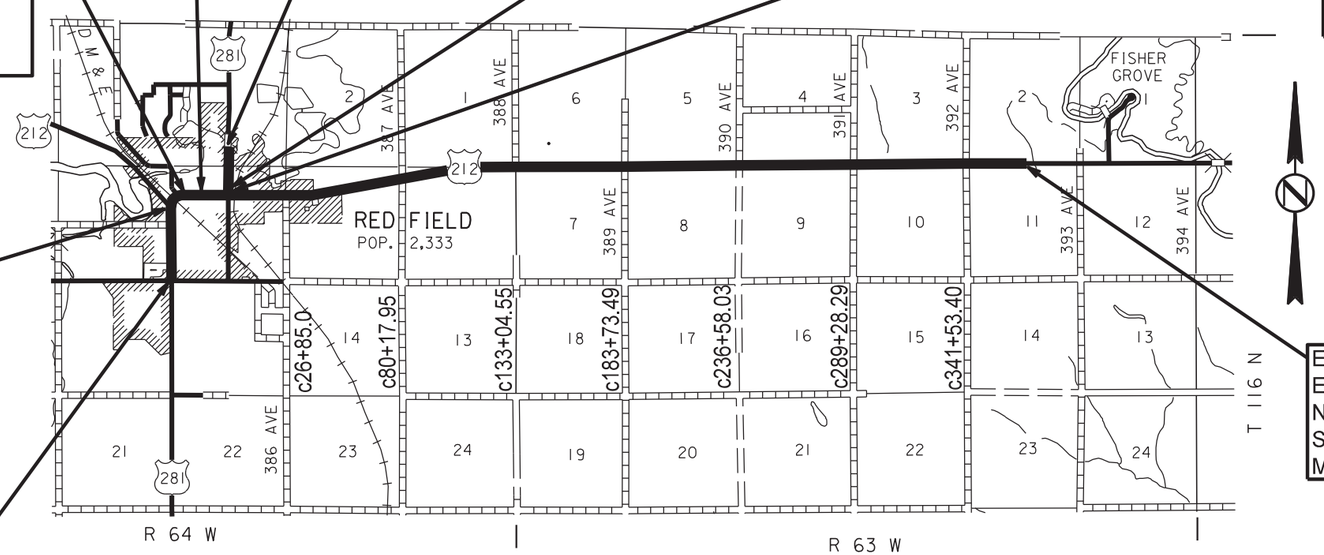

Begin Exception
NH 0281(99)152, PCN 03HS
Sta. 48+43.45

Begin Project (ADA Upgrades)
NH 0212(156)360, PCN 023T
Sta. 48+43.45
MRM 153.38 +0.000 (US 281)
MRM 306.46 +0.000 (US 212)
(Jct US212 & US281)

Begin Project (ADA Upgrades)
NH 0281(99)152, PCN 03HS
Sta. 13+26.31
MRM 152.00 +0.740
(16th Ave)

End Project
End Resurfacing
NH 0212(156)306, PCN 023T
Sta. c 368+03.92
MRM 313.00 +0.896

PLOT SCALE - 1:7000
PLOT NAME - 1
FILE - ...\SECTION F TITLE SHEET.DGN
PLOTTED FROM - TRAB17982

SECTION F - ESTIMATE OF QUANTITIES NH 0212(156)306, PCN 023T

	Bid Item Number	Item	Quantity	Unit
	120E0100	Unclassified Excavation, Digouts	367	CuYd
	120E6200	Water for Granular Material	31.0	MGal
	260E1010	Base Course	1,544.1	Ton
	260E1050	Base Course, Salvaged Asphalt Mix	3,731.4	Ton
*	260E6000	Granular Material, Furnish	5,814.0	Ton
*	270E0200	Blend, Haul, and Stockpile Granular Material	14,534.0	Ton
	320E0005	PG 58-34 Asphalt Binder	1,103.4	Ton
	320E1200	Asphalt Concrete Composite	54.5	Ton
	320E1203	Class Q3R Hot Mixed Asphalt Concrete	21,575.6	Ton
	320E1800	Asphalt Concrete Blade Laid	1,336.6	Ton
	320E4000	Hydrated Lime	226.5	Ton
	320E7012	Grind 12" Rumble Strip or Stripe in Asphalt Concrete	12.1	Mile
	330E0100	SS-1h or CSS-1h Asphalt for Tack	90.7	Ton
	330E0210	SS-1h or CSS-1h Asphalt for Flush Seal	42.2	Ton
	330E2000	Sand for Flush Seal	491.5	Ton
	332E0010	Cold Milling Asphalt Concrete	159,349	SqYd
	451E6080	Adjust Water Valve Box	15	Each
	600E0300	Type III Field Laboratory	1	Each
	671E7010	Adjust Manhole	16	Each
	900E0010	Refurbish Single Mailbox	3	Each

* - Denotes Non-Participating

SECTION F - ESTIMATE OF QUANTITIES NH 0281(99)152, PCN 03HS

	Bid Item Number	Item	Quantity	Unit
	120E0100	Unclassified Excavation, Digouts	25	CuYd
	260E1010	Base Course	50.8	Ton
*	260E6000	Granular Material, Furnish	1,099.0	Ton
*	270E0200	Blend, Haul, and Stockpile Granular Material	2,748.0	Ton
	320E0005	PG 58-34 Asphalt Binder	92.1	Ton
	320E1200	Asphalt Concrete Composite	9.7	Ton
	320E1203	Class Q3R Hot Mixed Asphalt Concrete	1,732.0	Ton
	320E1800	Asphalt Concrete Blade Laid	152.4	Ton
	320E4000	Hydrated Lime	18.6	Ton
	330E0100	SS-1h or CSS-1h Asphalt for Tack	3.1	Ton
	330E0210	SS-1h or CSS-1h Asphalt for Flush Seal	3.1	Ton
	330E2000	Sand for Flush Seal	59.3	Ton
	332E0010	Cold Milling Asphalt Concrete	14,837	SqYd
	451E6080	Adjust Water Valve Box	7	Each
	671E7010	Adjust Manhole	3	Each

* - Denotes Non-Participating

SURFACING THICKNESS DIMENSIONS

Plans tonnage will be applied even though the thickness may vary from that shown on the plans.

At those locations where material must be placed to achieve a required elevation, plans tonnage may be varied to achieve the required elevation.

GENERAL CONSTRUCTION

The Contractor shall be required to mow the inslopes with a rotary mower to a height of 6 inches for a distance of 14 feet from the edge of the roadway (or shoulder) for the length of the project. This work will be completed to the satisfaction of the Engineer after all construction activities are completed. All costs associated with this work shall be incidental to the various contract items.

TYPE III FIELD LABORATORY

The lab shall be equipped with an internet connection such as DSL, cable modem, or other approved service. The internet connection shall be provided with a multi-port wireless router. The internet connection shall be a minimum speed of 512 Kb unless limited by job location and approved by the DOT. Prior to installing the wireless router the Contractor shall submit the wireless router's technical data to the Area Office to check for compatibility with the state's computer equipment. The internet connection is intended for state personnel usage only. The Contractor's personnel are prohibited from using the internet connection unless pre-approved by the Project Engineer. These items shall be incidental to the contract unit price per each for TYPE III FIELD LABORATORY.

SAWING IN EXISTING SURFACING

Where new asphalt concrete is placed adjacent to existing asphalt concrete or PCCP, the existing pavement shall be sawed full depth to a true line with a vertical face. No separate payment shall be made for sawing.

TYPICAL RESURFACING SECTIONS 1 THRU 3

This segment of the project Sta. a -2+49.73 to Sta b 12+50 dates back to the 1930's with numerous changes made to the roadway width since original construction. The Department does not have complete record of all the changes to the surfacing section and thus the resurfacing sections may vary greatly from what is shown.

The width of each individual surfacing section is not consistent as changes have been made to the curb and gutter.

For Section 3, the Contractor will be required to cold mill asphalt concrete and place Class Q3R Hot Mixed Asphalt Concrete up against a vertical retaining wall.

COLD MILLING ASPHALT CONCRETE

The Los Angeles Abrasion Loss value on the aggregate used for the in place asphalt concrete is as follows. This value was obtained from testing during construction of the in place asphalt concrete.

Route	Section	LA Abrasion Loss Value
US 212	1 thru 6	23
US 212	7 thru 10	23 to 25
US 281	11	24 to 28

The placement of asphalt concrete shall begin within **5** working days after completion of cold milling of mainline asphalt concrete.

The Contractor shall use extreme care when milling around water valve boxes and manhole frames, lids, and rings.

TABLE OF MAINTENANCE PATCHES

Station	to	Station	Length
c 101+25		c 107+00	575'
c 247+30		c 256+00	870'
c 345+30		c 347+50	220'
		TOTAL	**1665'**

Maintenance Patches data obtained on 3-31-15.

There are numerous asphalt maintenance patches within the urban curb and gutter section within the city of Redfield that are not listed in the above table. It shall be the Contractors responsibility to determine the extent of maintenance patching that has been done within the city of Redfield.

Cold milling asphalt concrete is estimated to produce **18,497** tons of salvaged asphalt concrete material. An estimated **4,396** tons of salvaged asphalt concrete will be used on this project in the Class Q3R Hot Mixed Asphalt Concrete mixture. An estimated **3,731** tons will be used as Base Course, Salvaged Asphalt Mix to surface the outer portion of the shoulder in US212 Sections 7 thru 10. The Contractor is responsible to assure enough asphalt concrete salvage is available for the Class Q3R Hot Mixed Asphalt Concrete. The remainder of the salvaged asphalt concrete material shall be stockpiled. The salvaged asphalt concrete from Sections 7 thru 10 shall be used in the Class Q3R Hot Mixed Asphalt Concrete mixture.

Cold milling asphalt concrete shall be done according to the typical sections. The depth or width of milling may need to be adjusted due to rutting, maintenance patches, or roadway irregularities. Additional asphalt concrete shall be milled in these areas to provide a uniform typical section from centerline to the edge of the finished shoulder. These areas may also include farm & field entrances and intersecting roads. Any additional costs associated with this additional cold milling shall be incidental to the contract unit price per square yard for COLD MILLING ASPHALT CONCRETE. No adjustments in quantity or price will be made.

The Contractor will be responsible for excessive material lost at plant site stockpile location, or intermediate stockpiling locations due to bad stockpile management practices as deemed by the Engineer and will be required to compensate the State by providing similar material.

COLD MILLING ASPHALT CONCRETE (Cont.)

All cold milled material generated and not utilized within this Contract shall be hauled, blended, and stockpiled at the SDDOT Redfield Maintenance Yard located in the SE 1/4 of the NW ¼ of Sec 3, T116N, R64W.

The Contractor shall supply a scale and operator as specified in Section 9.1 of the Specifications to weigh the material before it is blended with the gravel surfacing material.

Between the cold milling operation and resurfacing with new asphalt at intersections in Redfield, cold milled material shall be placed in front of the curb ramps to form a temporary ramp from the cold milled surface to the curb ramp. The temporary ramp shall be a minimum of 3' wide with a slope no greater than 12:1. The ramp shall be smooth with no steep edge drop offs. All costs associated with placing the cold millings for a temporary ramp and removing those millings shall be incidental to the contract unit price per square yard for COLD MILLING ASPHALT CONCRETE.

GRANULAR MATERIAL, FURNISH

Granular Material shall be furnished by the Contractor for use in blending with the salvaged asphalt mix material from this project for the stockpile at the Redfield Maintenance Yard.

The Granular Material shall be Base Course meeting the requirements of Section 882.

BLEND, HAUL & STOCKPILE GRANULAR MATERIAL

The **10,369** tons of excess asphalt mix material shall be blended with **6,913** tons of Granular Material, Furnish and shall be hauled, and stockpiled at the SDDOT Redfield Maintenance Yard. Asphalt mix material shall be blended with Granular Material, Furnished at a rate of approximately 60% salvaged asphalt mix material and 40% Granular Material, Furnished material to obtain stockpile material.

The SDDOT Redfield Maintenance Yard is located in the SE 1/4 of the NW ¼ of Sec 3, T116N, R64W. Exact stockpile location to be determined by the Engineer. The Contractor shall be responsible for stockpile site preparation costs. Site preparation may include such items as stripping topsoil and shaping the stockpile site.

A computerized scale along with a scale operator shall be provided by the Contractor at the stockpile site to weigh the salvaged material prior to blending.

Prior to incorporation into the stockpile, cold milled asphalt material shall be run over a 1 ½" screen to remove large chunks. The use of a pugmill to blend the materials will be accepted. Calibrated conveyor(s) shall be used to provide a uniform blending of the materials. Material shall be blended prior to incorporation into the pile.

All other costs for hauling, stockpiling, and blending asphalt mix material and State Furnished material shall be incidental to the contract unit price per ton for BLEND, HAUL & STOCKPILE GRANULAR MATERIAL.

SHOULDER PREPARATION

Vegetation and accumulated material adjacent to the existing surface edge shall be removed to the satisfaction of the Engineer prior to placement of mainline surfacing. Any remaining windrow of accumulated material shall be re-spread evenly on the inslope adjacent to the asphalt shoulder to the satisfaction of the Engineer prior to the application of the flush seal.

Any vegetation damaged outside of the asphalt concrete limits shall be repaired and/or restored by the Contractor, at no expense to the State, and to the satisfaction of the Engineer.

This shoulder work shall be incidental to other contract items. Separate measurement and payment will not be made.

Prior to construction, State Maintenance Forces will spray the shoulders to kill existing vegetation. It will be the Contractor's responsibility to notify the State at least 30 days in advance of when he plans to begin work on the surface of the highway. The State assumes no responsibility for the effectiveness of the herbicide applied.

INTERSECTING ROADS AND ENTRANCES

Intersecting roads and entrances shall be satisfactorily cleared of vegetation, shaped, and compacted prior to placement of mainline surfacing. This work will be considered incidental to other contract items. Separate measurement and payment will not be made.

EXCAVATION OF UNSTABLE MATERIAL

Included in the Estimate of Quantities are **50** Cubic Yards of Unclassified Excavation, Digouts per mile for the necessary removal of unstable material.

Backfill shall be Base Course paid for at the contract unit price per ton.

The digout shall be extended to the shoulder and the granular material backfill shall daylight to the inslope to allow water to escape the subgrade.

A copy of the surfacing/subgrade investigation for this project is available from the Huron Area and the Aberdeen Region offices.

BASE COURSE

Aggregate for Base Course shall conform to the Specifications, except that the compaction shall be to the satisfaction of the Engineer.

Included in the Estimate of Quantities are **100** tons of Base Course per mile for backfill of Unclassified Excavation, Digouts.

BASE COURSE, SALVAGED ASPHALT MIX

Base Course Salvaged Asphalt Mix estimated at **3,231** tons shall be obtained from the material produced and stockpiled on this project and may be used without further testing.

Base Course Salvaged Asphalt Mix placed on the shoulders shall be compacted according to Section 260.3 D of the Specifications.

At the time of compaction, the material shall have approximately 4% moisture uniformly blended throughout the depth of material. The percent moisture may be adjusted by the Engineer. Included in the Estimate of Quantities is **31** M. Gal. for Water for Granular Material.

All other requirements for Base Course, Salvaged shall apply.

Included in the Estimate of Quantities are **500** tons of Base Course, Salvaged Asphalt Mix for placement from Sta. 246+50 to Sta. 262+50 on the wide shoulders through this location.

WATER FOR COMPACTION OF GRANULAR MATERIALS

Cost of water for compaction of the granular material, other than the Base Course, Salvaged Asphalt Mix placed on the shoulders in Section 7 thru 10, shall be incidental to the contract unit price for the various contract items. Six percent, plus or minus, moisture will be required at the time of compaction unless otherwise directed by the Engineer.

ADJUSTMENT OF MANHOLES

The Contractor shall adjust manholes to the extent necessary on this project. Adjusting the manholes may consist of removing the upper course of brick or removing the concrete walls, replacing the removed materials with brick or Class M6 concrete, placing adjusting rings if necessary, and resetting the manhole frame and lid. The elevation of the lid shall be set at the same elevation of the adjacent new pavement or surrounding ground. All manhole frames, lids, and rings that are cracked or broken due to carelessness of the Contractor shall be replaced with new manhole frames, lids, and rings that conform with the Specifications at the Contractor's expense. Manholes shall be adjusted to the satisfaction of the Engineer. All costs involved in adjusting the manholes shall be incidental to the contract unit price per each for ADJUST MANHOLE.

The Engineer may direct adjustment of manholes that were not included in these plans. Payment for adjusting manholes that were not included in the plans will be at the contract unit price per each for ADJUST MANHOLE.

TABLE OF ADJUST MANHOLES

US 212

Station	L/R	Type of Adjustment
a -0+28	20' R	Adjust to new surfacing elevation
a -0+27	8' L	Adjust to new surfacing elevation
a 3+69	29' R	Adjust to new surfacing elevation
a 3+69	12' L	Adjust to new surfacing elevation
a 3+85	10' L	Adjust to new surfacing elevation
a 4+14	18' L	Adjust to new surfacing elevation
a 8+17	10' L	Adjust to new surfacing elevation
b 3+69	12' L	Adjust to new surfacing elevation
b 3+85	10' L	Adjust to new surfacing elevation
b 8+16	10' L	Adjust to new surfacing elevation
b 12+47	1' R	Adjust to new surfacing elevation
c 4+68	1' L	Adjust to new surfacing elevation
c 8+57	1' L	Adjust to new surfacing elevation
c 12+81	CL	Adjust to new surfacing elevation
c 17+05	CL	Adjust to new surfacing elevation
c 22+17	CL	Adjust to new surfacing elevation

US 281

Station	L/R	Type of Adjustment
391+37	1' R	Adjust to new surfacing elevation
387+06	CL	Adjust to new surfacing elevation
383+20	2' L	Adjust to new surfacing elevation

TABLE FOR ADJUSTMENT OF WATER VALVES

US 212

Station	L/R	Adjustment
a -0+60	14' R	Adjust to new surfacing elevation
a -0+57	16' R	Adjust to new surfacing elevation
a -0+57	8' R	Adjust to new surfacing elevation
a -0+54	14' R	Adjust to new surfacing elevation
a 3+98	9' R	Adjust to new surfacing elevation
a 4+02	12' R	Adjust to new surfacing elevation
a 4+05	9' R	Adjust to new surfacing elevation
c 26+53	16' R	Adjust to new surfacing elevation
c 26+77	13' R	Adjust to new surfacing elevation
c 26+77	18' R	Adjust to new surfacing elevation
c 26+80	16' R	Adjust to new surfacing elevation
c 32+93	16' R	Adjust to new surfacing elevation
c 32+98	16' R	Adjust to new surfacing elevation
c 32+97	41' L	Adjust to new surfacing elevation
c 12+69	28' L	*Adjust to new surfacing elevation

* This is a Gas Valve and will be measured and paid for as Adjust Water Valve

US 281

Station	L/R	Adjustment
391+47	14' L	Adjust to new surfacing elevation
391+44	11' L	Adjust to new surfacing elevation
386+99	11' L	Adjust to new surfacing elevation
386+98	12' L	Adjust to new surfacing elevation
386+98	10' L	Adjust to new surfacing elevation
383+28	10' L	Adjust to new surfacing elevation
383+27	12' L	Adjust to new surfacing elevation

ASPHALT FOR TACK

Included in the Estimate of Quantities are **40** tons of SS-1h or CSS-1h Asphalt for Tack for use prior to the application of the Blade Laid lift. (Rate = 0.09 Gal./ Sq.Yd.).

Included in the Estimate of Quantities are **4** tons of SS-1h or CSS-1h Asphalt for Tack for surface repair, strengthening, and spot leveling areas throughout the project. (Rate = 0.05 Gal./ Sq.Yd.).

ASPHALT CONCRETE BLADE LAID

Included in the Estimate of Surfacing Quantities are **150** tons of Asphalt Concrete Blade Laid, **1.5** tons of Hydrated Lime, and **11.3** tons of PG **58-34** Asphalt Binder per mile and shall be tight bladed on the existing surface 24 feet wide prior to the overlay. For Sections 1 thru 4 within the city of Redfield the application width shall be 60 feet wide and, for Sections 5, 6 and 11 the application width shall be 48 feet wide. The quantities have been adjusted for Sections 1 thru 6 and 11 to account for this additional application width. A sufficient amount of material shall be kept in front of the blade to fill and level all joints, cracks and other surface irregularities. The actually rate per mile may vary from that indicated.

Mineral Aggregate for tight bladed material shall use only the fine aggregate components combined in the same proportions as the Class Q3R Hot Mixed Asphalt Concrete mix. No quality testing will be done on any of the coarse aggregate (+No. 4 sieve) in this mix.

The Asphalt Concrete Blade Laid Lift shall be designed using an N_{design} Gyratory Compactive Effort of 65. The asphalt binder content shall be determined so that the air voids of Asphalt Concrete Blade Laid Lift are between 3.0% and 5.0%.

Asphalt Concrete Blade Laid shall be completed prior to Class Q3R Hot Mixed Asphalt Concrete paving operations beginning.

CLASS Q3R HOT MIXED ASPHALT CONCRETE

Mineral Aggregate:
Asphalt concrete aggregates shall consist of reclaimed asphalt pavement (RAP) and virgin aggregate.

Virgin mineral aggregate for Class Q3R Hot Mixed Asphalt Concrete shall conform to the requirements of Class Q3.

The Class Q3R Hot Mixed Asphalt Concrete shall include 20 percent RAP in the mixture.

RAP shall be obtained from the material produced by cold milling on this project and may be used without further quality testing. RAP in the cold feed shall be crushed to meet the requirements specified in Section 884.2 C.1.

Screening or scalping of the RAP stockpile(s) will not be allowed.

Mix Design Criteria:
Gyratory Controlled QC/QA Mix Design requirements for the Class Q3R Hot Mixed Asphalt Concrete shall conform to the requirements of Class Q3 except as modified by the following:

Gyratory Compactive Effort:

	$N_{initial}$	N_{design}	$N_{maximum}$
Class Q3R	6	50	75

All remaining requirements for Class Q3 shall apply.

ADDITIONAL QUANTITIES:

Included in the Estimate of Quantities are **100** tons of Class **Q3R** Asphalt Concrete and, **1.0** tons of Hydrated Lime of Asphalt concrete and **4.7** tons of PG **58-34** Asphalt Binder, per mile for spot leveling, strengthening, and repair of the existing surface. This material shall be placed where and as directed by the Engineer.

FLUSH SEAL

Application of Flush Seal shall be completed within 10 working days following completion of the asphalt concrete surfacing.

For each working day that the Flush Seal remains uncompleted after the 10 working day limitation, the Contractor will be assessed liquidated damages at the rate of $250.00 per day.

The liquidated damages shall apply only up to the Field Work Completion Date, as extended. After the Contract Completion Date, liquidated damages will be assessed in accordance with the schedule set forth in Section 8.8 of the Specifications.

Application of Flush Seal may be eliminated by the Engineer. If the paved surface remains tight, the Engineer shall notify the Contractor as soon as possible that the Flush Seal is unnecessary.

SAND FOR FLUSH SEAL

On the rural section of US 212 Sta. c42+15 to Sta. c368+03.92, the sand application shall be placed 11' wide in each lane, leaving 12" on center line and 6" on each edge line free of sand. All other locations (Curb and Gutter urban sections) shall have the sand for flush seal placed the entire width of the asphalt pavement.

REFURBISH MAILBOXES

Existing mailboxes shall be removed, turnouts constructed, and mailboxes reset on new posts with the necessary support hardware for single or double mailbox assemblies (See Standard Plate No's. 900.01, 900.02 and 900.03). The local Postmaster will determine the recommended mounting height of the mailboxes throughout the project. The Contractor shall coordinate with the Engineer on the proper postal representative to contact.

TABLE OF REFURBISH MAILBOXES

Location MRM	SIDE	SINGLE MAILBOX EACH	COMMENTS
307.00 +0.94	Rt	1	
309.00 +0.02	Lt	1	
310.00 +0.68	Lt	Do Not Disturb	
310.00 +097	Rt	1	Turnout surfacing required
TOTALS		3	

All costs for removing existing mailboxes, providing temporary mailboxes, and resetting mailboxes with new posts and necessary support hardware shall be incidental to the contract unit price per each for REFURBISH SINGLE MAILBOX.

RUMBLE STRIPS

Rumble Strips installation shall be completed prior to application of the Flush Seal and Permanent Pavement Markings. In the event the Flush Seal is eliminated from the contract, the Contractor will still be required to apply a Flush Seal to the newly installed 12” Rumble Strips at a width of 1.5’ and at the same rate as specified in this plan set. No adjustment in the contract unit price will be made and SS-1h or CSS-1h will be paid at the contract unit price per ton.

The Contractor shall be required to remove loose material from the driving surface and/or asphalt shoulders of the roadway. Loose material may be broomed to the edge of shoulders and it shall be the Contractor’s responsibility to ensure the loose material does not enter any vegetated areas and/or waterways.

All costs associated with the work shall be incidental to the contract unit price per mile for GRIND 12" RUMBLE STRIP OR STRIPE IN ASPHALT CONCRETE.

TABLE OF 12” RUMBLE STRIPS

Station to Station	Length (Ft)	Length (Miles)
c 47+50 to c 368+03.92	64,107.84	12.1
Total	64,107.84	12.1

ASPHALT CONCRETE COMPOSITE

The requirement for a Flush Seal shall be waived for any asphalt surface that will be subsequently cold milled on this project.

All other requirements in the Specifications for Asphalt Concrete Composite shall apply.

The Asphalt Concrete Composite shall be used as:

a:) backfill in front of the newly placed concrete Curb and Gutter to provide a transition between the new Curb and Gutter and the in place surfacing

b:) backfill around the newly placed Valley Gutter placed at intersection streets.

Depth of Asphalt Concrete shall be 4 inches.

Placement and compaction shall be by methods and equipment to the satisfaction of the Engineer.

RATES OF MATERIALS - NH 0212(156)306, PCN 023T

The Estimate of Quantities is based on the following quantities of material per Station.

SECTION 4 Sta. c 0+00.00 to Sta. c 26+83.00

CLASS Q3R HOT MIXED ASPHALT CONCRETE – 2" LIFT

Crushed Aggregate	60.18 Tons
Salvaged Asphalt Concrete	15.04 Tons
PG 58-34 Asphalt Binder	3.71 Tons
Total without Lime	**78.93 Tons**
Hydrated Lime	0.79 Tons
Total with Lime	**79.72 Tons**

The exact proportion of these materials will be determined on construction.

SS-1h or CSS-1h Emulsified Asphalt for Tack at the rate of **0.15** tons applied **64** feet wide.
(Rate = 0.05 Gal./Sq.Yd.)

FLUSH SEAL

SS-1h or CSS-1h Emulsified Asphalt for Flush Seal at the rate of **0.15** tons applied **64** feet wide.
(Rate = 0.05 Gal./Sq.Yd.).

Sand for Flush Seal at the rate of **2.84** tons applied **64** feet wide. (Rate = 8 Lb./Sq.Yd.).

SECTION 5 Sta. c 26+83.00 to Sta. c 33+04.00

CLASS Q3R HOT MIXED ASPHALT CONCRETE – 2" LIFT

Crushed Aggregate	52.65 Tons
Salvaged Asphalt Concrete	13.16 Tons
PG 58-34 Asphalt Binder	3.25 Tons
Total without Lime	**69.06 Tons**
Hydrated Lime	0.69 Tons
Total with Lime	**69.75 Tons**

The exact proportion of these materials will be determined on construction.

SS-1h or CSS-1h Emulsified Asphalt for Tack at the rate of **0.13** tons applied **56** feet wide.
(Rate = 0.05 Gal./Sq.Yd.)

FLUSH SEAL

SS-1h or CSS-1h Emulsified Asphalt for Flush Seal at the rate of **0.13** tons applied **56** feet wide.
(Rate = 0.05 Gal./Sq.Yd.).

Sand for Flush Seal at the rate of **2.49** tons applied **56** feet wide. (Rate = 8 Lb./Sq.Yd.).

SECTION 6 Sta. c 33+04.00 to Sta. c 40+15.00

CLASS Q3R HOT MIXED ASPHALT CONCRETE – 2" LIFT

Crushed Aggregate	45.14 Tons
Salvaged Asphalt Concrete	11.28 Tons
PG 58-34 Asphalt Binder	2.78 Tons
Total without Lime	**59.20 Tons**
Hydrated Lime	0.59 Tons
Total with Lime	**59.79 Tons**

The exact proportion of these materials will be determined on construction.

SS-1h or CSS-1h Emulsified Asphalt for Tack at the rate of **0.11** tons applied **48** feet wide.
(Rate = 0.05 Gal./Sq.Yd.)

FLUSH SEAL

SS-1h or CSS-1h Emulsified Asphalt for Flush Seal at the rate of **0.11** tons applied **48** feet wide.
(Rate = 0.05 Gal./Sq.Yd.).

Sand for Flush Seal at the rate of **2.13** tons applied **48** feet wide. (Rate = 8 Lb./Sq.Yd.).

The Estimate of Quantities is based on the following quantities of material per Mile.

SECTION 7 Sta. c 40+15.00 to Sta. c 95+00.00

SECTION 8 Sta. c 95+00.00 to Sta. c 129+00.00

CLASS Q3R HOT MIXED ASPHALT CONCRETE – 2" LIFT

Crushed Aggregate	1817 Tons
Salvaged Asphalt Concrete	454 Tons
PG 58-34 Asphalt Binder	112 Tons
Total without Lime	**2383 Tons**
Hydrated Lime	24 Tons
Total with Lime	**2407 Tons**

The exact proportion of these materials will be determined on construction.

SS-1h or CSS-1h Emulsified Asphalt for Tack at the rate of **4.8** tons applied **39** feet wide.
(Rate = 0.05 Gal./Sq.Yd.)

BASE COURSE, SALVAGED ASPHALT MIX on Shoulders
(Rate for one side only)

Salvaged Asphalt Concrete ..... 110 Tons

SS-1h or CSS-1h Emulsified Asphalt for Tack at the rate of **0.5** tons applied **4** feet wide.
(Rate = 0.05 Gal./Sq.Yd.)

FLUSH SEAL

SS-1h or CSS-1h Emulsified Asphalt for Flush Seal at the rate of **5.1** tons applied **42** feet wide.
(Rate = 0.05 Gal./Sq.Yd.).

Sand for Flush Seal at the rate of **52** tons applied **22** feet wide. (Rate = 8 Lb./Sq.Yd.).

RATES OF MATERIALS - NH 0212(156)306, PCN 023T (Cont.)

SECTION 9	**Sta. c 129+00.00 to Sta. c 132+50.00** **Sta. c 171+00.00 to Sta. c 218+00.00** **Sta. c 288+00.00 to Sta. c 368+03.92**
SECTION 10	**Sta. c 132+50.00 to Sta. c 171+00.00** **Sta. c 218+00.00 to Sta. c 288+00.00**

CLASS Q3R HOT MIXED ASPHALT CONCRETE – 2" LIFT

Crushed Aggregate.....	1922 Tons
Salvaged Asphalt Concrete	480 Tons
PG 58-34 Asphalt Binder.....	118 Tons
Total without Lime	**2520 Tons**
Hydrated Lime.....	25 Tons
Total with Lime	**2545 Tons**

The exact proportion of these materials will be determined on construction.

SS-1h or CSS-1h Emulsified Asphalt for Tack at the rate of **4.8** tons applied **39** feet wide.
(Rate = 0.05 Gal./Sq.Yd.)

BASE COURSE, SALVAGED ASPHALT MIX on Shoulders
(Rate for one side only)

Salvaged Asphalt Concrete ..... 316 Tons

SS-1h or CSS-1h Emulsified Asphalt for Tack at the rate of **0.7** tons applied **5.5** feet wide.
(Rate = 0.05 Gal./Sq.Yd.)

FLUSH SEAL

SS-1h or CSS-1h Emulsified Asphalt for Flush Seal at the rate of **5.5** tons applied **45** feet wide.
(Rate = 0.05 Gal./Sq.Yd.).

Sand for Flush Seal at the rate of **52** tons applied **22** feet wide. (Rate = 8 Lb./Sq.Yd.).

RATES OF MATERIALS - NH 0281(99)152, PCN 03HS

The Estimate of Quantities is based on the following quantities of material per Station.

SECTION 11	**Sta. 395+77.40 to Sta. 368+66.16**

CLASS Q3R HOT MIXED ASPHALT CONCRETE – 2" LIFT

Crushed Aggregate.....	45.14 Tons
Salvaged Asphalt Concrete	11.28 Tons
PG 58-34 Asphalt Binder.....	2.78 Tons
Total without Lime	**59.20 Tons**
Hydrated Lime.....	0.59 Tons
Total with Lime	**59.79 Tons**

The exact proportion of these materials will be determined on construction.

SS-1h or CSS-1h Emulsified Asphalt for Tack at the rate of **0.11** tons applied **48** feet wide.
(Rate = 0.05 Gal./Sq.Yd.)

FLUSH SEAL

SS-1h or CSS-1h Emulsified Asphalt for Flush Seal at the rate of **0.11** tons applied **48** feet wide.
(Rate = 0.05 Gal./Sq.Yd.).

Sand for Flush Seal at the rate of **2.13** tons applied **48** feet wide. (Rate = 8 Lb./Sq.Yd.).

TABLE OF ADDITIONAL QUANTITIES - NH 0212(156)306, PCN 023T

LOCATIONS:	BASE COURSE	ASPHALT CONCRETE COMPOSITE	CLASS Q3R HOT MIXED ASPHALT CONCRETE (w/Specified Density)	CLASS Q3R HOT MIXED ASPHALT CONCRETE (w/out Specified Density)	PG 58-34 ASPHALT BINDER	HYDRATED LIME	SALVAGE ASPHALT CONCRETE (RAP)	Virgin Aggregate N.A.B.I.	SS-1h/ CSS-1h ASPH. FOR TACK	SS-1h/ CSS-1h ASPH. FOR FLUSH SEAL	SAND FOR FLUSH SEAL	COLD MILLING ASPHALT CONCRETE
	TON	TON	TON	TON	TON	TON	TON	TON	TON	TON	TON	SQ YD
Section 1	-	-	507.2	-	23.58	5.10	95.7	382.9	0.91	0.91	17.74	-
Section 1a	-	-	355.9	-	16.55	3.55	67.1	268.6	0.63	0.63	12.11	-
Section 2	-	-	457.4	-	21.31	4.49	86.3	345.3	0.79	0.79	15.33	-
Section 3	-	-	365.7	-	17.02	3.58	69.0	276.1	0.61	0.61	11.89	-
1st Street West Lt - Cold Mill and Resurface to 51' Lt of CL	-	1.3	-	14.0	0.66	0.14	2.6	10.6	0.03	0.03	0.30	96.2
1st Street West Rt - Cold Mill and Resurface to 52' Lt of CL	-	1.3	-	13.0	0.61	0.13	2.5	9.8	0.02	0.02	0.30	87.7
Sta. b0+30 to b 0+40 Rt and Sta. b 2+20 to 2+30 Lt for Curb and Gutter Replacement	-	0.6	-	-	-	-	-	-	-	-	-	-
1st Street East Lt - Cold Mill and Resurface to 55' Lt of CL	-	2.3	-	15.0	0.71	0.15	2.8	11.3	0.03	0.03	0.30	107.2
1st Street East Rt - Cold Mill and Resurface to 52' Rt of CL	-	2.2	-	15.0	0.71	0.15	2.8	11.3	0.03	0.03	0.30	102.4
2nd Street East Lt - Cold Mill and Resurface to 51' Lt of CL	-	1.1	-	14.0	0.66	0.14	2.6	10.6	0.03	0.03	0.30	96.2
2nd Street East Rt - Cold Mill and Resurface to 51' Rt of CL	-	3.6	-	14.0	0.66	0.14	2.6	10.6	0.03	0.03	0.30	96.3
3rd Street East Rt - Cold Mill and Resurface to 50' Rt of CL	-	0.9	-	15.0	0.71	0.15	2.8	11.3	0.03	0.03	0.30	102.8
Railroad crossing between 3rd St and 4th St (Additional width for Sidewalks)	-		-	9.0	0.42	0.09	1.7	6.8	0.02	0.02	0.30	74.8
4th Street East Lt - Cold Mill and Resurface to 57' Lt of CL	-	3.2	-	15.0	0.71	0.15	2.8	11.3	0.03	0.03	0.30	105.3
4th Street East Rt	-	0.5	-	-	-	-	-	-	-	-	-	-
5th Street East Lt	-	6.3	-	-	-	-	-	-	-	-	-	-
5th Street East Rt	-	5.7	-	-	-	-	-	-	-	-	-	-
6th Street East Lt	-	5.9	-	-	-	-	-	-	-	-	-	-
6th Street East Rt	-	5.8	-	-	-	-	-	-	-	-	-	-
8th Street East Lt	-	5.9	-	-	-	-	-	-	-	-	-	-
8th Street East Rt	-	0.5	-	-	-	-	-	-	-	-	-	-
9th Street East Lt	-	6.1	-	-	-	-	-	-	-	-	-	-
9th Street East Rt - Cold Mill and Resurface to 49' Rt of CL	-	1.2	-	13.0	0.61	0.13	2.5	9.8	0.02	0.02	0.30	87.0
12th Street East Rt - Cold Mill and Resurface to 41' Rt of CL	-	-	-	10.0	0.47	0.10	1.9	7.5	0.02	0.02	0.30	65.4
Transition from 4 to 2 lane Sta. 40+15 to Sta. 42+00	-	-	-	10.0	0.47	0.10	1.9	7.5	0.02	0.02	0.30	-
14th Street East Rt - Asphalt Pad to Radius Point	-	-	-	42.0	1.97	0.42	7.9	31.7	0.08	0.08	1.00	-
Local Road Sta c53+26 Lt - Asphalt Pad to Radius Point	15	-	-	20.0	0.94	0.20	3.8	15.1	0.04	-	-	-
1 Intersecting Asphalt County Roads to be surfaced with asphalt to ROW Line Sta. c 80+18 (387 Ave Rt). Feather Asphalt Surface at ROW Line.	-	-	-	38.0	1.79	0.38	7.2	28.7	0.07	-	-	-
1 Intersecting Gravel Road w/no asphalt surfacing - Gravel Only (388 Ave Rt)	30	-	-	-	-	-	-	-		-	-	-
10 Intersecting Gravel Roads to be surfaced with asphalt to radius point	300	-	-	255.0	11.99	2.55	48.1	192.4	0.46	-	-	-
1 Residential Driveway Sta c107+55 Lt - Surfaced with Asphalt to ROW Line. Feather Asphalt Surfacing to Radius Point.	-	-	-	33.0	1.55	0.33	6.2	24.9	0.06	-	-	-
31 Gravel Commercial, Residential, Farm & Field Entrances **	465	-	-	-	-	-	-	-	-	-	-	-
Mail Box Turnout at MRM 310.00 +0.97 Rt	-	-	-	1.0	0.05	0.01	0.2	0.8	0.00	-	-	-
End Project - Cold Mill and AC Surface 80' past Sta 336+03.92 and transition width to match in place surfacing	-	-	-	40.0	1.88	0.40	7.5	30.2	0.07	-	-	335.0
TOTALS	**810**	**54.5**	**1686.1**	**586.0**	**106.0**	**22.6**	**428.6**	**1714.9**	**4.0**	**3.3**	**61.7**	**1356.5**

The tonnage shown in the Table of Additional Quantities for Class Q3R Hot Mix Asphalt Concrete is based on an average compacted thickness of 2 inches.

Application shall be at the rate shown on the plans or as directed by the Engineer.

** At Entrances, Asphalt Concrete Pavement shall not be placed for pads, as indicated on Standard Plate 320.13.

The above quantities are included in the Estimate of Quantities.

PLOTTED FROM - TRAB17882

TABLE OF ADDITIONAL QUANTITIES - NH 0281(99)152, PCN 03HS

LOCATIONS:	BASE COURSE	ASPHALT CONCRETE COMPOSITE	CLASS Q3R HOT MIXED ASPHALT CONCRETE (w/Specified Density)	CLASS Q3R HOT MIXED ASPHALT CONCRETE (w/out Specified Density)	PG 58-34 ASPHALT BINDER	HYDRATED LIME	SALVAGE ASPHALT CONCRETE (RAP)	Virgin Aggregate N.A.B.I.	SS-1h/ CSS-1h ASPH. FOR TACK	SS-1h/ CSS-1h ASPH. FOR FLUSH SEAL	SAND FOR FLUSH SEAL	COLD MILLING ASPHALT CONCRETE
	TON	TON	TON	TON	TON	TON	TON	TON	TON	TON	TON	SQ YD
6th Ave East Lt - Cold Mill and Resurface to 42' Lt of CL	-	2.8	-	12.0	0.56	0.12	2.3	9.1	0.02	0.02	0.30	84.7
6th Ave East Rt - Cold Mill and Resurface to 42' Rt of CL	-	1.9	-	12.0	0.56	0.12	2.3	9.1	0.02	0.02	0.30	84.2
5th Ave East Lt - Cold Mill and Resurface to 42' Lt of CL	-	2.0	-	11.0	0.52	0.11	2.1	8.3	0.02	0.02	0.30	72.1
5th Ave East Rt - Cold Mill and Resurface to 42' Rt of CL	-	2.0	-	12.0	0.56	0.12	2.3	9.1	0.02	0.02	0.30	80.9
4th Ave East Lt - Cold Mill and Resurface to 42' Lt of CL	-	0.9	-	8.0	0.38	0.08	1.5	6.0	0.01	0.01	0.30	55.2
4th Ave East Rt - Cold Mill and Resurface to 42' Rt of CL	-	-	-	9.0	0.42	0.09	1.7	6.8	0.02	0.02	0.30	61.8
2nd Ave East Lt - Cold Mill and Resurface to 42' Lt of CL	-	-	-	14.0	0.66	0.14	2.6	10.6	0.02	0.02	0.30	96.7
TOTALS	**0**	**9.7**	**0**	**78.0**	**3.7**	**0.8**	**14.7**	**58.8**	**0.1**	**0.1**	**2.1**	**535.6**

The tonnage shown in the Table of Additional Quantities for Class Q3R Hot Mix Asphalt Concrete is based on an average compacted thickness of 2 inches.

Application shall be at the rate shown on the plans or as directed by the Engineer.

The above quantities are included in the Estimate of Quantities.

PLOTTED FROM - TRAB17882

SUMMARY OF ASPHALT CONCRETE - NH 0212(156)306, PCN 023T

LOCATIONS:	Class Q3R Hot Mixed Asphalt Concrete with Specified Density Compaction TONS	Class Q3R Hot Mixed Asphalt Concrete without Specified Density Compaction TONS
Section 1 - 60' Top	507.2	-
Section 1a - 69' Top	355.9	-
Section 2 - 70' Top	457.4	-
Section 3 - 62' Top	365.7	-
Section 4 - 48' Top	1605.8	-
Section 4 - 8' Parking Lane on each side of road	-	533.1
Section 5 - 48' Top	371.7	-
Section 5 - 8' Parking Lane left side only	-	61.5
Section 6 - 48' Top	425.1	-
Section 7 - 24' Top	1641.4	-
Section 7 - 6' Shoulder with 1' Sluff	-	859.0
Section 8 - 24' Top	1017.5	-
Section 8 - 6' Shoulder with 1' Sluff	-	532.5
Section 9 - 24' Top	3906.5	-
Section 9 - 6' Shoulder with 1' Sluff	-	2385.6
Section 10 - 24' Top	3247.0	-
Section 10 - 6' Shoulders and 1' Sluff	-	1982.8
Spot leveling, strengthening, and repair of existing surface	-	734.1
Table of Additional Quantities **(Less Sections 1 thru 3)**	-	586.0
TOTAL	**13901.1**	**7674.5**

Total Class Q3R Hot Mixed Asphalt Concrete: 21575.6 *Tons*

SUMMARY OF ASPHALT CONCRETE - NH 0281(99)152, 03HS

LOCATIONS:	Class Q3R Hot Mixed Asphalt Concrete with Specified Density Compaction TONS	Class Q3R Hot Mixed Asphalt Concrete without Specified Density Compaction TONS
Section 11 - 48' Top	1603.2	-
Spot leveling, strengthening, and repair of existing surface	-	50.8
Table of Additional Quantities	-	78.0
TOTAL	**1603.2**	**128.8**

Total Class Q3R Hot Mixed Asphalt Concrete: 1732.0 *Tons*

TOTAL CLASS Q3R HOT MIXED ASPHALT CONCRETE FOR BOTH PROJECTS: *23307.6* *TONS*

PLOTTED FROM - TRAB17882

STATE OF SOUTH DAKOTA	PROJECT	SHEET NO.	TOTAL SHEETS
	NH 0212(156)306 NH 0281(99)152	F11	F28

TABLE OF PROJECT STATIONING - NH 0212(156)306, PCN 023T

SECTION		STATION	TO		STATION	LENGTH (Ft)	GROSS SECTION LENGTH (Ft)	GROSS SECTION LENGTH (Miles)
1	a	-2+49.73	to	a	-+38.00	211.73	641.73	0.122
	b	3+90.00	to	b	8+20.00	430.00		
1a	b	+0.00	to	b	3+90.00	390.00	390.00	0.074
2	a	-+38.00	to	a	4+55.40	493.40	493.40	0.093
3	b	8+20.00	to	b	12+50.00	430.00	430.00	0.081
4	c	+0.00	to	c	26+83.00	2683.00	2683.00	0.508
5	c	26+83.00	to	c	33+04.00	621.00	621.00	0.118
6	c	33+04.00	to	c	40+15.00	711.00	711.00	0.135
7	c	40+15.00	to	c	95+00.00	5485.00	5485.00	1.039
8	c	95+00.00	to	c	129+00.00	3400.00	3400.00	0.644
9	c	129+00.00	to	c	132+50.00	350.00	13053.92	2.472
	c	171+00.00	to	c	218+00.00	4700.00		
	c	288+00.00	to	c	368+03.92	8003.92		
10	c	132+50.00	to	c	171+00.00	3850.00	10850.00	2.055
	c	218+00.00	to	c	288+00.00	7000.00		
TOTAL:							38759.05	7.341

TABLE OF PROJECT STATIONING - NH 0281(99)152, PCN 03HS

SECTION	STATION	TO	STATION	LENGTH (Ft)	GROSS SECTION LENGTH (Ft)	GROSS SECTION LENGTH (Miles)
11	395+47.60	to	368+66.16	2681.44	2681.44	0.508

TABLE OF MATERIAL QUANTITIES - NH 0212(156)306, PCN 023T

	UNCLASSIFIED EXCAVATION, DIG OUTS	BASE COURSE	COLD MILLING ASPHALT CONCRETE	Estimated Cold Milled Material produced	BASE COURSE, SALVAGED ASPHALT MIX	ASPHALT CONCRETE BLADE LAID	HYDRATED LIME	PG 58-34 ASPHALT BINDER	VIRG.. AGGR. (NABI.)	CLASS Q3R HOT MIXED ASPHALT CONCRETE	HYDRATED LIME	PG 58-34 ASPHALT BINDER	SALVAGED ASPHALT CONCRETE (RAP)	VIRG.. AGGR. (NABI.)	CLASS Q3R HOT MIXED ASPHALT CONCRETE	PG 58-34 ASPHALT BINDER	HYDRATED LIME	SALVAGED ASPHALT CONCRETE (RAP)	VIRG. AGGR. (NABI.)	SS-1h/ CSS-1h ASPH. FOR TACK	SS-1h/ CSS-1h ASPH. FOR FLUSH SEAL	SAND FOR FLUSH SEAL
	50.0					<----------Blade Laid---------->				<----------Spot Leveling---------->					<----------2" Main Line Lift ---------->							
SECTION	CuYd	Ton	SqYd	(Ton)	Ton	Ton	Ton	Ton	Ton	Ton	Ton	Ton	Ton	Ton	Ton	Ton	Ton	Ton	Ton	Ton	Ton	Ton
1	6.1	12.2	4278.2	237.7	-	45.6	0.5	3.4	41.7	12.2	0.1	0.6	2.3	9.2	Included in Table of Additional Quantities							
1a	3.7	7.4	2990.0	166.1	-	27.7	0.3	2.1	25.3	7.4	0.1	0.3	1.4	5.6								
2	4.7	9.3	3837.6	213.2	-	35.0	0.4	2.6	32.1	9.3	0.1	0.4	1.8	7.0								
3	4.1	8.1	2962.2	164.6	-	30.5	0.3	2.3	27.9	8.1	0.1	0.4	1.5	6.1								
4	25.4	50.8	19079.1	2119.9	-	190.6	1.9	14.4	174.3	50.8	0.5	2.4	9.6	38.3	2138.9	99.5	21.2	403.5	1614.6	4.0	4.0	76.3
5	5.9	11.8	3864.0	429.3	-	35.3	0.4	2.7	32.3	11.8	0.1	0.6	2.2	8.9	433.1	20.2	4.3	81.7	327.0	0.8	0.8	15.5
6	6.7	13.5	3792.0	421.3	-	40.4	0.4	3.0	37.0	13.5	0.1	0.6	2.5	10.2	425.1	19.8	4.2	80.2	320.9	0.8	0.8	15.2
7	51.9	103.9	19502.2	2166.9	228.5	155.8	1.6	11.7	142.5	103.9	1.0	4.9	19.6	78.4	2500.5	116.3	24.9	471.6	1887.5	5.9	5.3	54.0
8	32.2	64.4	12164.4	1351.6	141.7	96.6	1.0	7.3	88.3	64.4	0.6	3.0	12.1	48.6	1550.0	72.1	15.5	292.3	1170.0	3.7	3.3	33.5
9	123.6	247.2	46704.0	5189.3	1562.5	370.9	3.7	27.9	339.2	247.2	2.5	11.6	46.6	186.5	6292.0	291.7	61.8	1186.7	4751.8	15.0	13.5	128.6
10	102.7	205.5	38818.9	4313.2	1298.7	308.2	3.1	23.2	281.9	205.5	2.1	9.7	38.8	155.0	5229.8	242.5	51.4	986.4	3949.6	12.5	11.3	106.9
Sub totals	367.0	734.1	157992.7	16773.2	3231.4	1336.6	13.4	100.7	1222.5	734.1	7.3	34.5	138.4	553.8	18569.4	862.2	183.2	3502.5	14021.5	42.7	38.9	429.9
Additional Quantities	-	810	1356.5	75.4	500.0	-	-	-	-	-	-	-	-	-	2272.1	106.0	22.6	428.6	1714.9	48.0	3.3	61.7
Totals	367.0	1544.1	159349.1	16848.5	3731.4	1336.6	13.4	100.7	1222.5	734.1	7.3	34.5	138.4	553.8	20841.5	968.2	205.8	3931.1	15736.4	90.7	42.2	491.5

TABLE OF MATERIAL QUANTITIES - NH 0281(99)152, PCN 03HS

	UNCLASSIFIED EXCAVATION, DIG OUTS	BASE COURSE	COLD MILLING ASPHALT CONCRETE	Estimated Cold Milled Material produced	BASE COURSE, SALVAGED ASPHALT MIX	ASPHALT CONCRETE BLADE LAID	HYDRATED LIME	PG 58-34 ASPHALT BINDER	VIRG.. AGGR. (NABI.)	CLASS Q3R HOT MIXED ASPHALT CONCRETE	HYDRATED LIME	PG 58-34 ASPHALT BINDER	SALVAGED ASPHALT CONCRETE (RAP)	VIRG.. AGGR. (NABI.)	CLASS Q3R HOT MIXED ASPHALT CONCRETE	PG 58-34 ASPHALT BINDER	HYDRATED LIME	SALVAGED ASPHALT CONCRETE (RAP)	VIRG. AGGR. (NABI.)	SS-1h/ CSS-1h ASPH. FOR TACK	SS-1h/ CSS-1h ASPH. FOR FLUSH SEAL	SAND FOR FLUSH SEAL
	50.0					<----------Blade Laid---------->				<----------Spot Leveling---------->					<----------2" Main Line Lift---------->							
SECTION	CuYd	Ton	SqYd	(Ton)	Ton	Ton	Ton	Ton	Ton	Ton	Ton	Ton	Ton	Ton	Ton	Ton	Ton	Ton	Ton	Ton	Ton	Ton
11	25.4	50.8	14301.0	1589.0	-	152.4	1.5	11.5	139.4	50.8	0.5	2.4	9.6	38.3	1603.2	74.5	15.8	302.5	1210.4	3.0	3.0	57.2
Additional Quantities	-	-	535.6	59.5	0	-	-	-	-	-	-	-	-	-	78.0	3.7	0.8	14.7	58.8	0.1	0.1	2.1
Totals	25.4	50.8	14836.6	1648.5	0	152.4	1.5	11.5	139.4	50.8	0.5	2.4	9.6	38.3	1681.2	78.2	16.6	317.2	1269.2	3.1	3.1	59.3

PLOTTED FROM - TRAB17882

STATE OF SOUTH DAKOTA	PROJECT	SHEET NO.	TOTAL SHEETS
	NH 0212(156)306 NH 0281(99)152	F12	F28

Plotting Date: 07/10/2015

TYPICAL RESURFACING SECTION

US212 - Section 1

Sta a -2+49.73 to Sta a - 0+38
* Sta b 0+00 to Sta b 3+90 (Section 1a)
Sta b 3+90 to Sta b 8+20

Sta a -2+49.73 to Sta a -0+38 = 5%
Sta b 0+00 to Sta b 3+90 = 4%
Sta b 3+90 to Sta b 8+20 = 3%

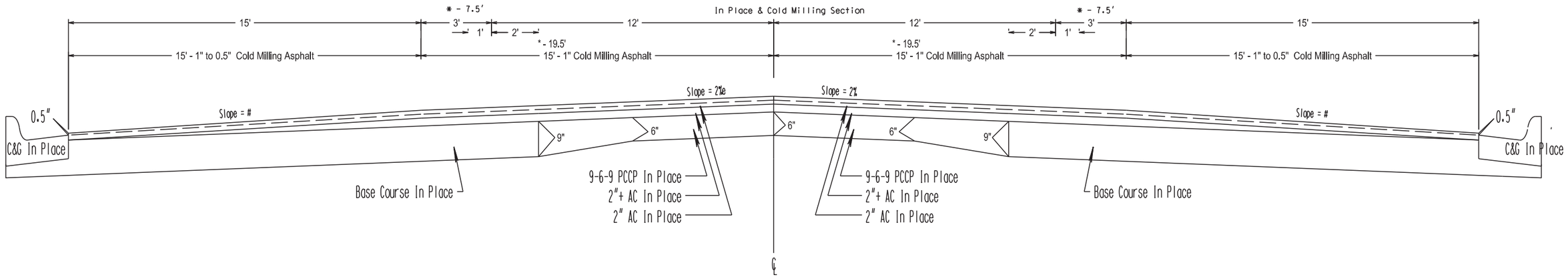

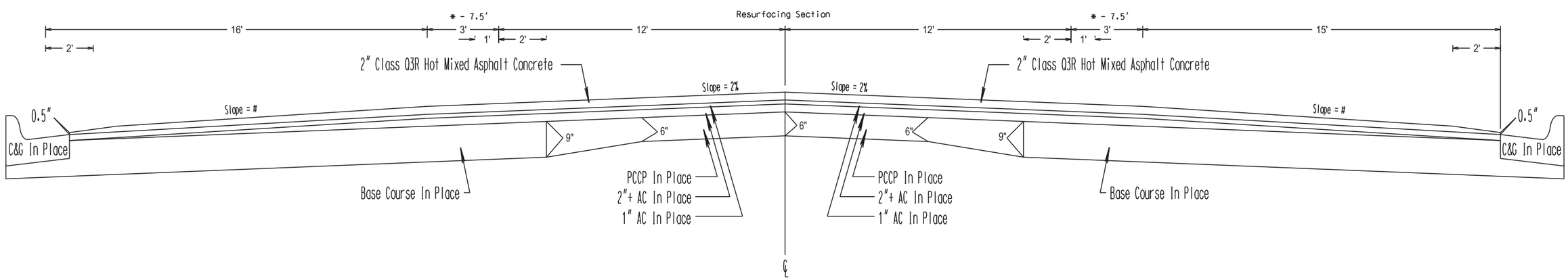

PLOT SCALE - 1:4.3
PLOTTED FROM - TRAB17982
PLOT NAME - 2
FILE - ...\SPNK023T\SECTIONF\023TTYP.DGN

STATE OF SOUTH DAKOTA	PROJECT	SHEET NO.	TOTAL SHEETS
	NH 0212(156)306 NH 0281(99)152	F13	F28

Plotting Date: 07/10/2015

TYPICAL RESURFACING SECTION

US212 - Section 2

Sta a -0+38 to Sta a 4+55.4

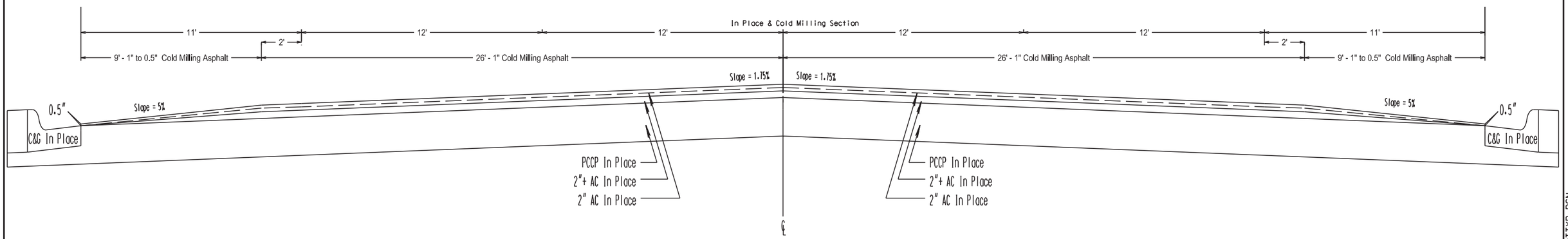

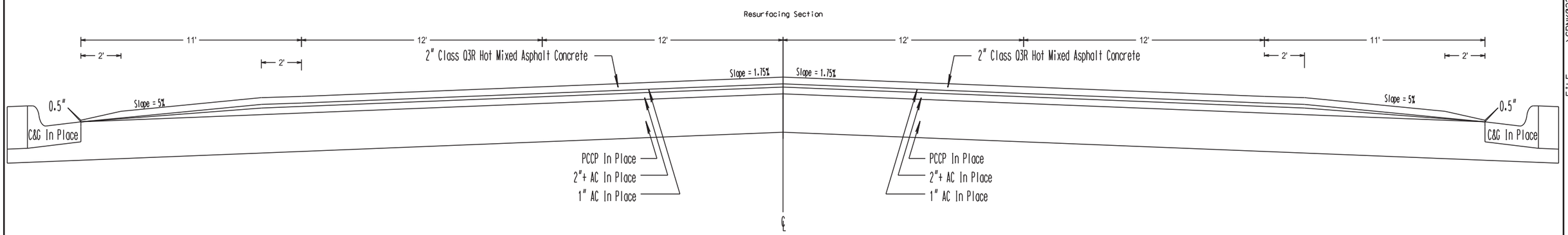

PLOT SCALE - 114.859

PLOT NAME - 3

FILE - ...\SPNK023T\SECTIONF\023TTYP.DGN

PLOTTED FROM - TRAB17982

STATE OF SOUTH DAKOTA	PROJECT	SHEET NO.	TOTAL SHEETS
	NH 0212(156)306 NH 0281(99)152	F14	F28

Plotting Date: 07/10/2015

TYPICAL RESURFACING SECTION

US212 - Section 3

Sta b 8+20 to Sta b 12+50

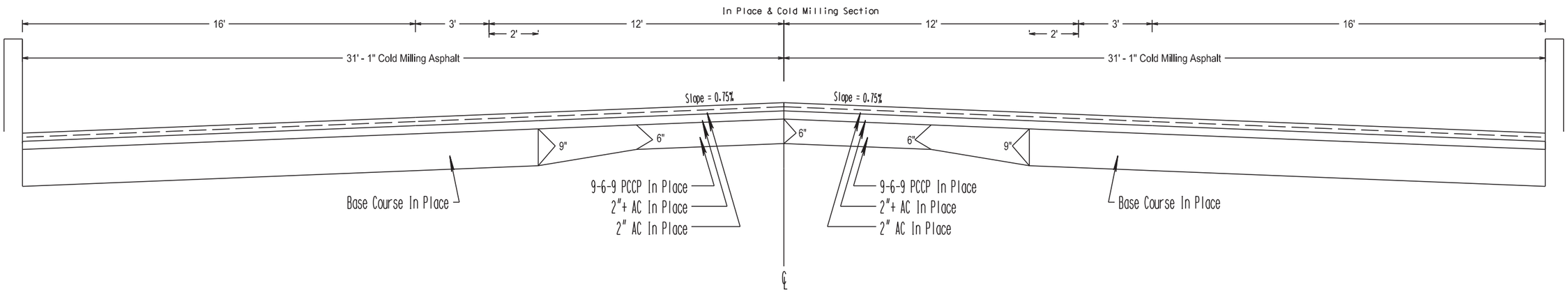

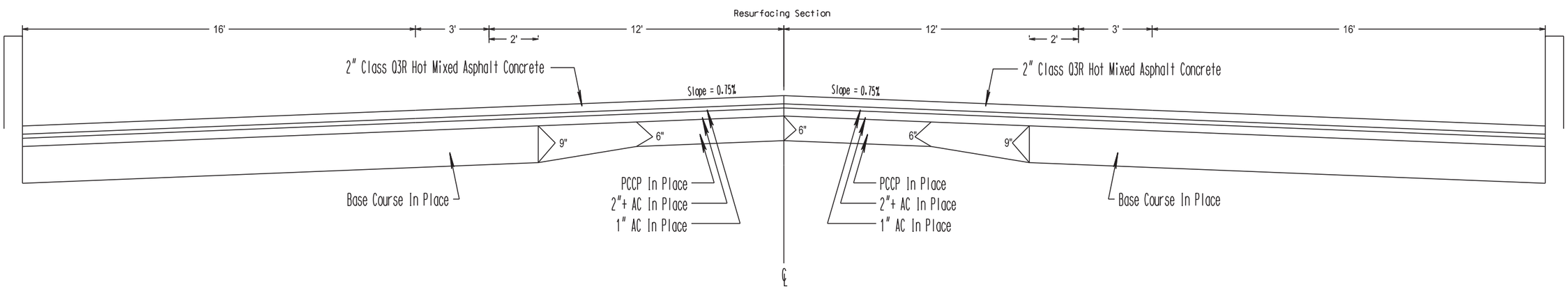

PLOT SCALE - 1:4.3

PLOTTED FROM - TRAB17882

PLOT NAME - 4

FILE - ...\SPNK0231\SECTIONF\023TTYP.DGN

STATE OF SOUTH DAKOTA	PROJECT	SHEET NO.	TOTAL SHEETS
	NH 0212(156)306 NH 0281(99)152	F15	F28

Plotting Date: 07/10/2015

TYPICAL RESURFACING SECTION

US212 - Section 4

Sta c 0+00 to Sta c 26+83

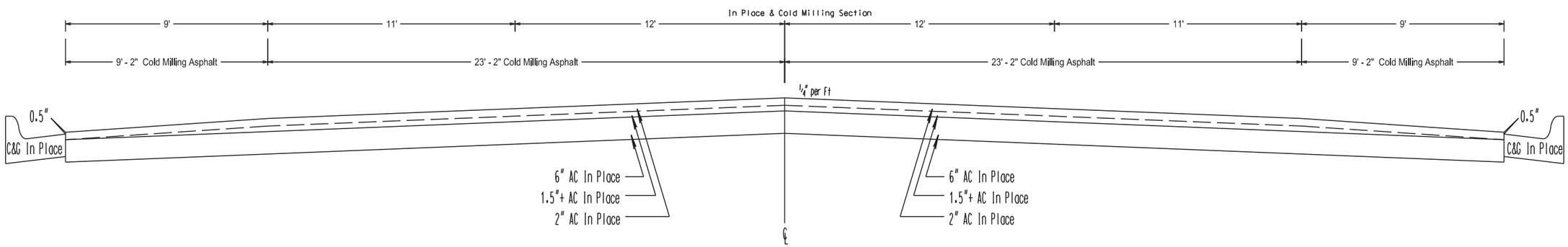

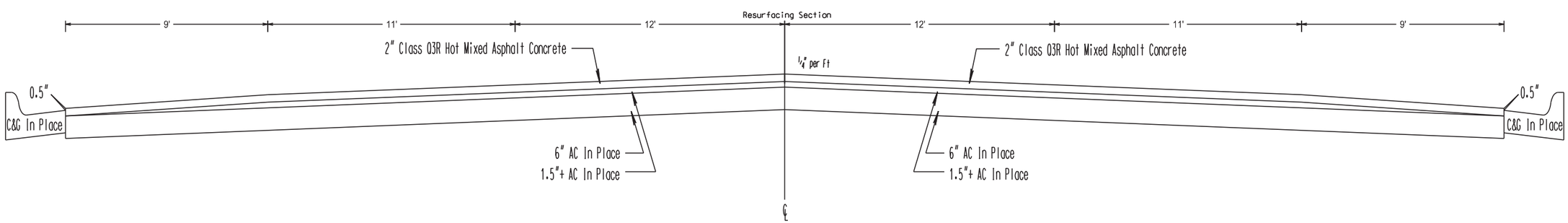

PLOT SCALE - 114.859

PLOT NAME - 5

FILE - ...\SPNK023T\SECTIONF\023TTYP.DGN

PLOTTED FROM - TRAB17892

STATE OF SOUTH DAKOTA	PROJECT	SHEET NO.	TOTAL SHEETS
	NH 0212(156)306 NH 0281(99)152	F16	F28

Plotting Date: 07/10/2015

TYPICAL RESURFACING SECTION

US212 - Section 5

Sta c 26+83 to Sta c 33+04

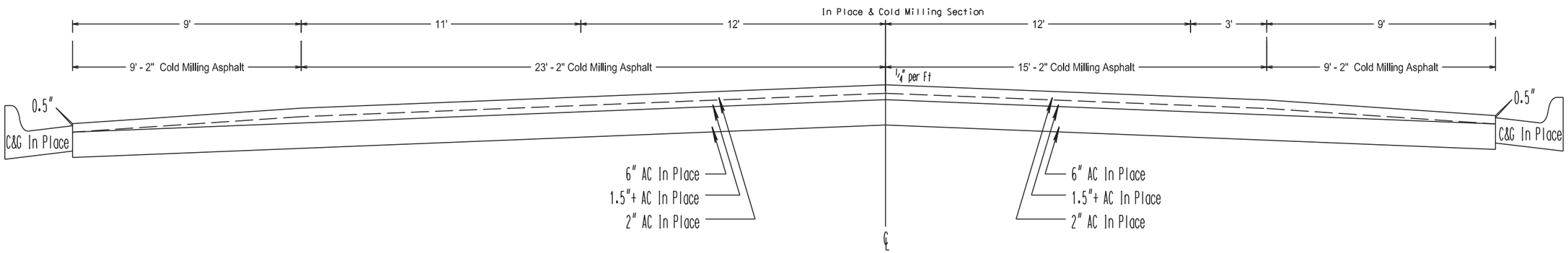

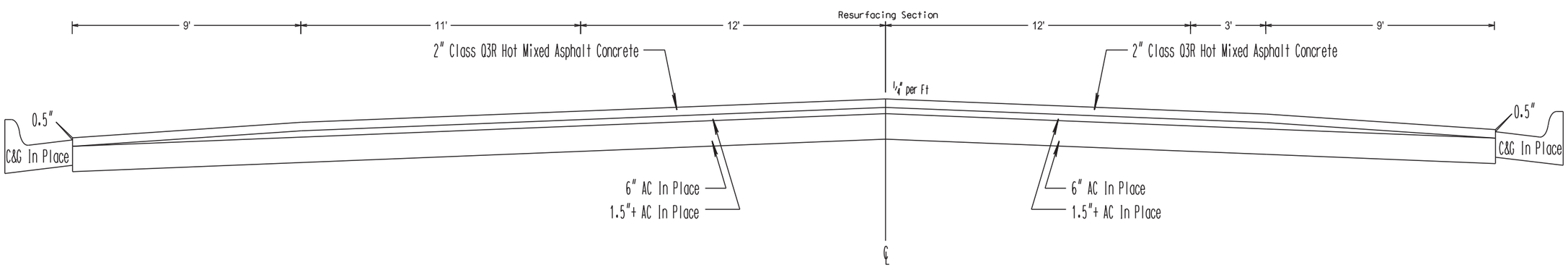

PLOT SCALE - 1:4.3

PLOTTED FROM - TRAB17982

PLOT NAME - 6

FILE - ...\SPNK023T\SECTIONF\023TTYP.DGN

STATE OF SOUTH DAKOTA	PROJECT	SHEET NO.	TOTAL SHEETS
	NH 0212(156)306 NH 0281(99)152	F17	F28

Plotting Date: 07/10/2015

TYPICAL RESURFACING SECTION

US212 - Section 6

Sta c 33+04 to Sta c 40+15

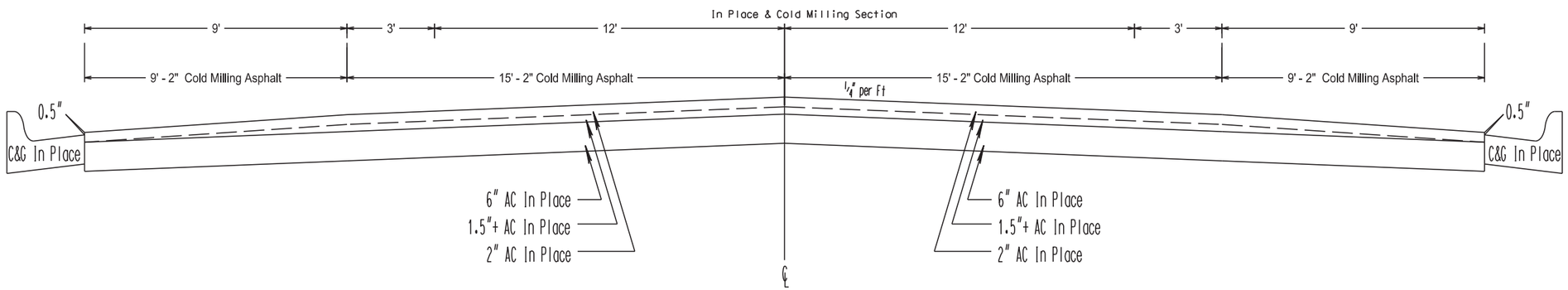

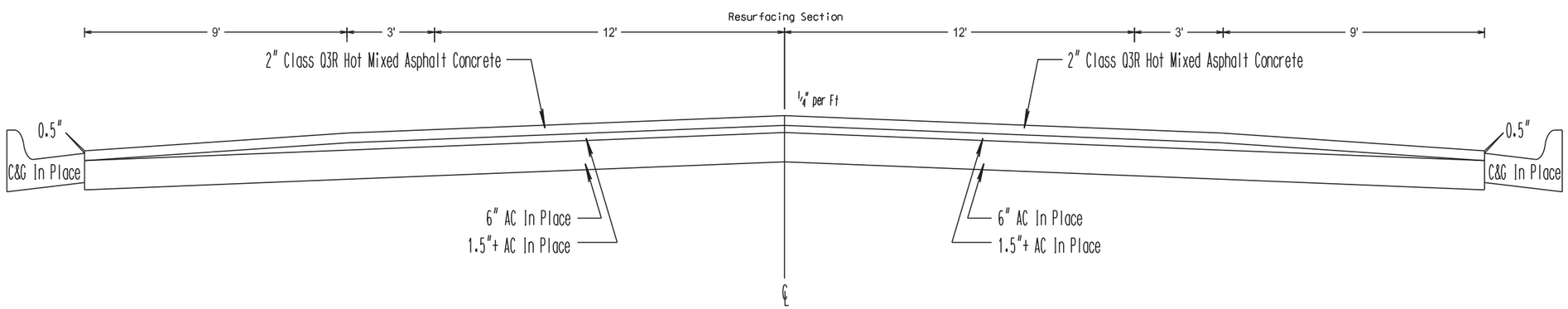

PLOT SCALE - 1:4.3

PLOTTED FROM - TRAB17982

PLOT NAME - 7

FILE - ...\SPNK023T\SECTIONF\023TTYP.DGN

STATE OF SOUTH DAKOTA	PROJECT	SHEET NO.	TOTAL SHEETS
	NH 0212(156)306 NH 0281(99)152	F18	F28

Plotting Date: 07/10/2015

TYPICAL RESURFACING SECTION

US212 - Section 7

Sta c 40+15 to Sta c 95+00

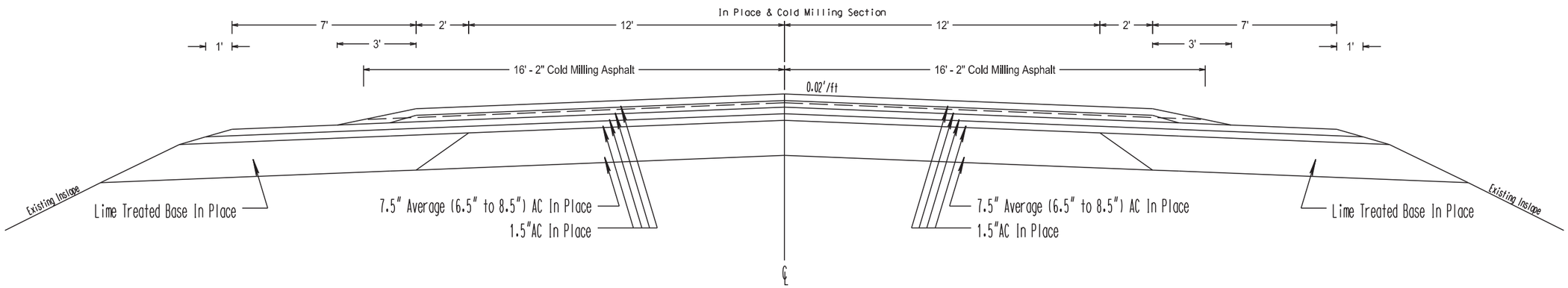

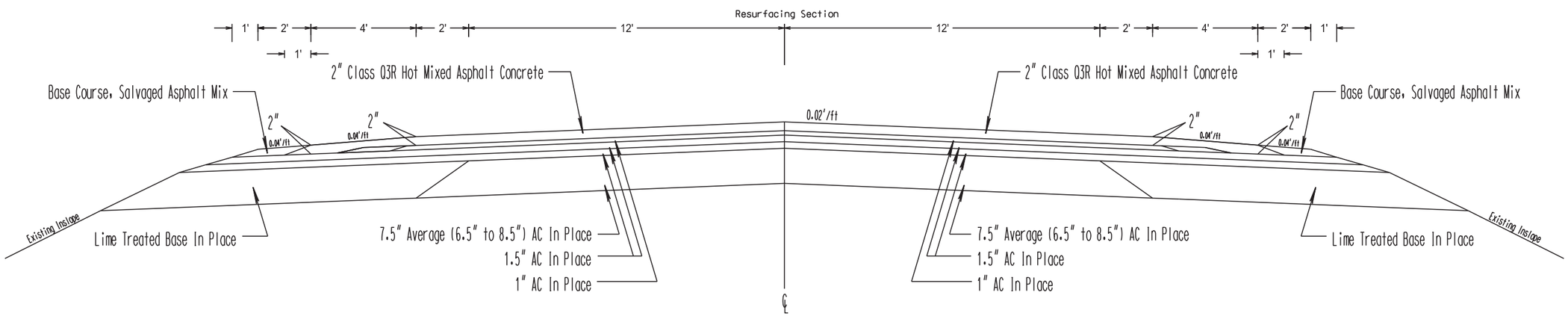

PLOT SCALE - 1:4.3

PLOT NAME - 8

FILE - ...\SPNK023T\SECTIONF\023TTYP.DGN

PLOTTED FROM - TRAB17982

STATE OF SOUTH DAKOTA	PROJECT	SHEET NO.	TOTAL SHEETS
	NH 0212(156)306 NH 0281(99)152	F19	F28

Plotting Date: 07/10/2015

TYPICAL RESURFACING SECTION

US212 - Section 8

Sta c 95+00 to Sta c 129+00

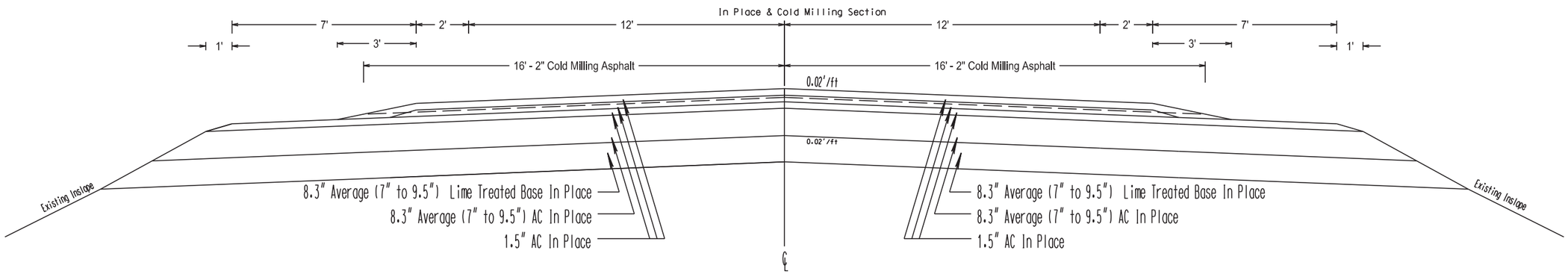

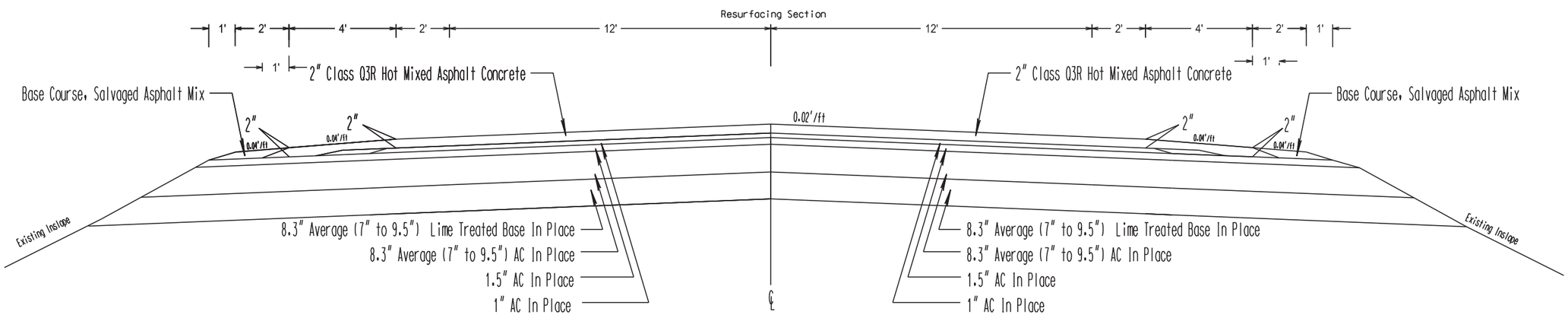

PLOT SCALE - 114.3

PLOT NAME - 9

FILE - ...\SPNK023T\SECTIONF\023TTYP.DGN

PLOTTED FROM - TRAB17982

STATE OF SOUTH DAKOTA	PROJECT	SHEET NO.	TOTAL SHEETS
	NH 0212(156)306 NH 0281(99)152	F20	F28

Plotting Date: 07/10/2015

TYPICAL RESURFACING SECTION

US212 - Section 9

Sta c 129+00 to Sta c 132+50
Sta c 171+00 to Sta c 218+00
Sta c 288+00 to Sta c 368+03.92

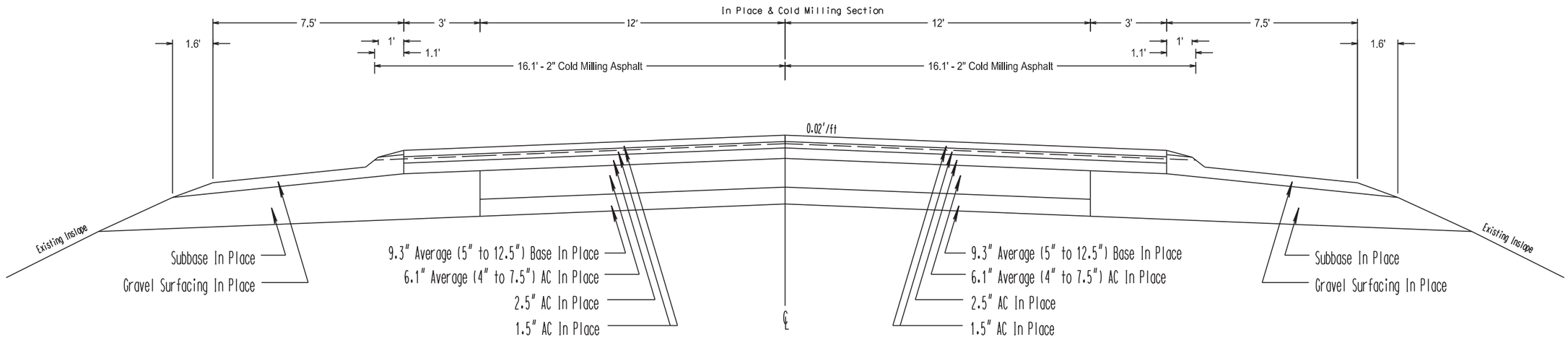

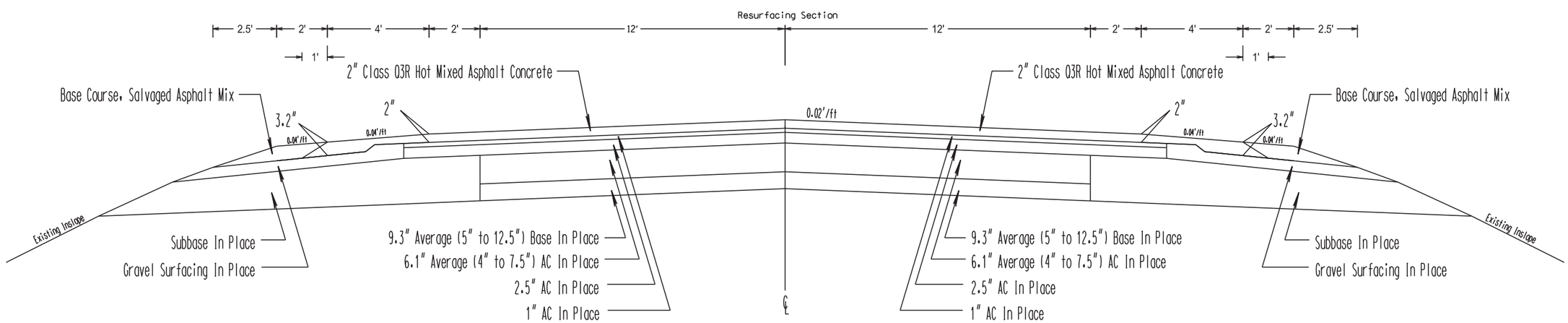

PLOT SCALE - 114.3

PLOTTED FROM - TRAB17982

PLOT NAME - 10

FILE - ...\SPNK023T\SECTIONF\023TTYP.DGN

STATE OF SOUTH DAKOTA	PROJECT	SHEET NO.	TOTAL SHEETS
	NH 0212(156)306 NH 0281(99)152	F21	F28

Plotting Date: 07/10/2015

TYPICAL RESURFACING SECTION

US212 - Section 10

Sta c Sta 132+50 to Sta c 171+00
Sta c 218+00 to Sta c 288+00

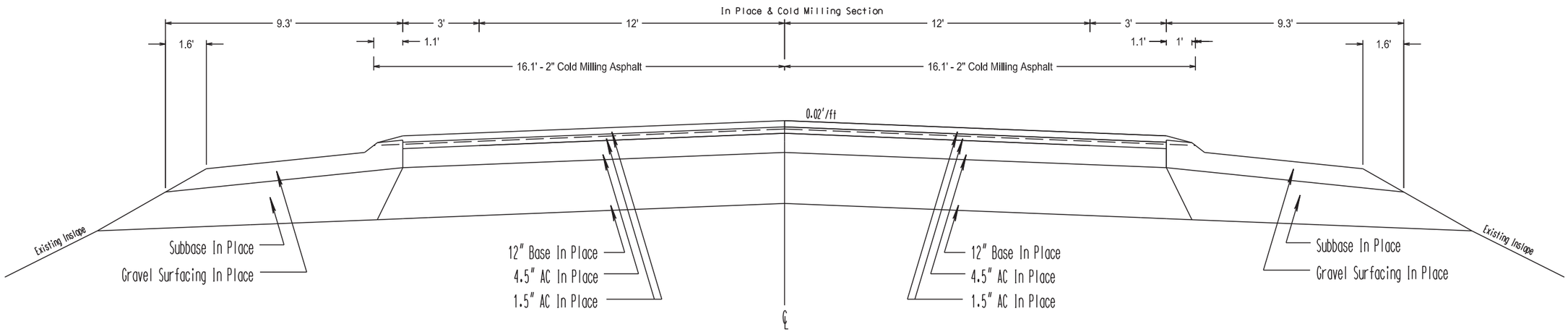

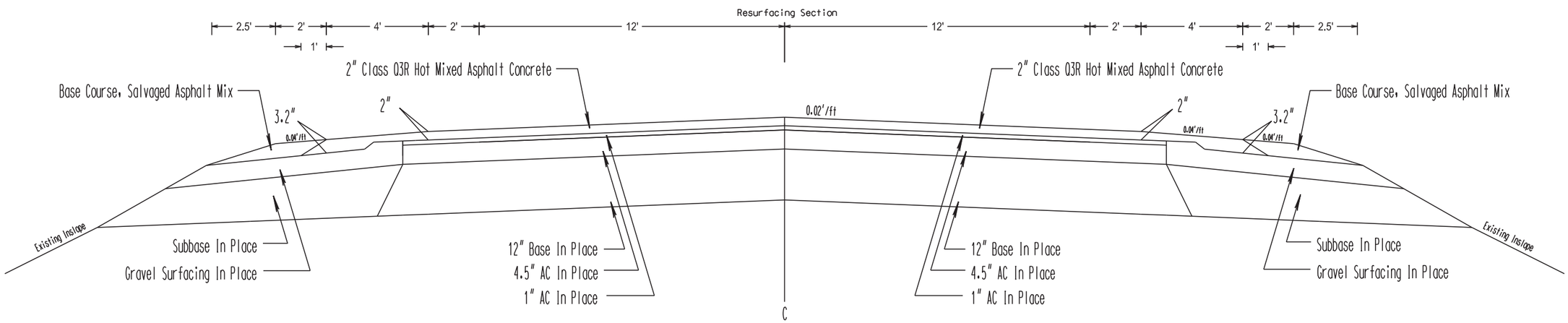

PLOT SCALE - 1:4.3

PLOTTED FROM - TRAB17982

PLOT NAME - 11

FILE - ...\SPNK023T\SECTIONF\023TTYP.DGN

STATE OF SOUTH DAKOTA	PROJECT	SHEET NO.	TOTAL SHEETS
	NH 0212(156)306 NH 0281(99)152	F22	F28

Plotting Date: 07/10/2015

TYPICAL RESURFACING SECTION

US281 - Section 11

Sta 368+66.16 to Sta 395+47.6

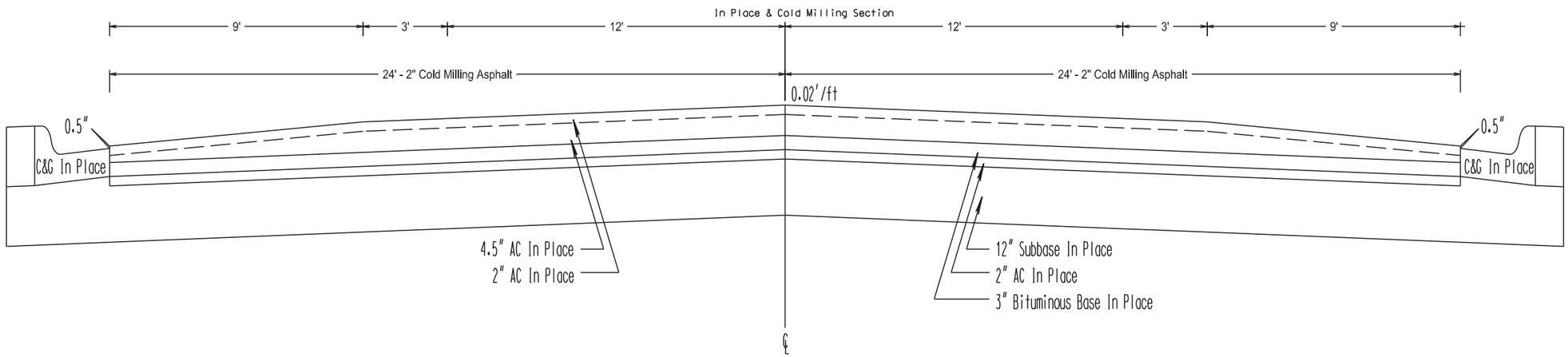

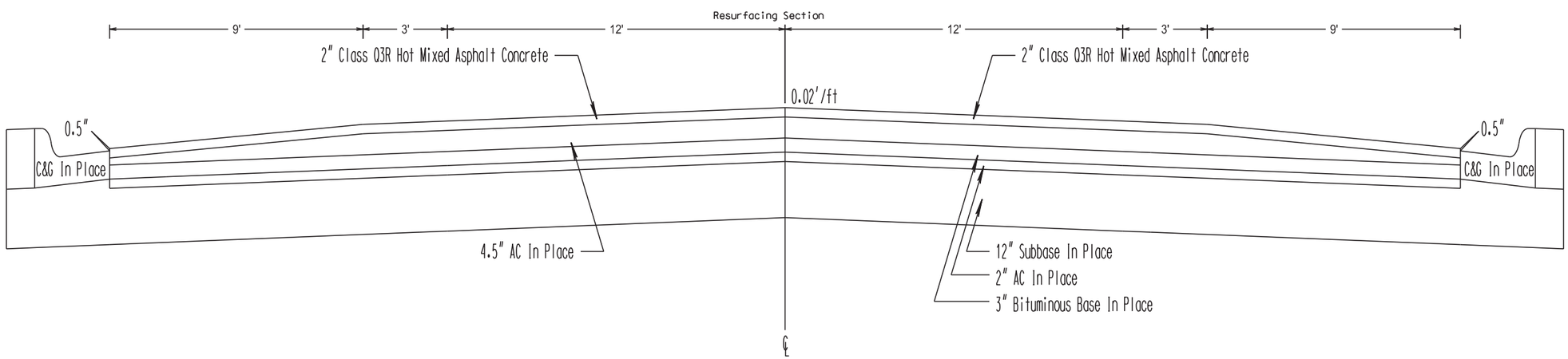

PLOT SCALE - 114.3

PLOT NAME - 12

FILE - ...\SPNK023T\SECTIONF\023TTYP.DGN

PLOTTED FROM - TRAB17882

DETAILS FOR INTERSECTING CITY STREET

STATE OF SOUTH DAKOTA	PROJECT	SHEET NO.	TOTAL SHEETS
	NH 0212(156)306 NH 0281(99)152	F23	F28

Plotting Date: 07/08/2015

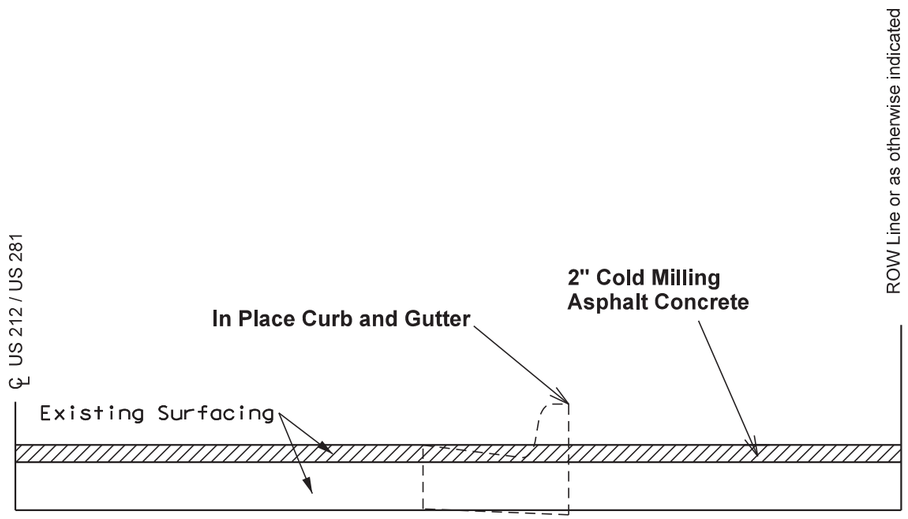

Cold Milling shall be completed at the locations as noted in the Table of Additional Quantities.

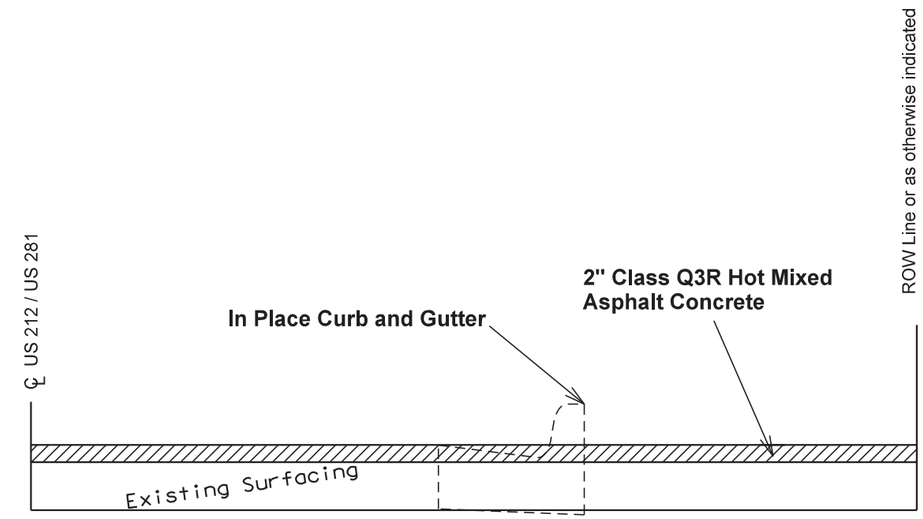

Class Q3R Hot MixedAsphalt Concrete shall be placed at the locations as noted in the Table of Additional Quantities.

Note: Depth of Cold Milling Asphalt Concrete on mainline varies with each typical section.

PLOT SCALE - 1:20000
PLOTTED FROM - TRAB17882
PLOT NAME - 13
FILE - ...\SECTIONF\023T_COLD_MILLING.DGN

TRANSITION DETAILS FOR PROJECT LIMITS

TRANSITION SECTION

US 212 Sta. a -2+49.73
US 281 Sta. 363+66.16

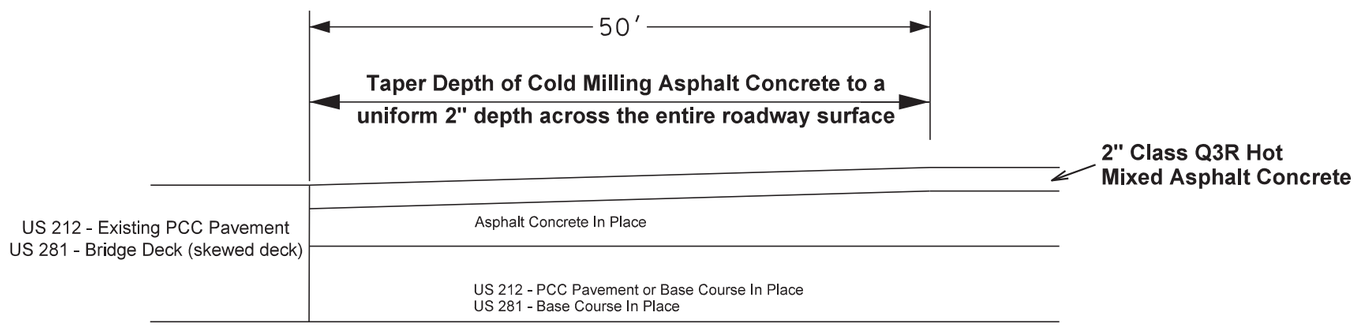

Note: Cost for tapering the depth of cold milling asphalt concrete shall be incidental to the contract unit price per square yard for Cold Milling Asphalt Concrete.

TRANSITION SECTION

End of Project NH 0212(156)306

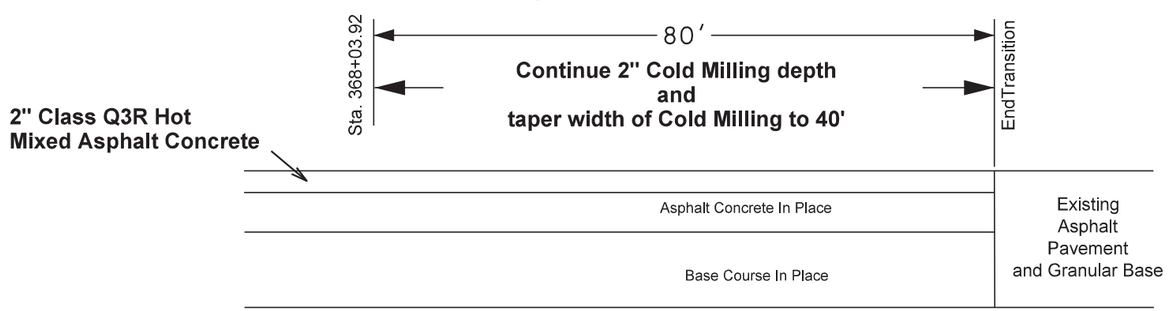

Note: Width of Cold Milling Asphalt Concrete at Ending of Project shall match adjacent surfacing width.

Included in the Table of Additional Quantities is 335 Sq Yd of Cold Milling Asphalt Concrete to transition width to 40'.

PLOT SCALE - 1:28000
PLOTTED FROM - TRAB17882
PLOT NAME - 14
FILE - ...\SECTIONF\023T_COLD_MILLING.DGN

STATE OF SOUTH DAKOTA	PROJECT	SHEET NO.	TOTAL SHEETS
	NH 0212(156)306 NH 0281(99)152	F25	F28

Plotting Date: 07/08/2015

DETAILS FOR RAILROAD CROSSING

Sta. 3+06 to Sta. 3+36

Note: Cold mill asphalt concrete 2" in depth for the entire length and width (98') between the railroad crossings.
Place 2" of Class Q3R Hot Mixed Asphalt Concrete to match the present surfacing width (98').
The additional quantities of cold milling asphalt concrete and Class Q3R Hot Mixed Asphalt Concrete, beyond the Section 4 width of 64' are included in the Table of Additional Quantities.
Work shall be sequenced such that the sidewalk on one side of the roadway is useable at all times.

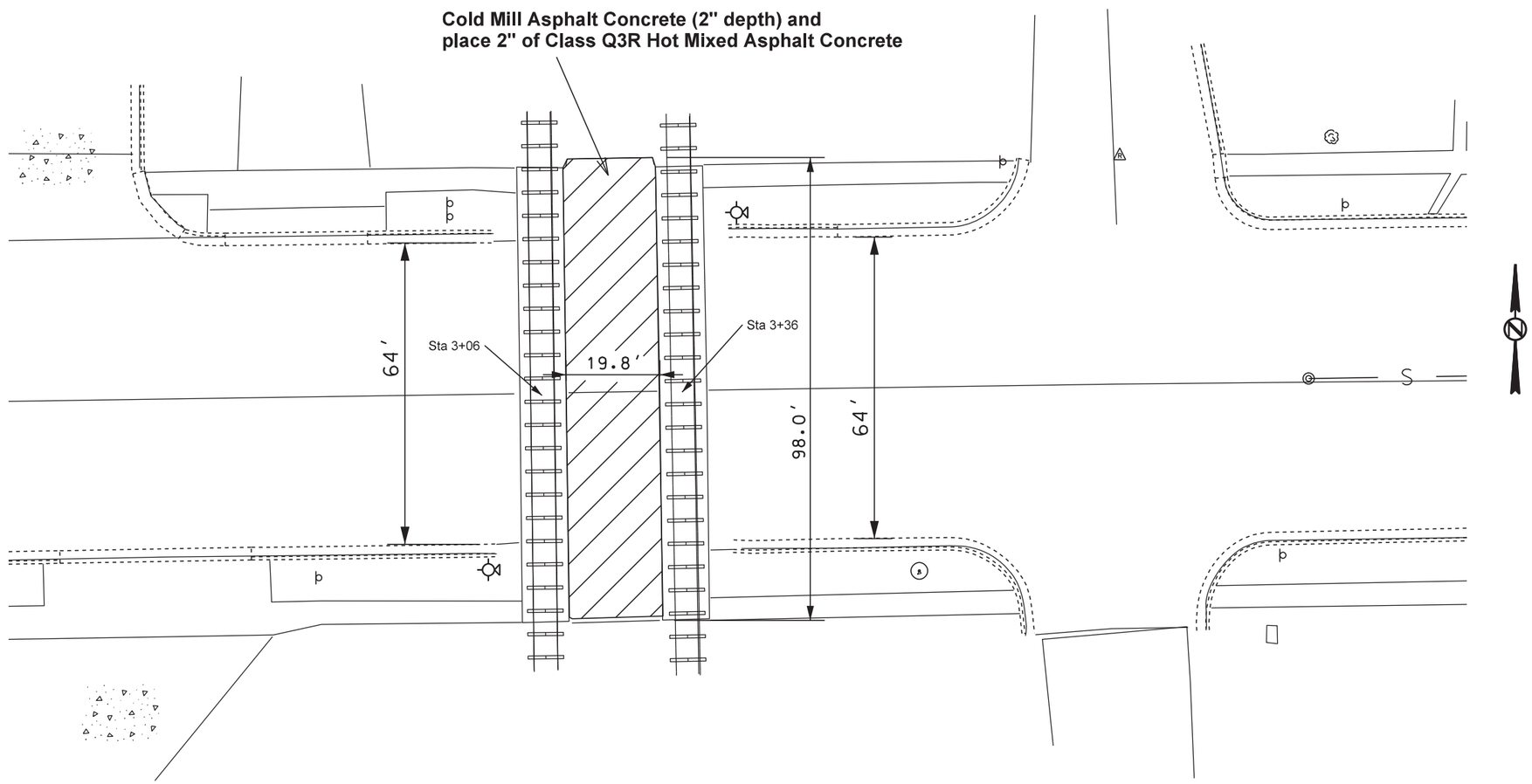

PLOT SCALE - 1:20000
PLOTTED FROM - TRAB17882
PLOT NAME - 15
FILE - ...\SECTIONF\023I_COLD_MILLING.DGN

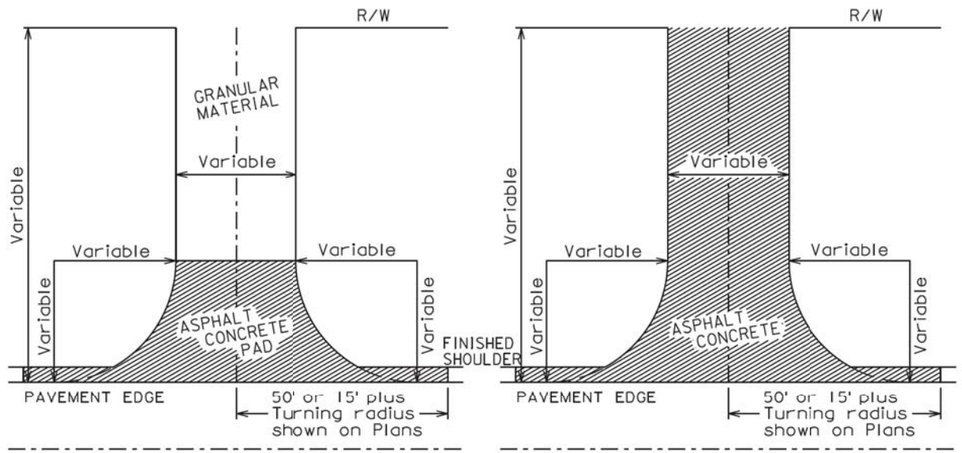

INTERSECTING ROAD
NO ASPHALT CONCRETE SURFACING
BEYOND R/W

INTERSECTING ROAD
ASPHALT CONCRETE SURFACING
BEYOND R/W

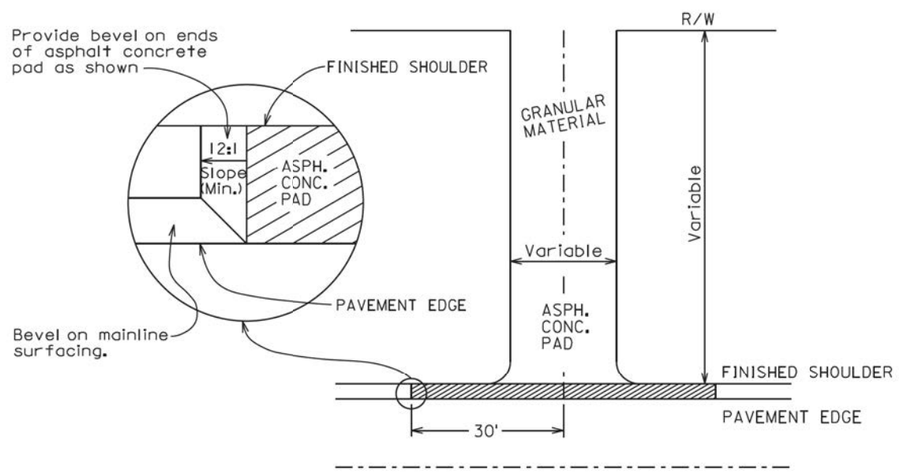

ENTRANCE

The surfacing details shown on this sheet are provided as a guide for surfacing these facilities. The precise construction limits for situations other than the standards shown will be determined by the Engineer, at the time of construction.

ROADWAY WITH SHOULDER

March 31, 2000

Published Date: 2nd Qtr. 2015	SDDOT	RESURFACING OF INTERSECTING ROADS AND ENTRANCES	PLATE NUMBER 320.13 Sheet 1 of 1

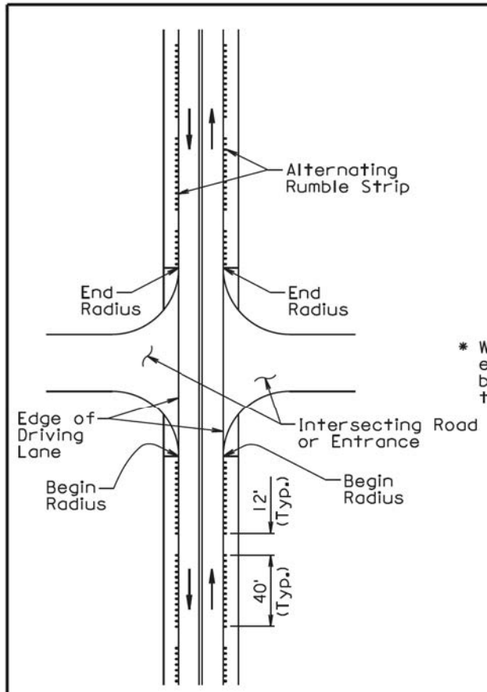

PLAN VIEW

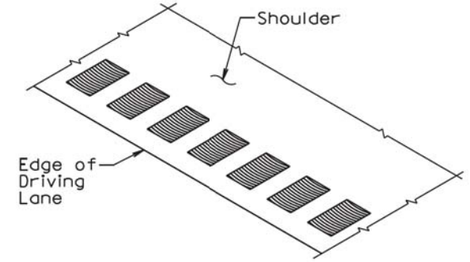

PERSPECTIVE OF TYPICAL
RUMBLE STRIP IN ASPHALT CONCRETE

* When PCC pavement width from centerline to edge of pavement is 12', the rumble strip may be placed a maximum of 2' from the edge of the driving lane.

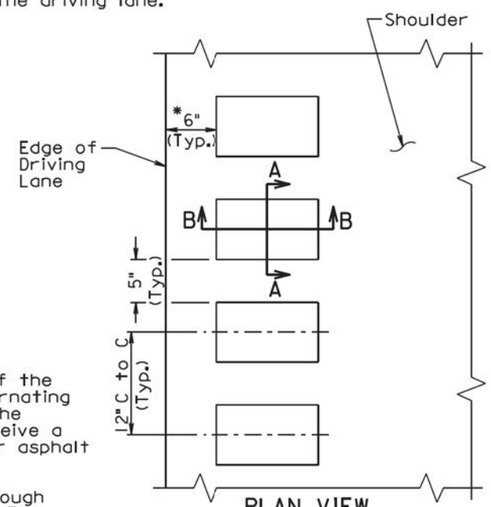

PLAN VIEW
TYPICAL RUMBLE STRIP
IN ASPHALT CONCRETE

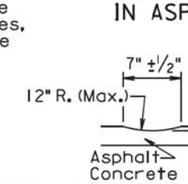

SECTION A-A

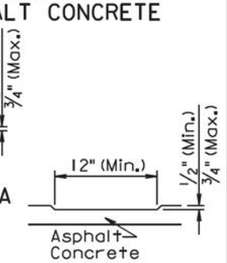

SECTION B-B

GENERAL NOTES:

A rumble strip shall be constructed on all of the asphalt concrete shoulders by grinding alternating patterns of 40' continuous indentations in the asphalt concrete. The rumble strip shall receive a flush seal with the shoulder flush sealing or asphalt surface treatment.

A rumble strip shall not be constructed through intersecting roads, entrances, and turnouts. The lengths of the 40' segments with continuous indentations and the 12' segments without a rumble strip adjacent to the intersecting roads, entrances, and turnouts shall be adjusted as approved by the Engineer.

Prior to constructing the rumble strip the Contractor shall submit to the Engineer, for approval, the proposed method of constructing the rumble strip.

Measurement of the rumble strip shall be to the nearest 0.1 of a mile for each shoulder. Measurement and payment of the rumble strip shall include the 12' long segments without rumble strips and the segments adjacent to the intersecting roads, entrances, and turnouts without rumble strips. Payment for constructing the rumble strip shall be at the contract unit price per mile for "Grind 12" Rumble Strip or Stripe in Asphalt Concrete".

June 26, 2011

Published Date: 2nd Qtr. 2015	SDDOT	12" RUMBLE STRIP IN ASPHALT CONCRETE ON NONDIVIDED HIGHWAY SHOULDERS	PLATE NUMBER 320.24 Sheet 1 of 1

PLOT SCALE - 1:200
PLOT NAME - 16
FILE - ...\SECTIONF\32013_&_32024.DGN
-PLOTTED FROM - TRAB17882

STATE OF SOUTH DAKOTA	PROJECT	SHEET	TOTAL SHEETS
	NH 0212(156)303 NH 0281(99)152	F27	F28

Plotting Date: 07/08/2015

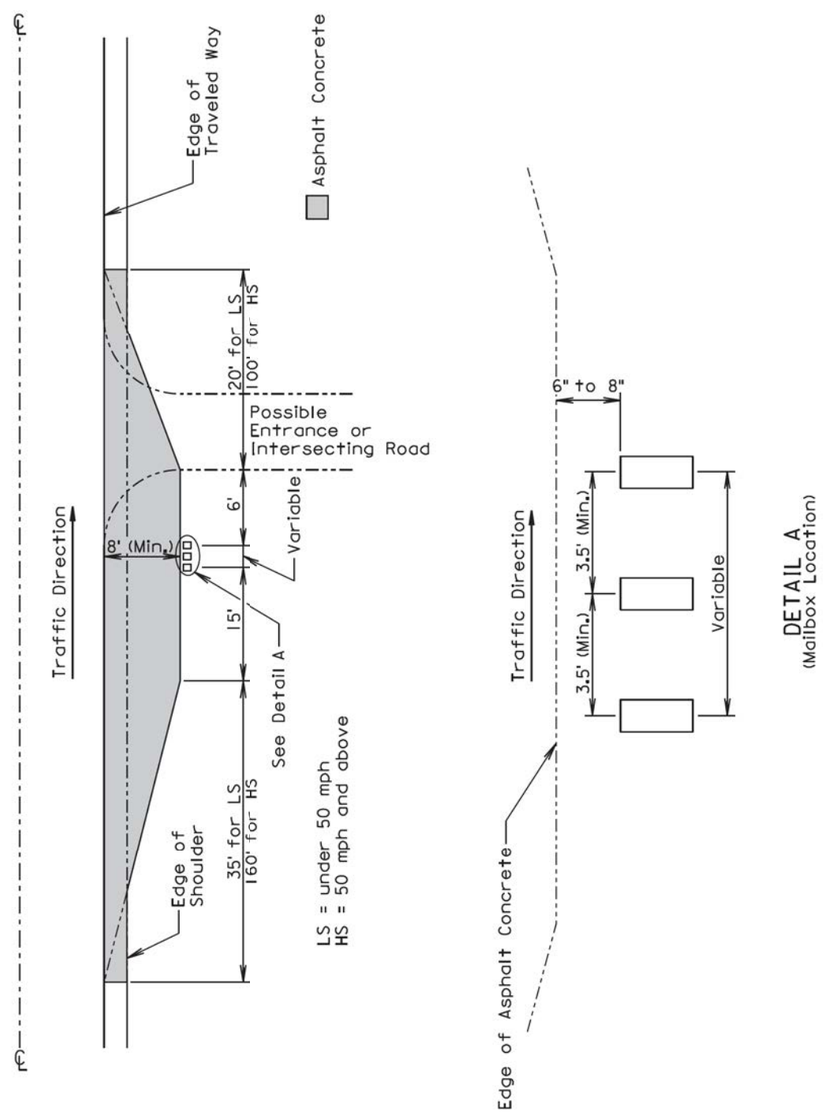

August 31, 2013

Published Date: 2nd Qtr. 2015

SDDOT

MAILBOX TURNOUT

PLATE NUMBER
900.01

Sheet 1 of 1

PLOT SCALE - 1:200

PLOT NAME - 17

FILE - ...\SECTIONF\90001_&_BLANK.DGN

PLOTTED FROM - TRAB17882

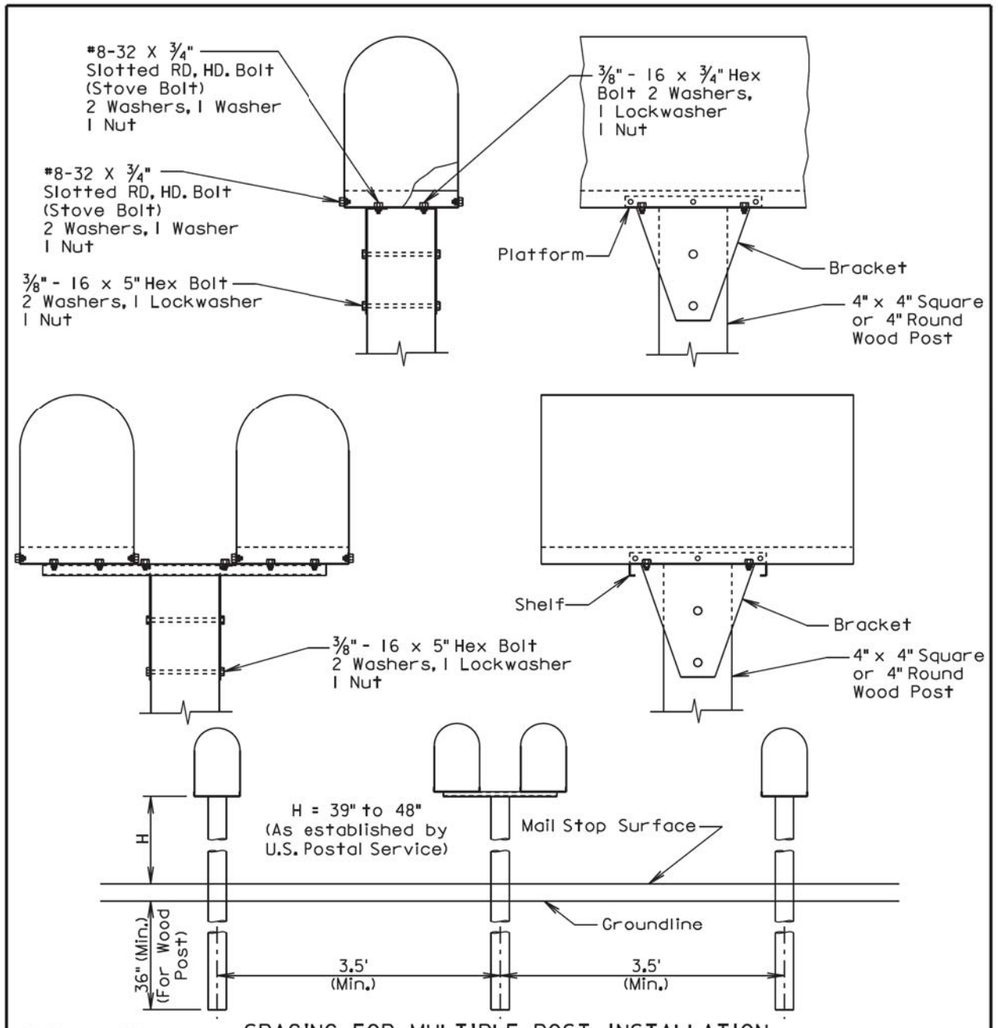

SPACING FOR MULTIPLE POST INSTALLATION

GENERAL NOTES:

The post support assemblies provided should be consistant throughout the project.

Single and double mailboxes may be in any sequence.

Post support assemblies shall be one from the approved products list, a 4"x4" or 4" round wood post, or an alternate post support assembly that meets the test level 3 crash testing requirements of NCHRP 350 or MASH.

Alternate mailbox support assemblies shall be approved by the Engineer prior to installation. The Contractor shall provide the Engineer written certification that the mailbox support assembly has met the crash testing requirements and will be installed in accordance with the manufacturer's installation instructions.

September 6, 2013

Published Date: 2nd Qtr. 2015	SDDOT	SINGLE AND DOUBLE MAILBOX ASSEMBLIES	PLATE NUMBER 900.02
			Sheet 1 of 1

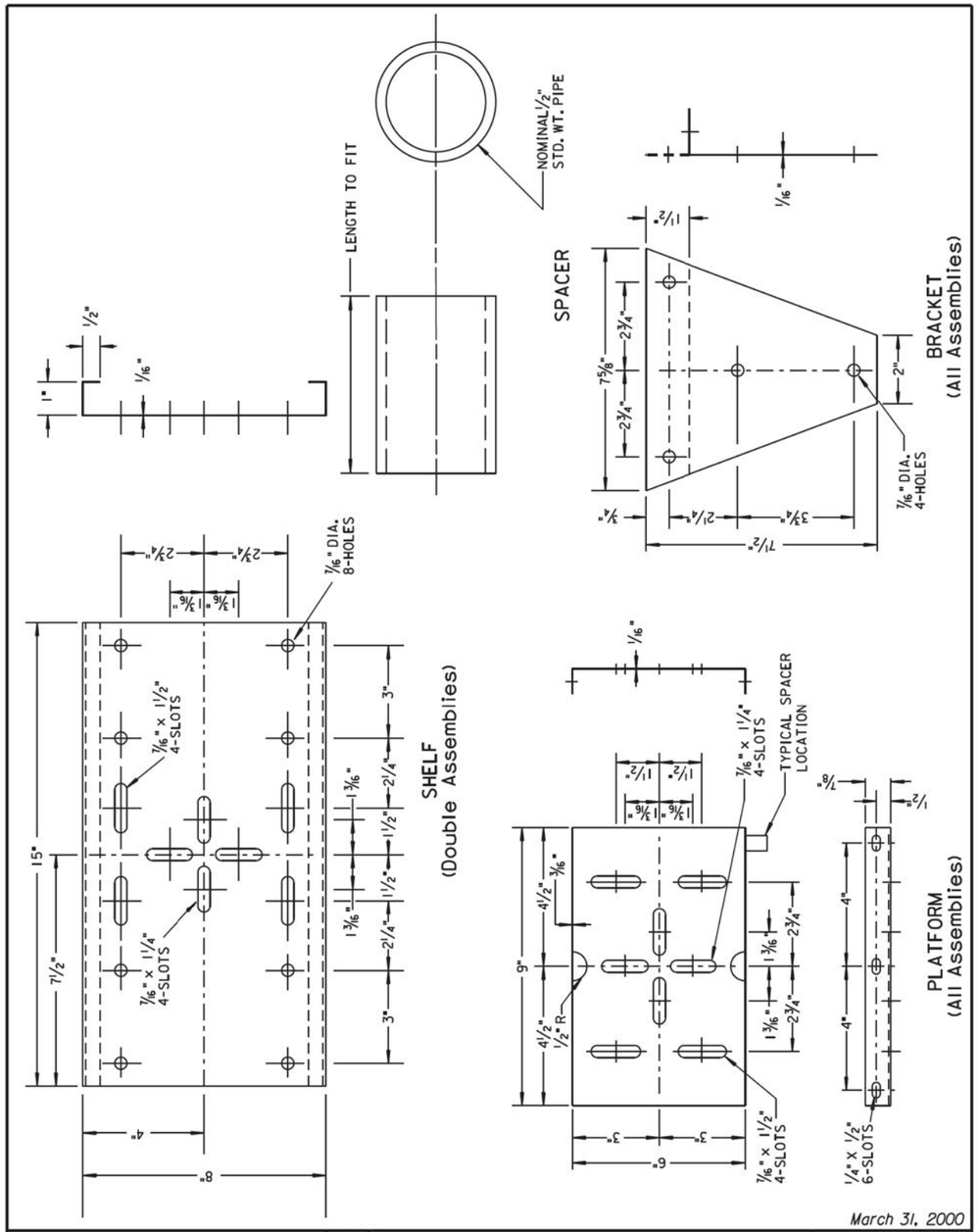

March 31, 2000

Published Date: 2nd Qtr. 2015	SDDOT	MAILBOX SUPPORT HARDWARE	PLATE NUMBER 900.03
			Sheet 1 of 1