Section F: Surfacing Plans

INDEX OF SHEETS

F1	General Layout with Index
F2 thru F14	Estimate of Quantities, Notes, Rates and Tables
F15 thru F23	Typical Surfacing Sections
F24 thru F29	PCC Pavement Joint Layouts
F30 thru F36	Surfacing Transitions
F37 thru F47	Entrance Details
F48	Curb and Gutter Layout
F49 thru F50	Temporary Median Crossover
F51 thru F52	Guardrail and Additional Surfacing Details
F53	Details for Membrane Sealant Expansion Joint
F54 thru F55	Cutoff Drain Details
F56 thru F58	Special Details
F59 thru F84	Standard Plates
F85 thru F102	PCC Overlay Centerline Profile Sheets

Surfacing Exception
Sta. b 155+56.66 to Sta. b 159+48.47 WB
Str. # 68-180-199/Approach Slabs
MRM 390.05 (SD 50W)

Equation: Sta. 418+23.65 Bk =
Sta. a 418+27.65 Ah

END NH 0050(108)385

Station b 368+13.6
M.R.M.= 394.00 + 0.034

BEGIN NH 0050(108)385

Station 398+73.0
MRM = 385.48 +0.000

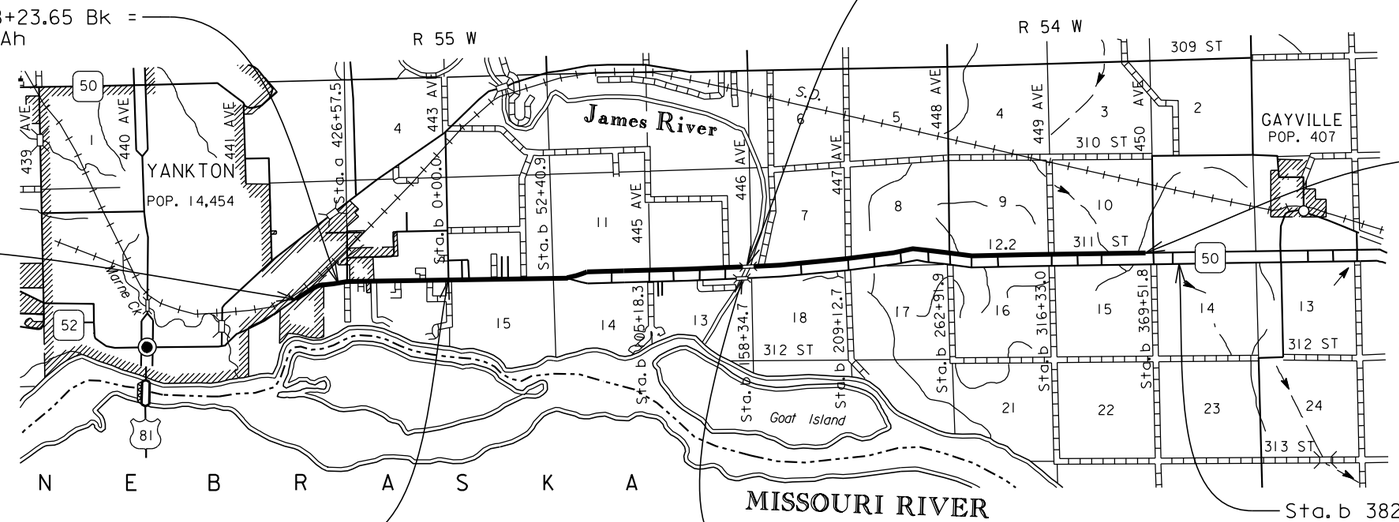

PLOT SCALE - 1:7920.02
PLOT NAME - 1
FILE - ...\PRJ\YANK023U\TITLE F 023U.DGN
PLOTTED FROM - TRPR16032

Revised: 1 Sep 16, RML

SECTION F ESTIMATE OF QUANTITIES

BID ITEM NUMBER	ITEM	QUANTITY	UNIT
004E0050	Remove Traffic Diversion(s)	Lump Sum	LS
009E0010	Mobilization	Lump Sum	LS
009E3230	Grade Staking	25.530	Mile
009E3240	Graded Centerline Staking	8.419	Mile
009E3250	Miscellaneous Staking	8.419	Mile
009E3280	Slope Staking	8.419	Mile
009E3300	Three Man Survey Crew	40.0	Hour
009E4300	Construction Schedule, Category III	Lump Sum	LS
110E0300	Remove Concrete Curb and/or Gutter	510	Ft
110E0415	Remove Edge Drains	Lump Sum	LS
110E0700	Remove 3 Cable Guardrail	478	Ft
110E0730	Remove Beam Guardrail	300.0	Ft
110E0740	Remove 3 Cable Guardrail Anchor Assembly	1	Each
110E0745	Remove 3 Cable Guardrail Slip Base Anchor Assembly	2	Each
110E0770	Remove W Beam Guardrail Breakaway Cable Terminal	2	Each
110E0800	Remove W Beam Guardrail End Terminal	2	Each
110E1100	Remove Concrete Pavement	9,401.0	SqYd
120E0010	Unclassified Excavation	3,252	CuYd
120E0600	Contractor Furnished Borrow Excavation	16,666	CuYd
120E6100	Water for Embankment	214.9	MGal
120E6200	Water for Granular Material	529.8	MGal
120E9000	Pit Run	922.5	Ton
260E1010	Base Course	17,474.9	Ton
260E1030	Base Course, Salvaged	20,517.1	Ton
260E2010	Gravel Cushion	2,301.5	Ton
260E2030	Gravel Cushion, Salvaged	2,702.2	Ton
260E6000	Granular Material, Furnish	10,829.4	Ton
270E0040	Salvage and Stockpile Asphalt Mix and Granular Base Material	1,560.5	Ton
270E0220	Blend and Stockpile Granular Material	21,658.8	Ton
320E0004	PG 58-28 Asphalt Binder	716.0	Ton
320E1070	Class HR Asphalt Concrete	17,907.8	Ton
320E1200	Asphalt Concrete Composite	240.0	Ton
320E3000	Compaction Sample	3	Each
320E5010	Saw and Seal Shoulder Joint	87,666	Ft
320E7012	Grind 12" Rumble Strip or Stripe in Asphalt Concrete	5.3	Mile
330E0010	MC-70 Asphalt for Prime	115.0	Ton
330E0100	SS-1h or CSS-1h Asphalt for Tack	30.9	Ton
330E0210	SS-1h or CSS-1h Asphalt for Flush Seal	20.3	Ton
330E2000	Sand for Flush Seal	104.4	Ton
332E4000	Micro-Milling Asphalt Concrete	134,619	SqYd
380E0070	9" Nonreinforced PCC Pavement	9,646.4	SqYd
380E1500	PCC Overlay, Furnish	36,895.9	CuYd
380E1570	7" PCC Overlay, Placement	173,000.1	SqYd

SECTION F ESTIMATE OF QUANTITIES (CONTINUED)

BID ITEM NUMBER	ITEM	QUANTITY	UNIT
380E3530	7" PCC Approach Pavement	82.2	SqYd
380E5010	Fast Track Concrete	10,997.8	SqYd
380E6000	Dowel Bar	108,806	Each
380E6110	Insert Steel Bar in PCC Pavement	617	Each
410E2600	Membrane Sealant Expansion Joint	52.0	Ft
430E0700	Precast Concrete Headwall for Drain	24	Each
600E0300	Type III Field Laboratory	1	Each
629E0100	3 Cable Guardrail	247	Ft
629E0300	3 Cable Guardrail Slip Base Anchor Assembly	1	Each
630E1010	Straight Class A W Beam Guardrail with Wood Posts	200.0	Ft
630E2020	W Beam Guardrail Tangent End Terminal	1	Each
630E2030	W Beam Guardrail Breakaway Cable Terminal	1	Each
650E0070	Type B67 Concrete Curb and Gutter	398	Ft
650E4670	Type P7 Concrete Gutter	112	Ft
650E6070	7" Concrete Valley Gutter	112	Ft
680E0010	Edge Drain	3,527	Ft
680E0015	Edge Drain Outlet	24	Each
680E0025	Adjust Edge Drain Outlet	145	Each
680E0100	Cutoff Drain	1	Each
831E0210	Non-woven Separator Fabric	1,202	SqYd
831E1500	Geotextile Bond Breaker Fabric	211,251	SqYd
900E0010	Refurbish Single Mailbox	24	Each
900E0012	Refurbish Double Mailbox	10	Each

SURFACING THICKNESS DIMENSIONS

Plans tonnage will be applied even though the thickness may vary from that shown on the plans.

At those locations where material must be placed to achieve a required elevation, plans tonnage may be varied to achieve the required elevation.

UTILITIES

The Contractor shall contact the involved utility companies through South Dakota One Call (1-800-781-7474) prior to starting work. It shall be the responsibility of the Contractor to coordinate work with the utility owners to avoid damage to existing facilities.

Utilities are not planned to be affected on this project. If utilities are identified near the improvement area through the SD One Call Process as required by South Dakota Codified Law 49-7A and Administrative Rule Article 20:25, the Contractor shall contact the Engineer to determine modifications that will be necessary to avoid utility impacts.

TYPE III FIELD LABORATORY

Substitution of a cellular telephone for the hard-wired touch-tone telephone is not allowed, as state personnel need the ability to download information over direct phone lines. The phone is intended for state personnel usage only. Contractor personnel are prohibited from using this phone unless pre-approved by the Project Engineer. It is the responsibility of the Contractor to contact Golden West Telecommunications prior to bidding to ensure the plant site area where the lab will be placed is able to have a hard wired phone connection.

The lab shall be equipped with an internet connection such as DSL, cable modem, or other approved service. The internet connection shall be provided with a multi-port wireless router. The internet connection shall be a minimum speed of 512 Kb unless limited by job location and approved by the DOT. Prior to installing the wireless router the Contractor shall submit the wireless router's technical data to the Area Office to check for compatibility with the state's computer equipment. The internet connection is intended for state personnel usage only. The Contractor's personnel are prohibited from using the internet connection unless pre-approved by the Project Engineer.

The Contractor shall submit a copy of each monthly bill for calls charged to this phone at the completion of the project. The Project Engineer will then audit the bills to ensure all calls are legitimate and then initiate a Construction Change Order (CCO) to reimburse the Contractor for the actual phone calls made, including local and long distance calls. Reimbursement will not be made for fees associated with the purchase, installation, disconnection, monthly line charges, and incidentals involved in the installation, maintenance, and disconnection of the phone (including attachments). These items shall be incidental to the contract unit price per each for TYPE III FIELD LABORATORY.

EXISTING PCC PAVEMENT

Sta. 398+73 to Sta. a 479+07.3

The existing 8 inch P.C.C. Pavement is typically 52 feet wide. The existing contraction joints are spaced at 20 feet. The longitudinal joints have 24" long #4 deformed bars at a spacing of 30". The transverse joints have 18" long 1" plain round bars at a spacing of 1'. The aggregate in the existing P.C.C. pavement is gravel, crushed gravel or crushed rock.

Sta. b 0+00 to Sta. b 83+00

The existing 8 inch P.C.C. Pavement varies in width from 56 to 78 feet wide. The existing contraction joints are spaced at variable spacing following a 12', 13', 19', 18' pattern. The longitudinal joints have 30" long #4 deformed bars at a spacing of 48". The transverse joints have 6' long #4 deformed bars at a spacing of 1'. The aggregate in the existing P.C.C. pavement is gravel, crushed gravel or crushed rock.

Sta. b 83+00 to Sta. b 368+13.6

The existing 8 inch P.C.C. Pavement is typically 24 feet wide. The existing contraction joints are spaced at variable spacing following a 12', 13', 19', 18' pattern. The longitudinal joints have 30" long #4 deformed bars at a spacing of 48". The transverse joints have 6' long #4 deformed bars at a spacing of 1'. The aggregate in the existing P.C.C. pavement is gravel, crushed gravel or crushed rock.

UNCLASSIFIED EXCAVATION

Unclassified Excavation quantity shall be as noted in the following table. Unclassified Excavation will not be measured for payment and the basis of payment will be plans quantity. Unclassified Excavation is salvaged asphalt mix and granular base material and removal of waste material, see typical sections.

The Unclassified Excavation waste material may be used as Contractor Furnished Borrow Excavation for inslope flattening and widening. The Contractor will ensure no asphalt concrete material will be used for inslope flattening and widening.

TABLE OF UNCLASSIFIED EXCAVATION

Location of Removal Areas	Salvaged Asphalt Mix and Granular Base Material	Waste Material
	CuYds	CuYds
SD50		
Sta. 398+73 to Sta. 400+17	58.6	27.5
Sta. b 68+41.3 to Sta. b 70+61.3	116.7	125.2
Sta. 70+61.3 to Sta. b 72+11.3	38.4	84.1
Sta. b 72+11.3 to Sta. b 83+00	278.9	1200.6
SD50 WBL		
Sta. b 83+00 to Sta. b 86+08	111.0	162.8
Sta. b 152+48.7 to Sta. b 155+56.7	111.0	162.8
Sta. b 159+48.5 to Sta. b 162+56.5	111.0	162.8
Approaches		
Sta. a 431+07 Rt.		
Sta. a 431+71 Rt.		
Sta. a 433+09 Rt.		
Temporary Median Crossover		500.4
Subtotals	825.6	2426.2
* TOTAL	3251.8	

* Plans quantity will be the basis of measurement and payment for the above mentioned work.

TABLE OF CONCRETE CURB AND GUTTER REMOVAL

Station	to	Station	L/R	Quantity (Ft)
a 430+48		a 430+86	R	38.0
a 431+28		a 431+57	R	29.0
a 431+85		a 432+88	R	103.0
a 433+30		a 435+58	R	228.0
			Total:	398.0

TABLE OF CONCRETE GUTTER REMOVAL

Station	to	Station	L/R	Quantity (Ft)
a 430+86		a 431+28	R	42.0
a 431+57		a 431+85	R	28.0
a 432+88		a 433+30	R	42.0
			Total:	112.0

SALVAGE AND STOCKPILE ASPHALT MIX AND GRANULAR BASE MATERIAL

Asphalt mix and granular base material shall be salvaged from the location shown in the Table of Salvage and Stockpile Asphalt Mix and Granular Base Material, an estimated 1560.5 tons (825.6 cu.yds.). The salvaged material shall be stockpiled at a site furnished by the Contractor and satisfactory to the Engineer.

The Contractor will be required to use all the salvaged material on this project by decreasing or increasing the quantity of Base Course or Gravel Cushion as necessary, or as directed by the Engineer. Plans quantity will be the basis of measurement and payment for the above mentioned work.

No adjustment in the contract unit price per ton for salvaged material will be made because of a variation in salvaged material quantities.

TABLE OF SALVAGE AND STOCKPILE ASPHALT MIX AND GRANULAR BASE MATERIAL

Location of Removal Areas	Salvaged Asphalt Mix and Granular Base Material
	Tons
SD50	
Sta. 398+73 to Sta. 400+17	110.8
Sta. b 68+41.3 to Sta. b 83+00	820.3
SD50 WBL	
Sta. b 83+00 to Sta. b 86+08 Lt.	209.8
Sta. b 152+48.7 to Sta. b 155+56.7 Lt.	209.8
Sta. b 159+48.5 to Sta. b 162+56.5 Lt.	209.8
TOTAL	1560.5

* Plans quantity will be the basis of measurement and payment for the above mentioned work.

MICRO-MILLING ASPHALT CONCRETE

The Los Angeles Abrasion Loss value on the aggregate used for the in place asphalt concrete could not be determined.

Micro-Milling Asphalt Concrete is estimated to produce 15,986.9 tons of material. An estimated 5157.9 tons will be used as RAP on this project in the Class HR Asphalt Concrete mixture. An estimated 10,829.4 tons of Micro-Milled material will be blended with Granular Material, Furnish and reused as Base Course, Salvaged and Gravel Cushion, Salvaged. The Contractor is responsible to assure enough RAP is available for the Class HR Asphalt Concrete.

TABLE OF MICRO-MILLING ASPHALT CONCRETE

Location	Micro-Milling Asphalt Concrete SqYd
SD50	
Sta. 398+73 to Sta. 400+17	1088.0
Sta. 400+17 to Sta. a 430+48	23,895.4
Sta. a 430+48 to Sta. a 435+58	3922.9
Sta. a 435+58 to Sta. b 68+41.3	88,329.1
Sta. b 68+41.3 to Sta. b 72+11.3	2515.5
SD50 WBL	
Sta. b 86+08 to Sta. b 152+48.7	2951.4
Sta. b 162+56.5 to Sta. b 365+49.6	9019.2
Sta. b 365+49.6 to Sta. b 368+13	1173.3
Median Crossovers – 14 each	1724.0
TOTAL	134,618.8

BLEND & STOCKPILE GRANULAR MATERIAL

Micro-milling asphalt concrete material to be reused as Base Course, Salvage or Gravel Cushion, Salvage, estimated at 10,829.4 tons, shall be blended with 10,829.4 tons of Granular Material, Furnish and stockpiled at the Contractor furnished stockpile site(s). The Contractor shall use a portable platform scale, stationary commercial scale, stationary commercial plant, portable plant scale, or a belt scale to control the blending and weighing of the milled material with Contractor furnished granular material.

The Micro-Milled Asphalt Concrete material shall be blended with Granular Material, Furnished at a rate of 50% milled material and 50% Granular Material, Furnished to obtain stockpile material. The use of a pugmill to blend the materials will be accepted.

The milled material shall be crushed to meet the requirements of Section 884.2.D.3 and Section 884.2.D.4 prior to blending into the stockpile.

Screening or scalping of the milled material stockpile(s) will not be allowed.

No further testing of the blended material will be required.

Calibrated conveyor(s) shall be used to provide a uniform blending of the materials. Materials shall be blended prior to incorporation into the pile.

All other costs for hauling, stockpiling, and blending Micro-milling asphalt concrete material and Granular Material, Furnish shall be incidental to the contract unit price per ton for “Blend and Stockpile Granular Material”.

GRANULAR MATERIAL, FURNISH

Granular Material shall be furnished by the Contractor for use in blending with the micro-milling material from this project.

The Granular Material shall be Base Course meeting the requirements of Section 882.

All other costs for hauling, stockpiling, and blending asphalt mix material and Granular Material, Furnish shall be incidental to the contract unit price per ton for “Blend & Stockpile Granular Material”.

TABLE OF RECLAIMED/SALVAGED MATERIAL TO BE REUSED

	RAP for Class HR Asphalt Concrete (tons)	Base Course, Salvaged (tons)	Gravel Cushion, Salvaged (tons)	TOTAL (tons)
Micro-Milling Asphalt Concrete	5157.5	9569.1	1260.3	15,986.9
* Granular Material, Furnish for Blending		9569.1	1260.3	10,829.4
Salvage And Stockpile Asphalt Mix And Granular Base Material		1378.9	181.6	1560.5
TOTAL	5157.5	20,517.1	2702.2	

* Granular Material, Furnish to be blended and stockpiled with Micro-Milling Asphalt Concrete material.

RECLAIMED CONCRETE AGGREGATE

PCC Pavement (RCA) removed from within the project limits may be crushed and reused on the project provided it meets the requirements for the material it is replacing. Asphalt from the shoulders and from the asphalt patch areas should be salvaged separately. All in place rebar shall be separated and removed from the RCA. Existing rebar will become the property of the Contractor.

There is an estimated 3,387.1 tons (2,126.4 cu.yds.) of PCC Pavement on this project that may be crushed and reused. This quantity is based on a unit weight of 118 lbs. per cubic foot for the reclaimed concrete aggregate.

Payment for the placement of RCA will be included in the bid item it is replacing.

TABLE OF REMOVE CONCRETE PAVEMENT

Location	In Place PCC Pavement
	SqYds
SD50	
Sta. 398+73 to Sta. 400+17	832.0
Sta. b 68+41.3 to Sta. b 83+00	6030.7
SD50 WBL	
Sta. b 83+00 to Sta. b 86+08	821.3
Sta. b 152+48.7 to Sta. b 155+56.7	821.3
Sta. b 159+48.5 to Sta. b 162+56.5	821.3
Approaches	
Sta. a 431+07 Rt.	27.4
Sta. a 431+71 Rt.	20.1
Sta. a 433+09 Rt.	26.9
Total	9401.0

REMOVE TEMPORARY MEDIAN CROSSOVER

Upon completion of the project the temporary median crossover at Sta. b 382+30 shall be removed. The material shall be disposed of by the Contractor as approved by the Engineer.

Cost for removing the material shall be incidental to the contract lump sum price for REMOVE TRAFFIC DIVERSION(S).

EXISTING EDGE DRAIN OUTLETS

Prior to construction at slope widening/flattening locations along the length of the project on the WB left and right shoulders, the Contractor shall locate and protect the Edge Drain Outlets and concrete Headwalls during construction. The Contractor will ensure all outlets function properly during construction. It is estimated that there are approximately 145 edge drain outlets.

Existing edge drain outlets located in the areas of the mainline slope widening/flattening may need to be extended to match the new inslopes. At all locations a 4” Standard Weight Black Steel Pipe (length = 5’) will be installed. The in place 4” PVC Edge Drain Outlet Pipe lengths will be adjusted (lengthen or shorten) to ensure the Concrete Headwall will be located properly along the new inslope. The new 4” PVC Edge Drain Outlet Pipe (if needed) and 4” Standard Weight Black Steel Pipe (length = 5’) will maintain the same slope as the in place outlet pipe. The Concrete Headwalls shall be removed, reset, and cleaned out after seeding operations are complete as directed by the Engineer.

All costs associated with furnishing and installing the 4” Standard Weight Black Steel Pipes, fill material, bends, couplers, caps, fittings, and incidentals necessary to satisfactorily complete the installation of the pipe shall be incidental to the contract unit price per each for Adjust Edge Drain Outlet.

All costs associated with furnishing/extending or shortening the 4” PVC Edge Drain Outlet Pipes necessary to satisfactorily complete the installation of the Concrete Headwall and 4” Standard Weight Black Steel Pipe shall be incidental to the contract unit price per each for Adjust Edge Drain Outlet.

All costs associated with removing/resetting and cleaning out the concrete headwalls after seeding operations, labor, equipment, tools and incidentals necessary to satisfactorily complete the work on the headwalls shall be incidental to the contract unit price per each for Adjust Edge Drain Outlet.

Any edge drain outlet pipes and headwalls damaged during construction shall be repaired at the Contractor’s expense and to the satisfaction of the Engineer.

EDGE DRAIN REMOVAL

At locations where PCC Pavement will be removed, the Contractor will remove the edge drains, edge drain fabric, edge drain outlets, and concrete headwalls installed along the shoulders, see following table.

The Contractor shall locate edge drain outlets prior to construction along these work areas. Edge Drain Outlets will be installed at the same location as the in place outlets or as directed by the Engineer.

The Contractor may salvage concrete headwalls to be reused with the new edge drain outlets with the approval by the Engineer.

The Contractor shall cap off the existing edge drain openings that are upstream of the in place edge drains with an approved cap as directed by the Engineer.

At locations where the existing edge drain openings are downstream of the in place edge drains, the Contractor will install an approved Edge Drain Outlet and Concrete Headwall as directed by the Engineer. An estimated 7 Edge Drain Outlets and 7 Precast Concrete Headwall will be needed. All costs associated with installing Edge Drain Outlets and Precast Concrete Headwalls including labor, equipment, tools and incidentals necessary to satisfactorily complete the work shall be incidental to the contract unit price per each for Edge Drain Outlet and Precast Concrete Headwall.

All costs for removing, salvaging, capping, including materials and incidentals shall be incidental to the contract lump sum price for REMOVE EDGE DRAINS.

Edge Drain Removal, for information only

Location	Edge Drain	Edge Drain Outlet & Concrete Headwall
	Feet	Each
Sta. b 68+41.3 to Sta. b 70+61.3 Rt.	220.0	2
Sta. b 83+00 to Sta. b 86+08 Rt.	308.0	2
Sta. b 152+48.7 to Sta. b 155+56.7 Rt.	308.0	2
Sta. b 159+48.5 to Sta. b 162+56.5 Rt.	308.0	2
Sta. b 68+41.3 to Sta. b 86+08 Lt.	1766.7	5
Sta. b 152+48.7 to Sta. b 155+56.7 Lt.	308.0	2
Sta. b 159+48.5 to Sta. b 162+56.5 Lt.	308.0	2
TOTAL	3526.7	17

Revised: 1 Sep 16, RML

EDGE DRAINS AND OUTLET INSTALLATION

The Contractor shall construct Edge Drains and Outlets in accordance with the Special Provision and Section F special details for Edge Drains.

See following table for quantity and location of Edge Drains and Outlets.

TABLE OF EDGE DRAINS AND OUTLETS

Location	Edge Drain	Edge Drain Outlet & Concrete Headwall
	Feet	Each
Sta. b 68+41.3 to Sta. b 70+61.3 Rt.	220.0	2
Sta. b 83+00 to Sta. b 86+08 Rt.	308.0	2
Sta. b 152+48.7 to Sta. b 155+56.7 Rt.	308.0	2
Sta. b 159+48.5 to Sta. b 162+56.5 Rt.	308.0	2
Sta. b 68+41.3 to Sta. b 86+08 Lt.	1766.7	5
Sta. b 152+48.7 to Sta. b 155+56.7 Lt.	308.0	2
Sta. b 159+48.5 to Sta. b 162+56.5 Lt.	308.0	2
TOTAL	3526.7	17

CONTRACTOR FURNISHED BORROW EXCAVATION

The Contractor shall provide a suitable site for Contractor Furnished Borrow Excavation material to be used at the locations listed in the Table of Contractor Furnished Borrow Excavation.

Placement of the Contractor Furnished Borrow Excavation will be to the satisfaction of the Engineer.

Water for Embankment is estimated at the rate of 10 gallons of water per cubic yard of Contractor Furnished Borrow Excavation

The Contractor is responsible for obtaining all required permits and clearances for the borrow site as stated in Commitment I: Historical Preservation Office Clearances in Section A. The borrow material shall be approved by the Engineer.

Restoration of the Contractor Furnished Borrow Excavation site shall be the responsibility of the Contractor.

The Unclassified Excavation waste material may be used as Contractor Furnished Borrow Excavation for inslope flattening and widening as required, see typical sections. The outside and median shoulder inslope shall be at a 6:1 or flatter. All slopes for median ditch blocks and crossovers shall be a 10:1 or flatter. Care shall be taken so that a minimum 4" depth of topsoil shall be placed over the entire disturbed area while proper drainage is maintained. Final acceptance of the inslopes will be at the discretion of the Engineer.

TABLE OF CONTRACTOR FURNISHED BORROW EXCAVATION

Location	Contractor Furnished Borrow Excavation	Water For Embankment
	CuYds	Mgal
SD50 – Inslopes Flattening		
Sta. 398+73 to Sta. b 83+00 Both Shoulders	8419.2	108.6
SD50 WBL – Inslopes Flattening		
Sta. b 83+00 to Sta. b 368+13.6, Both Shoulders	8195.0	105.7
Guardrail		
Str. # 68-180-199		
End Bridge Lt. Shoulder	18.7	0.2
End Bridge Rt. Shoulder	32.9	0.4
TOTAL	16,665.8	214.9

BASE COURSE, SALVAGED

The Base Course, Salvaged shall be obtained from the stockpile site(s) provided by the Contractor from the blended and salvaged material produced on this project and may be used without further testing.

The Contractor will be required to use all the Base Course, Salvaged on this project by decreasing or increasing the quantity of Base Course necessary, or as directed by the Engineer.

Base Course, Salvaged shall be compacted according to the requirements of the Specifications. All other requirements for Base Course, Salvaged shall apply.

GRAVEL CUSHION, SALVAGED

The Gravel Cushion, Salvaged shall be obtained from the stockpile site(s) provided by the Contractor from the blended and salvaged material produced on this project and may be used without further testing.

The Contractor will be required to use all the Gravel Cushion, Salvaged on this project by decreasing or increasing the quantity of Gravel Cushion necessary, or as directed by the Engineer.

Gravel Cushion, Salvaged shall be compacted according to the requirements of the Specifications. All other requirements for Gravel Cushion, Salvaged shall apply.

CLASS HR ASPHALT CONCRETE

Screening or scalping of the RAP stockpile(s) will not be allowed.

Virgin mineral aggregate for Class HR Asphalt Concrete shall conform to the requirements for Class E, Type 1.

An estimated 5157.4 tons of RAP is needed for the Class HR mixture.

The Class HR Asphalt Concrete shall include 30 percent RAP in the mixture.

The RAP shall be crushed so the particle size in the cold feed will meet the requirements specified in Section 884.2.C.1.

All other requirements for Class HR shall apply

ASPHALT CONCRETE RUMBLE STRIPS

Rumble Strips for the median shoulder shall be constructed as per Standard Plate 320.26 for 12" Rumble Strip In Asphalt Concrete On Divided Highway Median Shoulders. Rumble Strips will be placed 6" from edge of PCC Pavement. Payment for grinding rumble strips, on the shoulder, including labor, materials and incidentals shall be at the contract unit price per mile for GRIND 12" RUMBLE STRIP OR STRIPE IN ASPHALT CONCRETE. It is estimated that 5.3 miles of asphalt concrete rumble strip will be required for the median shoulder, from Sta. b 83+00 to Sta. b 368+13.6 except bridge.

SUMMARY OF ASPHALT CONCRETE

Location	Class HR Asphalt Concrete With Specified Density Ton	Class HR Asphalt Concrete Without Specified Density Ton
SD50 Shoulders		
Sta. 398+73 to b 83+00 Lt.	2039.6	
Sta. 398+73 to Sta. a 429+70 Rt.	386.3	
Sta. a 435+58 to Sta. b 70+61.3 Rt.	1425.1	
SD50 WBL Shoulders	0	
Sta. b 83+00 to Sta. b 155+56.7 Lt.	906.4	
Sta. b 159+48.5 to Sta. 368+13.6 Lt.	2606.1	
Sta. b 83+00 to Sta. b 155+56.7 Rt.	637.9	
Sta. b 159+48.5 to Sta. 368+13.6 Rt.	1834.0	
Miscellaneous		
Entrances		6632.2
Median Crossovers		1142.5
Traffic Control Median Crossover		272.4
Guardrail		25.3
TOTAL	9835.4	8072.4

Revised: 26 Aug 16, RML

TABLE OF TYPE B67 CONCRETE CURB AND GUTTER

Station	to	Station	L/R	Quantity (Ft)
a 430+48		a 430+86	R	38.0
a 431+28		a 431+57	R	29.0
a 431+85		a 432+88	R	103.0
a 433+30		a 435+58	R	228.0
			Total:	398.0

TABLE OF TYPE P7 CONCRETE GUTTER

Station	to	Station	L/R	Quantity (Ft)
A 430+86		A 431+28	R	42.0
A 431+57		A 431+85	R	28.0
A 432+88		A 433+30	R	42.0
			Total:	112.0

TABLE OF 7" CONCRETE VALLEY GUTTER

Station	to	Station	L/R	Quantity (Ft)
a 429+45		a 429+70	R	34.3
a 429+70		a 430+48	R	78.0
			Total:	112.3

TABLE OF 7" PCC APPROACH PAVEMENT

Station	L/R	Opening (Ft)	Type	Quantity (SqYd)
a 431+07	R	42	A	30.0
a 431+71	R	28	A	22.2
a 433+09	R	42	A	30.0
			Total:	82.2

PCC OVERLAY CENTERLINE PROFILE

The PCC Overlay centerline profile shown in these plans was used to calculate the cubic yards for the PCC Overlay furnished. The PCC Overlay centerline profile was designed so that there will be a minimum of 7 inches of PCC at all locations of the typical sections. The PCC Overlay centerline profile sheets are included in the plans for information only.

9" NONREINFORCED CONCRETE PAVEMENT AND 7" PCC OVERLAY

The fine aggregate shall be screened over a 1 inch square opening screen just prior to introduction into the concrete paving mix. The Contractor will screen all of the aggregate to prevent the incorporation of foreign materials (i.e.: mud balls) into the concrete mix.

The concrete mix shall conform to the special provision for Contractor Furnished Mix Design for PCC Pavement.

There will be no direct payment for trimming of the Gravel Cushion for PCC pavement. The trimming will be considered incidental to the related items required for PCC Pavement. Trimming shall be performed as required by Section 380.3 C of the Specifications.

A construction joint will be sawed whenever new concrete pavement is placed adjacent to existing concrete pavement.

The transverse contraction joints shall be perpendicular to the centerline as detailed in the special detail for PCC Pavement Transverse Contraction Joint Spacing and standard plate for PCC Pavement Dowel Bar Assembly for Transverse Contraction Joints. In multilane areas the transverse contraction joints shall be perpendicular to the centerline and be in a straight line across the width of the pavement. In special situations the Engineer may pre-approve transverse contraction joints that do not meet these requirements. All nonconforming transverse contraction joints shall be removed at the Contractor's expense. Any method of placement that cannot produce these requirements shall not be allowed to continue.

The surface of the mainline paving shall be longitudinally tined. All other areas shall be tined as directed by the Engineer.

See Standard Plate 380.15 for placement of PCC Pavement Rumble Strips. Payment for forming rumble strips including labor, materials and incidentals shall be incidental to the contract unit price per square yard for 9" NONREINFORCED PCC PAVEMENT and 7" PCC OVERLAY.

PCC PAVEMENT RUMBLE STRIPS, for information only	
Location	PCCP Rumble Strips
	mile
Sta. b 83+00 to Sta. b 368+13.6	5.327

ALKALI SILICA REACTIVITY

Delete Section 800.2 D and replace with the following:

Alkali-Silica Reactivity (ASR) Requirements: Fine aggregates from sources that have not been tested by the Department shall be submitted to the Department's Materials and Surfacing Central Materials Laboratory for ASR testing 30 days prior to performing the concrete mix design.

ASR testing shall be performed in accordance with ASTM C1260, except that the gradation of the material used for testing shall be as produced from the source. The fine aggregate shall only be sampled at the source by a Department representative or in the presence of a Department representative.

Fine aggregate with a 14 day expansion value below 0.250 shall require Type II cement with a fly ash content of 20 to 25% in the concrete mix. Fine aggregate with a 14 day expansion value of 0.250 or greater shall require Type II cement with a fly ash content of 25% in the concrete mix. Fine aggregate with a 14 day expansion value of 0.400 or greater shall not be used.

When a fine aggregate supplier changes locations within the pit, the fine aggregate from the new location in the pit shall be submitted for testing.

When more than one source of fine aggregate is blended to meet the gradation specifications, the expansion value of the blended sands will be used for determining acceptability and type of cement required.

Blended sources will be treated as a new source and it shall be the responsibility of the Contractor to submit the blended samples for testing 30 days prior to performing the concrete mix design. The expansion value of the blended sources will be used to determine the type of cement required.

Below is a list of known fine aggregate sources and the average corresponding 14 day expansion values:

Source	Location	Expansion Value
Bachman	Winner, SD	0.335*
Bitterman	Delmont, SD	0.316*
Concrete Materials	Corson, SD	0.146
Croell	Hot Springs, SD	0.089
Croell	Wasta, SD	0.212
Emme Sand & Gravel	Oneil, NE	0.217
Fisher S&G - Mickelson Pit	E of Nisland, SD	0.129
Fisher S&G - Vallery Pit	Nisland, SD	0.110
Fisher S&G	Rapid City, SD	0.092
Fisher S&G	Spearfish, SD	0.053
Fisher S&G	Wasta, SD	0.159
Fuchs	Pickstown, SD	0.275*
Higman	Akron, IA	0.203
Higman	Hudson, SD	0.187
Hilde	Madison, SD	0.116
Jensen	Herried, SD	0.276*
L.G. Everist	Brookings, SD	0.267*
L.G. Everist	Hawarden, IA	0.166
L.G. Everist	Summit, SD	0.178
Morris	Blunt, SD	0.192
Morris - Richards Pit	Onida, SD	0.188
Morris - Shawn's Pit	E of Sturgis, SD	0.186
Myrl & Roys - Ode Pit	E Sioux Falls, SD	0.214
Myrl & Roys - Nelson Pit	NE Sioux Falls, SD	0.156
Northern Concrete Agg.	Rauville, SD	0.113
Northern Concrete Agg.	Luverne, MN	0.133
Opperman - Gunvordahl Pit	Burke, SD	0.363
Opperman - Cahoy Pit	Herrick, SD	0.307*
Opperman - Jones Pit	Burke, SD	0.321*
Opperman - Randall Pit	Pickstown, SD	0.239
Pete Lien & Sons	Creston, SD	0.158
Pete Lien & Sons	Oral, SD	0.129
Pete Lien & Sons	Wasta, SD	0.192
Thorpe Pit	Britton, SD	0.098
Wagner Building Supplies	Pickstown (Wagner), SD	0.241
Winter Brothers- Whitehead Pit	Brookings, SD	0.197

* These sources will require Type II cement with a fly ash content of 25% in the concrete mix.

The Department will use the running average of the last three known expansion test results or less for determining acceptability of source and the required Type of cement. These expansion results are reported in the preceding table. Additional testing, when requested by the Contractor, will be performed by the Department at the Contractor's expense.

The values listed in the table are intended for use in bidding. If a previously tested pit by SDDOT with a test value less than 0.250 is discovered after letting to be 0.250 or greater, then the Department will accept financial responsibility if higher costs are incurred due to higher % of fly ash requirement.

Revised: 28 Sep 16, RML

PAVEMENT SMOOTHNESS

The following locations shall be tested for smoothness in accordance with the Special Provision for PI PCC Pavement Smoothness:

SD50 – Sta. 398+73 to Sta. b 3+00 thru Equations

The following locations shall be tested for smoothness in accordance with the Special Provision for IRI PCC Pavement Smoothness:

SD50 – Sta. b 3+00 to Sta. b 83+00
SD50 WBL – Sta. b 83+00 to Sta. b 368+13.6

FAST TRACK CONCRETE

At specific locations (intersecting streets, driveways, & blockouts) designated by the Engineer, Fast Tack Concrete may be used. The intent of the Fast Track Concrete is to insure the new pavement can be opened to traffic within 24 hours after placement.

An estimated 16 blockouts will be needed on the south side from Sta. 398+73 to Sta. b 70+61.3, 21 blockouts will be needed on the north side from Sta. 398+73 to Sta. b 368+13.6, and 4 blockouts will be needed for the center turn lane from Sta. 398+73 to Sta. b 70+61.3.

Fast Track Concrete shall be constructed according to plan details and Specifications for the 9" Nonreinforced PCC Pavement or 7" PCC Overlay except as follows:

The Fast Track Concrete shall be designed to achieve a minimum compressive strength of 3800 psi in 24 hours. Use of a water reducer, accelerator, or a high range water reducer may be required to achieve the desired early strength. If any of these additives are used, they shall be compatible with all other ingredients of the mix. The minimum pounds of cement shall be 600 pounds per cubic yard of Type I, II, III, or V cement. In addition to the cement a minimum of 105 pounds per cubic yard of Fly Ash will be used in the mix. The coarse aggregate shall be a minimum of 53% of total aggregate weight per cubic yard. Coarse aggregate shall be crushed ledge rock, Size No. 1 or 15. The water cement ratio shall be as low as practical to achieve the desired results. The slump requirement will be limited to 6.5 inches maximum and the entrained air content shall be 4.5% to 7.0% after all admixtures are added and the concrete. The Contractor is responsible for the mix design used. The Contractor shall submit a mix design and supporting documentation to the Engineer for approval at least 2 weeks prior to use. The Department of Transportation's Office of Materials & Surfacing shall review and comment on the proposed mix design prior to its use.

Fast Track Concrete shall be cured with Curing Compound. In addition, the concrete shall be immediately covered with a suitable insulation blanket consisting of a layer of closed cell polystyrene foam protected by at least one layer of plastic. The insulation blanket shall have an R-value of at least 0.5, as rated by the manufacturer. The insulation blanket shall be left in place, except for initial joint sawing operations, until the 3800 psi is attained. The initial contraction joint sawing shall be performed as soon as practical after placement to avoid random cracking. The use of insulation blankets may be waived during periods of hot weather upon approval of the Engineer.

FAST TRACK CONCRETE (CONTINUED)

The pavement may be opened to traffic, earlier than 24 hours, provided the compressive strength of 3800 psi has been attained. The final contraction joint sawing and sealing are not required at this time to open up pavement to traffic.

If more or less Fast Track Concrete is used, an equal amount shall be subtracted from or added to the total for 9" Nonreinforced PCC Pavement or 7" PCC Overlay. All costs for Fast Track Concrete shall be incidental to the contract unit price per square yard for FAST TRACK CONCRETE.

TABLE OF PCC PAVEMENT

	Overlay Area (sq.yds.)	Replacement Area (sq.yds.)	Total (sq.yds.)
Fast Track Concrete	10,431.6	566.2	10,997.8
7" PCC Overlay	173,000.1		
9" Nonreinforced PCC Pavement		9646.4	
TOTAL	183,431.7	10,212.6	

TABLE OF SUPERELEVATION

STATION TO STATION	REMARKS
SD50	
Sta. 398+73.0 to Sta. 403+47.4 Thru Equation	Normal Crown Section
Sta. 403+47.4 to Sta. 405+97.4	Superelevation Transition
Sta. 405+97.4 to Sta. 417+57.5	2° 28.2' Curve Rt. 0.048 Superelevation Rate.
Sta. 417+57.5 to Sta. a 420+11.5	Superelevation Transition
Sta. a 420+11.5 to Sta. b 83+00	Normal Crown Section
SD50 WBL	
Sta. b 83+00 to Sta. b 161+11.7	Normal Crown Section
Sta. b 161+11.7 to Sta. b 179+61.5	0° 18' Curve Lt. Normal Crown Section
Sta. b 179+61.5 to Sta. b 239+19.4	Normal Crown Section
Sta. b 239+19.4 to Sta. b 241+59.4	Superelevation Transition
Sta. b 241+59.4 to Sta. b 260+51.8	1° 00' Curve Rt. 0.034 Superelevation Rate.
Sta. b 260+51.8 to Sta. b 265+91.6	Superelevation Transition
Sta. b 265+91.6 to Sta. b 284+30.9	1° 00' Curve Lt. 0.034 Superelevation Rate.
Sta. b 284+30.9 to Sta. b 286+05.0	Superelevation Transition
Sta. b 286+05.0 to Sta. b 288+45.9	Normal Crown Section
Sta. b 288+45.9 to Sta. b 308+37.3	0° 18' Curve Rt. Normal Crown Section.
Sta. b 308+37.3 to Sta. b 368+13.6	Normal Crown Section

TABLE OF GEOTEXTILE BOND BREAKER FABRIC

Location	Geotextile Bond Breaker Fabric
	SqYd
SD50	
Sta. 400+17 to Sta. b 68+41.3	114,548.0
SD50 WBL	
Sta. b 86+08 to Sta. b 152+48.7	23,611.4
Sta. b 162+56.5 to Sta. b 368+13.6	73,091.9
TOTAL	211,251.3

Quantity shown is the actual square yardage required with no laps

TABLE OF PCC PAVEMENT

Location	PCC Overlay, Furnish CuYd	7" PCC Overlay Placement Or Fast Track Concrete SqYd	9" Nonreinforced PCC Pavement Or Fast Track Concrete SqYd
SD50			
Sta. 398+73 to Sta. 400+17			1024.0
Sta. 400+17 to Sta. 404+00	529.6	2723.6	
Sta. 404+00 to Sta. a 419+62.6	2154.9	11082.7	
Sta. a 419+62.6 to Sta. a 429+70	1393.0	7164.4	
Sta. a 429+70 to Sta. a 435+58	813.3	4181.3	
Sta. a 435+58 to Sta. b 68+41.3	15,473.2	79,577.6	
Sta. b 68+41.3 to Sta. b 70+61.3			1564.4
Sta. b 70+61.3 to Sta. b 83+00			4954.8
SD50 WBL			
Sta. b 83+00 to Sta. b 86+08			889.8
Sta. b 86+08 to Sta. b 152+48.7	3780.2	19,184.2	
Sta. b 152+48.7 to Sta. b 155+56.7			889.8
Sta. b 159+48.5 to Sta. b 162+56.5			889.8
Sta. b 162+56.5 to Sta. b 368+13.6	12751.7	59,387.2	
TOTALS	36,895.9	183,301.0	10,212.6

TRANSVERSE CONTRACTION JOINTS

See PCC Pavement Layouts sheets and standard plate for PCC Pavement Transverse Contraction Joint Spacing for joint spacing in Nonreinforced PCC Pavement. Joint spacing in the PCC Shoulder Pavement shall match adjacent mainline pavement.

Silicone sealing operations shall be suspended per Specifications for seasonal restrictions (380.3 P.3). Hot poured elastic joint sealer may be temporarily placed during the seasonal restrictions of silicone sealing. If hot poured elastic joint sealer is used, it will be removed the following year and replaced with silicone sealant. All costs associated with the placement and removal of the hot poured elastic joint sealer, any additional joint cleaning, sawing, and traffic control shall be at the Contractor's expense with no additional payment.

TABLE OF DOWEL BARS

Location	1 ¼" Bars	1" Bars
	Each	Each
SD50		
Sta. 398+73 to Sta. 400+17	600	
Sta. 400+17 to Sta. b 68+41.3		59460
Sta. b 68+41.3 to Sta. 70+61.3	900	
Sta. b 70+61.3 to Sta. b 83+00	2822	
SD50 WBL		
Sta. b 83+00 to Sta. b 86+08	504	
Sta. b 86+08 to Sta. b 152+48.7		10632
Sta. b 152+48.7 to Sta. b 155+56.7	504	
Sta. b 159+48.5 to Sta. b 162+56.5	504	
Sta. b 162+56.5 to Sta. b 368+13.6		32880
Subtotal	5834	102972
TOTAL	108,806	

LOCATION OF CONCRETE PAVEMENT JOINTS

The location of joints, as shown on the "PCC Pavement Layout" sheets, are only approximate locations to be used as a guide in the final location of joints and to afford bidders a basis for estimating the construction costs of the joints. The final locations of the joints are to be designated by the Engineer during construction.

STEEL BAR INSTALLATION

The Contractor shall install 1¼ inch x 18 inch epoxy coated plain round dowel bar, 1 inch x 18 inch epoxy coated plain round dowel bar and #5 x 30 inch epoxy coated deformed tie bar.

The steel bars shall be cut to the specified length by sawing and shall be free from burring or other deformations. Shearing will not be permitted.

Epoxy coated plain round steel bars shall be installed on 12 inch centers in the transverse joint. The first steel bar shall be placed a minimum of 3 inches and a maximum of 6 inches from the outside edge of the slab.

Epoxy coated deformed steel bars shall be inserted on 30 inch centers in the longitudinal joint and shall be placed a minimum of 15 inches from the existing transverse contraction joint.

Cost for the epoxy resin adhesive, steel bars, drilling of holes, applying the adhesive, installing the steel bars into the drilled holes and all other items incidental to the installation of the steel bars shall be incidental to the contract unit price per each for Insert Steel Bar in PCC Pavement.

TABLE OF STEEL BAR INSTALLATION

LOCATION*	1-1/4" x 18" Plain Round Dowel Bars	1" x 18" Plain Round Dowel Bars	#5 x 30" Deformed Tie Bar
	each	Each	each
Sta. 398+73, SD50	64		
Sta. b 70+61.3, SD50	32		
Sta. b 70+61.3 to Sta. b 83+00, SD50			495
Sta. b 368+13.6		26	
SUBTOTAL	96	26	495
TOTAL	617		

MAILBOXES

The Contractor shall reset the existing mailboxes on new posts with the necessary support hardware for single or double mailbox assemblies. The local Postmaster will determine the recommended mounting height of the mailboxes throughout the project. The Contractor shall coordinate with the Engineer on the proper postal representative to contact.

All costs for removing existing mailboxes and resetting mailboxes with new posts and necessary support hardware shall be incidental to the contract unit price per each for "Refurbish Single Mailbox" or "Refurbish Double Mailbox".

24 single mailboxes shall be refurbished and 10 double mailboxes shall be refurbished.

Location	Single Mailbox (each)	Double Mailbox (each)
SD 50		
Sta. 415+05 Lt.	1	1
Sta. a 421+12 Lt.	1	
Sta. a 429+76 Rt.	1	
Sta. a 431+68 Lt.	1	
Sta. a 436+58 Rt.	1	
Sta. a 437+77 Lt.	1	1
Sta. a 439+50 Rt.		1
Sta. a 442+20 Rt.		1
Sta. a 448+56 Lt.	1	
Sta. a 449+25 Rt.	1	
Sta. a 451+18 Lt.	1	
Sta. a 453+01 Rt.	1	
Sta. a 459+67 Rt.		2
Sta. a 460+50 Lt.	1	
Sta. a 465+47 Rt.	1	
Sta. a 471+73 Rt.	1	
Sta. a 474+39 Rt.	1	
Sta. a 475+66 Rt.	1	
Sta. b 7+49 Rt.	1	
Sta. b 15+14 Lt.	1	
Sta. b 18+57 Lt.	1	
Sta. b 30+04 Rt.	1	
Sta. b 35+07 Lt.		1
Sta. b 37+61 Lt.	1	
Sta. b 42+35 Rt.		1
Sta. b 43+00 Lt.	1	1
Sta. b 63+60 Lt.		1
Sta. b 66+18 Rt.	1	
SD 50 WBL		
Sta. b 99+89 Lt.	1	
Sta. b 319+52 Lt.	1	
TOTAL	24	10

RATES OF MATERIALS

The Estimate of Surfacing Quantities is based on the following quantities of materials per **station**.

SD50 - ADDITIONAL WIDENING OF SHOULDERS

Sta. 400+17 to Sta. b 68+41.3 Lt.
Sta. 400+17 to Sta. a 429+70 Rt.
Sta. a 435+58 to Sta. b 68+41.3 Rt.

BASE COURSE OR BASE COURSE, SALVAGED

Crushed or Salvaged Material 38.76 tons

Water for Granular Material at the rate of 0.47 M Gallons

SD50 – 6' SHOULDERS

Sta. 398+73 to Sta. 400+17 Lt.
Sta. b 68+41.3 Sta. b 86+08 Lt.
Sta. b 152+48.7 to Sta. b 155+56.7 Lt.
Sta. b 159+48.5 to Sta. b 162+56.5 Lt.
Sta. 398+73 to Sta. 400+17 Rt.
Sta. b 68+41.3 to Sta. b 70+61.3 Rt.

BASE COURSE OR BASE COURSE, SALVAGED

Crushed or Salvaged Material 25.38 tons

Water for Granular Material at the rate of 0.30 M Gallons

MC-70 Asphalt for Prime at the Rate of 0.11 ton applied 8.5 feet wide (Rate = 0.30 gallon per square yard).

SS-1h or CSS-1h Asphalt for Tack at the rate of 0.02 ton applied 8.0 feet wide (Rate = 0.06 gallon per square yard).

CLASS HR ASPHALT CONCRETE

Crushed Aggregate	8.39 tons
RAP	3.60 tons
PG 58-28 Asphalt Binder	0.50 tons
Total	12.49 tons

The exact proportions of these materials will be determined on construction.

FLUSH SEAL

SS-1h or CSS-1h Asphalt for Flush Seal at the rate of 0.02 ton applied 7.5 feet wide (Rate = 0.05 gallon per square yard).

SD50 – 6' SHOULDERS

Sta. 400+17 to Sta. 404+00 Lt.
Sta. a 419+62.6 Sta. b 68+41.3 Lt.
Sta. 400+17 to Sta. 404+00 Rt.
Sta. a 419+62.6 to Sta. a 429+70 Rt.
Sta. a 435+58 to Sta. b 68+41.3 Rt.

BASE COURSE OR BASE COURSE, SALVAGED

Crushed or Salvaged Material 14.36 tons

Water for Granular Material at the rate of 0.17 M Gallons

MC-70 Asphalt for Prime at the Rate of 0.11 ton applied 8.5 feet wide (Rate = 0.30 gallon per square yard).

SS-1h or CSS-1h Asphalt for Tack at the rate of 0.02 ton applied 8.0 feet wide (Rate = 0.06 gallon per square yard).

CLASS HR ASPHALT CONCRETE

Crushed Aggregate	8.39 tons
RAP	3.60 tons
PG 58-28 Asphalt Binder	0.50 tons
Total	12.49 tons

The exact proportions of these materials will be determined on construction.

FLUSH SEAL

SS-1h or CSS-1h Asphalt for Flush Seal at the rate of 0.02 ton applied 7.5 feet wide (Rate = 0.05 gallon per square yard).

SD50 – 6' SHOULDERS

Sta. 404+00 to Sta. a 419+62.6 Lt.
Sta. 404+00 to Sta. a 419+62.6 Rt.

BASE COURSE OR BASE COURSE, SALVAGED

Crushed or Salvaged Material 18.96 tons

Water for Granular Material at the rate of 0.23 M Gallons

MC-70 Asphalt for Prime at the Rate of 0.11 ton applied 8.5 feet wide (Rate = 0.30 gallon per square yard).

SS-1h or CSS-1h Asphalt for Tack at the rate of 0.02 ton applied 8.0 feet wide (Rate = 0.06 gallon per square yard).

CLASS HR ASPHALT CONCRETE

Crushed Aggregate	8.39 tons
RAP	3.60 tons
PG 58-28 Asphalt Binder	0.50 tons
Total	12.49 tons

The exact proportions of these materials will be determined on construction.

FLUSH SEAL

SS-1h or CSS-1h Asphalt for Flush Seal at the rate of 0.02 ton applied 7.5 feet wide (Rate = 0.05 gallon per square yard).

SD50 WBL – OUTSIDE SHOULDERS

Sta. b 86+08 Sta. b 152+48.7
Sta. b 162+56.5 to Sta. b 368+13.6

BASE COURSE OR BASE COURSE, SALVAGED

Crushed or Salvaged Material 25.64 tons

Water for Granular Material at the rate of 0.31 M Gallons

MC-70 Asphalt for Prime at the Rate of 0.11 ton applied 8.5 feet wide (Rate = 0.30 gallon per square yard).

SS-1h or CSS-1h Asphalt for Tack at the rate of 0.02 ton applied 8.0 feet wide (Rate = 0.06 gallon per square yard).

CLASS HR ASPHALT CONCRETE

Crushed Aggregate	8.39 tons
RAP	3.60 tons
PG 58-28 Asphalt Binder	0.50 tons
Total	12.49 tons

The exact proportions of these materials will be determined on construction.

FLUSH SEAL

SS-1h or CSS-1h Asphalt for Flush Seal at the rate of 0.02 ton applied 7.5 feet wide (Rate = 0.05 gallon per square yard).

SD50 WBL – MEDIAN SHOULDERS

Sta. b 86+08 Sta. b 152+48.7
Sta. b 162+56.5 to Sta. b 368+13.6

BASE COURSE OR BASE COURSE, SALVAGED

Crushed or Salvaged Material 21.29 tons

Water for Granular Material at the rate of 0.26 M Gallons

MC-70 Asphalt for Prime at the Rate of 0.09 ton applied 6.5 feet wide (Rate = 0.30 gallon per square yard).

SS-1h or CSS-1h Asphalt for Tack at the rate of 0.02 ton applied 6.0 feet wide (Rate = 0.06 gallon per square yard).

CLASS HR ASPHALT CONCRETE

Crushed Aggregate	5.91 tons
RAP	2.53 tons
PG 58-28 Asphalt Binder	0.35 tons
Total	8.79 tons

The exact proportions of these materials will be determined on construction.

FLUSH SEAL

SS-1h or CSS-1h Asphalt for Flush Seal at the rate of 0.01 ton applied 5.5 feet wide (Rate = 0.05 gallon per square yard).

SD50 WBL – MEDIAN SHOULDERS

Sta. b 83+00 to Sta. b 86+08
Sta. b 152+48.7 to Sta. b 155+56.7
Sta. b 159+48.5 to Sta. b 162+56.5

BASE COURSE OR BASE COURSE, SALVAGED

Crushed or Salvaged Material 19.18 tons

Water for Granular Material at the rate of 0.23 M Gallons

MC-70 Asphalt for Prime at the Rate of 0.09 ton applied 6.5 feet wide (Rate = 0.30 gallon per square yard).

SS-1h or CSS-1h Asphalt for Tack at the rate of 0.02 ton applied 6.0 feet wide (Rate = 0.06 gallon per square yard).

CLASS HR ASPHALT CONCRETE

Crushed Aggregate	5.91 tons
RAP	2.53 tons
PG 58-28 Asphalt Binder	0.35 tons
Total	8.79 tons

The exact proportions of these materials will be determined on construction.

FLUSH SEAL

SS-1h or CSS-1h Asphalt for Flush Seal at the rate of 0.01 ton applied 5.5 feet wide (Rate = 0.05 gallon per square yard).

TABLE OF ADDITIONAL QUANTITIES

Location	Water for Granular Material MGal	Base Course or Base Course, Salvaged Ton	Gravel Cushion or Gravel Cushion, Salvaged Ton	Pit Run Ton	Class HR Asphalt Concrete Ton / Lift	Asphalt Binder PG 58-28 Ton / Lift	MC-70 Asphalt for Prime Ton	SS-1h or CSS-1h Asphalt for Tack Ton / Lift	SS-1h or CSS-1h Asphalt for Flush Seal Ton	Sand for Flush Seal Ton
SD50 Mainline										
Sta. 398+73 to Sta. 400+17	5.5		459.1							
Sta. b 68+41.3 to Sta. b 70+61.3	8.7		725.7							
Sta. b 70+61.3 to Sta. b 83+00	20.4		1698.6							
SD50 WBL Mainline										
Sta. b 83+00 to Sta. b 86+08	5.8		483.5							
Sta. b 152+48.7 to Sta. b 155+56.7	5.8		483.5							
Sta. b 159+48.5 to Sta. b 162+56.5	5.8		483.5							
SD50 Valley Gutter / Curb & Gutter										
Sta. a 429+45 to Sta. a 430+48 Rt.	0.3		22.9							
Sta. a 430+48 to Sta. a 435+58 Rt.	1.0		81.9							
Entrances										
Sta. 407+92 Lt.	0.4	34.9			7.7 / 7.7	0.3 / 0.3	0.1	--- / ---	---	0.2
Sta. 409+57 Lt.	1.3	107.6			48.7 / 48.7	1.9 / 1.9	0.3	0.1 / 0.1	0.1	1.2
Sta. 411+92 Lt	1.0	84.4			38.2 / 38.2	1.5 / 1.5	0.3	0.1 / 0.1	0.1	0.9
Sta. 414+70 Lt.	1.2	98.8			44.8 / 44.8	1.8 / 1.8	0.3	0.1 / 0.1	0.1	1.1
Sta. 415+93 Lt.	1.2	96.5			43.7 / 43.7	1.7 / 1.7	0.3	0.1 / 0.1	0.1	1.1
Sta. 417+19 Lt.	1.3	107.2			48.6 / 48.6	1.9 / 1.9	0.3	0.1 / 0.1	0.1	1.2
Sta. a 430+14 Rt.	0.6	47.9			21.7 / 21.7	0.9 / 0.9	0.2	--- / ---	---	0.5
Sta. a 431+07 Rt.	0.6	47.3			18.6 / 18.6	0.7 / 0.7	0.1	--- / ---	---	0.4
Sta. a 431+71 Rt.	0.4	32.2			12.5 / 12.5	0.5 / 0.5	0.1	--- / ---	---	0.3
Sta. a 433+09 Rt.	0.5	42.9			16.6 / 16.6	0.7 / 0.7	0.1	--- / ---	---	0.4
Entrances with AC beyond shoulder – 68 each	69.8	5814.7			2634.3 / 2634.3	105.4 / 105.4	18.7	4.0 / 4.0	3.4	63.3
Entrances without AC beyond shoulder – 35 each	10.5	871.1			380.7 / 380.7	15.2 / 15.2	2.7	0.6 / 0.6	0.5	9.1
Median Crossovers										
Median Crossovers with AC – 14 each					136.5 / 407.0 / 599.0	5.5 / 16.3 / 24.0		0.5 / 1.0 / 1.4	1.1	21.6
Median Crossovers without AC – 10 each	6.1	504.6								
* Temporary Median Crossover @ Sta. b 382+30	19.1	664.9		922.5	145.3 / 127.1	5.8 / 5.1	1.1	0.2 / 0.2	0.2	3.1
Additional Surfacing for Guardrail										
Str. # 68-180-199										
End Bridge Lt.	1.1	94.5			16.7	0.7	0.2	---	---	
End Bridge Rt.	2.3	194.7			8.6	0.3	0.1	---	---	
Miscellaneous										
# Temporary Transition @ Sta. 398+73	2.9		245.0							
Temporary Traffic Control	3.8		320.0							
TOTAL =	177.4	8844.2	5003.7	922.5	8072.4	322.7	24.9	13.5	5.7	104.4

* Temporary Median Crossover requires installation of Nonwoven Geotextile Separator, estimated at 1202.3 sq.yds.

Included in the Estimate of Quantities is 240 tons of Asphalt Concrete, Composite for the temporary transition at Sta. 398+73.

TABLES OF GUARDRAIL AND RELATED ITEMS

Location	Remove 3 Cable Guardrail	Remove 3 Cable Guardrail Anchor Assembly	Remove 3 Cable Guardrail Slip Base Anchor Assembly	Remove Beam Guardrail	Remove W Beam Guardrail Breakaway Cable Terminal	Remove Tangent End Terminal	3 Cable Guardrail	3 Cable Guardrail Slip Base Anchor Assembly	Class A W Beam Guardrail With Wood Posts	W Beam Guardrail Breakaway Cable Terminal	Tangent End Terminal	Comments
	Feet	Each	Each	Feet	Each	Each	Feet	Each	Feet	Each	Each	
Str. 68-180-199, SD50 WBL												
End Bridge Lt.				125.0		1			150		1	
End Bridge Rt.	183		1	50.0	1		247	1	50	1		
Str. 68-180-200, SD50 EBL												
End Bridge Lt.	295	1	1	81.25	1							* Temporary Traffic Control
End Bridge Rt.				43.75		1						* Temporary Traffic Control
TOTAL	478	1	2	300.0	2	2	247	1	200.0	1	1	

* Guardrail to be removed when project is completed and detoured WB traffic has been moved back to WB Lanes.

TABLE OF CONSTRUCTION STAKING
(See Special Provision for Contractor Staking)

Roadway and Description	Begin Station		End Station	Number of Lanes	Length	Length	Lane Factor	*Sets of Stake	**Grade Staking Quantity	Miscellaneous Staking Quantity	Slope Staking Quantity	Graded Centerline Staking Quantity
					(Ft)	(Mile)			(Mile)	(Mile)	(Mile)	(Mile)
SD50	398 + 73.0	to	a 479 + 07.3	5	8030.3	1.521	2.5	2	7.605	1.521	1.521	1.521
	b 0 + 00.0	to	b 70 + 61.3	5	7061.3	1.337	2.5	2	6.685	1.337	1.337	1.337
	b 70 + 61.3	to	b 83 + 00.0	2.5	1238.7	0.235	1.25	2	0.588	0.235	0.235	0.235
SD50 WBL	b 83 + 00.0	to	b 155 + 56.7	2	7256.7	1.374	1.0	2	2.748	1.374	1.374	1.374
	b 159 + 48.5	to	b 368 + 13.6	2	20865.1	3.952	1.0	2	7.904	3.952	3.952	3.952
								TOTAL =	25.530	8.419	8.419	8.419

* 1 = Paving Hubs Only
2 = Milling Hub Stakes and Paving Hub Stakes or Blue Top and Paving Hub Stakes

** Grade Staking Quantity = (Length) x (Lane Factor) x (Sets of Stakes)

STATE OF SOUTH DAKOTA	PROJECT	SHEET	TOTAL SHEETS
	NH 0050(108)385	F15	F102

Plotting Date: 08/18/2016

TYPICAL REMOVAL SECTIONS

PCC Pavement Removal

Salvage & Stockpile Asphalt Mix and Granular Base Material

Unclassified Excavation (Waste Material)

Micro-Milling Asphalt Concrete

* New surfacing elevation of PCC Pavement from project 05HD. An additional 4.5" of temporary surfacing for traffic control transition.

Sta. 398+73 to Sta. 400+17

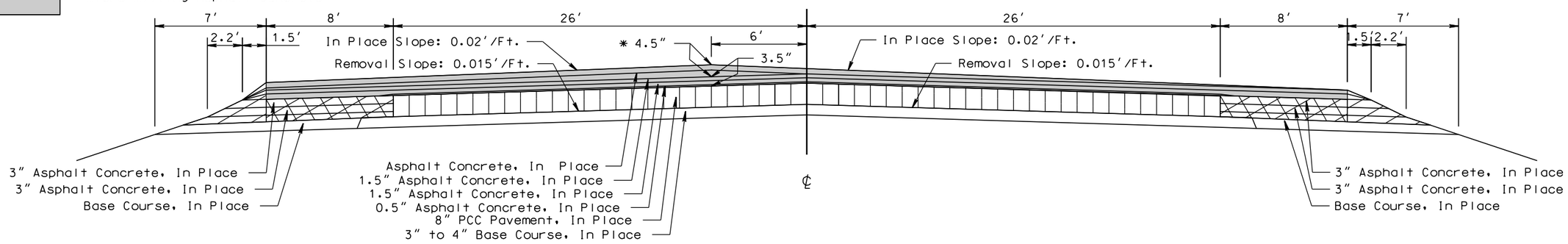

Sta. 400+17 to Sta. a 430+50
Sta. a 435+58 to Sta. a 467+35

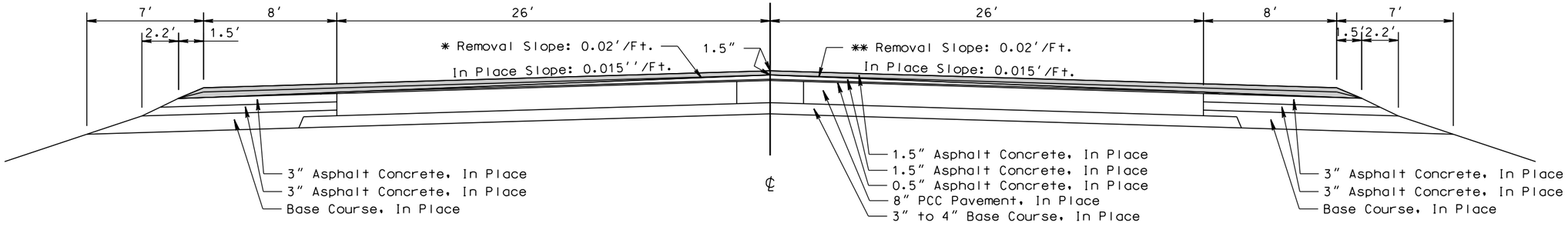

Transitions:

Sta. a 429+70 to Sta. a 435+58
* 0.02'/Ft. to 0.025'/Ft.
** 0.02'/Ft. to 0.015'/Ft.

Sta. a 430+50 to Sta. a 435+58

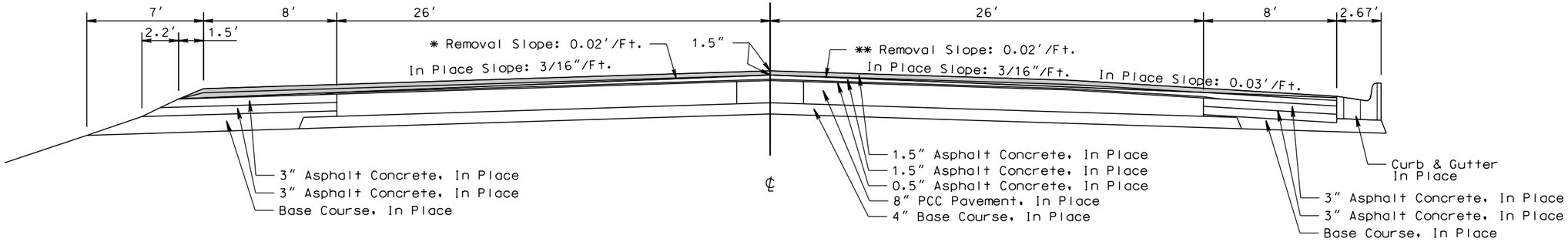

PLOT SCALE - 1:7

PLOTTED FROM - TRPR16032

PLOT NAME - 2

FILE - ...\YANK023U\TYPICAL SECTIONS.DGN

STATE OF SOUTH DAKOTA	PROJECT	SHEET	TOTAL SHEETS
	NH 0050(108)385	F16	F102

Plotting Date: 08/18/2016

TYPICAL REMOVAL SECTIONS

Salvage & Stockpile Asphalt Mix and Granular Base Material

Unclassified Excavation (Waste Material)

Micro-Milling Asphalt Concrete

PCC Pavement Removal

Transitions:

Sta. b 66+26.4 to Sta. b 68+41.3
* 26' to 28'

Sta. a 467+35 to Sta. b 68+41.3

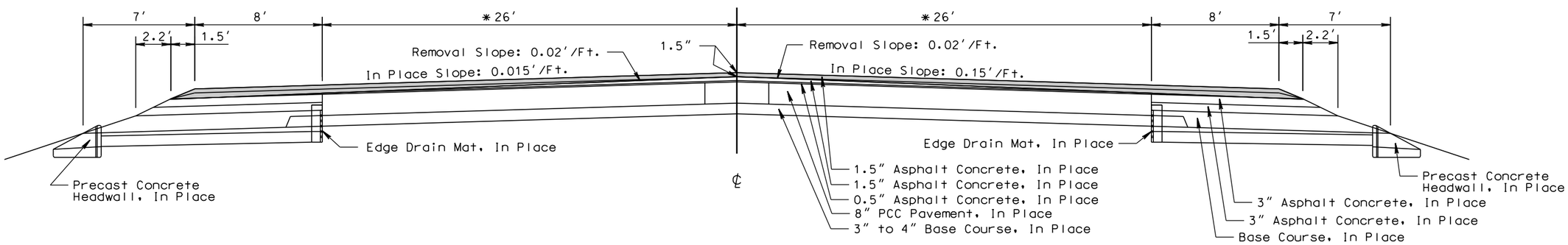

Transitions:

Sta. b 68+41.3 to Sta. b 70+61.3
* 28' to 30'
# 0" to 2.5"

Sta. b 68+41.3 to Sta. b 70+61.3

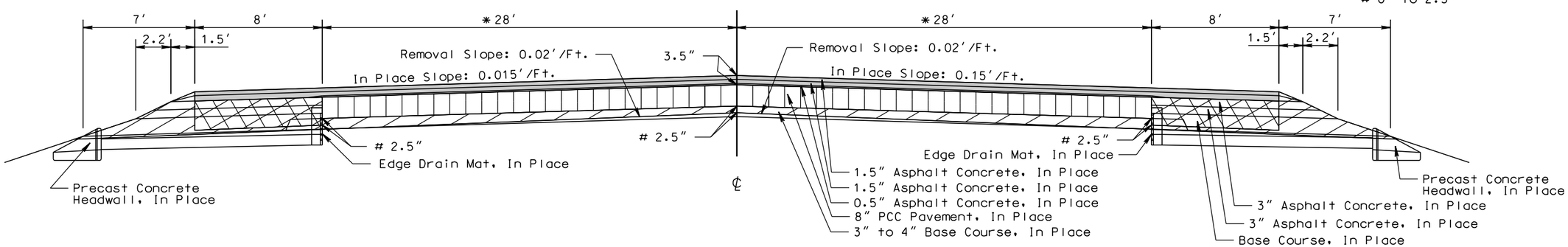

Sta. b 70+61.3 to Sta. b 72+11.3

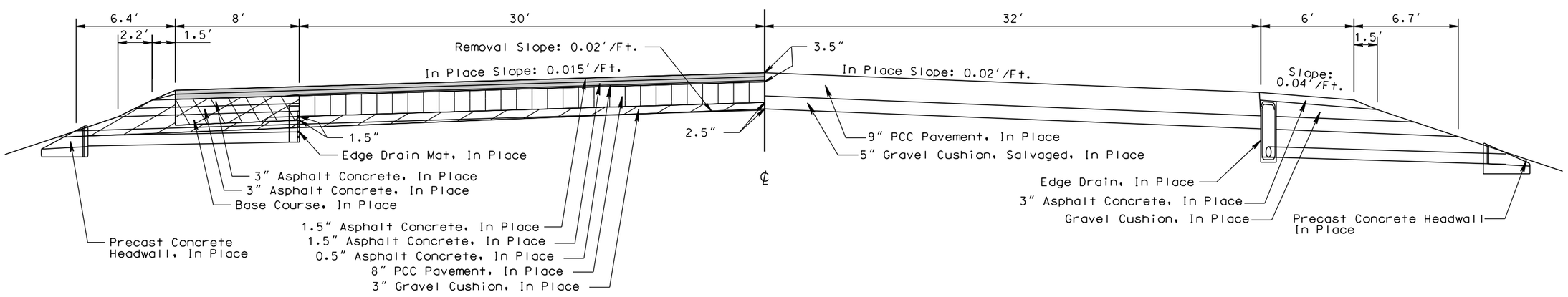

PLOT SCALE - 1:7

PLOT NAME - 3

FILE - ...\YANK023U\TYPICAL SECTIONS.DGN

PLOTTED FROM - TRPR16032

STATE OF SOUTH DAKOTA	PROJECT	SHEET	TOTAL SHEETS
	NH 0050(108)385	F17	F102

Plotting Date: 08/18/2016

TYPICAL REMOVAL SECTIONS

Salvage & Stockpile Asphalt Mix and Granular Base Material

Unclassified Excavation (Waste Material)

Micro-Milling Asphalt Concrete

Transitions:

Sta. b 72+11.3 to Sta. b 83+00.0
* 30' to 38'
** 32' to 40'

Sta. b 72+11.3 to Sta. b 83+00

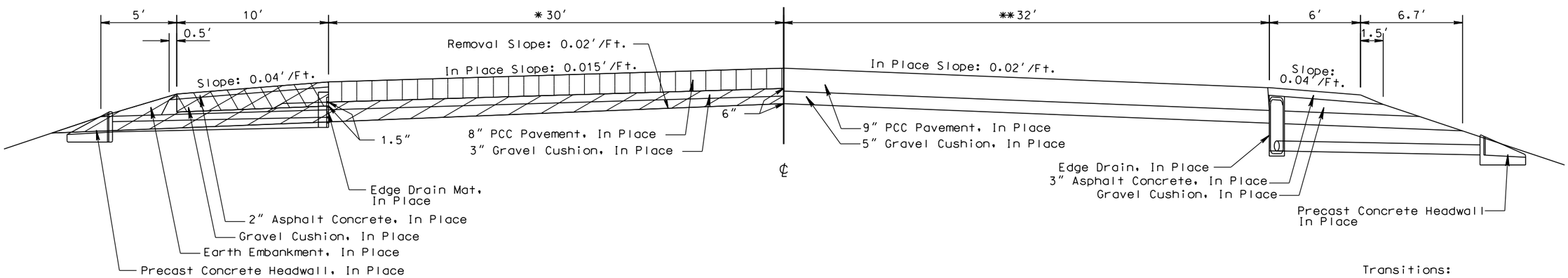

Transitions:

Sta. b 83+00 to Sta. b 86+08
Sta. b 159+48.5 to Sta. b 162+56.5
** 6" to 0"

Sta. b 152+48.7 to Sta. b 155+56.7
** 0" to 6"

Sta. b 85+48 to Sta. b 86+08
Sta. b 161+96.5 to Sta. b 162+56.5
* 1.5" to 0"

Sta. b 152+48.7 to Sta. b 153+08.7
* 0" to 1.5"

Sta. b 83+00 to Sta. b 86+08
Sta. b 152+48.7 Sta. b 155+56.7
Sta. b 159+48.5 to Sta. b 162+56.5

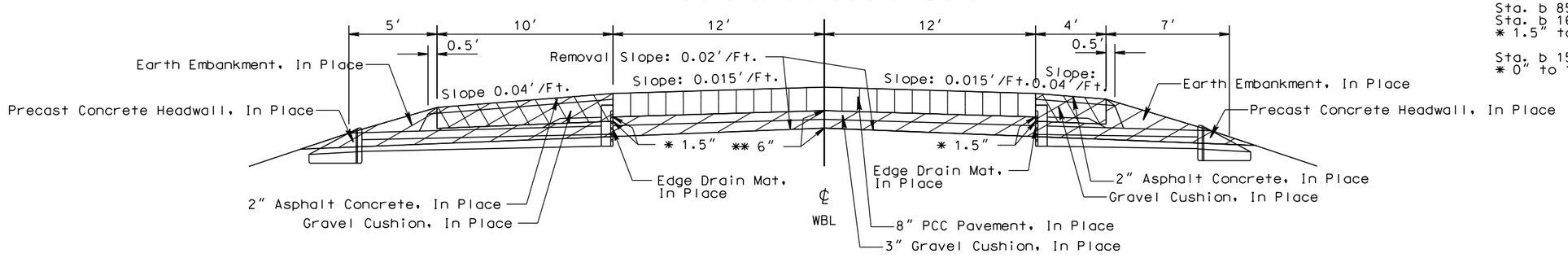

Sta. b 365+49.6 to Sta. b 368+13.6

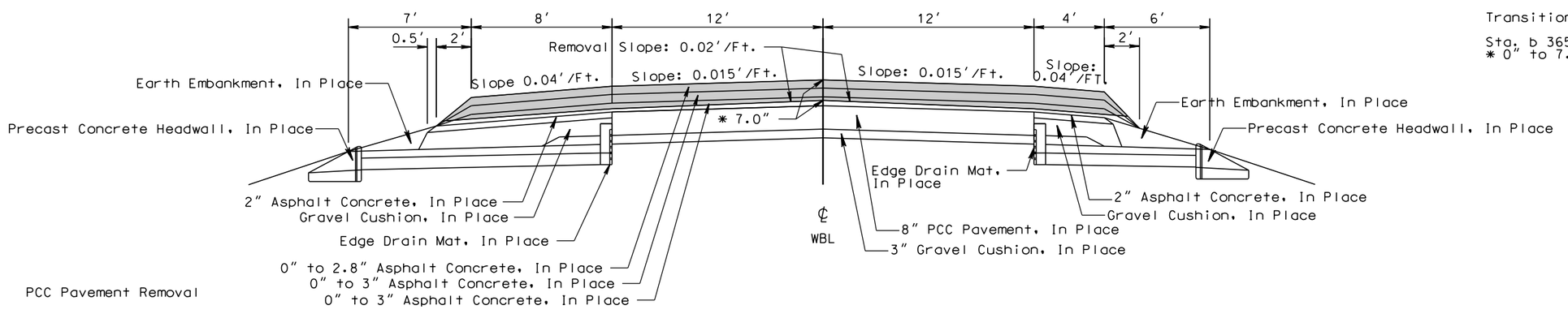

Transition:

Sta. b 365+49.6 to Sta. b 368+13.6
* 0" to 7.0"

PCC Pavement Removal

PLOT SCALE - 1:7

PLOT NAME - 4

FILE - ...\YANK023U\TYPICAL SECTIONS.DGN

PLOTTED FROM - TRPR16032

STATE OF SOUTH DAKOTA	PROJECT	SHEET	TOTAL SHEETS
	NH 0050(108)385	F18	F102

Plotting Date: 08/18/2016

TYPICAL REMOVAL SECTIONS

* Micro-Milling Asphalt Concrete will be performed along outside shoulder, 4' wide with slope = 0.02'/Ft. Milling will follow the outside edge of the in place PCC Pavement elevation.

Sta. b 86+08 to Sta. b 152+48.7
Sta. b 162+56.5 to Sta. b 365+49.6

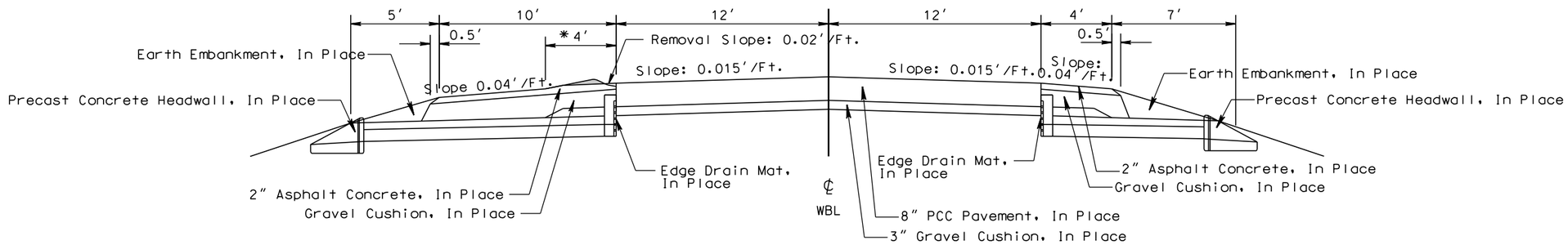

PLOT SCALE - 1:7

PLOTTED FROM - TRPR16032

PLOT NAME - 5

FILE - ...\YANK023U\TYPICAL SECTIONS.DGN

STATE OF SOUTH DAKOTA	PROJECT	SHEET	TOTAL SHEETS
	NH 0050(108)385	F19	F102

Plotting Date: 08/18/2016

TYPICAL SURFACING SECTIONS

Transitions:

Sta. 398+73 to Sta. 400+17
* Crown Point 6′ Lt. to 0′ Lt.

Sta. 398+73 to Sta. 400+17

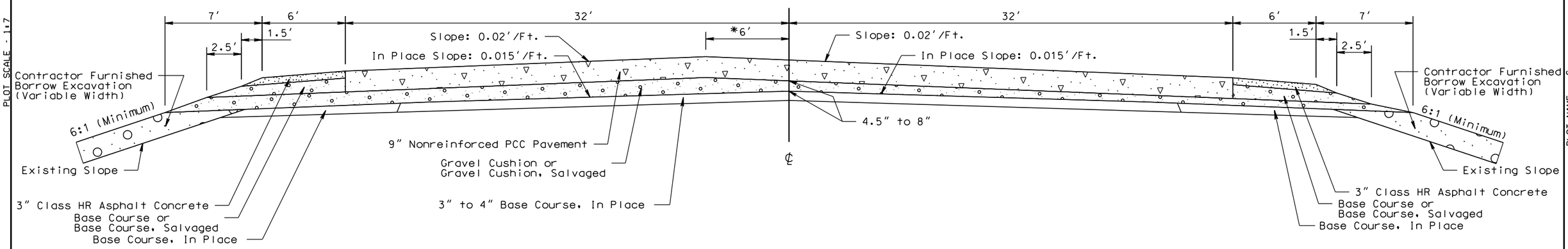

Transitions:

Sta. a 435+58 to Sta. a 436+38
* 0.025′/Ft. to 0.02′/Ft.
** 0.015′/Ft. to 0.02′/Ft.

Sta. 400+17 to Sta. a 429+70
Sta. a 435+58 to Sta. a 467+35

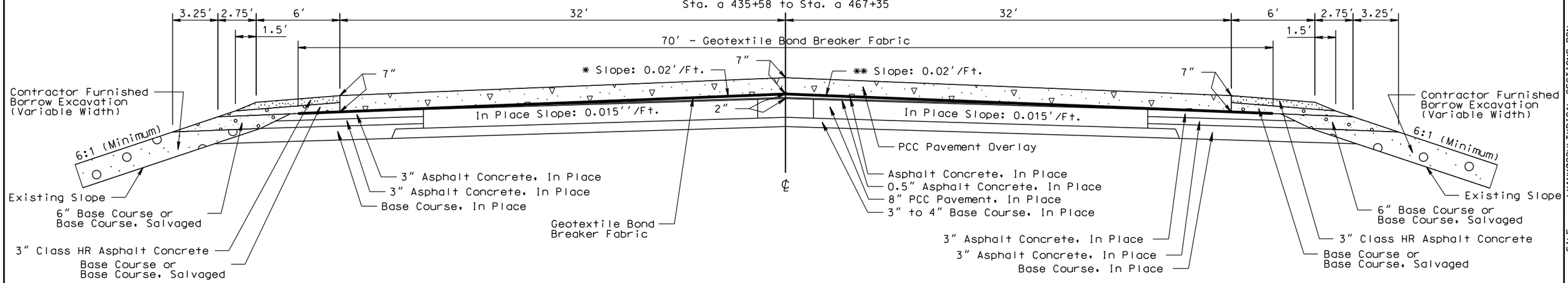

Transitions:

Sta. a 429+70 to Sta. a 435+58
* 0.02′/Ft. to 0.025′/Ft.
** 0.02′/Ft. to 0.015′/Ft.

Sta. a 429+70 to Sta. a 430+48

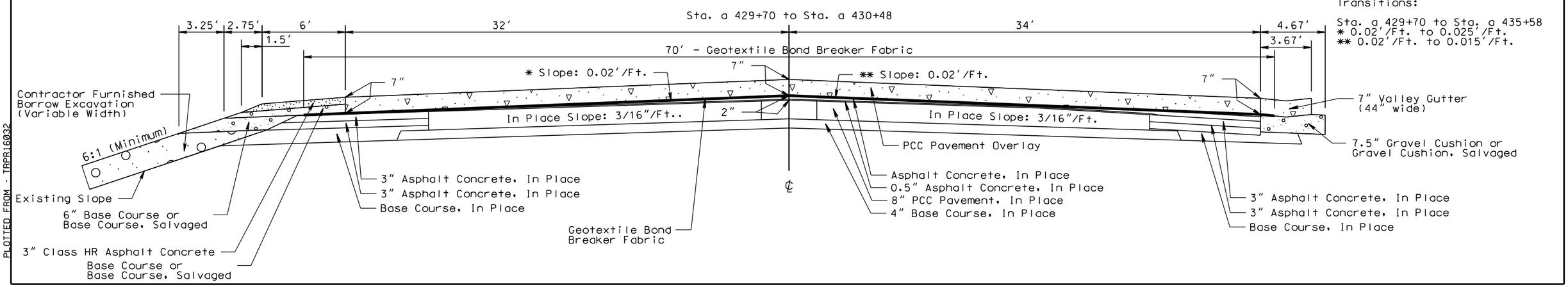

PLOT SCALE - 1:7

PLOT NAME - 6

FILE - ...\YANK023U\TYPICAL SECTIONS.DGN

PLOTTED FROM - TRPR16032

STATE OF SOUTH DAKOTA	PROJECT	SHEET	TOTAL SHEETS
	NH 0050(108)385	F20	F102

Plotting Date: 08/18/2016

$$$ Precast concrete Headwall may require resetting. Outlet Pipe may require an extension or reduction in length due to slope flattening and the installation of the Standard Weight Black Steel Pipe.

TYPICAL SURFACING SECTIONS

Transitions:

Sta. a 429+70 to Sta. a 435+58
* 0.02'/Ft. to 0.025'/Ft.
** 0.02'/Ft. to 0.015'/Ft.

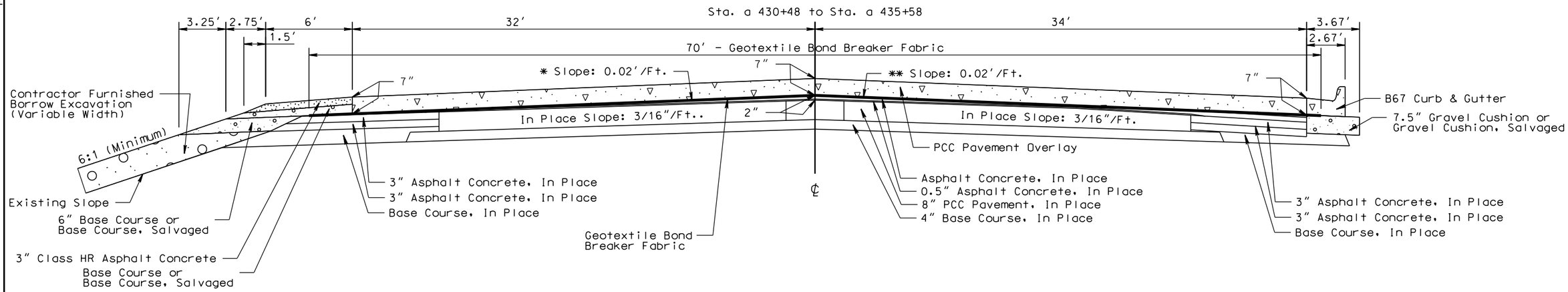

Transitions:

Sta. b 66+26.4 to Sta. b 68+41.3
* Full Width Transition of In Place PCCP: 52' to 56'

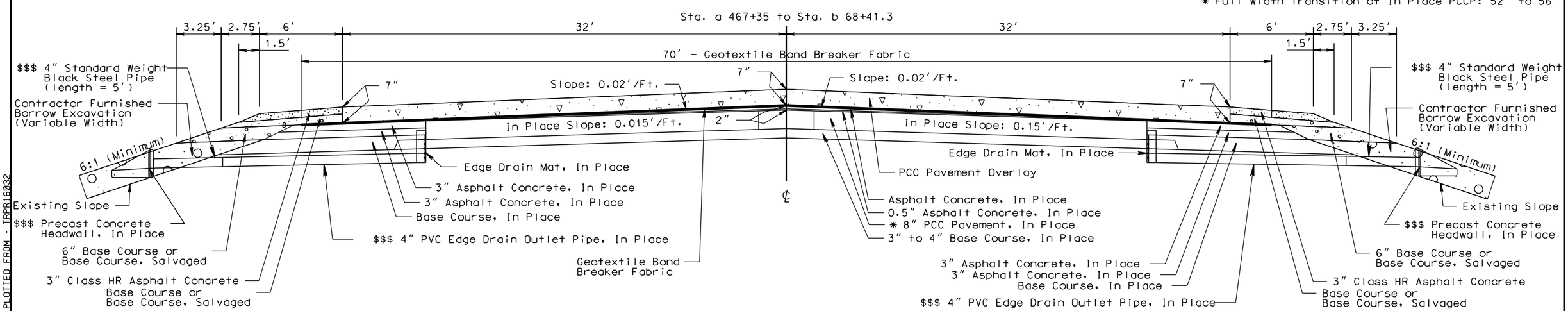

PLOT SCALE - 1:7

PLOT NAME - 7

FILE -...\YANK023U\TYPICAL SECTIONS.DGN

PLOTTED FROM - TRPR16032

STATE OF SOUTH DAKOTA	PROJECT	SHEET	TOTAL SHEETS
	NH 0050(108)385	F21	F102

Plotting Date: 08/18/2016

$$$ Precast concrete Headwall may require resetting. Outlet Pipe may require an extension or reduction in length due to slope flattening and the installation of the Standard Weight Black Steel Pipe.

TYPICAL SURFACING SECTIONS

Sta. b 68+41.3 to Sta. b 70+61.3

Transitions:

Sta. b 68+41.3 to Sta. b 70+61.3
* 8" to 5"

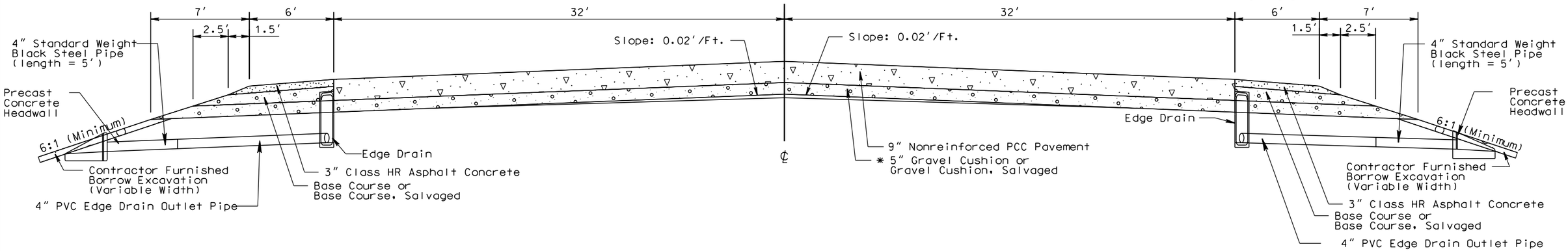

Transitions:

Sta. 72+11.3 to Sta. b 83+00.0
* 32' to 40'

Sta. b 70+61.3 to Sta. b 83+00

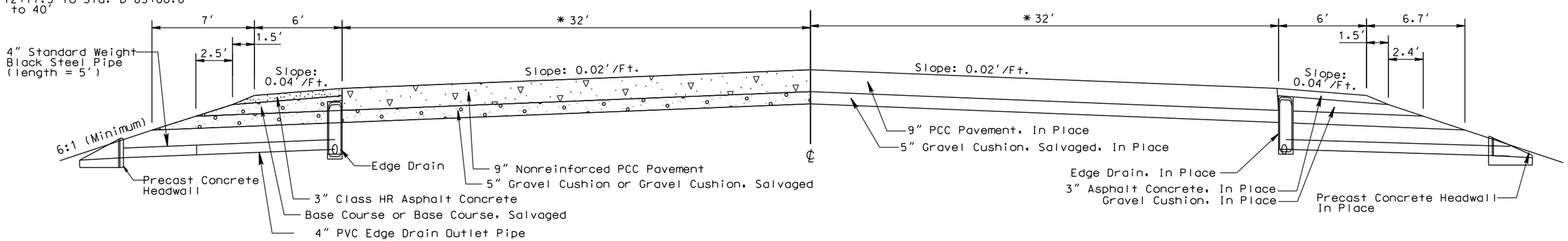

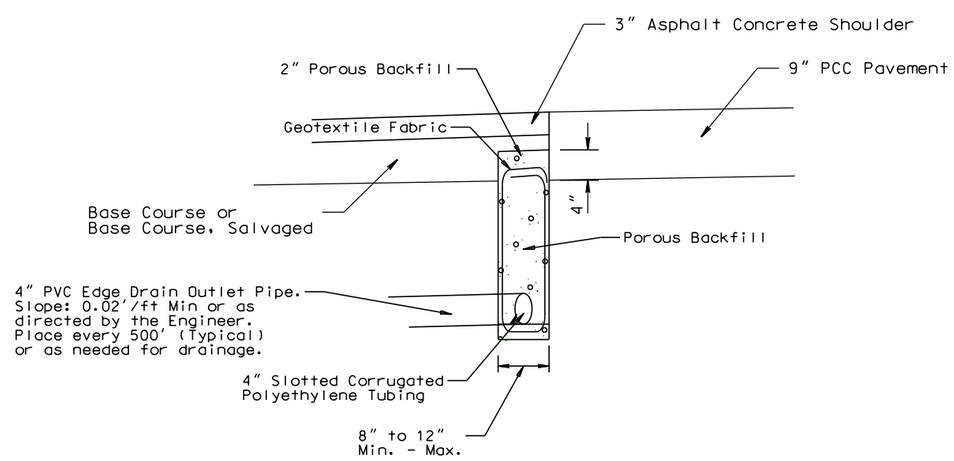

Detail for 2' Deep Edge Drain

PLOT SCALE - 1:7

PLOT NAME - 8

FILE - ...\YANK023U\TYPICAL SECTIONS.DGN

PLOTTED FROM - TRPR16032

TYPICAL SURFACING SECTIONS

$$$ Precast concrete Headwall may require resetting. Outlet Pipe may require an extension or reduction in length due to slope flattening and the installation of the Standard Weight Black Steel Pipe.

Transitions:

Sta. b 83+00.0 to Sta. b 86+08.0
** -0.02'/Ft. to 0.02'/Ft.
# -0.02'/Ft. to 0.04'/Ft.

Sta. b 83+00.0 to Sta. b 86+08.0
Sta. b 159+48.5 to Sta. b 162+56.5
* 5" to 6.7"

Sta. b 152+48.7 to Sta. b 155+56.7
* 6.7" to 5"

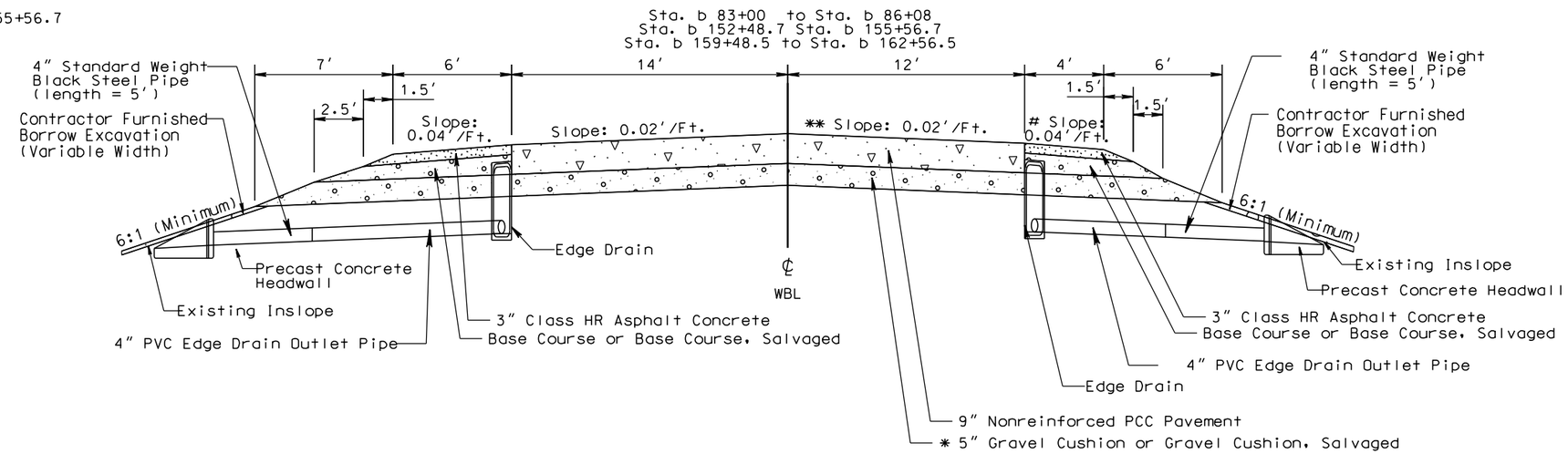

Transitions:

Sta. b 365+49.6 to Sta. b 368+13.6
* 7.7" to 7"

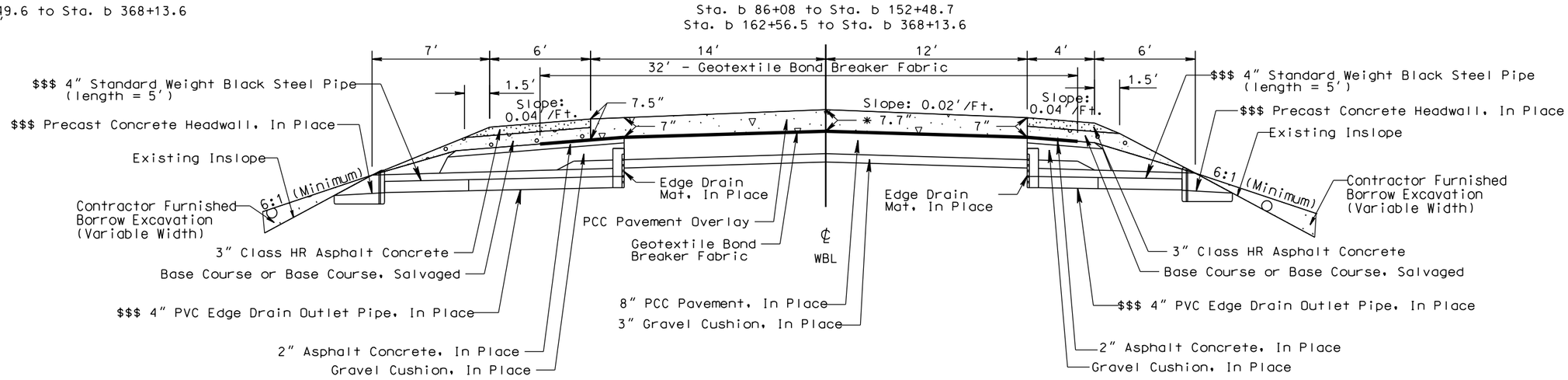

TYPICAL EDGE DRAIN LAYOUTS

STATE OF SOUTH DAKOTA	PROJECT	SHEET	TOTAL SHEETS
	NH 0050(108)385	F23	F102

Plotting Date: 08/18/2016

TYPICAL SECTION SHOWING 2′ DEEP EDGE DRAIN PLACEMENT

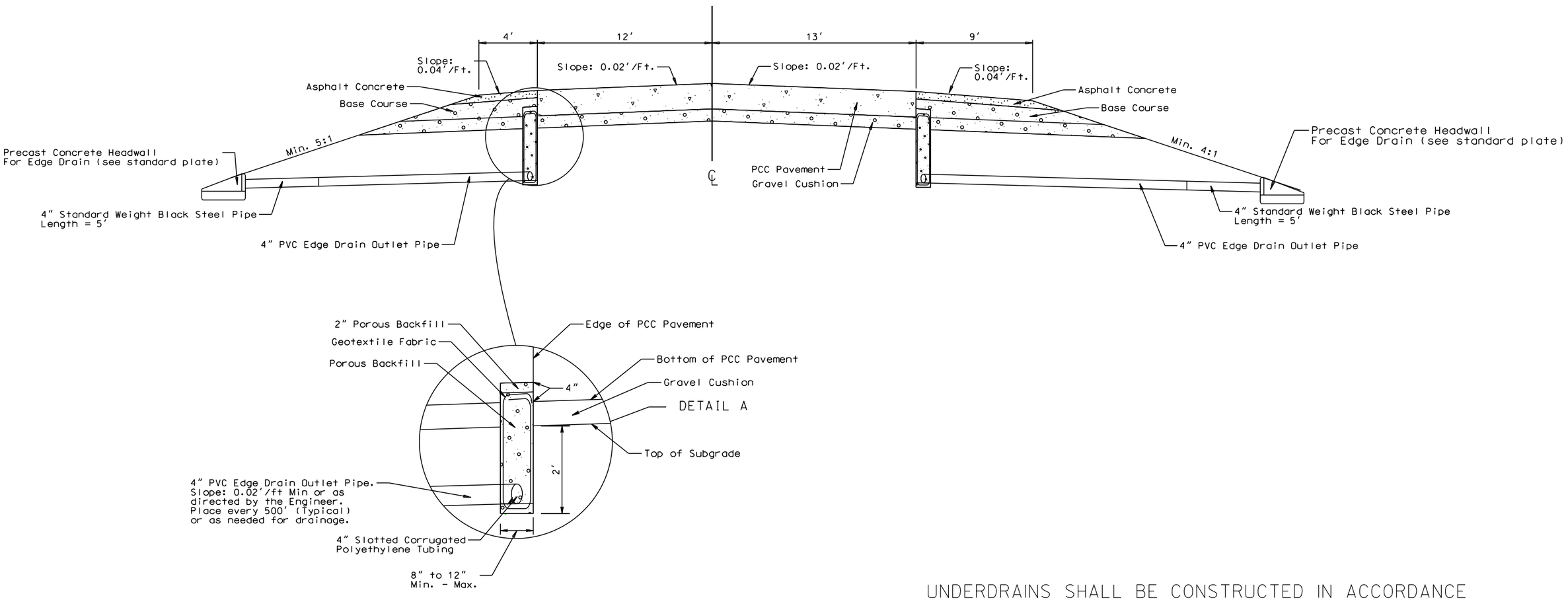

Detail for 2′ Deep Edge Drain

UNDERDRAINS SHALL BE CONSTRUCTED IN ACCORDANCE WITH SECTION 680 OF THE SPECIFICATIONS.

It will be the Contractor's responsibility to determine the amount of 4″ PVC Edge Drain Outlet Pipe required to be installed at each Edge Drain Outlet location. All costs to Furnish and Install 4″ Standard Weight Black Steel Pipe, Shear Gasket Gravity Flow Seal Couplers or equal, and 4″ PVC Edge Drain Outlet Pipe shall be incidental to the contract unit price per each for Edge Drain Outlet.

Care must be taken to insure that the edge drain and outlet tubing is not damaged during construction. Sufficient cover material is to be placed over the edge drain and outlets before heavy equipment is allowed to work over them. Damaged pipes will be replaced at the Contractor's expense.

PLOT SCALE - 1:206.061
PLOTTED FROM - TRPR16032
PLOT NAME - 10
FILE - ...\STANDARD INT RD & ENT.DGN

PCC PAVEMENT JOINT LAYOUT

STATE OF SOUTH DAKOTA	PROJECT	SHEET	TOTAL SHEETS
	NH 0050(108)385	F24	F102

Plotting Date: 08/18/2016

Scale 1 Inch = 40 Feet
Sheet 1 of 6 Sheets

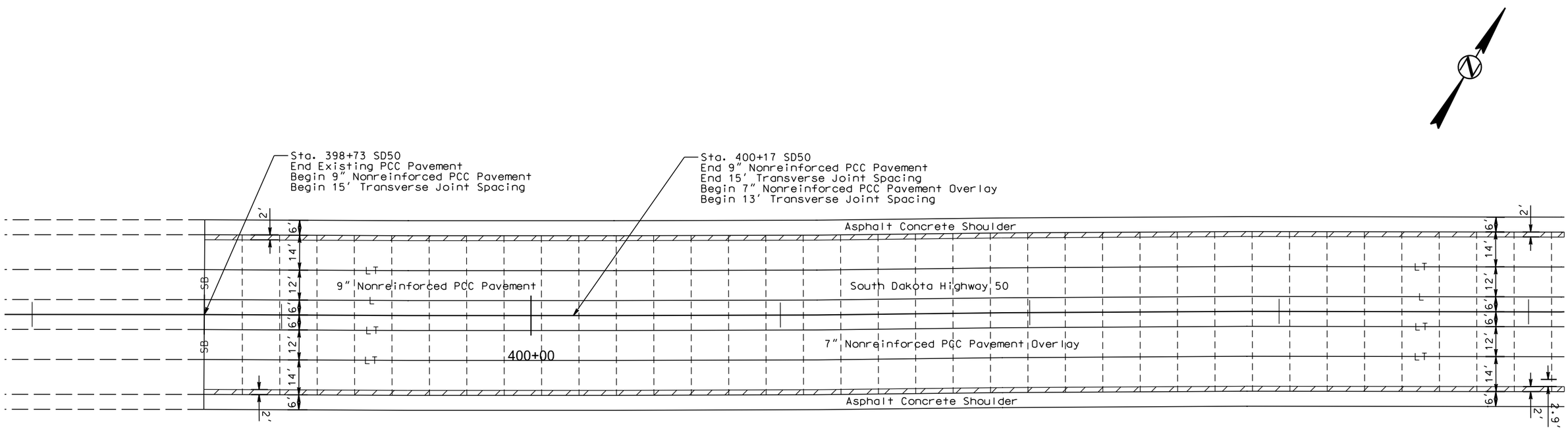

LEGEND:

Longitudinal Joint With Tie Bars (Construction or Sawed) ——LT——LT——
Transverse Contraction Joint -
Steel Bar Installation in Longitudinal or Transverse Joint ——SB——SB——
Longitudinal Joint Without Tie Bars (Construction or Sawed) ——L——L——

Transverse contraction joints within these areas shall not have dowel bar assemblies. All other transverse contraction joints shall have dowel bar assemblies.

PLOT SCALE - 1:40
PLOTTED FROM - TRPR16032
PLOT NAME - 11
FILE - ...\PCC PAVEMENT LAYOUT.DGN

PCC PAVEMENT JOINT LAYOUT

STATE OF SOUTH DAKOTA	PROJECT	SHEET	TOTAL SHEETS
	NH 0050(108)385	F25	F102

Plotting Date: 08/18/2016

Scale 1 Inch = 40 Feet
Sheet 2 of 6 Sheets

6" Class HR Asphalt Concrete and 7" Base Course

Base Course Variable Depth

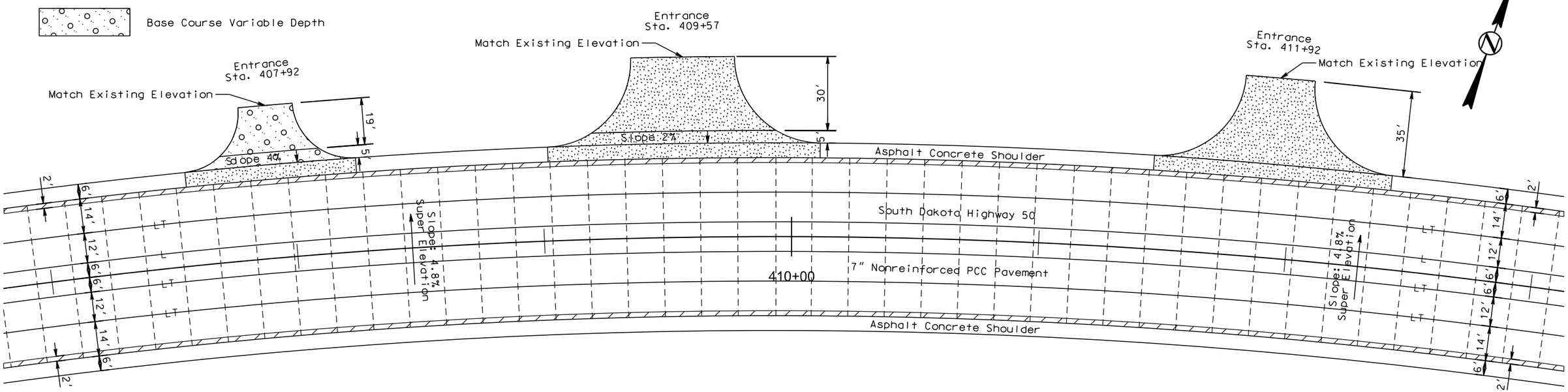

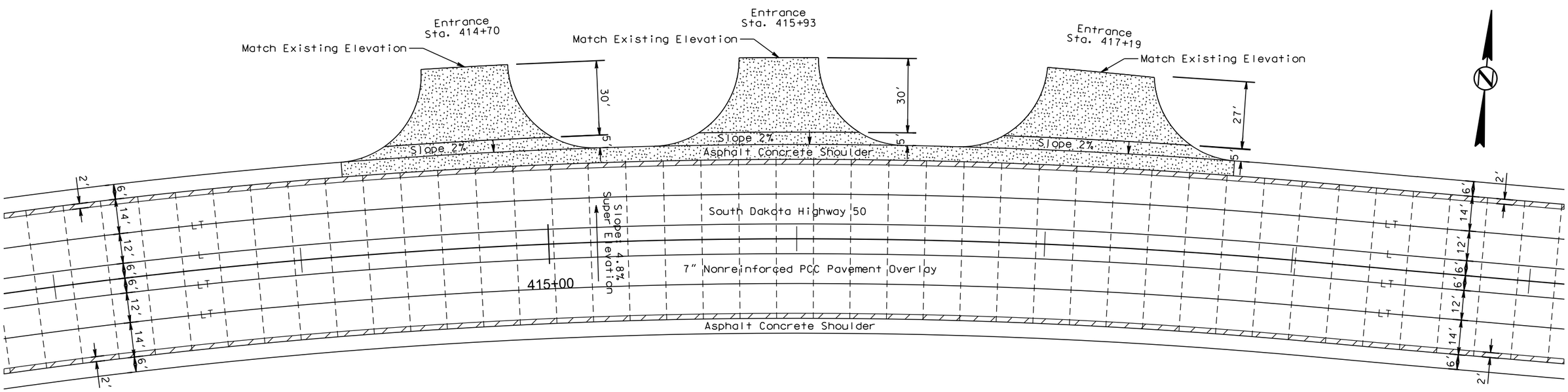

PLOT SCALE - 1:40

PLOT NAME - 12

FILE - ...\PCC PAVEMENT LAYOUT.DGN

PLOTTED FROM - TRPR16032

PCC PAVEMENT JOINT LAYOUT

STATE OF SOUTH DAKOTA	PROJECT	SHEET	TOTAL SHEETS
	NH 0050(108)385	F26	F102

Plotting Date: 08/18/2016

6" Class HR Asphalt Concrete and 7" Base Course

Scale 1 Inch = 40 Feet
Sheet 3 of 6 Sheets

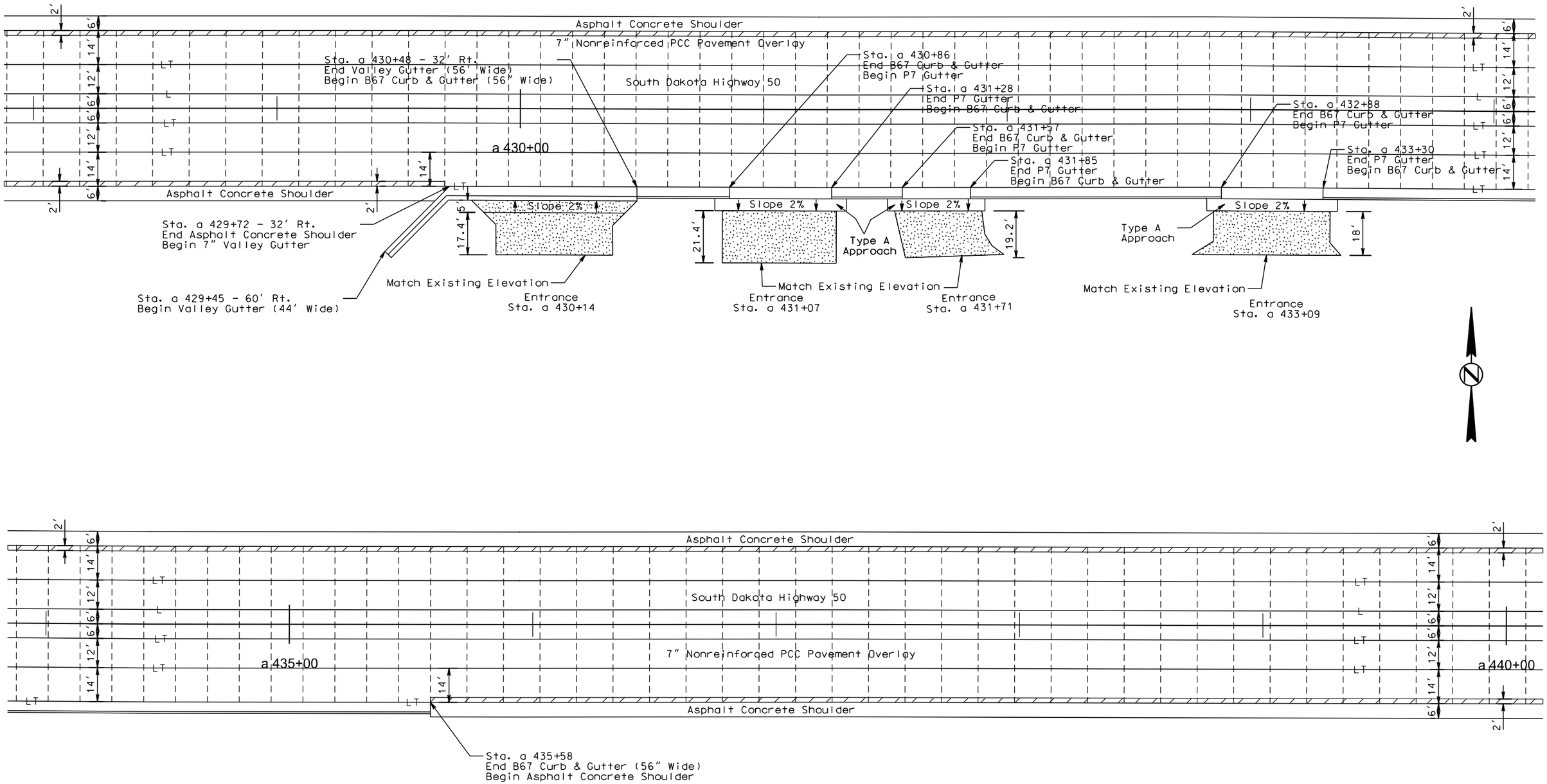

PLOT SCALE - 1:40

PLOT NAME - 13

FILE - ...\PCC PAVEMENT LAYOUT.DGN

PLOTTED FROM - TRPR16032

PCC PAVEMENT JOINT LAYOUT

STATE OF SOUTH DAKOTA	PROJECT	SHEET	TOTAL SHEETS
	NH 0050(108)385	F27	F102

Plotting Date: 08/18/2016

Scale 1 Inch = 40 Feet
Sheet 4 of 6 Sheets

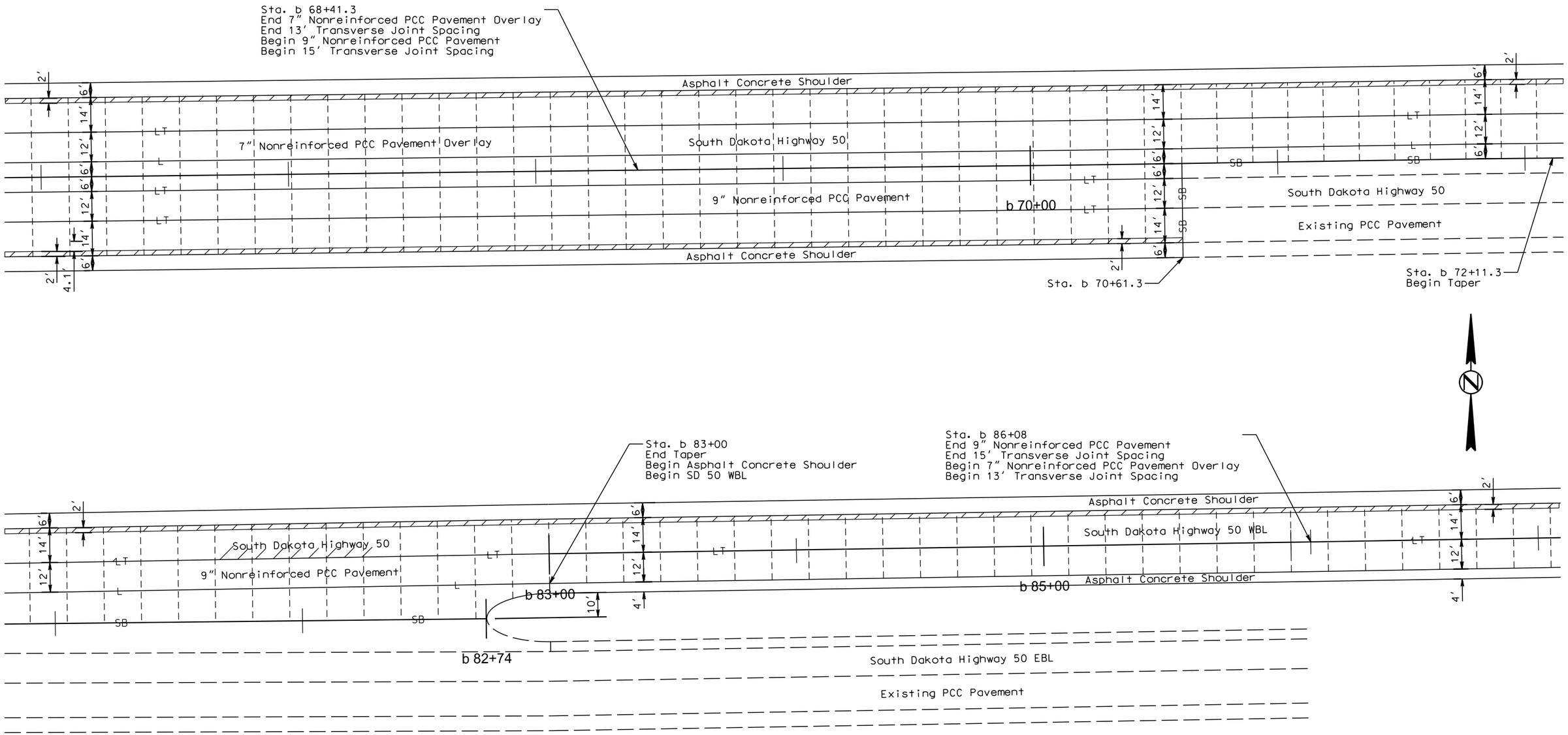

The Contractor will ensure new transverse joints from Sta. b 70+61.3 to Sta. b 83+00 will align with existing transverse joints.

PLOT SCALE - 1:40

PLOTTED FROM - TRPR16032

PLOT NAME - 14

FILE - ...\PCC PAVEMENT LAYOUT.DGN

PCC PAVEMENT JOINT LAYOUT

STATE OF SOUTH DAKOTA	PROJECT	SHEET	TOTAL SHEETS
	NH 0050(108)385	F28	F102

Plotting Date: 08/18/2016

Scale 1 Inch = 40 Feet
Sheet 5 of 6 Sheets

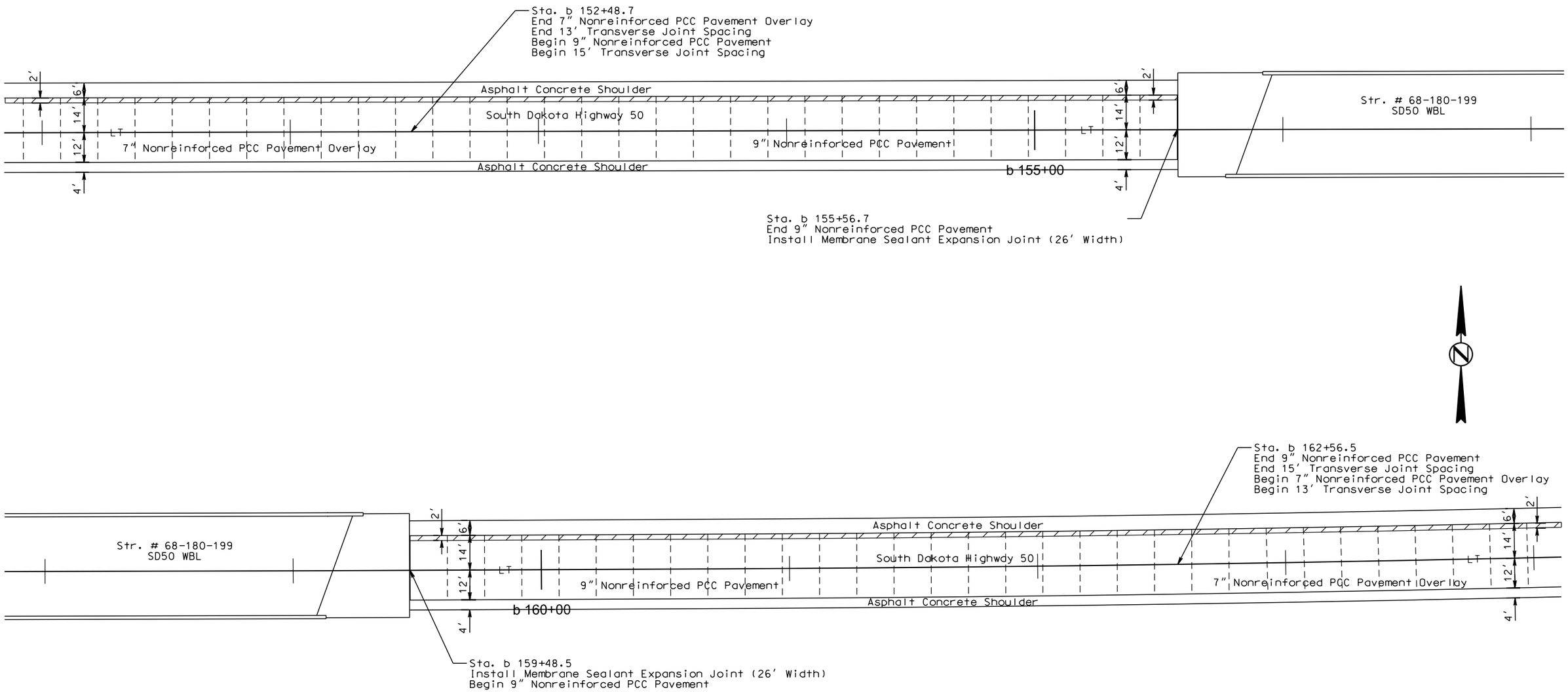

PLOT SCALE - 1:40

PLOT NAME - 15

FILE - ...\PCC PAVEMENT LAYOUT.DGN

PLOTTED FROM - TRPR16032

PCC PAVEMENT JOINT LAYOUT

STATE OF SOUTH DAKOTA	PROJECT	SHEET	TOTAL SHEETS
	NH 0050(108)385	F29	F102

Plotting Date: 08/18/2016

Scale 1 Inch = 40 Feet
Sheet 6 of 6 Sheets

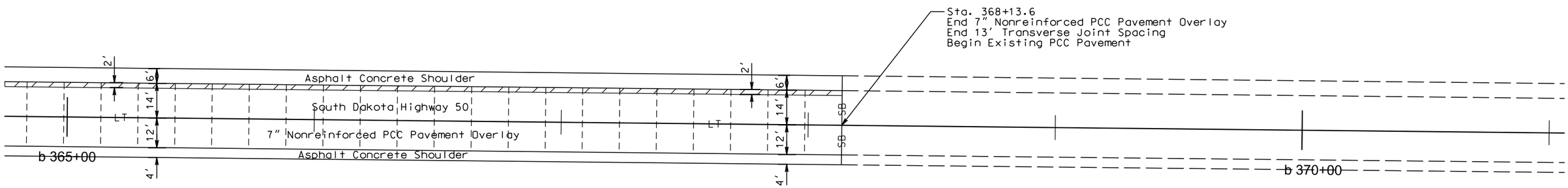

PLOT SCALE - 1:40

PLOTTED FROM - TRPR16032

PLOT NAME - 16

FILE - ...\PCC PAVEMENT LAYOUT.DGN

STATE OF SOUTH DAKOTA	PROJECT	SHEET	TOTAL SHEETS
	NH 0050(108)385	F30	F102

Plotting Date: 08/18/2016

SURFACING TRANSITION DETAILS STA. 398+73 TO STA. 400+17

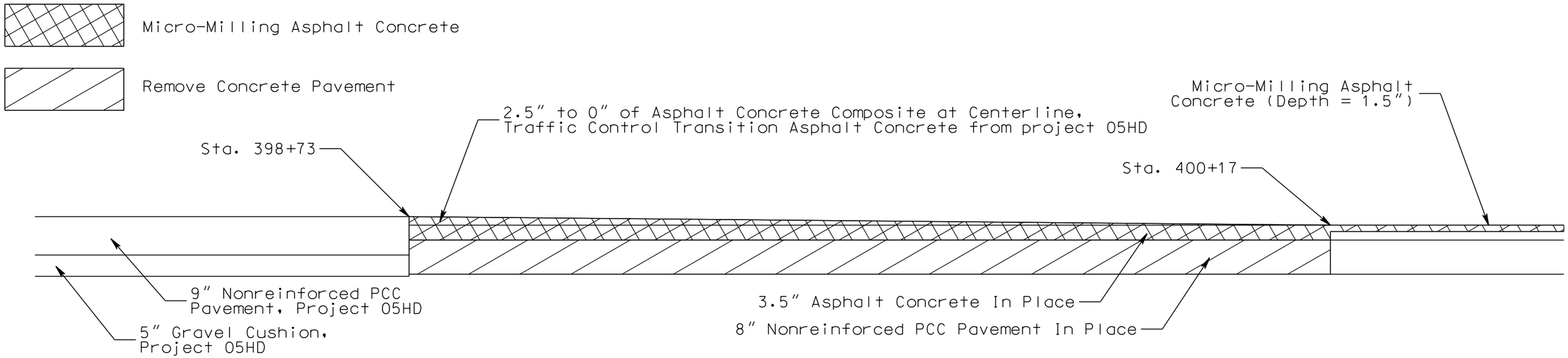

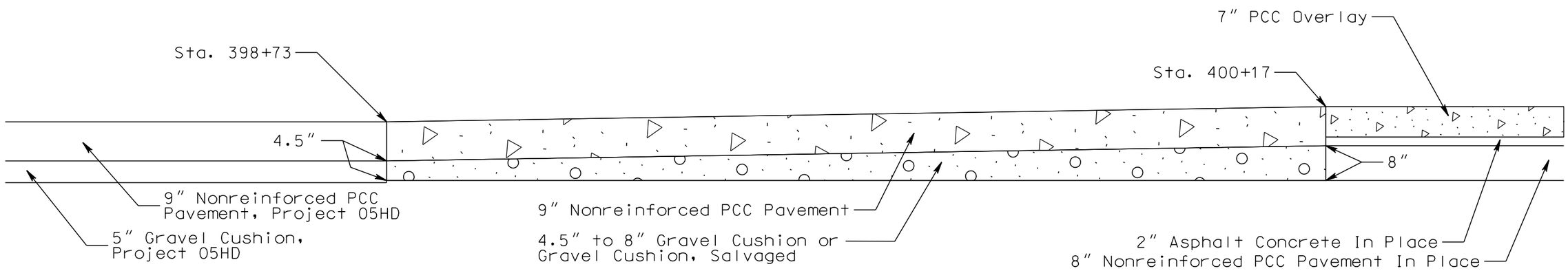

PLOT SCALE - 1:2

PLOTTED FROM - TRPR16032

PLOT NAME - 17

FILE - ...\YANK023U\BOP TRANSITION.DGN

STATE OF SOUTH DAKOTA	PROJECT	SHEET	TOTAL SHEETS
	NH 0050(108)385	F31	F102

Plotting Date: 08/18/2016

SURFACING TRANSITION DETAILS STA. b 68+41.3 TO STA. b 70+61.3

Micro-Milling Asphalt Concrete

Remove Concrete Pavement

Unclassified Excavation (Waste Material)

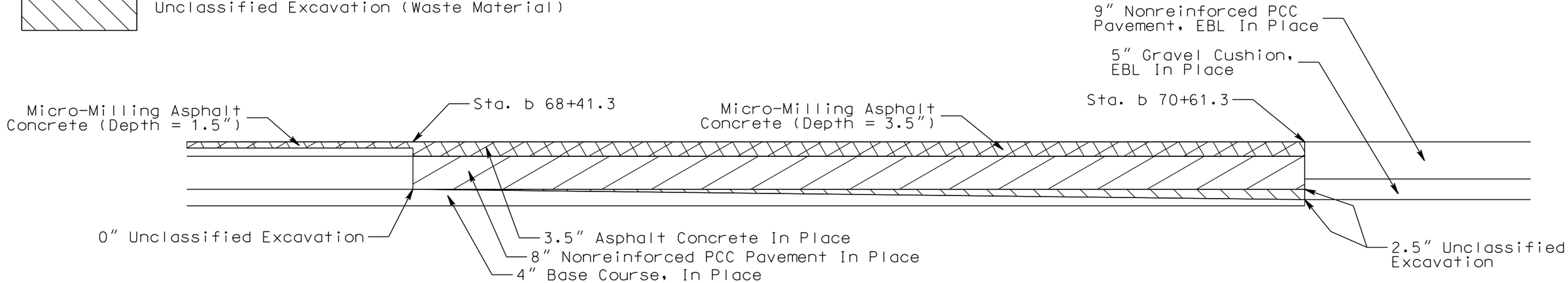

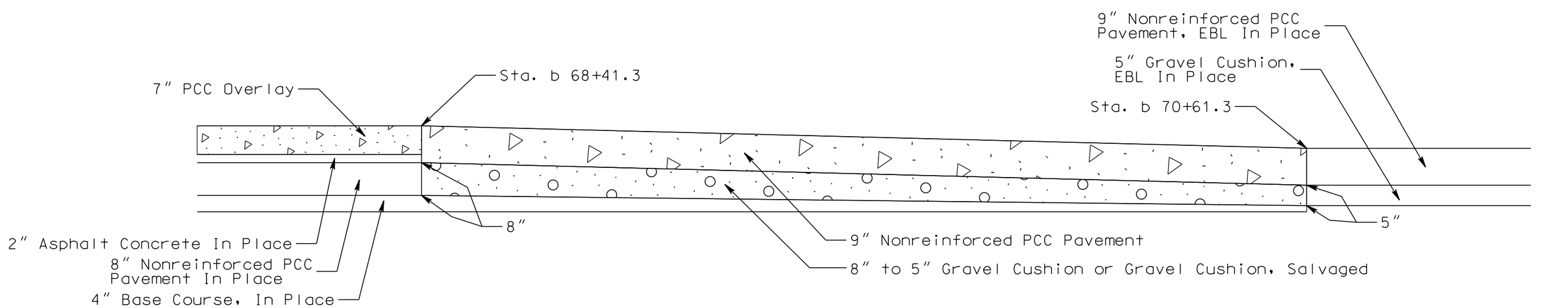

PLOT SCALE - 1:2

PLOT NAME - 18

FILE - ...\YANK023U\BOP TRANSITION.DGN

PLOTTED FROM - TRPR16032

STATE OF SOUTH DAKOTA	PROJECT	SHEET	TOTAL SHEETS
	NH 0050(108)385	F32	F102

Plotting Date: 08/18/2016

SURFACING TRANSITION DETAILS STA. b 83+00 TO STA. b 86+08

Remove Concrete Pavement

Unclassified Excavation (Waste Material)

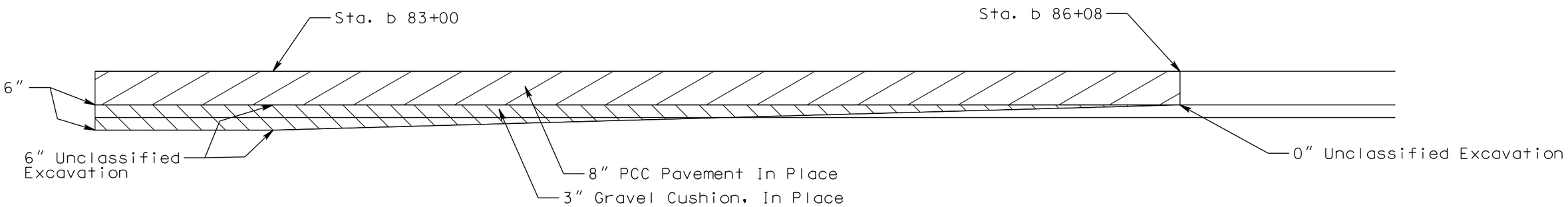

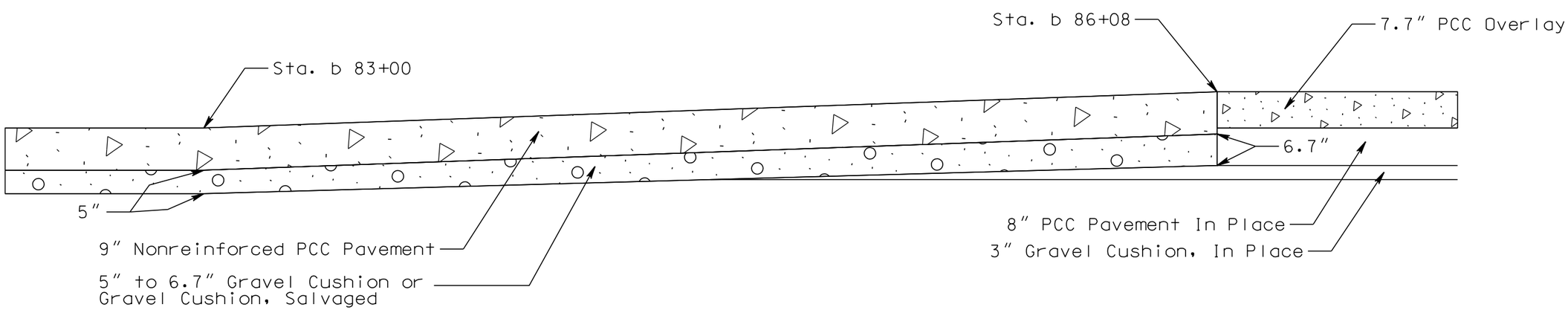

PLOT SCALE - 1:2

PLOT NAME - 19

FILE - ...\YANK023U\BOP TRANSITION.DGN

PLOTTED FROM - TRPR16032

STATE OF SOUTH DAKOTA	PROJECT	SHEET	TOTAL SHEETS
	NH 0050(108)385	F33	F102

Plotting Date: 08/18/2016

SURFACING TRANSITION DETAILS STA. b 152+48.7 TO STA. b 155+56.7

Remove Concrete Pavement

Unclassified Excavation (Waste Material)

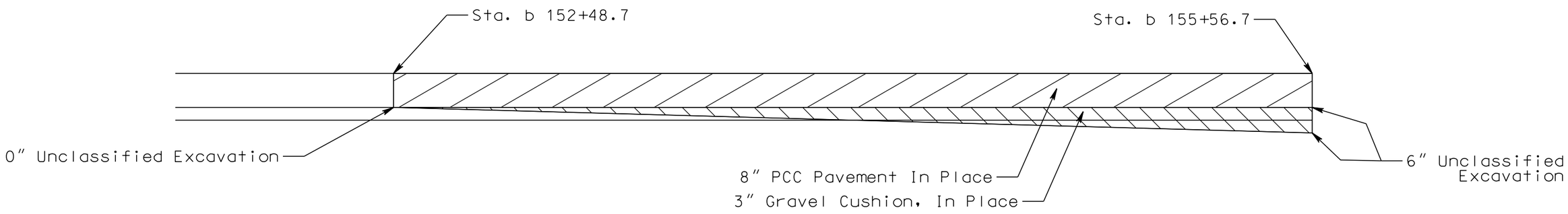

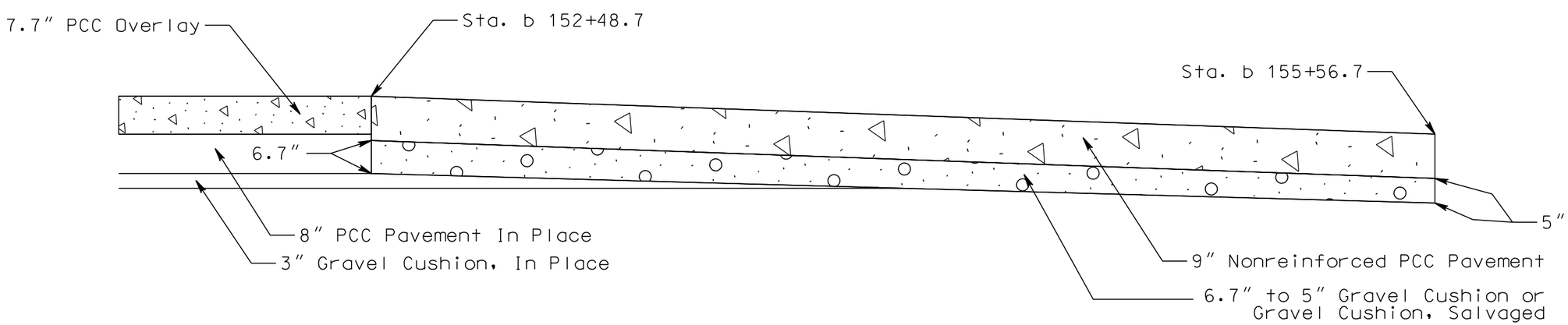

PLOT SCALE - 1:2

PLOT NAME - 20

FILE - ...\YANK023U\BOP TRANSITION.DGN

PLOTTED FROM - TRPR16032

STATE OF SOUTH DAKOTA	PROJECT	SHEET	TOTAL SHEETS
	NH 0050(108)385	F34	F102

Plotting Date: 08/18/2016

SURFACING TRANSITION DETAILS STA. b 159+48.5 TO STA. b 162+56.5

Remove Concrete Pavement

Unclassified Excavation (Waste Material)

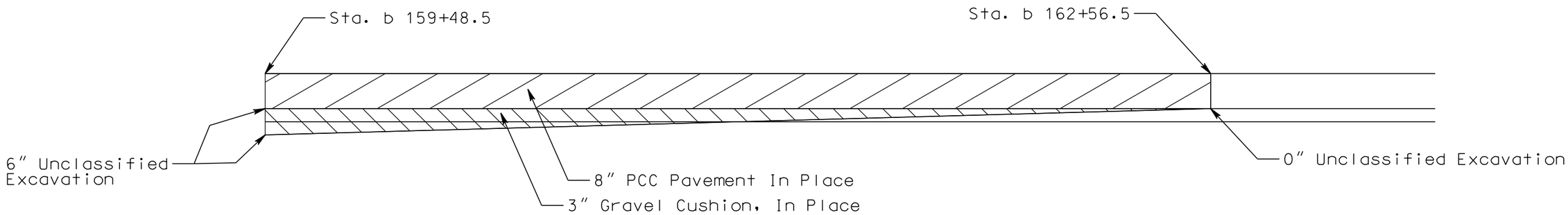

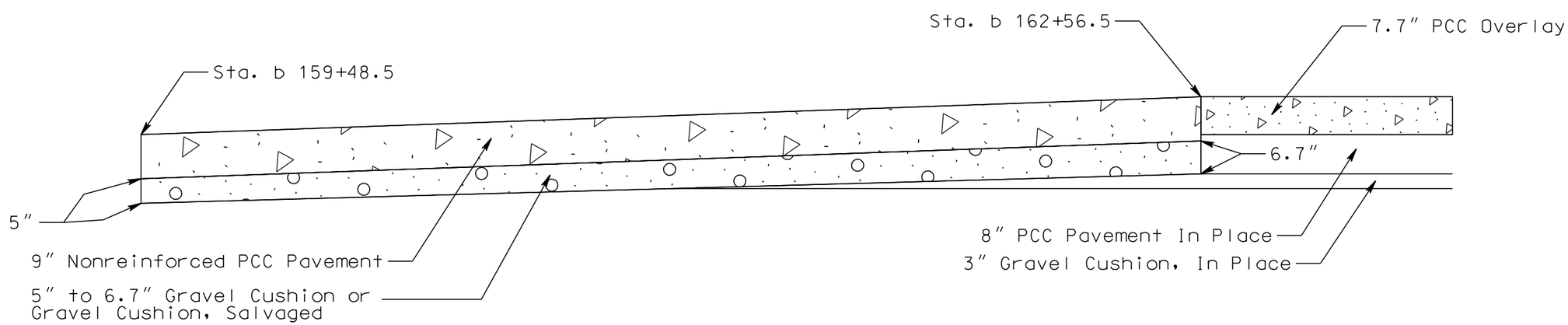

PLOT SCALE - 1:2

PLOTTED FROM - TRPR16032

PLOT NAME - 21

FILE - ...\YANK023U\BOP TRANSITION.DGN

STATE OF SOUTH DAKOTA	PROJECT	SHEET	TOTAL SHEETS
	NH 0050(108)385	F35	F102

Plotting Date: 08/18/2016

SURFACING TRANSITION DETAILS STA. b 365+49.6 TO STA. b 368+13.6

Micro-Milling Asphalt Concrete

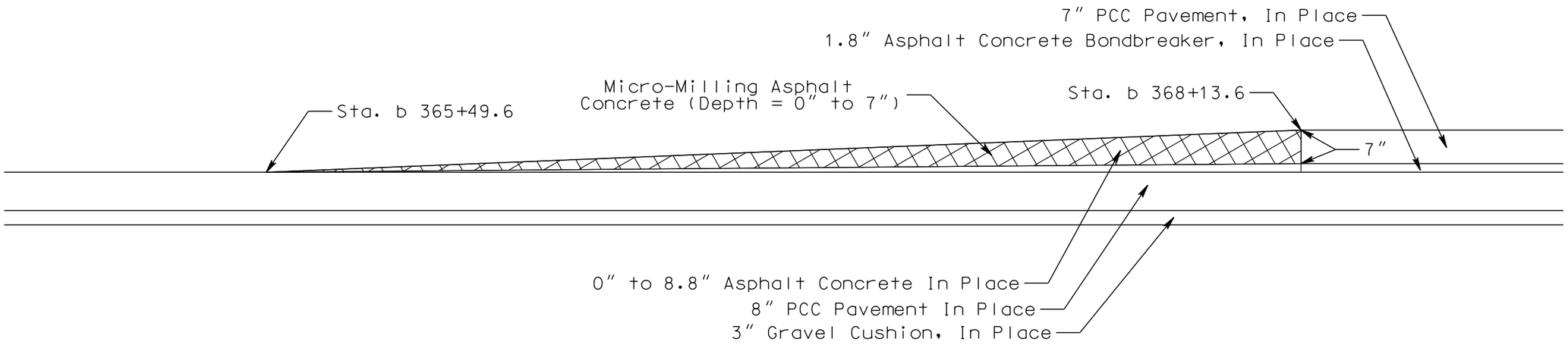

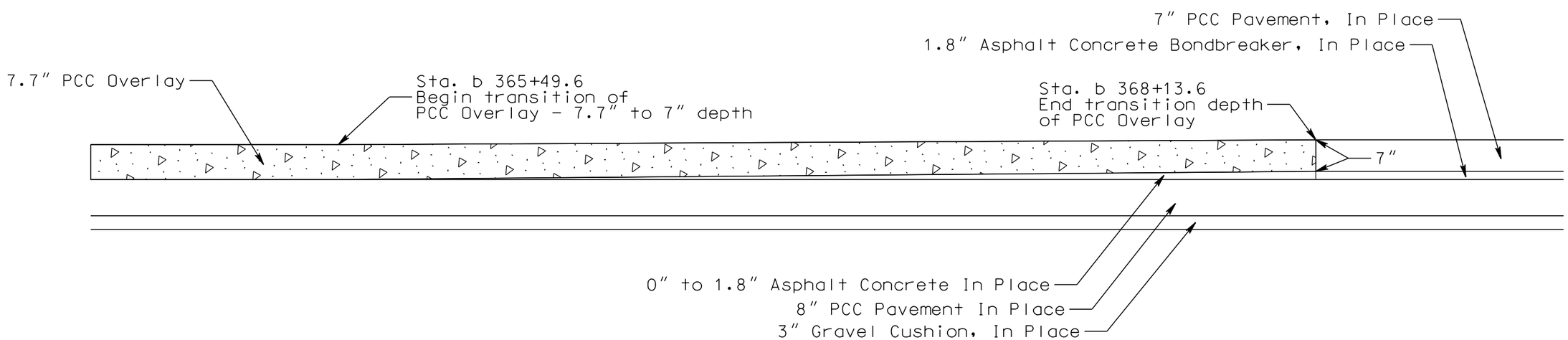

PLOT SCALE - 1:2

PLOT NAME - 22

FILE - ...\YANK023U\BOP TRANSITION.DGN

PLOTTED FROM - TRPR16032

MEDIAN CROSSOVER SURFACING

STATE OF SOUTH DAKOTA	PROJECT	SHEET	TOTAL SHEETS
	NH 0050(108)385	F36	F102

Plotting Date: 08/18/2016

Median Crossover with Asphalt Concrete

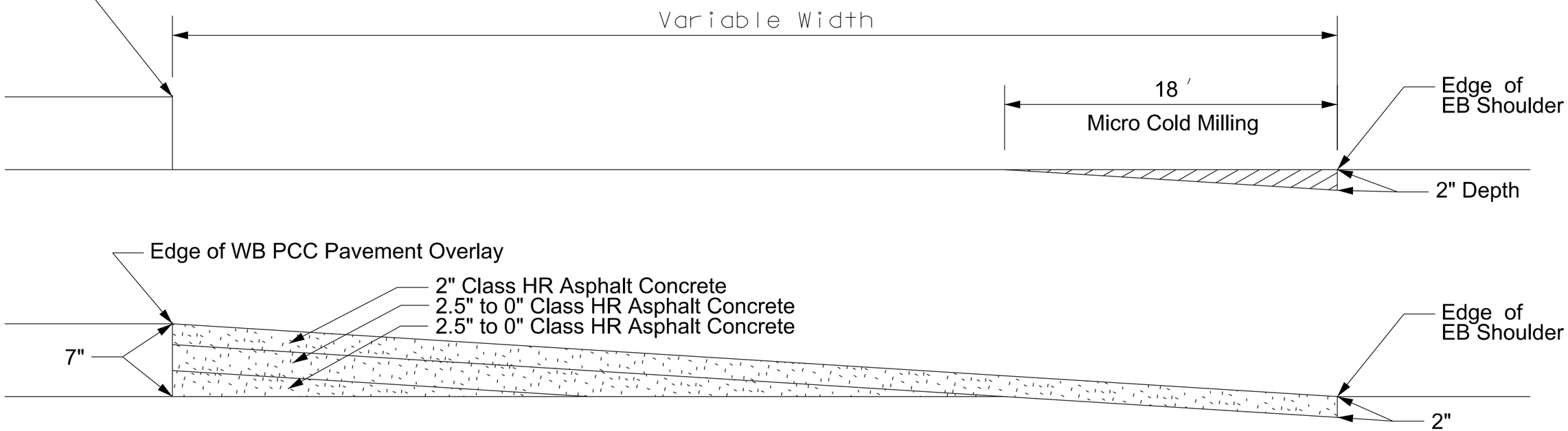

Median Crossover with Base Course Only

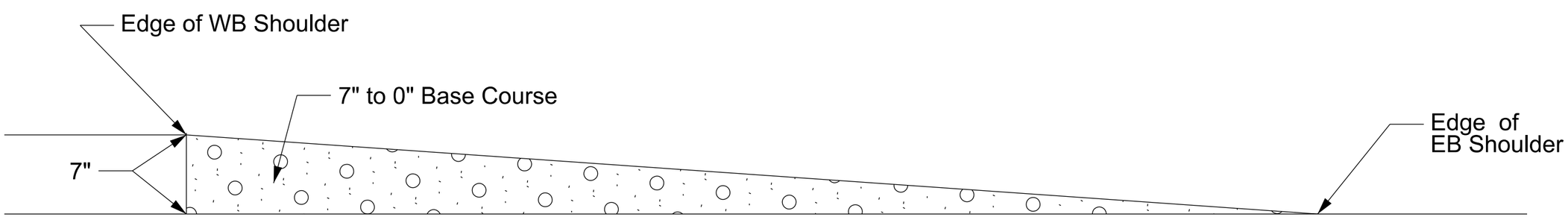

PLOT SCALE - 1:20

PLOTTED FROM - TRPR16032

PLOT NAME - 23

FILE - U:\MS\PRJ\YANK023U\MS023U.DGN

ENTRANCE REMOVAL & SURFACING

STATE OF SOUTH DAKOTA	PROJECT	SHEET	TOTAL SHEETS
	NH 0050(108)385	F37	F102

Plotting Date: 08/18/2016

Unclassified Excavation
(Waste Material)

6" Class HR Asphalt Concrete
and 7" Base Course

Base Course
Variable depth

Entrance @ Sta. 407+92

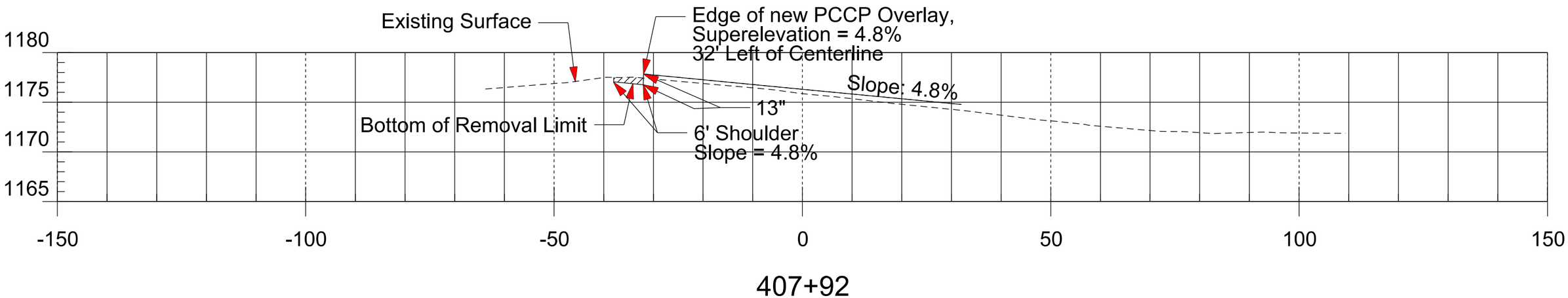

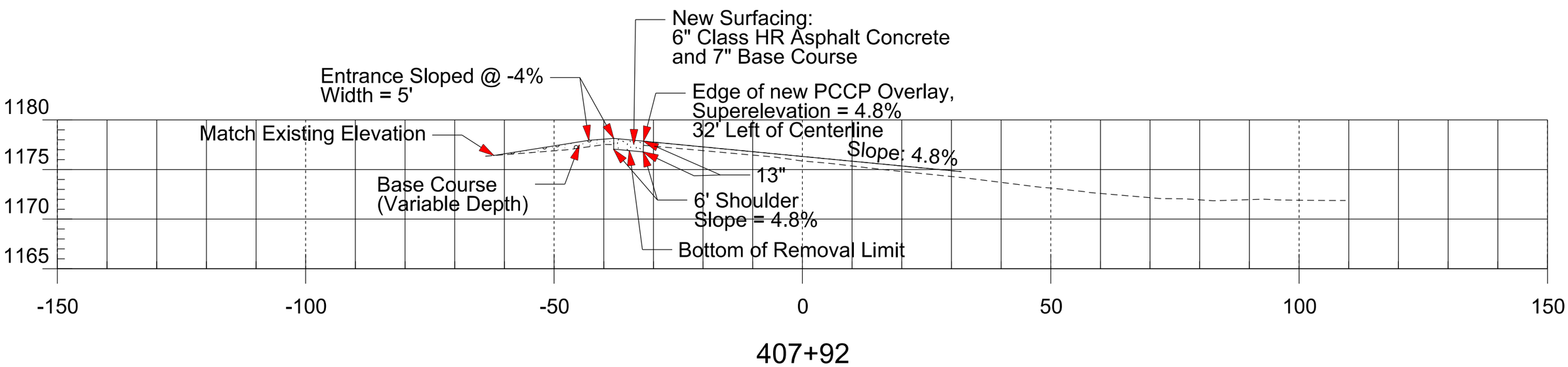

PLOT SCALE - 1:20

PLOTTED FROM - TRPR16032

PLOT NAME - 24

FILE - U:\MS\PRJ\YANK023U\MS023U.DGN

ENTRANCE REMOVAL & SURFACING

STATE OF SOUTH DAKOTA	PROJECT	SHEET	TOTAL SHEETS
	NH 0050(108)385	F38	F102

Plotting Date: 08/18/2016

Unclassified Excavation
(Waste Material)

6" Class HR Asphalt Concrete
and 7" Base Course

Entrance @ Sta. 409+57

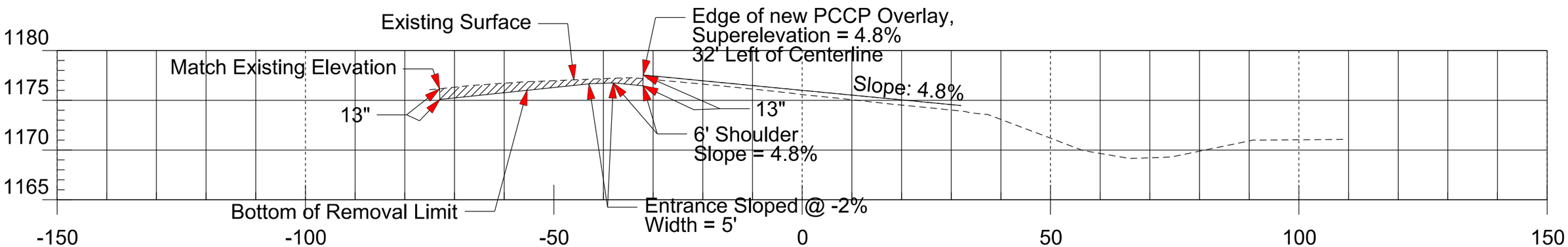

409+57

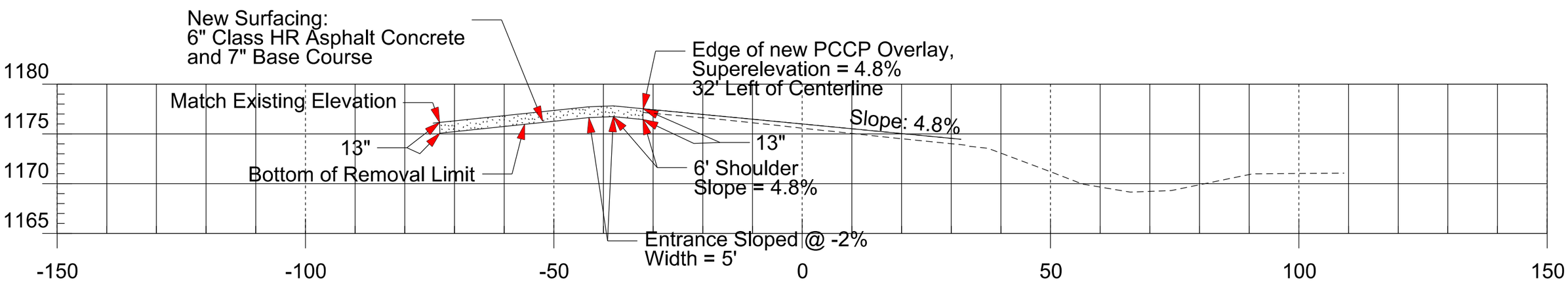

409+57

PLOT SCALE - 1:20

PLOT NAME - 25

FILE - U:\MS\PRJ\YANK023U\MS023U.DGN

PLOTTED FROM - TRPR16032

ENTRANCE REMOVAL & SURFACING

STATE OF SOUTH DAKOTA	PROJECT	SHEET	TOTAL SHEETS
	NH 0050(108)385	F39	F102

Plotting Date: 08/18/2016

Unclassified Excavation
(Waste Material)

6" Class HR Asphalt Concrete
and 7" Base Course

Entrance @ Sta. 411+92

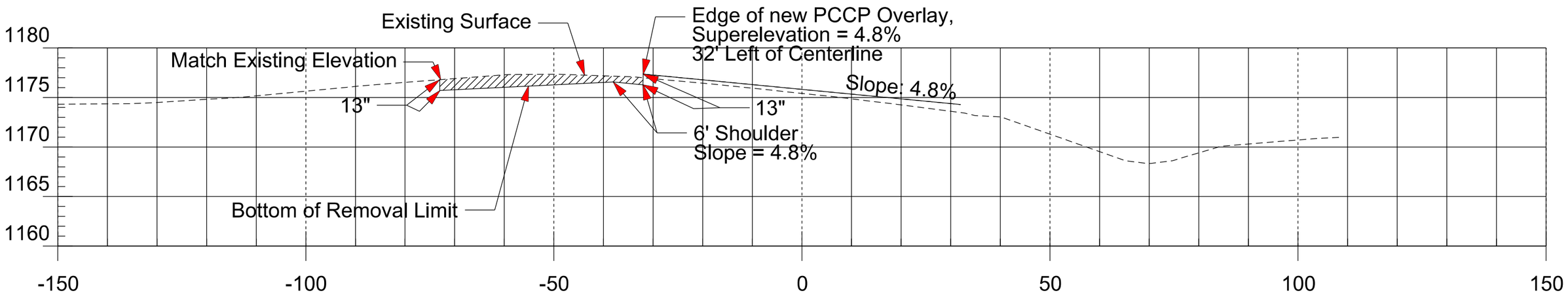

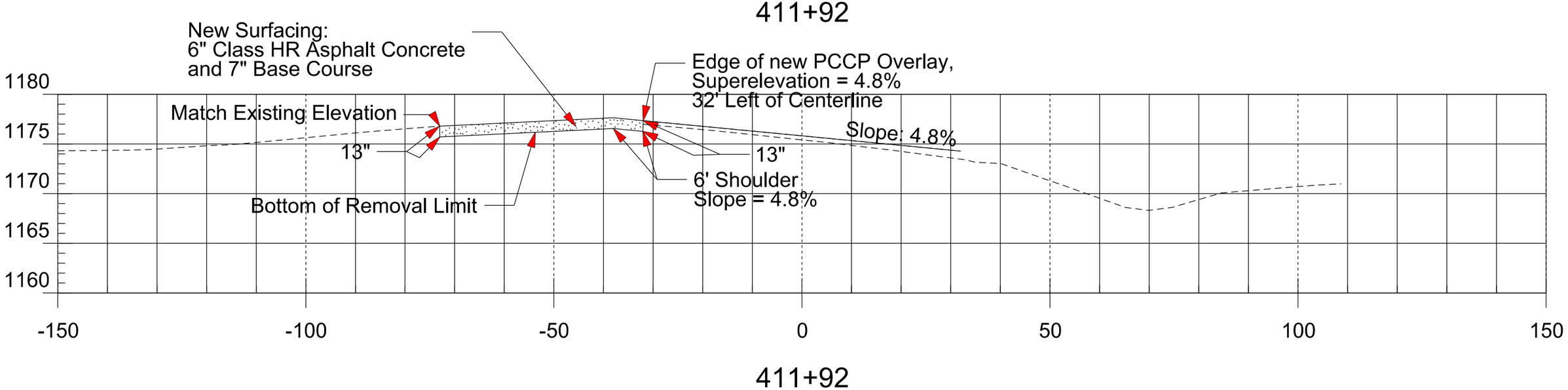

PLOT SCALE - 1:20

PLOT NAME - 26

FILE - U:\MS\PRJ\YANK023U\MS023U.DGN

PLOTTED FROM - TRPR16032

ENTRANCE REMOVAL & SURFACING

STATE OF SOUTH DAKOTA	PROJECT	SHEET	TOTAL SHEETS
	NH 0050(108)385	F40	F102

Plotting Date: 08/18/2016

Unclassified Excavation
(Waste Material)

6" Class HR Asphalt Concrete
and 7" Base Course

Entrance @ Sta. 414+70

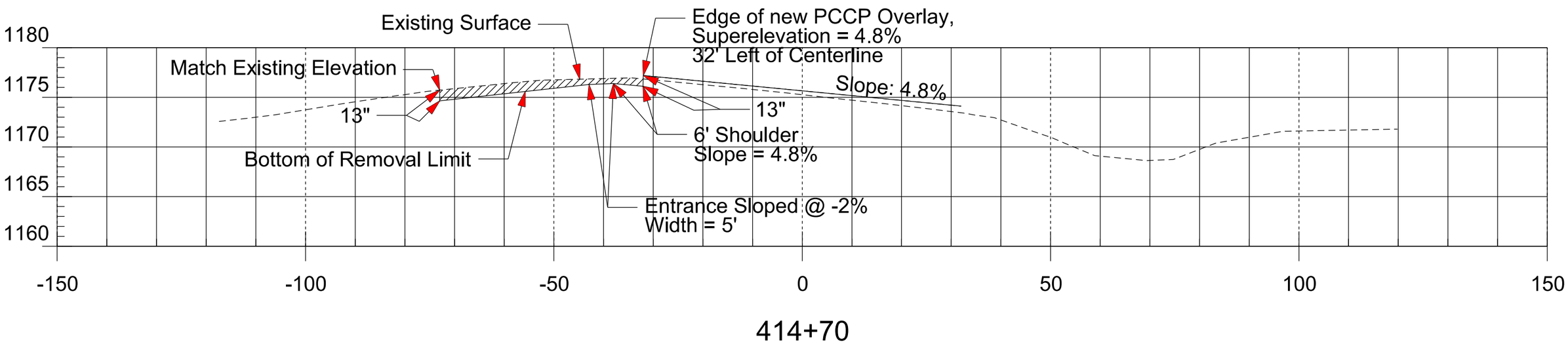

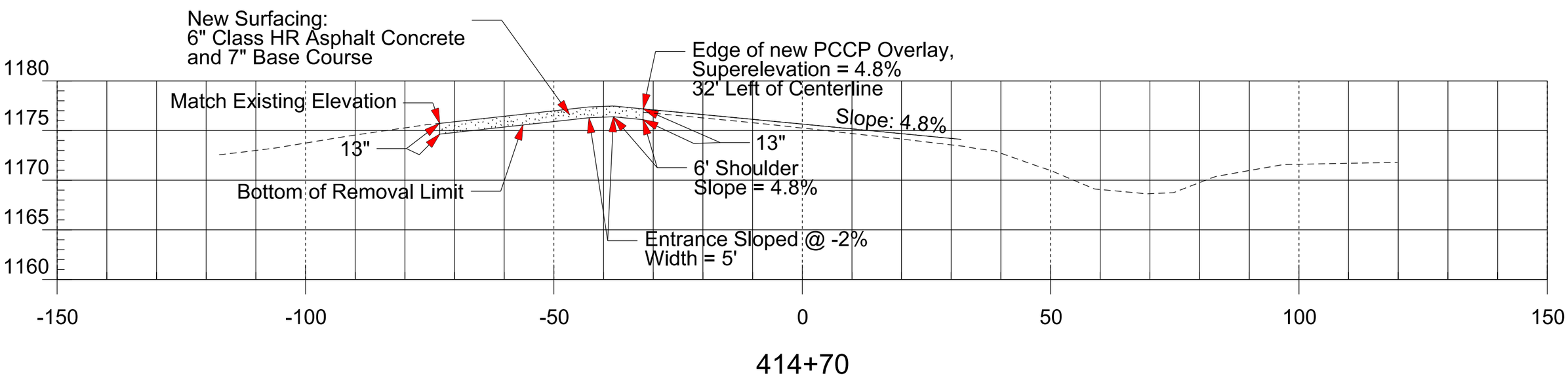

PLOT SCALE - 1:20

PLOT NAME - 27

FILE - U:\MS\PRJ\YANK023U\MS023U.DGN

PLOTTED FROM - TRPR16032

ENTRANCE REMOVAL & SURFACING

STATE OF SOUTH DAKOTA	PROJECT	SHEET	TOTAL SHEETS
	NH 0050(108)385	F41	F102

Plotting Date: 08/18/2016

Unclassified Excavation
(Waste Material)

6" Class HR Asphalt Concrete
and 7" Base Course

Entrance @ Sta. 415+93

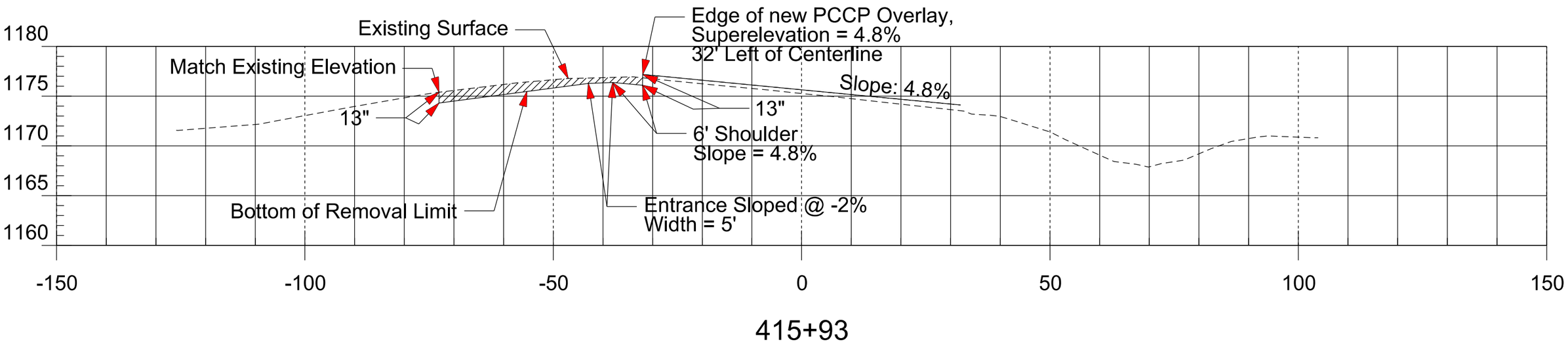

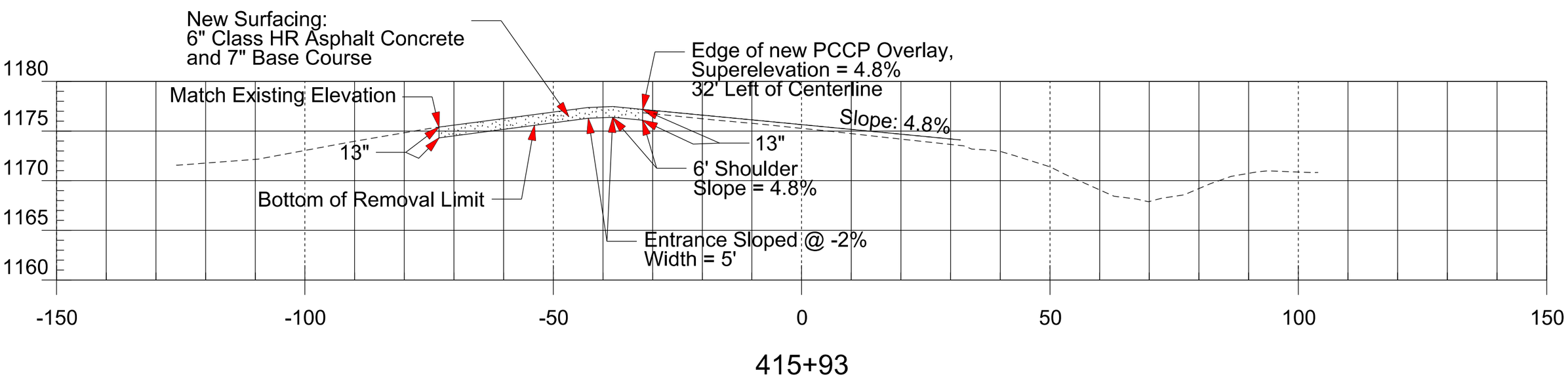

PLOT SCALE - 1:20

PLOTTED FROM - TRPR16032

PLOT NAME - 28

FILE - U:\MS\PRJ\YANK0023U\MS0023U.DGN

ENTRANCE REMOVAL & SURFACING

STATE OF SOUTH DAKOTA	PROJECT	SHEET	TOTAL SHEETS
	NH 0050(108)385	F42	F102

Plotting Date: 08/18/2016

Unclassified Excavation (Waste Material)

6" Class HR Asphalt Concrete and 7" Base Course

Entrance @ Sta. 417+19

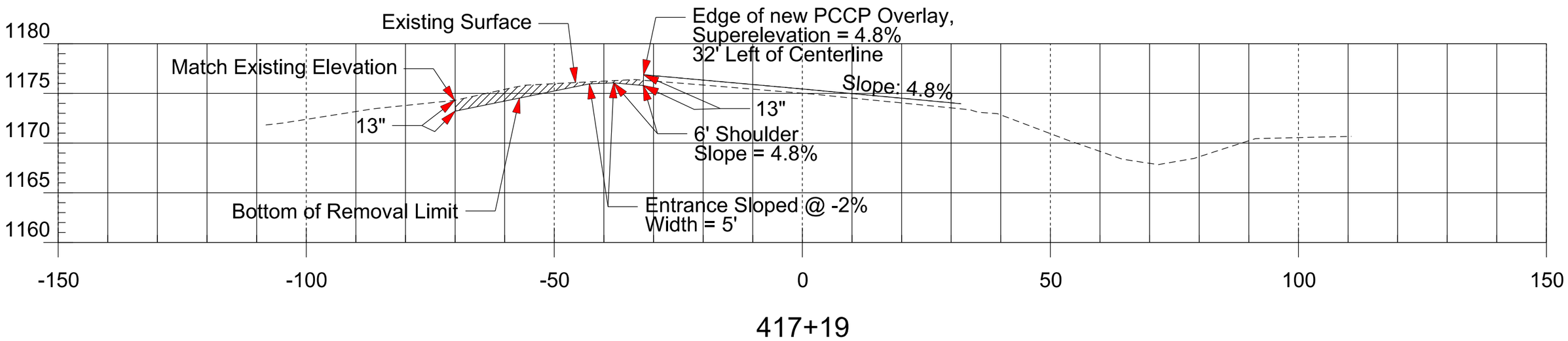

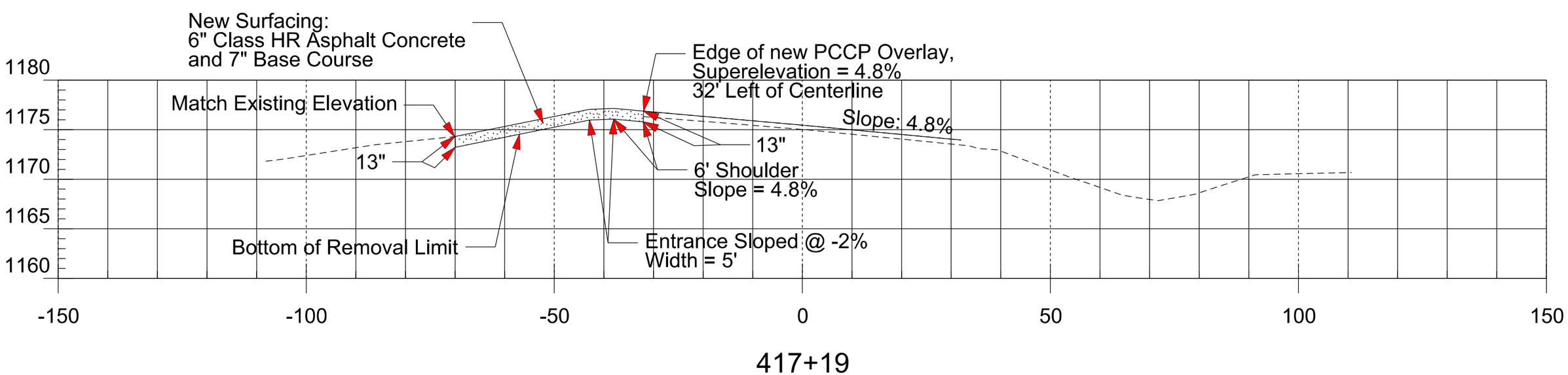

PLOT SCALE - 1:20

PLOT NAME - 29

FILE - U:\MS\PRJ\YANK023U\MS023U.DGN

PLOTTED FROM - TRPR16032

ENTRANCE REMOVAL & SURFACING

STATE OF SOUTH DAKOTA	PROJECT	SHEET	TOTAL SHEETS
	NH 0050(108)385	F43	F102

Plotting Date: 08/18/2016

Unclassified Excavation (Waste Material)

6" Class HR Asphalt Concrete and 7" Base Course

7" Valley Gutter (width = 5.67')

Entrance @ Sta. a 430+13

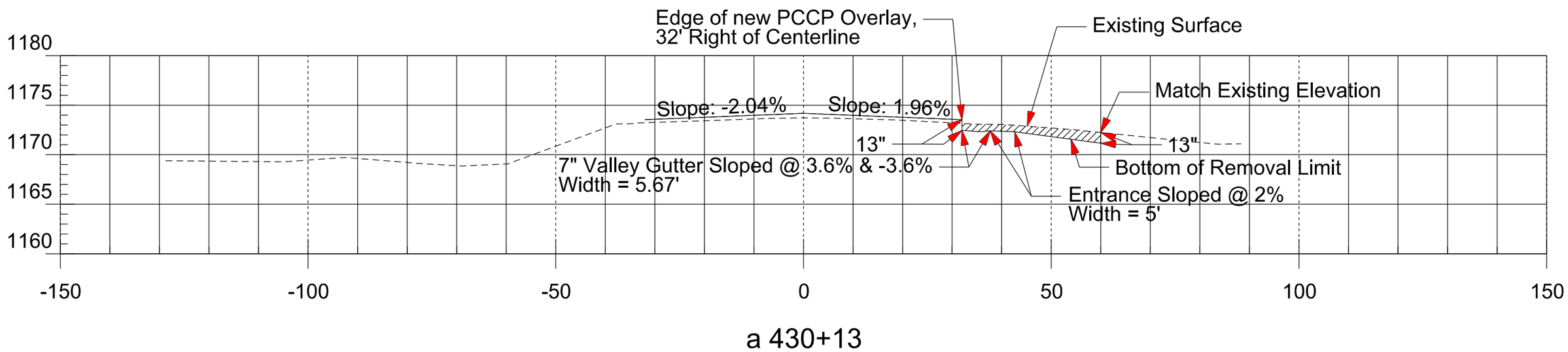

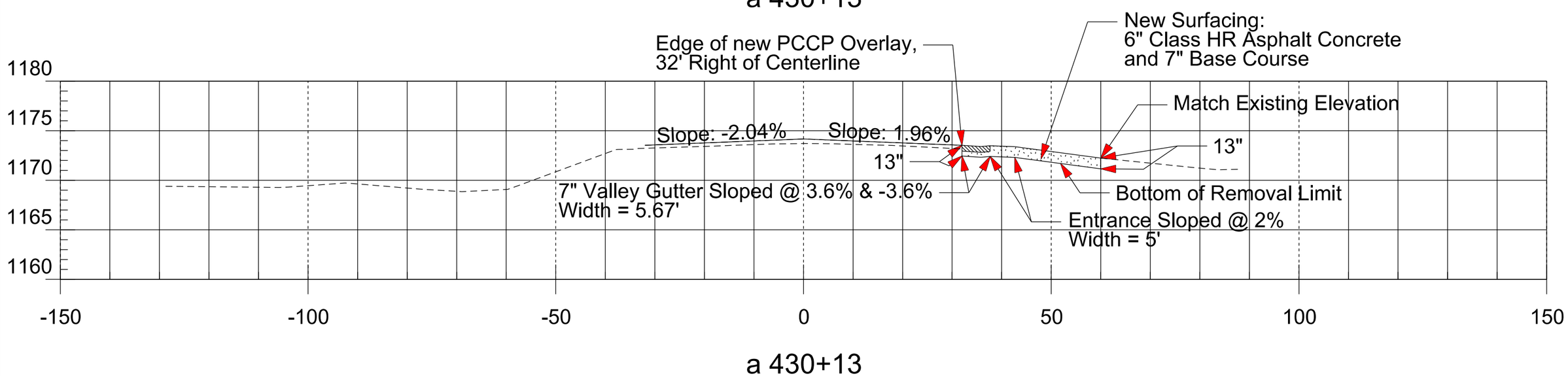

PLOT SCALE - 1:20

PLOTTED FROM - TRPR16032

PLOT NAME - 30

FILE - U:\MS\PRJ\YANK023U\MS023U.DGN

ENTRANCE REMOVAL & SURFACING

STATE OF SOUTH DAKOTA	PROJECT	SHEET	TOTAL SHEETS
	NH 0050(108)385	F44	F102

Plotting Date: 08/18/2016

Unclassified Excavation (Waste Material)

6" Class HR Asphalt Concrete and 7" Base Course

Type A Concrete Approach (thicknes = 7")

P7 Gutter

Entrance @ Sta. a 431+07

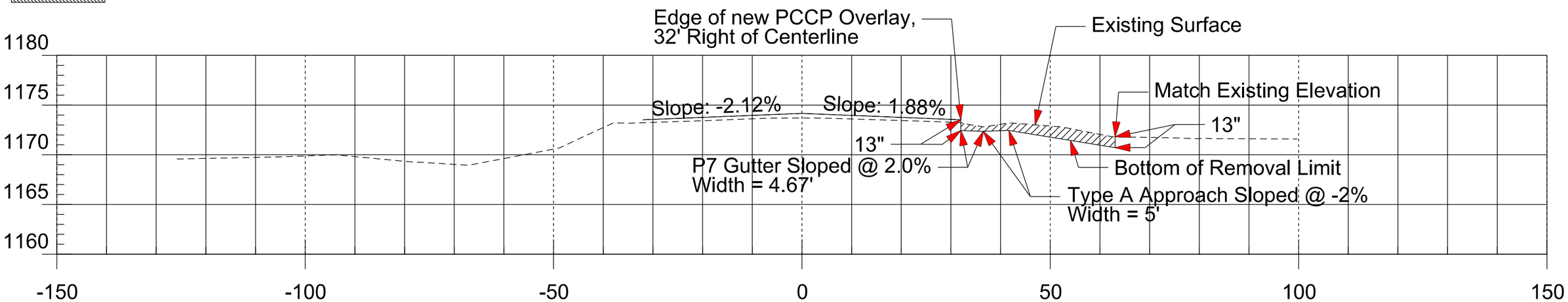

a 431+07

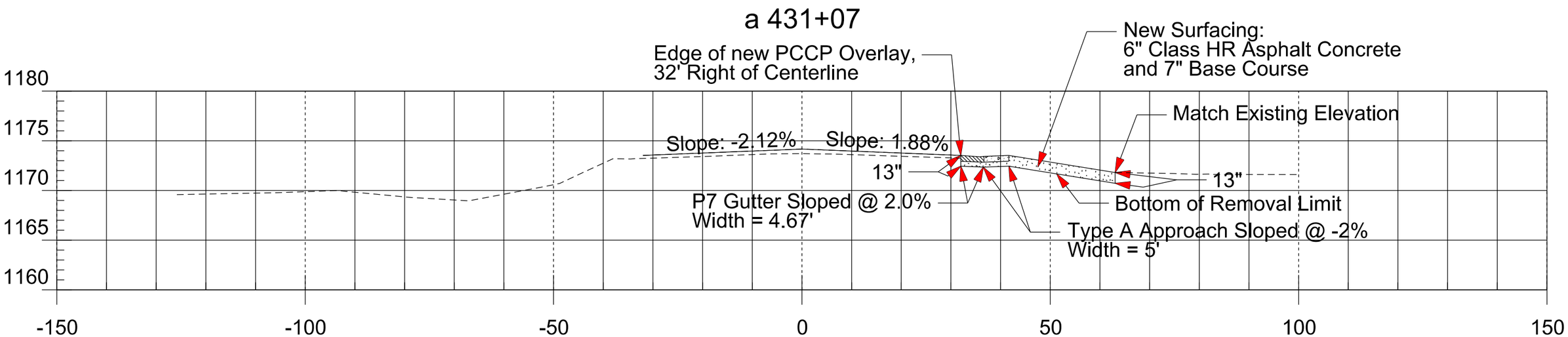

a 431+07

PLOT SCALE - 1:20

PLOT NAME - 31

FILE - U:\MS\PRJ\YANK023U\MS023U.DGN

PLOTTED FROM - TRPR16032

ENTRANCE REMOVAL & SURFACING

STATE OF SOUTH DAKOTA	PROJECT	SHEET	TOTAL SHEETS
	NH 0050(108)385	F45	F102

Plotting Date: 08/18/2016

Unclassified Excavation (Waste Material)

6" Class HR Asphalt Concrete and 7" Base Course

Type A Concrete Approach (thicknes = 7")

P7 Gutter

Entrance @ Sta. a 431+71

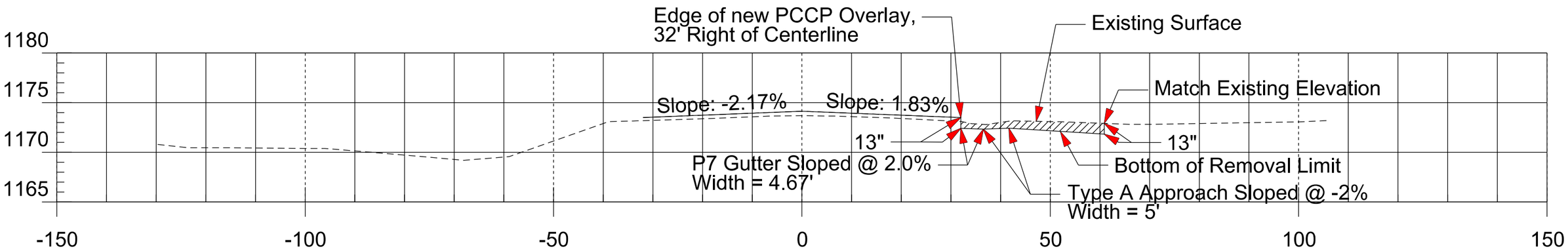

a 431+71

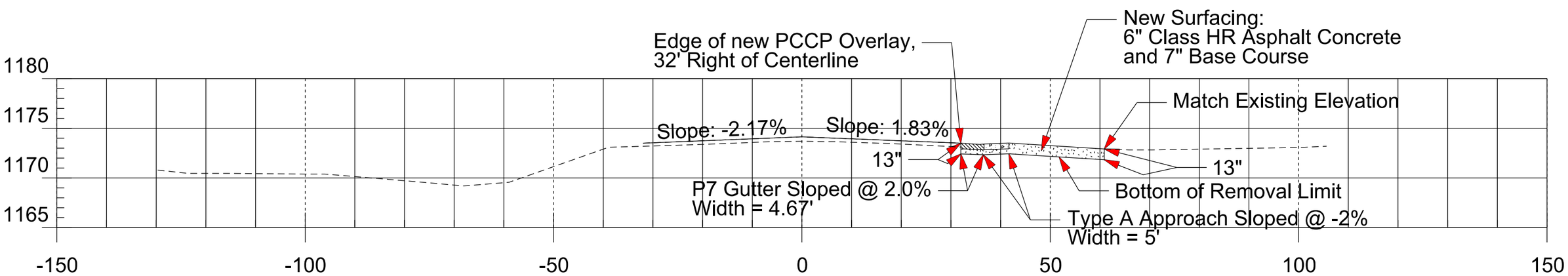

a 431+72

PLOT SCALE - 1:20

PLOT NAME - 32

FILE - U:\MS\PRJ\YANK023U\MS023U.DGN

PLOTTED FROM - TRPR16032

ENTRANCE REMOVAL & SURFACING

STATE OF SOUTH DAKOTA	PROJECT	SHEET	TOTAL SHEETS
	NH 0050(108)385	F46	F102

Plotting Date: 08/18/2016

Unclassified Excavation (Waste Material)

6" Class HR Asphalt Concrete and 7" Base Course

Type A Concrete Approach (thicknes = 7")

P7 Gutter

Entrance @ Sta. a 433+09

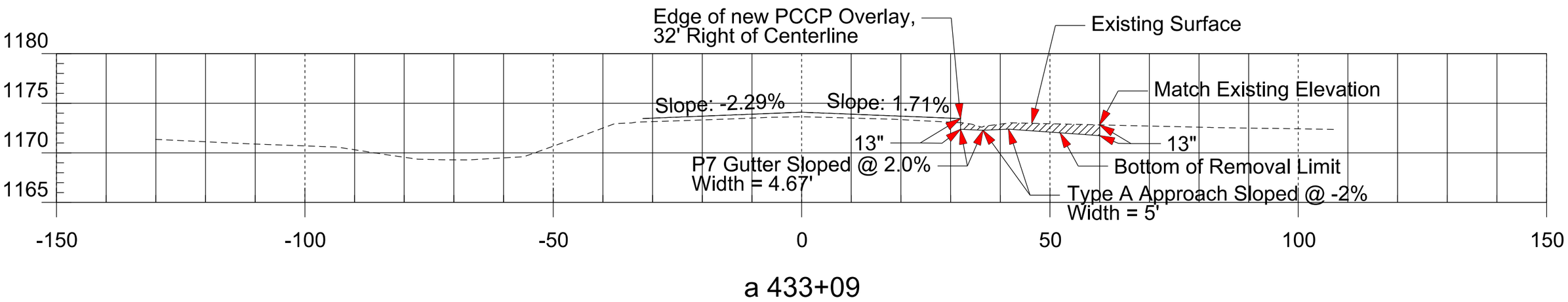

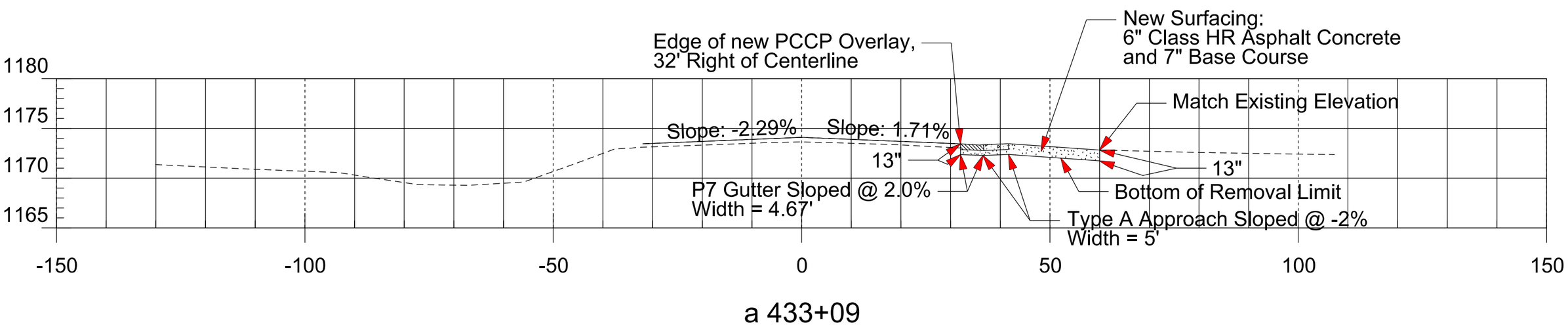

PLOT SCALE - 1:20

PLOTTED FROM - TRPR16032

PLOT NAME - 33

FILE - U:\MS\PRJ\YANK023U\MS023U.DGN

ENTRANCE REMOVAL & SURFACING

STATE OF SOUTH DAKOTA	PROJECT	SHEET	TOTAL SHEETS
	NH 0050(108)385	F47	F102

Plotting Date: 08/18/2016

Unclassified Excavation
(Waste Material)

6" Class HR Asphalt Concrete
and 7" Base Course

Base Course
Variable depth

STANDARD ENTRANCES

STANDARD ENTRANCES
with Asphalt Concrete beyond 6' shoulder

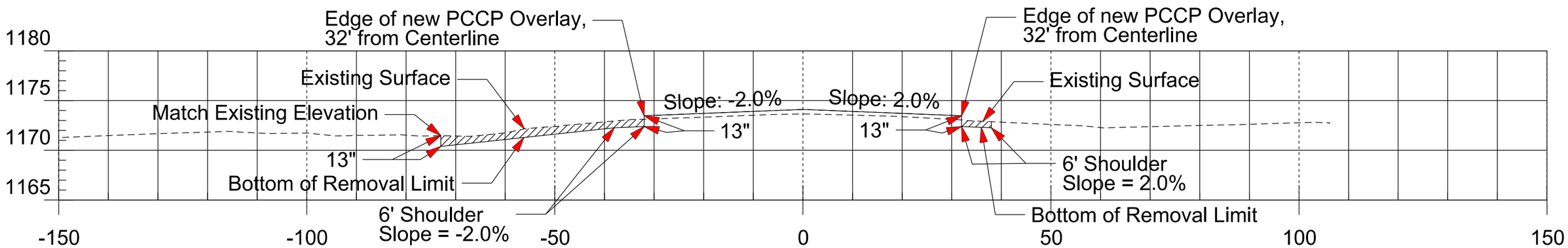

STANDARD ENTRANCES
with no Asphalt Concrete beyond 6' shoulder

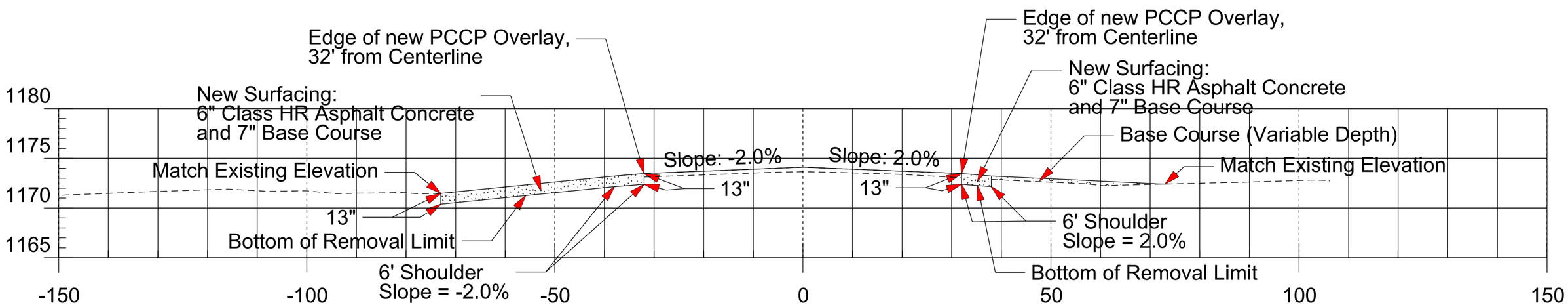

PLOT SCALE - 1:20

PLOTTED FROM - TRPR16032

PLOT NAME - 34

FILE - U:\MS\PRJ\YANK0023U\MS0023U.DGN

CURB & GUTTER LAYOUT

STATE OF SOUTH DAKOTA	PROJECT	SHEET	TOTAL SHEETS
	NH 0050(108)385	F48	F102

Plotting Date: 08/18/2016

See Special Details for
Type B67 Curb & Gutter,
Type P Gutter, and
7" Valley Gutter.

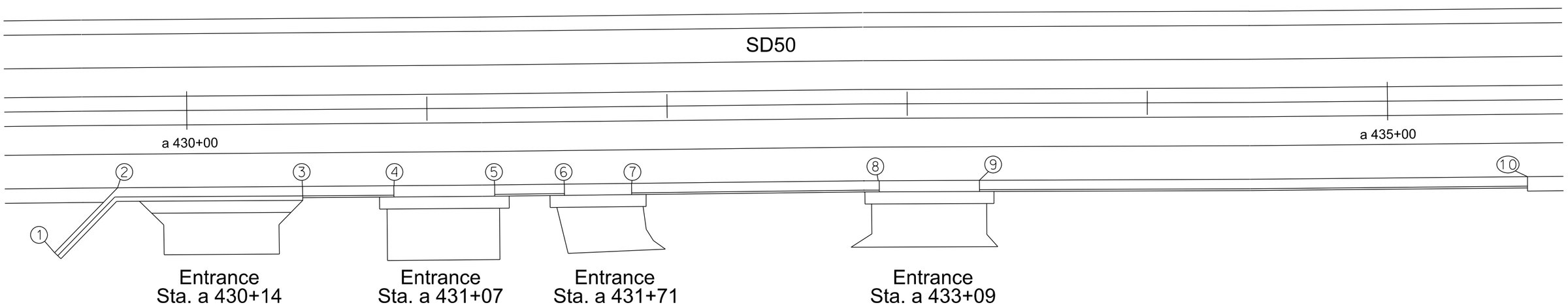

1 Sta. a 429+45 - 60' Rt.
Begin Str Valley Gutter (3.67' wide)
Edge of Gutter Elev. 1169.32

2 Sta. a 429+72 - 32' Rt.
End Str Valley Gutter (3.67' wide)
Begin Str Valley Gutter (5.67' wide)
Edge of Gutter Elev. 1173.57

3 Sta. a 430+48 - 32' Rt.
End Str Valley Gutter (5.67' wide)
Begin Str Type B67 C & G (4.67' wide)
Edge of Gutter Elev. 1173.59

4 Sta. a 430+86 - 32' Rt.
End Str Type B67 C & G (4.67' wide)
Begin Str Type P7 Gutter (4.67' wide)
Edge of Gutter Elev. 1173.60

5 Sta. a 431+28 - 32' Rt.
End Str Type P7 Gutter (4.67' wide)
Begin Str Type B67 C & G (4.67' wide)
Edge of Gutter Elev. 1173.61

6 Sta. a 431+57 - 32' Rt.
End Str Type B67 C & G (4.67' wide)
Begin Str Type P7 Gutter (4.67' wide)
Edge of Gutter Elev. 1173.62

7 Sta. a 431+85 - 32' Rt.
End Str Type P7 Gutter (4.67' wide)
Begin Str Type B67 C & G (4.67' wide)
Edge of Gutter Elev. 1173.63

8 Sta. a 432+88 - 32' Rt.
End Str Type B67 C & G (4.67' wide)
Begin Str Type P7 Gutter (4.67' wide)
Edge of Gutter Elev. 1173.66

9 Sta. a 433+30 - 32' Rt.
End Str Type P7 Gutter (4.67' wide)
Begin Str Type B67 C & G (4.67' wide)
Edge of Gutter Elev. 1173.67

10 Sta. a 435+58 - 32' Rt.
End Str Type B67 C & G (4.67' wide)
Edge of Gutter Elev. 1173.73

PLOT SCALE - 1141.2122
PLOT NAME - 35
FILE - U:\MS\PRJ\YANK023U\J023U.DGN
PLOTTED FROM - TRPR16032

TEMPORARY MEDIAN CROSSOVER

STATE OF SOUTH DAKOTA	PROJECT	SHEET	TOTAL SHEETS
	NH 0050(108)385	F49	F102

Plotting Date: 08/18/2016

6" Class E Asphalt Concrete,
12" Base Course and Pit Run (Variable Depth)

Median Crossover @ Sta. b 382+30 WBL

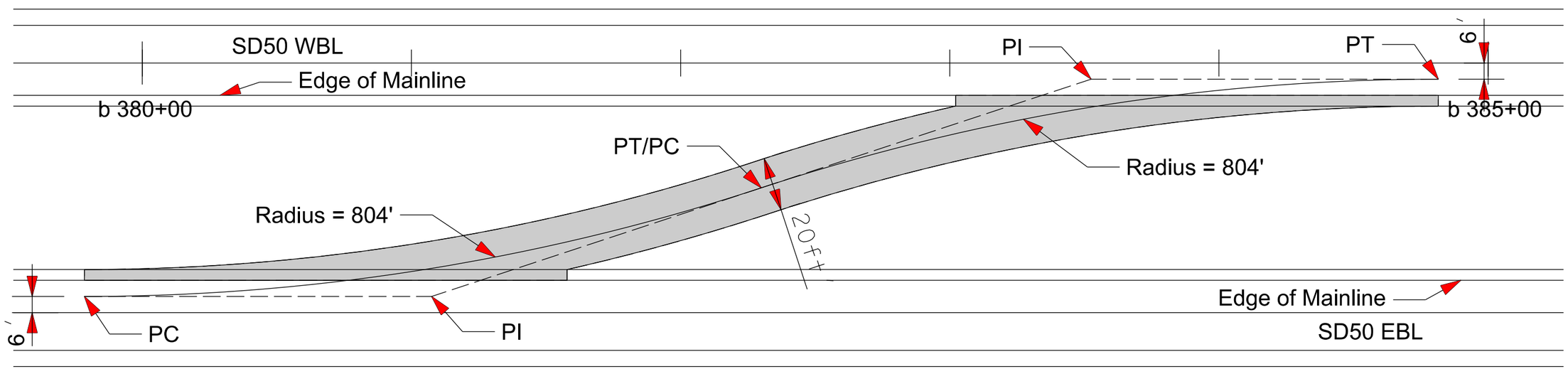

PLOT SCALE - 1:40
PLOT NAME - 36
FILE - U:\MS\PRJ\YANK023U\J023U.DGN
PLOTTED FROM - TRPR16032

TEMPORARY MEDIAN CROSSOVER

STATE OF SOUTH DAKOTA	PROJECT	SHEET	TOTAL SHEETS
	NH 0050(108)385	F50	F102

Plotting Date: 08/18/2016

Median Crossover @ Sta b 382+30

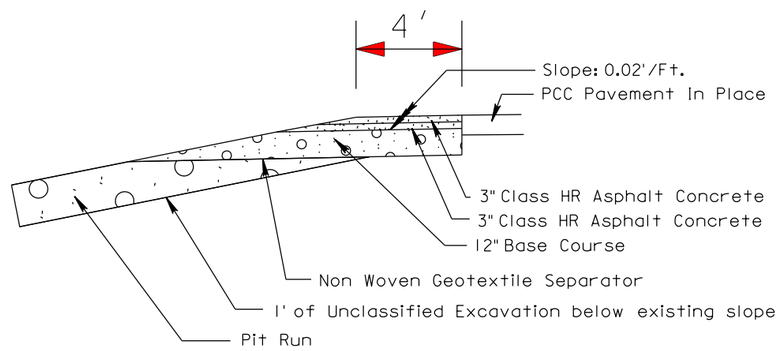

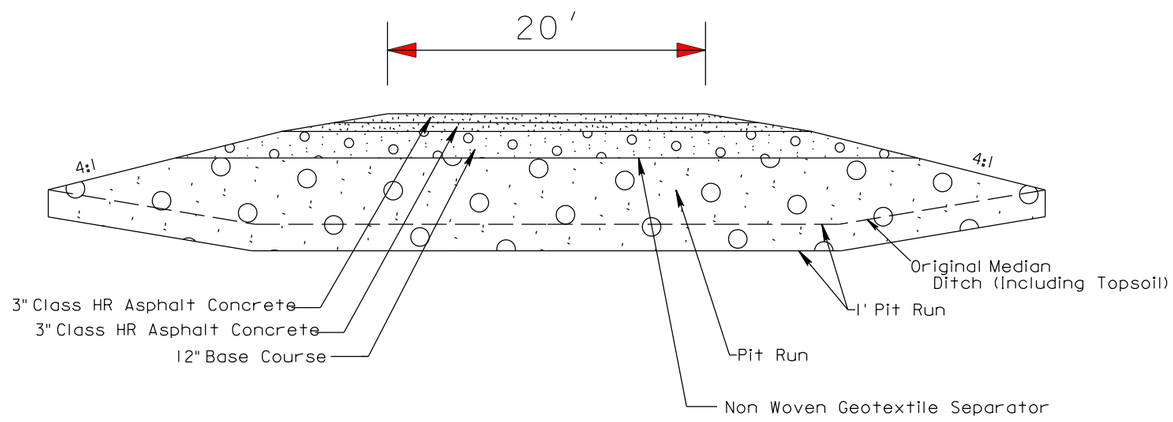

PLOT SCALE - 1:40

PLOTTED FROM - TRPR160032

PLOT NAME - 37

FILE - U:\MS\PRJ\YANK023U\J023U.DGN

STATE OF SOUTH DAKOTA	PROJECT	SHEET	TOTAL SHEETS
	NH 0050(108)385	F51	F102

Plotting Date: 08/18/2016

GUARDRAIL LAYOUT

Scale 1 Inch = 30 Feet
Sheet 1 of 2 Sheets

All anchor assembly hardware will be salvaged and reused to attach new 3 cable guardrail. All cost to salvage and reuse in place hardware will be incidental to 3 cable guardrail installation.

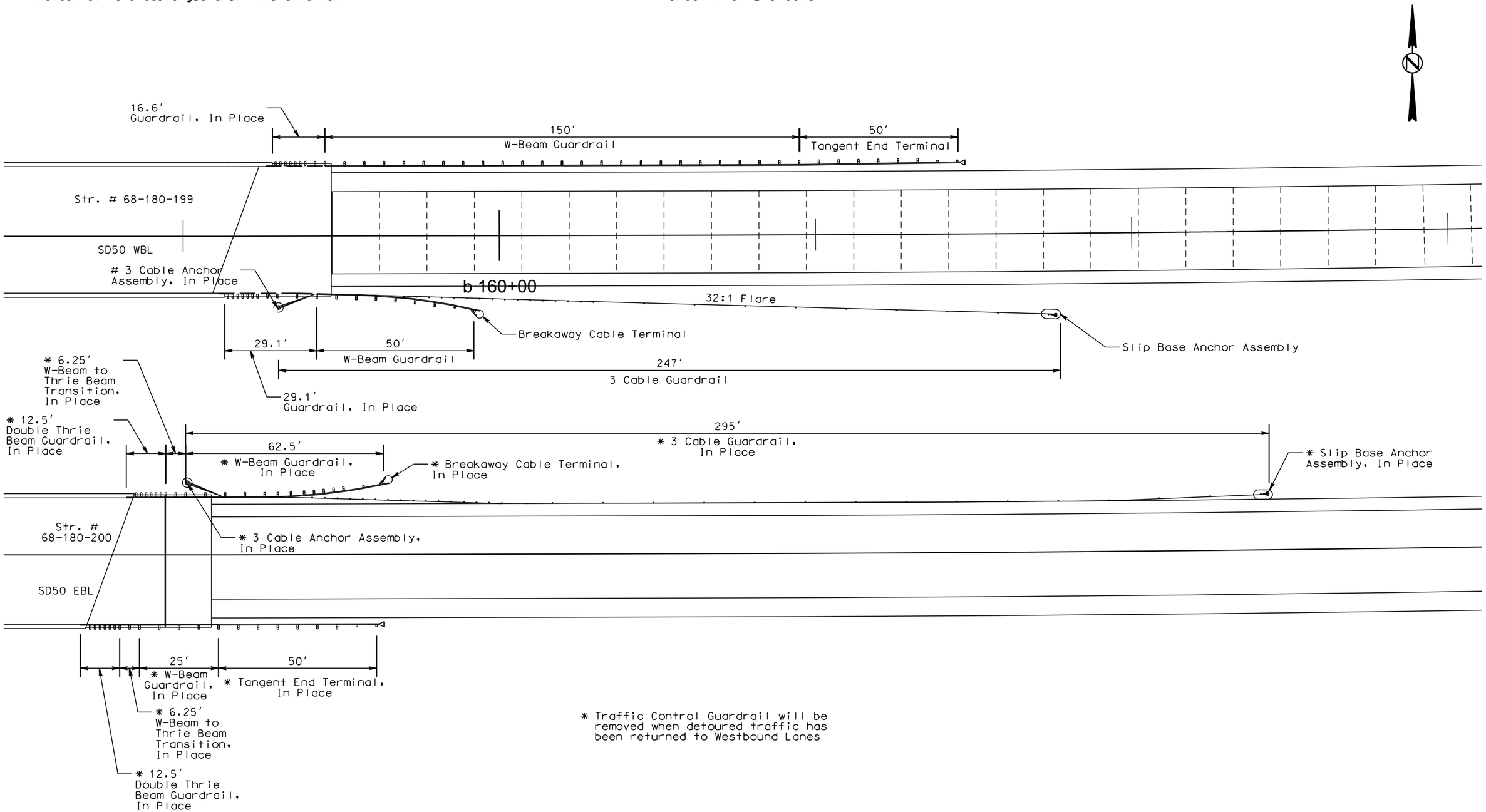

* Traffic Control Guardrail will be removed when detoured traffic has been returned to Westbound Lanes

PLOT SCALE - 1:30

PLOTTED FROM - TRPR16032

PLOT NAME - 38

FILE - ...\YANK023U\GUARDRAIL LAYOUTS.DGN

STATE OF SOUTH DAKOTA	PROJECT	SHEET	TOTAL SHEETS
	NH 0050(108)385	F52	F102

Plotting Date: 08/18/2016

GUARDRAIL LAYOUT

Scale 1 Inch = 30 Feet
Sheet 2 of 2 Sheets

2" Class E Asphalt Concrete and 12" Base Course

14" Base Course adjacent to Edge of Shoulder (Minimum depth = 6")

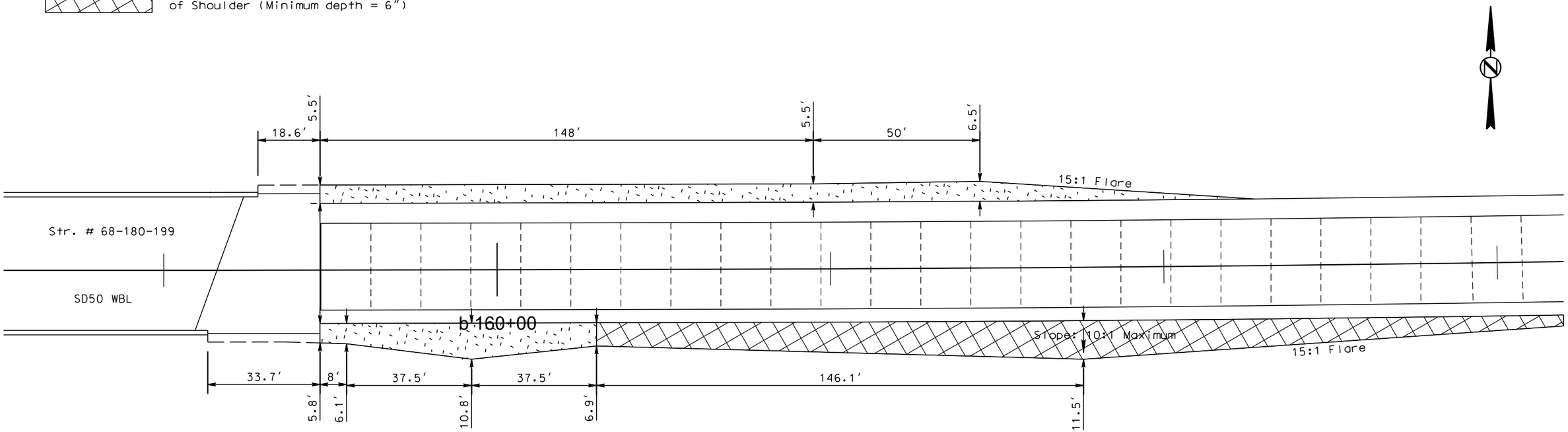

PLOT SCALE - 1:30

PLOTTED FROM - TRPR16032

PLOT NAME - 39

FILE - ...\YANK023U\GUARDRAIL LAYOUTS.DGN

Membrane Sealant Expansion Joint

STATE OF SOUTH DAKOTA	PROJECT	SHEET	TOTAL SHEETS
	NH 0050(108)385	F53	F102

Plotting Date: 08/18/2016

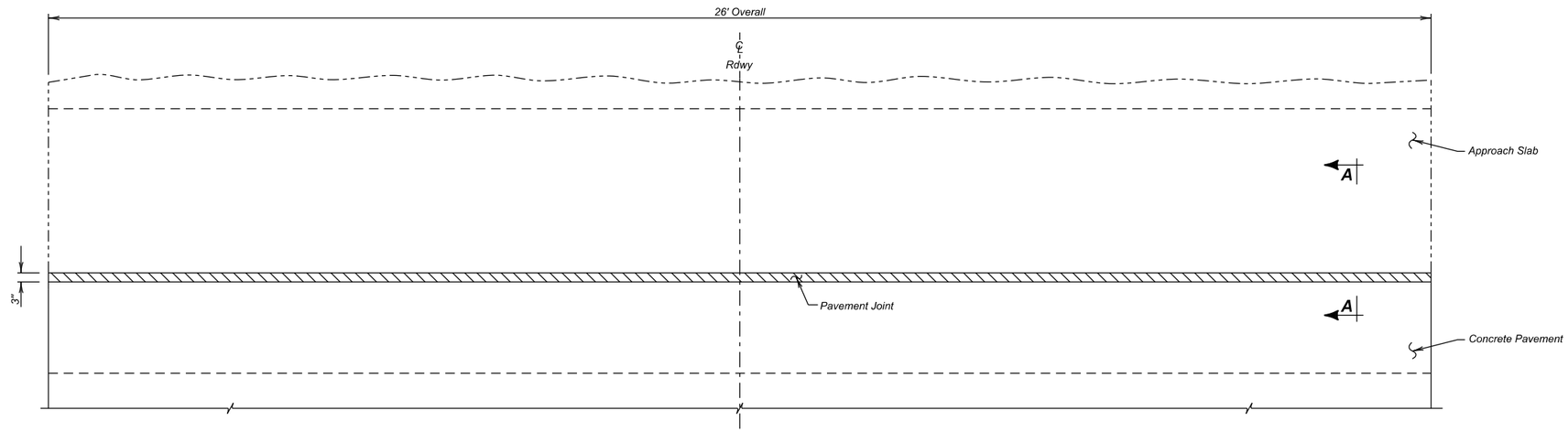

PLAN

GENERAL NOTES

1. The Membrane Sealant shall be on the approved product list for Membrane Sealant Expansion Joints.
2. The manufacturer shall supply the membrane sealant in packaging that precompresses the membrane sealant. The precompressed dimension shall be as recommended by the sealant manufacturer, however, in no case shall the precompressed dimension exceed 75% of the joint opening width. The foam sealant shall be slowly self expanding to permit workers ample time to install the membrane sealant before the membrane sealant exceeds the joint opening width.
3. The membrane sealant shall provide a water tight seal throughout a joint movement range of + 25% (minimum) from the specified joint opening dimension.
4. The membrane sealant shall be supplied in pieces a minimum of 5 feet in length. The foam sealant shall be ultra-violet and ozone resistant.
5. The bonding adhesive used to attach the membrane sealant to the adjacent concrete shall be approved by the membrane sealant manufacturer.
6. Adhesive used to join adjacent pieces of the membrane sealant shall be as recommended by the manufacturer.
7. If styrofoam filler material is used in the construction, it shall be closed cell and water-tight as approved by the Engineer.
8. The minimum ambient air temperature at the time of joint installation and adhesive curing shall be 40° F.
9. A technical representative of the membrane sealant manufacturer shall be present at the jobsite during installation. The technical representative shall be knowledgeable in the correct procedures for the preparation and installation of the joint material to ensure the Contractor installs the joint to the manufacturers' recommendations.
10. Surfaces that will be in contact with the membrane sealant shall be thoroughly cleaned by abrasive blasting to remove all laitance and contaminants (such as oil, curing compounds, etc.) from the surface. At a minimum, two passes of abrasive blasting with the nozzle held at an angle to within 1 to 2 inches of the surface will be required. Cleaning of the surfaces with solvents, wire brushing, or grinding shall not be permitted.
11. After abrasive blasting, but immediately prior to membrane joint installation, the entire joint contact surface shall be air blasted. The air compressor used for joint cleaning shall be equipped with trap devices capable of providing moisture-free and oil-free air at a recommended pressure of 90 psi. To obtain complete bonding with the adhesive, the adjacent surfaces must be dry and clean. The contact surfaces for the joint shall be visually inspected by the Engineer immediately prior to joint installation to verify the surface is dry and clean.
12. Individual spliced sections shall be installed as per the manufacturers' recommendations. The membrane joint sealant manufacturer shall submit a detailed installation procedure to the Engineer at least 5 days prior to joint installation for his review.
13. Traffic shall not be allowed on the joint until the bonding adhesive has had time to cure, as recommended by the manufacturer.
14. Use plywood or other material to protect concrete adjacent to the joint from spalling before any equipment is moved across the joint. Any spall areas will be repaired at the Contractor's expense by breaking out and replacing adjacent concrete, as approved by the Engineer.
15. The Membrane Sealant Expansion Joint will be measured in feet to the nearest one-tenth foot, complete in place. Measurement will be made of the overall horizontal length. The Membrane Sealant Expansion Joint will be paid for at the contract unit price per foot complete in place. Payment for this item shall be full compensation for furnishing all the required materials in place, including labor, equipment and incidentals necessary to complete the work in accordance with the plans and the foregoing specifications.

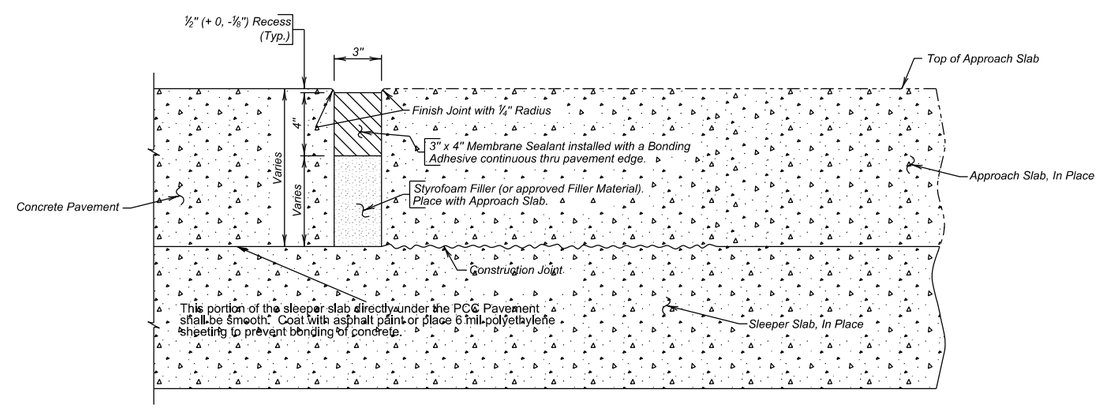

SEC. A - A

ESTIMATED QUANTITIES

Location	UNIT	QUANTITY
Sta. b 155+56.7	Ft.	26.0
Sta. b 159+48.5	Ft.	26.0
	TOTAL	52.0

PLOT SCALE - 1:0.2

PLOTTED FROM - TRPR16032

PLOT NAME - 40

FILE - ...\MEMBRANE JOINT SEALANT DETAILS.DGN

STATE OF SOUTH DAKOTA	PROJECT	SHEET	TOTAL SHEETS
	NH 0050(108)385	F54	F102

Plotting Date: 08/18/2016

The Contractor will ensure the underdrain pipes located at the Cutoff Drain are not damaged during the installation of the guardrail posts. Damaged underdrain pipes will be replaced at the Contractor's expense.

CUTOFF DRAIN

Sheet 1 of 2

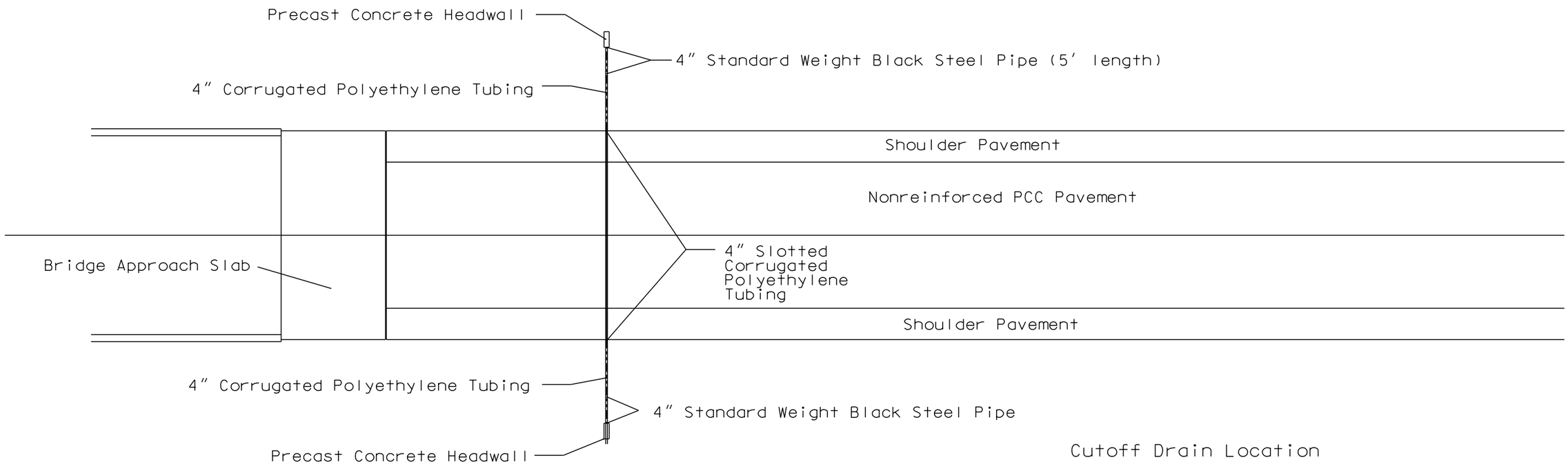

Cutoff Drain Location

Structure 68-180-199 Sta. b 159+84 WBL

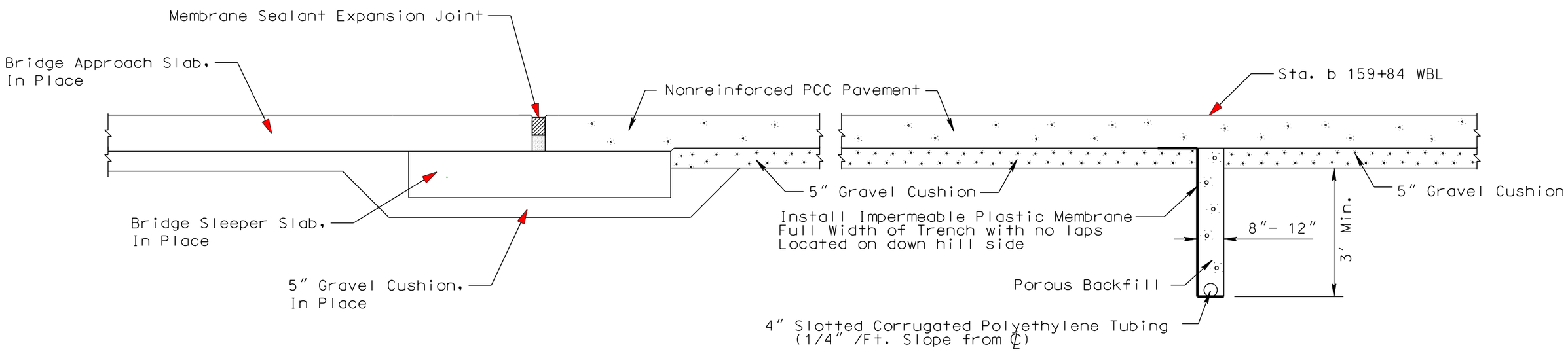

* Raven Industries Dura Skrim 12BV or equal has been approved for use in cutoff drain applications.

PLOT SCALE - 1:200.67

PLOT NAME - 41

FILE -...\CUTOFF DRAIN DETAIL 023U.DGN

PLOTTED FROM - TRPR16032

CUTOFF DRAIN

Sheet 2 of 2

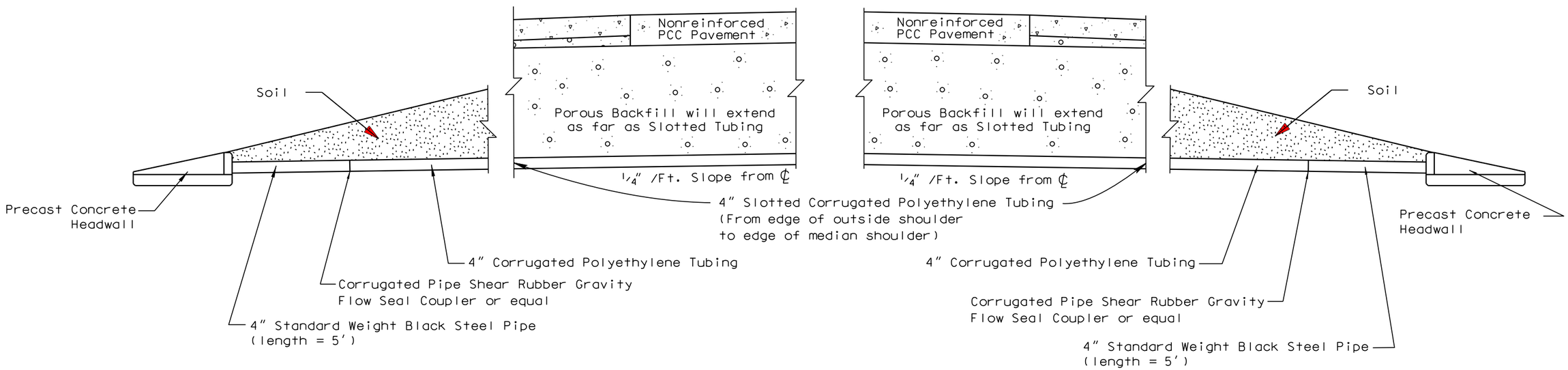

It will be the Contractor's responsibility to determine the amount of Pipe and Porous Backfill required to be installed at the Cutoff Drain. All costs to Furnish and Install 2 Precast Headwalls, 4" Standard Weight Black Steel Pipe, Corrugated Pipe Shear Rubber Gasket Gravity Flow Seal Couplers or equal, 4" Corrugated Polyethylene Tubing, 4" Slotted Corrugated Polyethylene Tubing, Impermeable Plastic Membrane and Porous Backfill shall be incidental to the contract unit price per each for Cutoff Drain.

Care must be taken to insure that the underdrain and outlet tubing is not damaged during construction. Sufficient cover material is to be placed over the underdrain before heavy equipment is allowed to work over the underdrain.

PLOT SCALE - 1:200.67
PLOTTED FROM - TRPR16032
PLOT NAME - 42
FILE ...\CUTOFF DRAIN DETAIL 023U.DGN

TYPE B67 CONCRETE CURB AND GUTTER

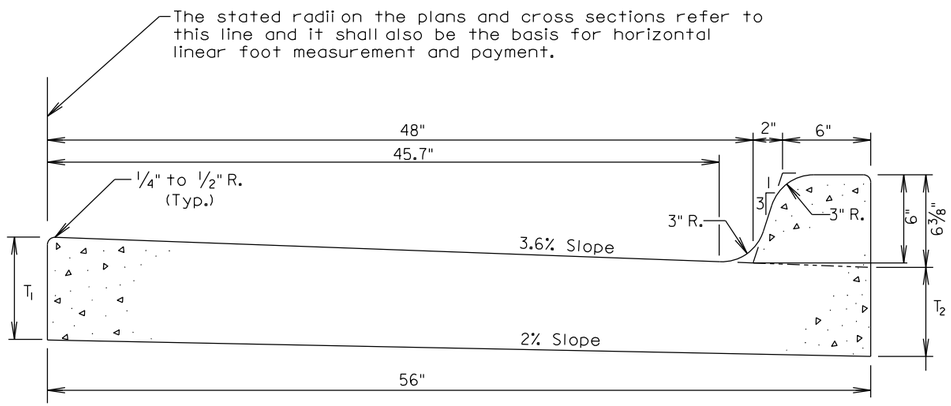

Type	T_1 (Inches)	T_2 (Inches)	Cu. Yd. Per Lin. Ft.	Lin. Ft. Per Cu. Yd.
B67	7	6 1/16	0.105	9.5

GENERAL NOTES:

When concrete curb and gutter longitudinally adjoins new concrete pavement, the method of attachment shall be by one of the methods shown on Standard Plate 380.11.

See Standard Plate 650.90 for expansion and contraction joints in the curb and gutter.

TYPE P CONCRETE GUTTER

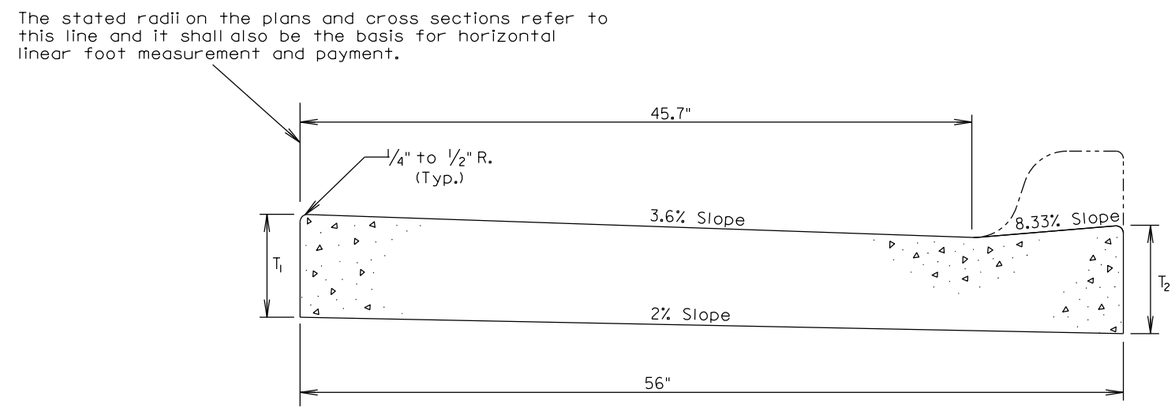

TRANSVERSE SECTION

Type	T_1 (Inches)	T_2 (Inches)	Cu. Yd. Per Lin. Ft.	Lin. Ft. Per Cu. Yd.
P7	7	7 3/8	0.096	10.4

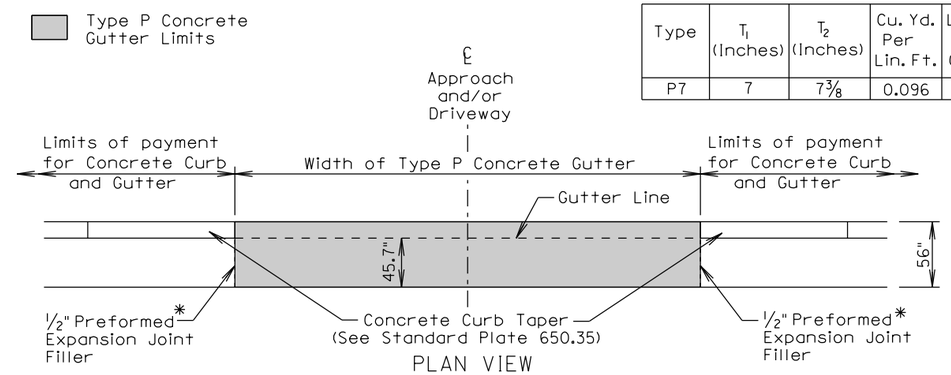

PLAN VIEW

* Joint will not be needed if concrete curb and gutter and type P concrete gutter is placed at the same time. If the 1/2" Preformed Expansion Joint Filler is provided, then the joint shall be sealed in accordance with Standard Plate 650.90.

GENERAL NOTES:

The concrete for the Type P Concrete Gutter shall comply with the requirements of the Specifications for Class M6 Concrete.

When concrete gutter longitudinally adjoins new concrete pavement, the method of attachment shall be by one of the methods shown on Standard Plate 380.11.

Transverse contraction joints shall be constructed at 10' intervals in the concrete gutter except when concrete gutter is constructed adjacent to mainline PCC pavement. When concrete gutter is constructed adjacent to mainline PCC pavement, a transverse contraction joint shall be constructed in the concrete gutter at each mainline PCC pavement transverse contraction joint location.

When concrete gutter is placed monolithically with mainline PCC pavement, the transverse contraction joints in the concrete gutter shall be sawed and sealed the same as the transverse contraction joints in the mainline PCC pavement.

When concrete gutter is not placed monolithically with the mainline PCC pavement and when the adjacent mainline surfacing is not PCC concrete, the transverse contraction joints in the concrete gutter shall be 1 1/2 inches deep if formed in the fresh concrete using a suitable grooving tool. If a saw is used to cut the contraction joints, then the depth of the joint shall be at least 1/4 the thickness of the concrete.

PLOT SCALE - 1:206.061
PLOTTED FROM - TRPR16032
PLOT NAME - 43
FILE - ...\CURB GUTTER DETAILS.DGN

7" VALLEY GUTTER

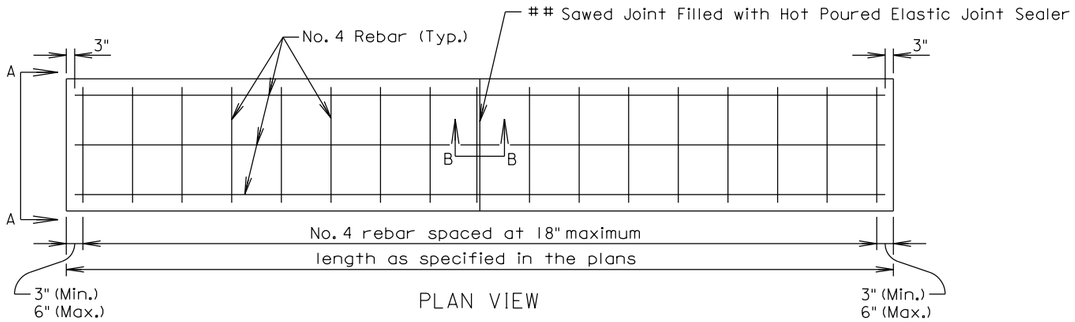

PLAN VIEW

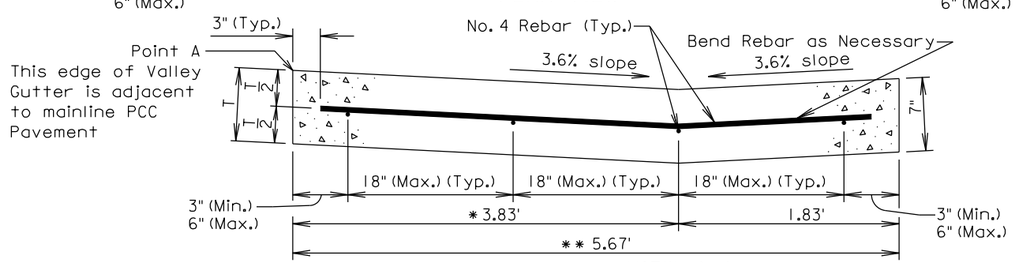

VIEW A-A
(Not to scale)

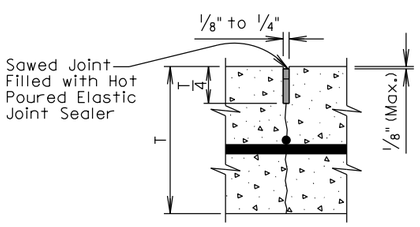

SECTION B-B
(Sawed Joint Filled with Hot Poured Elastic Joint Sealer)

Sta. a 429+45 - 60' Rt. to Sta. a 429+72 - 32' Rt. (Point A)
* 1.83'
** 3.67'

Sta. a 429+72 - 32' Rt. to Sta. a 435+58 - 32' Rt. (Point A)
* 3.83'
** 5.67'

GENERAL NOTES:

The concrete shall comply with the Specifications for Class M6 concrete.

The reinforcing steel shall comply with the requirements of the Specification Sections 480 and 1010.

If a lap splice is provided the No. 4 rebar shall be lapped a minimum of 12".

The sawed joints shall be spaced at 12'; however, when the length of the valley gutter is 12' to 24' there shall be a joint at the midpoint of the length. The saw cut to control cracking shall be a minimum of 1/4 the thickness of the pavement.

All hot poured elastic joint sealer material spilled on the surface of the concrete pavement shall be removed as soon as the material has cooled. The extent of removal of material shall be to the satisfaction of the Engineer. All costs for removal of the spilled joint sealer material shall be borne by the Contractor.

All costs for furnishing and installing the valley gutter including materials, equipment, labor, and incidentals shall be included in the contract unit price per square yard for the corresponding Valley Gutter bid item.

PCC PAVEMENT TRANSVERSE CONTRACTION JOINT SPACING

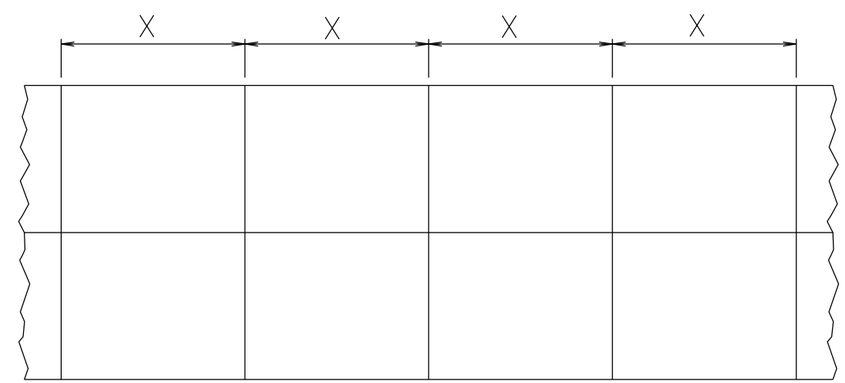

PCCP Thickness	Transverse Contraction Joint Spacing (X)
Less than 8"	13'
8" to 9.5"	15'
10" and thicker	20'

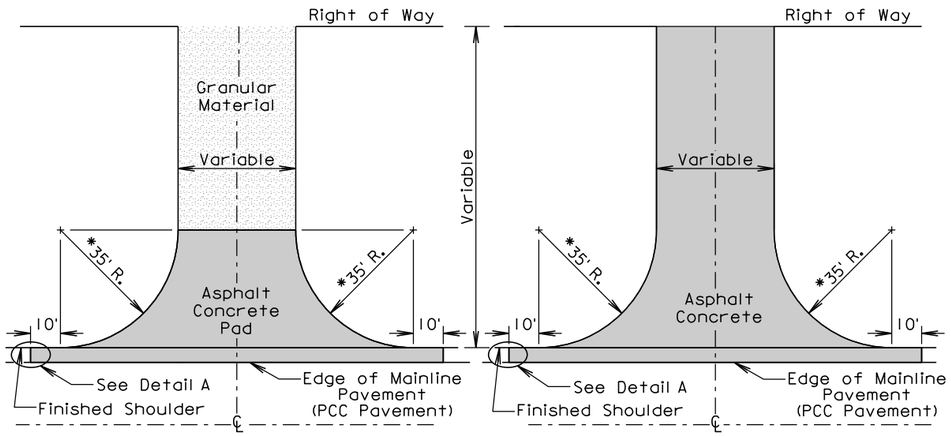

INTERSECTING ROAD
NO ASPHALT CONCRETE SURFACING
BEYOND RIGHT OF WAY

INTERSECTING ROAD
ASPHALT CONCRETE SURFACING
BEYOND RIGHT OF WAY

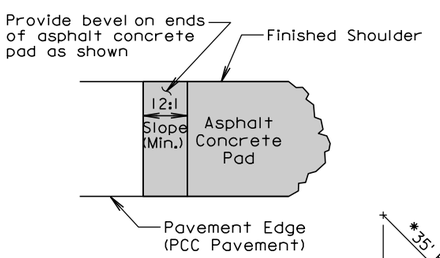

DETAIL A

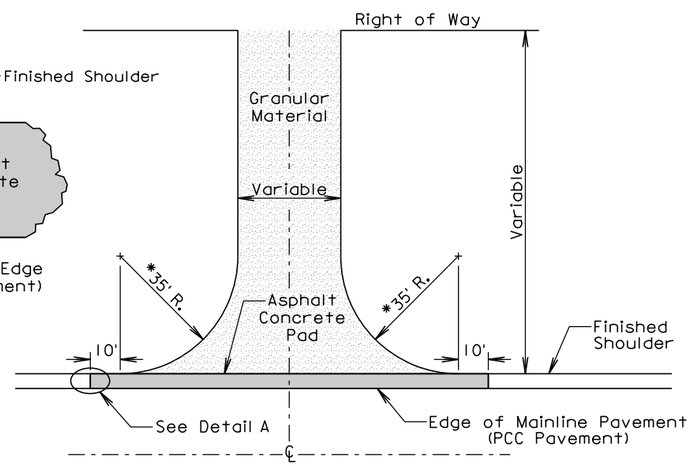

ENTRANCE

GENERAL NOTES:

The details shown are provided as a guide for surfacing. The precise construction limits for situations other than the standards shown will be determined by the Engineer during construction.

*35' Radius except as noted elsewhere in plans.

SURFACING OF INTERSECTING ROADS AND ENTRANCES (MAINLINE PCC PAVEMENT WITH 6" ASPHALT CONCRETE ON SHOULDERS ADJACENT TO INTERSECTING ROADS AND ENTRANCES)

PLOT SCALE - 1:206.061
PLOTTED FROM - TRPR16032
PLOT NAME - 45
FILE - ...\STANDARD INT RD & ENT.DGN

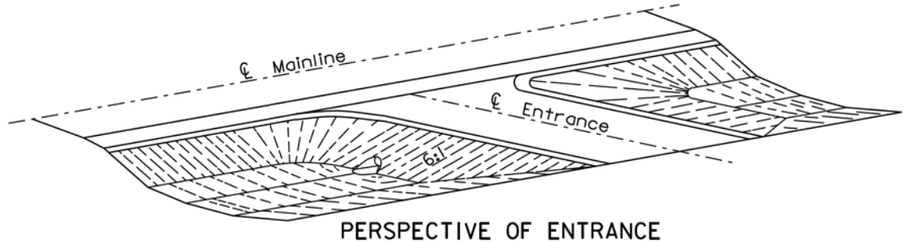

PERSPECTIVE OF ENTRANCE

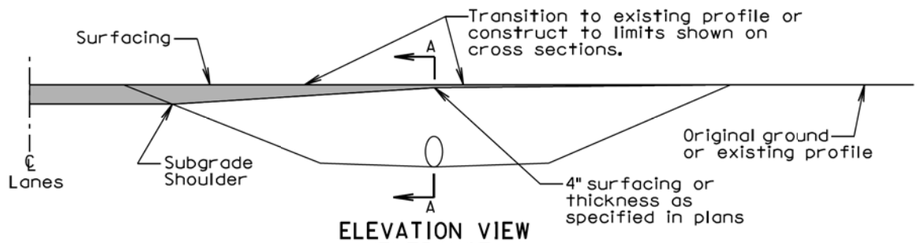

ELEVATION VIEW (ENTRANCE)

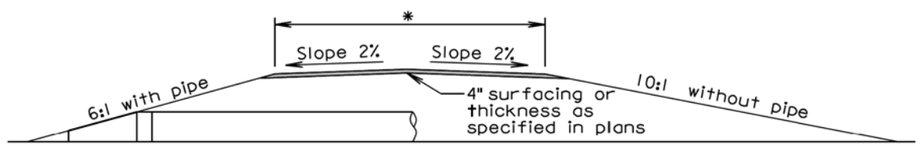

SECTION A-A (ENTRANCE)

*The finished surfacing width is stated elsewhere in the plans. The subgrade width is 4' wider than the finished surfacing width unless stated otherwise in the plans.

GENERAL NOTES:

The ditch section shown above in the perspective and elevation view is only for illustrative purposes.

A 6:1 inslope shall be constructed for an entrance when a pipe is required. A 10:1 inslope shall be constructed when a pipe is not required.

Pipe lengths shall be adjusted if necessary during construction to obtain the 6:1 slopes. For grading projects, the pipe lengths are estimated typically using a 4" thickness of surfacing directly over the subgrade above the pipe.

The transition area between the mainline inslope and the approach inslope for entrances shall be rounded to eliminate an abrupt transition.

The turning radii shall be 35' for intersecting roads and entrances unless stated otherwise in the plans.

September 6, 2013

Published Date: 3rd Qtr. 2016	SDDOT	INTERSECTING ROADS AND ENTRANCES	PLATE NUMBER 120.01
			Sheet 1 of 2

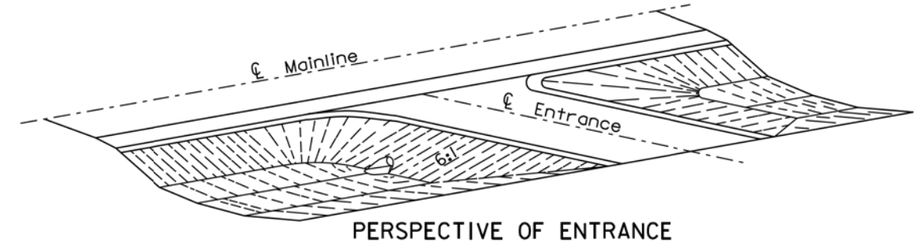

PERSPECTIVE OF ENTRANCE

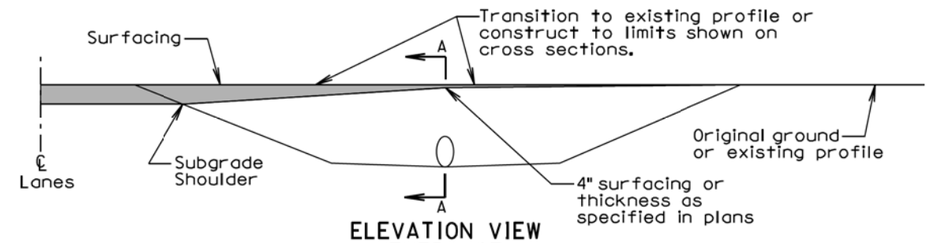

ELEVATION VIEW (ENTRANCE)

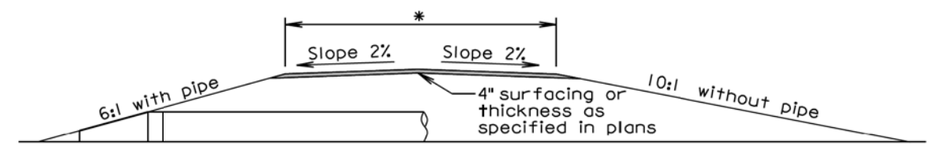

SECTION A-A (ENTRANCE)

*The finished surfacing width is stated elsewhere in the plans. The subgrade width is 4' wider than the finished surfacing width unless stated otherwise in the plans.

GENERAL NOTES:

The ditch section shown above in the perspective and elevation view is only for illustrative purposes.

A 6:1 inslope shall be constructed for an entrance when a pipe is required. A 10:1 inslope shall be constructed when a pipe is not required.

Pipe lengths shall be adjusted if necessary during construction to obtain the 6:1 slopes. For grading projects, the pipe lengths are estimated typically using a 4" thickness of surfacing directly over the subgrade above the pipe.

The transition area between the mainline inslope and the approach inslope for entrances shall be rounded to eliminate an abrupt transition.

The turning radii shall be 35' for intersecting roads and entrances unless stated otherwise in the plans.

September 6, 2013

Published Date: 3rd Qtr. 2016	SDDOT	INTERSECTING ROADS AND ENTRANCES	PLATE NUMBER 120.01
			Sheet 1 of 2

PLOT SCALE - 1:200
PLOT NAME - 46
FILE - ...\STDPLATEPAGESEED - 1.DGN
-PLOTTED FROM - TRPR16032

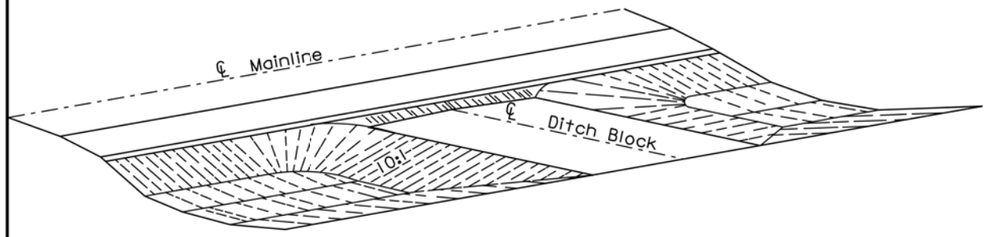

PERSPECTIVE OF DITCH BLOCK

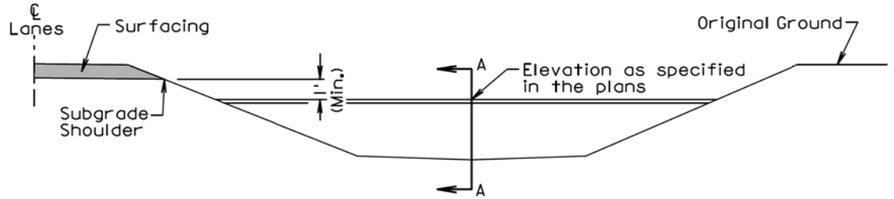

ELEVATION VIEW

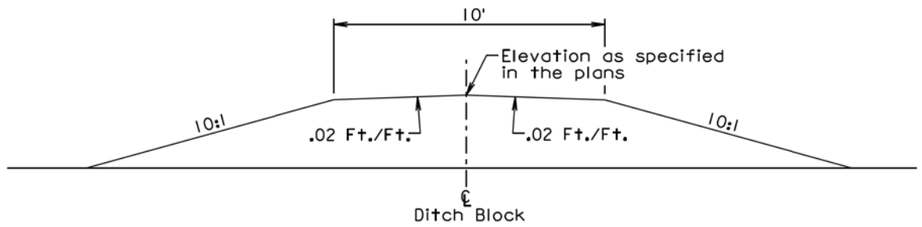

SECTION A-A

GENERAL NOTES:

The ditch section shown above in the perspective and elevation view is only for illustrative purposes.

The inslopes of the ditch block shall be 10:1 or as specified in the plans.

The transition area between the mainline inslope and the ditch block inslope shall be rounded to eliminate an abrupt transition.

February 14, 2011

Published Date: 3rd Qtr. 2016	SDDOT	DITCH BLOCK	PLATE NUMBER 120.02
			Sheet 1 of 1

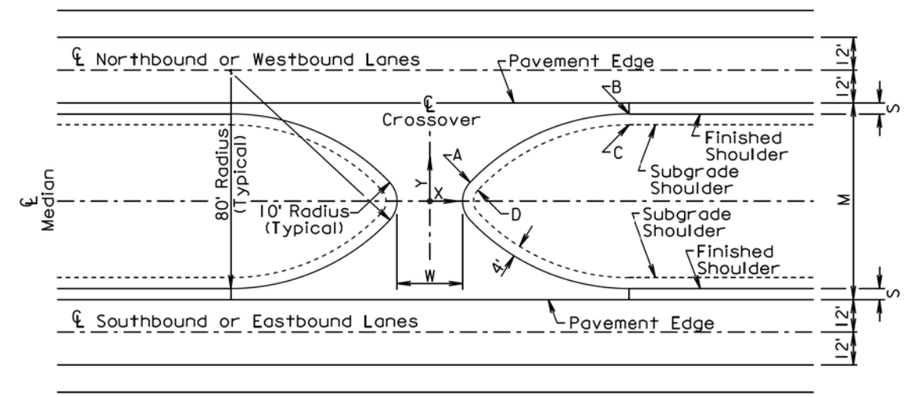

PLAN VIEW

S = Finished Shoulder Width
M = Median Width
W = Finished Median Crossover Width

PUBLIC ACCESS MEDIAN CROSSOVER LAYOUT INFORMATION

M (Ft)	S (Ft)	W (Ft)	Point A X (Ft)	Point A Y (Ft)	Point B X (Ft)	Point B Y (Ft)	Point C X (Ft)	Point C Y (Ft)	Point D X (Ft)	Point D Y (Ft)
60	4	24	15.7	7.7	66.5	26.0	66.5	22.0	18.2	4.7
60	4	40	23.7	7.7	74.5	26.0	74.5	22.0	26.2	4.7
60	6	24	16.0	8.0	64.0	24.0	64.0	20.0	18.4	4.8
60	6	40	24.0	8.0	72.0	24.0	72.0	20.0	26.4	4.8
66	4	24	15.2	7.3	70.0	29.0	70.0	25.0	17.9	4.4
66	4	40	23.2	7.3	78.0	29.0	78.0	25.0	25.9	4.4
66	6	24	15.5	7.6	67.7	27.0	67.7	23.0	18.1	4.6
66	6	40	23.5	7.6	75.7	27.0	75.7	23.0	26.1	4.6
72	4	24	14.8	6.9	73.0	32.0	73.0	28.0	17.6	4.1
72	4	40	22.8	6.9	81.0	32.0	81.0	28.0	25.6	4.1
72	6	24	15.0	7.1	71.0	30.0	71.0	26.0	17.8	4.3
72	6	40	23.0	7.1	79.0	30.0	79.0	26.0	25.8	4.3
80	4	24	14.2	6.3	76.4	36.0	76.4	32.0	17.3	3.8
80	4	40	22.2	6.3	84.4	36.0	84.4	32.0	25.3	3.8
80	6	24	14.5	6.6	74.8	34.0	74.8	30.0	17.5	4.0
80	6	40	22.5	6.6	82.8	34.0	82.8	30.0	25.5	4.0

The dimensions provided for "X" and "Y" begin from the intersection of the median centerline and the crossover centerline.

March 28, 2001

Published Date: 3rd Qtr. 2016	SDDOT	PUBLIC ACCESS MEDIAN CROSSOVER	PLATE NUMBER 120.03
			Sheet 1 of 2

PLOT SCALE - 1:200
PLOT NAME - 47
FILE - ...\STDPLATEPAGESEED - 2.DGN
-PLOTTED FROM - TRPR16032

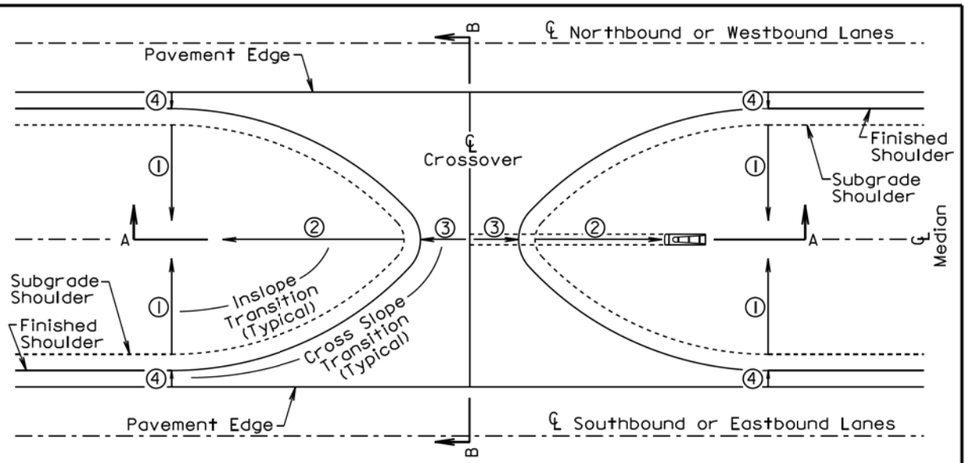

PLAN VIEW

① Inslope as specified on the typical sections or cross sections

② 10:1 Inslope without pipe, 6:1 with pipe

③ Cross slope shall be .02 Ft./Ft. when centerline profiles of adjacent lanes are at less than 2% grade. When the centerline profiles of the adjacent lanes are 2% and greater the cross slope shall be parallel to the profile or as approved by the Engineer. (See Detail C)

④ Cross slope as specified on the typical sections

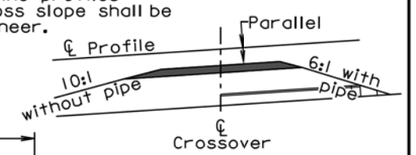

DETAIL C

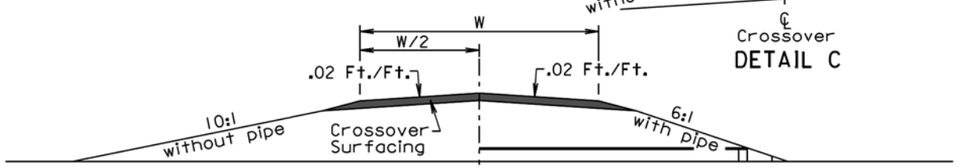

SECTION A-A

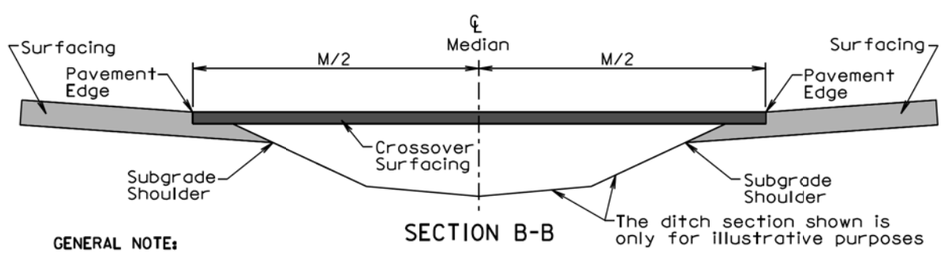

SECTION B-B

GENERAL NOTE:

The quantities of materials necessary for construction of the public access median crossover are as provided in the plans and shall be paid for at their respective contract unit prices for the various materials used.

March 28, 2001

Published Date: 3rd Qtr. 2016	SDDOT	PUBLIC ACCESS MEDIAN CROSSOVER	PLATE NUMBER 120.03
			Sheet 2 of 2

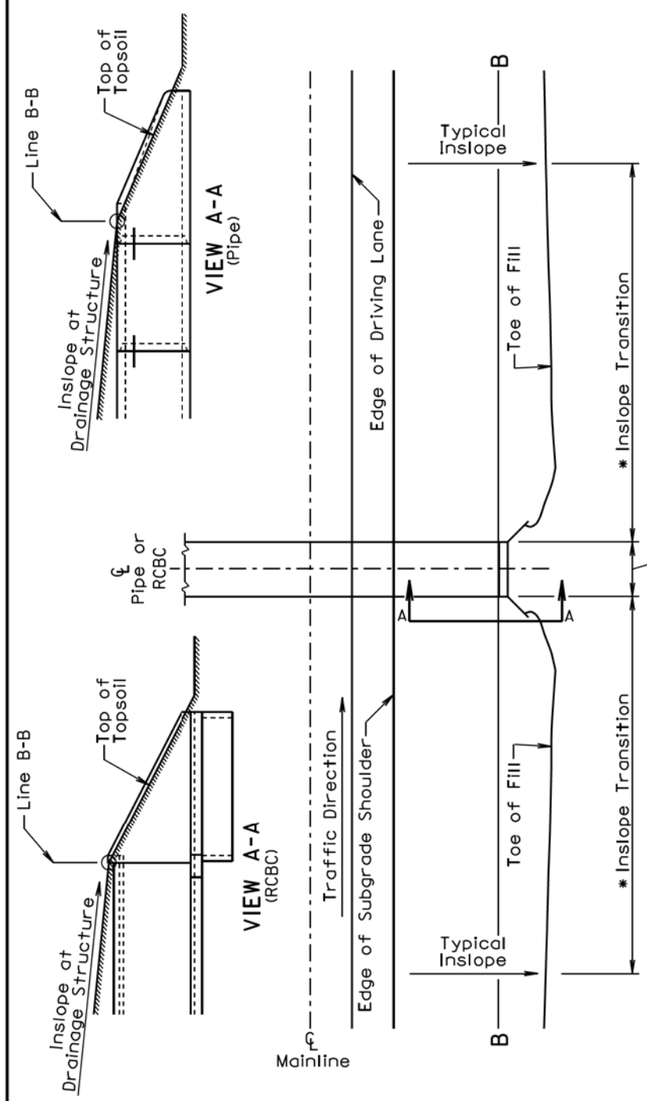

TYPE 1 INSLOPE TRANSITION

GENERAL NOTES:

This Type 1 Inslope Transition is used when the specified inslope at the drainage structure is flatter than the typical inslope and the inslope at the drainage structure is between a 4:1 slope and 6:1 slope.

Line B-B represents the clear zone line, the location where soil intercepts the parapet on an RCBC, the location where the soil intercepts the top of the pipe adjacent to the opening of the pipe end section, or may represent a change in slope.

* Transition from the typical inslope to the inslope at the drainage structure. Within the clear zone (area from edge of subgrade shoulder to line B-B) use 100' length for each 1:1 slope change. Example: transition from a 4:1 to a 6:1 would require a 200' length transition. The typical inslope outside of the clear zone shall be transitioned gradually to the slope necessary adjacent to the RCBC wing wall or pipe culvert end section within the transition length necessary for the transition within the clear zone.

February 14, 2011

Published Date: 3rd Qtr. 2016	SDDOT	INSLOPE TRANSITIONS AT PIPE CULVERTS OR REINFORCED CONCRETE BOX CULVERTS	PLATE NUMBER 120.05
			Sheet 1 of 2

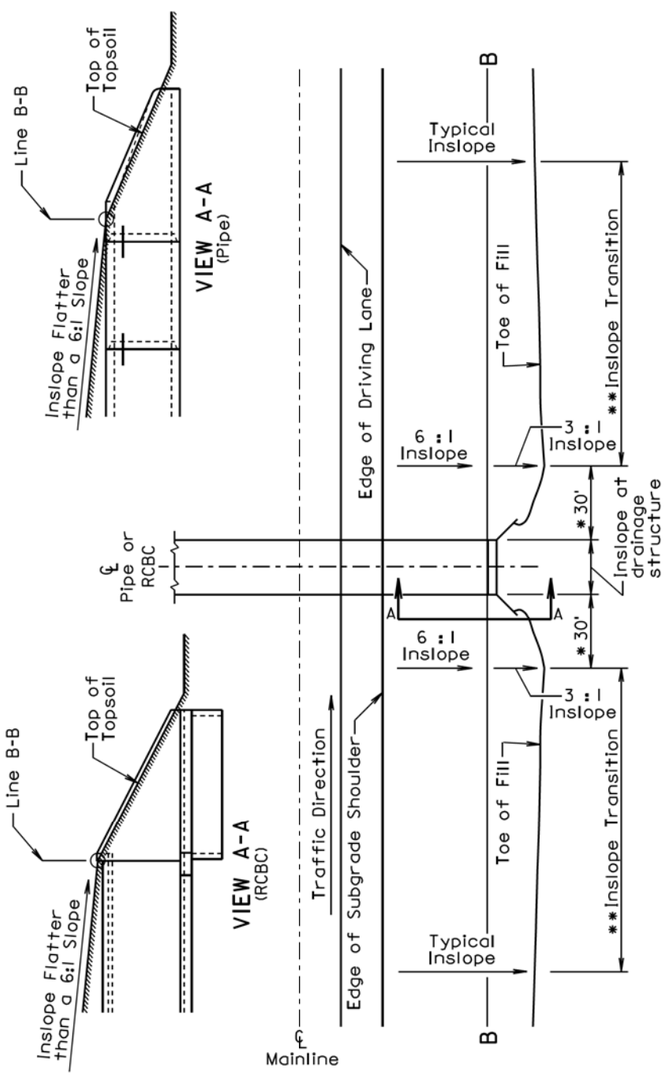

TYPE 2 INSLOPE TRANSITION

GENERAL NOTES:

This Type 2 Inslope Transition is used when the specified inslope at the pipe or RCBC is flatter than a 6:1 slope.

Line B-B represents the clear zone line, the location where soil intercepts the parapet on an RCBC, the location where the soil intercepts the top of the pipe adjacent to the opening of the pipe end section, or may represent a change in slope.

* Transition from Inslope at drainage structure to a 6 :1 inslope and 3:1 inslope.

** Transition from typical inslope to the inslopes adjacent to the drainage structure. Within the clear zone (area from edge of subgrade shoulder to line B-B) use 100' length for each 1:1 slope change. Example: transition from a 4:1 to a 6:1 would require a 200' length transition. The typical inslope outside of the clear zone shall be transitioned to a 3:1 inslope within the transition length necessary for the transition within the clear zone.

February 14, 2011

Published Date: 3rd Qtr. 2016

SDDOT

INSLOPE TRANSITIONS AT PIPE CULVERTS OR REINFORCED CONCRETE BOX CULVERTS

PLATE NUMBER 120.05

Sheet 2 of 2

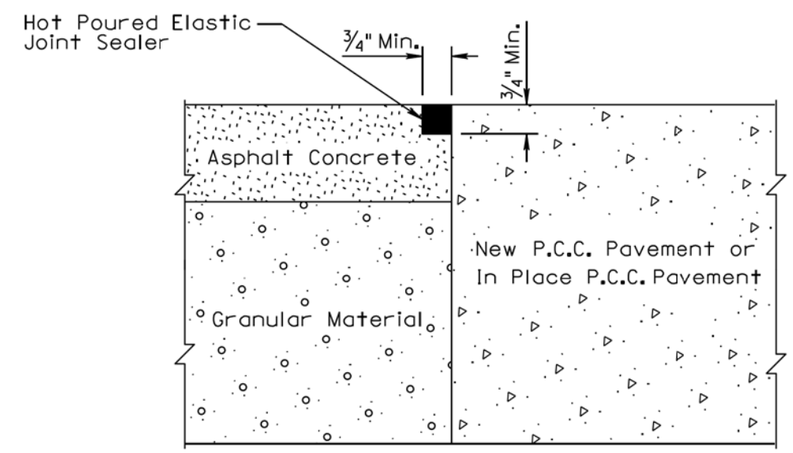

March 31, 2000

Published Date: 3rd Qtr. 2016

SDDOT

ASPHALT CONCRETE SHOULDER JOINT ADJACENT TO PCC PAVEMENT

PLATE NUMBER 320.15

Sheet 1 of 1

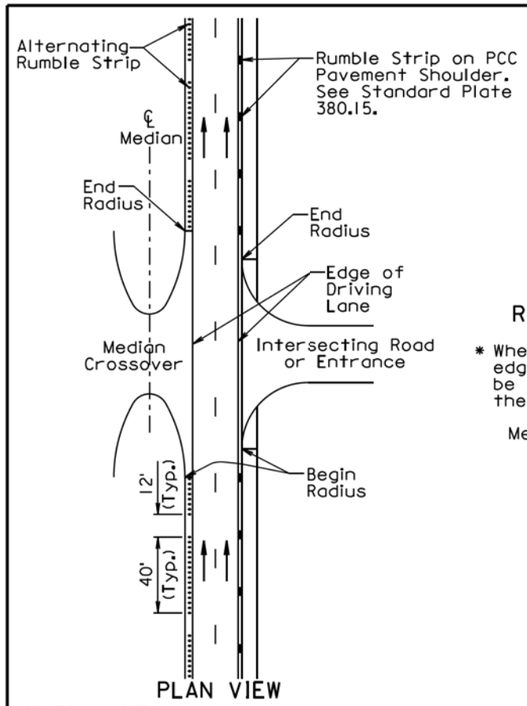

PLAN VIEW

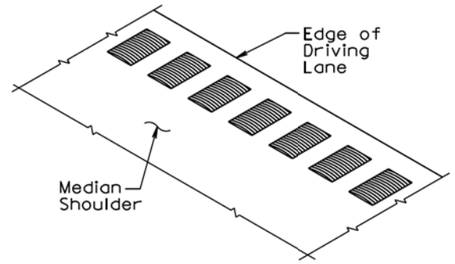

PERSPECTIVE OF TYPICAL RUMBLE STRIP IN ASPHALT CONCRETE

* When PCC pavement width from centerline to edge of pavement is 12', the rumble strip may be placed a maximum of 2' from the edge of the driving lane.

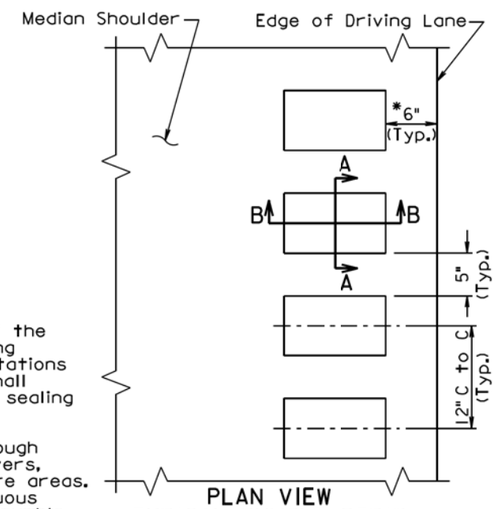

PLAN VIEW
TYPICAL RUMBLE STRIP IN ASPHALT CONCRETE

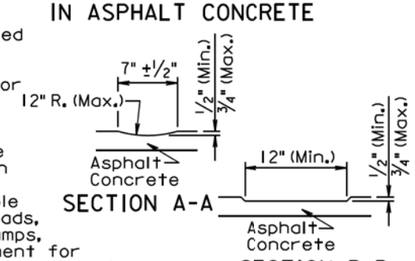

SECTION A-A

SECTION B-B

GENERAL NOTES:

A rumble strip shall be constructed on all of the asphalt concrete median shoulders by grinding alternating patterns of 40' continuous indentations in the asphalt concrete. The rumble strip shall receive a flush seal with the shoulder flush sealing or asphalt surface treatment.

A rumble strip shall not be constructed through intersecting roads, entrances, median crossovers, entrance ramps, exit ramps, turnouts, and gore areas. The lengths of the 40' segments with continuous indentations and the 12' segments without a rumble strip adjacent to the intersecting roads, entrances, median crossovers, entrance ramps, exit ramps, turnouts, and gore areas shall be adjusted as approved by the Engineer.

Prior to constructing the rumble strip the Contractor shall submit to the Engineer, for approval, the proposed method of constructing the rumble strip.

Measurement of the rumble strip in asphalt concrete shall be to the nearest 0.1 of a mile for each median shoulder. Measurement and payment of the rumble strip shall include the 12' long segments without rumble strips and the segments adjacent to intersecting roads, entrances, median crossovers, entrance ramps, exit ramps, turnouts, and gore areas without rumble strips. Payment for constructing the rumble strip shall be at the contract unit price per mile for "Grind 12" Rumble Strip or Stripe in Asphalt Concrete".

June 26, 2011

Published Date: 3rd Qtr. 2016	SDDOT	12" RUMBLE STRIP IN ASPHALT CONCRETE ON DIVIDED HIGHWAY MEDIAN SHOULDER	PLATE NUMBER 320.26
			Sheet 1 of 1

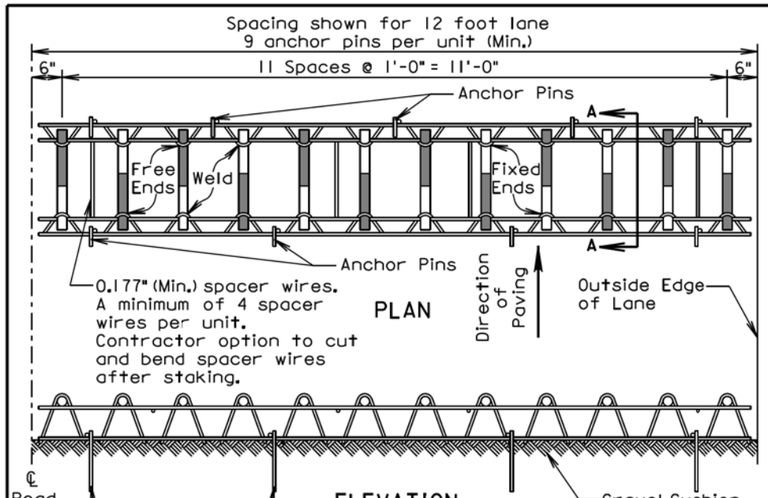

PLAN

ELEVATION
(One Side Rail)

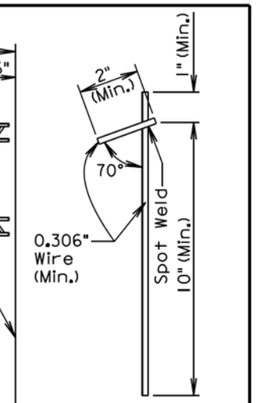

TYPICAL ANCHOR PIN

PAVEMENT THICKNESS	EPOXY COATED DOWEL BAR SIZE	HEIGHT TO CENTER
7" to 7½"	1" × 18"	3.0"
8" to 10"	1¼" × 18"	4.0"
10½" to 12"	1½" × 18"	5.0"

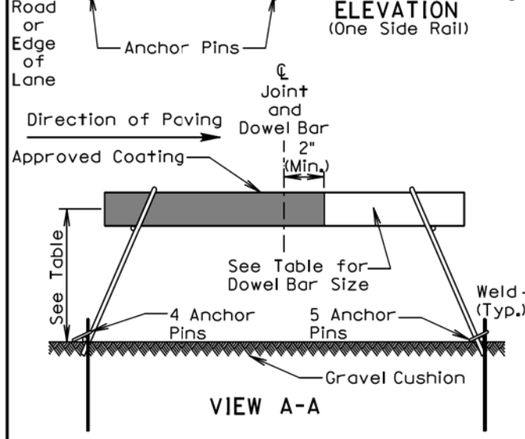

VIEW A-A

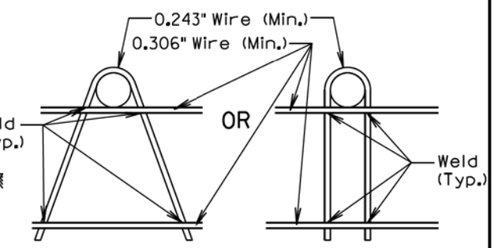

Loops may be installed on either inside or outside of rails

SIDE RAIL DETAIL OPTIONS

GENERAL NOTES:

Longitudinal joint tie bars shall be placed a minimum of 15 inches from the transverse contraction joint.

Centerline of individual dowel bars shall be parallel to top of subgrade ±1/8 inch in 18 inches and to all other dowel bars in the assembly ±1/16 inch in 18 inches.

Centerline of individual dowel bars shall be parallel to the centerline of the roadway ±1/2 inch in 18 inches.

The transverse contraction joints shall be sawed perpendicular to the centerline of the roadway and the dowel bars shall be centered on the sawed joint ±1 inch.

Supporting devices as shown on this sheet, or equivalent as approved by the Engineer, shall be used to maintain proper horizontal and vertical alignment of the dowel bars.

August 30, 2013

Published Date: 3rd Qtr. 2016	SDDOT	PCC PAVEMENT DOWEL BAR ASSEMBLY FOR TRANSVERSE CONTRACTION JOINTS 12 Bar Assembly on Granular Base Material	PLATE NUMBER 380.01
			Sheet 1 of 1

PLOT SCALE - 1:200
PLOT NAME - 50
FILE - ...\STDPLATEPAGESEED - 5.DGN
PLOTTED FROM - TRPR16032

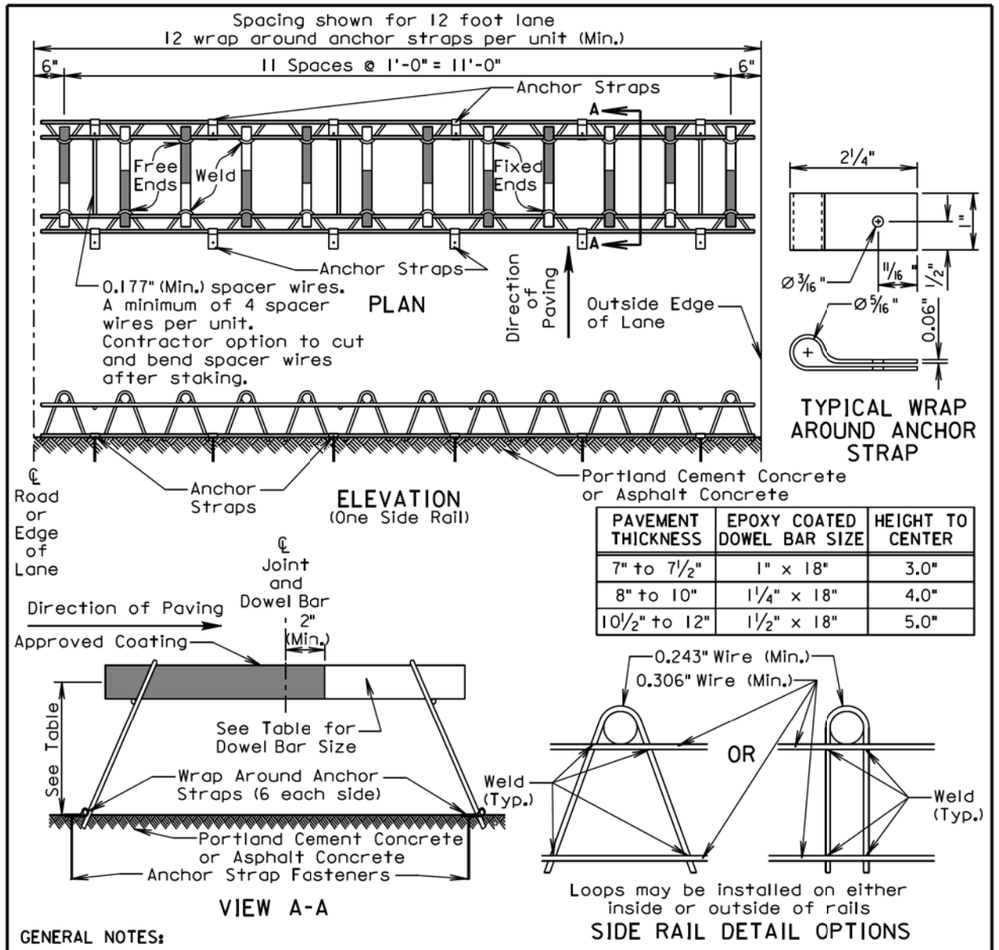

PAVEMENT THICKNESS	EPOXY COATED DOWEL BAR SIZE	HEIGHT TO CENTER
7" to 7 1/2"	1" x 18"	3.0"
8" to 10"	1 1/4" x 18"	4.0"
10 1/2" to 12"	1 1/2" x 18"	5.0"

GENERAL NOTES:

Longitudinal joint tie bars shall be placed a minimum of 15 inches from the transverse contraction joint.

Centerline of individual dowel bars shall be parallel to top of subgrade ±1/8 inch in 18 inches and to all other dowel bars in the assembly ±1/16 inch in 18 inches.

Centerline of individual dowel bars shall be parallel to the centerline of the roadway ±1/2 inch in 18 inches.

The transverse contraction joints shall be sawed perpendicular to the centerline of the roadway and the dowel bars shall be centered on the sawed joint ±1 inch.

Supporting devices as shown on this sheet, or equivalent as approved by the Engineer, shall be used to maintain proper horizontal and vertical alignment of the dowel bars.

Appropriate anchor strap fasteners shall be used to prevent movement of the dowel bar assemblies during the paving operation.

August 30, 2013

Published Date: 3rd Qtr. 2016	SDDOT	PCC PAVEMENT DOWEL BAR ASSEMBLY FOR TRANSVERSE CONTRACTION JOINTS 12 Bar Assembly on Hard Surfaced Base Material	PLATE NUMBER 380.02 Sheet 1 of 1

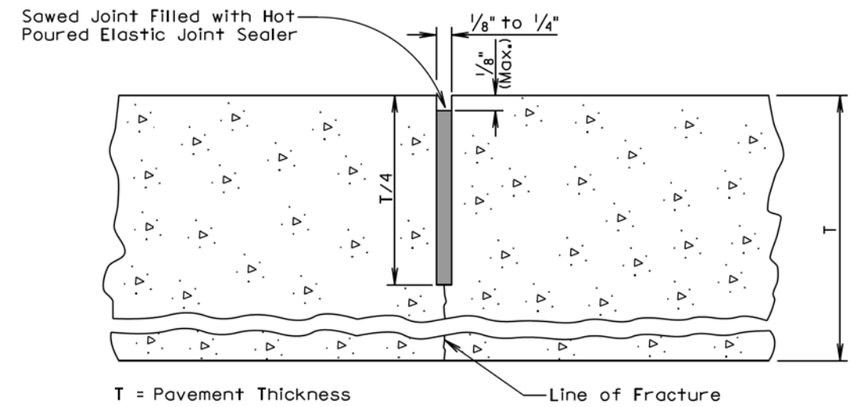

GENERAL NOTES:

If an early entrance sawcut does not develop the full transverse crack, then the saw cut to control cracking shall be a minimum of 1/4 the thickness of the pavement.

All hot poured elastic joint sealer material spilled on the surface of the concrete pavement shall be removed as soon as the material has cooled. The extent of removal of material shall be to the satisfaction of the Engineer. All costs for removal of the spilled joint sealer material shall be borne by the Contractor.

June 26, 2015

Published Date: 3rd Qtr. 2016	SDDOT	PCC PAVEMENT TRANSVERSE CONTRACTION JOINT WITH OR WITHOUT DOWEL BAR ASSEMBLY	PLATE NUMBER 380.05 Sheet 1 of 1

PLOT SCALE - 1:200
PLOTTED FROM - TRPR16032
PLOT NAME - 51
FILE - ...\STDPLATEPAGESEED - 5A.DGN

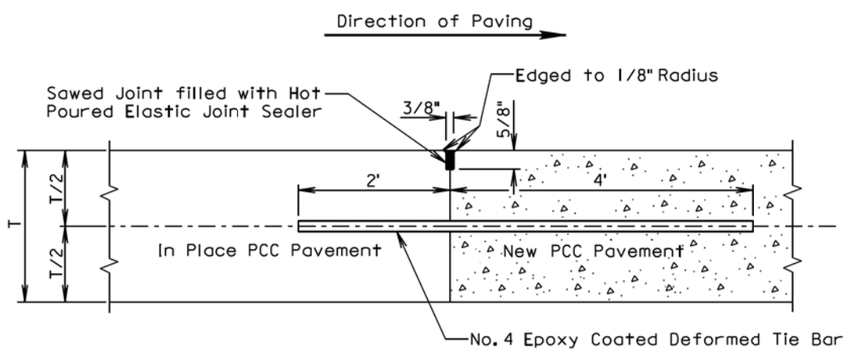

T = Pavement Thickness

GENERAL NOTES:

No. 4 epoxy coated deformed tie bars shall be spaced 12 inches center to center and shall be a minimum of 3 inches and a maximum of 6 inches from the pavement edges.

The minimum distance between a transverse construction joint with tie bars and an adjacent transverse contraction joint shall be 5 feet.

When a transverse construction joint is made, paving will not be allowed in this area for 12 hours.

A transverse construction joint may be placed in lieu of the transverse contraction joint when shown in the plans.

The term "In Place PCC Pavement" in the above drawing indicates that the in place PCC pavement was placed on the current project.

June 26, 2013

Published Date: 3rd Qtr. 2016	SDDOT	PCC PAVEMENT MID PANEL TRANSVERSE CONSTRUCTION JOINT	PLATE NUMBER 380.07 Sheet 1 of 1

DETAIL A
TRANSVERSE CONSTRUCTION JOINT WITH TIE BARS

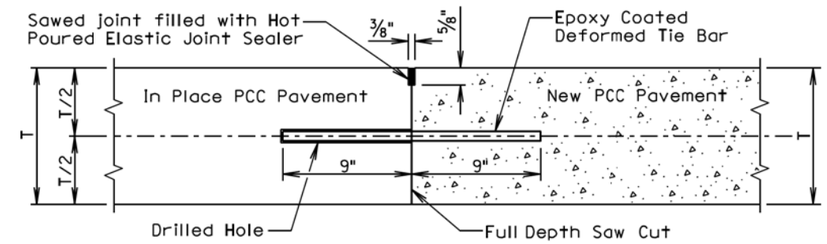

T = In Place PCC Pavement and New PCC Pavement Thickness

GENERAL NOTES:

The term "In Place PCC Pavement" in the above drawing indicates that the in place PCC pavement was placed on a previous project.

See sheet 2 of 2 of this standard plate to determine if Detail A shall be used.

The tie bars shall be embedded a minimum depth of 9 inches into the in place PCC pavement and anchored with an epoxy resin adhesive.

No. 9 epoxy coated deformed tie bars shall be used in 10 inch thickness and less PCC Pavement and No. 11 epoxy coated deformed tie bars shall be used in 10.5 inch thickness and greater PCC Pavement. The tie bar spacing shall be 18 inches center to center and shall be a minimum of 3 inches and a maximum of 9 inches from the pavement edges.

DETAIL B
TRANSVERSE CONSTRUCTION JOINT WITH DOWEL BARS

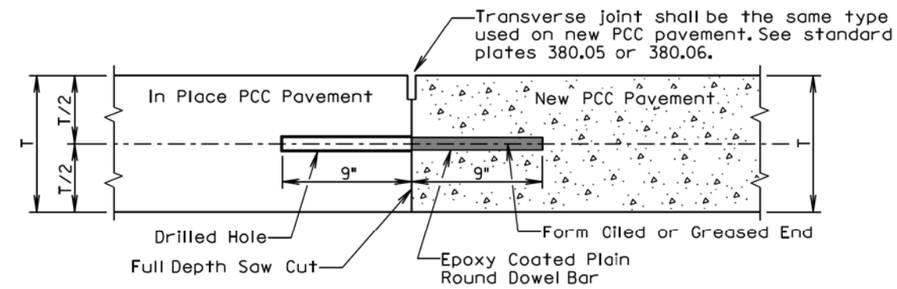

T = In Place PCC Pavement and New PCC Pavement Thickness

GENERAL NOTES:

The term "In Place PCC Pavement" in the above drawing indicates that the in place PCC pavement was placed on a previous project or current project.

See sheet 2 of 2 of this standard plate to determine if Detail B shall be used.

The plain round dowel bars shall be embedded a minimum depth of 9 inches into the in place PCC pavement and anchored with an epoxy resin adhesive.

The epoxy coated plain round dowel bar size, number, and spacing shall be the same as detailed on the corresponding dowel bar assembly standard plate (380.01, 380.02, 380.03, or 380.04). The epoxy coated plain round dowel bars shall be a minimum of 3 inches and a maximum of 6 inches from the pavement edges.

September 6, 2013

Published Date: 3rd Qtr. 2016	SDDOT	PCC PAVEMENT TRANSVERSE CONSTRUCTION JOINTS WITH TIE BARS OR DOWEL BARS	PLATE NUMBER 380.08 Sheet 1 of 2

PLOT SCALE - 1:200
PLOT NAME - 52
FILE - ...\STDPLATEPAGESEED - 6.DGN
PLOTTED FROM - TRPR16032

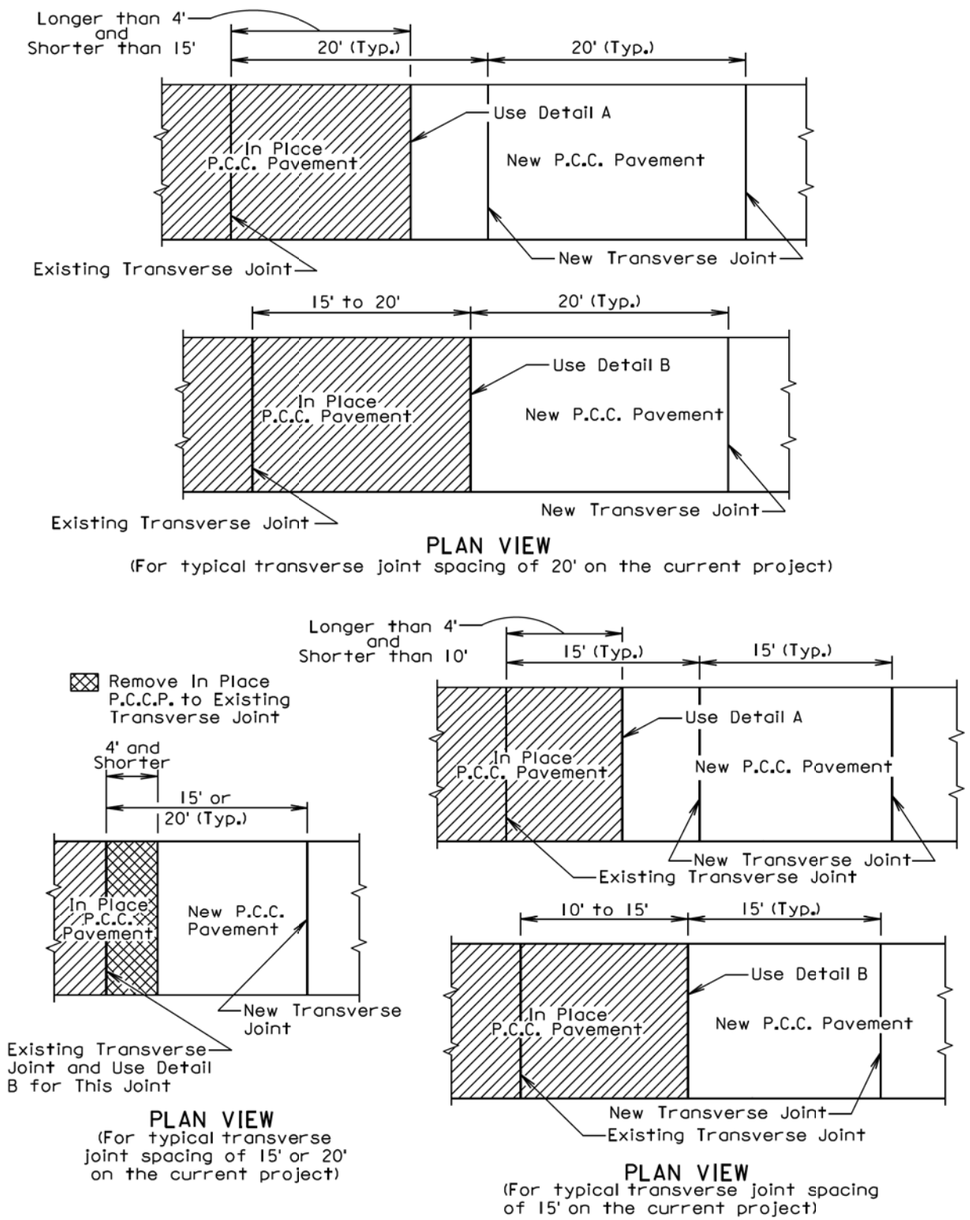

September 6, 2013

Published Date: 3rd Qtr. 2016

SDDOT

PCC PAVEMENT TRANSVERSE CONSTRUCTION JOINTS WITH TIE BARS OR DOWEL BARS

PLATE NUMBER 380.08

Sheet 2 of 2

LONGITUDINAL CONSTRUCTION JOINT WITH TIE BARS

(DRILLED IN BARS)

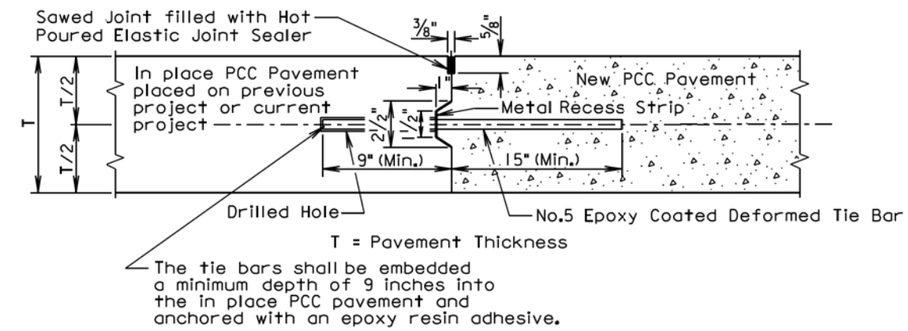

LONGITUDINAL CONSTRUCTION JOINT WITH TIE BARS

(INSERTED OR FORMED IN BARS)

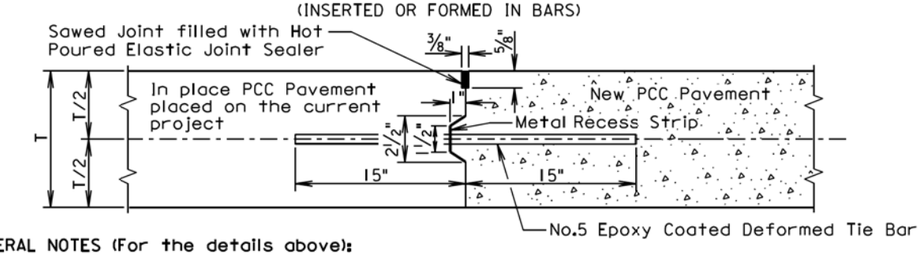

GENERAL NOTES (For the details above):

The epoxy coated deformed tie bars shall be spaced in accordance with the following tables:

Tie Bar Spacing 48" Maximum	
Transverse Contraction Joint Spacing	Number of Tie Bars
6.5' to 10'	2
10.5' to 14'	3
14.5' to 18'	4
18.5' to 22'	5

Tie Bar Spacing 30" Maximum	
Transverse Contraction Joint Spacing	Number of Tie Bars
5' to 7'	2
7.5' to 9.5'	3
10' to 12'	4
12.5' to 14.5'	5
15' to 17'	6
17.5' to 19.5'	7
20' to 22'	8

The tie bars shall be placed a minimum of 15 inches from transverse contraction joints.

The required number of tie bars as shown in the table shall be uniformly spaced within each panel. The uniformly spaced tie bars shall be spaced a maximum of 48 inches center to center for a female keyway and shall be spaced a maximum of 30 inches center to center for a vertical face and male keyway. The maximum tie bar spacing shall apply to tie bars within each panel.

The keyway illustrated in the above details depict a female keyway.

The keyway is optional and is not required. When concrete pavement is formed and a keyway is provided, a metal recess strip shall be used. When concrete pavement is slip formed, a metal recess strip is not required.

August 31, 2013

Published Date: 3rd Qtr. 2016

SDDOT

PCC PAVEMENT LONGITUDINAL JOINTS WITH TIE BARS

PLATE NUMBER 380.10

Sheet 1 of 2

PLOT SCALE - 1:200
PLOT NAME - 53
FILE - ...\STDPLATEPAGESEED - 7.DGN
PLOTTED FROM - TRPR16032

SAWED LONGITUDINAL JOINT WITH TIE BARS
(POURED MONOLITHICALLY)

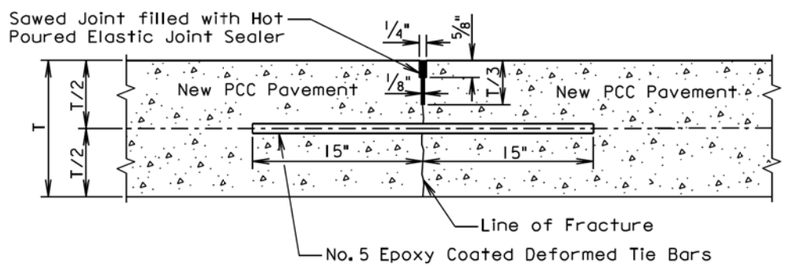

T = Pavement Thickness

GENERAL NOTES (For the detail above):

The epoxy coated deformed tie bars shall be spaced in accordance with the following table:

Tie Bar Spacing 48" Maximum	
Transverse Contraction Joint Spacing	Number of Tie Bars
6.5' to 10'	2
10.5' to 14'	3
14.5' to 18'	4
18.5' to 22'	5

The tie bars shall be placed a minimum of 15 inches from the transverse contraction joints.

The required number of tie bars as shown in the table shall be uniformly spaced within each panel with a maximum space of 48 inches center to center. The maximum tie bar spacing shall apply to tie bars within each panel.

The first saw cut to control cracking shall be a minimum of 1/3 the thickness of the pavement. Additional sawing for widening the saw cut to provide the width for the installation of the hot poured elastic joint sealer is necessary.

August 31, 2013

Published Date: 3rd Qtr. 2016 | SDDOT | PCC PAVEMENT LONGITUDINAL JOINTS WITH TIE BARS | PLATE NUMBER 380.10 | Sheet 2 of 2

LONGITUDINAL CONSTRUCTION JOINT WITH TIE BARS
(Individually Formed)

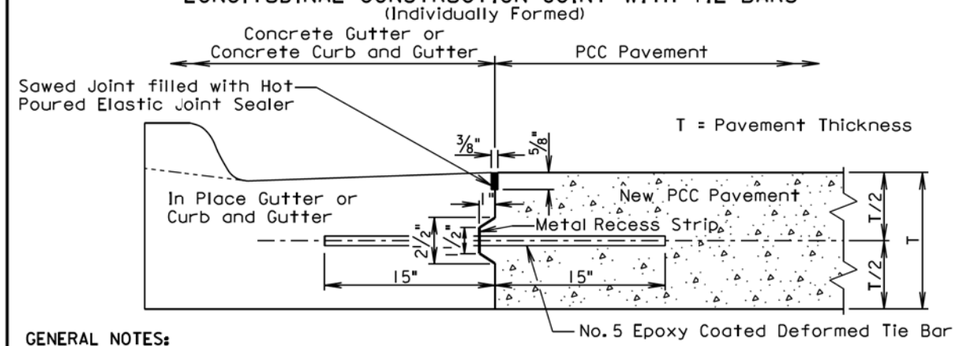

GENERAL NOTES:

No. 5 epoxy coated deformed tie bars shall be spaced 48 inches center to center. The keyway shown above is a female keyway.

The tie bars shall be placed a minimum of 15 inches from existing transverse contraction joints.

The keyway is optional and is not required. When concrete pavement is formed and a keyway is provided, a metal recess strip shall be used. When concrete pavement is slip formed, a metal recess strip is not required.

The transverse contraction joints in the concrete gutter or concrete curb and gutter shall be placed at each mainline PCC pavement transverse contraction joint. The transverse contraction joints in the concrete gutter or the concrete curb and gutter shall be 1 1/2 inches deep if formed in fresh concrete using a suitable grooving tool. If a saw is used to cut the transverse contraction joints, then the depth of the joint shall be at least 1/4 the thickness of the concrete gutter or concrete curb and gutter.

The term "In Place Gutter or Curb and Gutter" in the above drawing indicates that the in place concrete gutter and concrete curb and gutter was placed on the current project.

POURED MONOLITHICALLY

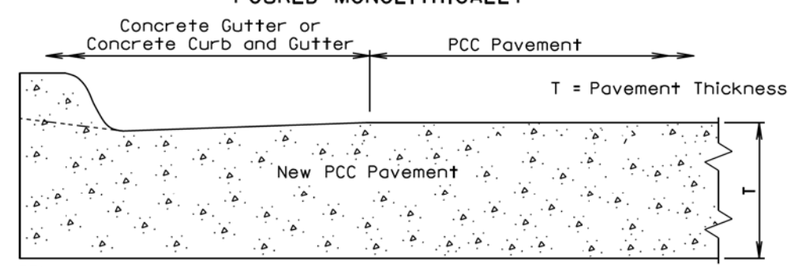

GENERAL NOTES:

The mainline curb and gutter may be placed monolithically with the PCC pavement if the mainline lane width is less than or equal to 12 feet. If this method of construction is used, the tie bars and the sawed joint between the curb and gutter and the PCC pavement shall be eliminated.

The gutter or curb and gutter shall be sawed transversely at each mainline transverse contraction joint. The transverse contraction joints in the gutter or curb and gutter shall be sawed and sealed same as the transverse contraction joints in the PCC pavement.

The slope of the gutter shall be the slope designated for the type of gutter or curb and gutter to be constructed. The bottom slope of the gutter or curb and gutter shall be constructed at the same slope as the mainline concrete pavement.

June 26, 2013

Published Date: 3rd Qtr. 2016 | SDDOT | PCC PAVEMENT LONGITUDINAL CONSTRUCTION JOINTS WITH CONCRETE GUTTER OR CONCRETE CURB AND GUTTER | PLATE NUMBER 380.11 | Sheet 1 of 1

PLOT SCALE - 1:200
PLOT NAME - 54
FILE - ...\STDPLATEPAGESEED - 8.DGN
-PLOTTED FROM - TRPR16032

LONGITUDINAL CONSTRUCTION JOINT WITHOUT TIE BARS

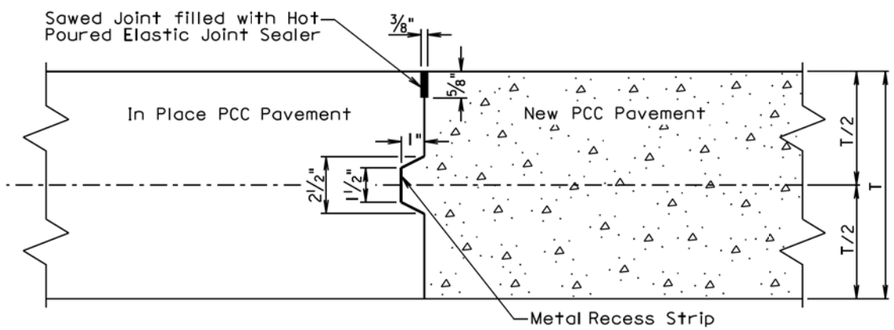

T = Pavement Thickness

GENERAL NOTES:

When concrete pavement is formed and a keyway is provided, a metal recess strip shall be used. When concrete pavement is slip formed, a metal recess strip is not required.

The term "In Place PCC Pavement" in the above drawing indicates that the in place PCC pavement was placed on the current project.

LONGITUDINAL CONSTRUCTION JOINT WITHOUT TIE BARS

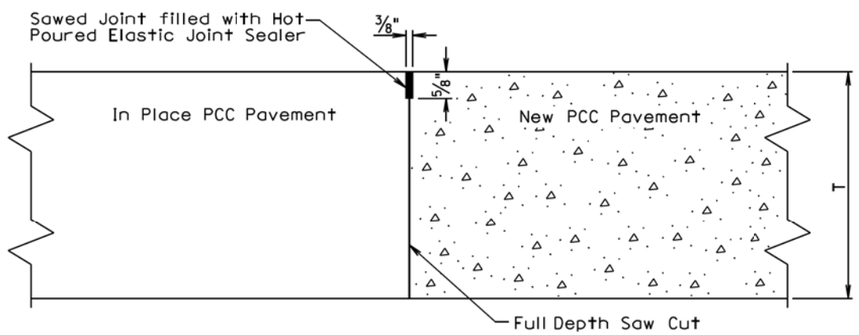

T = Pavement Thickness

GENERAL NOTE:

The term "In Place PCC Pavement" in the above drawing indicates that the in place PCC pavement was placed on a previous project.

September 14, 2001

Published Date: 3rd Qtr. 2016	SDDOT	PCC PAVEMENT LONGITUDINAL JOINTS WITHOUT TIE BARS	PLATE NUMBER 380.12
			Sheet 1 of 2

SAWED LONGITUDINAL JOINT WITHOUT TIE BARS

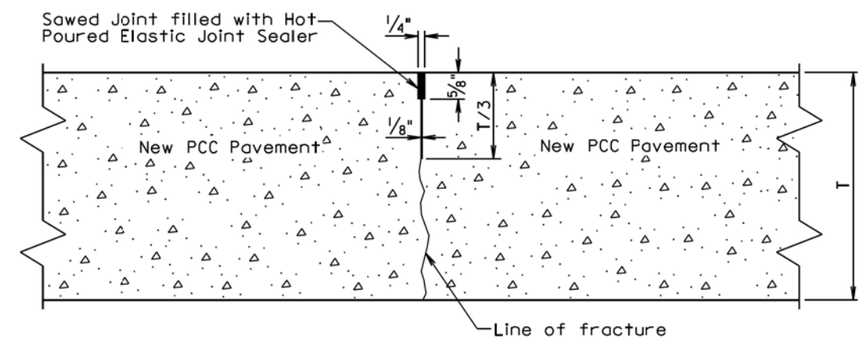

T = Pavement Thickness

GENERAL NOTE:

The first saw cut to control cracking shall be a minimum of 1/3 the thickness of the pavement. Additional sawing for widening the saw cut to provide the width for the installation of the hot poured elastic joint sealer will be necessary.

September 14, 2001

Published Date: 3rd Qtr. 2016	SDDOT	PCC PAVEMENT LONGITUDINAL JOINTS WITHOUT TIE BARS	PLATE NUMBER 380.12
			Sheet 2 of 2

PLOT SCALE - 1:200
PLOT NAME - 55
FILE -...\STDPLATEPAGESEED - 9.DGN
-PLOTTED FROM - TRPR16032

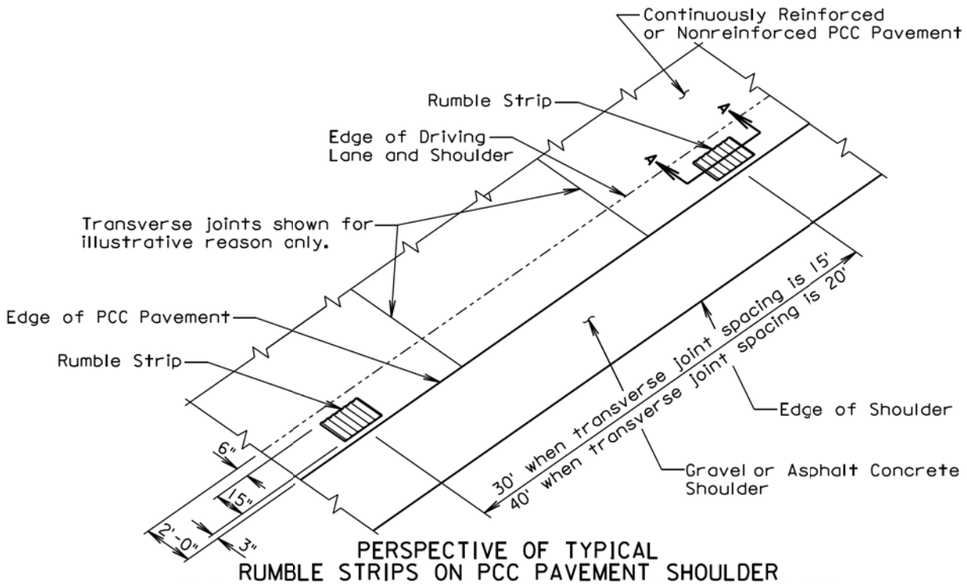

PERSPECTIVE OF TYPICAL
RUMBLE STRIPS ON PCC PAVEMENT SHOULDER
ADJACENT TO GRAVEL OR ASPHALT CONCRETE SHOULDER

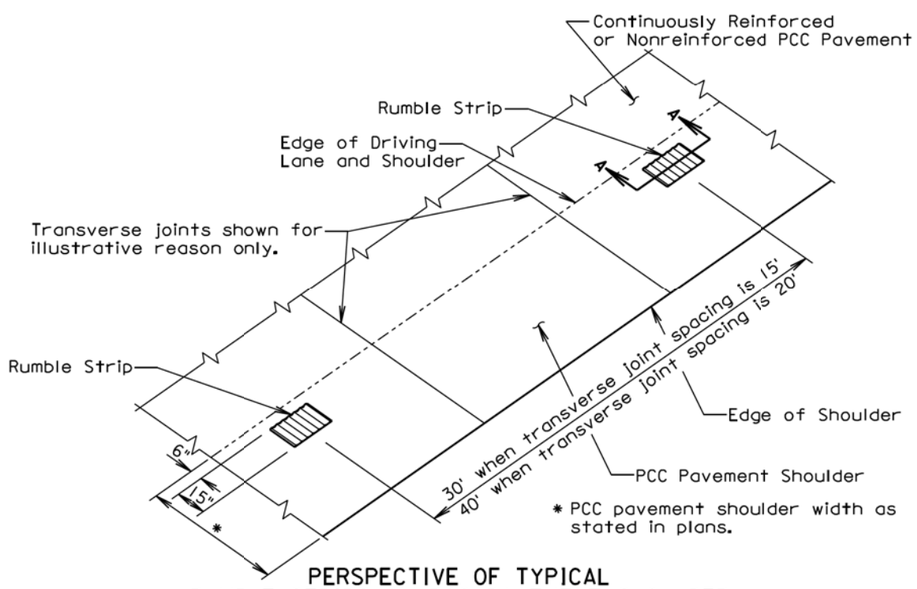

PERSPECTIVE OF TYPICAL
RUMBLE STRIPS ON PCC PAVEMENT SHOULDER

August 31, 2013

Published Date: 3rd Qtr. 2016	SDDOT	RUMBLE STRIP ON PCC PAVEMENT SHOULDER	PLATE NUMBER 380.15
			Sheet 1 of 2

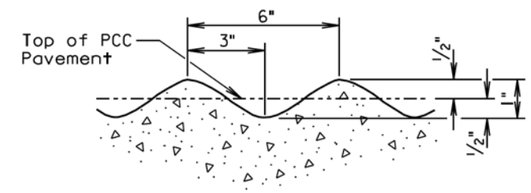

DETAIL B

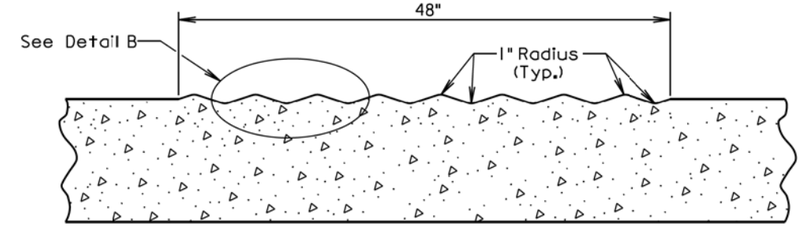

SECTION A-A

GENERAL NOTES:

The rumble strips shall be evenly spaced and shall not coincide with any transverse contraction joints.

The rumble strips shall NOT be placed along areas adjacent to entrance ramps, exit ramps, and gore areas.

Payment for constructing the PCC Pavement Rumble Strips shall be incidental to the contract unit price per square yard for the corresponding PCC Pavement bid item.

August 31, 2013

Published Date: 3rd Qtr. 2016	SDDOT	RUMBLE STRIP ON PCC PAVEMENT SHOULDER	PLATE NUMBER 380.15
			Sheet 2 of 2

PLOT SCALE - 1:200
PLOT NAME - 56
FILE - ...\STDPLATEPAGESEED - 10.DGN
-PLOTTED FROM - TRPR16032

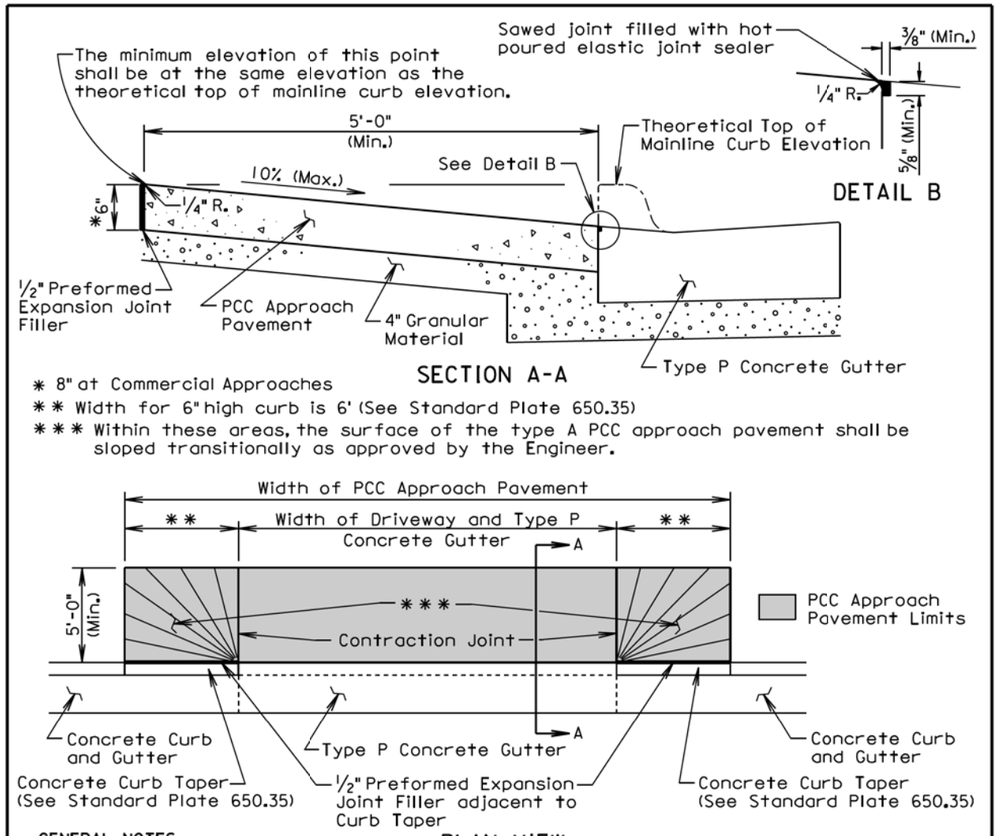

* 8" at Commercial Approaches

** Width for 6" high curb is 6' (See Standard Plate 650.35)

*** Within these areas, the surface of the type A PCC approach pavement shall be sloped transitionally as approved by the Engineer.

GENERAL NOTES:

The concrete for the type A PCC approach pavement and adjacent driveway shall comply with the requirements of the Specifications for class M6 concrete unless otherwise stated in the plans.

Contraction joints in the type A PCC approach pavement shall be 1½ inches deep if formed in the fresh concrete using a suitable grooving tool. If a saw is used to cut the contraction joints, then the depth of the joint shall be at least ¼ the thickness of the approach pavement. Additional contraction joints not shown in the Plan View shall be spaced as follows:

One joint at the center of the approach for driveways 16' to 24' wide.
Two joints spaced at equal intervals for driveways greater than 24' to 40' wide.

All costs for furnishing and placing the type A PCC approach pavement and constructing the expansion and contraction joints including labor, equipment, and materials including the earthen backfill shall be incidental to the contract unit price per square yard for the corresponding PCC Approach Pavement bid item.

All costs for excavation required for placing the type A PCC approach pavement and granular material shall be incidental to the contract unit price per cubic yard for "Unclassified Excavation". All costs for furnishing and placing the granular material shall be incidental to the contract unit price per ton for the corresponding granular material bid item.

June 26, 2015

Published Date: 3rd Qtr. 2016	SDDOT	TYPE A PCC APPROACH PAVEMENT	PLATE NUMBER 380.40
			Sheet 1 of 1

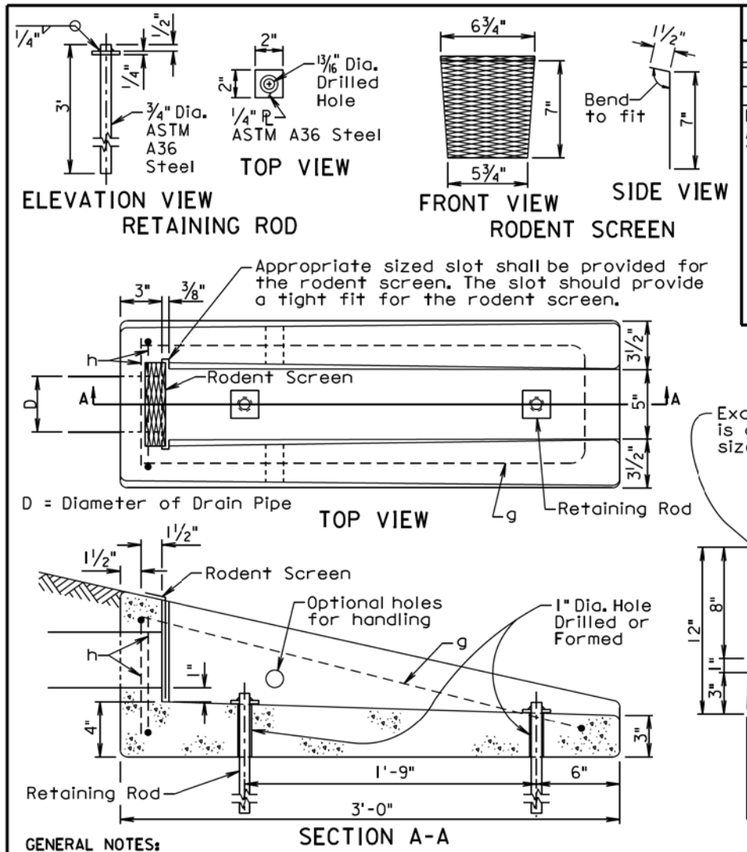

REINFORCING SCHEDULE				
MK.	No.	Size	Length	Type
g	1	4	6'-3"	17
h	2	4	2'-4"	17

NOTE:
All dimensions are out to out of bars.

Bending Details

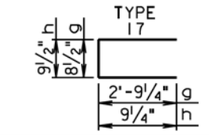

GENERAL NOTES:

The concrete shall be Class M6. The concrete shall conform to the requirements of Section 462 of the Specifications. It is estimated that each unit weighs approximately 210 pounds.

All reinforcing steel shall conform to ASTM A615 Grade 60 and shall be epoxy coated. The reinforcing steel shall be securely retained to prevent displacement during placement of concrete. It is estimated that 7.3 pounds of reinforcing steel is required for each unit.

The pipe shall be placed in the concrete headwall with the pipe end flush with the concrete surface adjacent to the rodent screen.

The rodent screen shall be galvanized 13 Ga. steel with a diamond shaped flattened mesh pattern. The size shall be ½". The size refers to the measurement across the smallest diamond shaped opening measured from the centers of the wires.

The retaining rod shall be galvanized in accordance with ASTM A123 after all shop welding has been completed.

The drawing indicates using ½" fillets; however, ¾" chamfers may be substituted for the ½" fillets.

All costs for furnishing and installing the concrete headwall including equipment, labor, and materials including concrete, reinforcing steel, retaining rods, and rodent screen shall be incidental to the contract unit price per each for "Precast Concrete Headwall for Drain".

June 26, 2015

Published Date: 3rd Qtr. 2016	SDDOT	PRECAST CONCRETE HEADWALL FOR DRAIN	PLATE NUMBER 430.50
			Sheet 1 of 1

PLOT SCALE - 1:200
PLOT NAME - 57
FILE ....\STDPLATEPAGESEED - 10A.DGN
-PLOTTED FROM - TRPR16032

GENERAL NOTES:

Either flanged channel steel posts or S3x5.7 steel I beam posts shall be used, but post type shall be consistent thoughout the project. The S3x5.7 Steel I Beam post shall be used for the end posts.

All costs associated with furnishing and constructing the 3 cable guardrail anchor assembly including the concrete anchor, cable anchor bracket, compensating device, steel turnbuckle cable assembly, and necessary hardware shall be incidental to the contract unit price per each for "3 Cable Guardrail Anchor Assembly".

All costs associated with furnishing and constructing the 3 cable guardrail including posts, cable, cable splices, and hardware shall be incidental to the contract unit price per foot for "3 Cable Guardrail".

The following table and criteria shall apply to the arrangement of the Spring Cable End Assemblies (Compensation Devices) and Turnbuckle Cable End Assemblies:

LENGTH OF CABLE RUN	CRITERIA FOR ARRANGEMENT OF THE SPRING CABLE END ASSEMBLIES (COMPENSATION DEVICES) AND TURNBUCKLE CABLE END ASSEMBLIES
Less than 500'	Use turnbuckle on the approaching traffic end and compensating device on the other end of each individual cable, except in the W Beam to 3 Cable Transition where all compensating devices shall be provided at the bridge ends.
Greater than 500' to 1000'	Use compensating device on each end of each individual cable.
Greater than 1000'	Start new run by interlacing at last parallel post as shown on sheet 2 of 6.

All Compensating Devices shall be attached to the cable anchor bracket when one end of the run is attached to a bridge.

Compensating Devices must have a spring rate of 450 ± 50 pounds per inch and shall have a total available travel of 6 inches minimum.

The cable shall be retensioned after the initial 2 week pretension period in accordance with the following table:

CABLE TENSIONING SPECIFICATIONS

Temperature Range (Degree F)	-20 to -11	-10 to -1	0 to 9	10 to 19	20 to 29	30 to 39	40 to 49	50 to 59	60 to 69	70 to 79	80 to 89	90 to 99	100 to 109	110 to 120
Spring Compression (Inch)	4¼	4	3¾	3½	3¼	3	2¾	2½	2¼	2	1¾	1½	1¼	1

POST SPACING FOR HORIZONTAL CURVES

Roadway ℄ Curvature	Maximum Post Spacing (Ft)
1° and Less	16'
Greater than 1° to 8°	12'
Greater than 8° to 13°	8'
Greater than 13°	NOT ALLOWED

December 16, 2015

Published Date: 3rd Qtr. 2016

SDDOT

3 CABLE GUARDRAIL (LOW TENSION)

PLATE NUMBER 629.01

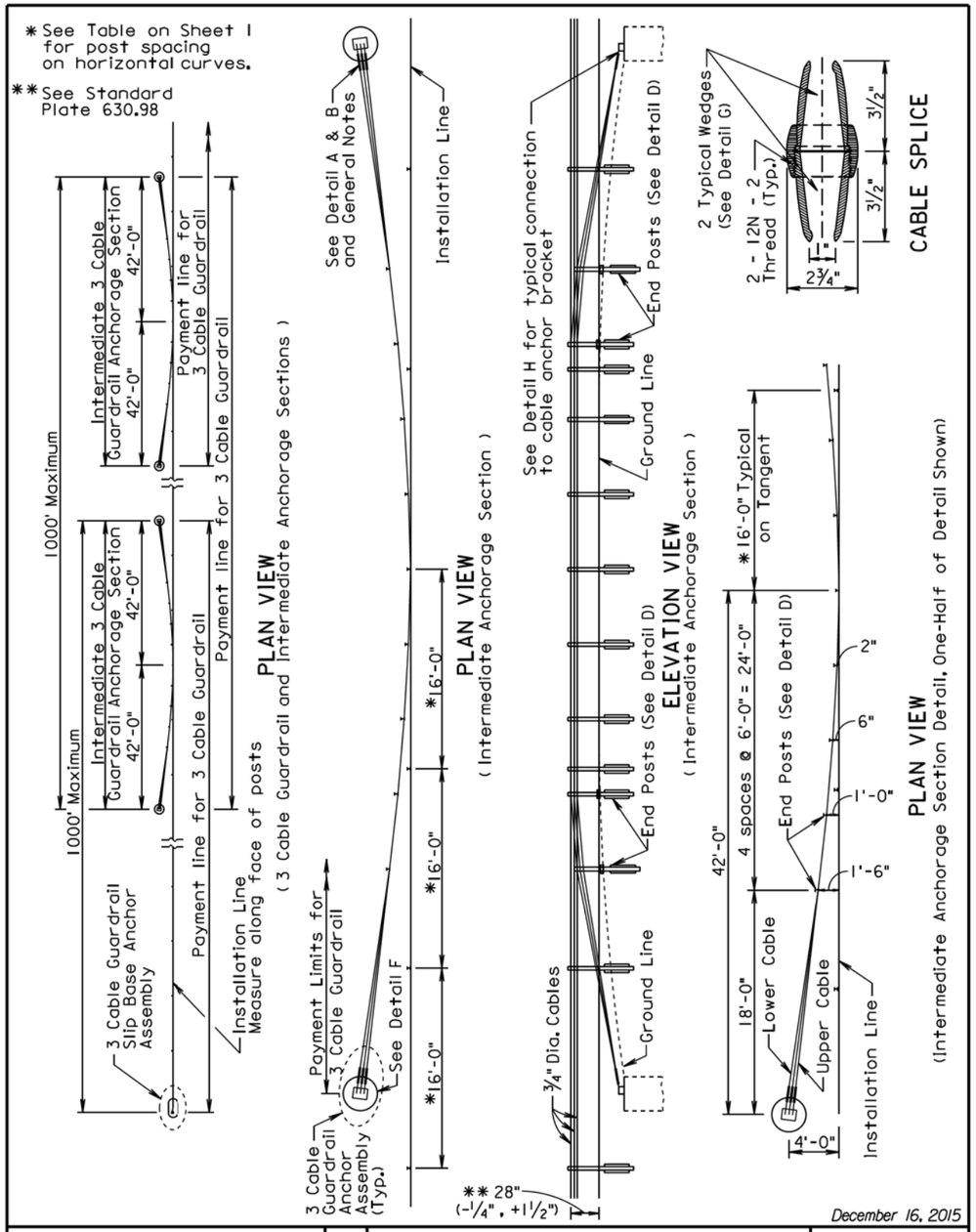

December 16, 2015

Published Date: 3rd Qtr. 2016

SDDOT

3 CABLE GUARDRAIL (LOW TENSION)

PLATE NUMBER 629.01

PLOT SCALE - 1:200
PLOTTED FROM - TRPR16032
PLOT NAME - 58
FILE - ...\STDPLATEPAGESEED - 11.DGN

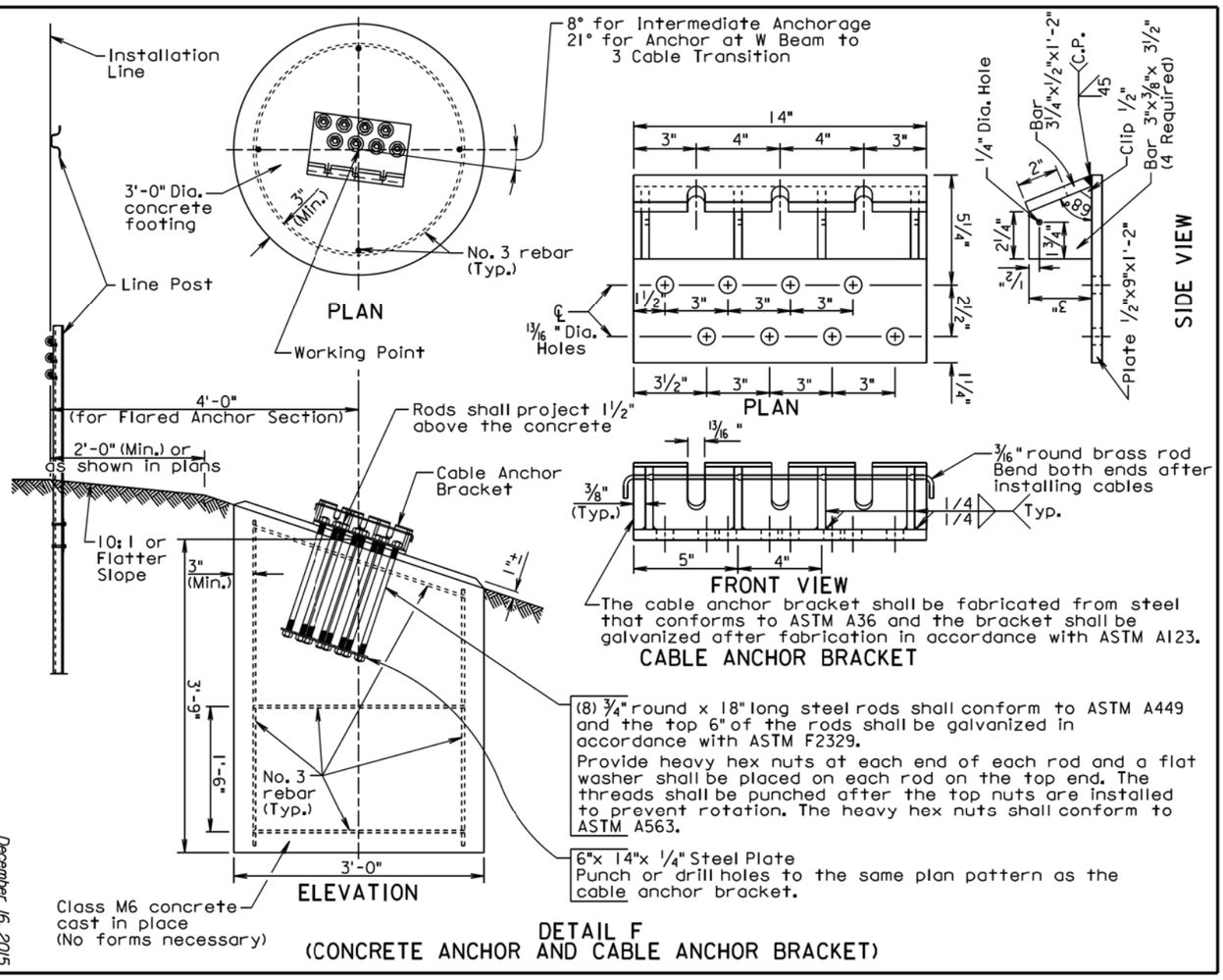

DETAIL F
(CONCRETE ANCHOR AND CABLE ANCHOR BRACKET)

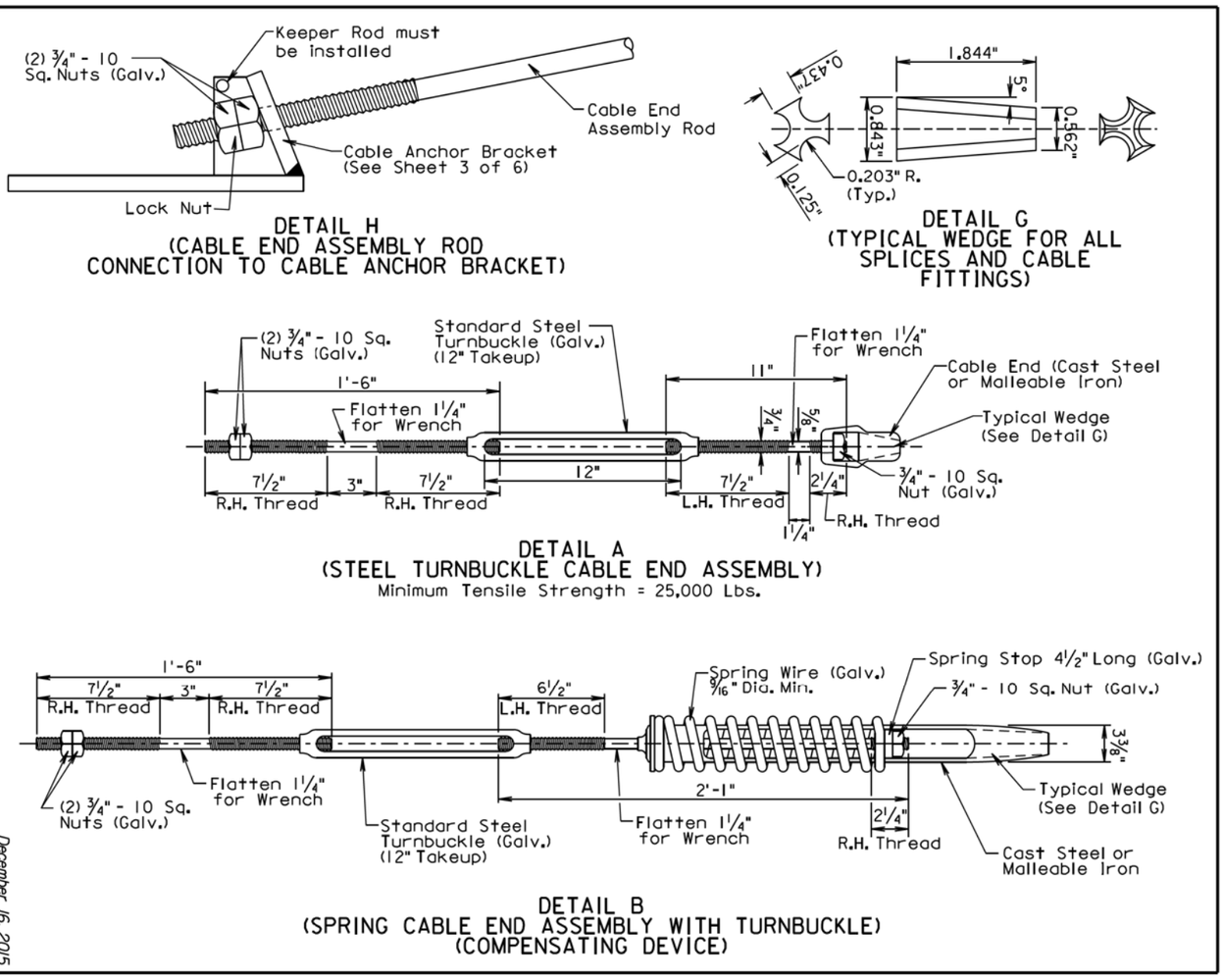

Published Date: 3rd Qtr. 2016

SDDOT

3 CABLE GUARDRAIL (LOW TENSION)

PLATE NUMBER 629.01

Sheet 3 of 6

December 16, 2015

Published Date: 3rd Qtr. 2016

SDDOT

3 CABLE GUARDRAIL (LOW TENSION)

PLATE NUMBER 629.01

Sheet 4 of 6

December 16, 2015

STATE OF SOUTH DAKOTA

PROJECT NH 0050(108)385

SHEET F72

TOTAL SHEETS F102

Plotting Date: 08/18/2016

Published Date: 3rd Qtr. 2016

SDDOT

3 CABLE GUARDRAIL (LOW TENSION)

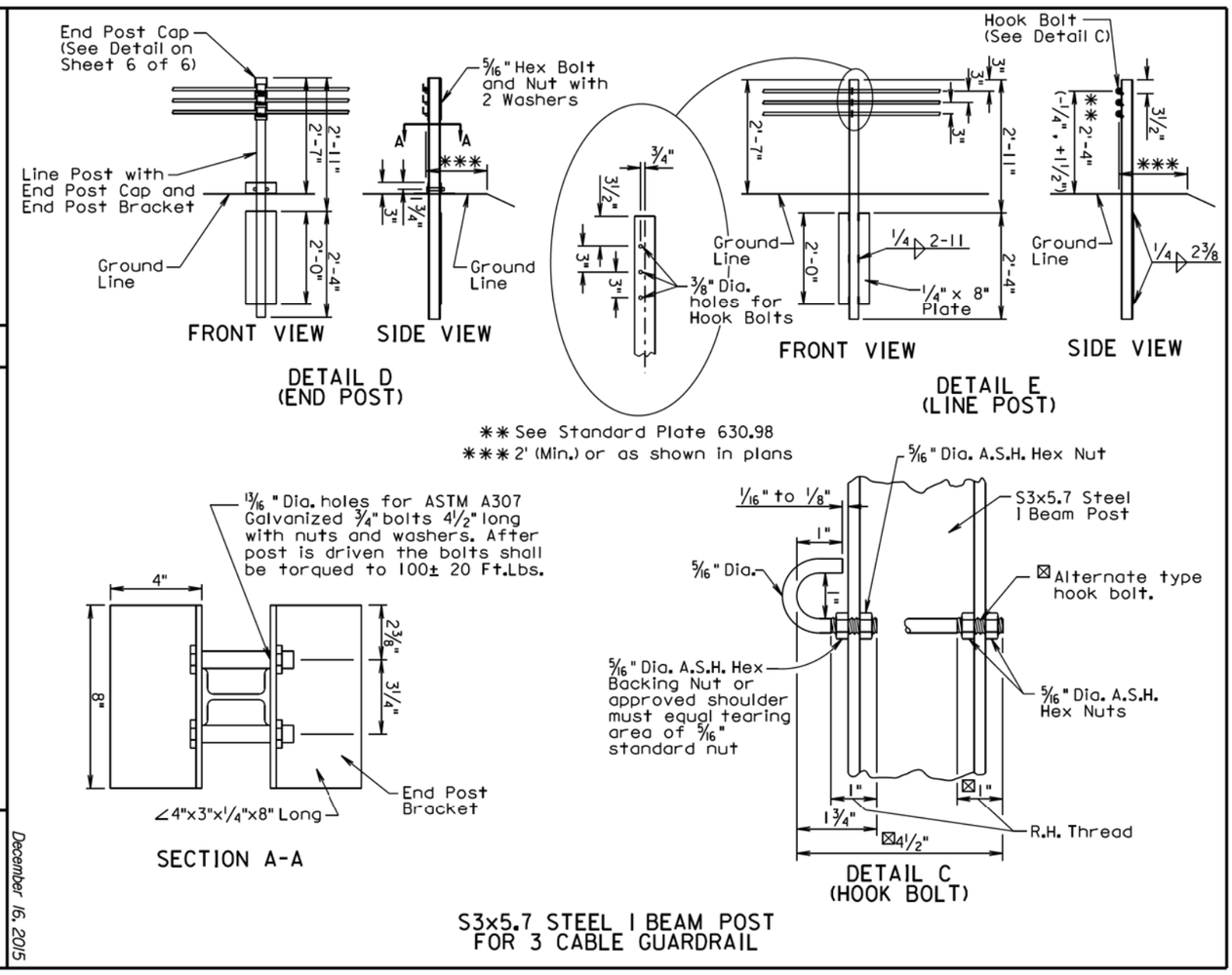

December 16, 2015

PLATE NUMBER 629.01

Sheet 5 of 6

Published Date: 3rd Qtr. 2016

SDDOT

3 CABLE GUARDRAIL (LOW TENSION)

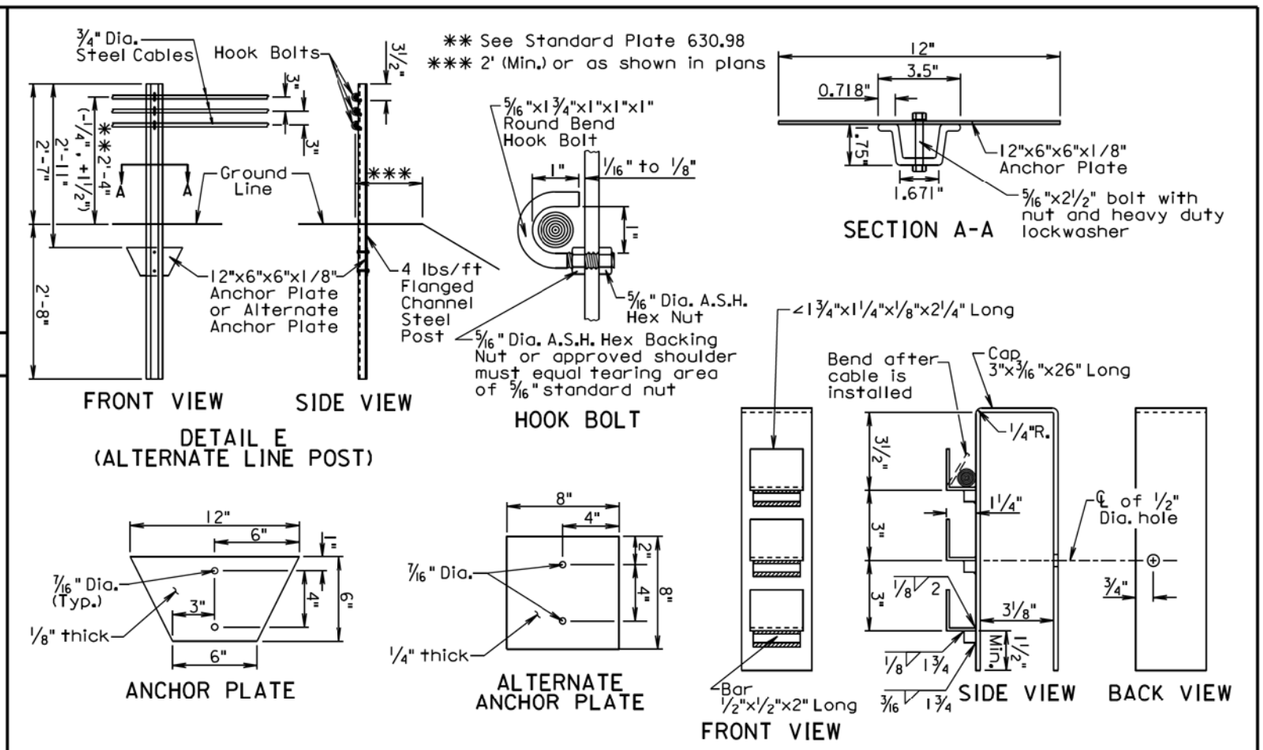

GENERAL NOTES:

Flanged channel steel posts shall be produced from high strength steel in accordance with ASTM A499, Grade 60.

Anchor plates shall be in conformance with ASTM A709, Grade 36.

Bolt shall be in conformance with ASTM A307. Nut shall be in conformance with ASTM A563 Grade DH.

Bolt shall be galvanized in accordance with ASTM F2329.

Finish for the post and anchor plate shall be a baked on high quality dark green enamel.

Alternate anchor plate may be unfinished.

December 16, 2015

PLATE NUMBER 629.01

Sheet 6 of 6

Plotting Date: 08/18/2016

STATE OF SOUTH DAKOTA	PROJECT	SHEET	TOTAL SHEETS
	NH 0050(108)385	F73	F102

Published Date: 3rd Qtr. 2016

SDDOT

W BEAM TO 3 CABLE TRANSITION

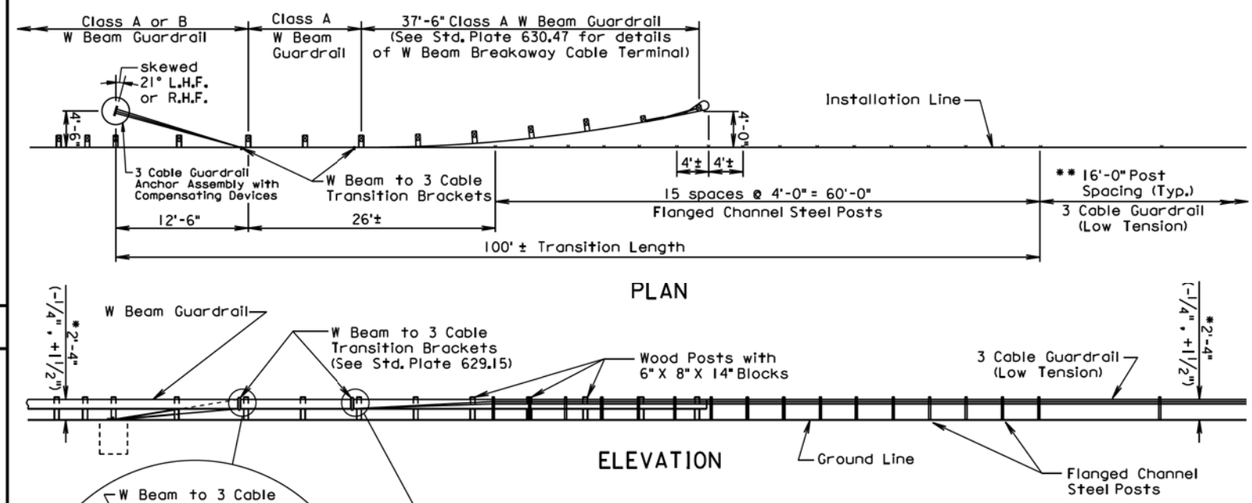

PLAN

ELEVATION

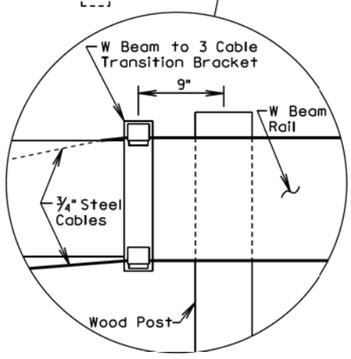

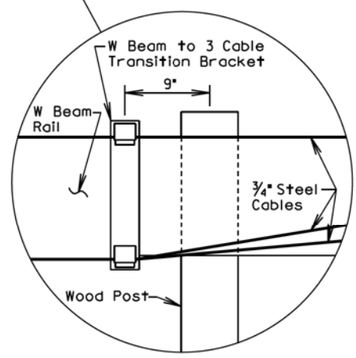

* See Standard Plate 630.98

** or post spacing as specified in the plans

GENERAL NOTES:

Flanged channel steel posts are shown on this standard plate, however, S3 X 5.7 steel I beam posts may be substituted for the flanged channel steel posts.

All costs associated with furnishing and installing the W Beam to 3 Cable Transition Bracket shall be incidental to the contract unit price per Ft. for "3 Cable Guardrail", "Reset 3 Cable Guardrail", or "Reset 3 Cable Guardrail, Cable Only".

See Standard Plates 630.31, 630.32, and 630.33 for details and payment information for W Beam Guardrail.

See Standard Plate 629.01 for details and payment information for 3 Cable Guardrail.

PLATE NUMBER 629.05

Sheet 1 of 1

December 16, 2014

Published Date: 3rd Qtr. 2016

SDDOT

3 CABLE GUARDRAIL SLIP BASE ANCHOR ASSEMBLY

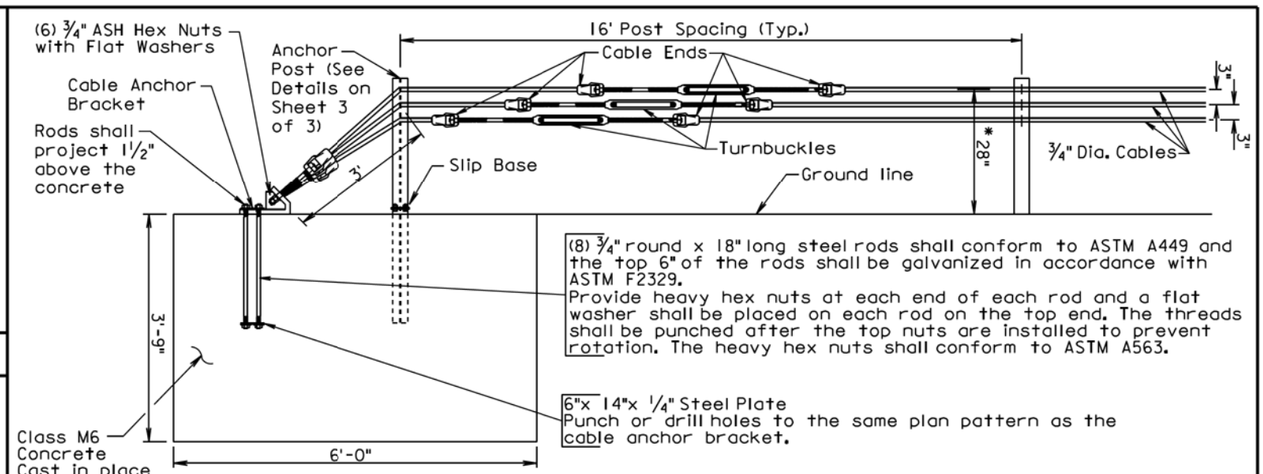

ELEVATION VIEW
(Anchor Assembly)

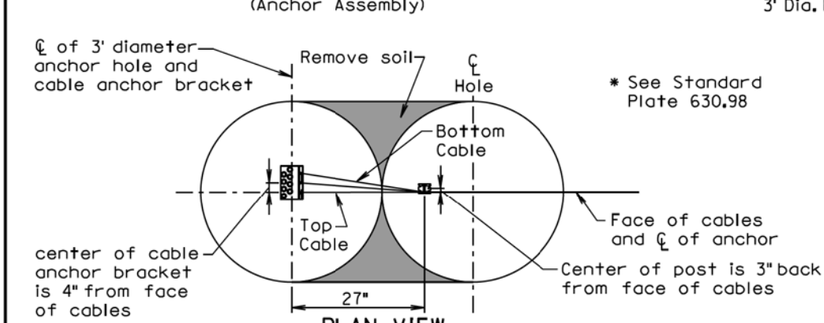

PLAN VIEW
(Anchor Assembly)

* See Standard Plate 630.98

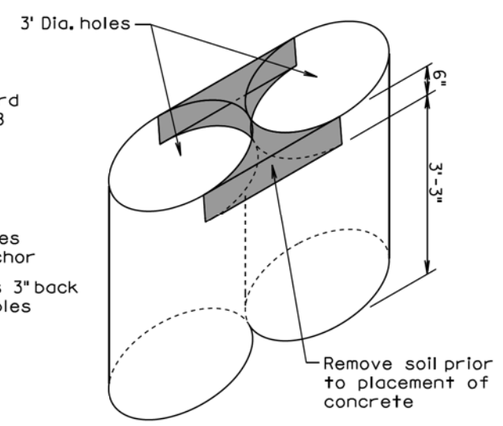

ISOMETRIC VIEW

ANCHOR CONSTRUCTION NOTES:

1. Auger two 3' diameter by 3'-9" deep holes tangent to each other.
2. Clean out the top 6 inches of soil between the holes.
3. Place concrete in holes with anchor bolts and slip base stub post in place.
4. For informational purposes the neat line concrete volume of the anchor is 1.9 cubic yards.

PLATE NUMBER 629.10

Sheet 1 of 3

June 26, 2016

STATE OF SOUTH DAKOTA

PROJECT NH 0050(108)385

SHEET F74

TOTAL SHEETS F102

Plotting Date: 08/18/2016

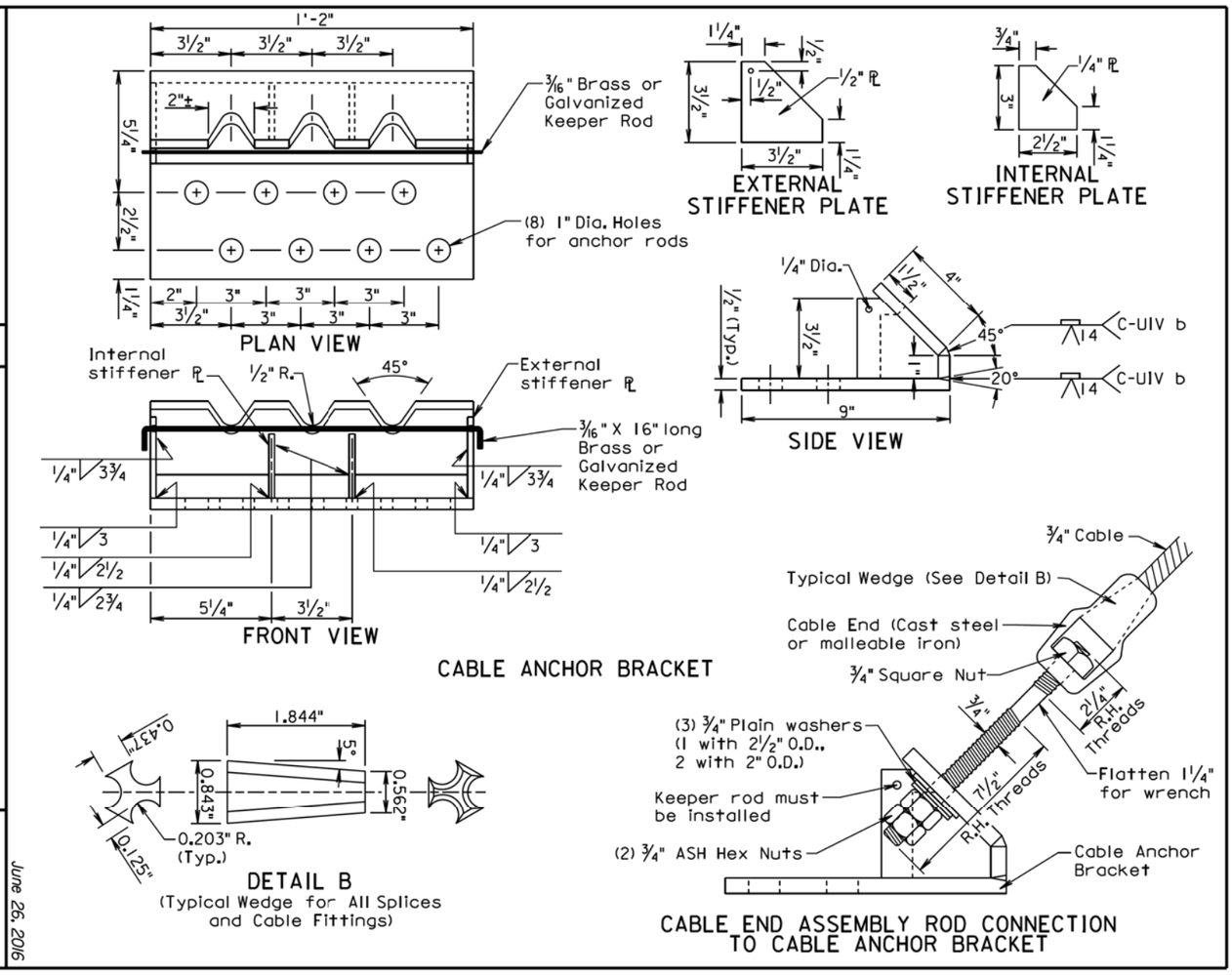

Published Date: 3rd Qtr. 2016

SDDOT

3 CABLE GUARDRAIL SLIP BASE ANCHOR ASSEMBLY

PLATE NUMBER 629.10

Sheet 2 of 3

June 26, 2016

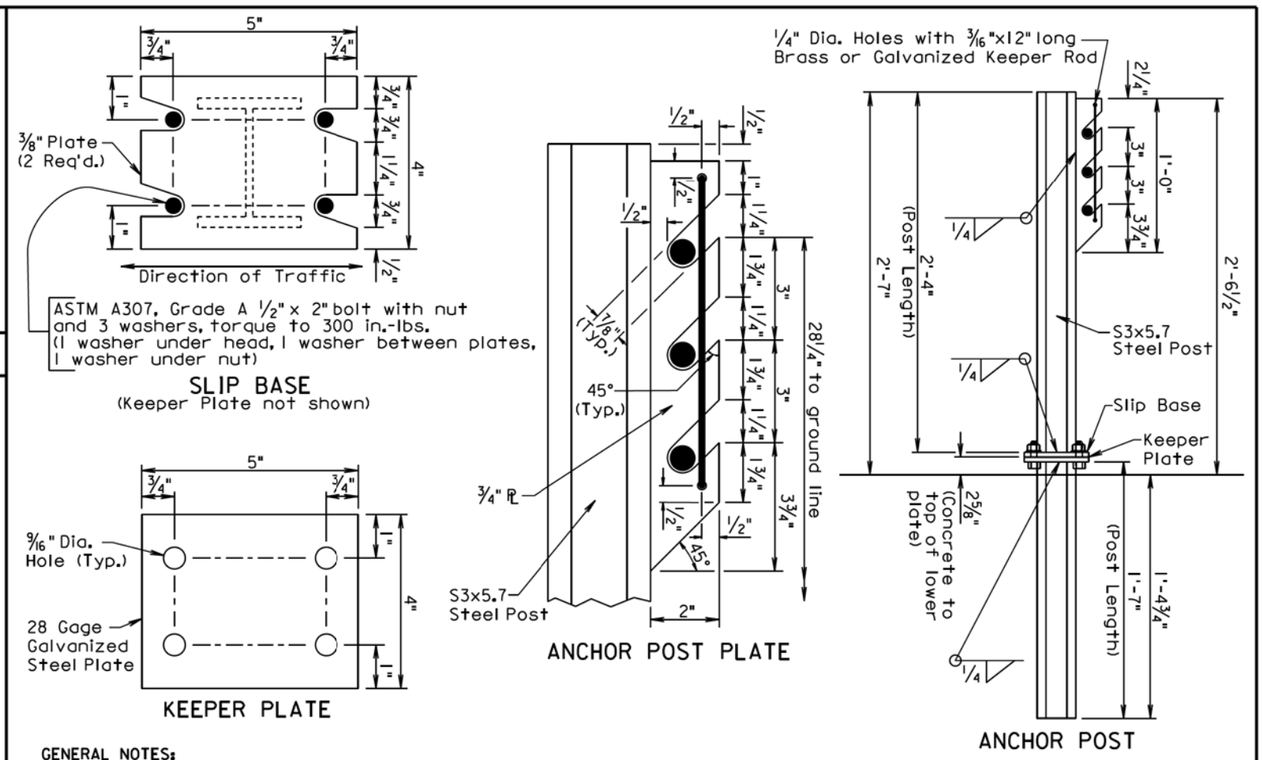

GENERAL NOTES:

Anchor post shall be a S3x5.7 rolled steel section. Post and plates shall conform to ASTM A709, Grade 36 and shall be galvanized in accordance with ASTM A123.

¾" round wire cable shall consist of three strands (7 wires per strand) and have a minimum tensile strength of 25,000 pounds.

Cast steel elements shall conform to AASHTO M103 (ASTM 27-73) grade U-60-30.

All costs associated with furnishing and constructing the 3 cable guardrail slip base anchor assembly including the concrete anchor, cable anchor bracket, anchor bolts, plates, slip base stub post, anchor post, steel turnbuckles, cable ends, and necessary hardware shall be incidental to the contract unit price per each for "3 Cable Guardrail Slip Base Anchor Assembly".

Published Date: 3rd Qtr. 2016

SDDOT

3 CABLE GUARDRAIL SLIP BASE ANCHOR ASSEMBLY

PLATE NUMBER 629.10

Sheet 3 of 3

June 26, 2016

STATE OF SOUTH DAKOTA	PROJECT	SHEET	TOTAL SHEETS
	NH 0050(108)385	F75	F102

Plotting Date: 08/18/2016

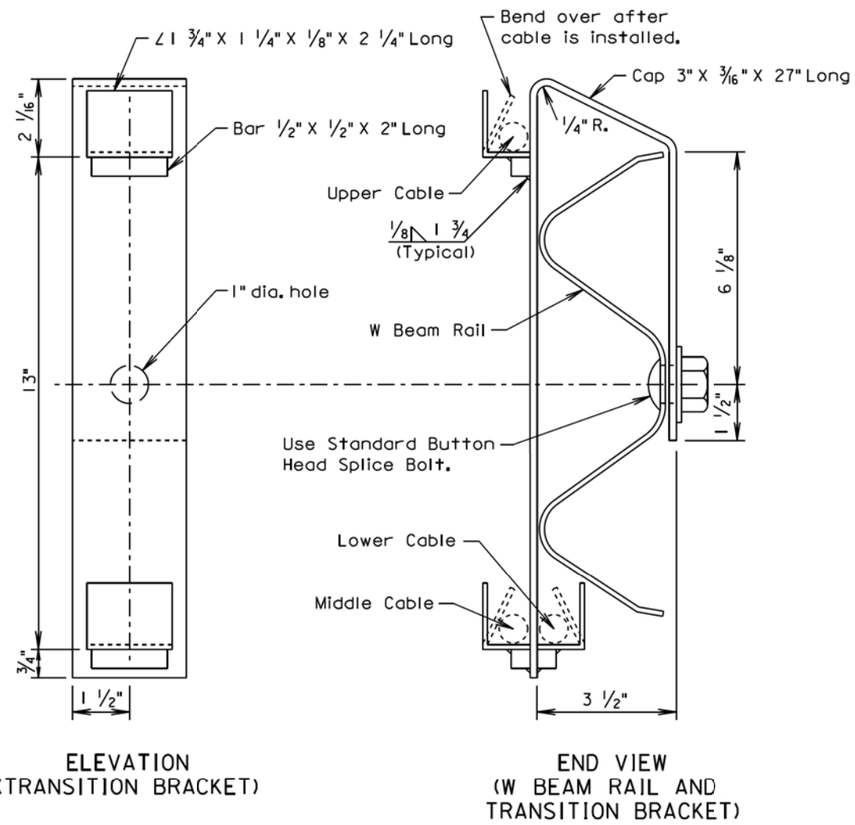

ELEVATION
(TRANSITION BRACKET)

END VIEW
(W BEAM RAIL AND TRANSITION BRACKET)

GENERAL NOTES:

Steel used in the fabrication of the bracket shall conform to ASTM A36 and the bracket shall be galvanized after fabrication in accordance with ASTM A123.

March 31, 2000

Published Date: 3rd Qtr. 2016	SDDOT	W BEAM TO 3 CABLE TRANSITION BRACKET	PLATE NUMBER 629.15
			Sheet 1 of 1

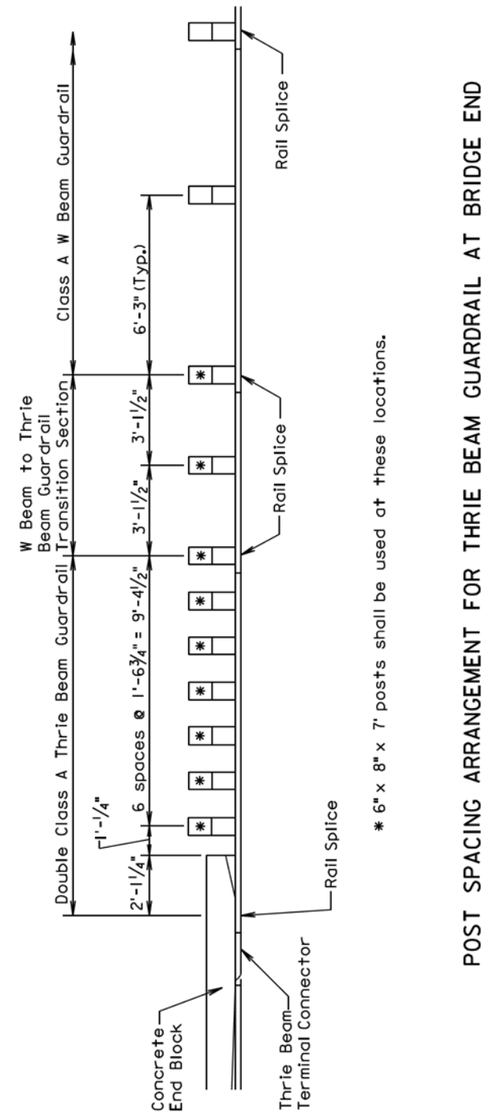

* 6" x 8" x 7' posts shall be used at these locations.

POST SPACING ARRANGEMENT FOR THRIE BEAM GUARDRAIL AT BRIDGE END

December 23, 2002

Published Date: 3rd Qtr. 2016	SDDOT	POST SPACING ARRANGEMENT FOR THRIE BEAM GUARDRAIL AT BRIDGE END	PLATE NUMBER 630.15
			Sheet 1 of 1

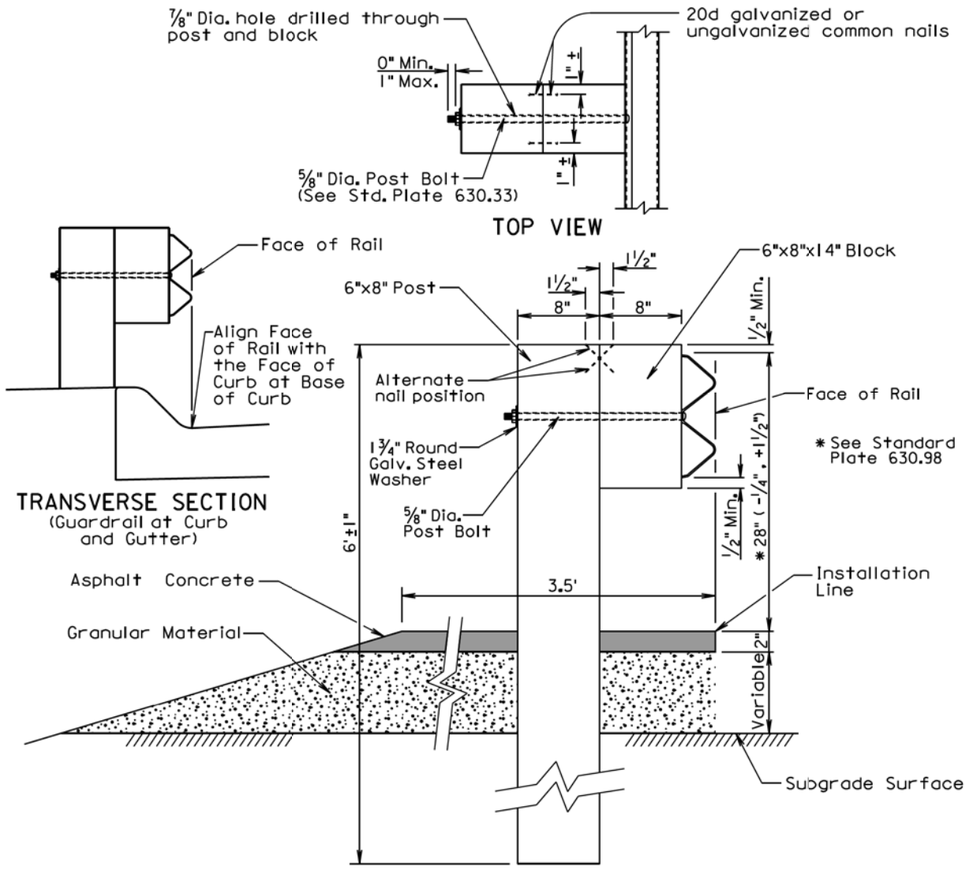

TRANSVERSE SECTION

GENERAL NOTES:

Asphalt concrete shall be the same type used elsewhere on the project or shall be as specified in the plans. If asphalt concrete is not specified in the plans, the asphalt concrete shall conform to the Specifications for "Asphalt Concrete Composite." For informational purposes, the Rate of Materials for the 3.5' wide section of asphalt concrete as shown above shall be 4.80 Tons per Station.

Granular material shall be the same type used elsewhere on the project or shall be as specified in the plans. If granular material type is not specified in the plans, the material shall conform to the Specifications for "Base Course". The granular material shall be placed the same thickness as the mainline surfacing or as specified in the plans.

The cross slope for the surfacing and subgrade surface shall be as specified in the plans (See Typical Sections and/or Cross Sections).

The top of post and top of block shall have a true square cut. The top of block shall be ±1 inch from the top of the post.

June 26, 2015

Published Date: 3rd Qtr. 2016	SDDOT	W BEAM GUARDRAIL POST INSTALLATION	PLATE NUMBER 630.31
			Sheet 1 of 1

W BEAM GUARDRAIL DEFLECTION CRITERIA	
POST SPACING	MAXIMUM DEFLECTION
6'-3"	5'-0"
3'-1 1/2"	3'-9"

For Informational Purposes Only

GENERAL NOTES:

All W beam rail shall be Type 1.

There will be no separate payment for furnishing and installing W Beam End Sections (Flared) and W Beam Terminal Connectors. All costs for the W Beam End Sections (Flared) and W Beam Terminal Connectors shall be incidental to the contract unit price per foot for the respective "W Beam Guardrail" bid item.

W beam rail section lengths may be 12'-6" and/or 25'-0". The combination of section lengths used shall be compatible with the total length of rail per site as shown in the plans.

W Beam End Sections (Flared) shall only be used in a one way traffic situation. See Standard Plate 630.80 for W Beam End Section (Flared) in the Beam Guardrail Trailing End Terminal.

All costs for constructing W beam guardrail including labor, equipment, and materials including all posts, blocks, steel beam rail, and hardware shall be incidental to the contract unit price per foot for the respective "W Beam Guardrail" bid item.

June 26, 2015

Published Date: 3rd Qtr. 2016	SDDOT	W BEAM GUARDRAIL INSTALLATION	PLATE NUMBER 630.32
			Sheet 1 of 1

PLOT SCALE - 1:200
PLOT NAME - 64
FILE -...\STDPLATEPAGESEED - 19.DGN
-PLOTTED FROM - TRPR16032

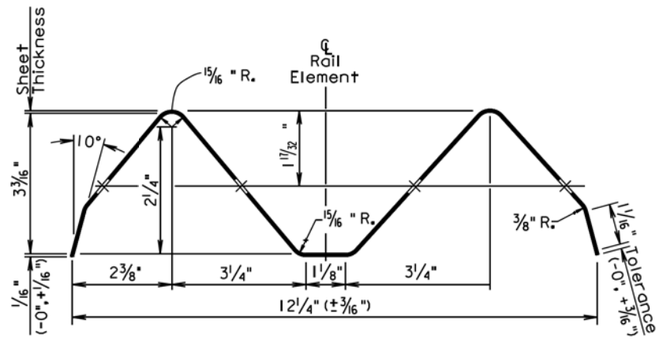

SECTION THROUGH W BEAM RAIL ELEMENT

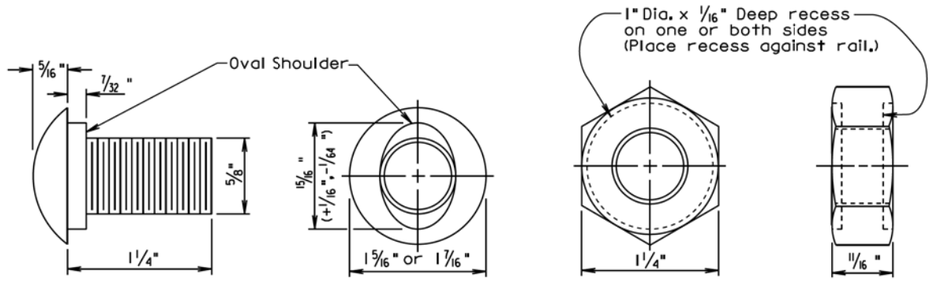

The Post Bolt is similar except the post bolt is 18" long.

SPLICE BOLT
(5/8" BUTTON HEAD BOLT AND RECESS NUT)

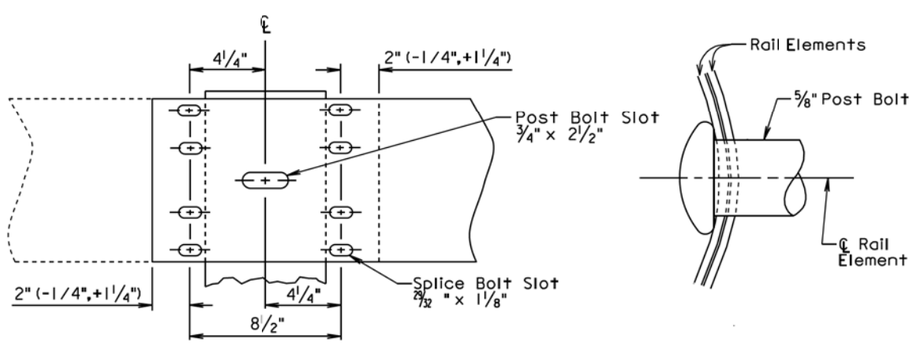

Lap in direction of traffic.

RAIL SPLICE

December 23, 2004

Published Date: 3rd Qtr. 2016	SDDOT	W BEAM RAIL, RAIL SPLICE, AND HARDWARE	PLATE NUMBER 630.33 Sheet 1 of 1

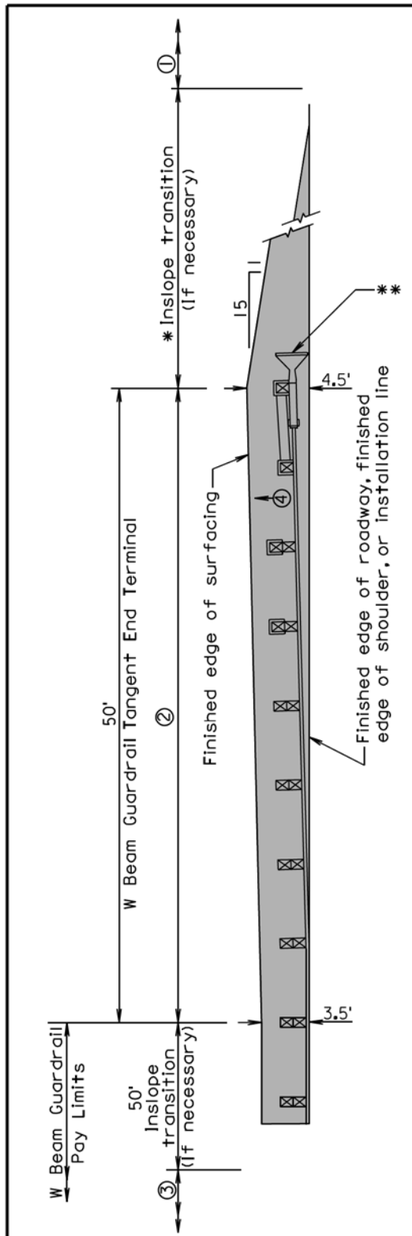

PLAN

* The length of inslope transition varies with the amount of change between inslopes. The length of the transition shall change 100' for every whole number change in the inslope. For Example: If the inslope changes from a 5:1 to a 4:1 the length of the inslope transition would be 100'. If the inslope changes from a 6:1 to a 4:1 the length of the inslope transition would be 200'.

2" Asphalt concrete surfacing with variable thickness granular material

① Same inslope as mainline inslope
② 4:1 inslope
③ 2:1 inslope or flatter, or inslope as specified in plans
④ Same slope as roadway cross slope

GENERAL NOTES:

The W beam guardrail tangent end terminal shall be installed according to the manufacturer's installation instructions.

**An adhesive object marker shall be placed on the end section buffer or extruder after placement of the end section buffer or extruder. The adhesive object marker dimensions may be 16" x 16" or other variation due to the shape of the end section buffer or extruder. A minimum of 256 square inches of object marker reflective sheeting area is required. The reflective sheeting shall be fluorescent yellow super or very high intensity. All costs for furnishing and installing the adhesive object marker shall be incidental to various contract items.

Asphalt concrete shall be the same type used elsewhere on the project or shall be as specified in the plans. If asphalt concrete is not specified in the plans, the asphalt concrete shall conform to the Specifications for "Asphalt Concrete Composite."

Granular material shall be the same type used elsewhere on the project or shall be as specified in the plans. If granular material type is not specified in the plans, the material shall conform to the Specifications for "Base Course". The granular material shall be placed the same thickness as the mainline surfacing or as specified in the plans.

December 16, 2014

Published Date: 3rd Qtr. 2016	SDDOT	EMBANKMENT AND SURFACING FOR W BEAM GUARDRAIL TANGENT END TERMINAL	PLATE NUMBER 630.46 Sheet 1 of 1

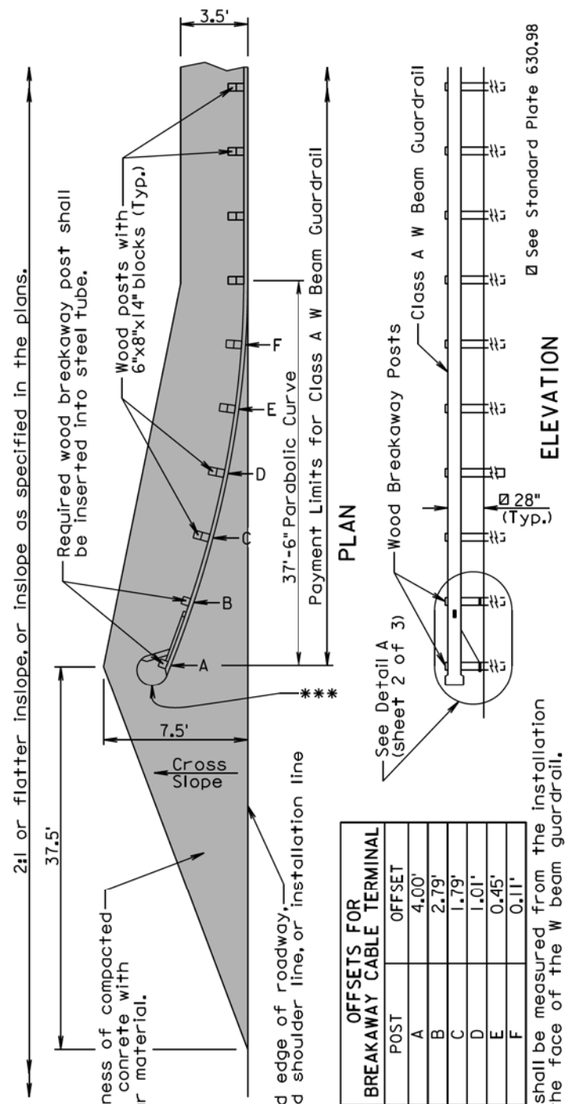

OFFSETS FOR BREAKAWAY CABLE TERMINAL

POST	OFFSET
A	4.00'
B	2.79'
C	1.79'
D	1.01'
E	0.45'
F	0.11'

GENERAL NOTES:

The finished embankment surfacing cross slope shall match the roadway cross slope; however, if a steeper cross slope is necessary the steepest allowable cross slope is 10:1.

Asphalt concrete shall be the same type used elsewhere on the project or shall be as specified in the plans. If asphalt concrete is not specified in the plans, the asphalt concrete shall conform to the Specifications for "Asphalt Concrete Composite."

Granular material shall be the same type used elsewhere on the project or shall be as specified in the plans. If granular material type is not specified in the plans, the material shall conform to the Specifications for "Base Course". The granular material shall be placed the same thickness as the mainline surfacing or as specified in the plans.

***An adhesive object marker shall be placed on the end section buffer after placement of the end section buffer. The adhesive object marker dimensions may be 16" x 16" or other variation due to the shape of the end section buffer. A minimum of 256 square inches of object marker reflective sheeting area is required. The reflective sheeting shall be fluorescent yellow super or very high intensity. All costs for furnishing and installing the adhesive object marker shall be incidental to various contract items.

Costs for constructing the W Beam Guardrail Breakaway Cable Terminal including labor, equipment, and materials including the anchor bracket, cable assembly, steel tubes, soil plates, bearing plate, pipe sleeve, W beam end section(buffer), modified W beam terminal connector, and all necessary hardware shall be incidental to the contract unit price per each for "W Beam Guardrail Breakaway Cable Terminal".

December 16, 2014

Published Date: 3rd Qtr. 2016

SDDOT

W BEAM GUARDRAIL BREAKAWAY CABLE TERMINAL

PLATE NUMBER 630.47

Sheet 1 of 3

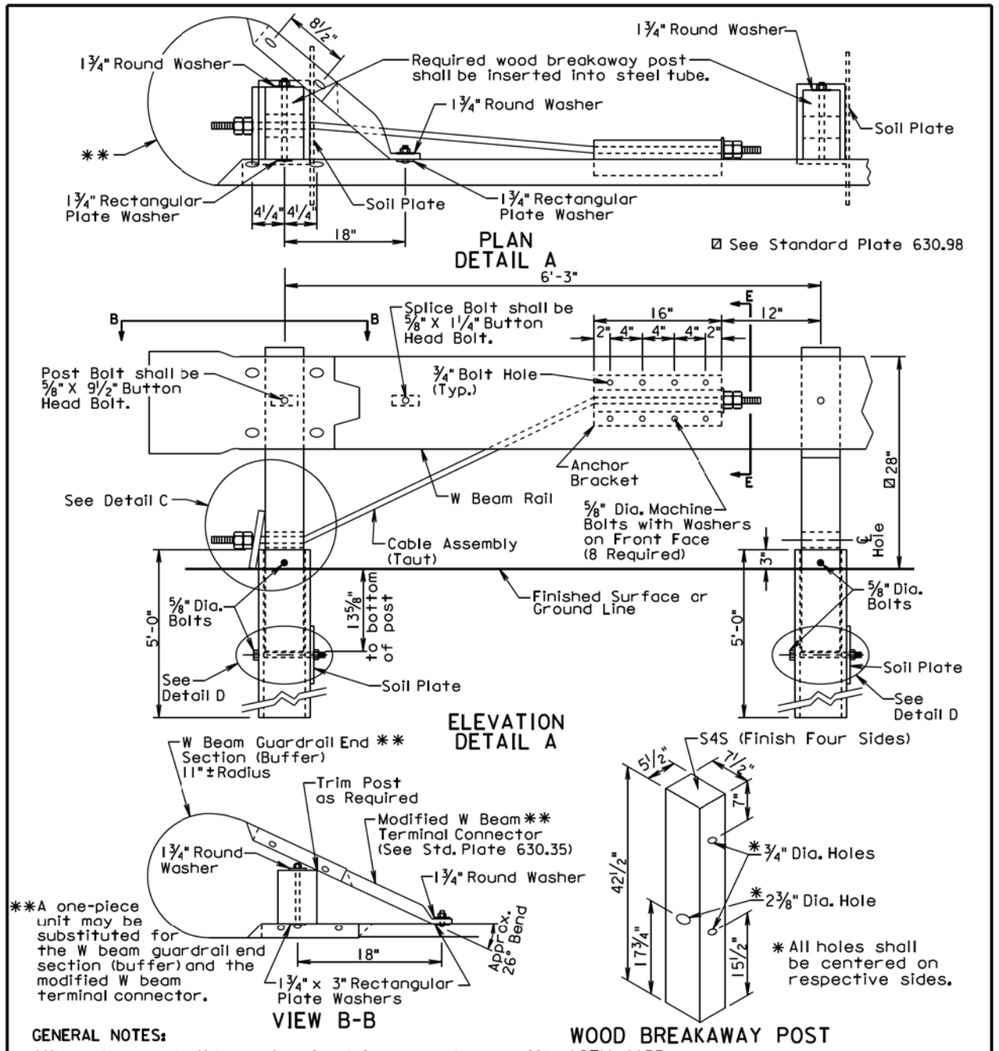

GENERAL NOTES:

All hardware shall be galvanized in accordance with ASTM A153.

The steel tubes shall meet the requirements of ASTM Specification A500, Grade B, and shall be galvanized after fabrication in accordance with the requirements of AASHTO Specification M111.

The anchor bracket, soil plate, and bearing plate shall be fabricated from steel that meets ASTM A36 Specifications. They shall be galvanized after fabrication in accordance with ASTM A123.

The W Beam End Section (Buffer) shall be 12 gage galvanized steel.

The cable shall be ¾", Type II, with Class A coating in conformance with AASHTO M30.

December 16, 2014

Published Date: 3rd Qtr. 2016

SDDOT

W BEAM GUARDRAIL BREAKAWAY CABLE TERMINAL

PLATE NUMBER 630.47

Sheet 2 of 3

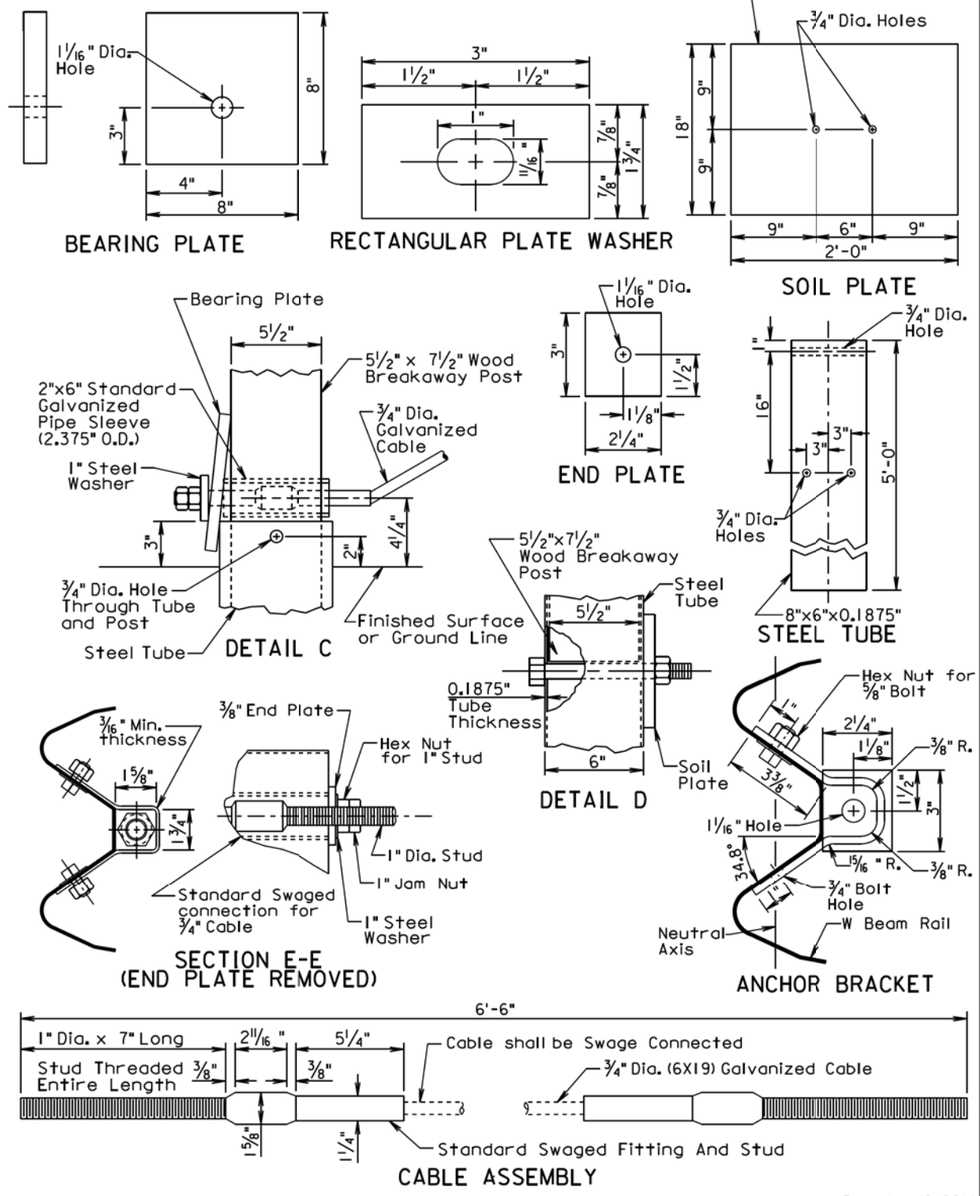

December 16, 2014

Published Date: 3rd Qtr. 2016	SDDOT	W BEAM GUARDRAIL BREAKAWAY CABLE TERMINAL	PLATE NUMBER 630.47 Sheet 3 of 3

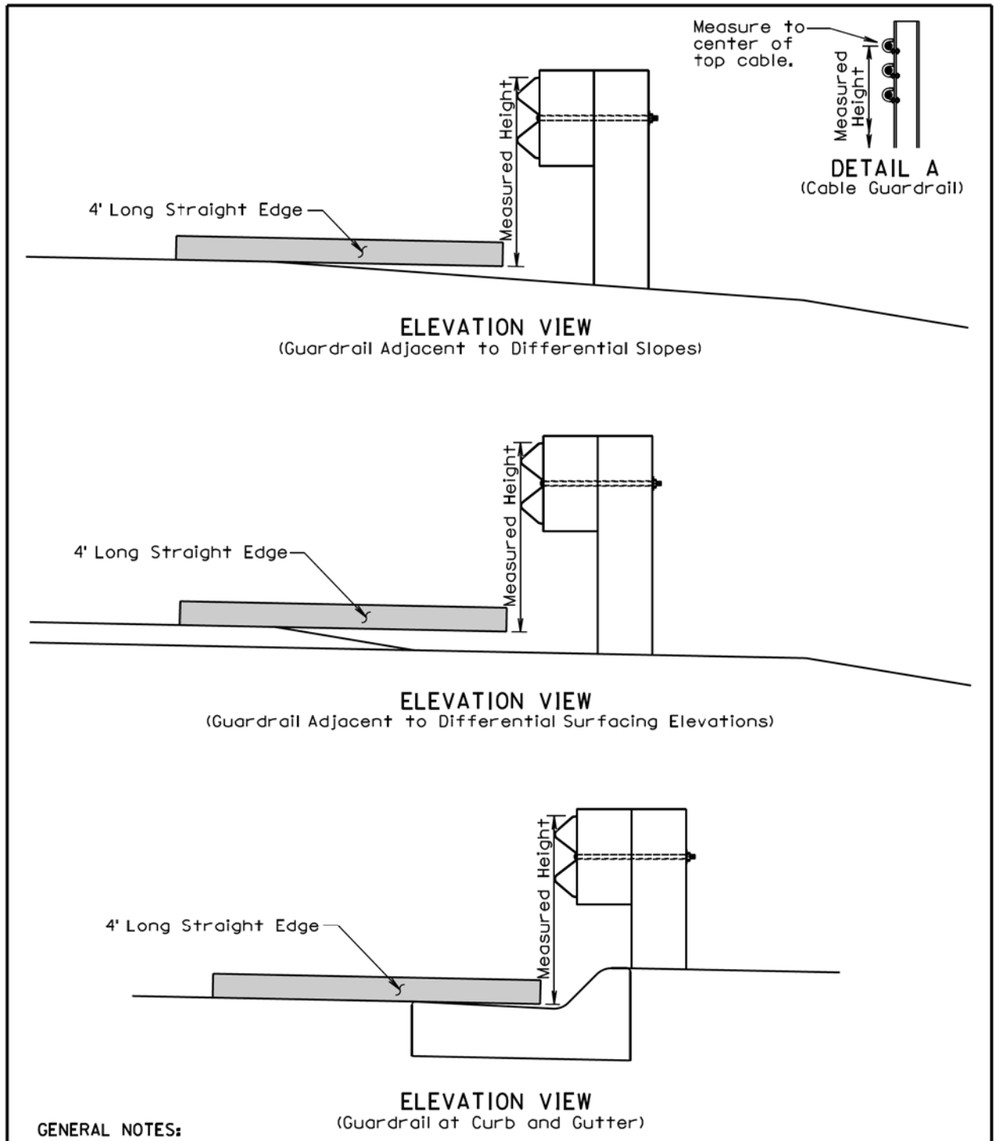

GENERAL NOTES:

The W Beam guardrail shown is for illustrative purpose. The guardrail height for all types of guardrail systems shall be measured in accordance with this standard plate.

When measuring height of cable guardrail or cable barrier the height shall be measured to the center of the top cable. See Detail A.

June 26, 2010

Published Date: 3rd Qtr. 2016	SDDOT	MEASURING GUARDRAIL HEIGHT	PLATE NUMBER 630.98 Sheet 1 of 1

PLOT SCALE - 1:200
PLOT NAME - 67
FILE - ...\STDPLATEPAGESEED - 23.DGN
PLOTTED FROM - TRPR16032

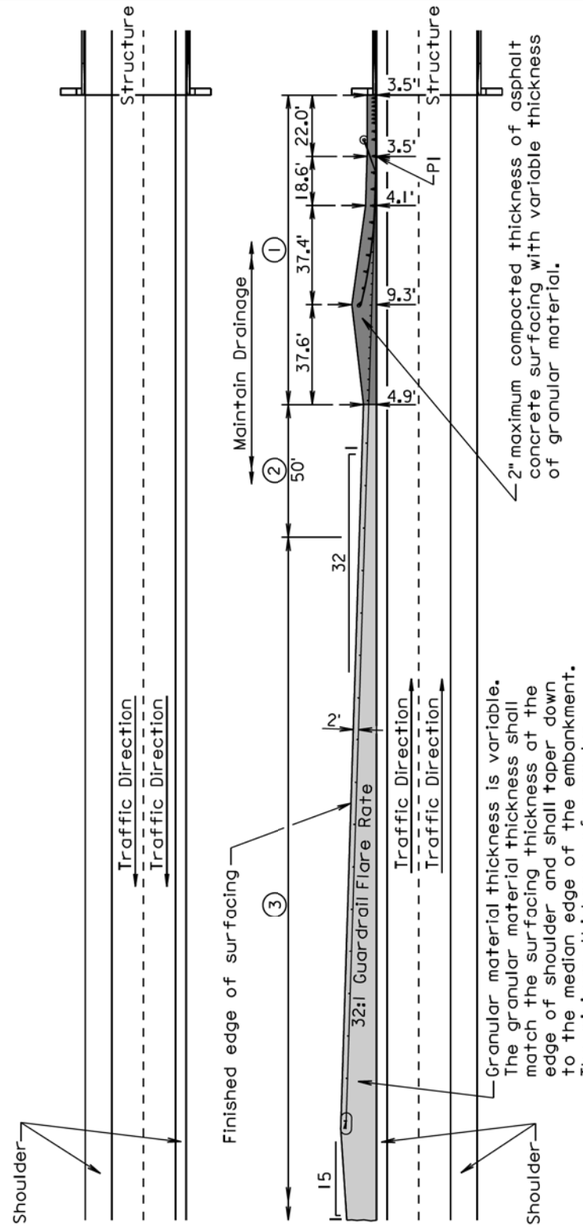

PLAN VIEW

1. Finished embankment surfacing cross slope shall be the same as the roadway cross slope.
2. Finished embankment surfacing cross slope transition.
3. Finished embankment surfacing cross slope shall be 10:1, however, a cross slope flatter than 10:1 may be used to obtain the 6" minimum thickness of granular material.

GENERAL NOTES:

Asphalt concrete shall be the same type used elsewhere on the project or shall be as specified in the plans. If asphalt concrete is not specified in the plans, the asphalt concrete shall conform to the Specifications for "Asphalt Concrete Composite."

Granular material shall be the same type used elsewhere on the project or shall be as specified in the plans. If granular material type is not specified in the plans, the material shall conform to the Specifications for "Base Course".

February 10, 2014

Published Date: 3rd Qtr. 2016	SDDOT	EMBANKMENT AND SURFACING FOR TYPICAL MEDIAN PROTECTION	PLATE NUMBER 630.99
			Sheet 1 of 1

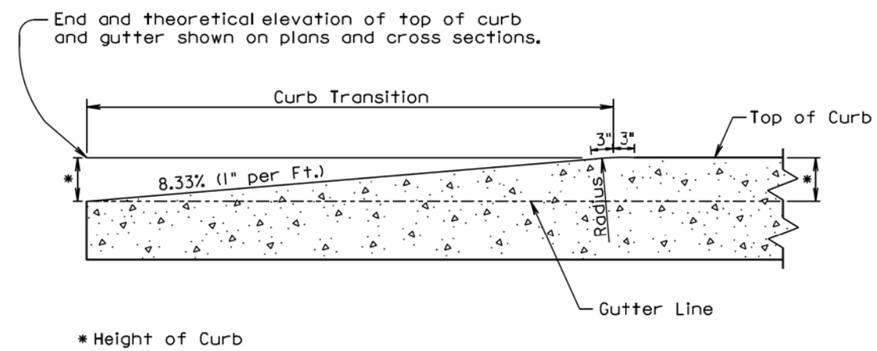

LONGITUDINAL SECTION OF CONCRETE CURB TAPER

September 14, 2005

Published Date: 3rd Qtr. 2016	SDDOT	CONCRETE CURB TAPER	PLATE NUMBER 650.35
			Sheet 1 of 1

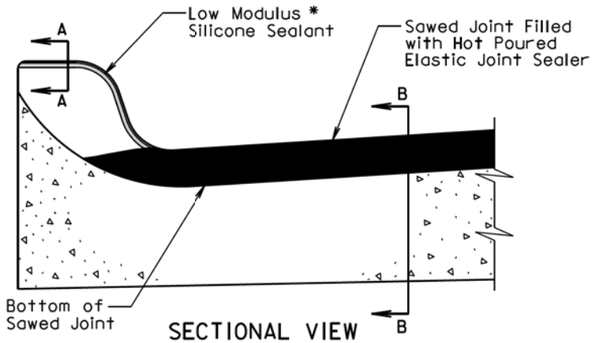

SECTIONAL VIEW

(Curb and Gutter Placed Monolithic with Adjacent Mainline PCC Pavement)

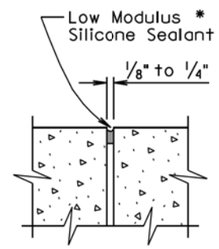

SECTION A-A

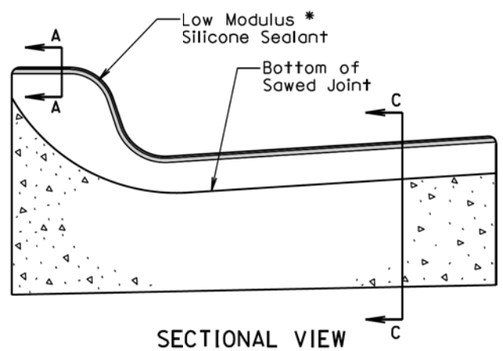

SECTIONAL VIEW

(Curb and Gutter not Placed Monolithic with Adjacent Mainline PCC Pavement or Mainline Surfacing is not PCC Pavement)

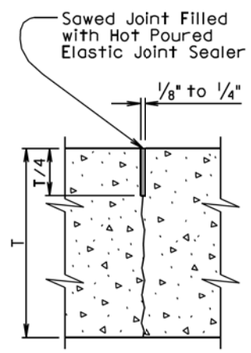

SECTION B-B

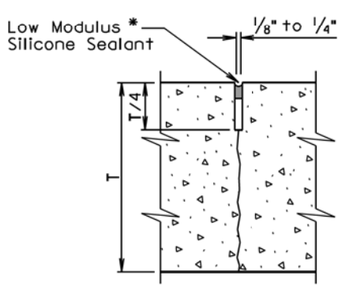

SECTION C-C

* The silicone sealant shall be placed such that it completely seals the joint and is bonded to the sides of the clean joint as approved by the Engineer.

September 6, 2013

Published Date: 3rd Qtr. 2016	SDDOT	JOINTS IN CONCRETE CURB AND GUTTER	PLATE NUMBER 650.90
			Sheet 1 of 2

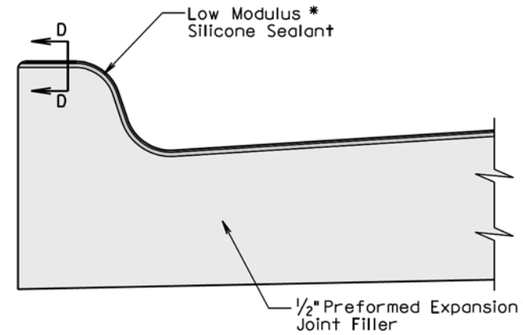

SECTIONAL VIEW

(Curb and Gutter at 1/2" Preformed Expansion Joint Filler Location)

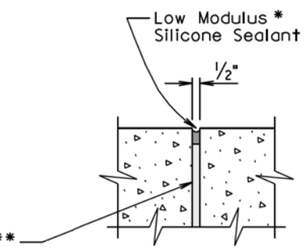

SECTION D-D

* The silicone sealant shall be placed such that it completely seals the joint and is bonded to the sides of the clean joint as approved by the Engineer.

GENERAL NOTES:

For illustrative reason, only the type B curb and gutter is shown.

** A 1/2" preformed expansion joint filler shall be placed transversely in the curb and gutter at the following locations:

1. At each junction between the radius return of curb and gutter and curb and gutter which is parallel to the project centerline.
2. At each junction between new curb and gutter and existing curb and gutter.

Transverse contraction joints shall be constructed at 10' intervals in the concrete curb and gutter except when the concrete curb and gutter is constructed adjacent to mainline PCC pavement. When concrete curb and gutter is constructed adjacent to mainline PCC pavement, a transverse contraction joint shall be constructed in the concrete curb and gutter at each mainline PCC pavement transverse contraction joint location.

When concrete curb and gutter is not placed monolithically with the mainline PCC pavement or when the adjacent mainline surfacing is not PCC concrete, the transverse contraction joints in the concrete curb and gutter shall be 1 1/2 inches deep if formed in the fresh concrete using a suitable grooving tool. If a saw is used to cut the contraction joints, then the depth of the joint shall be at least 1/4 the thickness of the concrete and the joint shall be sealed in accordance with the details shown above.

September 6, 2013

Published Date: 3rd Qtr. 2016	SDDOT	JOINTS IN CONCRETE CURB AND GUTTER	PLATE NUMBER 650.90
			Sheet 2 of 2

PLOT SCALE - 1:200
PLOT NAME - 69
FILE -...\STDPLATEPAGESEED - 26.DGN
-PLOTTED FROM - TRPR16032

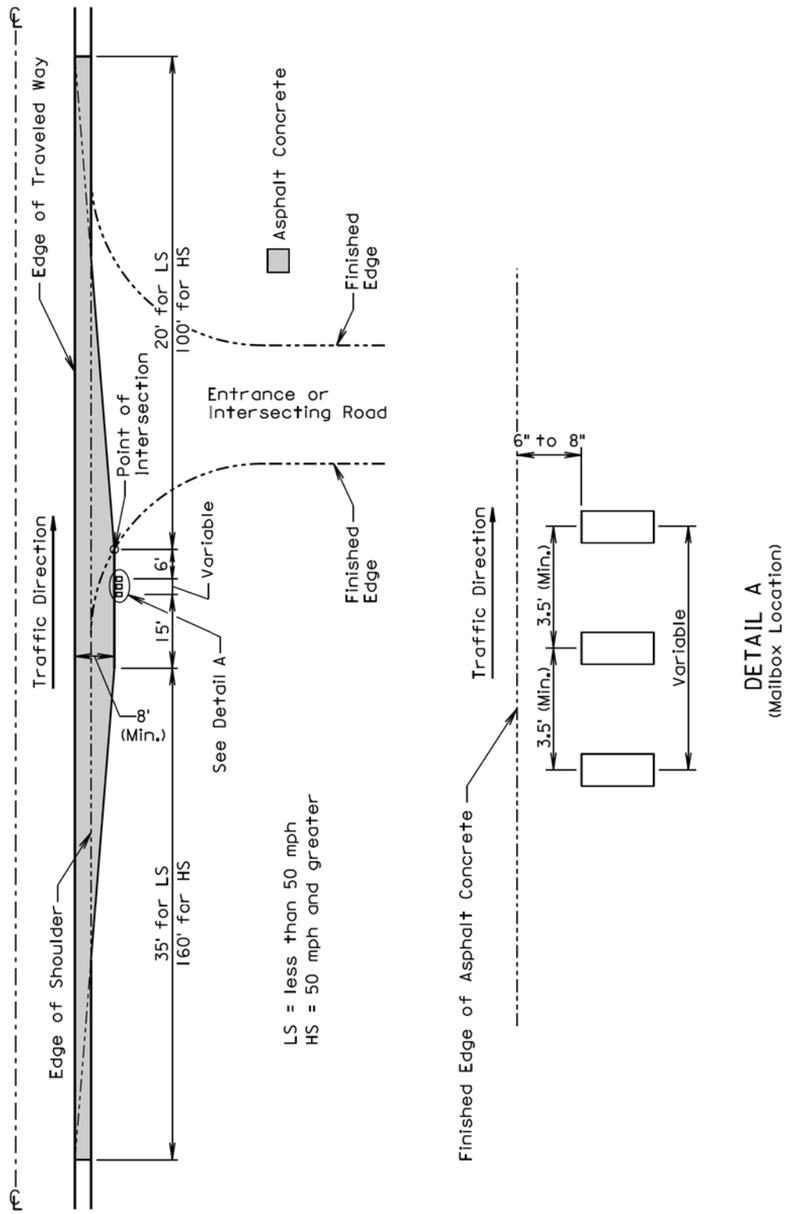

September 6, 2015

Published Date: 3rd Qtr. 2016	SDDOT	MAILBOX TURNOUT	PLATE NUMBER 900.01
			Sheet 1 of 1

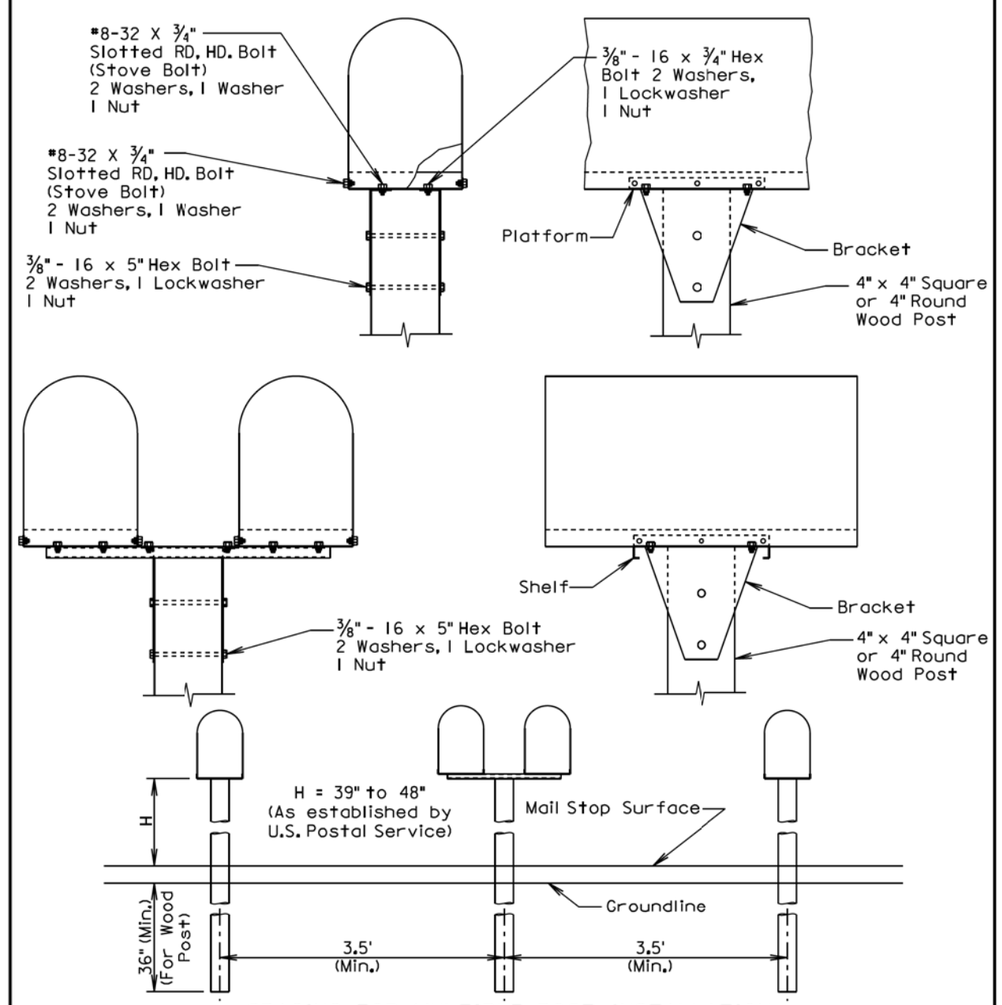

SPACING FOR MULTIPLE POST INSTALLATION

GENERAL NOTES:

The post support assemblies provided should be consistant throughout the project.

Single and double mailboxes may be in any sequence.

Post support assemblies shall be one from the approved products list, a 4"x4" or 4" round wood post, or an alternate post support assembly that meets the test level 3 crash testing requirements of NCHRP 350 or MASH.

Alternate mailbox support assemblies shall be approved by the Engineer prior to installation. The Contractor shall provide the Engineer written certification that the mailbox support assembly has met the crash testing requirements and will be installed in accordance with the manufacturer's installation instructions.

September 6, 2013

Published Date: 3rd Qtr. 2016	SDDOT	SINGLE AND DOUBLE MAILBOX ASSEMBLIES	PLATE NUMBER 900.02
			Sheet 1 of 1

PLOT SCALE - 1:200
PLOT NAME - 70
FILE - ...\STDPLATEPAGESEED - 27.DGN
PLOTTED FROM - TRPR16032

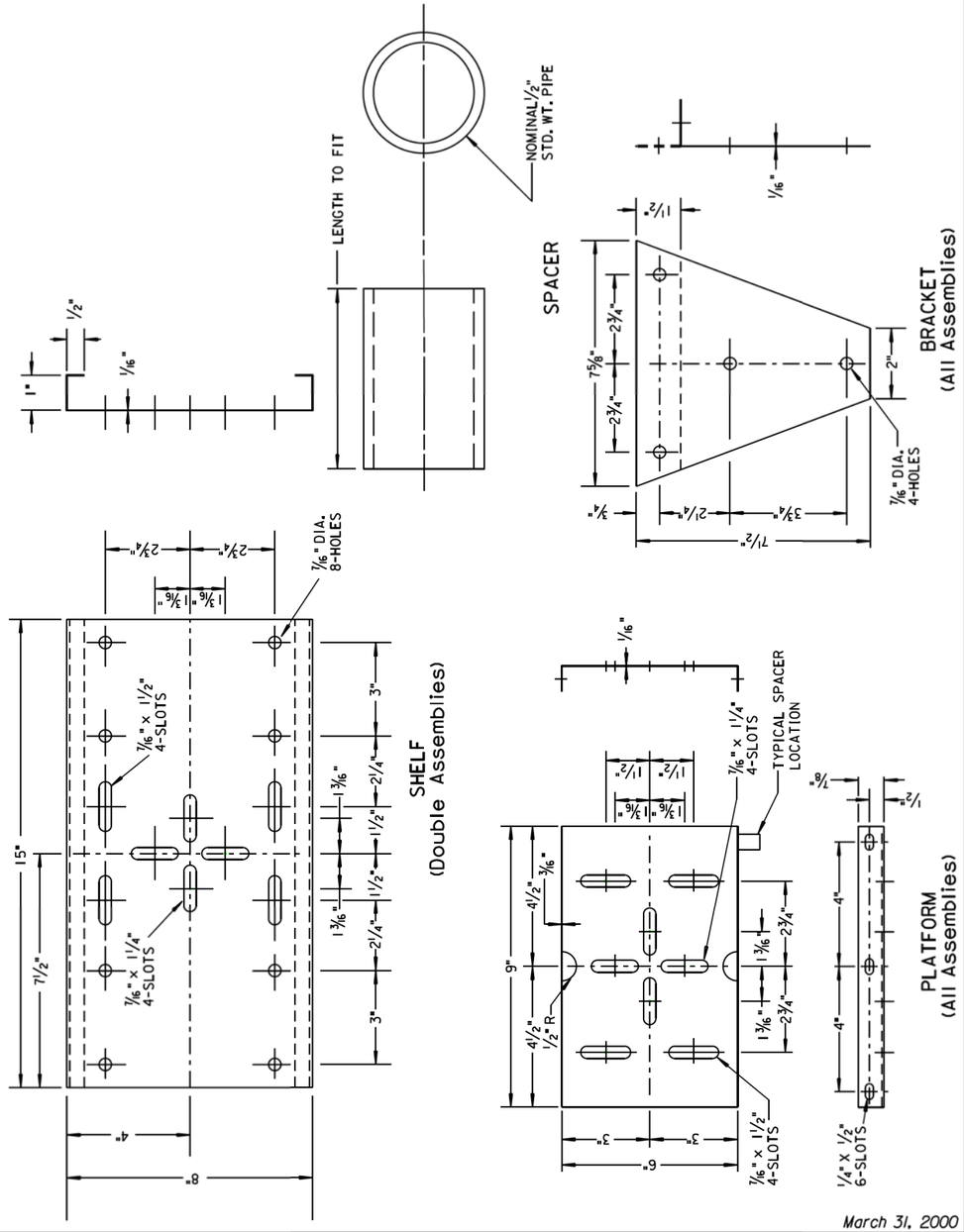

March 31, 2000

Published Date: 3rd Qtr. 2016	SDDOT	MAILBOX SUPPORT HARDWARE	PLATE NUMBER 900.03
			Sheet 1 of 1

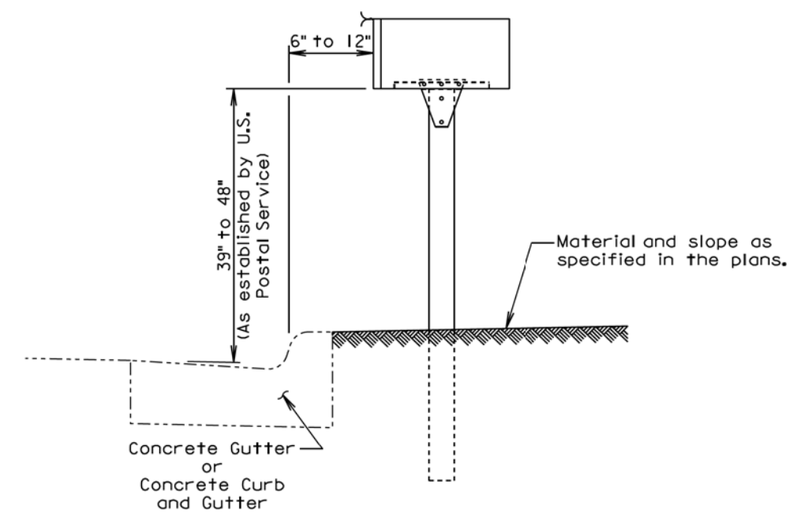

ELEVATION VIEW

GENERAL NOTES:

The post support assemblies provided should be consistant throughout the project.

Post support assemblies shall be one from the approved products list, a 4"x4" or 4" round wood post, or an alternate post support assembly that meets the test level 3 crash testing requirements of NCHRP 350 or MASH.

Alternate mailbox support assemblies shall be approved by the Engineer prior to installation. The Contractor shall provide the Engineer written certification that the mailbox support assembly has met the crash testing requirements and will be installed in accordance with the manufacturer's installation instructions.

February 10, 2014

Published Date: 3rd Qtr. 2016	SDDOT	MAILBOX ADJACENT TO CONCRETE GUTTER OR CONCRETE CURB AND GUTTER	PLATE NUMBER 900.05
			Sheet 1 of 1

STATE OF SOUTH DAKOTA	PROJECT	SHEET	TOTAL SHEETS
	NH 0050(108)385	F85	F102

Plotting Date: 08/18/2016

PCC OVERLAY CENTERLINE PROFILE

The PCC Overlay centerline profile shown in these plans was used to calculate the cubic yards for the PCC Overlay furnished.
The PCC Overlay centerline profile was designed so that there will be a minimum of 7.0 inches of PCC at all locations of the typical sections.
The PCC Overlay centerline profile sheets are included in the plans for information only.
The Contractor shall create a new PCC Overlay centerline profile in accordance with the Special Provision for Contractor Staking.
The elevations shown are the top of the PCC Overlay at Centerline.
Profile begins at Station 400+17 and ends at Station 404+00

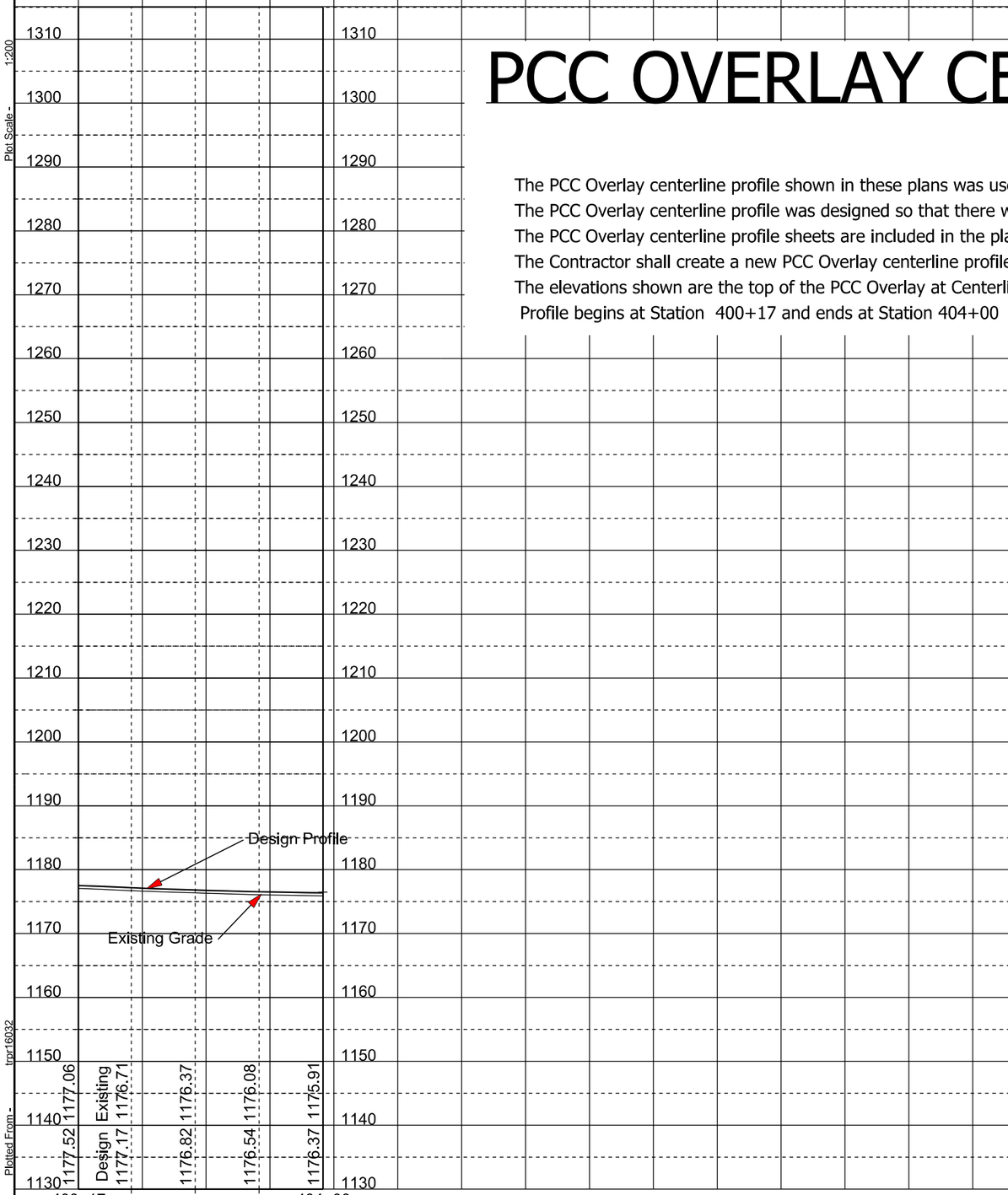

Plot Scale - 1:200

Plotted From - trpr16032

File - U:\ms\prj\yank023U\pro.dgn

STATE OF SOUTH DAKOTA	PROJECT	SHEET	TOTAL SHEETS
	NH 0050(108)385	F86	F102

Plotting Date: 08/18/2016

PCC OVERLAY CENTERLINE PROFILE

The PCC Overlay centerline profile shown in these plans was used to calculate the cubic yards for the PCC Overlay furnished.
The PCC Overlay centerline profile was designed so that there will be a minimum of 7.0 inches of PCC at all locations of the typical sections.
The PCC Overlay centerline profile sheets are included in the plans for information only.
The Contractor shall create a new PCC Overlay centerline profile in accordance with the Special Provision for Contractor Staking.
The elevations shown are the top of the PCC Overlay at Centerline.
Profile begins at Station 404+00 and ends at Station a 419+62.55

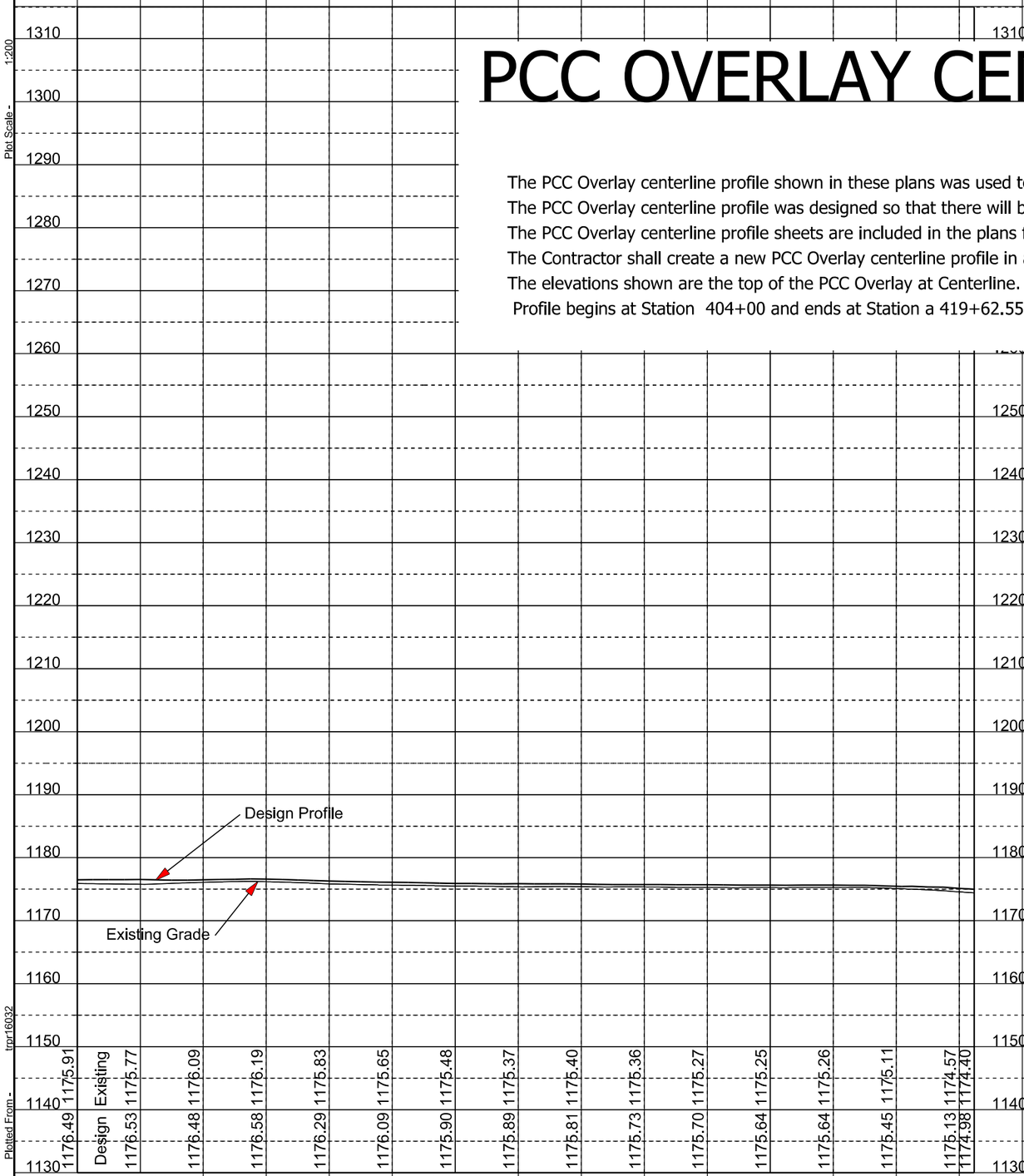

Plot Scale - 1:200

Plotted From - tnpr16032

File - U:\msjrtjyank023\U\pro1.dgn

STATE OF SOUTH DAKOTA	PROJECT	SHEET	TOTAL SHEETS
	NH 0050(108)385	F87	F102

Plotting Date: 08/18/2016

PCC OVERLAY CENTERLINE PROFILE

The PCC Overlay centerline profile shown in these plans was used to calculate the cubic yards for the PCC Overlay furnished.
The PCC Overlay centerline profile was designed so that there will be a minimum of 7.0 inches of PCC at all locations of the typical sections.
The PCC Overlay centerline profile sheets are included in the plans for information only.
The Contractor shall create a new PCC Overlay centerline profile in accordance with the Special Provision for Contractor Staking.
The elevations shown are the top of the PCC Overlay at Centerline.
Profile begins at Station 404+00 and ends at Station a 419+62.55

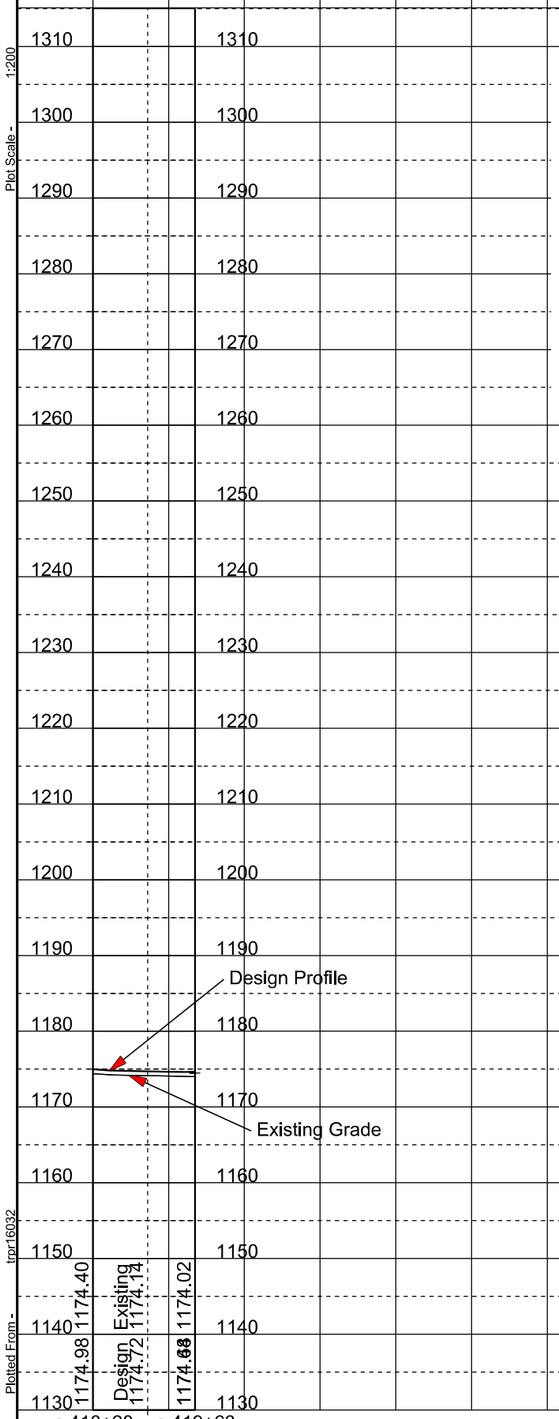

Plot Scale - 1:200

Plotted From - tmp16032

File - U:\msjrhjyank023U\pro1.dgn

STATE OF SOUTH DAKOTA	PROJECT	SHEET	TOTAL SHEETS
	NH 0050(108)385	F88	F102

Plotting Date: 08/18/2016

PCC OVERLAY CENTERLINE PROFILE

The PCC Overlay centerline profile shown in these plans was used to calculate the cubic yards for the PCC Overlay furnished.
The PCC Overlay centerline profile was designed so that there will be a minimum of 7.0 inches of PCC at all locations of the typical sections.
The PCC Overlay centerline profile sheets are included in the plans for information only.
The Contractor shall create a new PCC Overlay centerline profile in accordance with the Special Provision for Contractor Staking.
The elevations shown are the top of the PCC Overlay at Centerline.
Profile begins at Station a 419+62.55 and ends at Station b 68+41.30

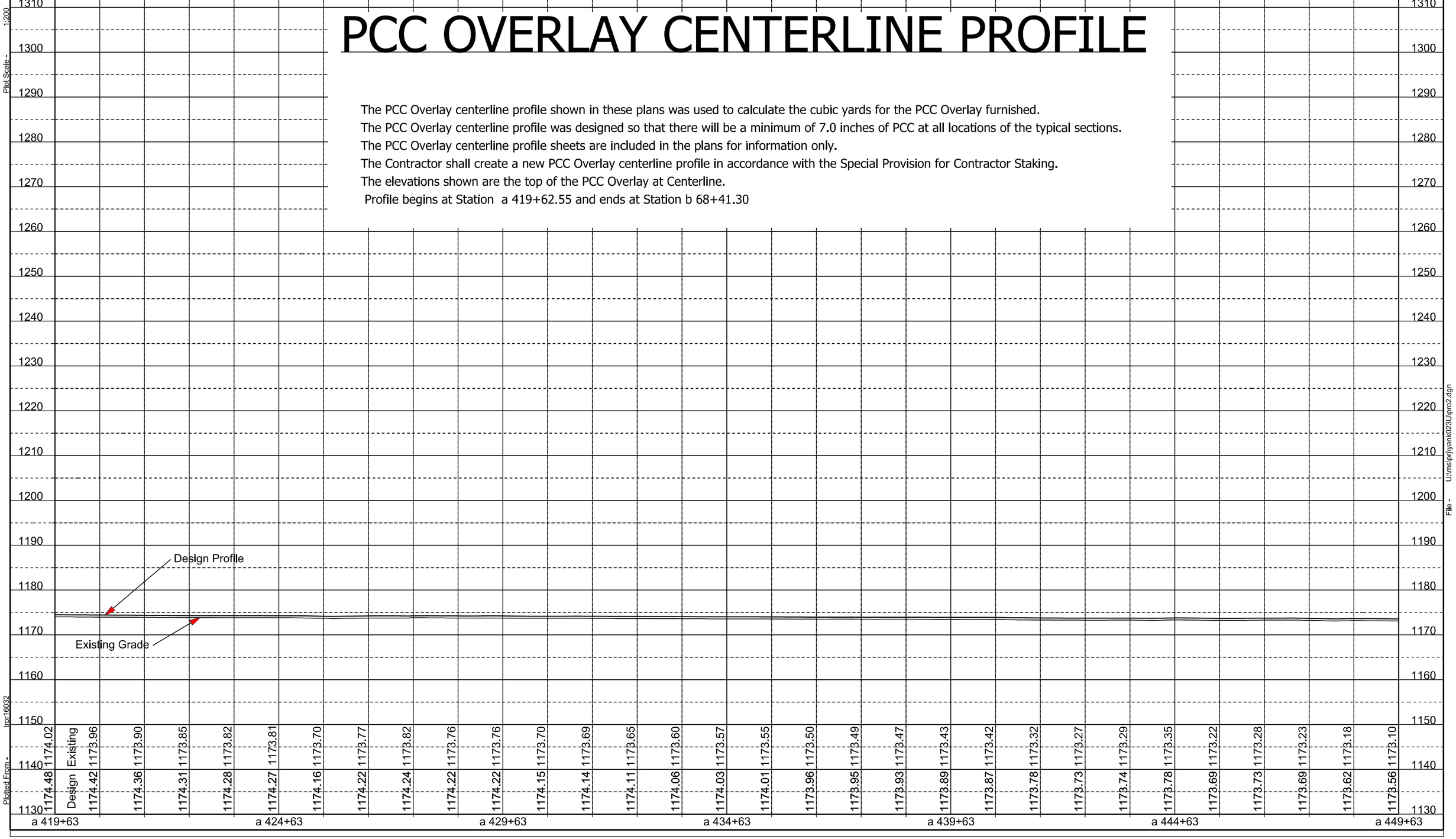

Plot Scale - 1:200
Plotted From - tpr16032
File - U:\ms\phlyank023U\pro2.dgn

STATE OF SOUTH DAKOTA	PROJECT	SHEET	TOTAL SHEETS
	NH 0050(108)385	F89	F102

Plotting Date: 08/18/2016

PCC OVERLAY CENTERLINE PROFILE

The PCC Overlay centerline profile shown in these plans was used to calculate the cubic yards for the PCC Overlay furnished.
The PCC Overlay centerline profile was designed so that there will be a minimum of 7.0 inches of PCC at all locations of the typical sections.
The PCC Overlay centerline profile sheets are included in the plans for information only.
The Contractor shall create a new PCC Overlay centerline profile in accordance with the Special Provision for Contractor Staking.
The elevations shown are the top of the PCC Overlay at Centerline.
Profile begins at Station a 419+62.55 and ends at Station b 68+41.30

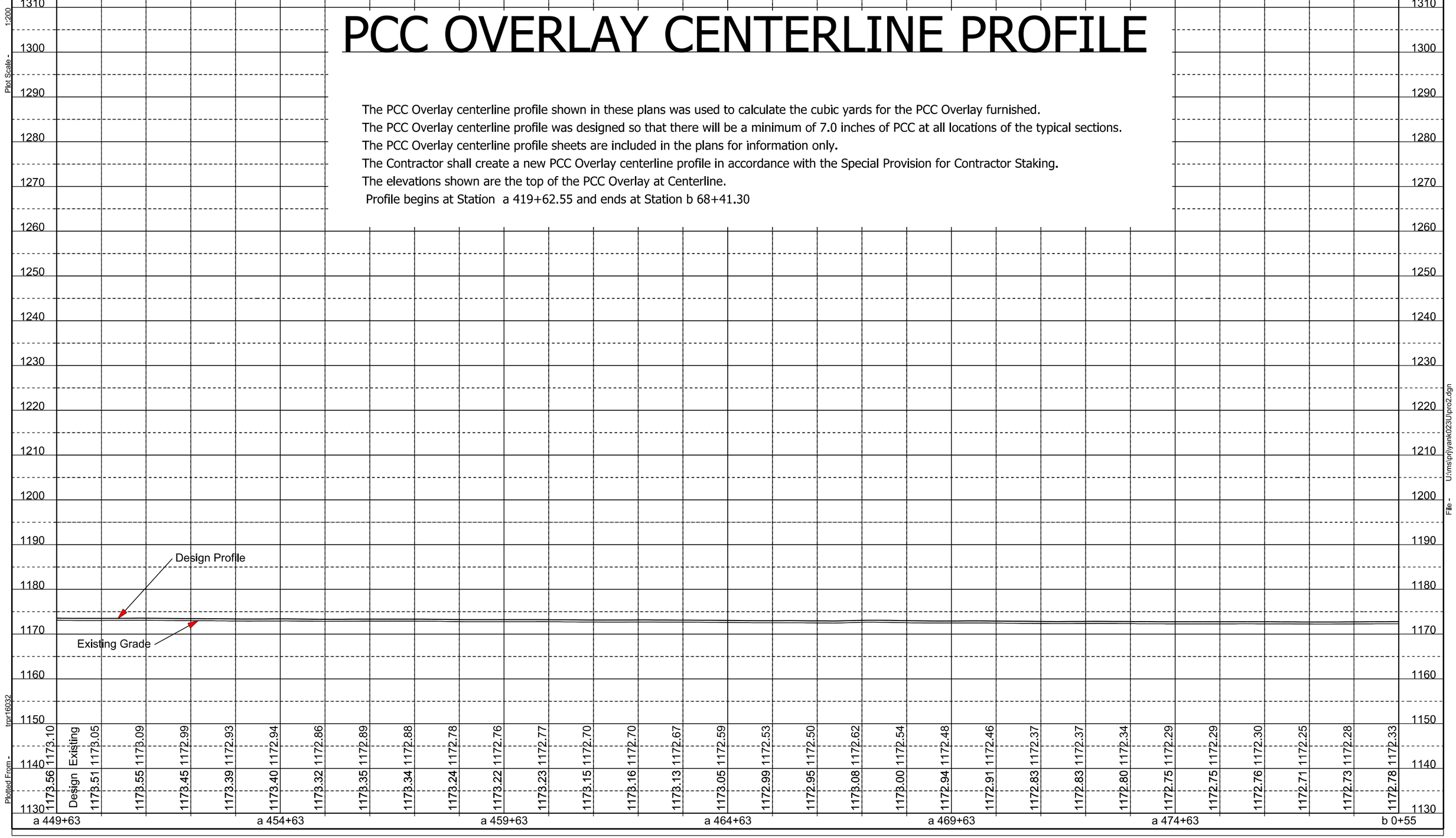

Plot Scale - 1:200
Plotted From - tpr16032
File - U:\ms\phlyank023\U\pro2.dgn

STATE OF SOUTH DAKOTA	PROJECT	SHEET	TOTAL SHEETS
	NH 0050(108)385	F90	F102

Plotting Date: 08/18/2016

PCC OVERLAY CENTERLINE PROFILE

The PCC Overlay centerline profile shown in these plans was used to calculate the cubic yards for the PCC Overlay furnished.
The PCC Overlay centerline profile was designed so that there will be a minimum of 7.0 inches of PCC at all locations of the typical sections.
The PCC Overlay centerline profile sheets are included in the plans for information only.
The Contractor shall create a new PCC Overlay centerline profile in accordance with the Special Provision for Contractor Staking.
The elevations shown are the top of the PCC Overlay at Centerline.
Profile begins at Station a 419+62.55 and ends at Station b 68+41.30

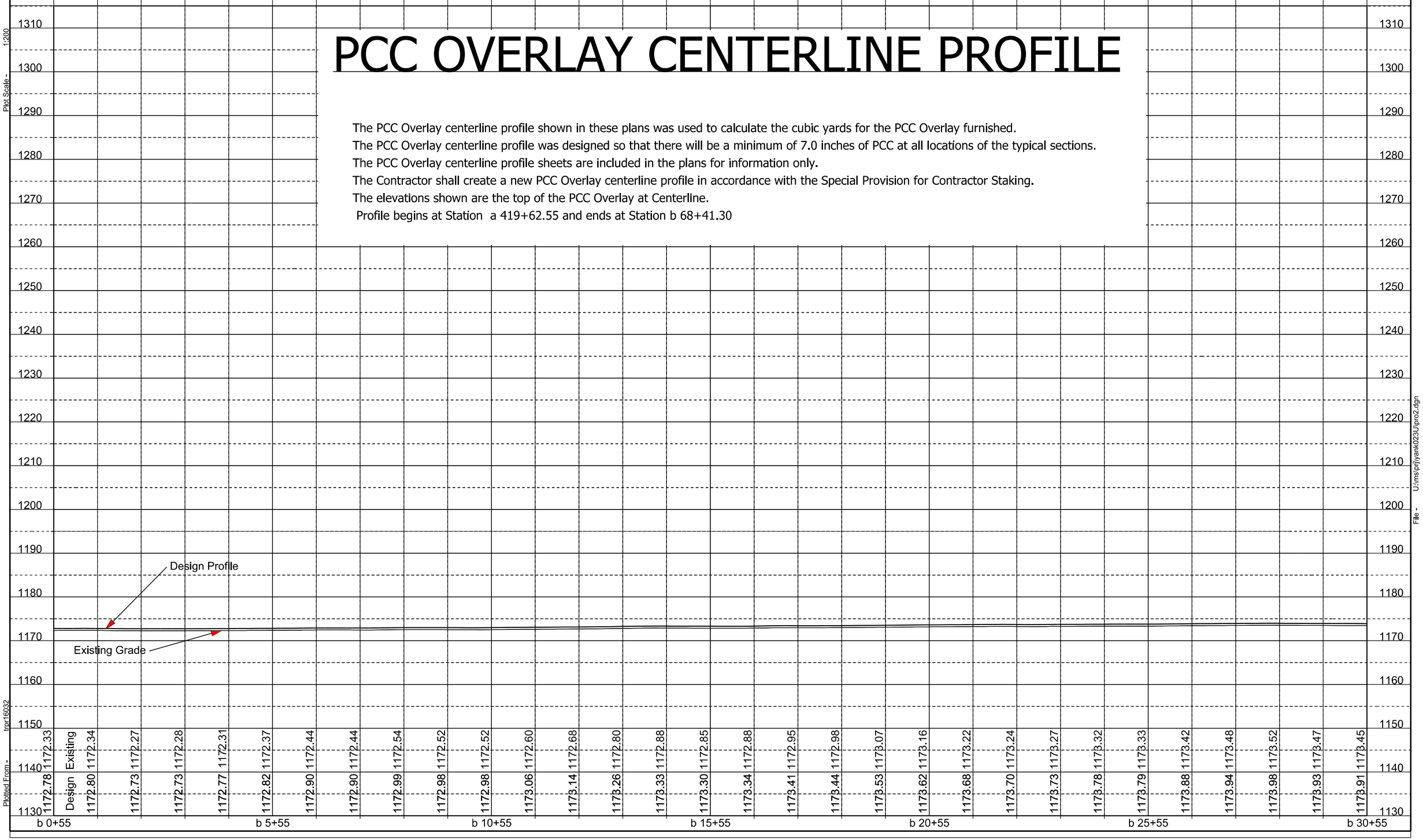

Plot Scale - 1:200
Plotted From - tpr16032
File - U:\ms\phlyank023U\pro2.dgn

STATE OF SOUTH DAKOTA	PROJECT	SHEET	TOTAL SHEETS
	NH 0050(108)385	F91	F102

Plotting Date: 08/18/2016

PCC OVERLAY CENTERLINE PROFILE

The PCC Overlay centerline profile shown in these plans was used to calculate the cubic yards for the PCC Overlay furnished.
The PCC Overlay centerline profile was designed so that there will be a minimum of 7.0 inches of PCC at all locations of the typical sections.
The PCC Overlay centerline profile sheets are included in the plans for information only.
The Contractor shall create a new PCC Overlay centerline profile in accordance with the Special Provision for Contractor Staking.
The elevations shown are the top of the PCC Overlay at Centerline.
Profile begins at Station a 419+62.55 and ends at Station b 68+41.30

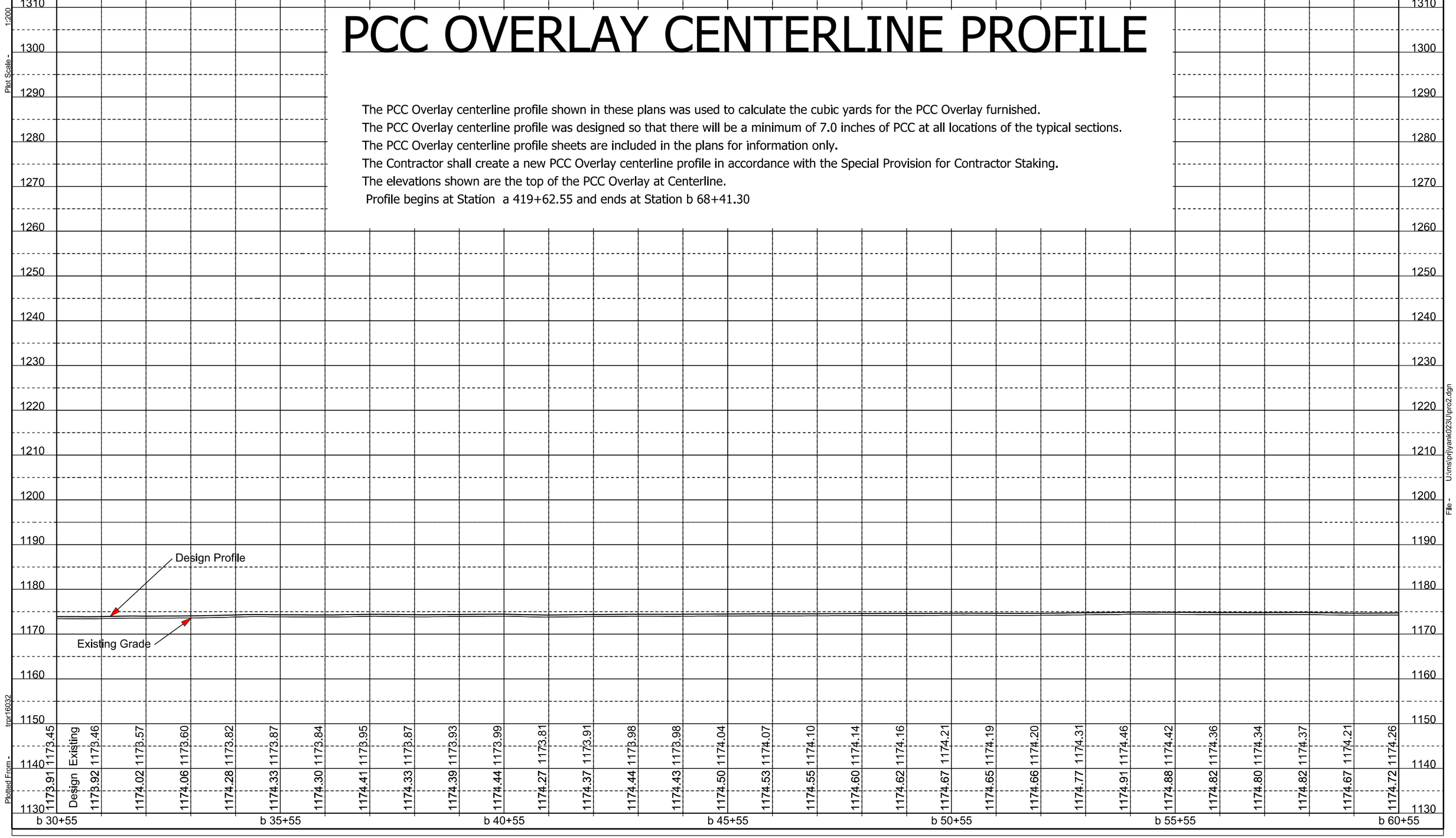

Plot Scale - 1:200
Plotted From - tpr16032
File - U:\ms\phlyank023U\pro2.dgn

STATE OF SOUTH DAKOTA	PROJECT	SHEET	TOTAL SHEETS
	NH 0050(108)385	F92	F102

Plotting Date: 08/18/2016

PCC OVERLAY CENTERLINE PROFILE

The PCC Overlay centerline profile shown in these plans was used to calculate the cubic yards for the PCC Overlay furnished.
The PCC Overlay centerline profile was designed so that there will be a minimum of 7.0 inches of PCC at all locations of the typical sections.
The PCC Overlay centerline profile sheets are included in the plans for information only.
The Contractor shall create a new PCC Overlay centerline profile in accordance with the Special Provision for Contractor Staking.
The elevations shown are the top of the PCC Overlay at Centerline.
Profile begins at Station a 419+62.55 and ends at Station b 68+41.30

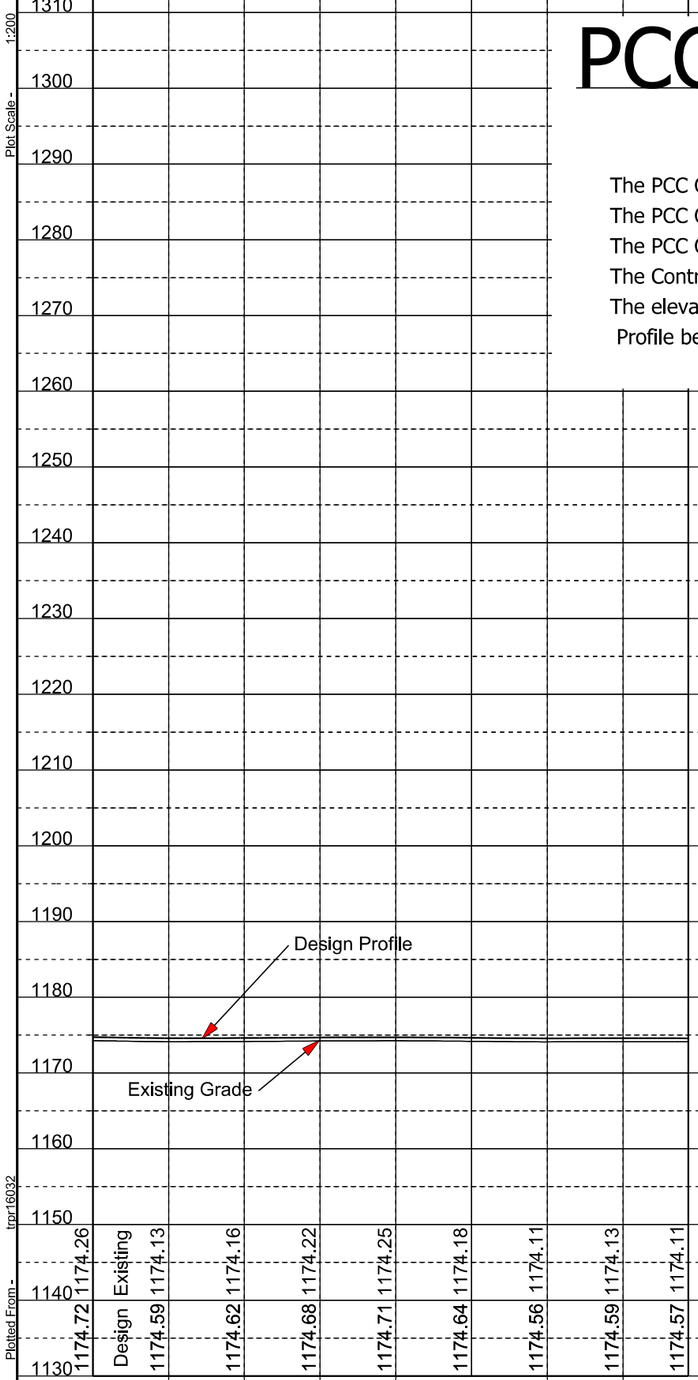

Plot Scale - 1:200

Plotted From - tpr16032

File - U:\ms\phjyank023U\pro2.dgn

STATE OF SOUTH DAKOTA	PROJECT	SHEET	TOTAL SHEETS
	NH 0050(108)385	F93	F102

Plotting Date: 08/18/2016

PCC OVERLAY CENTERLINE PROFILE

The PCC Overlay centerline profile shown in these plans was used to calculate the cubic yards for the PCC Overlay furnished.
The PCC Overlay centerline profile was designed so that there will be a minimum of 7.0 inches of PCC at all locations of the typical sections.
The PCC Overlay centerline profile sheets are included in the plans for information only.
The Contractor shall create a new PCC Overlay centerline profile in accordance with the Special Provision for Contractor Staking.
The elevations shown are the top of the PCC Overlay at Centerline.
Profile begins at Station b 86+08 and ends at Station b 365+49.60

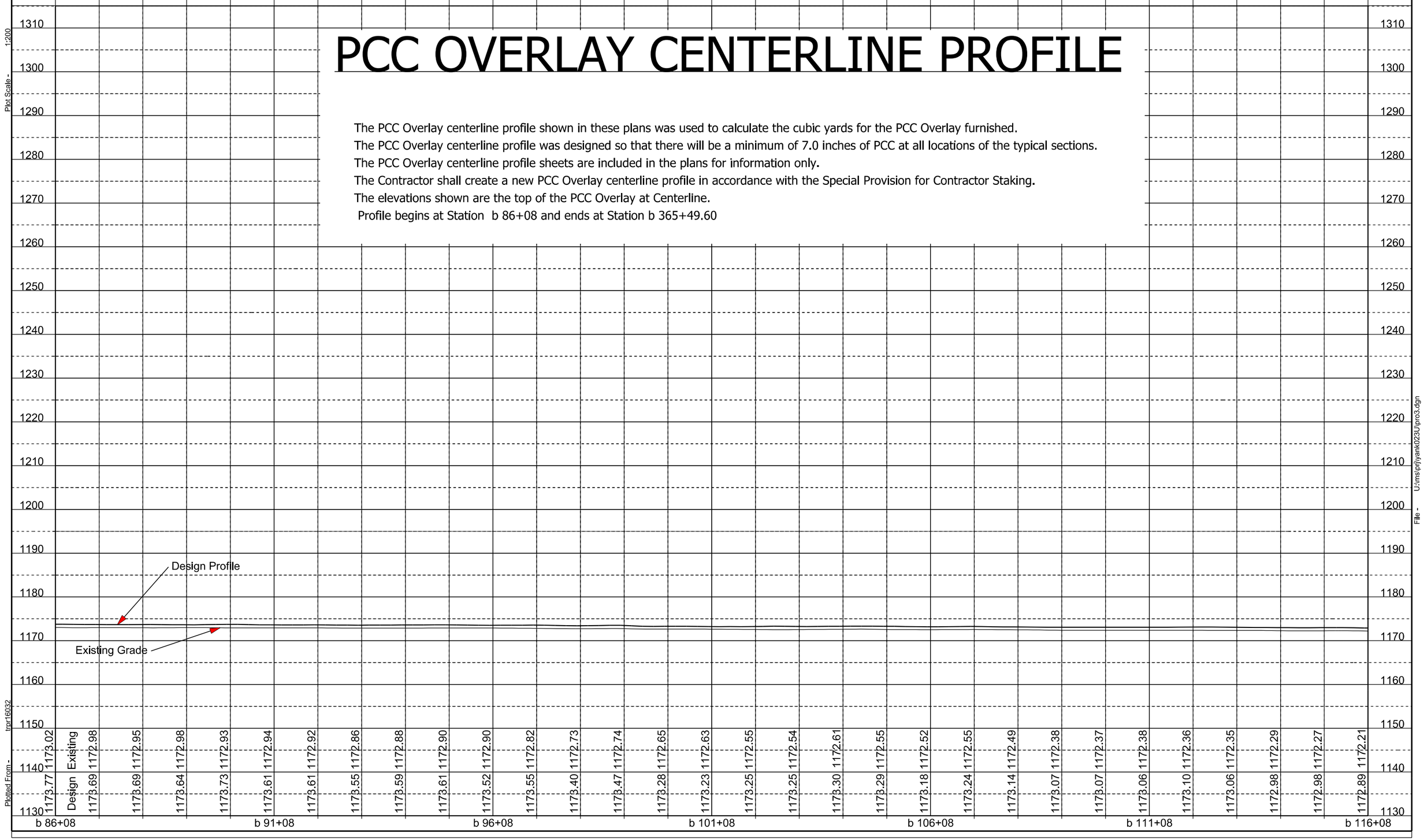

Plot Scale - 1:200
Plotted From - tpr16032
File - U:\ms\phlyank023U\pro3.dgn

STATE OF SOUTH DAKOTA	PROJECT	SHEET	TOTAL SHEETS
	NH 0050(108)385	F94	F102

Plotting Date: 08/18/2016

PCC OVERLAY CENTERLINE PROFILE

The PCC Overlay centerline profile shown in these plans was used to calculate the cubic yards for the PCC Overlay furnished.
The PCC Overlay centerline profile was designed so that there will be a minimum of 7.0 inches of PCC at all locations of the typical sections.
The PCC Overlay centerline profile sheets are included in the plans for information only.
The Contractor shall create a new PCC Overlay centerline profile in accordance with the Special Provision for Contractor Staking.
The elevations shown are the top of the PCC Overlay at Centerline.
Profile begins at Station b 86+08 and ends at Station b 365+49.60

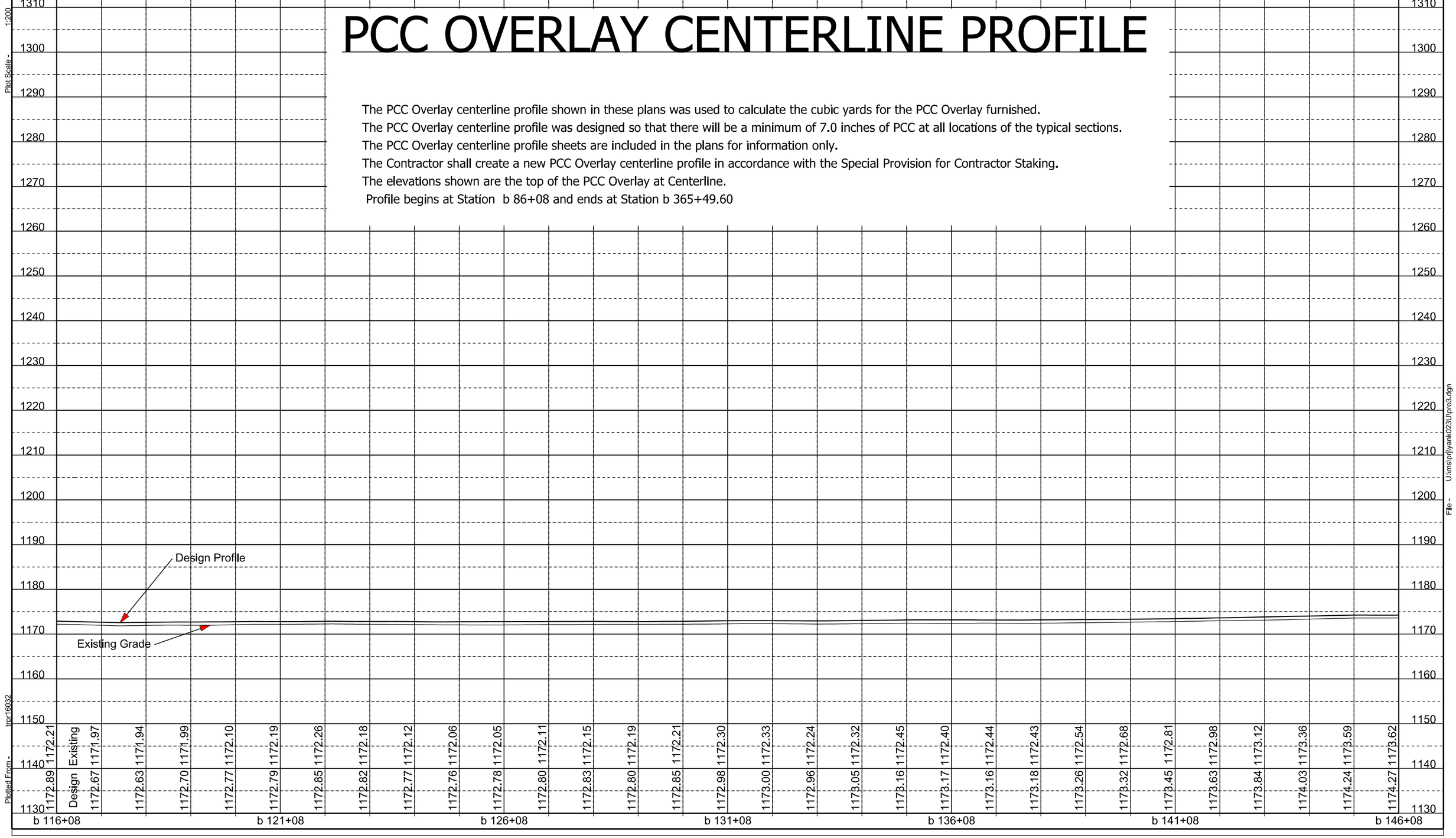

STATE OF SOUTH DAKOTA	PROJECT	SHEET	TOTAL SHEETS
	NH 0050(108)385	F95	F102

Plotting Date: 08/18/2016

PCC OVERLAY CENTERLINE PROFILE

The PCC Overlay centerline profile shown in these plans was used to calculate the cubic yards for the PCC Overlay furnished.
The PCC Overlay centerline profile was designed so that there will be a minimum of 7.0 inches of PCC at all locations of the typical sections.
The PCC Overlay centerline profile sheets are included in the plans for information only.
The Contractor shall create a new PCC Overlay centerline profile in accordance with the Special Provision for Contractor Staking.
The elevations shown are the top of the PCC Overlay at Centerline.
Profile begins at Station b 86+08, ends at Station b 152+48.7, begins at Station b 162+56.5, and ends at Station b 365+49.60 (exception for bridge)

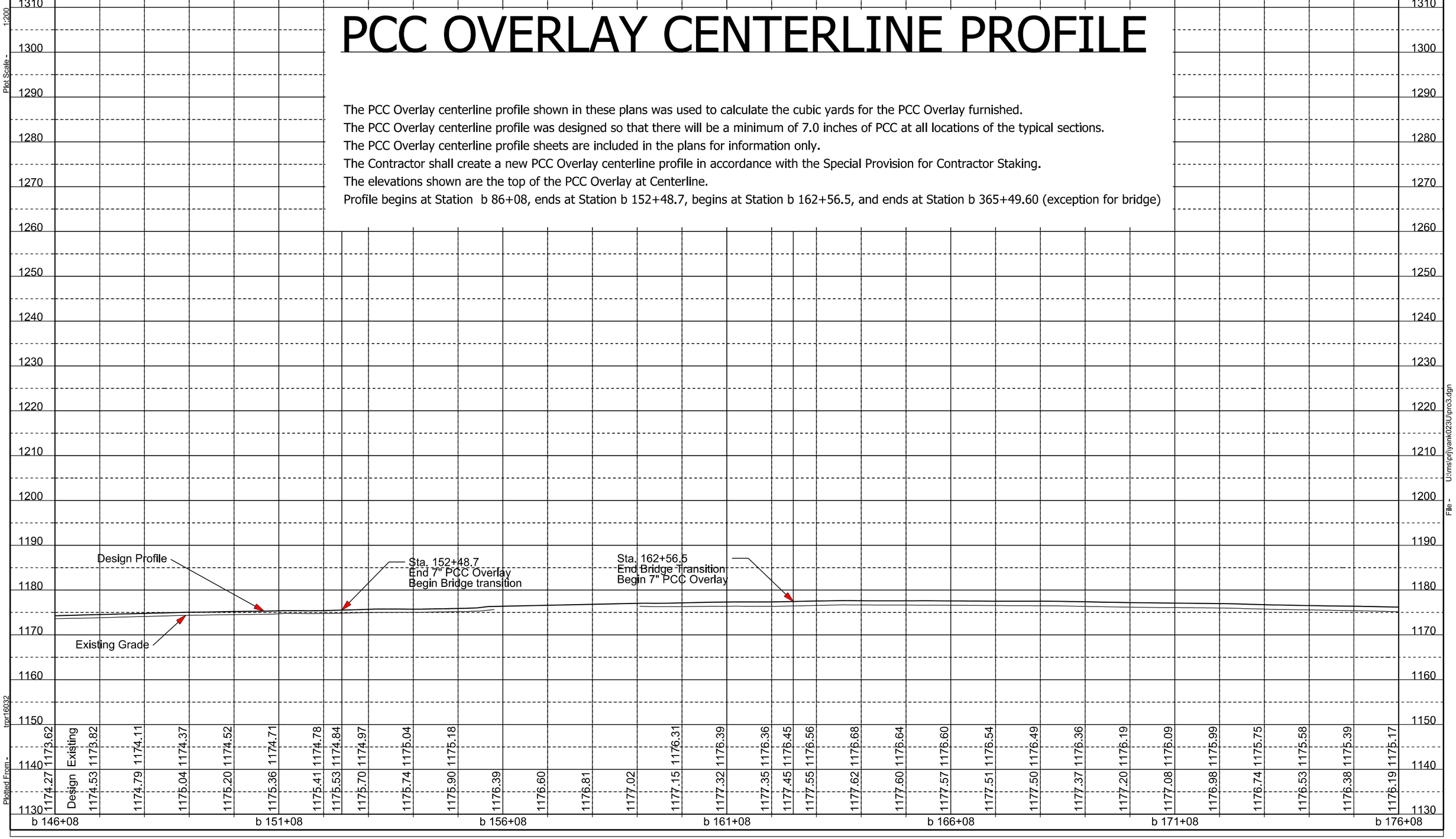

Plot Scale - 1:200
Plotted From - tpr16032
File - U:\mspflyank023U\pro3.dgn

STATE OF SOUTH DAKOTA	PROJECT	SHEET	TOTAL SHEETS
	NH 0050(108)385	F96	F102

Plotting Date: 08/18/2016

PCC OVERLAY CENTERLINE PROFILE

The PCC Overlay centerline profile shown in these plans was used to calculate the cubic yards for the PCC Overlay furnished.
The PCC Overlay centerline profile was designed so that there will be a minimum of 7.0 inches of PCC at all locations of the typical sections.
The PCC Overlay centerline profile sheets are included in the plans for information only.
The Contractor shall create a new PCC Overlay centerline profile in accordance with the Special Provision for Contractor Staking.
The elevations shown are the top of the PCC Overlay at Centerline.
Profile begins at Station b 86+08 and ends at Station b 365+49.60

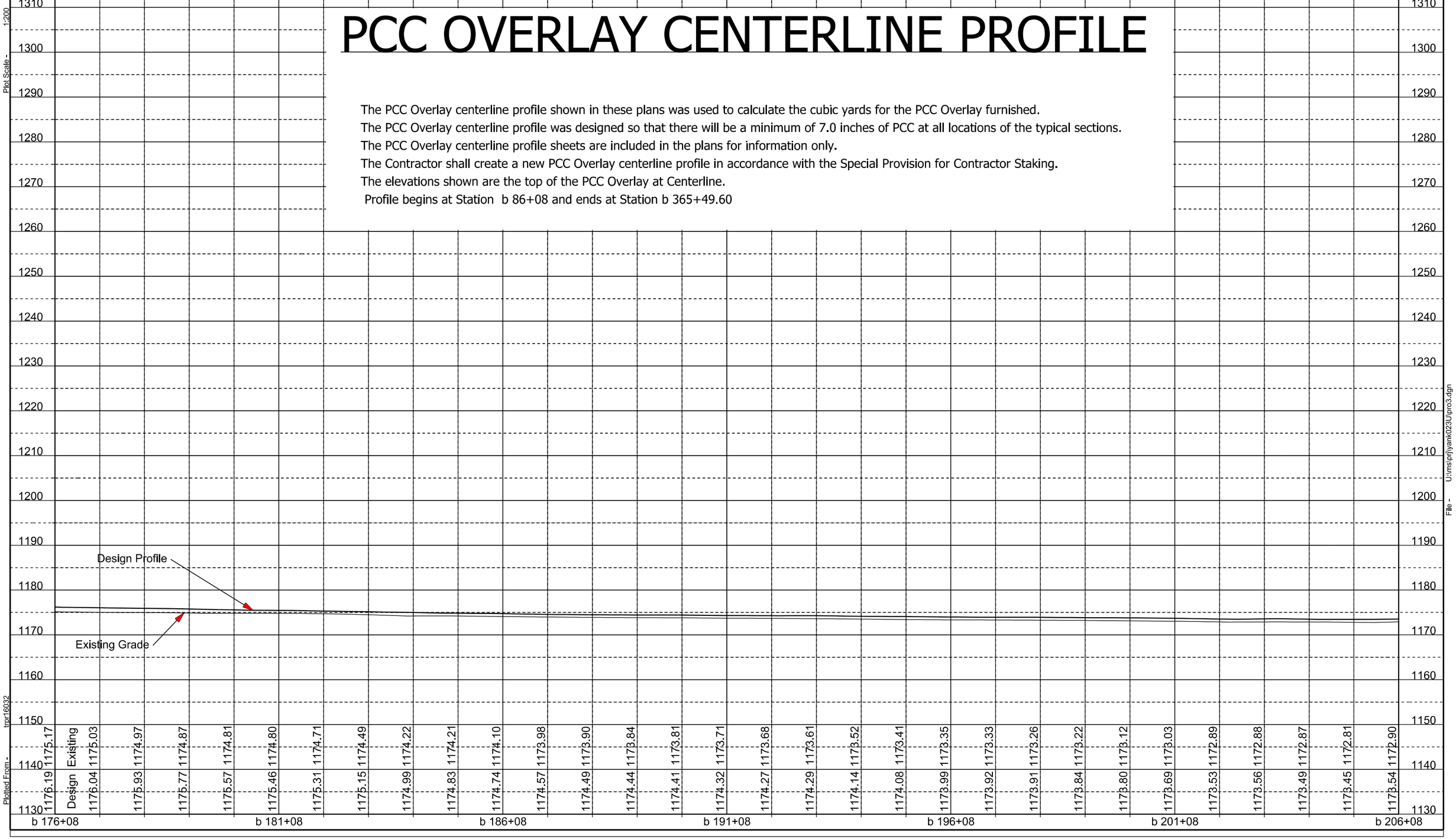

Plot Scale - 1:200

Plotted From - tnpr16032

File - U:\msipriyank023U\pro3.dgn

STATE OF SOUTH DAKOTA	PROJECT	SHEET	TOTAL SHEETS
	NH 0050(108)385	F97	F102

Plotting Date: 08/18/2016

PCC OVERLAY CENTERLINE PROFILE

The PCC Overlay centerline profile shown in these plans was used to calculate the cubic yards for the PCC Overlay furnished.
The PCC Overlay centerline profile was designed so that there will be a minimum of 7.0 inches of PCC at all locations of the typical sections.
The PCC Overlay centerline profile sheets are included in the plans for information only.
The Contractor shall create a new PCC Overlay centerline profile in accordance with the Special Provision for Contractor Staking.
The elevations shown are the top of the PCC Overlay at Centerline.
Profile begins at Station b 86+08 and ends at Station b 365+49.60

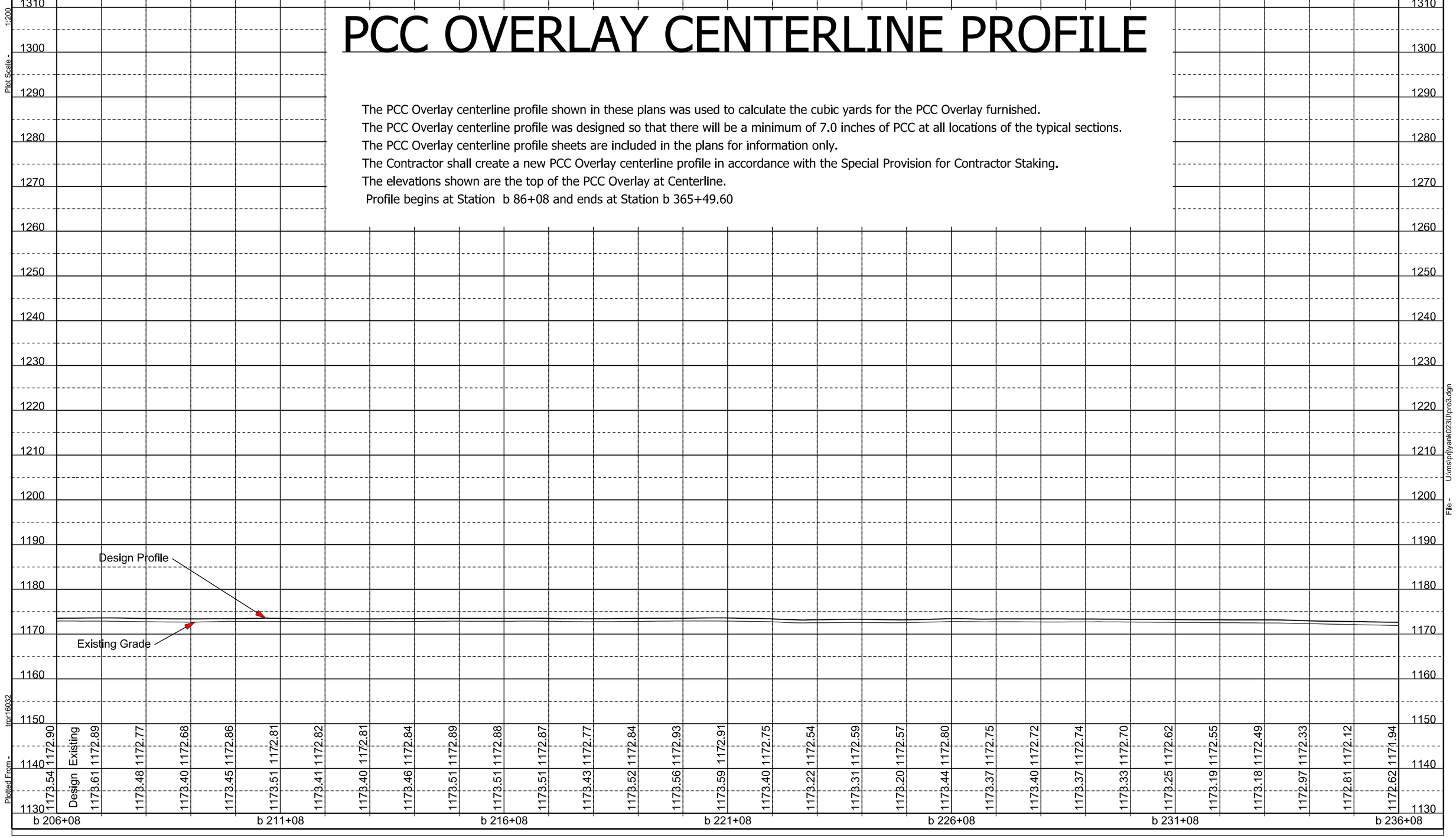

Plot Scale - 1:200
Plotted From - tpr16032
File - U:\ms\phlyank023U\pro3.dgn

STATE OF SOUTH DAKOTA	PROJECT	SHEET	TOTAL SHEETS
	NH 0050(108)385	F98	F102

Plotting Date: 08/18/2016

PCC OVERLAY CENTERLINE PROFILE

The PCC Overlay centerline profile shown in these plans was used to calculate the cubic yards for the PCC Overlay furnished.
The PCC Overlay centerline profile was designed so that there will be a minimum of 7.0 inches of PCC at all locations of the typical sections.
The PCC Overlay centerline profile sheets are included in the plans for information only.
The Contractor shall create a new PCC Overlay centerline profile in accordance with the Special Provision for Contractor Staking.
The elevations shown are the top of the PCC Overlay at Centerline.
Profile begins at Station b 86+08 and ends at Station b 365+49.60

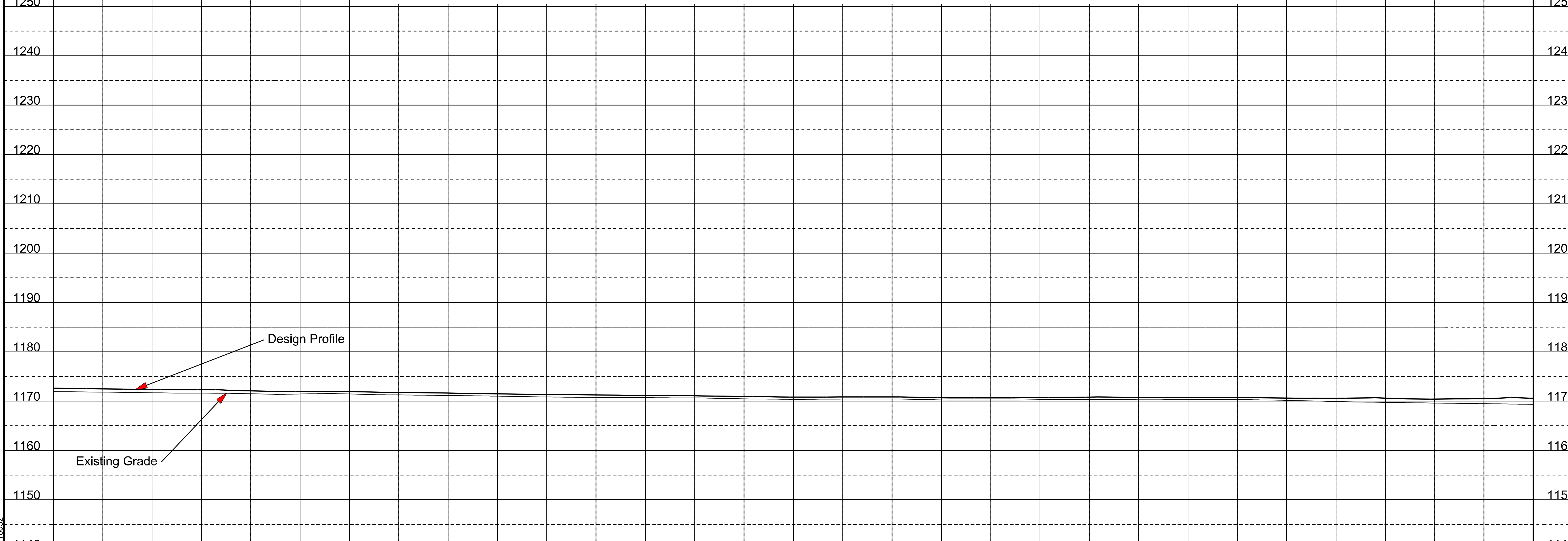

Station	Design	Existing
b 236+08	1172.62	1171.94
	1172.48	1171.82
	1172.35	1171.70
	1172.32	1171.62
	1172.07	1171.49
b 241+08	1171.96	1171.44
	1171.93	1171.45
	1171.76	1171.25
	1171.63	1171.14
	1171.47	1171.00
b 246+08	1171.35	1170.85
	1171.25	1170.75
	1171.14	1170.70
	1171.07	1170.65
	1170.94	1170.45
b 251+08	1170.82	1170.35
	1170.85	1170.42
	1170.84	1170.43
	1170.68	1170.25
	1170.64	1170.21
b 256+08	1170.72	1170.30
	1170.82	1170.34
	1170.71	1170.27
	1170.72	1170.31
	1170.72	1170.30
b 261+08	1170.62	1170.14
	1170.58	1169.91
	1170.60	1169.75
	1170.41	1169.61
	1170.50	1169.49
b 266+08	1170.59	1169.34

Plot Scale - 1:200
Plotted From - trpr16032
File - U:\ms\prj\yank023U\pro3.dgn

STATE OF SOUTH DAKOTA	PROJECT	SHEET	TOTAL SHEETS
	NH 0050(108)385	F99	F102

Plotting Date: 08/18/2016

PCC OVERLAY CENTERLINE PROFILE

The PCC Overlay centerline profile shown in these plans was used to calculate the cubic yards for the PCC Overlay furnished.
The PCC Overlay centerline profile was designed so that there will be a minimum of 7.0 inches of PCC at all locations of the typical sections.
The PCC Overlay centerline profile sheets are included in the plans for information only.
The Contractor shall create a new PCC Overlay centerline profile in accordance with the Special Provision for Contractor Staking.
The elevations shown are the top of the PCC Overlay at Centerline.
Profile begins at Station b 86+08 and ends at Station b 365+49.60

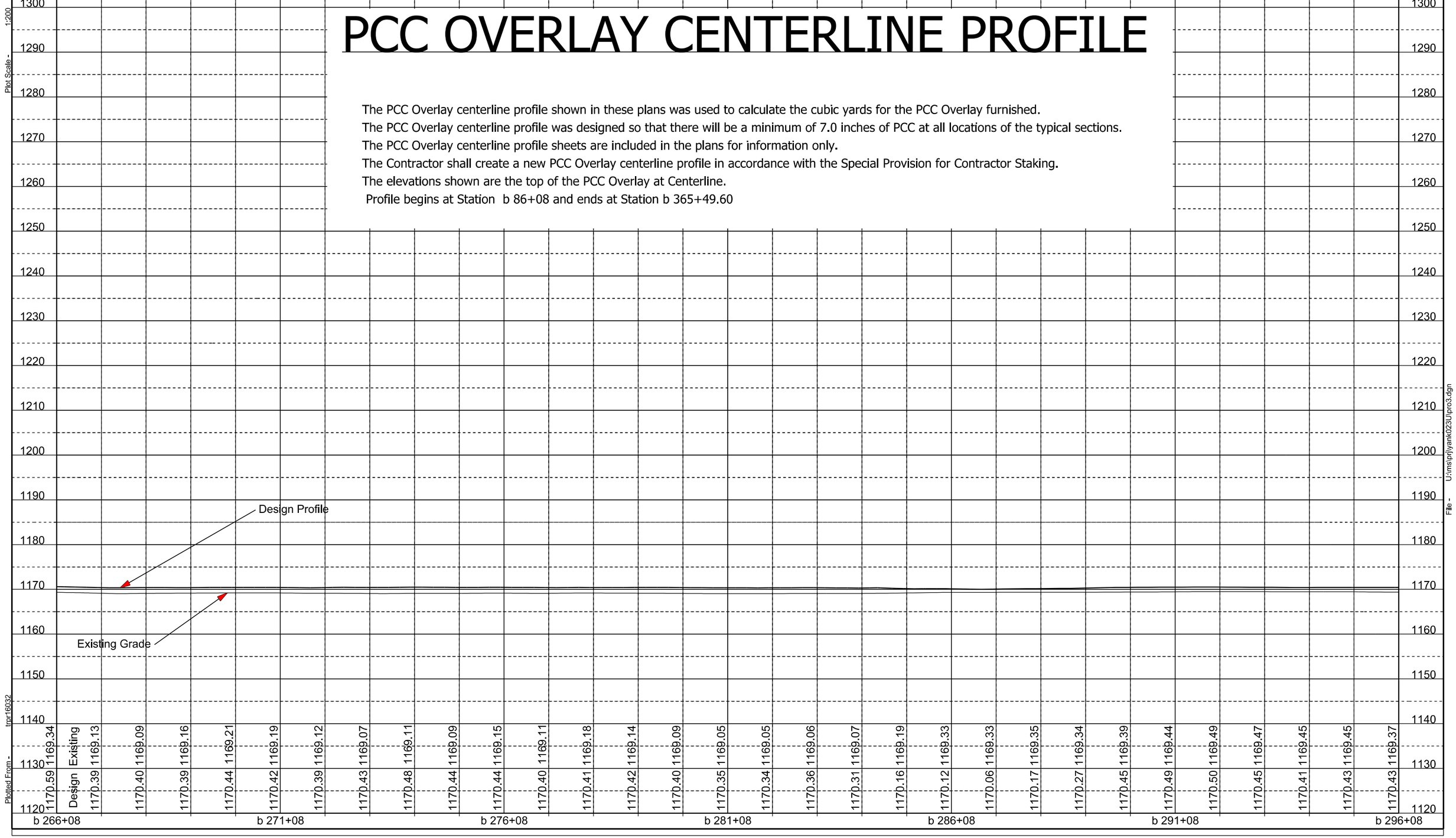

Plot Scale - 1:200
Plotted From - tpr16032
File - U:\ms\phlyank023U\pro3.dgn

STATE OF SOUTH DAKOTA	PROJECT	SHEET	TOTAL SHEETS
	NH 0050(108)385	F100	F102

Plotting Date: 08/18/2016

PCC OVERLAY CENTERLINE PROFILE

The PCC Overlay centerline profile shown in these plans was used to calculate the cubic yards for the PCC Overlay furnished.
The PCC Overlay centerline profile was designed so that there will be a minimum of 7.0 inches of PCC at all locations of the typical sections.
The PCC Overlay centerline profile sheets are included in the plans for information only.
The Contractor shall create a new PCC Overlay centerline profile in accordance with the Special Provision for Contractor Staking.
The elevations shown are the top of the PCC Overlay at Centerline.
Profile begins at Station b 86+08 and ends at Station b 365+49.60

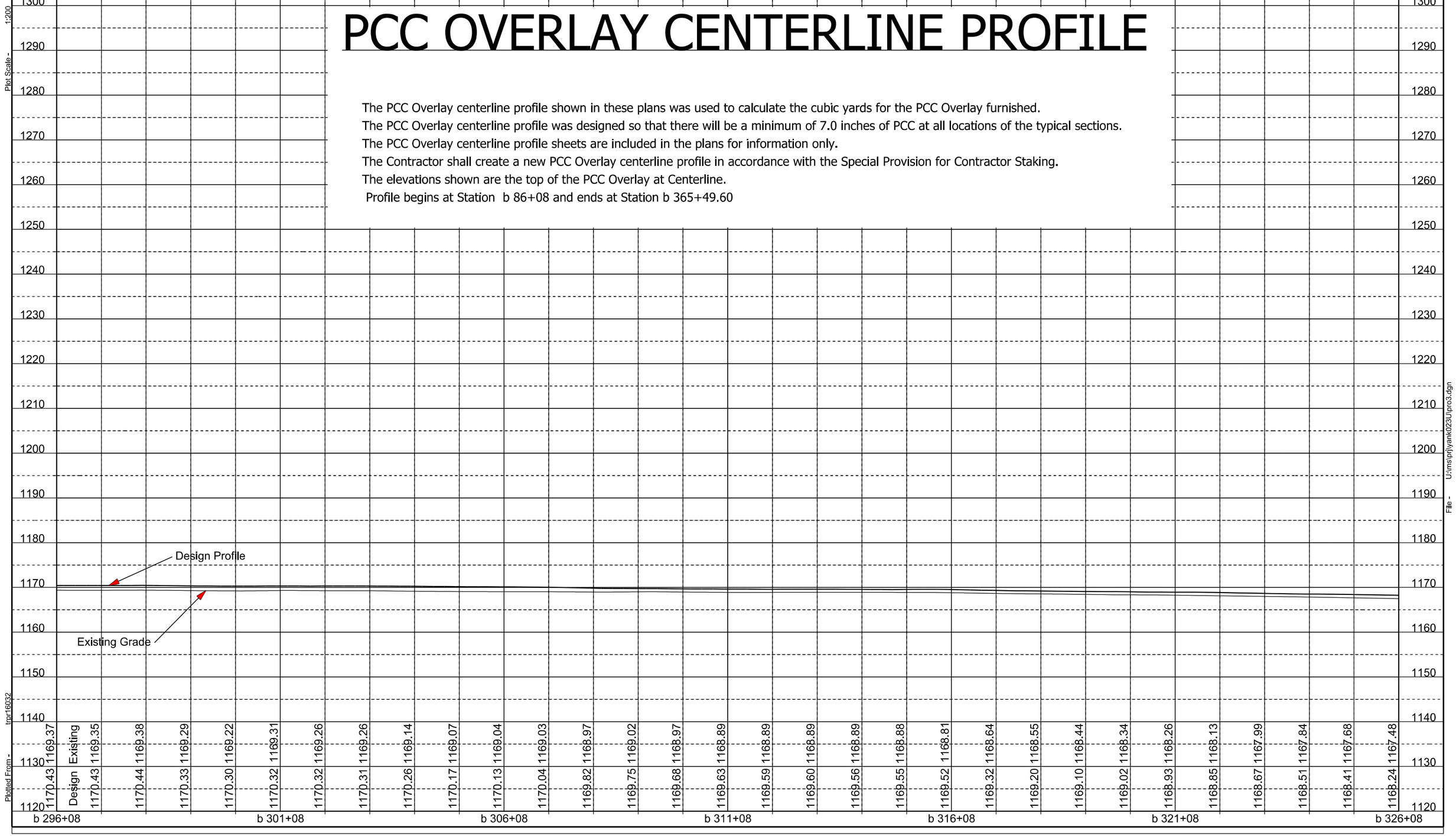

Plot Scale - 1:200

Plotted From - tpr16032

File - U:\msjrhjyank023U\pro3.dgn

STATE OF SOUTH DAKOTA	PROJECT	SHEET	TOTAL SHEETS
	NH 0050(108)385	F101	F102

Plotting Date: 08/18/2016

PCC OVERLAY CENTERLINE PROFILE

The PCC Overlay centerline profile shown in these plans was used to calculate the cubic yards for the PCC Overlay furnished.
The PCC Overlay centerline profile was designed so that there will be a minimum of 7.0 inches of PCC at all locations of the typical sections.
The PCC Overlay centerline profile sheets are included in the plans for information only.
The Contractor shall create a new PCC Overlay centerline profile in accordance with the Special Provision for Contractor Staking.
The elevations shown are the top of the PCC Overlay at Centerline.
Profile begins at Station b 86+08 and ends at Station b 365+49.60

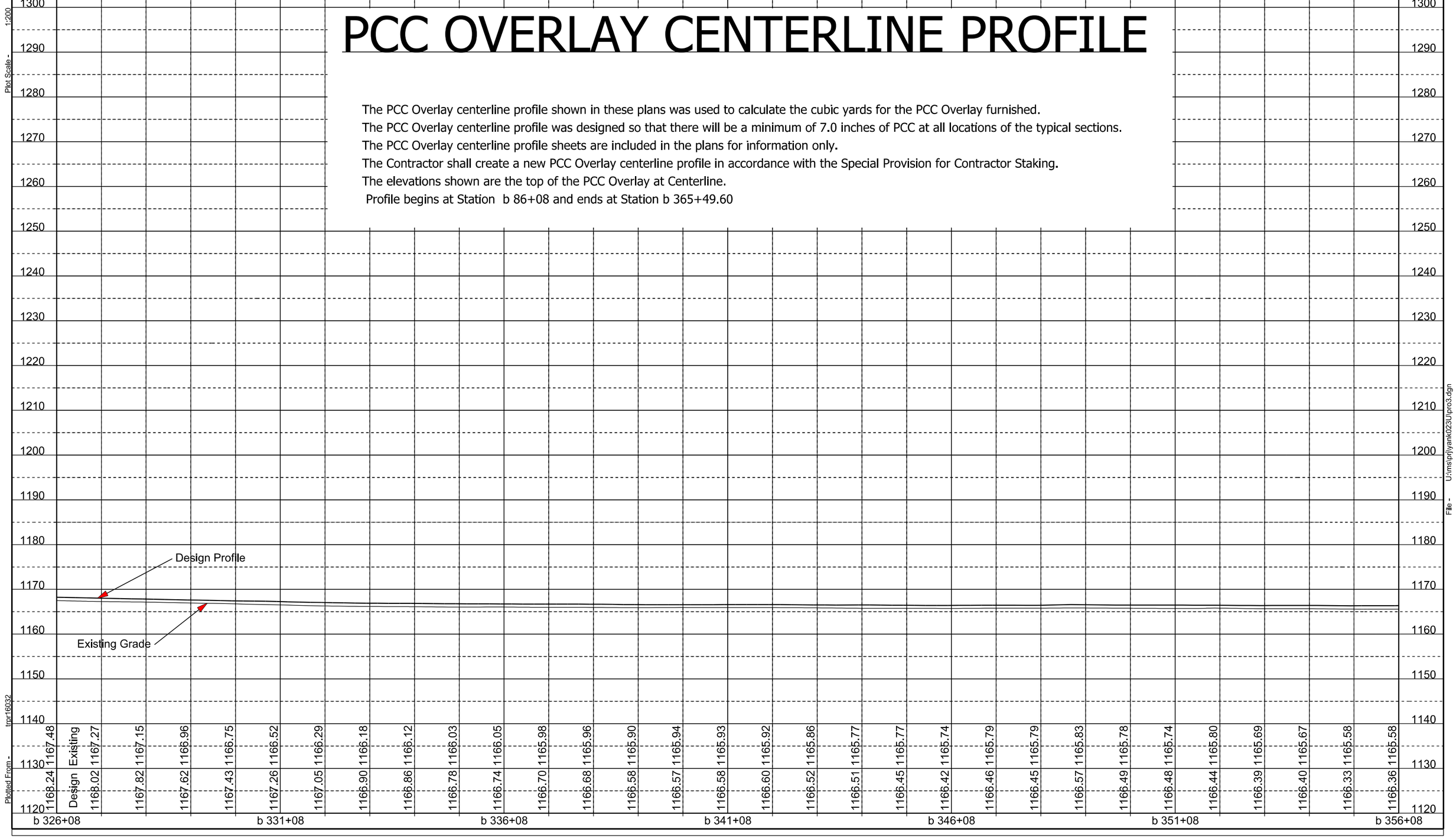

	Existing	Design
b 326+08	1167.48	1168.24
	1167.27	1168.02
	1167.15	1167.82
	1166.96	1167.62
	1166.75	1167.43
	1166.52	1167.26
	1166.29	1167.05
	1166.18	1166.90
	1166.12	1166.86
	1166.03	1166.78
b 336+08	1166.05	1166.74
	1165.98	1166.70
	1165.96	1166.68
	1165.90	1166.58
	1165.94	1166.57
	1165.93	1166.58
	1165.92	1166.60
	1165.86	1166.52
	1165.77	1166.51
b 341+08	1165.77	1166.45
	1165.74	1166.42
	1165.79	1166.46
	1165.79	1166.45
	1165.83	1166.57
	1165.78	1166.49
b 351+08	1165.74	1166.48
	1165.80	1166.44
	1165.69	1166.39
	1165.67	1166.40
	1165.58	1166.33
	1165.58	1166.36

Plot Scale - 1:200
Plotted From - tpr16032
File - U:\ms\phlyank023U\pro3.dgn

STATE OF SOUTH DAKOTA	PROJECT	SHEET	TOTAL SHEETS
	NH 0050(108)385	F102	F102

Plotting Date: 08/18/2016

PCC OVERLAY CENTERLINE PROFILE

The PCC Overlay centerline profile shown in these plans was used to calculate the cubic yards for the PCC Overlay furnished.
The PCC Overlay centerline profile was designed so that there will be a minimum of 7.0 inches of PCC at all locations of the typical sections.
The PCC Overlay centerline profile sheets are included in the plans for information only.
The Contractor shall create a new PCC Overlay centerline profile in accordance with the Special Provision for Contractor Staking.
The elevations shown are the top of the PCC Overlay at Centerline.
Profile begins at Station b 86+08 and ends at Station b 365+49.60

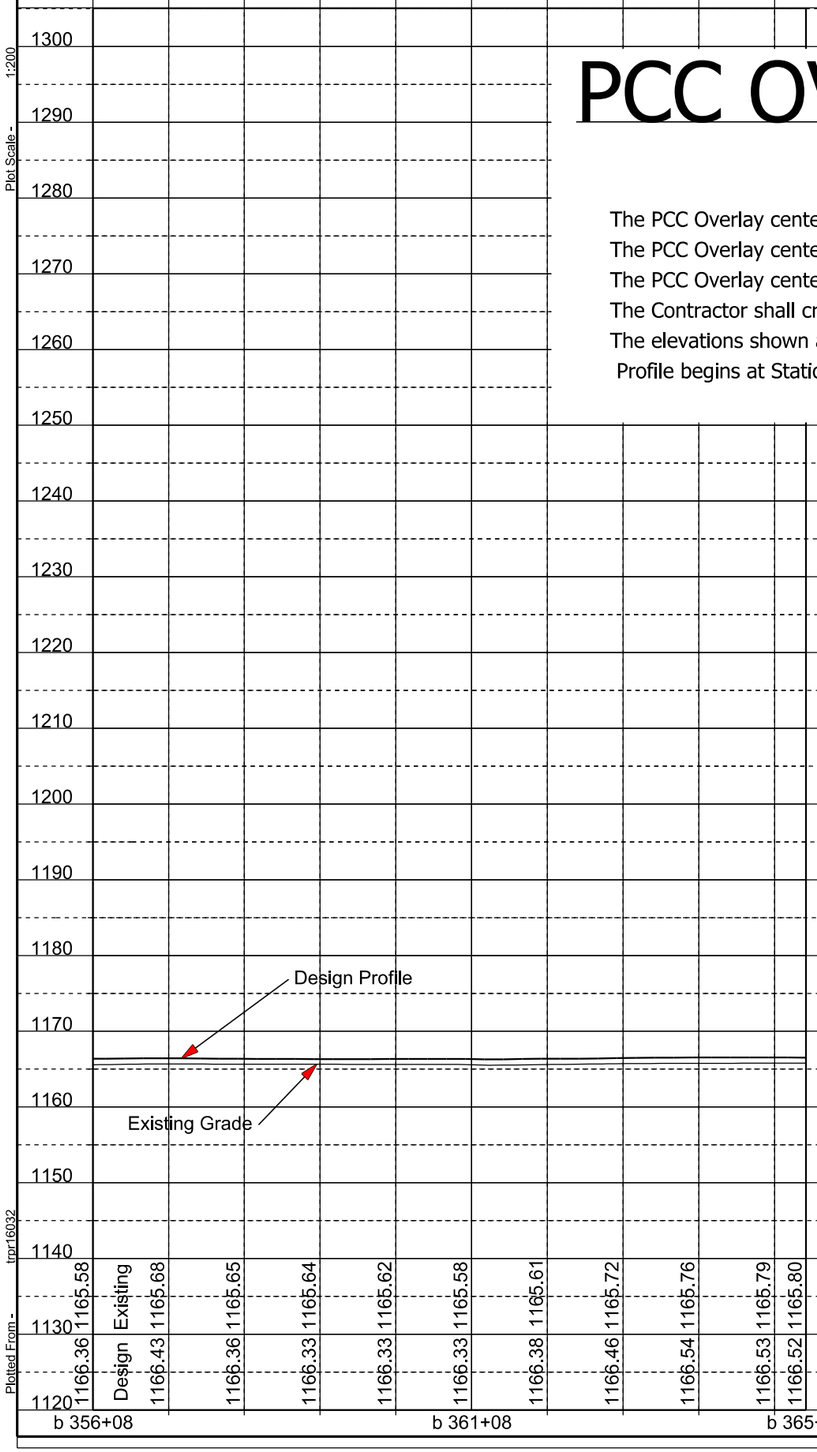

Plot Scale - 1:200

Plotted From - tpr16032

File - U:\ms\phjyank023\0\pro3.dgn