STATE OF SOUTH DAKOTA	PROJECT	SHEET	TOTAL SHEETS
	P 0115(47)102	B1	B78

Plotting Date: 11/20/2015

Section B: Grading Plans

INDEX OF SHEETS

B1	General Layout w/Index
B2-B10	Estimate With General Notes & Tables
B11	Pipe Quantities
B12	Fence Quantities
B13	Pavement, C&G, and Sidewalk Quantities
B14-B15	Typical Sections
B16	Horizonal Alignment Data
B17	Control Data Sheet
B18-B28	Utility Confilicts and Review Summary
B29	Topography Symbology & Legend
B30-B45	Plan & Profile Sheets
B46-B49	Curb and Gutter Layouts
B50-B51	Curb Ramp Layouts
B52-B78	Standard Plates

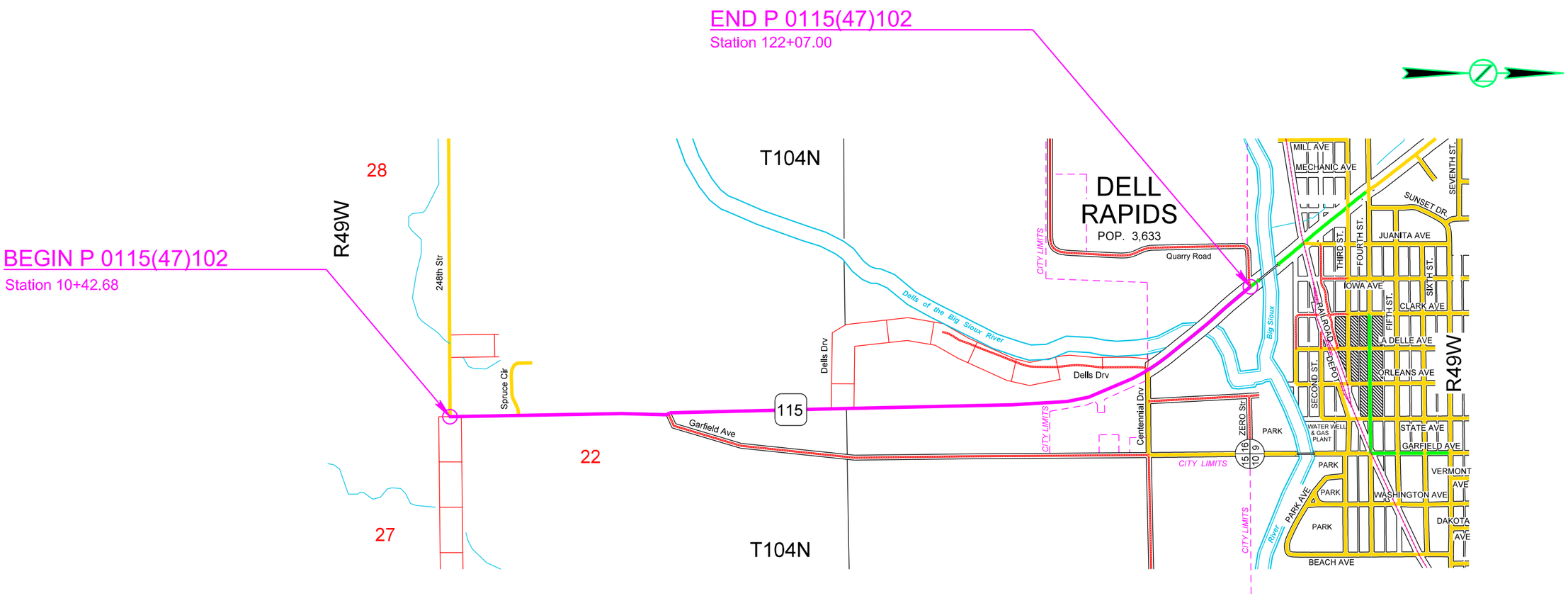

Plot Scale - 1:200

File - U:\rdprj\mhn\025C\TitleB.dgn

SECTION B ESTIMATE OF QUANTITIES

BID ITEM NUMBER	ITEM	QUANTITY	UNIT
009E0010	Mobilization	Lump Sum	LS
009E3230	Grade Staking	6.411	Mile
009E3245	Final Cross Section Survey	2.114	Mile
009E3250	Miscellaneous Staking	2.114	Mile
009E3280	Slope Staking	2.114	Mile
009E3290	Structure Staking	2	Each
009E3300	Three Man Survey Crew	40.0	Hour
009E4200	Construction Schedule, Category II	Lump Sum	LS
100E0100	Clearing	Lump Sum	LS
110E0400	Remove Drop Inlet	1	Each
110E0600	Remove Fence	2,807	Ft
110E0605	Remove Chain Link Fence	78	Ft
110E0700	Remove 3 Cable Guardrail	908	Ft
110E0730	Remove Beam Guardrail	399.0	Ft
110E0740	Remove 3 Cable Guardrail Anchor Assembly	8	Each
110E1010	Remove Asphalt Concrete Pavement	21,608.7	SqYd
110E1100	Remove Concrete Pavement	29,304.0	SqYd
110E1130	Remove Concrete Driveway Pavement	621.7	SqYd
110E7040	Remove Gate for Reset	1	Each
120E0010	Unclassified Excavation	88,467	CuYd
120E0400	Select Subgrade Topping	46,510	CuYd
120E0420	Contractor Furnished Select Subgrade Topping	2,422	CuYd
120E6100	Water for Embankment	813.0	MGal
250E0020	Incidental Work, Grading	Lump Sum	LS
270E0042	Salvage Asphalt Mix and Granular Base Material	15,678.4	Ton
270E0300	Haul Material	13,104.0	CuYd
380E3520	6" PCC Approach Pavement	32.0	SqYd
380E4050	8" PCC Fillet Section	25.9	SqYd
421E0100	Pipe Culvert Undercut	87	CuYd
450E0122	18" RCP Class 2, Furnish	480	Ft
450E0130	18" RCP, Install	480	Ft
450E0142	24" RCP Class 2, Furnish	386	Ft
450E0150	24" RCP, Install	386	Ft
450E0162	30" RCP Class 2, Furnish	338	Ft
450E0170	30" RCP, Install	338	Ft
450E0202	48" RCP Class 2, Furnish	114	Ft
450E0210	48" RCP, Install	114	Ft
450E0214	54" RCP Class 4, Furnish	144	Ft
450E0220	54" RCP, Install	144	Ft
450E2008	18" RCP Flared End, Furnish	6	Each
450E2009	18" RCP Flared End, Install	6	Each
450E2036	48" RCP Flared End, Furnish	2	Each
450E2037	48" RCP Flared End, Install	2	Each
450E2040	54" RCP Flared End, Furnish	2	Each

BID ITEM NUMBER	ITEM	QUANTITY	UNIT
450E2041	54" RCP Flared End, Install	2	Each
450E2200	24" RCP Sloped End, Furnish	8	Each
450E2201	24" RCP Sloped End, Install	8	Each
450E2204	30" RCP Sloped End, Furnish	6	Each
450E2205	30" RCP Sloped End, Install	6	Each
450E4759	18" CMP 16 Gauge, Furnish	1,390	Ft
450E4760	18" CMP, Install	1,390	Ft
450E5010	18" CMP Elbow, Furnish	2	Each
450E5011	18" CMP Elbow, Install	2	Each
450E5211	18" CMP Flared End, Furnish	1	Each
450E5212	18" CMP Flared End, Install	1	Each
450E5406	18" CMP Safety End, Furnish	38	Each
450E5407	18" CMP Safety End, Install	38	Each
450E5539	36" CMP Arch 16 Gauge, Furnish	64	Ft
450E5540	36" CMP Arch, Install	64	Ft
450E6020	36" CMP Arch Safety End, Furnish	2	Each
450E6023	36" CMP Arch Safety End, Install	2	Each
450E8009	18" RCP to CMP Transition, Furnish	1	Each
450E8010	18" Pipe Transition, Install	1	Each
462E0100	Class M6 Concrete	9.6	CuYd
480E0100	Reinforcing Steel	1,314	Lb
600E0300	Type III Field Laboratory	1	Each
620E0020	Type 2 Right-of-Way Fence	2,274	Ft
620E0060	Type 6 Right-of-Way Fence	345	Ft
620E0510	Type 1 Temporary Fence	2,807	Ft
620E1020	2 Post Panel	22	Each
620E1030	3 Post Panel	17	Each
620E2100	Reset Gate	1	Each
621E0040	4' Chain Link Fence with Top Rail	291	Ft
621E0060	6' Chain Link Fence with Top Rail	60	Ft
650E0080	Type B68 Concrete Curb and Gutter	1,171	Ft
650E4680	Type P8 Concrete Gutter	24	Ft
651E0050	5" Concrete Sidewalk	15,073	SqFt
651E7000	Type 1 Detectable Warnings	79	SqFt
670E1200	Type B Frame and Grate Assembly	4	Each
670E5200	Special Frame and Grate Assembly	4	Each
670E5340	4' x 11' Precast Concrete Type S Drop Inlet Lid	1	Each
670E5400	Precast Drop Inlet Collar	8	Each
720E1015	Bank and Channel Protection Gabion	33.0	CuYd
900E0010	Refurbish Single Mailbox	9	Each
900E0012	Refurbish Double Mailbox	6	Each

GRADING OPERATIONS

Water for Embankment is estimated at the rate of 10 gallons of water per cubic yard of Embankment minus Waste.

The estimated cubic yards of excavation and/or embankment required to construct outlet ditches, ditch blocks, and approaches are included in the earthwork balance notes on the profile sheets.

Special ditch grades and other sections of the roadway different than the typical section(s) shall be constructed to the limits shown on the cross sections. If significant changes to the cross sections are necessary during construction, the Engineer shall contact the Designer for the proposed change.

Generally, all shallow inlet and outlet ditches as noted on the plan sheets shall be cut with a 10-foot wide bottom with 5:1 backslopes. However, the Engineer may direct the Contractor to adjust the ditch width for proper alignment with the drainage structure.

Temporary fence and/or permanent fence shall be placed ahead of the grading operation unless otherwise directed by the Engineer.

A copy of the soils profile is available for review at the Mitchell Region and Sioux Falls Area offices.

TYPE III FIELD LABORATORY

The lab shall be equipped with an internet connection such as DSL, cable modem, or other approved service. The internet connection shall be provided with a multi-port wireless router. The internet connection shall be a minimum speed of 512 Kb unless limited by job location and approved by the DOT. Prior to installing the wireless router the Contractor shall submit the wireless router's technical data to the Area Office to check for compatibility with the state's computer equipment. The internet connection is intended for state personnel usage only. The Contractor's personnel are prohibited from using the internet connection unless pre-approved by the Project Engineer.

The Contractor shall submit a copy of each monthly bill for calls charged to this phone at the end of each month. The Project Engineer will then audit the bills to ensure all calls are legitimate and then initiate a Construction Change Order (CCO) to reimburse the Contractor for the actual phone calls made, including local and long distance calls. Reimbursement will not be made for fees associated with the purchase, installation, disconnection, monthly line charges, and incidentals involved in the installation, maintenance, and disconnection of the phone (including attachments). These items shall be incidental to the contract unit price per each for "Type III Field Laboratory".

UTILITIES

The Contractor shall be aware that the existing utilities shown in the plans were surveyed prior to the design of this project and might have been relocated or replaced by a new utility facility prior to construction of this project, might be relocated or replaced by a new utility facility during the construction of this project, or might not require adjustment and may remain in its current location. The Contractor shall contact each utility owner and confirm the status of all existing and new utility facilities. The utility contact information is provided elsewhere in the plans or bidding documents.

A Utility Conflict Analysis, with each utility company, was completed on this project. A Conflict Resolution Summary table is provided elsewhere in the plans or bidding documents. A more detailed Resolution Report, including Test Hole Data, will be provided at the Pre-Construction meeting. All information in the table and Report is approximate and shall be verified by the contractor prior to construction in those areas. The information shown in the table is not a replacement or substitution for the requirement of SDCL 49-7A – One-Call Notification System for Excavation Activities.

Xcel Energy:

The Company has overhead power and buried power along and crossing SD115 in multiple locations. The Company plans to protect their facilities in place and coordinate with the highway contractor to make any necessary adjustments. The Company plans to replace a piece of their buried power near approximate station 27+00 to 28+50 Left. The relocation of this buried power cable will be accomplished as provided by the utility agreement which is in progress; it is anticipated that it will be completed before the letting. The Company will be required to complete the relocation by April 15, 2016, unless prior arrangements are made with the STATE and approved, in writing, by the Area Engineer.

Goldenwest Telecommunication:

The Company has buried fiber optic and copper cables along and crossing SD115 within public Right-of-Way. The Company plans to install a new fiber optic facility prior to the highway construction and abandon the old cables at no cost to the State.

Minnehaha Community Water:

The Company has Underground water lines along SD115 including multiple crossings. The Company plans to coordinate with the highway contractor to lower their waterline where necessary once the heavy grading is complete and prior to the finish grading.

City of Dell Rapids:

The Company has an abandoned sanitary sewer attached to the bridge just north of the end of the project.

Utility Contact Information:

Xcel Energy:

500 West Russel St
Sioux Falls SD 57104
Adam Amundson – 605.339.8316

Goldenwest Telecommunications:

PO Box 411
Wall SD 57790-0411
Dave London – 605.428.5421

Minnehaha Community Water:

47381 248th St
Dell Rapids SD 57022-5305
Ryan Allen – 605-428-3374

City of Dell Rapids:

PO Box 10
Dell Rapids SD 57022-0010
Justin Weiland – 605-428-3595

Plot Scale - 1:200
Plotted From - TRSF12141
File - ...\prj\min\025C\NotesSectionB.dgn

SHRINKAGE FACTOR: Embankment +35 to -10%

TABLE OF EXCAVATION QUANTITIES BY BALANCES

Station to	Station	Excavation (CuYd)	# Undercut for Sel Topping (CuYd)	* Surfacing Removal (CuYd)	* Contractor Furnished Select Subgrade Topping. (CuYd)	Total Excavation (CuYd)	Out-of-Balance Exc. (CuYd)	** Excavation Waste (CuYd)	** Surfacing Material Waste (CuYd)	* Select Subgrade Topping (CuYd)	** Haul (CuYdSta)	* Haul Material (CuYd)
10+23	24+27	5307	5154	1509	347	12317	0	2784	0	6030	16700	2784
24+27	74+00	20112	18635	5421	1288	45456	0	10063	0	22613	29500	10063
74+00	110+00	14914	13085	3924	787	32710	0	7066	0	15310	85900	257
113+00	122+07	780	2185	989	0	3954	6809	0	202	2557	0	
	Totals:	41113	39059	11843	2422	94437	6809	19913	202	46510	132100	13104

* The quantities for these items are in the Estimate of Quantities under their respective bid items. The quantity for Surfacing Removal in this table is only the portion used in the select subgrade topping. It does not include the existing AC shoulder and gravel under the shoulders as this will be used as gravel cushion in the final surfacing.
** The quantities for these items are for information only.
\# Undercutting for select topping to be paid for as Unclassified Excavation.

Note: The Haul Material bid item is provided for 13104 cu yds of excavation waste to be hauled to the SD115/I29 Interchange and stockpiled at a site approved by the Engineer. It shall be used on the future PCN 03RT project.

TABLE OF UNCLASSIFIED EXCAVATION

Excavation	41113
Undercutting for Select Topping	39059
Topsoil	12194
Exc. for Deep Pipe & RCBC Removal	8321
Salvaged Asphalt Mix and Granular Base Material (from cut sections)	8295
Salvaged Asphalt Mix and Granular Base Material (from fill sections)	0
Total	88467

PROCEDURES FOR DETERMINING UNCLASSIFIED EXCAVATION QUANTITY

When plan quantities are used for payment, the Unclassified Excavation quantity shall be used for final payment.

The following paragraphs are general earthwork information and information in regards to computing the Unclassified Excavation quantity when final cross sections are taken in the field:

The Unstable Material Excavation quantity is included in the Excavation quantity listed in the Table of Unclassified Excavation. When finaling a project, the Unstable Material Excavation quantity shall be added to the Excavation quantity to compute the Unclassified Excavation quantity.

Out-of-Balance Excavation is material obtained from waste generated from excavation from other balances. The quantity of Out-of-Balance Excavation is included in the Excavation quantity in the balance where it is excavated and is paid for once as Unclassified Excavation.

The Topsoil quantity in the Table of Unclassified Excavation is an estimate. When finaling a project, the total quantity of field measured Topsoil shall be used in place of the estimated Topsoil quantity. The quantity of Topsoil from the cuts will be paid for twice as Unclassified Excavation, as it will be in both the Excavation and Topsoil quantities. This will be full compensation for Excavation, which includes necessary undercutting to provide space for placement of topsoil.

The Excavation quantities from individual balances and the Table of Unclassified Excavation have been reduced by the volume of in place surfacing that will be removed and/or salvaged. The in place surfacing is paid for as Remove Concrete Surfacing and shall be used as defined in the "SELECT SUBGRADE TOPPING" note.

Salvaged Asphalt Mix and Granular Base Material shall be paid for once as Unclassified Excavation. When finaling a project, the quantities of Salvaged Asphalt Mix and Granular Base Material from fill sections and off-alignment roadways or obliterated old roads will not be adjusted according to field measurements. The quantity of Salvaged Asphalt Mix and Granular Base Material from cut sections will not be added to the Excavation quantity as it is already in the cuts on the final cross sections.

The volume of in place Concrete Surfacing removed will NOT be paid for as Unclassified Excavation.

When finaling a project, the estimated quantity of 6616 cubic yards of Concrete Pavement removed from the cut sections shall be subtracted from the Unclassified Excavation quantity for final payment. The quantity of Concrete Pavement from cut sections subtracted from the Unclassified Excavation quantity shall be plans quantity and will not be adjusted according to field measurements.

HAUL

Haul is included in the Table of Excavation Quantities by Balances. Haul is not a pay item and is for informational purposes only.

Haul: Estimated quantity (CuYdSta) for moving unclassified excavation material to the locations where it is needed throughout the earthwork balance.

For Purpose of Extra Haul Computations:

Average Haul = (Haul)/Unclassified Excavation = 132100/41113 = 3.2 Sta.

Compensation for "Extra Haul" will not be made for haul distances less than 5 stations. When payment for "Extra Haul" is authorized, the distance used for "Extra Haul" calculations shall be that in excess of 5 stations.

SELECT SUBGRADE TOPPING

After the existing PCCP and asphalt is removed, the existing gravel cushion/ base course shall be removed and stockpiled. The removed PCCP will be crushed to a minus 2.5 inch size.

In all cut sections, the subgrade will be undercut to a depth of 1.5 feet. The undercut area will be scarified to a depth of 6 inches and recompacted by the Specified Density Method. The crushed PCCP and the salvaged gravel cushion/ base course will be blended with the soil taken from the undercut and used as Select Subgrade Topping to backfill the undercut. The blended backfill material will consist of a mix of approximately 60% undercut soil and 40% salvaged concrete surfacing and gravel cushion/ base course. Salvaged asphalt material shall not be used in the undercut backfill.

In fill sections, the top 1.5 feet of subgrade will be constructed with the Select Subgrade Topping. To obtain the Select Subgrade Topping, the salvaged PCCP and granular material will be mixed with new embankment material at the same 60/40 rate as the undercut backfill. Shallow embankment sections, i.e. fills less than 1.5 feet in height measure at the finished subgrade shoulder, will be undercut to ensure the upper 1.5 of subgrade is constructed with Select Subgrade Topping.

Payment to remove the undercut shall be paid for once as Unclassified Excavation.

All cost associated with scarifying the undercut area and the crushing, mixing, and placement of the Select Subgrade Topping material shall be included in the contract unit price per cubic yard for Select Subgrade Topping.

Select Subgrade Topping shall be compacted with sheepsfoot or other approved rollers. Compaction shall be as per 260.3D. Additional test strips will be made as required by changes in soil types. Moisture requirements will be determined in accordance with SD 104, except the optimum and field moisture will be determined using material passing a ¾ inch sieve. Density testing will be performed a minimum of 1 per half mile per lift. Moisture testing will be performed a minimum of 1 per day.

The plan shown quantity will be the basis of payment. However, if there are additional areas of undercut other than what is shown in the plans, the Engineer shall direct removal of these areas and the additional areas will be measured according to the Engineer.

UNDERCUTTING FOR SELECT TOPPING

Payment to remove the undercut shall be paid for once as Unclassified Excavation.

Station	to	Station	Quantity (CuYd)
10+23		24+27	5154
24+27		74+00	18635
74+00		110+00	13085
113+00		122+07	2185
		Total:	39059

UNSTABLE MATERIAL EXCAVATION

The areas of unstable material excavation are drawn on the cross sections with a normal depth of 2 feet. The estimated quantity of 730 cubic yards of unstable material excavation shall be paid for at the contract unit price per cubic yard for "Unclassified Excavation".

All areas designated as Unstable shall be excavated. The unstable material excavated on this project shall be placed outside the subgrade shoulder in fill sections or stockpiled and used as topsoil.

Field measurement of unstable material excavation shall not be made. However, if there are additional areas of unstable material excavation other than what is shown in the plans, the Engineer shall direct removal of these areas and the additional areas will be measured according to the Engineer.

TABLE OF UNSTABLE MATERIAL EXCAVATION

Station	to	Station	L/R	Depth (Ft)	Quantity (CuYd)
48+00		49+00	L	2	176
48+00		49+00	R	2	73
57+00		58+00	L	2	64
57+00		58+00	R	2	89
68+00		70+00	L	2	176
78+00		79+00	L	2	74
78+00		79+00	R	2	78
				Total:	730

Plot Scale - 1:200
Plotted From - TRSF12141
File - ...\prj\minn0255C\NotesSectionB.dgn

SALVAGE AND STOCKPILE ASPHALT MIX AND GRANULAR BASE MATERIAL

An estimated 15,678.4 tons (8,295 Cubic Yards) of asphalt mix and granular base material shall be salvaged from the entire length of the existing highway and stockpiled at a site furnished by the Contractor and satisfactory to the Engineer.

The quantity of salvage asphalt mix and granular base material may vary from the plans. No adjustment will be made to the contract unit price for variations of the quantity of "Salvage and Stockpile Asphalt Mix and Granular Base Material."

Location	Begin Station	to	End Station	Salvaged Asphalt Mix and Granular Base Material (ton)
Shoulders	10+62.68	to	110+21.00	14,457.4
Shoulders	113+66.00	to	122+07.00	1,221.0
				15,678.4

IN PLACE SURFACING AND GRANULAR MATERIAL

Test holes were drilled to check the depth of in place surfacing. The following is a log of these test holes.

The following table is furnished for information only.

Driving Surface

Sta.	Centerline Feet Lt.	Centerline Feet Rt.	Depth PCCP (inches)	Depth Granular Base (inches)
15+00		10.4	8.0	8.0
23+00		10.0	8.0	8.0
27+00		10.3	8.0	8.0
31+00		7.9	8.0	8.0
36+00		10.0	8.0	8.0
43+00		10.0	8.0	8.0
50+00		11.0	7.5	7.5
57+00		10.0	8.0	5.0
64+00		11.0	8.0	5.0
71+00		9.9	8.0	5.0
78+00		9.9	8.0	5.0
85+00		9.9	8.0	6.0
92+00		10.3	8.0	6.0
		Average	8.0	6.7

Shoulder Surface

Sta.	Centerline Feet Lt.	Centerline Feet Rt.	Depth AC (inches)	Depth Granular Base (inches)
89+00		15.4	3	6
94+00		15.3	2	6
99+00		15.2	2	6
106+00		15.4	2	6
108+50	17.9		3	6
113+00		16.6	3	6
115+00	17.5		3	6
117+50	17.7		3	6
120+00		18.3	3	6
		Average	2.7	6.0

It is estimated there are 154 cubic yards of surfacing material per station. This quantity was used to compute unclassified excavation quantities. This quantity is based on a 24.4 foot width of mainline with 2-8.5 foot shoulders. The mainline surfacing depth was estimated at 14.5 inches and the shoulder surfacing depth was estimated at 8.5 inches.

EXCAVATION FOR DEEP PIPE AND BOX CULVERT REMOVAL

Included in the quantity of "Unclassified Excavation" are 8321 cubic yards of excavation for removal of deep pipes and box culverts. Deep pipes and box culverts are existing mainline pipes or box culverts at depths of 10 feet or greater (measured from the flow line to the lowest elevation of either the existing ground line, undercut line, or bottom of removed or salvaged surfacing).

All work necessary to excavate and backfill the deep pipes and box culverts including labor, equipment, and incidentals shall be incidental to the contract unit price per cubic yard for "Unclassified Excavation". Payment for deep pipe and box culvert excavation shall be based only on plans quantity and measurement of these excavation quantities during construction shall not be performed.

The excavation quantities for deep pipes and box culverts are not included with the earthwork balance quantities on the plans profile sheets. The quantities computed for excavation of the deep pipes and box culverts are based on the limits shown in the drawing below. The drawing shows a box culvert for illustration purposes only; the limits are similar for a pipe.

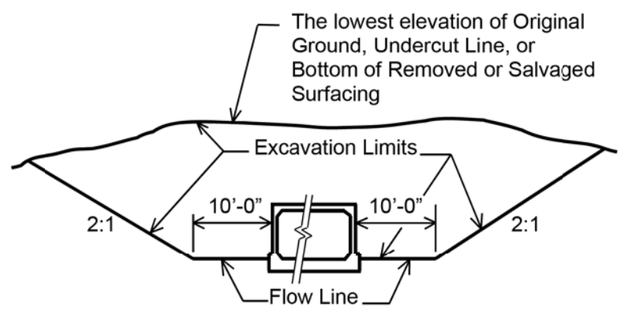

TABLE OF EXCAVATION FOR DEEP PIPE AND BOX CULVERT REMOVAL

Station	Type	Quantity (CuYd)
48+36	6'x4' RC Cattlepass	2002
57+24	48" RCP	4735
78+56	6'x4' RC Cattlepass	1584
	Total:	8321

TABLE OF PIPE CULVERT UNDERCUT

The Table of Pipe Culvert Undercut is intended to be used to establish an estimated quantity of Pipe Culvert Undercut for bidding purposes only. The table includes undercut for 36 inch and larger pipe culverts. The depth of undercut is an estimate and the actual depth necessary shall be determined during construction. Pipes shown may or may not require undercutting and pipes not shown may require undercutting. The Engineer will determine which pipe shall be undercut in accordance with Section 421 of the Specifications.

Station	Undercut Depth (Ft)	Quantity (CuYd)
48+36	1	37
57+24	1	50
	Total:	87

The table contains the rate of pipe culvert undercut per foot of pipe length and should be used as an aid in determining the actual amount of undercut to be performed during construction. The table is derived from the drawing below and conforms to the Specifications. When calculating pipe culvert undercut, the length of pipe ends should be included in the overall pipe length.

Storm sewer and approach pipes do not require undercutting unless specified otherwise in these plans.

Pipe Diameter (In)	Round Pipe Undercut Rate for 1' Depth (CuYd/Ft)	Arch Pipe Undercut Rate for 1' Depth (CuYd/Ft)
24	0.2407	0.2577
30	0.2623	0.2847
36	0.2840	0.3110
42	0.3056	0.3337
48	0.3272	0.3596
54	0.3488	0.3827
60	0.3704	0.4105
66	0.3920	---
72	0.4136	0.4630
78	0.4352	---
84	0.4568	0.5123
90	0.4784	---

Plot Scale - 1:200
Plotted From - TRSF12141
File - ...\prj\minn025C\NotesSectionB.dgn

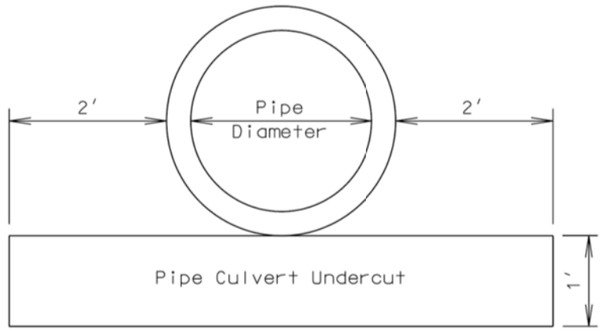

INCIDENTAL WORK, GRADING

Station	Remarks
10+98	Take Out 24"-82' RCP & 2 End Sections
13+55	Take Out 18"-117' RCP & 2 End Sections
21+05	Take Out 24"-108' RCP & 2 End Sections
32+70-72'L	Take Out18"-66' RCP & 2 End Section
35+37	Take Out 30"-132' RCP & 2 End Sections
40+43	Take Out 30" - 99' RCP & 2 End Sections
44+70-52'L	Take Out 18' - 60' CMP
48+36	Take Out 6'x4'-102' RC Cattlepass & 2 End Sections
50+88-55'R	Take Out 18" - 82' CMP & 2 End Sections
52+95-54'R	Take Out 18" - 73' CMP & 2 End Sections
57+24	Take Out 48" - 157' CMP & 2 End Sections
64+48	Take Out 18" - 93' RCP & 2 End Sections
69+42-61'R	Take Out 18" - 60' CMP & 2 End Sections
74+09-65'R	Take Out 18" - 91' CMP
76+69-64'R	Take Out 18" - 114' CMP & 2 End Sections
78+56	Take Out 4'x6'- 99' RC Cattlepass & 2 End Sections
80+28-61'R	Take Out 18" - 77' RCP & 2 End Sections
80+43-70'L	Take Out 18" - 74' RCP & 2 End Sections
85+02-57'R	Take Out 15" - 81' CMP
86+57-65'L	Take Out 18" - 79' CMP & 2 End Sections
89+45-58'R	Take Out 18" - 109' CMP
91+19-62'L	Take Out 18" - 93' CMP & 2 End Sections
95+81-59'L	Take Out 18"-59' CMP
99+08-60'R	Take Out 18" - 46' RCP Arch & 2 End Sections
99+11-47'L	Take Out 18" - 79' CMP & 2 End Sections
103+01-74'R	Take Out 18" - 70' & 2 End Sections
103+42-43'L	Take Out 18" - 55' & 2 End Sections
116+87-74'L	Take Out 18"-43' CMP & 2 End Sections

REMOVAL OF EXISTING CONCRETE PAVEMENT STA. 10+43 to STA. 122+07

Existing asphalt concrete and/or existing asphalt concrete patch work that was placed above the existing concrete pavement is included in the quantity for "Remove Concrete Pavement". The Contractor shall use the existing concrete pavement as Select Subgrade Topping material.

The existing roadway consists of 8" Reinforced PCC Pavement. Mesh reinforcement is square mesh with wires on 6" centers, with equal sectional areas in both directions with an effective weight o f42 lbs per 100 sq. ft. Transverse wires on adjoining sheets to be lapped at least 1 ½ inches.

The existing contraction joints are spaced at approximately 20 feet. The aggregate in the existing P.C.C. pavement is quartzite.

The existing Concrete Pavement shall be used as Select Subgrade Topping (See Select Subgrade Topping Note)

TABLE OF CONCRETE PAVEMENT REMOVAL

Station	to	Station	Description	Quantity (SqYd)
10+43		110+41	Begin Project to Bridge	27008.0
113+46		122+07	Bridge to End Project	2296.0
			Total:	29304.0

TABLE OF ASPHALT CONCRETE PAVEMENT REMOVAL

Station	to	Station	L/R	Quantity (SqYd)
10+43		110+41	L	8887.1
10+43		110+41	R	8887.1
113+46		122+07	L	765.3
113+46		122+07	R	765.3
19+08		19+59	L	182.7
24+71		25+12	L	161.7
81+77		82+38	R	322.2
83+98		84+59	R	270.0
84+82		85+23	R	195.9
86+09		86+94	L	266.3
98+84		99+43	R	164.8
102+58		103+69	R	740.3
			Total:	21608.7

TABLE OF CONCRETE DRIVEWAY PAVEMENT REMOVAL

Station	to	Station	L/R	Quantity (SqYd)
116+74		117+07	L	127.3
120+41		122+00	L	494.4
			Total:	621.7

TABLE OF DROP INLET REMOVAL

All costs for removal of the frame and grate assembly shall be incidental to the contract unit price per each for "Remove Drop Inlet".

Station	L/R	Quantity (Each)
84+65-59'	R	1
	Total:	1

CORRUGATED METAL PIPE

Corrugated metal pipes shall have 2 ⅔-inch X ½-inch corrugations for 42-inch and smaller round pipe and 48-inch and smaller arch pipe unless otherwise stated in the plans. Corrugated metal pipes shall have 3-inch X 1-inch or 5-inch X 1-inch corrugations for 48-inch and larger round pipe and 54-inch and larger arch pipe unless otherwise stated in the plans.

The gauge of the corrugated metal elbows and ends shall match the thickest gauge of corrugated metal pipe it is connected to.

PIPE FOR APPROACHES, INTERSECTING ROADS, AND DOWNSPOUTS

Class II reinforced concrete pipe, high density polyethylene pipe, corrugated polypropylene pipe, or steel reinforced polyethylene pipe may be substituted for corrugated metal pipe at approaches and intersecting roads at no additional cost to the State.

If corrugated metal pipes are provided, the pipes shall be as specified in the CORRUGATED METAL PIPE note.

High density polyethylene pipe may be substituted for 36 inch and smaller pipe downspouts at no additional cost to the State. All necessary connections, transitions, and anchoring methods shall be in accordance with the manufacturer's recommendations and be approved by the Engineer. Bedding and backfill material and installation procedures shall conform to the manufacturer's design requirements.

If high density polyethylene pipe, corrugated polypropylene pipe, or steel reinforced polyethylene pipe are provided, then the end sections shall be metal, be compatible, and conform to the type of end section as shown in the plans.

Plot Scale - 1:200
Plotted From - TRSF12141
File - ...\prj\mlm025C\NotesSectionB.dgn

STORM SEWER

Reinforced concrete pipe may be either bell and spigot or tongue and groove. The pipe sections shall be adjoined such that the ends are fully entered and the inner surfaces are reasonably flush and even.

Lift holes in the reinforced concrete pipe shall be plugged with grout.

Watertight joints are required for reinforced concrete pipe, drop inlets, manholes, and junction boxes where storm sewers run parallel to and within 10 feet horizontally from existing or proposed water mains.

Watertight joints are required where reinforced concrete pipes, drop inlets, manholes, or junction boxes cross water mains and are separated a distance of 18 inches or less, above or below, the water main.

If watertight joints are required then the watertight joints shall extend for a distance of 10 feet beyond the water main. This measurement shall be from the sealed concrete joint to the outer most surface of the water main.

Watertight joint seals shall conform to the following requirements:

1. Reinforced Concrete Pipe (Circular): Gasketed pipe shall conform to the requirements of ASTM C443. Non-gasketed concrete pipe shall be sealed with a mastic joint seal conforming to the requirements of ASTM C990 and encased with a minimum 2' wide by 6" thick M6 concrete collar reinforced with 6x6 W2.9 x W2.9 wire mesh.

2. Reinforced Concrete Pipe (Arch): Joints shall be sealed with a waterstop seal meeting the requirements of ASTM C990. Waterstop seals shall consist of hydrophilic compounds such as Waterstop-RX or ConSeal CS-231.

3. Drop Inlets, Manholes, and Junction Boxes: Joints shall be sealed with a waterstop seal or seal wrap meeting the requirements of ASTM C990 or encased with a minimum 2' wide by 6" thick M6 concrete collar reinforced with 6x6 W2.9 x W2.9 wire mesh. Waterstop seal shall contain hydrophilic compounds such as Waterstop-RX or

   ConSeal CS-231. Seal wrap shall be a self adhesive external joint wrap such as ConWrap CS-217 or Mar Mac Seal Wrap.

Gaskets and seals (mastic, waterstop, and seal wraps) shall be installed in accordance with the manufacturer's recommendations.

The cost for furnishing and installing all gaskets, mastic joint seal, waterstop seal, seal wrap, concrete collars, and for plugging the lift holes shall be incidental to the contract unit price per foot for the corresponding pipe bid item.

DROP INLETS

Where drop inlets are constructed within areas of curb and gutter, the Contractor shall construct weep holes of at least 3 inches in diameter in the drop inlet walls. The weep holes shall be constructed at the same elevation as the adjacent top of the earthen subgrade and shall be maintained clean and open at all times until the permanent surfacing is placed. The drop inlets shall be covered throughout construction operations as necessary with an Engineer approved cover to provide safe travel for motorists and to prevent materials from entering the storm sewer system. After the permanent surfacing has been placed, the Contractor shall seal the weep holes with grout and remove all debris from the drop inlet. All costs involved with the coverings, weep holes, and removing debris from the drop inlets shall be incidental to the contract unit prices for the components of the drop inlets.

The plan shown quantities of the drop inlet components such as Class M6 Concrete, Reinforcing Steel, Type B Frame and Grate Assembly, Type B Special Frame and Grate, Precast Drop Inlet Collar, and Precast Concrete Type S Drop Inlet Lid will be the basis of payment for these items.

Note: The Type B Special Frame and Grate Assemby shall be Deeter Foundry 2060-A or equivalent.

If additions or reductions to the number of drop inlets are ordered by the Engineer, payment for the components required to construct the drop inlets will be made at the contract unit prices for the components of the drop inlets.

TABLE OF DROP INLETS AND QUANTITIES

Station	L / R	Drop Inlet Size	Drop Inlet Type	Class M6 Concrete (CuYd)	Reinf. Steel (Lb)	Precast Drop Inlet Collar (Each)	Frame and Grate/Lid Type
105+50	L	2'x3'	B	0.70	81	1	B
108+00	L	2'x3'	B-Sp	0.72	81	1	B
110+30	L	2'x3'	B-Sp	0.75	91	1	B
113+56	L	2'x3'	B-Sp	1.03	111	1	B
113+56	R	2'x3'	B-Sp	1.03	111	1	B
114+46	L	4'x11'	S	3.17	584		S
115+00	L	2'x3'	B	0.69	81	1	B
117+30	L	2'x3'	B	0.78	93	1	B
119+20	L	2'x3'	B	0.70	81	1	B
			Totals:	9.57	1314	8	

Total Type B Frame and Grate Assembly	4
Total Type B Special Frame and Grate Assembly	4
Total 4'x11' Precast Concrete Type S Drop Inlet Lid	1

TABLE OF BANK AND CHANNEL PROTECTION GABIONS

Station	L/R	Quantity (CuYd)
48+36	L	12.0
57+24	L	12.0
108+69	L	4.5
110+30	R	4.5
	Total:	33.0

TYPE 1 DETECTABLE WARNINGS

Detectable warnings shall be in compliance with the Americans with Disabilities Act regulations.

The detectable warnings shall be installed according to the manufacturer's installation instructions.

A concrete thickness equal to the adjacent concrete sidewalk thickness and 2 inches of granular cushion material shall be placed below the Type 1 Detectable Warnings. When concrete is placed below the detectable warnings then the concrete thickness shall be transitioned at the rate of 1" per foot to match the adjacent concrete sidewalk thickness.

The detectable warnings shall be a brick red color for application in concrete curb ramps. Cast iron plates may be a natural patina (weathered steel).

When Type 1 Detectable Warnings are specified, the Contractor shall furnish and install only one of the products listed in the Type 1 Detectable Warnings table.

Type 1 Detectable Warnings

Product	Manufacturer
Detectable Warning Plate Cast Iron Plate	Neenah Foundry Company Neenah, WI 800-558-5075 http://www.neenahfoundry.com/
Detectable Warning Plate Cast Iron Plate	Deeter Foundry Lincoln, NE 800-234-7466 http://www.deeter.com/
Detectable Warning Plate Cast Iron Plate(No Coating)	East Jordan Iron Works, Inc. 301 Spring Street East Jordan, MI 49727 800-626-4653 http://www.ejiw.com

MAILBOXES

The Contractor shall reset the existing mailboxes on new posts with the necessary support hardware for single or double mailbox assemblies. The local Postmaster will determine the recommended mounting height of the mailboxes throughout the project. The Contractor shall coordinate with the Engineer on the proper postal representative to contact.

If large mailboxes are located at double mailbox installations, a single post may need to be used for the large mailbox.

All costs for removing existing mailboxes, providing temporary mailboxes, and resetting mailboxes with new posts and necessary support hardware shall be incidental to the contract unit price per each for “Refurbish Single Mailbox” or “Refurbish Double Mailbox”.

TABLE OF REFURBISH MAILBOX

Station	L/R	Single (Each)	Double (Each)
19+90	L		4
25+38	L	1	
38+99	R	1	
45+26	L	1	
51+42	L	1	
69+15	L	1	
74+76	L	1	1
80+73	L	1	
82+54	L		1
84+55	L	1	
90+92	L	1	
	Totals:	9	6

TEMPORARY FENCE

The Contractor shall verify the location of the temporary fence with the landowner prior to installation of the fence.

BRACE PANELS FOR ROW FENCE

The E-Z Brace or an approved equal may be utilized as an alternate horizontal brace in the brace panels if approved by the Engineer. The E-Z Brace shall be attached to each wood post utilizing two 5/16” x 3” lag screws. Holes of appropriate diameter, based on wood post condition, shall be drilled before placement of lag screws. The following are contacts regarding the E-Z Brace:

Roger Papka
E-Z Brace
1160 Karen St.
Watertown, SD 57201
605-881-6142

Dennis Mack
E-Z Brace
108 18th St. NE
Watertown, SD 57201
605-881-4990

TABLE OF GUARDRAIL

Location	Remove 3 Cable Guardrail (Ft)	Remove 3 Cable Guardrail Anchor Assembly (Each)	Remove Beam Guardrail (Ft)
Structure No. 50-208-022			
Begin Bridge Lt.	560	4	81
Begin Bridge Rt.	156	2	81
End Bridge Lt.	192	2	81
End Bridge Rt.			156
Totals:	908	8	399

TABLE OF SUPERELEVATION

Station	to	Station		
10+00		86+52.32	-	Normal Crown Section
86+52.32		88+05.32	-	Superelevation Transition
88+05.32		107+01.88	-	2910’ Radius Curve Left 0.040’/’ Superelevation Rate Point of Rotation at 5.50’ Left of Centerline
107+01.88		108+54.88	-	Superelevation Transition
108+54.88		122+07.00	-	Normal Crown Section

Plot Scale - 1:200
Plotted From - TRSF12141
File - ...\prj\minn025C\NotesSectionB.dgn

TABLE OF CONSTRUCTION STAKING

(See Special Provision for Contractor Staking)

Roadway and Description	Begin Station	End Station	Number of Lanes	Length (Ft)	Grade Staking: Length (Mile)	Grade Staking: Lane Factor	Grade Staking: *Sets of Stakes	Grade Staking: **Grade Staking Quantity (Mile)	Miscellaneous Staking Quantity (Mile)	Slope Staking Quantity (Mile)	Final Cross Section Survey Quantity (Mile)	Structure Staking Quantity (Each)
SD115 (3 Lanes PCCP)	10+43	99+47	3	8904	1.686	1.5	2	5.058	1.686	1.686	1.686	
SD115 (Transition from 3 Lanes to 4 Lane PCCP)	99+47	100+47	4	100	0.019	2	2	0.076	0.019	0.019	0.019	
SD115 (4 Lanes PCCP)	100+47	103+06	4	259	0.049	2	2	0.196	0.049	0.049	0.049	
SD 115 (3 Lanes PCCP)	103+06	122+07	3	1901	0.360	1.5	2	1.081	0.360	0.360	0.360	2
							Totals:	6.411	2.114	2.114	2.114	2

* 1 = Blue Top Stakes Only (Asphalt Concrete Pavement)
2 = Blue Top and Paving Hub Stakes (PCC Pavement)

** Grade Staking Quantity = (Length) x (Lane Factor) x (Sets of Stakes)

Plot Scale - 1:200
Plotted From - TRSF12141
File - ...\prj\minn025C\NotesSectionB.dgn

PIPE QUANTITIES

STATE OF SOUTH DAKOTA	PROJECT	SHEET	TOTAL SHEETS
	P 0115(47)102	B11	B78

Plotting Date: 01/25/2016 Revised 01/25/2016 AR

	Reinforced Concrete Pipe														RCP Ends Circular														Corrugated Metal Pipe				CMP Ends Circular		CMP Ends Arch
	Circular														Flared				Sloped										Circular	Arch	Elbows	RCP to CMP Transition	Safety	Flared	Safety
		18"	24"	30"	48"	54"									18"	48"	54"		24"	30"									18"	36"	18"	18"	18"	18"	36"
		Cl.2	Cl.2	Cl.2	Cl.2	Cl.4																							16 Ga	16 Ga	15 degree				
Station		Ft	Ft	Ft	Ft	Ft									Each	Each	Each		Each	Each									Ft	Ft	Each	Each	Each	Each	Each
10+98			74																2																
13+55			122																2																
19+33-56' R																													64				2		
21+05			100																2																
31+63-56'L to 32+43-63'L																													72				2		
31+99-56' R																													66				2		
35+37				124																2															
39+50-56' R																													68				2		
40+43				98																2															
44+70-56' L																													64				2		
48+36					114											2																			
50+88-56' R																													62				2		
52+95-56' R																													78				2		
57+24						144											2																		
64+48			90																2																
69+42-52' R																													72				2		
74+34-58' R																													70				2		
77+00-66'R																													96				2		
78+56				116																2															
79+73-65' R to 80+69-56' R																													88				2		
80+43-56' L																													72				2		
85+06-56' R																													72				2		
89+46-56' L																													72				2		
89+46-56' R'																													84				2		
98+49.00-56' R																													60				2		
95+80-56' L																													66				2		
102+73-56' L to 103+44-64' L																													64				2		
103+07-64' R																														64					2
105+50.00-21.17' L to 56.95' L		30													1																				
108+00.00-21.17'L to 110+30.00-21.17'L		228																																	
110+30.00-21.17'L to 73.10'R		42																											44		2	1		1	
113+56.00-21.17'L to 50.14'L		24													1																				
113+56.00-20.17'R to 38.29'R		12													1																				
114+45.76-23.63'L to 59.95'L		30													1																				
114+45.76-23.63'L to 115+00.00-59.95'L		54																																	
116+88-74' L																													56				2		
117+30-21.14' L to 56.84' L		30													1																				
119+20-21.17' L to 56.30' L		30													1																				
Total:		480	386	338	114	144									6	2	2		8	6									1390	64	2	1	38	1	2

Plot Scale - 1:200

Plotted From - TRSF12141

File - ...\rd(prj)minn0225C\TablePipe.dgn

FENCE QUANTITIES

STATE OF SOUTH DAKOTA	PROJECT	SHEET	TOTAL SHEETS
	P 0115(47)102	B12	B78

Plotting Date: 11/20/2015

Station to Station		Side (L/R)	Right-of-Way Fence: Type 2 (Ft)	Right-of-Way Fence: Type 6 (Ft)	Right-of-Way Fence: 6' Chain Link Fence	Right-of-Way Fence: 4' Chain Link Fence	Right-of-Way Fence: Remove Fence (Ft)	Right-of-Way Fence: Remove Chain Link Fence (Ft)	Post Panels: 2 Post Panel (Each)	Post Panels: 3 Post Panel (Each)	Gates: Remove Gate for Reset	Gates: Reset Gate	Gates: N.A.B.I. 30' Barbed Wire Gate (Each)	Temporary Fence: Type 1
10+66	14+11	R		345			345		4	2				345
19+13	19+53	R	40				40			2			1	40
22+35	30+47	R	822				808			7				808
31+79	32+19	R	40				40			2			1	40
40+74	49+54	R	938				1140		5	1				1140
24+68	25+45	L	88				88		4	1				88
51+91	55+47	L	346				346		9	2			1	346
86+46	86+68	L			22						1			
89+18	89+58	L						40				1		
91+10	91+30	L			20			20						
95+71	95+89	L			18			18						
107+25	110+15	L				291								
Subtotal:			2274	345	60	291	2807	78	22	17	1	1	3	2807
Total:			2274	345	60	291	2807	78	22	17	1	1	3	2807

Post Type and Sequence:

Right-of-way fence shall be constructed using alternate wood and steel posts

Chain Link Fence:

6' Chain Link Fence shall be constructed with top rail and barbed wire top

4' Chain Link Fence shall be constructed with top rail

Plot Scale - 1:200

Plotted From - TRSF12141

File - ...\rdlprj\minn025C\TableFence.dgn

PAVEMENT, CURB AND GUTTER, AND SIDEWALK QUANTITIES

STATE OF SOUTH DAKOTA	PROJECT	SHEET	TOTAL SHEETS
	P 0115(47)102	B13	B78

Plotting Date: 12/08/2015

Station to Station	Concrete Curb and Gutter Type B 68 Ft	Concrete Gutter Type P 8 Ft	PCC Approach Pavement Type A 6.0" Sq Yd	Concrete Sidewalk 5" SqFt	Detectable Warning Type 1 SqFt	PCC Fillet Section 8" SqYd
Beg Proj to Bridge						
103+21.96-49.86' L 103+47.39-19.50'L	6.0			219.3	20.0	25.9
103+47.39-19.50'L 107+00.00-19.50'L	350.2			3478.4		
107+00.00-19.50'L 110+17.27-19.50'L				3169.3		
Bridge to End Project						
113+68.52-19.50'L 116+76.00-19.50'L	307.5			2993.8		
116+76.00-19.50'L 120+42.96-19.50'L	343.0	24.0	32.0	3429.6		
120+42.96-19.50'L 121+02.00-72.32'L	85.4			96.5	30.8	
121+62.00-72.36'L 122+71.94-202.80' L	78.5			1686.4	28.1	
Total:	1170.6	24.0	32.0	15073.3	78.9	25.9

Plot Scale - 1:200

Plotted From - trsf12142

File - U:\rdprj\minn0225C\TableCG.dgn

STATE OF SOUTH DAKOTA	PROJECT	SHEET	TOTAL SHEETS
	P 0115(47)102	B14	B78

Plotting Date: 11/20/2015

TYPICAL GRADING SECTIONS

Transitions
* From 12' @ 85+70 to 24' @ 86+70
* 24' from 86+70 to 89+46
** From 8' @ 85+70 to 4' @ 86+70
** 4' from 86+70 to 89+46
* From 12' @ 99+47 to 24' @ 100+47
* 24' from 100+47 to 103+06
** From 8' @ 99+47 to 4' @ 100+47
** 4' from 100+47 to 103+06

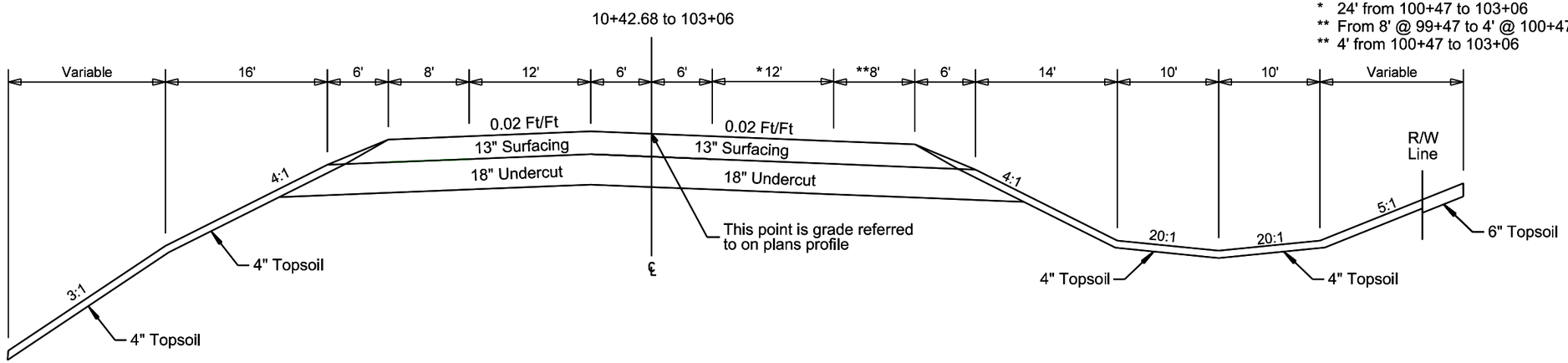

Transitions

* From 8' @106+50 to 0' at 107+00
* 0' from 107+00 to 114+00
* From 0' at 114+00 to 8' at 114+40

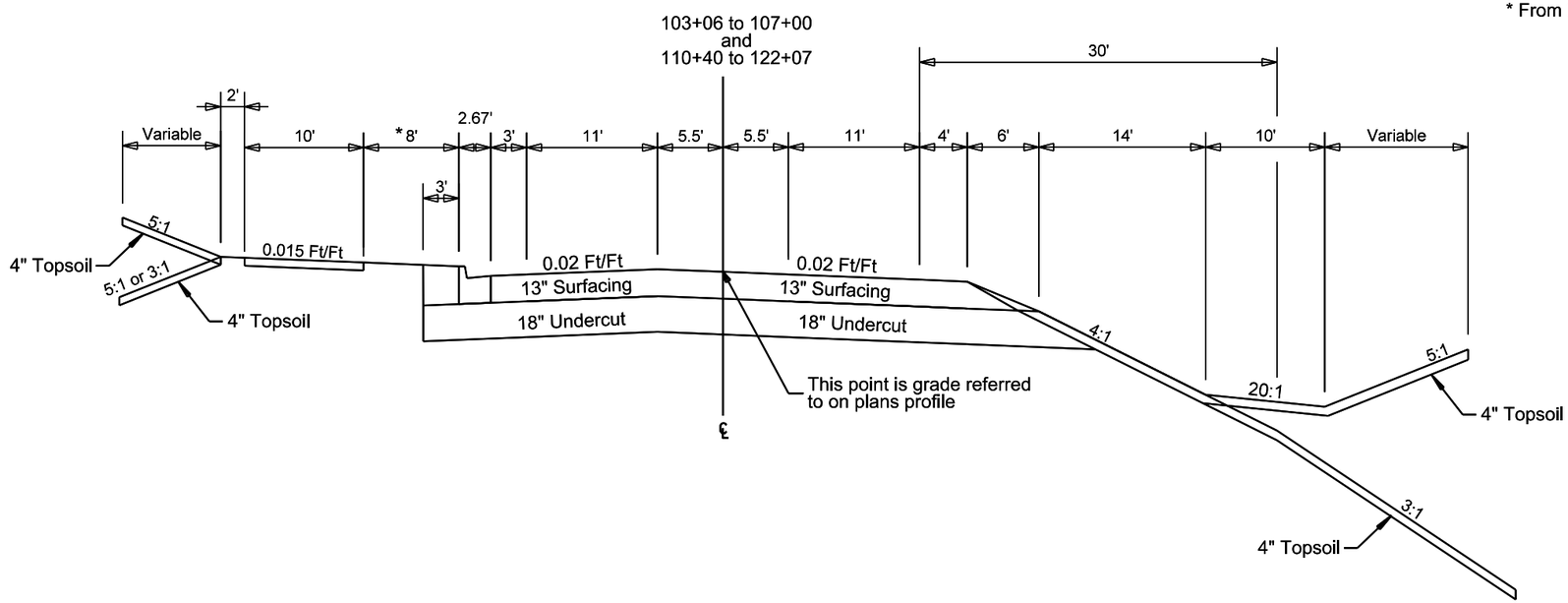

Plot Scale - 1:12.5

Plotted From - TRSF12141

File - U:\rdprj\minn\025C1Typ.dgn

STATE OF SOUTH DAKOTA	PROJECT	SHEET	TOTAL SHEETS
	P 0115(47)102	B15	B78

Plotting Date: 11/20/2015

TYPICAL GRADING SECTIONS

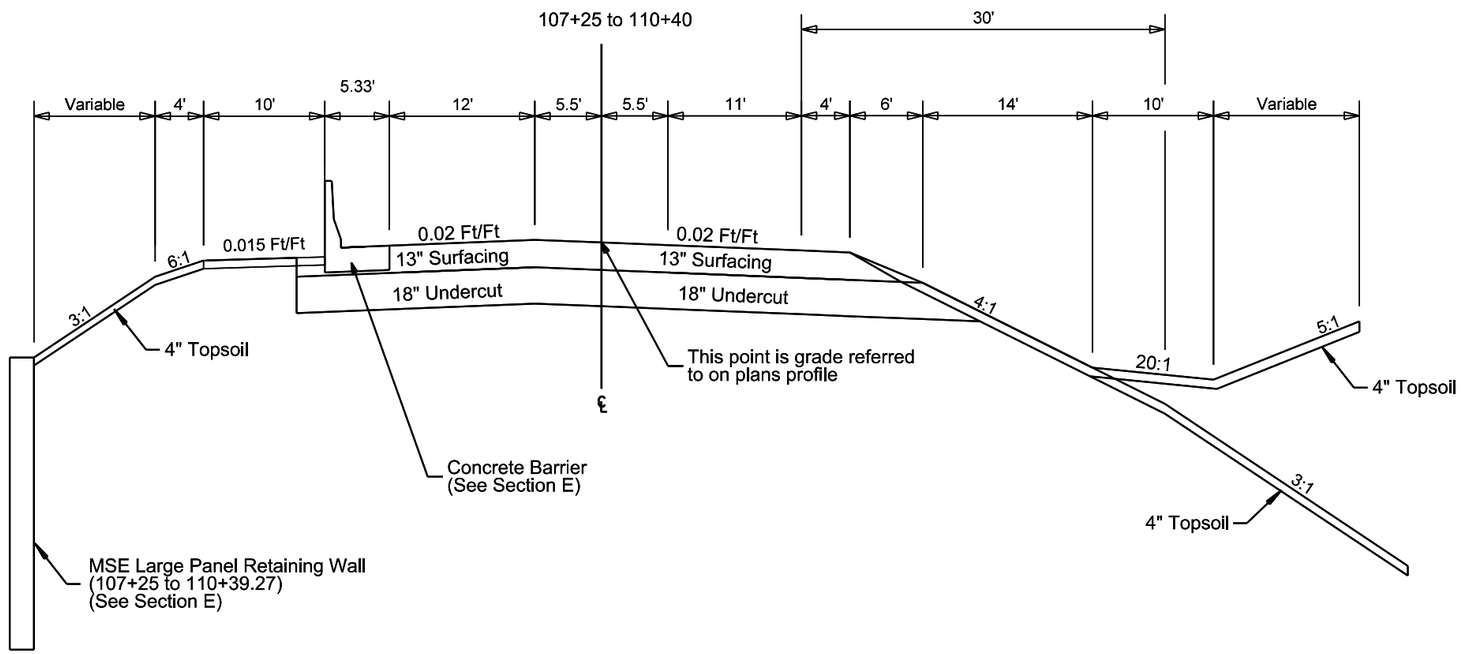

xr 3950R 0+26 to 2+30
xr 10307L 0+26 to 1+22
xr 10307R 0+26 to 2+30
xr 12132R 0+20 to 3+26

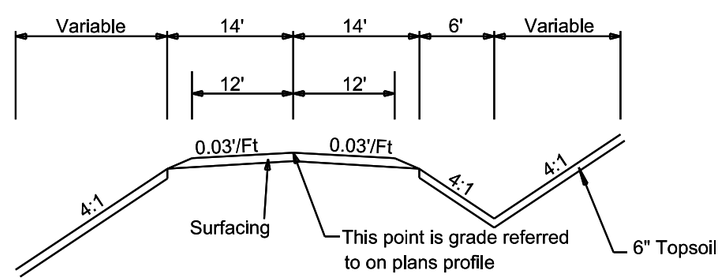

Plot Scale - 1:12.5

Plotted From - TRSF12141

File - U:\rdfprj\minn025C\Typ.dgn

HORIZONTAL ALIGNMENT DATA

STATE OF SOUTH DAKOTA	PROJECT	SHEET	TOTAL SHEETS
	P 0115(47)102	B16	B78

Plotting Date: 11/20/2015

MainlineNS

Type	Station			Northing	Easting
POB	10+00			551709.736	2924977.629
		TL= 7774.72	N 2°11'17" W		
PC	87+75			559478.790	2924680.799
PI	97+92	R = 2910.00	Delta = 38°32'48" L	560495.598	2924641.951
PT	107+32			561266.635	2923977.940
		TL= 1586.93	N 40°44'05" W		
PI	123+19			562469.115	2922942.373
		TL= 984.10	N 40°46'34" W		
PC	133+04			563214.338	2922299.655
PI	135+02	R = 11460.00	Delta = 1°58'59" R	563364.544	2922170.110
PT	137+00			563519.142	2922045.840
		TL= 421.95	N 38°47'35" W		
PI	141+22			563848.015	2921781.487
		TL= 222.13	N 38°47'35" W		
POE	143+44			564021.146	2921642.320

ENT2494L

Type	Station			Northing	Easting
POB	0+00			553202.647	2924920.590
		TL= 43.25	S 87°48'43" W		
PC	0+43			553200.996	2924877.373
PI	1+00	R = 60.00	Delta = 86°33'41" R	553198.838	2924820.911
PT	1+34			553255.069	2924815.372
		TL= 45.18	N 5°37'36" W		
POE	1+79			553300.031	2924810.942

XR3950R

Type	Station			Northing	Easting
POB	0+00			554657.585	2924865.002
		TL= 41.39	N 87°48'43" E		
PC	0+41			554659.165	2924906.360
PI	1+50	R = 150.00	Delta = 71°52'34" L	554663.317	2925015.014
PT	2+30			554767.872	2925044.868
		TL= 50.00	N 15°56'10" E		
POE	2+80			554815.950	2925058.596

XR10307L

Type	Station			Northing	Easting
POB	0+00			560925.012	2924231.142
		TL= 39.92	S 57°38'42" W		
PC	0+40			560903.650	2924197.423
PI	0+85	R = 80.00	Delta = 58°56'12" L	560879.459	2924159.237
PT	1+22			560834.267	2924160.256
		TL= 143.77	S 1°17'30" E		
POE	2+66			560690.538	2924163.497

XR10307R

Type	Station			Northing	Easting
POB	-0+00			560925.012	2924231.142
		TL= 60.02	N 58°38'52" E		
PC	0+60			560956.238	2924282.395
PI	0+98	R = 125.00	Delta = 33°35'40" R	560975.871	2924314.619
PT	1+33			560974.394	2924352.323
		TL= 99.33	S 87°45'28" E		
PI	2+33			560970.508	2924451.579
		TL= 31.29	N 85°55'45" E		
POE	2+64			560972.729	2924482.787

XR11933R

Type	Station			Northing	Easting
POB	0+00			562327.107	2923064.669
		TL= 6.88	N 49°15'55" E		
PC	0+07			562331.599	2923069.885
PI	1+00	R = 125.00	Delta = 73°08'14" R	562392.109	2923140.148
PT	1+66			562342.420	2923218.438
		TL= 87.84	S 57°35'51" E		
PC	2+54			562295.349	2923292.603
PI	2+91	R = 125.00	Delta = 32°59'33" L	562275.512	2923323.857
PT	3+26			562275.894	2923360.873
		TL= 111.56	N 89°24'36" E		
POE	4+38			562277.043	2923472.426

The coordinates shown on this sheet are based on the South Dakota State Plane Coordinate System. South Zone (NAD 83/07); epoch 2010.00; NAVD 88; Geoid 09; SF = 0.9998410923

Plot Scale - 1:200
Plotted From - TRSF12141
File - ...\rd\prj\minn0225C\DataHoriz.dgn

CONTROL DATA

STATE OF SOUTH DAKOTA	PROJECT	SHEET	TOTAL SHEETS
	P 0115(47)102	B17	B78

Plotting Date: 11/20/2015

HORIZONTAL AND VERTICAL CONTROL POINTS

POINT	STATION	OFFSET	DESCRIPTION	NORTHING	EASTING	ELEVATION
CP2	21+03.44	98.12' R	MRM 102.25 - 98' RT. - 5/8" x 5' REBAR & CAP STAMPED "SDDOT CONTROL POINT" - 1' WEST OF NORTH POST OF 2 POST PANEL ON NORTH SIDE OF APPROACH	552816.125	2925033.563	1571.876
CP3	37+77.32	100.08' R	MRM 102.57 - 100.5' RT. - 5/8" x 5' REBAR & CAP STAMPED "SDDOT CONTROL POINT" - ON EAST ROW LINE 1' NORTH OF TWO POST PANEL (FENCE ENDS)	554488.857	2924971.601	1557.880
CP4	55+10.09	99.02' L	MRM 102.90 - 99' LT. - 5/8" x 5' REBAR & CAP STAMPED "SDDOT CONTROL POINT" - 1' EAST OF SOUTH POST OF TWO POST PANEL SOUTH SIDE OF APPROACH	556212.758	2924706.495	1549.967
CP5	69+14.47	19.19' L	MRM 103.18 - 19' LT. - DURANAIL & WASHER STAMPED "SDDOT CONTROL PT" IN WEST ASPHALT SHOLDER 4' EAST OF MAILBOX	557619.166	2924732.645	1546.770
CP6	87+26.32	75.63' R	MRM 103.52 - 76' RT. - DURANAIL & WASHER STAMPED "SDDOT CONTROL PT" IN SW CORNER OF CONCRETE FOOTING FOR SIGN (NO SIGN ON FOOTING ANYMORE)	559433.327	2924758.207	1546.356
CP7	98+57.19	101.74' L	MRM 103.73 - 102' LT. - 5/8" x 5' REBAR & CAP STAMPED "SDDOT CONTROL POINT" - 2' EAST OF CHAIN LINK FENCE - 12'+/- SOUTH OF APPROACH	560487.522	2924348.242	1516.674
CP8	110+41	17.35' R	MRM 103.94 - 17' RT. - DURANAIL & WASHER STAMPED "SDDOT CONTROL PT" - TOP OF SE WNGWALL OF STR. 50-209-022	561511.974	2923789.559	1496.135
CP9	113+46.11	17.29' R	MRM 103.99 - 17' RT. - DURANAIL & WASHER STAMPED "SDDOT CONTROL PT" - TOP OF NE WNGWALL OF STR. 50-208-022	561742.888	2923590.613	1493.609
CP10	123+35.99	17.72' R	MRM 104.18 -18' RT. - DURANAIL & WASHER STAMPED "SDDOT CONTROL PT" - TOP OF SE WNGWALL OF STR. 50-206-020	562493.245	2922944.962	1493.506
CP11	127+62.39	17.56' R	MRM 104.26 - 17' RT. - DURANAIL & WASHER STAMPED "SDDOT CONTROL PT" - TOP OF NE WNGWALL OF STR. 50-206-020	562816.037	2922666.354	1493.592
CP12	134+52.74	77.61' R	MRM 104.39 - 77' RT. - 5/8" x 2' REBAR & CAP STAMPED "SDDOT CONTROL POINT" - NEAR EAST ROW - SOUTH SIDE OF CUBBYS APPROACH/ALLEY	563377.901	2922262.358	1499.173
CP13	140+03.92	215.61' R	MRM 104.50 - 215' RT. Duranail & Washer Stamped "SDDOT CONTROLPT" - Top of Drop-Inlet Lid @ NE Corner of 4th St. and Sunset Dr.	563890.977	2922023.589	1511.953

* All Station and Offsets are from SD Hwy 115 Alignment

The coordinates shown on this sheet are based on the South Dakota State Plane Coordinate System. South Zone (NAD 83/2007); epoch 2010.00, Geoid 2009; SF = 0.9998410923
The elevations shown on this sheet are based on NAVD 88.

Plot Scale - 1:200
Plotted From - TRSF12141
File - ...\prj\minn025C\DataControl.dgn

UTILITY CONFLICTS & REVIEW SUMMARY

STATE OF SOUTH DAKOTA	PROJECT	SHEET	TOTAL SHEETS
	P 0115(47)102	B18	B78

Plotting Date: 11/20/2015

UTILITY CONFLICTS & REVIEW SUMMARY

Conflict ID Number	Existing Utility Owner	Description	Alignment	Conflict Beginning Station	Offset Direction Begin (R=Right, L=Left)	Offset Distance Begin (FT)	Conflict Ending Station	Offset Direction End (R=Right, L=Left)	Offset Distance End (FT)	RESOLUTION #	Utility Action to be Taken (See Resolution(s) for Details): **REMAIN IN PLACE** = Protect in Place ****REMAIN IN PLACE**** = Protect in Place and See Resolution(s) for Specific Considerations **ABANDON IN PLACE** = Highway Contractor to Coordinate with Utility and Remove as necessary. **RELOCATE** = See Resolution(s) for Details and Responsibilities. Some Relocations may result in Utility Features being Abandoned in Place, Highway Contractor to Coordinate with Utilty and Remove as necessary
C2091	Golden West Communications	TELEPHONE LINE ROUTED IN PROPOSED LOWERED DITCH	474TH/475TH AVENUE (HIGHWAY 115)	10+42.6	R	78.9	10+61.8	R	73.9	244	ABANDON IN PLACE
F2022	Minnehaha Community Water	WATER LINE ROUTED IN PROPOSED LOWERED DITCH	474TH/475TH AVENUE (HIGHWAY 115)	10+42.6	R	56.6	10+73.2	R	103.7	213	REMAIN IN PLACE
C2089	Golden West Communications	FIBER OPTIC LINE ROUTED IN PROPOSED LOWERED DITCH	474TH/475TH AVENUE (HIGHWAY 115)	10+43	R	63.1	10+75.7	R	65.8	244	ABANDON IN PLACE
C2090	Golden West Communications	FIBER OPTIC LINE ROUTED IN PROPOSED LOWERED DITCH	474TH/475TH AVENUE (HIGHWAY 115)	10+55.1	R	101.9	10+75.7	R	65.8	244	ABANDON IN PLACE
C2079	Golden West Communications	TELEPHONE LINE ROUTED IN PROPOSED LOWERED DITCH	474TH/475TH AVENUE (HIGHWAY 115)	10+61.8	R	73.9	12+85.1	R	62.4	244	ABANDON IN PLACE
C2080	Golden West Communications	TELEPHONE LINE ROUTED IN PROPOSED LOWERED DITCH	474TH/475TH AVENUE (HIGHWAY 115)	10+61.8	R	73.9	12+85.3	R	63.2	244	ABANDON IN PLACE
C2084	Golden West Communications	TELEPHONE LINE ROUTED ACROSS PROPOSED ROAD	474TH/475TH AVENUE (HIGHWAY 115)	10+61.8	R	73.9	11+05	L	47.7	244	ABANDON IN PLACE
C2085	Golden West Communications	TELEPHONE LINE ROUTED ACROSS PROPOSED ROAD	474TH/475TH AVENUE (HIGHWAY 115)	10+61.8	R	73.9	10+66.6	L	66.8	244	ABANDON IN PLACE
C2086	Golden West Communications	TELEPHONE BOX IN PROPOSED LOWERED DITCH	474TH/475TH AVENUE (HIGHWAY 115)	10+61.8	R	73.9	-	-	-	244	ABANDON IN PLACE
M2012	Xcel Energy	POWER POLE IN PROPOSED LOWERED DITCH	474TH/475TH AVENUE (HIGHWAY 115)	10+63.8	R	69.8	-	-	-	216	REMAIN IN PLACE
C2078	Golden West Communications	FIBER OPTIC LINE ROUTED IN PROPOSED LOWERED DITCH	474TH/475TH AVENUE (HIGHWAY 115)	10+75.7	R	65.8	12+91.2	R	56	244	ABANDON IN PLACE
C2087	Golden West Communications	FIBER OPTIC VAULT IN PROPOSED LOWERED DITCH	474TH/475TH AVENUE (HIGHWAY 115)	10+75.7	R	65.8	-	-	-	244	**REMAIN IN PLACE**
C2088	Golden West Communications	FIBER OPTIC LINE ROUTED ACROSS PROPOSED ROAD	474TH/475TH AVENUE (HIGHWAY 115)	10+75.7	R	65.8	10+75.4	L	58	244	ABANDON IN PLACE
C2081	Golden West Communications	CATV LINE ROUTED IN PROPOSED LOWERED DITCH	474TH/475TH AVENUE (HIGHWAY 115)	10+92.5	R	68.3	11+90.5	R	77.5	244	ABANDON IN PLACE
C2082	Golden West Communications	CATV BOX IN PROPOSED LOWERED DITCH	474TH/475TH AVENUE (HIGHWAY 115)	10+92.5	R	68.3	-	-	-	244	ABANDON IN PLACE
C2083	Golden West Communications	CATV LINE ROUTED ACROSS PROPOSED ROAD	474TH/475TH AVENUE (HIGHWAY 115)	10+92.5	R	68.3	10+91	L	54.6	244	ABANDON IN PLACE
C2094	Golden West Communications	TELEPHONE LINE ADJACENT TO A PROPOSED STORM DRAIN LINE.	474TH/475TH AVENUE (HIGHWAY 115)	10+99	R	50.5	-	-	-	244	ABANDON IN PLACE
C2095	Golden West Communications	FIBER OPTIC LINE ADJACENT TO A PROPOSED STORM DRAIN LINE.	474TH/475TH AVENUE (HIGHWAY 115)	10+99	R	53.4	-	-	-	244	ABANDON IN PLACE
C2096	Golden West Communications	TELEPHONE LINE ADJACENT TO A PROPOSED STORM DRAIN LINE.	474TH/475TH AVENUE (HIGHWAY 115)	10+99	R	55.6	-	-	-	244	ABANDON IN PLACE
C2097	Golden West Communications	TELEPHONE LINE ADJACENT TO A PROPOSED STORM DRAIN LINE.	474TH/475TH AVENUE (HIGHWAY 115)	10+99	R	57	-	-	-	244	ABANDON IN PLACE
M2011	Xcel Energy	POWER POLE IN PROPOSED LOWERED DITCH	474TH/475TH AVENUE (HIGHWAY 115)	12+56.2	R	71.4	-	-	-	216	REMAIN IN PLACE

Plot Scale - 1:200

Plotted From - TRSF12141

File - ...\DataUtilityConflicts.dgn

UTILITY CONFLICTS & REVIEW SUMMARY

STATE OF SOUTH DAKOTA	PROJECT	SHEET	TOTAL SHEETS
	P 0115(47)102	B19	B78

Plotting Date: 11/20/2015

UTILITY CONFLICTS & REVIEW SUMMARY

Utility Action to be Taken (See Resolution(s) for Details):

REMAIN IN PLACE = Protect in Place

****REMAIN IN PLACE** =** Protect in Place and See Resolution(s) for Specific Considerations

ABANDON IN PLACE = Highway Contractor to Coordinate with Utility and Remove as necessary.

RELOCATE = See Resolution(s) for Details and Responsibilities. Some Relocations may result in Utility Features being Abandoned in Place, Highway Contractor to Coordinate with Utilty and Remove as necessary

Conflict ID Number	Existing Utility Owner	Description	Alignment	Conflict Beginning Station	Offset Direction Begin (R=Right, L=Left)	Offset Distance Begin (FT)	Conflict Ending Station	Offset Direction End (R=Right, L=Left)	Offset Distance End (FT)	RESOLUTION #	Utility Action to be Taken (See Resolution(s) for Details)
C2120	Golden West Communications	FIBER OPTIC LINE CROSSES A PROPOSED DITCH BLOCK	474TH/475TH AVENUE (HIGHWAY 115)	12+80	R	55.9	-	-	-	244	ABANDON IN PLACE
C2121	Golden West Communications	TELEPHONE LINE CROSSES A PROPOSED DITCH BLOCK	474TH/475TH AVENUE (HIGHWAY 115)	12+80	R	61.9	-	-	-	244	ABANDON IN PLACE
C2122	Golden West Communications	TELEPHONE LINE CROSSES A PROPOSED DITCH BLOCK	474TH/475TH AVENUE (HIGHWAY 115)	12+80	R	62.7	-	-	-	244	ABANDON IN PLACE
C2148	Golden West Communications	FIBER OPTIC LINE IS IN VERY CLOSE PROXIMITY TO THE END OF A PROPOSED STORM LINE.	474TH/475TH AVENUE (HIGHWAY 115)	13+55	R	59.4	-	-	-	244	ABANDON IN PLACE
F2023	Minnehaha Community Water	WATER LINE CROSSING PROPOSED STORM LINE	474TH/475TH AVENUE (HIGHWAY 115)	13+55	L	74	-	-	-	213	REMAIN IN PLACE
C2119	Golden West Communications	CABLE TV LINE CROSSES A PROPOSED DRIVEWAY.	474TH/475TH AVENUE (HIGHWAY 115)	15+60	L	80.7	15+83.7	L	81.6	244	ABANDON IN PLACE
F2031	Minnehaha Community Water	WATER LINE CROSSES A PROPOSED DRIVEWAY	474TH/475TH AVENUE (HIGHWAY 115)	15+60	L	73.4	15+83.7	L	73.4	213	REMAIN IN PLACE
F2032	Minnehaha Community Water	WATER LINE CROSSES A PROPOSED DRIVEWAY	474TH/475TH AVENUE (HIGHWAY 115)	15+60	L	100.4	15+83.7	L	99.5	213	REMAIN IN PLACE
M2020	Xcel Energy	BURIED ELECTRIC LINE CROSSES A PROPOSED DRIVEWAY LOCATION	474TH/475TH AVENUE (HIGHWAY 115)	15+60	L	92.3	15+83.7	L	91.4	216	REMAIN IN PLACE
C2077	Golden West Communications	TELEPHONE LINE ROUTED ACROSS PROPOSED ROAD	474TH/475TH AVENUE (HIGHWAY 115)	16+00	R	37.2	16+00	L	80.7	244	ABANDON IN PLACE
C2076	Golden West Communications	TELEPHONE LINE ROUTED ACROSS PROPOSED ROAD	474TH/475TH AVENUE (HIGHWAY 115)	16+00.1	R	37.2	16+00.1	L	80.7	244	ABANDON IN PLACE
F2024	Minnehaha Community Water	WATER LINE ROUTED IN PROPOSED LOWERED DITCH. ALSO CROSSES BELOW A DRIVEWAY BEING RECONSTRUCTED.	474TH/475TH AVENUE (HIGHWAY 115)	19+07	L	70	20+11	L	70	213	REMAIN IN PLACE
C2141	Golden West Communications	TELEPHONE LINE CROSSES A PROPOSED DRIVEWAY.	474TH/475TH AVENUE (HIGHWAY 115)	19+20.4	R	88.3	19+45.3	R	88.1	244	ABANDON IN PLACE
C2142	Golden West Communications	TELEPHONE LINE CROSSES A PROPOSED DRIVEWAY.	474TH/475TH AVENUE (HIGHWAY 115)	19+20.4	R	76.7	19+45.3	R	76.2	244	ABANDON IN PLACE
C2143	Golden West Communications	FIBER OPTIC LINE CROSSES A PROPOSED DRIVEWAY.	474TH/475TH AVENUE (HIGHWAY 115)	19+20.4	R	65.3	19+45.3	R	64.2	244	ABANDON IN PLACE
C2073	Golden West Communications	FIBER OPTIC LINE ROUTED IN PROPOSED LOWERED DITCH	474TH/475TH AVENUE (HIGHWAY 115)	19+61.8	R	65.9	31+47.4	R	68.9	244	ABANDON IN PLACE
F2025	Minnehaha Community Water	WATER LINE CROSSING PROPOSED ROAD	474TH/475TH AVENUE (HIGHWAY 115)	20+10.5	L	44.5	20+10.5	R	68.1	213	REMAIN IN PLACE
C2074	Golden West Communications	TELEPHONE LINE ROUTED IN PROPOSED LOWERED DITCH	474TH/475TH AVENUE (HIGHWAY 115)	20+50.2	R	76.3	30+70.5	R	80	244	ABANDON IN PLACE
F2033	Minnehaha Community Water	WATER LINE CROSSES A PROPOSED DITCH BLOCK	474TH/475TH AVENUE (HIGHWAY 115)	20+70.5	R	49.5	-	-	-	198	RELOCATE
C2123	Golden West Communications	FIBER OPTIC LINE CROSSES A PROPOSED DITCH BLOCK	474TH/475TH AVENUE (HIGHWAY 115)	20+71.2	R	64.6	-	-	-	244	ABANDON IN PLACE
C2124	Golden West Communications	TELEPHONE LINE CROSSES A PROPOSED DITCH BLOCK	474TH/475TH AVENUE (HIGHWAY 115)	20+71.2	R	75.8	-	-	-	244	ABANDON IN PLACE

Plot Scale - 1:200
Plotted From - TRSF12141
File - ...\DataUtilityConflicts.dgn

UTILITY CONFLICTS & REVIEW SUMMARY

STATE OF SOUTH DAKOTA	PROJECT	SHEET	TOTAL SHEETS
	P 0115(47)102	B20	B78

Plotting Date: 11/20/2015

UTILITY CONFLICTS & REVIEW SUMMARY

Conflict ID Number	Existing Utility Owner	Description	Alignment	Conflict Beginning Station	Offset Direction Begin (R=Right, L=Left)	Offset Distance Begin (FT)	Conflict Ending Station	Offset Direction End (R=Right, L=Left)	Offset Distance End (FT)	RESOLUTION #	Utility Action to be Taken (See Resolution(s) for Details): **REMAIN IN PLACE** = Protect in Place ****REMAIN IN PLACE**** = Protect in Place and See Resolution(s) for Specific Considerations **ABANDON IN PLACE** = Highway Contractor to Coordinate with Utility and Remove as necessary. **RELOCATE** = See Resolution(s) for Details and Responsibilities. Some Relocations may result in Utility Features being Abandoned in Place, Highway Contractor to Coordinate with Utilty and Remove as necessary
F2040	Minnehaha Community Water	WATER MAIN CROSSES A PROPOSED STORM DRAIN (CULVERT) CROSSING HIGHWAY 115.	474TH/475TH AVENUE (HIGHWAY 115)	21+05	R	49.7	-	-	-	198	RELOCATE
F2027	Minnehaha Community Water	WATER LINE ROUTED IN PROPOSED LOWERED DITCH	474TH/475TH AVENUE (HIGHWAY 115)	22+05	R	106.2	29+25	R	110.1	198	RELOCATE
C2075	Golden West Communications	TELEPHONE LINE ROUTED IN PROPOSED LOWERED DITCH	474TH/475TH AVENUE (HIGHWAY 115)	22+67.1	R	90.3	30+30.7	R	87.5	244	ABANDON IN PLACE
M2010	Xcel Energy	POWER POLE IN PROPOSED LOWERED DITCH	474TH/475TH AVENUE (HIGHWAY 115)	22+93.3	R	96.2	-	-	-	176	**REMAIN IN PLACE**
F2034	Minnehaha Community Water	WATER LINE CROSSES A PROPOSED DRIVEWAY	474TH/475TH AVENUE (HIGHWAY 115)	24+60	L	69	25+26	L	120	243	**REMAIN IN PLACE**
C2125	Golden West Communications	TELEPHONE LINE CROSSES A PROPOSED DRIVEWAY.	474TH/475TH AVENUE (HIGHWAY 115)	24+65.2	L	86	25+40	L	85.5	244	ABANDON IN PLACE
C2126	Golden West Communications	CABLE TV LINE CROSSES A PROPOSED DRIVEWAY.	474TH/475TH AVENUE (HIGHWAY 115)	24+65.2	L	78.2	25+40	L	81.4	244	ABANDON IN PLACE
M2021	Xcel Energy	BURIED ELECTRIC LINE CROSSES A PROPOSED DRIVEWAY LOCATION	474TH/475TH AVENUE (HIGHWAY 115)	24+77	L	100	25+34	L	96.5	241	RELOCATE
C2151	Golden West Communications	BURIED CABLE TV LINE CROSSES A DRIVEWAY TO BE MODIFIED DURING CONSTRUCTION.	474TH/475TH AVENUE (HIGHWAY 115)	24+80	L	73.5	25+17	L	78.5	244	ABANDON IN PLACE
M2009	Xcel Energy	POWER POLE IN PROPOSED LOWERED DITCH	474TH/475TH AVENUE (HIGHWAY 115)	25+14.2	R	96.3	-	-	-	176	**REMAIN IN PLACE**
F2026	Minnehaha Community Water	WATER LINE ROUTED IN PROPOSED LOWERED DITCH	474TH/475TH AVENUE (HIGHWAY 115)	26+02	R	48	33+05	R	54	198	RELOCATE
C2099	Golden West Communications	TELEPHONE LINE LOCATED IN A PROPOSED CUT LOCATION.	474TH/475TH AVENUE (HIGHWAY 115)	26+93.2	L	96	28+18.7	L	115	244	ABANDON IN PLACE
M2008	Xcel Energy	POWER POLE IN PROPOSED LOWERED DITCH	474TH/475TH AVENUE (HIGHWAY 115)	27+33.8	R	95.4	-	-	-	176	**REMAIN IN PLACE**
M2013	Xcel Energy	POWER PEDESTAL/BOX IN A PROPOSED CUT LOCATION.	474TH/475TH AVENUE (HIGHWAY 115)	28+11	L	111	-	-	-	241	RELOCATE
C2098	Golden West Communications	TELEPHONE PEDESTAL LOCATED IN A PROPOSED CUT LOCATION.	474TH/475TH AVENUE (HIGHWAY 115)	28+17	L	110	-	-	-	244	ABANDON IN PLACE
C2144	Golden West Communications	CATV PEDESTAL IS LOCATED WITHIN A CUT/FILL LOCATION ON THE EMBANKMENT.	474TH/475TH AVENUE (HIGHWAY 115)	28+20	L	110	-	-	-	244	ABANDON IN PLACE
C2147	Golden West Communications	CATV LINE LOCATED IN A PROPOSED CUT LOCATION.	474TH/475TH AVENUE (HIGHWAY 115)	29+13	L	105.4	26+54	L	86	244	ABANDON IN PLACE
F2028	Minnehaha Community Water	WATER VALVE LOCATED IN PROPOSED LOWERED DITCH	474TH/475TH AVENUE (HIGHWAY 115)	29+17	R	98	-	-	-	198	RELOCATE
F2029	Minnehaha Community Water	WATER VALVE LOCATED IN PROPOSED LOWERED DITCH	474TH/475TH AVENUE (HIGHWAY 115)	29+17	R	99	-	-	-	198	RELOCATE
F2030	Minnehaha Community Water	WATER LINE ROUTED IN PROPOSED LOWERED DITCH	474TH/475TH AVENUE (HIGHWAY 115)	29+17	R	68.9	29+17	R	99.1	198	RELOCATE
M2007	Xcel Energy	POWER POLE IN PROPOSED LOWERED DITCH	474TH/475TH AVENUE (HIGHWAY 115)	29+54.2	R	95.3	-	-	-	176	**REMAIN IN PLACE**

Plot Scale - 1:200
Plotted From - TRSF12141
File - ...\DataUtilityConflicts.dgn

UTILITY CONFLICTS & REVIEW SUMMARY

STATE OF SOUTH DAKOTA	PROJECT	SHEET	TOTAL SHEETS
	P 0115(47)102	B21	B78

Plotting Date: 11/20/2015

UTILITY CONFLICTS & REVIEW SUMMARY

Conflict ID Number	Existing Utility Owner	Description	Alignment	Conflict Beginning Station	Offset Direction Begin (R=Right, L=Left)	Offset Distance Begin (FT)	Conflict Ending Station	Offset Direction End (R=Right, L=Left)	Offset Distance End (FT)	RESOLUTION #	Utility Action to be Taken (See Resolution(s) for Details): **REMAIN IN PLACE** = Protect in Place; ****REMAIN IN PLACE**** = Protect in Place and See Resolution(s) for Specific Considerations; **ABANDON IN PLACE** = Highway Contractor to Coordinate with Utility and Remove as necessary. **RELOCATE** = See Resolution(s) for Details and Responsibilities. Some Relocations may result in Utility Features being Abandoned in Place, Highway Contractor to Coordinate with Utilty and Remove as necessary
C2127	Golden West Communications	TELEPHONE LINE CROSSES A PROPOSED DRIVEWAY.	474TH/475TH AVENUE (HIGHWAY 115)	31+88	R	87.5	32+12.5	R	87.6	244	ABANDON IN PLACE
C2128	Golden West Communications	TELEPHONE LINE CROSSES A PROPOSED DRIVEWAY.	474TH/475TH AVENUE (HIGHWAY 115)	31+88	R	78	32+12.5	R	77.8	244	ABANDON IN PLACE
C2129	Golden West Communications	FIBER OPTIC LINE CROSSES A PROPOSED DRIVEWAY.	474TH/475TH AVENUE (HIGHWAY 115)	31+88	R	69	32+12.5	R	69.2	244	ABANDON IN PLACE
F2035	Minnehaha Community Water	WATER LINE CROSSES A PROPOSED DRIVEWAY	474TH/475TH AVENUE (HIGHWAY 115)	31+88	R	53.4	32+12.5	R	53.4	198	RELOCATE
F2021	Minnehaha Community Water	WATER LINE CROSSING PROPOSED STORM LINE	474TH/475TH AVENUE (HIGHWAY 115)	35+37	R	56	-	-	-	213	REMAIN IN PLACE
C2130	Golden West Communications	TELEPHONE LINE CROSSES A PROPOSED DITCH BLOCK	474TH/475TH AVENUE (HIGHWAY 115)	35+92	R	71.5	-	-	-	244	ABANDON IN PLACE
C2131	Golden West Communications	FIBER OPTIC LINE CROSSES A PROPOSED DITCH BLOCK	474TH/475TH AVENUE (HIGHWAY 115)	35+92	R	71.5	-	-	-	244	ABANDON IN PLACE
C2132	Golden West Communications	TELEPHONE LINE CROSSES A PROPOSED DITCH BLOCK	474TH/475TH AVENUE (HIGHWAY 115)	35+92	R	81.2	-	-	-	244	ABANDON IN PLACE
F2036	Minnehaha Community Water	WATER LINE CROSSES A PROPOSED DITCH BLOCK	474TH/475TH AVENUE (HIGHWAY 115)	35+92	R	55	-	-	-	213	REMAIN IN PLACE
C2072	Golden West Communications	FIBER OPTIC LINE ROUTED IN PROPOSED LOWERED DITCH	474TH/475TH AVENUE (HIGHWAY 115)	37+00	R	68	39+39.2	R	79.6	244	ABANDON IN PLACE
C2145	Golden West Communications	TELEPHONE LINE CROSSES AN EXISTING ROADWAY THAT WILL BE REMOVED AND CUT DOWN TO SHAPE DITCH BOTTOM.	474TH/475TH AVENUE (HIGHWAY 115)	37+00	R	68	46+19	R	66.2	244	ABANDON IN PLACE
F2020	Minnehaha Community Water	WATER LINE ROUTED IN PROPOSED LOWERED DITCH	474TH/475TH AVENUE (HIGHWAY 115)	37+00	R	59	39+41	R	86	197	RELOCATE
C2062	Golden West Communications	TELEPHONE LINE ROUTED IN PROPOSED LOWERED DITCH	474TH/475TH AVENUE (HIGHWAY 115)	38+00	R	77.1	46+17.5	R	66.9	244	ABANDON IN PLACE
C2146	Golden West Communications	TELEPHONE LINE CROSSES AN EXISTING ROADWAY THAT WILL BE REMOVED AND CUT DOWN TO SHAPE DITCH BOTTOM.	474TH/475TH AVENUE (HIGHWAY 115)	38+18.4	R	93	39+17.4	R	72.2	244	ABANDON IN PLACE
C2063	Golden West Communications	TELEPHONE LINE ROUTED IN PROPOSED LOWERED DITCH	474TH/475TH AVENUE (HIGHWAY 115)	38+42.6	R	87.7	46+05.6	R	80	244	ABANDON IN PLACE
C2069	Golden West Communications	TELEPHONE LINE ROUTED ACROSS PROPOSED ROAD	474TH/475TH AVENUE (HIGHWAY 115)	39+33.7	R	49	39+69.6	R	51	244	ABANDON IN PLACE
F2041	Minnehaha Community Water	WATER MAIN CROSSES EXISTING GARFIELD AVENUE ROADWAY WHICH IS PLANNED FOR RE-ALIGNMENT. THE AREA NEAR THE INTERSECTION WITH 475TH AVENUE WILL BE REMOVED WHEN INTERSECTION IS RELOCATED.	474TH/475TH AVENUE (HIGHWAY 115)	39+35	R	169	39+55	R	116	197	RELOCATE
C2070	Golden West Communications	TELEPHONE LINE ROUTED ACROSS PROPOSED ROAD	474TH/475TH AVENUE (HIGHWAY 115)	39+38.2	R	67.5	39+68.5	R	63.3	244	ABANDON IN PLACE
C2071	Golden West Communications	FIBER OPTIC LINE ROUTED ACROSS PROPOSED ROAD	474TH/475TH AVENUE (HIGHWAY 115)	39+39.1	R	80	39+72.9	R	80	244	ABANDON IN PLACE
F2018	Minnehaha Community Water	WATER LINE CROSSING PROPOSED ROAD	474TH/475TH AVENUE (HIGHWAY 115)	39+41.8	R	87.5	39+83.8	R	110	197	RELOCATE

Plot Scale - 1:200
Plotted From - TRSF12141
File - ...\DataUtilityConflicts.dgn

UTILITY CONFLICTS & REVIEW SUMMARY

STATE OF SOUTH DAKOTA	PROJECT	SHEET	TOTAL SHEETS
	P 0115(47)102	B22	B78

Plotting Date: 11/20/2015

UTILITY CONFLICTS & REVIEW SUMMARY

Conflict ID Number	Existing Utility Owner	Description	Alignment	Conflict Beginning Station	Offset Direction Begin (R=Right, L=Left)	Offset Distance Begin (FT)	Conflict Ending Station	Offset Direction End (R=Right, L=Left)	Offset Distance End (FT)	RESOLUTION #	Utility Action to be Taken (See Resolution(s) for Details): **REMAIN IN PLACE** = Protect in Place ****REMAIN IN PLACE**** = Protect in Place and See Resolution(s) for Specific Considerations **ABANDON IN PLACE** = Highway Contractor to Coordinate with Utility and Remove as necessary. **RELOCATE** = See Resolution(s) for Details and Responsibilities. Some Relocations may result in Utility Features being Abandoned in Place, Highway Contractor to Coordinate with Utilty and Remove as necessary
F2019	Minnehaha Community Water	WATER LINE CROSSING PROPOSED ROAD	474TH/475TH AVENUE (HIGHWAY 115)	39+51.9	R	116	39+74.7	R	89.3	197	RELOCATE
M2005	Xcel Energy	POWER POLE IN PROPOSED NEW ROAD	474TH/475TH AVENUE (HIGHWAY 115)	39+64.5	R	125.4	-	-	-	175	RELOCATE
M2004	Xcel Energy	POWER POLE IN PROPOSED NEW ROAD	474TH/475TH AVENUE (HIGHWAY 115)	39+64.7	R	99.5	-	-	-	175	RELOCATE
M2006	Xcel Energy	POWER LINE CROSSING PROPOSED ROAD	474TH/475TH AVENUE (HIGHWAY 115)	39+64.7	R	99.5	39+45.4	R	102.8	175	RELOCATE
C2067	Golden West Communications	TELEPHONE LINE ROUTED ACROSS PROPOSED DITCH BLOCK	474TH/475TH AVENUE (HIGHWAY 115)	40+78	R	51	-	-	-	244	ABANDON IN PLACE
C2068	Golden West Communications	TELEPHONE LINE ROUTED ACROSS PROPOSED DITCH BLOCK	474TH/475TH AVENUE (HIGHWAY 115)	40+78	R	60.6	-	-	-	244	ABANDON IN PLACE
C2066	Golden West Communications	FIBER OPTIC LINE ROUTED ACROSS PROPOSED ROAD	474TH/475TH AVENUE (HIGHWAY 115)	42+55.3	L	93	42+65.9	R	89	244	ABANDON IN PLACE
C2061	Golden West Communications	FIBER OPTIC LINE ROUTED IN PROPOSED LOWERED DITCH	474TH/475TH AVENUE (HIGHWAY 115)	42+61	L	97.8	45+66.6	L	74.5	244	ABANDON IN PLACE
C2065	Golden West Communications	FIBER OPIC MH IN PROPOSED LOWERED DITCH	474TH/475TH AVENUE (HIGHWAY 115)	42+61	L	97.8	-	-	-	244	**REMAIN IN PLACE**
C2060	Golden West Communications	CATV LINE ROUTED ACROSS PROPOSED LOWERED DITCH	474TH/475TH AVENUE (HIGHWAY 115)	42+66.5	L	98.6	45+57.5	L	92.8	244	ABANDON IN PLACE
C2064	Golden West Communications	CATV BOX IN PROPOSED LOWERED DITCH	474TH/475TH AVENUE (HIGHWAY 115)	42+66.5	L	98.6	-	-	-	244	ABANDON IN PLACE
C2059	Golden West Communications	FIBER OPTIC LINE ROUTED NEAR PROPOSED STORM LINE	474TH/475TH AVENUE (HIGHWAY 115)	44+56.5	L	59	44+82.7	L	59.5	244	ABANDON IN PLACE
F2017	Minnehaha Community Water	WATER LINE CROSSING PROPOSED ROAD	474TH/475TH AVENUE (HIGHWAY 115)	45+82.3	R	77.4	45+82.3	L	59	213	REMAIN IN PLACE
M2003	Xcel Energy	POWER LINE CROSSING PROPOSED ROAD	474TH/475TH AVENUE (HIGHWAY 115)	46+64.1	L	50.2	46+76.3	R	48.3	216	REMAIN IN PLACE
C2138	Golden West Communications	FIBER OPTIC LINE CROSSES A PROPOSED DRIVEWAY.	474TH/475TH AVENUE (HIGHWAY 115)	50+14	L	86.7	50+37.8	L	86.5	244	ABANDON IN PLACE
C2139	Golden West Communications	TELEPHONE LINE CROSSES A PROPOSED DRIVEWAY.	474TH/475TH AVENUE (HIGHWAY 115)	50+14	L	90.1	50+37.8	L	91	244	ABANDON IN PLACE
C2140	Golden West Communications	CATV LINE CROSSES A PROPOSED DRIVEWAY.	474TH/475TH AVENUE (HIGHWAY 115)	50+14	L	94.5	50+37.8	L	94.6	244	ABANDON IN PLACE
F2016	Minnehaha Community Water	WATER LINE CROSSING PROPOSED ROAD	474TH/475TH AVENUE (HIGHWAY 115)	50+67.6	R	76.25	51+08.6	R	76	213	REMAIN IN PLACE
C2058	Golden West Communications	TELEPHONE LINE ROUTED IN PROPOSED LOWERED DITCH	474TH/475TH AVENUE (HIGHWAY 115)	51+19.7	R	77.6	52+82.3	R	66.4	244	ABANDON IN PLACE
C2050	Golden West Communications	FIBER OPTIC LINE ROUTED ACROSS PROPOSED LOWERED DITCH	474TH/475TH AVENUE (HIGHWAY 115)	52+00	L	86.7	55+61.3	L	87.1	244	ABANDON IN PLACE
C2055	Golden West Communications	TELEPHONE LINE ROUTED IN PROPOSED LOWERED DITCH	474TH/475TH AVENUE (HIGHWAY 115)	52+17.3	L	92.3	53+42.8	L	98.7	244	ABANDON IN PLACE

Plot Scale - 1:200

Plotted From - TRSF12141

File - ...\DataUtilityConflicts.dgn

UTILITY CONFLICTS & REVIEW SUMMARY

STATE OF SOUTH DAKOTA	PROJECT	SHEET	TOTAL SHEETS
	P 0115(47)102	B23	B78

Plotting Date: 11/20/2015

UTILITY CONFLICTS & REVIEW SUMMARY

Conflict ID Number	Existing Utility Owner	Description	Alignment	Conflict Beginning Station	Offset Direction Begin (R=Right, L=Left)	Offset Distance Begin (FT)	Conflict Ending Station	Offset Direction End (R=Right, L=Left)	Offset Distance End (FT)	RESOLUTION #	Utility Action to be Taken (See Resolution(s) for Details): **REMAIN IN PLACE** = Protect in Place ****REMAIN IN PLACE**** = Protect in Place and See Resolution(s) for Specific Considerations **ABANDON IN PLACE** = Highway Contractor to Coordinate with Utility and Remove as necessary. **RELOCATE** = See Resolution(s) for Details and Responsibilities. Some Relocations may result in Utility Features being Abandoned in Place, Highway Contractor to Coordinate with Utilty and Remove as necessary
C2056	Golden West Communications	CATV LINE ROUTED IN PROPOSED LOWERED DITCH	474TH/475TH AVENUE (HIGHWAY 115)	52+30.2	L	95.3	53+40.5	L	98	244	ABANDON IN PLACE
C2057	Golden West Communications	TELEPHONE LINE ROUTED ACROSS PROPOSED ROAD	474TH/475TH AVENUE (HIGHWAY 115)	52+82.3	R	66.4	53+07.1	R	67.2	244	ABANDON IN PLACE
F2015	Minnehaha Community Water	WATER LINE CROSSING PROPOSED ROAD	474TH/475TH AVENUE (HIGHWAY 115)	52+83.3	R	75.4	53+06.8	R	75.4	213	REMAIN IN PLACE
C2052	Golden West Communications	CATV LINE ROUTED IN PROPOSED LOWERED DITCH	474TH/475TH AVENUE (HIGHWAY 115)	53+40.5	L	98	55+56.2	L	94.4	244	ABANDON IN PLACE
C2054	Golden West Communications	CATV BOX IN PROPOSED LOWERED DITCH	474TH/475TH AVENUE (HIGHWAY 115)	53+40.5	L	98	-	-	-	244	ABANDON IN PLACE
C2051	Golden West Communications	TELEPHONE LINE ROUTED ACROSS PROPOSED LOWERED DITCH	474TH/475TH AVENUE (HIGHWAY 115)	53+42.8	L	98.7	55+53.9	L	91.5	244	ABANDON IN PLACE
C2053	Golden West Communications	TELEPHONE BOX IN PROPOSED LOWERED DITCH	474TH/475TH AVENUE (HIGHWAY 115)	53+42.8	L	98.7	-	-	-	244	ABANDON IN PLACE
C2048	Golden West Communications	TELEPHONE LINE ROUTED ACROSS PROPOSED ROAD	474TH/475TH AVENUE (HIGHWAY 115)	55+14.5	R	73.5	55+39.4	R	73.3	244	ABANDON IN PLACE
C2049	Golden West Communications	TELEPHONE LINE ROUTED ACROSS PROPOSED ROAD	474TH/475TH AVENUE (HIGHWAY 115)	55+14.5	R	79.3	55+39.4	R	80	244	ABANDON IN PLACE
F2014	Minnehaha Community Water	WATER LINE CROSSING PROPOSED ROAD	474TH/475TH AVENUE (HIGHWAY 115)	55+14.5	R	112	55+39	R	112	213	REMAIN IN PLACE
C2045	Golden West Communications	TELEPHONE LINE ROUTED ACROSS PROPOSED STORM LINE	474TH/475TH AVENUE (HIGHWAY 115)	57+24	R	36.7	-	-	-	244	ABANDON IN PLACE
C2046	Golden West Communications	TELEPHONE LINE ROUTED ACROSS PROPOSED STORM LINE	474TH/475TH AVENUE (HIGHWAY 115)	57+24	R	41.2	-	-	-	244	ABANDON IN PLACE
C2047	Golden West Communications	TELEPHONE LINE ROUTED ACROSS PROPOSED STORM LINE	474TH/475TH AVENUE (HIGHWAY 115)	57+24	R	48.3	-	-	-	244	ABANDON IN PLACE
F2013	Minnehaha Community Water	WATER LINE CROSSING PROPOSED STORM LINE	474TH/475TH AVENUE (HIGHWAY 115)	57+24	R	112	-	-	-	213	REMAIN IN PLACE
C2100	Golden West Communications	TELEPHONE LINE CROSSES PROPOSED ROADWAY AND PROPOSED LOWERED DITCHES.	474TH/475TH AVENUE (HIGHWAY 115)	62+23.6	L	73.4	62+23.6	R	73.9	244	ABANDON IN PLACE
F2011	Minnehaha Community Water	WATER LINE CROSSING PROPOSED ROAD	474TH/475TH AVENUE (HIGHWAY 115)	62+54	R	74.5	62+54	L	81.3	227	**REMAIN IN PLACE**
F2012	Minnehaha Community Water	WATER LINE CROSSING PROPOSED ROAD	474TH/475TH AVENUE (HIGHWAY 115)	62+86.4	R	87.1	63+09.9	R	87.1	213	REMAIN IN PLACE
C2043	Golden West Communications	TELEPHONE LINE ROUTED ACROSS PROPOSED ROAD	474TH/475TH AVENUE (HIGHWAY 115)	62+87.6	R	64	63+11.1	R	62.4	244	ABANDON IN PLACE
C2044	Golden West Communications	TELEPHONE LINE ROUTED ACROSS PROPOSED ROAD	474TH/475TH AVENUE (HIGHWAY 115)	62+87.6	R	72.2	63+11.1	R	71.5	244	ABANDON IN PLACE
F2010	Minnehaha Community Water	WATER LINE CROSSING PROPOSED ROAD	474TH/475TH AVENUE (HIGHWAY 115)	63+44.2	R	77.3	63+44.2	L	74.6	227	**REMAIN IN PLACE**
C2133	Golden West Communications	TELEPHONE LINE CROSSES A PROPOSED DITCH BLOCK	474TH/475TH AVENUE (HIGHWAY 115)	64+84	R	66.5	-	-	-	244	ABANDON IN PLACE

Plot Scale - 1:200
Plotted From - TRSF12141
File - ...\DataUtilityConflicts.dgn

UTILITY CONFLICTS & REVIEW SUMMARY

STATE OF SOUTH DAKOTA	PROJECT	SHEET	TOTAL SHEETS
	P 0115(47)102	B24	B78

Plotting Date: 11/20/2015

UTILITY CONFLICTS & REVIEW SUMMARY

Conflict ID Number	Existing Utility Owner	Description	Alignment	Conflict Beginning Station	Offset Direction Begin (R=Right, L=Left)	Offset Distance Begin (FT)	Conflict Ending Station	Offset Direction End (R=Right, L=Left)	Offset Distance End (FT)	RESOLUTION #	Utility Action to be Taken (See Resolution(s) for Details): **REMAIN IN PLACE** = Protect in Place ****REMAIN IN PLACE**** = Protect in Place and See Resolution(s) for Specific Considerations **ABANDON IN PLACE** = Highway Contractor to Coordinate with Utility and Remove as necessary. **RELOCATE** = See Resolution(s) for Details and Responsibilities. Some Relocations may result in Utility Features being Abandoned in Place, Highway Contractor to Coordinate with Utilty and Remove as necessary
C2134	Golden West Communications	TELEPHONE LINE CROSSES A PROPOSED DITCH BLOCK. CLOSE PROXIMITY.	474TH/475TH AVENUE (HIGHWAY 115)	64+84	R	78.1	-	-	-	244	ABANDON IN PLACE
C2040	Golden West Communications	TELEPHONE LINE ROUTED ACROSS PROPOSED ROAD	474TH/475TH AVENUE (HIGHWAY 115)	69+30.1	R	77.7	69+54.3	R	78	244	ABANDON IN PLACE
C2041	Golden West Communications	TELEPHONE LINE ROUTED ACROSS PROPOSED ROAD	474TH/475TH AVENUE (HIGHWAY 115)	69+30.1	R	68	69+54.3	R	67.5	244	ABANDON IN PLACE
C2042	Golden West Communications	TELEPHONE LINE ROUTED ACROSS PROPOSED ROAD	474TH/475TH AVENUE (HIGHWAY 115)	70+26.3	R	66	70+41.5	L	83.3	244	ABANDON IN PLACE
M2002	Xcel Energy	POWER LINE CROSSING PROPOSED ROAD. ROAD IS PROPOSED TO BE LOWERED.	474TH/475TH AVENUE (HIGHWAY 115)	70+39.7	R	66.1	70+54	L	81.5	216	REMAIN IN PLACE
C2102	Golden West Communications	TELEPHONE LINE ROUTED IN PROPOSED LOWERED DITCH AND PROPOSED ROADWAY	474TH/475TH AVENUE (HIGHWAY 115)	73+96	R	92.1	81+98	R	85	244	ABANDON IN PLACE
C2103	Golden West Communications	TELEPHONE LINE ROUTED IN PROPOSED LOWERED DITCH AND PROPOSED ROADWAY	474TH/475TH AVENUE (HIGHWAY 115)	73+96	R	97.6	81+98	R	85	244	ABANDON IN PLACE
C2039	Golden West Communications	FIBER OPTIC LINE ROUTED ACROSS PROPOSED ROAD	474TH/475TH AVENUE (HIGHWAY 115)	74+21.87	L	79.3	74+44.78	L	78.8	244	ABANDON IN PLACE
F2039	Minnehaha Community Water	WATER LINE LOCATED BELOW A PROPOSED CUT FOR THE DITCH BOTTOM.	474TH/475TH AVENUE (HIGHWAY 115)	74+34	R	90.8	80+00	R	74.6	225	RELOCATE
F2007	Minnehaha Community Water	WATER LINE ROUTED IN PROPOSED LOWERED DITCH. ALSO CROSSES BELOW SEVERAL PROPOSED ROADWAYS/DRIVEWAYS.	474TH/475TH AVENUE (HIGHWAY 115)	76+15	R	86	89+97	R	68.6	213	REMAIN IN PLACE
F2009	Minnehaha Community Water	WATER LINE NEAR PROPOSED STORM LINE	474TH/475TH AVENUE (HIGHWAY 115)	78+53.65	L	69.25	-	-	-	213	REMAIN IN PLACE
M2014	Xcel Energy	POWER POLE IN PROPOSED LOWERED DITCH	474TH/475TH AVENUE (HIGHWAY 115)	78+80.6	R	100.5	-	-	-	216	REMAIN IN PLACE
C2101	Golden West Communications	TELEPHONE LINE ROUTED IN PROPOSED LOWERED DITCH AND PROPOSED ROADWAY	474TH/475TH AVENUE (HIGHWAY 115)	80+05	R	91.5	83+53	R	82.9	244	ABANDON IN PLACE
M2015	Xcel Energy	POWER POLE IN PROPOSED LOWERED DITCH	474TH/475TH AVENUE (HIGHWAY 115)	80+06	R	100.7	-	-	-	216	REMAIN IN PLACE
F2008	Minnehaha Community Water	WATER LINE CROSSING PROPOSED STORM LINE	474TH/475TH AVENUE (HIGHWAY 115)	80+09.8	L	55.3	80+00	L	56.2	226	**REMAIN IN PLACE**
C2038	Golden West Communications	FIBER OPTIC LINE ROUTED ACROSS PROPOSED ROAD	474TH/475TH AVENUE (HIGHWAY 115)	80+28.8	L	80.2	80+57	L	80.1	244	ABANDON IN PLACE
C2137	Golden West Communications	CATV LINE CROSSES A PROPOSED DRIVEWAY.	474TH/475TH AVENUE (HIGHWAY 115)	80+28.8	L	80.2	80+57	L	80	244	ABANDON IN PLACE
F2006	Minnehaha Community Water	WATER LINE CROSSING PROPOSED ROAD	474TH/475TH AVENUE (HIGHWAY 115)	80+28.8	L	50.9	80+57	L	49.7	226	**REMAIN IN PLACE**
F2005	Minnehaha Community Water	WATER LINE CROSSING PROPOSED ROAD	474TH/475TH AVENUE (HIGHWAY 115)	80+81	L	45.8	80+81	R	72.3	213	REMAIN IN PLACE
C2104	Golden West Communications	TELEPHONE PEDESTAL LOCATED IN A PROPOSED CUT LOCATION.	474TH/475TH AVENUE (HIGHWAY 115)	81+98	R	85	-	-	-	244	ABANDON IN PLACE
C2105	Golden West Communications	TELEPHONE LINE ROUTED IN PROPOSED LOWERED DITCH AND PROPOSED ROADWAY	474TH/475TH AVENUE (HIGHWAY 115)	81+98	R	85	81+90	R	102.5	244	ABANDON IN PLACE

Plot Scale - 1:200

Plotted From - TRSF12141

File - ...\Data\Utility\Conflicts.dgn

UTILITY CONFLICTS & REVIEW SUMMARY

STATE OF SOUTH DAKOTA	PROJECT	SHEET	TOTAL SHEETS
	P 0115(47)102	B25	B78

Plotting Date: 11/20/2015

UTILITY CONFLICTS & REVIEW SUMMARY

Conflict ID Number	Existing Utility Owner	Description	Alignment	Conflict Beginning Station	Offset Direction Begin (R=Right, L=Left)	Offset Distance Begin (FT)	Conflict Ending Station	Offset Direction End (R=Right, L=Left)	Offset Distance End (FT)	RESOLUTION #	Utility Action to be Taken (See Resolution(s) for Details): **REMAIN IN PLACE** = Protect in Place; ****REMAIN IN PLACE**** = Protect in Place and See Resolution(s) for Specific Considerations; **ABANDON IN PLACE** = Highway Contractor to Coordinate with Utility and Remove as necessary. **RELOCATE** = See Resolution(s) for Details and Responsibilities. Some Relocations may result in Utility Features being Abandoned in Place, Highway Contractor to Coordinate with Utilty and Remove as necessary
C2108	Golden West Communications	FIBER OPTIC LINE LOCATED IN A PROPOSED LOWERED DITCH.	474TH/475TH AVENUE (HIGHWAY 115)	82+00	L	78.6	91+32.9	L	99	244	ABANDON IN PLACE
F2038	Minnehaha Community Water	WATER LINE CROSSES A DRIVEWAY THAT IS BEING REMOVED.	474TH/475TH AVENUE (HIGHWAY 115)	82+05	R	49.5	82+36	R	49.5	225	RELOCATE
C2092	Golden West Communications	CATV LINE ROUTED IN PROPOSED LOWERED DITCH	474TH/475TH AVENUE (HIGHWAY 115)	82+14	L	88	88+35	L	85	244	ABANDON IN PLACE
C2111	Golden West Communications	TELEPHONE BOX IN PROPOSED LOWERED DITCH	474TH/475TH AVENUE (HIGHWAY 115)	82+18.4	L	89.7	-	-	-	244	ABANDON IN PLACE
C2110	Golden West Communications	TELEPHONE MANHOLE LOCATED IN A PROPOSED CUT LOCATION	474TH/475TH AVENUE (HIGHWAY 115)	82+22.5	L	88.7	-	-	-	244	**REMAIN IN PLACE**
M2016	Xcel Energy	POWER POLE GUY ANCHOR IN PROPOSED LOWERED DITCH	474TH/475TH AVENUE (HIGHWAY 115)	82+23	L	74.4	-	-	-	216	REMAIN IN PLACE
C2036	Golden West Communications	TELEPHONE LINE ROUTED ACROSS PROPOSED LOWERED ROAD	474TH/475TH AVENUE (HIGHWAY 115)	82+61	R	27.5	82+61	L	32.7	244	ABANDON IN PLACE
C2035	Golden West Communications	TELEPHONE LINE ROUTED ACROSS PROPOSED ROAD	474TH/475TH AVENUE (HIGHWAY 115)	82+94.6	R	46.3	83+22	R	63.4	244	ABANDON IN PLACE
C2037	Golden West Communications	FIBER OPTIC LINE ROUTED ACROSS PROPOSED ROAD	474TH/475TH AVENUE (HIGHWAY 115)	82+97.2	L	79.2	83+20.8	L	78.3	244	ABANDON IN PLACE
C2136	Golden West Communications	CATV LINE CROSSES A PROPOSED DRIVEWAY.	474TH/475TH AVENUE (HIGHWAY 115)	82+97.2	L	83.2	83+20.8	L	83	244	ABANDON IN PLACE
F2004	Minnehaha Community Water	WATER LINE CROSSING PROPOSED ROAD	474TH/475TH AVENUE (HIGHWAY 115)	82+97.2	L	54.5	83+20.8	L	58	226	**REMAIN IN PLACE**
C2034	Golden West Communications	TELEPHONE LINE ROUTED ACROSS PROPOSED ROAD	474TH/475TH AVENUE (HIGHWAY 115)	82+98.5	R	78.2	83+22	R	78.5	244	ABANDON IN PLACE
C2135	Golden West Communications	FIBER OPTIC LINE CROSSES A PROPOSED DRIVEWAY.	474TH/475TH AVENUE (HIGHWAY 115)	82+98.5	R	84.2	83+22	R	83.5	244	ABANDON IN PLACE
F2003	Minnehaha Community Water	WATER LINE CROSSING PROPOSED ROAD	474TH/475TH AVENUE (HIGHWAY 115)	82+98.5	R	48	83+22	R	48	213	REMAIN IN PLACE
C2106	Golden West Communications	TELEPHONE PEDESTAL LOCATED IN A PROPOSED CUT LOCATION.	474TH/475TH AVENUE (HIGHWAY 115)	83+55	R	82.9	-	-	-	244	ABANDON IN PLACE
C2107	Golden West Communications	TELEPHONE LINE ROUTED IN PROPOSED LOWERED DITCH.	474TH/475TH AVENUE (HIGHWAY 115)	83+55	R	82.9	83+55	R	100	244	ABANDON IN PLACE
C2149	Golden West Communications	TELEPHONE LINE ROUTED ACROSS A DRIVEWAY THAT IS BEING REMOVED. ALSO IN A DITCH AREA.	474TH/475TH AVENUE (HIGHWAY 115)	83+87	R	83.1	84+30	R	82.6	244	ABANDON IN PLACE
C2150	Golden West Communications	TELEPHONE LINE CROSSES A DRIVEWAY THAT IS BEING REMOVED. ALSO IN A DITCH AREA.	474TH/475TH AVENUE (HIGHWAY 115)	83+87	R	77.1	84+30	R	74.1	244	ABANDON IN PLACE
F2037	Minnehaha Community Water	WATER LINE CROSSES A DRIVEWAY THAT IS BEING REMOVED	474TH/475TH AVENUE (HIGHWAY 115)	84+04	R	48.2	84+32	R	48.2	225	RELOCATE
C2032	Golden West Communications	TELEPHONE LINE ROUTED ACROSS PROPOSED ROAD	474TH/475TH AVENUE (HIGHWAY 115)	84+94	R	67.1	85+18.2	R	65.16	244	ABANDON IN PLACE
C2033	Golden West Communications	TELEPHONE LINE ROUTED ACROSS PROPOSED ROAD	474TH/475TH AVENUE (HIGHWAY 115)	84+94	R	78.6	85+18.2	R	73.4	244	ABANDON IN PLACE

Plot Scale - 1:200
Plotted From - TRSF12141
File - ...\Data\Utility\Conflicts.dgn

UTILITY CONFLICTS & REVIEW SUMMARY

STATE OF SOUTH DAKOTA	PROJECT	SHEET	TOTAL SHEETS
	P 0115(47)102	B26	B78

Plotting Date: 11/20/2015

UTILITY CONFLICTS & REVIEW SUMMARY

Conflict ID Number	Existing Utility Owner	Description	Alignment	Conflict Beginning Station	Offset Direction Begin (R=Right, L=Left)	Offset Distance Begin (FT)	Conflict Ending Station	Offset Direction End (R=Right, L=Left)	Offset Distance End (FT)	RESOLUTION #	Utility Action to be Taken (See Resolution(s) for Details): **REMAIN IN PLACE** = Protect in Place; ****REMAIN IN PLACE**** = Protect in Place and See Resolution(s) for Specific Considerations; **ABANDON IN PLACE** = Highway Contractor to Coordinate with Utility and Remove as necessary. **RELOCATE** = See Resolution(s) for Details and Responsibilities. Some Relocations may result in Utility Features being Abandoned in Place, Highway Contractor to Coordinate with Utilty and Remove as necessary
F2002	Minnehaha Community Water	WATER LINE CROSSING PROPOSED ROAD	474TH/475TH AVENUE (HIGHWAY 115)	84+94	R	48.1	85+18.2	R	48.1	213	REMAIN IN PLACE
C2031	Golden West Communications	TELEPHONE LINE ROUTED NEAR PROPOSED STORM LINE	474TH/475TH AVENUE (HIGHWAY 115)	85+49.7	R	58.9	-	-	-	244	ABANDON IN PLACE
C2025	Golden West Communications	TELEPHONE LINE ROUTED ACROSS PROPOSED LOWERED ROAD	474TH/475TH AVENUE (HIGHWAY 115)	88+94.8	R	49	89+17.7	L	84	244	ABANDON IN PLACE
C2024	Golden West Communications	CATV LINE ROUTED ACROSS PROPOSED LOWERED ROAD	474TH/475TH AVENUE (HIGHWAY 115)	88+95	R	68.4	89+17.9	L	84	244	ABANDON IN PLACE
C2028	Golden West Communications	TELEPHONE LINE ROUTED NEAR PROPOSED STORM LINE	474TH/475TH AVENUE (HIGHWAY 115)	88+99	R	55.2	-	-	-	244	ABANDON IN PLACE
C2027	Golden West Communications	CATV LINE ROUTED ACROSS PROPOSED STORM LINE	474TH/475TH AVENUE (HIGHWAY 115)	88+99.2	R	55.3	-	-	-	244	ABANDON IN PLACE
C2113	Golden West Communications	FIBER OPTIC LINE CROSSES BELOW A PROPOSED DRIVEWAY.	474TH/475TH AVENUE (HIGHWAY 115)	89+16	L	82.7	89+60	L	85.9	244	ABANDON IN PLACE
C2022	Golden West Communications	TELEPHONE LINE ROUTED ACROSS PROPOSED STORM LINE	474TH/475TH AVENUE (HIGHWAY 115)	89+16.5	L	56.1	-	-	-	244	ABANDON IN PLACE
C2030	Golden West Communications	TELEPHONE LINE ROUTED ACROSS PROPOSED ROAD	474TH/475TH AVENUE (HIGHWAY 115)	89+17.9	R	76.9	89+58	R	79.6	244	ABANDON IN PLACE
C2029	Golden West Communications	FIBER OPTIC LINE ROUTED ACROSS PROPOSED ROAD	474TH/475TH AVENUE (HIGHWAY 115)	89+18.3	R	70.9	89+57.9	R	73.3	244	ABANDON IN PLACE
C2021	Golden West Communications	CATV LINE ROUTED ACROSS PROPOSED STORM LINE	474TH/475TH AVENUE (HIGHWAY 115)	89+18.5	L	56.1	-	-	-	244	ABANDON IN PLACE
C2114	Golden West Communications	CABLE TELEVISION LINE LOCATED IN A PROPOSED DRIVEWAY.	474TH/475TH AVENUE (HIGHWAY 115)	89+19	L	93.9	-	-	-	244	ABANDON IN PLACE
C2115	Golden West Communications	CABLE TELEVISION LINE CROSSES BELOW A PROPOSED DRIVEWAY. CONNECTS TO A PEDESTAL LOCATED IN THE PROPOSED DRIVEWAY.	474TH/475TH AVENUE (HIGHWAY 115)	89+19	L	93.9	89+16	L	87.2	244	ABANDON IN PLACE
C2116	Golden West Communications	CABLE TELEVISION LINE CROSSES BELOW A PROPOSED DRIVEWAY. CONNECTS TO A PEDESTAL LOCATED IN THE PROPOSED DRIVEWAY.	474TH/475TH AVENUE (HIGHWAY 115)	89+19	L	93.9	89+60	L	91.7	244	ABANDON IN PLACE
C2023	Golden West Communications	TELEPHONE LINE ROUTED ACROSS PROPOSED LOWERED ROAD	474TH/475TH AVENUE (HIGHWAY 115)	89+22.6	L	86	89+38.3	R	82.6	244	ABANDON IN PLACE
C2117	Golden West Communications	TELEPHONE LINE CROSSES BELOW A PROPOSED DRIVEWAY. CONNECTS TO A PEDESTAL LOCATED IN THE PROPOSED DRIVEWAY.	474TH/475TH AVENUE (HIGHWAY 115)	89+22.7	L	94.5	89+60	L	92.7	244	ABANDON IN PLACE

Plot Scale - 1:200
Plotted From - TRSF12141
File - ...\Data\Utility\Conflicts.dgn

UTILITY CONFLICTS & REVIEW SUMMARY

STATE OF SOUTH DAKOTA	PROJECT	SHEET	TOTAL SHEETS
	P 0115(47)102	B27	B78

Plotting Date: 11/20/2015

UTILITY CONFLICTS & REVIEW SUMMARY

Conflict ID Number	Existing Utility Owner	Description	Alignment	Conflict Beginning Station	Offset Direction Begin (R=Right, L=Left)	Offset Distance Begin (FT)	Conflict Ending Station	Offset Direction End (R=Right, L=Left)	Offset Distance End (FT)	RESOLUTION #	Utility Action to be Taken (See Resolution(s) for Details): **REMAIN IN PLACE =** Protect in Place ****REMAIN IN PLACE** =** Protect in Place and See Resolution(s) for Specific Considerations **ABANDON IN PLACE =** Highway Contractor to Coordinate with Utility and Remove as necessary. **RELOCATE =** See Resolution(s) for Details and Responsibilities. Some Relocations may result in Utility Features being Abandoned in Place, Highway Contractor to Coordinate with Utilty and Remove as necessary
C2118	Golden West Communications	TELEPHONE PEDESTAL LOCATED IN A PROPOSED DRIVEWAY.	474TH/475TH AVENUE (HIGHWAY 115)	89+22.7	L	94.5	-	-	-	244	ABANDON IN PLACE
C2020	Golden West Communications	TELEPHONE LINE ROUTED ACROSS PROPOSED STORM LINE	474TH/475TH AVENUE (HIGHWAY 115)	89+28.77	L	52.6	-	-	-	244	ABANDON IN PLACE
C2093	Golden West Communications	CATV LINE ROUTED IN PROPOSED LOWERED DITCH	474TH/475TH AVENUE (HIGHWAY 115)	90+98	L	101.7	91+34	L	102.9	244	ABANDON IN PLACE
C2109	Golden West Communications	TELEPHONE LINE ROUTED IN PROPOSED LOWERED DITCH.	474TH/475TH AVENUE (HIGHWAY 115)	90+98.2	L	103.5	91+32.9	L	103.5	244	ABANDON IN PLACE
F2001	Minnehaha Community Water	WATER LINE CROSSING PROPOSED ROAD	474TH/475TH AVENUE (HIGHWAY 115)	93+64.9	R	49.2	93+64.9	L	59.6	213	REMAIN IN PLACE
C2019	Golden West Communications	CATV LINE ROUTED ACROSS PROPOSED ROAD	474TH/475TH AVENUE (HIGHWAY 115)	95+14.4	R	49	95+14.4	L	64	244	ABANDON IN PLACE
C2018	Golden West Communications	TELEPHONE LINE ROUTED ACROSS PROPOSED ROAD	474TH/475TH AVENUE (HIGHWAY 115)	95+14.7	R	49	95+14.7	L	64	244	ABANDON IN PLACE
C2017	Golden West Communications	FIBER OPTIC LINE ROUTED ACROSS PROPOSED LOWERED ROAD	474TH/475TH AVENUE (HIGHWAY 115)	95+28.5	R	49	95+28.5	L	64	244	ABANDON IN PLACE
C2015	Golden West Communications	FIBER OPTIC LINE ROUTED IN PROPOSED LOWERED DITCH. ALSO CROSSES PROPOSED NEW ACCESS ROAD.	474TH/475TH AVENUE (HIGHWAY 115)	98+30	R	67.6	98+67.8	R	62	244	ABANDON IN PLACE
C2016	Golden West Communications	CATV LINE ROUTED IN PROPOSED NEW ROAD	474TH/475TH AVENUE (HIGHWAY 115)	98+32	R	77	98+75	R	71.8	244	ABANDON IN PLACE
C2026	Golden West Communications	TELEPHONE LINE ROUTED ACROSS PROPOSED STORM LINE	474TH/475TH AVENUE (HIGHWAY 115)	98+32.7	R	55.7	-	-	-	244	ABANDON IN PLACE
C2011	Golden West Communications	FIBER OPTIC LINE ROUTED IN PROPOSED NEW ROAD THEN TURNING EAST	474TH/475TH AVENUE (HIGHWAY 115)	102+45	R	74.2	102+71.2	R	78.5	244	ABANDON IN PLACE
C2012	Golden West Communications	CATV LINE ROUTED IN PROPOSED NEW ROAD THEN TURNING EAST	474TH/475TH AVENUE (HIGHWAY 115)	102+45	R	81.5	102+71.2	R	90.3	244	ABANDON IN PLACE
C2013	Golden West Communications	TELEPHONE LINE ROUTED IN PROPOSED NEW ROAD THEN TURNING EAST	474TH/475TH AVENUE (HIGHWAY 115)	102+45	R	91.2	102+71.2	R	94.3	244	ABANDON IN PLACE
C2014	Golden West Communications	TELEPHONE LINE ROUTED IN PROPOSED NEW ROAD THEN TURNING EAST	474TH/475TH AVENUE (HIGHWAY 115)	102+45	R	91.3	102+71.2	R	94.4	244	ABANDON IN PLACE
M2001	Xcel Energy	POWER POLE IN PROPOSED NEW ROAD	474TH/475TH AVENUE (HIGHWAY 115)	102+65.8	R	98	-	-	-	236	REMAIN IN PLACE
M2018	Xcel Energy	POWER POLE GUY ANCHOR IN PROPOSED ROADWAY	474TH/475TH AVENUE (HIGHWAY 115)	102+72	R	97.5	-	-	-	236	REMAIN IN PLACE

Plot Scale - 1:200
Plotted From - TRSF12141
File - ...\DataUtilityConflicts.dgn

UTILITY CONFLICTS & REVIEW SUMMARY

STATE OF SOUTH DAKOTA	PROJECT	SHEET	TOTAL SHEETS
	P 0115(47)102	B28	B78

Plotting Date: 11/20/2015

UTILITY CONFLICTS & REVIEW SUMMARY

Conflict ID Number	Existing Utility Owner	Description	Alignment	Conflict Beginning Station	Offset Direction Begin (R=Right, L=Left)	Offset Distance Begin (FT)	Conflict Ending Station	Offset Direction End (R=Right, L=Left)	Offset Distance End (FT)	RESOLUTION #	Utility Action to be Taken (See Resolution(s) for Details): REMAIN IN PLACE = Protect in Place; **REMAIN IN PLACE** = Protect in Place and See Resolution(s) for Specific Considerations; ABANDON IN PLACE = Highway Contractor to Coordinate with Utility and Remove as necessary. RELOCATE = See Resolution(s) for Details and Responsibilities. Some Relocations may result in Utility Features being Abandoned in Place, Highway Contractor to Coordinate with Utilty and Remove as necessary
M2019	Xcel Energy	POWER POLE GUY ANCHOR IN PROPOSED ROADWAY	474TH/475TH AVENUE (HIGHWAY 115)	102+72	R	97.5	-	-	-	236	REMAIN IN PLACE
M2017	Xcel Energy	POWER POLE GUY ANCHOR IN PROPOSED ROADWAY	474TH/475TH AVENUE (HIGHWAY 115)	102+73	R	80.1	-	-	-	236	REMAIN IN PLACE
C2010	Golden West Communications	TELEPHONE LINE CROSSING PROPOSED STORM LINE	474TH/475TH AVENUE (HIGHWAY 115)	116+91.6	L	74	-	-	-	244	ABANDON IN PLACE
C2112	Golden West Communications	TELEPHONE LINE CROSSES BELOW A PROPOSED DRIVEWAY/DRIVEWAY SLAB	474TH/475TH AVENUE (HIGHWAY 115)	116+95	L	51	116+95	L	68	244	ABANDON IN PLACE
C2007	Golden West Communications	TELEPHONE LINE ROUTED IN PROPOSED SIDEWALK	474TH/475TH AVENUE (HIGHWAY 115)	117+05.3	L	38.2	120+77.4	L	37.2	244	ABANDON IN PLACE
C2009	Golden West Communications	TELEPHONE LINE CROSSING PROPOSED STORM LINE	474TH/475TH AVENUE (HIGHWAY 115)	117+30.1	L	30.5	-	-	-	244	ABANDON IN PLACE
C2008	Golden West Communications	TELEPHONE LINE CROSSING PROPOSED STORM LINE	474TH/475TH AVENUE (HIGHWAY 115)	119+20.1	L	31.5	-	-	-	244	ABANDON IN PLACE
C2006	Golden West Communications	TELEPHONE LINE CROSSING PROPOSED CURB & GUTTER. ALSO CROSSES PROPOSED ROADWAY.	474TH/475TH AVENUE (HIGHWAY 115)	120+81.5	L	38.5	-	-	-	244	ABANDON IN PLACE
C2003	Golden West Communications	TELEPHONE LINE CROSSES BELOW A PROPOSED CURB AND GUTTER. ALSO CROSSES BELOW A ROADWAY SECTION THAT APPEARS TO BE A CUT AS WELL.	474TH/475TH AVENUE (HIGHWAY 115)	121+25	L	72.7	121+72	L	41.2	244	ABANDON IN PLACE
C2005	Golden West Communications	BURIED FIBER OPTIC LINE CROSSING PROPOSED CURB & GUTTER. ALSO CROSSES PROPOSED CURB AND GUTTER.	474TH/475TH AVENUE (HIGHWAY 115)	121+61.5	L	56	-	-	-	244	ABANDON IN PLACE
C2004	Golden West Communications	TELEPHONE LINE CROSSES BELOW A PROPOSED CURB AND GUTTER. ALSO CROSSES BELOW A ROADWAY SECTION THAT APPEARS TO BE A CUT AS WELL.	474TH/475TH AVENUE (HIGHWAY 115)	121+66	L	44.5	120+84	L	38.9	244	ABANDON IN PLACE
C2001	Golden West Communications	TELEPHONE LINE ROUTED ADJACENT TO PROPOSED SIDEWALK	474TH/475TH AVENUE (HIGHWAY 115)	121+71	L	41	122+00	L	37	244	ABANDON IN PLACE
C2002	Golden West Communications	TELEPHONE LINE ROUTED ADJACENT TO PROPOSED SIDEWALK	474TH/475TH AVENUE (HIGHWAY 115)	121+71	L	43	122+00	L	39.5	244	ABANDON IN PLACE

Plot Scale - 1:200
Plotted From - TRSF12141
File - ...\DataUtilityConflicts.dgn

EXISTING TOPOGRAPHY SYMBOLOGY AND LEGEND

STATE OF SOUTH DAKOTA	PROJECT	SHEET	TOTAL SHEETS
	P 0115(47)102	B29	B78

Plotting Date: 11/20/2015

Anchor
Antenna
Approach
Assumed Corner
Azimuth Marker
BBQ Grill/ Fireplace
Bearing Tree
Bench Mark
Box Culvert
Bridge
Brush
Buildings
Bulk Tank
Cattle Guard
Cemetery
Centerline
Cistern
Clothes Line
Commercial Sign Double Face
Commercial Sign One Post
Commercial Sign Overhead
Commercial Sign Two Post
Concrete Symbol
Creek Edge
Curb/Gutter
Curb
Dam Grade/Dike/Levee
Deck Edge
Ditch Block
Doorway Threshold
Drainage Profile
Drop Inlet
Edge Of Asphalt
Edge Of Concrete
Edge Of Gravel
Edge Of Other
Edge Of Shoulder
Elec. Trans./Power Jct. Box
Fence Barbwire
Fence Chainlink
Fence Electric
Fence Misc.
Fence Rock
Fence Snow
Fence Wood
Fence Woven
Fire Hydrant
Flag Pole
Flower Bed
Gas Valve Or Meter
Gas Pump Island
Grain Bin
Guardrail
Guide Sign One Post
Guide Sign Two Post
Gutter
Guy Pole
Haystack

Hedge
Highway R.O.W. Marker
Interstate Close Gate
Iron Pin
Irrigation Ditch
Lake Edge
Lawn Sprinkler
Mailbox
Manhole Electric
Manhole Gas
Manhole Misc
Manhole Sanitary Sewer
Manhole Storm Sewer
Manhole Telephone
Manhole Water
Merry-Go-Round
Microwave Radio Tower
Misc. Line
Misc. Property Corner
Misc. Post
Overhang Or Encroachment
Overhead Utility Line — OH —
Parking Meter
Pipe With End Section
Pipe With Headwall
Pipe Without End Section
Playground Slide
Playground Swing
Power And Light Pole
Power And Telephone Pole
Power Meter
Power Pole
Power Pole And Transformer
Power Tower Structure
Propane Tank
Property Pipe
Property Pipe With Cap
Property Stone
Public Telephone
Railroad Crossing Signal
Railroad Milepost Marker
Railroad Profile
Railroad R.O.W. Marker
Railroad Signs
Railroad Switch
Railroad Track
Railroad Trestle
Rebar
Rebar With Cap
Reference Mark
Regulatory Sign One Post
Regulatory Sign Two Post
Retaining Wall
Riprap
River Edge
Rock And Wire Baskets
Rockpiles
Satellite Dish
Septic Tank

Shrub Tree
Sidewalk
Sign Face
Sign Post
Slough Or Marsh
Spring
Stream Gauge
Street Marker
Subsurface Utility Exploration Test Hole
Telephone Fiber Optics — T/F —
Telephone Junction Box
Telephone Pole
Television Cable Jct Box
Television Tower
Test Wells/Bore Holes
Traffic Signal
Trash Barrel
Tree Belt
Tree Coniferous
Tree Deciduous
Tree Stumps
Triangulation Station
Underground Electric Line — P —
Underground Gas Line — G —
Underground High Pressure Gas Line — HG —
Underground Sanitary Sewer — S —
Underground Storm Sewer — S —
Underground Tank
Underground Telephone Line — T —
Underground Television Cable — TV —
Underground Water Line — W —
Warning Sign One Post
Warning Sign Two Post
Water Fountain
Water Hydrant
Water Meter
Water Tower
Water Valve
Water Well
Weir Rock
Windmill
Wingwall
Witness Corner

State and National Line
County Line
Section Line
Quarter Line
Sixteenth Line
Property Line
Construction Line
R. O. W. Line
New R. O. W. Line
Cut and Fill Limits
Control of Access
New Control of Access
Proposed ROW
(After Property Disposal)

PLOT SCALE - 1:200
PLOTTED FROM - TRSF12141
PLOT NAME - 29
FILE - U:\RD\PRJ\MINN0025C\TOPOSYMB.DGN

STATE OF SOUTH DAKOTA	PROJECT	SHEET	TOTAL SHEETS
	P 0115(47)102	B30	B78

Plotting Date: 01/27/2016 Revised 01/26/2016 AR

10+98
Take Out 24"-82' RCP
& 2 End Sections
(Incidental Work, Grading)

13+55
Take Out 18"-117' RCP
& 2 End Sections
(Incidental Work, Grading)

21+05
Take Out 24"-108' RCP
& 2 End Sections
(Incidental Work, Grading)

10+98 (2 ac)
Install 24" - 74' RCP
& 2 Sloped Ends

13+55 (10 ac)
Install 24" - 122' RCP
& 2 Sloped Ends

19+33-56' R
Install 18" - 64' CMP
& 2 Safety Ends

21+05 (4 ac)
Install 24" - 100' RCP
& 2 Sloped Ends

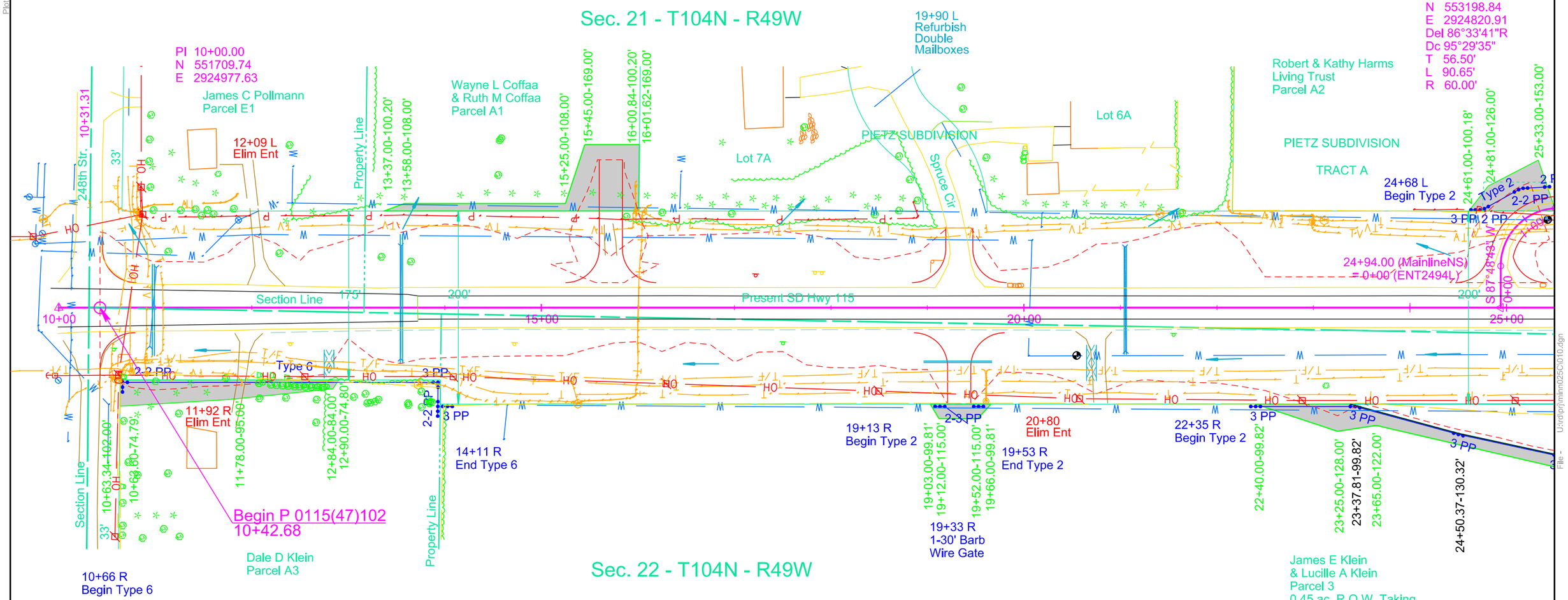

Parcel A1
13+37.00 to 16+01.62 L
Temporary Easement for
Cut & fill containing
(6019 sq ft), more or less

Parcel A2
24+61.00 to 25+51.00 L
Temporary Easement for
Cut & fill containing
(2779 sq ft), more or less

Parcel A3
10+63.34 to 12+90.00 R
Temporary Easement for
Cut & fill containing
(4301 sq ft), more or less

Parcel 3
19+03.00 to 19+66.00 R
Temporary Easement for
Cut & fill containing
(782 sq ft), more or less

Parcel 3
22+40.00 to 30+42.00 R
Temporary Easement for
Cut & fill containing
(9964 sq ft), more or less

Plot Scale - 1:100
Plotted From - TRSF12141
File - U:\rdp\mtnh0256\010.dgn

STATE OF SOUTH DAKOTA	PROJECT	SHEET	TOTAL SHEETS
	P 0115(47)102	B31	B78

Plotting Date: 11/20/2015

Exc	5307	Emb	2595	
* Undercut Sel Top	5154	+35.00%	908	3503
** Surfacing Removal	1509	Sel Top (Exc)	3092	
Contr Furn Sel Topping	347	+35.00%	1082	4174
	12317	Sel Top (Surf)	2062	
		-10.00%	206	1856
		Waste (Exc)		2784
				12317

* Paid for as Unclassifed Excavation
** Paid for as Remove Concrete Surfacing
Haul 16700 cuydsta
Waste to be hauled to I29 Interchange and stockpiled for use on PCN 03RT

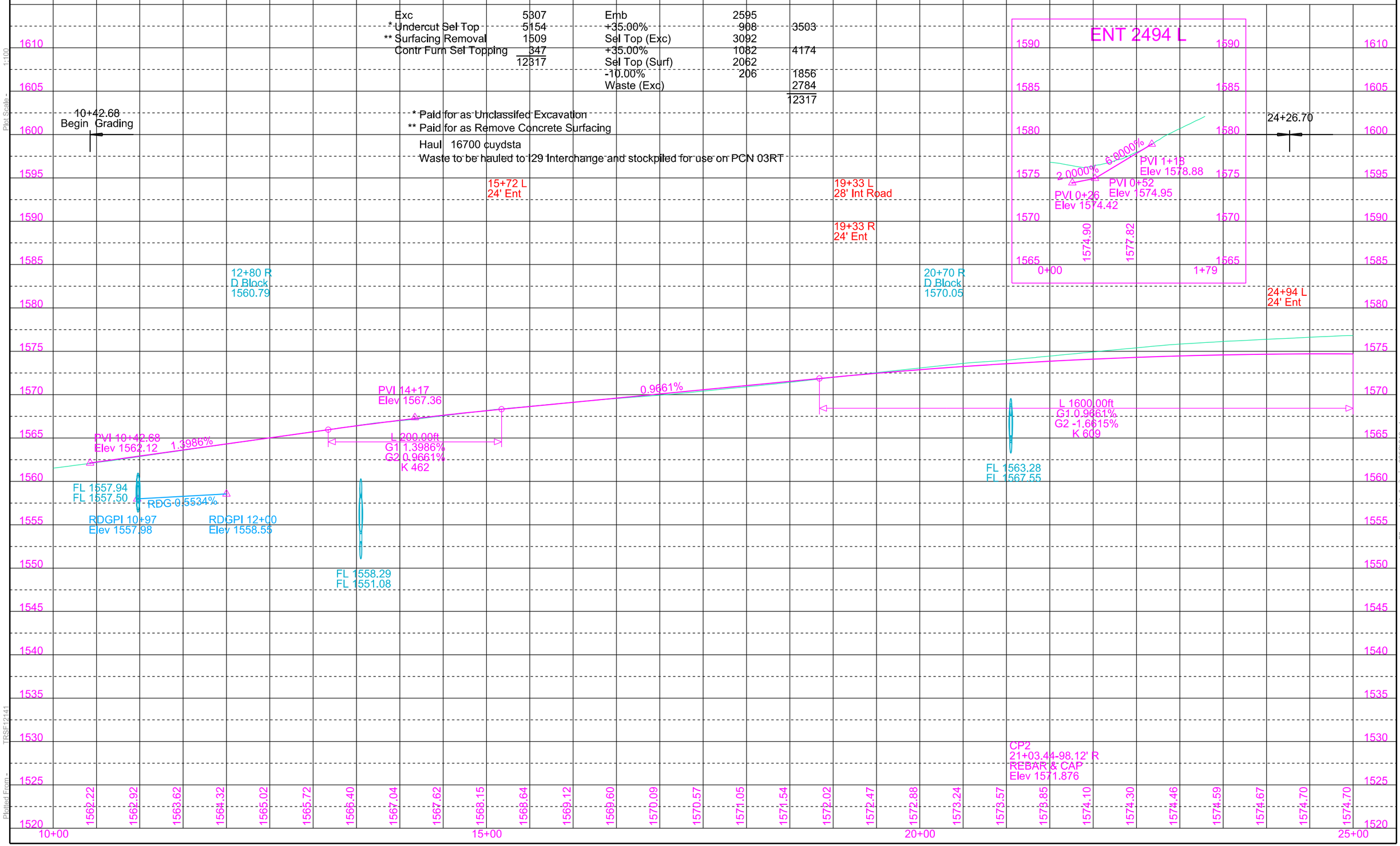

Plot Scale - 1:100
Plotted From - TRSF12141
File - U:\rd\prj\minn025C\010v.dgn

STATE OF SOUTH DAKOTA	PROJECT	SHEET	TOTAL SHEETS
	P 0115(47)102	B32	B78

Plotting Date: 01/27/2016 Revised 01/26/2016 AR

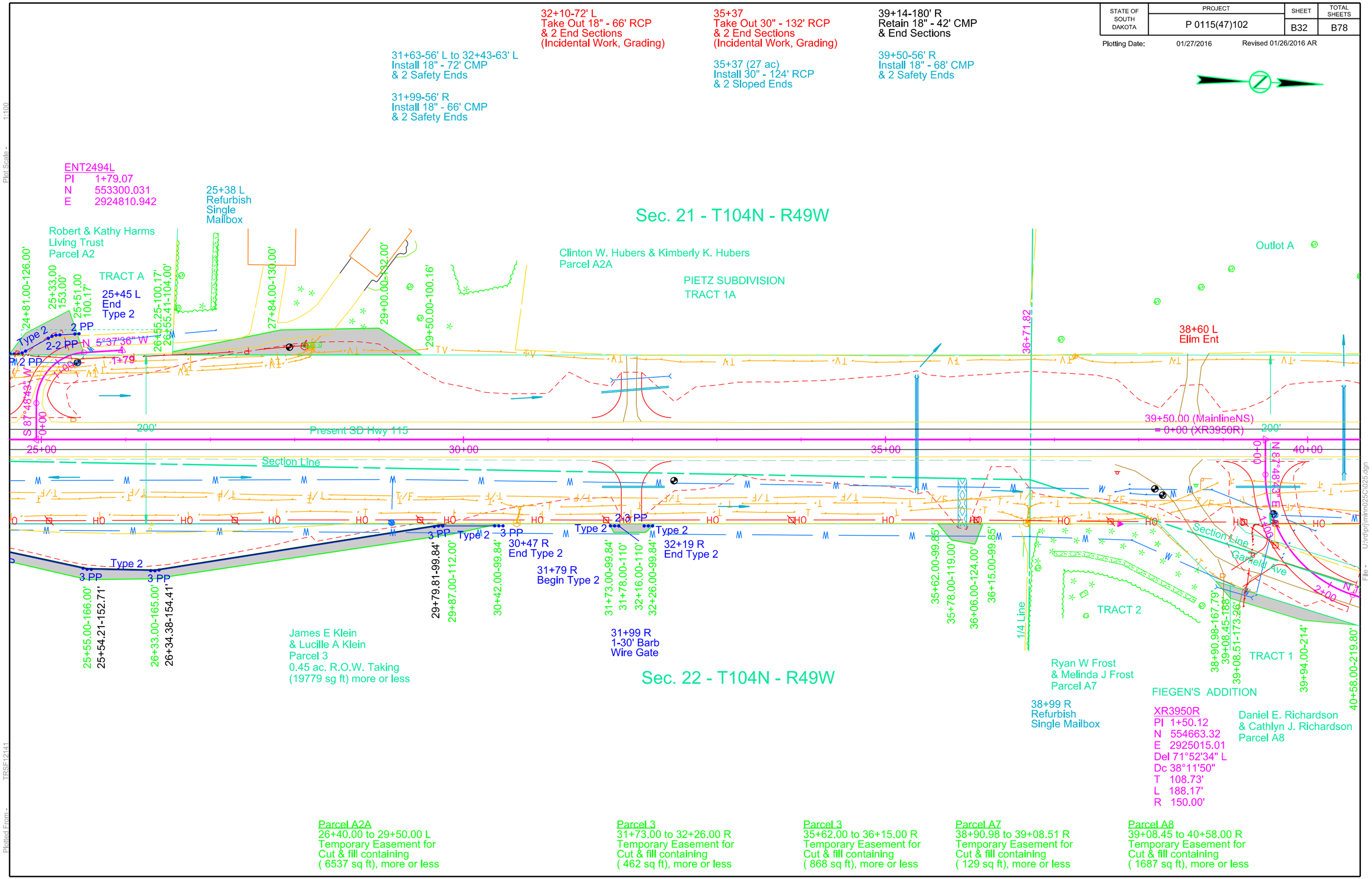

STATE OF SOUTH DAKOTA	PROJECT	SHEET	TOTAL SHEETS
	P 0115(47)102	B33	B78

Plotting Date: 11/20/2015

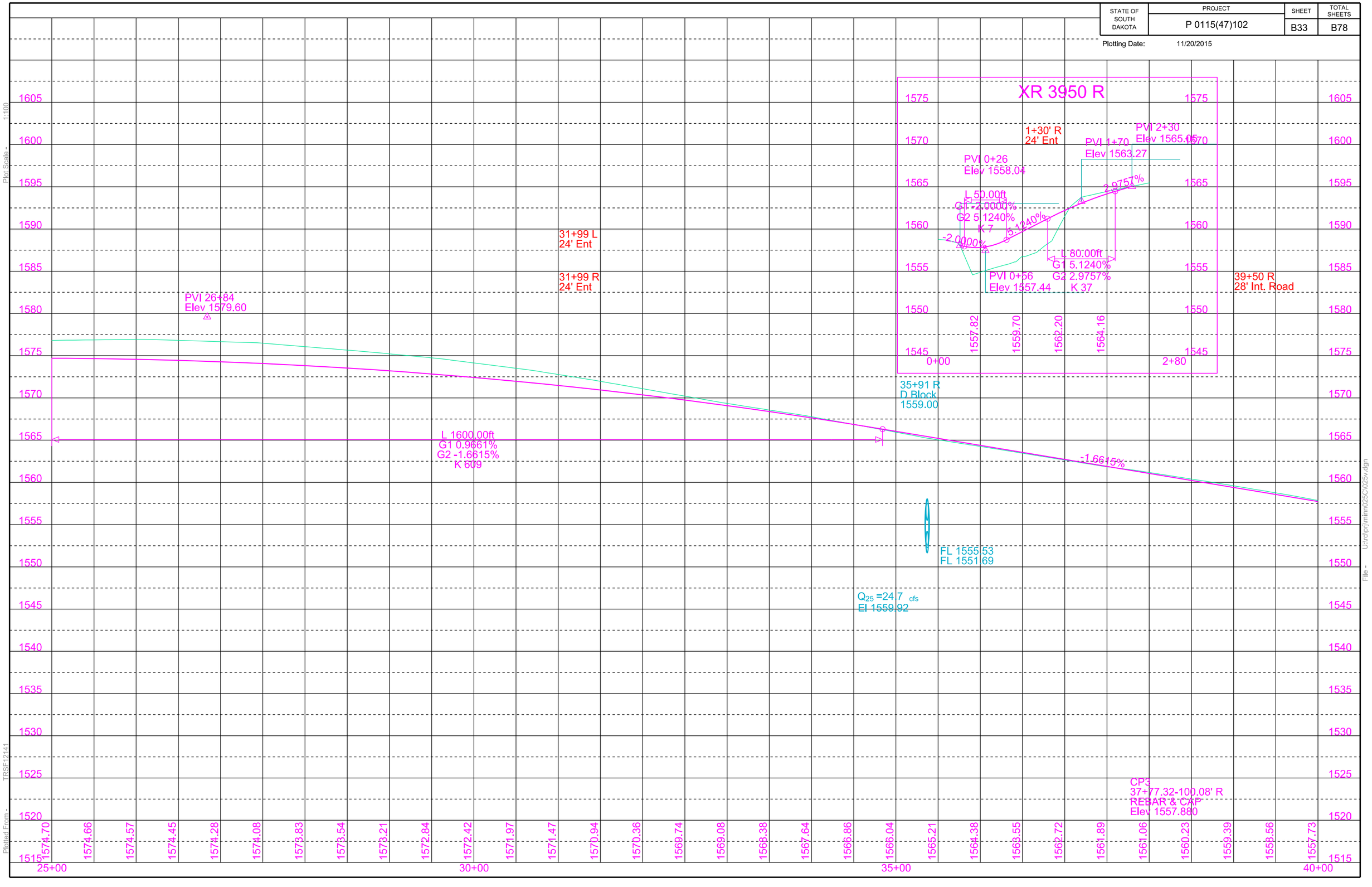

Plot Scale - 1:100

Plotted From - TRSF12141

File - U:\rd\prj\minn025C\025v.dgn

STATE OF SOUTH DAKOTA	PROJECT	SHEET	TOTAL SHEETS
	P 0115(47)102	B34	B78

Plotting Date: 11/20/2015

40+43
Take Out 30" - 99' RCP
& 2 End Sections
(Incidental Work, Grading)

40+43 (1 ac)
Install 30" - 98' RCP
& 2 Sloped Ends

44+70 - 52' L
Take Out 18' - 60' CMP
(Incidental Work, Grading)

44+70-56' L
Install 18" - 64' CMP
& 2 Safety Ends

48+36
Take Out 4'x6'-102' RC Cattlepass
& 2 End Sections
(Incidental Work, Grading)

48+36 (66 ac)
Install 48" - 114' RCP
& 2 Flared Ends

Install Bank and Channel
Protection Gabions
(12.0 CY)

50+88 - 55' R
Take Out 18" - 82' CMP
& 2 End Sections
(Incidental Work, Grading)

50+88-56' R
Install 18" - 62' CMP
& 2 Safety Ends

52+95 - 54' R
Take Out 18" - 73' CMP
& 2 End Sections
(Incidental Work, Grading)

52+95-56' R
Install 18" - 78' CMP
& 2 Safety Ends

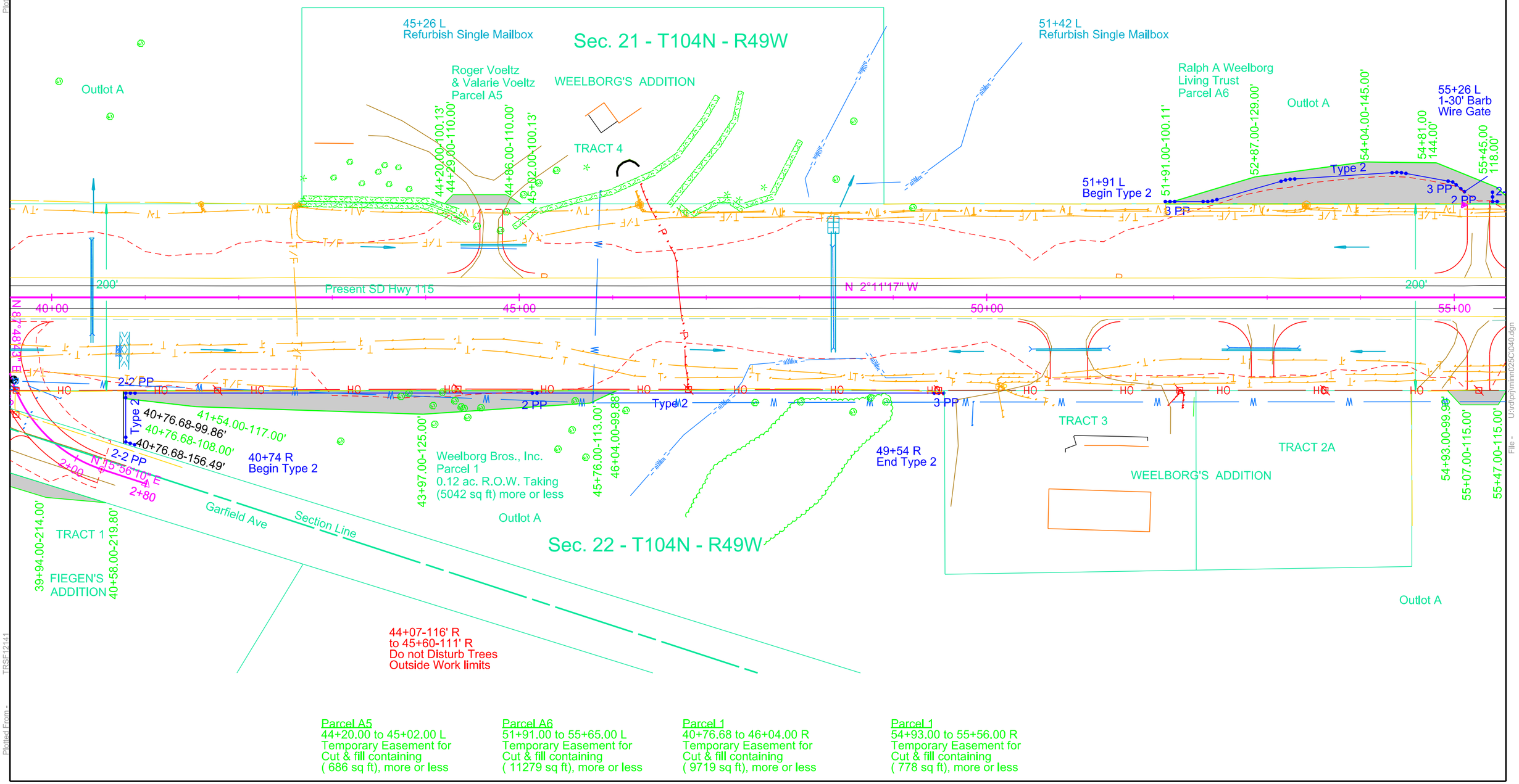

Parcel A5
44+20.00 to 45+02.00 L
Temporary Easement for
Cut & fill containing
(686 sq ft), more or less

Parcel A6
51+91.00 to 55+65.00 L
Temporary Easement for
Cut & fill containing
(11279 sq ft), more or less

Parcel 1
40+76.68 to 46+04.00 R
Temporary Easement for
Cut & fill containing
(9719 sq ft), more or less

Parcel 1
54+93.00 to 55+56.00 R
Temporary Easement for
Cut & fill containing
(778 sq ft), more or less

Plot Scale - 1:100
Plotted From - TRSF12141
File - U:\rdprj\mhn\025C\040.dgn

STATE OF SOUTH DAKOTA	PROJECT	SHEET	TOTAL SHEETS
	P 0115(47)102	B35	B78

Plotting Date: 11/20/2015

Exc	20112	Emb	10067
* Undercut Sel Top	18635	+35.00%	3523
** Surfacing Removal	5421	Sel Top (Exc)	11181
Contr Furn Sel Topping	1288	+35.00%	3913
	45456	Sel Top (Surf)	7454
		-10.00%	745
		Waste (Exc)	

13590	
15094	
6709	
10063	
45456	

* Paid for as Unclassifed Excavation

** Paid for as Remove Concrete Surfacing

Haul 29500 cuydsta

Included in the Excavation Quantity is 578 cy yds of Unstable Material Excavation

Waste to be hauled to I29 Interchange and stockpiled for use on PCN 03RT

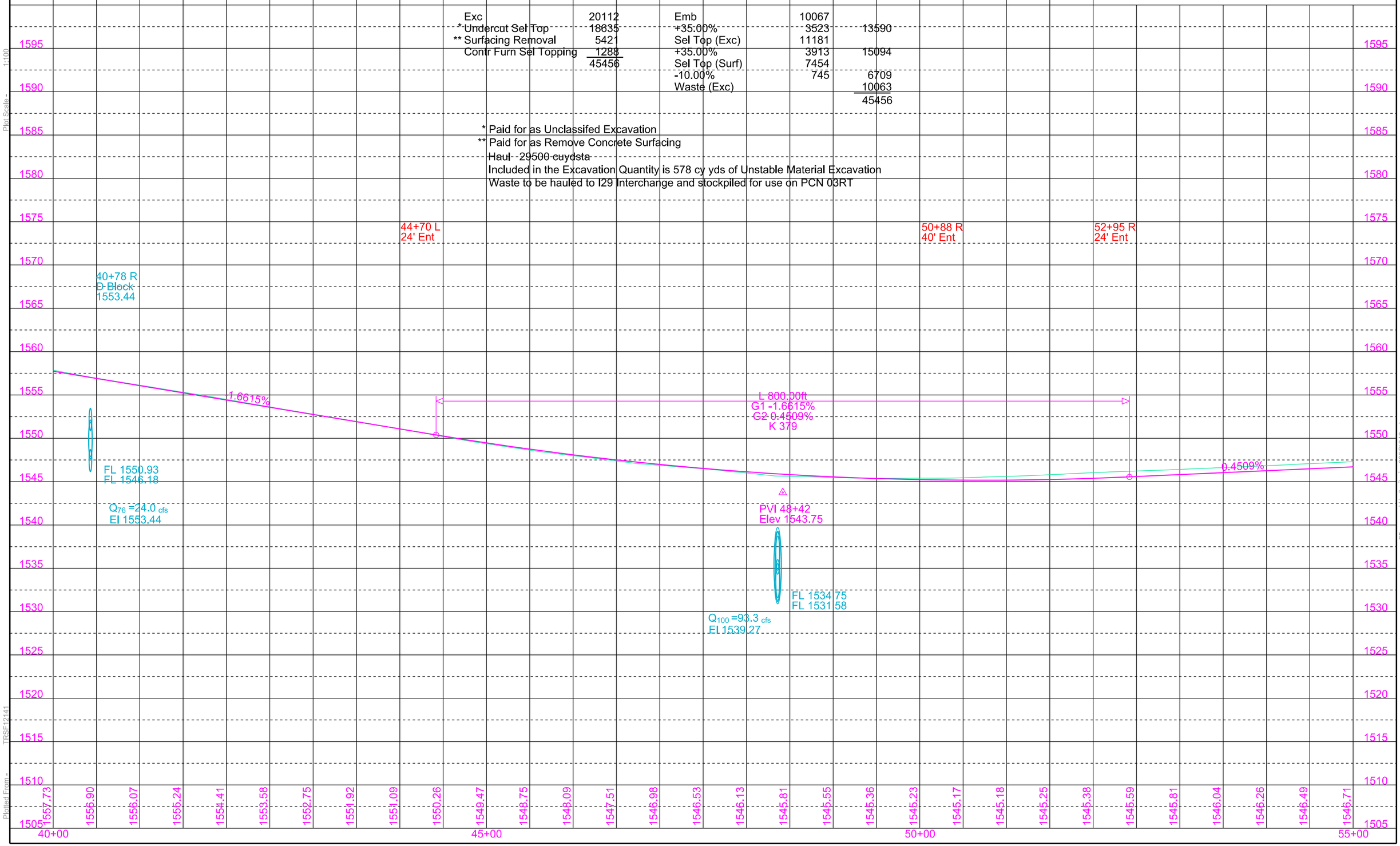

Plot Scale - 1:100

Plotted From - TRSF12141

File - U:\rdprj\mnn\025C\040v.dgn

STATE OF SOUTH DAKOTA	PROJECT	SHEET	TOTAL SHEETS
	P 0115(47)102	B36	B78

Plotting Date: 11/20/2015

57+24
Take Out 48" - 157' CMP
& 2 End Sections
(Incidental Work, Grading)

57+24 (109 ac)
Install 54" - 144' RCP (Cl 4)
& 2 Flared Ends

Install Bank and Channel
Protection Gabions
(12.0 CY)

64+48
Take Out 18" - 93' RCP
& 2 End Sections
(Incidental Work, Grading)

64+48 (2 ac)
Install 24" - 90' RCP
& 2 Sloped Ends

65+31-106' L to 136' L
Retain 12" - 30' CMP
& End Sections

69+42 - 61' R
Take Out 18" - 60' CMP
& 2 End Sections
(Incidental Work, Grading)

69+42-52' R
Install 18" - 72' CMP
& 2 Safety Ends

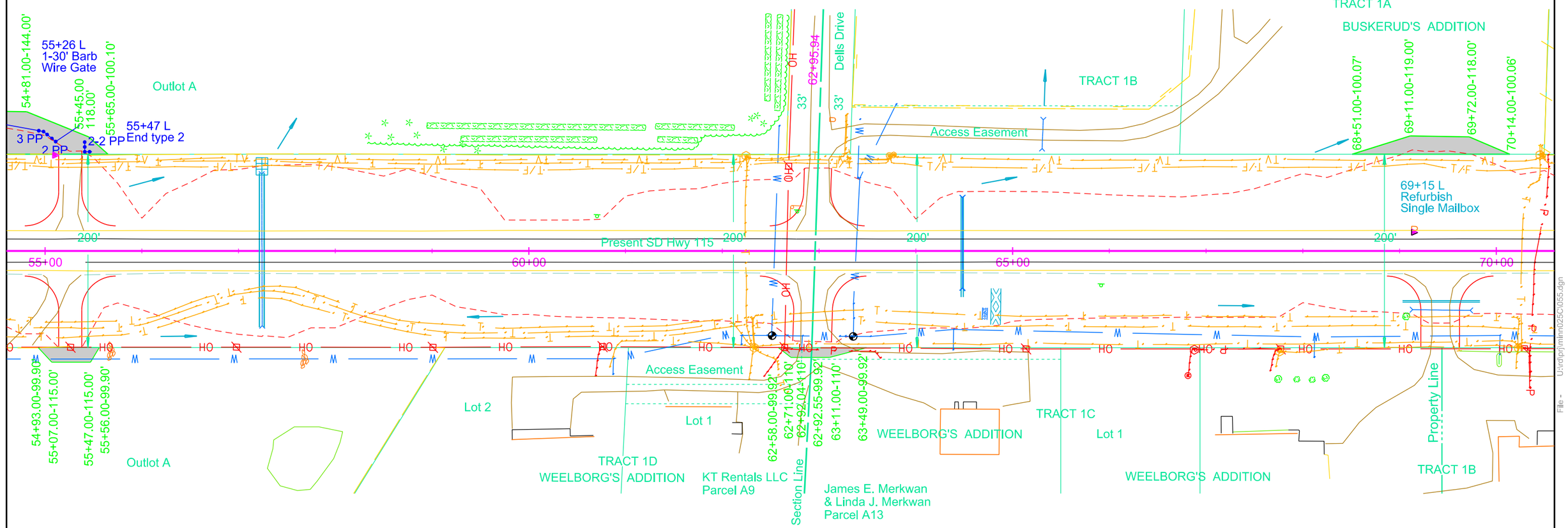

Parcel A9
62+58.00 to 62+92.55 R
Temporary Easement for
Cut & fill containing
(280 sq ft), more or less

Parcel A13
62+92.04 to 63+49.00 R
Temporary Easement for
Cut & fill containing
(380 sq ft), more or less

Parcel A10
68+51.00 to 70+14.00 L
Temporary Easement for
Cut & fill containing
(2069 sq ft), more or less

Plot Scale - 1:100
Plotted From - TRSF12141
File - U:\rdprj\mhn\025C\055.dgn

STATE OF SOUTH DAKOTA	PROJECT	SHEET	TOTAL SHEETS
	P 0115(47)102	B37	B78

Plotting Date: 11/20/2015

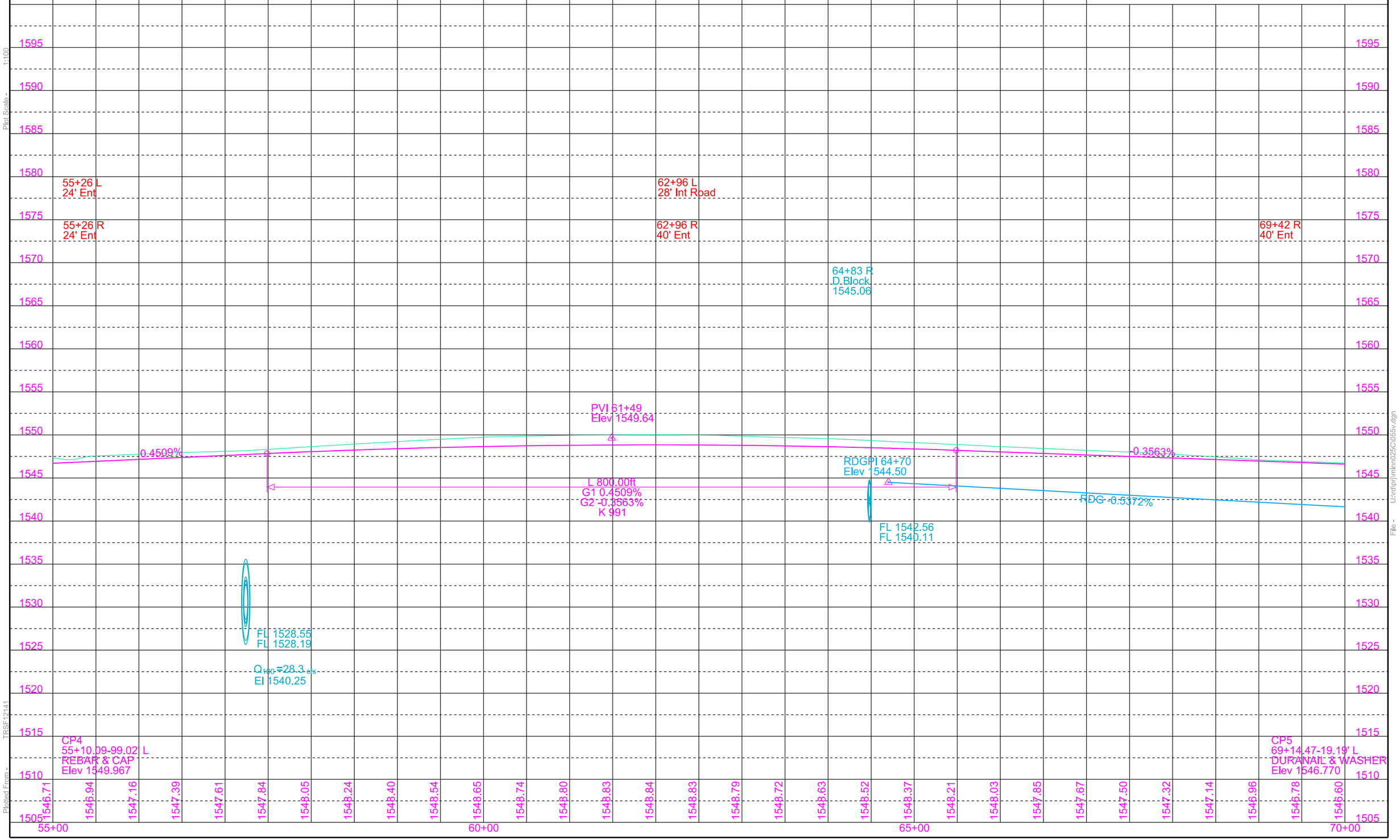

Plot Scale - 1:100

Plotted From - TRSF12141

File - U:\rd\prj\minn025C\055v.dgn

STATE OF SOUTH DAKOTA	PROJECT	SHEET	TOTAL SHEETS
	P 0115(47)102	B38	B78

Plotting Date: 01/25/2016 Revised 01/25/2016 AR

74+09 - 65' R
Take Out 18" - 91' CMP
(Incidental Work, Grading)

74+34-58' R
Install 18" - 70' CMP
& 2 Safety Ends

76+69 - 64' R
Take Out 18" - 114' CMP
& 2 End Sections
(Incidental Work, Grading)

77+00-66'R
Install 18" - 96' CMP
& 2 Safety Ends

78+56
Take Out 4'x6'- 99' RC Cattlepass
& 2 End Sections
(Incidental Work, Grading)

78+56 (14 ac)
Install 30" - 116' RCP
& 2 Sloped Ends

79+73-65' R to 80+69-56' R
Install 18" - 88' CMP
& 2 Safety Ends

80+28 - 61' R
Take Out 18" - 77' RCP
& 2 End Sections
(Incidental Work, Grading)

80+43 - 70' L
Take Out 18" - 74' RCP
& 2 End Sections
(Incidental Work, Grading)

80+43-56' L
Install 18" - 72' CMP
& 2 Safety Ends

84+65 - 59' R
Remove Drop Inlet

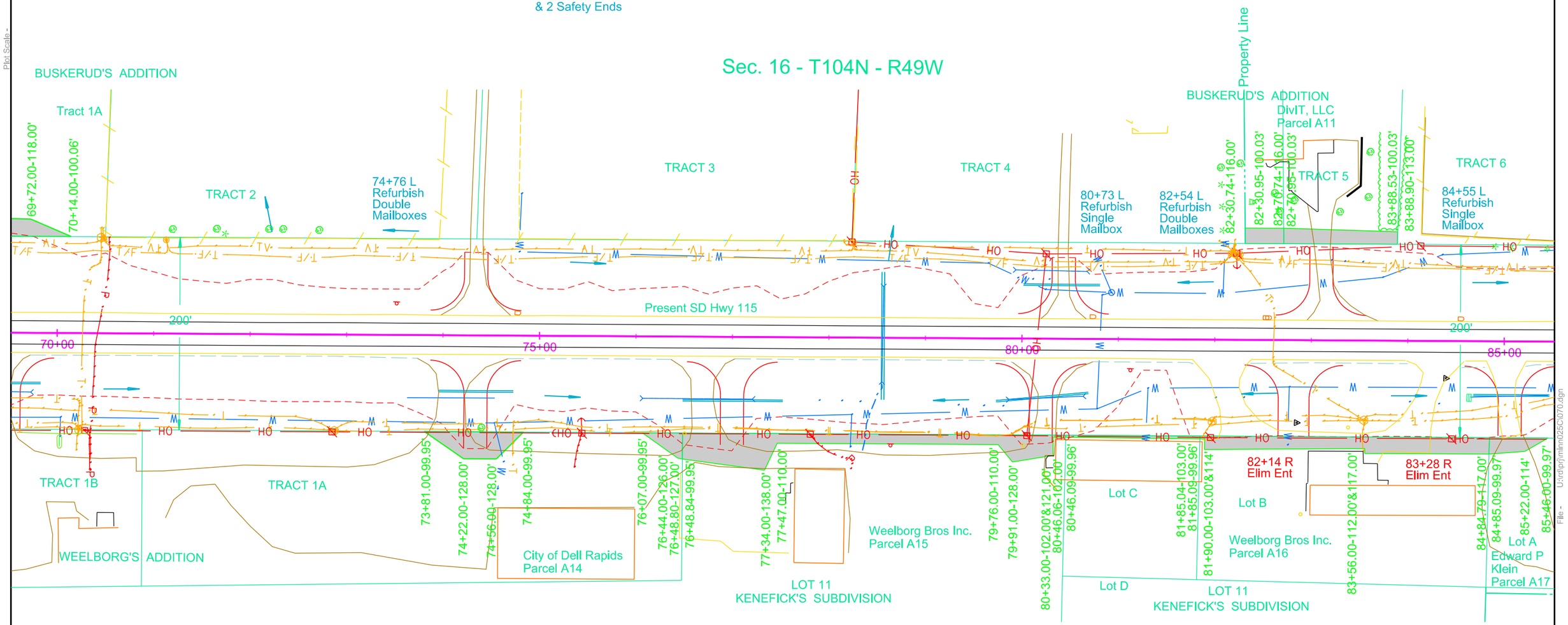

Parcel A11
82+30.74 to 83+88.90 L
Temporary Easement for
Cut & fill containing
(2344 sq ft), more or less

Parcel A14
73+81.00 to 74+84.00 R
Temporary Easement for
Cut & fill containing
(1922 sq ft), more or less

Parcel A14
76+07.00 to 76+48.84 R
Temporary Easement for
Cut & fill containing
(610 sq ft), more or less

Parcel A15
76+48.80 to 80+46.09 R
Temporary Easement for
Cut & fill containing
(6728 sq ft), more or less

Parcel A16
80+46.06 to 84+85.09 R
Temporary Easement for
Cut & fill containing
(4727 sq ft), more or less

Parcel A17
84+84.79 to 85+46.00 R
Temporary Easement for
Cut & fill containing
(744 sq ft), more or less

Plot Scale - 1:100
Plotted From - TRSF12141
File - U:\trd\prj\minn025C\070.dgn

STATE OF SOUTH DAKOTA	PROJECT	SHEET	TOTAL SHEETS
	P 0115(47)102	B39	B78

Plotting Date: 01/25/2016 Revised 01/25/2016 AR

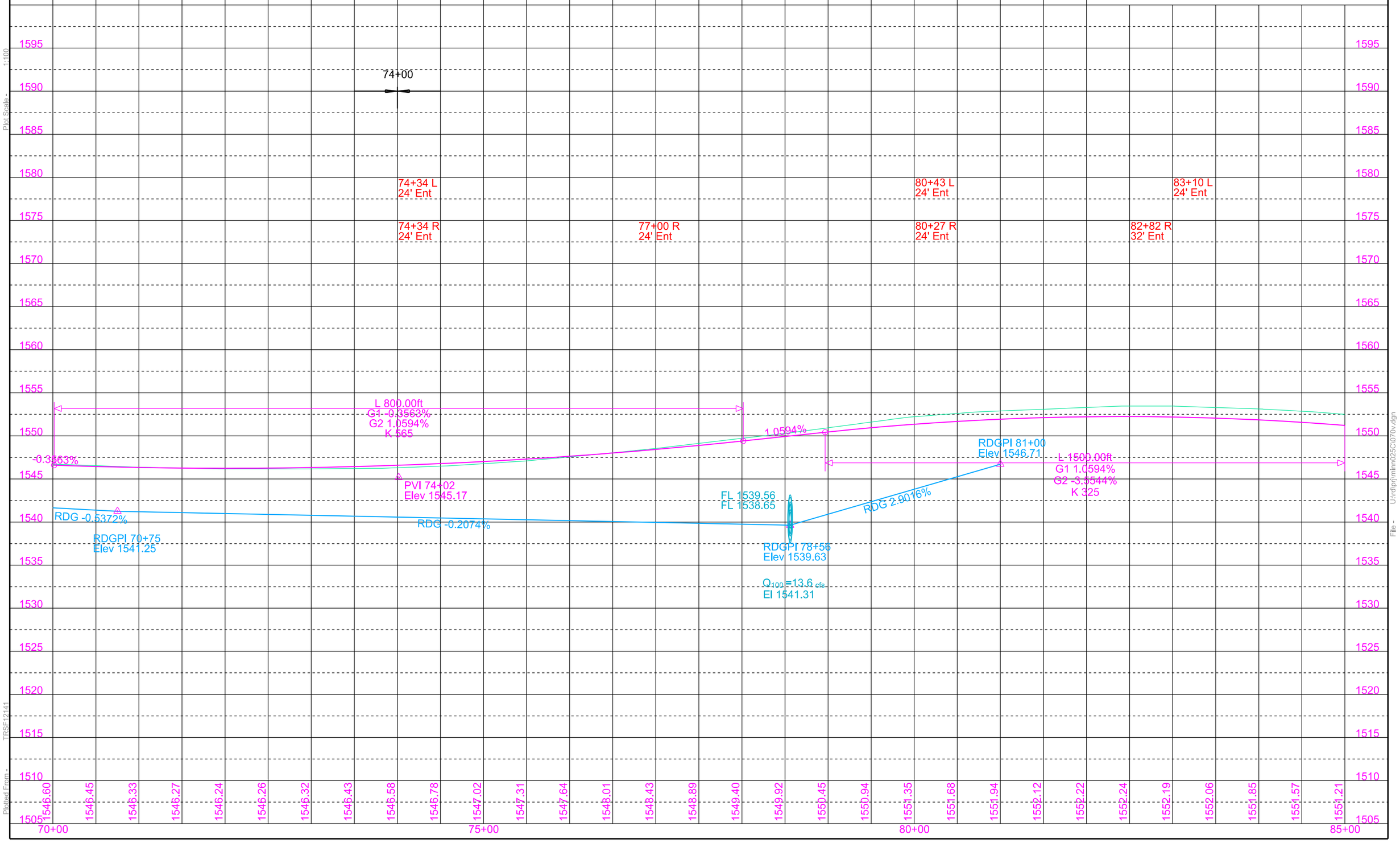

Plot Scale - 1:100

Plotted From - TRSF12141

File - U:\rd\prj\minn025C\070v.dgn

STATE OF SOUTH DAKOTA	PROJECT	SHEET	TOTAL SHEETS
	P 0115(47)102	B40	B78

Plotting Date: 01/25/2016 Revised 01/25/2016 AR

85+02 - 57' R
Take Out 15" - 81' CMP
(Incidental Work, Grading)

85+06-56' R
Install 18" - 72' CMP
& 2 Safety Ends

86+57 - 65' L
Take Out 18" - 79' CMP
& 2 End Sections
(Incidental Work, Grading)

89+45 - 58' R
Take Out 18" - 109' CMP
(Incidental Work, Grading)

89+46-56' L
Install 18" - 72' CMP
& 2 Safety Ends

89+46-56' R
Install 18" - 84' CMP
& 2 Safety Ends

91+19 - 62' L
Take Out 18" - 93' CMP
& 2 End Sections
(Incidental Work, Grading)

95+81 - 59' L
Take Out 18" - 59' CMP
(Incidental Work, Grading)

95+80-56'L
Install 18" - 66' CMP
& 2 Safety Ends

98+49-56' R
Install 18" - 60' CMP
& 2 Safety Ends

99+08 - 60' R
Take Out 18" - 46' RCP Arch
& 2 End Sections
(Incidental Work, Grading)

99+11 - 47' L
Take Out 18" - 79' CMP
& 2 End Sections
(Incidental Work, Grading)

PI 97+92.27
N 560495.60
E 2924641.95
Del 38°32'48" L
Dc 1°58'08"
T 1017.55'
L 1957.75'
R 2910.00'

Sec. 16 - T104N - R49W

86+46 L
Remove Automatic
Gate for Reset

86+46 L
Begin 6' Chain Link

86+57 L
Elim Ent

86+68 L
End 6' Chain Link

89+38 L
Reset Automatic
Gate

90+92 L
Refurbish
Single
Mailbox

91+19 L
Elim Ent

91+10 L
Begin 6' Chain Link

91+30 L
End 6' Chain Link

95+71 L
Begin 6' Chain Link

95+89 L
End 6' Chain Link

98+84 L
Retain
Gate

99+16 L
Elim Ent

TRACT 6
TRACT 8
DivIT, LLC
Parcel A12
BUSKERUD'S ADDITION
Sioux Valley
Telephone Co.
Parcel A18
TRACT 9
Dells DR.
Present SD Hwy 115
200'
85+00
90+00
95+00
100+00
Lot B
Lot A
Property Line
KENEFICK'S SUBDIVISION
City Limits
1/4 Line
TRACT 1
TRACT 2
TRACT 2A
TRACT 3
TRACT 3A
TRACT 5A
TRACT 6A
TRACT 7A
TRACT 8
TRACT 8A
TRACT 12A
Tract 1
Tract 3
Louis Geraets
Parcel A20
Maria Crisp
Addition
SWARD ADDITION
DELL RAPIDS
LUMBER CO.
SUBDIVISION
LODMELL'S SUBDIVISION

88+97.00-99.45'
89+07.00-117.00'
89+46.50
89+54.29-99.19'
89+56.33-124.00'
89+90.00-99.04'
90+77.00-98.70'
90+90.00-123.00'
91+30.00-123.00'
91+62.00-98.41'
95+17.95-97.64'
95+50.32-132.85'
96+03.76-135.27'
96+45.59-97.54'
97+90.00
97.53'
103+43.87
206.98'
103+72.02
191.60'
99+18.00-97.63'
84+84.79-117.00'
84+85.09-99.97'
85+22.00-114.00'
85+46.00-99.97'
98+12.00-105.12'
98+22.00-120.00'
98+75.00-120.00'
98+90.00-102.48'

DELL RAPIDS

Parcel A12
88+97.00 to 89+90 L
Temporary Easement for
Cut & fill containing
(1499 sq ft), more or less

Parcel A12
90+77.00 to 91+62.00 L
Temporary Easement for
Cut & fill containing
(1473 sq ft), more or less

Parcel A18
95+17.95 to 96+45.59 L
Temporary Easement for
Entrance containing
(3192 sq ft), more or less

Parcel A18
97+90.00 to 99+18.00 L
Temporary Easement for
Entrance containing
(4696 sq ft), more or less

Parcel A20
98+12.00 to 98+90.00 R
Temporary Easement for
Entrance containing
(1108 sq ft), more or less

Plot Scale - 1:100
Plotted From - TRSF12141
File - U:\rdprj\mhn\025C\085.dgn

STATE OF SOUTH DAKOTA	PROJECT	SHEET	TOTAL SHEETS
	P 0115(47)102	B41	B78

Plotting Date: 01/25/2016 Revised 01/25/2016 AR

Exc	14914	Emb	7655	
* Undercut Sel Top	13085	+35.00%	2679	10334
** Surfacing Removal	3924	Sel Top (Exc)	7851	
Contr Furn Sel Topping	787	+35.00%	2748	10599
	32710	Sel Top (Surf)	5234	
		-10.00%	523	4711
		Waste (Exc)		7066
				32710

* Paid for as Unclassifed Excavation
** Paid for as Remove Concrete Surfacing
Haul 85900 cuydsta
Included in the Excavation Quantity is 152 cy yds of Unstable Material Excavation
Waste to be used as Out of Balance Exc for Balance from 113+00 to 122+07

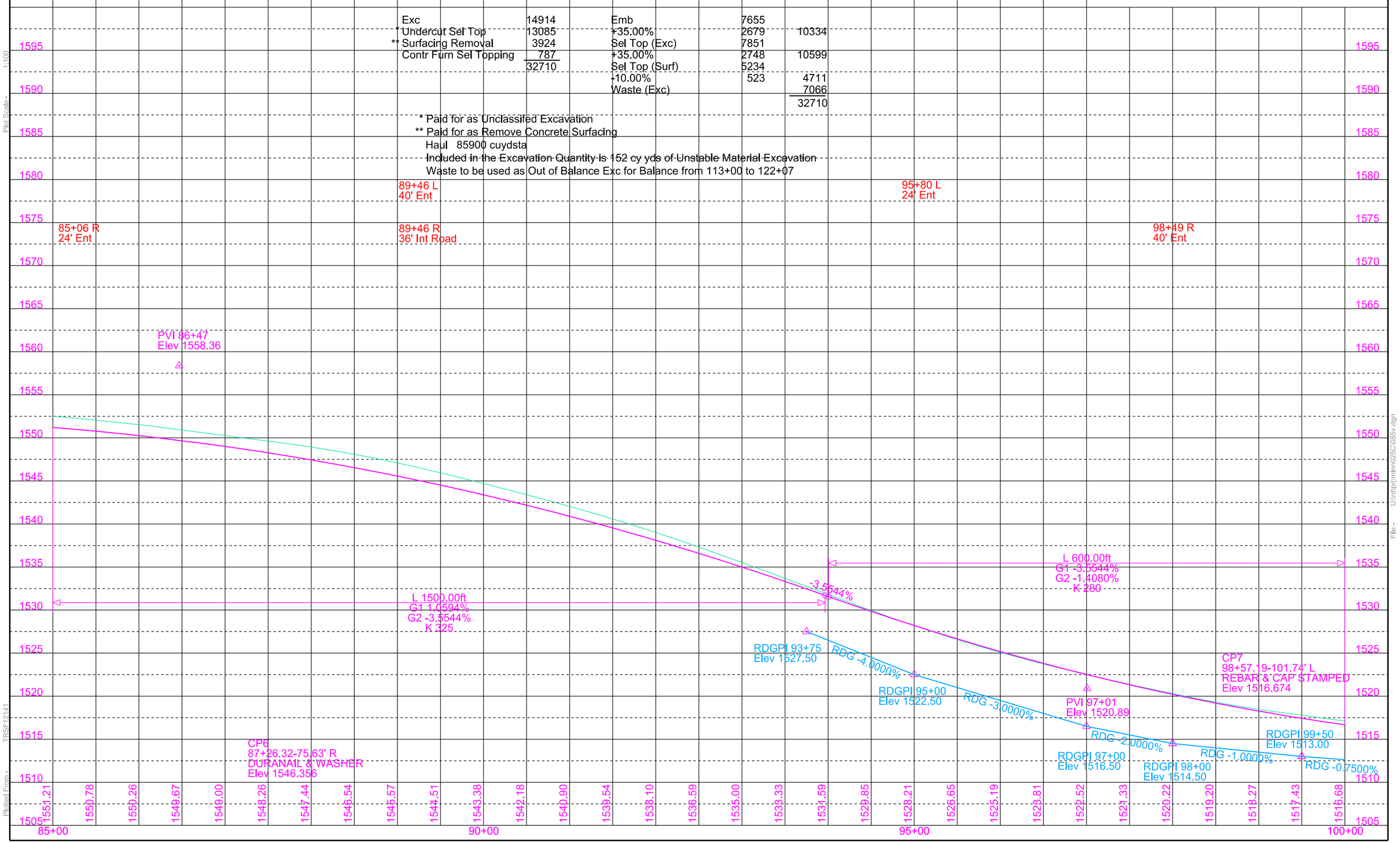

Plot Scale - 1:100
Plotted From - TRSF12141
File - U:\rd\prj\minn025C\085v.dgn

STATE OF SOUTH DAKOTA	PROJECT	SHEET	TOTAL SHEETS
	P 0115(47)102	B42	B78

Plotting Date: 12/03/2015 Revised 12-02-15 PCN

102+73-56' L to 103+44-64' L
Install 18" - 64' CMP
& 2 Safety Ends

103+01 - 74' R
Take Out 18" - 70'
& 2 End Sections
(Incidental Work, Grading)

103+42 - 43' L
Take Out 18" - 55'
& 2 End Sections
(Incidental Work, Grading)

103+07-64' R
Install 36" - 64' CMP Arch
& 2 Safety Ends

108+17-60' L to 110+71-20' L
Remove Concrete
Gravity Wall
(See Section E)

105+50.00-21.17' L
Install 2'x3' Type B Drop Inlet
with 6" Conc Collar
& Type B Frame and Grate

Install 2'x3' Type B Drop Inlet
with 6" Conc Collar
& Type B Special Frame and Grate
at the Following Locations:
108+00.00-20.50' L
110+30.00-20.50' L
113+56.00-20.50' L
113+56.00-19.50' R

Remove 3-Cable Guardrail
at the Following Locations:
105+26-25' L to 110+21-19'L
108+33-24'R to 110+28-16'R

105+50.00-21.17'L to 56.95'L
Install 18"-30' RCP
& 1 Flared End
(Between Drop Inlet and Outlet)

107+25.00-70.04'L to
110+39.27-34.67'L
Install MSE Large
Panel Retaining Wall

108+00.00-20.50'L to
110+30.00-20.50'L
Install 18"-228' RCP
(Between Drop Inlets)

Remove Beam Guardrail
at the Following Locations:
109+60-20' L to 110+41-15' L
109+60-19' R to 110+41-15' R
113+46-15' L to 114+26-19' L
113+46-15' R to 115+02-24' R
113+65-19' L to 115+55-24' L

108+69-56'L
Install Bank and Channel
Protection Gabions
(4.5 CY)

110+30.00-20.50' L to 73.10' R
Install 18"-42' RCP
Install 18"-44' CMP (34' & 10')
& 2-15° Elbows
& 1-18" RCP to CMP Transition
& 1 Flared End

110+30.00-73' R
Install Bank and Channel
Protection Gabions
(4.5 CY)

108+69
Retain 18" - 140' RCP
& 1 End Section

110+39.27 to 113+46.52
Install 307'-3" Continuous
Concrete Bridge
(3090 sq. miles)
(See Section E)

113+56.00-20.50' L to 50.14' L
Install 18"-24' RCP
& 1 Flared End
(Between Drop Inlet and Outlet)

113+56.00-19.50' R to 38.29' R
Install 18"-12' RCP
& 1 Flared End
(Between Drop Inlet and Outlet)

110+40 to 113+47
Take Out Bridge
(See Section E)

114+45.76-23.63' L
Install 4'x11' Type S
Drop Inlet with Precast Concrete
Type S Drop Inlet Lid

114+45.76-23.63' L to 59.95' L
Install 18"-30' RCP
& 1 Flared End
(Between Drop Inlet and Outlet)

114+45.76-23.63' L to
115+00.00-21.17' L
Install 18"-54' RCP
(Between Drop Inlets)

XR10307L
PI 2+65.97
N 560690.538
E 2924163.497

XR10307L
PI 0+85.12
N 560879.46
E 2924159.24
Del 58°56'12" L
Dc 71°37'11"
T 45.20'
L 82.29'
R 80.00'

103+12 - 119' L
Do Not Disturb Tree

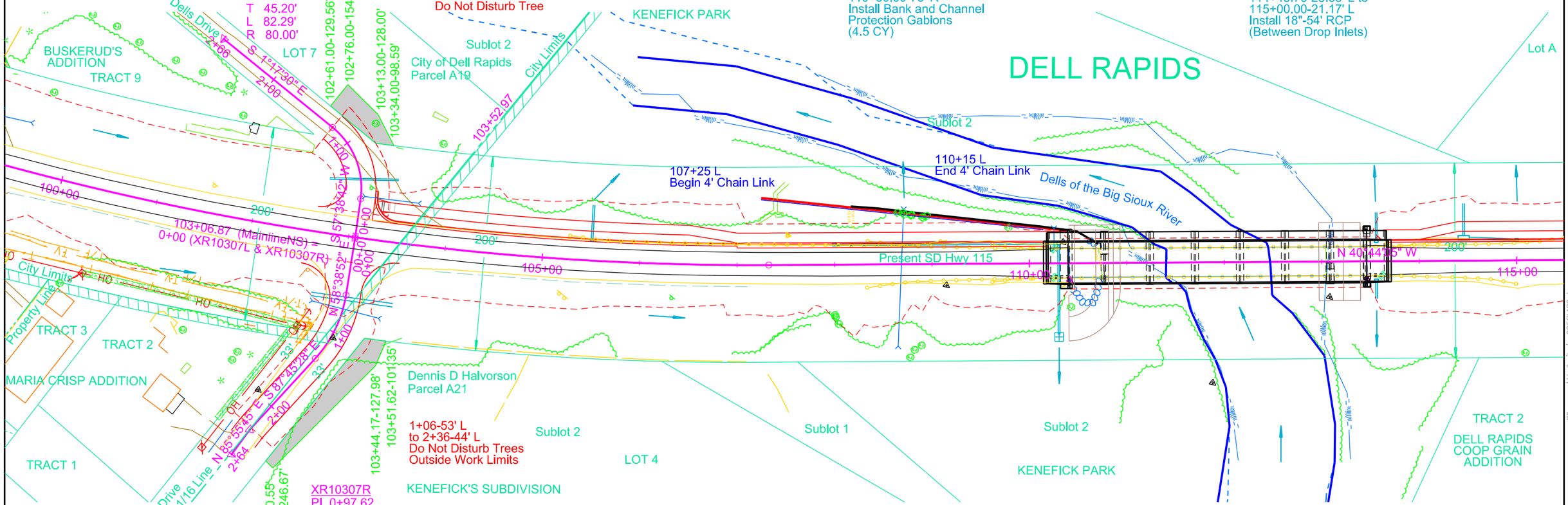

XR10307R
PI 2+63.80
N 560972.729
E 2924482.787

XR10307R
PI 2+32.51
N 560970.51
E 2924451.58
Del 6°18'47" L

XR10307R
PI 0+97.62
N 560975.87
E 2924314.62
Del 33°35'40"R
Dc 45°50'12"
T 37.73'
L 73.29'
R 125.00'

Parcel A19
102+61.00 to 103+34.00 L
Temporary Easement for
Cut & fill containing
(1626 sq ft), more or less

Parcel A21
102+52.51 to 103+51.62 R
Temporary Easement for
Cut & fill containing
(3206 sq ft), more or less

Plot Scale - 1:100
Plotted From - trsf12142
File - U:\rd\prj\minn025C\100.dgn

STATE OF SOUTH DAKOTA	PROJECT	SHEET	TOTAL SHEETS
	P 0115(47)102	B43	B78

Plotting Date: 01/08/2016 Revised 01/08/2016 AR

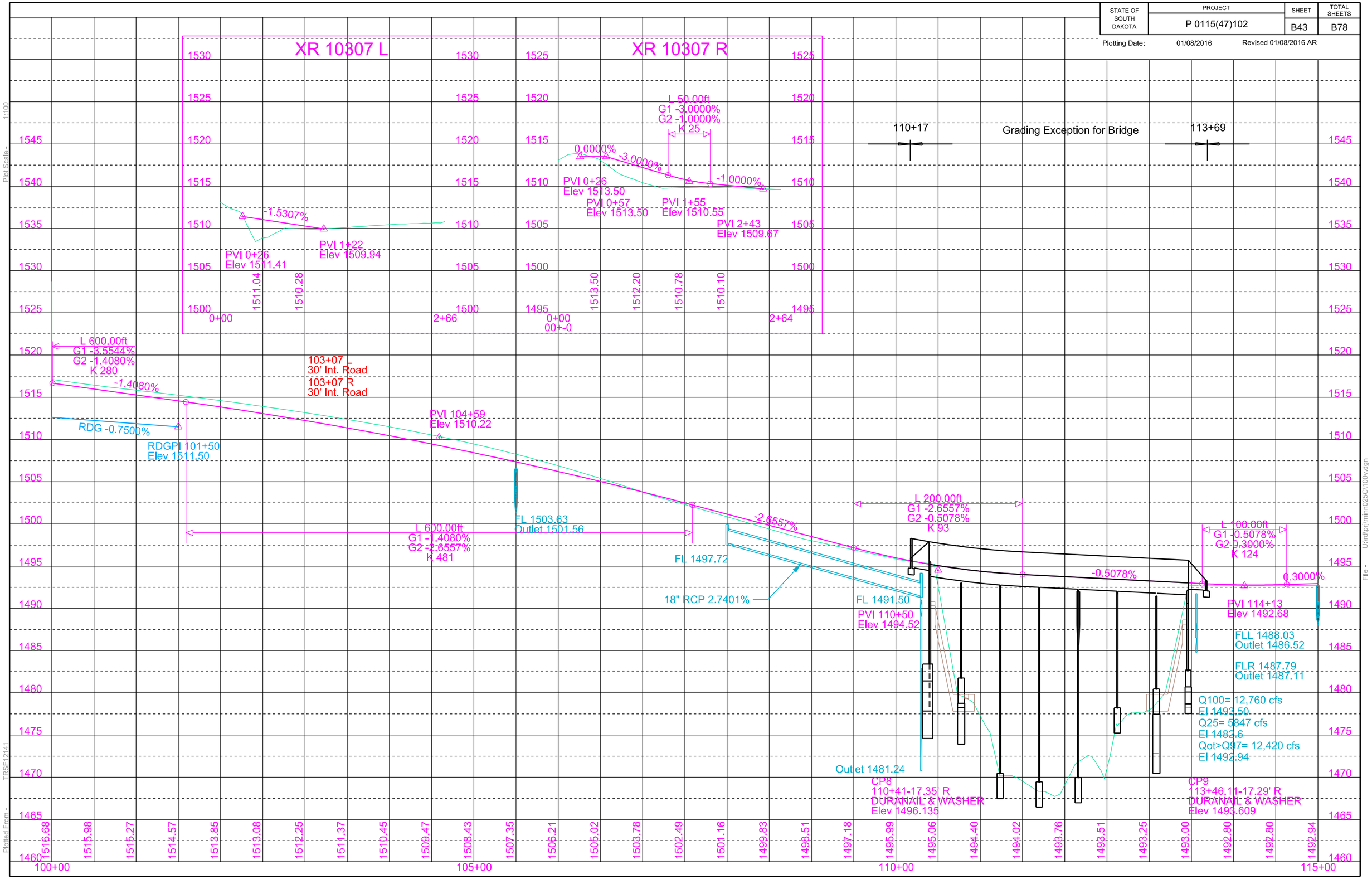

STATE OF SOUTH DAKOTA	PROJECT	SHEET	TOTAL SHEETS
	P 0115(47)102	B44	B78

Plotting Date: 11/20/2015

116+87 - 74' L
Take Out 18" - 43' CMP
& 2 End Sections
(Incidental Work, Grading)

116+88-74' L (12 Ac)
Install 18" - 56' CMP
& 2 Safety Ends

117+30.00-21.17' L to 56.84' L
Install 18"-30' RCP
& 1 Flared End
(Between Drop Inlet and Outlet)

119+20.00-21.17' L to 56.30' L
Install 18"-30' RCP
& 1 Flared End
(Between Drop Inlet and Outlet)

Install 2'x3' Type B Drop Inlet
with 6" Conc Collar
& Type B Frame and Grate
at the following locations:
115+00.00-21.17' L
117+30.00-21.17' L
119+20.00-21.17' L

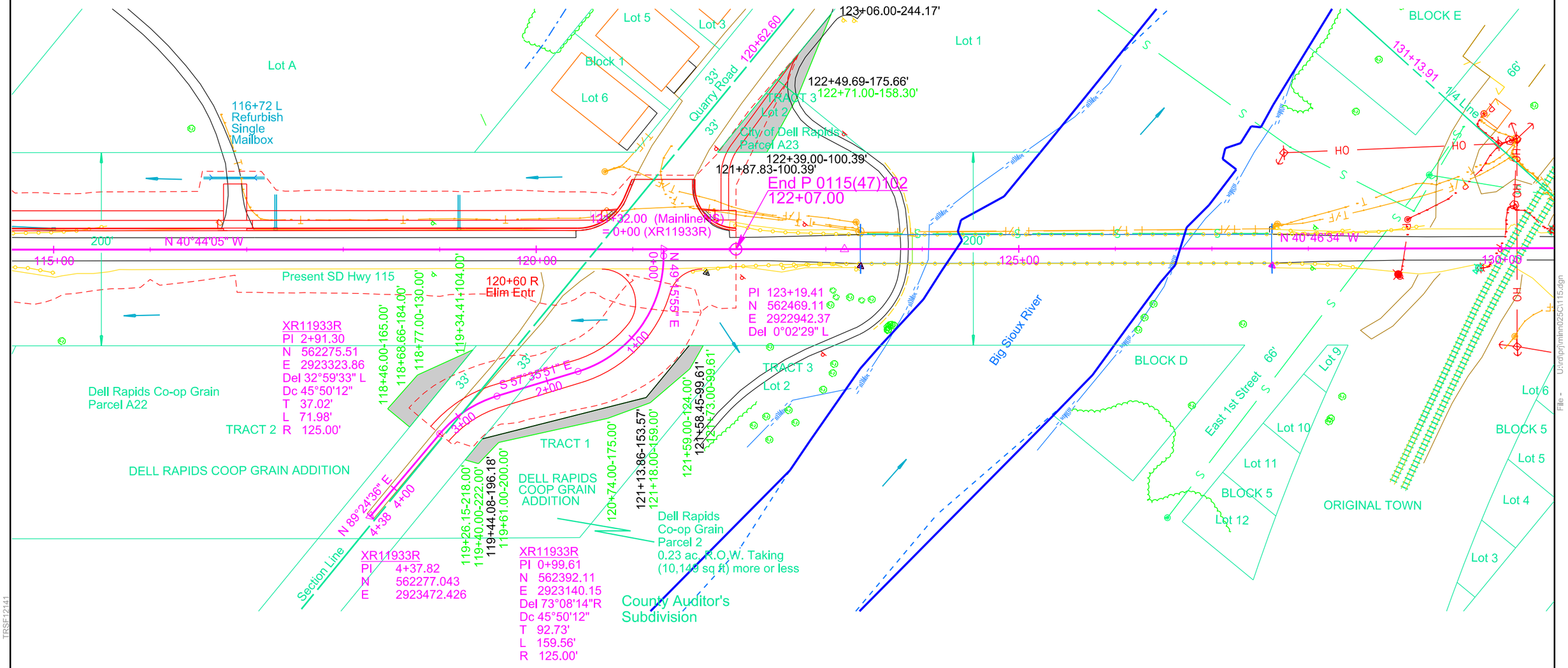

Parcel A22
118+46.00 to 119+34.41 R
Temporary Easement for
Cut & fill containing
(2133 sq ft), more or less

Parcel A23
121+87.83 to 123+06.00 L
Temporary Easement for
Cut & fill containing
(4040 sq ft), more or less

Parcel 2
119+26.15 to 121+73.00 R
Temporary Easement for
Cut & fill containing
(2882 sq ft), more or less

Plot Scale - 1:100
Plotted From - TRSF12141
File - U:\rd\prj\minn025C115.dgn

STATE OF SOUTH DAKOTA	PROJECT	SHEET	TOTAL SHEETS
	P 0115(47)102	B45	B78

Plotting Date: 11/20/2015

Exc	780	Emb	5929
* Undercut Sel Top	2185	+35.00%	2075
** Surfacing Removal	989	Sel Top (Exc)	1311
Out of Balance Exc	6809	+35.00%	459
Contr Furn Sel Topping	0	Sel Top (Surf)	874
	10763	-10.00%	87
		Waste (Surf)	202
		Waste (Exc)	0
			10763

* Paid for as Unclassifed Excavation

** Paid for as Remove Concrete Surfacing

Haul 0 cuydsta

Out of Balance Excavation is Waste from previous balances.

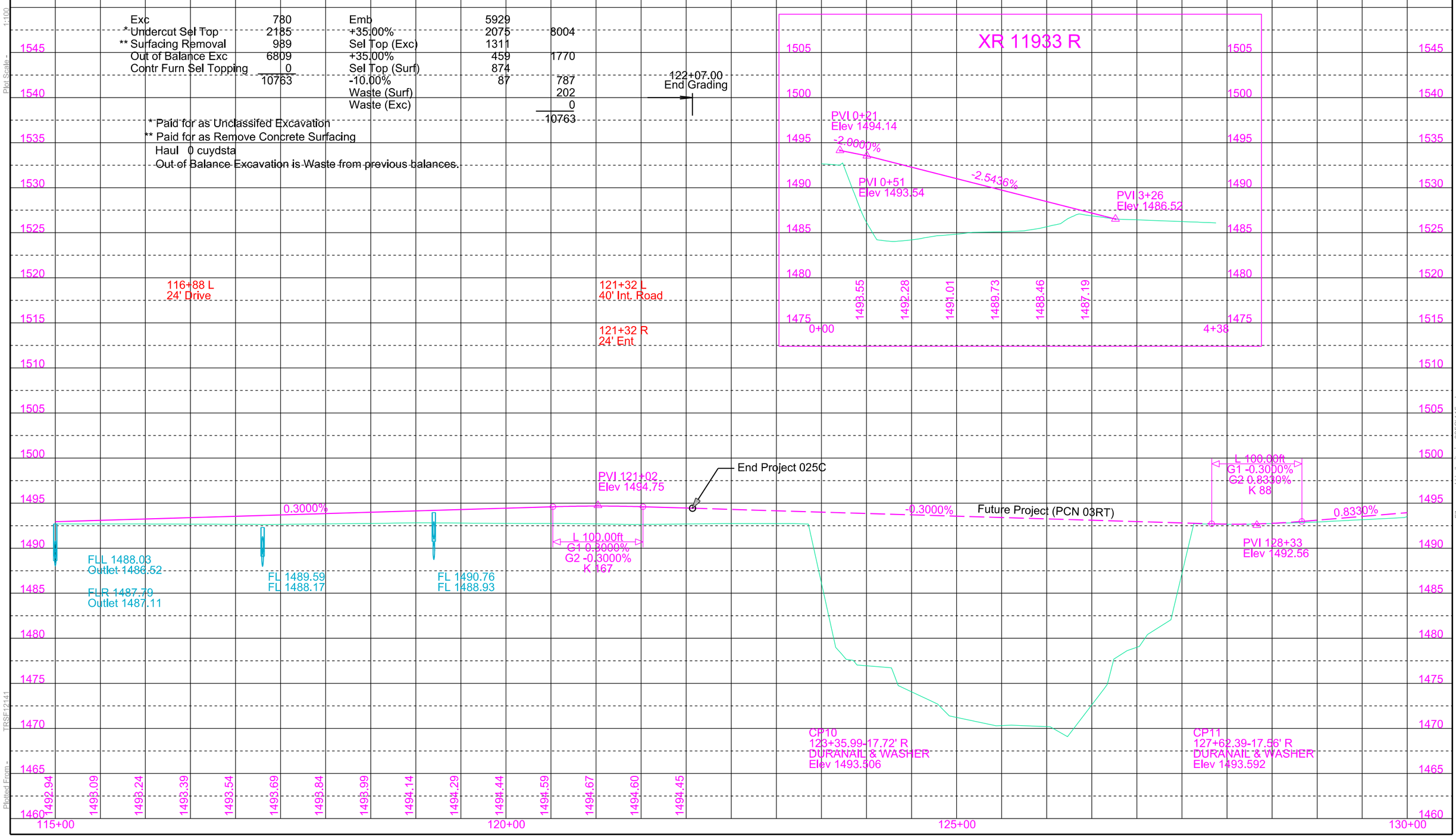

Plot Scale - 1:100

Plotted From - TRSF12141

File - U:\rdip\minn025C\115v.dgn

STATE OF SOUTH DAKOTA	PROJECT	SHEET	TOTAL SHEETS
	P 0115(47)102	B46	B78

Plotting Date: 11/23/2015

CURB & GUTTER LAYOUT

NOTE: All Curb & Gutter shown on this sheet is Type B68 and all Type P gutter is Type P8 except as noted.
All sidewalks are 10' wide except as noted.

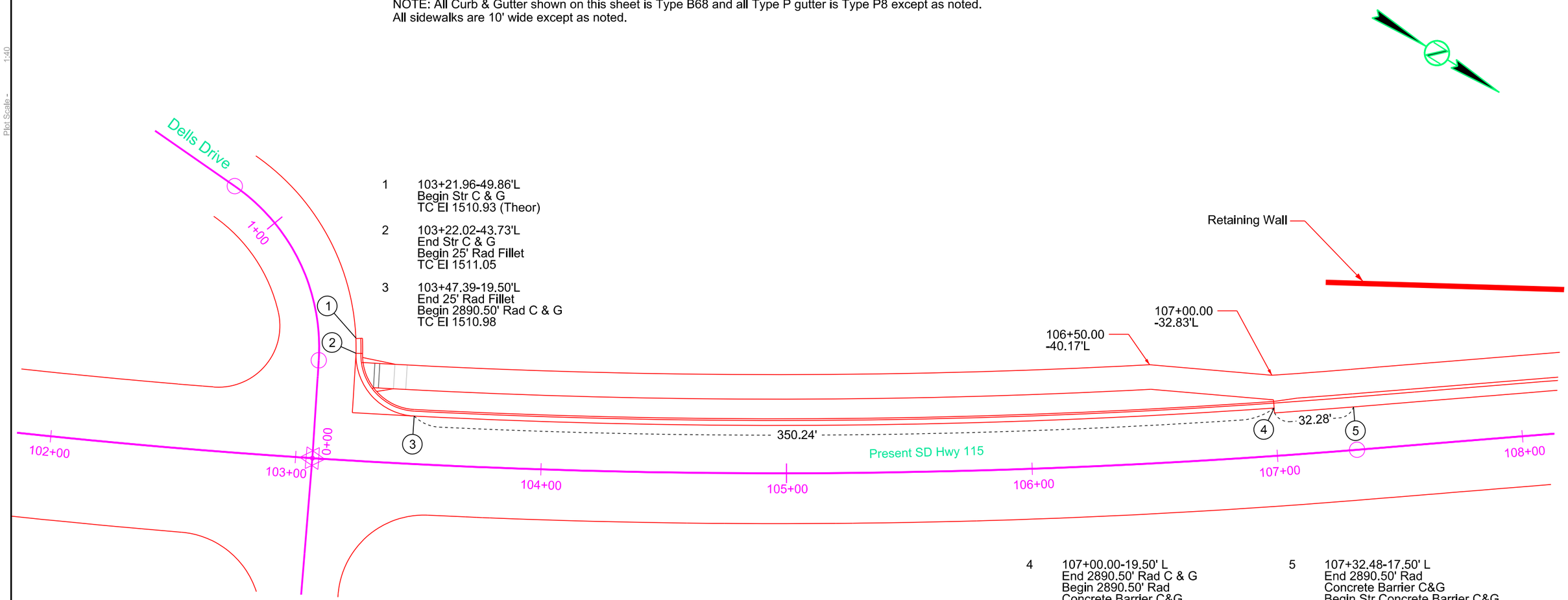

1 103+21.96-49.86'L
Begin Str C & G
TC El 1510.93 (Theor)

2 103+22.02-43.73'L
End Str C & G
Begin 25' Rad Fillet
TC El 1511.05

3 103+47.39-19.50'L
End 25' Rad Fillet
Begin 2890.50' Rad C & G
TC El 1510.98

4 107+00.00-19.50' L
End 2890.50' Rad C & G
Begin 2890.50' Rad
Concrete Barrier C&G
EOP El 1503.33

5 107+32.48-17.50' L
End 2890.50' Rad
Concrete Barrier C&G
Begin Str Concrete Barrier C&G
(See Section E)
EOP El 1502.64

Plot Scale - 1:40
Plotted From - TRSF12141
File - U:\rdprj\mhn\025C\1102cg.dgn

STATE OF SOUTH DAKOTA	PROJECT	SHEET	TOTAL SHEETS
	P 0115(47)102	B47	B78

Plotting Date: 11/23/2015

CURB & GUTTER LAYOUT

NOTE: All Curb & Gutter shown on this sheet is Type B68 and all Type P gutter is Type P8 except as noted.
All sidewalks are 10' wide except as noted.

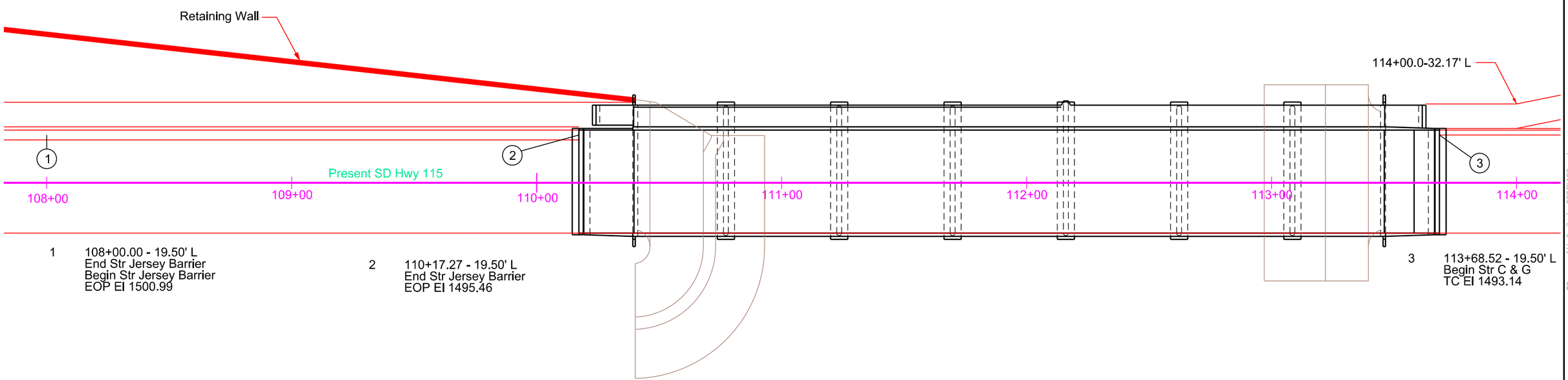

1 108+00.00 - 19.50' L
End Str Jersey Barrier
Begin Str Jersey Barrier
EOP El 1500.99

2 110+17.27 - 19.50' L
End Str Jersey Barrier
EOP El 1495.46

3 113+68.52 - 19.50' L
Begin Str C & G
TC El 1493.14

Plot Scale - 1:40
Plotted From - TRSF12141
File - U:\rdprj\mhn\025C\108cg.dgn

STATE OF SOUTH DAKOTA	PROJECT	SHEET	TOTAL SHEETS
	P 0115(47)102	B48	B78

Plotting Date: 11/20/2015

CURB & GUTTER LAYOUT

NOTE: All Curb & Gutter shown on this sheet is Type B68 and all Type P gutter is Type P8 except as noted.
All sidewalks are 10' wide except as noted.

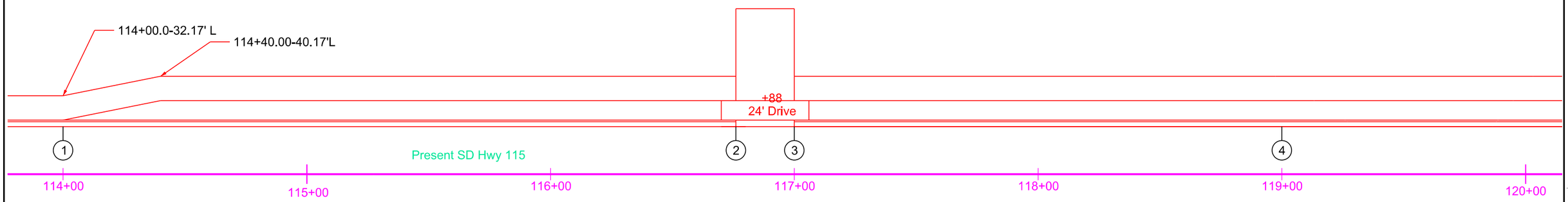

1 114+00-19.50' L
End Str C & G
Begin Str C & G
TC El 1493.03

2 116+76-19.50'L
End Str C & G
Begin Type P Gutter
TC El 1493.70 (Theor)

3 117+00-19.50'L
End Type P Gutter
Begin Str C & G
TC El 1493.77 (Theor)

4 119+00-19.50' L
End Str C & G
Begin Str C & G
TC El 1494.37

Plot Scale - 1:40
Plotted From - TRSF12141
File - U:\rdlprj\minn025C\114cg.dgn

STATE OF SOUTH DAKOTA	PROJECT	SHEET	TOTAL SHEETS
	P 0115(47)102	B49	B78

Plotting Date: 11/20/2015

CURB & GUTTER LAYOUT

NOTE: All Curb & Gutter shown on this sheet is Type B68 and all Type P gutter is Type P8 except as noted.
All sidewalks are 10' wide except as noted.

1 120+42.96-19.50' L
End Str C & G
Begin 55' Rad Fillet
TC El 1494.80

2 120+93.39-52.55' L
End 55' Rad Fillet
Begin Str C & G
TC El 93.64

3 121+02.00-72.32' L
End Str C & G
TC El 92.39 (Theor)

4 121+62.00-72.36' L
Begin Str C & G
TC El 92.26 (Theor)

5 121+62.00-64.50' L
End Str C & G
Begin 45' Rad C & G
TC El 92.78

6 121+07.00-19.50'L
End 45' Rad C & G
TC El 94.66

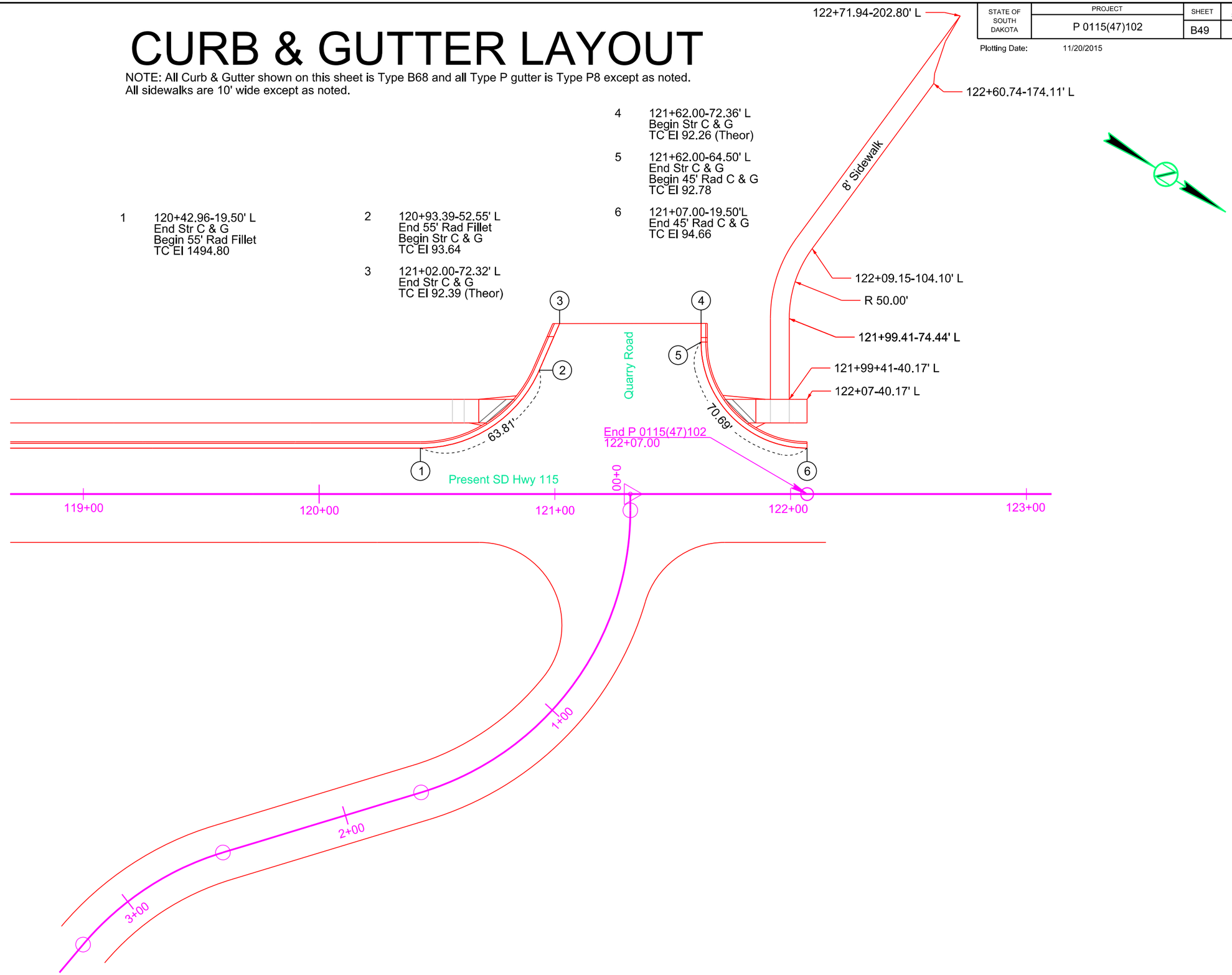

Plot Scale - 1:40

Plotted From - TRSF12141

File - U:\rd\prj\minn025C\119cg.dgn

CURB RAMP LAYOUT

STATE OF SOUTH DAKOTA	PROJECT	SHEET	TOTAL SHEETS
	P 0115(47)102	B50	B78

Plotting Date: 11/20/2015

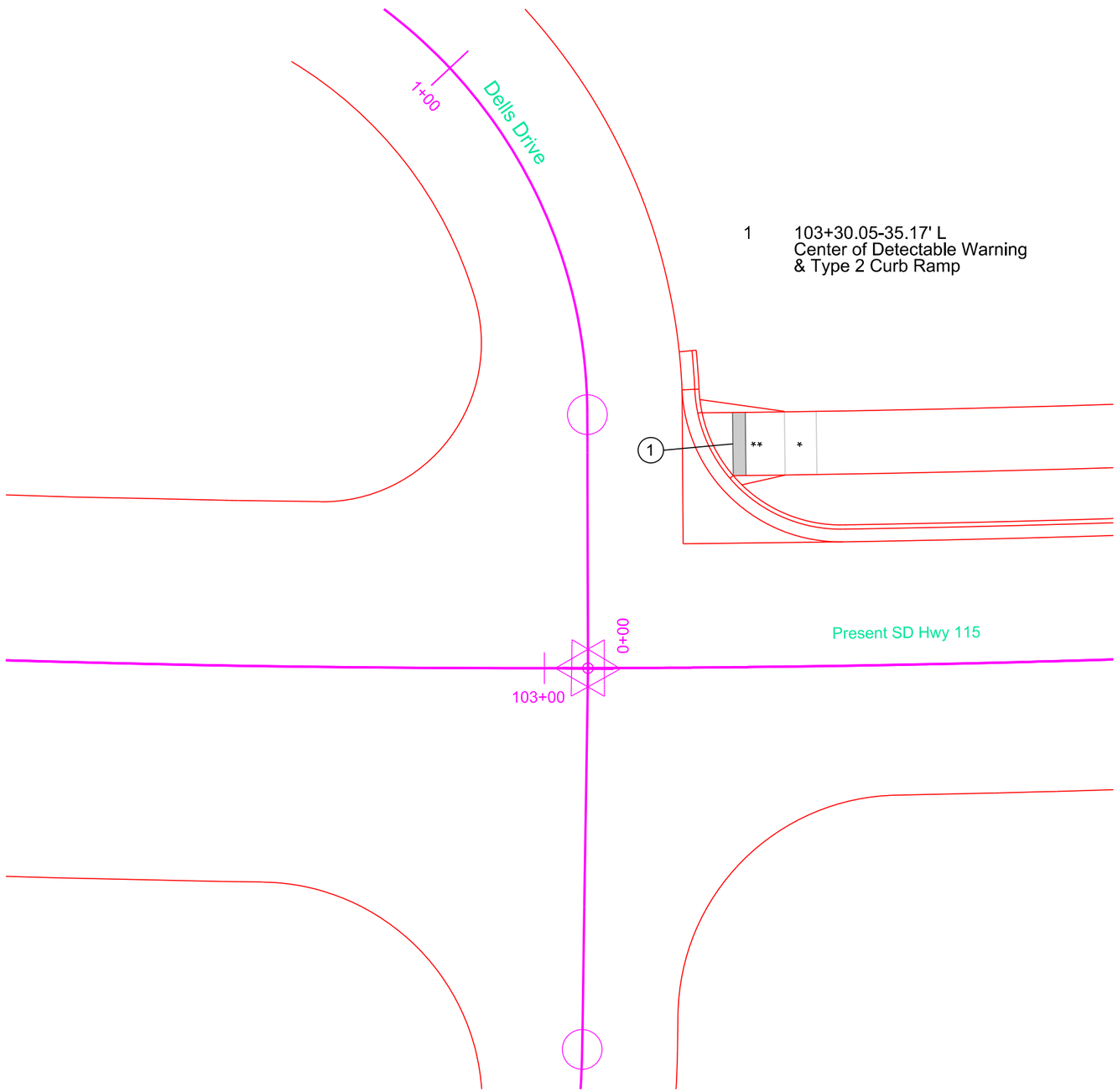

LEGEND:

* Turning Space with 1.5% slope

** Curb Ramp with 7.5% slope and 1.5% cross slope

Detectable Warning

Plot Scale - 1:20
Plotted From - TRSF12141
File - U:\rdprj\mhn\025C\103cr.dgn

CURB RAMP LAYOUT

STATE OF SOUTH DAKOTA	PROJECT	SHEET	TOTAL SHEETS
	P 0115(47)102	B51	B78

Plotting Date: 11/20/2015

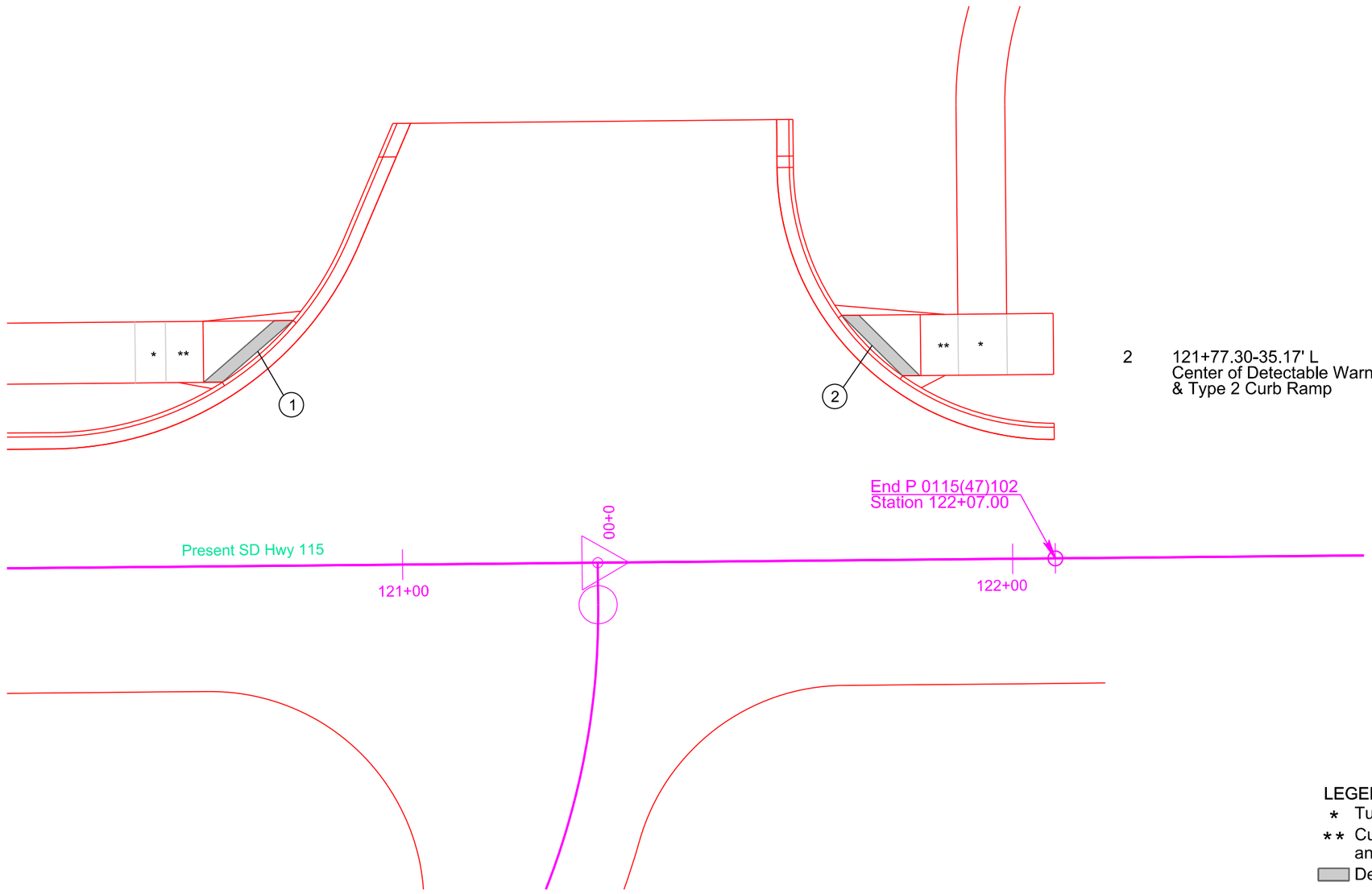

LEGEND:
- * Turning Space with 1.5% slope
- ** Curb Ramp with 7.5% slope and 1.5% cross slope
- Detectable Warning

Plot Scale - 1:20

Plotted From - TRSF12141

File - U:\rd\prj\minn025C\121cr.dgn

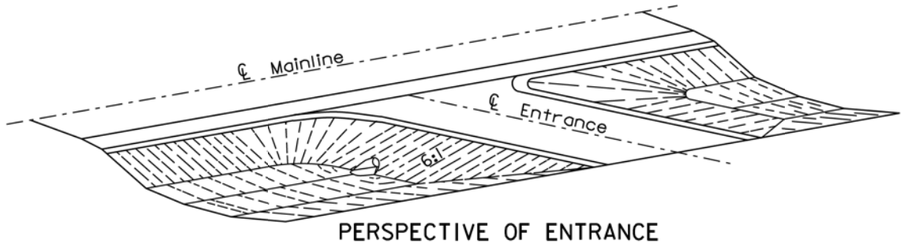

PERSPECTIVE OF ENTRANCE

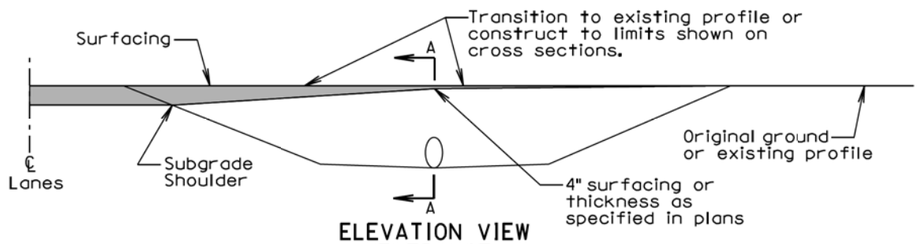

ELEVATION VIEW (ENTRANCE)

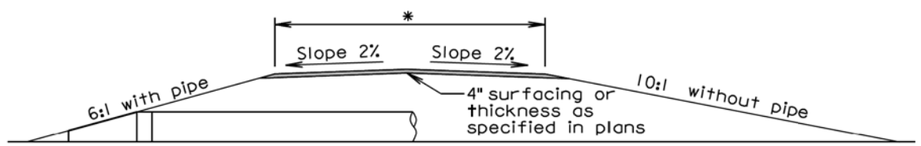

SECTION A-A (ENTRANCE)

*The finished surfacing width is stated elsewhere in the plans. The subgrade width is 4' wider than the finished surfacing width unless stated otherwise in the plans.

GENERAL NOTES:

The ditch section shown above in the perspective and elevation view is only for illustrative purposes.

A 6:1 inslope shall be constructed for an entrance when a pipe is required. A 10:1 inslope shall be constructed when a pipe is not required.

Pipe lengths shall be adjusted if necessary during construction to obtain the 6:1 slopes. For grading projects, the pipe lengths are estimated typically using a 4" thickness of surfacing directly over the subgrade above the pipe.

The transition area between the mainline inslope and the approach inslope for entrances shall be rounded to eliminate an abrupt transition.

The turning radii shall be 35' for intersecting roads and entrances unless stated otherwise in the plans.

September 6, 2013

Published Date: 4th Qtr. 2015	SDDOT	INTERSECTING ROADS AND ENTRANCES	PLATE NUMBER 120.01
			Sheet 1 of 2

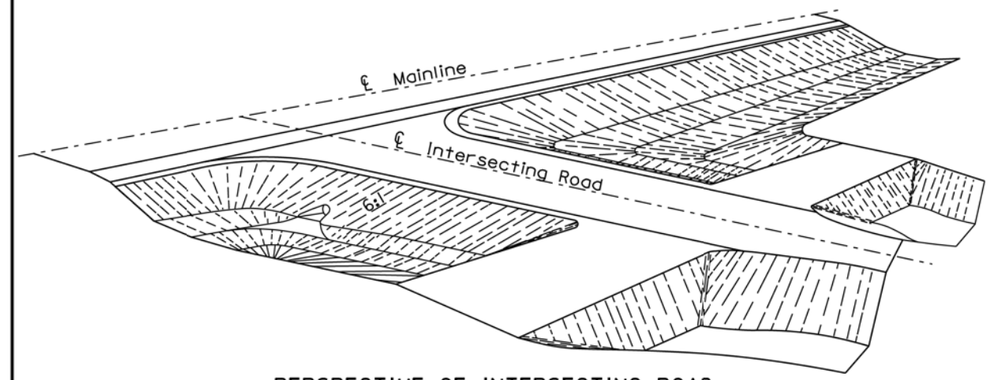

PERSPECTIVE OF INTERSECTING ROAD

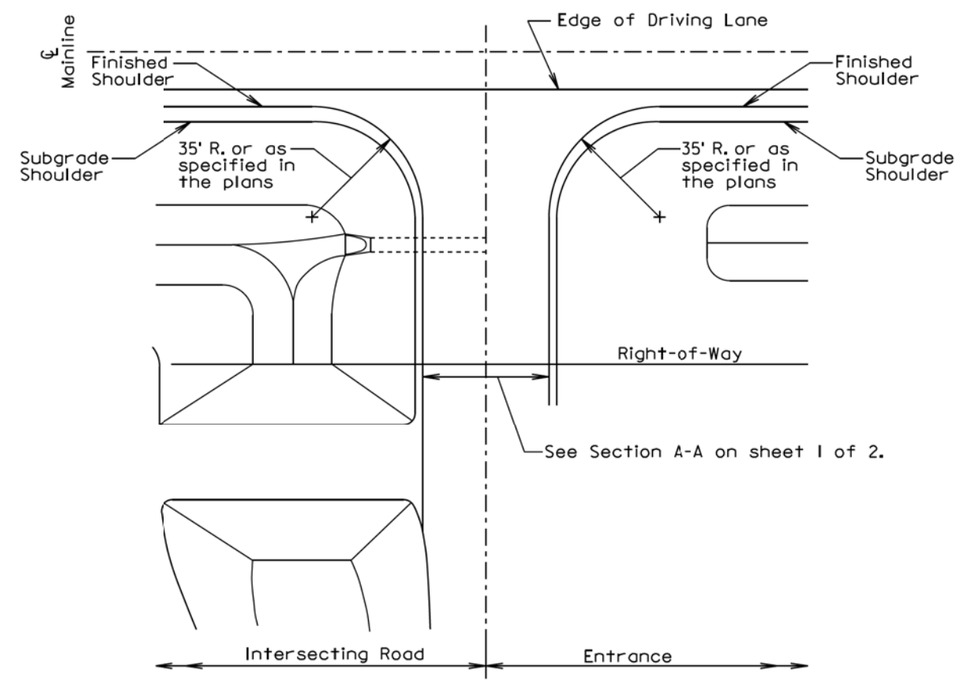

PLAN VIEW

September 6, 2013

Published Date: 4th Qtr. 2015	SDDOT	INTERSECTING ROADS AND ENTRANCES	PLATE NUMBER 120.01
			Sheet 2 of 2

Plot Scale - 1:200
- Plotted From - TRSF12141
File - ...\minn025C\s12001_1s12001_2.dgn

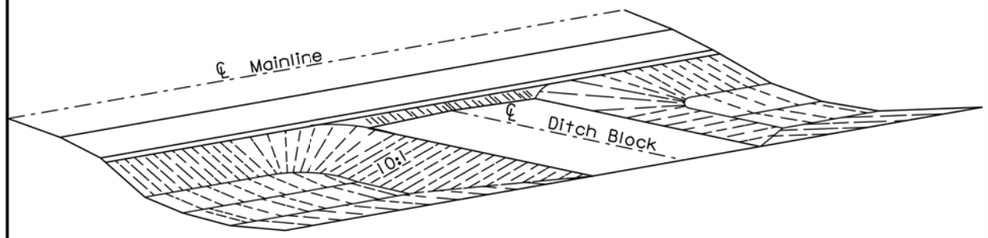

PERSPECTIVE OF DITCH BLOCK

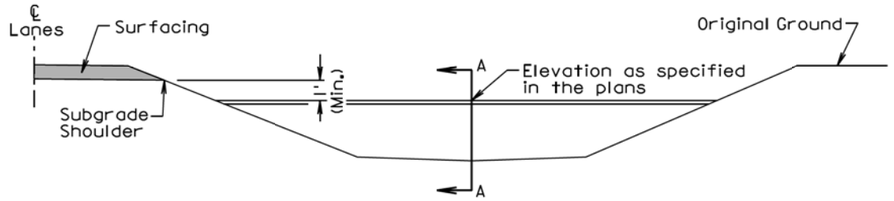

ELEVATION VIEW

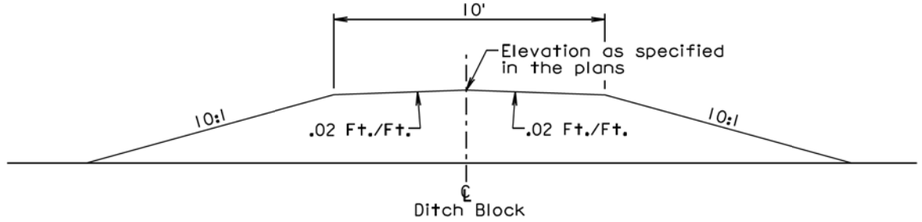

SECTION A-A

GENERAL NOTES:

The ditch section shown above in the perspective and elevation view is only for illustrative purposes.

The inslopes of the ditch block shall be 10:1 or as specified in the plans.

The transition area between the mainline inslope and the ditch block inslope shall be rounded to eliminate an abrupt transition.

February 14, 2011

Published Date: 4th Qtr. 2015	SDDOT	DITCH BLOCK	PLATE NUMBER 120.02
			Sheet 1 of 1

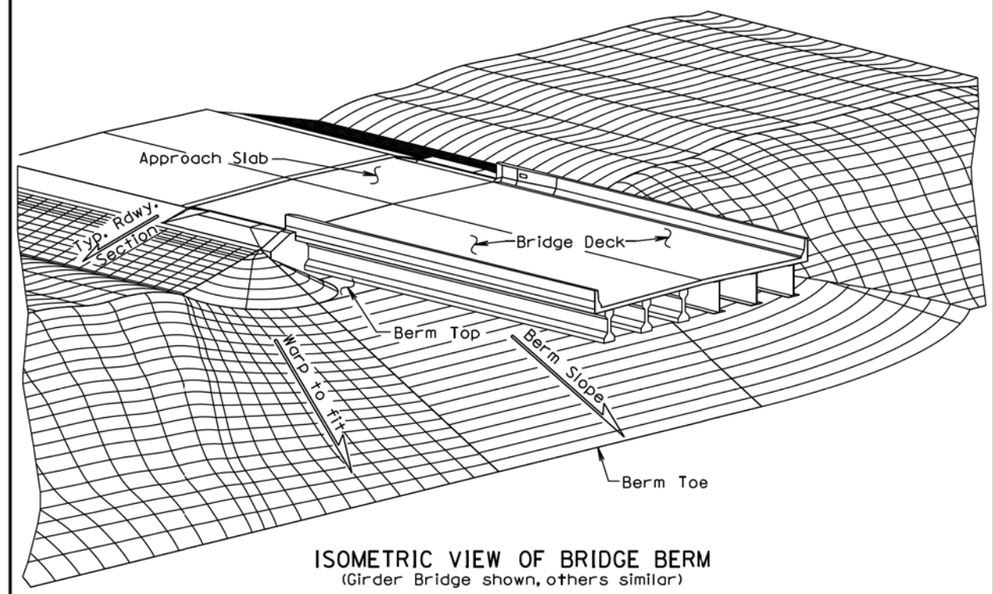

ISOMETRIC VIEW OF BRIDGE BERM
(Girder Bridge shown, others similar)

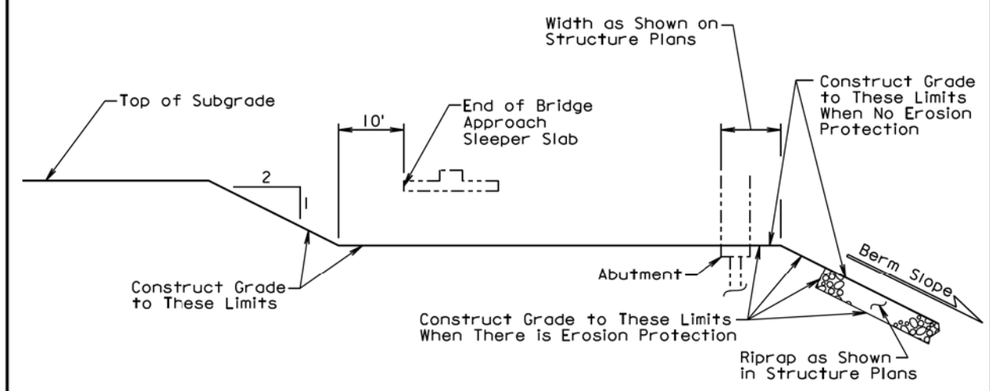

TYPICAL GRADING PROFILE AT BRIDGE BERM
(Normal to ℄ Abutment at ℄ Roadway)

GENERAL NOTE:

The bridge berm elevation and slope shall be as shown in the structure plans.

September 6, 2006

Published Date: 4th Qtr. 2015	SDDOT	BRIDGE BERM (NONPROJECTING EMBANKMENT)	PLATE NUMBER 120.10
			Sheet 1 of 1

Plot Scale - 1:200
- Plotted From - TRSF12141
File - ...\prj\minn025C\s12002s12010.dgn

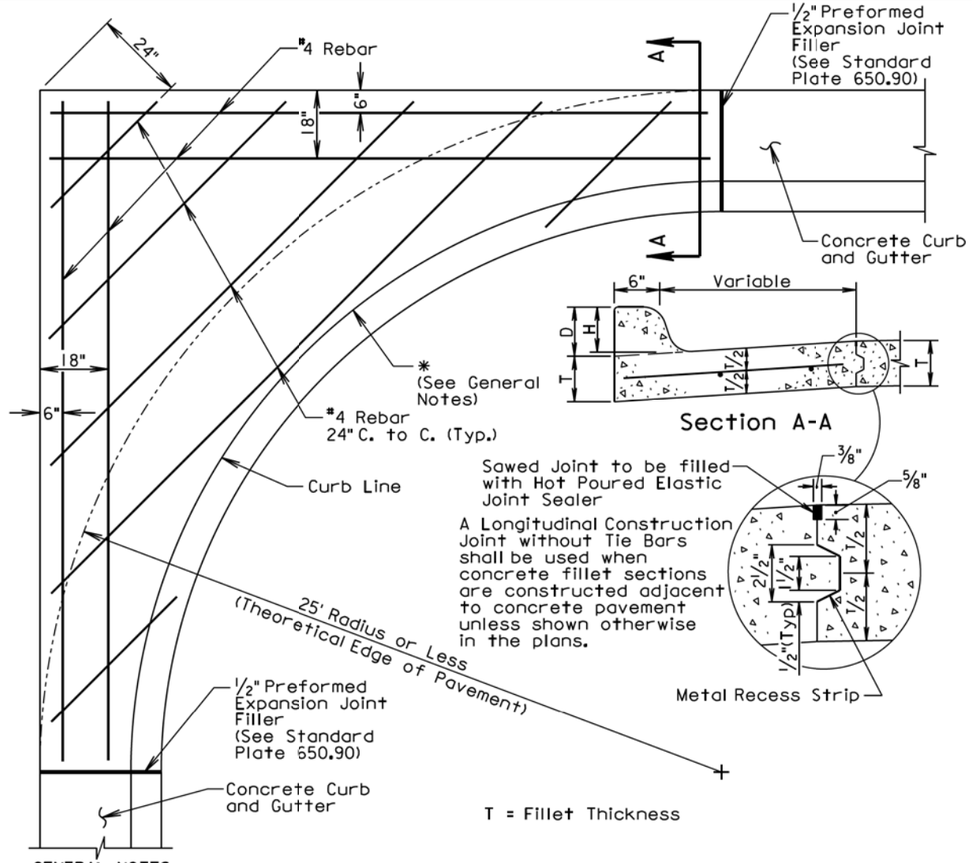

GENERAL NOTES:

* If a curb ramp is constructed adjacent to a PCC fillet section, the curb will need to be modified. Refer to the corresponding curb ramp standard plate or other special details in the plans for modification of the PCC fillet section.

Dimensions D, H, and T shall conform to those shown on the appropriate curb and gutter standard plate.

All rebar shall be in conformance with Sections 480 and 1010 of the Specifications. All rebar shall have a minimum of 3" clear cover.

Class M6 Concrete shall be used in construction of the fillets.

The concrete curb shall be monolithic with the concrete fillet. No separate payment for this curb will be made as the curb is considered a part of the fillet.

Joints shall be constructed at 10' intervals except when fillets are constructed adjacent to PCC Pavement. If there is adjacent PCC Pavement the joints shall be extended from edge of pavement through the fillet section as directed by the Engineer.

The cost for all materials, labor, and incidentals necessary to construct the PCC fillet section with curb and gutter shall be incidental to the contract unit price per square yard for the corresponding PCC fillet section bid item.

June 26, 2015

Published Date: 4th Qtr. 2015	SDDOT	PCC FILLET SECTION WITH TYPE B CURB AND GUTTER	PLATE NUMBER 380.16
			Sheet 1 of 1

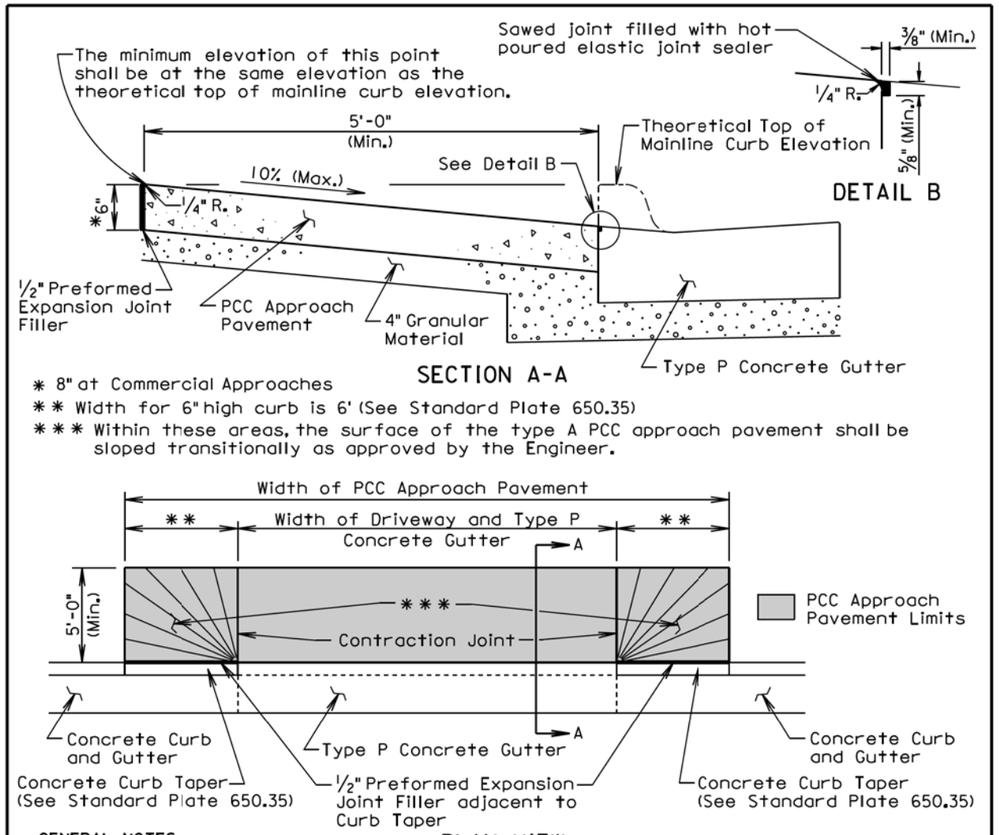

* 8" at Commercial Approaches

** Width for 6" high curb is 6' (See Standard Plate 650.35)

*** Within these areas, the surface of the type A PCC approach pavement shall be sloped transitionally as approved by the Engineer.

GENERAL NOTES:

The concrete for the type A PCC approach pavement and adjacent driveway shall comply with the requirements of the Specifications for class M6 concrete unless otherwise stated in the plans.

Contraction joints in the type A PCC approach pavement shall be 1 1/2 inches deep if formed in the fresh concrete using a suitable grooving tool. If a saw is used to cut the contraction joints, then the depth of the joint shall be at least 1/4 the thickness of the approach pavement. Additional contraction joints not shown in the Plan View shall be spaced as follows:

One joint at the center of the approach for driveways 16' to 24' wide.
Two joints spaced at equal intervals for driveways greater than 24' to 40' wide.

All costs for furnishing and placing the type A PCC approach pavement and constructing the expansion and contraction joints including labor, equipment, and materials including the earthen backfill shall be incidental to the contract unit price per square yard for the corresponding PCC Approach Pavement bid item.

All costs for excavation required for placing the type A PCC approach pavement and granular material shall be incidental to the contract unit price per cubic yard for "Unclassified Excavation". All costs for furnishing and placing the granular material shall be incidental to the contract unit price per ton for the corresponding granular material bid item.

June 26, 2015

Published Date: 4th Qtr. 2015	SDDOT	TYPE A PCC APPROACH PAVEMENT	PLATE NUMBER 380.40
			Sheet 1 of 1

Plot Scale - 1:200
- Plotted From - TRSF12141
File - ...\pp\mnn025Cts38016s38040.dgn

TOLERANCES IN DIMENSIONS

Diameter: ±1.5% for 24" Dia. or less and ±1% or 3/8" whichever is more for 27" Dia. or greater.
Diameters at joints: ± 3/16" for 30" Dia. or less and ± 1/4" for 36" or greater.
Length of joint (j): ± 1/4".
Wall thickness (T): not less than design T by more than 5% or 3/16", whichever is greater.
Laying length: shall not underrun by more than 1/2".

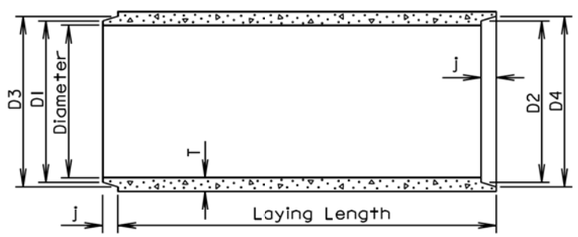

LONGITUDINAL SECTION

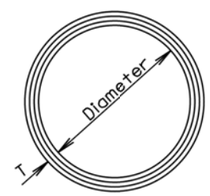

END VIEW

GENERAL NOTES:

Construction of R. C. P. shall conform to the requirements of Section 990 of the Specifications.

Not more than 2 four-foot sections shall be permitted near the ends of any culvert. Four-foot lengths shall be used only to secure the required length of culvert.

Diam. (in.)	Approx. Wt./Ft. (lb.)	T (in.)	J (in.)	D1 (in.)	D2 (in.)	D3 (in.)	D4 (in.)
12	92	2	1 3/4	13 1/4	13 5/8	13 7/8	14 1/4
15	127	2 1/4	2	16 1/2	16 7/8	17 1/4	17 5/8
18	168	2 1/2	2 1/4	19 5/8	20	20 3/8	20 3/4
21	214	2 3/4	2 1/2	22 7/8	23 1/4	23 3/4	24 1/8
24	265	3	2 3/4	26	26 3/8	27	27 3/8
27	322	3 1/4	3	29 1/4	29 5/8	30 1/4	30 5/8
30	384	3 1/2	3 1/4	32 3/8	32 3/4	33 1/2	33 7/8
36	524	4	3 3/4	38 3/4	39 1/4	40	40 1/2
42	685	4 1/2	4	45 1/8	45 5/8	46 1/2	47
48	867	5	4 1/2	51 1/2	52	53	53 1/2
54	1070	5 1/2	4 1/2	57 7/8	58 3/8	59 3/8	59 7/8
60	1296	6	5	64 1/4	64 3/4	66	66 1/2
66	1542	6 1/2	5 1/2	70 5/8	71 1/8	72 1/2	73
72	1810	7	6	77	77 1/2	79	79 1/2
78	2098	7 1/2	6 1/2	83 3/8	83 7/8	85 5/8	86 1/8
84	2410	8	7	89 3/4	90 1/4	92 1/8	92 5/8
90	2740	8 1/2	7	95 3/4	96 1/4	98 1/8	98 5/8
96	2950	9	7	102 1/8	102 5/8	104 1/2	105
102	3075	9 1/2	7 1/2	109	109 1/2	111 1/2	112
108	3870	10	7 1/2	115 1/2	116	118	118 1/2

June 26, 2015

Published Date: 4th Qtr. 2015

SDDOT

REINFORCED CONCRETE PIPE

PLATE NUMBER 450.01

Sheet 1 of 1

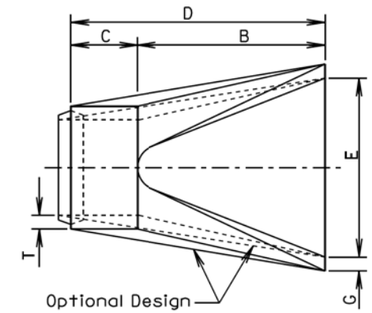

TOP VIEW

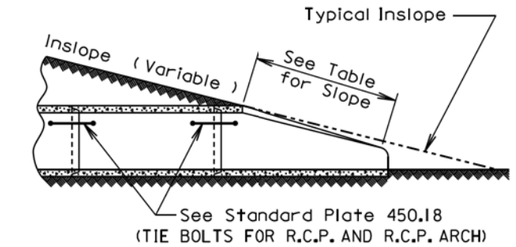

SLOPE DETAIL

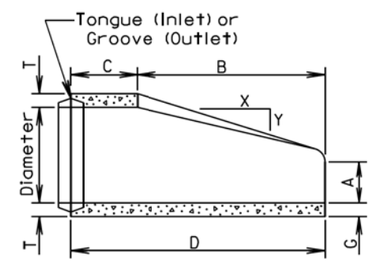

LONGITUDINAL SECTION

GENERAL NOTES:

Lengths of concrete pipe shown on plan sheets are between flared ends only.

Construction of R.C.P. Flared End shall conform to the requirements of Section 990 of the Specifications.

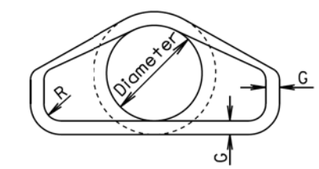

END VIEW

Dia. (in.)	Approx. Wt. of Section (lbs.)	Approx. Slope (X to Y)	T (in.)	A (in.)	B (in.)	C (in.)	D (in.)	E (in.)	G (in.)	R (in.)
12	530	2.4: 1	2	4	24	48 7/8	72 7/8	24	2	1 1/2
15	740	2.4: 1	2 1/4	6	27	46	73	30	2 1/4	1 1/2
18	990	2.3: 1	2 1/2	9	27	46	73	36	2 1/2	1 1/2
21	1280	2.4: 1	2 3/4	9	36	37 1/2	73 1/2	42	2 3/4	1 1/2
24	1520	2.5: 1	3	9 1/2	43 1/2	30	73 1/2	48	3	1 1/2
27	1930	2.5: 1	3 1/4	10 1/2	49 1/2	24	73 1/2	54	3 1/4	1 1/2
30	2190	2.5: 1	3 1/2	12	54	19 3/4	73 3/4	60	3 1/2	1 1/2
36	4100	2.5: 1	4	15	63	34 3/4	97 3/4	72	4	1 1/2
42	5380	2.5: 1	4 1/2	21	63	35	98	78	4 1/2	1 1/2
48	6550	2.5: 1	5	24	72	26	98	84	5	1 1/2
54	8240	2: 1	5 1/2	27	65	33 1/4	98 1/4	90	5 1/2	1 1/2
60	8730	1.9: 1	6	35	60	39	99	96	5	1 1/2
66	10710	1.7: 1	6 1/2	30	72	27	99	102	5 1/2	1 1/2
72	12520	1.8: 1	7	36	78	21	99	108	6	1 1/2
78	14770	1.8: 1	7 1/2	36	90	21	111	114	6 1/2	1 1/2
84	18160	1.6: 1	8	36	90 1/2	21	111 1/2	120	6 1/2	1 1/2
90	20900	1.5: 1	8 1/2	41	87 1/2	24	111 1/2	132	6 1/2	6

June 26, 2015

Published Date: 4th Qtr. 2015

SDDOT

R. C. P. FLARED ENDS

PLATE NUMBER 450.10

Sheet 1 of 1

Plot Scale - 1:200
Plotted From - TRSF12141
File - ...\prj\mlm025\cs450\1s450010.dgn

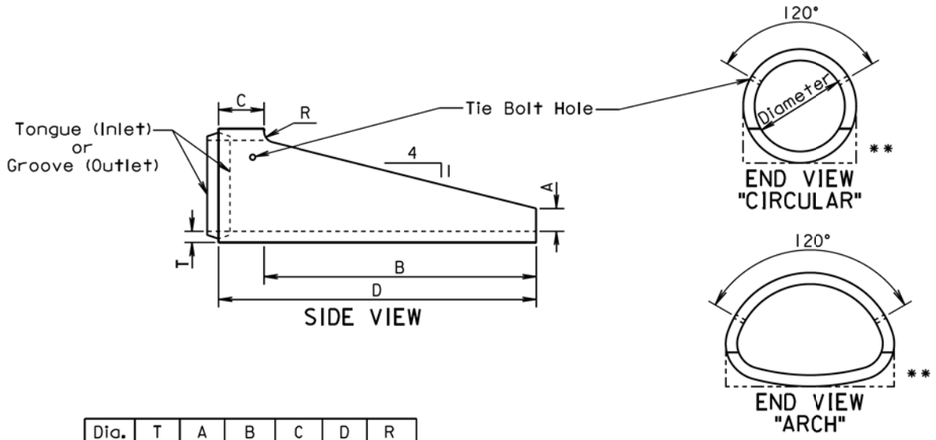

Dia. (in.)	T (in.)	A (in.)	B (in.)	C (in.)	D (in.)	R (in.)
FOR CIRCULAR PIPE						
24	3	6	72	12	84	3
30	3½	7½	90	12	102	3½
FOR ARCH PIPE						
* 24	3	6	48	12	60	3
* 30	3½	7½	60	12	72	3½
* 36	4½	8⅝	66	30	96	0
* 42	4½	10	77¼	18¾	96	0

ALTERNATE

Dia. (in.)	T (in.)	A (in.)	B (in.)	C (in.)	D (in.)	R (in.)
FOR CIRCULAR PIPE						
24	3	9	72	12	84	0
30	3½	11	90	12	102	0
FOR ARCH PIPE						
* 24	3	9	48	12	60	0
* 30	3½	11	60	12	72	0

* Equivalent Diameter of Circular R.C.P.

** Acceptable Flat Bottom Alternate.

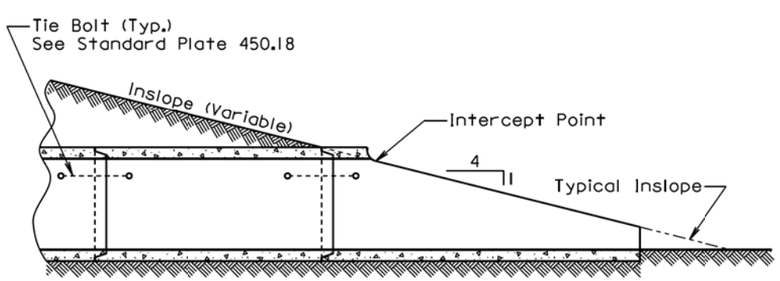

SECTION
(Along Centerline of Pipe)

GENERAL NOTE:

The length of concrete pipe shown in the construction plans is between sloped ends.

September 22, 2006

Published Date: 4th Qtr. 2015	SDDOT	R. C. P. SLOPED ENDS	PLATE NUMBER 450.13
			Sheet 1 of 1

Wall "t" (in.)	Rod Dia. (in.)	Pipe Sleeve Dia. (nominal)
≤ 3¼	⅝	¾
3½-6½	¾	1
≥ 7	1	1¼

GENERAL NOTES:

Tie bolts shall conform to ASTM F1554 Grade 36 or ASTM A36. Nuts shall be heavy hex conforming to ASTM A563. Washers shall conform to ASTM F436.

Pipe Sleeve shall conform to ASTM A500 or A53, Grade B.

Galvanize adjustible eye bolt tie assembly in accordance with ASTM A153.

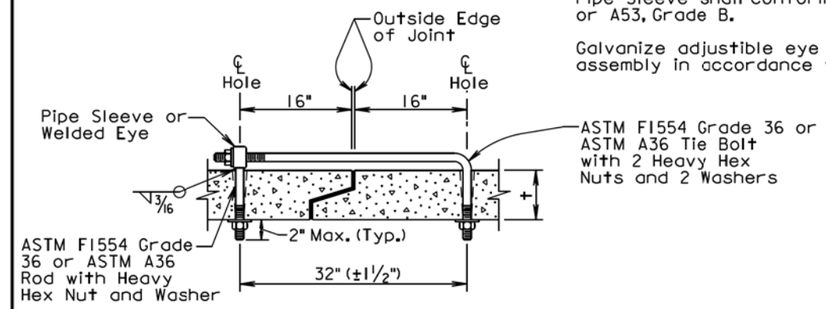

ADJUSTABLE EYE BOLT TIE

Pipe Dia. (in.)	"L" (in.)	Bolt Dia. (in.)
≤ 48	4	¾
> 48	6	1

GENERAL NOTES:

Angles shall conform to ASTM A36.

Bolts shall conform to ASTM A307. Nuts shall be heavy hex conforming to ASTM A563. Washers shall conform to ASTM F436.

Galvanize angles, bolts, nuts, and washers in accordance with ASTM A153.

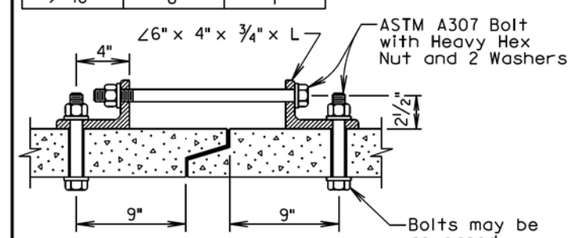

ANGLE AND BOLT TIE

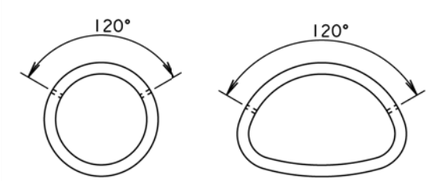

END VIEW
"CIRCULAR"

END VIEW
"ARCH"

GENERAL NOTES:

In lieu of the tie bolts detailed above other types of tie bolt connections may be installed as approved by the Office of Bridge Design.

All pipe sections of R.C.P. and R.C.P. Arch shall be tied with tie bolts except for pipe located between drop inlets, manholes, and junction boxes. All pipe sections of pipes that only enter or exit drop inlets, manhole, and junction boxes shall be tied with tie bolts.

There will be no separate measurement or payment for the tie bolts. The cost for furnishing and installing the tie bolts shall be incidental to the contract unit price per foot for the corresponding bid item for R.C.P. or R.C.P. Arch.

February 28, 2013

Published Date: 4th Qtr. 2015	SDDOT	TIE BOLTS FOR R.C.P. AND R.C.P. ARCH	PLATE NUMBER 450.18
			Sheet 1 of 1

Plot Scale - 1:200

- Plotted From - TRSF12141

File - ...\prj\mlmn025Cls450130s450180.dgn

	2⅔" x ½" CORRUGATIONS			3" X 1" CORRUGATIONS		
* Dia. (in.)	S Span (in.)	H Rise (in.)	Area (Sq. Ft.)	S Span (in.)	H Rise (in.)	Area (Sq. Ft.)
15	17	13	1.1			
18	21	15	1.6			
21	24	18	2.2			
24	28	20	2.8			
30	35	24	4.4			
36	42	29	6.4	40	31	7.0
42	49	33	8.7	46	36	9.4
48	57	38	11.4	53	41	12.3
54	64	43	14.3	60	46	15.6
60	71	47	17.6	66	51	19.3
66	77	52	21.3	73	55	23.2
72	83	57	25.3	81	59	27.4
78				87	63	32.1
84				95	67	37.0
90				103	71	42.4
96				112	75	48.0
102				117	79	54.2
108				128	83	60.8
114				137	87	67.4
120				142	91	74.5

* Equivalent diameter of circular C.M.P.

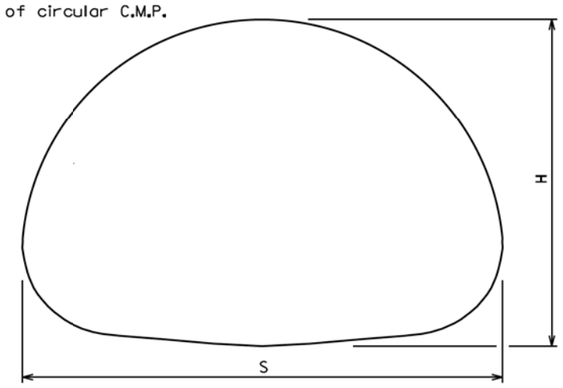

GENERAL NOTE:
All dimensions measured from inside crest.

March 31, 2000

Published Date: 4th Qtr. 2015

SDDOT

CORRUGATED METAL PIPE ARCH CULVERT

PLATE NUMBER 450.30

Sheet 1 of 1

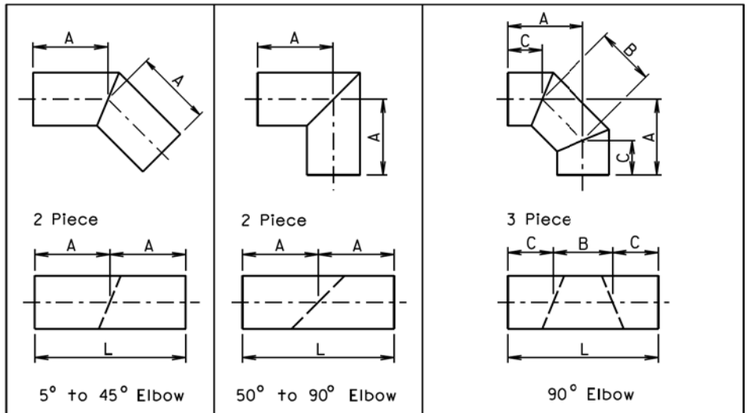

Diameter	A	L	Diameter	A	L	Diameter	A	B	C	L
Inches	Feet	Feet	Inches	Feet	Feet	Inches	Inches			Feet
12	1	2	12	2	4	12	25½	11	18½	4
15	1	2	15	2	4	15	26½	12	18	4
18	1	2	18	2	4	18	27	14	17	4
21	2	4	21	2	4	21	27	15	16½	4
24	2	4	24	2	4	24	27½	16	16	4
27	2	4	27	2	4	27	27½	17	15½	4
30	2	4	30	3	6	30	40	19	26½	6
33	2	4	33	3	6	33	40	20	26	6
36	2	4	36	3	6	36	40½	21	25½	6
42	2	4	42	3	6	42	41	23	24½	6
48	2	4	48	4	8	48	53½	26	35	8
54	3	6	54	4	8	54	54	28	34	8
60	3	6	60	4	8	60	54½	31	32½	8
66	3	6	66	4	8	66	54	33	31½	8
72	3	6	72	5	10	72	67½	36	42	10
78	3	6	78	5	10	78	68	39	40½	10
84	3	6	84	5	10	84	68½	41	39½	10
90	3	6	90	6	12	90	70	46	37	10
96	3	6	96	6	12	96	82	46	49	12

FABRICATED ELBOW LENGTHS FOR ALL CORRUGATIONS

GENERAL NOTES:
All dimensions shown are nominal.
L = Linear Feet of C.M.P. required to fabricate fitting.

June 26, 2001

Published Date: 4th Qtr. 2015

SDDOT

C.M.P. FABRICATED LENGTHS FOR ELBOWS

PLATE NUMBER 450.32

Sheet 1 of 1

Plot Scale - 1:200
- Plotted From - TRSF12141
File - ...\prj\minn025C\s45030s45032.dgn

Alternate Type Connector Sections may be used with approval of the Engineer.

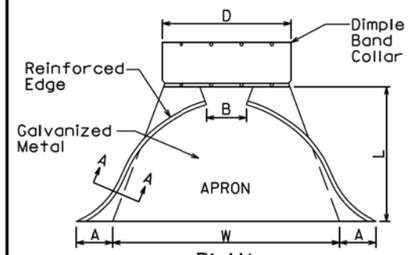

PLAN

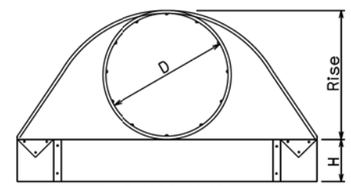

ELEVATION

Dia. D (in.)	Ga.	DIMENSIONS (in.) A	B	H	L	W	Approx. Slope	Body
12	16	6	6	6	21	24	2½:1	1 Pc.
15	16	7	8	6	26	30	2½:1	1 Pc.
18	16	8	10	6	31	36	2½:1	1 Pc.
21	16	9	12	6	36	42	2½:1	1 Pc.
24	16	10	13	6	41	48	2½:1	1 Pc.
30	14	12	16	8	46	60	2½:1	1 Pc.
36	14	14	19	9	51	72	2½:1	2 Pc.
42	12	16	22	11	60	84	2½:1	2 Pc.
48	12	18	27	12	69	90	2¼:1	2 Pc.
54	12	18	30	12	78	102	2:1	3 Pc.
60	12	18	33	12	84	114	1¾:1	3 Pc.
66	12	18	36	12	87	120	1½:1	3 Pc.
72	12	18	39	12	87	126	1⅓:1	3 Pc.
78	12	18	42	12	87	132	1¼:1	3 Pc.
84	12	18	45	12	87	138	1⅙:1	3 Pc.

STANDARD CONNECTIONS

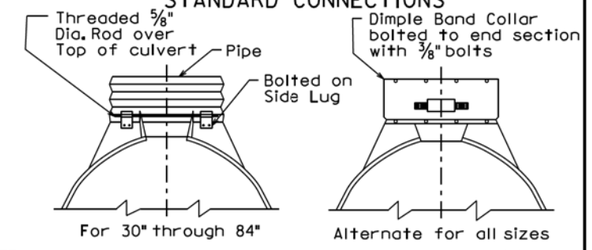

For 30" through 84"

Alternate for all sizes

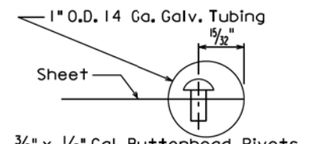

⅜" x ½" Gal. Buttonhead Rivets spaced 6" C. to C. Overall length of rivets=0.78"

TUBING ATTACHMENT DETAILS
SECTION A-A

NOTE:
Tubing is slipped over the sheet and rivets or lugs prior to forming operations of the apron.

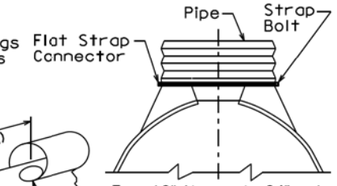

For 12" through 24" only

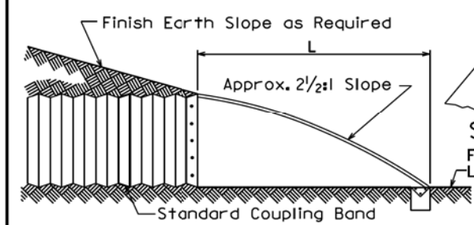

TYPICAL CROSS-SECTION

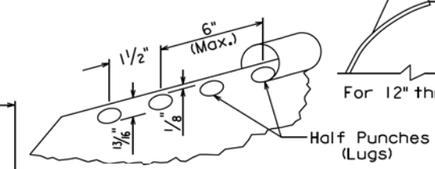

SECTION A-A (alternate)

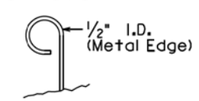

SECTION A-A (alternate)

GENERAL NOTES:

All 3 pc. bodies shall have 12 Ga. sides and 10 Ga. center panels. Width of center panels shall be greater than 20% of the pipe periphery. Multiple panel bodies to have lap seams tightly joined by ⅜" Dia. galvanized rivets or bolts.

For 60" through 84" sizes, reinforced edges shall be supplemented with galvanized stiffener angles. The angles will be 2" x 2" x ¼" for 60" through 72" diameters and 2½" x 2½" x ¼" for 78" and 84" diameters. The angles shall be attached by ⅜" diameter galvanized nuts and bolts.

Rivets and Bolts shall be ⅜" Dia. Min. for 10 Ga. and 12 Ga. sheet, and 5/16" Dia. Min. for 14 Ga. and 16 Ga. sheets. Tighten nuts with torque wrench to 25 lbs. torque.

March 31, 2000

Published Date: 4th Qtr. 2015	SDDOT	C.M.P. FLARED ENDS	PLATE NUMBER 450.35
			Sheet 1 of 1

Plot Scale - 1:200
- Plotted From - TRSF12141
File - ...\prj\minn025C\sblanks45035.dgn

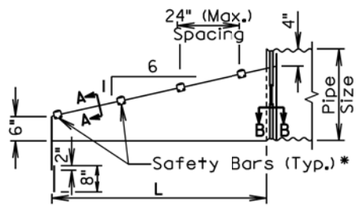

ELEVATION VIEW

*Number of bars required will vary depending on the length of the end section.

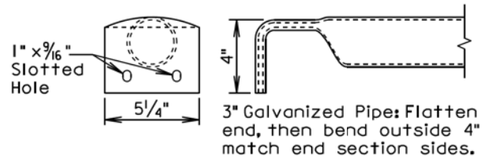

DETAIL OF SAFETY BARS

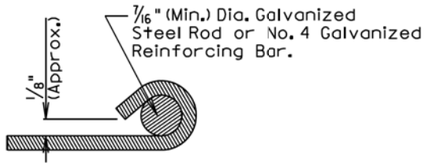

SECTION A-A

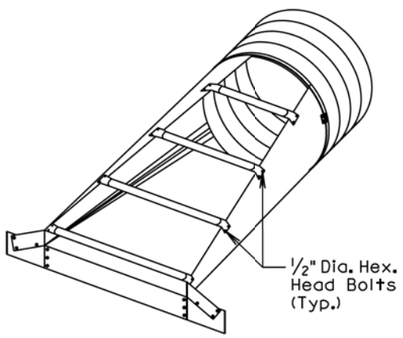

ISOMETRIC VIEW

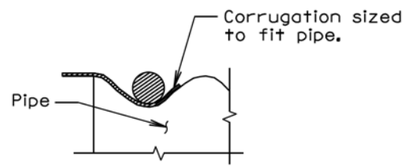

SECTION B-B

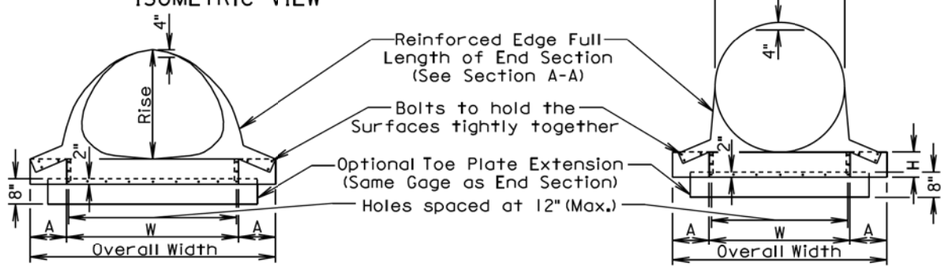

FRONT VIEW

FRONT VIEW

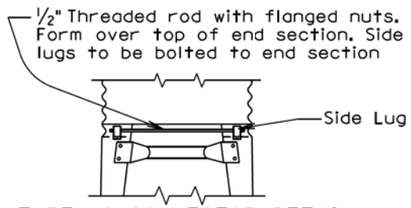

TYPE #2 CONNECTOR DETAIL
(For 30" and Larger)
(For 21" X 15" and Larger)

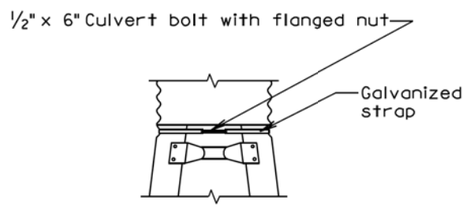

TYPE #1 CONNECTOR DETAIL
(For 15" Through 24")

June 26, 2015

Published Date: 4th Qtr. 2015	SDDOT	C. M. P. SAFETY ENDS	PLATE NUMBER 450.38
			Sheet 1 of 2

ARCH C.M.P. SAFETY ENDS										
Equv. Dia. (Inch)	(Inches)		Min. Thick.		Dimensions (Inches)				L Dimensions	
	Span	Rise	Inch	Gage	A	H	W	Overall Width	Slope	Length (Inch)
18	21	15	.064	16	8	6	27	43	6:1	30
21	24	18	.064	16	8	6	30	46	6:1	48
24	28	20	.064	16	8	6	34	50	6:1	60
30	35	24	.079	14	12	9	41	65	6:1	84
36	42	29	.109	12	12	9	48	72	6:1	114
42	49	33	.109	12	16	12	55	87	6:1	138
48	57	38	.109	12	16	12	63	95	6:1	168
54	64	43	.109	12	16	12	70	102	6:1	198
60	71	47	.109	12	16	12	77	109	6:1	222
72	83	57	.109	12	16	12	89	121	6:1	282

CIRCULAR C.M.P. SAFETY ENDS								
Pipe Dia. (Inch)	Min. Thick.		Dimensions (Inches)				L Dimensions	
	Inch	Gage	A	H	W	Overall Width	Slope	Length (Inch)
15	.064	16	8	6	21	37	6:1	30
18	.064	16	8	6	24	40	6:1	48
21	.064	16	8	6	27	43	6:1	66
24	.064	16	8	6	30	46	6:1	84
30	.109	12	12	9	36	60	6:1	120
36	.109	12	12	9	42	66	6:1	156
42	.109	12	16	12	48	80	6:1	192
48	.109	12	16	12	54	86	6:1	228
54	.109	12	16	12	60	92	6:1	264
60	.109	12	16	12	66	98	6:1	300

GENERAL NOTES:

Safety ends shall be fabricated from galvanized steel conforming to the requirements of the Specifications.

Safety bars shall be fabricated from steel schedule 40 pipe in conformance with ASTM A53, grade B or HSS 3.5X.216 in conformance with ASTM A500, grade B.

Slotted holes for safety bar attachment shall be provided for all end sections.

Attachment to circular pipes 15" through 24" diameter shall be made with Type #1 straps. All other sizes shall be attached with Type #2 rods and lugs.

When stated in the plans, optional toe plate extension shall be punched and bolted to end section apron lip with 3/8" diameter galvanized bolts. Steel for toe plate extension shall be same gauge as end section. Dimensions shall be overall width less 6" by 8" high.

Installation shall be performed in accordance with the Specifications.

Cost of all work and materials required for fabrication and installation of safety ends shall be incidental to the bid items for the various sizes of safety ends.

June 26, 2015

Published Date: 4th Qtr. 2015	SDDOT	C. M. P. SAFETY ENDS	PLATE NUMBER 450.38
			Sheet 2 of 2

Plot Scale - 1:200
Plotted From - TRSF12141
File - ...\s45038_01s45038_02.dgn

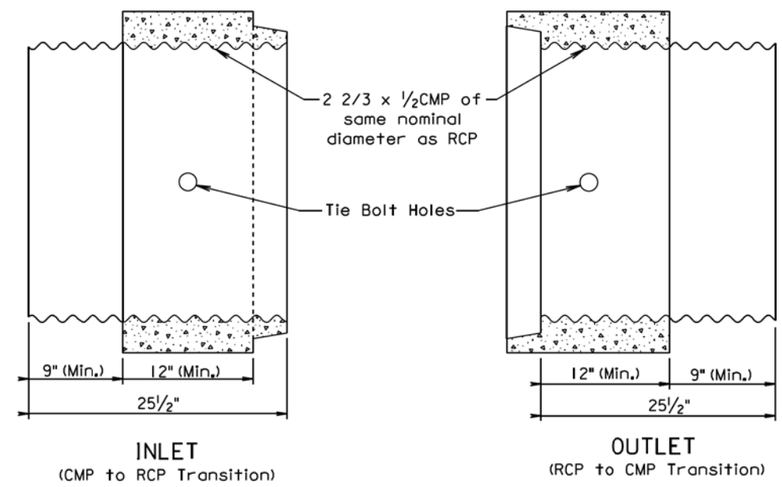

GENERAL NOTE:

Arch pipe transitions shall be fabricated similar to the round transition shown above.

March 31, 2000

Published Date: 4th Qtr. 2015	SDDOT	C.M.P. TO R.C.P. TRANSITION AND R.C.P. TO C.M.P. TRANSITION	PLATE NUMBER 450.50
			Sheet 1 of 1

Plot Scale - 1:200

- Plotted From - TRSF12141

File - ...\prj\mim025C\sdblanks45050.dgn

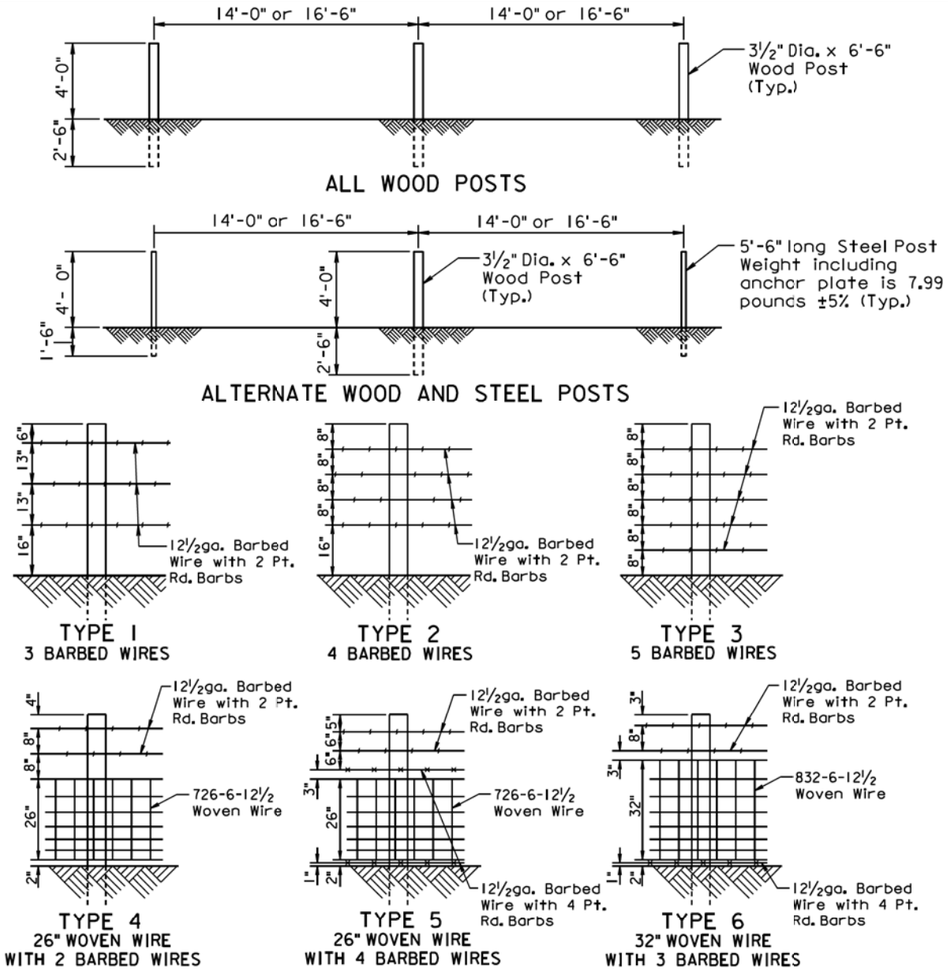

ALL WOOD POSTS

ALTERNATE WOOD AND STEEL POSTS

TYPE 1
3 BARBED WIRES

TYPE 2
4 BARBED WIRES

TYPE 3
5 BARBED WIRES

TYPE 4
26" WOVEN WIRE
WITH 2 BARBED WIRES

TYPE 5
26" WOVEN WIRE
WITH 4 BARBED WIRES

TYPE 6
32" WOVEN WIRE
WITH 3 BARBED WIRES

TYPE OF FENCE		LINE POST SPACING	BARBED WIRE		WOVEN WIRE
TYPE	DESCRIPTION		WIRE GAGE	NUMBER AND SHAPE OF BARBS	STYLE OR DESIGN NO.
1	3 Barbed Wires	16'-6"	12½	2 Point Round	—
2	4 Barbed Wires	16'-6"	12½	2 Point Round	—
3	5 Barbed Wires	16'-6"	12½	2 Point Round	—
4	26" Woven Wire with 2 Barbed Wires	14'-0"	12½	2 Point Round	726-6-12½
5	26" Woven Wire with 4 Barbed Wires	14'-0"	12½	2 wires with 2 Pt. Rd. 2 wires with 4 Pt. Rd.	726-6-12½
6	32" Woven Wire with 3 Barbed Wires	14'-0"	12½	2 wires with 2 Pt. Rd. 1 wire with 4 Pt. Rd.	832-6-12½

GENERAL NOTES:

Fence types designated on the plans that are followed by the letter S shall have smooth (barbless) wires.

When type 5S or 6S is designated the bottom wire may be barbed, smooth, or left off.

All degrees of curvature stated for fence are at centerline of roadway.

September 14, 2009

Published Date: 4th Qtr. 2015

SDDOT

RIGHT-OF-WAY FENCE

PLATE NUMBER 620.01

Sheet 1 of 1

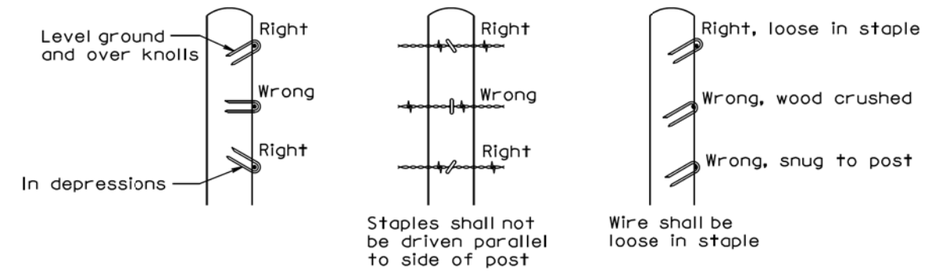

STAPLE INSTALLATION

GENERAL NOTES:

The Right-of-Way fence shall consist of barbed wire or a combination of woven wire and barbed wire. The barbed wire and/or woven wire shall be fastened to all wood posts or fastened to alternating wood and steel posts. Only wood posts shall be used for brace panels. Gates shall be of the type designated in the plans or as otherwise directed by the Engineer. Fence shall be constructed conforming to the details on the standard plates and in the plans unless otherwise directed by the Engineer.

Right-of-Way fence on Interstate Projects shall be constructed one foot within the Interstate Right-of-Way lines except at bridge openings, cattle passes, and as otherwise directed by the Engineer.

Right-of-Way fence other than on Interstate Projects shall be constructed within one foot of the Right-of-Way on the Landowner's side except at bridge openings, cattle passes, and as otherwise directed by the Engineer.

Barbs shall be fabricated from zinc coated 14 ga. wire. Two point barbs shall be wrapped twice around one main strand at 4" spacings and the four point barbs shall be interlocked and wrapped around both main strands at 5" spacings.

The gages of wire and wood post lengths and sizes are the minimum acceptable unless otherwise specified in the plans. The tolerances for steel posts shall be as stated in AASHTO M281. Woven wire shall conform to design and specifications of ASTM A116 and barbed wire shall conform to ASTM A121.

December 23, 2004

Published Date: 4th Qtr. 2015

SDDOT

STAPLE INSTALLATION AND GENERAL RIGHT-OF-WAY FENCE NOTES

PLATE NUMBER 620.02

Sheet 1 of 1

Plot Scale - 1:200
- Plotted From - TRSF12141
File - ...\prj\minn025C\s62001s62002.dgn

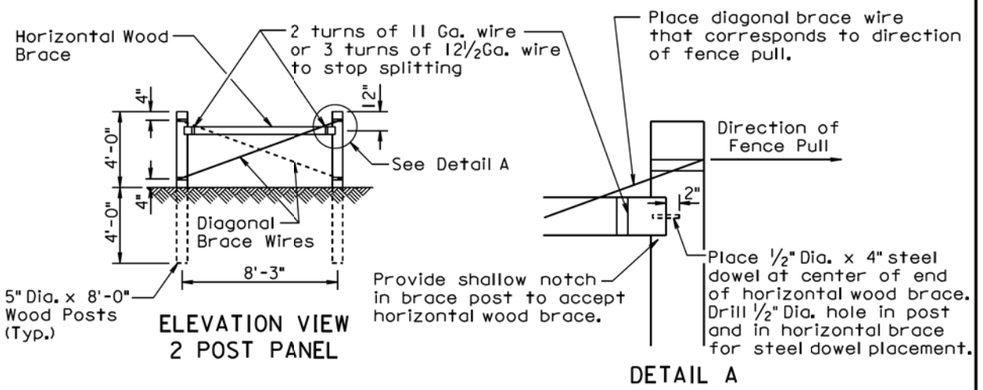

ELEVATION VIEW
2 POST PANEL

DETAIL A

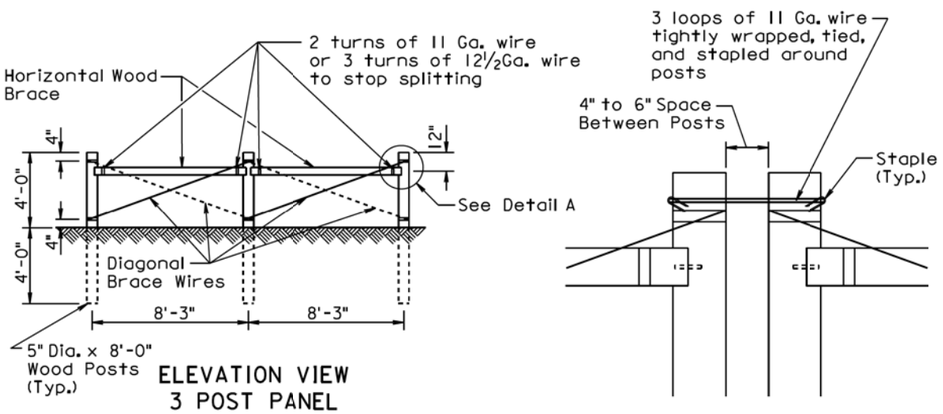

ELEVATION VIEW
3 POST PANEL

DETAIL B

GENERAL NOTES:

Two Post Panels shall be installed at least every 1320' between corners.

Two Post Panels shall be installed at any sharp vertical angle crest points and as directed by the Engineer.

Horizontal wood braces shall consist of 4" dia. x 8' wood posts or rough 4" x 4" x 8' timbers.

Diagonal brace wires shall be fabricated with 4 strands of 9 Ga. galvanized wire twisted tight. The diagonal brace wires shall be installed in accordance with the direction of the fence pull. Two diagonal brace wires are required if fence pull is in both directions.

December 23, 2004

Published Date: 4th Qtr. 2015	SDDOT	BRACE PANELS AND APPLICATIONS OF BRACE PANELS	PLATE NUMBER 620.03
			Sheet 1 of 3

SPACING OF 2 POST PANELS WITHIN CURVES	
DEGREE OF CURVE	SPACING OF 2 POST PANEL
less than 3°15'	** 1320'
3°15' and greater	**At P.C., P.T., and at every 1320' between P.C. and P.T.

GENERAL NOTE:

All degrees of curvature stated for fence are at centerline of roadway.

* If fence length is less than 600' to next corner use a 2 post panel.
If fence length is greater than 600' to next corner use a 3 post panel.

** Fence lengths greater than 1320' and less than 2640' place 2 Post Panel approximately at midpoint.

① See Detail B on Sheet 1 of 3.

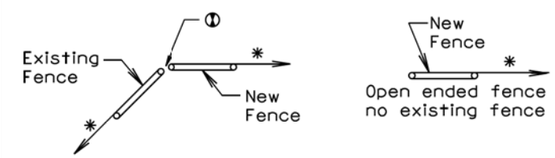

BEGIN OR END FENCE
(where new fence ties into existing fence)

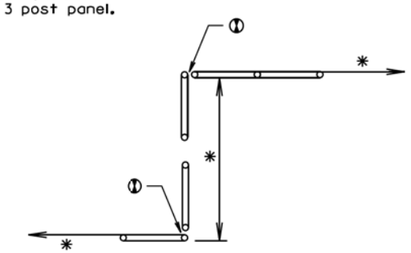

SHORT JOGS IN FENCE

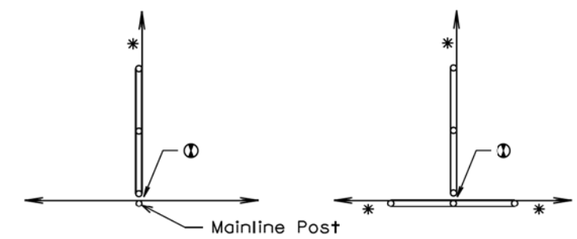

CROSS FENCE

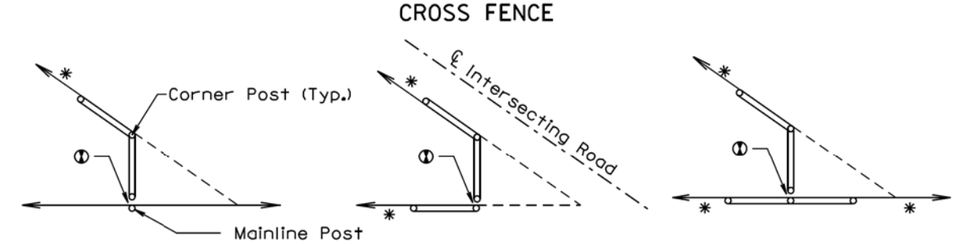

SHARP ANGLES IN CROSS FENCE

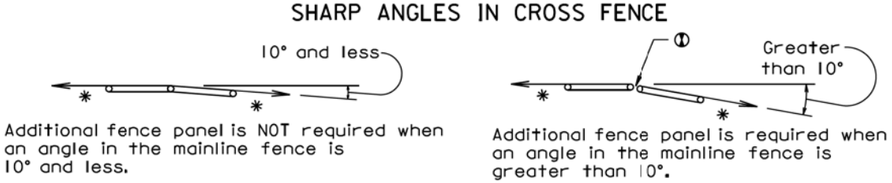

Additional fence panel is NOT required when an angle in the mainline fence is 10° and less.

Additional fence panel is required when an angle in the mainline fence is greater than 10°.

ANGLES IN MAINLINE FENCE

December 23, 2004

Published Date: 4th Qtr. 2015	SDDOT	BRACE PANELS AND APPLICATIONS OF BRACE PANELS	PLATE NUMBER 620.03
			Sheet 2 of 3

Plot Scale - 1:200
Plotted From - TRSF12141
File - ...\s62003_01s62003_02.dgn

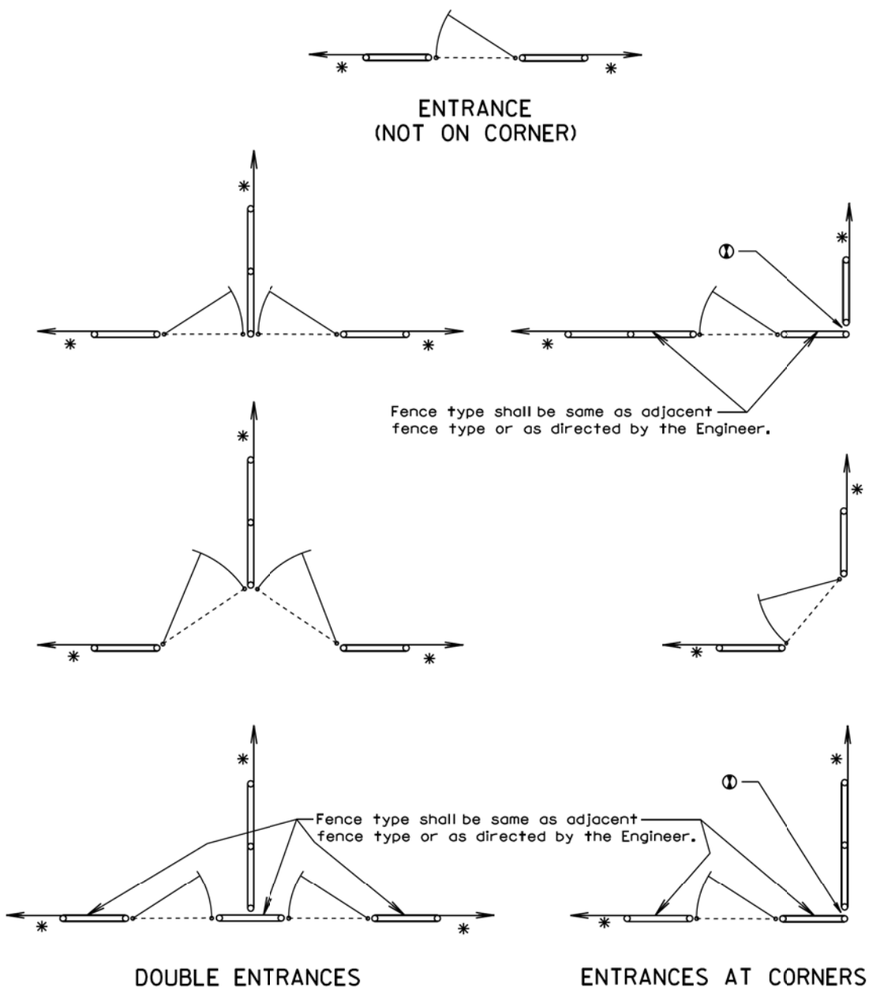

GATES

* If fence length is less than 600' to next corner use a 2 post panel.
If fence length is greater than 600' to next corner use a 3 post panel.

① See Detail B on Sheet 1 of 3.

December 23, 2004

Published Date: 4th Qtr. 2015	SDDOT	BRACE PANELS AND APPLICATIONS OF BRACE PANELS	PLATE NUMBER 620.03
			Sheet 3 of 3

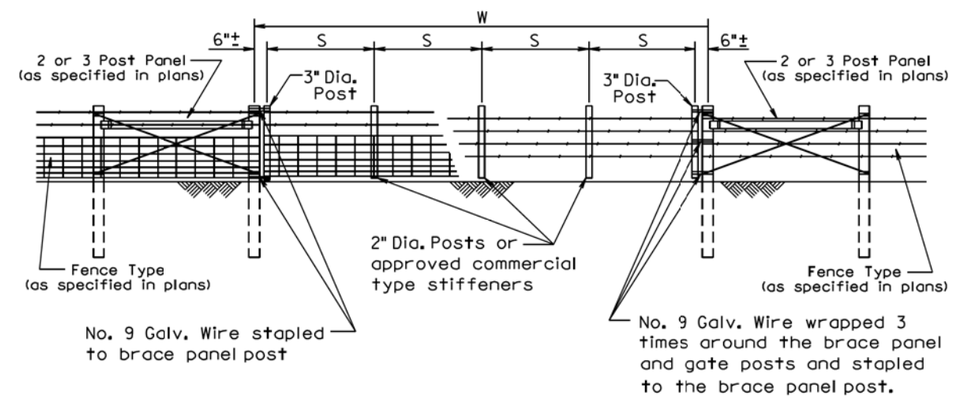

W Gate Width (ft.)	S Post Spacing
16	3 @ 5'-0" ±
20	4 @ 4'-9" ±
24	4 @ 5'-9" ±
30	5 @ 5'-10" ±
40	6 @ 6'-6" ±

GENERAL NOTES:

Creosote treatment of the gate posts will not be accepted.

The type of fencing in the gate shall be of the same type as specified for the adjacent Right-of-Way fence.

All costs for furnishing and constructing the wire gate(s) shall be incidental to the contract unit price per Ft for the respective Right-of-Way fence bid item.

March 31, 2000

Published Date: 4th Qtr. 2015	SDDOT	WIRE GATES	PLATE NUMBER 620.20
			Sheet 1 of 1

Plot Scale - 1:200
- Plotted From - TRSF12141
File - ...\minn025C\s62003_03s62020.dgn

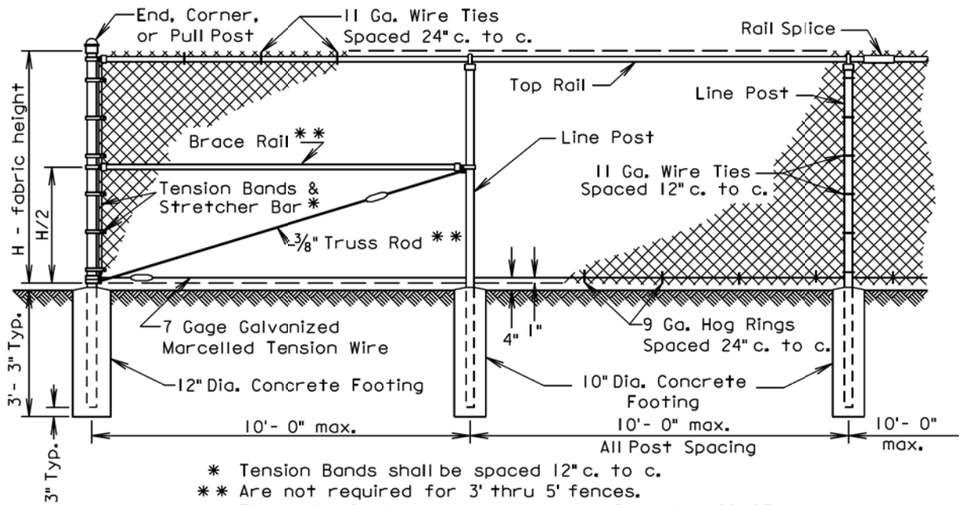

* Tension Bands shall be spaced 12" c. to c.
** Are not required for 3' thru 5' fences.
⬭ Tightening Device such as shown on Plate No. 621.03

Component	End, Corner & Pull Post		Line Post			Top & Brace Rail	
Type of Fabrication	Round Pipe Nominal	Roll Formed Steel	Round Pipe Nominal	"C" Section	H-Beam Steel	Round Pipe Nominal	Roll Formed Steel
Size	3.00" O. D.	3.5" x 3.5"	2.50" O. D.	1.875"x1.625"	2.25"x1.70"	1.625" O. D.	1.625"x1.25"
Weight (lb. / ft.)	5.79 or 4.64	5.14	3.65 or 3.12	2.34	3.43	2.27 or 1.84	1.35

GENERAL NOTES:

Specific details of manufacture of component parts of the complete fence construction shall be subject to the approval of the Engineer. Commercially available items produced specifically for the use intended shall be used wherever possible in the construction of the fence.

"H" (Height of Fabric) shall be as shown on the Plans. Fabric is available in the the following heights: 36", 42", 48", 60", 72", 84", 96", 108", 120", & 144". Fabric heights 60 inches and under shall be knuckled at both selvages. Fabric heights 72 inches and over shall be knuckled at one selvage and twisted at the other selvage.

Chain Link Fabric shall be 2" mesh, No. 9 gage galvanized wire securely fastened to Tension Wire, Line Post, Rails, Braces and Stretcher Bars spaced as shown hereon.

Fence may be constructed with either Round Pipe, "C" Section, "H" Beam, or roll Formed Steel components as shown in the table above. Line post may be Round Pipe, "C" Section, or "H" Beam. The Corner Post and Rails shall be either Round Pipe or Roll Formec Steel. The type of components used shall have prior approval by the Engineer before construction.

Where fence must cross small bodies of water (such as drainage areas or ponds) that could freeze during the winter, use 11 gage Hog Rings. Provide only two ties per Tension Wire and Top Rail between line posts.

A suitable method of rail splicing shall be used to allow for expansion and contraction while maintaining proper position of the Top Rail.

March 31, 2000

Published Date: 4th Qtr. 2015	SDDOT	CHAIN LINK FENCE WITH TOP RAIL	PLATE NUMBER 621.01
			Sheet 1 of 1

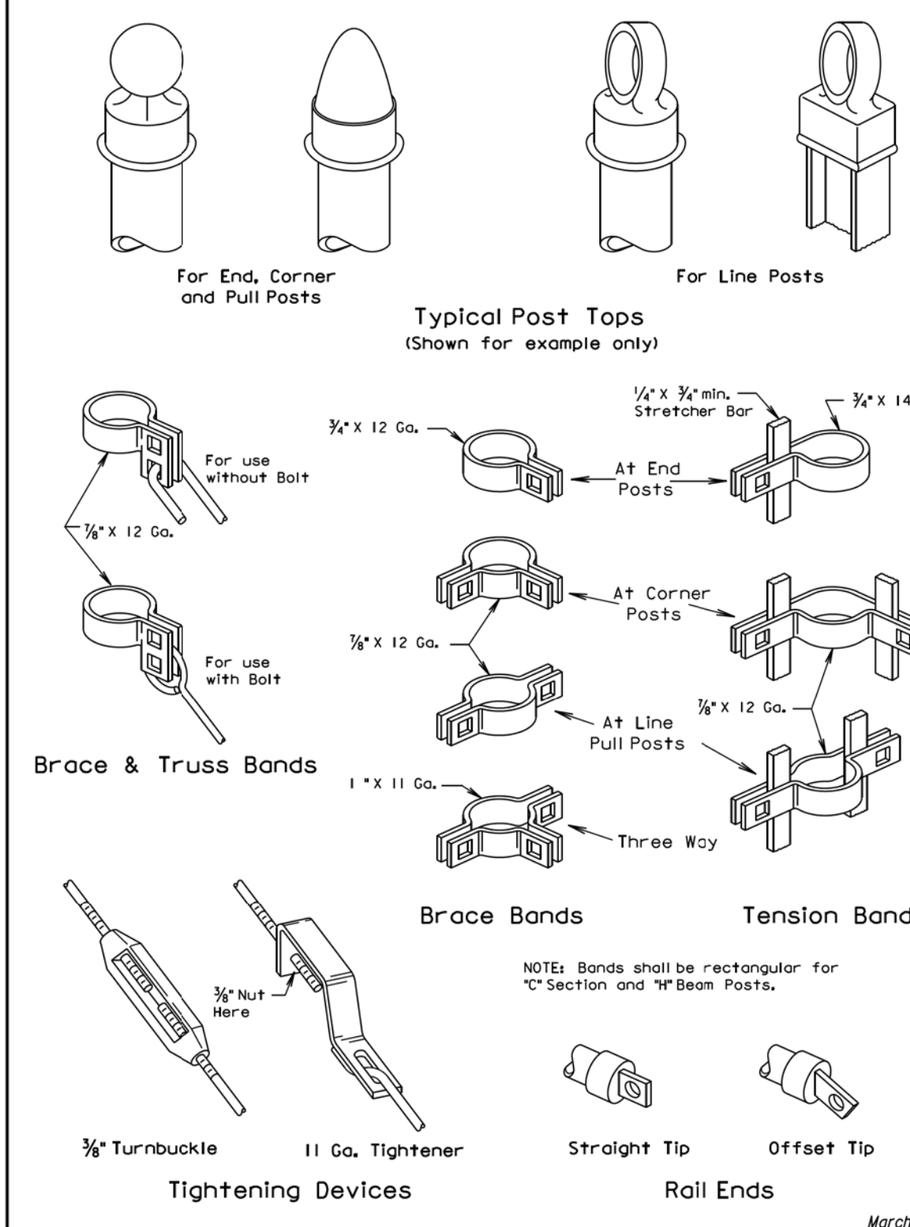

March 31, 2000

Published Date: 4th Qtr. 2015	SDDOT	HARDWARE FOR CHAIN LINK FENCE	PLATE NUMBER 621.03
			Sheet 1 of 1

Plot Scale - 1:200
- Plotted From - TRSF12141
File - ...\prj\minn025C\s62101s62103.dgn

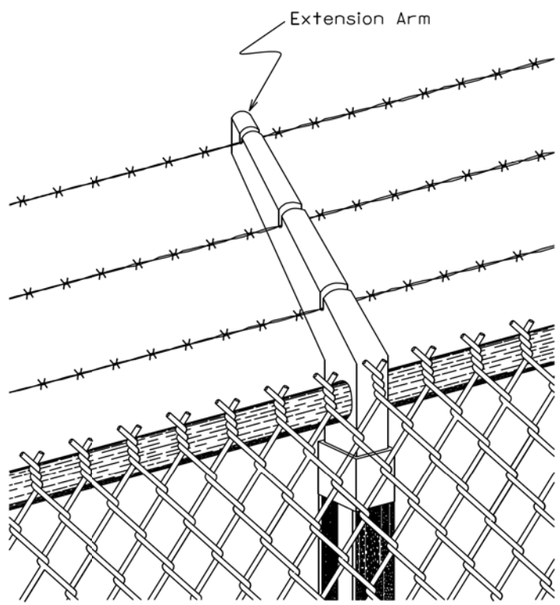

GENERAL NOTES:

Extension arms shall be hot dipped galvanized. End and corner arms shall be malleable iron. Intermediate arms may be pressed steel. Arms shall have sealed caps and three slots to accommodate the barbed wires. The top wire shall be 12 inches above the fabric and 12 inches out from the fence line at an angle of approximately 45°. Adjustable arms may be used. Barbed wire shall be two strand 12½ gauge wire with four point round barbs spaced on 5 inch centers.

Extra payment will not be made for extension arms with barbed wire. Extension arms with barbed wire shall be incidental to the respective "Chain Link Fence" bid item. When extension arms with barbed wire are attached to gates, the payment for the extension arms with barbed wire shall be incidental to the respective "Gate" bid item.

March 31, 2000

Published Date: 4th Qtr. 2015	SDDOT	BARBED WIRE TOP FOR CHAIN LINK FENCE	PLATE NUMBER 621.04
			Sheet 1 of 1

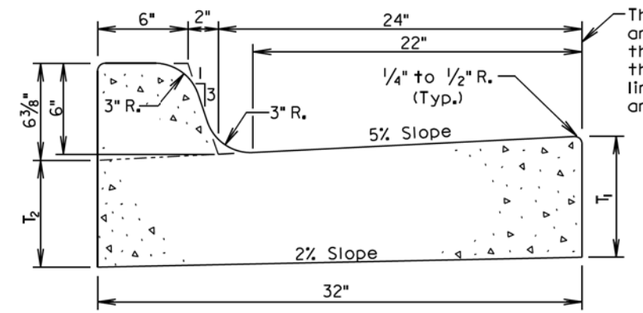

Type	T_1 (Inches)	T_2 (Inches)	Cu. Yd. Per Lin. Ft.	Lin. Ft. Per Cu. Yd.
B66	6	5 1/16	0.057	17.7
B67	7	6 1/16	0.065	15.4
B68	8	7 1/16	0.073	13.7
B68.5	8.5	7 9/16	0.077	13.0
B69	9	8 1/16	0.081	12.3
B69.5	9.5	8 9/16	0.085	11.7
B610	10	9 1/16	0.090	11.2
B610.5	10.5	9 9/16	0.094	10.7
B611	11	10 1/16	0.098	10.2
B611.5	11.5	10 9/16	0.102	9.8
B612	12	11 1/16	0.106	9.4

GENERAL NOTES:

When concrete curb and gutter longitudinally adjoins new concrete pavement, the method of attachment shall be by one of the methods shown on Standard Plate 380.11.

See Standard Plate 650.90 for expansion and contraction joints in the curb and gutter.

September 6, 2008

Published Date: 4th Qtr. 2015	SDDOT	TYPE B CONCRETE CURB AND GUTTER	PLATE NUMBER 650.01
			Sheet 1 of 1

Plot Scale - 1:200
- Plotted From - TRSF12141
File - ...\prj\mlmn025Cls62104s65001.dgn

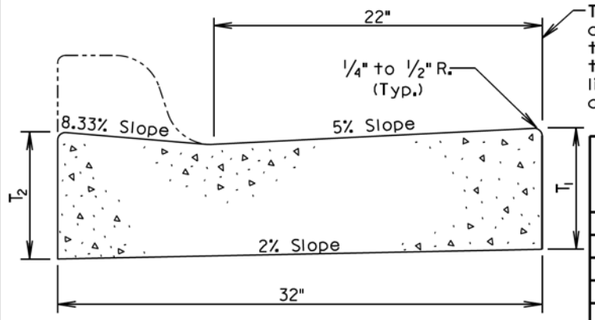

The stated radii on the plans and cross sections refer to this line and it shall also be the basis for horizontal linear foot measurement and payment.

TRANSVERSE SECTION

Type	T_1 (Inches)	T_2 (Inches)	Cu. Yd. Per Lin. Ft.	Lin. Ft. Per Cu. Yd.
P6	6	6 3/8	0.047	21.2
P7	7	7 3/8	0.055	18.1
P8	8	8 3/8	0.064	15.7
P8.5	8.5	8 7/8	0.068	14.8
P9	9	9 3/8	0.072	13.9
P9.5	9.5	9 7/8	0.076	13.2
P10	10	10 3/8	0.080	12.5
P10.5	10.5	10 7/8	0.084	11.9
P11	11	11 3/8	0.088	11.3
P11.5	11.5	11 7/8	0.092	10.8
P12	12	12 3/8	0.096	10.4

Type P Concrete Gutter Limits

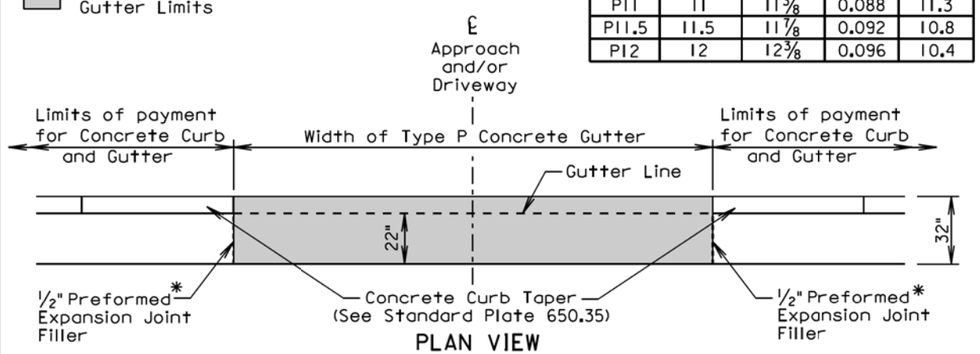

PLAN VIEW

* Joint will not be needed if concrete curb and gutter and type P concrete gutter is placed at the same time. If the 1/2" Preformed Expansion Joint Filler is provided, then the joint shall be sealed in accordance with Standard Plate 650.90.

GENERAL NOTES:

The concrete for the Type P Concrete Gutter shall comply with the requirements of the Specifications for Class M6 Concrete.

When concrete gutter longitudinally adjoins new concrete pavement, the method of attachment shall be by one of the methods shown on Standard Plate 380.11.

Transverse contraction joints shall be constructed at 10' intervals in the concrete gutter except when concrete gutter is constructed adjacent to mainline PCC pavement. When concrete gutter is constructed adjacent to mainline PCC pavement, a transverse contraction joint shall be constructed in the concrete gutter at each mainline PCC pavement transverse contraction joint location.

When concrete gutter is placed monolithically with mainline PCC pavement, the transverse contraction joints in the concrete gutter shall be sawed and sealed the same as the transverse contraction joints in the mainline PCC pavement.

When concrete gutter is not placed monolithically with the mainline PCC pavement and when the adjacent mainline surfacing is not PCC concrete, the transverse contraction joints in the concrete gutter shall be 1 1/2 inches deep if formed in the fresh concrete using a suitable grooving tool. If a saw is used to cut the contraction joints, then the depth of the joint shall be at least 1/4 the thickness of the concrete.

June 26, 2015

Published Date: 4th Qtr. 2015	SDDOT	TYPE P CONCRETE GUTTER	PLATE NUMBER 650.30
			Sheet 1 of 1

End and theoretical elevation of top of curb and gutter shown on plans and cross sections.

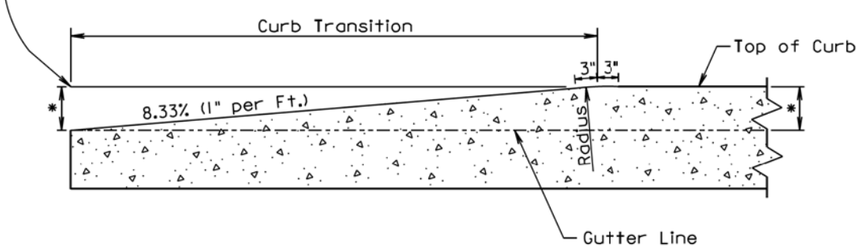

* Height of Curb

LONGITUDINAL SECTION OF CONCRETE CURB TAPER

September 14, 2005

Published Date: 4th Qtr. 2015	SDDOT	CONCRETE CURB TAPER	PLATE NUMBER 650.35
			Sheet 1 of 1

Plot Scale - 1:200
- Plotted From - TRSF12141
File - ...\prj\minn025Cls65030s65035.dgn

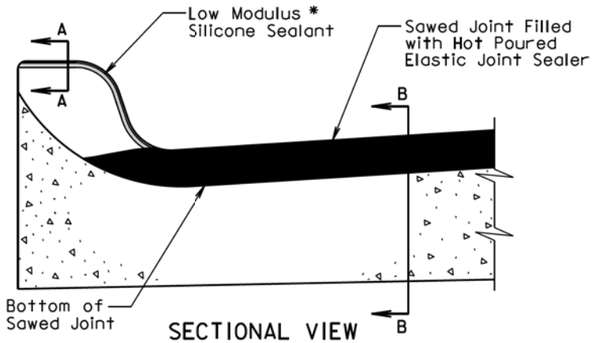

SECTIONAL VIEW

(Curb and Gutter Placed Monolithic with Adjacent Mainline PCC Pavement)

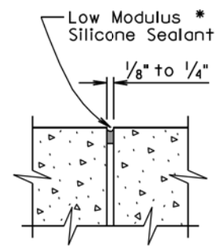

SECTION A-A

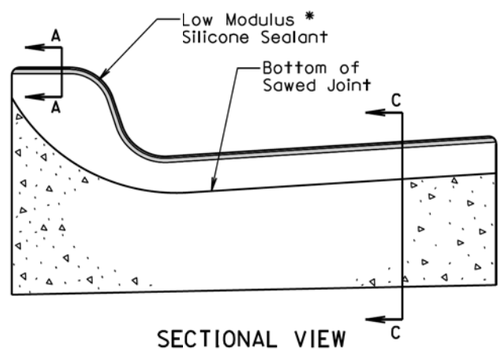

SECTIONAL VIEW

(Curb and Gutter not Placed Monolithic with Adjacent Mainline PCC Pavement or Mainline Surfacing is not PCC Pavement)

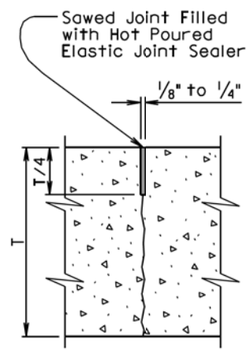

SECTION B-B

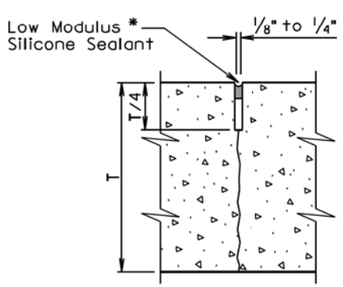

SECTION C-C

* The silicone sealant shall be placed such that it completely seals the joint and is bonded to the sides of the clean joint as approved by the Engineer.

September 6, 2013

Published Date: 4th Qtr. 2015	SDDOT	JOINTS IN CONCRETE CURB AND GUTTER	PLATE NUMBER 650.90
			Sheet 1 of 2

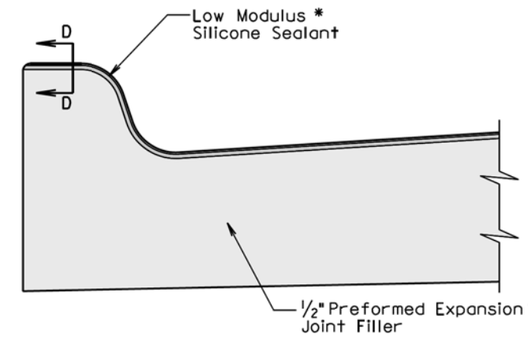

SECTIONAL VIEW

(Curb and Gutter at 1/2" Preformed Expansion Joint Filler Location)

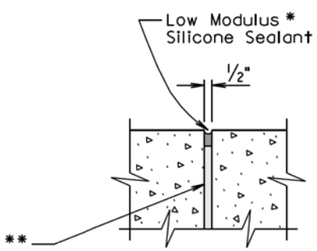

SECTION D-D

* The silicone sealant shall be placed such that it completely seals the joint and is bonded to the sides of the clean joint as approved by the Engineer.

GENERAL NOTES:

For illustrative reason, only the type B curb and gutter is shown.

** A 1/2" preformed expansion joint filler shall be placed transversely in the curb and gutter at the following locations:

1. At each junction between the radius return of curb and gutter and curb and gutter which is parallel to the project centerline.
2. At each junction between new curb and gutter and existing curb and gutter.

Transverse contraction joints shall be constructed at 10' intervals in the concrete curb and gutter except when the concrete curb and gutter is constructed adjacent to mainline PCC pavement. When concrete curb and gutter is constructed adjacent to mainline PCC pavement, a transverse contraction joint shall be constructed in the concrete curb and gutter at each mainline PCC pavement transverse contraction joint location.

When concrete curb and gutter is not placed monolithically with the mainline PCC pavement or when the adjacent mainline surfacing is not PCC concrete, the transverse contraction joints in the concrete curb and gutter shall be 1 1/2 inches deep if formed in the fresh concrete using a suitable grooving tool. If a saw is used to cut the contraction joints, then the depth of the joint shall be at least 1/4 the thickness of the concrete and the joint shall be sealed in accordance with the details shown above.

September 6, 2013

Published Date: 4th Qtr. 2015	SDDOT	JOINTS IN CONCRETE CURB AND GUTTER	PLATE NUMBER 650.90
			Sheet 2 of 2

Plot Scale - 1:200
- Plotted From - TRSF12141
File - ...\s65090_01s65090_02.dgn

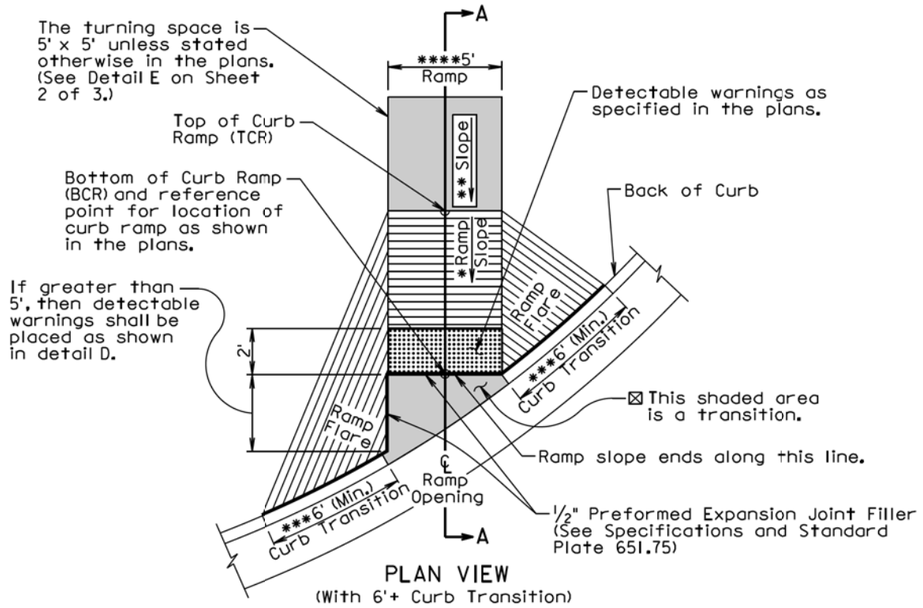

PLAN VIEW
(With 6'+ Curb Transition)

⊠ The slope within the transition area shall not be steeper than 5%. The concrete within the transition shall be placed monolithic with the curb and gutter or fillet section concrete. The concrete thickness within the transition shall be the same as the curb and gutter or fillet section concrete thickness.

*** The curb transition shall be a minimum of 6' long, a maximum of 10' long, and the curb transition slope shall not be steeper than 10% unless stated otherwise in the plans. The curb transition length shall be adjusted as necessary to meet slope and length requirements based on field geometrics.

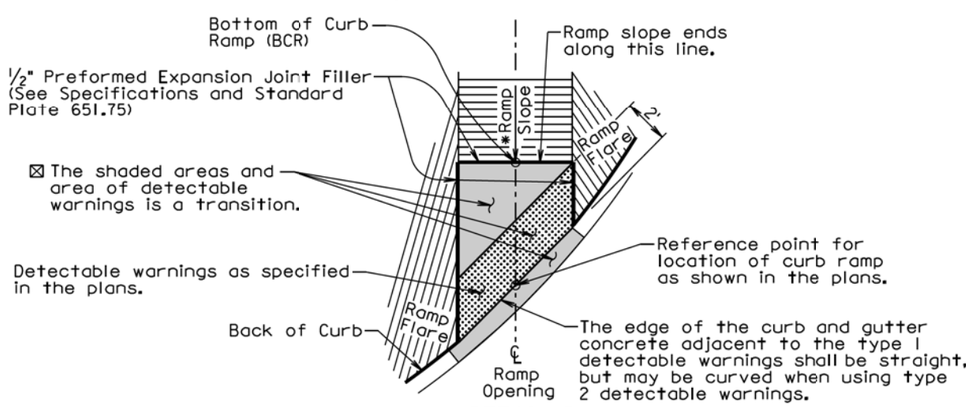

DETAIL D

September 6, 2015

Published Date: 4th Qtr. 2015	SDDOT	TYPE 2 CURB RAMP (DIRECTIONAL CURB RAMP)	PLATE NUMBER 651.02
			Sheet 1 of 3

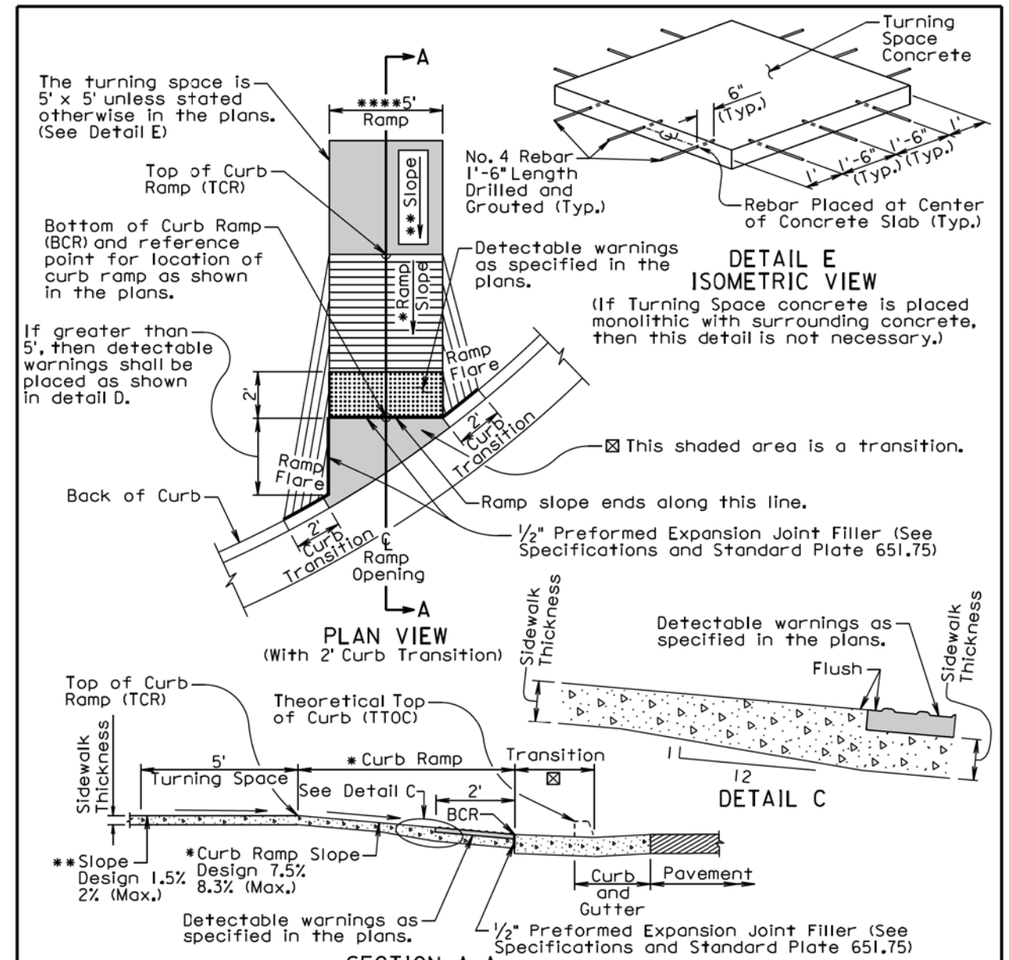

DETAIL E
ISOMETRIC VIEW
(If Turning Space concrete is placed monolithic with surrounding concrete, then this detail is not necessary.)

PLAN VIEW
(With 2' Curb Transition)

SECTION A-A

DETAIL C

* Curb ramp slopes are designed at 7.5% unless stated otherwise in the plans. The curb ramp may have a maximum slope of 8.3% and shall not exceed 15' in length unless stated otherwise in the plans.

The elevation of point TCR shall always be higher than the elevation of point TTOC unless specified otherwise in the plans. The curb ramp length dimension as shown in the plans shall be adjusted as necessary to meet all slope and length requirements based on field geometrics.

The cross slope of the ramp shall not be steeper than 2%. Plans are designed using a 1.5% slope unless stated otherwise in the plans.

** The slope in the turning space shall not be steeper than 2% in any direction of pedestrian travel. Plans are designed using a 1.5% slope unless stated otherwise in the plans.

**** The ramp width is 5' unless stated otherwise in the plans.

September 6, 2015

Published Date: 4th Qtr. 2015	SDDOT	TYPE 2 CURB RAMP (DIRECTIONAL CURB RAMP)	PLATE NUMBER 651.02
			Sheet 2 of 3

Plot Scale - 1:200
- Plotted From - TRSF12141
File - ...\s65102_01s65102_02.dgn

GENERAL NOTES:

For illustrative purpose only, type I detectable warnings are shown in the drawings.

The curb ramp depicted on this standard plate may be used with a PCC fillet section or curb and gutter. The curb ramp shall be placed at the location stated in the plans.

Sidewalk shall not be placed adjacent to the curb ramp flares when a 2' curb transition is used unless shown otherwise in the plans.

* Care shall be taken to ensure a uniform grade on the curb ramp, free of sags and short grade changes.

Surface texture of the curb ramp shall be obtained by coarse brooming transverse to the slope of the curb ramp.

The normal gutter line profile shall be maintained through the area of the ramp opening.

Joints shall be sawed or tooled into the concrete adjacent to the detectable warnings to alleviate possible corner cracking.

Care shall be taken to ensure that the surface of the detectable warnings are clean and maintains a uniform color.

The detectable warnings shall be cut as necessary to fit the plan specified limits of the detectable warnings. Cost for cutting the detectable warnings shall be incidental to the corresponding detectable warning bid item.

There will be no separate payment for curb ramps. The curb ramp shall be measured and paid for at the contract unit price per square foot for the corresponding concrete sidewalk bid item. The square foot area of the detectable warnings shall be included in the measured and paid for quantity of sidewalk.

If rebar is placed in the Turning Space as depicted in DETAIL E, the cost of the materials, labor, and equipment to furnish and install the rebar shall be incidental to the contract unit price per square foot for the corresponding concrete sidewalk bid item.

The curb transitions and ramp opening shall be measured and paid for at the contract unit price per foot for the corresponding curb and gutter bid item when curb and gutter is used. The curb transitions and ramp opening shall be measured and paid for at the contract unit price per square yard for the corresponding PCC fillet section bid item when a PCC fillet section is used.

All costs for furnishing and installing the transition area at the base of the curb ramp shall be incidental to the contract unit price per foot for the corresponding curb and gutter bid item when curb and gutter is used and shall be incidental to the contract unit price per square yard for the corresponding PCC fillet section bid item when a PCC fillet section is used.

The type I detectable warnings shall be measured to the nearest square foot. All costs for furnishing and installing the type I detectable warnings including labor, equipment, materials, and incidentals shall be paid for at the contract unit price per square foot for "Type I Detectable Warnings".

The type 2 detectable warnings shall be measured to the nearest square foot. All costs for furnishing and installing the type 2 detectable warnings including labor, equipment, and materials, including adhesive, necessary sealant or grout, and necessary grinding shall be paid for at the contract unit price per square foot for "Type 2 Detectable Warnings".

September 6, 2015

Published Date: 4th Qtr. 2015	SDDOT	TYPE 2 CURB RAMP (DIRECTIONAL CURB RAMP)	PLATE NUMBER 651.02
			Sheet 3 of 3

Plot Scale - 1:200
- Plotted From - TRSF12141
File - ...\minn025C\sblanks65102_03.dgn

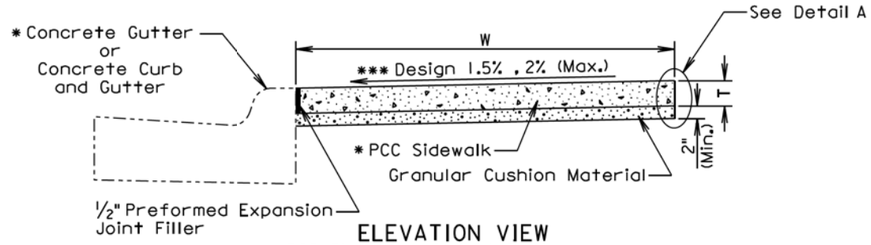

ELEVATION VIEW
(PCC Sidewalk without Boulevard)

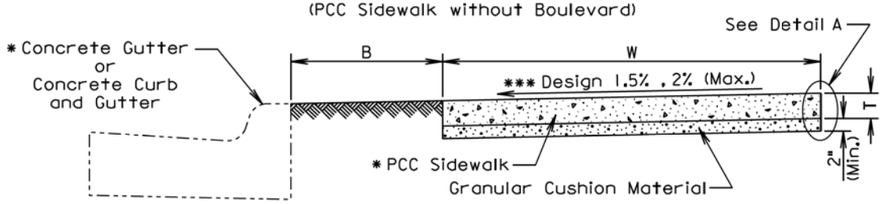

ELEVATION VIEW
(PCC Sidewalk with Boulevard)

B Width of boulevard as specified in the plans.
T Thickness of PCC sidewalk as specified in the plans.
W Width of PCC sidewalk as specified in the plans.
* Type as specified in the plans.

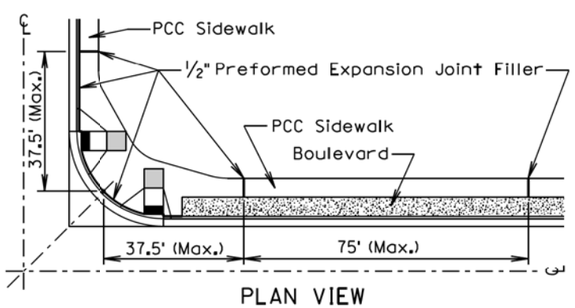

PLAN VIEW

GENERAL NOTES:

The PCC sidewalk shall be constructed in accordance with Section 651 of the Specifications.

*** The cross slope of the sidewalk is designed at 1.5% and the maximum slope allowed is 2% unless specified otherwise in the plans.

The maximum length between expansion joints in PCC sidewalk is 75 feet.

PCC sidewalk placed adjacent to intersection of roadways shall have an expansion joint placed transversely a maximum of 37.5 feet from the intersection. See PLAN VIEW.

An expansion joint in PCC sidewalk shall consist of a ½ inch thick preformed expansion joint filler material placed full depth and width of the PCC sidewalk.

** Large areas of PCC pavement adjacent to PCC sidewalk may require a different joint treatment than shown in the detail. If a different joint detail is necessary, plans will contain the joint detail and the Contractor shall construct the joint treatment in accordance with the plans.

September 6, 2015

Published Date: 4th Qtr. 2015	SDDOT	PCC SIDEWALK	PLATE NUMBER 651.75
			Sheet 1 of 2

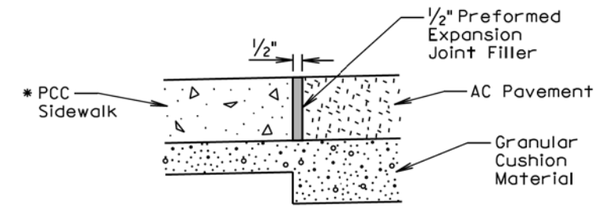

ELEVATION VIEW
(PCC sidewalk adjacent to asphalt concrete pavement)

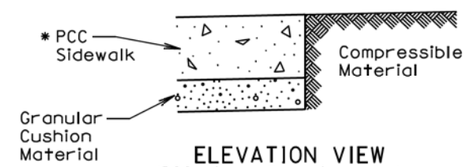

ELEVATION VIEW
(PCC sidewalk adjacent to earthen material, landscape rock, or other compressible materials)

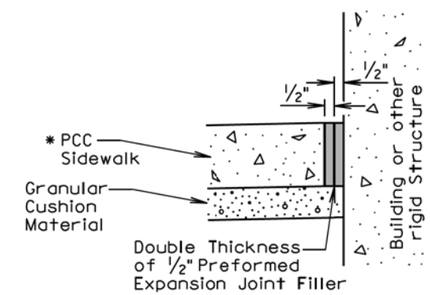

ELEVATION VIEW
(PCC sidewalk adjacent to building or other rigid structure)

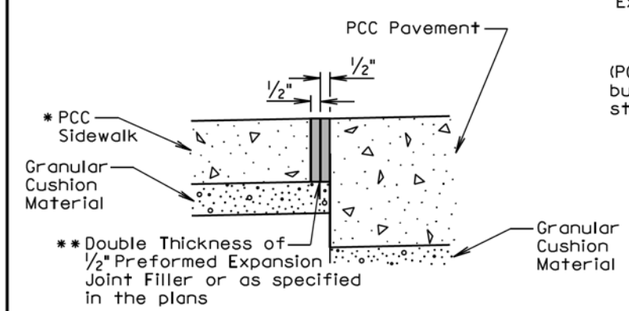

ELEVATION VIEW
(PCC sidewalk adjacent to PCC pavement)

Detail A
(Use Appropriate Detail(s))

September 6, 2015

Published Date: 4th Qtr. 2015	SDDOT	PCC SIDEWALK	PLATE NUMBER 651.75
			Sheet 2 of 2

Plot Scale - 1:200
- Plotted From - TRSF12141
File - ...\s65175_01s65175_02.dgn

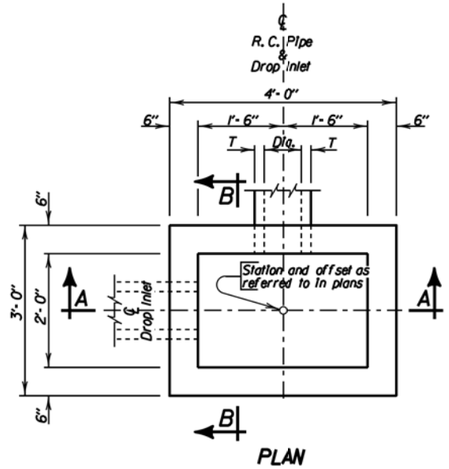

PLAN

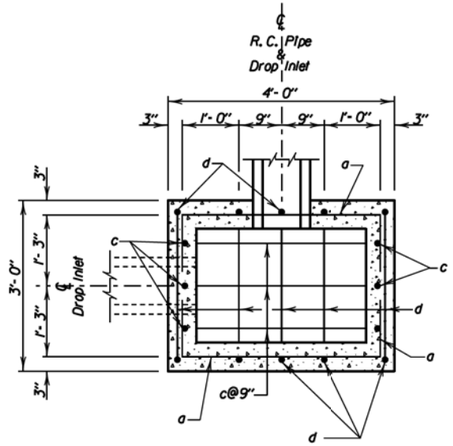

BOTTOM SECTION

ESTIMATED QUANTITIES

ITEM	UNIT	CONSTANT QUANTITY	VARIABLE QUANTITY
✳ Class M6 Concrete	CuYd	0.26	0.22H
Reinforcing Steel	Lb	37	20.04H
Frame and Grate Assembly	Each	1	———

PIPE DISPLACEMENT REDUCTIONS

R.C. Pipe Diameter Inches	T Inches	Class M6 Concrete CuYd
12	2	0.03
15	2 1/4	0.04
18	2 1/2	0.05
24	3	0.09
27	3 1/4	0.11

DROP INLETS FOR 12" TO 27" DIAMETER PIPE

GENERAL NOTES:

✳ Reduce total quantities of concrete by the amount of concrete displaced by the pipe. The total quantity of concrete shall be computed to the nearest hundredth of a cubic yard. The total quantity of reinforcing steel shall be computed to the nearest pound.

Drop inlets shown may be modified by the addition or omission of connecting pipes as shown on the layouts.

Reinforcing steel shall conform to ASTM A615 Grade 60. The b bars shall be lapped 12 inches. Cut and bend reinforcing steel as required to place pipe(s) through the drop inlet wall.

Pipe shall not enter through a corner of the drop inlet.

Use 2" clear cover on all reinforcing steel unless otherwise noted.

Precasting of reinforced drop inlets will be permissible. Prior to precasting, the Contractor shall submit details to the Engineer for approval.

Maximum pipe diameter shall not exceed 18 inches on the 3 foot wide side and shall not exceed 27 inches on the 4 foot wide side of the drop inlet.

The dimension of H is in feet.

December 23, 2009

Published Date: 4th Qtr. 2015

SDDOT

2'X 3' TYPE B
REINFORCED CONCRETE DROP INLET

PLATE NUMBER
670.01

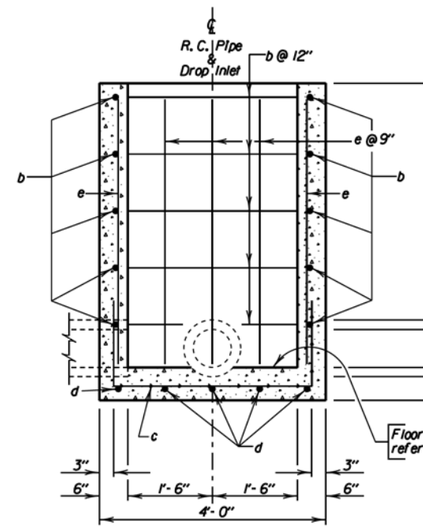

SEC. A-A

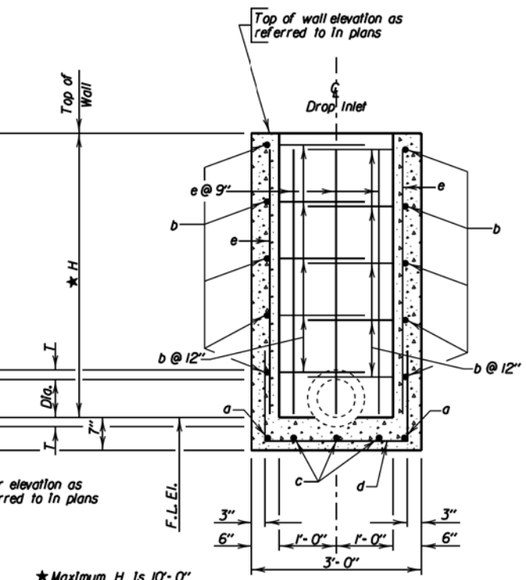

★ Maximum H is 10'-0"

SEC. B-B

DROP INLETS FOR 12" TO 27" DIAMETER PIPE

REINFORCING SCHEDULE

MK.	No.	Size	Length	Type	Bending Details
a	2	4	5'-6"	17	
b	2H	4	7'-0"	17	
c	3	4	6'-6"	17	
d	5	4	5'-6"	17	
e	16	4	H - 2"	Str.	

NOTE:
All dimensions are out to out of bars.

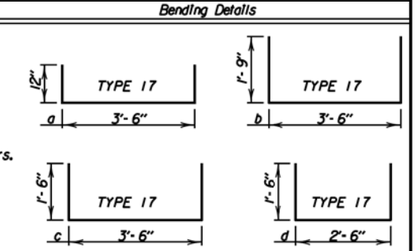

December 23, 2009

Published Date: 4th Qtr. 2015

SDDOT

2'X 3' TYPE B
REINFORCED CONCRETE DROP INLET

PLATE NUMBER
670.01

Plot Scale - 1:200
- Plotted From - TRSF12141
File - ...\s67001_01s67001_02.dgn

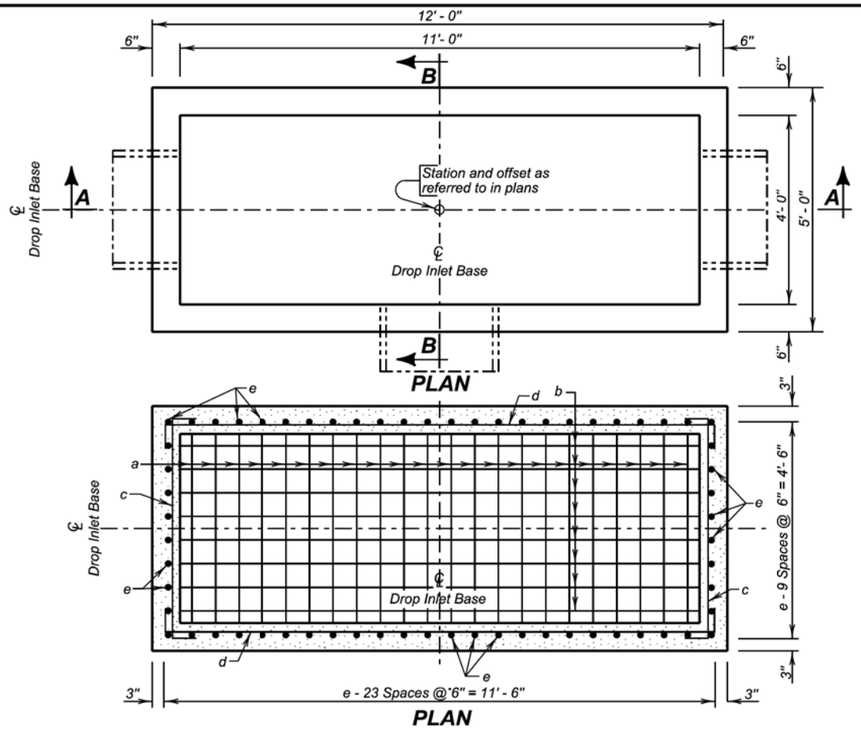

PLAN
(Bottom Steel)
(Pipe Not Shown)

SPECIFICATIONS:

1. Design Specifications: AASHTO LRFD Bridge Design Specifications 2012 Edition.
2. Construction Specifications: South Dakota Standard Specifications for Roads and Bridges, Current Edition and required Provisions, Supplemental Specifications, and Special Provisions as included in the Proposal.

GENERAL NOTES:

1. Design Live Load: HL-93 loading. No construction loading in excess of legal load was considered.
2. Base is intended for use with a Precast Concrete Type S Drop Inlet Lid, Standard Plate 670.40. Base may be precast. If precast base used, and details differ from that shown, the precast base must be on the current approved list. The current approved list is available through proper channels from the SDDOT Office of Bridge Design.
3. To qualify for addition to the approved list, submit a checked design, by South Dakota Registered Professional Engineers and shop plans to the Office of Bridge Design for approval. Design shall be in accordance with the current edition of the AASHTO LRFD Bridge Design Specifications.
4. ✶ Reduce total quantities of concrete by the amount of concrete displaced by the pipe. The total quantity of concrete shall be computed to the nearest hundredth of a cubic yard. The total quantity of reinforcing steel shall be computed to the nearest pound.
5. Inlets shown may be modified by the addition or omission of connecting pipes as shown on the layouts. Connecting pipes shall not enter the inlet through the corners.
6. Maximum R.C.P. diameter shall not exceed 36 inches (30 inches for R.C. Arch) on the 4-foot wide side of the Drop Inlet.
7. Reinforcing steel shall conform to ASTM A615 Grade 60. Cut and bend reinforcing steel as required to place pipe(s) through the inlet wall.
8. Use 1 inch clear cover on all reinforcing steel unless otherwise noted.
9. The dimension of H is in feet. Maximum H is 8 feet.

June 26, 2015

Published Date: 4th Qtr. 2015	SDDOT	4' X 11' TYPE S DROP INLET BASE	PLATE NUMBER 670.32
			Sheet 1 of 2

PIPE DISPLACEMENT REDUCTIONS

	Diameter (Inches)	Wall T (Inches)	Class M6 Concrete (Cu. Yd.)
R.C.P.	12	2	0.03
	15	2 ¼	0.04
	18	2 ½	0.05
	24	3	0.09
	30	3 ½	0.14
	36	4	0.20
	42	4 ½	0.26
	48	5	0.34
	54	5 ½	0.43
	60	6	0.52
R.C. ARCH	18	2 ½	0.05
	24	3 ½	0.09
	30	4	0.14
	36	4 ½	0.19
	42	4 ½	0.24
	48	5	0.32
	54	5 ½	0.39
	60	6	0.49
	72	7	0.70
	84	8	0.93

REINFORCING SCHEDULE

Mk.	No.	Size	Length	Type
a	24	5	9' - 6"	17
b	10	5	16' - 6"	17
c	2H	4	5' - 6"	17
d	2H	4	12' - 6"	17
e	64	4	H - 2"	Str.

Bending Details

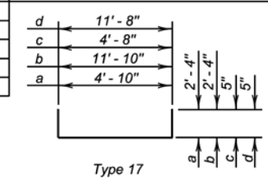

Type 17

NOTE:
All dimensions are out to out of bars.

ESTIMATED QUANTITIES

ITEM	UNIT	CONSTANT QUANTITY	VARIABLE QUANTITY
✶ Class M6 Concrete	Cu. Yd.	1.67	0.59H
Reinforcing Steel	Lb.	402.77	66.80H

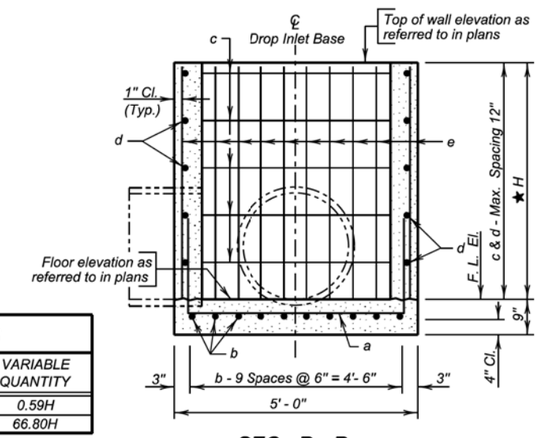

SEC. B - B

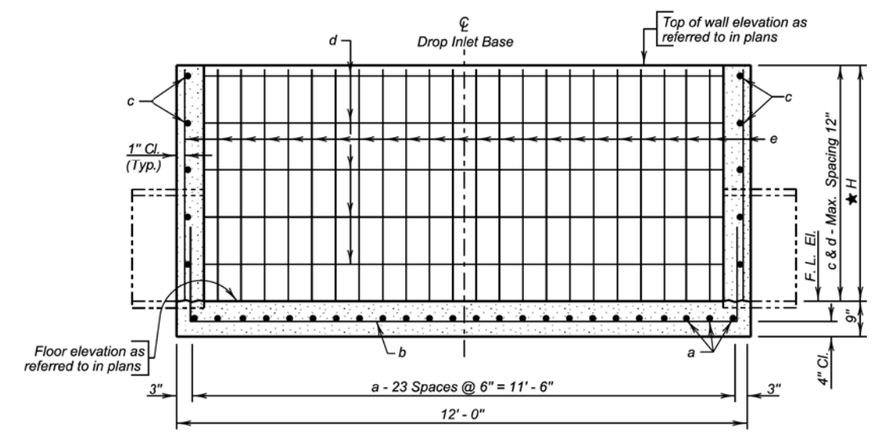

SEC. A - A

✶ Maximum H is 8' - 0"

June 26, 2015

Published Date: 4th Qtr. 2015	SDDOT	4' X 11' TYPE S DROP INLET BASE	PLATE NUMBER 670.32
			Sheet 2 of 2

STATE OF SOUTH DAKOTA	PROJECT	SHEET	TOTAL SHEETS
	P 0115(47)102	B73	B78

Plotting Date: 11/20/2015

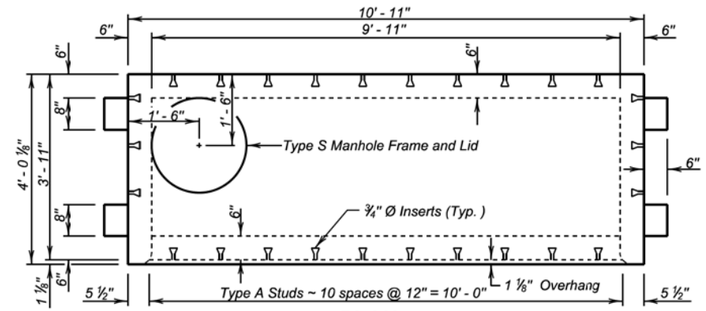

PLAN

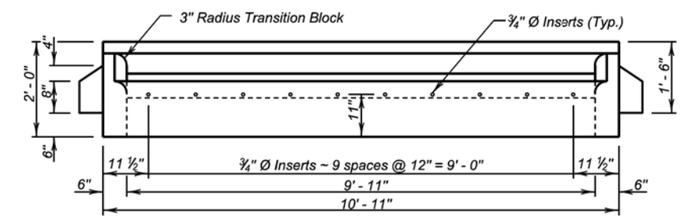

ELEVATION

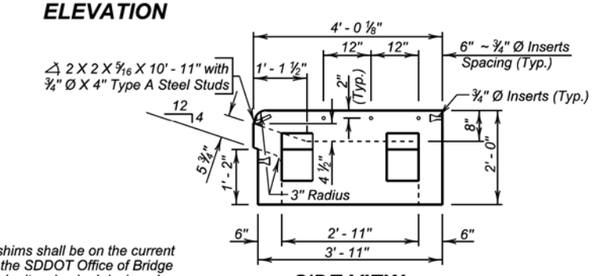

SIDE VIEW
(With Sidewalk Inserts)

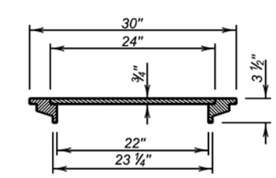

TYPICAL SECTION THROUGH TYPE S MANHOLE FRAME AND LID
(Weight 140 Lbs.)

GENERAL NOTES:

1. The Precast Concrete Type S Drop Inlet Lid and the shims shall be on the current approved list available through proper channels from the SDDOT Office of Bridge Design. To qualify for addition to the approved list, submit a checked design, done by South Dakota Registered Professional Engineers, and shop plans to the Office of Bridge Design for approval. Design shall be in accordance with the current edition of the AASHTO LRFD Bridge Design Specifications.
2. Design Live Load shall be HL - 93.
3. Concrete mix shall be as per fabricators design, however, minimum compressive strength shall not be less than 4500 psi. Type II Cement is required.
4. The Type S Manhole Frame and Lid shall conform to AASHTO M105, Class 30.
5. Structural Steel shall conform to ASTM A36. The ¾ inch diameter Headed Type A Steel Studs shall conform to Section 7 of the current edition of AWS D1. 1 Structural Steel Welding Code.
6. The ¾ inch diameter Concrete Inserts shall be galvanized or made of a corrosion resistant material. Provide ¾ inch diameter x 1' - 6" long dowels conforming to ASTM A615, Gr. 60 threaded to fit inserts with each lid.
7. All costs associated with furnishing and installing the Precast Concrete Type S Drop Inlet Lid including the type S manhole frame and lid, shims, inserts, and dowels shall be included in the contract unit price per each for " 4' x 11' Precast Concrete Type S Drop Inlet Lid ".

December 23, 2012

Published Date: 4th Qtr. 2015	SDDOT	4' X 11' PRECAST CONCRETE TYPE S DROP INLET LID	PLATE NUMBER 670.40
			Sheet 1 of 1

Plot Scale - 1:200

- Plotted From - TRSF12141

File - ...\prj\minn025C\sblanks67040.dgn

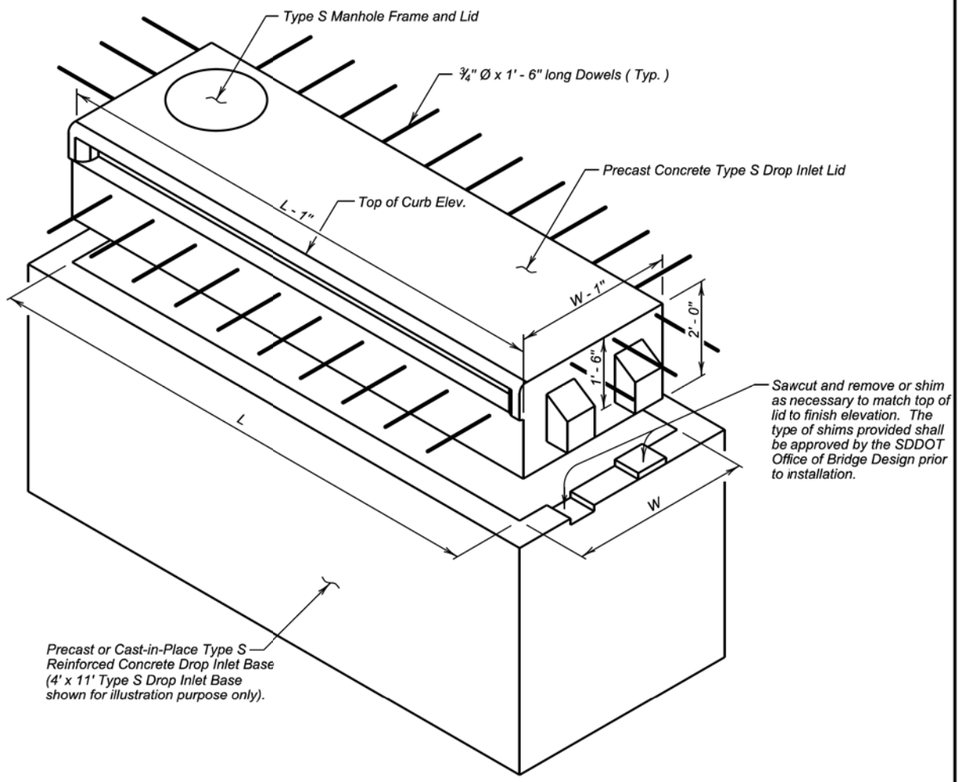

TYPE S DROP INLET

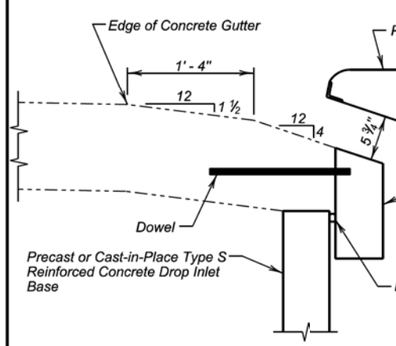

CONCRETE GUTTER DETAIL

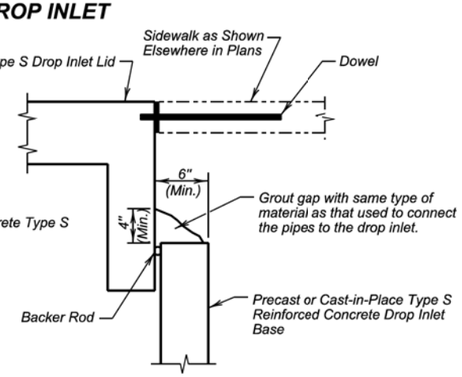

GROUTING DETAIL
(Sides and Back, Adjacent to Sidewalk)

December 23, 2012

Published Date: 4th Qtr. 2015	SDDOT	INSTALLATION DETAILS FOR PRECAST CONCRETE TYPE S DROP INLET LID	PLATE NUMBER 670.45
			Sheet 1 of 2

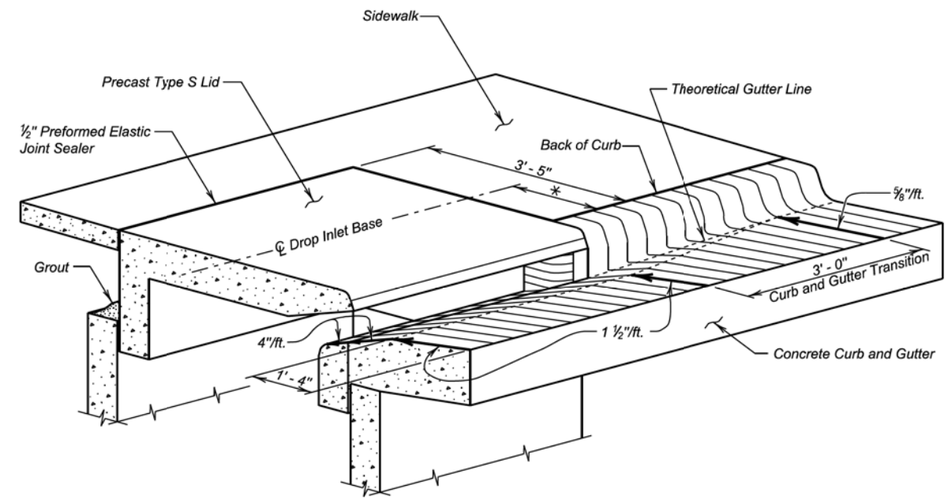

CURB AND GUTTER TRANSITION DETAILS

Drop Inlet Base Unit Size	⁎ Distance
4' x 6'	1' - 5 ½"
4' x 11'	1' - 5 ½"
7' x 11'	2' - 11 ½"

GENERAL NOTES:

1. Dowels shall be used to anchor the precast concrete Type S drop inlet lid to the concrete gutter. See Standard Plate 670.38 or 670.40 as applicable. If there is sidewalk adjacent dowels shall be used to anchor the precast concrete Type S drop inlet lid to the sidewalk. If there is sidewalk adjacent to the drop inlet, the precast lid shall match the finish elevations and cross slopes of the sidewalk.
2. The sidewalk shall be steel reinforced when the sidewalk adjoins the precast lid. Refer to Standard Plate 651.70 for reinforced concrete sidewalk details.

December 23, 2012

Published Date: 4th Qtr. 2015	SDDOT	INSTALLATION DETAILS FOR PRECAST CONCRETE TYPE S DROP INLET LID	PLATE NUMBER 670.45
			Sheet 2 of 2

Plot Scale - 1:200
- Plotted From - TRSF12141
File - ...\s67045_01\s67045_02.dgn

GENERAL NOTE:

Top of grate elevation shall be 0.04' below theoretical elevation of gutter.

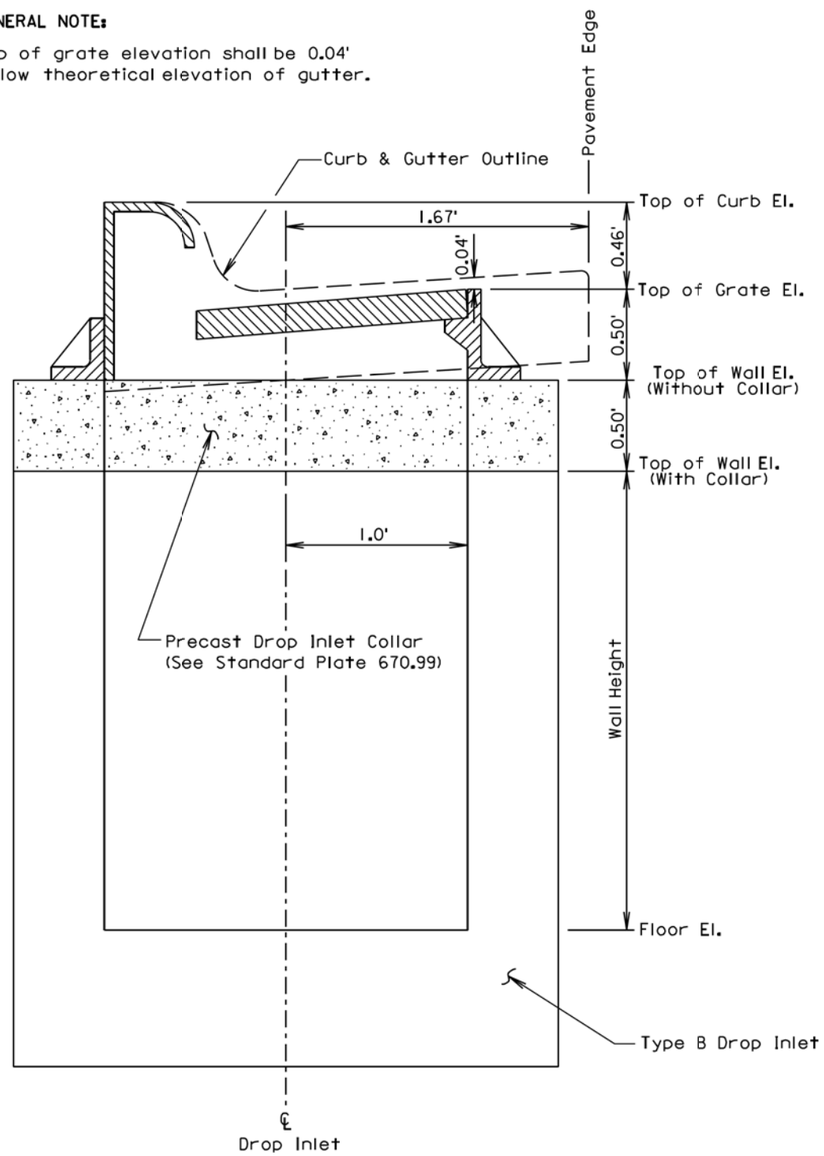

June 26, 2011

Published Date: 4th Qtr. 2015	SDDOT	INSTALLATION OF TYPE B DROP INLET	PLATE NUMBER 670.75
			Sheet 1 of 1

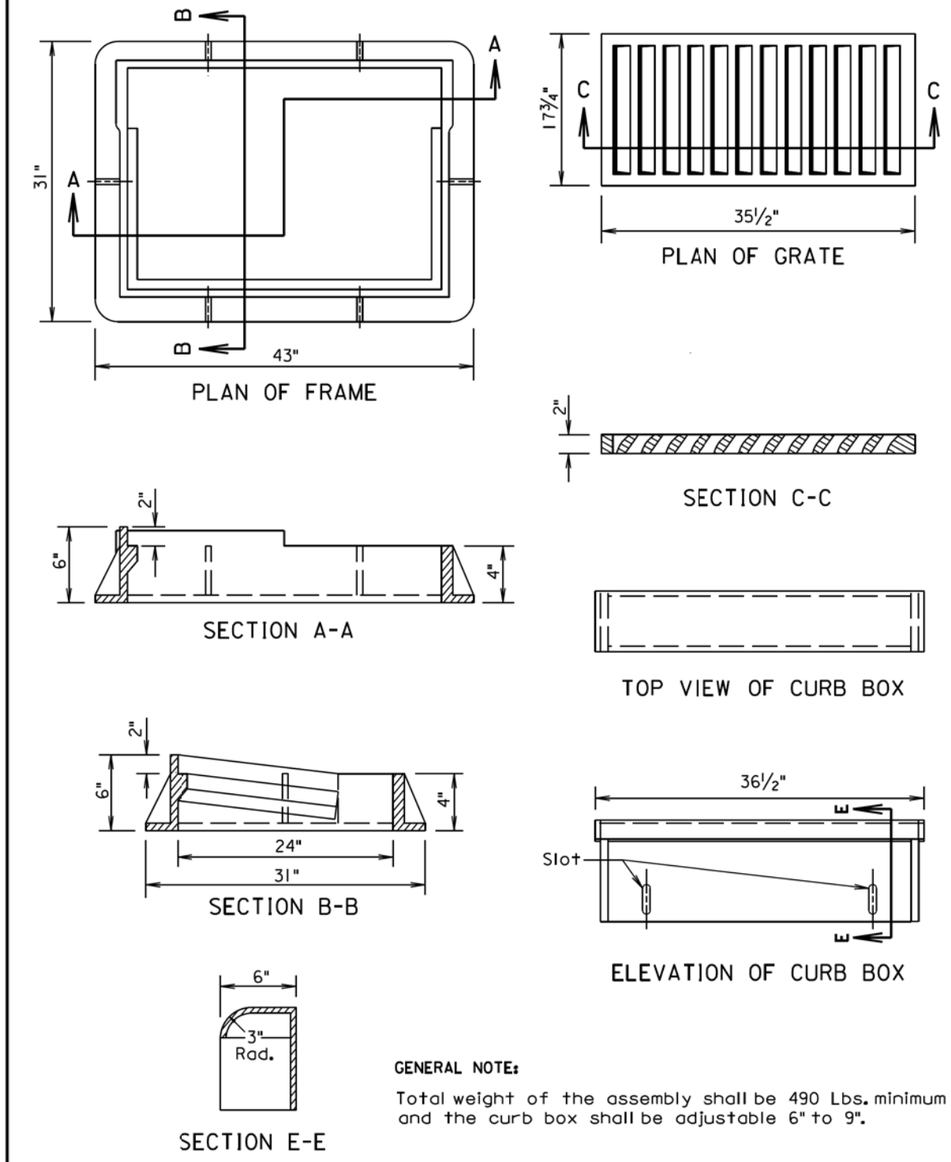

GENERAL NOTE:

Total weight of the assembly shall be 490 Lbs. minimum and the curb box shall be adjustable 6" to 9".

March 31, 2000

Published Date: 4th Qtr. 2015	SDDOT	TYPE B FRAME AND GRATE ASSEMBLY	PLATE NUMBER 670.80
			Sheet 1 of 1

Plot Scale - 1:200
- Plotted From - TRSF12141
File - ...\prj\minn0225C\ss67075ss67080.dgn

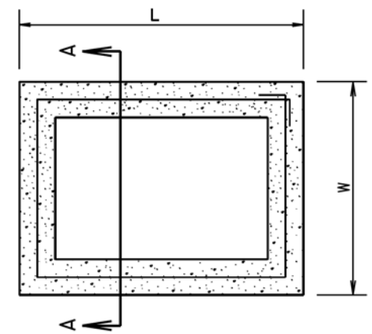

PLAN VIEW

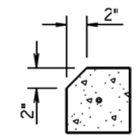

For Type D Drop Inlets only:
Use Precast Drop Inlet Collar with 2" chamfer on L sides only.

DETAIL B

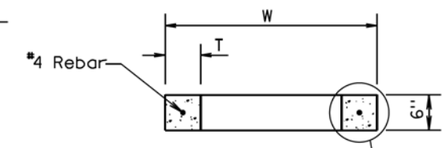

SECTION A-A

See Detail B (For Type D Drop Inlets Only)

INFORMATIONAL QUANTITIES					
FRAME AND GRATE TYPE	L Ft-In	W Ft-In	T In	CLASS M6 CONCRETE CuYd	REINFORCING STEEL Lb
TYPE B	4'-0"	3'-0"	6	0.11	9
TYPE C	5'-0"	4'-0"	6	0.15	11
TYPE D	4'-0"	2'-6"	6	0.10	8

GENERAL NOTES:

All reinforcing steel shall conform to ASTM A615, Grade 60.

The 1/2" diameter bar shall lap 6"± and shall be centered in the concrete.

The cost of furnishing and installing Precast Drop Inlet Collars, including labor, materials, and incidentals shall be incidental to the contract unit price per Each for "Precast Drop Inlet Collar".

March 31, 2000

Published Date: 4th Qtr. 2015	SDDOT	PRECAST DROP INLET COLLAR	PLATE NUMBER 670.99
			Sheet 1 of 1

Plot Scale - 1:200
- Plotted From - TRSF12141
File - ...\prj\minn025C\sblanks67099.dgn

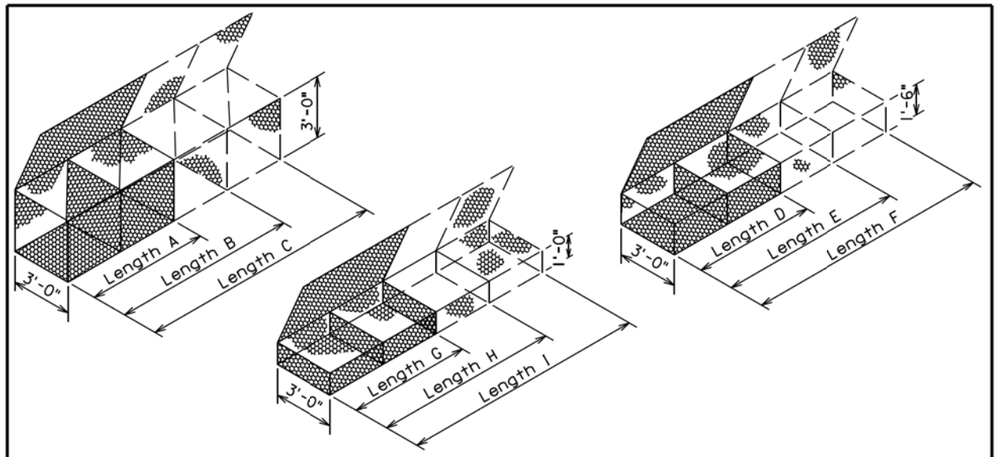

GABION DETAILS

STANDARD SIZES

SIZE	LENGTH	WIDTH	HEIGHT	NUMBER OF CELLS	CAPACITY, Cu. Yd.
A	6'-0"	3'-0"	3'-0"	2	2.0
B	9'-0"	3'-0"	3'-0"	3	3.0
C	12'-0"	3'-0"	3'-0"	4	4.0
D	6'-0"	3'-0"	1'-6"	2	1.0
E	9'-0"	3'-0"	1'-6"	3	1.5
F	12'-0"	3'-0"	1'-6"	4	2.0
G	6'-0"	3'-0"	1'-0"	2	0.7
H	9'-0"	3'-0"	1'-0"	3	1.0
I	12'-0"	3'-0"	1'-0"	4	1.3

Above Dimensions subject to mill tolerances.

GENERAL NOTES:

Lacing and internal connecting wire shall be 0.0866 inch diameter steel wire ASTM A641 Class 3 soft temper measured after galvanizing and for PVC coated gabions shall be 0.0866 inch diameter steel wire measured after galvanizing but before PVC coating.

The lacing procedure is as follows:

1. Cut a length of lacing wire approximately 1 ½ times the distance to be laced but not exceeding 5 feet.
2. Secure the wire terminal at the corner by looping and twisting.
3. Proceed lacing with alternating single and double loops at a spacing not to exceed 6 inches.
4. Securely fasten the other lacing wire terminal.

Wire lacing or interlocking type fasteners shall be used for gabion assembly and final construction of gabion structures. Interlocking fasteners for galvanized gabions shall be high tensile 0.120 inch diameter galvanized steel wire measured after galvanizing. The galvanizing shall conform to ASTM A641-92 Class 3 coating. Fasteners shall also be in accordance with ASTM A764, Class II, Type III.

Interlocking fasteners for PVC coated gabions shall be high tensile 0.120 inch diameter stainless steel wire conforming to ASTM A313, Type 302, Class I. The spacing of the interlocking fasteners during all phases of assembly and construction shall not exceed 6 inches.
All fasteners shall be placed where the mesh weaves around the selvage wire at the vertical and horizontal joints.

June 26, 2001

Published Date: 4th Qtr. 2015	SDDOT	BANK AND CHANNEL PROTECTION GABIONS	PLATE NUMBER 720.01
			Sheet 1 of 1

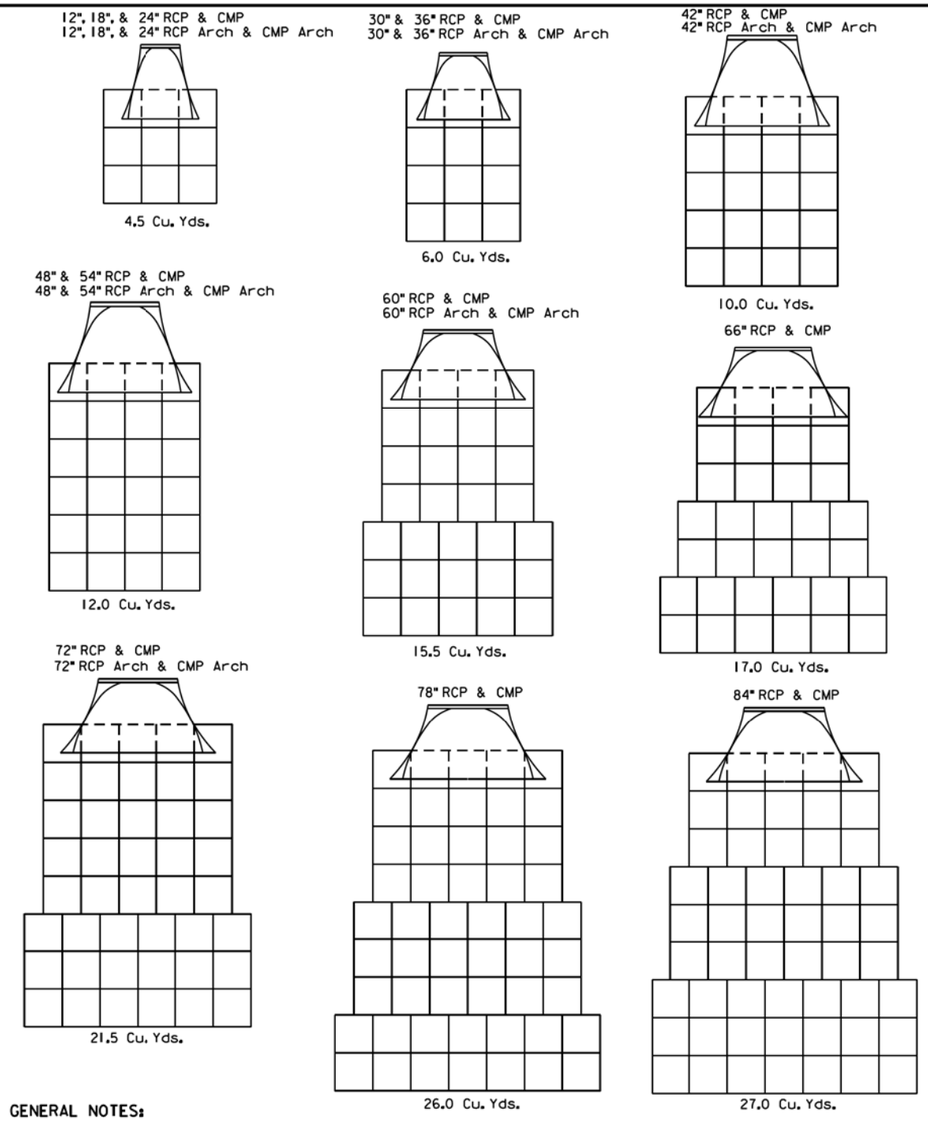

GENERAL NOTES:

Gabions at outlets of C. M. pipe and R. C. pipe shall be placed under the end section a distance of 2' from the outlet end of the section. For C. M. pipe end section installations, the upper fabric of the gabions shall be modified to accommodate the metal end section in a manner approved by the Engineer.

Quantities shown on this standard plate are based on standard gabion sizes D, E, and F (See Standard Plate 720.01).

June 26, 2001

Published Date: 4th Qtr. 2015	SDDOT	BANK AND CHANNEL PROTECTION GABION PLACEMENT UNDER PIPE END SECTIONS	PLATE NUMBER 720.03
			Sheet 1 of 1

Plot Scale - 1:200
- Plotted From - TRSF12141
File - ...\prj\minn025Cls72001s72003.dgn

STATE OF SOUTH DAKOTA	PROJECT	SHEET	TOTAL SHEETS
	P 0115(47)102	B78	B78

Plotting Date: 11/20/2015

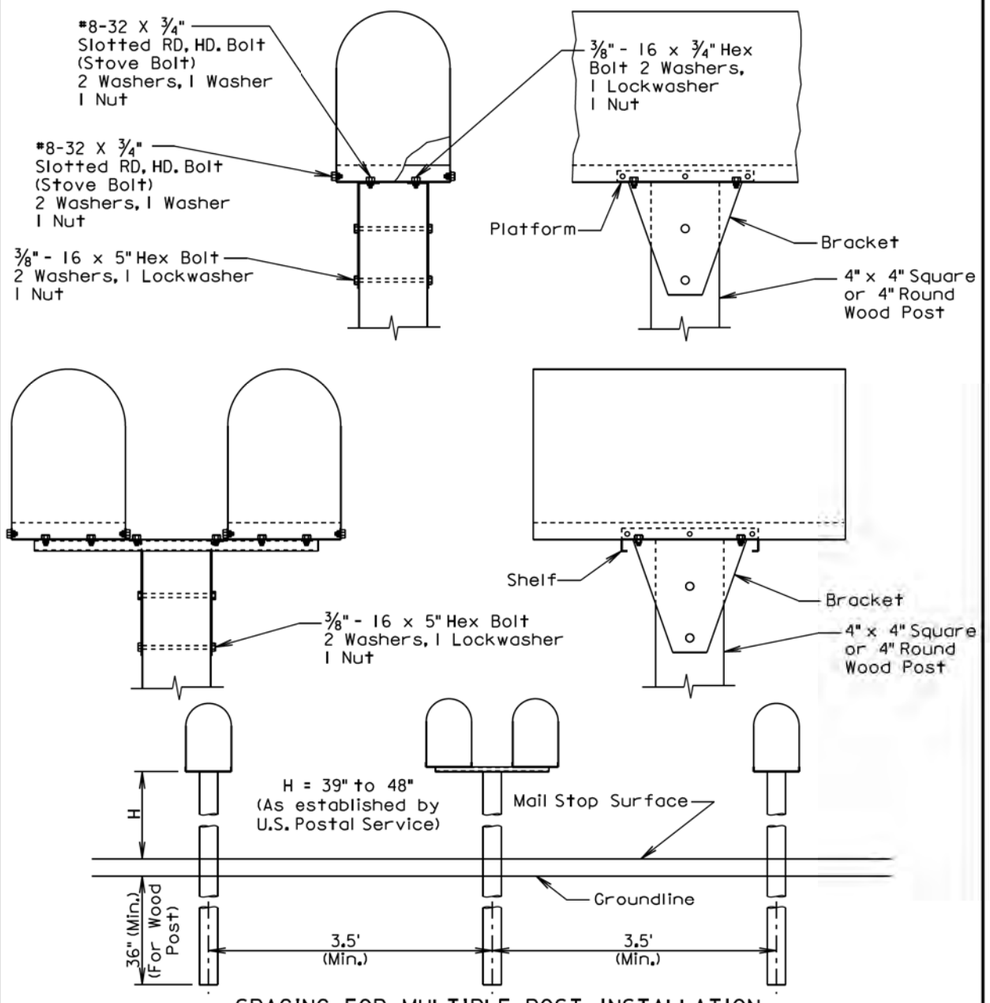

SPACING FOR MULTIPLE POST INSTALLATION

GENERAL NOTES:

The post support assemblies provided should be consistant throughout the project.

Single and double mailboxes may be in any sequence.

Post support assemblies shall be one from the approved products list, a 4"x4" or 4" round wood post, or an alternate post support assembly that meets the test level 3 crash testing requirements of NCHRP 350 or MASH.

Alternate mailbox support assemblies shall be approved by the Engineer prior to installation. The Contractor shall provide the Engineer written certification that the mailbox support assembly has met the crash testing requirements and will be installed in accordance with the manufacturer's installation instructions.

September 6, 2013

Published Date: 4th Qtr. 2015	SDDOT	SINGLE AND DOUBLE MAILBOX ASSEMBLIES	PLATE NUMBER 900.02
			Sheet 1 of 1

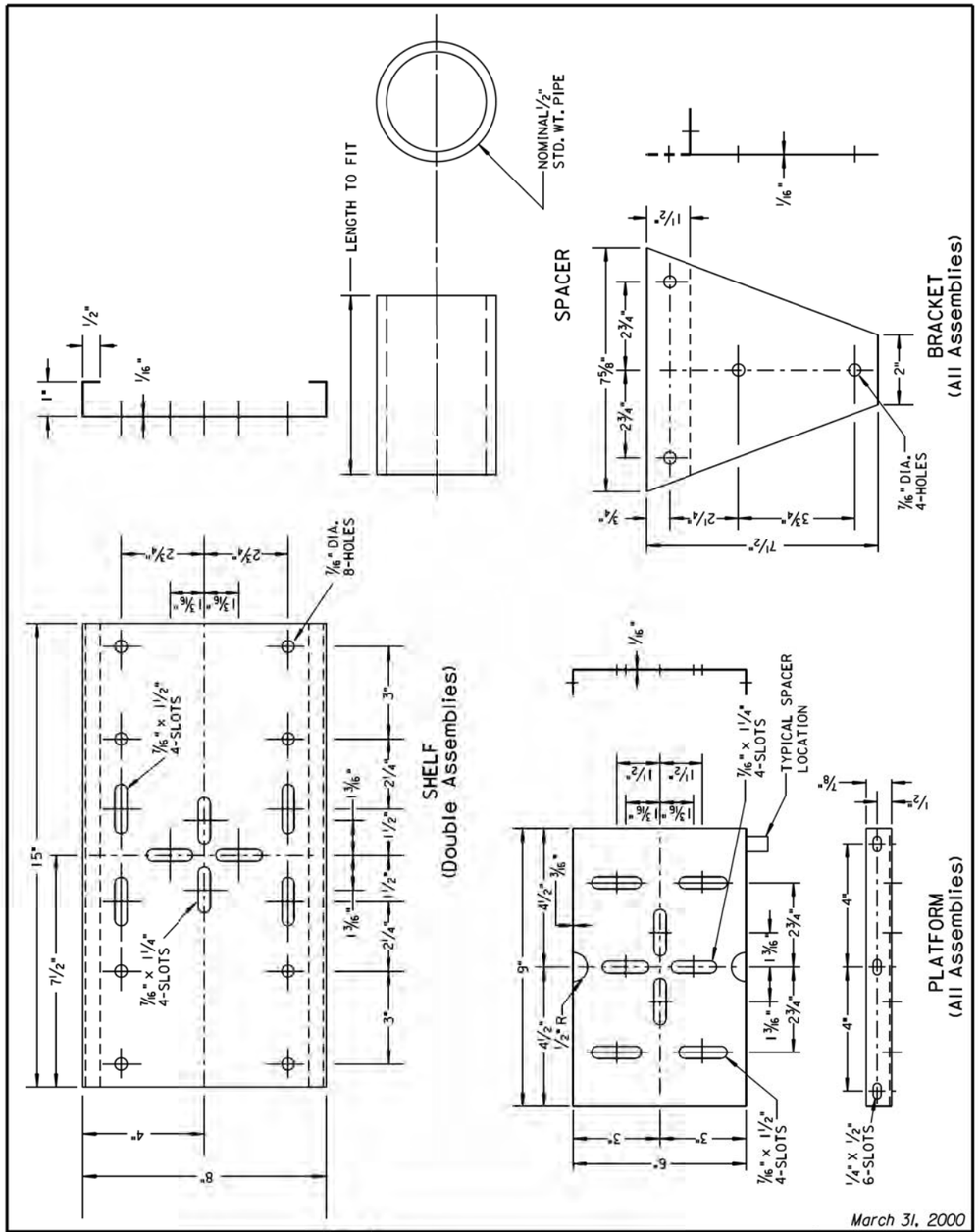

March 31, 2000

Published Date: 4th Qtr. 2015	SDDOT	MAILBOX SUPPORT HARDWARE	PLATE NUMBER 900.03
			Sheet 1 of 1

Plot Scale - 1:200
- Plotted From - TRSF12141
File - ...\prj\minn025C\s90002s90003.dgn