Section B: Grading Plans

STATE OF SOUTH DAKOTA	PROJECT	SHEET	TOTAL SHEETS
	P 0081(93)157	B1	B120

Plotting Date: 09/01/2015

INDEX OF SHEETS

B1	General Layout w/Index
B2-B10	Estimate With General Notes & Tables
B11-B13	Table of Pipe Quantities
B14-B16	Pavement, C&G, and Sidewalk Quantities
B17-B18	Typical Sections
B19	Horizonal Alignment Data
B20	Control Data Sheet
B21	Subsurface Utility Locations
B22	Topography Symbology & Legend
B23-B48	Plan & Profile Sheets
B49-B61	Pavment Removal Sheets
B62-B73	Curb and Gutter Sheets
B74-B88	Curb Ramp Details
B89	Type C Retaining Wall Layout
B90-B120	Standard Plates

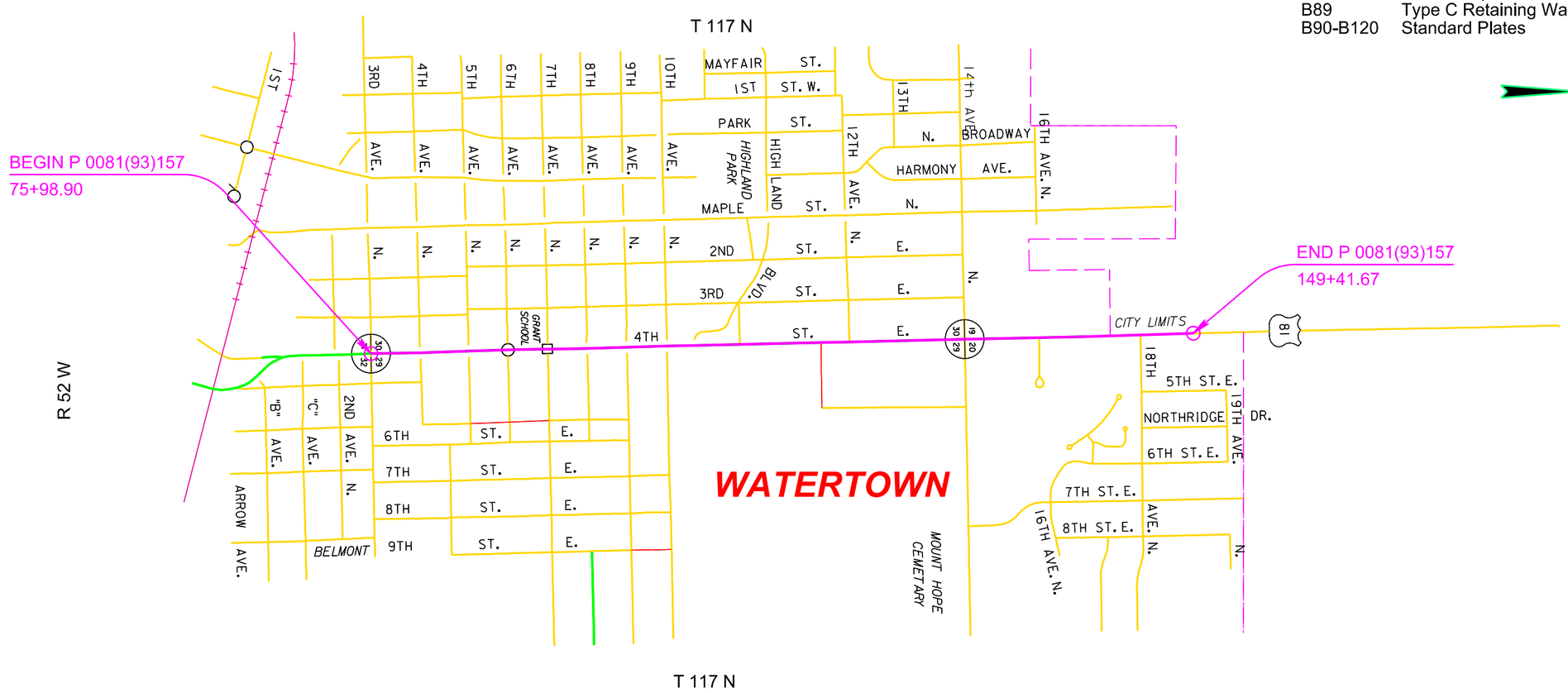

Plot Scale - 1:200
Plot Name - 1
File - U:\rdprj\codn\026X\title.dgn
Plotted From - TRSF12139

SECTION B ESTIMATE OF QUANTITIES

BID ITEM NUMBER	ITEM	QUANTITY	UNIT
009E0010	Mobilization	Lump Sum	LS
009E3230	Grade Staking	6.452	Mile
009E3250	Miscellaneous Staking	1.392	Mile
009E3280	Slope Staking	1.392	Mile
009E3290	Structure Staking	1	Each
009E3300	Three Man Survey Crew	40.0	Hour
100E0100	Clearing	Lump Sum	LS
110E0300	Remove Concrete Curb and Gutter	543	Ft
110E0400	Remove Drop Inlet	52	Each
110E0460	Remove Manhole	1	Each
110E0605	Remove Chain Link Fence	245	Ft
110E1010	Remove Asphalt Concrete Pavement	5,879.6	SqYd
110E1100	Remove Concrete Pavement	41,445.5	SqYd
110E1130	Remove Concrete Driveway Pavement	468.7	SqYd
110E1140	Remove Concrete Sidewalk	2,317.9	SqYd
110E1300	Remove Concrete Retaining Wall	566.0	Ft
120E0010	Unclassified Excavation	32,240	CuYd
120E0900	Contaminated Material Excavation	100	CuYd
120E2000	Undercutting	17,943	CuYd
120E6100	Water for Embankment	238.5	MGal
250E0020	Incidental Work, Grading	Lump Sum	LS
270E0042	Salvage Asphalt Mix and Granular Base Material	1,191.0	Ton
380E3520	6" PCC Approach Pavement	1,386.6	SqYd
380E4060	8.5" PCC Fillet Section	854.7	SqYd
421E0100	Pipe Culvert Undercut	7	CuYd
450E0122	18" RCP Class 2, Furnish	5,414	Ft
450E0130	18" RCP, Install	5,414	Ft
450E0142	24" RCP Class 2, Furnish	1,290	Ft
450E0150	24" RCP, Install	1,290	Ft
450E0162	30" RCP Class 2, Furnish	870	Ft
450E0170	30" RCP, Install	870	Ft
450E0182	36" RCP Class 2, Furnish	34	Ft
450E0190	36" RCP, Install	34	Ft
450E0192	42" RCP Class 2, Furnish	12	Ft
450E0200	42" RCP, Install	12	Ft
450E0700	RCP Tee, Furnish	1	Each
450E0701	RCP Tee, Install	1	Each
450E2008	18" RCP Flared End, Furnish	3	Each
450E2009	18" RCP Flared End, Install	3	Each
450E2304	18" RCP Safety End, Furnish	2	Each
450E2307	18" RCP Safety End, Install	2	Each
450E3022	30" RCP Arch Class 2, Furnish	154	Ft
450E3030	30" RCP Arch, Install	154	Ft
450E3042	42" RCP Arch Class 2, Furnish	8	Ft
450E3050	42" RCP Arch, Install	8	Ft
450E4508	30" RCP Arch Flared End, Furnish	1	Each
450E4509	30" RCP Arch Flared End, Install	1	Each
451E0518	8" PVC Pipe	44	Ft
451E6080	Adjust Water Valve Box	68	Each
462E0100	Class M6 Concrete	144.7	CuYd
470E0020	Pipe Handrail	83.9	Ft
480E0100	Reinforcing Steel	19,739	Lb
480E0200	Epoxy Coated Reinforcing Steel	757	Lb
530E0300	Type C Concrete Retaining Wall	276	SqFt
600E0200	Type II Field Laboratory	1	Each
621E0060	6' Chain Link Fence with Top Rail	136	Ft
650E0085	Type B68.5 Concrete Curb and Gutter	11,408	Ft
650E3060	Type B6 Concrete Curb	232	Ft
650E4685	Type P8.5 Concrete Gutter	956	Ft
650E6085	8.5" Concrete Valley Gutter	11	Ft
651E0040	4" Concrete Sidewalk	63,464	SqFt
651E7000	Type 1 Detectable Warnings	1,050	SqFt
670E1200	Type B Frame and Grate Assembly	87	Each
670E5342	4' x 6' Precast Concrete Type S Drop Inlet Lid	7	Each
670E5400	Precast Drop Inlet Collar	83	Each
671E4548	48" Manhole Cone Section	2.0	Ft
671E6007	Type A7 Manhole Frame and Lid	2	Each
671E6009	Type A9 Manhole Frame and Lid	1	Each
671E6020	Type C Manhole Frame and Lid	1	Each
671E7010	Adjust Manhole	16	Each
900E0010	Refurbish Single Mailbox	2	Each

GRADING OPERATIONS

Water for Embankment is estimated at the rate of 10 gallons of water per cubic yard of Embankment minus Waste.

The estimated cubic yards of excavation and/or embankment required to construct outlet ditches, ditch blocks, and approaches are included in the earthwork balance notes on the profile sheets.

Special ditch grades and other sections of the roadway different than the typical section(s) shall be constructed to the limits shown on the cross sections. If significant changes to the cross sections are necessary during construction, the Engineer shall contact the Designer for the proposed change.

Generally, all shallow inlet and outlet ditches as noted on the plan sheets shall be cut with a 10-foot wide bottom with 5:1 backslopes. However, the Engineer may direct the Contractor to adjust the ditch width for proper alignment with the drainage structure.

TYPE II FIELD LABORATORY

The lab shall be equipped with an internet connection such as DSL, cable modem, or other approved service. The internet connection shall be provided with a multi-port wireless router. The internet connection shall be a minimum speed of 512 Kb unless limited by job location and approved by the DOT. Prior to installing the wireless router the Contractor shall submit the wireless router's technical data to the Area Office to check for compatibility with the state's computer equipment. The internet connection is intended for state personnel usage only. The Contractor's personnel are prohibited from using the internet connection unless pre-approved by the Project Engineer.

The Contractor will provide an extra oven and a 6'x4'x4" thick concrete level pad placed outside of the lab to the satisfaction of the Engineer. If the Contractor provides a four aggregate PCCP mix design; a second 6' x 4'x4" thick concrete pad shall be required.

The Contractor shall submit a copy of each monthly bill for calls charged to this phone at the end of each month. The Project Engineer will then audit the bills to ensure all calls are legitimate and then initiate a Construction Change Order (CCO) to reimburse the Contractor for the actual phone calls made, including local and long distance calls. Reimbursement will not be made for fees associated with the purchase, installation, disconnection, monthly line charges, and incidentals involved in the installation, maintenance, and disconnection of the phone (including attachments). These items shall be incidental to the contract unit price per each for "Type II Field Laboratory".

UTILITIES

The Contractor shall be aware that the existing utilities shown in the plans were surveyed prior to the design of this project and might have been relocated or replaced by a new utility facility prior to construction of this project, might be relocated or replaced by a new utility facility during the construction of this project, or might not require adjustment and may remain in its current location. The Contractor shall contact each utility owner and confirm the status of all existing and new utility facilities. The utility contact information is provided elsewhere in the plans or bidding documents.

Subsurface utility explorations were done for this project. The findings can be found in the SUBSURFACE UTILITY LOCATIONS table elsewhere in the plans. The table is provided to aid the Contractor during construction. All information in the table is approximate and shall be verified by the Contractor prior to construction in those areas.

CLEARING

Unless specifically noted in the plans with a "Do Not Disturb" note, all trees and bushes inside the right-of-way or easement line shall be removed at the discretion of the Engineer.

In addition, the following trees will also be removed as per agreements with the landowner and will be incidental to the contract lump sum price for "Clearing".

Station	Offset	Notes
78+99	47'L	
82+17	39'L	
82+60	38'L	
82+96	41'L	
93+87	48'L	
116+40 to 128+40	R	Remove Westernmost ROW of Trees

Plot Scale - 1:200
Plotted From - trsf12142
File - ...\prj\codn\026X\NotesSectionB.dgn

SHRINKAGE FACTOR: Embankment +20

TABLE OF EXCAVATION QUANTITIES BY BALANCES

Station to	Station	Excavation (CuYd)	* Undercut (CuYd)	Total Excavation (CuYd)	** Waste (CuYd)	** Haul (CuYdSta)
76+00	149+42	11091	17943	29034	5182	1900
	Totals:	11091	17943	29034	5182	1900

* The quantities for these items are in the Estimate of Quantities under their respective bid items.
** The quantities for these items are for information only.

TABLE OF UNCLASSIFIED EXCAVATION

Excavation	11091
Undercut	17943
Topsoil	2412
Salvaged Asphalt Mix and Granular Base Material (from cut sections)	794
Total	32240

PROCEDURES FOR DETERMINING UNCLASSIFIED EXCAVATION QUANTITY

When plan quantities are used for payment, the Unclassified Excavation quantity shall be used for final payment.

The following paragraphs are general earthwork information and information in regards to computing the Unclassified Excavation quantity when final cross sections are taken in the field:

The Topsoil quantity in the Table of Unclassified Excavation is an estimate. When finaling a project, the total quantity of field measured Topsoil shall be used in place of the estimated Topsoil quantity. The quantity of Topsoil from the cuts will be paid for twice as Unclassified Excavation, as it will be in both the Excavation and Topsoil quantities. This will be full compensation for Excavation, which includes necessary undercutting to provide space for placement of topsoil.

The Excavation quantities from individual balances and the Table of Unclassified Excavation have been reduced by the volume of in place surfacing that will be removed and/or salvaged.

The volume of in place Concrete Surfacing removed will NOT be paid for as Unclassified Excavation.

The Excavation quantities from individual balances and the table above have been reduced by the volume of in place concrete pavement that will be removed.

When finaling a project, the estimated quantity of 8059 cubic yards of Concrete Pavement removed from the cut sections shall be subtracted from the Unclassified Excavation quantity for final payment. The quantity of Concrete Pavement from cut sections subtracted from the Unclassified Excavation quantity shall be plans quantity and will not be adjusted according to field measurements.

HAUL

Haul is included in the Table of Excavation Quantities by Balances. Haul is not a bid item and is for informational purposes only. The mass haul diagram is available as part of the bid package for use in figuring this haul.

Haul: Estimated quantity (CuYdSta) for moving unclassified excavation material to the locations where it is needed throughout the earthwork balance.

For Purpose of Extra Haul Computations:

Average Haul = (Haul + Out-of-Balance Haul)/Unclassified Excavation = 1900/11091 = 0.2 Sta

Compensation for “Extra Haul” will not be made for haul distances less than 5 stations. When payment for “Extra Haul” is authorized, the distance used for “Extra Haul” calculations shall be that in excess of 5 stations.

UNDERCUTTING

In all cut sections the earthen subgrade shall be undercut 1 foot below the earthen subgrade surface (2 foot in rural area). The undercut material or other suitable material, as directed by the Engineer, shall then be replaced and compacted to the density specified for the section being constructed.

In all cut sections, the earthen subgrade shall be undercut 1 foot below the finished subgrade (2 foot in rural area). Shallow embankment sections, fills less than 1 foot (2 foot in rural area) in height measured at the finished subgrade shoulders, shall be undercut to assure a minimum height of 1 foot (2 foot in rural area) of earth embankment for the entire width of the roadbed. The undercut material or other suitable material, as directed by the engineer, shall then be replaced and re-compacted to the density specified for the section being constructed.

.

The plan shown quantity will be the basis of payment. However, if there are additional areas of undercut other than what is shown in the plans, the Engineer shall direct removal of these areas and the additional areas will be measured according to the Engineer.

A copy of the Soils Report is available for review at the Aberdeen Region Office of the Watertown Area Office.

TABLE OF UNDERCUTTING

Station	to	Station	Quantity (CuYd)
76+00		106+00	6692
106+00		136+00	7371
136+00		149+42	3880
		Total:	17943

SALVAGE AND STOCKPILE ASPHALT MIX AND GRANULAR BASE MATERIAL

An estimated 1191 tons (794 Cubic Yards) of asphalt mix and granular base material shall be salvaged from the entire length of the existing highway) and stockpiled at a site furnished by the Contractor and satisfactory to the Engineer.

The quantity of salvage asphalt mix and granular base material may vary from the plans. No adjustment will be made to the contract unit price for variations of the quantity of “Salvage Asphalt Mix and Granular Base Material.”

Plot Scale - 1:200
Plotted From - TRSF12139
File - ...\prj\codn026X\NotesSectionB.dgn

It is estimated that there are 68 cubic yards of salvageable material per station from approximately 140+00 to 149+41.67. This rate was used to compute the unclassified excavation quantities. The rate of salvageable material is based on a 24 foot width.

IN PLACE SURFACING AND GRANULAR MATERIAL

The following table is furnished for information only.

Sta.	Centerline Feet Lt.	Centerline Feet Rt.	Depth PCCP (inches)	Depth Granular Base (inches)
86+24		23.8	7.0	5.5
93+66		24.4	6.0	4.0
100+59		24.8	6.5	5.0
107+24		20.4	7.0	5.0
114+29		20.7	6.5	5.0
		Average	6.6	4.9

TABLE OF PIPE CULVERT UNDERCUT

The Table of Pipe Culvert Undercut is intended to be used to establish an estimated quantity of Pipe Culvert Undercut for bidding purposes only. The table includes undercut for 36 inch and larger pipe culverts. The depth of undercut is an estimate and the actual depth necessary shall be determined during construction. Pipes shown may or may not require undercutting and pipes not shown may require undercutting. The Engineer will determine which pipe shall be undercut in accordance with Section 421 of the Specifications.

Station	Undercut Depth (Ft)	Quantity (CuYd)
141+76	1	7.3
	Total:	7.3

The table contains the rate of pipe culvert undercut per foot of pipe length and should be used as an aid in determining the actual amount of undercut to be performed during construction. The table is derived from the drawing below and conforms to the Specifications. When calculating pipe culvert undercut, the length of pipe ends should be included in the overall pipe length.

Storm sewer and approach pipes do not require undercutting unless specified otherwise in these plans.

Pipe Diameter (In)	Round Pipe Undercut Rate for 1' Depth (CuYd/Ft)	Arch Pipe Undercut Rate for 1' Depth (CuYd/Ft)
24	0.2407	0.2577
30	0.2623	0.2847
36	0.2840	0.3110
42	0.3056	0.3337
48	0.3272	0.3596
54	0.3488	0.3827
60	0.3704	0.4105
66	0.3920	---
72	0.4136	0.4630
78	0.4352	---
84	0.4568	0.5123
90	0.4784	---

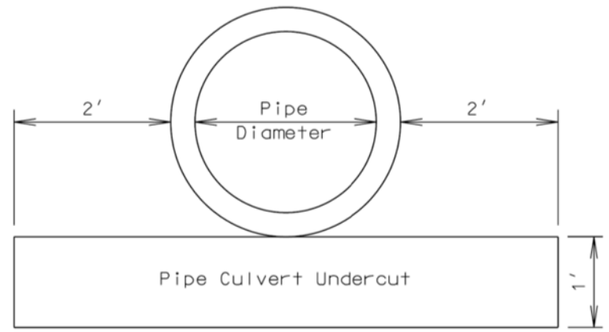

INCIDENTAL WORK, GRADING

Station	Remarks
76+62-29'R to 80+93-26'R	Take Out 18"-430' RCP
80+92-26'R to 80+93-26'L	Take Out 18"-46' RCP
84+65-42'L to 85+24-26'L	Take Out 18" -62' RCP
85+24-26'L to 88+04-26'L	Take Out 18"-280' RCP
86+85 L	Take Out Concrete Stairway
87+43 L	Take Out Concrete Stairway
87+76 L	Take Out Concrete Stairway
88+04-26'L to 88+22-41'L	Take Out 18"-22' RCP
88+04-25'R to 88+04-26'L	Take Out 18"-48' RCP
88+04-26'L to 88+79-26'L	Take Out 18"-76' RCP
88+69-26'L to 88+79-26'L	Take Out 18"-10' RCP
88+79-26'L to 91+58-26'L	Take Out 18"-278' RCP
90+25 L	Take Out Concrete Stairway
91+58-25'R to 91+58-26'L	Take Out 18"-48' RCP
91+58-25'L to 92+31-26'L	Take Out 18"-74' RCP
91+76-42'L to 92+15-42'L	Take Out 18"-40' RCP
92+14-42'L to 92+31-26'L	Take Out 18"-22' RCP
92+31-26'L to 95+09-26'L	Take Out 18"-280' RCP
94+49 L	Take Out Concrete Stairway
94+99 L	Take Out Concrete Stairway
95+09-26'L to 95+86-26'L	Take Out 30"-77' RCP
95+10-25'R to 95+10-24'L	Take Out 18"-48' RCP
95+10-24'L to 95+21-26'L	Take Out 30"-12' RCP
95+33-43'L to 95+69-42'L	Take Out 18"-35' RCP
95+69-42'L to 95+86-26'L	Take Out 18"-24' RCP
95+86-26'L to 98+65-31'L	Take Out 30"-279' RCP
98+65-31'L to 98+65-31'R	Take Out 18"-63' RCP
98+65-31'L to 99+41-31'L	Take Out 30" -76' RCP
98+68 L	Take Out Concrete Stairway
98+72-59'L	Remove Lower 8ft of Branches from Spruce Tree
98+84-48'L to 99+24-47'L	Take Out 18"-40' RCP
99+24-47'L to 99+41-31'L	Take Out 18"-23' RCP
99+41-31'L to 102+20-31'L	Take Out 18"-31' RCP
102+01-31'L to 102+20-31'L	Take Out 30"-18' RCP
102+20-31'R to 102+20-31'L	Take Out 30"-60'RCP
102+20-31'R to 102+41-32'R	Take Out 30"-22' RCP
102+20-31'L to 102+37-47'L	Take Out 18"-22' RCP
102+50-38'R to 104+46-26'R	Take Out 18"-197' RCP
102+76-63'L to 102+94-31'L	Take Out 18"-34' RCP

INCIDENTAL WORK, GRADING (CONTINUED)

104+31-27'R to 104+47-27'L	Take Out 24"-14' RCP
104+46-26'R to 106+99-26'R	Take Out 24"-253' RCP
104+47-26'L to 104+76-31'L	Take Out 18"-24' RCP
104+85-26'R to 105+32-26' R	Take Out 18"-47' RCP
106+98-26'L to 106+99-26'R	Take Out 18"-48' RCP
106+99-26'R to 109+39-26'R	Take Out 18"-240' RCP
109+39-26'R to 109+40-26'L	Take Out 18"-49' RCP
109+39-26'R to 111+56-26'R	Take Out 18"-240' RCP
111+55-26'L to 111+56-26'R	Take Out 18"-49' RCP
113+86-26'L to 113+87-26'R	Take Out 18"-49' RCP
113+87-26'R to 116+37-26'R	Take Out 18"-250' RCP
116+36-26'R to 116+37-25'L	Take Out 18"-48' RCP
116+37-25'L to 118+40-25'L	Take Out 18"-204' RCP
118+40-25'L to 119+13-26'L	Take Out 18"-71' RCP
118+96-42'L to 119+13-26'L	Take Out 18"-20' RCP
122+87-26'L to 123+04-26'L	Take Out 18"-16' RCP
124+22-26'L to 124+38-25'L	Take Out 18"-146' RCP
125+84-26'L to 25+85-25'R	Take Out 18"-51' RCP
125+84-26'L to 127+08-26'L	Take Out 18"-124' RCP
127+08-26'L to 128+35-26'L	Take Out 18"-127' RCP
128+35-26'L to 128+35-56'R	Take Out 18"-52' RCP
128+35-26'L to 128+86-26'L	Take Out 24"-52' RCP
129+38-69'L to 129+47-72'L	Take Out 18"-10' RCP
129+54-62'R to 129+55-28'R	Take Out 36"-32' RCP
129+55-28'l to 129+76-42'L	Take Out 30"-70' RCP
129+76-42'L to 129+82-60'L	Take Out 30"-16' RCP
142+64	Take Out 30"-78' RCP & 2 End Sections
142+67-48'R to 143+27-44'R	Take Out 18"-60' CMP & 2 End Sections
144+36-32'R to 145+16-33'R	Take Out 18"-82' CMP and 2 End Sections

REMOVAL OF EXISTING CONCRETE PAVEMENT STA. 76+00 to STA. 140+15

Existing asphalt concrete and/or existing asphalt concrete patch work that was placed above the existing concrete pavement is included in the quantity for "Remove Concrete Pavement". The Contractor shall dispose of the concrete pavement and asphalt concrete at a site approved by the Engineer.

The existing P.C.C. Pavement is 7" jointed PCCP with transverse and longitudinal dowels. Transverse contraction joints are spaced at 20'. Coarse aggregate size is 1" of gravel, crushed gravel, or crushed rock.

TABLE OF CONCRETE PAVEMENT REMOVAL

Station	to	Station	Description	Quantity (SqYd)
76+00		95+48	4 Lane Section	13495.0
95+48		135+76	5 Lane Section	26070.2
135+76		140+15	Transition to 2 Lane Section	1880.3
			Total:	41445.5

Plot Scale - 1:200
Plotted From - TRSF12139
File - ...\pn\codh0262X\NotesSectionB.dgn

TABLE OF ASPHALT CONCRETE PAVEMENT REMOVAL

Station	to	Station	L/R	Quantity (SqYd)
76+00		76+34	L	88.2
76+00		76+34	R	114.1
77+93		78+22	R	22.3
79+00		79+40	R	93.2
80+34		80+69	L	19.4
95+37		95+62	L	58.6
98+84		99+15	R	28.1
102+36		102+77	R	191.7
102+42		102+73	L	185.6
104+77		105+19	L	99.2
108+86		109+22	L	30.6
112+07		112+32	L	19.0
113+50		113+89	L	31.9
116+37		116+82	L	69.6
118+58		118+94	L	21.7
124+72		125+07	L	53.1
126+46		126+87	L	165.8
128+79		129+34	R	385.6
128+96		129+51	L	315.0
131+45		131+71	L	19.8
131+94		131+32	L	66.6
135+58		135+92	R	134.2
135+60		135+95	L	82.4
136+02		140+15	L	225.1
136+08		140+15	R	381.7
140+15		149+42	R	2977.1
			Total:	5879.6

TABLE OF CONCRETE CURB AND GUTTER REMOVAL

Station	to	Station	L/R	Quantity (Ft)
80+33		80+33	L	5
80+70		80+70	L	5
95+34		95+35	L	21
65+64		95+69	L	21
98+82		98+82	R	8
99+16		99+16	R	8
102+40		102+41	L	31
102+75		102+75	L	30
104+76		104+84	L	32
105+16		105+20	L	18
111+31		112+08	L	84
112+30		112+39	L	16
113+50		133658	L	15
113+81		114+11	L	37
116+36		116+44	L	16
116+73		116+81	L	14
128+91		128+91	L	26
131+45		131+45	L	7
131+72		131+72	L	7
131+94		131+94	L	14
132+32		132+32	L	18
135+57		135+57	R	20
135+59		135+59	L	22
135+93		135+93	R	21
135+95		135+95	L	22
138+07		138+07	R	9
138+45		138+45	R	8
144+58		144+58	R	4
144+94		144+94	R	4
			Total:	543

TABLE OF CHAIN LINK FENCE REMOVAL

Station	to	Station	L/R	Quantity (Ft)
82+37		82+66	L	87
88+73		90+10	L	158
			Total:	245

TABLE OF CONCRETE DRIVEWAY PAVEMENT REMOVAL

Station	to	Station	L/R	Quantity (SqYd)
78+89		78+96	L	2.5
85+91		86+15	L	44.4
86+93		87+03	R	7.5
93+55		93+81	L	11.3
93+56		93+82	R	25.4
94+21		94+31	L	38.1
94+46		94+70	R	12.6
97+83		98+07	R	13.1
100+32		100+56	R	23.0
100+39		100+64	L	32.2
101+25		101+49	R	16.5
101+36		101+65	L	39.2
102+76		103+23	L	93.9
103+93		104+12	R	8.8
106+13		106+45	L	29.7
110+42		110+62	L	15.3
115+45		115+68	R	9.4
115+97		116+32	R	16.4
118+72		119+03	R	12.6
131+38		131+78	L	16.8
			Total:	468.7

TABLE OF SIDEWALK REMOVAL

Note: Sidewalk adjacent to Type C Retaining Wall is not included in this table and is incidental to the contract unit price per foot for "Remove Concrete Retaining Wall".

Station	to	Station	L/R	Quantity (SqYd)
76+65		80+30	L	201.7
76+67		80+31	R	216.4
80+71		84+63	L	226.8
80+74		84+64	R	241.2
85+05		88+19	L	179.1
85+05		88+19	R	184.4
88+61		91+72	R	236.5
92+15		92+25	R	5.8
92+16		95+31	L	175.8
95+13		95+24	R	12.6
95+67		97+08	R	78.3

TABLE OF SIDEWALK REMOVAL (CONTINUED)

95+70	95+81	L	6.3
96+67	96+71	L	7.1
98+72	98+82	L	7.0
98+72	98+81	R	7.0
99+19	99+30	R	6.9
99+26	99+38	L	13.9
102+26	102+36	L	7.0
102+26	102+35	R	7.2
102+76	103+23	L	30.5
102+78	102+88	L	7.1
104+63	104+74	L	7.3
105+18	105+26	L	6.9
108+72	108+83	L	7.9
109+25	109+35	L	6.9
118+43	118+54	L	7.4
118+99	119+10	R	8.0
122+39	126+45	L	220.2
128+66	128+90	L	44.4
128+72	128+95	R	38.3
129+36	129+55	R	26.4
129+39	129+95	L	63.8
135+42	135+55	R	21.8
		Total:	2317.9

TABLE OF CONCRETE RETAINING WALL REMOVAL

Station	to	Station	L/R	Quantity (ft)
88+73		91+10	L	313.0
119+10		121+63	R	253.0
			Total:	566.0

TABLE OF MANHOLE REMOVAL

Station	L/R	Quantity (Each)
129+54-62'	R	1
	Total:	1

Plot Scale - 1:200
Plotted From - TRSF12139
File - ...\prj\coon0226X\NotesSectionB.dgn

TABLE OF DROP INLET REMOVAL

All costs for removal of the frame and grate assembly shall be incidental to the contract unit price per each for "Remove Drop Inlet".

Station	Offset	Quantity (Each)
80+92	26'R	1
80+93	26'L	1
84+65	42''L	1
85+24	26'L	1
88+04	25'R	1
88+04	26'L	1
88+22	41'L	1
88+79	26'L	1
91+58	25'R	1
91+58	26'L	1
92+31	26'L	1
95+09	26'L	1
95+10	25'R	1
95+33	43'L	1
95+69	42'L	1
95+86	26'L	1
98+65	31'R	1
98+65	31'L	1
98+84	48'L	1
99+24	47'L	1
99+41	31'L	1
102+20	31'L	1
102+20	31'R	1
102+37	47'L	1
102+76	63'L	1
102+94	31'L	1
104+46	26'R	1
104+47	26'L	1
105+32	26'L	1
106+98	26'L	1
106+99	26'R	1
109+39	26'R	1
109+40	26'l	1
111+55	26'L	1
111+56	26'R	1
113+86	26'L	1
113+87	26'R	1
116+36	26'R	1
116+37	25'R	1
118+40	25'R	1
118+96	42'l	1
119+13	26'L	1
122+87	26'L	1
124+38	25'L	1
125+84	26'L	1
125+85	25'R	1
127+08	26'L	1
128+35	26'R	1
128+35	26'L	1
129+47	72'L	1
129+54	28'R	1
129+76	42'L	1
	Total:	52

STORM SEWER

Reinforced concrete pipe may be either bell and spigot or tongue and groove. The pipe sections shall be adjoined such that the ends are fully entered and the inner surfaces are reasonably flush and even.

Lift holes in the reinforced concrete pipe shall be plugged with grout.

Watertight joints are required for reinforced concrete pipe, drop inlets, manholes, and junction boxes where storm sewers run parallel to and within 10 feet horizontally from existing or proposed water mains.

Watertight joints are required where reinforced concrete pipes, drop inlets, manholes, or junction boxes cross water mains and are separated a distance of 18 inches or less, above or below, the water main.

If watertight joints are required then the watertight joints shall extend for a distance of 10 feet beyond the water main. This measurement shall be from the sealed concrete joint to the outer most surface of the water main.

Watertight joint seals shall conform to the following requirements:

1. Reinforced Concrete Pipe (Circular): Gasketed pipe shall conform to the requirements of ASTM C443. Non-gasketed concrete pipe shall be sealed with a mastic joint seal conforming to the requirements of ASTM C990 and encased with a minimum 2' wide by 6" thick M6 concrete collar reinforced with 6x6 W2.9 x W2.9 wire mesh.

2. Reinforced Concrete Pipe (Arch): Joints shall be sealed with a waterstop seal meeting the requirements of ASTM C990. Waterstop seals shall consist of hydrophilic compounds such as Waterstop-RX or ConSeal CS-231.

3. Drop Inlets, Manholes, and Junction Boxes: Joints shall be sealed with a waterstop seal or seal wrap meeting the requirements of ASTM C990 or encased with a minimum 2' wide by 6" thick M6 concrete collar reinforced with 6x6 W2.9 x W2.9 wire mesh. Waterstop seal shall contain hydrophilic compounds such as Waterstop-RX or ConSeal CS-231. Seal wrap shall be a self-adhesive external joint wrap such as ConWrap CS-217 or Mar Mac Seal Wrap.

Gaskets and seals (mastic, waterstop, and seal wraps) shall be installed in accordance with the manufacturer's recommendations.

The cost for furnishing and installing all gaskets, mastic joint seal, waterstop seal, seal wrap, concrete collars, and for plugging the lift holes shall be incidental to the contract unit price per foot for the corresponding pipe bid item.

DROP INLETS

Where drop inlets are constructed within areas of curb and gutter, the Contractor shall construct weep holes of at least 3 inches in diameter in the drop inlet walls. The weep holes shall be constructed at the same elevation as the adjacent top of the earthen subgrade and shall be maintained clean and open at all times until the permanent surfacing is placed. The drop inlets shall be covered throughout construction operations as necessary with an Engineer approved cover to provide safe travel for motorists and to prevent materials from entering the storm sewer system. After the permanent surfacing has been placed, the Contractor shall seal the weep holes with grout and remove all debris from the drop inlet. All costs involved with the coverings, weep holes, and removing debris from the drop inlets shall be incidental to the contract unit prices for the components of the drop inlets.

The plan shown quantities of the drop inlet components such as Class M6 Concrete, Reinforcing Steel, Type B Frame and Grate Assembly, Precast Drop Inlet Collar, and Precast Concrete Type S Drop Inlet Lid will be the basis of payment for these items.

If additions or reductions to the number of drop inlets are ordered by the Engineer, payment for the components required to construct the drop inlets will be made at the contract unit prices for the components of the drop inlets.

Plot Scale - 1:200
Plotted From - TRSF12139
File - ...\prj\codn026X\NotesSectionB.dgn

REINFORCED CONCRETE DROP INLETS LOCATIONS AND QUANTITIES

Station	Type	Class M6 Concrete (Cu Yd)	Re-Steel (Lb)	Frame & Grate (Type)	6" Conc Collar (Each)	Top of Curb Elev	Top of Wall Elev	Floor Elev	Height of Drop Inlet (Feet)
78+42.00-29.17'L	B 2X3	0.83	94	B	1	57.91	56.45	53.63	2.82
78+42.00-29.17'R	B 2X3	0.84	104	B	1	58.13	56.67	53.35	3.32
80+93.62-26.67' L	B 2X3	0.83	94	B	1	64.80	63.34	60.52	2.82
80+95.95-23.67' R	B 2X3	0.79	99	B	1	64.84	63.38	60.30	3.08
84+40.00-23.67'L	B 3x4	1.68	211	B	1	66.75	65.29	61.75	3.54
84+40.00-23.67'R	B 2X3	0.83	93	B	1	66.25	64.79	61.98	2.81
84+64.53-42.71'L	B 2X3	0.90	104	B	1	66.42	64.96	61.61	3.35
85+04.16-43.00'L	B 2X3	0.89	103	B	1	66.18	64.72	61.42	3.30
85+24.20-23.67'L	B 2X3	0.85	95	B	1	65.65	64.19	61.29	2.90
86+60.00-23.67'L	B 2X3	0.78	98	B	1	64.83	63.37	60.34	3.03
86+60.00-23.67'R	B 2X3	0.83	93	B	1	64.83	63.37	60.56	2.81
87+98.93-23.67'L	B 2X3	0.78	98	B	1	64.15	62.69	59.66	3.03
87+98.93-23.67'R	B 2X3	0.83	93	B	1	64.15	62.69	59.88	2.81
88+21.76-40.93'L	B 2X3	0.70	81	B	1	64.40	62.94	60.73	2.21
88+60.99-42.58'L	B 2X3	0.65	81	B	1	64.22	62.76	60.54	2.22
88+80.43-23.67'L	B 2X3	0.78	98	B	1	63.76	62.30	59.26	3.04
90+10.00-23.67'L	B 2X3	0.83	94	B	1	62.50	61.04	58.00	3.04
90+10.00-23.67'R	B 2X3	0.78	98	B	1	62.50	61.04	58.22	2.82
91+50.00-23.67'L	B 3x4	1.70	223	B	1	60.24	58.78	54.89	3.89
91+50.00-23.67'R	B 2X3	0.84	94	B	1	59.74	58.28	55.43	2.85
91+75.35-48.29'L	B 2X3	0.76	87	B	1	59.28	57.82	55.32	2.50
92+14.83-42.80'L	B 2X3	0.65	81	B	1	58.80	57.34	55.13	2.21
92+34.21-23.67'L	B 3x4	1.64	220	B	1	58.79	57.33	53.51	3.82
93+45.00-23.67'L	B 4X3	1.55	211	B	1	57.81	56.35	52.81	3.54
93+45.00-23.67'R	B 2X3	0.83	93	B	1	57.31	55.85	53.04	2.81
95+02.00-23.67'L	B 4X3	1.71	239	B	1	57.44	55.98	51.57	4.41
95+02.00-23.67'R	B 2X3	0.83	94	B	1	56.94	55.48	52.66	2.82
95+33.29-42.87'L	B 2X3	0.70	81	B	1	57.24	55.78	53.57	2.21
95+68.92-42.99'L	B 2X3	0.67	83	B	1	57.17	55.71	53.40	2.31
95+92.13-23.67'L	B 4x4	2.16	409	B	1	57.23	55.77	51.16	4.61
97+00.00-29.17'L	B 4X3	1.89	258	B	1	57.09	55.63	50.64	4.99
97+00.00-29.17'R	B 2X3	0.83	93	B	1	56.37	54.91	52.10	2.81
98+58.00-29.17'L	B 4x3	1.95	265	B	1	56.53	55.07	49.86	5.21
98+58.00-29.17'R	B 2x3	0.83	94	B	1	55.81	54.35	51.53	2.82
98+84.16-48.28'L	B 2x3	0.78	89	B	1	56.09	54.63	52.06	2.57
99+24.54-48.59'L	B 2x3	0.65	81	B	1	55.54	54.08	51.87	2.21
99+47.85-29.17'L	B 4x4	2.16	409	B	1	55.22	53.76	49.43	4.33
100+80.00-29.17'L	B 4x3	1.71	239	B	1	53.56	52.10	47.70	4.40
100+80.00-29.17'R	B 2x3	0.83	94	B	1	52.84	51.38	48.56	2.82
102+11.37-29.17'R	B 4x4	2.16	402	B	1	52.33	50.87	46.42	4.45
102+11.93-29.17'L	B 4x4	2.04	400	B	1	52.55	51.09	46.69	4.40
102+37.32-56.07'L	B 4x3	1.66	210	B	1	52.82	51.36	47.88	3.48
102+75.21-54.68'L	B 2x3	0.76	87	B	1	52.17	50.71	48.23	2.48
103+00.54-29.17'L	B 2x3	0.83	93	B	1	51.87	50.41	47.60	2.81
104+51.50-29.17'L	B 2x3	0.70	81	B	1	50.98	49.52	47.31	2.21
104+75.00-29.17'R	B 3X4	1.83	236	B	1	51.81	50.35	46.05	4.30
105+25.21-31.63'R	S 4x6	3.54	635	S		51.25	49.75	46.28	3.47
105+50.10-29.17'L	B 2x3	0.70	81	B	1	50.89	49.43	47.22	2.21
105+75.00-29.17'R	B 4x3	1.70	221	B	1	51.82	50.36	46.51	3.85
107+00.00-29.17'L	B 2x3	0.83	93	B	1	52.29	50.83	48.02	2.81
107+00.00-29.17'R	B 4x3	1.75	233	B	1	52.93	51.47	47.26	4.21
SubTotals		**59.57**	**8140**	**50-B 1-S**	**50**				

Station	Type	Class M6 Concrete (Cu Yd)	Re-Steel (Lb)	Frame & Grate (Type)	6" Conc Collar (Each)	Top of Curb Elev	Top of Wall Elev	Floor Elev	Height of Drop Inlet (Feet)
109+47.43-29.17'L	B 2x3	0.83	93	B	1	56.25	54.79	51.98	2.81
109+47.43-29.17'R	B 4x3	1.65	222	B	1	56.53	55.07	51.21	3.86
111+55.00-29.17'L	B 2x3	0.83	94	B	1	60.96	59.50	56.68	2.82
111+55.00-29.17'R	B 4x3	1.65	222	B	1	61.24	59.78	55.92	3.86
113+92.00-29.17'L	B 2x3	0.83	93	B	1	66.20	64.74	61.93	2.81
113+92.00-29.17'R	B 4x3	1.65	221	B	1	66.48	65.02	61.17	3.85
116+34.95-29.17'L	B 2x3	0.90	104	B	1	71.85	70.39	67.04	3.35
116+37.28-29.17'R	B 3x4	1.73	225	B	1	72.19	70.73	66.76	3.97
118+33.18-29.17'L	B 2x3	0.73	93	B	1	76.35	74.89	72.08	2.81
118+56.55-52.45'L	B 2x3	0.66	82	B	1	77.31	75.85	73.60	2.25
118+95.33-52.53'L	B 2x3	0.74	85	B	1	77.65	76.19	73.78	2.41
119+20.00-29.17'L	B 2x3	0.89	104	B	1	78.00	76.54	73.22	3.32
119+20.00-29.17'R	B 2x3	0.83	94	B	1	77.78	76.32	73.50	2.82
122+87.11-29.17'L	B 2x3	0.91	105	B	1	73.74	72.28	68.97	3.41
122+87.11-29.17'R	B 2x3	0.83	93	B	1	73.52	72.06	69.25	2.81
124+54.00-29.17'L	B 2x3	0.84	104	B	1	71.71	70.25	66.93	3.32
124+54.00-29.17'R	B 2x3	0.83	94	B	1	71.49	70.03	67.21	2.82
126+24.00-29.17'L	B 4x3	1.67	220	B	1	71.02	69.56	65.75	3.81
126+24.00-29.17'R	B 2x3	0.83	93	B	1	70.30	68.84	66.03	2.81
127+94.00-29.17'L	B 4x3	1.70	221	B	1	70.17	68.71	64.86	3.85
127+94.00-29.17'R	B 2x3	0.94	103	B	1	69.95	68.49	65.18	3.31
128+43.56-31.63'L	S 4x6	3.43	629	S		69.51	68.01	64.63	3.38
128+43.56-31.63'R	S 4x6	3.24	592	S		69.29	67.79	64.96	2.83
129+38.38-68.87'L	B 2x3	1.10	123	B	1	70.87	69.41	65.12	4.29
129+73.91-31.63'L	S 4x6	3.33	628	S		70.47	68.97	65.60	3.37
129+73.91-31.63'R	S 4x6	3.63	663	S		70.25	68.75	64.85	3.90
131+80.00-29.17'L	B 2x3	0.79	99	B	1	72.51	71.05	67.96	3.09
131+80.00-29.17'R	B 2x3	0.78	89	B	1	72.29	70.83	68.24	2.59
133+80.00-29.17'L	B 2x3	0.83	93	B	1	74.05	72.59	69.50	3.09
133+80.00-29.17'R	B 2x3	0.78	89	B	1	73.83	72.37	69.78	2.59
139+82.00-29.17'L	B 2x3	0.80	91	B	1	73.64	72.18	69.48	2.70
*139+82.00-29.17'R	B 2x3	0.80	95	B	1	73.41	71.95	69.04	2.91
141+36.00-29.17'L	B 2x3	0.78	89	B	1	72.77	71.31	68.73	2.58
*141+36.00-29.17'R	B 2x3	0.74	90	B	1	72.55	71.09	68.44	2.65
141+76.31-31.63'L	S 4x6	3.17	578	S		72.68	71.18	68.56	2.62
*141+76.31-31.63'R	S 4x6	2.75	580	S		72.45	70.95	68.30	2.65
141+77.85-43.50'R	C 4x5	2.16	250	C(Lid)		-	72.62	68.25	4.37
142+16.00-29.17'L	B 2x3	0.78	89	B	1	72.80	71.34	68.73	2.61
*142+16.00-29.17'R	B 4x4	1.58	325	B	1	72.58	71.12	68.43	2.69
142+63.24-29.17'L	B 3x4	1.46	207	B	1	73.66	72.20	68.79	3.41
*142+63.24-29.17'R	B 4x4	1.71	356	B	1	72.94	71.48	68.57	3.40
*144+31.74-29.17'R	B 2x3	0.96	110	B	1	74.78	73.32	69.69	3.63
145+17.36-29.17'L	B 3x4	1.61	204	B	1	76.16	74.70	71.40	3.30
*145+17.36-29.17'R	B 3x4	1.66	215	B	1	75.95	74.49	70.85	3.64
SubTotals		**61.34**	**9049**	**37-B 6-S 1-C**	**37**				
Grand Totals		**111.19**	**16142**	**87-B 7-S 1-C**	**87**				

* Drop inlet requires watertight joints in accordance with the STORM SEWER notes.

TABLE OF JUNCTION BOXES AND QUANTITIES

Station	Size L'xW'xH'	Frame and Lid (Type)	Class M6 Concrete (CuYd)	Reinforcing Steel (Lb)	** 48" Manhole Cone Section (Ft)
128+86.45-25.73'L	5'x5'x3.0	A9	4.13	796	0
*129+46.69-72.04'L	5'x5'x4.5'	A7	4.61	846	0
*129+53.79-61.81'R	5'x5'x5.0'	A7	4.85	908	2.0
		Totals:	13.59	2550	2.0

Total Type A7 Manhole Frame and Lid 1

Total Type A9 Manhole Frame and Lid 2

* Junction boxes require watertight joints in accordance with the STORM SEWER notes.

** Eccentric Cone Section

TABLE OF CONCRETE STAIRWAYS

Station	L/R	Top Landing Elev.	Bottom Landing Elev.	No. of Steps (w)	Class M6 Concrete (CuYd)	Epoxy Coated Reinf. Steel (Lb)	* Structure Exc. (CuYd)	Pipe Handrail (Ft)
86+85	L	76.39	64.89	2	1.33	99.57	2.97	10.70
87+43	L	66.10	64.60	2	1.33	99.57	2.97	10.70
87+75	L	65.95	64.45	2	1.33	99.57	2.97	10.70
90+25	L	64.83	62.33	4	1.79	129.51	4.15	15.18
94+49	L	58.73	57.23	2	1.33	99.57	2.97	10.70
94+99	L	58.62	57.12	2	1.33	99.57	2.97	10.70
96+68	L	59.25	56.75	4	1.79	129.51	4.15	15.18
				Totals:	10.23	757	23.15	83.86

* The quantities for structure excavation are for informational purposes only. Payment for all work necessary for structure excavation shall be incidental to the various contract unit prices for the items listed in the above table.

SLIP RESISTANT COATING FOR CONCRETE STAIRWAY

Curing compounds shall not be utilized on concrete stairway treads during the concrete curing process. Curing shall be accomplished with a double layer of burlap mats and polyethylene sheeting.

The Contractor shall apply a 2" wide slip resistant coating at the front of each stairway tread for the full width of the tread.

The slip resistant coating shall be a red, tile red, or brick red color. The coating shall be a single component epoxy and have a minimum coefficient of friction value of 0.9 for dry and 0.9 for wet as determined by ASTM F 609.

The slip resistant coating shall be applied in accordance with the manufacturer's recommendations.

All cost for furnishing and applying the slip resistant epoxy coating including equipment, labor, and materials shall be incidental to various contract items.

Plot Scale - 1:200

Plotted From - TRSF12139

File - ...\prj\codn\026X\NotesSectionB.dgn

ADJUSTMENT OF MANHOLES

The Contractor shall adjust manholes to the extent necessary on this project. Adjusting the manholes may consist of removing the upper course of brick or removing the concrete walls, replacing the removed materials with brick or Class M6 concrete, placing adjusting rings if necessary, and resetting the manhole frame and lid. The elevation of the lid shall be set at the same elevation of the adjacent new pavement or surrounding ground. All manhole frames, lids, and rings that are cracked or broken due to carelessness of the Contractor shall be replaced with new manhole frames, lids, and rings that conform with the Specifications at the Contractor's expense. Manholes shall be adjusted to the satisfaction of the Engineer. All costs involved in adjusting the manholes shall be incidental to the contract unit price per each for "Adjust Manhole".

The Engineer may direct adjustment of manholes that were not included in these plans. Payment for adjusting manholes that were not included in the plans will be at the contract unit price per each for "Adjust Manhole".

TABLE OF ADJUST MANHOLES

Station	Offset	Adjustment	Quantity
80+58	6'L	Raise 0.11'	1
82+63	4'L	Lower 0.27'	1
88+40	1'L	Raise 0.06'	1
89+01	13'L	Lower 0.14'	1
91+94	13'L	Raise 0.17'	1
95+48	13'L	Lower 0.18'	1
99+02	13'L	Raise 0.20'	1
102+04	12'L	Raise 0.15'	1
104+83	31'L	Raise 0.06'	1
109+04	16'L	Raise 0.30'	1
112+87	3'L	Raise 0.70'	1
116+88	2'L	Raise 0.20'	1
120+89	1'L	Lower 0.04'	1
124+88	2'L	Raise 0.27'	1
135+79	57'L	Raise 1.24'	1
145+09	27'R	Raise 0.47'	1
Total			16

TABLE OF ADJUST WATER VALVES

Station	Offset	Adjustment	Quantity
76+92	37'R	Lower 0.16'	1
77+91	37'R	Lower 0.27'	1
78+93	37'L	Lower 0.40'	1
80+16	37'R	Raise 0.04'	1
82+05	33'L	Raise 0.53'	1
82+62	34'L	Raise 0.08'	1
83+14	33'L	Raise 0.09'	1
83+54	32'L	Raise 0.03'	1
84+24	34'L	Lower 0.62'	1
84+52	19'R	Lower 0.10'	1
85+10	39'L	Raise 0.07'	1
86+37	32'R	Raise 0.16'	1
86+98	32'R	Raise 0.30'	1
87+18	31'R	Raise 0.14'	1
87+57	32'L	Lower 0.07'	1
87+67	33'R	Raise 0.16'	1
88+63	24'R	Lower 0.37'	1
90+49	34'L	Lower 1.23'	1
91+27	34'L	Lower 1.05'	1
92+05	34'R	Raise 0.52'	1
92+18	25'R	Raise 0.12'	1
92+73	33'R	Raise 0.66'	1
93+27	33'R	Raise 0.14'	1
93+49	35'L	Raise 0.17'	1
94+09	32'R	Raise 0.04'	1
94+16	34'L	Raise 0.15'	1
94+35	33'R	Lower 0.06'	1
94+75	34'L	Lower 0.31'	1
94+89	32'R	Raise 0.42'	1
95+59	34'R	Lower 0.14'	1
96+13	34'L	Lower 0.80'	1
96+44	35'L	Lower 0.84'	1
97+33	38'L	Lower 0.44'	1
97+81	38'R	Lower 0.10'	1
101+13	39'L	Lower 0.48'	1
101+60	40'R	Raise 0.74'	1
101+80	39"L	Lower 0.66'	1
102+68	27'L	Raise 0.15'	1
109+13	23'L	Raise 0.25'	1
110+04	33'R	Lower 0.14'	1
110+98	33'L	Lower 0.62'	1
112+67	32'R	Raise 0.19'	1
112+73	33'L	Lower 0.57'	1
113+43	31'R	Lower 0.39'	1
113+47	32'L	Lower 0.02'	1
114+18	31'R	Lower 0.10'	1
114+22	32'L	Raise 0.15'	1
115+67	32'R	Raise 0.20'	1
116+27	32'L	Lower 0.33'	1
116+97	32'R	Raise 0.41'	1
117+22	32'L	Lower 0.51'	1
117+72	32'R	Lower 0.07'	1
117+97	32'L	Raise 0.37'	1
118+51	32'R	Lower 0.23'	1
119+42	32'R	Raise 0.62'	1
121+17	35'L	Lower 2.37'	1
122+28	31'L	Lower 0.19'	1
123+93	32'R	Raise 1.22'	1
124+52	32'L	Raise 0.25'	1
124+67	33'R	Raise 1.16'	1
125+43	33'R	Raise 1.03'	1
125+82	32'L	Raise 0.04'	1
126+17	32'R	Raise 0.71'	1
126+93	32'R	Raise 0.70'	1
132+58	35'R	Raise 0.32'	1
135+89	37'R	Lower 0.65'	1
138+87	47'R	Lower 0.77'	1
144+78	38'R	Lower 0.64'	1
Total			68

TYPE 1 DETECTABLE WARNINGS

Detectable warnings shall be in compliance with the Americans with Disabilities Act regulations.

The detectable warnings shall be installed according to the manufacturer's installation instructions.

A concrete thickness equal to the adjacent concrete sidewalk thickness and 2 inches of granular cushion material shall be placed below the Type 1 Detectable Warnings. When concrete is placed below the detectable warnings then the concrete thickness shall be transitioned at the rate of 1" per foot to match the adjacent concrete sidewalk thickness.

The detectable warnings shall be a brick red color for application in concrete curb ramps. Cast iron plates may be a natural patina (weathered steel).

When Type 1 Detectable Warnings are specified, the Contractor shall furnish and install only one of the products listed in the Type 1 Detectable Warnings table.

Type 1 Detectable Warnings

Product	Manufacturer
Detectable Warning Plate Cast Iron Plate	Neenah Foundry Company Neenah, WI 800-558-5075 http://www.neenahfoundry.com/
Detectable Warning Plate Cast Iron Plate	Deeter Foundry Lincoln, NE 800-234-7466 http://www.deeter.com/
Detectable Warning Plate Cast Iron Plate(No Coating)	East Jordan Iron Works, Inc. 301 Spring Street East Jordan, MI 49727 800-626-4653 http://www.ejiw.com

Plot Scale - 1:200
Plotted From - TRSF12139
File - ...\prj\codn\026X\NotesSectionB.dgn

TABLE OF CHAIN LINK FENCE with TOP RAIL

Station	to	Station	L/R	Quantity (SqYd)
*88+74		90+10	L	136
			Total:	136

*Note: Fence to be installed at top of backslope

MAILBOXES

The Contractor shall reset the existing mailboxes on new posts with the necessary support hardware for single mailbox assemblies. The local Postmaster will determine the recommended mounting height of the mailboxes throughout the project. The Contractor shall coordinate with the Engineer on the proper postal representative to contact.

All costs for removing existing mailboxes, providing temporary mailboxes, and resetting mailboxes with new posts and necessary support hardware shall be incidental to the contract unit price per each for “Refurbish Single Mailbox”.

TABLE OF REFURBISH MAILBOX

Station	L/R	Single (Each)
108+21	R	1
136+22	L	1
	Totals:	2

TABLE OF CONSTRUCTION STAKING

(See Special Provision for Contractor Staking)

Roadway and Description	Begin Station	End Station	Number of Lanes	Length (Ft)	Grade Staking: Length (Mile)	Grade Staking: Lane Factor	Grade Staking: *Sets of Stakes	Grade Staking: **Grade Staking Quantity (Mile)	Miscellaneous Staking Quantity (Mile)	Slope Staking Quantity (Mile)	Structure Staking Quantity (Each)
US 81 (5 Lanes PCCP)	75+99	78+85	5	286	0.054	2.5	2	0.270	0.054	0.054	
US 81 (Transition from 5 Lanes to 4 Lanes PCCP)	78+85	79+67	5	82	0.016	2.5	2	0.080	0.016	0.016	
US 81 (4 Lanes PCCP)	79+67	96+09	2	1642	0.311	2	2	1.244	0.311	0.311	
US 81 (Transition from 4 Lanes to 5 Lanes PCCP)	96+09	96+92	5	83	0.016	2.5	2	0.080	0.016	0.016	
US 81 (5 Lanes PCCP and Retaining Wall)	96+92	145+27	5	4835	0.916	2.5	2	4.580	0.916	0.916	1
US 81 (5 Lanes AC Pavement)	145+27	147+95	5	268	0.051	2.5	1	0.128	0.051	0.051	
US 81 (Transition from 5 Lanes to 2 Lanes PCCP)	147+95	149+42	5	147	0.028	2.5	1	0.070	0.028	0.028	
							Totals:	6.452	1.392	1.392	1

* 1 = Blue Top Stakes Only (Asphalt Concrete Pavement)
2 = Blue Top and Paving Hub Stakes (PCC Pavement)

** Grade Staking Quantity = (Length) x (Lane Factor) x (Sets of Stakes)

PIPE QUANTITIES

STATE OF SOUTH DAKOTA	PROJECT	SHEET	TOTAL SHEETS
	P 0081(93)157	B11	B120

Plotting Date: 09/01/2015

Station Offset (L/R)	Reinforced Concrete Pipe																				PVC	
	Circular						Arch				Flared Ends			Safety Ends			Tees				Circular	
	18" Cl 2 Ft	24" Cl 2 Ft	30" Cl 2 Ft	36" Cl 2 Ft	42" Cl 2 Ft			30" Cl 2 Ft	42" Cl 2 Ft		18" Each	30" Arch Each		18" Each			18" x 18" Each				8" Ft	
76+62.00-28.99'R to 78+42.00-29.17'R	178																					
*78+42.00-29.17'L to 29.17'R	58																					
78+42.00-29.17'R to 80+95.95-23.67'R	252																					
80+93.62-23.67'L to 80+95.95-23.67'R	46																					
84+40.00-23.67'L to 23.67'R	46																					
84+40.00-23.67'L to 84+64.53-42.17'L	30																					
84+64.53-42.71'L to 85+04.16-43.00'L	38																					
85+04.16-43.00'L to 85+24.20-23.67'L	28																					
85+24.20-23.67' to 86+60.00-23.67'L	134																					
*86+60.00-23.67'L to 23.67'R	46																					
86+60.00-23.67'L to 87+98.93-23.67'L	136																					
*87+98.93-23.67'L to 23.67'R	46																					
87+98.93-23.67'L to 88+80.43-23.67'L	80																					
88+21.76-40.98'L to 88+60.99-42.58'L	38																					
88+60.99-42.58'L to 88+80.43-23.67'L	26																					
88+80.43-23.67'L to 90+10.00-23.67'L	128																					
*90+10.00-23.67'L to 23.67'R	46																					
90+10.00-23.67'L to 91+50.00-23.67'L	138																					
*91+50.00-23.67'L to 23.67'R	46																					
91+50.00-23.67'L to 92+34.21-23.67'L	82																					
91+75.35-48.29'L to 92+14.83-42.80'L	38																					
92+34.21-23.67'L to 93+45.00-23.67'L	108																					
*93+45.00-23.67'L to 23.67'R	46																					
93+45.00-23.67'L to 95+02.00-23.67'L	154																					
*95+02.00-23.67'L to 23.67'R	46																					
95+02.00-23.67'L to 95+92.13-23.67'L			88																			
95+33.29-42.87'L to 95+68.92-42.99'L	34																					
95+68.92-42.99'L to 95+92.13-23.67'L	28																					
95+92.13-23.67'L to 97+00.00-29.17'L			106																			
*97+00.00-29.17'L to 29.17'R	56																					
97+00.00-29.17'L to 98+58.00-29.17'L			156																			
*98+58.00-29.17'L to 29.17' R	56																					
*98+58.00-29.17'L to 99+47.85-29.17'L			88																			
98+84.16-48.28'L to 99+24.54-48.59'L	40																					
99+24.54-48.59'L to 99+47.85-29.17'L	30																					
99+47.85-29.17'L to 100+80.00-29.17'L			130																			
*100+80.00-29.17'L to 29.17'R	56																					
100+80.00-29.17'L to 102+11.93-29.17'L			130																			
*102+11.37-29.17'L to 102+11.93-29.17'R			56																			
102+11.93-29.17'L to 102+37.32-56.07'L	36																					
102+11.93-29.17'L to 103+00.54-29.17'L	86																					
102+11.37-29.17'R to 102+41.03-32.24'R			28																			
102+37.32-56.07'L to 102+75.21-54.69'L	36																					
102+49.51-38.26'R to 104+75.00-29.17'R		224																				
104+51.50-29.17'L to 104+76.22-30.92'L	24																					
104+75.00-29.17'R to 105+25.21-31.63'R		46																				
*104+84.74-25.52'L to 105+50.10-29.17'L	64																					
105+75.00-29.17'R to 107+00.00-29.17'R		122																				
*107+00.00-29.17'L to 29.17'R	48																					
Subtotal:	2608	392	782	0	0			0	0		0	0		0			0				0	

Pipes denoted with an asterisk(*) indicate that the entire length or a portion of the pipe requires watertight joints in accordance with the STORM SEWER plan note.

Plot Scale - 1:200

Plotted From - TRSF12139

File - ...\rd\prj\codh026X\TablePipe.dgn

PIPE QUANTITIES

STATE OF SOUTH DAKOTA	PROJECT	SHEET	TOTAL SHEETS
	P 0081(93)157	B12	B120

Plotting Date: 09/01/2015

	Reinforced Concrete Pipe																			PVC	
	Circular						Arch				Flared Ends			Safety Ends			Tees			Circular	
Station Offset (L/R)	18" Cl 2 Ft	24" Cl 2 Ft	30" Cl 2 Ft	36" Cl 2 Ft	42" Cl 2 Ft			30" Cl 2 Ft	42" Cl 2 Ft		18" Each	30" Arch Each		18" Each			18" x 18" Each			8" Ft	
107+00.00-29.17'R to 109+47.43-29.17'R		244																			
109+47.43-29.17'L to 29.17'R	48																				
109+47.43-29.17'R to 111+55.00-29.17'R		206																			
*111+55.00-29.17'L to 29.17'R	48																				
111+55.00-29.17'R to 113+92.00-29.17'R		234																			
*113+92.00-29.17'L to 29.17'R	56																				
113+92.00-29.17'R to 116+37.28-29.17'R	242																				
*116+34.95-29.17'L to 116+37.28-29.17'R	56																				
116+34.95-29.17'L to 118+83.18-29.17'L	196																				
118+17.26-75.97'L to 118+17.25-29.17'L																				44	
118+33.18-29.17'L to 118+56.55-52.45'L	32																				
118+56.55-52.45'L to 118+95.33-52.53'L	38																				
*118+33.18-29.17'L to 119+20.00-29.17'L	84																				
*119+20.00-29.17'L to 29.17'R	56																				
*122+87.00-29.17'L to 29.17'R	56																				
122+87.11-29.17'L to 124+54.00-29.17'L	164																				
*124+54.00-29.17'L to 29.17'R	56																				
124+54.00-29.17'L to 126+24.00-29.17'L	168																				
*126+24.00-29.17'L to 29.17'R	56																				
126+24.00-29.17'L to 127+94.00-29.17'L		168																			
127+94.00-29.17'L to 128+43.56-31.63'L		46																			
127+94.00-29.17'R to 128+43.56-31.63'R	46																				
*128+43.56-31.63'L to 31.63' R	60																				
128+43.56-31.63'L to 31.63' R	38																				
129+38.53-68.87'L to 129+46.69-72.04'L	6																				
129+53.79-61.81'R to 129+73.91-31.63'R				34																	
129+73.91-31.63'R to 32.31'L			60																		
129+73.91-32.31'L to 129+81.94-59.71'L			28																		
*129+73.91-32.31'L to 131+80.00-29.17'L	202																				
*131+80.00-29.17'L to 29.17'R	58																				
*131+80.00-29.17'L to 133+80.00-29.17'L	198																				
133+80.00-29.17'L to 29.17'R	58																				
*139+82.00-29.17'L to 29.17'R	58																				
*139+82.00-29.17'R to 141+36.00-29.17'R	152																				
141+36.00-29.17'L to 141+76.31-31.63'L	36																				
*141+36.00-29.17'R to 141+76.31-31.63'R	36																				
*141+62-50'R to 141+77.85-43.50'R	14										1										
141+76.31-31.63'L to 142+16.00-29.17'L	36																				
*141+76.31-31.63'R to 142+16.00-29.17'R								36													
*141+76.31-31.63'L to 31.63'R	60																				
*141+76.31-31.63'R to 141+77.85-43.50'R									8												
*141+77.85-43.50'R to 141+77.85-56.52'R					12																
*142+16.00-29.17'R to 142+63.24-29.17'R								44													
142+63.24-47.11' L to 29.17'L								18				1									
*142+63.24-29.17'L to 29.17'R								56													
*142+63.24-29.17'R to 51.30'R	20										1										
*142+63.24-29.17'R to 143+50.00-29.17'R	86																				
*143+50.00-29.17'R to 52.50'R	24										1						1				
*143+50.00-29.17'R to 144+31.74-29.17'R	80																				
Subtotal:	2624	898	88	34	12			154	8		3	1		0			1			44	

Pipes denoted with an asterisk(*) indicate that the entire length or a portion of the pipe requires watertight joints in accordance with the STORM SEWER plan note.

Plot Scale - 1:200

Plotted From - TRSF12139

File - ...\rd\prj\codh\026XT\TablePipe.dgn

PIPE QUANTITIES

STATE OF SOUTH DAKOTA	PROJECT	SHEET	TOTAL SHEETS
	P 0081(93)157	B13	B120

Plotting Date: 09/01/2015

Station	Offset (L/R)	Reinforced Concrete Pipe																		PVC	
		Circular						Arch			Flared Ends			Safety Ends			Tees			Circular	
		18" Cl 2	24" Cl 2	30" Cl 2	36" Cl 2	42" Cl 2		30" Cl 2	42" Cl 2		18"	30" Arch		18"			18" x 18"			8"	
		Ft	Ft	Ft	Ft	Ft		Ft	Ft		Each	Each		Each			Each			Ft	
*144+31.74-29.17R to 145+17.36-29.17'R		82																			
145+17.36-29.17'L to 29.17'R		56																			
145+17.36-29.17'R to 145+00.00-35.50'R		22												1							
145+17.36-29.17'L to 145+40.00-35.50'L		22												1							
Subtotal:		182	0	0	0	0			0	0		0	0		2			0			0	
Total:		5414	1290	870	34	12			154	8		3	1		2			1			44	

Pipes denoted with an asterisk(*) indicate that the entire length or a portion of the pipe requires watertight joints in accordance with the STORM SEWER plan note.

Plot Scale - 1:200

Plotted From - TRSF12139

File - ...\rd\prj\codn\026X\TablePipe.dgn

PAVEMENT, CURB AND GUTTER, AND SIDEWALK QUANTITIES

STATE OF SOUTH DAKOTA	PROJECT	SHEET	TOTAL SHEETS
	P 0081(93)157	B14	B120

Plotting Date: 09/01/2015

Station	to Station	PCC Fillet Section	Concrete Curb and Gutter	Concrete Gutter		Concrete Curb	Type A	Type B	Concrete Sidewalk	Detectable Warning	Retaining Wall
			Type B	Type P	Valley	Type B	PCC Approach Pavement	PCC Approach Pavement		Type 1	Type C
		8.5"	68.5	8.5	8.5	6"	6"	6"	4"		
		SqYd	Ft	Ft	Ft	Ft	SqYd	SqYd	SqFt	SqFt	SqFt
3rd Ave to 4th Ave											
76+66.89-31.50'L	77+78.00-27.50'L		111.2						667.2		
77+78.00-27.50'L	78+84.51-27.50'L		106.5	18.0				11.2	639.0		
78+84.51-27.50'L	80+16.56-22.00'L		132.2	32.1				38.4	477.4		
80+16.56-22.00'L	80+33.65-48.90'L	14.0	10.1						233.9	20	
76+63.95-27.50'R	77+94.24-27.50'R		130.3						781.8		
77+94.24-27.50'R	79+00.00-26.47'R		105.8	28.0				18.6	634.8	20	
79+00.00-26.47'R	80+17.02-22.00'R		117.2	40.0				26.7	417.4		
80+17.02-22.0'R	80+34.02-41.02'R	14.2	2.0						169.5	20	
4th Ave to 5th Ave									168.7		
80+68.93-49.07'L	80+85.95-22.00'L	14.1	10.1						240.1	20	
80+85.95-22.00'L	82+19.53-22.00'L		127.6						765.6		
82+19.53-22.00'L	82+68.93-22.00'L		33.4	16.0			22.7		85.6		
82+68.93-22.00'L	83+37.75-22.00'L		52.8	16.0			22.7		17.2		
83+37.75-22.00'L	84+49.12-22.00'L		111.4	20.0			22.7		463.8		
84+49.12-22.00'L	84+68.14-54.69'L	13.8	16.4						191.7	20	
80+70.97-41.13'R	80+87.95-22.00'R	14.4	2.0						169.2	20	
80+87.95-22.00'R	84+50.06-22.00'R								2202.5		
84+50.06-22.00'R	84+67.06-22.00'R	14.2	6.0						184.9	20	
5th Ave to 6th Ave											
84+99.86-50.31'L	85+19.49-22.00'L	14.2	11.3						203.5	20	
85+19.49-22.00'L	85+90.77-22.00'L		71.2						363.8		
85+90.77-22.00'L	88+06.42-22.00'L		191.7	24.0			69.7		956.8		
88+06.42-22.00'L	88+23.43-47.90'L	14.2	8.9						170.4	20	
85+02.53-45.05'R	85+19.52-22.00'R	14.2	6.0						248.7	20	
85+19.52-22.00'R	86+89.30-22.00'R		163.8						855.9		
86+89.30-22.00'R	88+04.93-22.00'R		99.6	16.0			30.7		505.1		
88+04.93-22.00'R	88+21.97-62.57'R	14.2	23.6						184.5	20	
6th Ave to 7th Ave											
88+59.38-40.54'L	88+76.43-22.00'L	14.2	8.9						146.6	20	
88+76.43-22.00'L	91+60.08-22.00'L		283.6						1658.7		
91+60.08-22.00'L	91+77.08-39.11'L	14.3	14.9						211.5		
88+62.95-62.46'R	88+74.26-22.00'R	17.0	17.8						185.0	20	
88+74.26-22.00'R	91+58.27-22.00'R		278.0						614.4		
91+58.27-22.00'R	91+75.23-71.90'R	16.9	16.9		10.6				169.3	20	
7th Ave to 8th Ave											
92+13.01-54.00'L	92+30.21-22.00'L	13.9	15.2						168.1	20	
92+30.21-22.00'L	92+53.65-22.00'L		123.4						625.2		
92+53.65-22.00'L	95+17.93-22.00'L		28.0	28.0			40.0		712.8		
95+17.93-22.00'L	95+36.57-70.45'L	14.0	31.6						167.7	20	
92+10.77-71.91'R	92+28.20-22.00'R	14.0	33.1						168.2	20	
92+28.20-22.00'R	93+58.19-22.00'R		130.1						681.6		
93+58.19-22.00'R	94+49.00-22.00'R		70.8	20.0			22.7		342.3		
94+49.00-22.00'R	95+10.36-22.00'R		45.4	16.0			22.7		258.2		
95+10.36-22.00'R	95+27.92-45.21'R	14.4	6.0						162.5	20	
8th Ave to 9th Ave											
95+62.32-70.50'L	95+84.12-22.00'L	13.9	15.2						168.1	20	
95+84.12-22.00'L	98+68.78-27.50'L		278.8						1784.3		
98+68.78-27.50'L	98+85.96-57.51'L	13.9	13.2						168.0	20	
95+62.94-44.90'R	95+79.97-22.00'R	14.1	6.0						185.2	20	
95+79.97-22.00'R	97+85.00-27.50'R		205.2						1269.4		
97+85.00-27.50'R	98+66.52-27.50'R		61.5	20.0				30.1	410.9		
98+66.52-27.50'R	98+83.72-54.50'R	13.8	10.2						167.3	20	
9th Ave to 10th Ave											
99+22.92-44.60'L	99+39.85-27.50'L	14.3	9.0	3.9					169.8	20	
99+39.85-27.50'L	100+42.00-27.50'L		102.2						602.6		
100+42.00-27.50'L	101+41.32-27.50'L		79.3					46.7	403.9		
101+41.32-27.50'L	102+13.93-27.50'L		72.6	20.0				49.8	338.8		
102+13.93-27.50'L	102+42.09-82.90'L	25.1	31.2	20.0					213.0	20	
	Subtotal:	355.3	3639.2	338.0	10.6		253.9	221.5	24152.4	480	

Plot Scale - 1:200

Plotted From - TRSF12139

File - U:\rdprj\codh\026X\TableCG.dgn

PAVEMENT, CURB AND GUTTER, AND SIDEWALK QUANTITIES

STATE OF SOUTH DAKOTA	PROJECT	SHEET	TOTAL SHEETS
	P 0081(93)157	B15	B120

Plotting Date: 09/01/2015

Station	to Station	PCC Fillet Section	Concrete Curb and Gutter		Concrete Gutter		Concrete Curb	Type A	Type B	Concrete Sidewalk	Detectable Warning	Retaining Wall
			Type B		Type P	Valley	Type B	PCC Approach Pavement	PCC Approach Pavement		Type 1	Type C
		8.5"	68.5		8.5	8.5	6"	6"	6"	4"		
		SqYd	Ft		Ft	Ft	Ft	SqYd	SqYd	SqFt	SqFt	SqFt
99+15.36-54.50'R	99+32.36-27.50'R	14.2	9.9							169.3	20	
99+32.36-27.50'R	100+35.82-27.50'R		103.5							610.0		
100+35.82-27.50'R	101+28.56-27.50'R		92.7		16.0				30.3	388.4		
101+28.56-27.50'R	102+13.37-27.50'R		68.8		16.0				22.6	376.9		
102+13.37-27.50'R	102+38.37-56.84'R	26.0	4.3							300.3		
10th Ave to Highland Blvd Left												
102+73.57-82.84'L	102+98.54-27.50'L	26.0	14.3		16.0				126.3	231.7	20	
102+98.54-27.50'L	103+94.00-27.50'L		95.5							535.3		
103+94.00-27.50'L	104+53.50-27.50'L		43.5		16.0			11.1		261.0		
104+53.50-27.50'L	104+85.19-73.58'L	19.2	26.8							208.1	20	
10th Ave to 14th Ave Right												
102+74.58-56.85'R	102+99.81-27.50'R	24.1	5.5							213.3	20	
102+99.81-27.50'R	107+99.29-27.50'R		499.5							2469.2	10	
107+99.29-27.50'R	109+78.00-27.50'R		158.7		20.0			26.7		1369.5	20	
109+78.00-27.50'R	110+30.39-27.50'L		32.4		20.0			26.7		149.8		
110+30.39-27.50'L	114+12.56-27.50'R		354.2		28.0			34.7		1358.8		
114+12.56-27.50'R	116+01.28-27.50'R		148.7		40.0			46.7		1758.8	10	
116+01.28-27.50'R	123+05.00-27.50'R		675.7		28.0			34.7		3366.6	20	
123+05.00-27.50'R	128+72.34-27.50'R		537.3		30.0			36.7		2685.0		
128+72.34-27.50'R	128+97.33-51.94'R	25.0								297.3	20	
Highland Blvd to 11th Ave Left												
105+18.67-61.23'L	105+42.10-27.50'L	34.4	6.0							306.1	20	
105+42.10-27.50'L	106+16.00-27.50'L		73.9							418.1		
106+16.00-27.50'L	108+68.54-27.50'L		228.5		24.0		232.3		22.6	1343.2		
108+68.54-27.50'L	108+85.52-44.54'L	14.2	6.0							209.7	20	
11th Ave to 12th Ave Left												
109+22.40-50.41'L	109+39.43-27.50'L	14.1	6.0							184.9	20	
109+39.43-27.50'L	110+43.28-27.50'L		184.9							595.1		
110+43.28-27.50'L	112+03.92-27.50'L		144.6		16.0				21.7	795.7		
112+03.92-27.50'L	113+50.05-27.50'L		118.1		30.0				28.0	636.5		
113+50.05-27.50'L	116+42.95-27.50'L		258.9		32.0				29.3	1481.7	10	
116+42.95-27.50'L	118+41.19-27.50'L		185.0		30.0				28.0	998.7		
118+41.19-27.50'L	118+58.24-58.45'L	14.1	14.0							209.3	20	
12th Ave to 14th Ave Left												
118+93.67-58.53'L	119+10.65-27.50'L	14.2	14.0							185.5	20	
119+10.65-27.50'L	121+30.00-27.50'L		219.4							393.6		276.0
121+30.00-27.50'L	122+97.19-27.50'L		137.2		30.0				28.0	751.2		
122+97.19-27.50'L	124+71.60-27.50'L		144.4		30.0				28.0	794.5		
124+71.60-27.50'L	126+47.00-27.50'L		139.4		36.0				32.0	764.4		
126+47.00-27.50'L	128+67.48-27.50'L		180.5		40.0				34.7	1049.6		
128+67.48-27.50'L	128+92.57-74.89'L	25.8	22.5							267.7	20	
14th Ave to 16th Ave												
129+36.70-118.91'L	129+81.71-27.50'L	68.6	46.4							612.5	20	
129+81.71-27.50'L	131+43.90-27.50'L		182.2							804.9		
131+43.90-27.50'L	135+43.30-27.50'L		371.4		28.0			34.7		1865.4		
135+43.30-27.50'L	135+94.50-44.61'L	25.8	22.5							267.3	20	
129+32.85-27.50'R	129+57.85-27.50'R	25.9								281.6	20	
129+57.85-27.50'R	131+95.35-27.50'R		237.5							1216.6		
131+95.35-27.50'R	134+41.20-27.50'R		309.8		36.0			62.7		502.1		
134+41.20-27.50'R	135+58.16-60.16'R	14.2	15.6							208.5	20	
16th Ave to 17th Ave Left												
135+94.72-63.90'L	136+13.73+27.50'L	14.3	10.3							167.8	20	
136+13.73+27.50'L	139+90.00-27.50'L		378.5								20	
139+90.00-27.50'L	140+07.00-44.50'L	14.2	2.0							191.8	20	
17th Ave to 18th Ave Left												
140+03.00-63.90'L	140+60.00-27.50'L	14.2	2.0							193.8	20	
140+60.00-27.50'L	144+41.86-27.50'L		381.9									
144+41.86-27.50'L	144+58.86-46.50'L	14.2	2.0							192.3	20	
144+92.86-46.50'L	145+27.36-27.50'L	14.2	19.5							194.0	20	
	Subtotal:	456.9	6936.2		562.0		232.3	314.7	431.5	34833.4	490	276.0

Plot Scale - 1:200

Plotted From - TRSF12139

File - U:\rdlprj\codh026XT\TableCG.dgn

PAVEMENT, CURB AND GUTTER, AND SIDEWALK QUANTITIES

STATE OF SOUTH DAKOTA	PROJECT	SHEET	TOTAL SHEETS
	P 0081(93)157	B16	B120

Plotting Date: 09/01/2015

Station	to Station	PCC Fillet Section	Concrete Curb and Gutter		Concrete Gutter		Concrete Curb	Type A PCC Approach Pavement	Type B PCC Approach Pavement	Concrete Sidewalk	Detectable Warning	Retaining Wall
			Type B		Type P	Valley	Type B				Type 1	Type C
		8.5"	68.5		8.5	8.5	6"	6"	6"	4"		
		SqYd	Ft		Ft	Ft	Ft	SqYd	SqYd	SqFt	SqFt	SqFt
16th Ave to 18th Ave Right												
135+91.71-60.20'R	136+08.82-27.50'R	14.1	19.9							190.9	20	
136+08.82-27.50'R	138+07.86-27.50'R		199.0					62.7		995.2		
138+07.86-27.50'R	142+91.55-27.50'R		447.7		36.0			62.7		2238.4	20	
142+91.55-27.50'R	144+41.81-27.50'R		130.3		20.0			39.6		651.3		
144+41.81-27.50'R	144+58.73-53.80'R	14.4	9.2							210.7	20	
144+92.79-53.78'R	145+27.36-27.50'R	14.0	26.9							191.9	20	
Subtotal:		42.5	833.0		56.0	0.0	0.0	165.0	0.0	4478.4	80	0.0
Total:		854.7	11408.4		956.0	10.6	232.3	733.6	653.0	63464.2	1050.0	276.0

Plot Scale - 1:200

Plotted From - TRSF12139

File - U:\rdprj\codh0226X\TableCG.dgn

STATE OF SOUTH DAKOTA	PROJECT	SHEET	TOTAL SHEETS
	P 0081(93)157	B17	B120

Plotting Date: 09/01/2015

TYPICAL GRADING SECTIONS

75+98.90 to 79+67.02

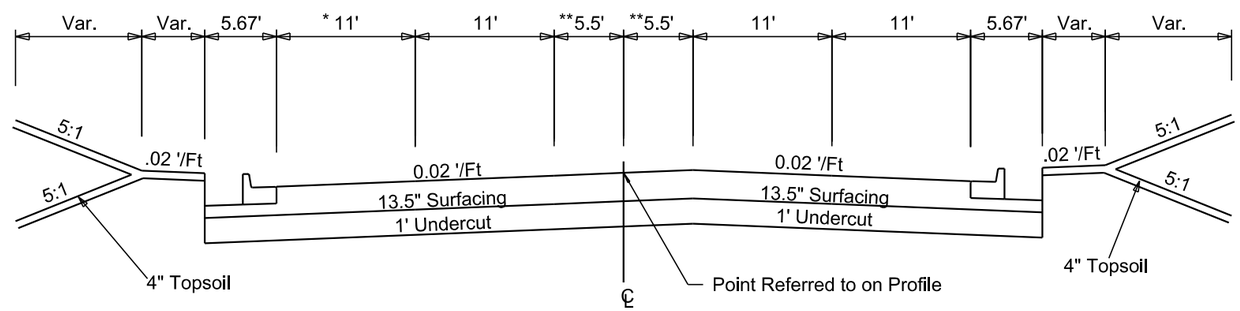

* Transition: 15' at 76+66.89 to 11' at 77+66.89

** Transition: 5.5' at 78+84.51 to 0' at 79+67.02

For Areas with
Curb-Side Sidewalk

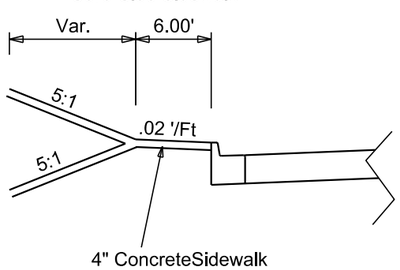

79+67.02 to 96+09.13

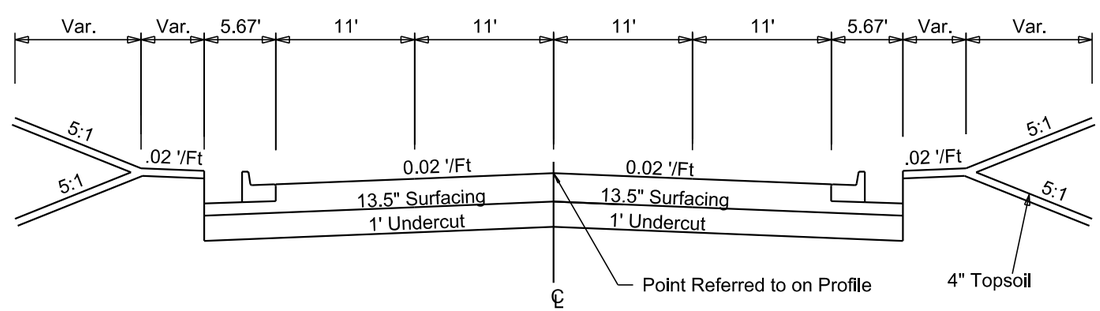

For Areas with
Boulevard Sidewalk

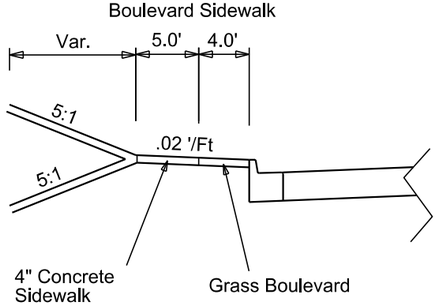

See Curb and Gutter Layouts for Sidewalk Locations

Plot Scale - 1:200
Plotted From - TRSF12139
File - U:\rd\prj\codn026X\typ.dgn

STATE OF SOUTH DAKOTA	PROJECT	SHEET	TOTAL SHEETS
	P 0081(93)157	B18	B120

Plotting Date: 09/01/2015

TYPICAL GRADING SECTIONS

96+09.13 to 145+27.36

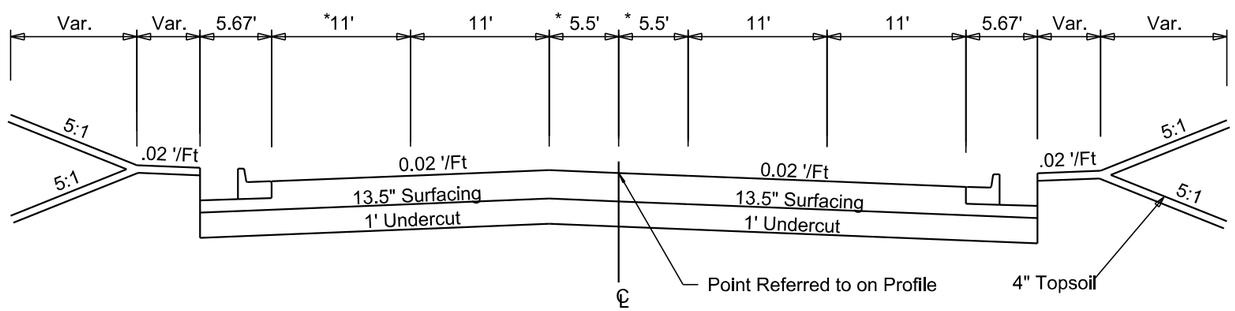

* Transition from 0' at 96+09.13 to 5.5' at 96+91.63

145+27.36 to 149+41.67

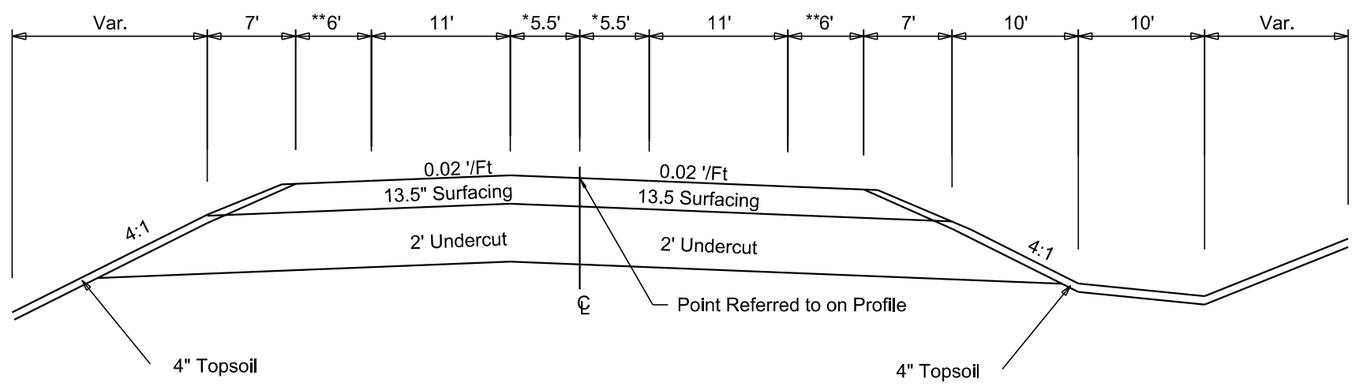

* Transition 5.5' at 147+95.00 to 0' at 149+41.67

** Transition 6' at 147+95.00 to 1' at 149+41.67

Plot Scale - 1:200

File - U:\rd\prj\codh0026X\typ.dgn

HORIZONTAL ALIGNMENT DATA

STATE OF SOUTH DAKOTA	PROJECT	SHEET	TOTAL SHEETS
	P 0081(93)157	B19	B120

Plotting Date: 09/01/2015

MAINLINE

Type	Station			Northing	Easting
POB	0+00.00			396553.143	2717660.802
		TL= 526.12	N 2°29'33" W		
PC	5+26.12			397078.763	2717637.921
PI	5+71.91	R = 1200.00	Delta = 4°22'16" L	397124.516	2717635.929
PT	6+17.67			397169.985	2717630.456
		TL= 1702.76	N 6°51'50" W		
PC	23+20.43			398860.541	2717426.960
PI	24+12.58	R = 510.00	Delta = 20°29'10" R	398952.039	2717415.946
PT	25+02.78			399041.605	2717437.651
		TL= 304.94	N 13°37'20" E		
PI	28+07.72			399337.972	2717509.471
		TL= 2587.72	N 13°28'08" E		
PI	53+95.44			401854.525	2718112.196
		TL= 668.99	N 13°34'48" E		
PC	60+64.43			402504.807	2718269.275
PI	63+50.58	R = 510.00	Delta = 58°35'31" L	402782.959	2718336.464
PT	65+85.97			402985.256	2718134.082
		TL= 47.64	N 45°00'43" W		
PC	66+33.61			403018.936	2718100.388
PI	67+88.78	R = 400.00	Delta = 42°24'22" R	403128.638	2717990.640
PT	69+29.66			403283.652	2717983.585
		TL= 363.63	N 2°36'21" W		
PI	72+93.29			403646.905	2717967.053
		TL= 323.99	N 2°24'28" W		
PI	76+17.28			403970.608	2717953.441
		TL= 434.34	N 2°26'50" W		
PI	80+51.62			404404.552	2717934.895
		TL= 432.96	N 2°07'16" W		
PI	84+84.58			404837.220	2717918.870
		TL= 355.88	N 2°07'33" W		
PI	88+40.46			405192.853	2717905.669
		TL= 353.55	N 2°08'18" W		
PI	91+94.01			405546.161	2717892.478
		TL= 353.76	N 2°09'32" W		
PI	95+47.77			405899.670	2717879.151
		TL= 354.07	N 2°09'21" W		
PI	99+01.85			406253.494	2717865.833
		TL= 355.45	N 2°08'38" W		
PI	102+57.30			406608.699	2717852.535
		TL= 645.76	N 2°01'57" W		
PI	109+03.07			407254.057	2717829.631
		TL= 972.42	N 2°02'47" W		
PI	118+75.49			408225.860	2717794.908
		TL= 1037.34	N 2°01'54" W		
PI	129+12.83			409262.548	2717758.131
		TL= 663.55	N 1°58'00" W		
PI	135+76.38			409925.711	2717735.358
		TL= 1623.62	N 2°23'34" W		
POE	152+00.00			411547.912	2717667.570

The coordinates shown on this sheet are based on the South Dakota State Plane Coordinate System. North Zone (NAD 83/96); epoch 2010.00; Geoid 03; SF = 0.99986438

Plot Scale - 1:200
Plotted From - TRSF12139
File - ...\rdprj\codn0266X\DataHoriz.dgn

CONTROL DATA

STATE OF SOUTH DAKOTA	PROJECT	SHEET	TOTAL SHEETS
	P 0081(93)157	B20	B120

Plotting Date: 09/01/2015

HORIZONTAL AND VERTICAL CONTROL POINTS						
POINT	STATION	OFFSET	DESCRIPTION	NORTHING	EASTING	ELEVATION
CP.51	88+72	30' L		405223.330	2717874.927	1763.81
CP.53	105+30	43' L		406879.867	2717799.905	1751.41
CP.53_1	105+30	43' L		406879.945	2717799.905	1751.41
CP.55A	138+88	46' R		410238.626	2717768.525	1775.60
15249	80+22	41' R		404377.107	2717977.473	1763.73
80416	84+61	40' L		404812.032	2717879.394	1766.79
15250	88+72	30' L		405223.300	2717874.874	1763.78
80790	95+29	45' L		405879.524	2717835.376	1758.14
62540	95+48			405899.730	2717879.161	1757.02
81332	98+80	46' L		406230.399	2717820.694	1756.81
86835	105+30	43' L		406879.841	2717799.874	1751.34
81780	112+56	37' R		407608.521	2717853.980	1765.02
60409	119+36	36' R		408287.960	2717828.316	1777.86
61118	127+91	47' L		409138.972	2717715.647	1770.44
83595	127+91	47' L		409138.917	2717715.633	1770.43
82181	136+01	65' L		409947.356	2717669.116	1777.79
87017	138+87	47' R		410238.397	2717768.872	1775.53
82317	138+88	46' R		410238.626	2717768.525	1775.61
83255	145+01	43' R		410851.565	2717739.696	1775.28

The coordinates shown on this sheet are based on the South Dakota State Plane Coordinate System. North Zone (NAD 83/96); epoch 2010.00
Geoid 03; SF = 0.99986438
The elevations shown on this sheet are based on NAVD 88.

Plot Scale - 1:200
Plotted From - TRSF12139
File - ...\prj\codn\026X\DataControl.dgn

SUBSURFACE UTILITY LOCATIONS

STATE OF SOUTH DAKOTA	PROJECT	SHEET	TOTAL SHEETS
	P 0081(93)157	B21	B120

Plotting Date: 09/01/2015

Subsurface utility explorations were done at the following locations. The information below states what was located in the specified areas. This table is provided to aid the Contractor during construction and does not substitute or replace the requirements of SD One Call. All information is approximate and the Contractor shall verify all utility locations before construction in those areas as mandated in SDCL 49-7A.

Test Hole	Station	Offset	Finding	Existing Ground Elev.	Utility Depth (Ft.)	Utility Elevation	Northing	Easting
4-1	80+26.41	31.10' R	2" PVC Fiber Optic	1763.15	3.7	1759.45	404380.695	2717967.047
5-2	84+47.18	32.58' L	3ea - 1.25" PVC Fiber Optic	1766.72	4.3	1762.42	404798.640	2717887.687
5-3	85+33.84	32.31' L	3ea - 1.25" PVC Fiber Optic	1766.21	3.8	1762.41	404885.251	2717884.753
5-4	88+67.12	36.16' L	2" PVC Fiber Optic cable	1764.11	6.1	1758.01	405168.188	2717870.404
5-5	88+67.26	31.19' L	2ea - 2" PVC Fiber Optic	1763.54	5.6	1757.94	405218.471	2717873.499
5-6	91+50.79	27.09' L	2ea - 2" PVC Fiber Optic	1759.57	5.9	1753.67	405501.958	2717867.023
5-7	92+30.42	33.09' L	2" PVC Fiber Optic	1758.43	5.4	1753.03	405581.291	2717858.039
5-8	95+97.18	28.32' L	2" PVC Fiber Optic	1757.11	5.5	1751.61	405947.974	2717848.988
5-9	92+03.33	32.31' L	2ea - 2" PVC Fiber Optic	1756.96	4	1752.96	406053.899	2717841.010
1-10	98+91.22	36.47' L	4" Steel Natural Gas	1755.34	4.9	1750.44	406241.503	2717829.789
5-11	99+45.36	34.80' L	2ea - 2" PVC Fiber Optic	1755.17	4.6	1750.57	406295.674	2717829.429
2-12	102+38.40	65.75' L	1.25" PVC Fiber Optic	1752.11	3.1	1749.01	406587.348	2717787.535
5-13	103+06.61	34.59' L	2ea - 2" PVC Fiber Optic	1751.92	5.1	1746.82	406656.748	2717816.217
2-14	102+41.52	79.32' R	1" PVC Fiber Optic	1751.35	3.6	1747.75	406595.893	2717932.386
5-15	106+76.91	30.66' L	3ea - 2" PVC Fiber Optic	1752.19	4	1748.19	407026.961	2717807.011
5-16	109+40.69	33.40' L	3ea - 2" PVC Fiber Optic	1755.54	3.3	1752.24	407290.468	2717794.908
5-17	114+80.91	31.19' L	2ea - 2" PVC Fiber Optic	1768.29	4	1764.29	407830.421	2717777.829
5-18	118+29.54	32.55' L	2" PVC Fiber Optic	1776.60	2.7	1773.90	408178.780	2717764.021
1-19	118+67.46	30.82' L	4" Steel Natural Gas	1776.79	2.5	1774.19	408216.738	2717764.396
5-20	118+68.46	32.11' L	3ea - 2" PVC Fiber Optic	1776.83	9.6	1767.23	408217.689	2717763.065
5-21	119+13.92	30.43' L	PVC Fiber Optic	1777.87	7.3	1770.57	408263.191	2717763.139
5-22	122+80.70	31.40' L	2ea - 2" PVC Fiber Optic	1774.44	3.7	1770.74	408629.701	2717749.158
5-23	124+42.57	29.60' L	2ea - 2" PVC Fiber Optic	1771.63	3.7	1767.93	408791.536	2717745.225
5-24	127+07.86	32.99' L	2" PVC Fiber Optic	1770.54	3.5	1767.04	409056.543	2717732.425
1-25	128+45.01	34.55' R	4" Steel Natural Gas	1769.30	3.4	1765.90	409195.996	2717795.063
4-26	128+65.55	29.52' L	1.25" PVC Fiber Optic	1769.93	4.1	1765.83	409214.257	2717730.307
5-27	129+84.52	43.62' L	3ea - 2" PVC Fiber Optic	1770.59	5.5	1765.09	409332.696	2717712.081
4-28	129+87.87	35.35' L	2" PVC Fiber Optic	1770.48	8.7	1761.78	409336.334	2717720.231
1-29	129+58.07	42.91' R	4" Steel Natural Gas	1769.56	5.1	1764.46	409309.237	2717799.460
5-30	129+60.00	53.35'R	3ea - 1.25" PVC Fiber Optic	1769.11	5.1	1764.01	409311.522	2717809.835
5-31	129+88.73	32.46' R	2.5" PVC Fiber Optic	1770.42	1.8	1768.62	409339.523	2717787.970
1-32	129+89.37	33.15'R	1" Steel Power conduit	1770.39	4.7	1765.69	409340.181	2717788.631
1-33	129+89.62	33.69' R	10" PVC Water line	1770.37	7.6	1762.77	409340.453	2717789.163
5-34	129+90.94	31.78' R	2ea - 2" PVC Fiber Optic	1770.48	4.1	1766.38	409341.708	2717787.214

Test Hole Owner Identification Number Codes (First number denotes utility ownership)

1 = Watertown Municipal Utilities, 2 = Vast Broadband, 4 = Midcontinent Communications, 5 = SDN Communications

The coordinates shown on this sheet are based on the South Dakota State Plane Coordinate System. North Zone (NAD 83/96); epoch 2010.00; Geoid 03; SF = 0.99986438
The elevations shown on this sheet are based on NAVD 88.

Plot Scale - 1:200
Plotted From - TRSF12139
File - ...\codh026X\DataSubSurface.dgn

STATE OF SOUTH DAKOTA	PROJECT	SHEET	TOTAL SHEETS
	P 0081(93)157	B22	B120

Plotting Date: 09/01/2015

EXISTING TOPOGRAPHY SYMBOLOGY AND LEGEND

Anchor
Antenna
Approach
Assumed Corner
Azimuth Marker
BBQ Grill/ Fireplace
Bearing Tree
Bench Mark
Box Culvert
Bridge
Brush
Buildings
Bulk Tank
Cattle Guard
Cemetery
Centerline
Cistern
Clothes Line
Commercial Sign Double Face
Commercial Sign One Post
Commercial Sign Overhead
Commercial Sign Two Post
Concrete Symbol
Creek Edge
Curb/Gutter
Curb
Dam Grade/Dike/Levee
Deck Edge
Ditch Block
Doorway Threshold
Drainage Profile
Drop Inlet
Edge Of Asphalt
Edge Of Concrete
Edge Of Gravel
Edge Of Other
Edge Of Shoulder
Elec. Trans./Power Jct. Box
Fence Barbwire
Fence Chainlink
Fence Electric
Fence Misc.
Fence Rock
Fence Snow
Fence Wood
Fence Woven
Fire Hydrant
Flag Pole
Flower Bed
Gas Valve Or Meter
Gas Pump Island
Grain Bin
Guardrail
Guide Sign One Post
Guide Sign Two Post
Gutter
Guy Pole
Haystack

Hedge
Highway R.O.W. Marker
Interstate Close Gate
Iron Pin
Irrigation Ditch
Lake Edge
Lawn Sprinkler
Mailbox
Manhole Electric
Manhole Gas
Manhole Misc
Manhole Sanitary Sewer
Manhole Storm Sewer
Manhole Telephone
Manhole Water
Merry-Go-Round
Microwave Radio Tower
Misc. Line
Misc. Property Corner
Misc. Post
Overhang Or Encroachment
Overhead Utility Line — OH —
Parking Meter
Pipe With End Section
Pipe With Headwall
Pipe Without End Section
Playground Slide
Playground Swing
Power And Light Pole
Power And Telephone Pole
Power Meter
Power Pole
Power Pole And Transformer
Power Tower Structure
Propane Tank
Property Pipe
Property Pipe With Cap
Property Stone
Public Telephone
Railroad Crossing Signal
Railroad Milepost Marker
Railroad Profile
Railroad R.O.W. Marker
Railroad Signs
Railroad Switch
Railroad Track
Railroad Trestle
Rebar
Rebar With Cap
Reference Mark
Regulatory Sign One Post
Regulatory Sign Two Post
Retaining Wall
Riprap
River Edge
Rock And Wire Baskets
Rockpiles
Satellite Dish
Septic Tank

Shrub Tree
Sidewalk
Sign Face
Sign Post
Slough Or Marsh
Spring
Stream Gauge
Street Marker
Subsurface Utility Exploration Test Hole
Telephone Fiber Optics — T/F —
Telephone Junction Box
Telephone Pole
Television Cable Jct Box
Television Tower
Test Wells/Bore Holes
Traffic Signal
Trash Barrel
Tree Belt
Tree Coniferous
Tree Deciduous
Tree Stumps
Triangulation Station
Underground Electric Line — P —
Underground Gas Line — G —
Underground High Pressure Gas Line — HG —
Underground Sanitary Sewer — S —
Underground Storm Sewer — S —
Underground Tank
Underground Telephone Line — T —
Underground Television Cable — TV —
Underground Water Line — W —
Warning Sign One Post
Warning Sign Two Post
Water Fountain
Water Hydrant
Water Meter
Water Tower
Water Valve
Water Well
Weir Rock
Windmill
Wingwall
Witness Corner

State and National Line
County Line
Section Line
Quarter Line
Sixteenth Line
Property Line
Construction Line
R. O. W. Line
New R. O. W. Line
Cut and Fill Limits
Control of Access
New Control of Access
Proposed ROW
(After Property Disposal)

Plot Scale - 1:200
Plotted From - TRSF12139
File - U:\ra\prj\codh\026X\toposymb.dgn

STATE OF SOUTH DAKOTA	PROJECT	SHEET	TOTAL SHEETS
	P 0081(93)157	B23	B120

Plotting Date: 09/01/2015 Rev. 3-30-2015 JWF

Retain All Storm Sewer Pipe
and Drop Inlets
Unless Otherwise Noted

Take Out Drop Inlets at
the following Locations:
80+92-26' R
80+93-26' L

76+62-29' R to 80+93-26' R
Take Out 18"-430' RCP
(Incidental Work, Grading)

80+92-26' R to 80+93-26' L
Take Out 18"-46' RCP
(Incidental Work, Grading)

Install Type B Drop Inlet
with 6" Concrete Collar
and Type B Frame and Grate
at the Following Locations:
78+42.00-29.17'L (2'x3')
78+42.00-29.17'R (2'x3')
80+93.62-26.67' L (2'x3')
80+95.95-23.67' R (2'x3')

76+62.00-28.99'R to 78+42.00-29.17'R
Install 18"-178' RCP
(Between Existing Drop and Drop Inlet)

78+42.00-29.17'L to 29.17'R
Install 18"-58' RCP
(Between Drop Inlets)

78+42.00-29.17'R to 80+95.95-23.67'R
Install 18"-252' RCP
(Between Drop Inlets)

80+93.62-23.67'L to 80+95.95-23.67'R
Install 18"-46' RCP
(Between Drop Inlets)

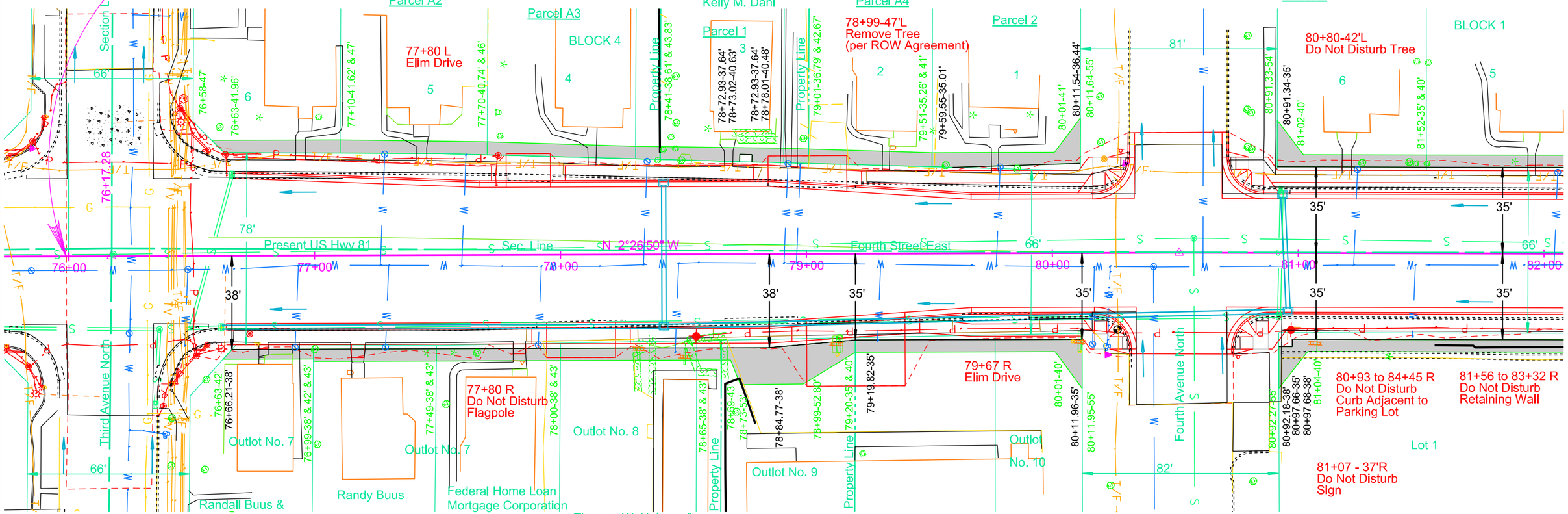

Parcel A1
76+58 to 77+10 L
Temporary Easement for
Cut & Fill containing
(256 sq ft),more or less

Parcel A2
77+10 to 77+70 L
Temporary Easement for
Cut & Fill containing
(309 sq ft),more or less

Parcel A3
77+70 to 78+41 L
Temporary Easement for
Cut & Fill containing
(364 sq ft), more or less

Parcel 1
78+41 to 79+01 L
Temporary Easement for
Cut & Fill containing
(324 sq ft), more or less

Parcel A4
79+01 to 79+51 L
Temporary Easement for
Cut & Fill containing
(292 sq ft), more or less

Parcel 2
79+51 to 80+11.64 L
Temporary Easement for
Cut & Fill containing
(435 sq ft), more or less

Parcel 9
80+91.33 to 81+52 L
Temporary Easement for
Cut & Fill containing
(378 sq ft), more or less

Parcel 10
81+52 to 82+12 L
Temporary Easement for
Cut & Fill containing
(300 sq ft), more or less

Parcel 3
76+63 to 76+99 R
Temporary Easement for
Cut & Fill containing
(140 sq ft), more or less

Parcel 4
76+99 to 77+49 R
Temporary Easement for
Cut & Fill containing
(250 sq ft), more or less

Parcel 5
77+49 to 78+00 R
Temporary Easement for
Cut & Fill containing
(252 sq ft), more or less

Parcel 6
78+00 to 78+65 R
Temporary Easement for
Cut & Fill containing
(327 sq ft), more or less

Parcel 7
78+69 to 79+20 R
Temporary Easement for
Cut & Fill containing
(670 sq ft), more or less

Parcel 8
79+19.82 to 80+11.95 R
Temporary Easement for
Cut & Fill containing
(543 sq ft), more or less

Parcel 15
80+92.27 to 84+51.73 R
Temporary Easement for
Cut & Fill containing
(2048 sq ft), more or less

Plot Scale - 1:40
Plotted From - TRSF12139
File - U:\rdphj\cadn\026X\076.dgn

STATE OF SOUTH DAKOTA	PROJECT	SHEET	TOTAL SHEETS
	P 0081(93)157	B24	B120

Plotting Date: 09/01/2015 Revised 3-30-15 JWF

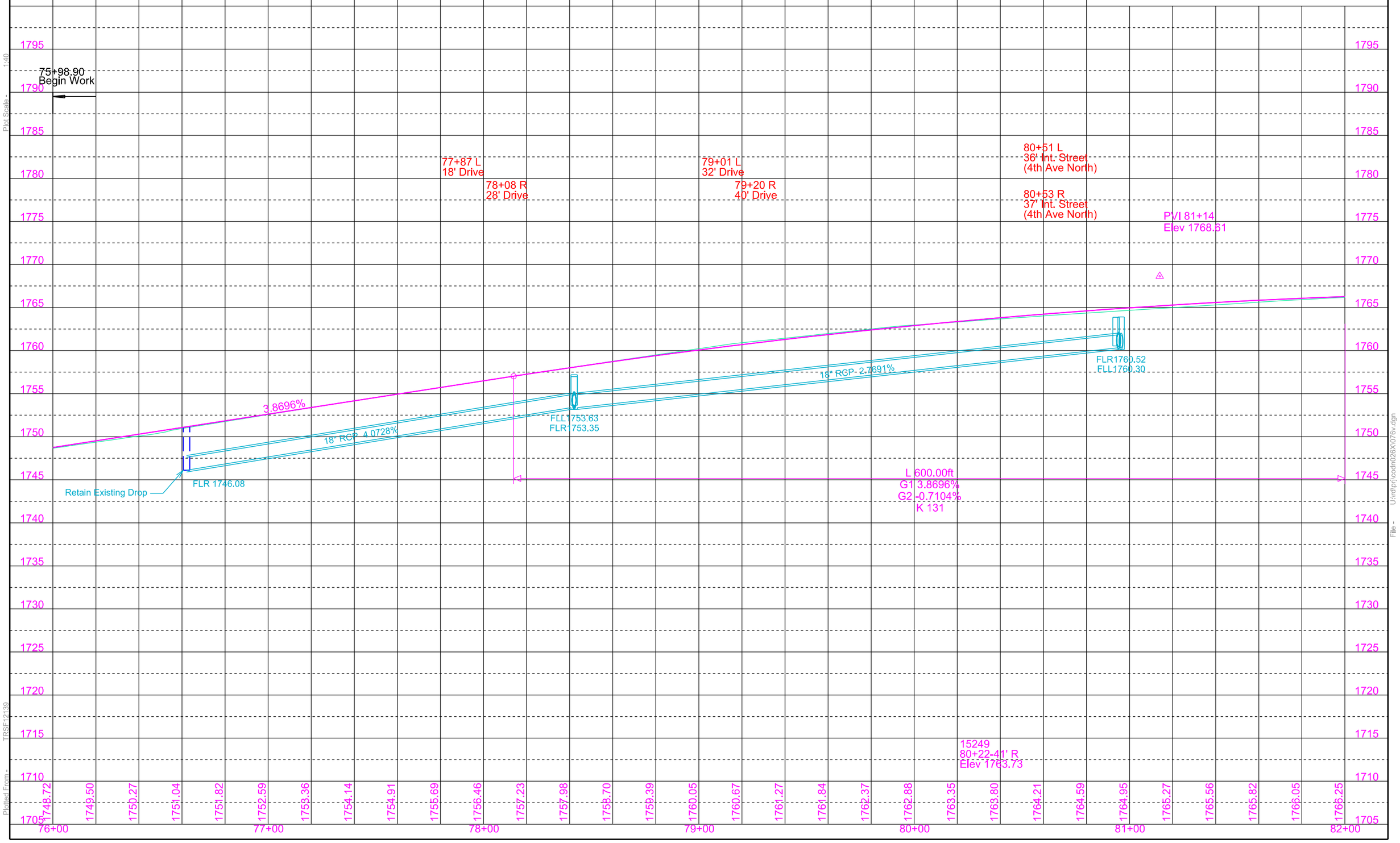

Plot Scale - 1:40

TRSF12139

Plotted From -

File - U:\rdprj\codh\026X\076v.dgn

STATE OF SOUTH DAKOTA	PROJECT	SHEET	TOTAL SHEETS
	P 0081(93)157	B25	B120

Plotting Date: 09/01/2015 Rev. 7-22-2014 JWF

Retain All Storm Sewer Pipe and Drop Inlets Unless Otherwise Noted

Take Out Drop Inlets at the following Locations:
84+65-42'L
85+24-26'L

84+65-42'L to 85+24-26'L
Take Out 18" -62' RCP
(Incidental Work, Grading)

85+24-26'L to 88+04-26'L
Take Out 18"-280' RCP
(Incidental Work, Grading)

86+85 L
Take Out Concrete Stairway
(Incidental Work, Grading)

87+43 L
Take Out Concrete Stairway
(Incidental Work, Grading)

87+76 L
Take Out Concrete Stairway
(Incidental Work, Grading)

Install Type B Drop Inlet with 6" Concrete Collar and Type B Frame and Grate at the Following Locations:
84+40.00-23.67'L(3'x4') 86+60.00-23.67'L(2'x3')
84+40.00-23.67'R(2'x3') 86+60.00-23.67'R(2'x3')
84+64.53-42.71'L(2'x3') 87+98.93-23.67'L(2'x3')
85+04.16-43.00'L(2'x3') 87+98.93-23.67'R(2'x3')
85+24.20-23.67'L(2'x3')

84+40.00-23.67'L to 23.67'R
Install 18"-46' RCP
(Between Drop Inlets)

84+40.00-23.67'L to 84+64.53-42.17'L
Install 18"-30' RCP
(Between Drop Inlets)

84+64.53-42.71'L to 85+04.16-43.00'L
Install 18"-38' RCP
(Between Drop Inlets)

85+04.16-43.00'L to 85+24.20-23.67'L
Install 18"-28' RCP
(Between Drop Inlets)

85+24.20-23.67' to 86+60.00-23.67'L
Install 18"-134' RCP
(Between Drop Inlets)

86+60.00-23.67'L to 23.67'R
Install 18"-46' RCP
(Between Drop Inlets)

86+60.00-23.67'L to 87+98.93-23.67'L
Install 18"-136' RCP
(Between Drop Inlets)

87+98.93-23.67'L to 23.67'R
Install 18"-46' RCP
(Between Drop Inlets)

87+98.93-23.67'L to 88+80.43-23.67'L
Install 18"-80' RCP
(Between Drop Inlets)

Install Concrete Stairway at the Following Locations:
86+86 L
87+43 L
87+76 L

Sec. 30 - T117N - R52W

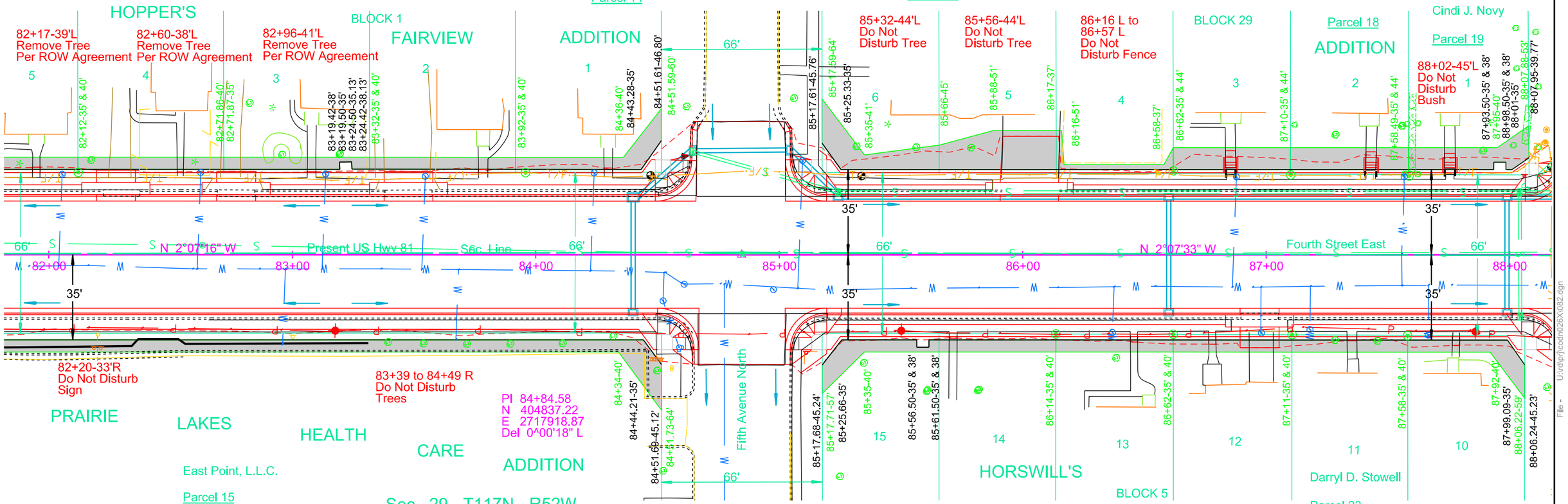

Parcel 14
83+92 to 84+51.61 L
Temporary Easement for
Cut & fill containing
(410 sq ft), more or less

Parcel 16
85+17.61 to 86+62 L
Temporary Easement for
Cut & fill containing
(1358 sq ft), more or less

Parcel 17
86+58 to 87+10 L
Temporary Easement for
Cut & fill containing
(433 sq ft), more or less

Parcel 18
87+10 to 87+58.49 L
Temporary Easement for
Cut & fill containing
(437 sq ft), more or less

Parcel 19
87+58 to 88+07.88 L
Temporary Easement for
Cut & fill containing
(471 sq ft), more or less

Parcel 11
82+12 to 82+71.87 L
Temporary Easement for
Cut & fill containing
(300 sq ft), more or less

Parcel 12
82+71.86 to 83+32 L
Temporary Easement for
Cut & fill containing
(285 sq ft), more or less

Parcel 13
83+32 to 83+92 L
Temporary Easement for
Cut & fill containing
(300 sq ft), more or less

Parcel 20
85+17.68 to 86+14 R
Temporary Easement for
Cut & fill containing
(573 sq ft), more or less

Parcel 21
86+14 to 86+62 R
Temporary Easement for
Cut & fill containing
(241 sq ft), more or less

Parcel 22
86+62 to 87+11 R
Temporary Easement for
Cut & fill containing
(244 sq ft), more or less

Parcel 23
87+11 to 87+58 R
Temporary Easement for
Cut & fill containing
(238 sq ft), more or less

Parcel 24
87+58 to 88+06.24 R
Temporary Easement for
Cut & fill containing
(340 sq ft), more or less

Plot Scale - 1:40
Plotted From - TRSF12139
File - U:\dgnprj\codnu26X082.dgn

STATE OF SOUTH DAKOTA	PROJECT	SHEET	TOTAL SHEETS
	P 0081(93)157	B26	B120

Plotting Date: 09/01/2015

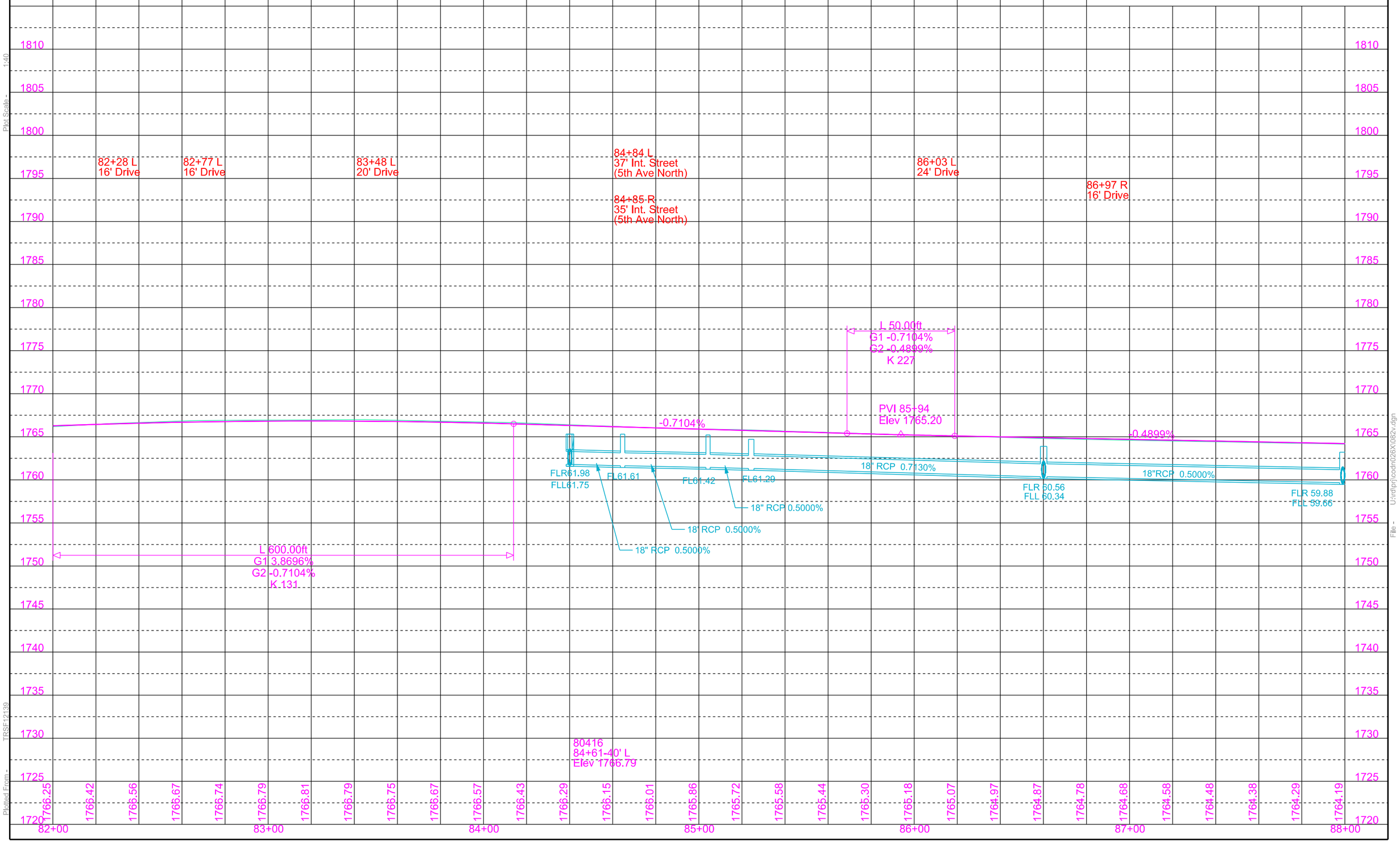

Plot Scale - 1:40

Plotted From - TRSF12139

File - U:\rdprj\codh\026X\082v.dgn

STATE OF SOUTH DAKOTA	PROJECT	SHEET	TOTAL SHEETS
	P 0081(93)157	B27	B120

Plotting Date: 09/01/2015

Retain All Storm Sewer Pipe and Drop Inlets Unless Otherwise Noted

Take Out Drop Inlets at the Following Locations:
88+04-25'R
88+04-26'L
88+22-41'L
88+79-26'L
91+58-25'R
91+58-26'L
92+31-26'L

88+73 to 91+70 L
Take Out Concrete Retaining Wall

88+73 L to 90+10 L
Remove Chainlink Fence

Install Type B Drop Inlet with 6" Concrete Collar and Type B Frame and Grate at the Following Locations:
88+21.76-40.93'L(2'x3')
88+60.99-42.58'L(2'x3')
88+80.43-23.67'L(2'x3')
90+10.00-23.67'R(2'x3')
90+10.00-23.67'L(2'x3')
91+50.00-23.67'R(2'x3')
91+50.00-23.67'L(3'x4')
91+75.35-49.29'L(2'x3')
92+14.83-42.80'L(2'x3')
92+34.21-23.67'L(3'x4')
93+45.00-23.67'L(4'x3')
93+45.00-23.67'R(2'x3')

Take Out RC Pipe at the Following Locations:
88+04-26'L to 88+22-41'L(18"-22')
88+04-25'R to 88+04-26'L(18"-48')
88+04-26'L to 88+79-26'L(18"-76')
88+69-26'L to 88+79-26'L(18"-10')
88+79-26'L to 91+58-26'L(18"-278')
91+58-25'R to 91+58-26'L(18"-48')
91+58-25'L to 92+31-26'L(18"-74')
91+76-42'L to 92+15-42'L(18"-40')
92+14-42'L to 92+31-26'L(18"-22')
92+31-26'L to 95+09-26'L(30"-280')
(Incidental Work, Grading)

88+21.76-40.98'L to 88+60.99-42.58'L
Install 18"-38' RCP
(Between Drop Inlets)

88+60.99-42.58'L to 88+80.43-23.67'L
Install 18"-26' RCP
(Between Drop Inlets)

88+80.43-23.67'L to 90+10.00-23.67'L
Install 18"-128' RCP
(Between Drop Inlets)

90+10.00-23.67'L to 23.67'R
Install 18"-46' RCP
(Between Drop Inlets)

90+25 L
Take Out Concrete Stairway
(Incidental Work, Grading)

90+10.00-23.67'L to 91+50.00-23.67'L
Install 18"-138' RCP
(Between Drop Inlets)

91+50.00-23.67'L to 23.67'R
Install 18"-46' RCP
(Between Drop Inlets)

91+50.00-23.67'L to 92+34.21-23.67'L
Install 18"-82' RCP
(Between Drop Inlets)

91+75.35-49.29'L to 92+14.83-42.80'L
Install 18"-38' RCP
(Between Drop Inlets)

92+34.21-23.67'L to 93+45.00-23.67'L
Install 18"-108' RCP
(Between Drop Inlets)

93+45.00-23.67'L to 23.67'R
Install 18"-46' RCP
(Between Drop Inlets)

93+45.00-23.67'L to 95+02.00-23.67'L
Install 18"-154' RCP
(Between Drop Inlets)

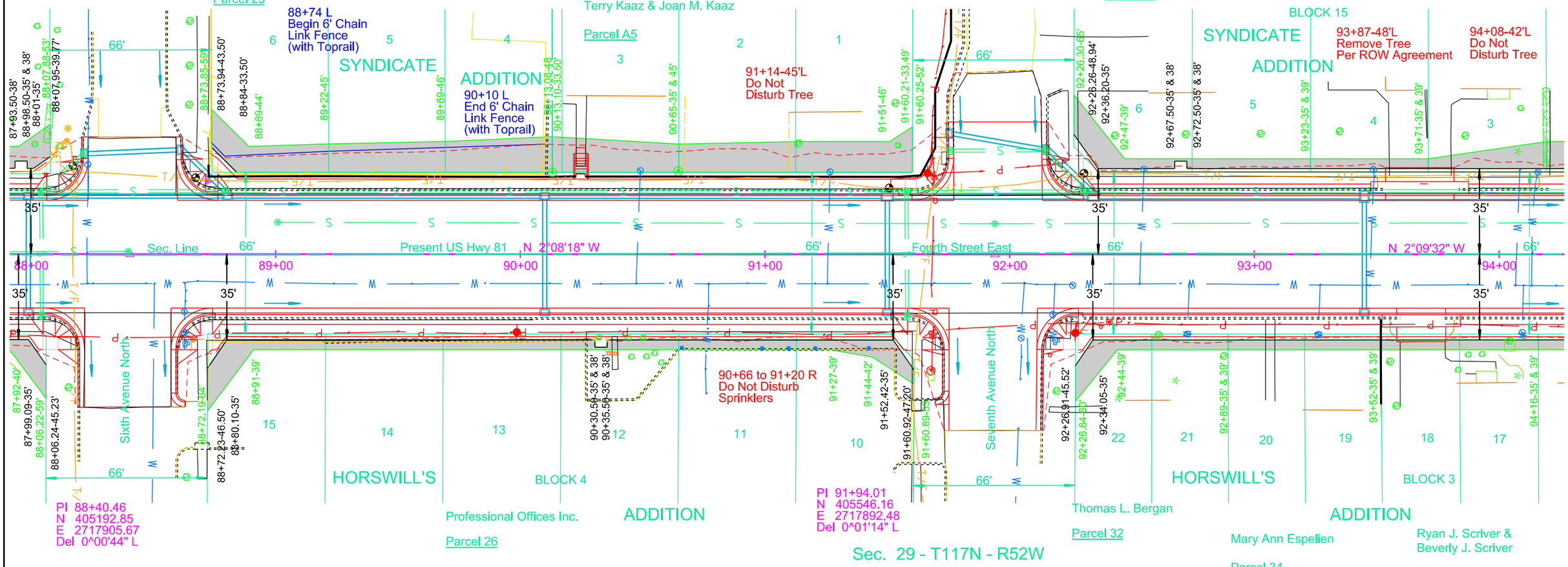

Parcel 25
88+73.85 to 90+13.10 L
Temporary Easement for Cut & fill containing
(1750 sq ft), more or less

Parcel 26
88+72.19 to 91+60.92 R
Temporary Easement for Cut & fill containing
(1449 sq ft), more or less

Parcel A5
90+13.08 to 90+65 L
Temporary Easement for Cut & fill containing
(672 sq ft), more or less

Parcel A6
90+65 to 91+60.25 L
Temporary Easement for Cut & fill containing
(1149 sq ft), more or less

Parcel 27
92+26.30 to 93+23 L
Temporary Easement for Cut & fill containing
(572 sq ft), more or less

Parcel 32
92+26.91 to 92+89 R
Temporary Easement for Cut & fill containing
(393 sq ft), more or less

Parcel 28
93+23 to 93+71 L
Temporary Easement for Cut & fill containing
(193 sq ft), more or less

Parcel 33
92+89 to 93+52 R
Temporary Easement for Cut & fill containing
(250 sq ft), more or less

Parcel 29
93+71 to 94+19 L
Temporary Easement for Cut & fill containing
(362 sq ft), more or less

Parcel 34
93+52 to 94+16 R
Temporary Easement for Cut & fill containing
(258 sq ft), more or less

Plot Scale - 1:40
Plotted From - TRSF12139
File - U:\rdprj\codh\026X\088.dgn

STATE OF SOUTH DAKOTA	PROJECT	SHEET	TOTAL SHEETS
	P 0081(93)157	B28	B120

Plotting Date: 09/01/2015

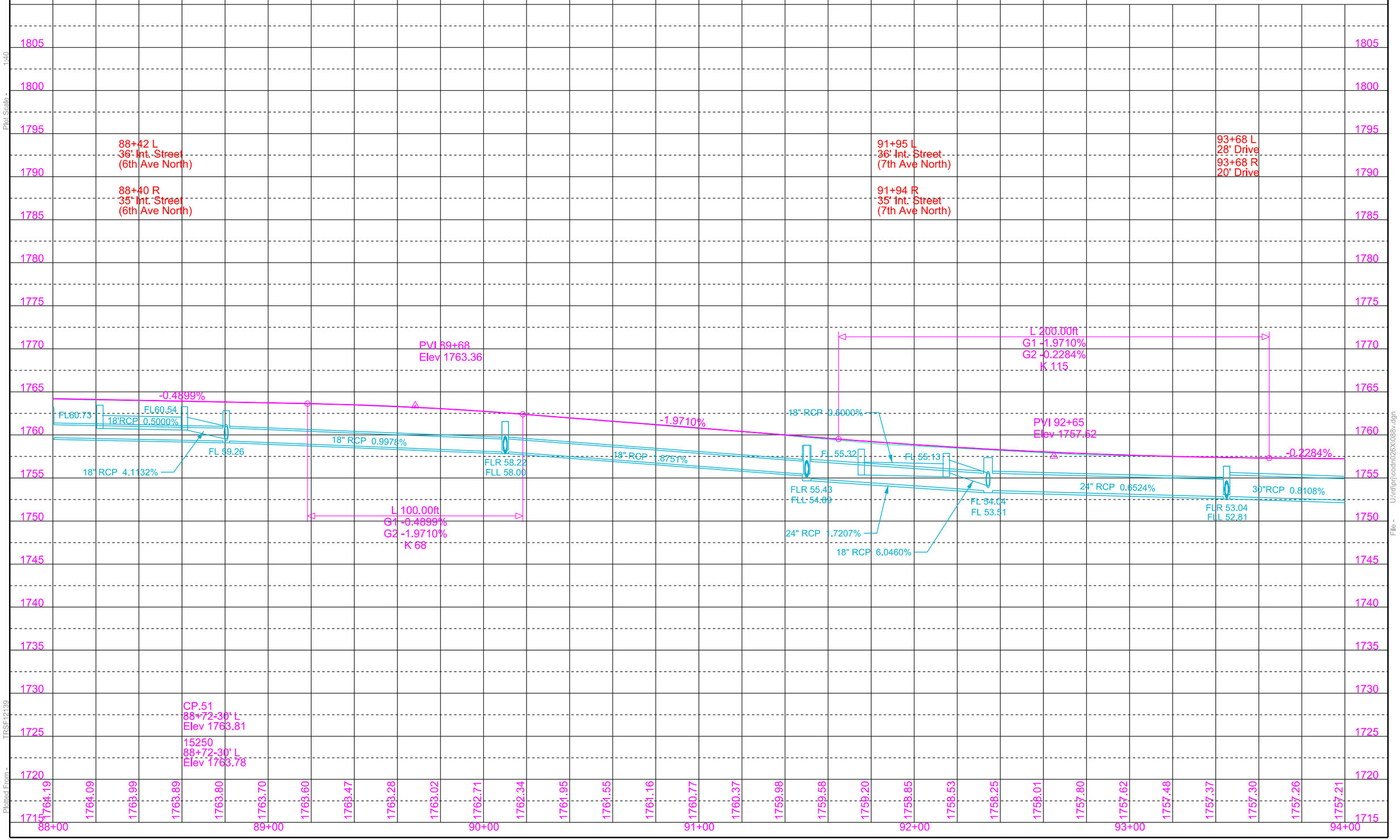

Plot Scale - 1:40

TRSF12139

Plotted From -

File - U:\radprj\cdah\026X\088v.dgn

STATE OF SOUTH DAKOTA	PROJECT	SHEET	TOTAL SHEETS
	P 0081(93)157	B29	B120

Plotting Date: 09/01/2015 Rev. 2-12-2015 JWF

Retain All Storm Sewer Pipe and Drop Inlets Unless Otherwise Noted

Take Out Drop Inlets at the Following Locations:
95+09-26'L
95+10-25'R
95+33-43'L
95+69-42'L
95+86-26'L
98+65-31'R
98+65-31'L
98+84-48'L
99+24-47'L
99+41-31'L

Install Type B Drop Inlet with 6" Concrete Collar and Type B Frame and Grate at the Following Locations:
95+02.00-23.67'L (4'x3')
95+02.00-23.67'R (2'x3')
95+33.29-42.87'L (2'x3')
95+68.92-42.99'L (2'x3')
95+92.13-23.67'L (4'x4')
97+00.00-29.17'L (4'x3')
97+00.00-29.17'R (2'x3')
98+58.00-29.17'L (4'x3')
98+58.00-29.17'R (2'x3')
98+84.16-48.28'L (2'x3')
99+24.54-48.59'L (2'x3')
99+47.85-29.17'L (4'x4')

94+49 L
Take Out Concrete Stairway
(Incidental Work, Grading)

Take Out RC Pipe at the Following Locations:
95+09-26'L to 95+86-26'L (30"-77')
95+10-25'R to 95+10-24'L (18"-48')
95+10-24'L to 95+21-26'L (30"-12')
95+33-43'L to 95+69-42'L (18"-35')
95+69-42'L to 95+86-26'L (18"-24')
95+86-26'L to 98+65-31'L (30"-279')
98+65-31'L to 98+65-31'R (18"-63')
98+65-31'L to 99+41-31'L (30"-76')
98+84-48'L to 99+24-47'L (18"-40')
99+24-47'L to 99+41-31'L (18"-23')
99+41-31'L to 102+20-31'L (18"-31')
(Incidental Work, Grading)

94+99 L
Take Out Concrete Stairway
(Incidental Work, Grading)

95+02.00-23.67'L to 23.67'R
Install 18"-46' RCP
(Between Drop Inlets)

95+02.00-23.67'L to 95+92.13-23.67'L
Install 30"-88' RCP
(Between Drop Inlets)

95+33.29-42.87'L to 95+68.92-42.99'L
Install 18"-34' RCP
(Between Drop Inlets)

96+68 L
Take Out Concrete Stairway
(Incidental Work, Grading)

95+68.92-42.99'L to 95+92.13-23.67'L
Install 18"-28' RCP
(Between Drop Inlets)

95+92.13-23.67'L to 97+00.00-29.17'L
Install 30"-106' RCP
(Between Drop Inlets)

97+00.00-29.17'L to 29.17'R
Install 18"-56' RCP
(Between Drop Inlets)

97+00.00-29.17'L to 98+58.00-29.17'L
Install 30"-156' RCP
(Between Drop Inlets)

98+58.00-29.17'L to 29.17' R
Install 18"-56' RCP
(Between Drop Inlets)

98+58.00-29.17'L to 99+47.85-29.17'L
Install 30"-88' RCP
(Between Drop Inlets)

98+84.16-48.28'L to 99+24.54-48.59'L
Install 18"-40' RCP
(Between Drop Inlets)

98+72-59'L
Remove Lower 8 ft
of Branches from Spruce Tree
(Incidental Work, Grading)

99+24.54-48.59'L to 99+47.85-29.17'L
Install 18"-30' RCP
(Between Drop Inlets)

99+47.85-29.17'L to 100+80.00-29.17'L
Install 30"-130' RCP
(Between Drop Inlets)

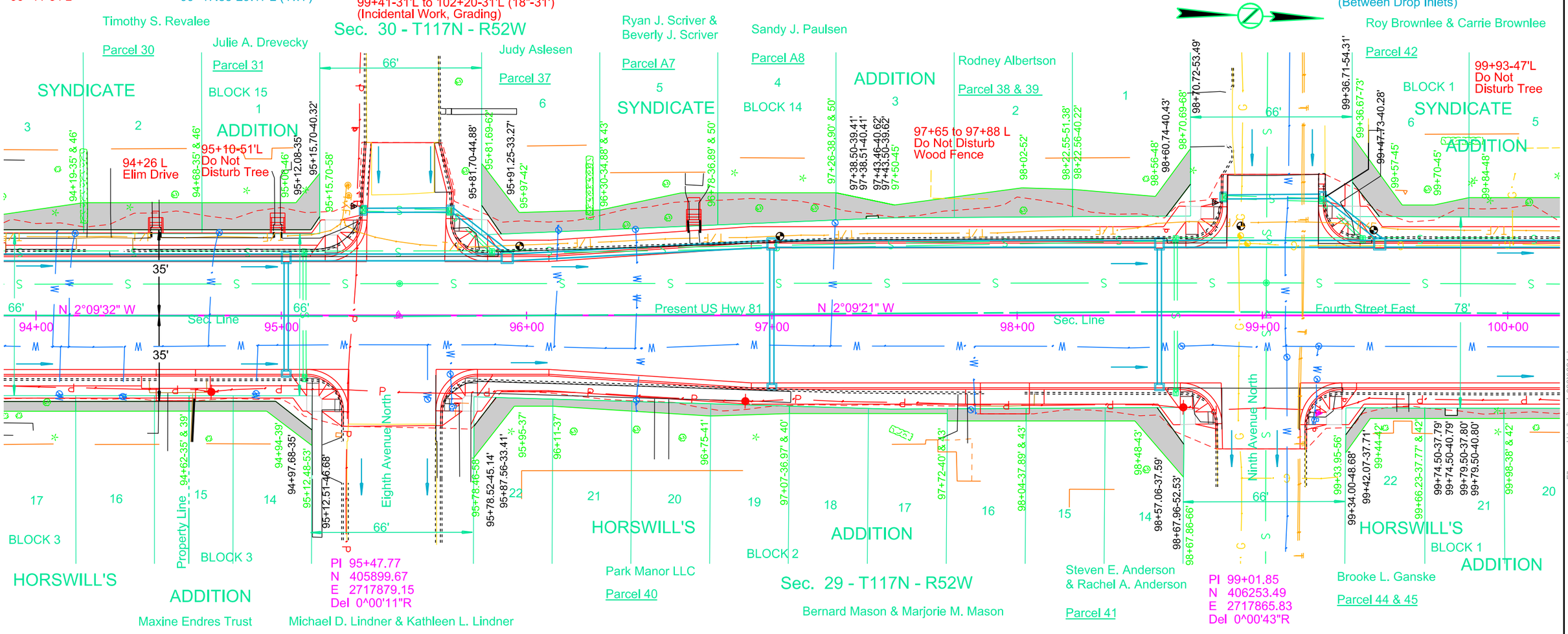

Install Concrete Stairway at the Following Locations:
94+48 L
94+98 L
96+68 L

Parcel 30
94+19 to 94+68 L
Temporary Easement for Cut & fill containing
(531 sq ft), more or less

Parcel 31
94+68 to 95+15.70 L
Temporary Easement for Cut & fill containing
(519 sq ft), more or less

Parcel 37
95+81.70 to 96+30 L
Temporary Easement for Cut & fill containing
(498 sq ft), more or less

Parcel A7
96+30 to 96+78 L
Temporary Easement for Cut & fill containing
(563 sq ft), more or less

Parcel A8
96+78 to 97+26 L
Temporary Easement for Cut & fill containing
(583 sq ft), more or less

Parcel 38
97+26 to 98+22.56 L
Temporary Easement for Cut & fill containing
(869 sq ft), more or less

Parcel 39
98+22.55 to 98+70.72 L
Temporary Easement for Cut & fill containing
(516 sq ft), more or less

Parcel 42
99+36.71 to 100+32 L
Temporary Easement for Cut & fill containing
(838 sq ft), more or less

Parcel 35
94+16 to 94+62 R
Temporary Easement for Cut & fill containing
(185 sq ft), more or less

Parcel 36
94+62 to 95+12.51 R
Temporary Easement for Cut & fill containing
(212 sq ft), more or less

Parcel 40
95+78.46 to 97+07 R
Temporary Easement for Cut & fill containing
(614 sq ft), more or less

Parcel A9
97+07 to 98+04 R
Temporary Easement for Cut & fill containing
(304 sq ft), more or less

Parcel 41
98+04 to 98+67.86 R
Temporary Easement for Cut & fill containing
(491 sq ft), more or less

Parcel 44
99+33.95 to 99+66.23 R
Temporary Easement for Cut & fill containing
(163 sq ft), more or less

Parcel 45
99+66.23 to 99+98 R
Temporary Easement for Cut & fill containing
(120 sq ft), more or less

Plot Scale - 1:40
Plotted From - TRSF12139
File - U:\rdprj\cotnu26\x1094.dgn

STATE OF SOUTH DAKOTA	PROJECT	SHEET	TOTAL SHEETS
	P 0081(93)157	B30	B120

Plotting Date: 09/01/2015

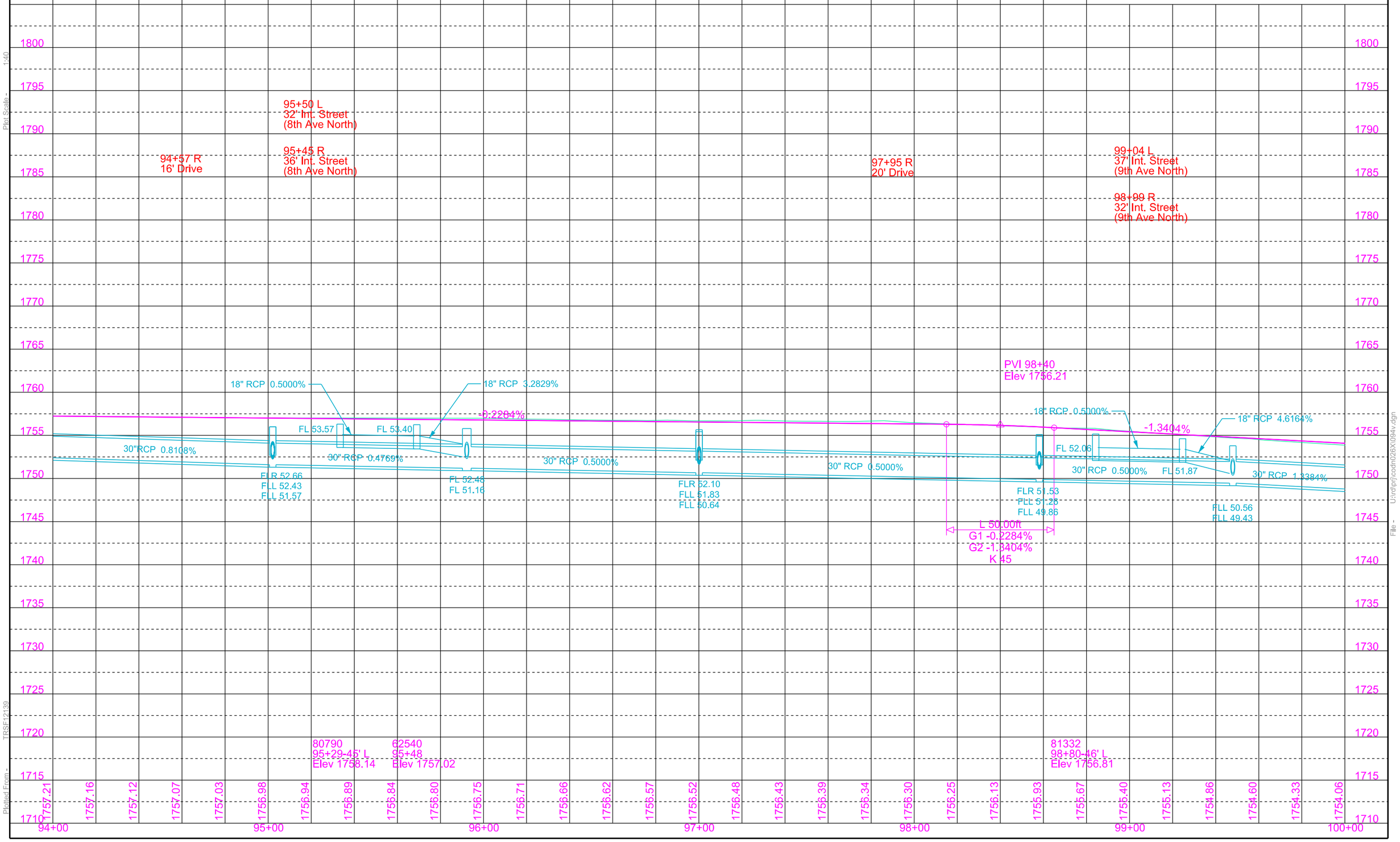

Plot Scale - 1:40

TRSF12139

Plotted From -

File - U:\radprj\cadh\026X\094v.dgn

STATE OF SOUTH DAKOTA	PROJECT	SHEET	TOTAL SHEETS
	P 0081(93)157	B31	B120

Plotting Date: 09/01/2015 Rev. 2-12-2015 JWF

Take Out Drop Inlets
at the Following Locations:
102+20-31'L
102+20-31'R
102+37-47'L
102+76-63'L
102+94-31'L
104+46-26'R
104+47-26'L
105+32-26'L

105+25.21-31.63' R
Install 4'x6' Type S
Drop Inlet and Precast
Concrete Type S Lid

Install Type B Drop Inlet
with 6" Concrete Collar
and Type B Frame and Grate
at the Following Locations:
100+80.00-29.17'L (4'x3')
100+80.00-29.17'R (2'x3')
102+11.37-29.17'R (4'x4')
102+11.93-29.17'L (4'x4')
102+37.32-56.07'L (3'x4')
102+75.21-54.68'L (2'x3')
103+00.54-29.17'L (2'x3')
104+51.50-29.17'L (2'x3')
104+75.00-29.17'R (3'x4')
105+50.10-29.17'L (2'x3')
105+75.00-29.17'R (4'x3')

Take Out RC Pipe
at the Following Locations:
102+01-31'L to 102+20-31'L(30"-18')
102+20-31'R to 102+20-31'L(30"-60')
102+20-31'R to 102+41-32'R(30"-22')
102+20-31'L to 102+37-47'L(18"-22')
102+50-38'R to 104+46-26'R(18"-197')
102+76-63'L to 102+94-31'L(18"-34')
104+31-27'R to 104+47-27'L(24"-14')
104+46-26'R to 106+99-26'R(24"-253')
104+47-26'L to 104+76-31'L(18"-24')
104+85-26'R to 105+32-26' R(18"-47')
(Incidental Work, Grading)

100+80.00-29.17'L to
29.17'R
Install 18"-56' RCP
(Between Drop Inlets)

100+80.00-29.17'L to
102+11.93-29.17'L
Install 30"-130' RCP
(Between Drop Inlets)

102+11.37-29.17'L to
102+11.93-29.17'R
Install 30"-56' RCP
(Between Drop Inlets)

102+11.93-29.17'L to
102+37.32-56.07'L
Install 18"-36' RCP
(Between Drop Inlets)

102+11.93-29.17'L to
103+00.54-29.17'L
Install 18"-86' RCP
(Between Drop Inlets)

102+11.37-29.17'R to
102+41.03-32.24'R
Install 30"-28' RCP
(Between Drop Inlet
and Existing Manhole)

102+37.32-56.07'L
102+75.21-54.69'L
Install 18"-36' RCP
(Between Drop Inlets)

102+49.51-38.26'R to
104+75.00-29.17'R
Install 24"-224' RCP
(Between Existing Jct Box
and Drop Inlet)

104+51.50-29.17'L to
104+76.22-30.92'L
Install 18"-24' RCP
(Between Drop Inlets)

104+75.00-29.17'R to
105+25.21-31.63'R
Install 24"-46' RCP
(Between Drop Inlets)

104+84.74-25.52'L to
105+50.10-29.17'L
Install 18"-64' RCP
(Between Drop Inlets)

105+75.00-29.17'R to
107+00.00-29.17'R
Install 24"-122' RCP
(Between Drop Inlets)

Retain All Storm Sewer Pipe
and Drop Inlets
Unless Otherwise Noted

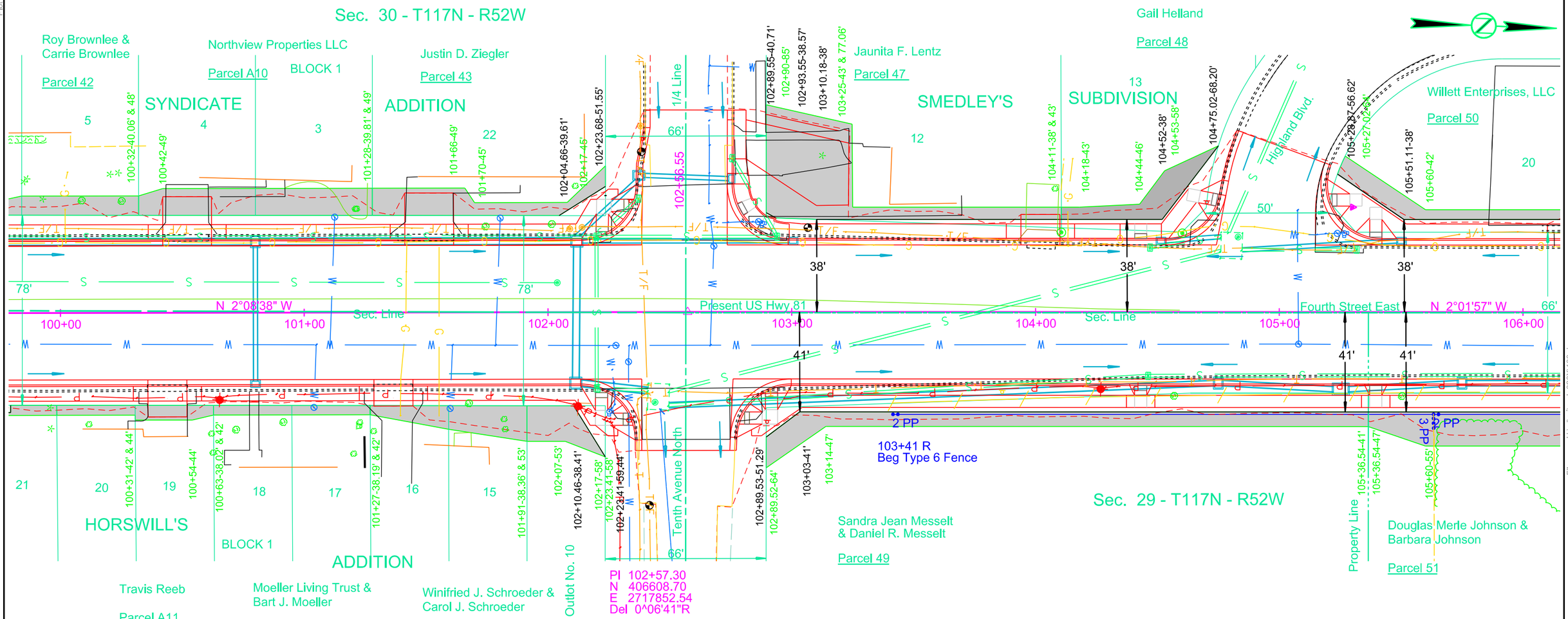

Parcel A10
100+32 to 101+28 L
Temporary Easement for
Cut & fill containing
(1046 sq ft), more or less

Parcel A11
99+98 to 100+63 R
Temporary Easement for
Cut & fill containing
(317 sq ft), more or less

Parcel 43
101+28 to 102+23.68 L
Temporary Easement for
Cut & fill containing
(774 sq ft), more or less

Parcel A12
100+63 to 101+27 R
Temporary Easement for
Cut & fill containing
(251 sq ft), more or less

Parcel 46
101+27 to 102+23.41 R
Temporary Easement for
Cut & fill containing
(896 sq ft), more or less

Parcel 47
102+89.55 to 104+11 L
Temporary Easement for
Cut & fill containing
(1937 sq ft), more or less

Parcel 49
102+89.53 to 105+36.54 R
Temporary Easement for
Cut & fill containing
(1619 sq ft), more or less

Parcel 48
104+11 to 104+75.02 L
Temporary Easement for
Cut & fill containing
(513 sq ft), more or less

Parcel 51
105+36.54 to 106+64.32 R
Temporary Easement for
Cut & fill containing
(1686 sq ft), more or less

Parcel 50
105+28.87 to 108+70.22 L
Temporary Easement for
Cut & fill containing
(1681 sq ft), more or less

Plot Scale - 1:40
Plotted From - TRSF12139
File - U:\rdphjcoadu\26X1100.dgn

STATE OF SOUTH DAKOTA	PROJECT	SHEET	TOTAL SHEETS
	P 0081(93)157	B32	B120

Plotting Date: 09/01/2015

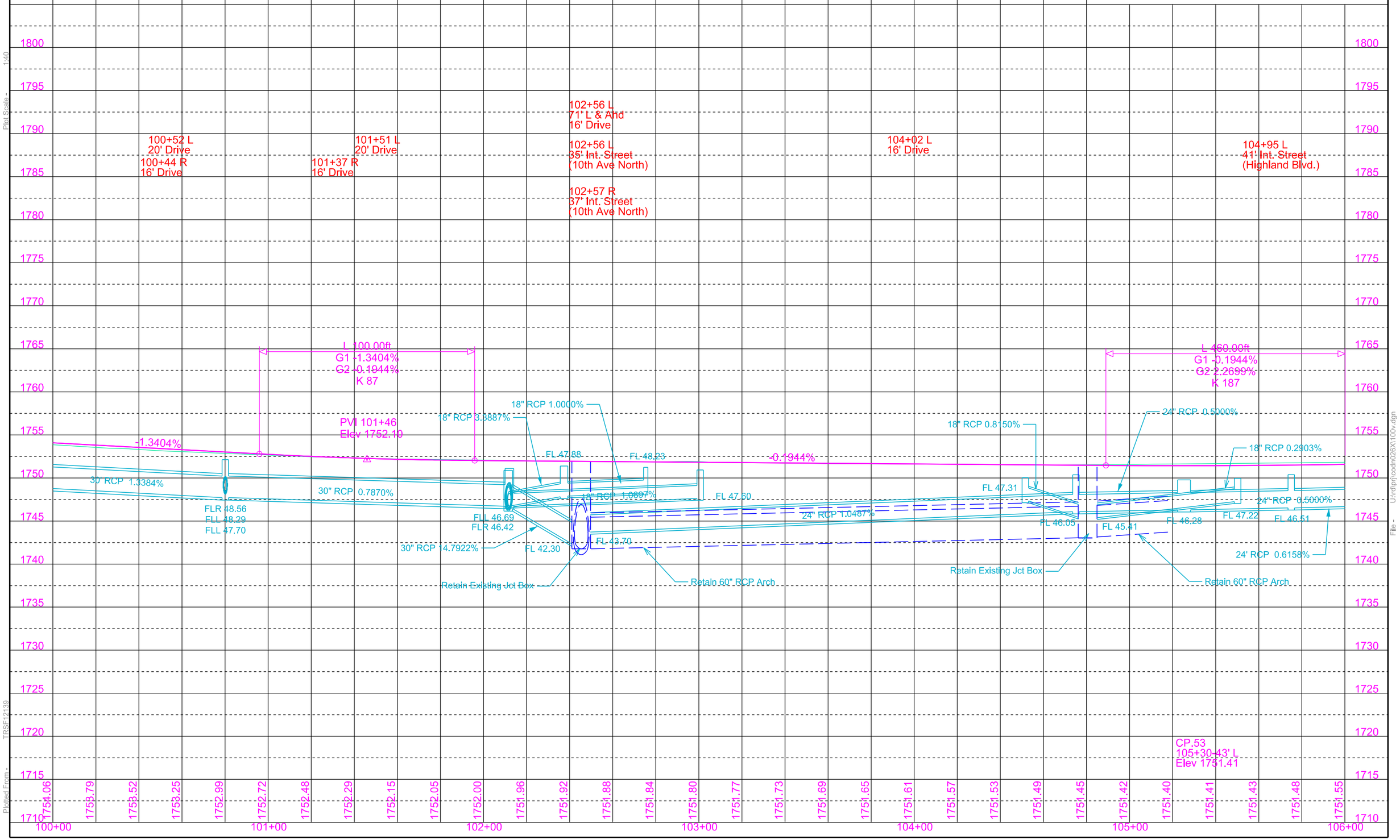

Plot Scale - 1:40

Plotted From - TRSF12139

File - U:\ralph\codn\026X1100v.dgn

STATE OF SOUTH DAKOTA	PROJECT	SHEET	TOTAL SHEETS
	P 0081(93)157	B33	B120

Plotting Date: 09/01/2015 Rev. 6-26-2015 JWF

Retain All Storm Sewer Pipe
and Drop Inlets
Unless Otherwise Noted

Take Out Drop Inlets
at the Following Locations:
106+98-26'L
106+99-26'R
109+39-26'R
109+40-26'L
111+55-26'L
111+56-26'R

Install Type B Drop Inlet
with 6" Concrete Collar
and Type B Frame and Grate
at the Following Locations:
107+00.00-29.17'L (2'x3')
107+00.00-29.17'R (4'x3')
109+47.43-29.17'L (2'x3')
109+47.43-29.17'R (4'x3')
111+55.00-29.17'L (2'x3')
111+55.00-29.17'R (4'x3')

Take Out RC Pipe
at the Following Locations:
106+98-26'L to 106+99-26'R(18"-48')
106+99-26'R to 109+39-26'R(18"-240')
109+39-26'R to 109+40-26'L(18"-49')
109+39-26'R to 11+56-26'R(18"-240'
111+55-26'L to 111+56-26'R(18"-49')
(Incidental Work, Grading)

107+00.00-29.17'L to 29.17'R
Install 18"-48' RCP
(Between Drop Inlets)

107+00.00'R to 109+47.43-29.17'R
Install 24"-244' RCP
(Between Drop Inlets)

109+47.43-29.17'L to 29.17'R
Install 18"-48' RCP
(Between Drop Inlets)

109+47.43-29.17'R to 111+55.00-29.17'R
Install 24"-206' RCP
(Between Drop Inlets)

111+55.00-29.17'L to 29.17'R
Install 18"-48' RCP
(Between Drop Inlets)

111+55.00-29.17'R to 113+92.00-29.17'R
Install 24"-234' RCP
(Between Drop Inlets)

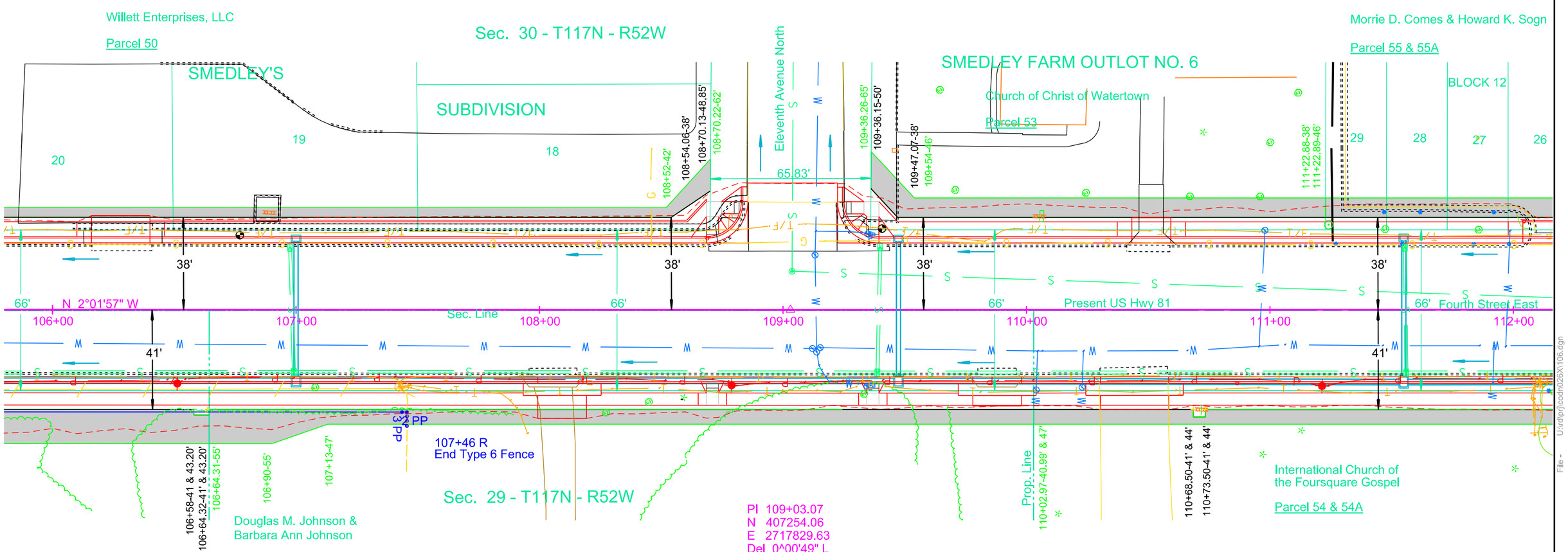

Parcel 53
109+36.26 to 111+22.89 L
Temporary Easement for
Cut & fill containing
(1599 sq ft), more or less

Parcel 55
111+22.88 to 116+22.44 L
Temporary Easement for
Cut & fill containing
(3714 sq ft), more or less

Parcel 52
106+64.31 to 110+02.97 R
Temporary Easement for
Cut & fill containing
(2334 sq ft), more or less

Parcel 54
110+02.97 to 115+86.09 R
Temporary Easement for
Cut & fill containing
(3444 sq ft), more or less

Plot Scale - 1:40
Plotted From - TRSF12139
File - U:\rdprj\codnu26\X1106.dgn

STATE OF SOUTH DAKOTA	PROJECT	SHEET	TOTAL SHEETS
	P 0081(93)157	B34	B120

Plotting Date: 09/01/2015

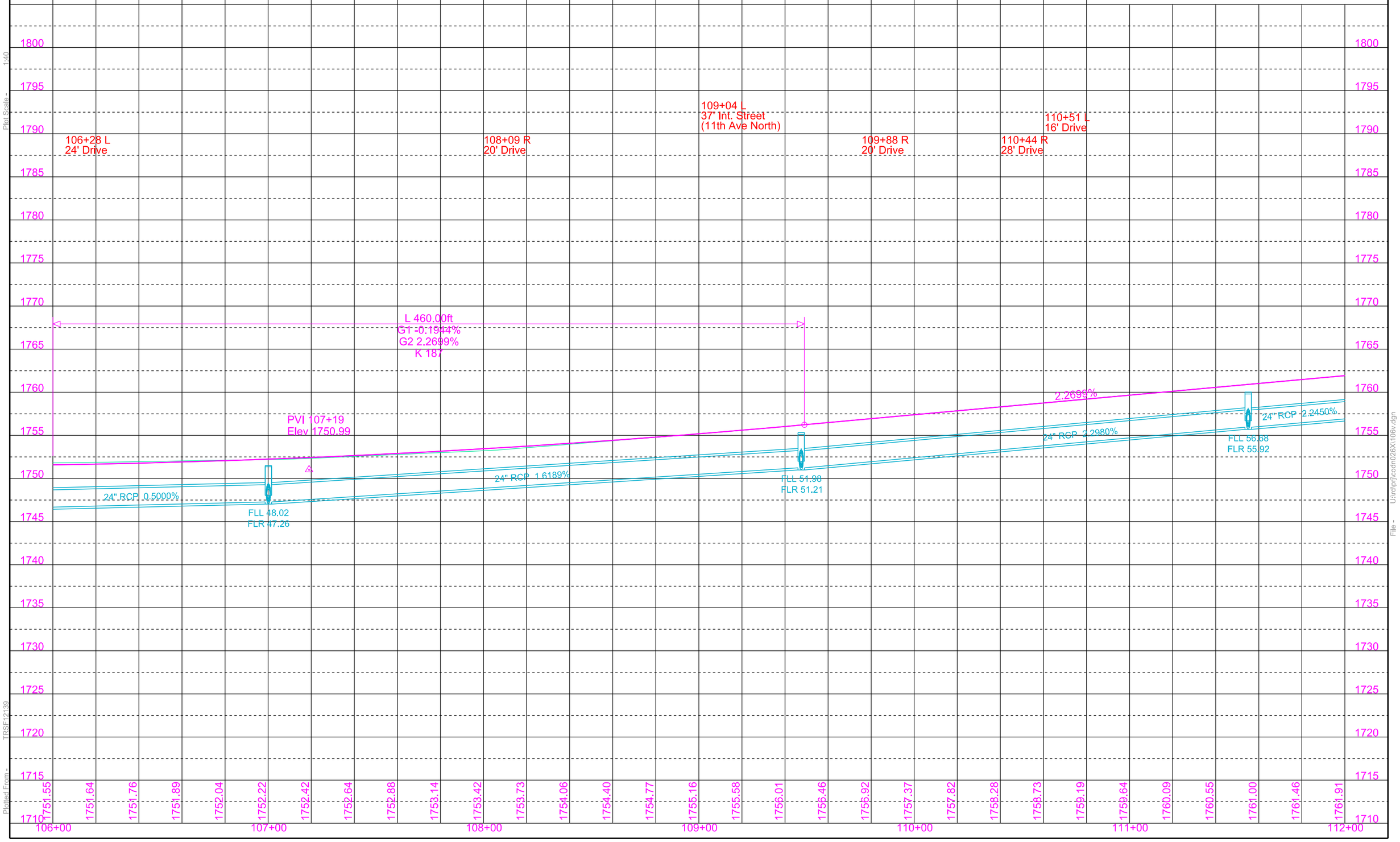

Plot Scale - 1:40

TRSF12139

Plotted From - U:\ra\prj\cdah\026X\106v.dgn

File -

STATE OF SOUTH DAKOTA	PROJECT	SHEET	TOTAL SHEETS
	P 0081(93)157	B35	B120

Plotting Date: 09/01/2015 Rev. 6-26-2015 JWF

Retain All Storm Sewer Pipe and Drop Inlets Unless Otherwise Noted

Take Out Drop Inlets at the Following Locations:
113+86-26'L
113+87-26'R
116+36-26'R
116+37-25'R

Install Type B Drop Inlet with 6" Concrete Collar and Type B Frame and Grate at the Following Locations:
113+92.00-29.17'L (2'x3')
113+92.00-29.17'R (4'x3')
116+34.95-29.17'L (2'x3')
116+37.28-29.17'R (3x4")

Take Out RC Pipe at the Following Locations:
113+86-26'L to 113+87-26'R (18"-49')
113+87-26'R to 116+37-26'R (18"-250')
116+36-26'R to 116+37-25'L (18"-48')
116+37-25'L to 118+40-25'L (18"-204')
(Incidental Work, Grading)

113+92.00-29.17'L to 29.17'R
Install 18"-56' RCP
(Between Drop Inlets)

113+92.00-29.17'R to 116+37.28-29.17'R
Install 18"-242' RCP
(Between Drop Inlets)

116+34.95-29.17'L to 116+37.28-29.17'R
Install 18"-56' RCP
(Between Drop Inlets)

116+34.95-29.17'L to 118+83.18-29.17'L
Install 18"-196' RCP
(Between Drop Inlets)

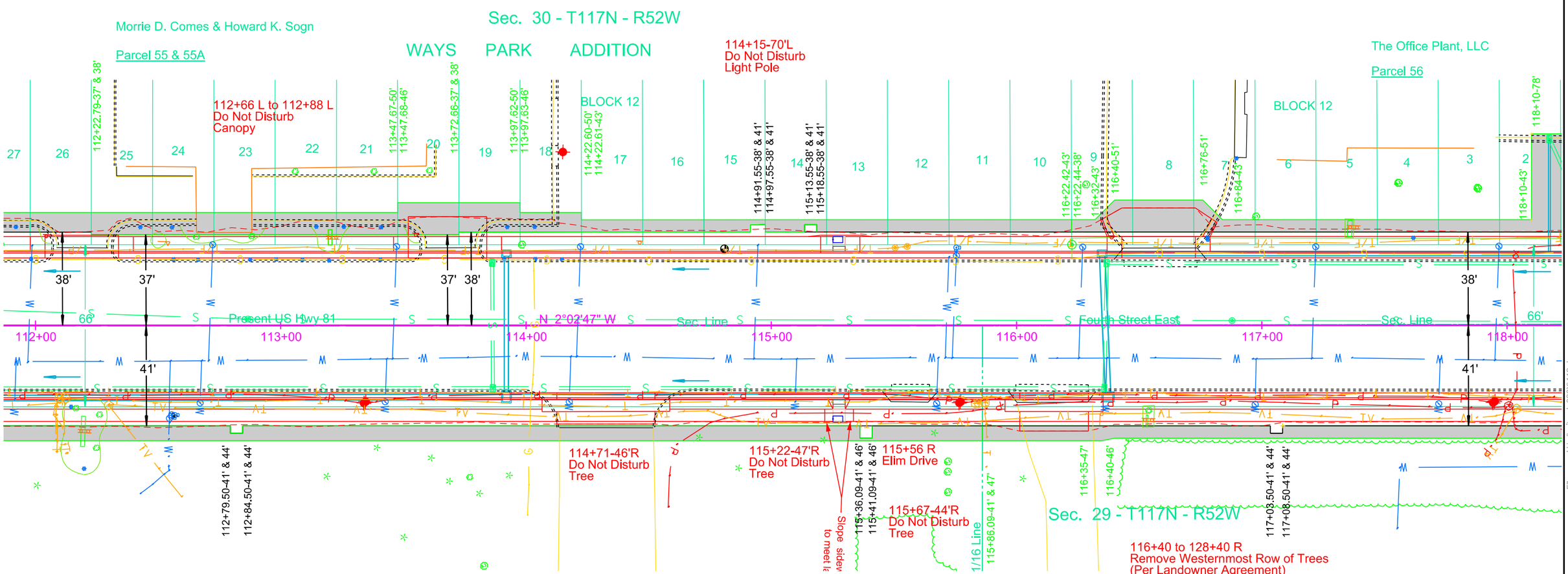

Parcel 56
116+22 to 118+44.78 L
Temporary Easement for
Cut & fill containing
(2096 sq ft), more or less

Parcel 58
115+86.09 to 128+79.68 R
Temporary Easement for
Cut & fill containing
(10412 sq ft), more or less

Plot Scale - 1:40
Plotted From - TRSF12139
File - U:\drl\prj\coadn\26X1\12.dgn

STATE OF SOUTH DAKOTA	PROJECT	SHEET	TOTAL SHEETS
	P 0081(93)157	B36	B120

Plotting Date: 09/01/2015 Rev. 4-15-2015 JWF

Exc=	11091	Emb=	1933
Undercut=	17943	20.00%	387	2320
		Undercut=	17943
		20.00%	3589	21532
Total=	29034	Waste=	5182
		Total=	29034

Haul 1900 CuYdSta

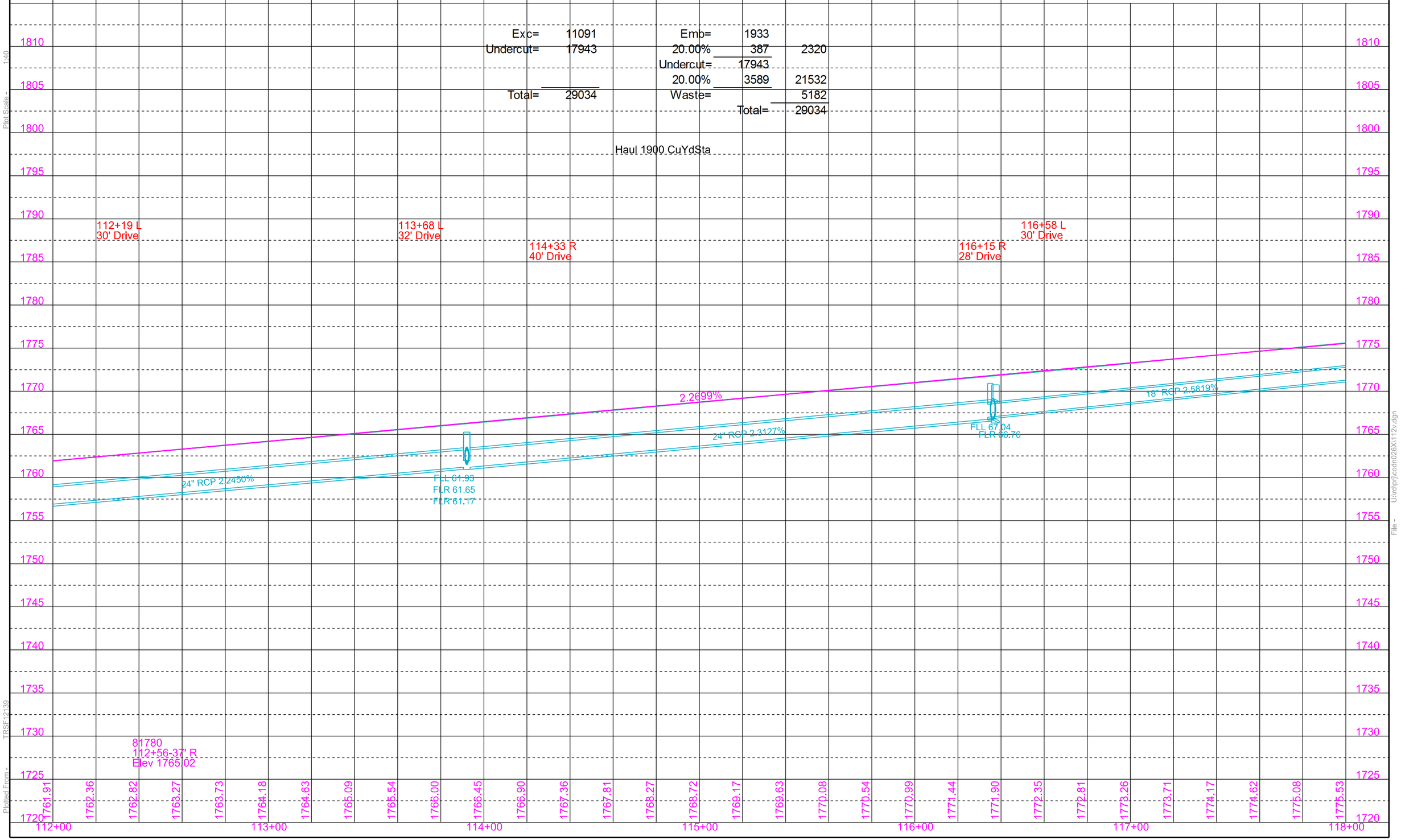

Plot Scale - 1:40

TRSF12139

Plotted From -

File - U:\traprj\cadh\026X\112v.dgn

STATE OF SOUTH DAKOTA	PROJECT	SHEET	TOTAL SHEETS
	P 0081(93)157	B37	B120

Plotting Date: 09/01/2015

Retain All Storm Sewer Pipe
and Drop Inlets
Unless Otherwise Noted

Take Out Drop Inlets
at the Following Locations:
118+40-25'L
118+96-42'L
119+13-26'L
122+87-26'L

118+22-65' L 118+33-41' R
Plug Existing 18" PVC Pipe
at Both Ends
(Incidental Work, Grading)

Install Type B Drop Inlet
with 6" Concrete Collar
and Type B Frame and Grate
at the Following Locations:
118+33.18-29.17'L (2'x3')
118+56.55-52.45'L (2'x3')
118+95.33-52.53'L (2'x3')
119+20.00-29.17'L (2'x3)
119+20.00-29.17'R (2'x3')
122+87.11-29.17'R (2'x3')
122+87.11-29.17'L (2'x3')

Take Out RC Pipe
at the Following Locations:
118+40-25'L to 119+13-26'L(18"-71')
118+96-42'L to 119+13-26'L(18'-20')
122+87-26'L to 123+04-26'L (18"-16')
(Incidental Work, Grading)

119+10 L to 121+63 L
Take Out Concrete
Retaining Wall

119+16 L to 120+68 L
Install Type C Retaining Wall

118+17.26-75.97'L to 118+17.25-29.17'L
Install 8"-44' PVC Pipe
(Between Existing Drop Inlet and RCP)

118+33.18-29.17'L to 118+56.55-52.45'L
Install 18"-32' RCP
(Between Drop Inlets)

118+56.55-52.45'L to 118+95.33-52.53'L
Install 18"-38' RCP
(Between Drop Inlets)

118+33.18-29.17'L to 119+20.00-29.17'L
Install 18"-84' RCP
(Between Drop Inlets)

119+20.00-29.17'L to 29.17'R
Install 18"-56' RCP
(Between Drop Inlets)

122+87.00-29.17'L to 29.17'R
Install 18"-56' RCP
(Between Drop Inlets)

122+87.11-29.17'L to 124+54.00-29.17'L
Install 18"-164' RCP
(Between Drop Inlets)

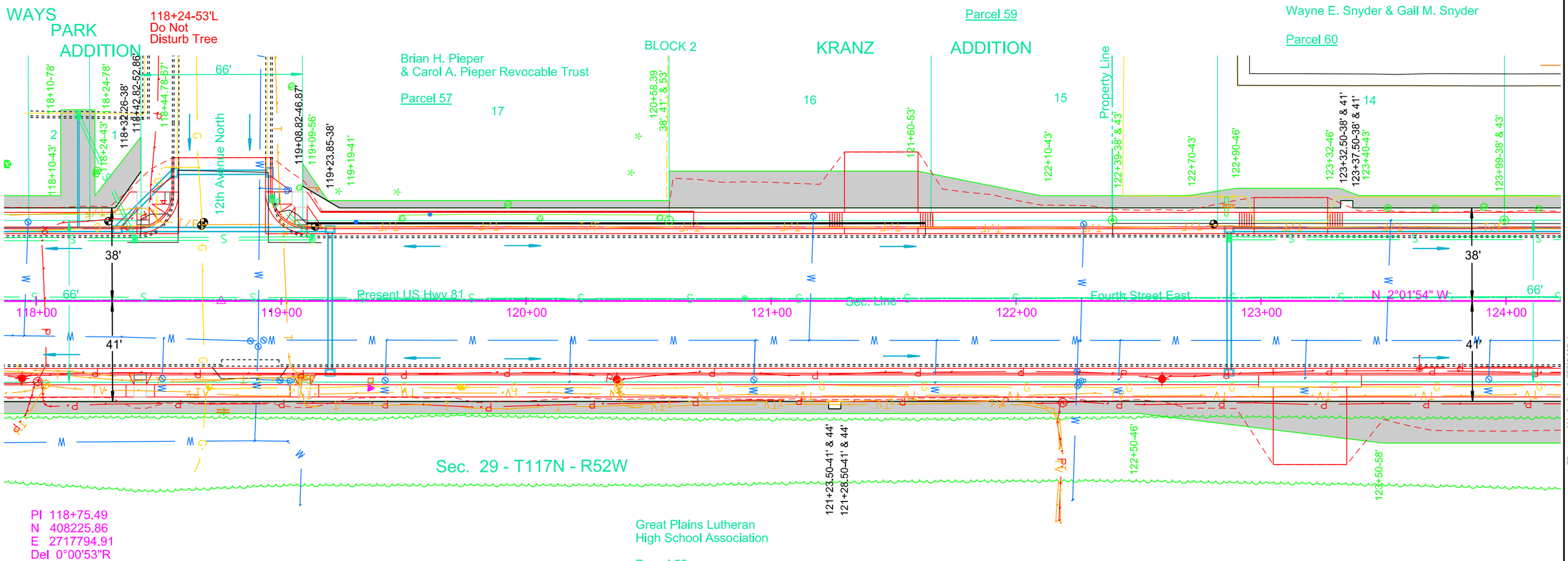

Parcel 57
119+08.81 to 120+58.39 L
Temporary Easement for
Cut & fill containing
(484 sq ft), more or less

Parcel 59
120+58 to 122+39 L
Temporary Easement for
Cut & fill containing
(2171 sq ft), more or less

Parcel 60
122+39 to 123+99 L
Temporary Easement for
Cut & fill containing
(953 sq ft), more or less

Plot Scale - 1:40
Plotted From - TRSF12139
File - U:\rdlpn\cadn\26X\118.dgn

STATE OF SOUTH DAKOTA	PROJECT	SHEET	TOTAL SHEETS
	P 0081(93)157	B38	B120

Plotting Date: 09/01/2015

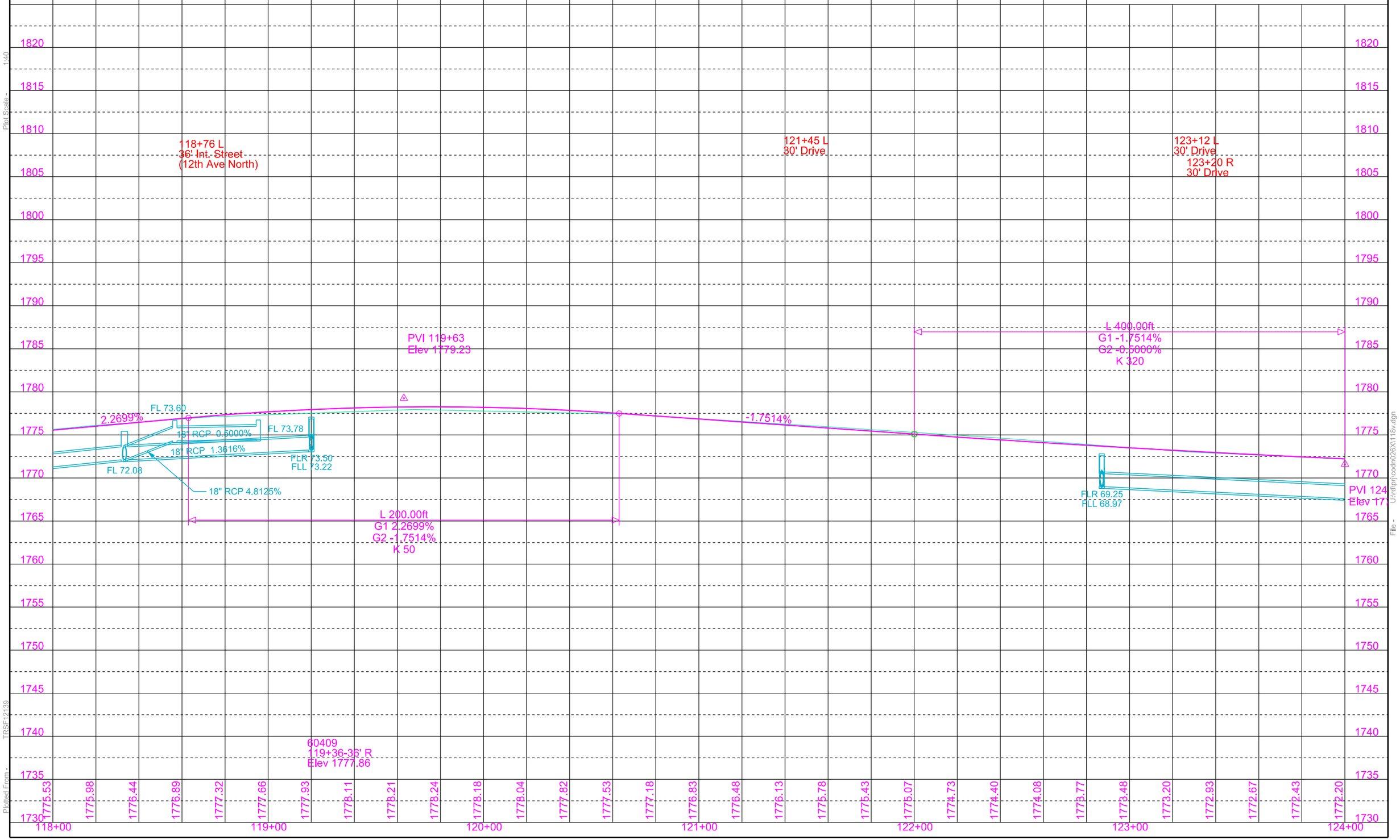

Plot Scale - 1:40

TRSF12139

Plotted From -

File - U:\ra\prj\cdah0\26X\118v.dgn

STATE OF SOUTH DAKOTA	PROJECT	SHEET	TOTAL SHEETS
	P 0081(93)157	B39	B120

Plotting Date: 09/01/2015

Retain All Storm Sewer Pipe and Drop Inlets Unless Otherwise Noted

Take Out Drop Inlets at the Following Locations:
124+38-25'L
125+84-26'L
125+85-25'R
127+08-26'L
128+35-26'R
128+35-26'L
129+47-72'L
129+54-28'R
129+76-42'L

Take Out RC Pipe at the Following Locations:
124+22-26'L to 124+38-25'L(18"-146')
125+84-26'L to 25+85-25'R(18"-51')
125+84-26'L to 127+08-26'L(18"-124')
127+08-26'L to 128+35-26'L(18"-127')
128+35-26'L to 128+35-56'R(18"-52')
128+35-26'L to 128+86-26'L(24"-52')
129+38-69'L to 129+47-72'L(18"-10')
129+54-62'R to 129+55-28'R(36"-32')
129+55-28'L to 129+76-42'L(30"-70')
129+76-42'L to 129+82-60'L(30"-16')
(Incidental Work, Grading)

124+54.00-29.17'L to 29.17'R
Install 18"-56' RCP
(Between Drop Inlets)

124+54.00-29.17'L to 126+24.00-29.17'L
Install 18"-168' RCP
(Between Drop Inlets)

126+24.00-29.17'L to 29.17'R
Install 18"-56' RCP
(Between Drop Inlets)

126+24.00-29.17'L to 127+94.00-29.17'L
Install 24"-168' RCP
(Between Drop Inlets)

127+94.00-29.17'L to 128+43.56-31.63'L
Install 24"-46' RCP
(Between Drop Inlets)

127+94.00-29.17'R to 128+43.56-31.63'R
Install 18"-46' RCP
(Between Drop Inlet and Jct Box)

128+43.56-31.63'L to 31.63' R
Install 18"-60' RCP
(Between Drop Inlets)

128+43.56-31.63'L to 31.63' R
Install 18"-38' RCP
(Between Drop Inlets)

129+38.53-68.87'L to 129+46.69-72.04'L
Install 18"-6' RCP
(Between Drop Inlet and Jct Box)

129+53.79-61.81'R to 129+73.91-31.63'R
Install 36"-34' RCP
(Between Drop Inlet and Jct Box)

129+73.91-31.63'R to 32.31'L
Install 30"-60' RCP
(Between Drop Inlets)

129+73.91-32.31'L to 129+81.94-59.71'L
Install 30"-28' RCP
(Between Drop Inlet and Existing Drop Inlet)

129+73.91-31.63'L to 131+80.00-29.17'L
Install 18"-202' RCP
(Between Drop Inlets)

129+54-62'R
Take Out Storm Sewer Manhole

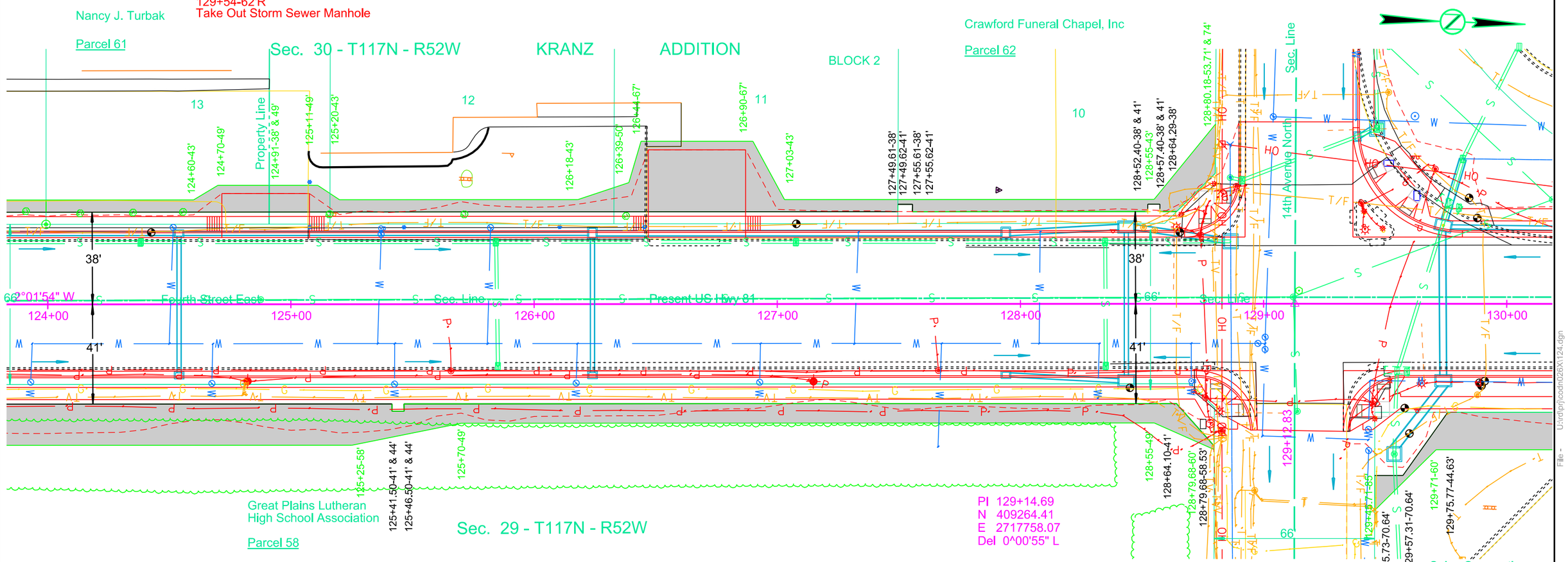

Install Type B Drop Inlet with 6" Concrete Collar and Type B Frame and Grate at the Following Locations:
124+54.00-29.17'L (2'x3')
124+54.00-29.17'R (2'x3')
126+24.00-29.17'L (4'x3')
126+24.00-29.17'R (2'x3')
127+94.00-29.17'L (4'x3')
127+94.00-29.17'R (3'x2')
129+38.53-68.87'L (2'x3')

Install 4'x6' Type S Drop Inlet with Precast Concrete Type S Drop Inlet Lid at the Following Locations:
128+43.56-31.63'L
128+43.56-31.63'R
129+73.91-32.31'L
129+73.91-31.63'R

128+86.45-25.73'L
Install 5'x5' Junction Box with Type A9 Frame and Lid

129+46.69-72.04'L
Install 5'x5' Junction Box with Type A9 Frame and Lid

129+53.79-61.81' R
Install 5'x5' Junction Box with Type A7 Frame and Lid and 1-4' Eccentric Cone

Parcel 61
123+99 to 124+91 L
Temporary Easement for Cut & fill containing (615 sq ft), more or less

Parcel 62
124+91 to 127+49.62 L
Temporary Easement for Cut & fill containing (3738 sq ft), more or less

Parcel 62
127+49.61 to 128+80.18 L
Temporary Easement for Cut & fill containing (3735 sq ft), more or less

Parcel 63
129+45.71 to 131+98 R
Temporary Easement for Cut & fill containing (3683 sq ft), more or less

Plot Scale - 1:40
Plotted From - TRSF12139
File - U:\drlprj\cadn\26x\124.dgn

STATE OF SOUTH DAKOTA	PROJECT	SHEET	TOTAL SHEETS
	P 0081(93)157	B40	B120

Plotting Date: 09/01/2015

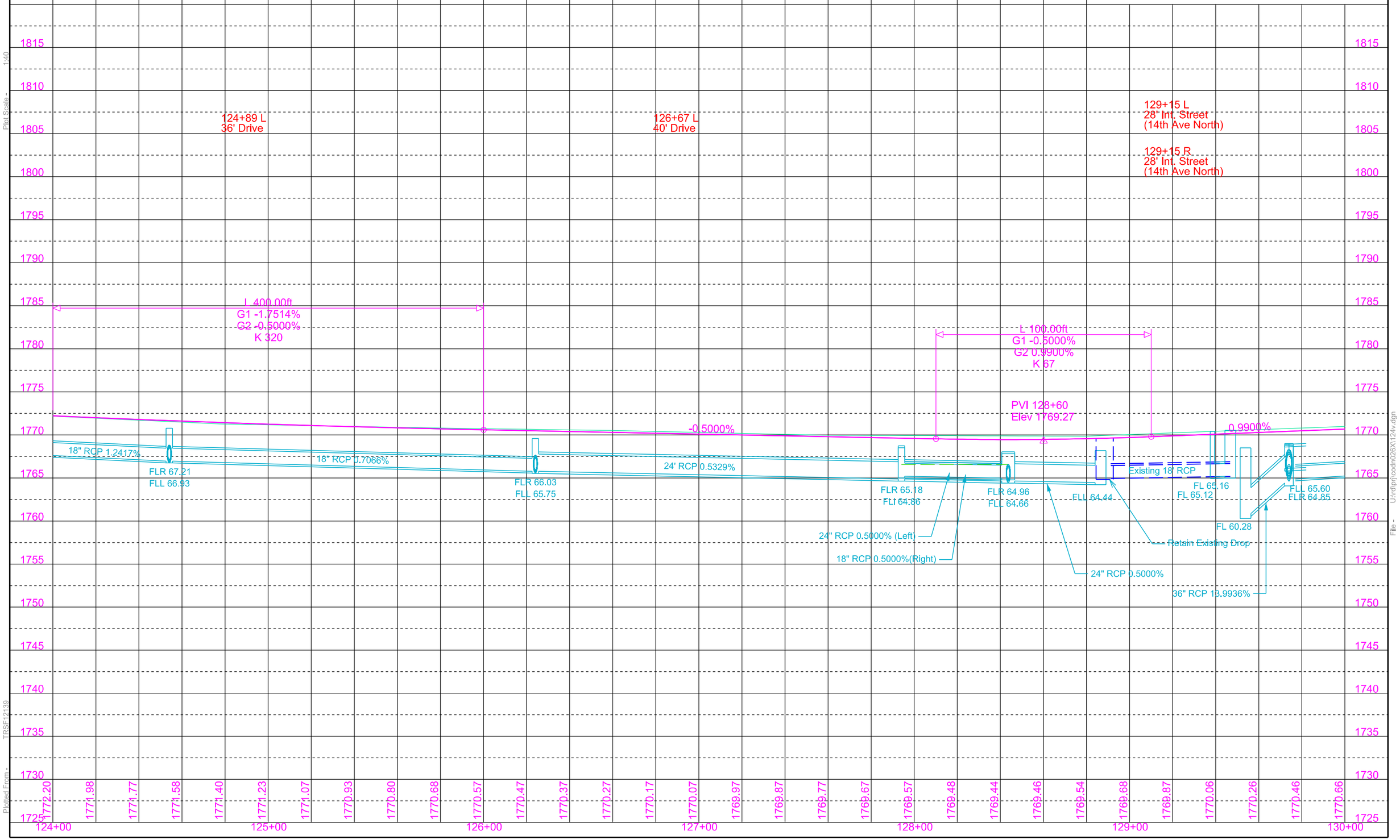

Plot Scale - 1:40

TPSF12139

Plotted From - U:\ralph\codn\026X1124v.dgn

File -

STATE OF SOUTH DAKOTA	PROJECT	SHEET	TOTAL SHEETS
	P 0081(93)157	B41	B120

Plotting Date: 09/01/2015 Revised 5-12-15 JWF

Retain All Storm Sewer Pipe and Drop Inlets Unless Otherwise Noted

Install Type B Drop Inlet with 6" Concrete Collar and Type B Frame and Grate at the Following Locations:
131+80.00-29.17'L (2'x3')
131+80.00-29.17'R (2'x3')
133+80.00-29.17'L (2'x3')
133+80.00-29.17'R (2'x3')

131+80.00-29.17'L to 29.17'R
Install 18"-58' RCP
(Between Drop Inlets)

133+80.00-29.17'L to 29.17'R
Install 18"-58' RCP
(Between Drop Inlets)

131+80.00-29.17'L to 133+80.00-29.17'L
Install 18"-198' RCP
(Between Drop Inlets)

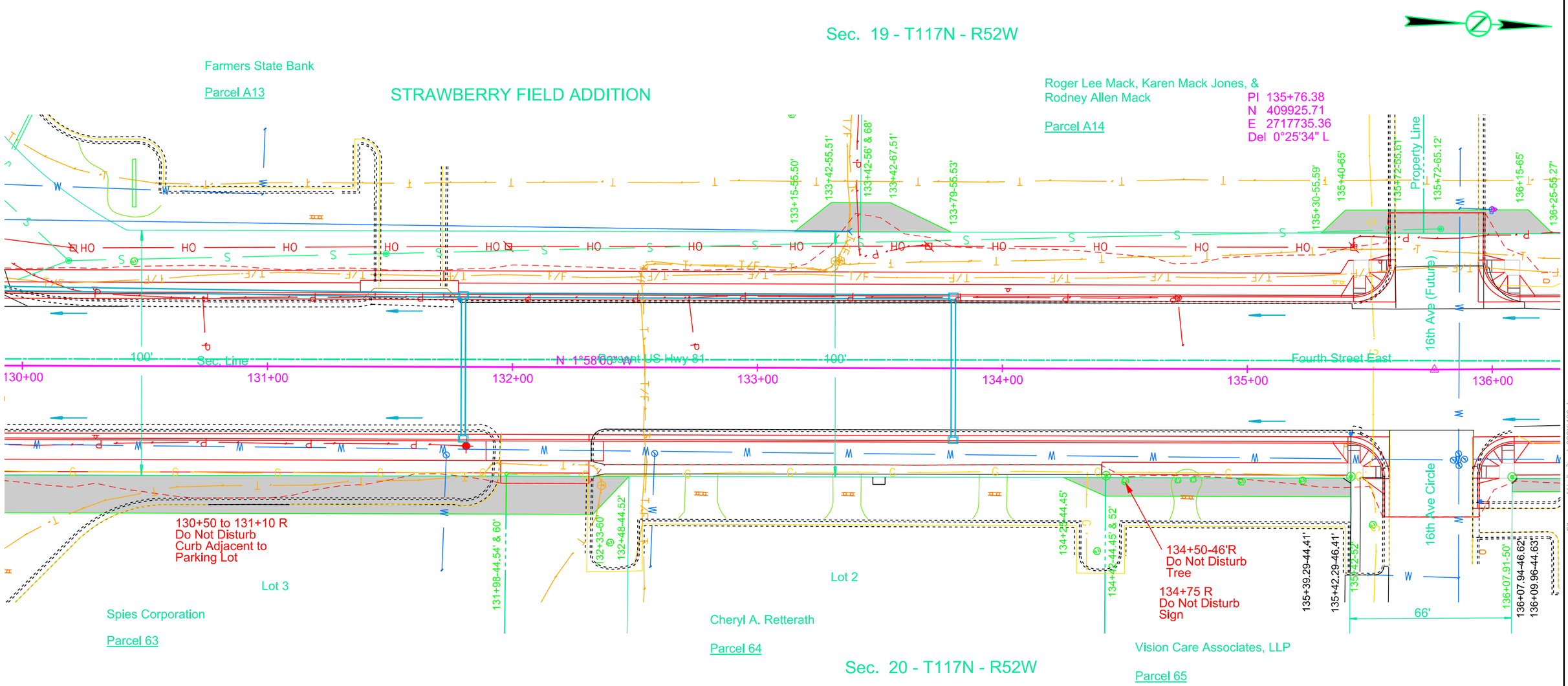

Parcel A14
135+30 to 135+72 L
Temporary Easement for
Cut & fill containing
(348 sq ft), more or less

Parcel A15
135+72 to 136+25 L
Temporary Easement for
Cut & fill containing
(458 sq ft), more or less

Parcel 64
131+98 to 132+48 R
Temporary Easement for
Cut & fill containing
(661 sq ft), more or less

Parcel A13
133+15 to 133+42 L
Temporary Easement for
Cut & fill containing
(233 sq ft), more or less

Parcel A14
133+42 to 133+79 L
Temporary Easement for
Cut & fill containing
(295 sq ft), more or less

Parcel 64
134+25 to 134+42 R
Temporary Easement for
Cut & fill containing
(65 sq ft), more or less

Parcel 65
134+42 to 135+42.29 R
Temporary Easement for
Cut & fill containing
(753 sq ft), more or less

Plot Scale - 1:40
Plotted From - TRSF12139
File - U:\rdp\prj\codh\26X1130.dgn

STATE OF SOUTH DAKOTA	PROJECT	SHEET	TOTAL SHEETS
	P 0081(93)157	B42	B120

Plotting Date: 09/01/2015

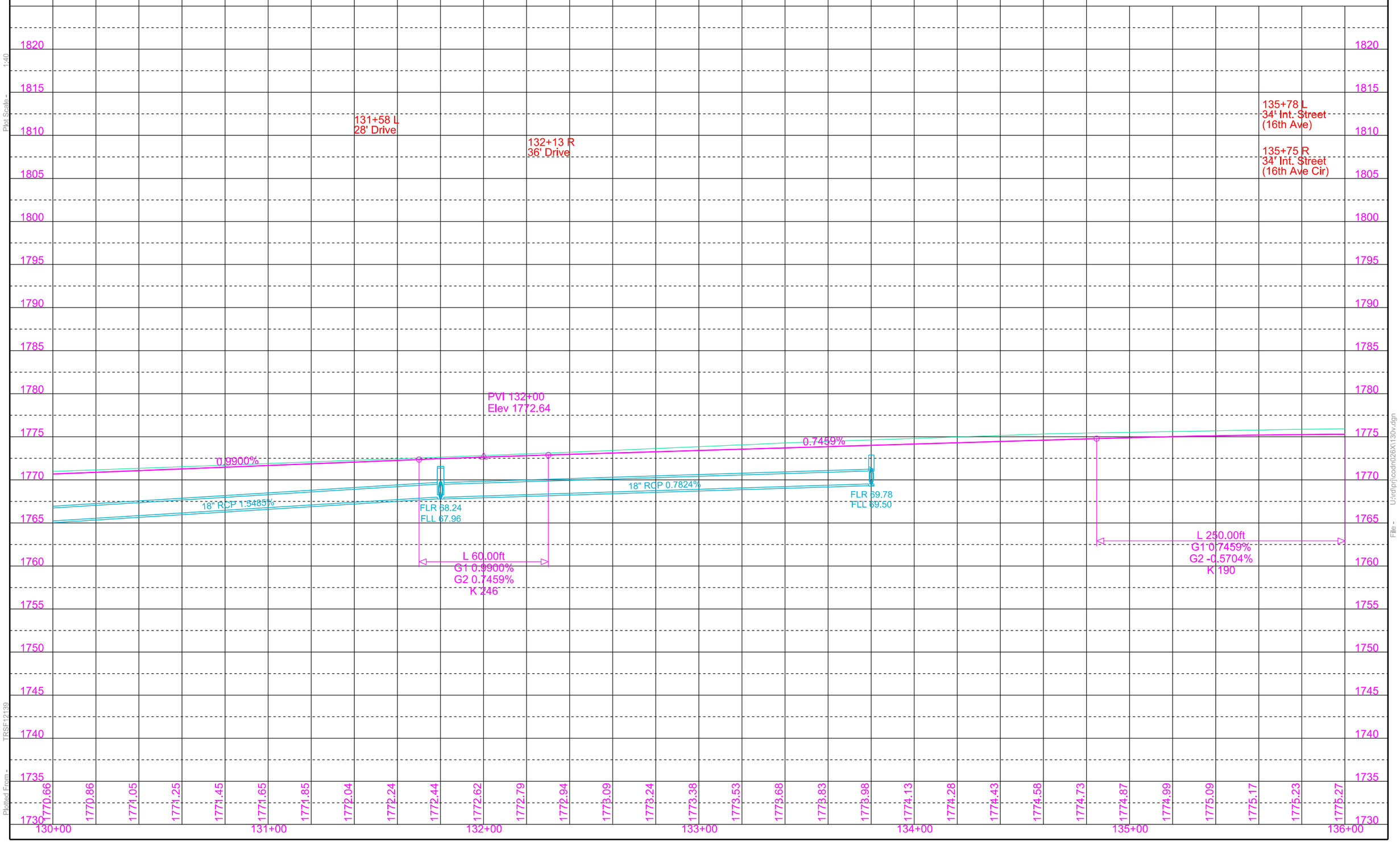

Plot Scale - 1:40

Plotted From - TRSF12139

File - U:\rdprj\codh\026X\130v.dgn

STATE OF SOUTH DAKOTA	PROJECT	SHEET	TOTAL SHEETS
	P 0081(93)157	B43	B120

Plotting Date: 09/01/2015 Rev. 2-5-2015 JWF

Retain All Storm Sewer Pipe
and Drop Inlets
Unless Otherwise Noted

Install Type B Drop Inlet
with 6" Concrete Collar
and Type B Frame and Grate
at the Following Locations:
139+82.00-29.17'L (2'x3')
139+82.00-29.17'R (2'x3')
141+36.00-29.17'L (2'x3')
141+36.00-29.17'R (2'x3')

Install 4' x 6' Type S Drop Inlet
with Precast Concrete
Type S Drop Inlet Lid
at the Following Locations:
141+76.31-31.63'L
141+76.31-31.63'R

139+82.00-29.17'L to 29.17'R
Install 18"-58' RCP
(Between Drop Inlets)

139+82.00-29.17'R to 141+36.00-29.17'R
Install 18"-152' RCP
(Between Drop Inlets)

141+36.00-29.17'R to 141+76.31-31.63'R
Install 18"-36' RCP
(Between Drop Inlets)

141+36.00-29.17'L to 141+76.31-31.63'L
Install 18"-36' RCP
(Between Drop Inlets)

141+62-50'R to 141+77.85-43.50'R
Install 18"-14' RCP
& 1 Flared Section
(Between Inlet and Drop Inlet)

141+76.31-31.63'L to 142+16.00-29.17'L
Install 18"-36' RCP
(Between Drop Inlets)

141+76.31-31.63'R to 142+16.00-29.17'R
Install 30"-36' RCP Arch
(Between Drop Inlets)

141+76.31-31.63'L to 31.63'R
Install 18"-60' RCP
(Between Drop Inlets)

141+76.31-31.63'R to 141+77.85-43.50'R
Install 42"-8' RCP Arch
(Between Drop Inlets)

141+77.85-43.50'R' to 141+77.85-56.52'R
Install 42"-12' RCP
(Between Drop Inlet and Existing 42" RCP)

141+77.85-43.50'R
Install 4'x5' Type B Drop Inlet
and Type C Manhole Frame and Lid

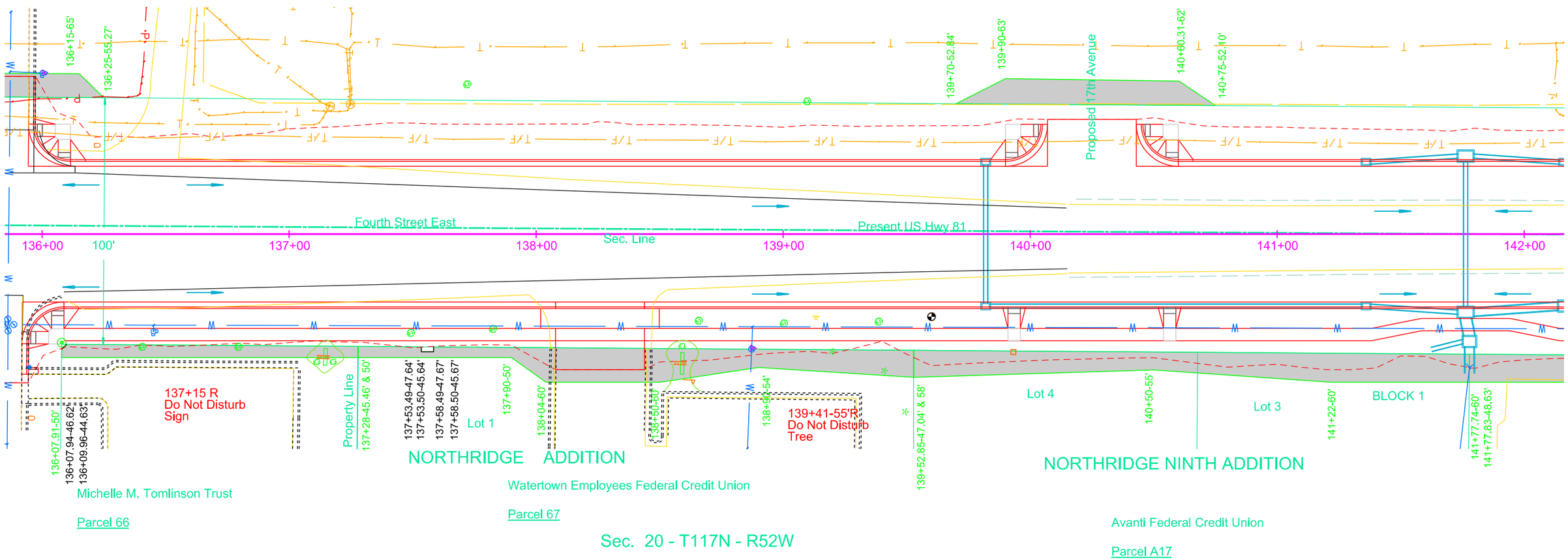

Parcel 66
136+07.91 to 137+28 R
Temporary Easement for
Cut & fill containing
(596 sq ft), more or less

Parcel 67
137+28 to 139+52.85 R
Temporary Easement for
Cut & fill containing
(2020 sq ft), more or less

Parcel A15
139+70 to 140+75 L
Temporary Easement for
Cut & fill containing
(881 sq ft), more or less

Parcel A17
139+52.85 to 141+77.83 R
Temporary Easement for
Cut & fill containing
(2426 sq ft), more or less

Parcel 68
141+77.74 to 142+53.16 R
Temporary Easement for
Cut & fill containing
(1089 sq ft), more or less

Plot Scale - 1:40
Plotted From - TRSF12139
File - U:\ralph\codn026X136.dgn

STATE OF SOUTH DAKOTA	PROJECT	SHEET	TOTAL SHEETS
	P 0081(93)157	B44	B120

Plotting Date: 09/01/2015 Revised 2-5-15 JWF

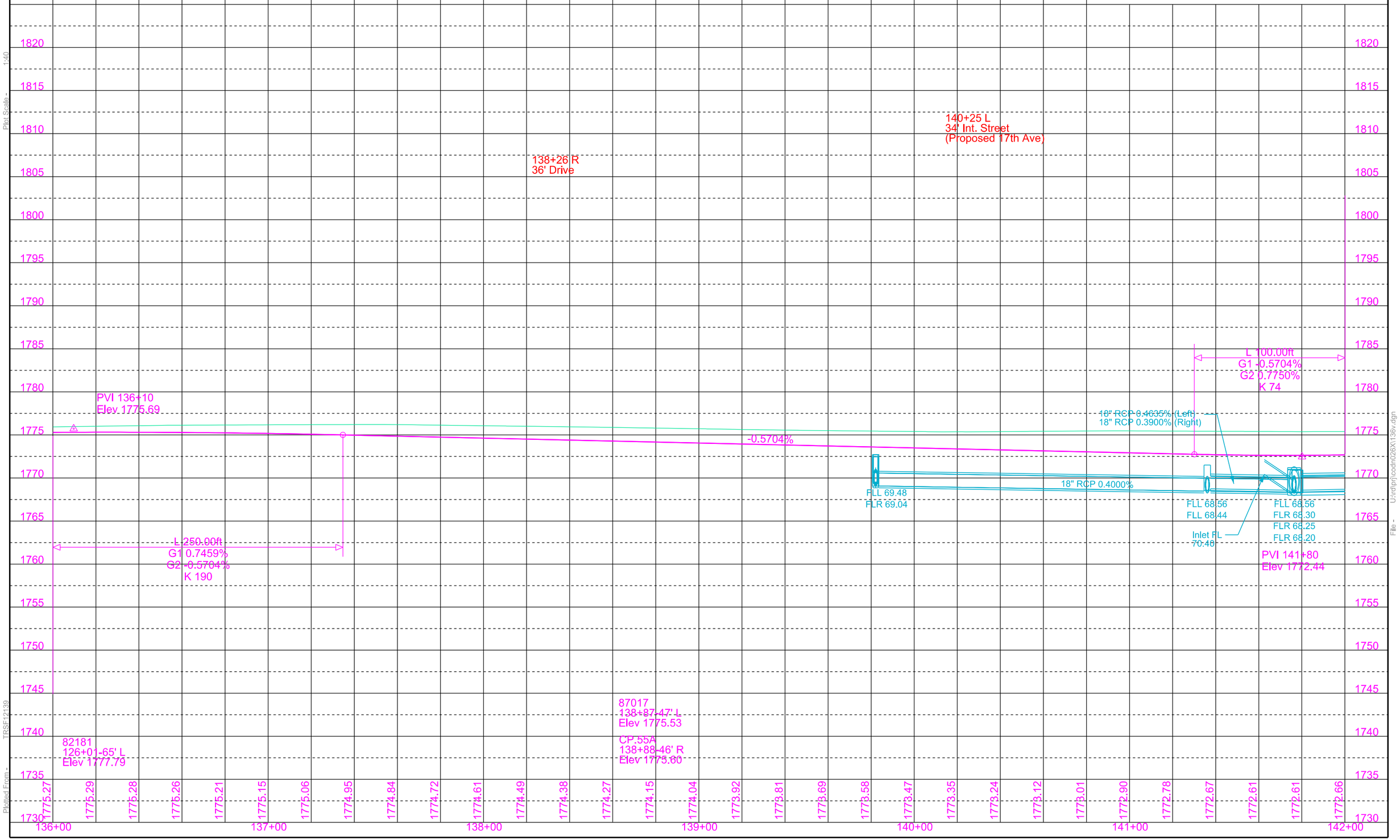

STATE OF SOUTH DAKOTA	PROJECT	SHEET	TOTAL SHEETS
	P 0081(93)157	B45	B120

Plotting Date: 09/01/2015 Rev. 2-5-2015 JWF

Retain All Storm Sewer Pipe
and Drop Inlets
Unless Otherwise Noted

142+67-48'R to 143+27-44'R
Take Out 18"-60' CMP
and 2 End Sections
(Incidental Work, Grading)

144+36-32'R to 145+16-33'R
Take Out 18"-82' CMP
and 2 End Sections
(Incidental Work, Grading)

142+64
Take Out 30"-78' RCP
and 2 End Sections
(Incidental Work, Grading)

142+16.00-29.17'R to 142+63.24-29.17'R
Install 30"-44' RCP Arch
(Between Drop Inlets)

142+63.24-29.17'R to 143+50.00-29.17'R
Install 18"-86' RCP
(Between Drop Inlet and RC Tee)

143+50.00-29.17'R to 144+31.74-29.17'R
Install 18"-80' RCP
(Between RC Tee and Drop Inlet)

145+17.36-29.17'L to 145+40.00-35.50'L
Install 18"-22' RCP
& 1 Safety End
(Between Inlet & Drop Inlet)

Install Type B Drop Inlet
with 6" Concrete Collar
and Type B Frame and Grate
at the Following Locations:
142+16.00-29.17'R (4'x4')
142+16.00-29.17'L (2'x3')
142+63.24-29.17'L (3'x4')
142+63.24-29.17'R (4'x4')
144+31.74-29.17'R (2'x3')
145+17.36-29.17'L (3x4')
145+17.36-29.17'R (3x4')

142+63.24-47.11'L to 29.17'L
Install 30"-18' RCP Arch
& 1 Flared End
(Between Inlet and Drop Inlet)

142+63.24-29.17'L to 29.17'R
Install 30"-56' RCP Arch
(Between Drop Inlets)

142+63.24-29.17'R to 51.30'R
Install 18"-20' RCP
& 1 Flared End
(Between Inlet and Drop Inlet)

143+50.00-29.17'R to 52.50'R
Install 18"-24' RCP
& 1-18"-18" RC Tee
& 1 Flared End

144+31.74-29.17R to 145+17.36-29.17'R
Install 18"-82' RCP
(Between Drop Inlets)

145+17.36-29.17'L to 29.17'R
Install 18"-56' RCP
(Between Drop Inlets)

145+17.36-29.17'R to 145+40.00-35.50'R
Install 18"-22' RCP
& 1 Safety End
(Between Inlet and Drop Inlet)

Linda Kay Wegleitner, et.al.

Parcel A16

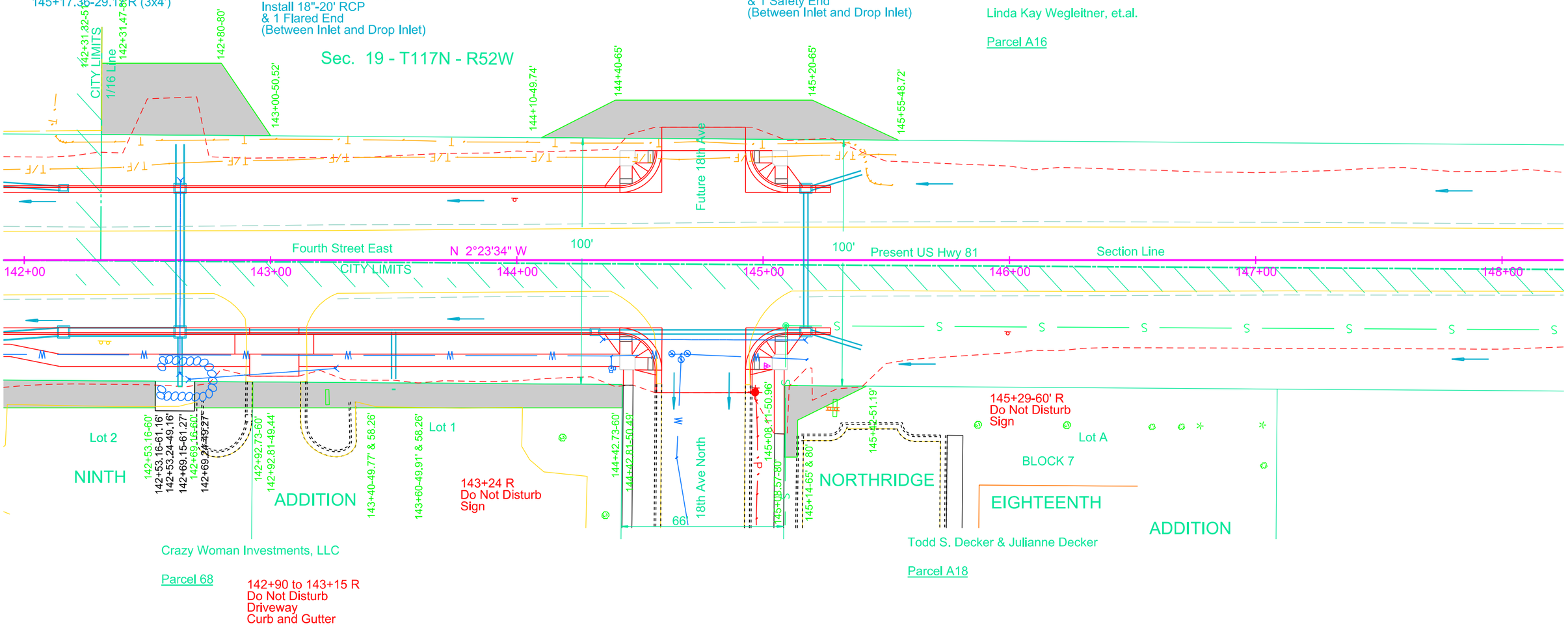

Crazy Woman Investments, LLC

Parcel 68

142+90 to 143+15 R
Do Not Disturb
Driveway
Curb and Gutter

Todd S. Decker & Julianne Decker

Parcel A18

Parcel 68
142+69.16 to 142+92.73 R
Temporary Easement for
Cut & fill containing
(251 sq ft), more or less

Parcel 68
142+92.73 to 144+42.81 R
Temporary Easement for
Cut & fill containing
(1506 sq ft), more or less

Parcel A16
142+31.32 to 143+00 L
Temporary Easement for
Cut & fill containing
(1711 sq ft), more or less

Parcel A16
144+10 to 145+55 L
Temporary Easement for
Cut & fill containing
(1773 sq ft), more or less

Parcel A18
145+08.11 to 145+42 R
Temporary Easement for
Cut & fill containing
(350 sq ft), more or less

Parcel A19
Omitted

Plot Scale - 1:40
Plotted From - TRSF12139
File - U:\traf\prj\cadh\026X\142.dgn

STATE OF SOUTH DAKOTA	PROJECT	SHEET	TOTAL SHEETS
	P 0081(93)157	B46	B120

Plotting Date: 09/01/2015 Revised 2-5-15 JWF

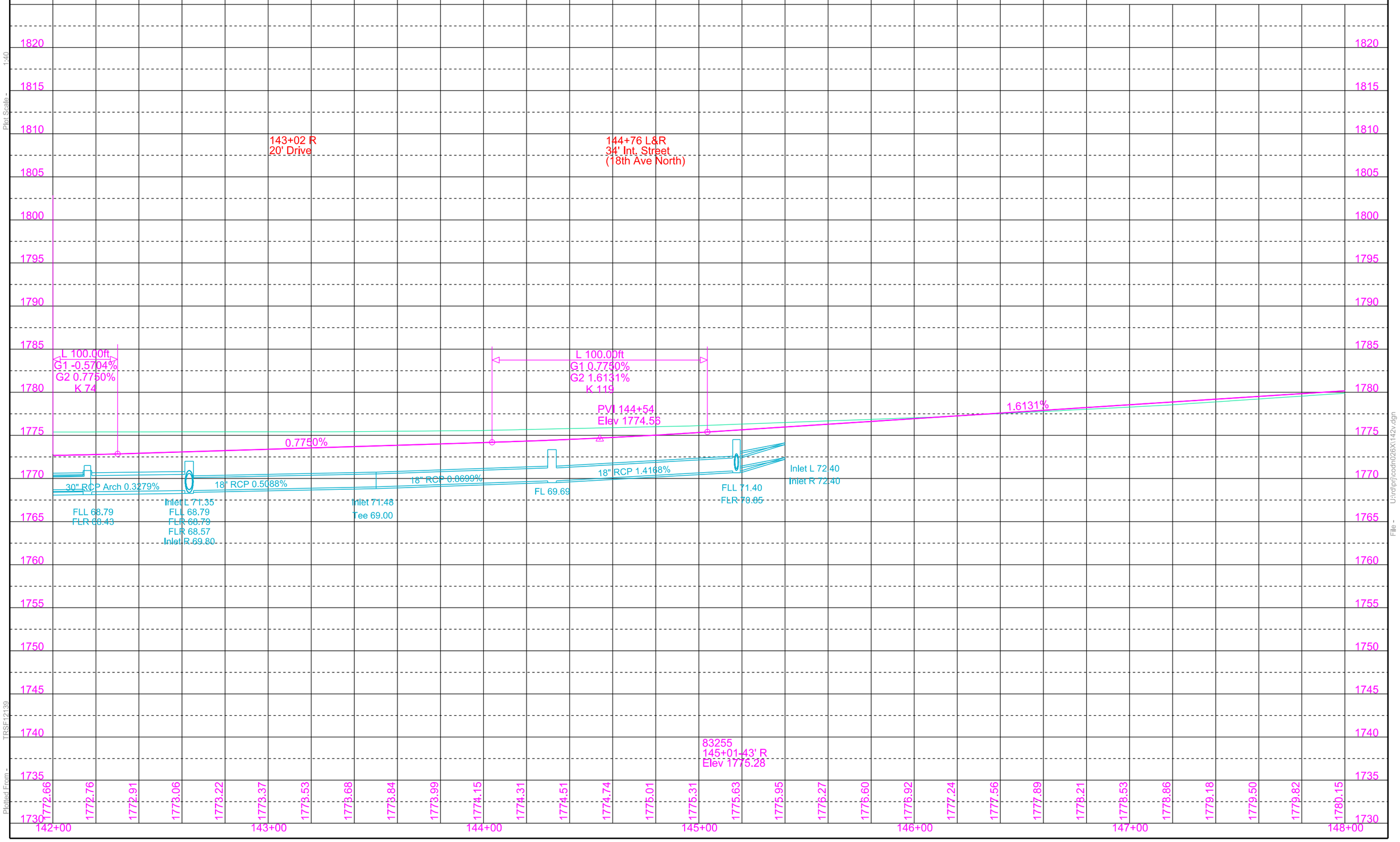

Plot Scale - 1:40

TRSF12139

Plotted From -

File - U:\radprj\codh\026X\142v.dgn

STATE OF SOUTH DAKOTA	PROJECT	SHEET	TOTAL SHEETS
	P 0081(93)157	B47	B120

Plotting Date: 09/01/2015 Rev. 2-5-2015 JWF

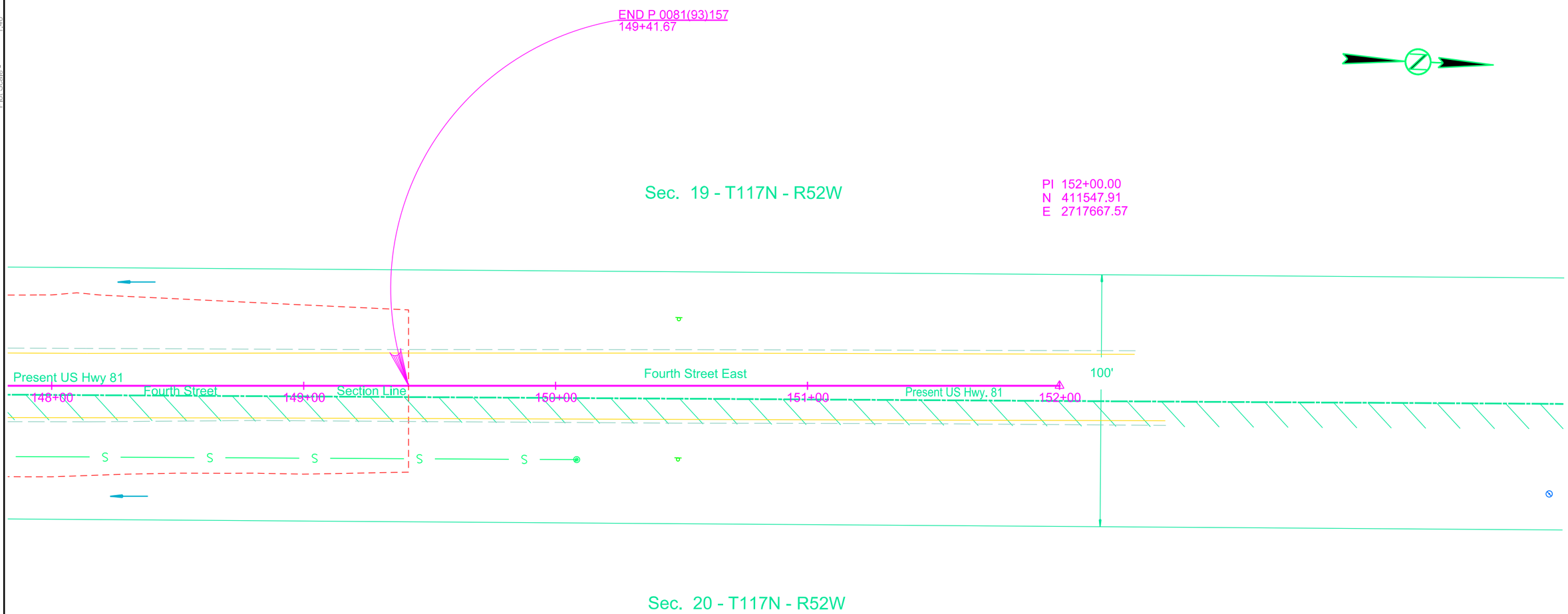

Plot Scale - 1:40

Plotted From - TRSF12139

File - U:\ralph\coah026X\148.dgn

STATE OF SOUTH DAKOTA	PROJECT	SHEET	TOTAL SHEETS
	P 0081(93)157	B48	B120

Plotting Date: 09/01/2015 Revised 2-5-15

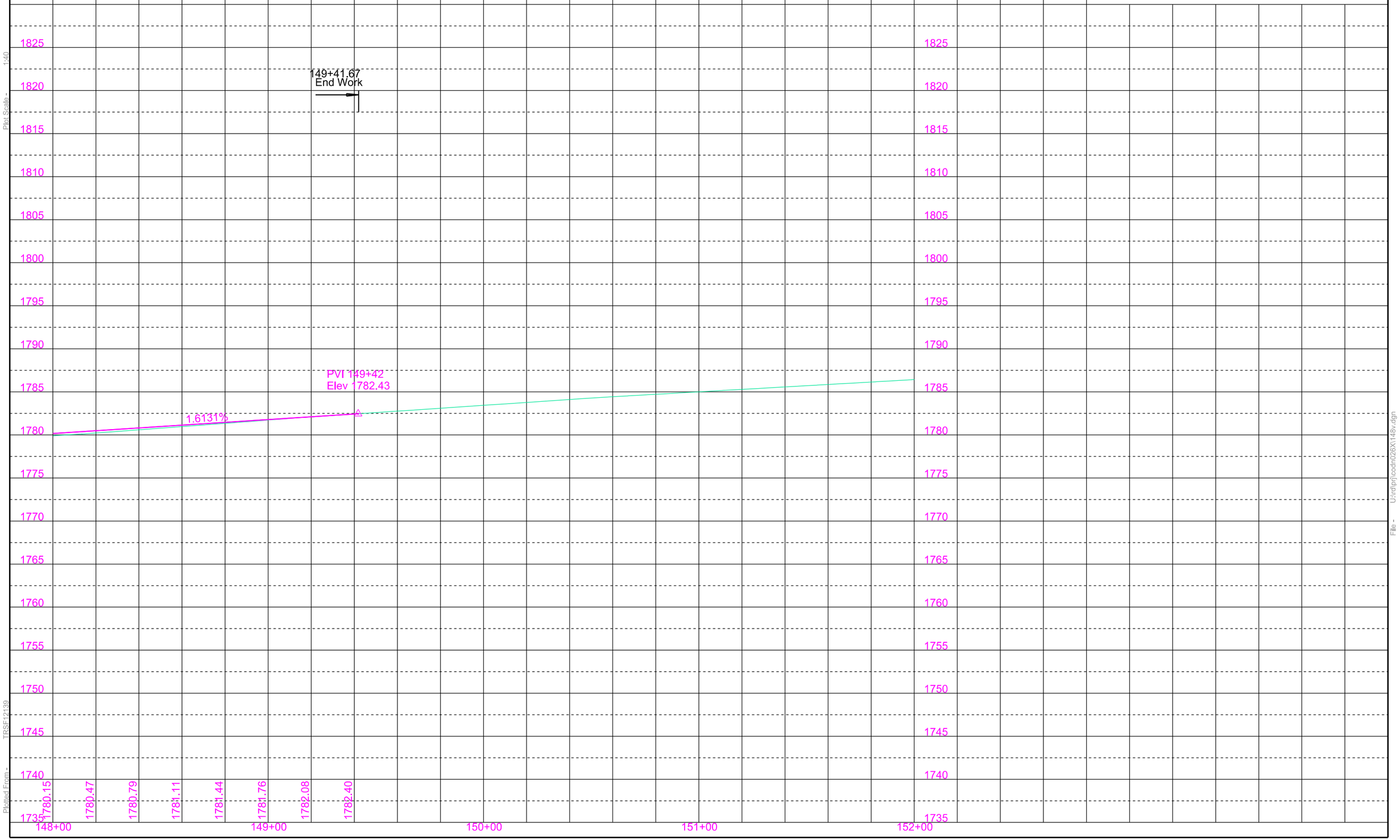

Plot Scale - 1:40

Plotted From - TPSF12139

File - U:\rdp\rj\cadd\26X1148v.dgn

PAVEMENT REMOVAL LAYOUT

STATE OF SOUTH DAKOTA	PROJECT	SHEET	TOTAL SHEETS
	P 0081(93)157	B49	B120

Plotting Date: 09/01/2015 Rev ROW 07-22-14 JWF

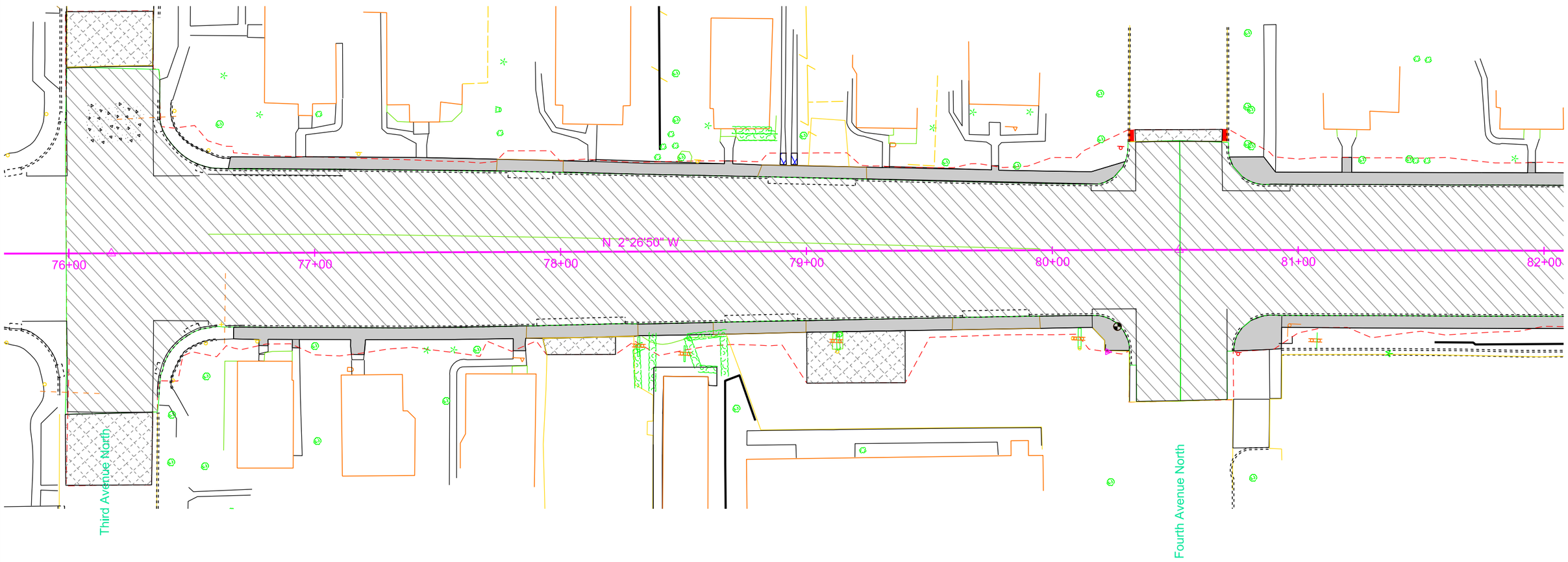

Remove Concrete Pavement

Remove Concrete Driveway Pavement

Remove Asphalt Concrete Pavement

Remove Concrete Sidewalk

Remove Concrete Curb and Gutter

Plot Scale - 1:40
Plotted From - TRSF12139
File - U:\rdlp\rlcadn026X\076pr.dgn

PAVEMENT REMOVAL LAYOUT

STATE OF SOUTH DAKOTA	PROJECT	SHEET	TOTAL SHEETS
	P 0081(93)157	B50	B120

Plotting Date: 09/01/2015 Rev ROW 07-22-14 JWF

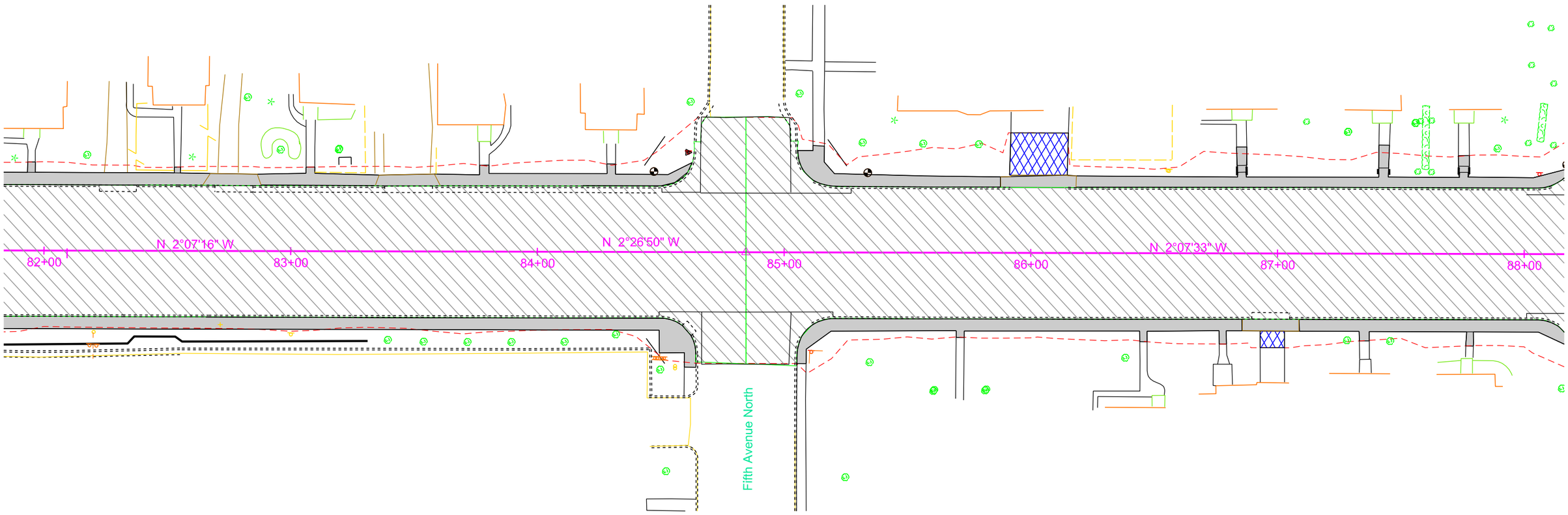

Plot Scale - 1:40

Plotted From - TRSF12139

File - U:\rdprj\codru026\x082pr.dgn

PAVEMENT REMOVAL LAYOUT

STATE OF SOUTH DAKOTA	PROJECT	SHEET	TOTAL SHEETS
	P 0081(93)157	B51	B120

Plotting Date: 09/01/2015 Rev ROW 07-22-14 JWF

Note:
Sidewalk adjacent to Type C Retaining Wall is not included in "Remove Concrete Sidewalk" quantity. It shall be removed and paid for as part of the "Remove Concrete Retaining Wall" bid item.

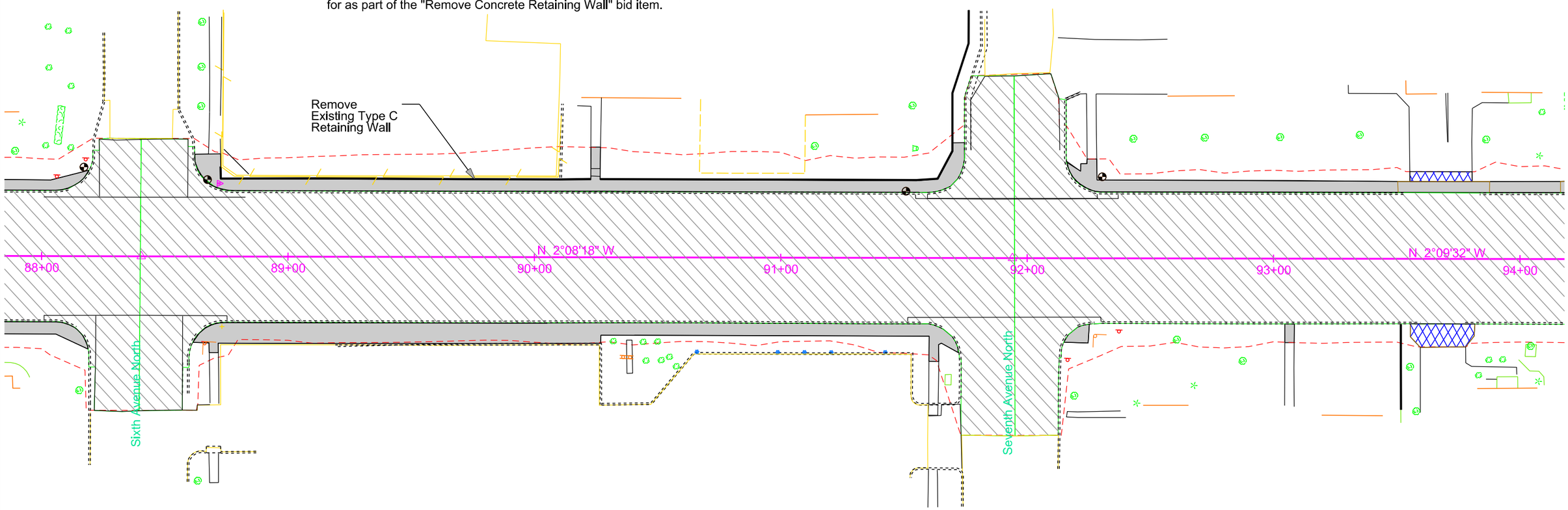

Plot Scale - 1:40

Plotted From - TRSF12139

File - U:\raj\prj\cdah\026X\088pr.dgn

PAVEMENT REMOVAL LAYOUT

STATE OF SOUTH DAKOTA	PROJECT	SHEET	TOTAL SHEETS
	P 0081(93)157	B52	B120

Plotting Date: 09/01/2015 Rev ROW 07-22-14 JWF

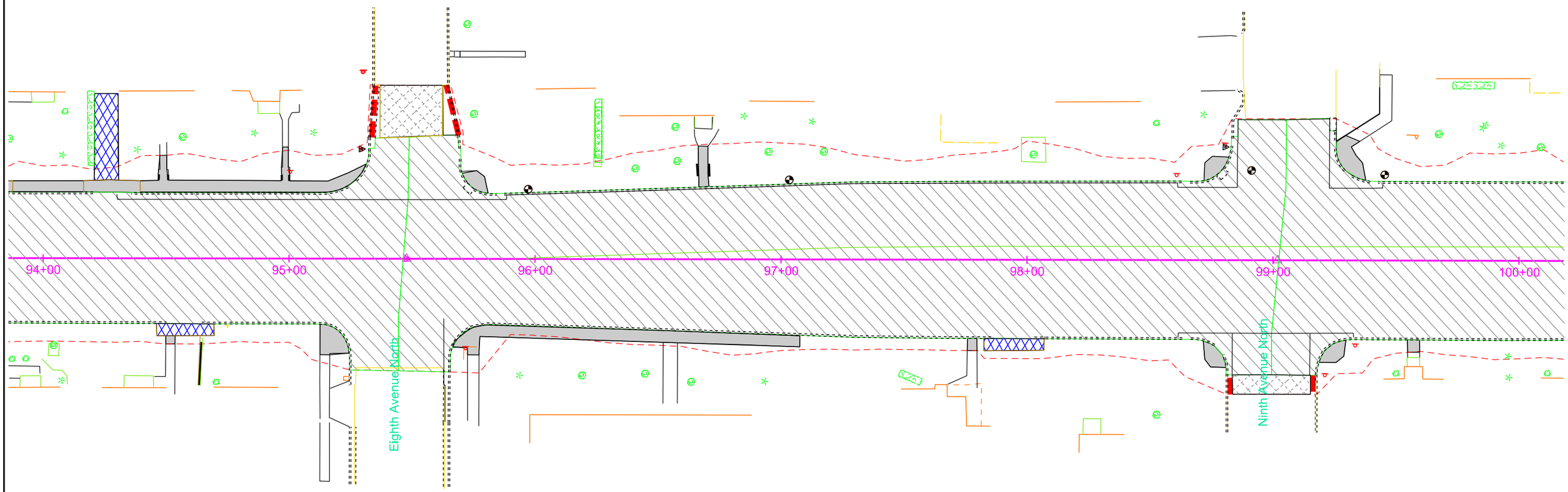

Plot Scale - 1:40
Plotted From - TRSF12139
File - U:\rdprj\cadd\026X\094pr.dgn

PAVEMENT REMOVAL LAYOUT

STATE OF SOUTH DAKOTA	PROJECT	SHEET	TOTAL SHEETS
	P 0081(93)157	B53	B120

Plotting Date: 09/01/2015 Rev ROW 07-22-14 JWF

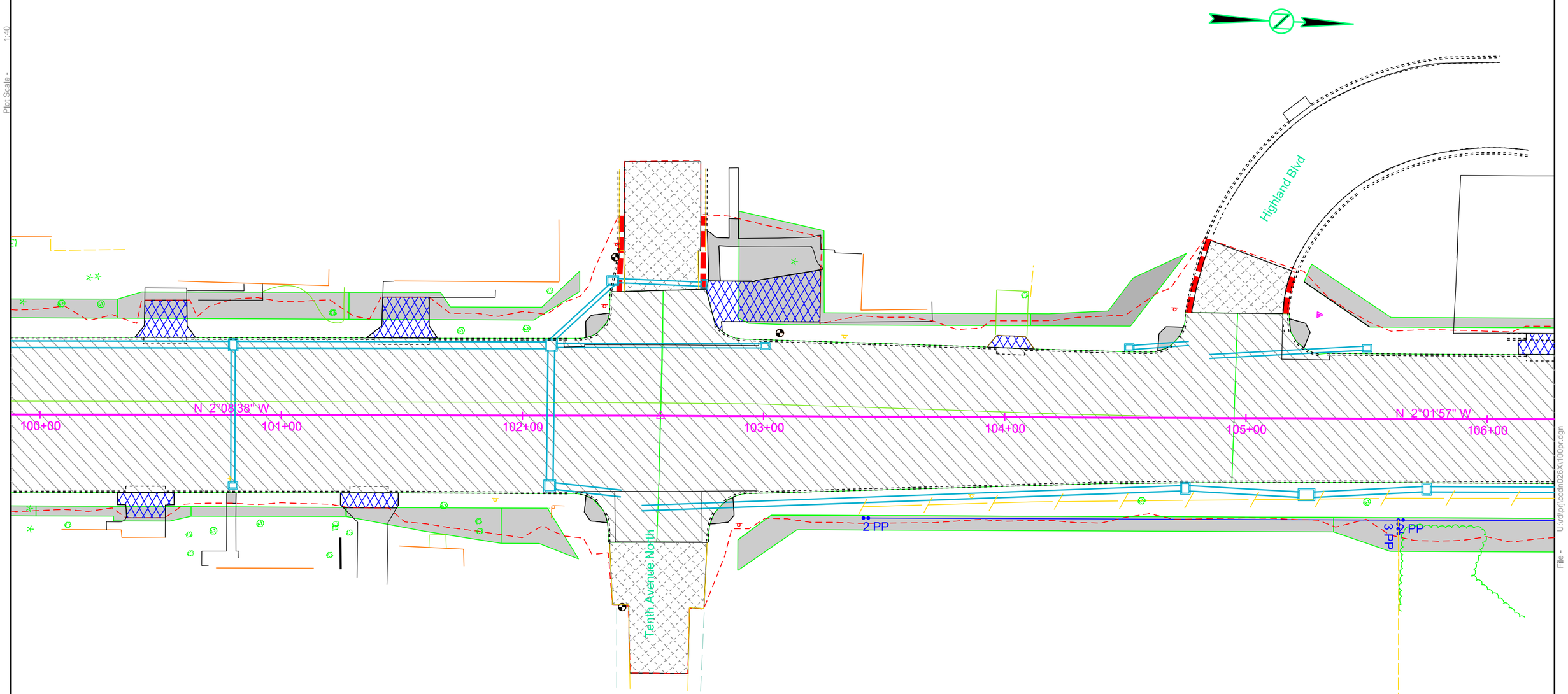

Plot Scale - 1:40

Plotted From - TRSF12139

File - U:\rdprj\cadn\026x110\pr.dgn

PAVEMENT REMOVAL LAYOUT

STATE OF SOUTH DAKOTA	PROJECT	SHEET	TOTAL SHEETS
	P 0081(93)157	B54	B120

Plotting Date: 09/01/2015 Rev ROW 07-22-14 JWF

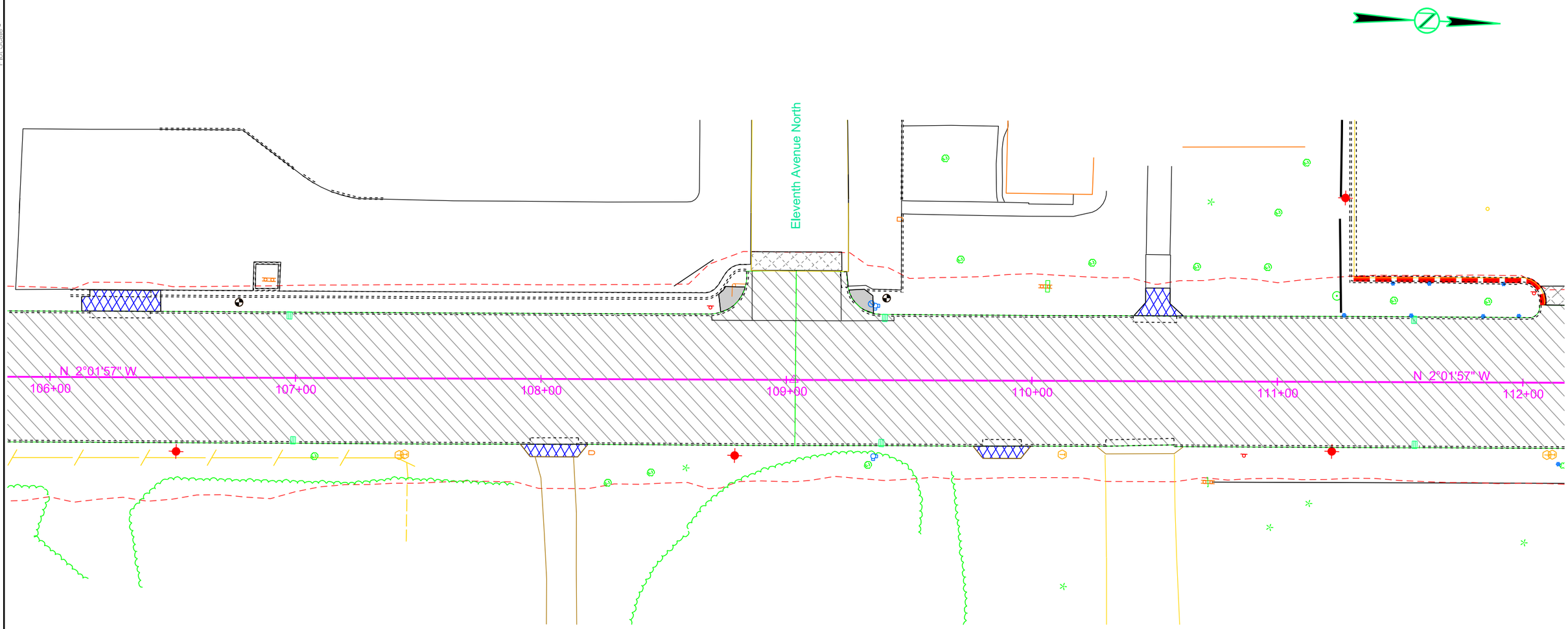

Plot Scale - 1:40

Plotted From - TRSF12139

File - U:\traprj\cadn\026X\106pr.dgn

PAVEMENT REMOVAL LAYOUT

STATE OF SOUTH DAKOTA	PROJECT	SHEET	TOTAL SHEETS
	P 0081(93)157	B55	B120

Plotting Date: 09/01/2015 Rev ROW 07-22-14 JWF

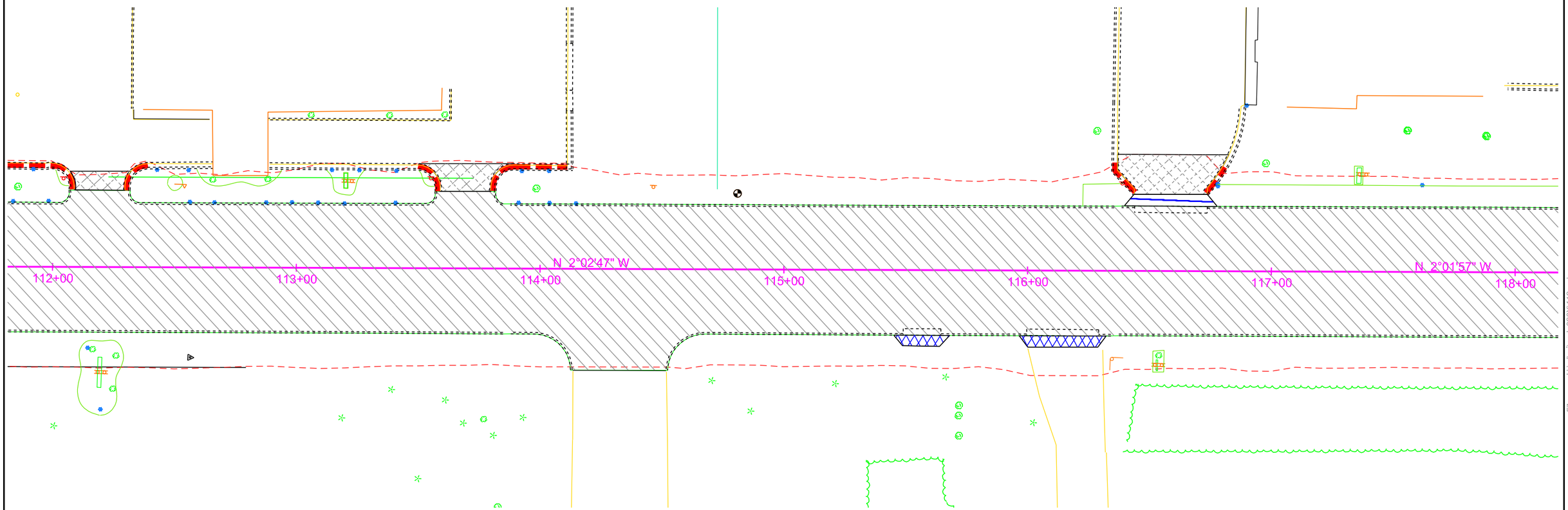

Plot Scale - 1:40

Plotted From - TRSF12139

File - U:\traprj\cadh\026X\112pr.dgn

PAVEMENT REMOVAL LAYOUT

STATE OF SOUTH DAKOTA	PROJECT	SHEET	TOTAL SHEETS
	P 0081(93)157	B56	B120

Plotting Date: 09/01/2015 Rev ROW 07-22-14 JWF

Note:
Sidewalk adjacent to Type C Retaining Wall not included in "Remove Concrete Sidewalk" quantity. It shall be removed and paid for as part of the "Remove Concrete Retaining Wall" bid item.

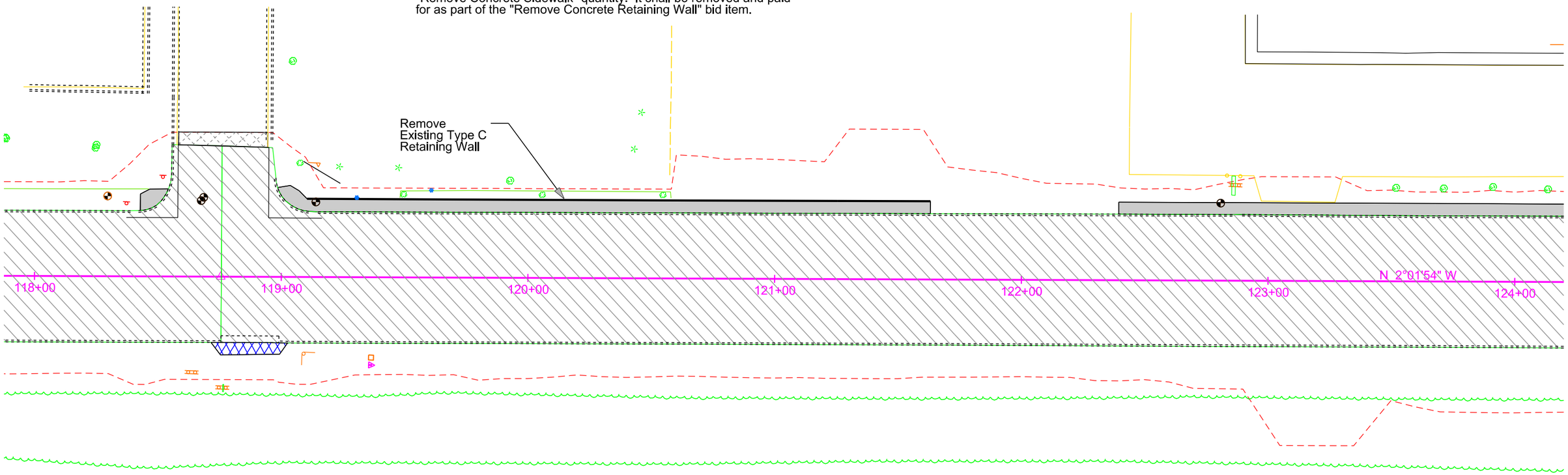

Plot Scale - 1:40

Plotted From - TRSF12139

File - U:\rdprj\codh\026X\118pr.dgn

PAVEMENT REMOVAL LAYOUT

STATE OF SOUTH DAKOTA	PROJECT	SHEET	TOTAL SHEETS
	P 0081(93)157	B57	B120

Plotting Date: 09/01/2015 Rev ROW 07-22-14 JWF

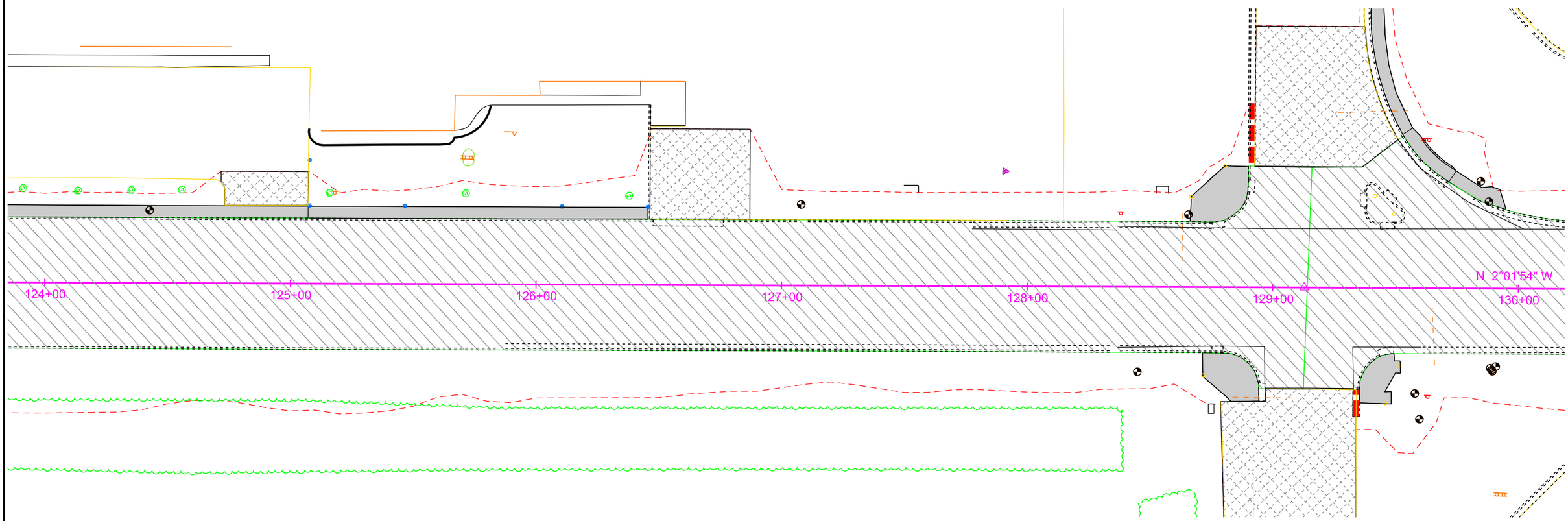

Plot Scale - 1:40

Plotted From - TRSF12139

File - U:\rdphj\cadh026X\124pr.dgn

PAVEMENT REMOVAL LAYOUT

STATE OF SOUTH DAKOTA	PROJECT	SHEET	TOTAL SHEETS
	P 0081(93)157	B58	B120

Plotting Date: 09/01/2015 Rev ROW 07-22-14 JWF

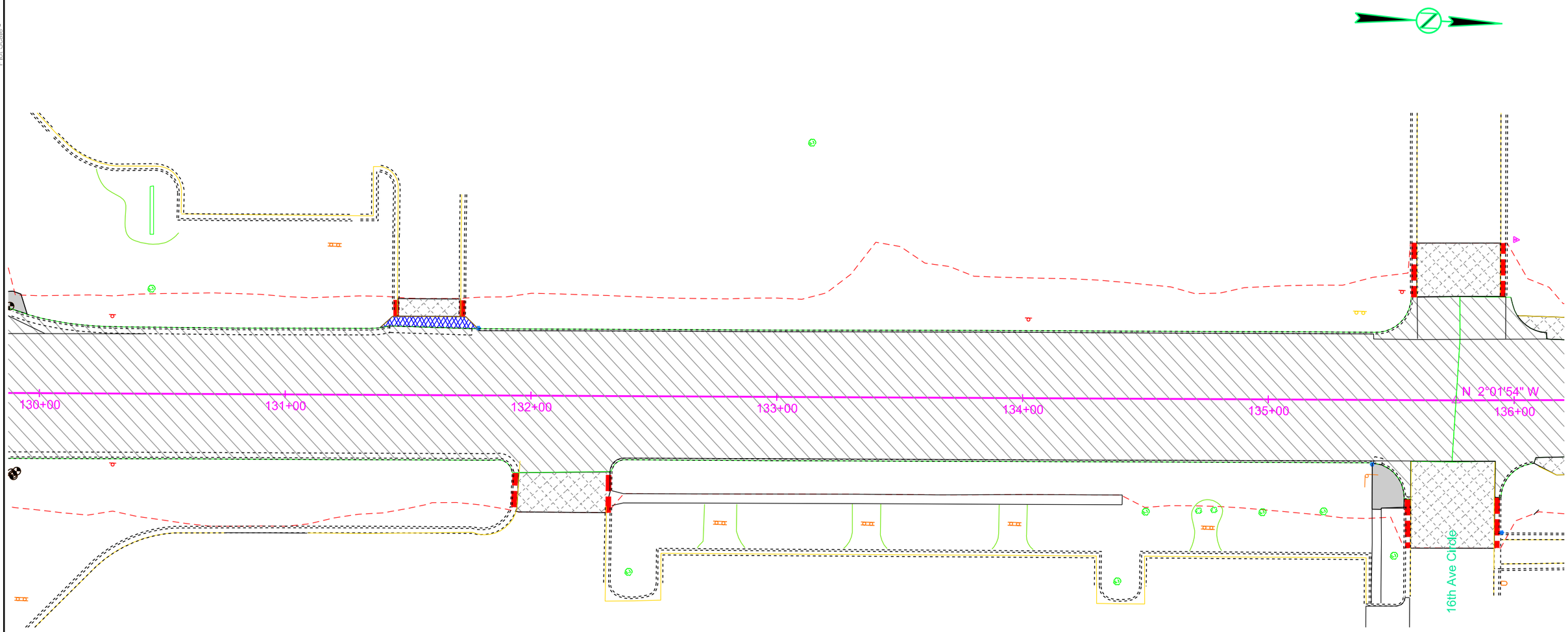

Plot Scale - 1:40

Plotted From - TRSF12139

File - U:\ra\prj\cdah\026X\130pr.dgn

PAVEMENT REMOVAL LAYOUT

STATE OF SOUTH DAKOTA	PROJECT	SHEET	TOTAL SHEETS
	P 0081(93)157	B59	B120

Plotting Date: 09/01/2015 Rev ROW 07-22-14 JWF

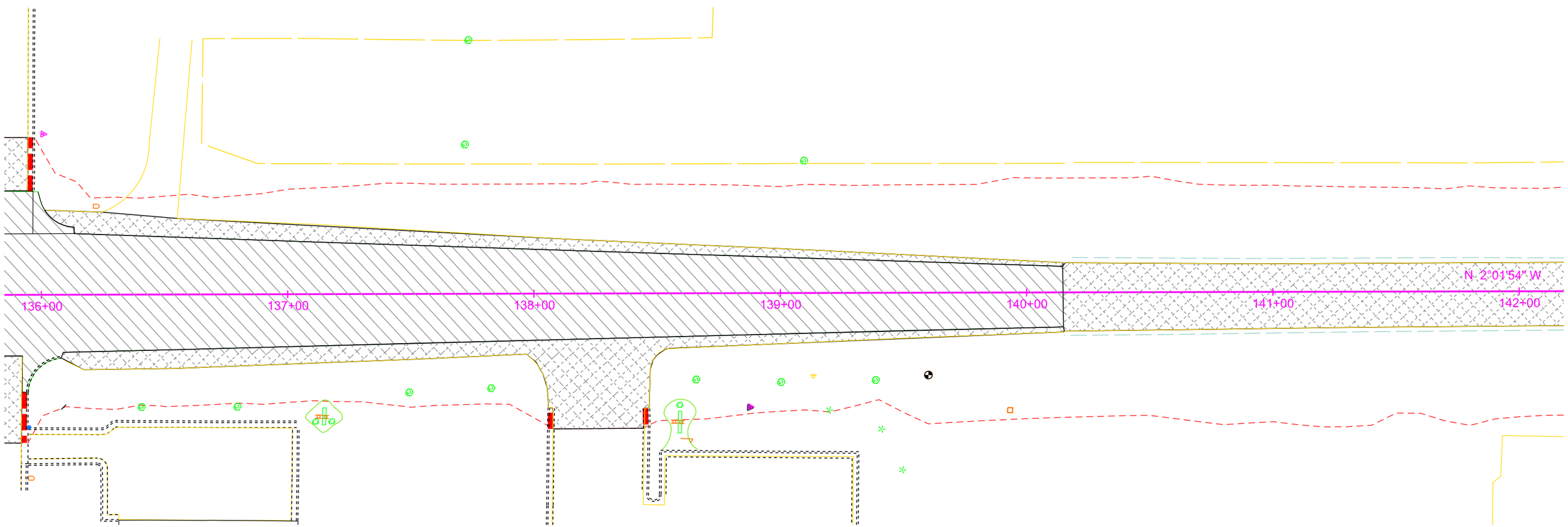

Plot Scale - 1:40

Plotted From - TRSF12139

File - U:\ra\pj\cadn\026X\136pr.dgn

PAVEMENT REMOVAL LAYOUT

STATE OF SOUTH DAKOTA	PROJECT	SHEET	TOTAL SHEETS
	P 0081(93)157	B60	B120

Plotting Date: 09/01/2015 Rev ROW 07-22-14 JWF

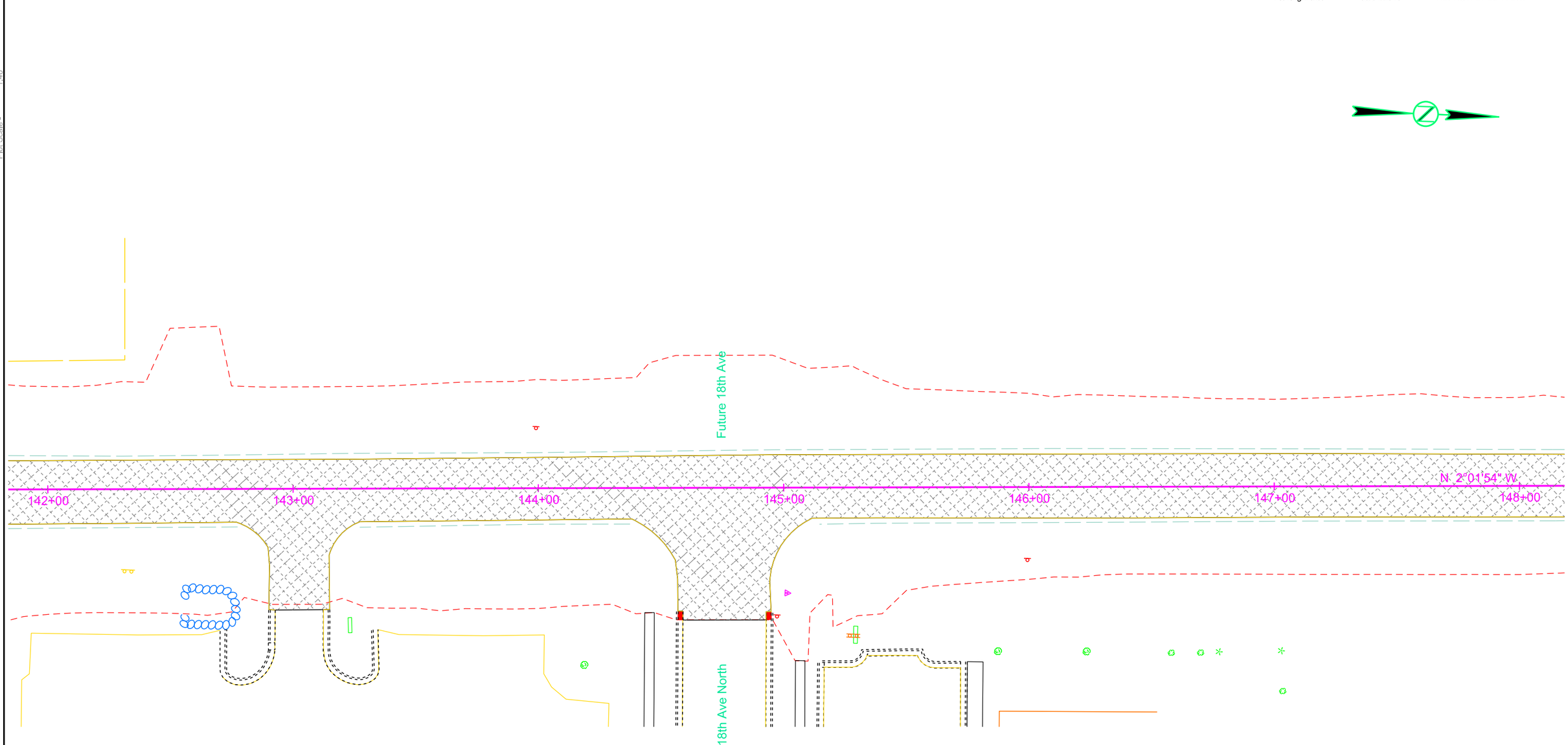

Plot Scale - 1:40

Plotted From - TRSF12139

File - U:\rdi\prj\coadn\026X\142pr.dgn

PAVEMENT REMOVAL LAYOUT

STATE OF SOUTH DAKOTA	PROJECT	SHEET	TOTAL SHEETS
	P 0081(93)157	B61	B120

Plotting Date: 09/01/2015 Rev ROW 07-22-14 JWF

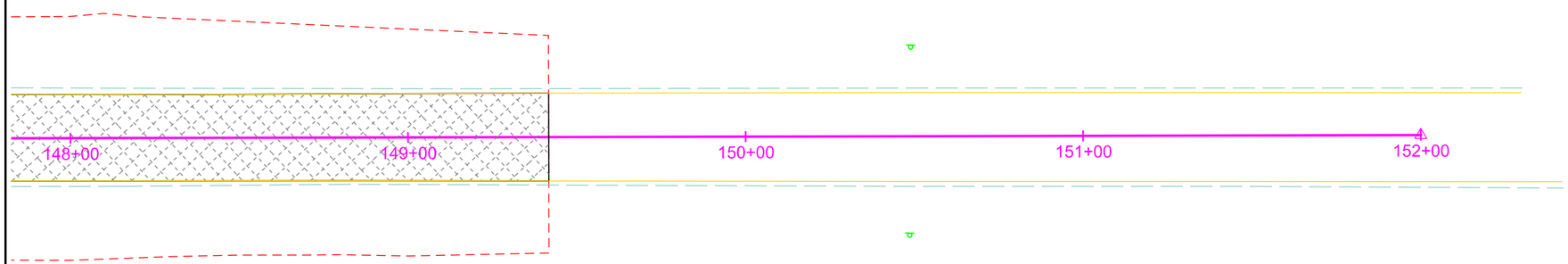

Plot Scale - 1:40

Plotted From - TRSF12139

File - U:\rdlprj\cadd\026X1148pr.dgn

CURB AND GUTTER LAYOUT

STATE OF SOUTH DAKOTA	PROJECT	SHEET	TOTAL SHEETS
	P 0081(93)157	B62	B120

Plotting Date: 09/01/2015 Revised 3-30-15 JWF

NOTE: All Curb & Gutter shown on this sheet is Type B68.5 and all gutter is Type P8.5 except as noted.
All curbside sidewalk is 6' wide and all boulevard sidewalk is 5' wide except as noted.

The existing curb ramps at 3rd Avenue shall be modified to include a 30"x48" clear space adjacent to the ped buttons.

1 76+66.89-31.50'L
Begin Str C &G
T C Elev (Match Existing)

1a 77+66.89-27.50'L
Begin Str C &G
T C Elev 55.03

2 77+78.00-27.50'L
End Str C & G
Begin Str P Gutter
T C Elev 55.46 (Theor)

3 77+96.00-27.50'L
End Type P Gutter
Begin Str C & G
T C Elev 56.15 (Theor)

4 78+84.51-27.50'L
End Str C & G
Begin Type P Gutter
T C Elev 59.39 (Theor)

5 79+16.51-25.37'L
End Type P Gutter
Begin Str C & G
T C Elev 60.46 (Theor)

6 79+67.02-22.00'L
End Str C & G
Begin Str C & G
T C Elev 61.99

7 80+16.56-22.00'L
End Str C & G
Beg 17' Rad Fillet
T C Elev 63.23 (Theor)

8 80+33.56-38.85'L
End 17' Rad Fillet
Begin Str C & G
T C Elev 63.66 (Theor)

9 80+33.65-48.90'L
End Str C & G
T C Elev (Match Existing)

10 80+68.93-49.07'L
Begin Str C & G
T C Elev (Match Existing)

11 80+68.95-38.95'L
End Str C & G
Begin 17' Rad Fillet
T C Elev 64.00 (Theor)

12 80+85.95-22.00'L
End 17' Rad Fillet
Begin Str C & G
T C Elev 64.66

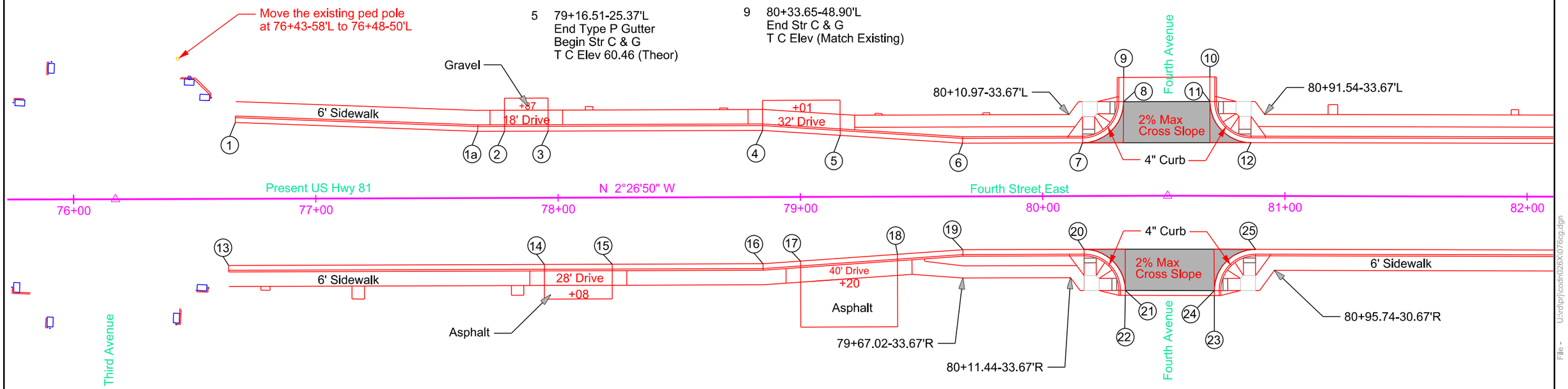

13 76+63.95-27.50'R
Begin Str C & G
T C Elev (Match Existing)

14 77+94.24-27.50'R
End Str C & G
Begin Type P Gutter
T C Elev 56.31 (Theor)

15 78+22.24-27.50'R
End Type P Gutter
Begin Str C & G
T C Elev 57.39 (Theor)

16 78+84.52-27.50'R
End Str C & G
Begin Type P Gutter
T C Elev 59.61 (Theor)

17 79+00.00-26.47'R
End Str C & G
Begin Type P Gutter
T C Elev 60.10 (Theor)

18 79+40.00-23.80'R
End Type P Gutter
Begin Str C & G
T C Elev 61.27 (Theor)

19 79+67.02-22.00'R
End Str C & G
Begin Str C & G
T C Elev 61.99

20 80+17.02-22.00'R
End Str C & G
Beg 17' Rad Fillet
T C Elev 63.24 (Theor)

21 80+34.02-39.02'R
End 17' Rad Fillet
Begin Str C & G
T C Elev 64.03 (Theor)

22 80+34.02-41.02'R
End Str C & G
T C Elev (Match Existing)

23 80+70.97-41.13'R
Begin Str C & G
T C Elev (Match Existing)

24 80+70.95-39.13'R
End Str C & G
Begin 17' Rad Fillet
T C Elev 64.72 (Theor)

25 80+87.95-22.00'R
End 17' Rad Fillet
Begin Str C & G
T C Elev 64.70 (Theor)

Plot Scale - 1:40
Plotted From - TRSF12139
File - U:\drafn\codh0\26X\076cg.dgn

CURB AND GUTTER LAYOUT

STATE OF SOUTH DAKOTA	PROJECT	SHEET	TOTAL SHEETS
	P 0081(93)157	B63	B120

Plotting Date: 09/01/2015

NOTE: All Curb & Gutter shown on this sheet is Type B68.5 and all gutter is Type P8.5 except as noted.
All curbside sidewalk is 6' wide and all boulevard sidewalk is 5' wide except as noted.

1 82+19.53-22.00'L
End Str C & G
Begin Type P Gutter
T C Elev 66.38 (Theor)

2 82+35.33-22.00'L
End Type P Gutter
Begin Str C & G
T C Elev 66.49 (Theor)

3 82+68.93-22.00'L
End Str C & G
Begin Type P Gutter
T C Elev 66.66 (Theor)

4 82+84.93-22.00'L
End Type P Gutter
Begin Str C & G
T C Elev 66.72 (Theor)

5 83+37.75-22.00'L
End Str C & G
Begin Type P Gutter
T C Elev 66.76 (Theor)

6 83+57.75-22.00'L
End Type P Gutter
Begin Str C & G
T C Elev 66.71 (Theor)

7 84+49.12-22.00'L
End Str C & G
Begin 17' Rad Fillet
T C Elev 66.19 (Theor)

8 84+66.12-38.67'L
End 17' Rad Fillet
Begin Str C & G
T C Elev 66.40 (Theor)

8a 84+66.36-51.00'L
End Str C & G
Begin Str C & G
T C Elev 66.50

9 84+68.14-54.69'L
End Str C & G
T C Elev (Match Existing)

10 84+99.86-54.67'L
Begin Str C & G
T C Elev (Match Existing)

10a 85+02.49-50.31'L
End Str C & G
Begin Str C & G
T C Elev 66.32

11 85+02.49-39.00'L
End Str C & G
Begin 17' Rad Fillet
T C Elev 66.15 (Theor)

12 85+19.49-22.00'L
End 17' Rad Fillet
Begin Str C & G
T C Elev 65.69 (Theor)

13 85+90.77-22.00'L
End Str C & G
Begin Type P Gutter
T C Elev 65.19 (Theor)

14 86+14.77-22.00'L
End Type P Gutter
Begin Str C & G
T C Elev 65.06 (Theor)

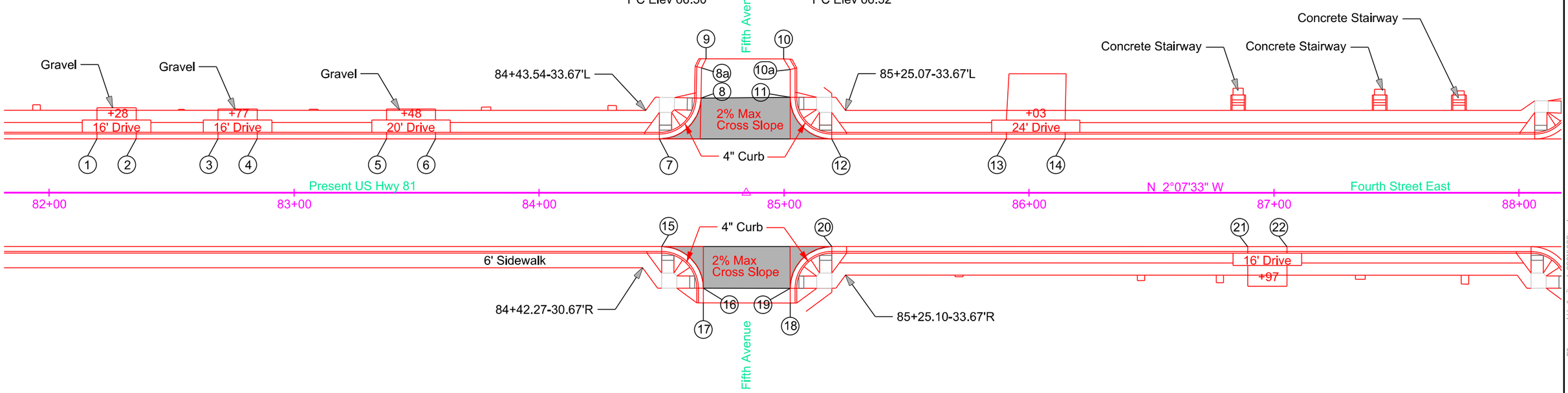

15 84+50.06-22.00'R
End Str C & G
Begin 17' Rad Fillet
T C Elev 66.18 (Theor)

16 84+67.06-39.00'R
End 17' Rad Fillet
Begin Str C & G
T C Elev 66.14 (Theor)

17 84+67.06-45.00'R
End Str C & G
T C Elev (Match Existing)

18 85+02.53-45.05'R
Begin Str C & G
T C Elev (Match Existing)

19 85+02.52-39.05'R
End Str C & G
Begin 17' Rad Fillet
T C Elev 65.89 (Theor)

20 85+19.52-22.00'R
End 17' Rad Fillet
Begin Str C & G
T C Elev 65.69 (Theor)

21 86+89.30-22.00'R
End Str C & G
Begin Type P Gutter
T C Elev 64.69 (Theor)

22 87+05.30-22.00'R
End Type P Gutter
Begin Str C & G
T C Elev 64.61 (Theor)

Plot Scale - 1:40
Plotted From - TRSF12139
File - U:\traprj\cadhu26x\082cg.dgn

CURB AND GUTTER LAYOUT

STATE OF SOUTH DAKOTA	PROJECT	SHEET	TOTAL SHEETS
	P 0081(93)157	B64	B120

Plotting Date: 09/01/2015

NOTE: All Curb & Gutter shown on this sheet is Type B68.5 and all gutter is Type P8.5 except as noted.
All curbside sidewalk is 6' wide and all boulevard sidewalk is 5' wide except as noted.

1 88+06.42-22.00'L
End Str C & G
Begin 17' Rad Fillet
T C Elev 64.12 (Theor)

2 88+23.42-38.98'L
End 17' Rad Fillet
Begin Str C & G
T C Elev 64.36 (Theor)

3 88+23.43-47.90'L
End Str C & G
T C Elev (Match Existing)

4 88+59.38-40.54'L
Begin Str C & G
T C Elev (Match Existing)

5 88+59.43-38.54'L
End Str C & G
Begin 17' Rad Fillet
T C Elev 64.18 (Theor)

6 88+76.43-22.00'L
End 17' Rad Fillet
Begin Str C & G
T C Elev 63.77 (Theor)

7 91+60.08-22.00'L
End Str C & G
Begin 17' Rad Fillet
T C Elev 59.54 (Theor)

8 91+77.08-39.11'L
End 17' Rad Fillet
Begin Str C & G
T C Elev 59.28 (Theor)

9 91+76.98-54.00'L
End Str C & G
T C Elev (Match Existing)

10 92+13.01-54.00'L
Begin Str C & G
T C Elev (Match Existing)

11 92+13.21-38.78'L
End Str C & G
Begin 17' Rad Fillet
T C Elev 58.94 (Theor)

12 92+30.21-22.00'L
End 17' Rad Fillet
Begin Str C & G
T C Elev 58.35 (Theor)

13 92+53.65-22.00'L
End Str C & G
Begin Type P Gutter
T C Elev 57.28 (Theor)

14 93+81.65-22.00'L
End Type P Gutter
Begin Str C & G
T C Elev 57.21 (Theor)

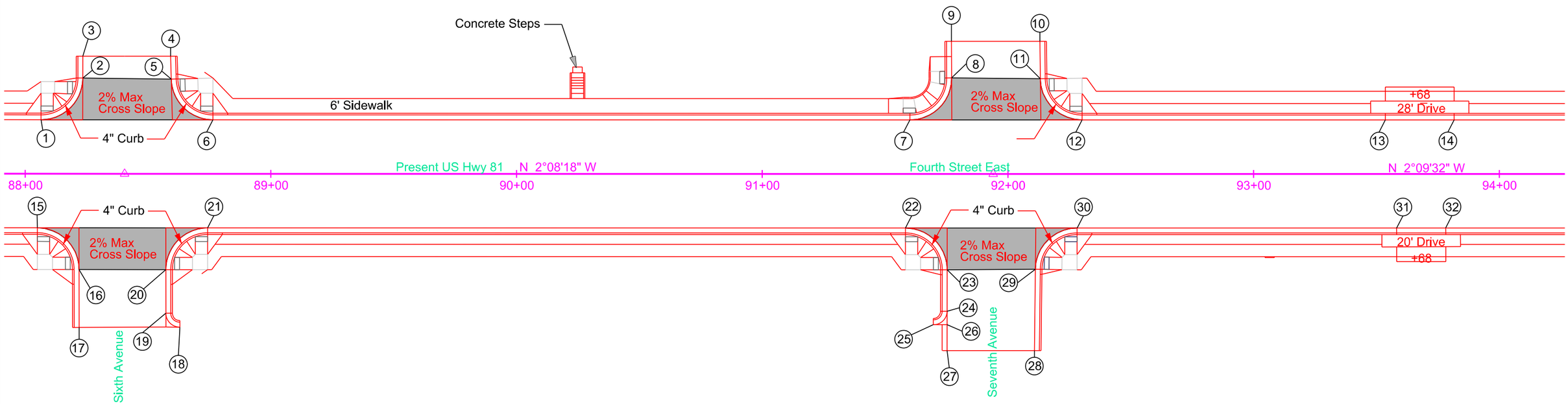

15 88+04.93-22.00'R
End Str C & G
Begin 17' Rad Fillet
T C Elev 64.13 (Theor)

16 88+21.93-38.97'R
End 17' Rad Fillet
Begin Str C & G
T C Elev 63.70 (Theor)

17 88+21.97-62.57'R
End Str C & G
T C Elev (Match Existing)

18 88+62.95-62.46'R
Begin 6' Rad Fillet
T C Elev (Match Existing)

19 88+57.28-56.78'R
End 6' Rad Fillet
Beg Str C & G
T C Elev 62.30

20 88+57.26-39.02'R
End Str C & G
Beg 17' Rad Fillet
T C Elev 63.53 (Theor)

21 88+74.26-22.00'R
End 17' Rad Fillet
Begin Str C & G
T C Elev 63.38 (Theor)

22 91+58.27-22.00'R
End Str C & G
Begin 17' Rad Fillet
T C Elev 59.58 (Theor)

23 91+75.27-39.02'R
End 17' Rad Fillet
Begin Str C & G
T C Elev 58.90 (Theor)

24 91+75.27-55.88'R
End Str C & G
Beg 5.5' Rad Fillet
T C Elev 57.47

25 91+69.62-61.37'R
End 5.5' Rad Fillet
T C Elev (Match Existing)

26 91+75.26-61.32'R
End 5.5' Rad Fillet
Begin Type P Gutter

27 91+75.23-71.90'R
End Type P Gutter
(Match Existing Surface)

28 92+10.77-71.91'R
Begin Str C & G
T C Elev (Match Existing)

29 92+11.22-38.80'R
End Str C & G
Begin 17' Rad Fillet
T C Elev 58.29 (Theor)

30 92+28.20-22.00'R
End 17' Rad Fillet
Begin Str C & G
T C Elev 58.38 (Theor)

31 93+58.19-22.00'R
End Str C & G
Begin Type P Gutter
T C Elev 57.27 (Theor)

32 93+78.19-22.00'R
End Type P Gutter
Begin Str C & G
T C Elev 57.22 (Theor)

Plot Scale - 1:40
Plotted From - TRSF12139
File - U:\traffic\cadh\026X\088cg.dgn

CURB AND GUTTER LAYOUT

STATE OF SOUTH DAKOTA	PROJECT	SHEET	TOTAL SHEETS
	P 0081(93)157	B65	B120

Plotting Date: 09/01/2015

NOTE: All Curb & Gutter shown on this sheet is Type B68.5 and all gutter is Type P8.5 except as noted.
All curbside sidewalk is 6' wide and all boulevard sidewalk is 5' wide except as noted.

1 95+17.93-22.00'L
End Str C & G
Begin 17' Rad Fillet
T C Elev 56.90 (Theor)

2 95+34.93-38.85'L
End 17' Rad Fillet
Begin Str C & G
T C Elev 57.20 (Theor)

3 95+36.57-70.45'L
End Str C & G
T C Elev (Match Existing)

4 95+62.32-70.50'L
Begin Str C & G
T C Elev (Match Existing)

5 95+67.48-50.21'L
End Str C & G
Begin Str C & G
T C Elev 57.55

6 95+67.14-39.54'L
End Str C & G
Begin 17' Rad Fillet
T C Elev 57.13 (Theor)

7 95+84.13-22.00'L
End 17' Rad Fillet
Begin Str C & G
T C Elev 56.75 (Theor)

8 96+09.13-22.00'L
End Str C & G
Begin Str C & G
T C Elev 56.69

9 96+91.63-27.50'L
End Str C & G
Begin Str C & G
T C Elev 56.61

10 98+68.78-27.50'L
End Str C & G
Begin 17' Rad Fillet
T C Elev 55.89 (Theor)

11 98+85.78-44.26'L
End 17' Rad Fillet
Begin Str C & G
T C Elev 56.00 (Theor)

12 98+85.96-57.51'L
End Str C & G
T C Elev (Match Existing)

13 99+22.92-57.51'L
Begin Str Type P Gutter
T C Elev (Match Existing)

13a 99+22.90-53.59'L
End Str Type P Gutter
Begin Str C & G
T C Elev 55.97 (Theor)

14 99+22.85-44.60'L
End Str C & G
Begin 17' Rad Fillet
T C Elev 55.50 (Theor)

15 99+39.85-27.50'L
End 17' Rad Fillet
Begin Str C & G
T C Elev 54.93 (Theor)

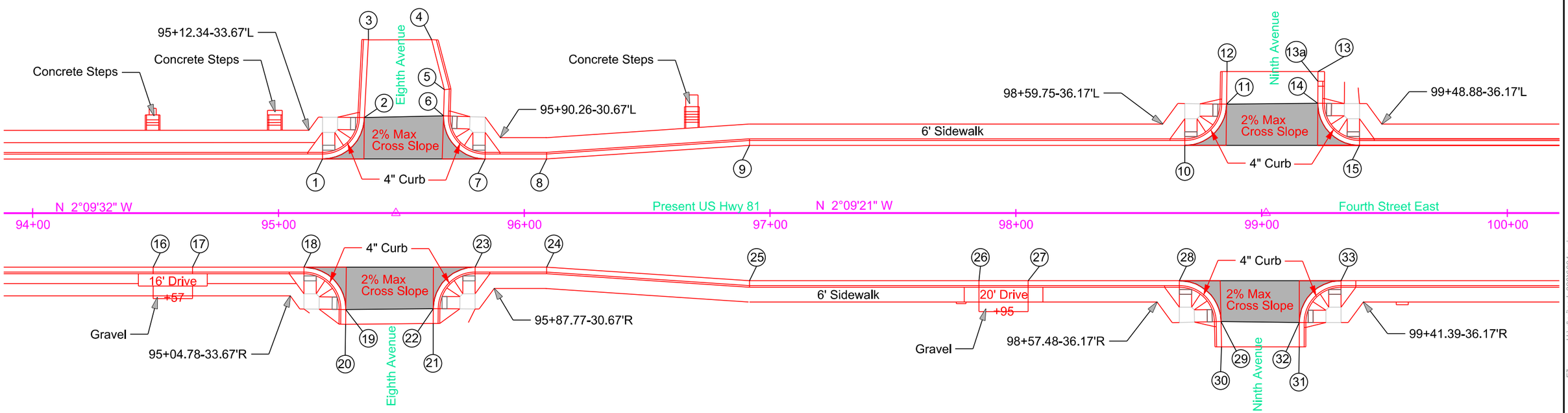

16 94+49.00-22.00'R
End Str C & G
Begin Type P Gutter
T C Elev 57.06 (Theor)

17 94+65.00-22.00'R
End Type P Gutter
Begin Str C & G
T C Elev 57.02 (Theor)

18 95+10.36-22.00'R
End Str C & G
Begin 17' Rad Fillet
T C Elev 56.92 (Theor)

19 95+27.36-39.21'R
End 17' Rad Fillet
Begin Str C & G
T C Elev 56.81 (Theor)

20 95+27.29-45.21'R
End Str C & G
T C Elev (Match Existing)

21 95+62.94-44.90'R
Begin Str C & G
T C Elev (Match Existing)

22 95+62.97-38.90'R
End Str C & G
Begin 17' Rad Fillet
T C Elev 56.73 (Theor)

23 95+79.97-22.00'R
End 17' Rad Fillet
Begin Str C & G
T C Elev 56.76 (Theor)

24 96+09.13-22.00'R
End Str C & G
Begin Str C & G
T C Elev 1756.69

25 96+91.63-27.50'R
End Str C & G
Begin Str C & G
T C Elev 56.39

26 97+85.00-27.50'R
End Str C & G
Begin Type P Gutter
T C Elev 56.18 (Theor)

27 98+05.00-27.50'R
End Type P Gutter
Begin Str C & G
T C Elev 56.13 (Theor)

28 98+66.52-27.50'R
End Str C & G
Begin 17' Rad Fillet
T C Elev 55.70 (Theor)

29 98+83.51-44.15'R
End 17' Rad Fillet
Begin Str C & G
T C Elev 55.13 (Theor)

30 98+83.72-54.50'R
End Str C & G
T C Elev (Match Existing)

31 99+15.36-54.50'R
Begin Str C & G
T C Elev (Match Existing)

32 99+15.36-44.50'R
End Str C & G
Begin 17' Rad Fillet
T C Elev 54.70 (Theor)

33 99+32.36-27.50'R
End 17' Rad Fillet
Begin Str C & G
T C Elev 54.81 (Theor)

Plot Scale - 1:40.0023
Plotted From - TRSF12139
File - U:\traffic\icadnu026X\094cg.dgn

STATE OF SOUTH DAKOTA	PROJECT	SHEET	TOTAL SHEETS
	P 0081(93)157	B66	B120

Plotting Date: 09/01/2015

CURB AND GUTTER LAYOUT

NOTE: All Curb & Gutter shown on this sheet is Type B68.5 and all gutter is Type P8.5 except as noted.
All curbside sidewalk is 6' wide and all boulevard sidewalk is 5' wide except as noted.

1 100+42.00-27.50'L
End Str C & G
Begin Type P Gutter
T C Elev 53.57 (Theor)

2 100+62.00-27.50'L
End Type P Gutter
Begin Str C & G
T C Elev 53.30 (Theor)

3 101+41.32-27.50'L
End Str C & G
Begin Type P Gutter
T C Elev 53.35 (Theor)

4 101+61.32-27.50'L
End Type P Gutter
Begin Str C & G
T C Elev 52.21 (Theor)

5 102+13.93-27.50'L
End Str C & G
Begin 25' Rad Fillet
T C Elev 52.04

6 102+38.92-52.05'L
End 25' Rad Fillet
Begin Str C & G
T C Elev 52.30

7 102+39.08-60.66'L
End Str C & G
Begin Str C & G
T C Elev 52.33

8 102+42.07-75.61'L
End Str C & G
Begin Str C & G
T C Elev 52.38

9 102+42.09-82.90'L
End Str C & G
T C Elev (Match Existing)

10 102+73.57-82.84'L
Begin Str C & G
T C Elev (Match Existing)

11 102+73.57-82.84'L
End Str C & G
Begin Type P Gutter
T C Elev 52.25 (Theor)

12 102+73.55-78.84'L
End Type P Gutter
Begin Str C & G
T C Elev 52.20 (Theor)

13 102+73.54-52.53'L
End Str C & G
Begin 25' Rad Fillet
T C Elev 52.17

14 102+98.54-27.50'L
End 25' Rad Fillet
Begin Str C & G
T C Elev 51.88

15 103+94.00-27.50'L
End Str C & G
Begin Type P Gutter
T C Elev 51.69 (Theor)

16 104+10.00-27.50'L
End Type P Gutter
Begin Str C & G
T C Elev 51.66 (Theor)

17 104+53.50-27.50'L
End Str C & G
Begin 25' Rad Fillet
T C Elev 51.58

18 104+78.06-47.82'L
End 25' Rad Fillet
Begin Str C & G
T C Elev 51.26 (Theor)

19 104+79.19-53.72'L
End Str C & G
Beg 100' Rad C & G
T C Elev 51.18 (Theor)

20 104+85.19-73.58'L
End 100' Rad C&G
T C Elev (Match Existing)

21 105+18.67-61.23'L
Begin 25' Rad Fillet
T C Elev (Match Existing)

22 105+42.10-27.50'L
End 25' Rad Fillet
Begin Str C & G
T C Elev 51.48 (Theor)

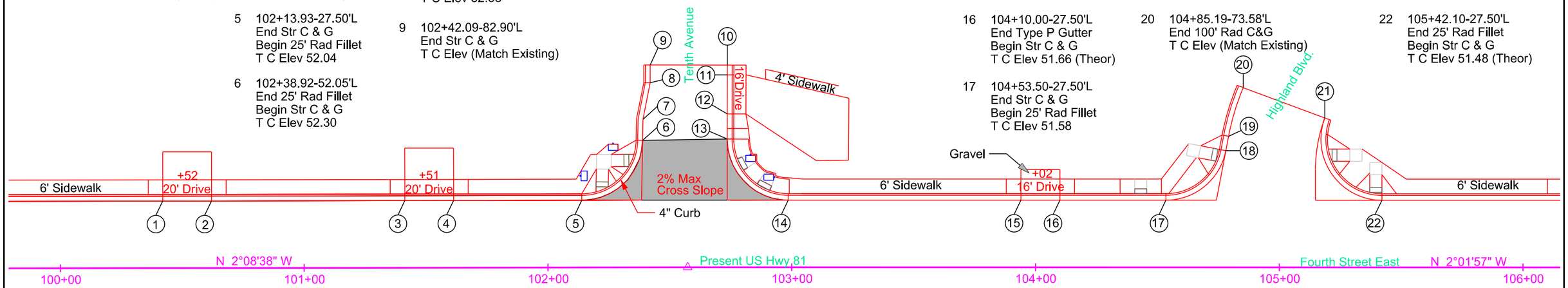

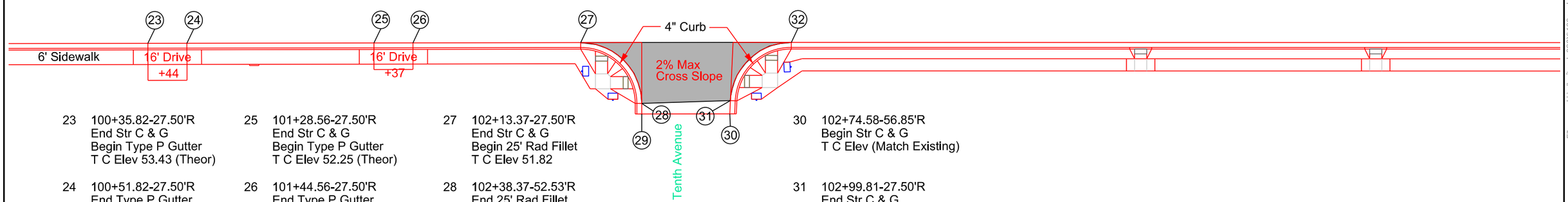

23 100+35.82-27.50'R
End Str C & G
Begin Type P Gutter
T C Elev 53.43 (Theor)

24 100+51.82-27.50'R
End Type P Gutter
Begin Str C & G
T C Elev 53.22(Theor)

25 101+28.56-27.50'R
End Str C & G
Begin Type P Gutter
T C Elev 52.25 (Theor)

26 101+44.56-27.50'R
End Type P Gutter
Begin Str C & G
T C Elev 52.11 (Theor)

27 102+13.37-27.50'R
End Str C & G
Begin 25' Rad Fillet
T C Elev 51.82

28 102+38.37-52.53'R
End 25' Rad Fillet
Begin Str C & G
T C Elev 52.40

29 102+38.37-56.84'R
End Str C & G
T C Elev (Match Existing)

30 102+74.58-56.85'R
Begin Str C & G
T C Elev (Match Existing)

31 102+99.81-27.50'R
End Str C & G
Begin 25' Rad Fillet
T C Elev 52.32

32 102+99.81-27.50'R
End 25' Rad Fillet
Begin Str C & G
T C Elev 51.66

Plot Scale - 1:40
Plotted From - TRSF12139
File - U:\rdprj\cadnu\26X100cg.dgn

CURB AND GUTTER LAYOUT

STATE OF SOUTH DAKOTA	PROJECT	SHEET	TOTAL SHEETS
	P 0081(93)157	B67	B120

Plotting Date: 09/01/2015

NOTE: All Curb & Gutter shown on this sheet is Type B68.5 and all gutter is Type P8.5 except as noted.
All curbside sidewalk is 6' wide and all boulevard sidewalk is 5' wide except as noted.

1 106+16.00-27.50'L
End Str C & G
Begin Type P Gutter
T C Elev 51.69 (Theor)

2 106+40.00-27.50'L
End Type P Gutter
Begin Str C & G
T C Elev 51.83 (Theor)

3 106+40.00-36.84'L
Begin Str Type B6
Concrete Curb
T C Elev 51.63

4 108+60.45-36.85'L
End Type B6 Conc Curb
Begin Type B6 Conc Curb
T C Elev 55.08

5 108+68.54-45.48'L
End Type B6 Conc Curb
T C Elev 55.39

6 108+68.54-27.50'L
End Str C & G
Begin 17' Rad Fillet
T C Elev 54.63 (Theor)

7 108+85.54-44.54'L
End 17' Rad Fillet
Begin Str C & G
T C Elev 54.66 (Theor)

8 108+85.52-50.54'L
End Str C & G
T C Elev (Match Existing)

9 109+22.40-50.41'L
Begin Str C & G
T C Elev (Match Existing)

10 109+22.43-44.41'L
End Str C & G
Begin 17' Rad Fillet
T C Elev 55.41 (Theor)

11 109+39.43-27.50'L
End 17' Rad Fillet
Begin Str C & G
T C Elev 56.07 ((Theor)

12 110+43.28-27.50'L
End Str C & G
Begin Type P Gutter
T C Elev 58.42 (Theor)

13 110+59.28-27.50'L
End Type P Gutter
Begin Str C & G
T C Elev 58.79 (Theor)

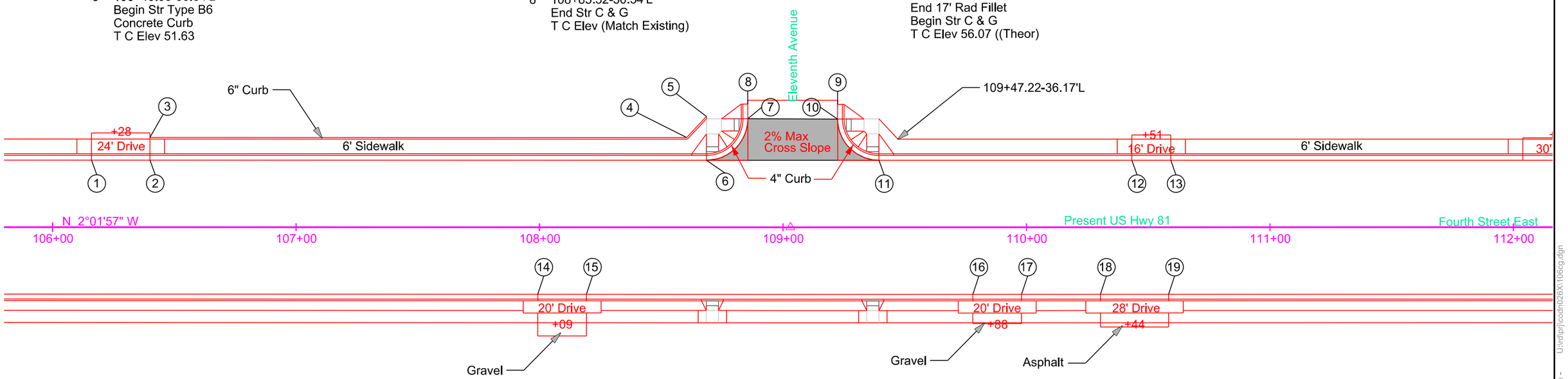

14 107+99.29-27.50R
End Str C & G
Begin Type P Gutter
T C Elev 53.26 (Theor)

15 108+19.29-27.50'R
End Type P Gutter
Begin Str C & G
T C Elev 53.27

16 109+78.00-27.50'R
End Str C & G
Begin Type P Gutter
T C Elev 56.73 (Theor)

17 109+98.00-27.50'R
End Type P Gutter
Begin Str C & G
T C Elev 57.17 (Theor)

18 110+30.39-27.50'R
End Str C & G
Begin Type P Gutter
T C Elev 57.90 (Theor)

19 110+58.39-27.50'R
End Type P Gutter
Begin Str C & G
T C Elev 58.54 (Theor)

Plot Scale - 1:40
Plotted From - TRSF12139
File - U:\rdprj\cadnv26\x106cg.dgn

CURB AND GUTTER LAYOUT

STATE OF SOUTH DAKOTA	PROJECT	SHEET	TOTAL SHEETS
	P 0081(93)157	B68	B120

Plotting Date: 09/01/2015

NOTE: All Curb & Gutter shown on this sheet is Type B68.5 and all gutter is Type P8.5 except as noted.
All curbside sidewalk is 6' wide and all boulevard sidewalk is 5' wide except as noted.

1 112+03.92-27.50'L
End Str C & G
Begin Type P Gutter
T C Elev 62.07 (Theor)

2 112+33.92-27.50'L
End Type P Gutter
Begin Str C & G
T C Elev 62.75 (Theor)

3 113+52.00-27.50'L
End Str C&G
Beg Type P Gutter
T C Elev 65.43 (Theor)

4 113+88.95-43.10'L
End Type P Gutter
Begin Str C & G
T C Elev 66.16 (Theor)

5 116+42.95-27.50'L
End Str C & G
Begin Type P Gutter
T C Elev 72.04 (Theor)

6 116+72.95-27.50'L
End Type P Gutter
Begin Str C & G
T C Elev 72.72 (Theor)

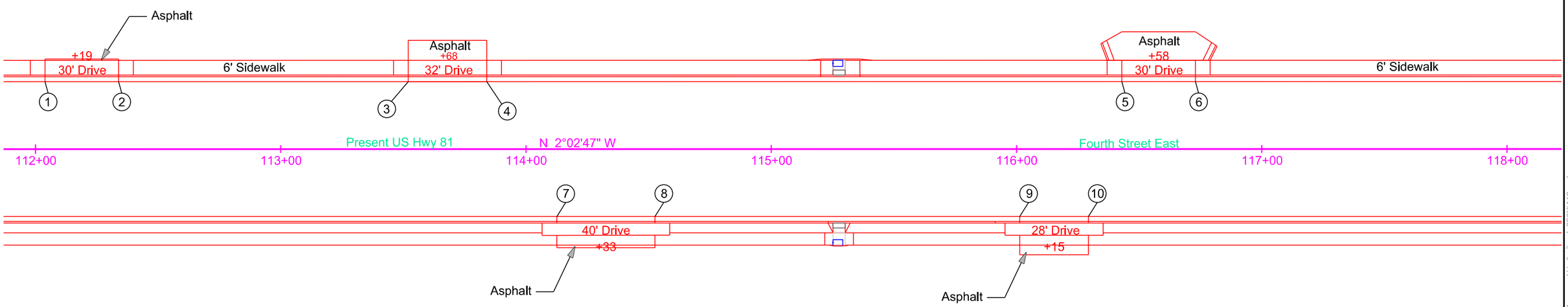

7 114+12.56-27.50'R
End Str C & G
Begin Type P Gutter
T C Elev 66.59 (Theor)

8 114+52.56-27.50'R
End Type P Gutter
Begin Str C & G
T C Elev 67.49 (Theor)

9 116+01.28-27.50'R
End Str C & G
Begin Type P Gutter
T C Elev 70.87 (Theor)

10 116+29.28-27.50'R
End Type P Gutter
Begin Str C & G
T C Elev 71.51 (Theor)

Plot Scale - 1:40
Plotted From - TRSF12139
File - U:\rdprj\cadnu\26X\112cg.dgn

CURB AND GUTTER LAYOUT

STATE OF SOUTH DAKOTA	PROJECT	SHEET	TOTAL SHEETS
	P 0081(93)157	B69	B120

Plotting Date: 09/01/2015

NOTE: All Curb & Gutter shown on this sheet is Type B68.5 and all gutter is Type P8.5 except as noted.
All curbside sidewalk is 6' wide and all boulevard sidewalk is 5' wide except as noted.

1 118+41.19-27.50'L
Begin 17' Rad Fillet
End Str C & G
T C Elev 76.54 (Theor)

2 118+58.19-44.44'L
End 17' Rad Fillet
Begin Str C & G
T C Elev 76.85 (Theor)

3 118+58.24-58.45'L
End Str C & G
T C Elev (Match Existing)

4 118+93.67-58.53'L
Begin Str C & G
T C Elev (Match Existing)

5 118+93.65-44.52'L
End Str C & G
Begin 17' Rad Fillet
T C Elev 77.97 (Theor)

6 119+10.65-27.50'L
End 17' Rad Fillet
Begin Str C & G
T C Elev 77.88 (Theor)

7 121+30.00-27.50'L
End Str C & G
Begin Type P Gutter
T C Elev 76.37 (Theor)

8 121+60-27.50'L
End Type P Gutter
Begin Str C & G
T C Elev 75.85 (Theor)

9 122+97.19-27.50'L
End Str C & G
Begin Type P Gutter
T C Elev 75.59 (Theor)

10 123+27.19-27.50'L
End Type P Gutter
Begin Str C & G
T C Elev 73.17 (Theor)

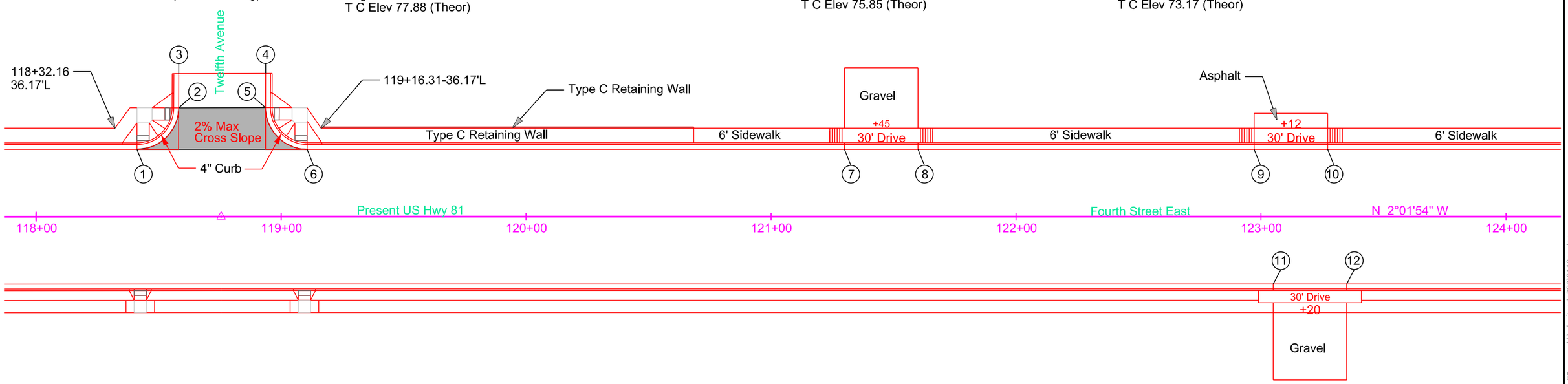

11 123+05.00-27.50'R
End Str C & G
Begin Type P Gutter
T C Elev 73.26 (Theor)

12 123+35.00-27.50'R
End Type P Gutter
Begin Str C & G
T C Elev 72.84 (Theor)

Plot Scale - 1:40
Plotted From - TRSF12139
File - U:\rdprj\cadnu\26X\118cg.dgn

CURB AND GUTTER LAYOUT

STATE OF SOUTH DAKOTA	PROJECT	SHEET	TOTAL SHEETS
	P 0081(93)157	B70	B120

Plotting Date: 09/01/2015

NOTE: All Curb & Gutter shown on this sheet is Type B68.5 and all gutter is Type P8.5 except as noted.
All curbside sidewalk is 6' wide and all boulevard sidewalk is 5' wide except as noted.

1 124+71.60-27.50'L
End Str C & G
Begin Type P Gutter
T C Elev 71.54 (Theor)

2 125+07.60-27.50'L
End Type P Gutter
Begin Str C & G
T C Elev 71.24 (Theor)

3 126+47.00-27.50'L
End Str C & G
Begin Type P Gutter
T C Elev 70.41 (Theor)

4 126+87.00-27.50'L
End Type P Gutter
Begin Str C & G
T C Elev 70.21 (Theor)

5 128+67.48-27.50'L
End Str C & G
Begin 25' Rad Fillet
T C Elev 69.55

6 128+92.48-52.40'L
End 25' Rad Fillet
Beg Str C & G
T C Elev 70.27 (Theor)

7 128+92.57-74.89'L
Begin Str C & G
T C Elev (Match Existing)

8 129+36.70-118.91'L
Begin Str C & G
T C Elev (Match Existing)

9 129+36.72-72.49'L
End Str C & G
Begin 45' Rad Fillet
T C Elev 70.94

10 129+81.71-27.50'L
End 45' Rad Fillet
Beg Str C & G
T C Elev 70.55

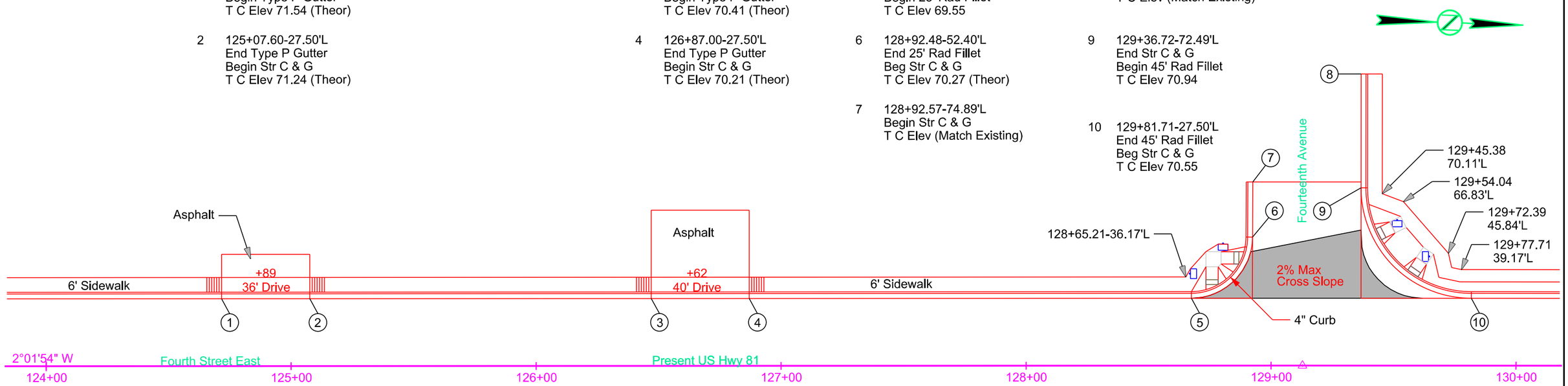

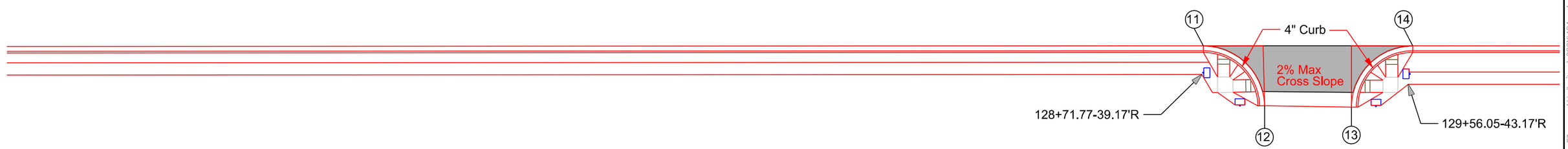

11 128+72.34-27.50'R
End Str C & G
Begin 25' Rad Fillet
T C Elev 69.35

12 128+97.33-51.94'R
End 25' Rad Fillet
T C Elev (Match Existing)

13 129+32.85-52.49'R
Begin 25' Rad Fillet
T C Elev (Match Existing)

14 129+57.85-27.50'R
End 25' Rad Fillet
Begin Str C & G
T C Elev 70.09

Plot Scale - 1:40
Plotted From - TRSF12139
File - U:\rdprj\codnu\26X\124cg.dgn

CURB AND GUTTER LAYOUT

STATE OF SOUTH DAKOTA	PROJECT	SHEET	TOTAL SHEETS
	P 0081(93)157	B71	B120

Plotting Date: 09/01/2015

NOTE: All Curb & Gutter shown on this sheet is Type B68.5 and all gutter is Type P8.5 except as noted.
All curbside sidewalk is 6' wide and all boulevard sidewalk is 5' wide except as noted.

1 131+43.90-27.50'L
End Str C & G
Begin Type P Gutter
T C Elev 72.15 (Theor)

2 131+71.90-27.50'L
End Type P Gutter
Begin Str C & G
T C Elev 72.43 (Theor)

3 135+43.30-27.50'L
End Str C & G
Beg 17' Rad Fillet
T C Elev 75.18 (Theor)

4 135+60.30-44.76'L
End 17' Rad Fillet
Beg Str C & G
T C Elev 75.59 (Theor)

5 135+60.17-63.90'L
End Str C & G
T C Elev (Match Existing)

6 135+94.72-63.90'L
Beg Str C & G
T C Elev (Match Existing)

7 135+94.50-44.61'L
End Str C & G
Beg 17' Rad Fillet
T C Elev 75.67 (Theor)

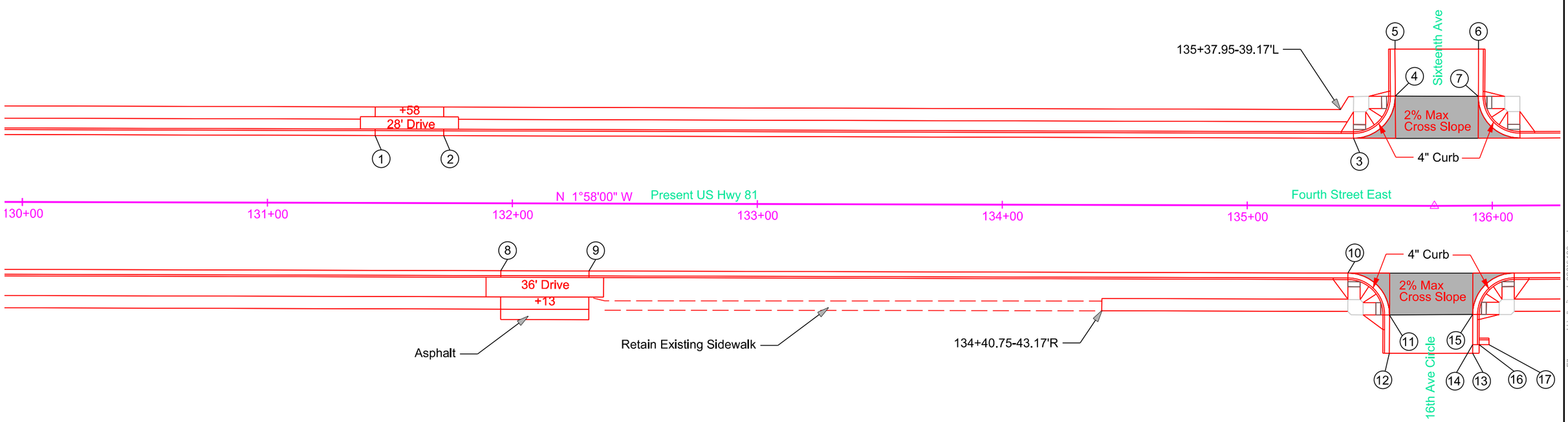

8 131+95.35-27.50'R
End Str C & G
Begin Type P Gutter
T C Elev 72.43 (Theor)

9 132+31.35-27.48'R
End Type P Gutter
Begin Str C & G
T C Elev 72.72 (Theor)

10 134+41.20-27.50'R
End Str C & G
Begin 17' Rad Fillet
T C Elev 74.95 (Theor)

11 135+58.20-44.54'R
End 17' Rad Fillet
Begin Str C & G
T C Elev 75.36 (Theor)

12 135+58.16-60.16'R
End Str C & G
T C Elev (Match Existing)

13 135+91.71-60.20'R
Beg Typ P Gutter
T C Elev (Match Existing)

14 135+91.71-56.70'R
End Type P Gutter
Beg Str C & G
T C Elev (75.58)

15 135+91.82-44.38'R
End Str C & G
Beg 17' Rad Fillet
T C Elev 75.45 (Theor)

16 135+94.40-56.72'R
Beg Str C & G
T C Elev 75.66 (Theor)

17 135+98.40-56.75'R
End Str C & G
T C Elev (Match Existing)

Plot Scale - 1:40
Plotted From - TRSF12139
File - U:\rdpj\cadh\026X\130cg.dgn

CURB AND GUTTER LAYOUT

STATE OF SOUTH DAKOTA	PROJECT	SHEET	TOTAL SHEETS
	P 0081(93)157	B72	B120

Plotting Date: 09/01/2015

NOTE: All Curb & Gutter shown on this sheet is Type B68.5 and all gutter is Type P8.5 except as noted.
All curbside sidewalk is 6' wide and all boulevard sidewalk is 5' wide except as noted.

1 136+13.73-27.50'L
End 17' Rad Fillet
Begin Str C & G
T C Elev 75.35 (Theor)

2 139+90.00-27.50'L
End Str C&G
Begin 17' Rad Fillet
T C Elev 73.59 (Theor)

3 140+07.00-44.50'L
End 17' Rad Fillet
Begin Str C & G
T C Elev 73.16 (Theor)

4 140+43.00-44.50'L
End Str C & G
Begin 17' Rad Fillet
T C Elev 72.95 (Theor)

5 140+60.00-27.50'L
End 17' Rad Fillet
Begin Str C & G
T C Elev 73.19 (Theor)

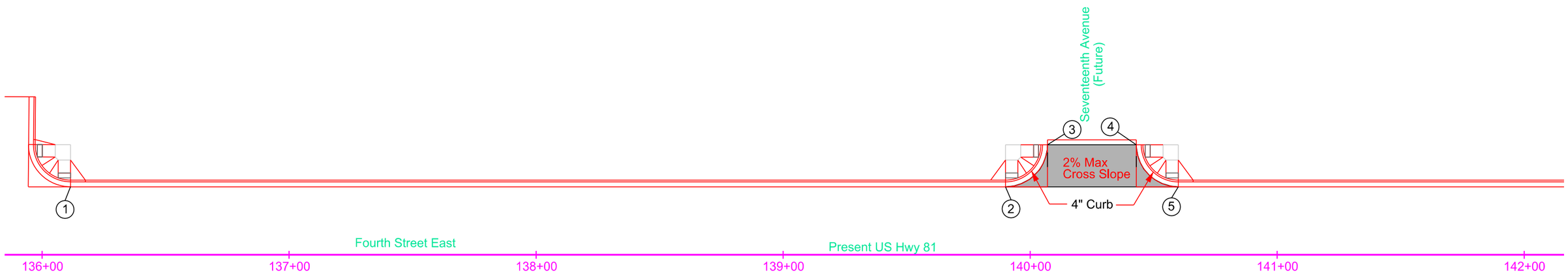

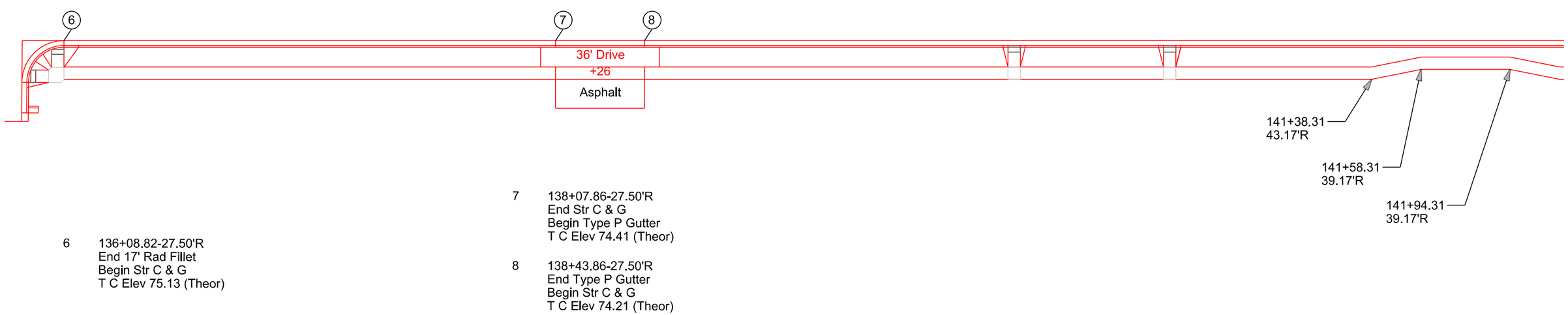

6 136+08.82-27.50'R
End 17' Rad Fillet
Begin Str C & G
T C Elev 75.13 (Theor)

7 138+07.86-27.50'R
End Str C & G
Begin Type P Gutter
T C Elev 74.41 (Theor)

8 138+43.86-27.50'R
End Type P Gutter
Begin Str C & G
T C Elev 74.21 (Theor)

Plot Scale - 1:40
Plotted From - TRSF12139
File - U:\rdpj\cadn\026X\136cg.dgn

CURB AND GUTTER LAYOUT

STATE OF SOUTH DAKOTA	PROJECT	SHEET	TOTAL SHEETS
	P 0081(93)157	B73	B120

Plotting Date: 09/01/2015

NOTE: All Curb & Gutter shown on this sheet is Type B68.5 and all gutter is Type P8.5 except as noted.
All curbside sidewalk is 6' wide and all boulevard sidewalk is 5' wide except as noted.

1 144+41.86-27.50'L
End Str C & G
Begin 17' Rad Fillet
T C Elev 74.59 (Theor)

2 144+58.86-44.50'L
End 17' Rad Fillet
Begin Str C & G
T C Elev 74.46 (Theor)

3 144+92.86-44.50'L
End Str C & G
Begin 17' Rad Fillet
T C Elev 74.89 (Theor)

4 145+09.86-27.50'L
End 17' Rad Fillet
Begin Str C & G
T C Elev 75.54 (Theor)

5 145+21.36-27.50'L
End Str C & G
Beg Str Curb Taper
T C Elev 75.72

6 145+27.36-27.50'L
End Curb Taper
T C Elev 75.82

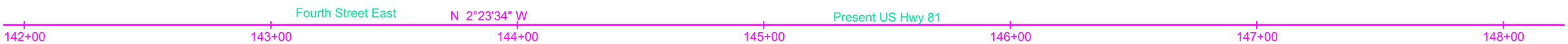

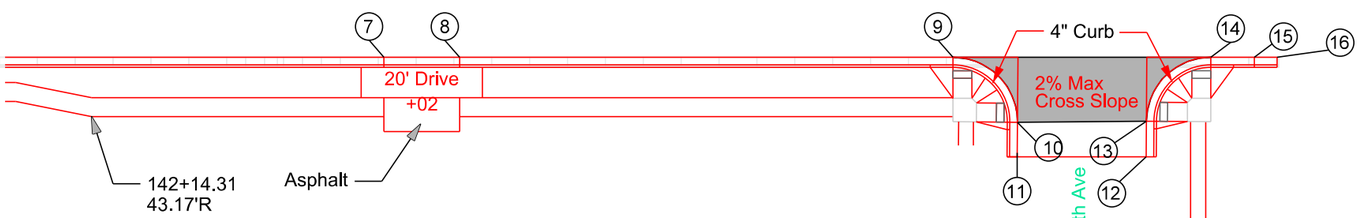

7 142+91.55-27.50'R
End Str C & G
Begin Type P Gutter
T C Elev 73.15 (Theor)

8 143+11.55-27.50'R
End Type P Gutter
Begin Str C & G
T C Elev 73.31 (Theor)

9 144+41.81-27.50'R
End Str C & G
Begin 17' Rad Fillet
T C Elev 74.38 (Theor)

10 144+58.81-44.64'R
End 17' Rad Fillet
Begin Str C & G
T C Elev 74.92 (Theor)

11 144+58.73-53.80'R
End Str C & G
T C Elev (Match Existing)

12 144+92.79-53.78'R
Begin Str C & G
T C Elev (Match Existing)

13 144+92.86-44.37'R
End Str C & G
Begin 17' Rad Fillet
T C Elev 75.39 (Theor)

14 145+09.86-27.50'R
End 17' Rad Fillet
Begin Str C & G
T C Elev 75.32 (Theor)

15 145+27.36-27.50'R
End Str C & G
Beg Str Curb Taper
T C Elev 75.50

15 145+27.36-27.50'R
End Curb Taper
T C Elev 75.60 (Theor)

Plot Scale - 1:40
Plotted From - TRSF12139
File - U:\traf\prj\cadh\026X\1442cg.dgn

STATE OF SOUTH DAKOTA	PROJECT	SHEET	TOTAL SHEETS
	P 0081(93)157	B74	B120

Plotting Date: 09/01/2015

CURB RAMP DETAILS

1 80+19.06-25.57'L
Center of Detectable Warning
& Type 2 Curb Ramp

2 80+29.96-36.36.38'L
Center of Detectable Warning
& Type 2 Curb Ramp

3 80+72.53-36.48'L
Center of Detectable Warning
& Type 2 Curb Ramp

4 80+83.45-25.57'L
Center of Detectable Warning
& Type 2 Curb Ramp

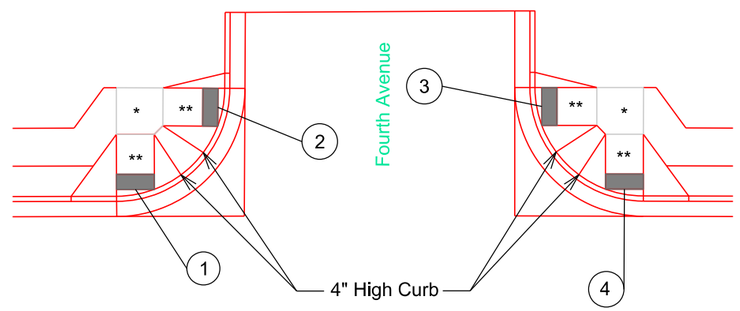

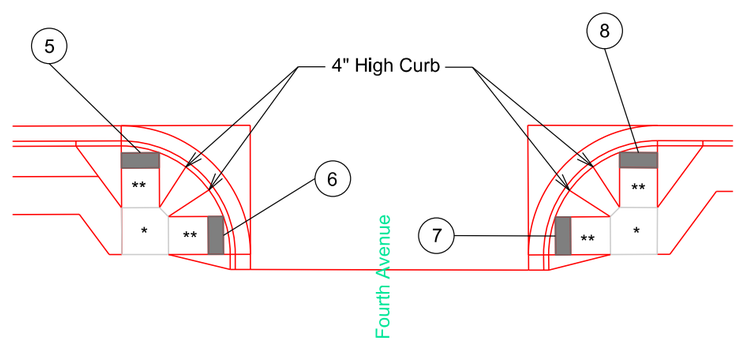

5 80+19.52-25.57'R
Center of Detectable Warning
& Type 2 Curb Ramp

6 80+30.45-36.51'R
Center of Detectable Warning
& Type 2 Curb Ramp

7 80+74.50-36.60'R
Center of Detectable Warning
& Type 2 Curb Ramp

8 80+85.45-25.57'R
Center of Detectable Warning
& Type 2 Curb Ramp

Legend:
* Turning Space with 2.0%(max) slope
** Curb Ramp with 8.33%(max) slope and 2.0%(max) cross slope
Detectable Warning

Plot Scale - 1:20
Plotted From - TRSF12139
File - U:\rdprj\codh\026X\080cr.dgn

CURB RAMP LAYOUT

STATE OF SOUTH DAKOTA	PROJECT	SHEET	TOTAL SHEETS
	P 0081(93)157	B75	B120

Plotting Date: 09/01/2015

1 84+51.62-25.57' L
Center of Detectable Warning
& Type 2 Curb Ramp

2 84+62.50-36.24' L
Center of Detectable Warning
& Type 2 Curb Ramp

3 85+06.06-36.50'L
Center of Detectable Warning
& Type 2 Curb Ramp

4 85+16.99-25.57'L
Center of Detectable Warning
& Type 2 Curb Ramp

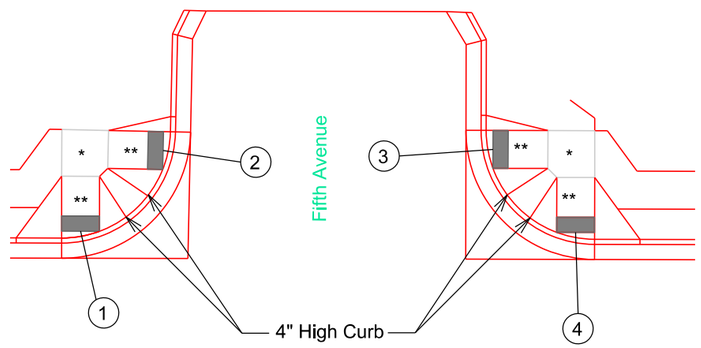

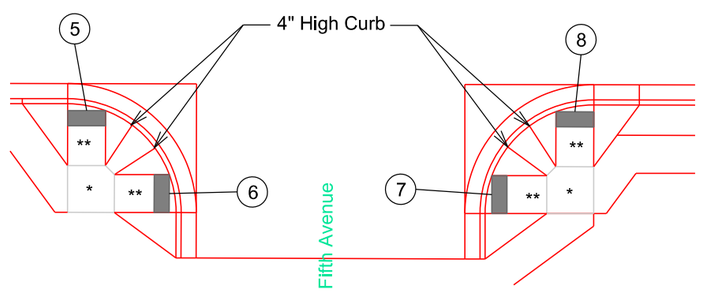

5 84+52.56-25.57'R
Center of Detectable Warning
& Type 2 Curb Ramp

6 84+63.49-36.50'R
Center of Detectable Warning
& Type 2 Curb Ramp

7 85+06.08-36.54' R
Center of Detectable Warning
& Type 2 Curb Ramp

8 85+17.02-25.57' R
Center of Detectable Warning
& Type 2 Curb Ramp

Legend:
* Turning Space with 2.0%(max) slope
** Curb Ramp with 8.33%(max) slope and 2.0%(max) cross slope
Detectable Warning

Plot Scale - 1:20
Plotted From - TRSF12139
File - U:\rdprj\codh\026X108scr.dgn

CURB RAMP LAYOUT

STATE OF SOUTH DAKOTA	PROJECT	SHEET	TOTAL SHEETS
	P 0081(93)157	B76	B120

Plotting Date: 09/01/2015

1 88+08.92-25.57'L
Center of Detectable Warning
& Type 2 Curb Ramp

2 88+19.21-35.02'L
Center of Detectable Warning
& Type 2 Curb Ramp

3 88+63.07-36.14'L
Center of Detectable Warning
& Type 2 Curb Ramp

4 88+73.93-25.57'L
Center of Detectable Warning
& Type 2 Curb Ramp

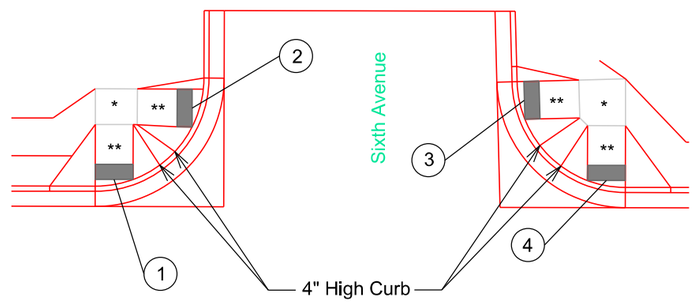

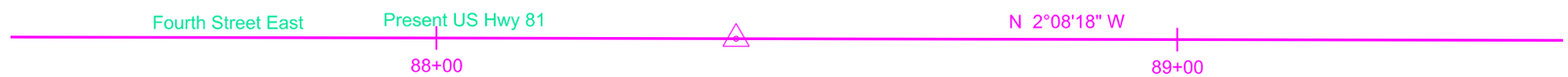

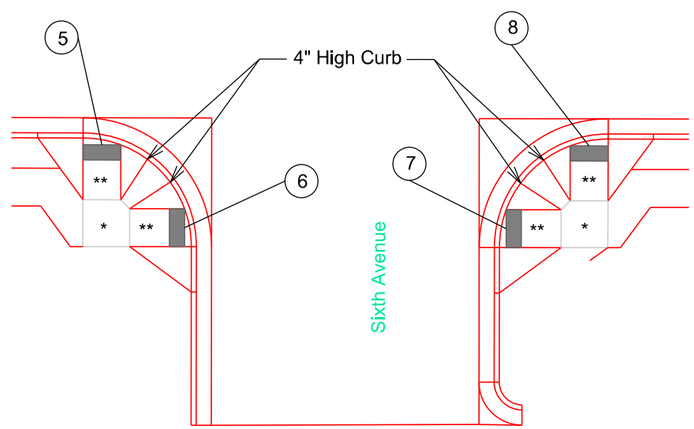

5 88+07.43-25.57'R
Center of Detectable Warning
& Type 2 Curb Ramp

6 88+18.36-36.48'R
Center of Detectable Warning
& Type 2 Curb Ramp

7 88+60.82-36.52'R
Center of Detectable Warning
& Type 2 Curb Ramp

8 88+71.76-25.57'R
Center of Detectable Warning
& Type 2 Curb Ramp

Legend:
* Turning Space with 2.0%(max) slope
** Curb Ramp with 8.33%(max) slope and 2.0%(max) cross slope
Detectable Warning

Plot Scale - 1:20
Plotted From - TRSF12139
File - U:\rdprj\cadn\026X\089cr.dgn

STATE OF SOUTH DAKOTA	PROJECT	SHEET	TOTAL SHEETS
	P 0081(93)157	B77	B120

Plotting Date: 09/01/2015

CURB RAMP LAYOUT

1 91+59.89-24.86'L
Center of Detectable Warning
& Type 3 Curb Ramp

2 91+74.22-39.28'L
Center of Detectable Warning
& Type 3 Curb Ramp

3 92+16.81-36.33'L
Center of Detectable Warning
& Type 2 Curb Ramp

4 92+27.71-25.57'L
Center of Detectable Warning
& Type 2 Curb Ramp

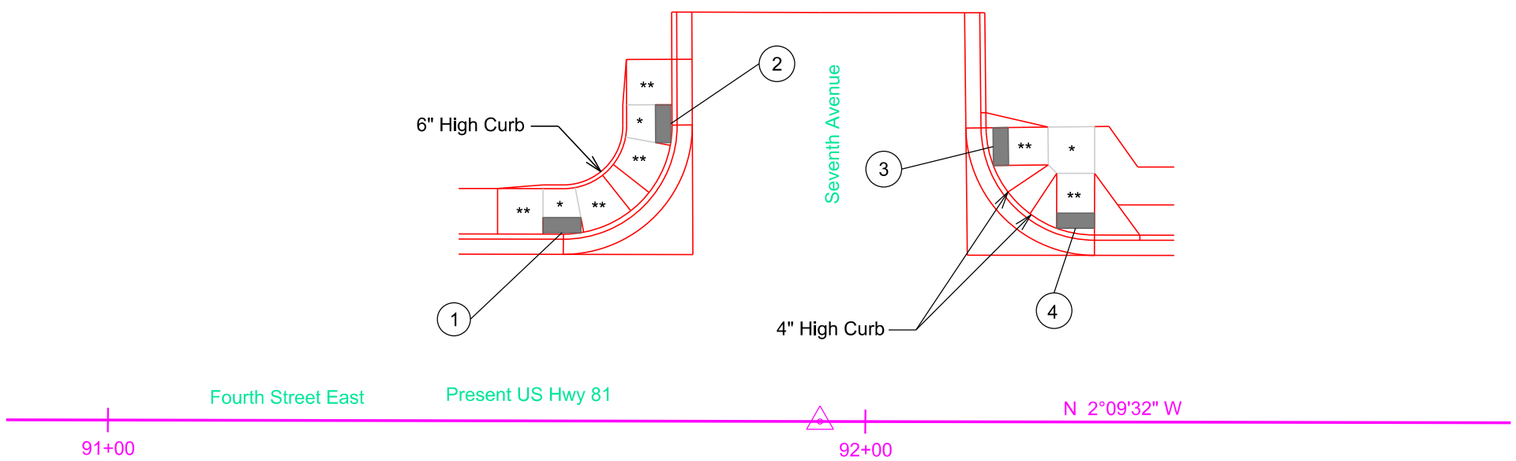

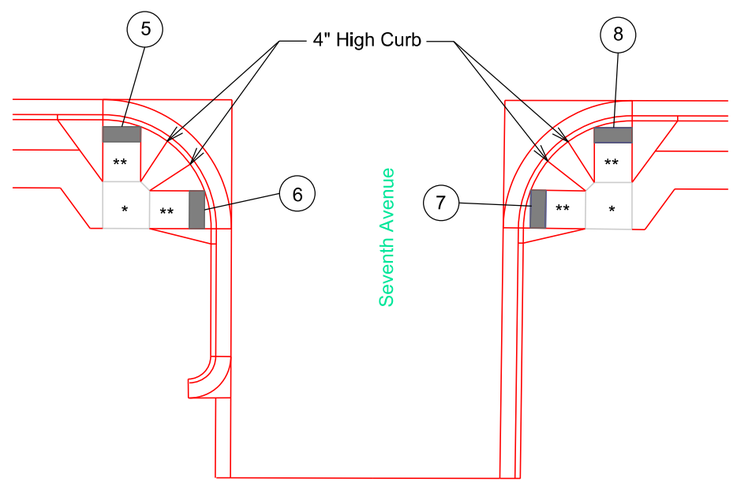

5 91+60.77-25.57'R
Center of Detectable Warning
& Type 2 Curb Ramp

6 91+71.70-36.52'R
Center of Detectable Warning
& Type 2 Curb Ramp

7 92+14.88-35.96'R
Center of Detectable Warning
& Type 2 Curb Ramp

8 92+25.70-25.57'R
Center of Detectable Warning
& Type 2 Curb Ramp

Legend:
* Turning Space with 2.0%(max) slope
** Curb Ramp with 8.33%(max) slope and 2.0%(max) cross slope
Detectable Warning

Plot Scale - 1:20
Plotted From - TRSF12139
File - U:\rdi\prj\coadn\026X\092cr.dgn

CURB RAMP LAYOUT

STATE OF SOUTH DAKOTA	PROJECT	SHEET	TOTAL SHEETS
	P 0081(93)157	B78	B120

Plotting Date: 09/01/2015

2 95+20.43-25.57'L
Center of Detectable Warning
& Type 2 Curb Ramp

3 95+31.34-36.39'L
Center of Detectable Warning
& Type 2 Curb Ramp

10 95+70.63-36.93'L
Center of Detectable Warning
& Type 2 Curb Ramp

9 95+81.63-25.57'L
Center of Detectable Warning
&Type 2 Curb Ramp

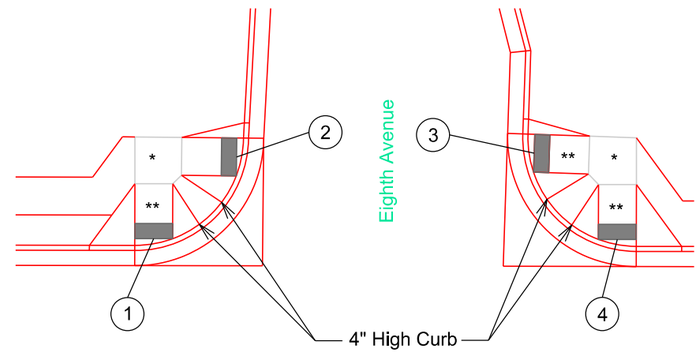

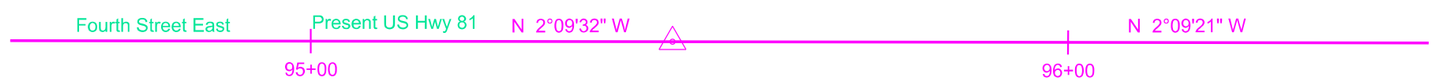

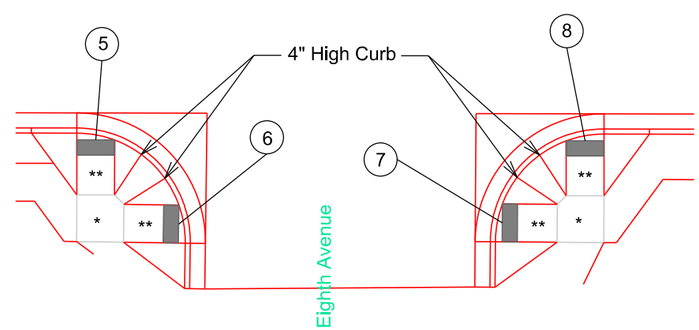

5 95+12.86-25.57'R
Center of Detectable Warning
& Type 2 Curb Ramp

6 95+23.82-36.66'R
Center of Detectable Warning
& Type 2 Curb Ramp

7 95+66.56-36.42'R
Center of Detectable Warning
& Type 2 Curb Ramp

8 95+77.47-25.57'R
Center of Detectable Warning
& Type 2 Curb Ramp

Legend:
* Turning Space with 2.0%(max) slope
** Curb Ramp with 8.33%(max) slope and 2.0%(max) cross slope
Detectable Warning

Plot Scale - 1:20
Plotted From - TRSF12139
File - U:\rdprj\cadh\026X\095cr.dgn

CURB RAMP LAYOUT

STATE OF SOUTH DAKOTA	PROJECT	SHEET	TOTAL SHEETS
	P 0081(93)157	B79	B120

Plotting Date: 09/01/2015

1 98+71.28-31.07'L
Center of Detectable Warning
& Type 2 Curb Ramp

2 98+82.17-41.81'L
Center of Detectable Warning
& Type 2 Curb Ramp

3 99+37.35-31.07'L
Center of Detectable Warning
& Type 2 Curb Ramp

4 99+26.41-42.08'L
Center of Detectable Warning
& Type 2 Curb Ramp

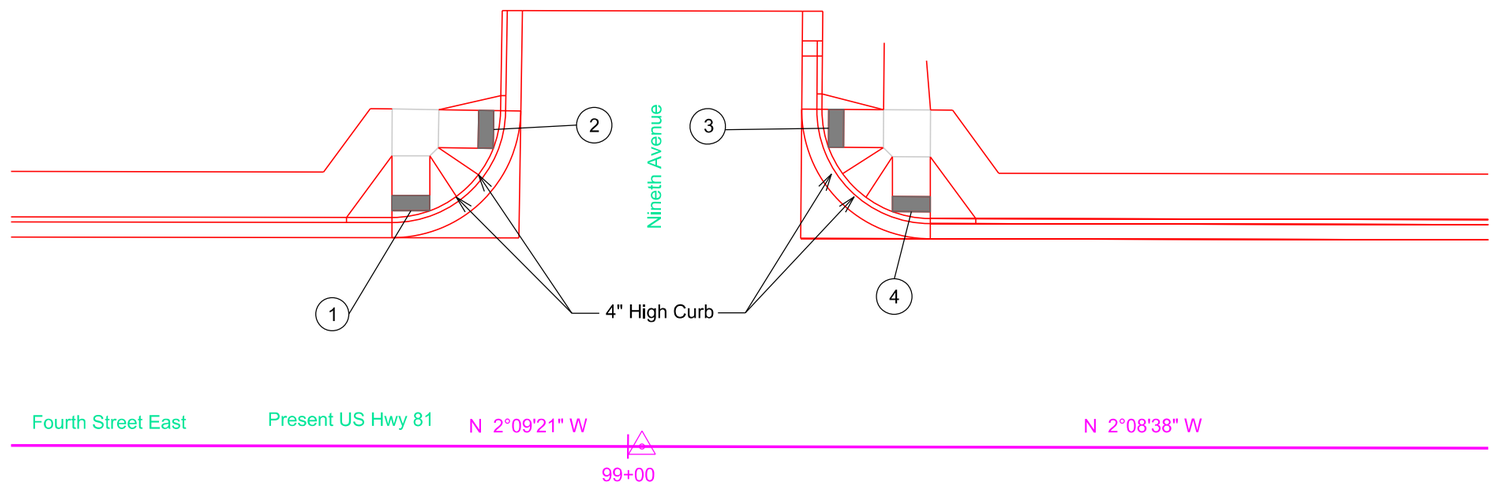

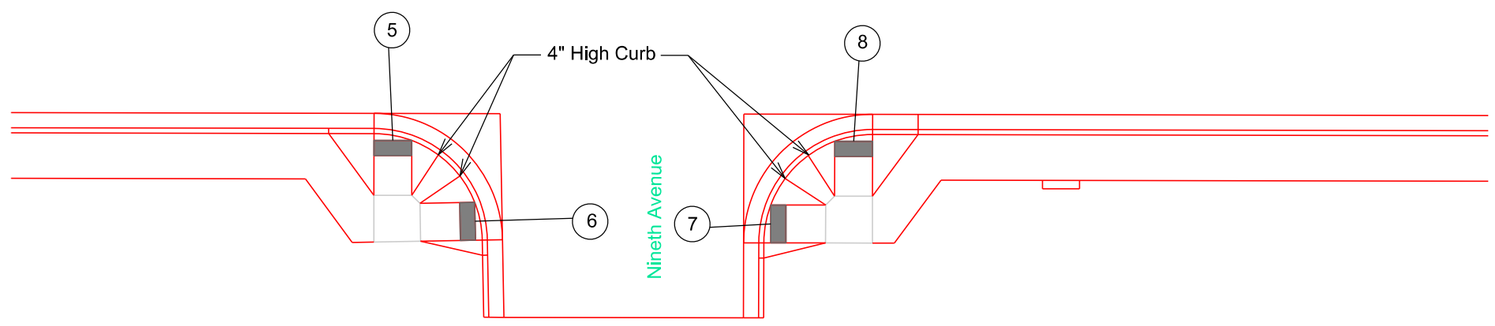

5 98+69.02-31.07'R
Center of Detectable Warning
& Type 2 Curb Ramp

6 98+79.89-41.73'R
Center of Detectable Warning
& Type 2 Curb Ramp

7 99+18.93-42.00'R
Center of Detectable Warning
& Type 2 Curb Ramp

8 99+29.86-32.07'R
Center of Detectable Warning
& Type 2 Curb Ramp

Legend:
* Turning Space with 2.0%(max) slope
** Curb Ramp with 8.33%(max) slope
and 2.0%(max) cross slope
Detectable Warning

Plot Scale - 1:20
Plotted From - TRSF12139
File - U:\rdi\prj\coadn\026X\099cr.dgn

CURB RAMP LAYOUT

STATE OF SOUTH DAKOTA	PROJECT	SHEET	TOTAL SHEETS
	P 0081(93)157	B80	B120

Plotting Date: 09/01/2015

1 102+22.28-33.03'L
Center of Detectable Warning
& Type 2 Curb Ramp

2 102+33.24-43.79'L
Center of Detectable Warning
& Type 2 Curb Ramp

3 102+78.97-42.07'L
Center of Detectable Warning
& Type 2 Curb Ramp

4 102+88.61-32.65'L
Center of Detectable Warning
& Type 3 Curb Ramp

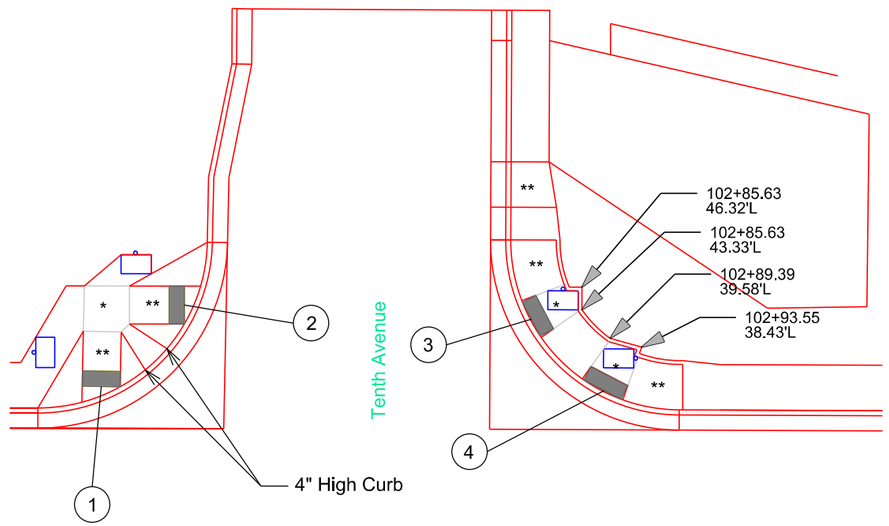

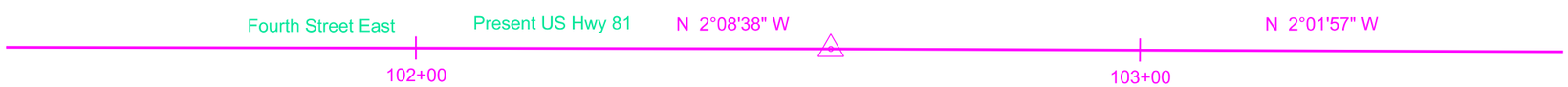

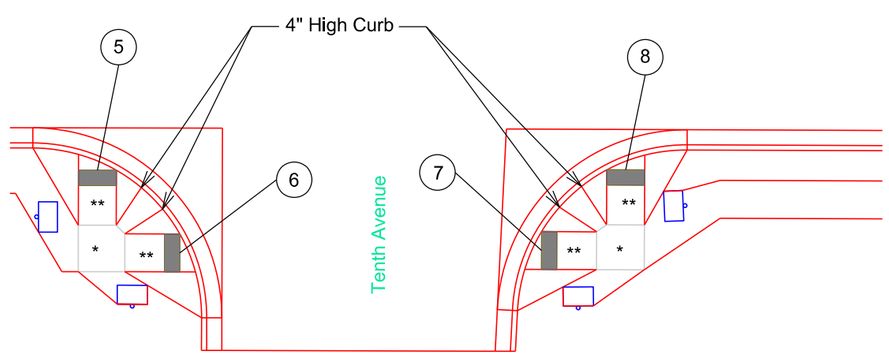

5 102+21.92-33.09'R
Center of Detectable Warning
& Type 2 Curb Ramp

6 102+32.79-43.98'R
Center of Detectable Warning
& Type 2 Curb Ramp

7 102+80.65-43.52'R
Center of Detectable Warning
& Type 2 Curb Ramp

8 102+91.73-32.84'R
Center of Detectable Warning
& Type 2 Curb Ramp

Legend:
Turning Space with 2.0%(max) slope
* Curb Ramp with 8.33%(max) slope
** and 2.0%(max) cross slope
Detectable Warning
Pedestrian Push Button Pole
and 30" x 48" Clear Space
with 1.5% slope

Plot Scale - 1:20
Plotted From - TRSF12139
File - U:\rdprj\codh\026X\102cr.dgn

CURB RAMP LAYOUT

STATE OF SOUTH DAKOTA	PROJECT	SHEET	TOTAL SHEETS
	P 0081(93)157	B81	B120

Plotting Date: 09/01/2015

1 104+43.17-30.17'L
Center of Detectable Warning
& Type 3 Curb Ramp

2 104+74.42-45.97'L
Center of Detectable Warning
& Type 2 Curb Ramp

3 105+21.67-45.97'L
Center of Detectable Warning
& Type 2 Curb Ramp

4 105+39.60-30.74'L
Center of Detectable Warning
& Type 2 Curb Ramp

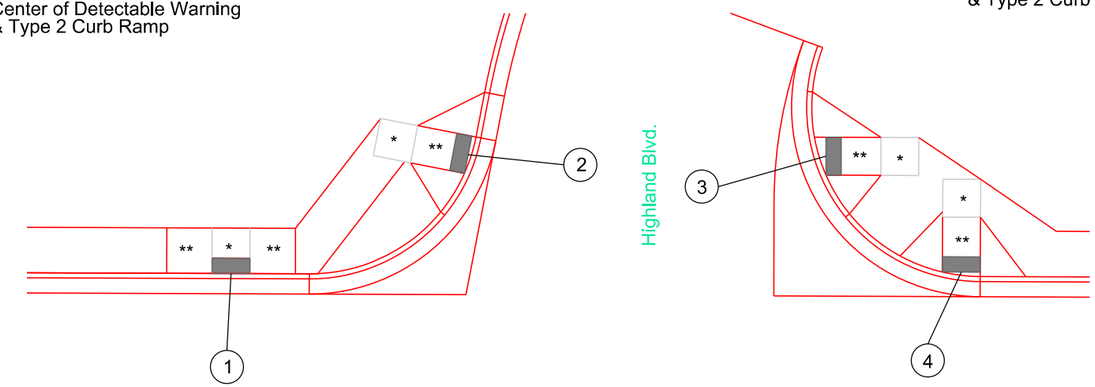

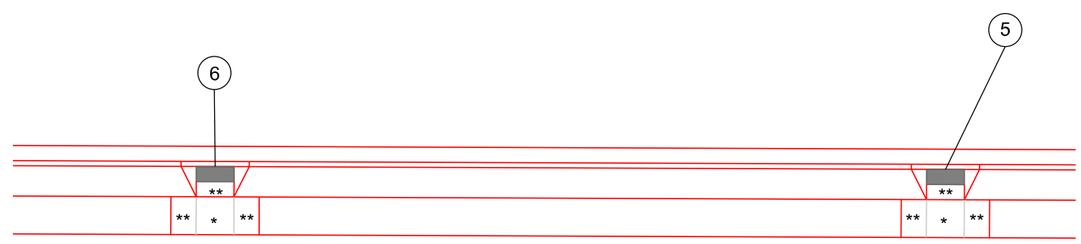

6 104+43.17.17'R
Center of Detectable Warning
& Type 1 Curb Ramp

5 105+39.60-30.17'R
Center of Detectable Warning
& Type 1 Curb Ramp

Legend:
* Turning Space with 2.0%(max) slope
** Curb Ramp with 8.33%(max) slope and 2.0%(max) cross slope
Detectable Warning

Plot Scale - 1:20
Plotted From - TRSF12139
File - U:\traprj\cadh\026X\105cr.dgn

CURB RAMP LAYOUT

STATE OF SOUTH DAKOTA	PROJECT	SHEET	TOTAL SHEETS
	P 0081(93)157	B82	B120

Plotting Date: 09/01/2015

1 108+71.04-31.07'L
Center of Detectable Warning
& Type 2 Curb Ramp

2 108+81.97-42.03'L
Center of Detectable Warning
& Type 2 Curb Ramp

3 109+26.02-41.93'L
Center of Detectable Warning
& Type 2 Curb Ramp

4 109+36.93-31.07'L
Center of Detectable Warning
& Type 2 Curb Ramp

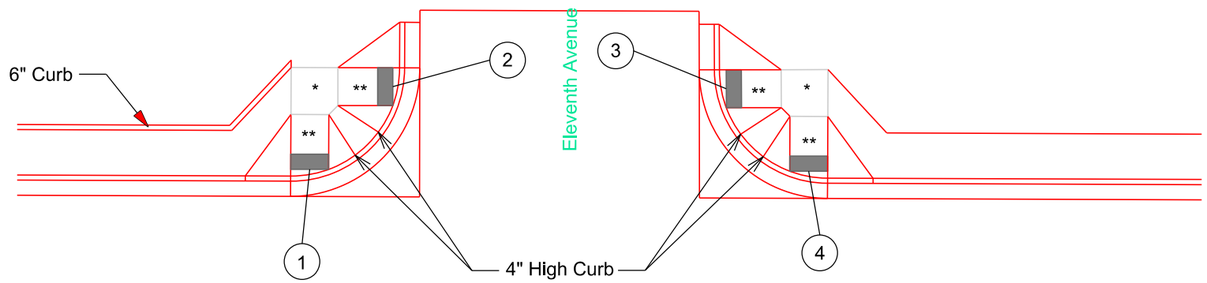

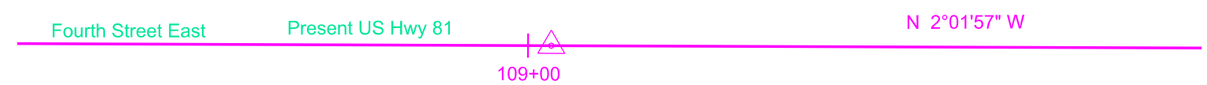

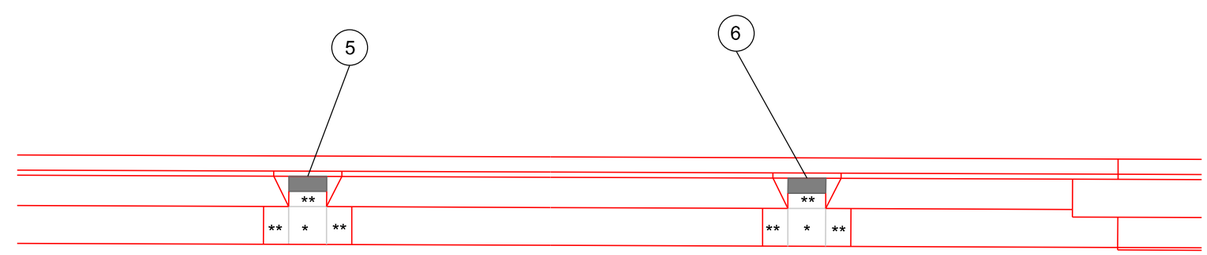

5 108+71.04-30.17'R
Center of Detectable Warning
& Type 1 Curb Ramp

6 109+36.93-30.17'R
Center of Detectable Warning
& Type 1 Curb Ramp

Legend:
* Turning Space with 2.0%(max) slope
** Curb Ramp with 8.33%(max) slope and 2.0%(max) cross slope
Detectable Warning

Plot Scale - 1:20
Plotted From - TRSF12139
File - U:\rdprj\codn026X\109cr.dgn

CURB RAMP LAYOUT

STATE OF SOUTH DAKOTA	PROJECT	SHEET	TOTAL SHEETS
	P 0081(93)157	B83	B120

Plotting Date: 09/01/2015

1 115+27.64-30.17'L
Center of Detectable Warning
& Type 3 Curb Ramp

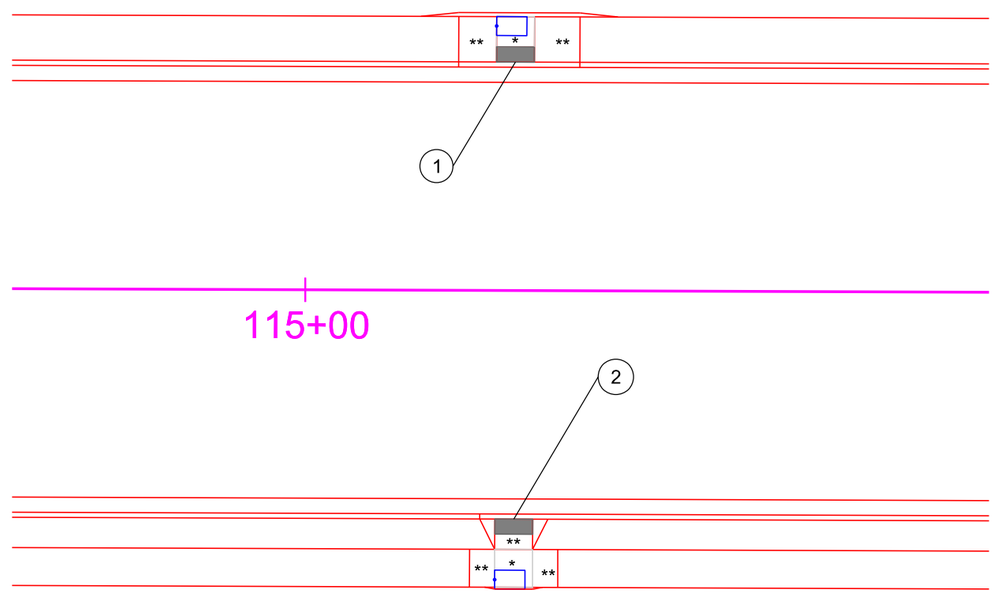

2 115+27.64-30.17'R
Center of Detectable Warning
& Type 1 Curb Ramp

Legend:

Turning Space with 2.0%(max) slope

* Curb Ramp with 8.33%(max) slope and 2.0%(max) cross slope

** Detectable Warning

Pedestrian Push Button Pole and 30" x 48" Clear Space with 1.5% slope

Plot Scale - 1:20
Plotted From - TRSF12139
File - U:\rdp\jcodn026X\115cr.dgn

CURB RAMP LAYOUT

STATE OF SOUTH DAKOTA	PROJECT	SHEET	TOTAL SHEETS
	P 0081(93)157	B84	B120

Plotting Date: 09/01/2015

1 118+43.69-31.07'L
Center of Detectable Warning
& Type 2 Curb Ramp

2 118+54.61-41.95'L
Center of Detectable Warning
& Type 2 Curb Ramp

3 118+97.21-42.02'L
Center of Detectable Warning
& Type 2 Curb Ramp

4 119+08.15-31.07'L
Center of Detectable Warning
& Type 2 Curb Ramp

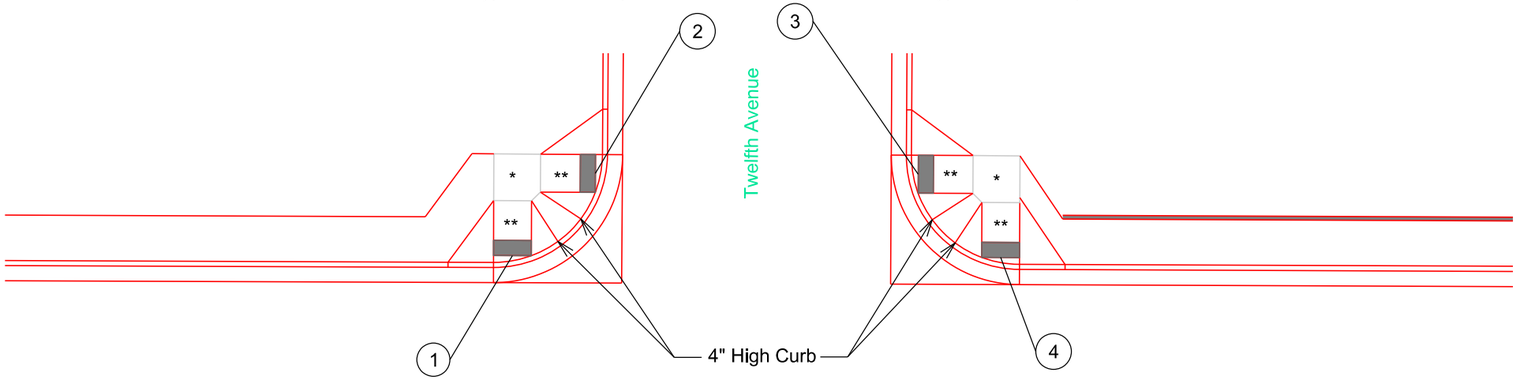

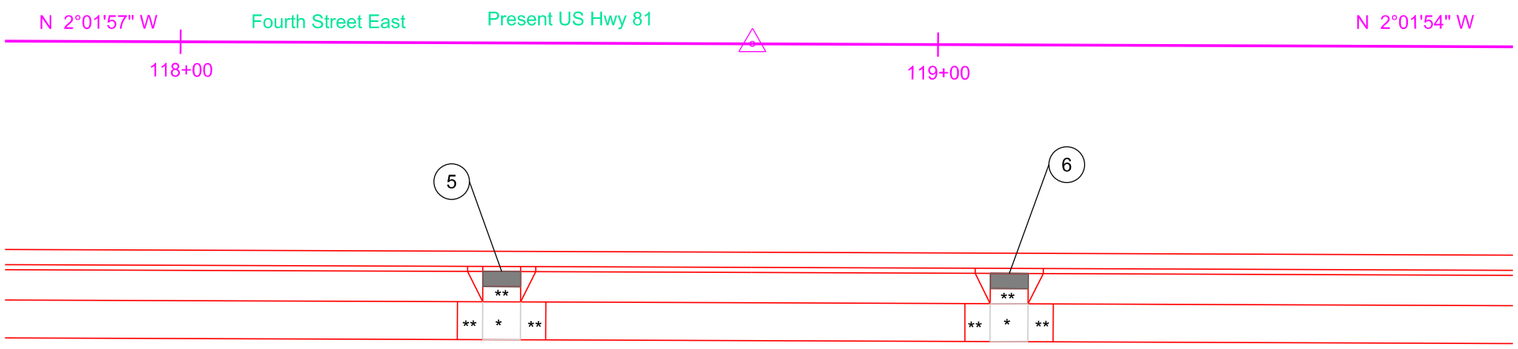

5 118+42.51-30.17'R
Center of Detectable Warning
& Type 1 Curb Ramp

6 119+09.52-30.17'R
Center of Detectable Warning
& Type 1 Curb Ramp

Legend:
* Turning Space with 2.0%(max) slope
** Curb Ramp with 8.33%(max) slope and 2.0%(max) cross slope
Detectable Warning

Plot Scale - 1:20
Plotted From - TRSF12139
File - U:\rdi\pjtcodn\026X\119cr.dgn

CURB RAMP LAYOUT

STATE OF SOUTH DAKOTA	PROJECT	SHEET	TOTAL SHEETS
	P 0081(93)157	B85	B120

Plotting Date: 09/01/2015

1 128+75.97-33.06'L
Center of Detectable Warning
& Type 2 Curb Ramp

2 128+86.88-43.93'L
Center of Detectable Warning
& Type 2 Curb Ramp

3 129+43.94-53.55'L
Center of Detectable Warning
& Type 1 Curb Ramp

4 129+57.87-37.61'L
Center of Detectable Warning
& Type 1 Curb Ramp

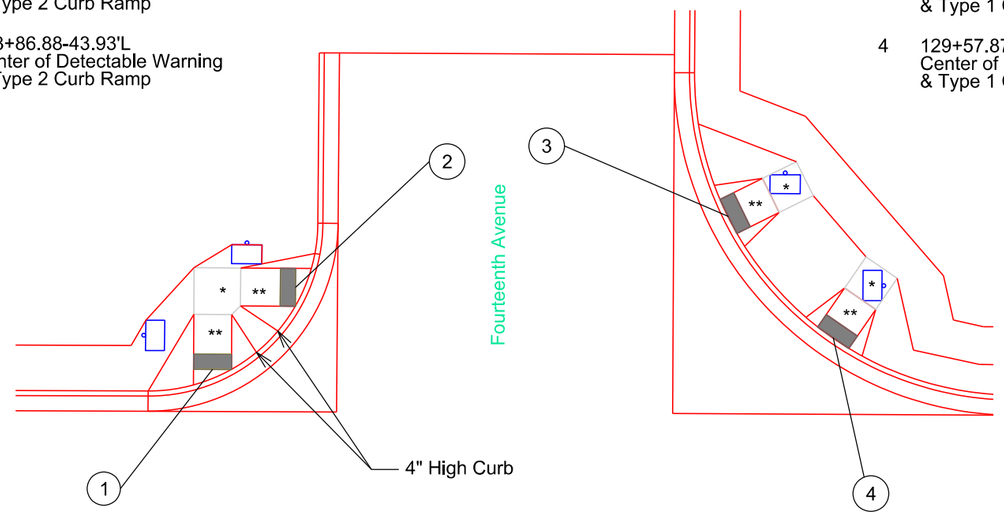

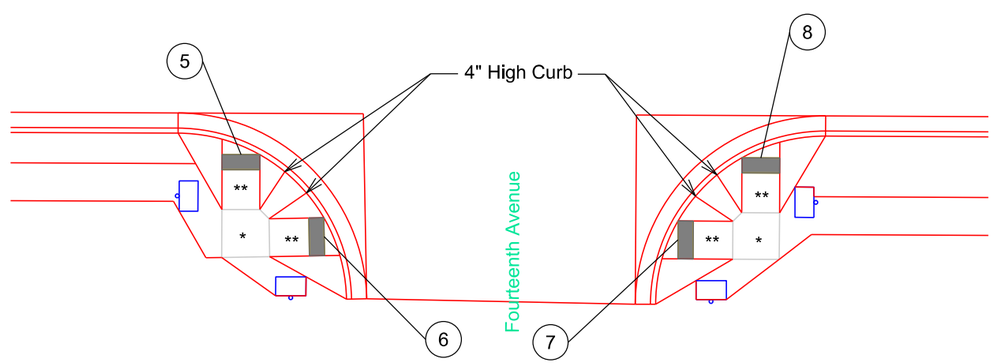

5 128+80.65-32.96'R
Center of Detectable Warning
& Type 2 Curb Ramp

6 128+91.68-43.75'R
Center of Detectable Warning
& Type 2 Curb Ramp

7 129+38.44-43.96'R
Center of Detectable Warning
& Type 2 Curb Ramp

8 129+49.33-33.08'R
Center of Detectable Warning
& Type 2 Curb Ramp

Legend:
Turning Space with 2.0%(max) slope
* Curb Ramp with 8.33%(max) slope
** and 2.0%(max) cross slope
Detectable Warning
Pedestrian Push Button Pole
and 30" x 48" Clear Space
with 1.5% slope

Plot Scale - 1:20
Plotted From - TRSF12139
File - U:\rdeph\codh026X1129cr.dgn

CURB RAMP LAYOUT

STATE OF SOUTH DAKOTA	PROJECT	SHEET	TOTAL SHEETS
	P 0081(93)157	B86	B120

Plotting Date: 09/01/2015

1 135+45.80-31.07'L
Center of Detectable Warning
& Type 2 Curb Ramp

2 135+56.76-42.20'L
Center of Detectable Warning
& Type 2 Curb Ramp

3 135+98.05-42.09'L
Center of Detectable Warning
& Type 2 Curb Ramp

4 136+09.29-31.08'L
Center of Detectable Warning
& Type 2 Curb Ramp

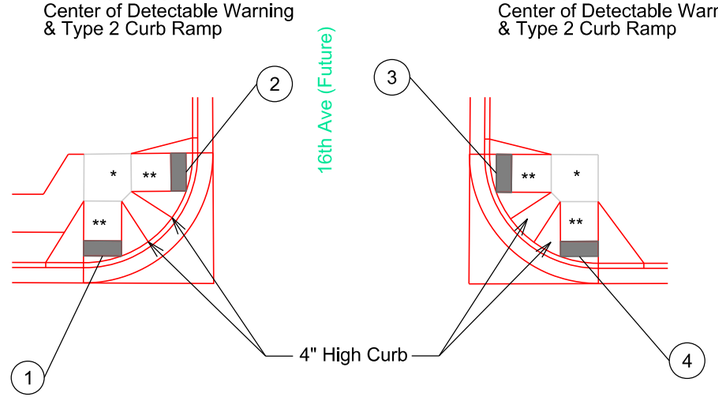

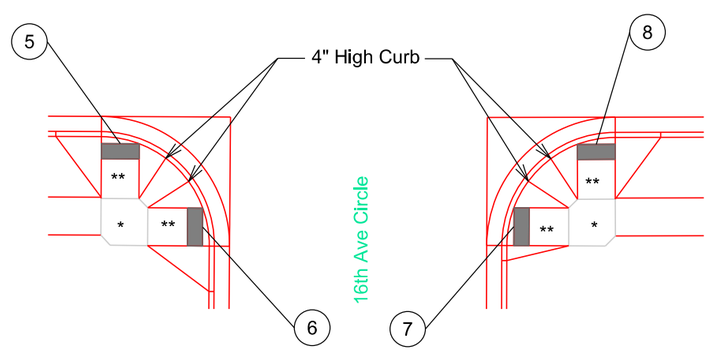

5 135+43.70-31.07'R
Center of Detectable Warning
& Type 2 Curb Ramp

6 135+54.63-42.03'R
Center of Detectable Warning
& Type 2 Curb Ramp

7 135+95.41-41.91'R
Center of Detectable Warning
& Type 2 Curb Ramp

8 136+06.32-31.07'R
Center of Detectable Warning
& Type 2 Curb Ramp

Legend:
* Turning Space with 2.0%(max) slope
** Curb Ramp with 8.33%(max) slope and 2.0%(max) cross slope
Detectable Warning

Plot Scale - 1:20
Plotted From - TRSF12139
File - U:\rd\prj\codh\026X\135cr.dgn

CURB RAMP LAYOUT

STATE OF SOUTH DAKOTA	PROJECT	SHEET	TOTAL SHEETS
	P 0081(93)157	B87	B120

Plotting Date: 09/01/2015

1 139+92.50-31.07'L
Center of Detectable Warning
& Type 2 Curb Ramp

2 140+03.43-42.00'L
Center of Detectable Warning
& Type 2 Curb Ramp

3 140+46.57-42.00'L
Center of Detectable Warning
& Type 2 Curb Ramp

4 140+57.50-31.07'L
Center of Detectable Warning
&Type 2 Curb Ramp

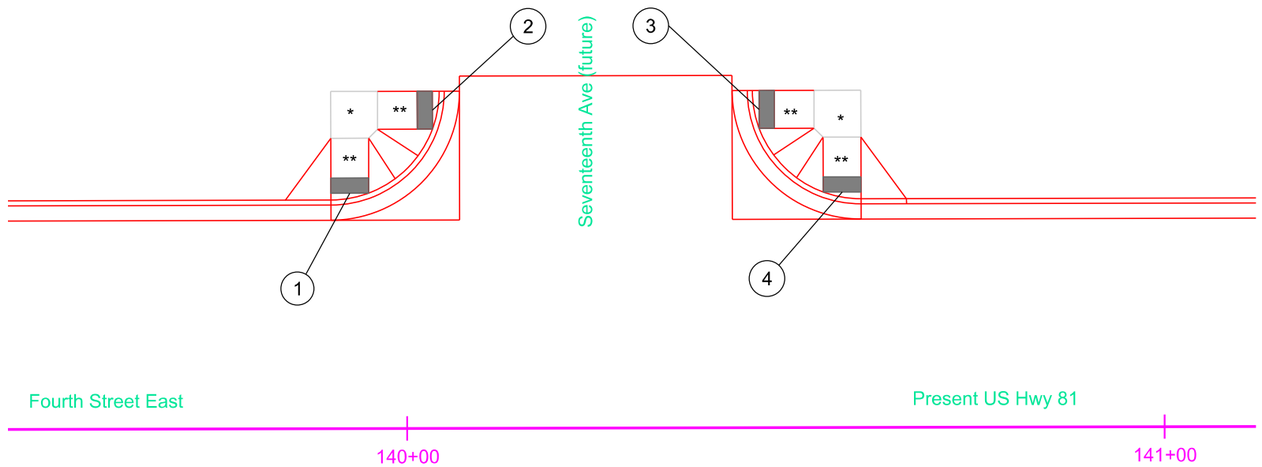

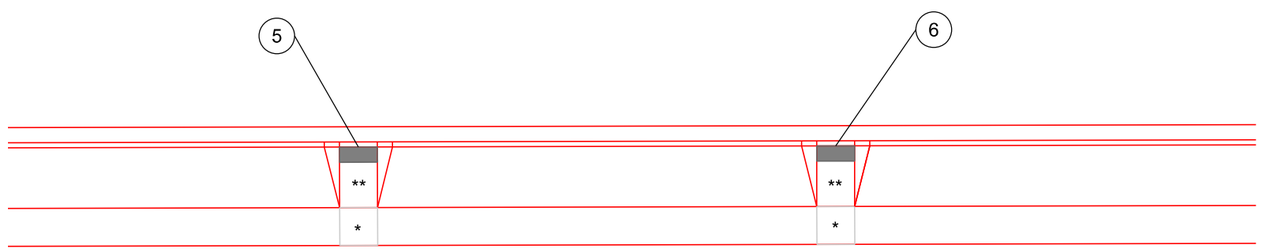

5 139+93.50-30.17'R
Center of Detectable Warning
&Type 1 Curb Ramp

6 140+56.50-30.17'R
Center of Detectable Warning
& Type 1 Curb Ramp

Legend:
* Turning Space with 2.0%(max) slope
** Curb Ramp with 8.33%(max) slope and 2.0%(max) cross slope
Detectable Warning

Plot Scale - 1:20
Plotted From - TRSF12139
File - U:\rdprj\cdot\026X\140cr.dgn

CURB RAMP LAYOUT

STATE OF SOUTH DAKOTA	PROJECT	SHEET	TOTAL SHEETS
	P 0081(93)157	B88	B120

Plotting Date: 09/01/2015

1 144+44.36-31.07'L
Center of Detectable Warning
& Type 2 Curb Ramp

2 144+55.29-42.00'L
Center of Detectable Warning
& Type 2 Curb Ramp

3 144+96.43-42.00'L
Center of Detectable Warning
& Type 2 Curb Ramp

4 145+07.36-31.07'L
Center of Detectable Warning
& Type 2 Curb Ramp

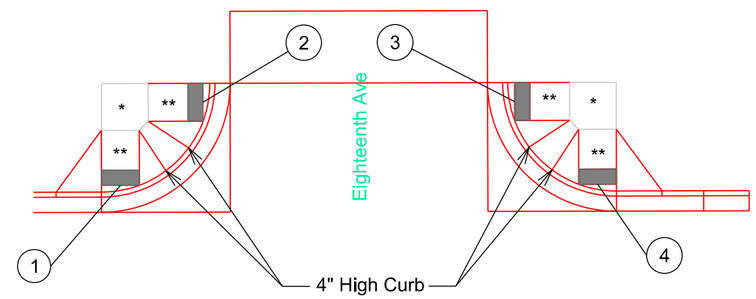

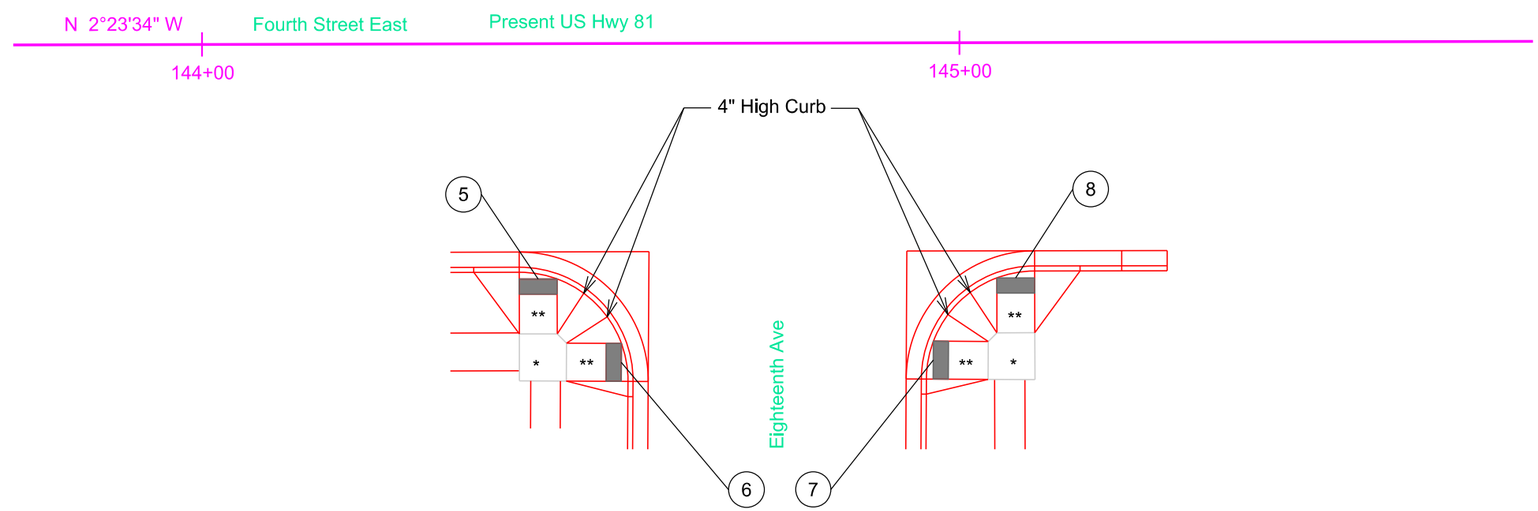

5 144+44.31-31.07'R
Center of Detectable Warning
& Type 2 Curb Ramp

6 144+55.26-42.11'R
Center of Detectable Warning
& Type 2 Curb Ramp

7 144+96.45-41.90'R
Center of Detectable Warning
&Type 2 Curb Ramp

8 145+07.36-31.07'R
Center of Detectable Warning
& Type 2 Curb Ramp

Legend:
* Turning Space with 2.0%(max) slope
** Curb Ramp with 8.33%(max) slope and 2.0%(max) cross slope
Detectable Warning

Plot Scale - 1:20
Plotted From - TRSF12139
File - U:\rdproj\cadn026X\145cr.dgn

STATE OF SOUTH DAKOTA	PROJECT	SHEET	TOTAL SHEETS
	P 0081(93)157	B89	B120

Plotting Date: 09/01/2015

TYPE C RETAINING WALL LAYOUT

Sta 119+16 to Sta 120+58

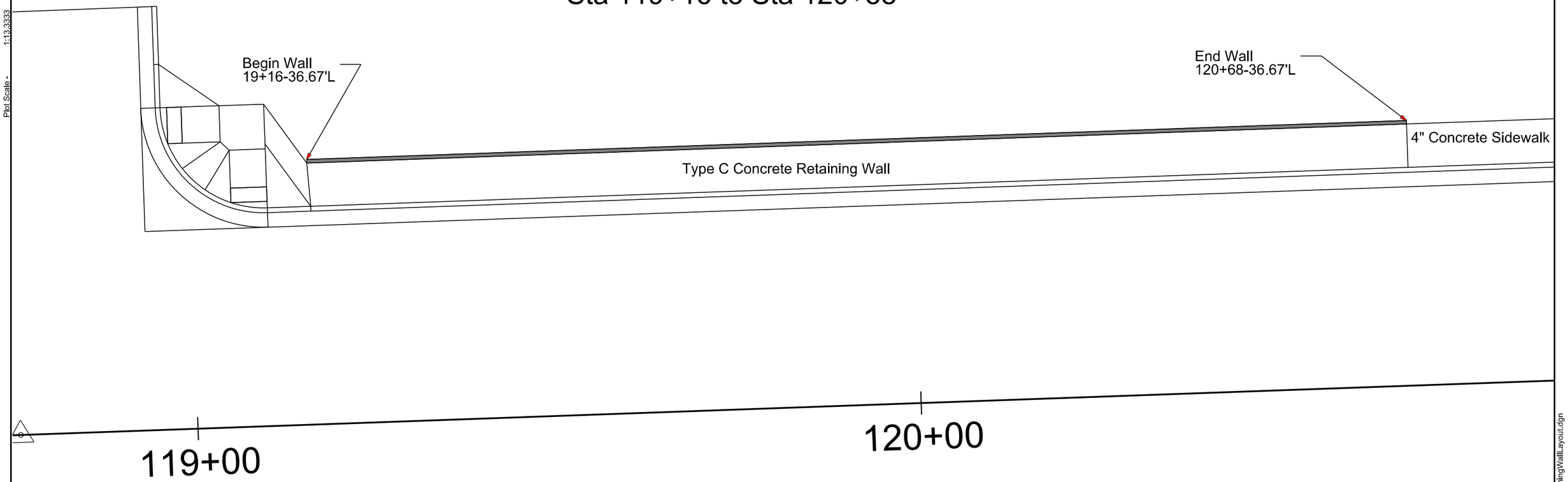

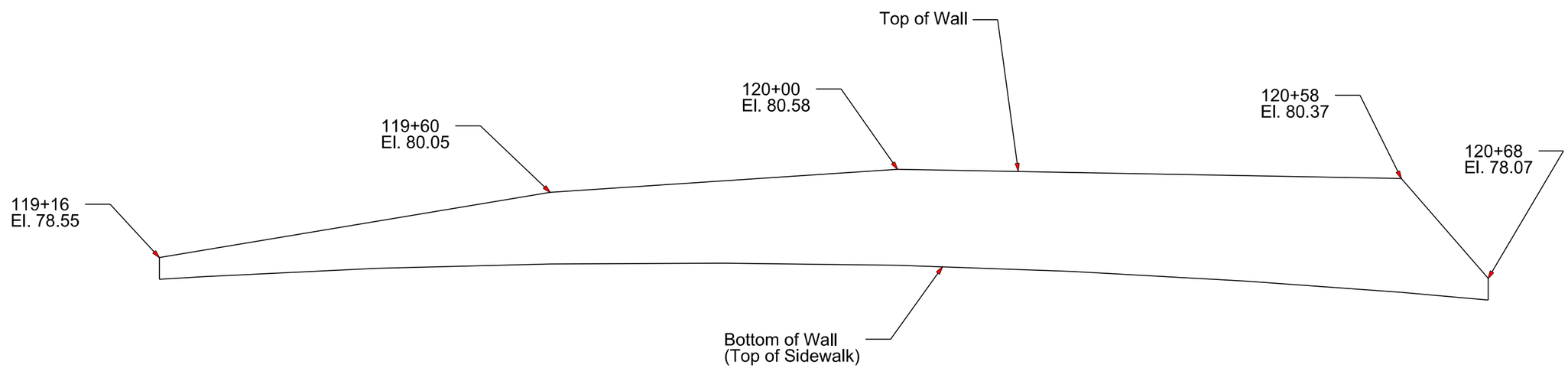

Plot Scale - 1:13.3333

Plotted From - TRSF12139

File - ...\TypeCRetainingWallLayout.dgn

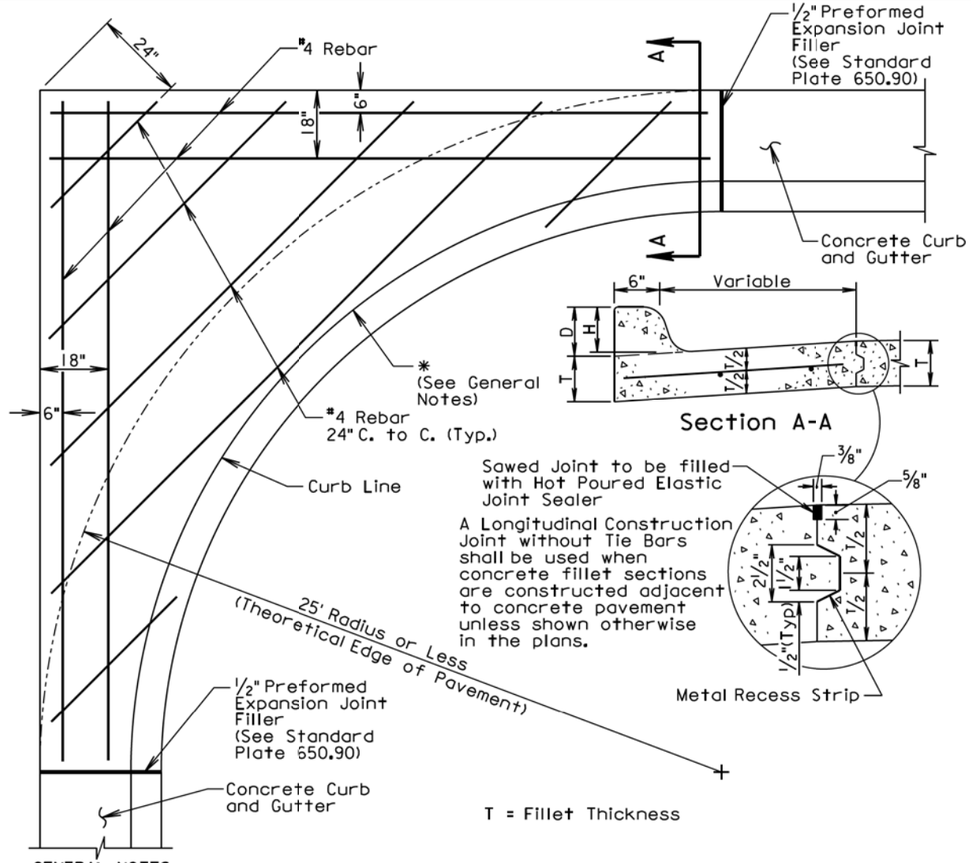

GENERAL NOTES:

* If a curb ramp is constructed adjacent to a PCC fillet section, the curb will need to be modified. Refer to the corresponding curb ramp standard plate or other special details in the plans for modification of the PCC fillet section.

Dimensions D, H, and T shall conform to those shown on the appropriate curb and gutter standard plate.

All rebar shall be in conformance with Sections 480 and 1010 of the Specifications. All rebar shall have a minimum of 3" clear cover.

Class M6 Concrete shall be used in construction of the fillets.

The concrete curb shall be monolithic with the concrete fillet. No separate payment for this curb will be made as the curb is considered a part of the fillet.

Joints shall be constructed at 10' intervals except when fillets are constructed adjacent to PCC Pavement. If there is adjacent PCC Pavement the joints shall be extended from edge of pavement through the fillet section as directed by the Engineer.

The cost for all materials, labor, and incidentals necessary to construct the PCC fillet section with curb and gutter shall be incidental to the contract unit price per square yard for the corresponding PCC fillet section bid item.

June 26, 2015

Published Date: 3rd Qtr. 2015	SDDOT	PCC FILLET SECTION WITH TYPE B CURB AND GUTTER	PLATE NUMBER 380.16
			Sheet 1 of 1

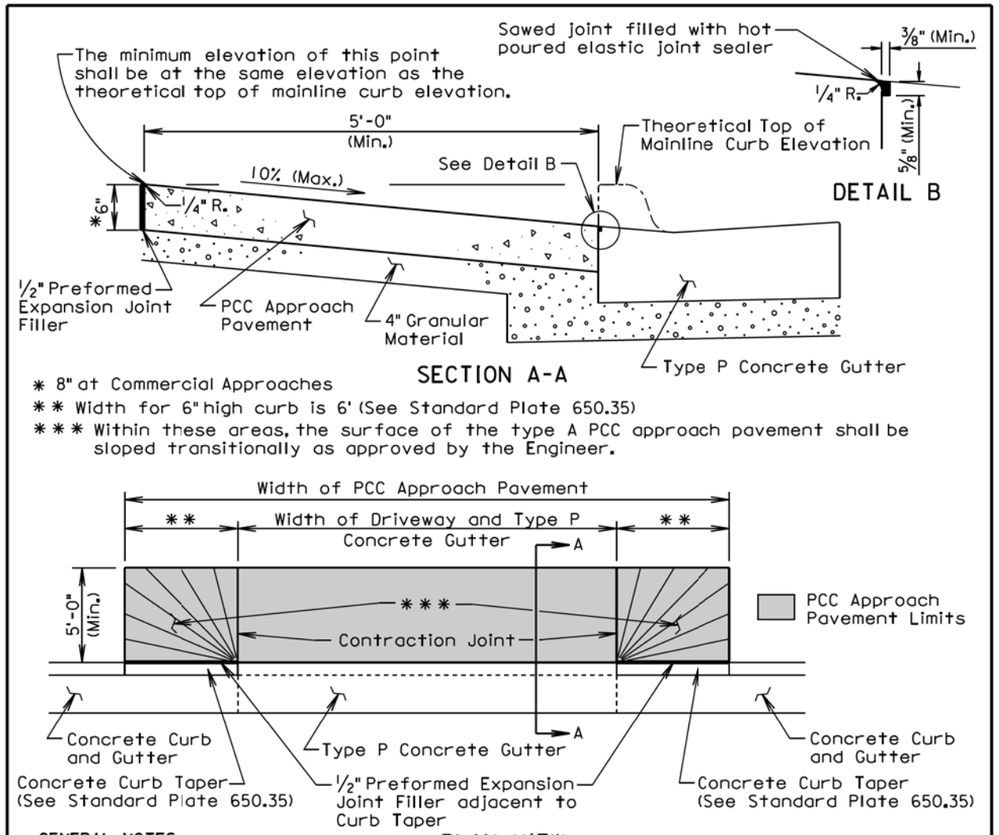

GENERAL NOTES:

The concrete for the type A PCC approach pavement and adjacent driveway shall comply with the requirements of the Specifications for class M6 concrete unless otherwise stated in the plans.

Contraction joints in the type A PCC approach pavement shall be 1 1/2 inches deep if formed in the fresh concrete using a suitable grooving tool. If a saw is used to cut the contraction joints, then the depth of the joint shall be at least 1/4 the thickness of the approach pavement. Additional contraction joints not shown in the Plan View shall be spaced as follows:

One joint at the center of the approach for driveways 16' to 24' wide.
Two joints spaced at equal intervals for driveways greater than 24' to 40' wide.

All costs for furnishing and placing the type A PCC approach pavement and constructing the expansion and contraction joints including labor, equipment, and materials including the earthen backfill shall be incidental to the contract unit price per square yard for the corresponding PCC Approach Pavement bid item.

All costs for excavation required for placing the type A PCC approach pavement and granular material shall be incidental to the contract unit price per cubic yard for "Unclassified Excavation". All costs for furnishing and placing the granular material shall be incidental to the contract unit price per ton for the corresponding granular material bid item.

June 26, 2015

Published Date: 3rd Qtr. 2015	SDDOT	TYPE A PCC APPROACH PAVEMENT	PLATE NUMBER 380.40
			Sheet 1 of 1

Plot Scale - 1:200
- Plotted From - TRSF12139
File - ...\pn\codn026X\s38016s38040.dgn

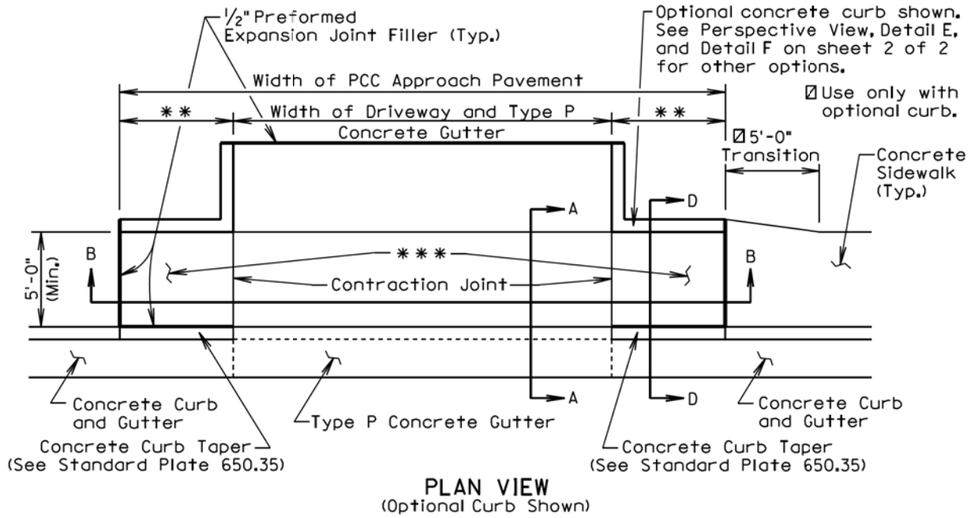

PLAN VIEW
(Optional Curb Shown)

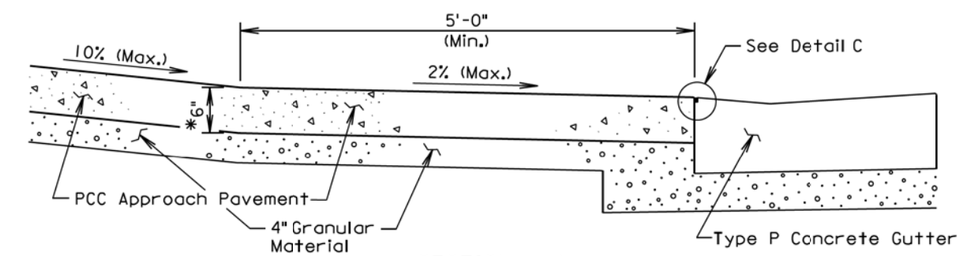

SECTION A-A

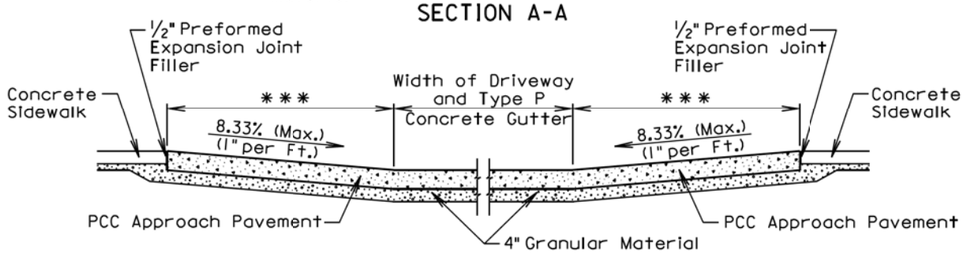

SECTION B-B

* 8" at Commercial Approaches

** Width for 6" high curb is 6' (See Standard Plate 650.35)

*** The slope of the type B PCC approach pavement in these areas shall match the slope of the concrete curb taper. The slope shall not be steeper than a 1" per foot slope.

June 26, 2015

Published Date: 3rd Qtr. 2015	SDDOT	TYPE B PCC APPROACH PAVEMENT	PLATE NUMBER 380.41
			Sheet 1 of 2

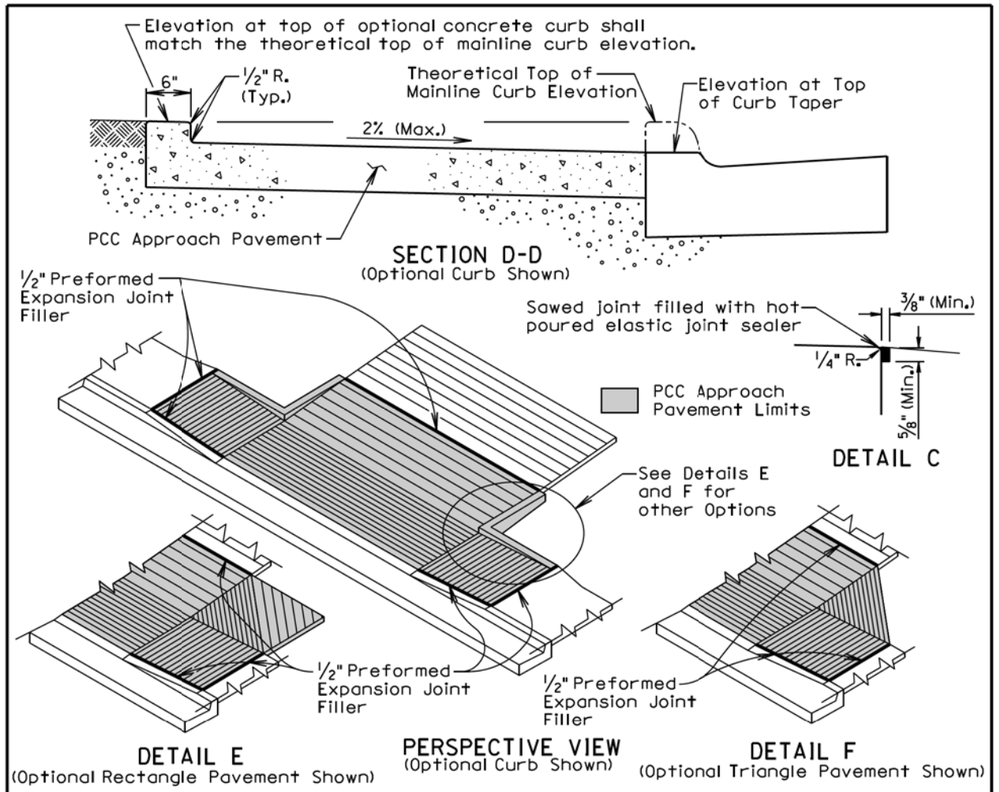

GENERAL NOTES:

Use the plan specified option for the pavement adjacent to the driveway and sidewalk. The options are shown above in the Perspective View, Detail E, and Detail F.

The concrete for the type B PCC approach pavement and adjacent driveway shall comply with the requirements of the Specifications for class M6 concrete unless otherwise stated in the plans.

Contraction joints in the type B PCC approach pavement shall be 1½ inches deep if formed in the fresh concrete using a suitable grooving tool. If a saw is used to cut the contraction joints, then the depth of the joint shall be at least ¼ the thickness of the approach pavement. Additional contraction joints not shown in the Plan View shall be spaced as follows:

One joint at the center of the approach for driveways 16' to 24' wide.
Two joints spaced at equal intervals for driveways greater than 24' to 40' wide.

All costs for furnishing and placing the type B PCC approach pavement and constructing the expansion and contraction joints including labor, equipment, and materials including the earthen backfill shall be incidental to the contract unit price per square yard for the corresponding PCC Approach Pavement bid item.

All costs for excavation required for placing the type B PCC approach pavement and granular material shall be incidental to the contract unit price per cubic yard for "Unclassified Excavation". All costs for furnishing and placing the granular material shall be incidental to the contract unit price per ton for the corresponding granular material bid item.

June 26, 2015

Published Date: 3rd Qtr. 2015	SDDOT	TYPE B PCC APPROACH PAVEMENT	PLATE NUMBER 380.41
			Sheet 2 of 2

Plot Scale - 1:200
- Plotted From - TRSF12139
File - ...\codh026X\s38041_1s38041_2.dgn

TOLERANCES IN DIMENSIONS

Diameter: ±1.5% for 24" Dia. or less and ±1% or 3/8" whichever is more for 27" Dia. or greater.
Diameters at joints: ± 3/16" for 30" Dia. or less and ± 1/4" for 36" or greater.
Length of joint (j): ± 1/4".
Wall thickness (T): not less than design T by more than 5% or 3/16", whichever is greater.
Laying length: shall not underrun by more than 1/2".

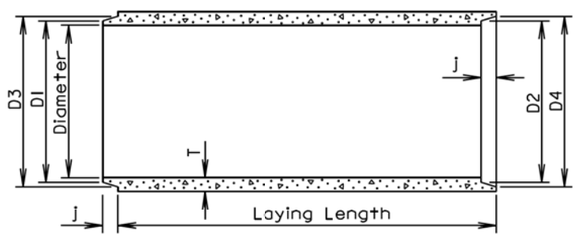

LONGITUDINAL SECTION

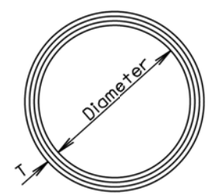

END VIEW

GENERAL NOTES:

Construction of R. C. P. shall conform to the requirements of Section 990 of the Specifications.

Not more than 2 four-foot sections shall be permitted near the ends of any culvert. Four-foot lengths shall be used only to secure the required length of culvert.

Diam. (in.)	Approx. Wt./Ft. (lb.)	T (in.)	J (in.)	D1 (in.)	D2 (in.)	D3 (in.)	D4 (in.)
12	92	2	1 3/4	13 1/4	13 5/8	13 7/8	14 1/4
15	127	2 1/4	2	16 1/2	16 7/8	17 1/4	17 5/8
18	168	2 1/2	2 1/4	19 5/8	20	20 3/8	20 3/4
21	214	2 3/4	2 1/2	22 7/8	23 1/4	23 3/4	24 1/8
24	265	3	2 3/4	26	26 3/8	27	27 3/8
27	322	3 1/4	3	29 1/4	29 5/8	30 1/4	30 5/8
30	384	3 1/2	3 1/4	32 3/8	32 3/4	33 1/2	33 7/8
36	524	4	3 3/4	38 3/4	39 1/4	40	40 1/2
42	685	4 1/2	4	45 1/8	45 5/8	46 1/2	47
48	867	5	4 1/2	51 1/2	52	53	53 1/2
54	1070	5 1/2	4 1/2	57 7/8	58 3/8	59 3/8	59 7/8
60	1296	6	5	64 1/4	64 3/4	66	66 1/2
66	1542	6 1/2	5 1/2	70 5/8	71 1/8	72 1/2	73
72	1810	7	6	77	77 1/2	79	79 1/2
78	2098	7 1/2	6 1/2	83 3/8	83 7/8	85 5/8	86 1/8
84	2410	8	7	89 3/4	90 1/4	92 1/8	92 5/8
90	2740	8 1/2	7	95 3/4	96 1/4	98 1/8	98 5/8
96	2950	9	7	102 1/8	102 5/8	104 1/2	105
102	3075	9 1/2	7 1/2	109	109 1/2	111 1/2	112
108	3870	10	7 1/2	115 1/2	116	118	118 1/2

June 26, 2015

Published Date: 3rd Qtr. 2015

SDDOT

REINFORCED CONCRETE PIPE

PLATE NUMBER 450.01

Sheet 1 of 1

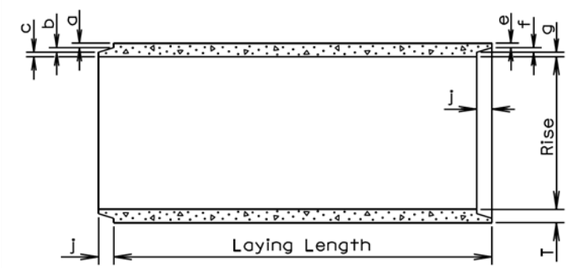

LONGITUDINAL SECTION

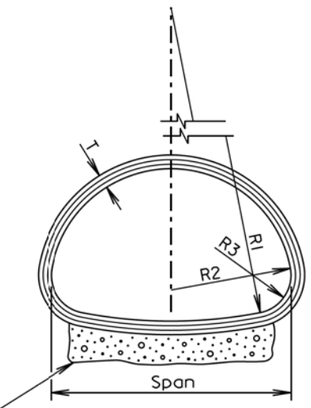

END VIEW

TOLERANCES IN DIMENSIONS

Radial dimensions at joints: ± 1/8" for 65" span or less and ± 1/4" for longer spans.
Rise and Span: ±2% of tabular values.
Length of Joint (J): ± 1/4".
Wall thickness (T): not less than design T by more than 5% or 3/16", whichever is greater.
Laying length: shall not underrun by more than 1/2".

Gravel Bedding Material shall be supplied for 102" to 169" spans. It shall be placed to a thickness of 6" (Min.) x 85% of the Span x Length of culvert and shall conform to the gradation requirements for gravel surfacing except material may be screened or may be plan provided material.

* Size (in.)	Approx. Wt./Ft. (lb.)	Rise (in.)	Span (in.)	T (in.)	a (in.)	b (in.)	c (in.)	j (in.)	e (in.)	f (in.)	g (in.)	R1 (in.)	R2 (in.)	R3 (in.)
18	170	13 1/2	22	2 1/2	1 3/8	3/8	3/4	2	1 1/8	3/8	1	27 1/2	13 3/4	5 1/4
24	320	18	28 1/2	3 1/2	1 5/8	1/2	1 3/8	3	1 3/8	1/2	1 5/8	40 11/16	14 3/4	4 5/8
30	450	22 1/2	36 1/4	4	1 13/16	5/8	1 9/16	3 1/2	1 9/16	5/8	1 13/16	51	18 3/4	6 1/8
36	600	26 5/8	43 3/4	4 1/2	2	3/4	1 3/4	4	1 3/4	3/4	2	62	22 1/2	6 1/2
42	740	31 5/16	51 1/8	4 1/2	2	3/4	1 3/4	4	1 3/4	3/4	2	73	26 1/4	7 3/4
48	890	36	58 1/2	5	2 1/4	3/4	2	5	2	3/4	2 1/4	84	30	8 7/8
54	1100	40	65	5 1/2	2 1/2	3/4	2 1/4	5	2 1/4	3/4	2 1/2	92 1/2	33 3/8	10
60	1400	45	73 1/2	6	3 5/16	3/4	1 15/16	5	2 3/4	3/4	2 1/2	105	37 1/2	11
72	1900	54	88	7	3 13/16	1	2 3/16	6	3 1/4	1	2 3/4	126	45	13 5/16
84	2500	62	102	8	4 1/8	1	2 7/8	6	3 1/2	1	3 1/2	162 1/2	52	14 1/2
96	3300	78	122 3/8	9	4 1/2	1	3 1/2	7	4	1	4	218	62	20
108	4200	88	138 1/2	10	5	1	4	7	4 1/2	1	4 1/2	269	70	22
120	5100	96 7/8	154	11	5 1/2	1	4 1/2	7	5	1	5	301 3/8	78	24
132	5100	106 1/2	168 3/4	10		1	4	7	4 1/2	1	4 1/2	329	85 5/8	26 7/8

* Equivalent Diameter of Circular R. C. P.

GENERAL NOTES:

Construction of R.C.P. Arch shall conform to the requirements of Section 990 of the Specifications. Not more than 2 four-foot sections shall be permitted near the ends of any culvert. Four-foot lengths shall be used only to secure the required length of culvert.

June 26, 2015

Published Date: 3rd Qtr. 2015

SDDOT

REINFORCED CONCRETE PIPE ARCH

PLATE NUMBER 450.02

Sheet 1 of 1

Plot Scale - 1:200
- Plotted From - TRSF12139
File - ...\prj\cadn\026X\s45001s45002.dgn

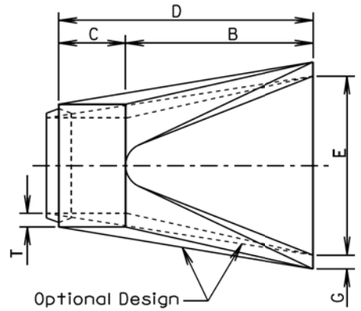

TOP VIEW

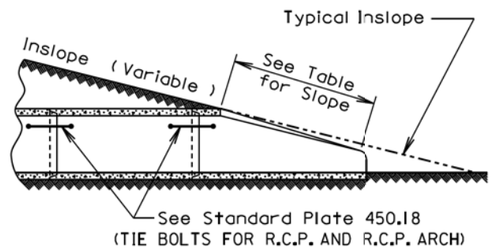

SLOPE DETAIL

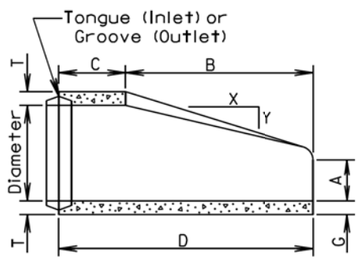

LONGITUDINAL SECTION

GENERAL NOTES:

Lengths of concrete pipe shown on plan sheets are between flared ends only.

Construction of R.C.P. Flared End shall conform to the requirements of Section 990 of the Specifications.

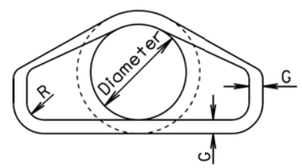

END VIEW

Dia. (in.)	Approx. Wt. of Section (lbs.)	Approx. Slope (X to Y)	T (in.)	A (in.)	B (in.)	C (in.)	D (in.)	E (in.)	G (in.)	R (in.)
12	530	2.4:1	2	4	24	48 7/8	72 7/8	24	2	1 1/2
15	740	2.4:1	2 1/4	6	27	46	73	30	2 1/4	1 1/2
18	990	2.3:1	2 1/2	9	27	46	73	36	2 1/2	1 1/2
21	1280	2.4:1	2 3/4	9	36	37 1/2	73 1/2	42	2 3/4	1 1/2
24	1520	2.5:1	3	9 1/2	43 1/2	30	73 1/2	48	3	1 1/2
27	1930	2.5:1	3 1/4	10 1/2	49 1/2	24	73 1/2	54	3 1/4	1 1/2
30	2190	2.5:1	3 1/2	12	54	19 3/4	73 3/4	60	3 1/2	1 1/2
36	4100	2.5:1	4	15	63	34 3/4	97 3/4	72	4	1 1/2
42	5380	2.5:1	4 1/2	21	63	35	98	78	4 1/2	1 1/2
48	6550	2.5:1	5	24	72	26	98	84	5	1 1/2
54	8240	2:1	5 1/2	27	65	33 1/4	98 1/4	90	5 1/2	1 1/2
60	8730	1.9:1	6	35	60	39	99	96	5	1 1/2
66	10710	1.7:1	6 1/2	30	72	27	99	102	5 1/2	1 1/2
72	12520	1.8:1	7	36	78	21	99	108	6	1 1/2
78	14770	1.8:1	7 1/2	36	90	21	111	114	6 1/2	1 1/2
84	18160	1.6:1	8	36	90 1/2	21	111 1/2	120	6 1/2	1 1/2
90	20900	1.5:1	8 1/2	41	87 1/2	24	111 1/2	132	6 1/2	6

June 26, 2015

Published Date: 3rd Qtr. 2015

SDDOT

R. C. P. FLARED ENDS

PLATE NUMBER 450.10

Sheet 1 of 1

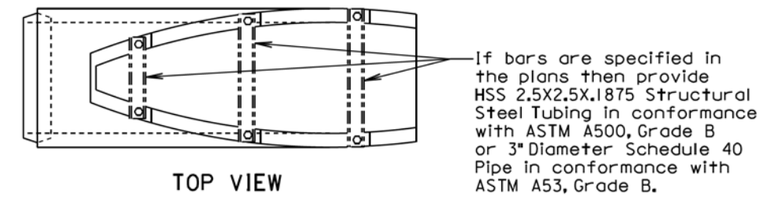

TOP VIEW

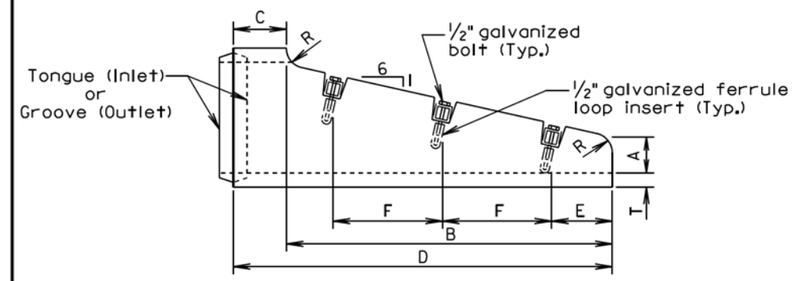

SIDE VIEW

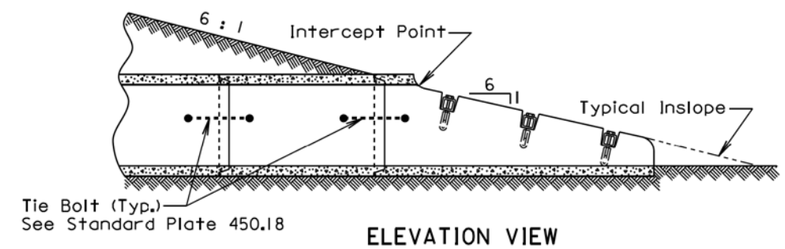

ELEVATION VIEW

Dia. (in.)	T (in.)	R (in.)	A (in.)	B (in.)	C (in.)	D (in.)	E (in.)	F (in.)	No. Sections	No. Bars
FOR CIRCULAR PIPE										
15	2 1/4	3	6	48	9	57	6	18	1	3
18	2 1/2	3	6	69	9	78	9	24	1	3
*24	3	3	6	111	9	120	6	24	1 or 2	5
FOR ARCH PIPE										
**18	2 1/2	1	6	39	33	72	6	24	1	2

*The use of 2 sections must be an approved design.
**Equivalent Diameter of Circular R. C. P.

GENERAL NOTES:

The length of concrete pipe shown on the plans is between safety ends.

Safety ends without bars are acceptable with or without the bar notches.

Bars shall be galvanized after fabrication in accordance with ASTM A123.

August 31, 2013

Published Date: 3rd Qtr. 2015

SDDOT

R. C. P. SAFETY ENDS WITH OR WITHOUT BARS

PLATE NUMBER 450.12

Sheet 1 of 1

Plot Scale - 1:200
- Plotted From - TRSF12139
File - ...\pn\codh026X\s450\0s450\2.dgn

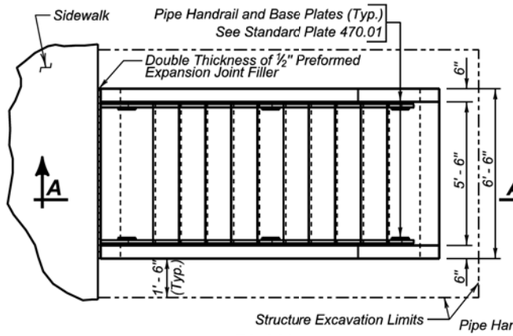

PLAN

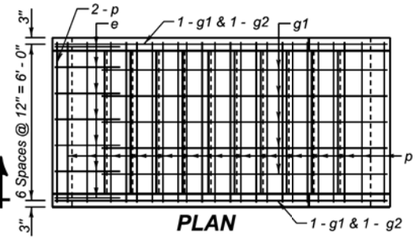

PLAN

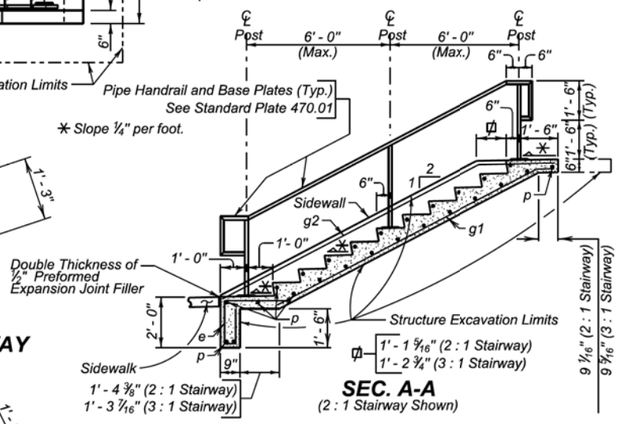

SEC. A-A
(2 : 1 Stairway Shown)

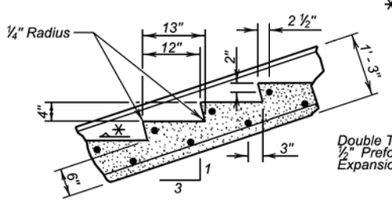

STEP DETAIL 3 : 1 STAIRWAY

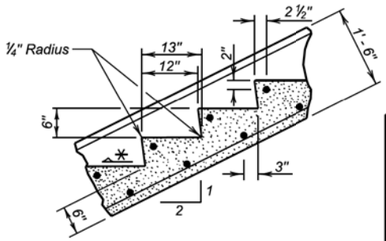

STEP DETAIL 2 : 1 STAIRWAY

REINFORCING SCHEDULE

	MK	△ No.	Size	△ Length	Type
2 : 1	e	7	4	5' - 8"	S12
	g1	7	4	1.12w + 2.0	19B
	g2	2	4	1.12w + 3.0	19B
	p	2w + 7	4	6' - 2"	Str
3 : 1	e	7	4	5' - 8"	S12
	g1	7	4	1.05w + 2.0	19B
	g2	2	4	1.05w + 3.7	19B
	p	2w + 7	4	6' - 2"	Str

Bending Details

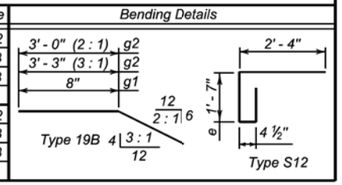

ESTIMATED QUANTITIES

ITEM	UNIT	△ QUANTITY 2 : 1 STAIRWAY	△ QUANTITY 3 : 1 STAIRWAY
Class M6 Concrete	Cu. Yd.	0.87 + 0.23w	0.83 + 0.19w
Structure Excavation (Misc.)	Cu. Yd.	1.79 + 0.59w	1.65 + 0.46w
Epoxy Coated Reinforcing Steel	Lb.	69.63 + 14.97w	69.63 + 14.55w
Pipe Handrail	Ft.	6.22 + 2.24w	6.10 + 2.10w

△ w = Number of steps NOT including landings (i. e. w = 9 in Sec. A-A).

GENERAL NOTES:

1. All concrete shall be Class M6 in accordance with Section 462.
2. All reinforcing steel shall be epoxy coated and shall conform to ASTM A615, Grade 60. Epoxy coating shall conform to ASTM A775.
3. Use 2 inch clear cover on all reinforcing steel except as shown.
4. All concrete shall be thoroughly tamped and spaded against forms to leave a smooth surface without honeycomb. Finish of step treads to be steel troweled and then brush finished with brush strokes on treads at right angles to width. All exposed edges shall be chamfered ¾ inch except as shown.
5. Place concrete on undisturbed soil. If backfilling is necessary, compact with mechanical tampers to the satisfaction of the Engineer.
6. The concrete sidewalk shall be constructed in accordance with Section 651.
7. Cost of the ½ inch Preformed Expansion Joint Filler shall be incidental to the contract unit price per cubic yard for "Class M6 Concrete".

SPECIAL NOTE:

Details for construction of the concrete stairway and handrails shown on this sheet are typical only, and are not intended to depict specific installations. Adjust the length of the stairway as required to fit specific site requirements. Use the formulas given on this sheet to adjust the unit price bid quantities to the required length of the stairway. Refer to project plans for requirements of individual locations. Alternate design details may be submitted through proper channels to the Office of Bridge Design for approval, including aluminum handrail installation.

August 8, 2014

Published Date: 3rd Qtr. 2015	SDDOT	CONCRETE STAIRWAY	PLATE NUMBER 460.31
			Sheet 1 of 1

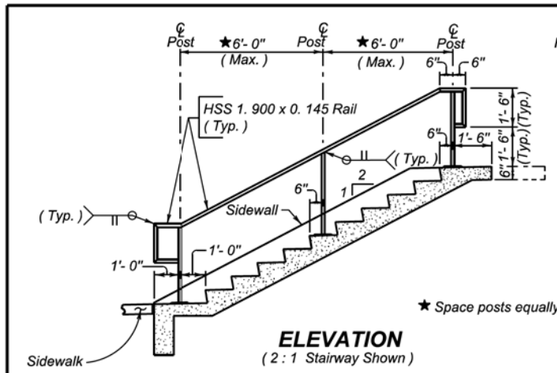

ELEVATION
(2 : 1 Stairway Shown)

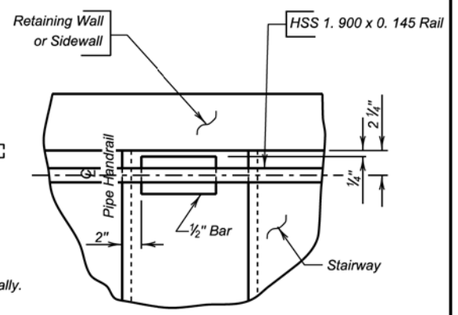

VIEW F - F

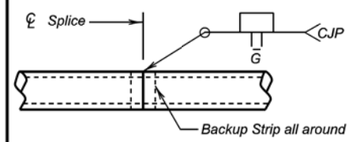

RAIL SPLICE DETAILS

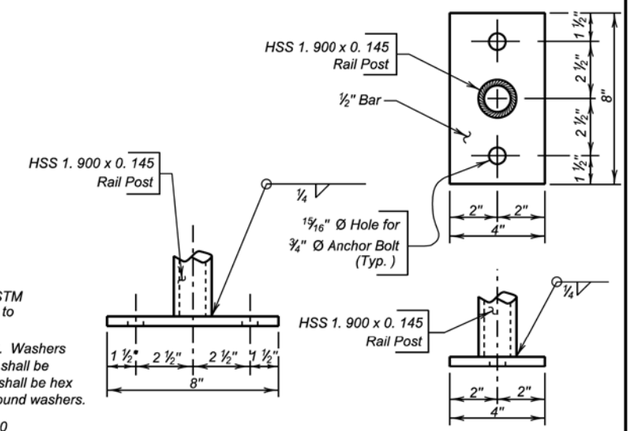

BASE PLATE DETAILS

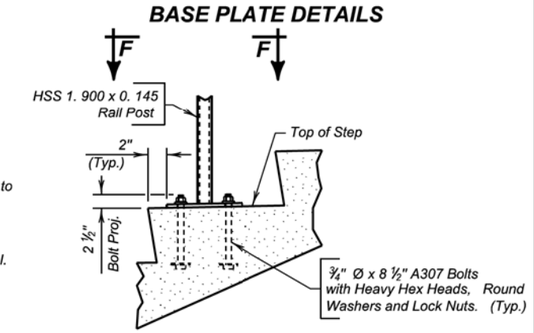

ANCHOR BOLT DETAIL

GENERAL NOTES:

1. All rail posts shall be built vertical.
2. Steel pipe for railing and posts shall conform to ASTM A500, Grade B. Railpost base plates shall conform to ASTM A709, Grade 36.
3. Anchor Bolts and nuts shall conform to ASTM A307. Washers shall be in accordance with ASTM F436. Hardware shall be galvanized in accordance with ASTM F2329. Bolts shall be hex head Structural type with heavy hex lock nuts and round washers.
4. All anchor bolts shall be tightened to a Torque of 120 ft-lbs (approximated without the use of a calibrated torque wrench).
5. Painting of steel railing shall be done in accordance with Section 411 of the Specifications. The finish color shall be Federal Standard 595B, color 27038 (semi-gloss black) unless stated otherwise in the plans.
6. Welding and weld inspection shall be done in accordance with AWS D1. 1-(Current Year) Structural Welding Code - Steel.
7. The cost of structural steel, anchor bolts, painting, galvanizing, fabrication and installation of the Pipe Handrail shall be incidental to welding, weld inspection and that which is incidental to the the contract unit price per foot for "Pipe Handrail".
8. Alternate rail designs, including aluminum rail, may be submitted through proper channels to the Office of Bridge Design for approval.

SHOP PLANS

The fabricator shall submit shop drawings in accordance with the Specifications.

June 26, 2015

Published Date: 3rd Qtr. 2015	SDDOT	STAIRWAY HANDRAIL	PLATE NUMBER 470.01
			Sheet 1 of 1

Plot Scale - 1:200
- Plotted From - TRSF12139
File - ...\pn\cadn026X\s46031s47001.dgn

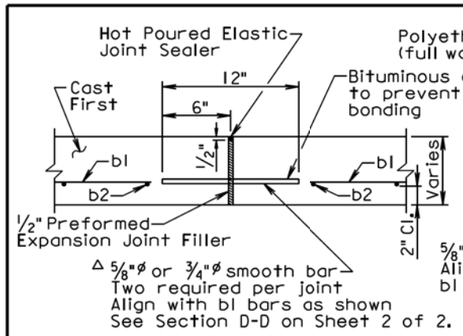

ELEVATION VIEW
EXPANSION JOINT FOR FOOTING

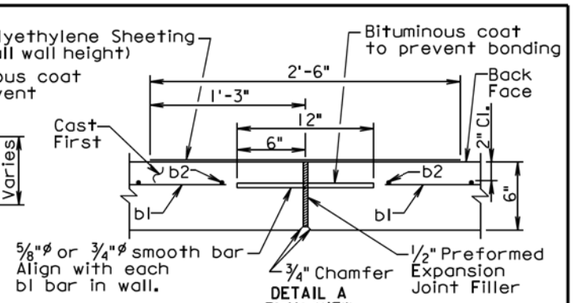

DETAIL A
PLAN VIEW
EXPANSION JOINT FOR WALL

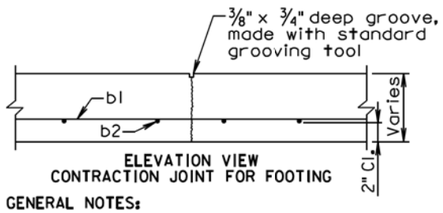

ELEVATION VIEW
CONTRACTION JOINT FOR FOOTING

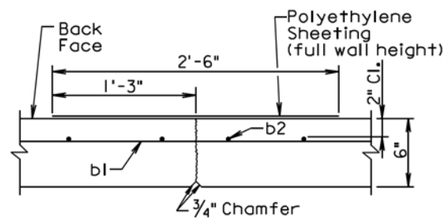

PLAN VIEW
CONTRACTION JOINT FOR WALL

GENERAL NOTES:

The Type C Concrete Retaining Wall shall be placed adjacent to pavement or curb and gutter as shown in Section D-D on sheet 2 of 2.

* The sidewalk width of the Type C Concrete Retaining Wall shall not be wider than 8 feet or narrower than 5 feet. See plans for specified width.

In the areas where the retaining wall footing is to be placed, a 2 inch thickness of cushion material shall be placed and compacted. The cushion material shall conform to Section 651.2 C. of the Specifications.

All concrete shall be Class M6 and conform to Section 462 of the Specifications.

All reinforcing steel shall be epoxy coated and shall conform to ASTM A615, Grade 60. The smooth bar may conform to ASTM A615, Grade 40. The epoxy coating shall conform to ASTM A775.

For variable height walls, the top b1 bar shall be placed parallel to the top of the wall.

The b1 bars shall be lapped a minimum of 12 inches.

A 3/4 inch chamfer shall be provided on all exposed retaining wall edges.

Use Detail B on sheet 2 of 2 for constructing corners in the retaining wall.

The maximum expansion joint spacing shall be 90 feet and the maximum contraction joint spacing shall be 30 feet. The contraction and expansion joints shall be placed to match pavement or curb joints where possible.

The exposed retaining wall surfaces shall receive a finish in accordance with 460.3 L. of the Specifications. The exposed surface of the retaining wall footing, when used as a sidewalk, shall receive a broom finish.

The Type C Concrete Retaining Wall shall be measured to the nearest square foot of front face area.

All costs for excavation, furnishing and placing backfill and cushion material, labor, equipment, preformed expansion joint filler, all reinforcing steel including the smooth bars, and all concrete except in the areas of PCC driveway and approach pavement, shall be incidental to the contract unit price per square foot for "Type C Concrete Retaining Wall".

The concrete used for the retaining wall footing that extends into the approach and/or driveway pavement shall be paid for at the contract unit price per square yard for the corresponding "PCC Approach Pavement" and/or "PCC Driveway Pavement" bid items. *June 26, 2015*

Published Date: 3rd Qtr. 2015	SDDOT	TYPE C CONCRETE RETAINING WALL	PLATE NUMBER 530.01
			Sheet 1 of 2

Use No. 4 bars for all reinforcing steel unless specified otherwise.

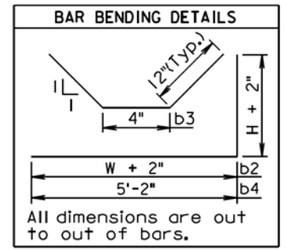

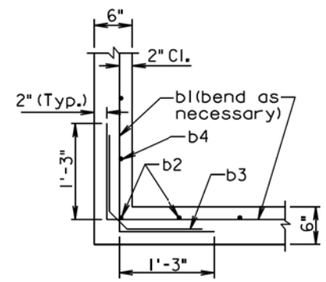

DETAIL B
PLAN VIEW OF WALL CORNER DETAIL

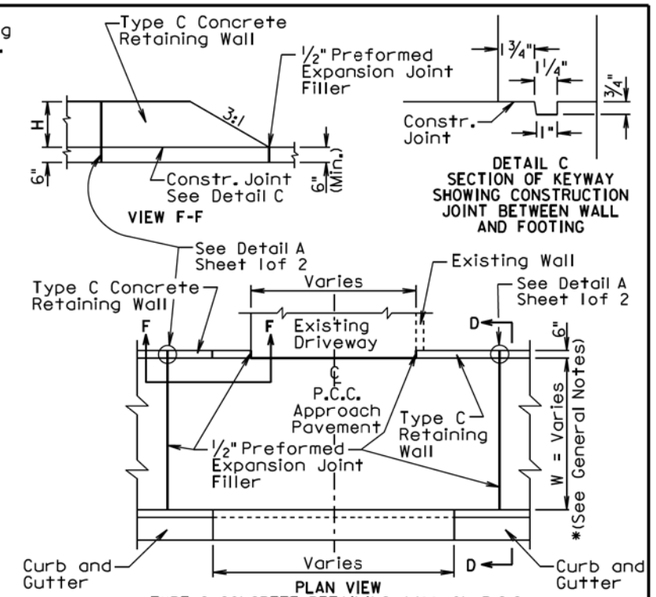

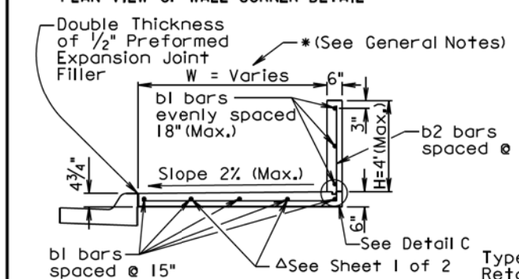

SECTION D-D

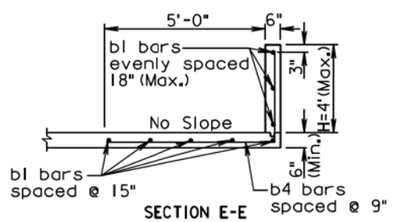

SECTION E-E

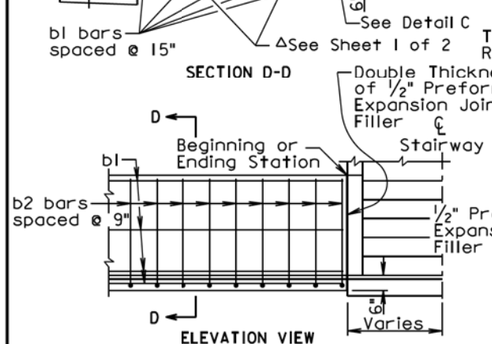

ELEVATION VIEW
TYPE C CONCRETE RETAINING WALL ADJACENT TO CURB & GUTTER AND STAIRWAY
(Curb and Gutter not shown)

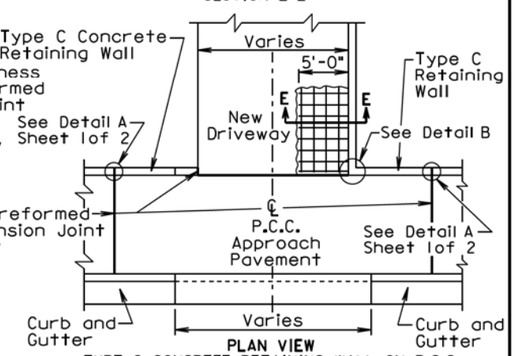

PLAN VIEW
TYPE C CONCRETE RETAINING WALL ON P.C.C. DRIVEWAY AND APPROACH PAVEMENT

June 26, 2015

Published Date: 3rd Qtr. 2015	SDDOT	TYPE C CONCRETE RETAINING WALL	PLATE NUMBER 530.01
			Sheet 2 of 2

Plot Scale - 1:200
- Plotted From - TRSF12139
File - ...\codh026X\s53001_1s53001_2.dgn

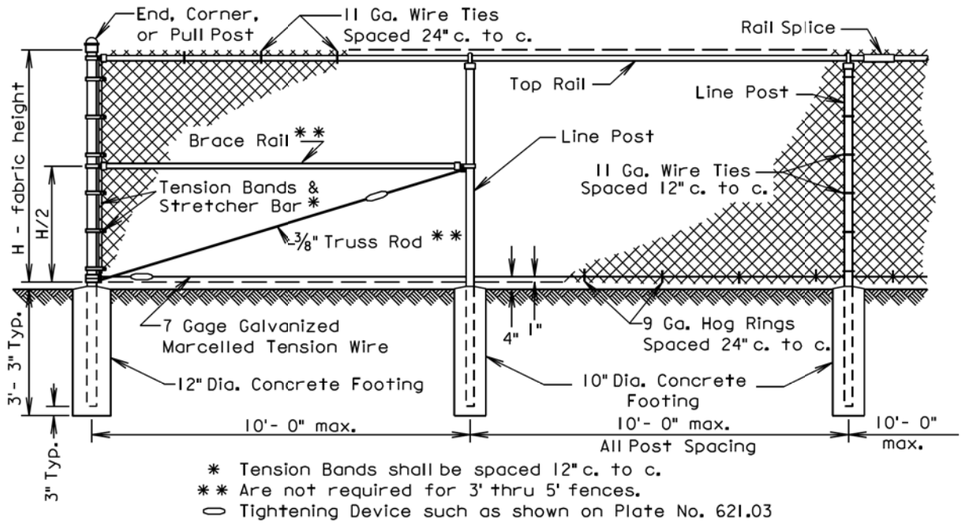

* Tension Bands shall be spaced 12" c. to c.
** Are not required for 3' thru 5' fences.
⬭ Tightening Device such as shown on Plate No. 621.03

Component	End, Corner & Pull Post		Line Post			Top & Brace Rail	
Type of Fabrication	Round Pipe Nominal	Roll Formed Steel	Round Pipe Nominal	"C" Section	H-Beam Steel	Round Pipe Nominal	Roll Formed Steel
Size	3.00" O. D.	3.5" x 3.5"	2.50" O. D.	1.875"x1.625"	2.25"x1.70"	1.625" O. D.	1.625"x1.25"
Weight (lb. / ft.)	5.79 or 4.64	5.14	3.65 or 3.12	2.34	3.43	2.27 or 1.84	1.35

GENERAL NOTES:

Specific details of manufacture of component parts of the complete fence construction shall be subject to the approval of the Engineer. Commercially available items produced specifically for the use intended shall be used wherever possible in the construction of the fence.

"H" (Height of Fabric) shall be as shown on the Plans. Fabric is available in the the following heights: 36", 42", 48", 60", 72", 84", 96", 108", 120", & 144". Fabric heights 60 inches and under shall be knuckled at both selvages. Fabric heights 72 inches and over shall be knuckled at one selvage and twisted at the other selvage.

Chain Link Fabric shall be 2" mesh, No. 9 gage galvanized wire securely fastened to Tension Wire, Line Post, Rails, Braces and Stretcher Bars spaced as shown hereon.

Fence may be constructed with either Round Pipe, "C" Section, "H" Beam, or roll Formed Steel components as shown in the table above. Line post may be Round Pipe, "C" Section, or "H" Beam. The Corner Post and Rails shall be either Round Pipe or Roll Formec Steel. The type of components used shall have prior approval by the Engineer before construction.

Where fence must cross small bodies of water (such as drainage areas or ponds) that could freeze during the winter, use 11 gage Hog Rings. Provide only two ties per Tension Wire and Top Rail between line posts.

A suitable method of rail splicing shall be used to allow for expansion and contraction while maintaining proper position of the Top Rail.

March 31, 2000

Published Date: 3rd Qtr. 2015	SDDOT	CHAIN LINK FENCE WITH TOP RAIL	PLATE NUMBER 621.01
			Sheet 1 of 1

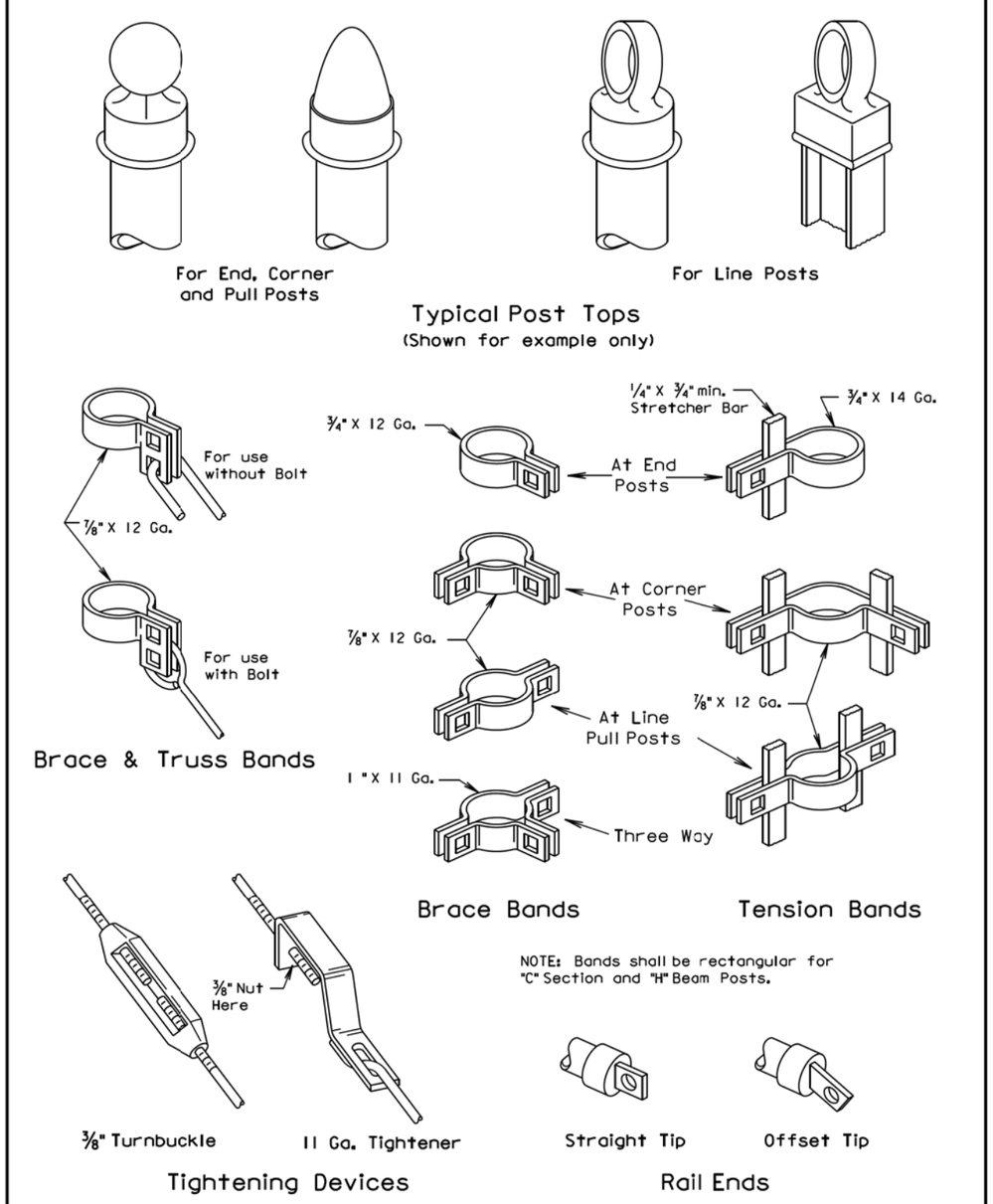

March 31, 2000

Published Date: 3rd Qtr. 2015	SDDOT	HARDWARE FOR CHAIN LINK FENCE	PLATE NUMBER 621.03
			Sheet 1 of 1

Plot Scale - 1:200
- Plotted From - TRSF12139
File - ...\prj\cadn\026X\s62101s62103.dgn

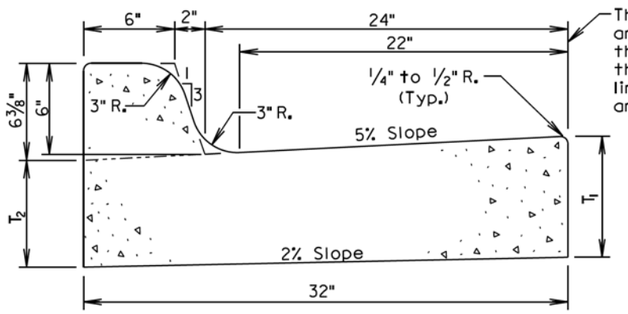

The stated radii on the plans and cross sections refer to this line and it shall also be the basis for horizontal linear foot measurement and payment.

Type	T_1 (Inches)	T_2 (Inches)	Cu. Yd. Per Lin. Ft.	Lin. Ft. Per Cu. Yd.
B66	6	5 1/16	0.057	17.7
B67	7	6 1/16	0.065	15.4
B68	8	7 1/16	0.073	13.7
B68.5	8.5	7 9/16	0.077	13.0
B69	9	8 1/16	0.081	12.3
B69.5	9.5	8 9/16	0.085	11.7
B610	10	9 1/16	0.090	11.2
B610.5	10.5	9 9/16	0.094	10.7
B611	11	10 1/16	0.098	10.2
B611.5	11.5	10 9/16	0.102	9.8
B612	12	11 1/16	0.106	9.4

GENERAL NOTES:

When concrete curb and gutter longitudinally adjoins new concrete pavement, the method of attachment shall be by one of the methods shown on Standard Plate 380.11.

See Standard Plate 650.90 for expansion and contraction joints in the curb and gutter.

September 6, 2008

Published Date: 3rd Qtr. 2015	SDDOT	TYPE B CONCRETE CURB AND GUTTER	PLATE NUMBER 650.01
			Sheet 1 of 1

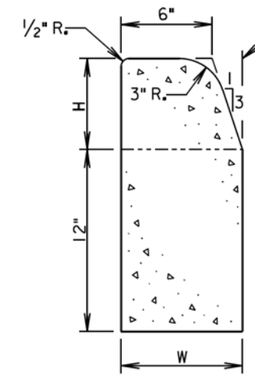

The stated radii on the plans and cross sections refer to this line and it shall also be the basis for horizontal linear foot measurement and payment.

Type	H (Inches)	W (Inches)	Cu. Yd. Per Lin. Ft.	Lin. Ft. Per Cu. Yd.
B6	6	8	0.0353	28.4
B7	7	8 3/8	0.0383	26.1
B8	8	8 5/8	0.0414	24.1
B9	9	9	0.0449	22.3
B10	10	9 3/8	0.0485	20.6

GENERAL NOTES:

The concrete for the Type B Concrete Curb shall comply with the requirements of the Specifications for Class M6 Concrete.

A 1/2" preformed expansion joint filler shall be placed transversely in the curb at the following locations:

1. At each junction between the radius return of curb and curb which is parallel to the project centerline.
2. At each junction between the existing curb and new curb or curb and gutter.
3. At each junction between the curb and existing sidewalk to the depth of the sidewalk.

See Standard Plate 650.90 for contraction joints in the curb.

June 26, 2015

Published Date: 3rd Qtr. 2015	SDDOT	TYPE B CONCRETE CURB	PLATE NUMBER 650.02
			Sheet 1 of 1

Plot Scale - 1:200
- Plotted From - TRSF12139
File - ...\prj\cadn026X\s65001s65002.dgn

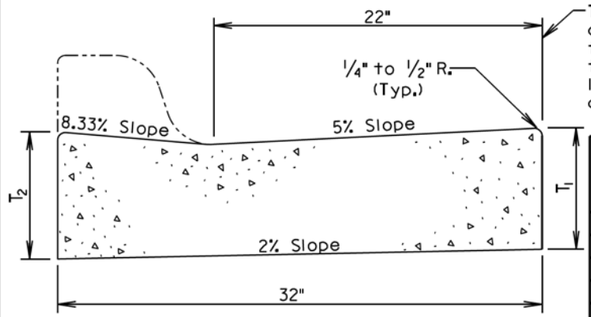

The stated radii on the plans and cross sections refer to this line and it shall also be the basis for horizontal linear foot measurement and payment.

TRANSVERSE SECTION

Type	T_1 (Inches)	T_2 (Inches)	Cu. Yd. Per Lin. Ft.	Lin. Ft. Per Cu. Yd.
P6	6	6 3/8	0.047	21.2
P7	7	7 3/8	0.055	18.1
P8	8	8 3/8	0.064	15.7
P8.5	8.5	8 7/8	0.068	14.8
P9	9	9 3/8	0.072	13.9
P9.5	9.5	9 7/8	0.076	13.2
P10	10	10 3/8	0.080	12.5
P10.5	10.5	10 7/8	0.084	11.9
P11	11	11 3/8	0.088	11.3
P11.5	11.5	11 7/8	0.092	10.8
P12	12	12 3/8	0.096	10.4

Type P Concrete Gutter Limits

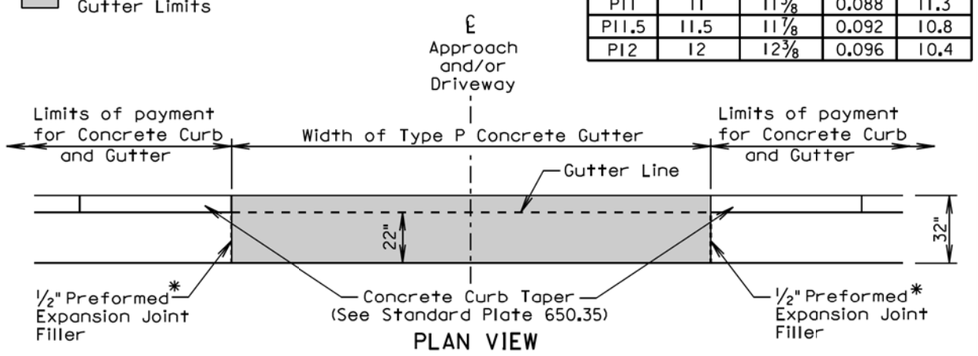

PLAN VIEW

* Joint will not be needed if concrete curb and gutter and type P concrete gutter is placed at the same time. If the 1/2" Preformed Expansion Joint Filler is provided, then the joint shall be sealed in accordance with Standard Plate 650.90.

GENERAL NOTES:

The concrete for the Type P Concrete Gutter shall comply with the requirements of the Specifications for Class M6 Concrete.

When concrete gutter longitudinally adjoins new concrete pavement, the method of attachment shall be by one of the methods shown on Standard Plate 380.11.

Transverse contraction joints shall be constructed at 10' intervals in the concrete gutter except when concrete gutter is constructed adjacent to mainline PCC pavement. When concrete gutter is constructed adjacent to mainline PCC pavement, a transverse contraction joint shall be constructed in the concrete gutter at each mainline PCC pavement transverse contraction joint location.

When concrete gutter is placed monolithically with mainline PCC pavement, the transverse contraction joints in the concrete gutter shall be sawed and sealed the same as the transverse contraction joints in the mainline PCC pavement.

When concrete gutter is not placed monolithically with the mainline PCC pavement and when the adjacent mainline surfacing is not PCC concrete, the transverse contraction joints in the concrete gutter shall be 1 1/2 inches deep if formed in the fresh concrete using a suitable grooving tool. If a saw is used to cut the contraction joints, then the depth of the joint shall be at least 1/4 the thickness of the concrete.

June 26, 2015

Published Date: 3rd Qtr. 2015	SDDOT	TYPE P CONCRETE GUTTER	PLATE NUMBER 650.30
			Sheet 1 of 1

End and theoretical elevation of top of curb and gutter shown on plans and cross sections.

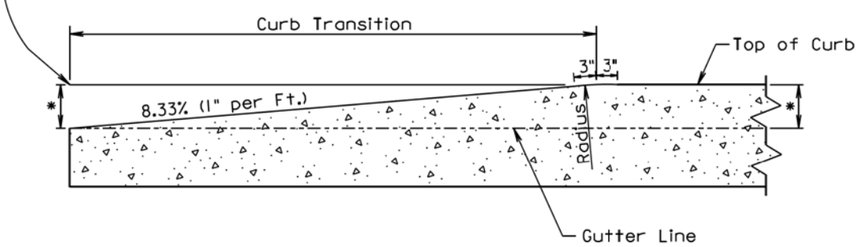

* Height of Curb

LONGITUDINAL SECTION OF CONCRETE CURB TAPER

September 14, 2005

Published Date: 3rd Qtr. 2015	SDDOT	CONCRETE CURB TAPER	PLATE NUMBER 650.35
			Sheet 1 of 1

Plot Scale - 1:200
- Plotted From - TRSF12139
File - ...\prj\cadn\026X\s65030s65035.dgn

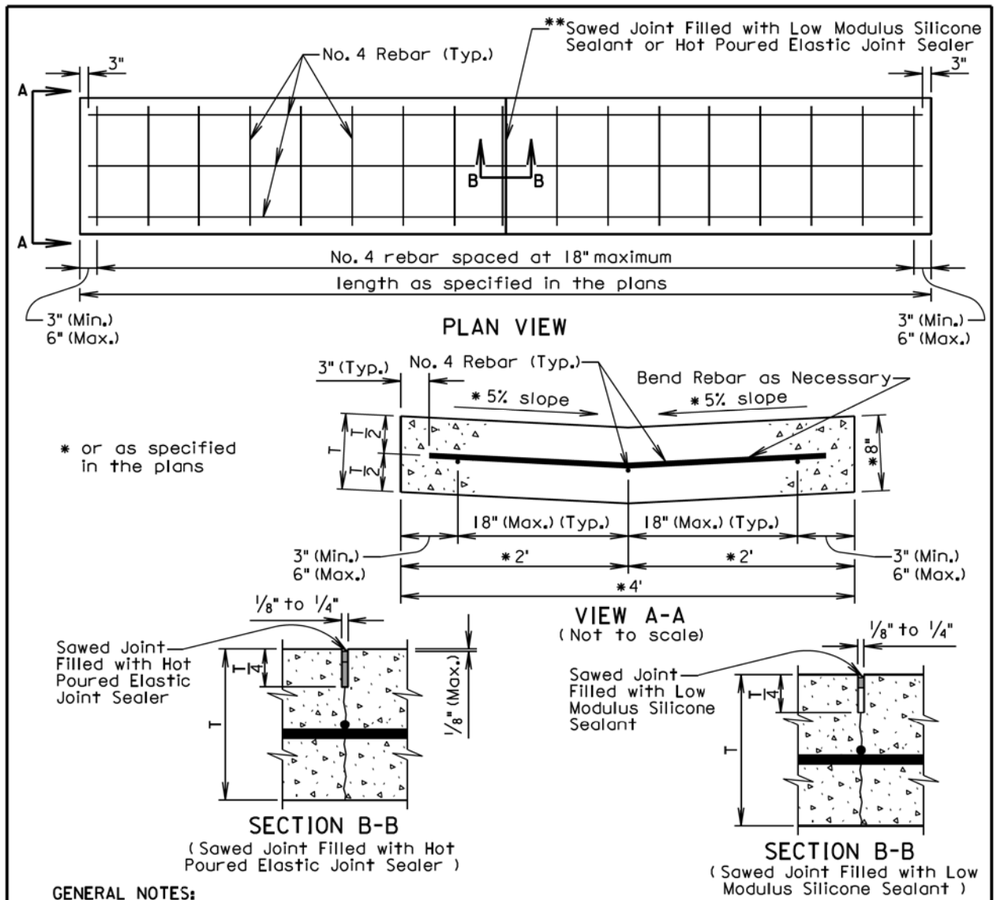

GENERAL NOTES:

The concrete shall comply with the Specifications for Class M6 concrete.

The reinforcing steel shall comply with the requirements of the Specification Sections 480 and 1010.

If a lap splice is provided the No. 4 rebar shall be lapped a minimum of 12".

** The sawed joints shall be spaced at 12'; however, when the length of the valley gutter is 12' to 24' there shall be a joint at the midpoint of the length. The saw cut to control cracking shall be a minimum of 1/4 the thickness of the pavement.

All hot poured elastic joint sealer material spilled on the surface of the concrete pavement shall be removed as soon as the material has cooled. The extent of removal of material shall be to the satisfaction of the Engineer. All costs for removal of the spilled joint sealer material shall be borne by the Contractor.

The silicone sealant shall be be bonded to the sides of a clean joint to completely seal the joint as approved by the Engineer.

All costs for furnishing and installing the valley gutter including materials, equipment, labor, and incidentals shall be included in the contract unit price per square yard for the corresponding Valley Gutter bid item.

February 10, 2014

Published Date: 3rd Qtr. 2015	SDDOT	***VALLEY GUTTER***	***PLATE NUMBER*** *650.40*
			Sheet 1 of 1

Plot Scale - 1:200
- Plotted From - TRSF12139
File - ...\prj\cadn026X\sbdtanks65040.dgn

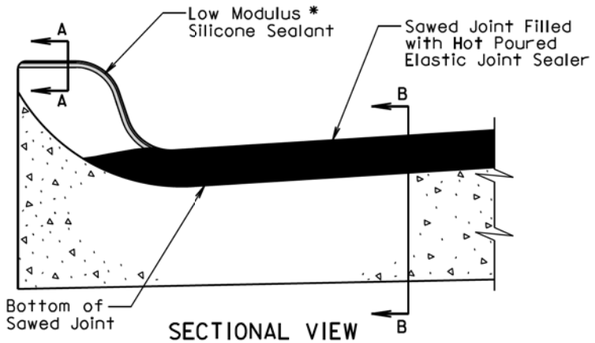

SECTIONAL VIEW

(Curb and Gutter Placed Monolithic with Adjacent Mainline PCC Pavement)

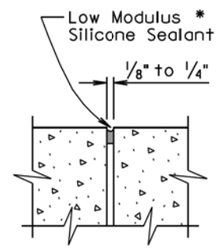

SECTION A-A

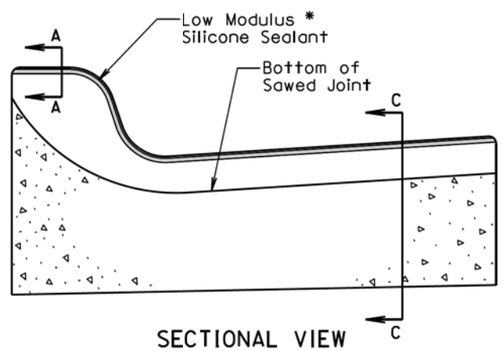

SECTIONAL VIEW

(Curb and Gutter not Placed Monolithic with Adjacent Mainline PCC Pavement or Mainline Surfacing is not PCC Pavement)

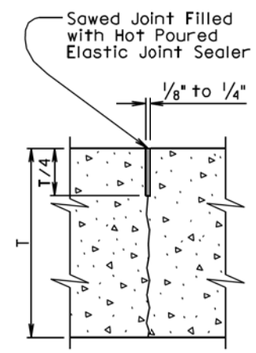

SECTION B-B

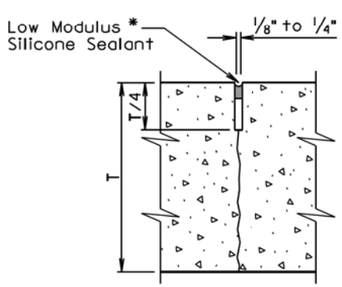

SECTION C-C

* The silicone sealant shall be placed such that it completely seals the joint and is bonded to the sides of the clean joint as approved by the Engineer.

September 6, 2013

Published Date: 3rd Qtr. 2015	SDDOT	JOINTS IN CONCRETE CURB AND GUTTER	PLATE NUMBER 650.90
			Sheet 1 of 2

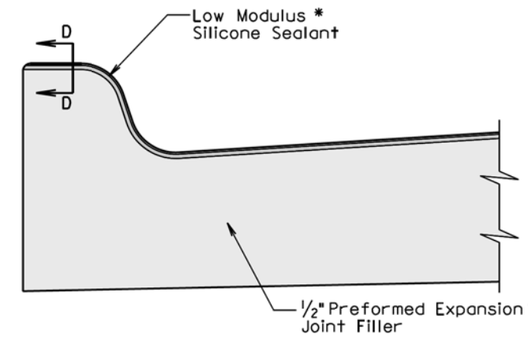

SECTIONAL VIEW

(Curb and Gutter at 1/2" Preformed Expansion Joint Filler Location)

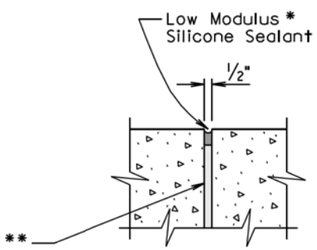

SECTION D-D

* The silicone sealant shall be placed such that it completely seals the joint and is bonded to the sides of the clean joint as approved by the Engineer.

GENERAL NOTES:

For illustrative reason, only the type B curb and gutter is shown.

** A 1/2" preformed expansion joint filler shall be placed transversely in the curb and gutter at the following locations:

1. At each junction between the radius return of curb and gutter and curb and gutter which is parallel to the project centerline.
2. At each junction between new curb and gutter and existing curb and gutter.

Transverse contraction joints shall be constructed at 10' intervals in the concrete curb and gutter except when the concrete curb and gutter is constructed adjacent to mainline PCC pavement. When concrete curb and gutter is constructed adjacent to mainline PCC pavement, a transverse contraction joint shall be constructed in the concrete curb and gutter at each mainline PCC pavement transverse contraction joint location.

When concrete curb and gutter is not placed monolithically with the mainline PCC pavement or when the adjacent mainline surfacing is not PCC concrete, the transverse contraction joints in the concrete curb and gutter shall be 1 1/2 inches deep if formed in the fresh concrete using a suitable grooving tool. If a saw is used to cut the contraction joints, then the depth of the joint shall be at least 1/4 the thickness of the concrete and the joint shall be sealed in accordance with the details shown above.

September 6, 2013

Published Date: 3rd Qtr. 2015	SDDOT	JOINTS IN CONCRETE CURB AND GUTTER	PLATE NUMBER 650.90
			Sheet 2 of 2

Plot Scale - 1:200
- Plotted From - TRSF12139
File - ...\icodn026X\ts65090_1s65090_2.dgn

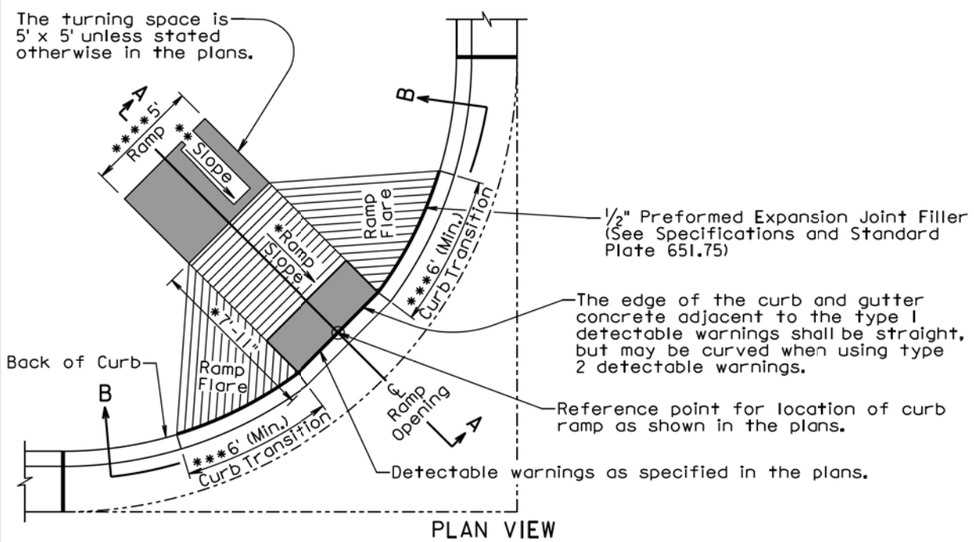

PLAN VIEW
(With 6'+ Curb Transition)

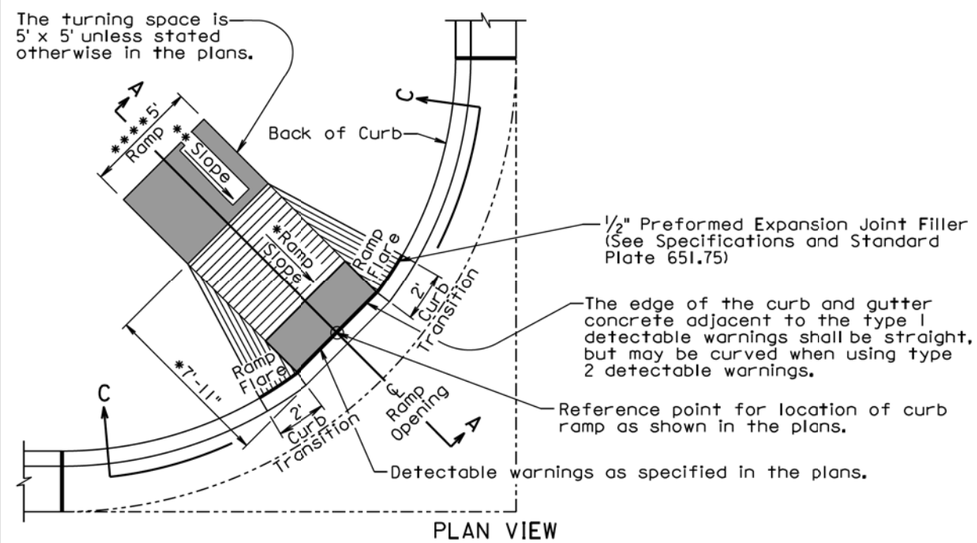

PLAN VIEW
(With 2' Curb Transition)

June 26, 2015

Published Date: 3rd Qtr. 2015	SDDOT	TYPE 1 CURB RAMP (PERPENDICULAR CURB RAMP)	PLATE NUMBER 651.01
			Sheet 1 of 3

The ramp slope shall be 12:1 (8.3%) maximum. The ramp length shall not exceed 15' unless stated otherwise in the plans. Ramp slopes are designed at 12:1 (8.3%) unless stated otherwise in the plans.

* The cross slope of the ramp shall not be steeper than 50:1 (2%).

The 7'-11" dimension was computed based on a flat roadway profile, a continuous 2% theoretical slope from top of theoretical curb to the top of ramp, and a 6" high curb. The dimension shall be adjusted based on the curb type shown in the plans, the roadway geometrics, and the sidewalk geometrics.

** The slope in the turning space shall not be steeper than 50:1 (2%) in any direction of pedestrian travel.

*** The curb transition shall be a minimum of 6' long, a maximum of 10' long, and the curb transition slope shall not be steeper than 10:1 (10%) unless stated otherwise in the plans.

**** The ramp width is 5' unless stated otherwise in the plans.

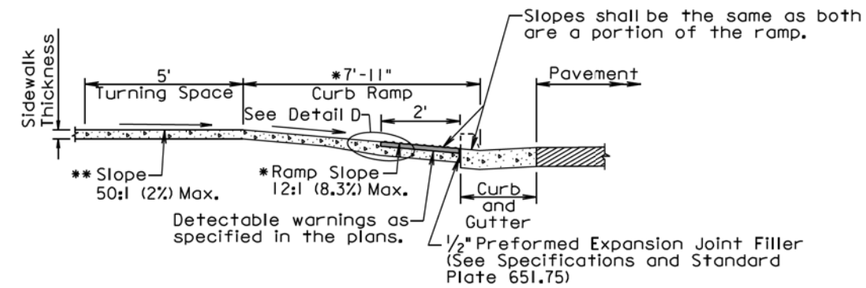

SECTION A-A

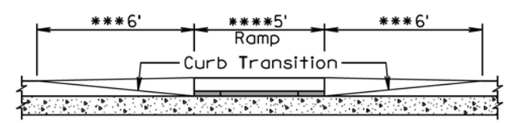

SECTIONAL VIEW B-B

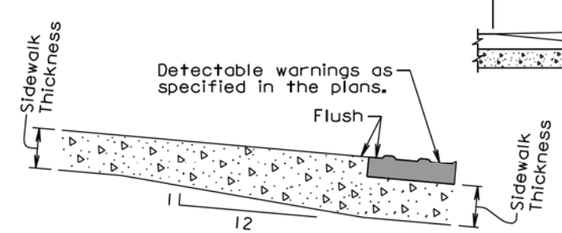

DETAIL D

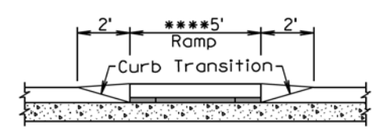

SECTIONAL VIEW C-C

June 26, 2015

Published Date: 3rd Qtr. 2015	SDDOT	TYPE 1 CURB RAMP (PERPENDICULAR CURB RAMP)	PLATE NUMBER 651.01
			Sheet 2 of 3

Plot Scale - 1:200
- Plotted From - TRSF12139
File - ...\codh026X\s65101_1s65101_2.dgn

GENERAL NOTES:

For illustrative purpose only, type I detectable warnings are shown in the drawings.

For illustrative purpose only, PCC fillet sections are shown in the drawings. The curb ramp depicted on this standard plate may be used with a PCC fillet section, with curved curb and gutter, or with straight curb and gutter.

For illustrative purpose only, the curb ramp location is shown at the center of a PCC fillet section. The curb ramp shall be placed at the location stated in the plans.

Sidewalk shall not be placed adjacent to the ramp flares when a 2' curb transition is used unless shown otherwise in the plans.

* Care shall be taken to ensure a uniform grade on the ramp, free of sags and short grade changes.

Surface texture of the ramp shall be obtained by coarse brooming transverse to the slope of the ramp.

The normal gutter line profile shall be maintained through the area of the ramp.

Joints shall be sawed or tooled into the concrete adjacent to the detectable warnings to alleviate possible corner cracking.

Care shall be taken to ensure that the surface of the detectable warnings are clean and maintains a uniform color.

The detectable warnings shall be cut as necessary to fit the plan specified limits of the detectable warnings. Cost for cutting the detectable warnings shall be incidental to the corresponding detectable warning bid item.

There will be no separate payment for curb ramps. The curb ramp shall be measured and paid for at the contract unit price per square foot for the corresponding concrete sidewalk bid item. The square foot area of the detectable warnings shall be included in the measured and paid for quantity of sidewalk.

The curb transitions and ramp opening shall be measured and paid for at the contract unit price per foot for the corresponding curb and gutter bid item when curb and gutter is used. The curb transitions and ramp opening shall be measured and paid for at the contract unit price per square yard for the corresponding PCC fillet section bid item when a PCC fillet section is used.

The type I detectable warnings shall be measured to the nearest square foot. All costs for furnishing and installing the type I detectable warnings including labor, equipment, materials, and incidentals shall be paid for at the contract unit price per square foot for "Type I Detectable Warnings".

The type 2 detectable warnings shall be measured to the nearest square foot. All costs for furnishing and installing the type 2 detectable warnings including labor, equipment, and materials, including adhesive, necessary sealant or grout, and necessary grinding shall be paid for at the contract unit price per square foot for "Type 2 Detectable Warnings".

June 26, 2015

Published Date: 3rd Qtr. 2015	SDDOT	TYPE 1 CURB RAMP (PERPENDICULAR CURB RAMP)	PLATE NUMBER 651.01
			Sheet 3 of 3

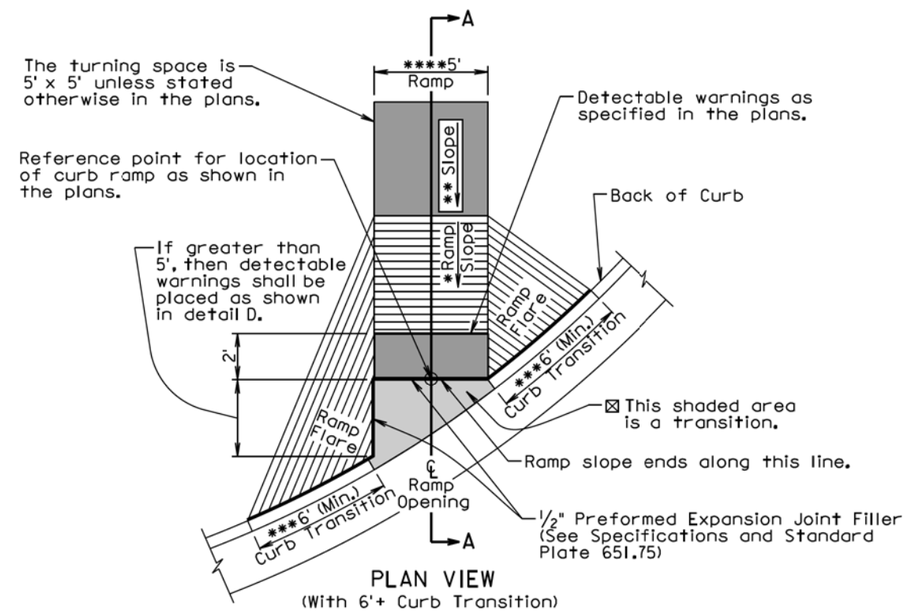

PLAN VIEW
(With 6'+ Curb Transition)

⊠ The slope within the transition area shall not be steeper than a 20:1 (5%). The concrete within the transition shall be placed monolithic with the curb and gutter or fillet section concrete. The concrete thickness within the transition shall be the same as the curb and gutter or fillet section concrete thickness.

*** The curb transition shall be a minimum of 6' long, a maximum of 10' long, and the curb transition slope shall not be steeper than a 10:1 (10%) unless stated otherwise in the plans.

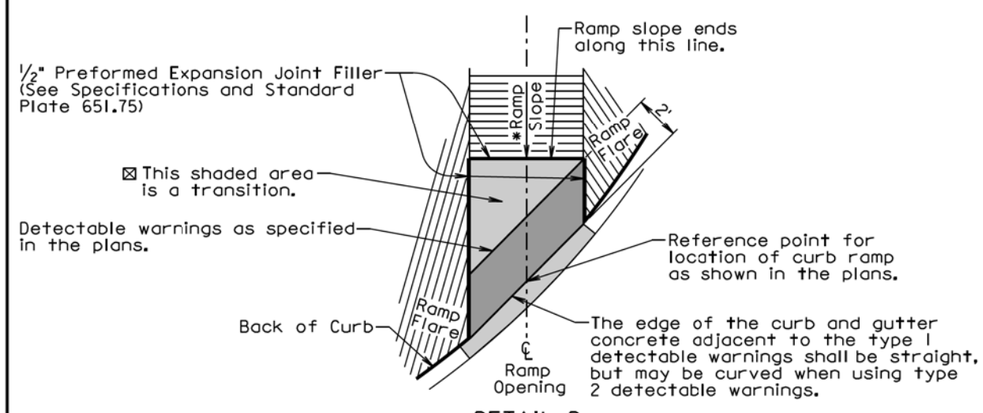

DETAIL D

June 26, 2015

Published Date: 3rd Qtr. 2015	SDDOT	TYPE 2 CURB RAMP (DIRECTIONAL CURB RAMP)	PLATE NUMBER 651.02
			Sheet 1 of 3

Plot Scale - 1:200
- Plotted From - TRSF12139
File - ...\codn026X\ss65101_3ss65102_1.dgn

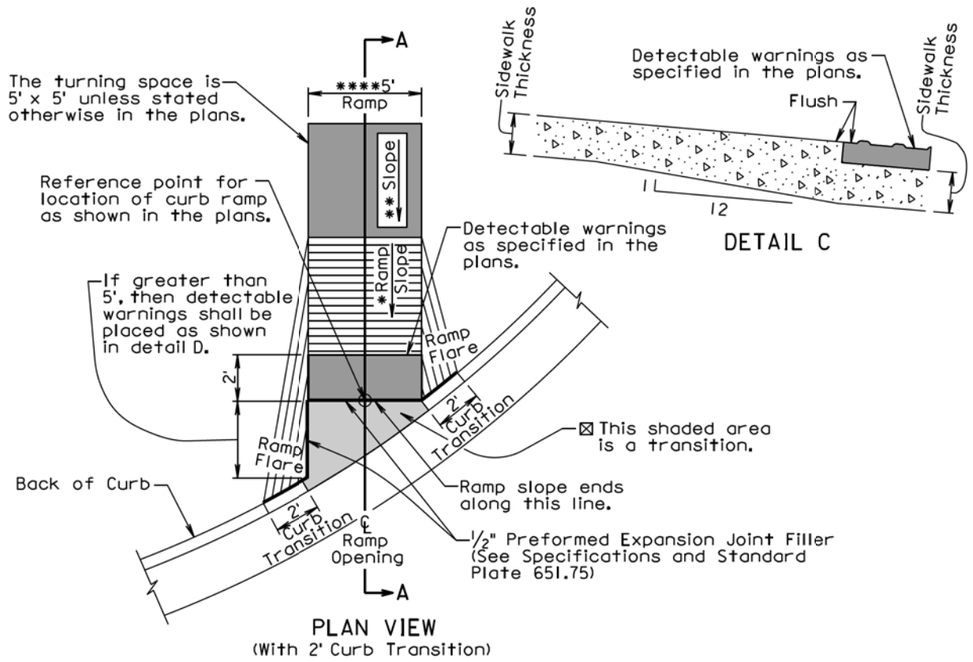

* The ramp slope shall be 12:1 (8.3%) maximum. The ramp length shall not exceed 15' unless stated otherwise in the plans. Ramp slopes are designed at 12:1 (8.3%) unless stated otherwise in the plans.

The cross slope of the ramp shall not be steeper than 50:1 (2%).

** The slope in the turning space shall not be steeper than a 50:1 (2%) in any direction of pedestrian travel.

**** The ramp width is 5' unless stated otherwise in the plans.

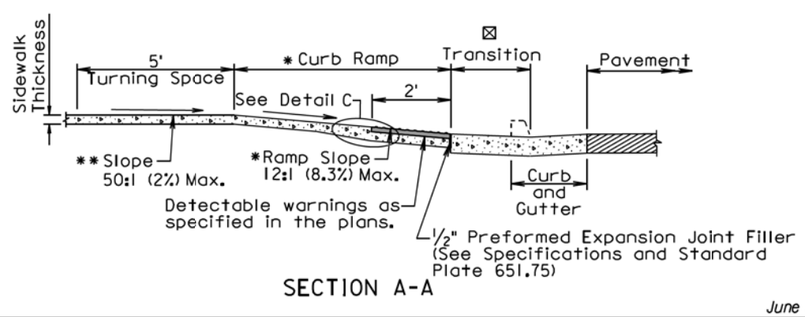

SECTION A-A

June 26, 2015

Published Date: 3rd Qtr. 2015	SDDOT	TYPE 2 CURB RAMP (DIRECTIONAL CURB RAMP)	PLATE NUMBER 651.02
			Sheet 2 of 3

GENERAL NOTES:

For illustrative purpose only, type 1 detectable warnings are shown in the drawings.

The curb ramp depicted on this standard plate may be used with a PCC fillet section, with curved curb and gutter, or with straight curb and gutter. The curb ramp shall be placed at the location stated in the plans.

Sidewalk shall not be placed adjacent to the ramp flares when a 2' curb transition is used unless shown otherwise in the plans.

* Care shall be taken to ensure a uniform grade on the ramp, free of sags and short grade changes.

Surface texture of the ramp shall be obtained by coarse brooming transverse to the slope of the ramp.

The normal gutter line profile shall be maintained through the area of the ramp.

Joints shall be sawed or tooled into the concrete adjacent to the detectable warnings to alleviate possible corner cracking.

Care shall be taken to ensure that the surface of the detectable warnings are clean and maintains a uniform color.

The detectable warnings shall be cut as necessary to fit the plan specified limits of the detectable warnings. Cost for cutting the detectable warnings shall be incidental to the corresponding detectable warning bid item.

There will be no separate payment for curb ramps. The curb ramp shall be measured and paid for at the contract unit price per square foot for the corresponding concrete sidewalk bid item. The square foot area of the detectable warnings shall be included in the measured and paid for quantity of sidewalk.

The curb transitions and ramp opening shall be measured and paid for at the contract unit price per foot for the corresponding curb and gutter bid item when curb and gutter is used. The curb transitions and ramp opening shall be measured and paid for at the contract unit price per square yard for the corresponding PCC fillet section bid item when a PCC fillet section is used.

All costs for furnishing and installing the transition area at the base of the ramp shall be incidental to the contract unit price per foot for the corresponding curb and gutter bid item when curb and gutter is used and shall be incidental to the contract unit price per square yard for the corresponding PCC fillet section bid item when a PCC fillet section is used.

The type 1 detectable warnings shall be measured to the nearest square foot. All costs for furnishing and installing the type 1 detectable warnings including labor, equipment, materials, and incidentals shall be paid for at the contract unit price per square foot for "Type 1 Detectable Warnings".

The type 2 detectable warnings shall be measured to the nearest square foot. All costs for furnishing and installing the type 2 detectable warnings including labor, equipment, and materials, including adhesive, necessary sealant or grout, and necessary grinding shall be paid for at the contract unit price per square foot for "Type 2 Detectable Warnings".

June 26, 2015

Published Date: 3rd Qtr. 2015	SDDOT	TYPE 2 CURB RAMP (DIRECTIONAL CURB RAMP)	PLATE NUMBER 651.02
			Sheet 3 of 3

Plot Scale - 1:200
Plotted From - TRSF12139
File - ...\cadh026X\s65102_2s65102_3.dgn

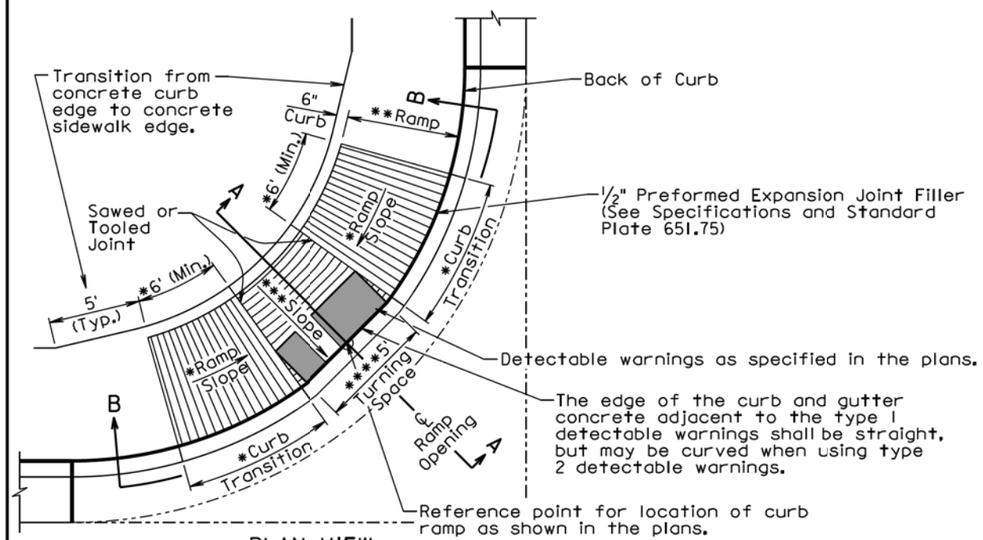

PLAN VIEW
(With Curved Curb and Gutter)

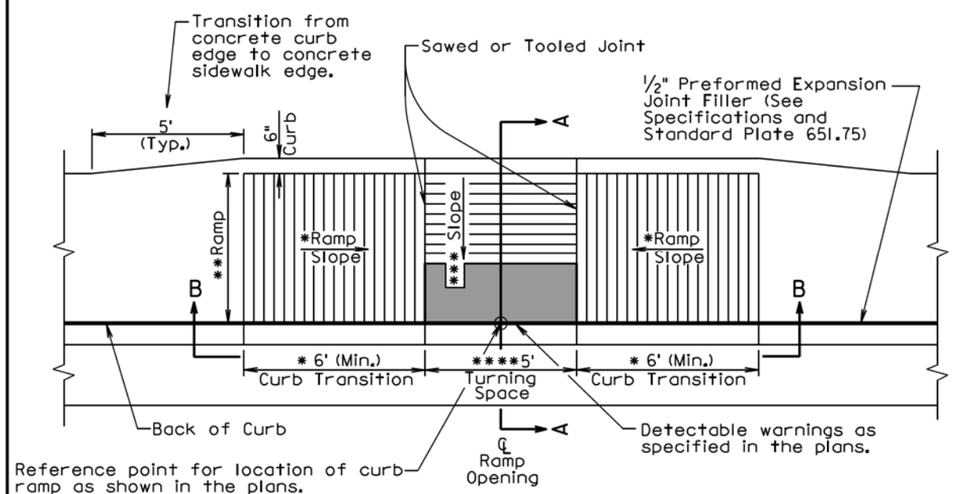

PLAN VIEW
(With Straight Curb and Gutter)

June 26, 2015

Published Date: 3rd Qtr. 2015	SDDOT	TYPE 3 CURB RAMP (PARALLEL CURB RAMP)	PLATE NUMBER 651.03
			Sheet 1 of 3

* The curb transition slope shall match the ramp slope. The ramp slope, at any location of the ramp, shall be 12:1 (8.3%) maximum. The ramp length shall not exceed 15' unless stated otherwise in the plans. Ramp slopes are designed at 12:1 (8.3%) unless stated otherwise in the plans. The minimum length of the curb transition shall be 6'.

** The ramp cross slope shall not be steeper than a 50:1 (2%) and the ramp width is 5' unless stated otherwise in the plans.

*** The slope in the turning space shall not be steeper than 50:1 (2%) in any direction of pedestrian travel.

**** The turning space is 5' x 5' unless stated otherwise in the plans.

☒ The curb height shall be 6" unless stated otherwise in the plans.

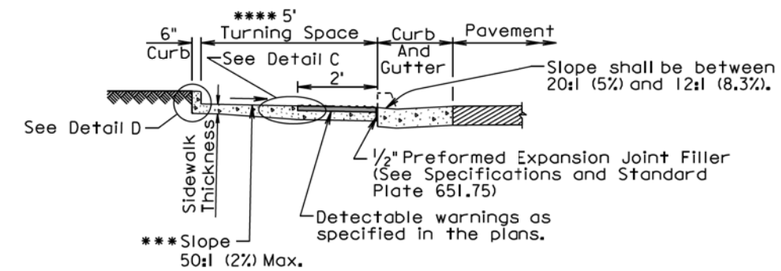

SECTION A-A

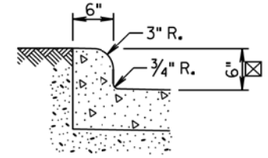

DETAIL D

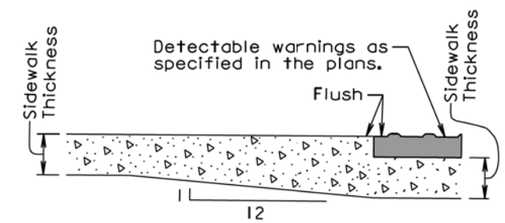

DETAIL C

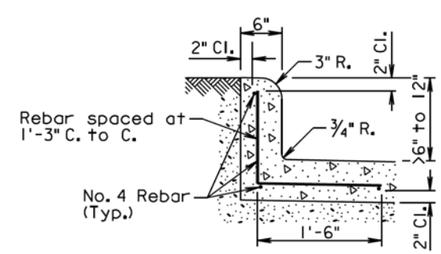

DETAIL D
(Use this detail when the curb height is greater than 6" and less than 12")

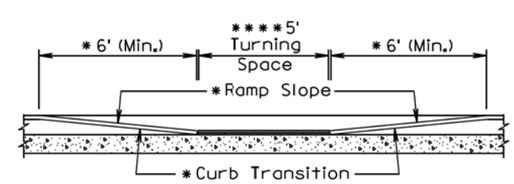

SECTIONAL VIEW B-B

June 26, 2015

Published Date: 3rd Qtr. 2015	SDDOT	TYPE 3 CURB RAMP (PARALLEL CURB RAMP)	PLATE NUMBER 651.03
			Sheet 2 of 3

Plot Scale - 1:200
Plotted From - TRSF12139
File - ...\coadn026X\ts65103_1s65103_2.dgn

GENERAL NOTES:

For illustrative purpose only, type 1 detectable warnings are shown in the drawings.

For illustrative purpose only, a PCC fillet section is shown in one of the drawings. The curb ramp depicted on this standard plate may be used with a PCC fillet section, with curved curb and gutter, or with straight curb and gutter.

The curb ramp shall be placed at the location stated in the plans.

Sidewalk adjacent to the curb ramp shall be as shown in the plans.

Care shall be taken to ensure a uniform grade on the ramp, free of sags and short grade changes.

Surface texture of the ramp shall be obtained by coarse brooming transverse to the slope of the ramp.

The normal gutter line profile shall be maintained through the area of the ramp.

Joints shall be sawed or tooled into the concrete adjacent to the detectable warnings to alleviate possible corner cracking (see plan view for joint location).

Care shall be taken to ensure that the surface of the detectable warnings are clean and maintains a uniform color.

The detectable warnings shall be cut as necessary to fit the plan specified limits of the detectable warnings. Cost for cutting the detectable warnings shall be incidental to the corresponding detectable warning bid item.

When curb height is greater than 6" and less than 12", reinforcing steel is required in accordance with the detail on sheet 2 of 3. The reinforcing steel shall conform to ASTM A615, Grade 60. Cost for furnishing and installing the reinforcing steel shall be incidental to the contract unit price per square foot for the corresponding concrete sidewalk bid item.

There will be no separate payment for curb ramps. The curb ramp shall be measured and paid for at the contract unit price per square foot for the corresponding concrete sidewalk bid item. The square foot area of the detectable warnings and the curb along the short radius shall be included in the measured and paid for quantity of sidewalk.

The curb transitions and ramp opening shall be measured and paid for at the contract unit price per foot for the corresponding curb and gutter bid item when curb and gutter is used. The curb transitions and ramp opening shall be measured and paid for at the contract unit price per square yard for the corresponding PCC fillet section bid item when a PCC fillet section is used.

The type 1 detectable warnings shall be measured to the nearest square foot. All costs for furnishing and installing the type 1 detectable warnings including labor, equipment, materials, and incidentals shall be paid for at the contract unit price per square foot for "Type 1 Detectable Warnings".

The type 2 detectable warnings shall be measured to the nearest square foot. All costs for furnishing and installing the type 2 detectable warnings including labor, equipment, and materials, including adhesive, necessary sealant or grout, and necessary grinding shall be paid for at the contract unit price per square foot for "Type 2 Detectable Warnings".

June 26, 2015

Published Date: 3rd Qtr. 2015	SDDOT	***TYPE 3 CURB RAMP (PARALLEL CURB RAMP)***	***PLATE NUMBER*** 651.03
			Sheet 3 of 3

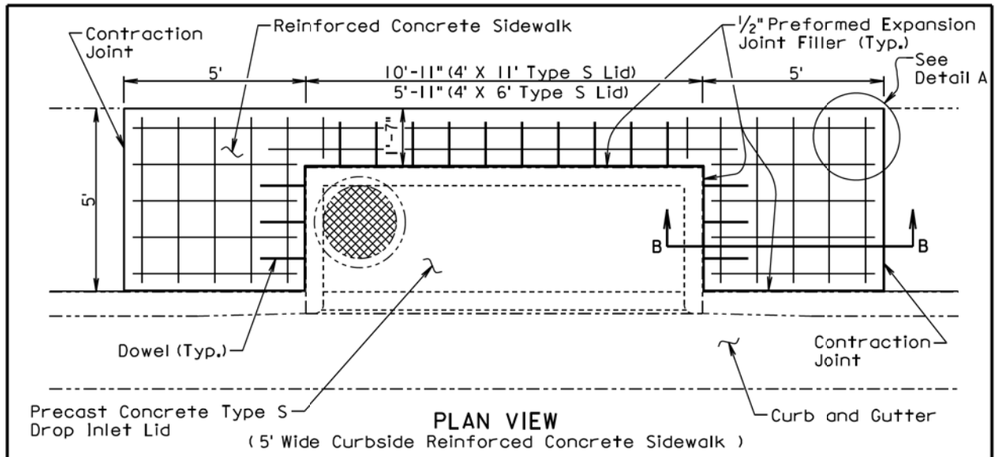

PLAN VIEW
(5' Wide Curbside Reinforced Concrete Sidewalk)

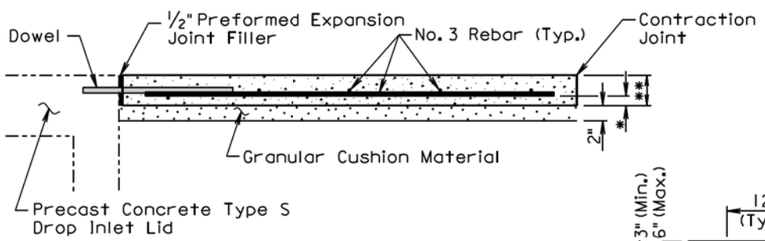

SECTION B-B

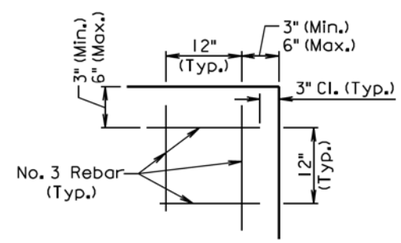

DETAIL A

** 4", 5", or 6" as specified elsewhere in the plans.

* 1⅝" for 4" sidewalk, 2⅛" for 5" sidewalk, and 2⅝" for 6" sidewalk.

GENERAL NOTES:

The precast concrete Type S lids shown are 4' X 11' for illustrative purpose.

The cross slope of the sidewalk and precast concrete type S drop inlet lid shall be as specified elsewhere in the plans.

The reinforcing steel shall conform to Section 1010 of the Specifications. The Contractor shall be in conformance with the construction requirements of Section 480.3 of the Specifications.

When lapping of reinforcing steel is necessary, the No. 3 rebar shall be lapped 12".

The reinforced concrete sidewalk shall conform to the requirements of Section 651 of the Specifications.

All costs for constructing the reinforced concrete sidewalk including labor, equipment, tools, backfilling, furnishing and placing materials, including granular cushion, reinforcing steel, preformed expansion joint filler, and incidentals shall be included in the contract unit price per square foot for the corresponding reinforced concrete sidewalk bid item.

June 26, 2015

Published Date: 3rd Qtr. 2015	SDDOT	REINFORCED CONCRETE SIDEWALK ADJACENT TO PRECAST CONCRETE TYPE S DROP INLET LID	PLATE NUMBER 651.70 Sheet 1 of 2

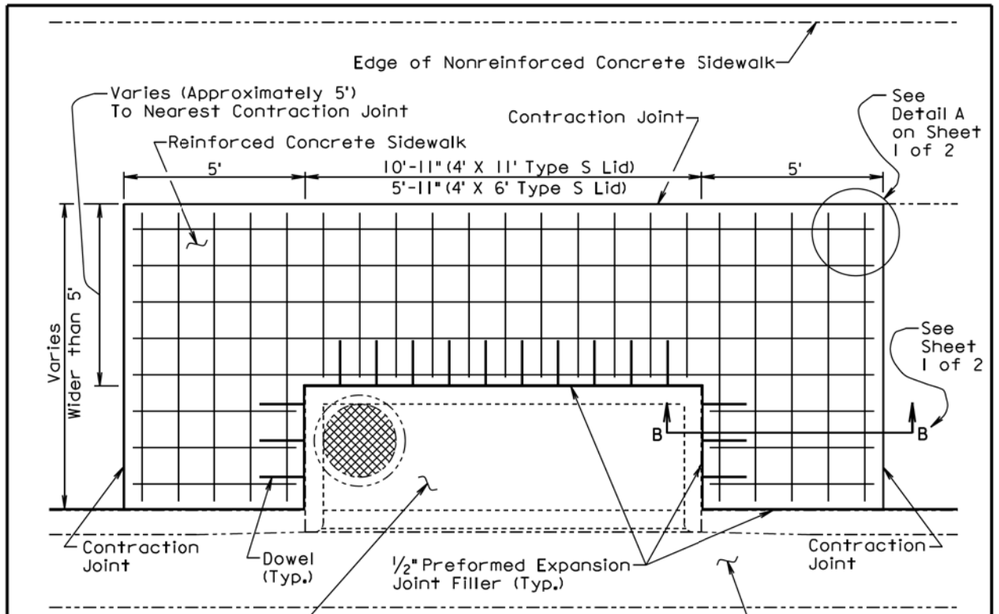

PLAN VIEW
(Curbside Reinforced Concrete Sidewalk Wider Than 5')

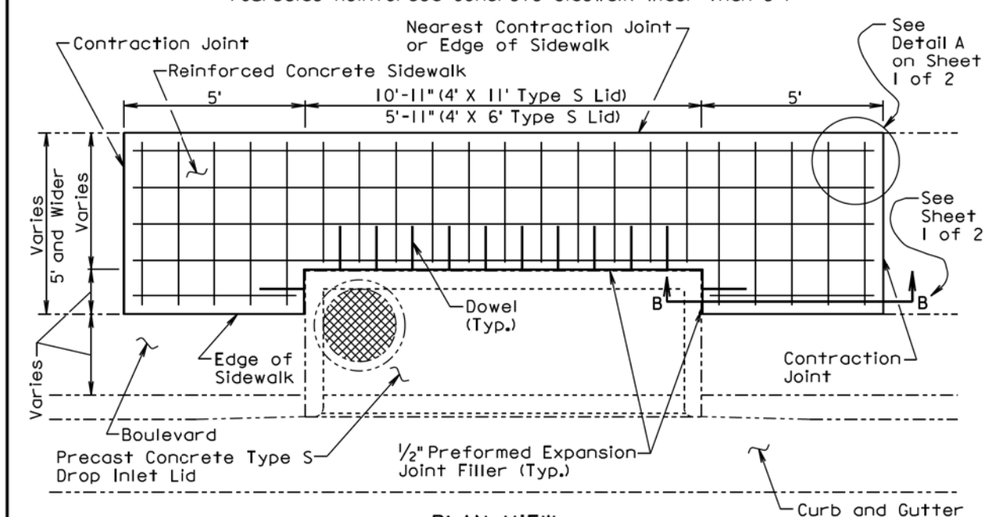

PLAN VIEW
(Reinforced Concrete Sidewalk With Boulevard)

June 26, 2015

Published Date: 3rd Qtr. 2015	SDDOT	REINFORCED CONCRETE SIDEWALK ADJACENT TO PRECAST CONCRETE TYPE S DROP INLET LID	PLATE NUMBER 651.70 Sheet 2 of 2

Plot Scale - 1:200
- Plotted From - TRSF12139
File - ...\icodn026X\s65170_1s65170_2.dgn

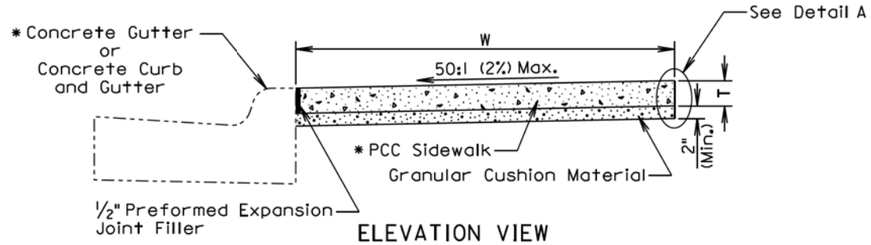

ELEVATION VIEW
(PCC Sidewalk without Boulevard)

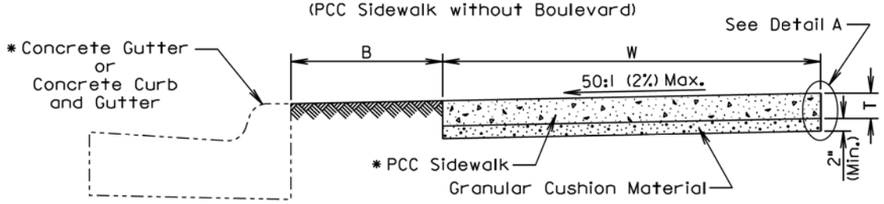

ELEVATION VIEW
(PCC Sidewalk with Boulevard)

B Width of boulevard as specified in the plans.
T Thickness of PCC sidewalk as specified in the plans.
W Width of PCC sidewalk as specified in the plans.
* Type as specified in the plans.

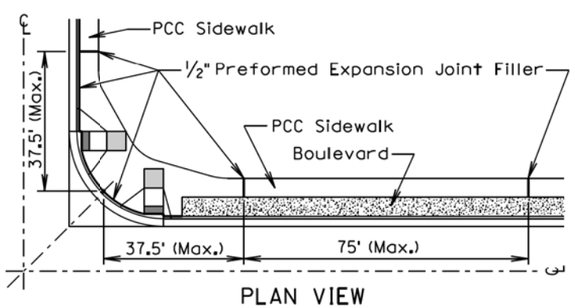

PLAN VIEW

GENERAL NOTES:

The PCC sidewalk shall be constructed in accordance with Section 651 of the Specifications.

The maximum length between expansion joints in PCC sidewalk is 75 feet.

PCC sidewalk placed adjacent to intersection of roadways shall have an expansion joint placed transversely a maximum of 37.5 feet from the intersection. See PLAN VIEW.

An expansion joint in PCC sidewalk shall consist of a ½ inch thick preformed expansion joint filler material placed full depth and width of the PCC sidewalk.

** Large areas of PCC pavement adjacent to PCC sidewalk may require a different joint treatment than shown in the detail. If a different joint detail is necessary, plans will contain the joint detail and the Contractor shall construct the joint treatment in accordance with the plans.

June 26, 2015

Published Date: 3rd Qtr. 2015	SDDOT	PCC SIDEWALK	PLATE NUMBER 651.75
			Sheet 1 of 2

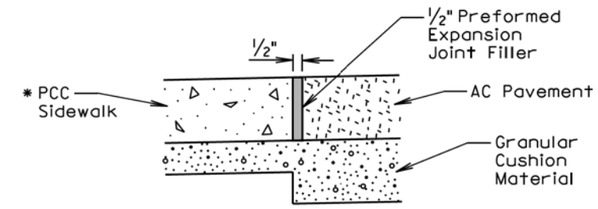

ELEVATION VIEW
(PCC sidewalk adjacent to asphalt concrete pavement)

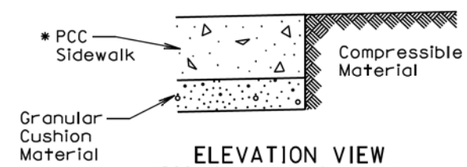

ELEVATION VIEW
(PCC sidewalk adjacent to earthen material, landscape rock, or other compressible materials)

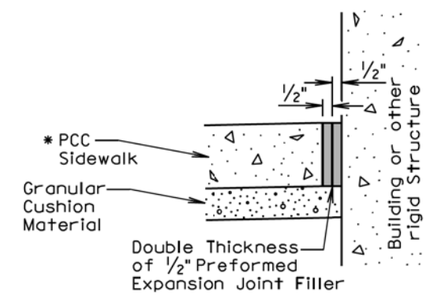

ELEVATION VIEW
(PCC sidewalk adjacent to building or other rigid structure)

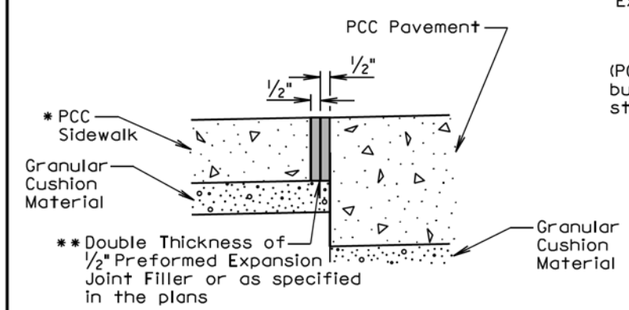

ELEVATION VIEW
(PCC sidewalk adjacent to PCC pavement)

Detail A
(Use Appropriate Detail(s))

June 26, 2015

Published Date: 3rd Qtr. 2015	SDDOT	PCC SIDEWALK	PLATE NUMBER 651.75
			Sheet 2 of 2

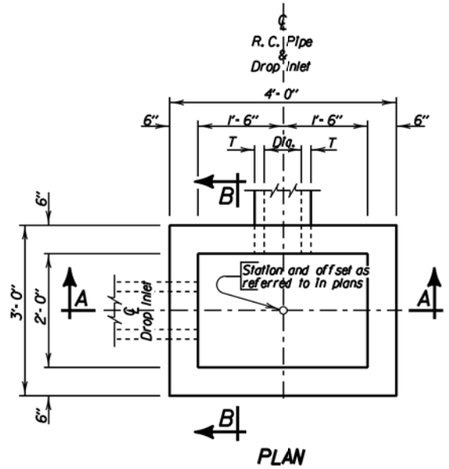

PLAN

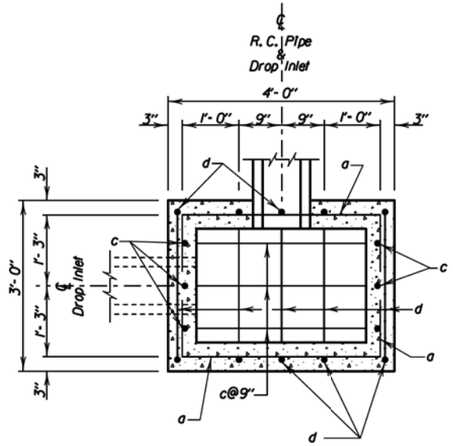

BOTTOM SECTION

PIPE DISPLACEMENT REDUCTIONS

R.C. Pipe Diameter Inches	T Inches	Class M6 Concrete Cu Yd
12	2	0.03
15	2 1/4	0.04
18	2 1/2	0.05
24	3	0.09
27	3 1/4	0.11

ESTIMATED QUANTITIES

ITEM	UNIT	CONSTANT QUANTITY	VARIABLE QUANTITY
✳ Class M6 Concrete	Cu Yd	0.26	0.22H
Reinforcing Steel	Lb	37	20.04H
Frame and Grate Assembly	Each	1	———

DROP INLETS FOR 12" TO 27" DIAMETER PIPE

GENERAL NOTES:

✳ Reduce total quantities of concrete by the amount of concrete displaced by the pipe. The total quantity of concrete shall be computed to the nearest hundredth of a cubic yard. The total quantity of reinforcing steel shall be computed to the nearest pound.

Drop inlets shown may be modified by the addition or omission of connecting pipes as shown on the layouts.

Reinforcing steel shall conform to ASTM A615 Grade 60. The b bars shall be lapped 12 inches. Cut and bend reinforcing steel as required to place pipe(s) through the drop inlet wall.

Pipe shall not enter through a corner of the drop inlet.

Use 2" clear cover on all reinforcing steel unless otherwise noted.

Precasting of reinforced drop inlets will be permissible. Prior to precasting, the Contractor shall submit details to the Engineer for approval.

Maximum pipe diameter shall not exceed 18 inches on the 3 foot wide side and shall not exceed 27 inches on the 4 foot wide side of the drop inlet.

The dimension of H is in feet.

December 23, 2009

Published Date: 3rd Qtr. 2015

SDDOT

2'X 3' TYPE B
REINFORCED CONCRETE DROP INLET

PLATE NUMBER
670.01

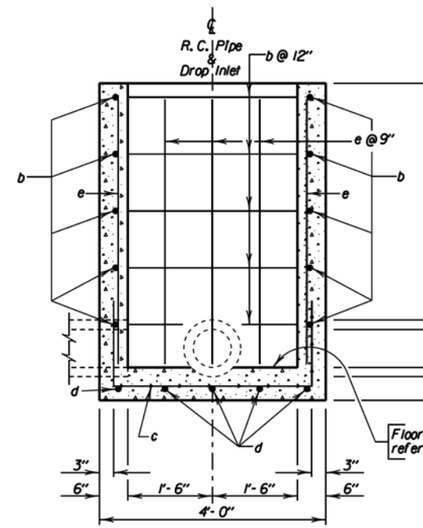

SEC. A-A

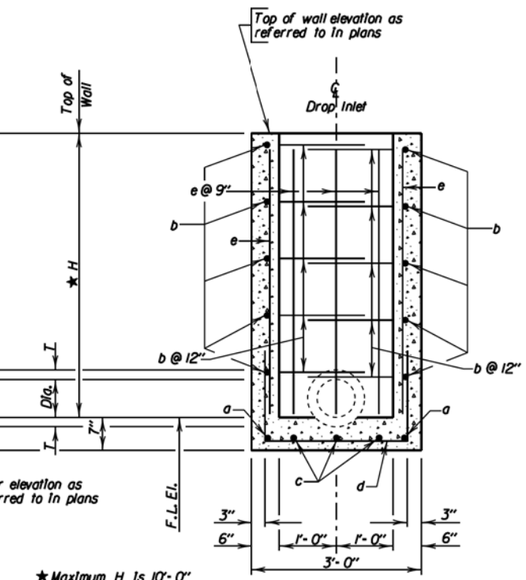

SEC. B-B

DROP INLETS FOR 12" TO 27" DIAMETER PIPE

REINFORCING SCHEDULE

MK.	No.	Size	Length	Type	Bending Details
a	2	4	5'- 6"	17	
b	2H	4	7'- 0"	17	
c	3	4	6'- 6"	17	
d	5	4	5'- 6"	17	
e	16	4	H - 2"	Str.	

NOTE:
All dimensions are out to out of bars.

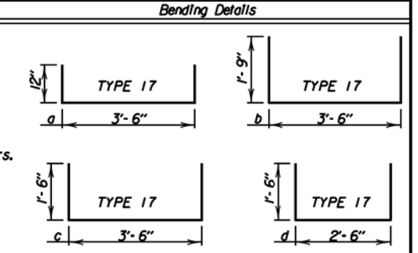

December 23, 2009

Published Date: 3rd Qtr. 2015

SDDOT

2'X 3' TYPE B
REINFORCED CONCRETE DROP INLET

PLATE NUMBER
670.01

Plot Scale - 1:200
- Plotted From - TRSF12139
File - ...\codh026X\ss67001_1ss67001_2.dgn

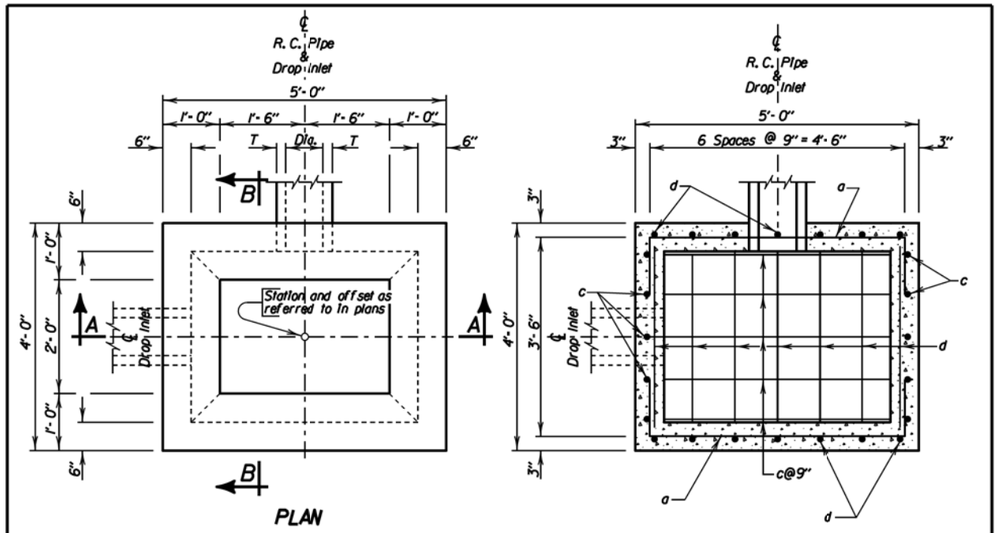

PIPE DISPLACEMENT REDUCTIONS		
R.C. Pipe Diameter Inches	T Inches	Class M6 Concrete Cu Yd
12	2	0.03
15	2 1/4	0.04
18	2 1/2	0.05
24	3	0.09
30	3 1/2	0.14
36	4	0.20

ESTIMATED QUANTITIES			
ITEM	UNIT	CONSTANT QUANTITY	VARIABLE QUANTITY
✳ Class M6 Concrete	Cu Yd	0.72	0.30H
Reinforcing Steel	Lb	98	32.06H
Frame and Grate Assembly	Each	1	———

DROP INLETS FOR 12" TO 36" DIAMETER PIPE

GENERAL NOTES:

✳ Reduce total quantities of concrete by the amount of concrete displaced by the pipe. The total quantity of concrete shall be computed to the nearest hundredth of a cubic yard. The total quantity of reinforcing steel shall be computed to the nearest pound.

Drop inlets shown may be modified by the addition or omission of connecting pipes as shown on the layouts.

Reinforcing steel shall conform to ASTM A615 Grade 60. The b and f bars shall be lapped 12 inches. Cut and bend reinforcing steel as required to place pipe(s) through the drop inlet wall.

Pipe shall not enter through a corner of the drop inlet.

Use 2" clear cover on all reinforcing steel unless otherwise noted.

Precasting of reinforced drop inlets will be permissible. Prior to precasting, the Contractor shall submit details to the Engineer for approval.

Maximum pipe diameter shall not exceed 27 inches on the 4 foot wide side and shall not exceed 36 inches on the 5 foot wide side of the drop inlet.

The dimension of H is in feet.

December 23, 2009

Published Date: 3rd Qtr. 2015	SDDOT	3' X 4' TYPE B REINFORCED CONCRETE DROP INLET	PLATE NUMBER 670.02
			Sheet 1 of 2

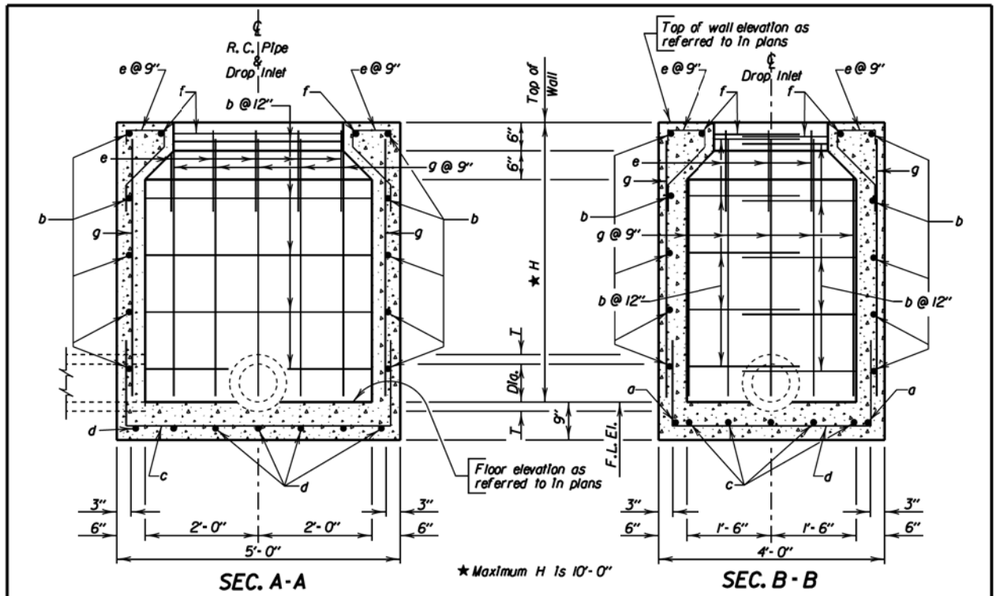

DROP INLETS FOR 12" TO 36" DIAMETER PIPE

REINFORCING SCHEDULE

MK.	No.	Size	Length	Type	Bending Details
a	2	4	6'-6"	17	
b	2H	4	9'-0"	17	
c	5	4	7'-6"	17	
d	7	4	6'-6"	17	
e	16	4	2'-6"	16A	
f	2	4	7'-0"	17	
g	24	4	H - 2"	Str.	

NOTE:
All dimensions are out to out of bars.

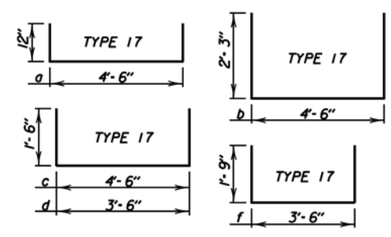

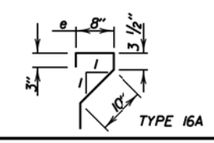

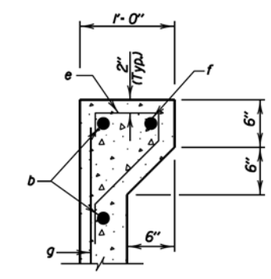

TYPICAL SEC. TOP OF WALL

December 23, 2009

Published Date: 3rd Qtr. 2015	SDDOT	3' X 4' TYPE B REINFORCED CONCRETE DROP INLET	PLATE NUMBER 670.02
			Sheet 2 of 2

Plot Scale - 1:200
Plotted From - TRSF12139
File - ...\cadh026X\s67002_1s67002_2.dgn

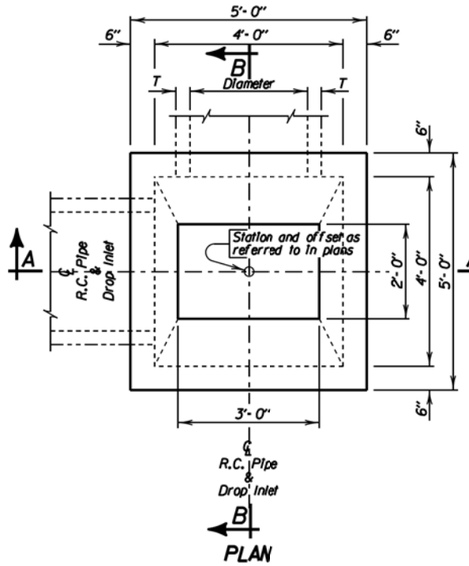

PLAN

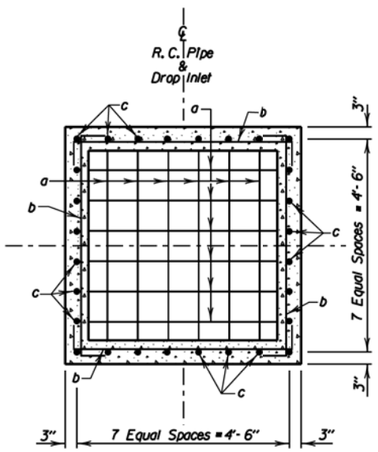

PLAN
(Bottom Steel)

ESTIMATED QUANTITIES			
ITEM	UNIT	CONSTANT QUANTITY	VARIABLE QUANTITY
✳ Class M6 Concrete	Cu Yd	0.97	0.33H
Reinforcing Steel	Lb	207	43.90H
Frame and Grate Assembly	Each	1	——

PIPE DISPLACEMENT REDUCTIONS		
R. C. Pipe Diameter Inches	T Inches	Class M6 Concrete Cu Yd
12	2	0.03
15	2 1/4	0.04
18	2 1/2	0.05
24	3	0.09
30	3 1/2	0.14
36	4	0.20

DROP INLETS FOR 12" TO 36" DIAMETER PIPE

GENERAL NOTES:

✳ Reduce total quantities of concrete by the amount of concrete displaced by the pipe. The total quantity of concrete shall be computed to the nearest hundredth of a cubic yard. The total quantity of reinforcing steel shall be computed to the nearest pound.

Drop Inlets shown may be modified by the addition or omission of connecting pipes as shown on the layouts.

Reinforcing steel shall conform to ASTM A615 Grade 60. Cut and bend reinforcing steel as required to place pipe(s) through the drop inlet wall.

Pipe shall not enter through a corner of the drop inlet.

Use 2" clear cover on all reinforcing steel unless otherwise noted.

Precasting of reinforced drop inlets will be permissible. Prior to precasting, the Contractor shall submit details to the Engineer for approval.

Maximum pipe diameter shall not exceed 36 inches.

The dimension of H is in feet.

December 23, 2009

Published Date: 3rd Qtr. 2015

SDDOT

4' X 4' TYPE B
REINFORCED CONCRETE DROP INLET

PLATE NUMBER 670.04

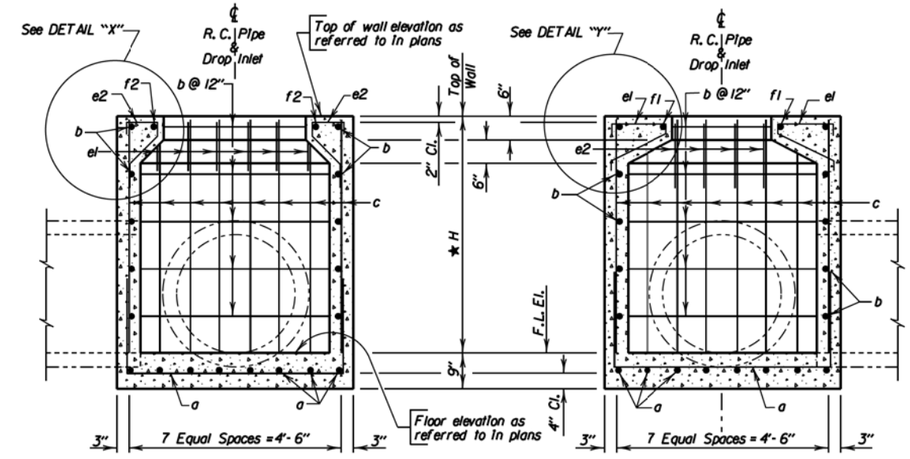

SEC. A-A

★ Maximum H is 10'-0"

SEC. B-B

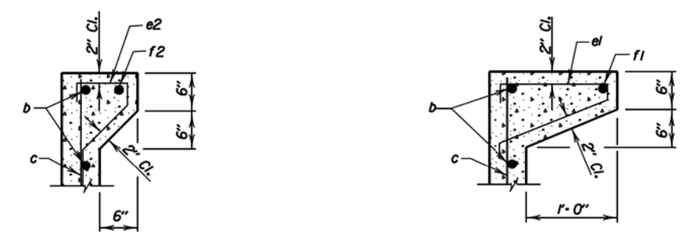

DETAIL "X"

DETAIL "Y"

DROP INLETS FOR 12" TO 36" DIAMETER PIPE

REINFORCING SCHEDULE

Mk.	No.	Size	Length	Type
a	16	5	8'-0"	17
b	4H	4	5'-6"	17
c	28	5	H-2"	Str.
e1	12	5	3'-3"	16A
e2	8	5	2'-6"	16A
f1	2	5	4'-6"	17
f2	2	5	3'-6"	17

Bending Details

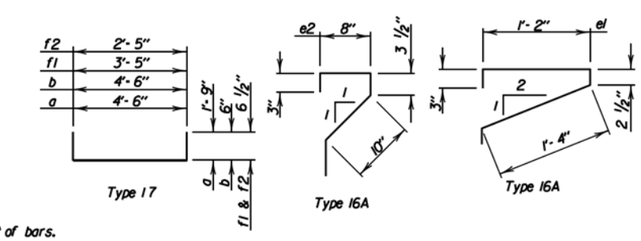

NOTE: All dimensions are out to out of bars.

December 23, 2009

Published Date: 3rd Qtr. 2015

SDDOT

4' X 4' TYPE B
REINFORCED CONCRETE DROP INLET

PLATE NUMBER 670.04

Plot Scale - 1:200
- Plotted From - TRSF12139
File - ...\coodn026X\s67004_1s67004_2.dgn

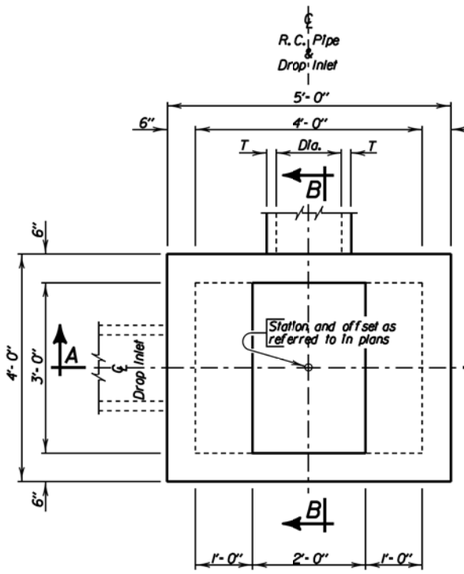

PLAN

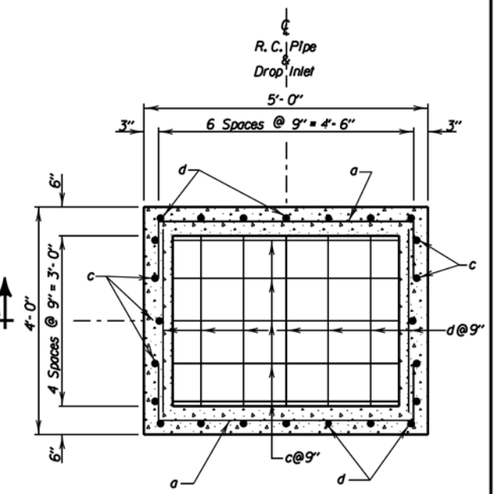

BOTTOM SECTION

ESTIMATED QUANTITIES			
ITEM	UNIT	CONSTANT QUANTITY	VARIABLE QUANTITY
✳ Class M6 Concrete	CuYd	0.72	0.30H
Reinforcing Steel	Lb	94	28.06H
Frame and Grate Assembly	Each	1	———

DROP INLETS FOR 12" TO 36" DIAMETER PIPE

GENERAL NOTES:

✳ Reduce total quantities of concrete by the amount of concrete displaced by the pipe. The total quantity of concrete shall be computed to the nearest hundredth of a cubic yard. The total quantity of reinforcing steel shall be computed to the nearest pound.

Drop inlets shown may be modified by the addition or omission of connecting pipes as shown on the layouts.

Reinforcing steel shall conform to ASTM A615 Grade 60. The b and f bars shall be lapped 12 inches. Cut and bend reinforcing steel as required to place pipe(s) through the drop inlet wall.

Pipe shall not enter through a corner of the drop inlet.

Use 2" clear cover on all reinforcing steel unless otherwise noted.

Precasting of reinforced drop inlets will be permissible. Prior to precasting, the Contractor shall submit details to the Engineer for approval.

Maximum pipe diameter shall not exceed 27 inches on the 4 foot wide side and shall not exceed 36 inches on the 5 foot wide side of the drop inlet.

The dimension of H is in feet.

PIPE DISPLACEMENT REDUCTIONS		
R.C. Pipe Diameter Inches	T Inches	Class M6 Concrete CuYd
12	2	0.03
15	2 1/4	0.04
18	2 1/2	0.05
24	3	0.09
30	3 1/2	0.14
36	4	0.20

December 23, 2009

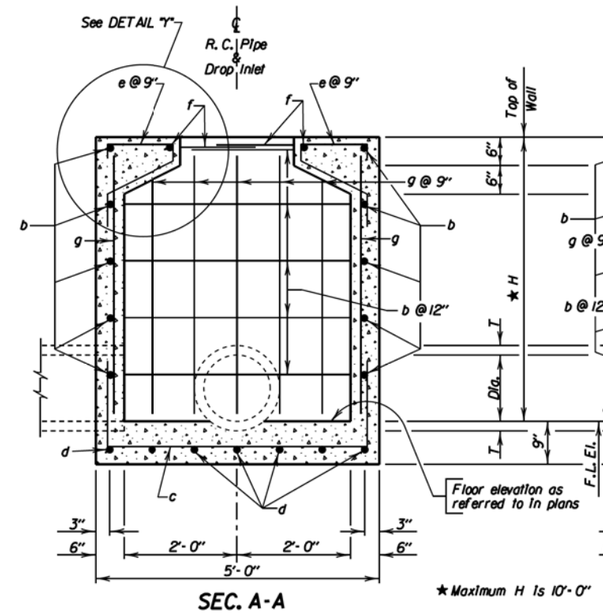

SEC. A-A

★ Maximum H is 10'-0"

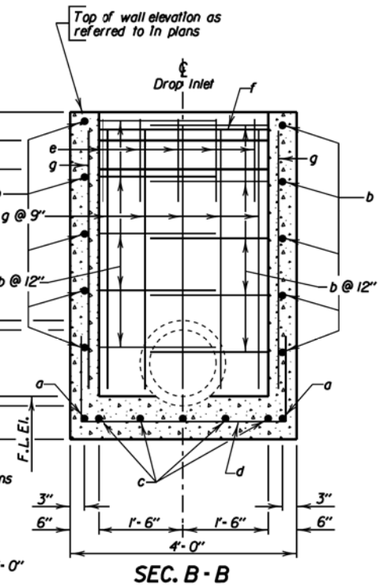

SEC. B-B

DROP INLETS FOR 12" TO 36" DIAMETER PIPE

REINFORCING SCHEDULE

MK.	No.	Size	Length	Type
a	2	4	6'-6"	17
b	2H	4	9'-0"	17
c	5	4	7'-6"	17
d	7	4	6'-6"	17
e	10	4	3'-6"	16A
f	2	4	7'-0"	17
g	24	4	H - 2"	Str.

Bending Details

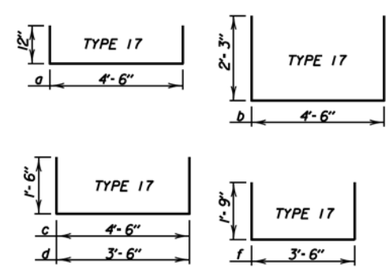

NOTE:
All dimensions are out to out of bars.

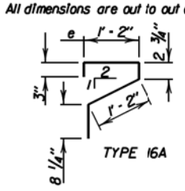

TYPE 16A

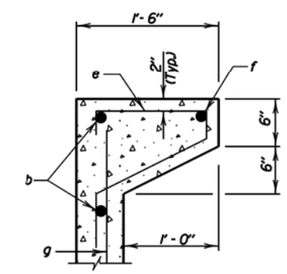

DETAIL "Y"

December 23, 2009

Plot Scale - 1:200
Plotted From - TRSF12139
File - ...\codh026X\s67007_1s67007_2.dgn

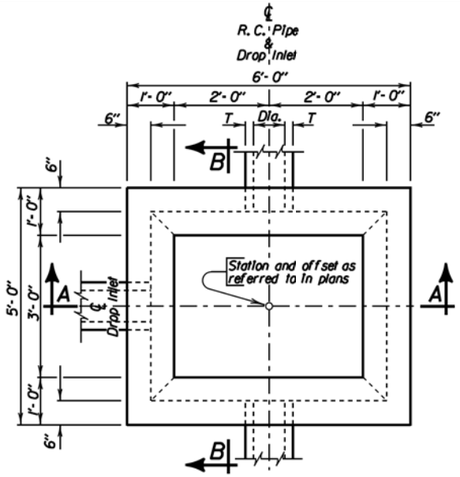

PLAN

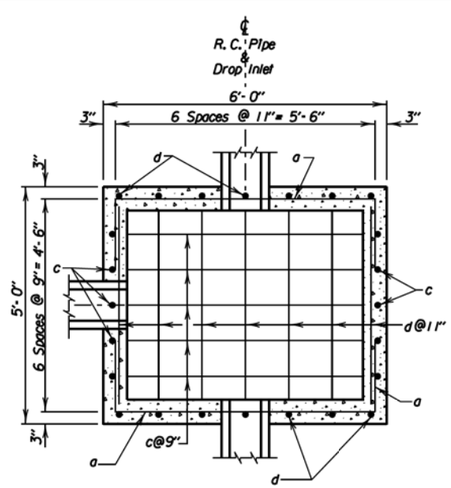

BOTTOM SECTION

PIPE DISPLACEMENT REDUCTIONS		
R.C. Pipe Diameter Inches	T Inches	Class M6 Concrete Cu Yd
12	2	0.03
15	2 1/4	0.04
18	2 1/2	0.05
24	3	0.09
30	3 1/2	0.14
36	4	0.20
42	4 1/2	0.26
48	5	0.34

ESTIMATED QUANTITIES			
ITEM	UNIT	CONSTANT QUANTITY	VARIABLE QUANTITY
✳ Class M6 Concrete	Cu Yd	1.06	0.37H
Reinforcing Steel	Lb	116	30.72H
Frame and Grate	Each	1	——

DROP INLETS FOR 12" TO 48" DIAMETER PIPE

GENERAL NOTES:

✳ Reduce total quantities of concrete by the amount of concrete displaced by the pipe. The total quantity of concrete shall be computed to the nearest hundredth of a cubic yard. The total quantity of reinforcing steel shall be computed to the nearest pound.

Drop inlets shown may be modified by the addition or omission of connecting pipes as shown on the layouts.

Reinforcing steel shall conform to ASTM A615 Grade 60. The b and f bars shall be lapped 12 inches. Cut and bend reinforcing steel as required to place pipe(s) through the drop inlet wall.

Pipe shall not enter through a corner of the drop inlet.

Use 2" clear cover on all reinforcing steel unless otherwise noted.

Precasting of reinforced drop inlets will be permissible. Prior to precasting, the Contractor shall submit details to the Engineer for approval.

Maximum pipe diameter shall not exceed 36 inches on the 5 foot wide side and shall not exceed 48 inches on the 6 foot wide side of the drop inlet.

The dimension of H is in feet.

December 23, 2009

Published Date: 3rd Qtr. 2015

SDDOT

4' X 5' TYPE C
REINFORCED CONCRETE DROP INLET

PLATE NUMBER
670.11

Sheet 1 of 2

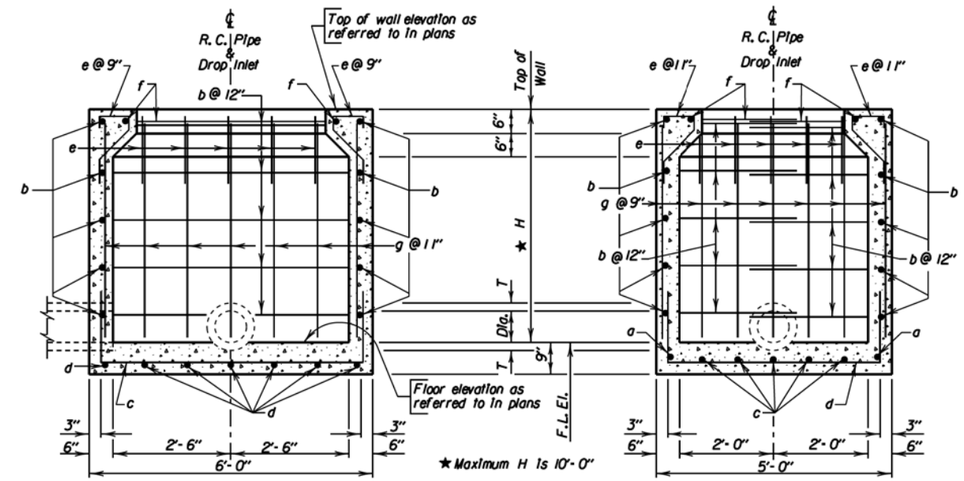

SEC. A-A

SEC. B-B

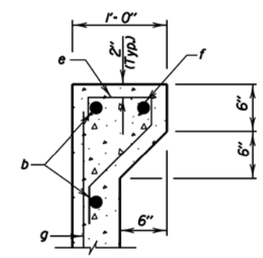

TYPICAL SEC. TOP OF WALL

DROP INLETS FOR 12" TO 48" DIAMETER PIPE

REINFORCING SCHEDULE					
Mk.	No.	Size	Length	Type	Bending Details
a	2	4	7'-6"	17	
b	2H	4	11'-0"	17	
c	5	4	8'-6"	17	
d	7	4	7'-6"	17	
e	20	4	2'-6"	16A	
f	2	4	9'-0"	17	
g	24	4	H - 2"	Str.	

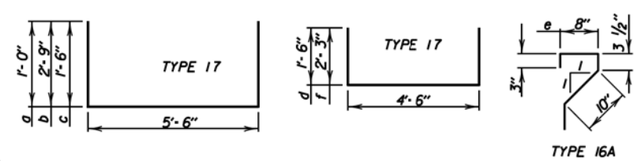

NOTE:
All dimensions are out to out of bars.

December 23, 2009

Published Date: 3rd Qtr. 2015

SDDOT

4' X 5' TYPE C
REINFORCED CONCRETE DROP INLET

PLATE NUMBER
670.11

Sheet 2 of 2

Plot Scale - 1:200
- Plotted From - TRSF12139
File - ...\coding026X\s67011_1s67011_2.dgn

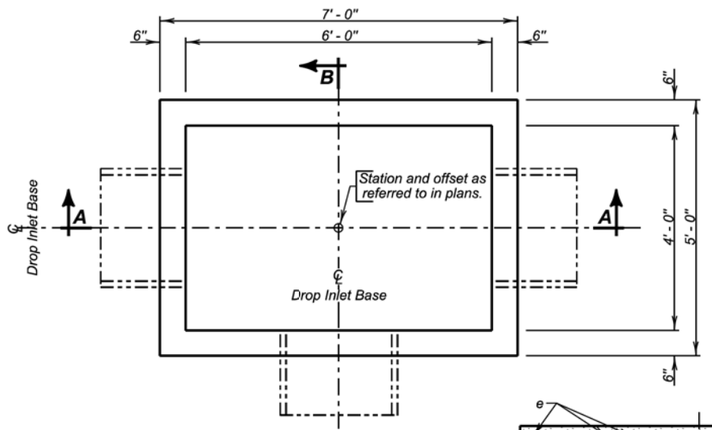

PLAN

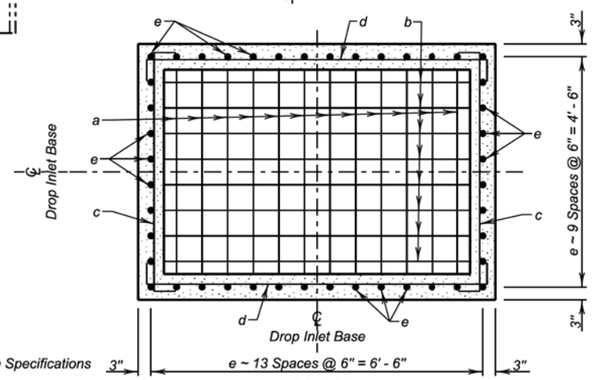

PLAN
(Bottom Steel)
(Pipe Not Shown)

SPECIFICATIONS:

1. Design Specifications: AASHTO LRFD Bridge Design Specifications 2012 Edition.
2. Construction Specifications: South Dakota Standard Specifications for Roads and Bridges, Current Edition and required Provisions, Supplemental Specifications, and Special Provisions as included in the Proposal.

GENERAL NOTES:

1. Design Live Load: HL-93 loading. No construction loading in excess of legal load was considered.
2. Base is intended for use with a Precast Concrete Type S Drop Inlet Lid, Standard Plate 670.38. Base may be precast. If precast base used, and details differ from that shown, the precast base must be on the current approved list. The current approved list is available through proper channels from the SDDOT Office of Bridge Design.
3. To qualify for addition to the approved list, submit a checked design, by South Dakota Registered Professional Engineers and shop plans to the Office of Bridge Design for approval. Design shall be in accordance with the current edition of the AASHTO LRFD Bridge Design Specifications.
4. ✳ Reduce total quantities of concrete by the amount of concrete displaced by the pipe. The total quantity of concrete shall be computed to the nearest hundredth of a cubic yard. The total quantity of reinforcing steel shall be computed to the nearest pound.
5. Inlets shown may be modified by the addition or omission of connecting pipes as shown on the layouts. Connecting pipes shall not enter the inlet through the corners.
6. Maximum R.C.P. diameter shall not exceed 36 inches (30 inches for R.C. Arch) on the 4-foot wide side and shall not exceed 54 inches (48 inches for R.C. Arch) on the 6-foot wide side of the Drop Inlet.
7. Reinforcing steel shall conform to ASTM A615 Grade 60. Cut and bend reinforcing steel as required to place pipe(s) through the inlet wall.
8. Use 1 inch clear cover on all reinforcing steel unless otherwise noted.
9. The dimension of H is in feet. Maximum H is 8 feet.

June 26, 2015

PIPE DISPLACEMENT REDUCTIONS

	Diameter (Inches)	Wall T (Inches)	Class M6 Concrete (Cu. Yd.)
R.C.P.	12	2	0.03
	15	2 ¼	0.04
	18	2 ½	0.05
	24	3	0.09
	30	3 ½	0.14
	36	4	0.20
	42	4 ½	0.26
	48	5	0.34
	54	5 ½	0.43
R.C. ARCH	18	2 ½	0.05
	24	3 ½	0.09
	30	4	0.14
	36	4 ½	0.19
	42	4 ½	0.24
	48	5	0.32

REINFORCING SCHEDULE

Mk.	No.	Size	Length	Type
a	14	5	9' - 6"	17
b	10	5	11' - 6"	17
c	2H	4	5' - 6"	17
d	2H	4	7' - 6"	17
e	44	4	H - 2"	Str.

Bending Details

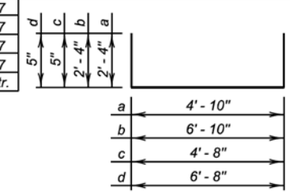

Type 17

NOTE:
All dimensions are out to out of bars

ESTIMATED QUANTITIES

ITEM	UNIT	CONSTANT QUANTITY	VARIABLE QUANTITY
✳ Class M6 Concrete	Cu.Yd.	0.97	0.41H
Reinforcing Steel	Lb.	253.77	46.76H

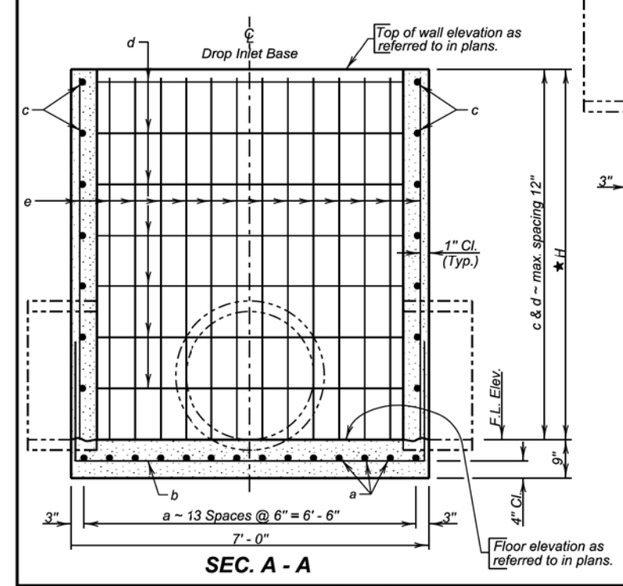

SEC. A - A

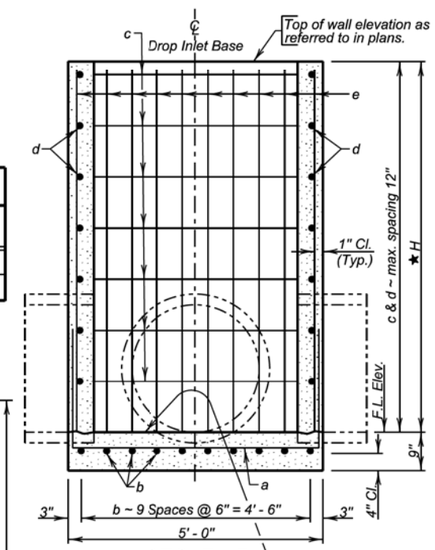

SEC. B - B

★ Maximum H is 8' - 0"

June 26, 2015

Plot Scale - 1:200
- Plotted From - TRSF12139
File - ...\cadn026X\s67030_1s67030_2.dgn

STATE OF SOUTH DAKOTA	PROJECT	SHEET	TOTAL SHEETS
	P 0081(93)157	B114	B120

Plotting Date: 09/01/2015

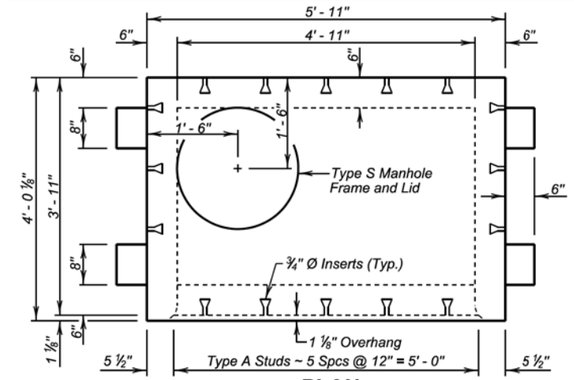

PLAN

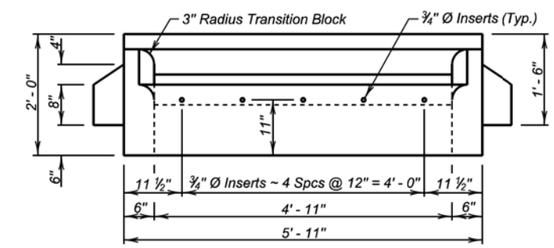

ELEVATION

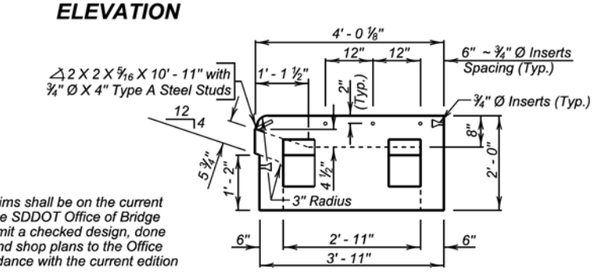

SIDE VIEW
(With Sidewalk Inserts)

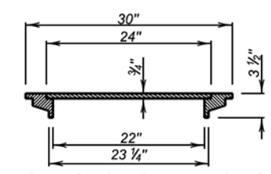

TYPICAL SECTION THROUGH TYPE S MANHOLE FRAME AND LID
(Weight 140 Lbs.)

December 23, 2012

GENERAL NOTES:

1. The Precast Concrete Type S Drop Inlet Lid and the shims shall be on the current approved list available through proper channels from the SDDOT Office of Bridge Design. To qualify for addition to the approved list, submit a checked design, done by South Dakota Registered Professional Engineers, and shop plans to the Office of Bridge Design for approval. Design shall be in accordance with the current edition of the AASHTO LRFD Bridge Design Specifications.
2. Design Live Load shall be HL - 93.
3. Concrete mix shall be as per fabricators design, however, minimum compressive strength shall not be less than 4500 psi. Type II Cement is required.
4. The Type S Manhole Frame and Lid shall conform to AASHTO M105, Class 30.
5. Structural Steel shall conform to ASTM A36. The ¾ inch diameter Headed Type A Steel Studs shall comform to Section 7 of the current edition of AWS Dl. I Structural Steel Welding Code.
6. The ¾ inch diameter Concrete Inserts shall be galvanized or made of a corrosion resistant material. Provide ¾ inch diameter x 1' - 6" long dowels conforming to ASTM A615, Gr. 60 threaded to fit Inserts with each lid.
7. All costs associated with furnishing and installing the Precast Concrete Type S Drop Inlet Lid including the type S manhole frame and lid, shims, inserts, and dowels shall be included in the contract unit price per each for " 4' x 6' Precast Concrete Type S Drop Inlet Lid ".

Published Date: 3rd Qtr. 2015	SDDOT	4' X 6' PRECAST CONCRETE TYPE S DROP INLET LID	PLATE NUMBER 670.38
			Sheet 1 of 1

Plot Scale - 1:200
- Plotted From - TRSF12139
File - ...\prj\codh026X\sbtlanks67038.dgn

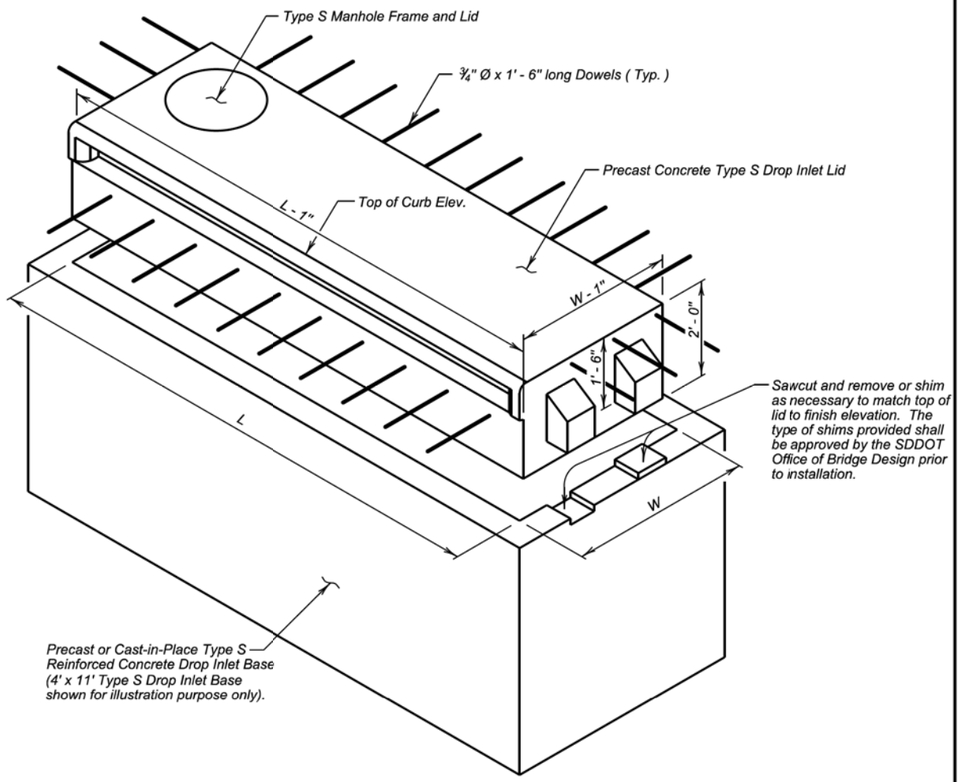

TYPE S DROP INLET

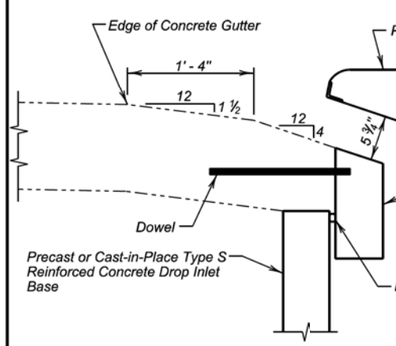

CONCRETE GUTTER DETAIL

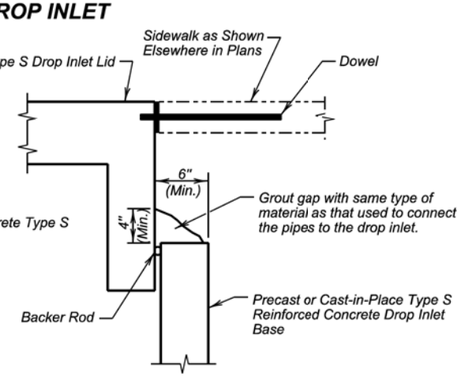

GROUTING DETAIL
(Sides and Back, Adjacent to Sidewalk)

December 23, 2012

Published Date: 3rd Qtr. 2015	SDDOT	INSTALLATION DETAILS FOR PRECAST CONCRETE TYPE S DROP INLET LID	PLATE NUMBER 670.45
			Sheet 1 of 2

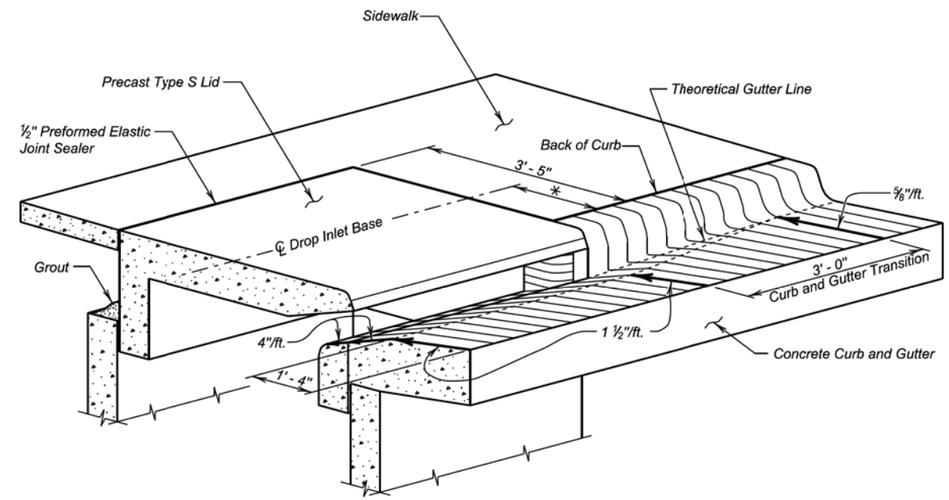

CURB AND GUTTER TRANSITION DETAILS

Drop Inlet Base Unit Size	⁎ Distance
4' x 6'	1' - 5 ½"
4' x 11'	1' - 5 ½"
7' x 11'	2' - 11 ½"

GENERAL NOTES:

1. Dowels shall be used to anchor the precast concrete Type S drop inlet lid to the concrete gutter. See Standard Plate 670.38 or 670.40 as applicable. If there is sidewalk adjacent dowels shall be used to anchor the precast concrete Type S drop inlet lid to the sidewalk. If there is sidewalk adjacent to the drop inlet, the precast lid shall match the finish elevations and cross slopes of the sidewalk.
2. The sidewalk shall be steel reinforced when the sidewalk adjoins the precast lid. Refer to Standard Plate 651.70 for reinforced concrete sidewalk details.

December 23, 2012

Published Date: 3rd Qtr. 2015	SDDOT	INSTALLATION DETAILS FOR PRECAST CONCRETE TYPE S DROP INLET LID	PLATE NUMBER 670.45
			Sheet 2 of 2

Plot Scale - 1:200
- Plotted From - TRSF12139
File - ...\cadn026X\s67045_1s67045_2.dgn

GENERAL NOTE:

Top of grate elevation shall be 0.04' below theoretical elevation of gutter.

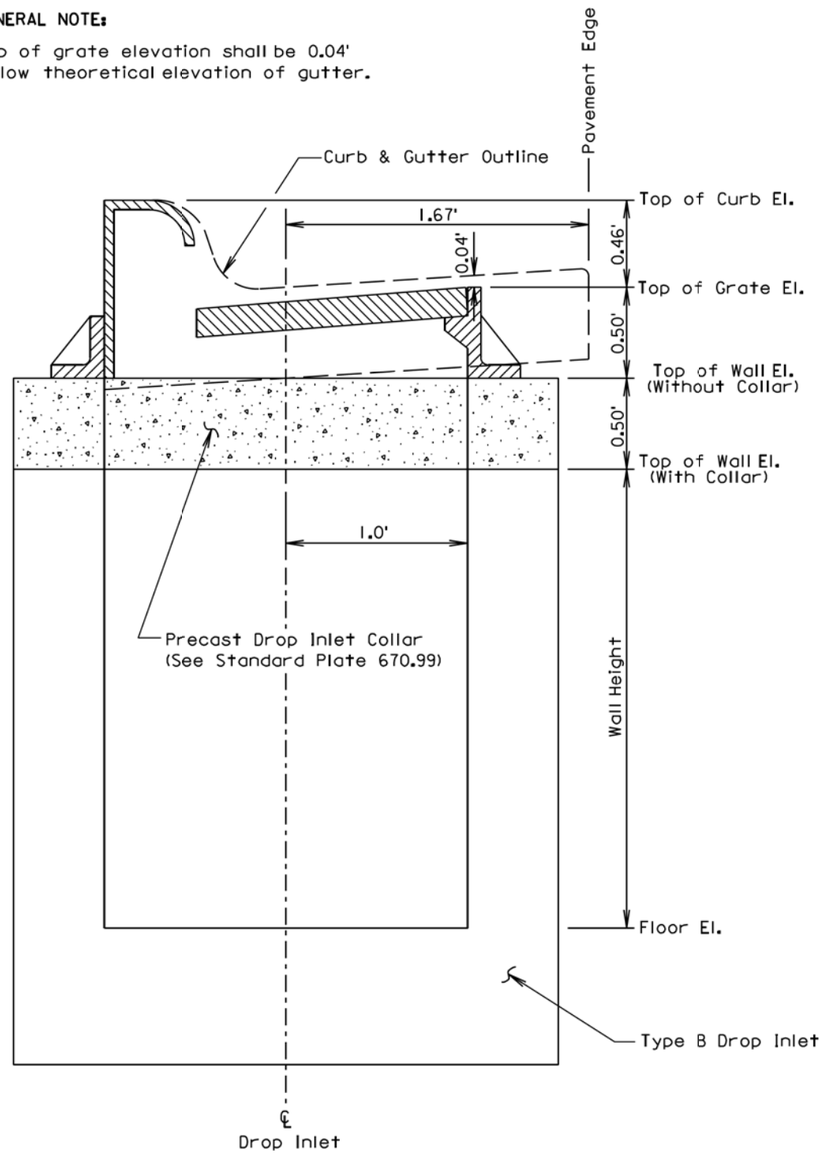

June 26, 2011

Published Date: 3rd Qtr. 2015	SDDOT	INSTALLATION OF TYPE B DROP INLET	PLATE NUMBER 670.75 Sheet 1 of 1

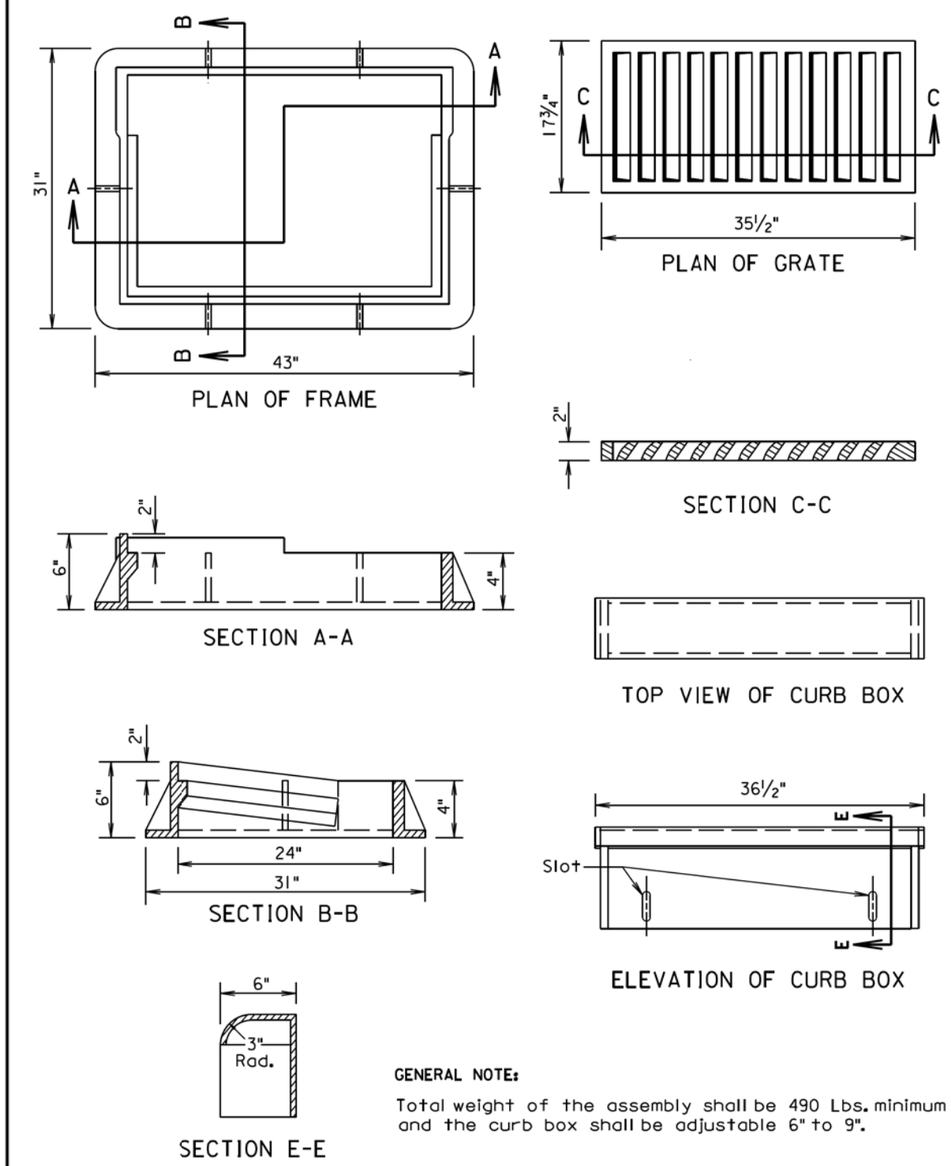

GENERAL NOTE:

Total weight of the assembly shall be 490 Lbs. minimum and the curb box shall be adjustable 6" to 9".

March 31, 2000

Published Date: 3rd Qtr. 2015	SDDOT	TYPE B FRAME AND GRATE ASSEMBLY	PLATE NUMBER 670.80 Sheet 1 of 1

Plot Scale - 1:200
- Plotted From - TRSF12139
File - ...\pn\cadn026X\s67075s67080.dgn

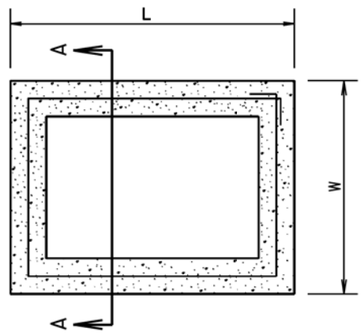

PLAN VIEW

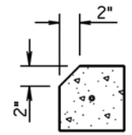

For Type D Drop Inlets only:
Use Precast Drop Inlet Collar with 2" chamfer on L sides only.

DETAIL B

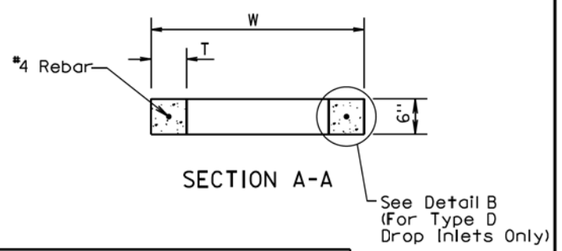

SECTION A-A

INFORMATIONAL QUANTITIES					
FRAME AND GRATE TYPE	L Ft-In	W Ft-In	T In	CLASS M6 CONCRETE CuYd	REINFORCING STEEL Lb
TYPE B	4'-0"	3'-0"	6	0.11	9
TYPE C	5'-0"	4'-0"	6	0.15	11
TYPE D	4'-0"	2'-6"	6	0.10	8

GENERAL NOTES:

All reinforcing steel shall conform to ASTM A615, Grade 60.

The ½" diameter bar shall lap 6"± and shall be centered in the concrete.

The cost of furnishing and installing Precast Drop Inlet Collars, including labor, materials, and incidentals shall be incidental to the contract unit price per Each for "Precast Drop Inlet Collar".

March 31, 2000

Published Date: 3rd Qtr. 2015 | SDDOT | PRECAST DROP INLET COLLAR | PLATE NUMBER 670.99 | Sheet 1 of 1

SPECIFICATIONS

1. Design Specifications: AASHTO Specifications for Highway Bridges, 1996 Edition (Service Load).
2. Construction Specifications: South Dakota Standard Specifications for Roads and Bridges, Current Edition and required Provisions, Supplemental Specifications and/or Special Provisions as included in the Proposal.

DESIGN MIX OF CONCRETE

1. Mix shall be designed to produce a concrete having a minimum compressive strength of 4000 p.s.i. at 28 days.
2. Type II Cement is required.

GENERAL NOTES

1. Design Live Load: HS 20-44 and Alternate Loading. No construction loading in excess of legal Load was considered.
2. The design of the junction box is based on a maximum fill over the junction box of 5 feet.
3. Unit Stresses: Concrete fc = 1600 p.s.i.
   Reinforcing Steel fs = 24000 p.s.i.
4. All reinforcing steel shall conform to ASTM A615 Grade 60.
5. All exposed edges shall be chamfered ¾".
6. Use 1" clear cover on all reinforcing steel except as shown.
7. The cost of furnishing and installing the manhole steps shall be incidental to the contract unit price per Lb. for "Reinforcing steel".
8. Reinforcing steel shall be cut and bent in field as necessary to fit pipe and manhole openings. (Pipe openings are not shown in these details.) Number, size and location of pipes entering junction box are shown elsewhere on plan sheets.
9. All pipes entering the junction box must fit between the inside faces of the walls.

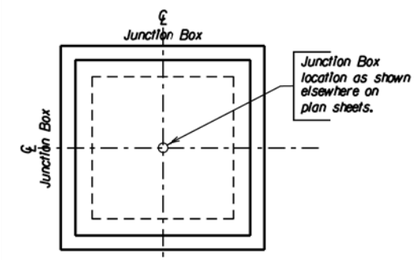

PLAN

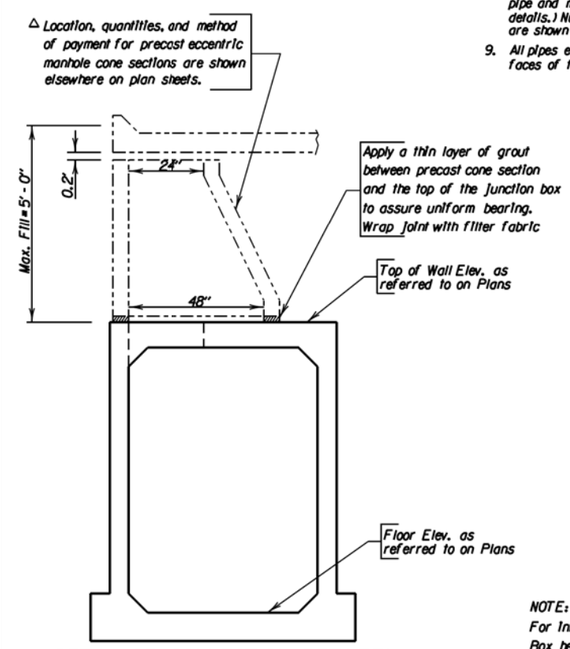

△ DETAIL OF CONNECTION BETWEEN PRECAST ECCENTRIC MANHOLE CONE SECTION AND JUNCTION BOX

ITEM	Class M6 Concrete	Reinforcing Steel
UNIT	Cu. Yd.	Lb.
H = 4'-0"	4.37	821
H = 4'-6"	4.61	846
H = 5'-0"	4.85	908
H = 5'-6"	5.10	933
H = 6'-0"	5.34	958
H = 6'-6"	5.58	1020
H = 7'-0"	5.82	1045
H = 7'-6"	6.06	1071
H = 8'-0"	6.30	1132

NOTE:
For informational purposes only, the estimated quantities for Junction Box height H are shown above. These quantities do not include quantity reduction for pipe openings, but do include the reduction for the 24" diameter manhole opening.

March 31, 2000

Published Date: 3rd Qtr. 2015 | SDDOT | 5'X 5' JUNCTION BOX | PLATE NUMBER 671.01 | Sheet 1 of 3

Plot Scale - 1:200
- Plotted From - TRSF12139
File - ...\codn026X\s67099s67101_1.dgn

REINFORCING SCHEDULE

	Mk.	No.	Size	Length	Type
H = 4'-0"	Φa1	1	6	9'-0"	T3
	Øa2	4	-	——	-
	h3	28	4	5'-9"	17A
	k3	48	4	8'-6"	17
	m1	18	5	6'-9"	Str.
	n1	18	5	5'-9"	Str.
	p1	52	4	5'-0"	Str.
	q1	8	4	3'-6"	17A
H = 4'-6"	Φa1	1	6	9'-0"	T3
	Øa2	4	-	——	-
	h4	28	4	6'-3"	17A
	k4	48	4	9'-0"	17
	m1	18	5	6'-9"	Str.
	n1	18	5	5'-9"	Str.
	p1	52	4	5'-0"	Str.
	q1	8	4	3'-6"	17A
H = 5'-0"	Φa1	1	6	9'-0"	T3
	Øa2	5	-	——	-
	h5	28	4	6'-9"	17A
	k5	48	4	9'-6"	17
	m1	18	5	6'-9"	Str.
	n1	18	5	5'-9"	Str.
	p1	60	4	5'-0"	Str.
	q1	12	4	3'-6"	17A
H = 5'-6"	Φa1	1	6	9'-0"	T3
	Øa2	5	-	——	-
	h6	28	4	7'-3"	17A
	k6	48	4	10'-0"	17
	m1	18	5	6'-9"	Str.
	n1	18	5	5'-9"	Str.
	p1	60	4	5'-0"	Str.
	q1	12	4	3'-6"	17A
H = 6'-0"	Φa1	1	6	9'-0"	T3
	Øa2	6	-	——	-
	h7	28	4	7'-9"	17A
	k7	48	4	10'-6"	17
	m1	18	5	6'-9"	Str.
	n1	18	5	5'-9"	Str.
	p1	60	4	5'-0"	Str.
	q1	12	4	3'-6"	17A
H = 6'-6"	Φa1	1	6	9'-0"	T3
	Øa2	6	-	——	-
	h8	28	4	8'-3"	17A
	k8	48	4	11'-0"	17
	m1	18	5	6'-9"	Str.
	n1	18	5	5'-9"	Str.
	p1	68	4	5'-0"	Str.
	q1	16	4	3'-6"	17A
H = 7'-0"	Φa1	1	6	9'-0"	T3
	Øa2	7	-	——	-
	h9	28	4	8'-9"	17A
	k9	48	4	11'-6"	17
	m1	18	5	6'-9"	Str.
	n1	18	5	5'-9"	Str.
	p1	68	4	5'-0"	Str.
	q1	16	4	3'-6"	17A

Bending Details

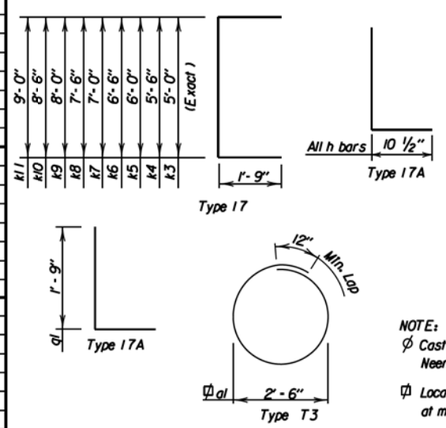

	Mk.	No.	Size	Length	Type
H = 7'-6"	Φa1	1	6	9'-0"	T3
	Øa2	7	-	——	-
	h10	28	4	9'-3"	17A
	k10	48	4	12'-0"	17
	m1	18	5	6'-9"	Str.
	n1	18	5	5'-9"	Str.
	p1	68	4	5'-0"	Str.
	q1	16	4	3'-6"	17A
H = 8'-0"	Φa1	1	6	9'-0"	T3
	Øa2	8	-	——	-
	h11	28	4	9'-9"	17A
	k11	48	4	12'-6"	17
	m1	18	5	6'-9"	Str.
	n1	18	5	5'-9"	Str.
	p1	76	4	5'-0"	Str.
	q1	20	4	3'-6"	17A

NOTE:

Ø Cast Iron Manhole Steps (R - 1980 - C) from Neenah Foundry or equivalant.

Φ Locate in center of top slab with 3" clearance at manhole opening.

All dimensions are out to out of bars.

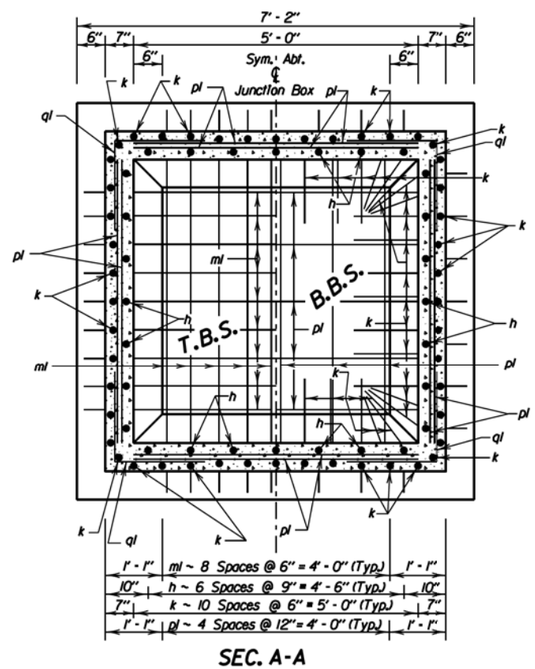

SEC. A-A

March 31, 2000

Published Date: 3rd Qtr. 2015

SDDOT

5'X 5' JUNCTION BOX

PLATE NUMBER 671.01

Sheet 2 of 3

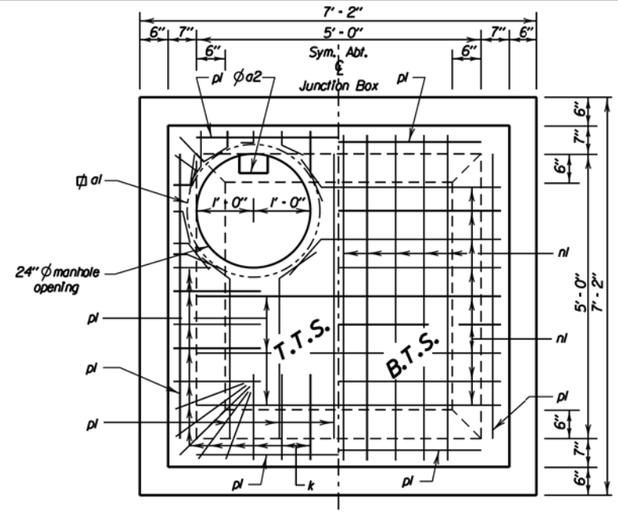

PLAN

LEGEND FOR PLACING RE-STEEL

T. T. S. - Top of Top Slab
B. T. S. - Bottom of Top Slab
T. B. S. - Top of Bottom Slab
B. B. S. - Bottom of Bottom Slab
O. F. W. - Outside Face of Wall
I. F. W. - Inside Face of Wall

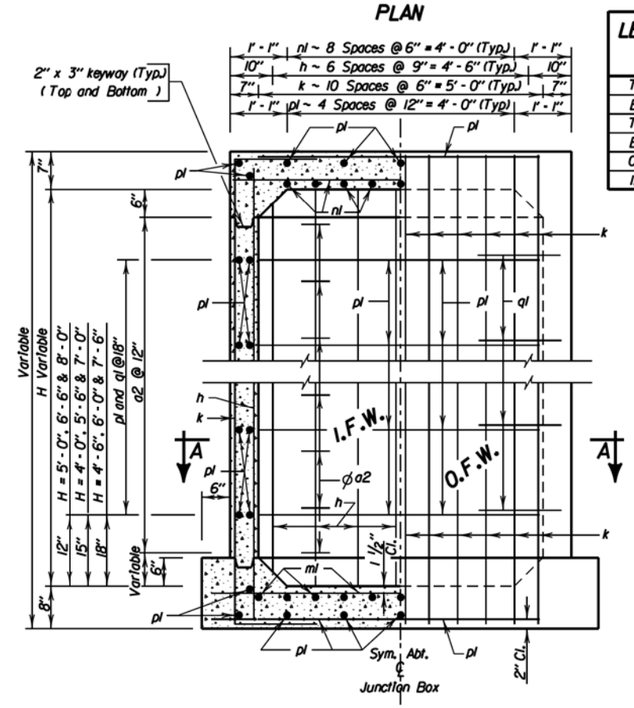

ELEVATION

March 31, 2000

Published Date: 3rd Qtr. 2015

SDDOT

5'X 5' JUNCTION BOX

PLATE NUMBER 671.01

Sheet 3 of 3

Plot Scale - 1:200

- Plotted From - TRSF12139

File - ...\codn026X\s67101_2s67101_3.dgn

STATE OF SOUTH DAKOTA	PROJECT	SHEET	TOTAL SHEETS
	P 0081(93)157		

Plotting Date: 09/01/2015

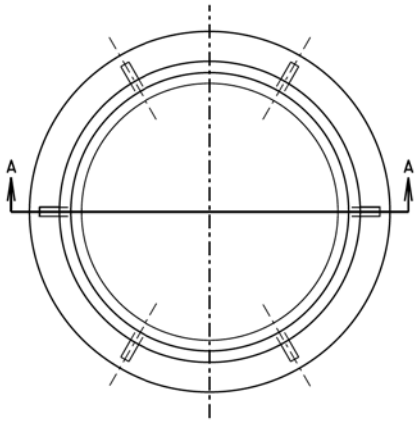

PLAN OF FRAME

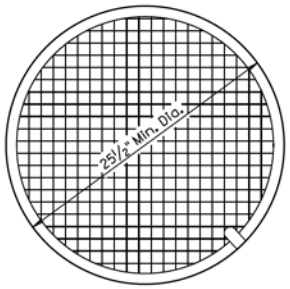

PLAN OF LID

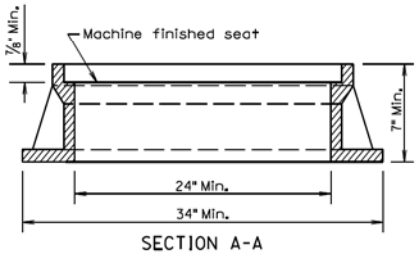

SECTION A-A

ASSEMBLED VIEW

TYPE	HEIGHT	MIN. WEIGHT
A7	7"	400Lbs.
A8	8"	440Lbs.
A9	9"	470Lbs.
A10	10"	480Lbs.

GENERAL NOTE:

Geometric pattern on top of lid other than that shown shall be approved by the Engineer.

March 31, 2000

Published Date: 3rd Qtr. 2015	SDDOT	TYPE A MANHOLE FRAME AND LID	PLATE NUMBER 671.10 Sheet 1 of 1

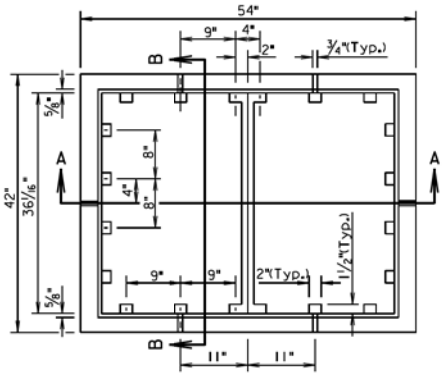

PLAN OF FRAME

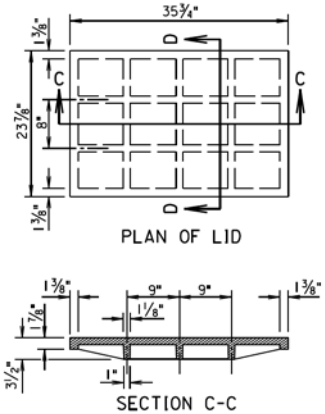

PLAN OF LID

SECTION C-C

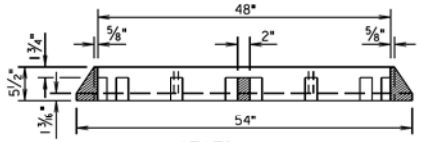

SECTION A-A

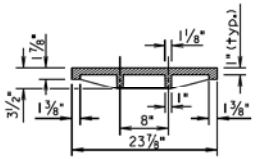

SECTION D-D

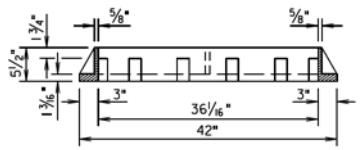

SECTION B-B

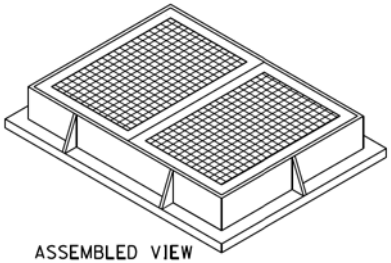

ASSEMBLED VIEW

GENERAL NOTE:

Total weight of the frame and lid shall be 1130 pounds minimum.

March 31, 2000

Published Date: 3rd Qtr. 2015	SDDOT	TYPE C MANHOLE FRAME AND LID	PLATE NUMBER 671.20 Sheet 1 of 1

Plot Scale - 1314.286
TRSF12139
Plotted From -
File - ...\prj\cadd\265X\s671\0671.20.dgn

STATE OF SOUTH DAKOTA	PROJECT	SHEET	TOTAL SHEETS
	P 0081(93)157	B120	B120

Plotting Date: 09/01/2015

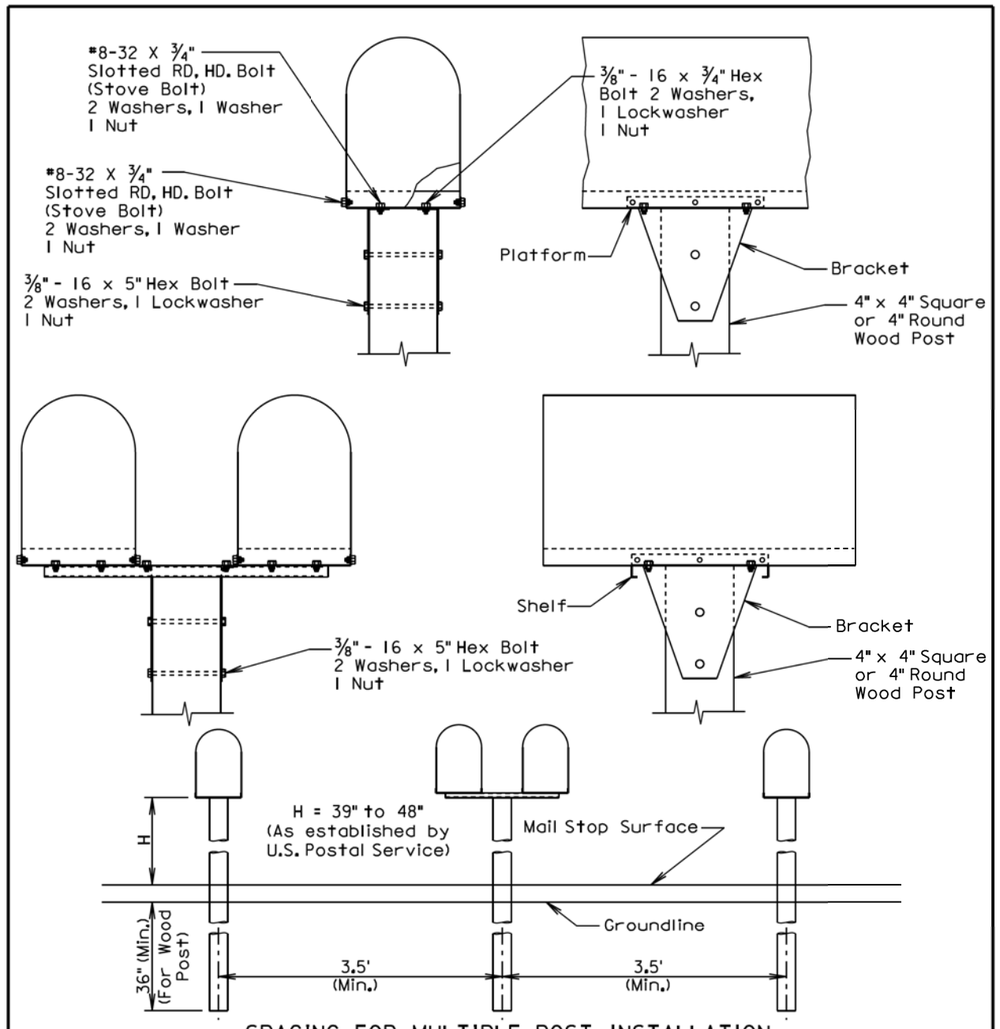

SPACING FOR MULTIPLE POST INSTALLATION

GENERAL NOTES:

The post support assemblies provided should be consistant throughout the project.

Single and double mailboxes may be in any sequence.

Post support assemblies shall be one from the approved products list, a 4"x4" or 4" round wood post, or an alternate post support assembly that meets the test level 3 crash testing requirements of NCHRP 350 or MASH.

Alternate mailbox support assemblies shall be approved by the Engineer prior to installation. The Contractor shall provide the Engineer written certification that the mailbox support assembly has met the crash testing requirements and will be installed in accordance with the manufacturer's installation instructions.

September 6, 2013

Published Date: 3rd Qtr. 2015	SDDOT	**SINGLE AND DOUBLE MAILBOX ASSEMBLIES**	PLATE NUMBER 900.02 — Sheet 1 of 1

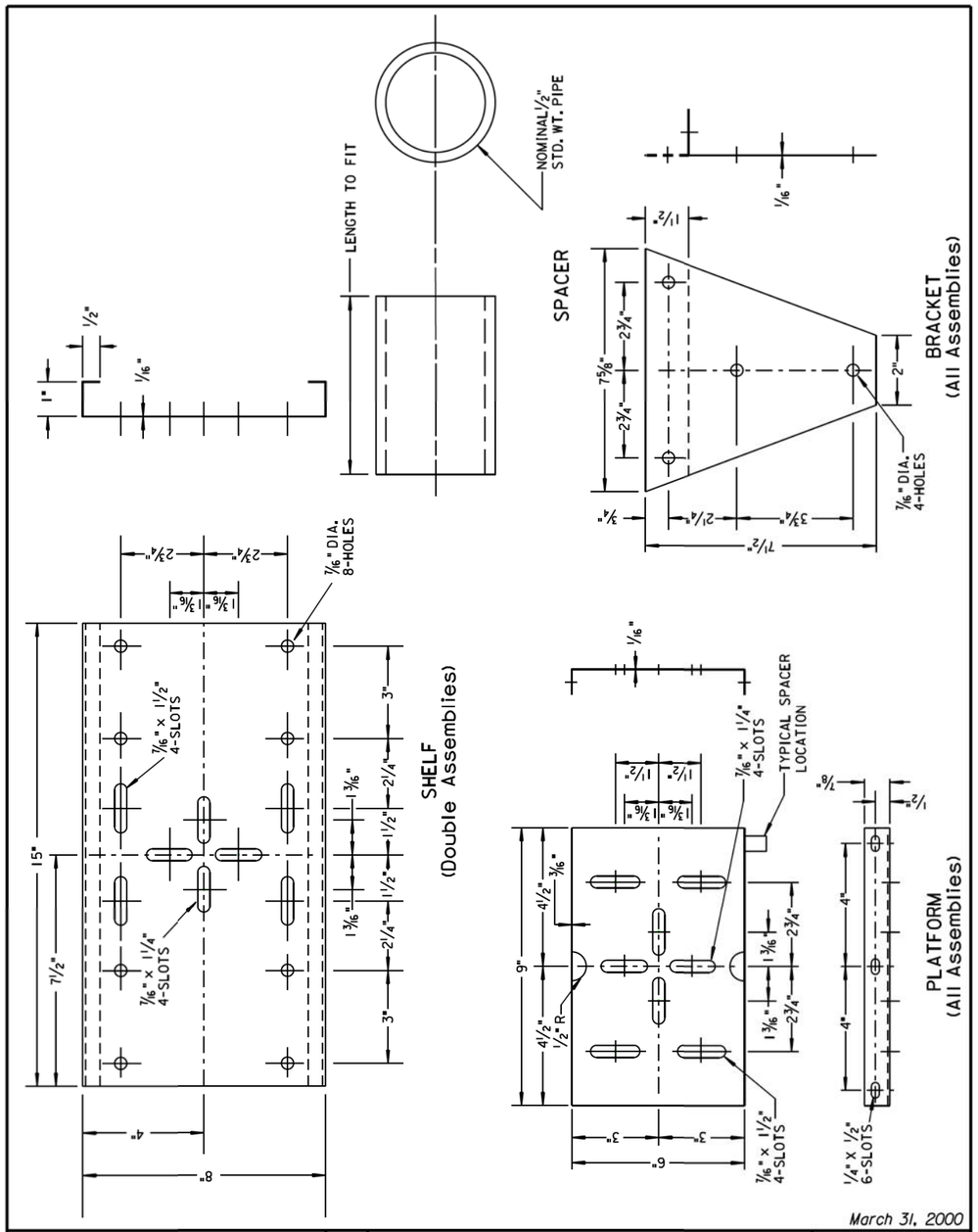

March 31, 2000

Published Date: 3rd Qtr. 2015	SDDOT	**MAILBOX SUPPORT HARDWARE**	PLATE NUMBER 900.03 — Sheet 1 of 1

Plot Scale - 1:200

- Plotted From - TRSF12139

File - ...\prj\cadn\026X\s90002s90003.dgn