STATE OF SOUTH DAKOTA	PROJECT	SHEET	TOTAL SHEETS
	P 0081(93)157	X1	X47

Plotting Date: 09/01/2015

Section X: Cross Sections

X1 General Layout W/Index
X2-X47 Cross Sections

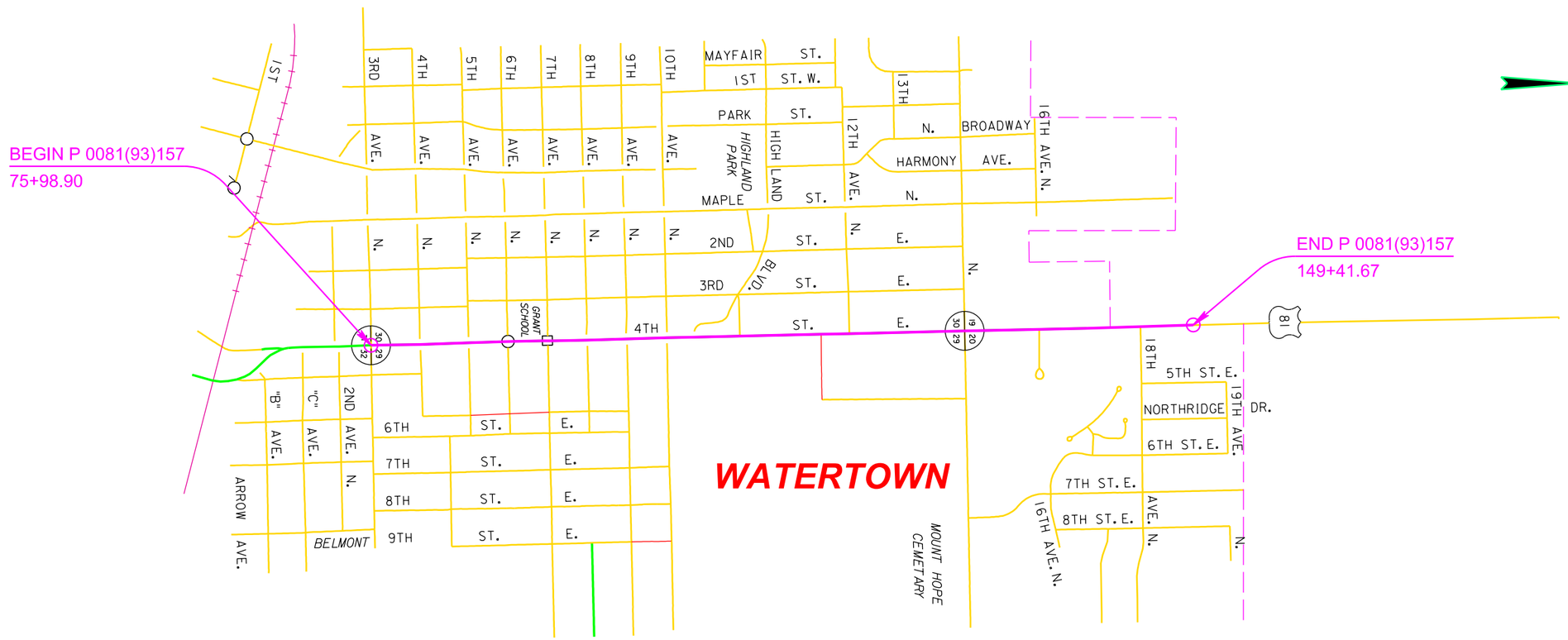

STATE OF SOUTH DAKOTA	PROJECT	SHEET NO.	TOTAL SHEETS
	P 0081(93)157	X2	X47

Plotting Date: 09/01/2015

STATE OF SOUTH DAKOTA	PROJECT	SHEET NO.	TOTAL SHEETS
	P 0081(93)157	X3	X47

Plotting Date: 09/01/2015

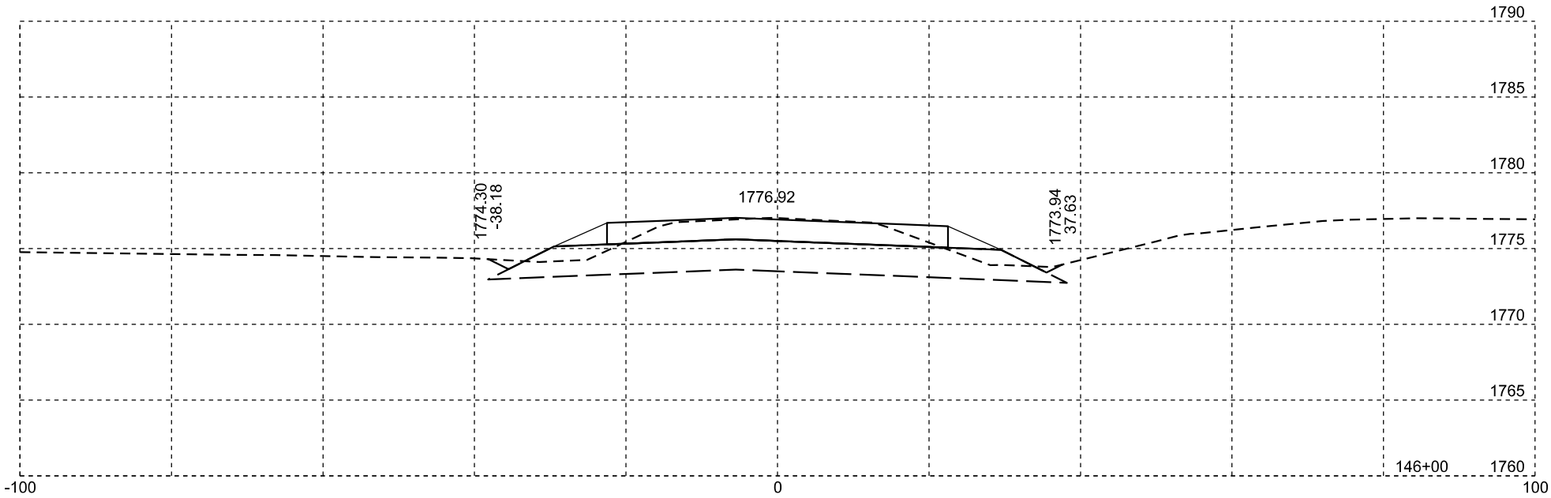

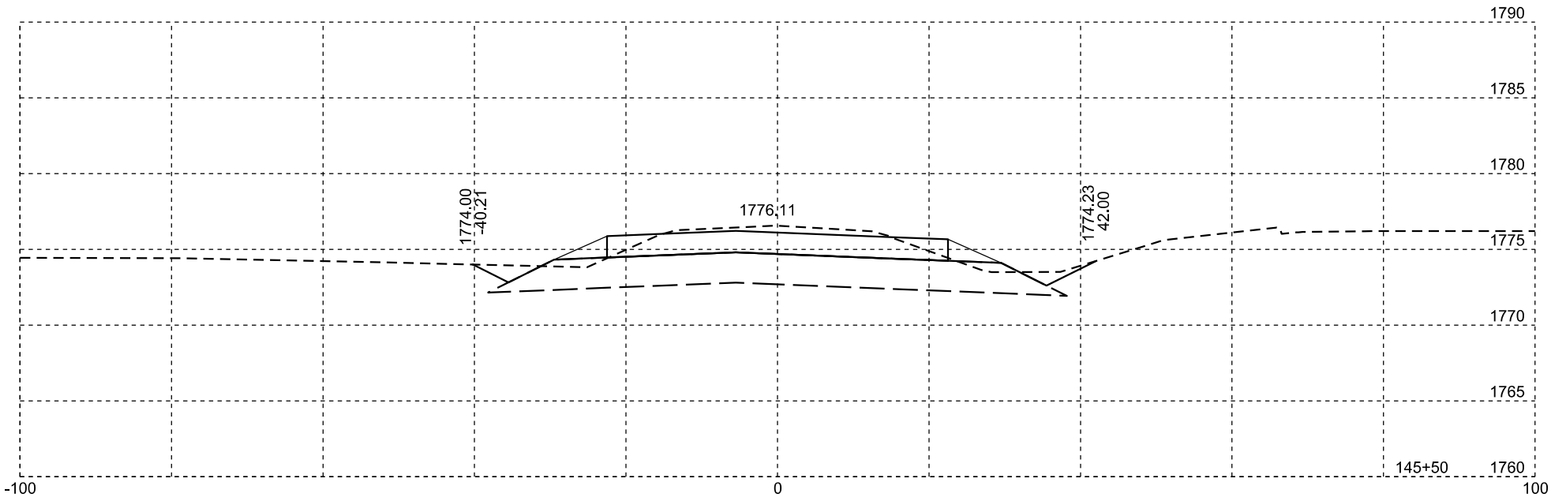

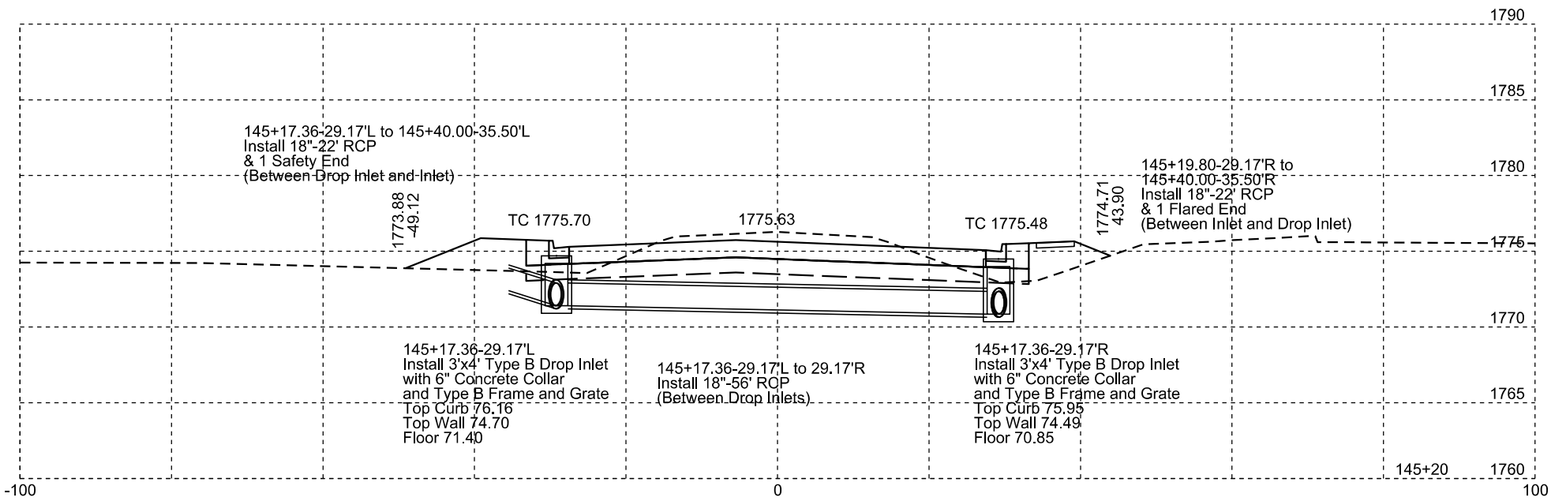

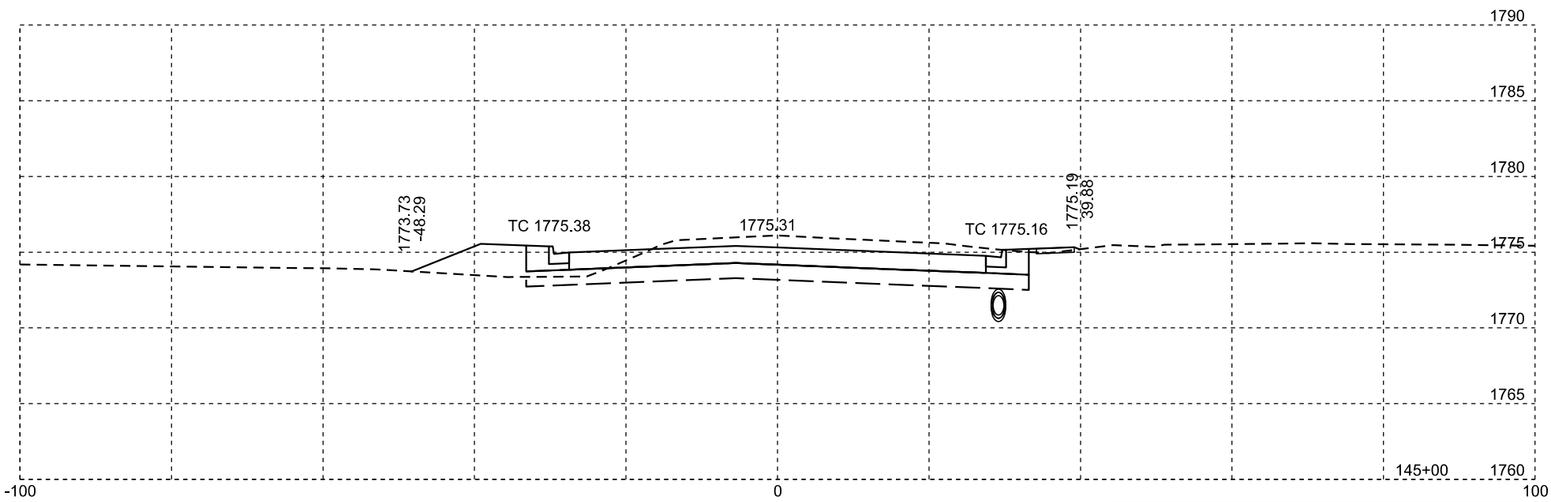

Plotting Date: 09/01/2015

STATE OF SOUTH DAKOTA	PROJECT	SHEET NO.	TOTAL SHEETS
	P 0081(93)157	X4	X47

STATE OF SOUTH DAKOTA	PROJECT	SHEET NO.	TOTAL SHEETS
	P 0081(93)157	X5	X47

Plotting Date: 09/01/2015

STATE OF SOUTH DAKOTA	PROJECT	SHEET NO.	TOTAL SHEETS
	P 0081(93)157	X6	X47

Plotting Date: 09/01/2015

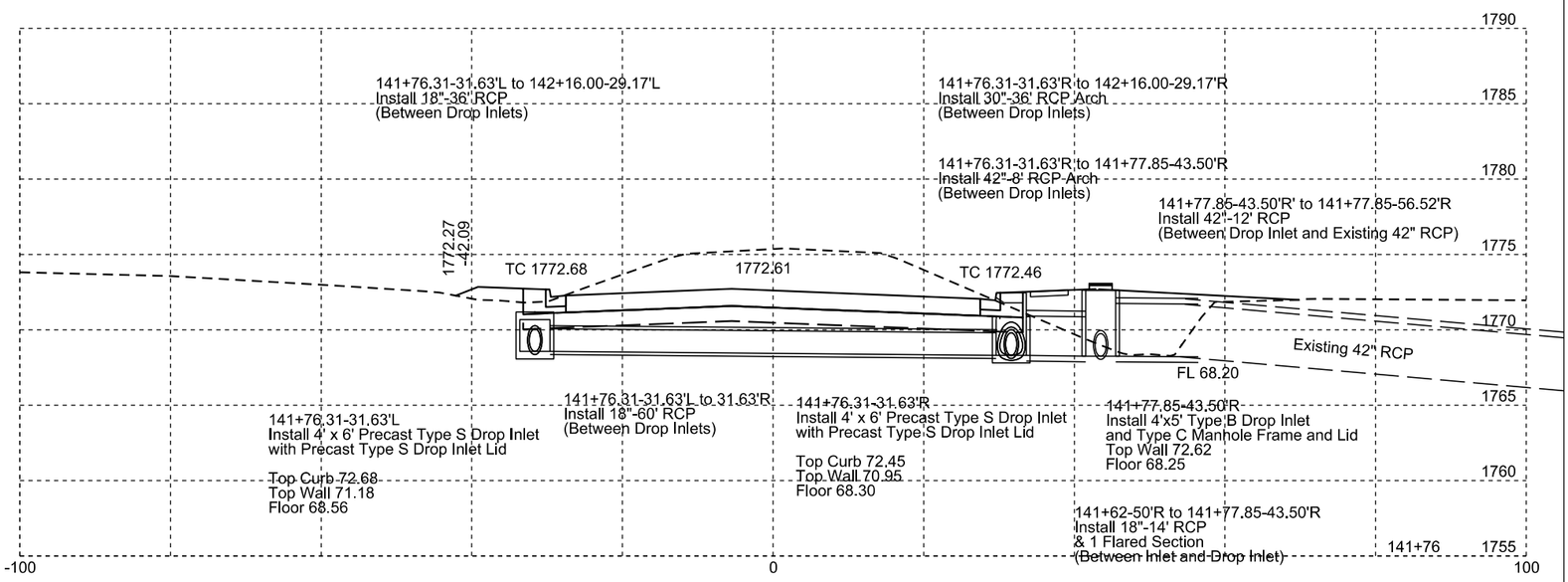

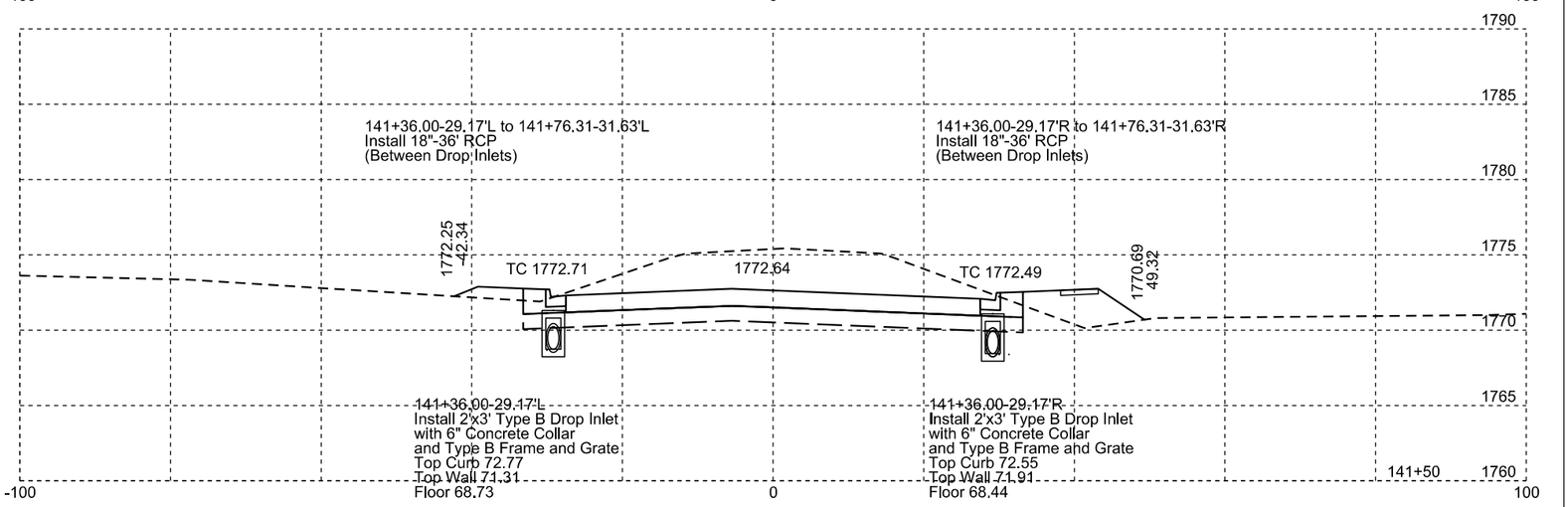

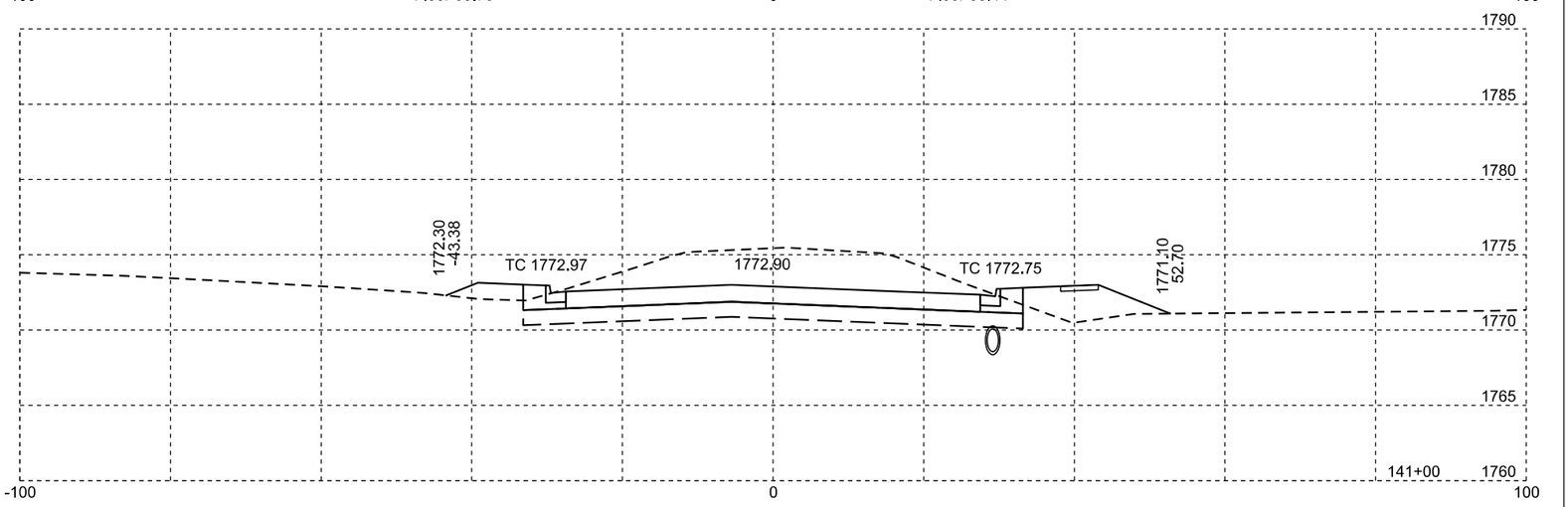

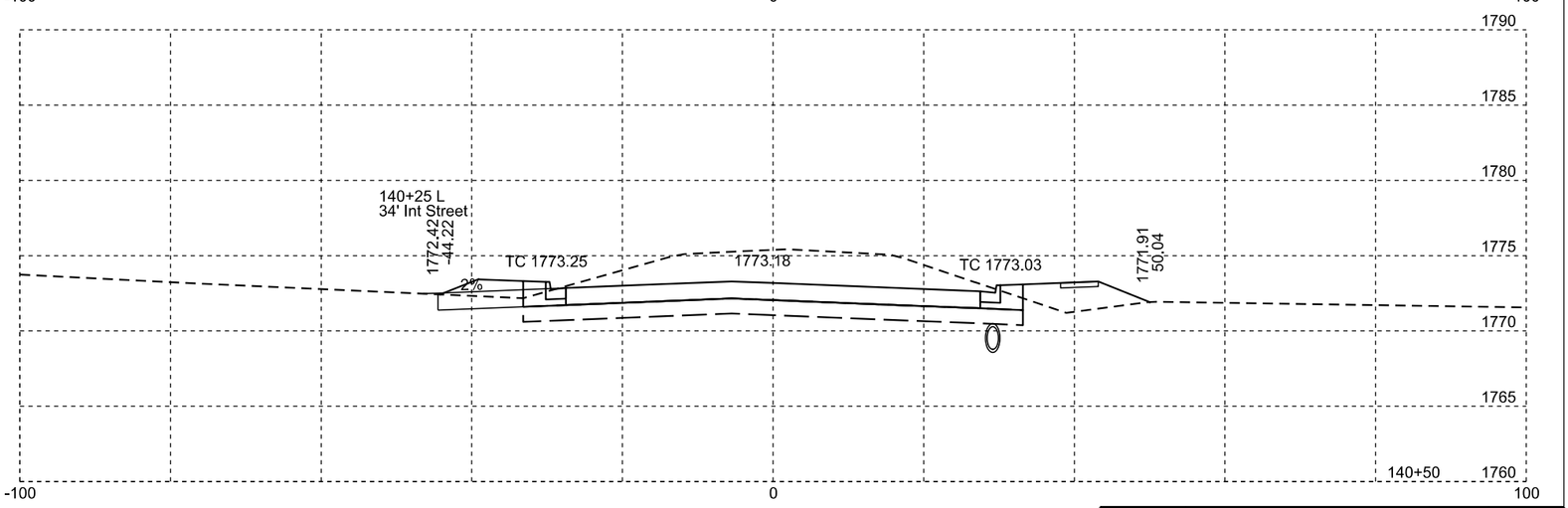

Plotting Date: 09/01/2015

STATE OF SOUTH DAKOTA	PROJECT	SHEET NO.	TOTAL SHEETS
	P 0081(93)157	X7	X47

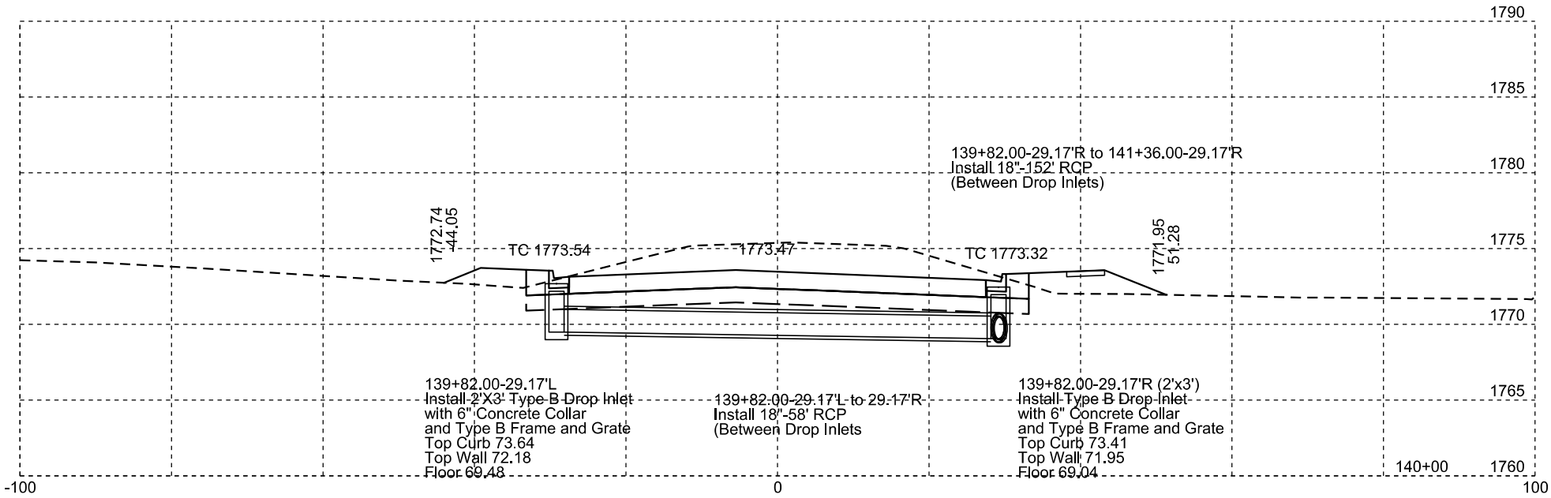

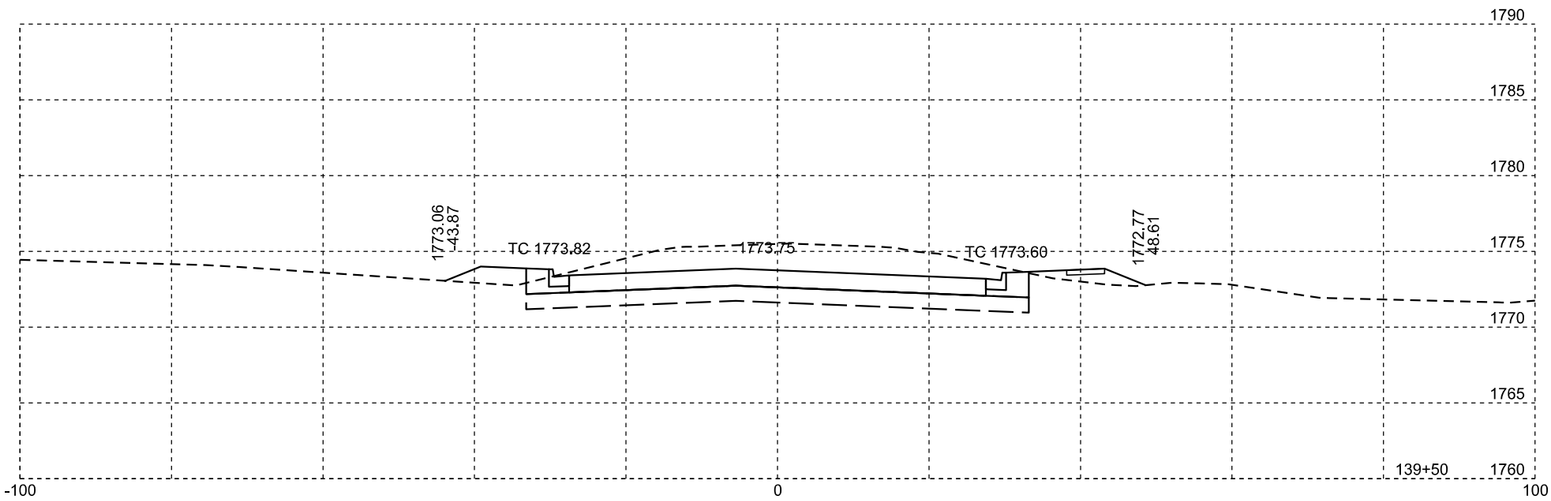

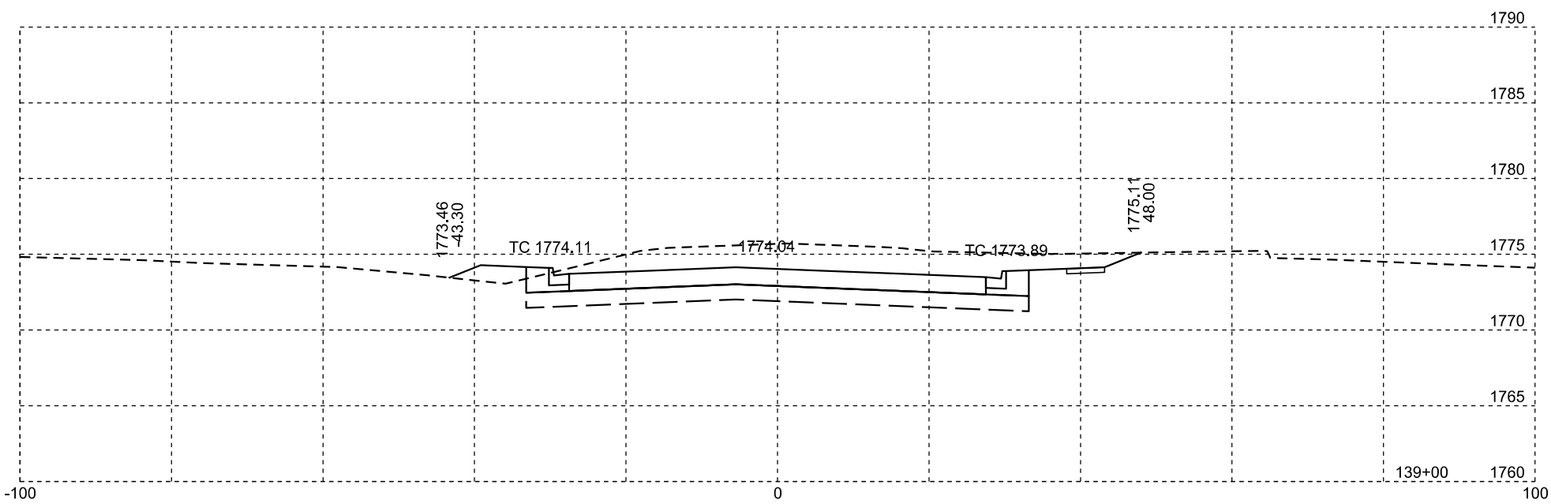

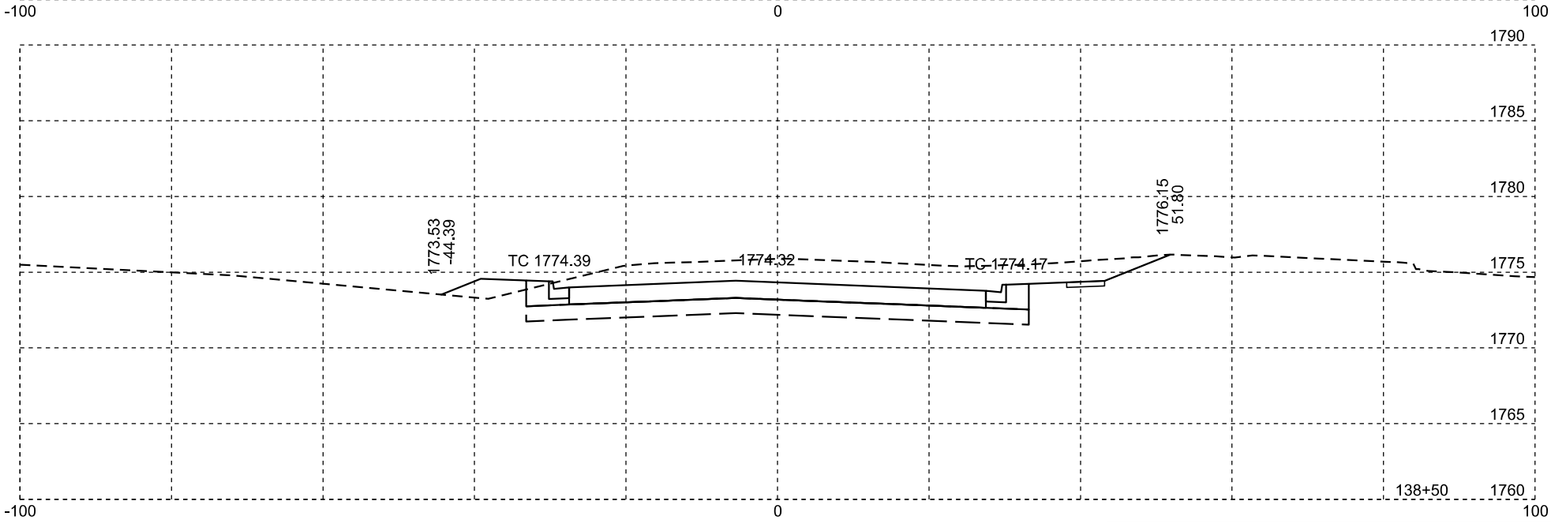

Plotting Date: 09/01/2015

STATE OF SOUTH DAKOTA	PROJECT	SHEET NO.	TOTAL SHEETS
	P 0081(93)157	X8	X47

STATE OF SOUTH DAKOTA	PROJECT	SHEET NO.	TOTAL SHEETS
	P 0081(93)157	X9	X47

Plotting Date: 09/01/2015

STATE OF SOUTH DAKOTA	PROJECT	SHEET NO.	TOTAL SHEETS
	P 0081(93)157	X10	X47

Plotting Date: 09/01/2015

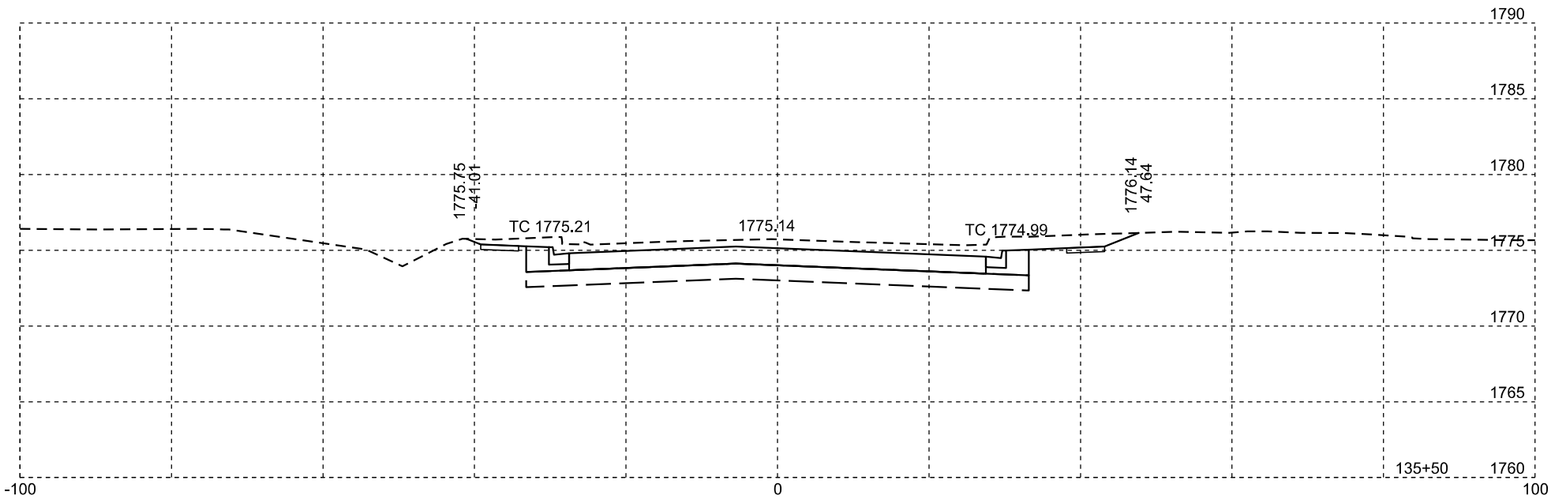

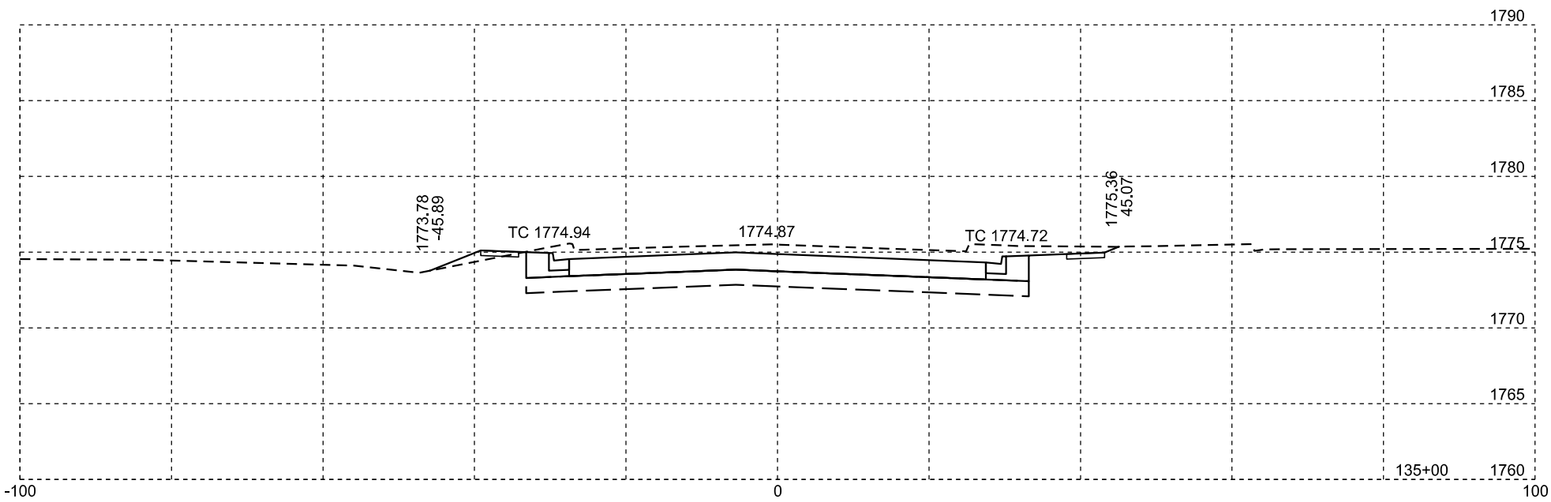

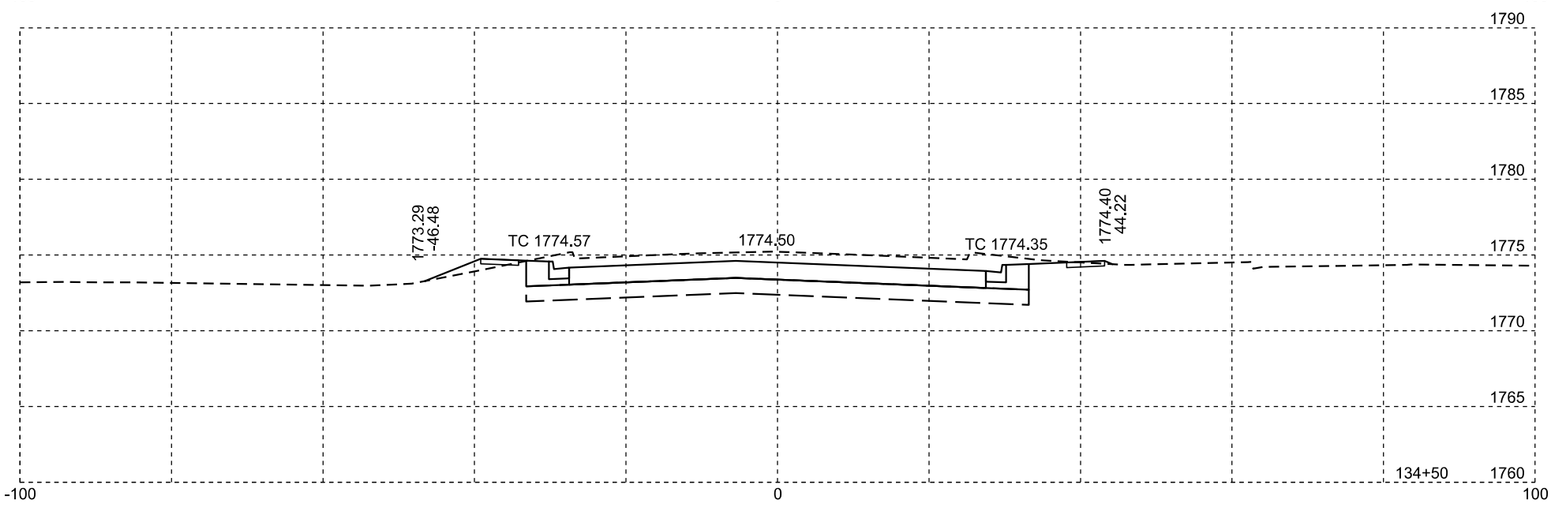

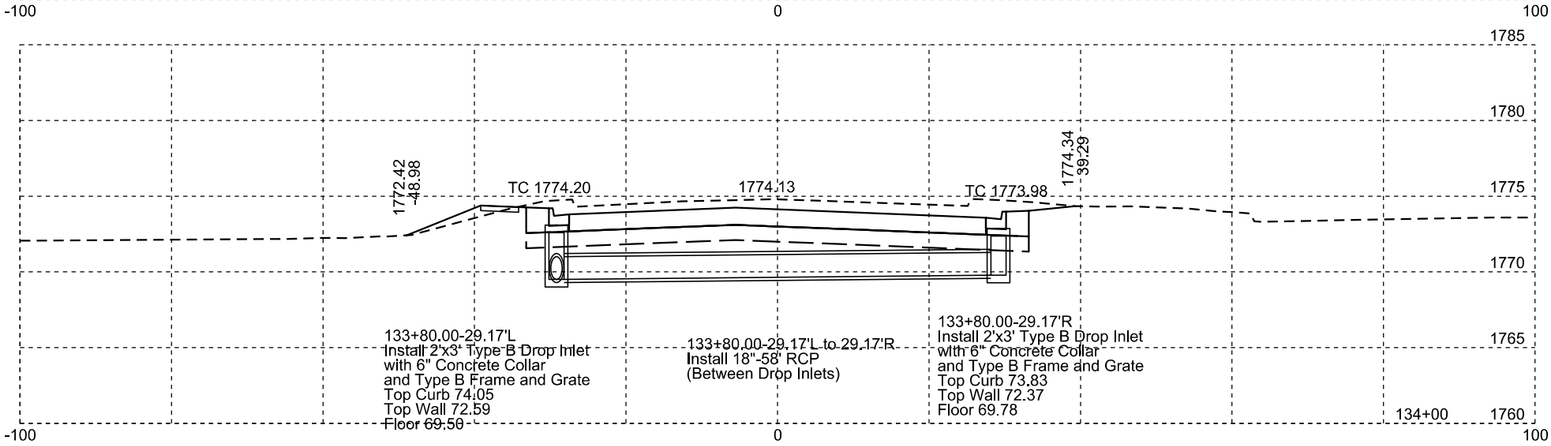

Plotting Date: 09/01/2015

STATE OF SOUTH DAKOTA	PROJECT	SHEET NO.	TOTAL SHEETS
	P 0081(93)157	X11	X47

STATE OF SOUTH DAKOTA	PROJECT	SHEET NO.	TOTAL SHEETS
	P 0081(93)157	X12	X47

Plotting Date: 09/01/2015

STATE OF SOUTH DAKOTA	PROJECT	SHEET NO.	TOTAL SHEETS
	P 0081(93)157	X13	X47

Plotting Date: 09/01/2015

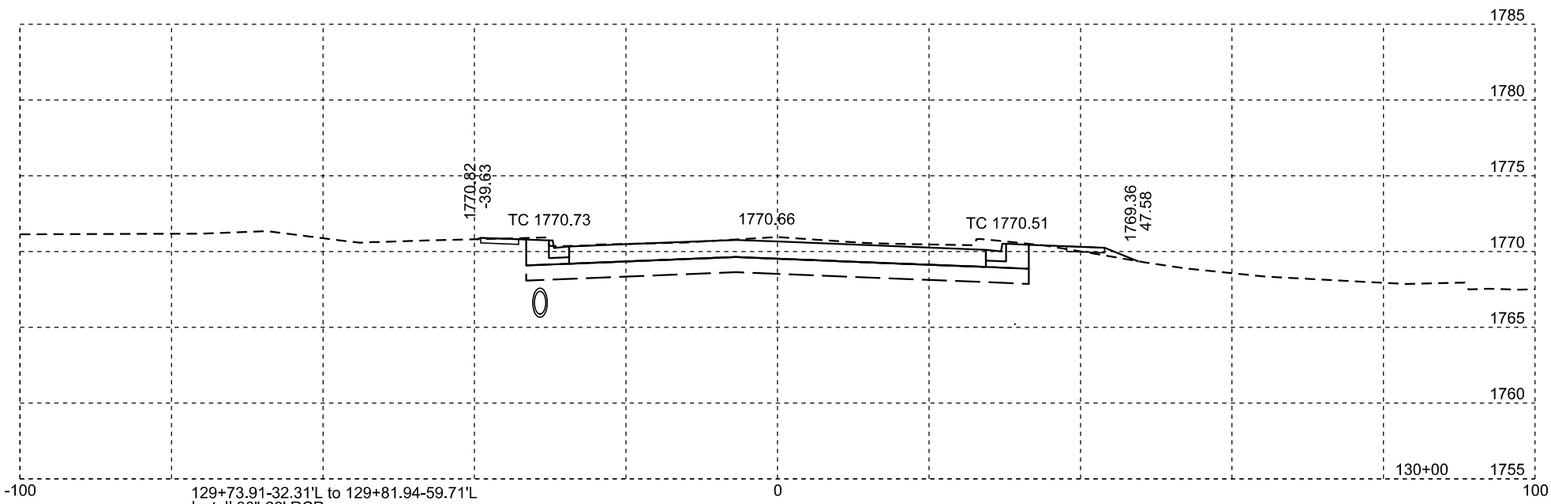

129+73.91-32.31'L to 129+81.94-59.71'L
Install 30"-28' RCP
(Between Drop Inlet and Existing Drop Inlet)

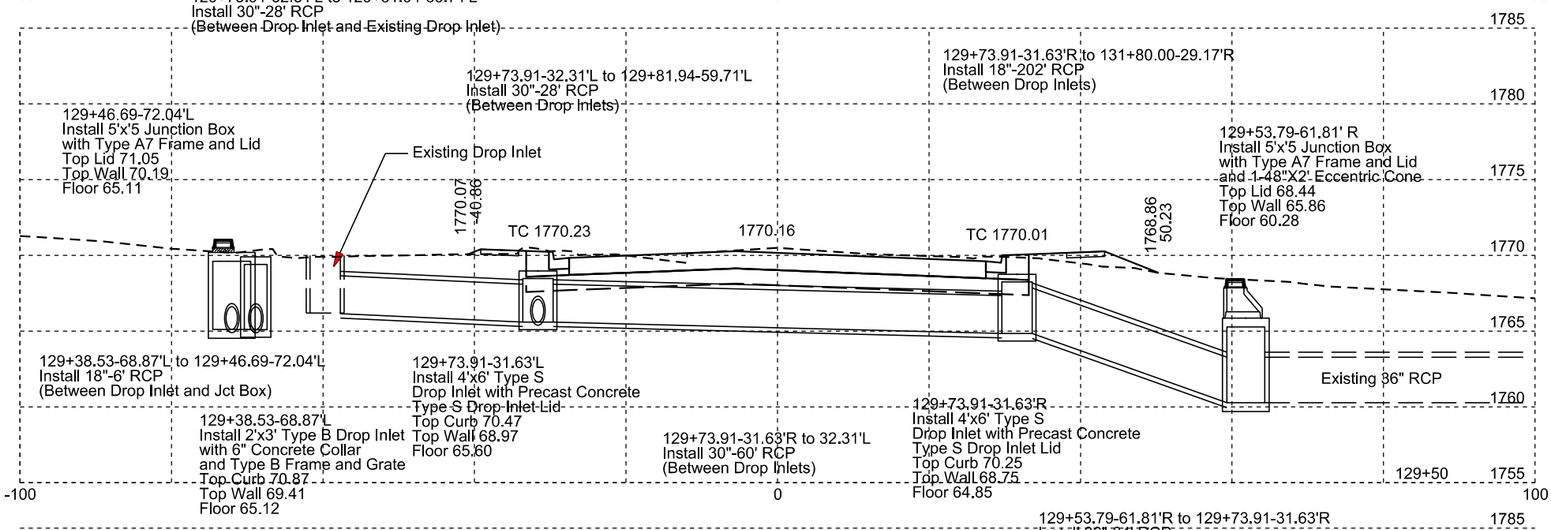

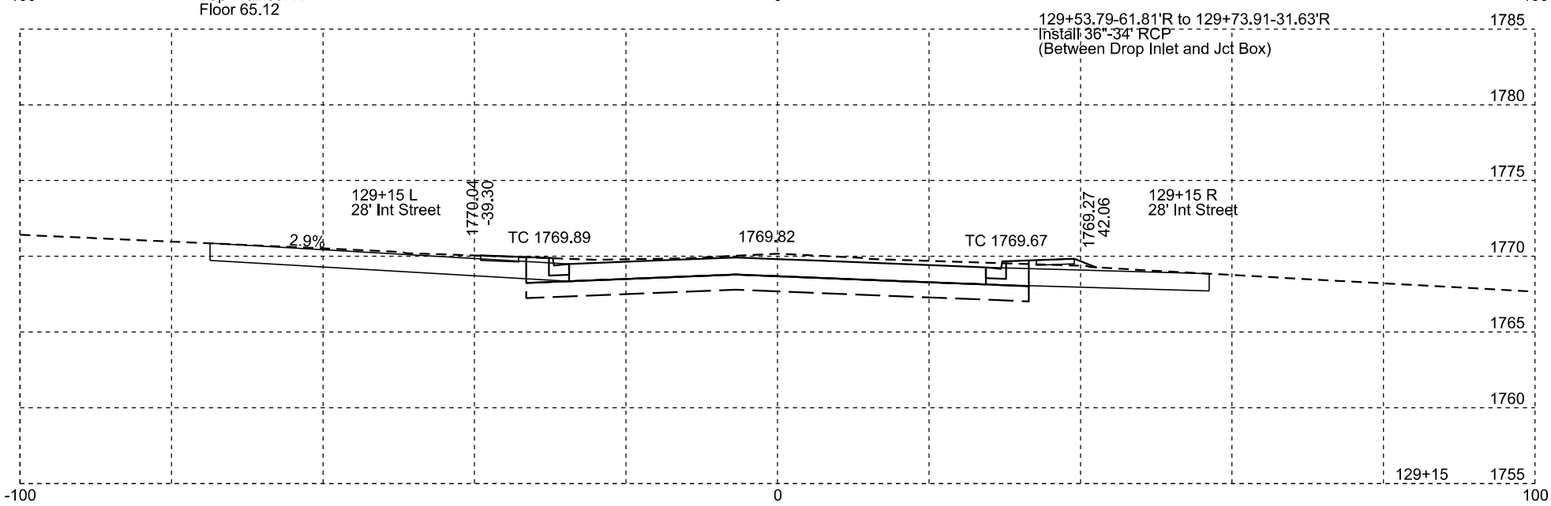

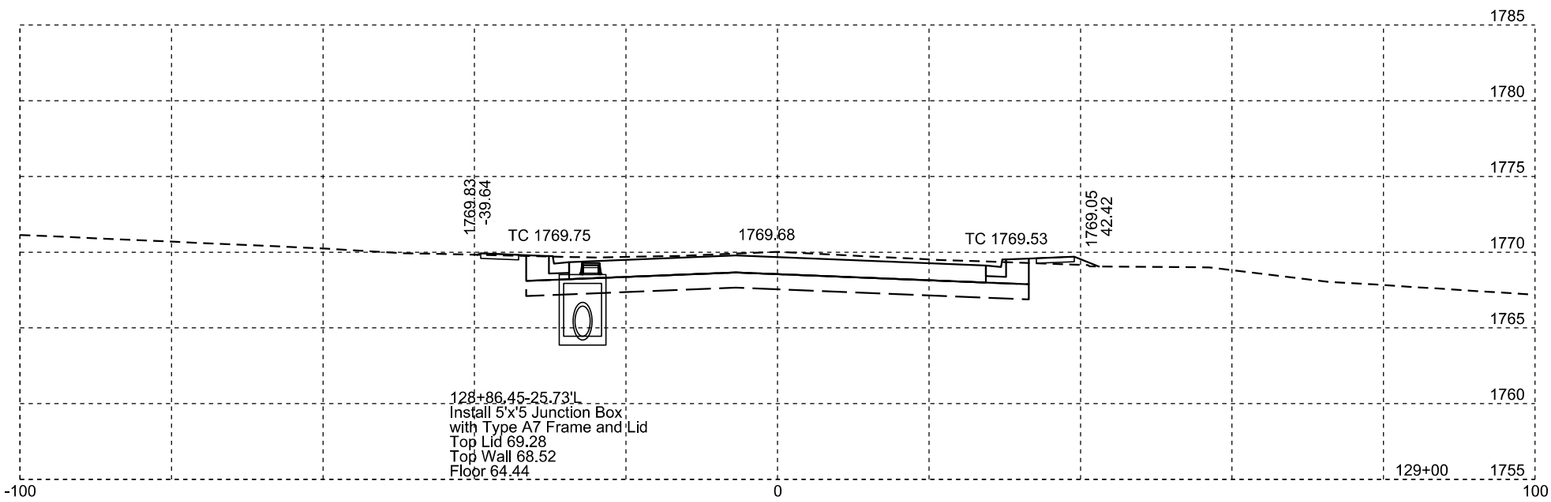

Plotting Date: 09/01/2015

STATE OF SOUTH DAKOTA	PROJECT	SHEET NO.	TOTAL SHEETS
	P 0081(93)157	X14	X47

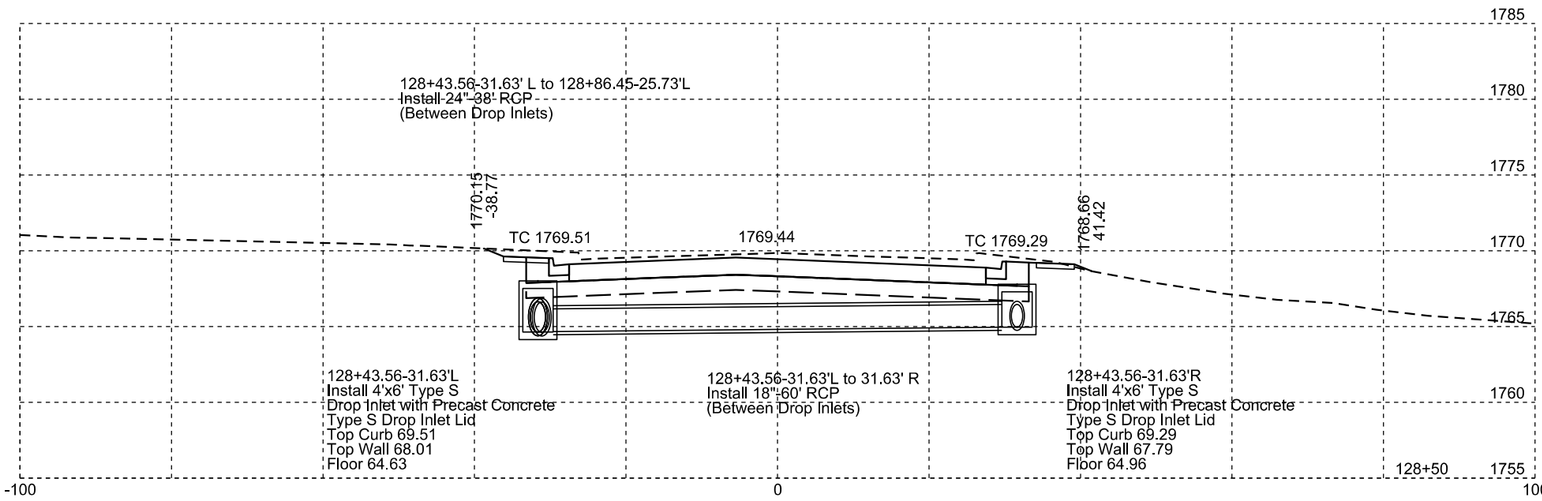

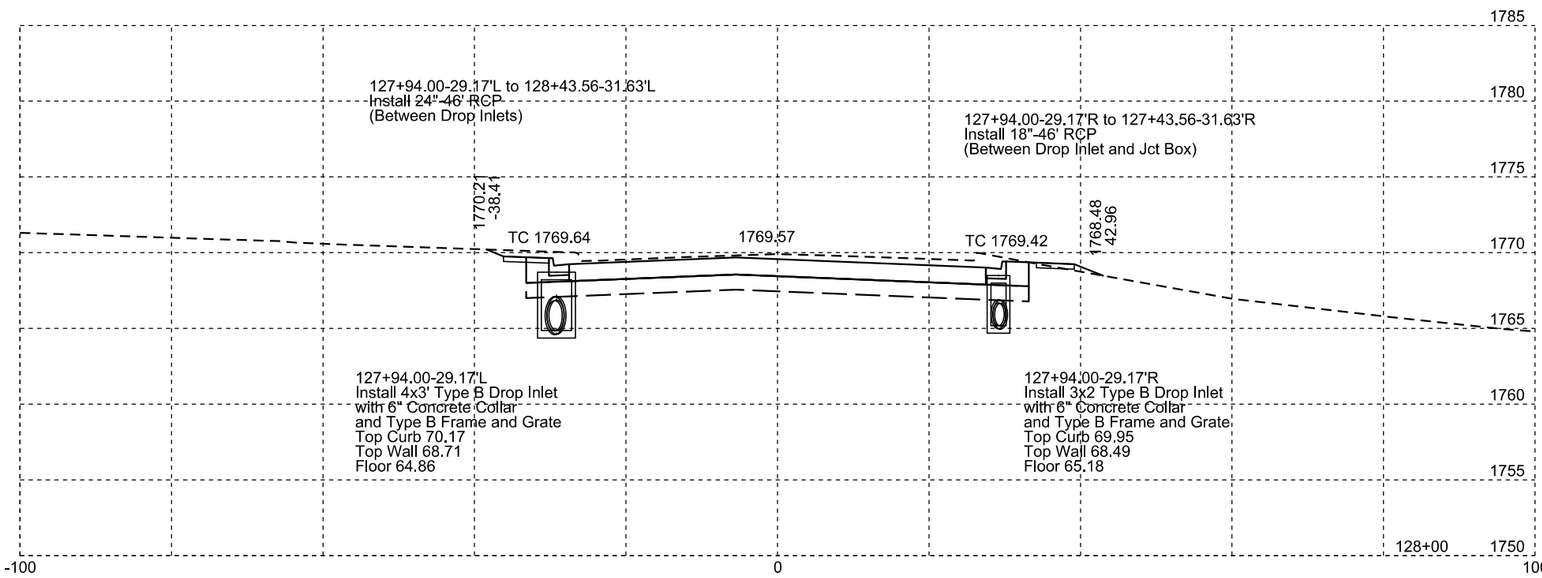

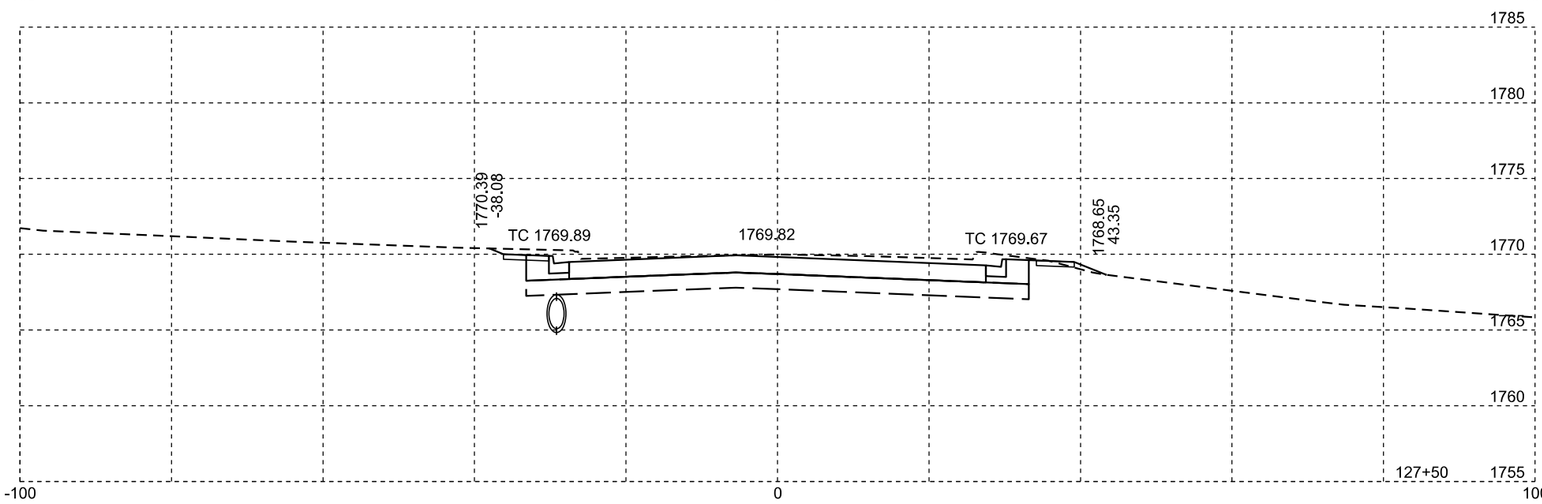

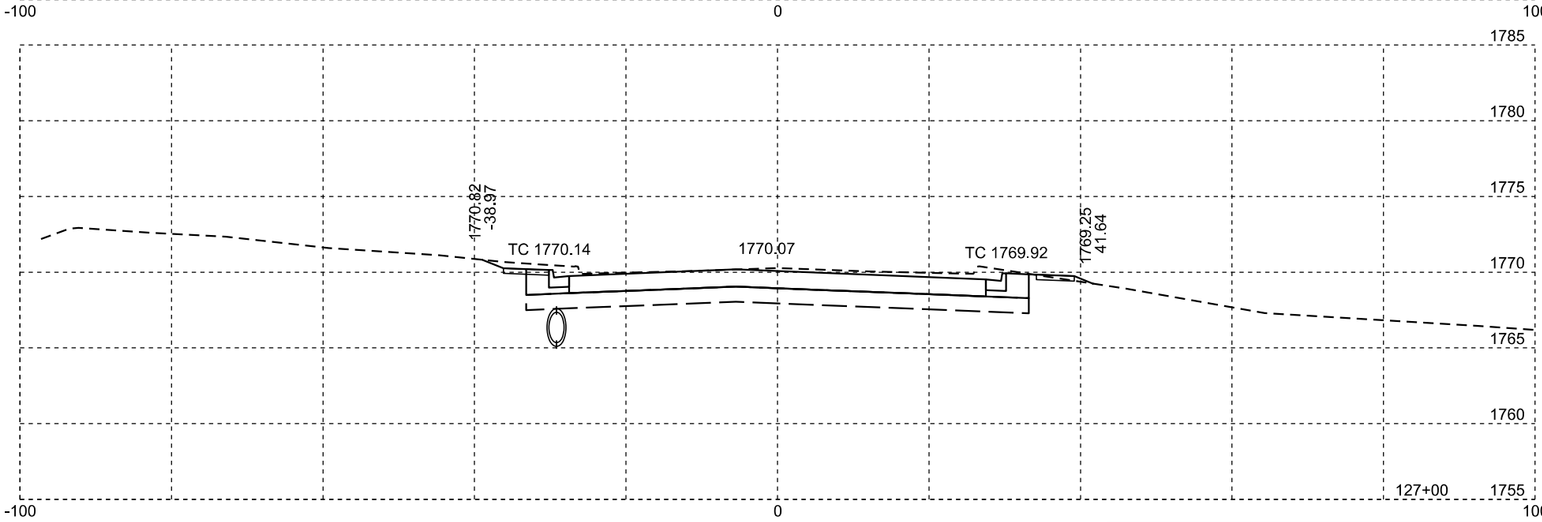

Plotting Date: 09/01/2015

STATE OF SOUTH DAKOTA	PROJECT	SHEET NO.	TOTAL SHEETS
	P 0081(93)157	X15	X47

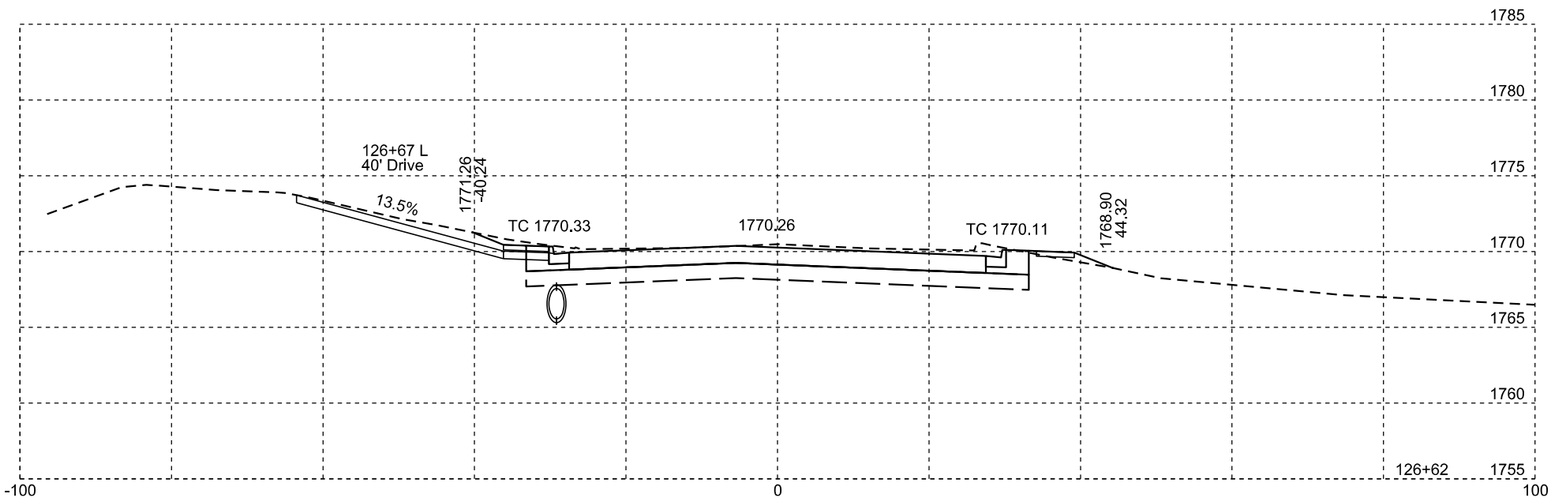

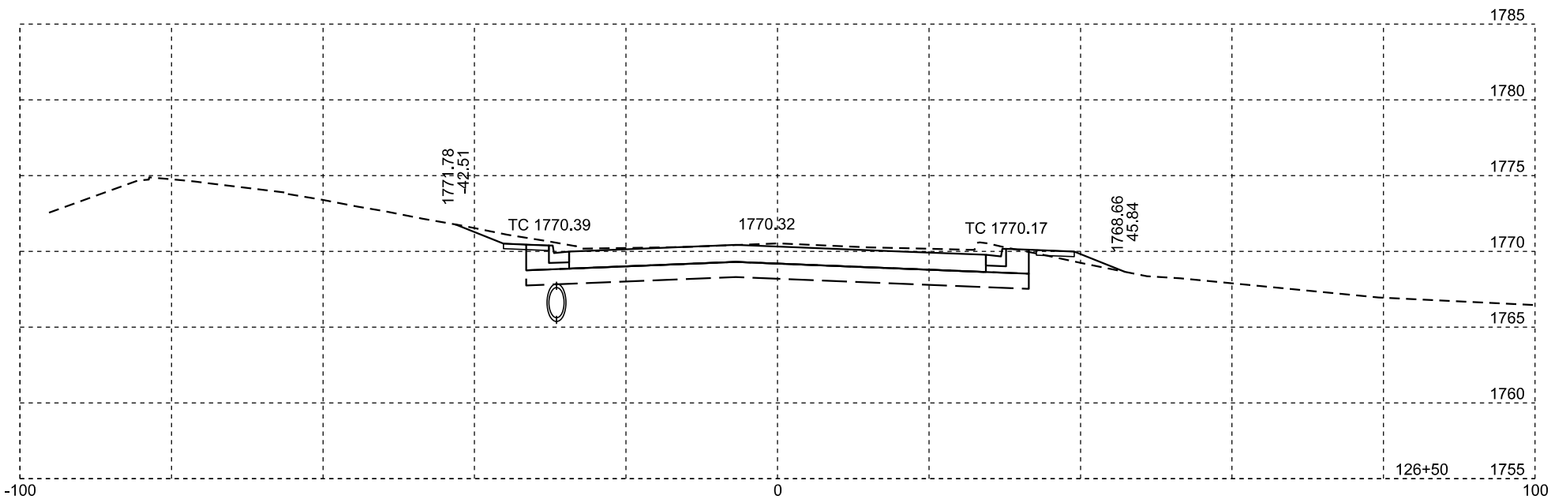

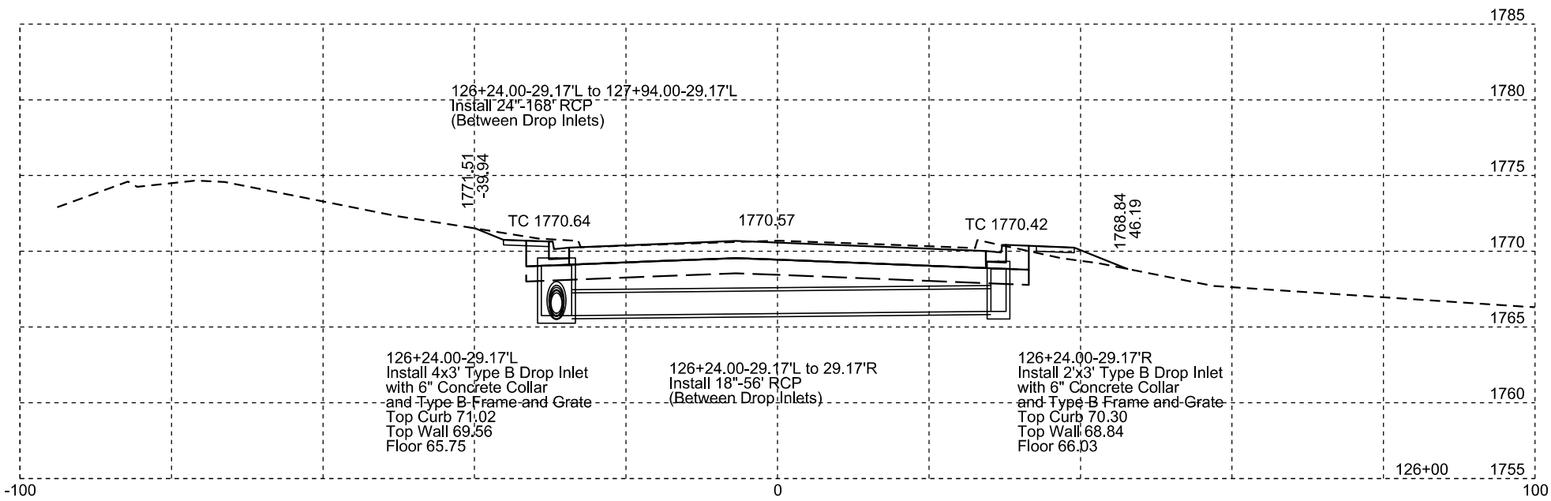

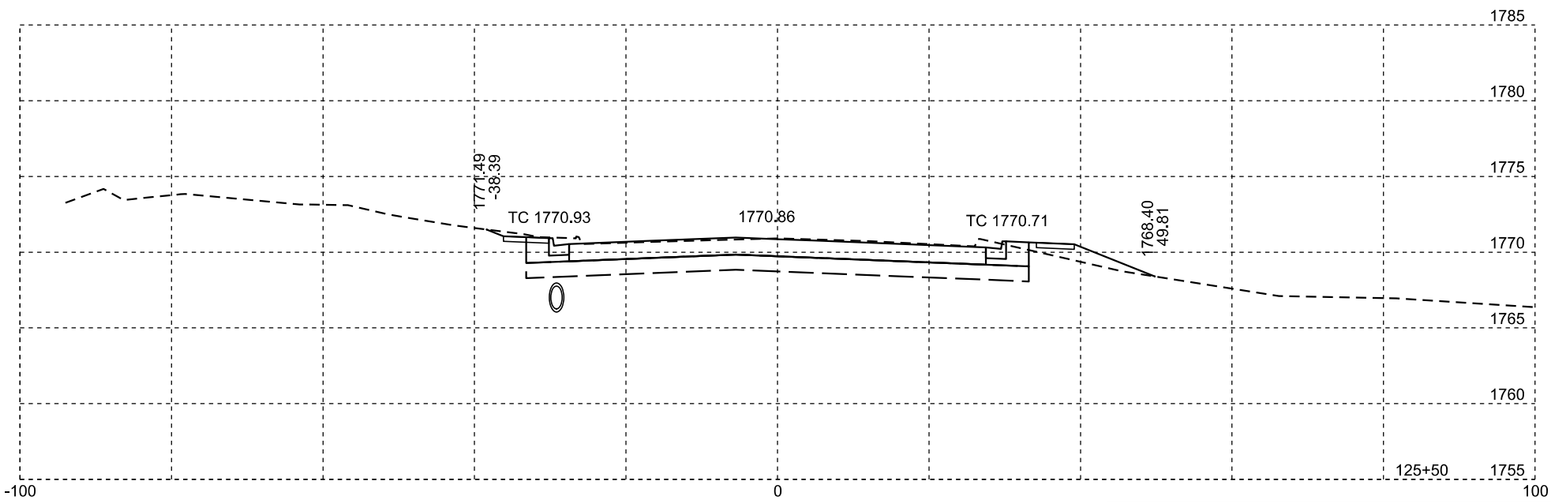

Plotting Date: 09/01/2015

STATE OF SOUTH DAKOTA	PROJECT	SHEET NO.	TOTAL SHEETS
	P 0081(93)157	X16	X47

STATE OF SOUTH DAKOTA	PROJECT	SHEET NO.	TOTAL SHEETS
	P 0081(93)157	X17	X47

Plotting Date: 09/01/2015

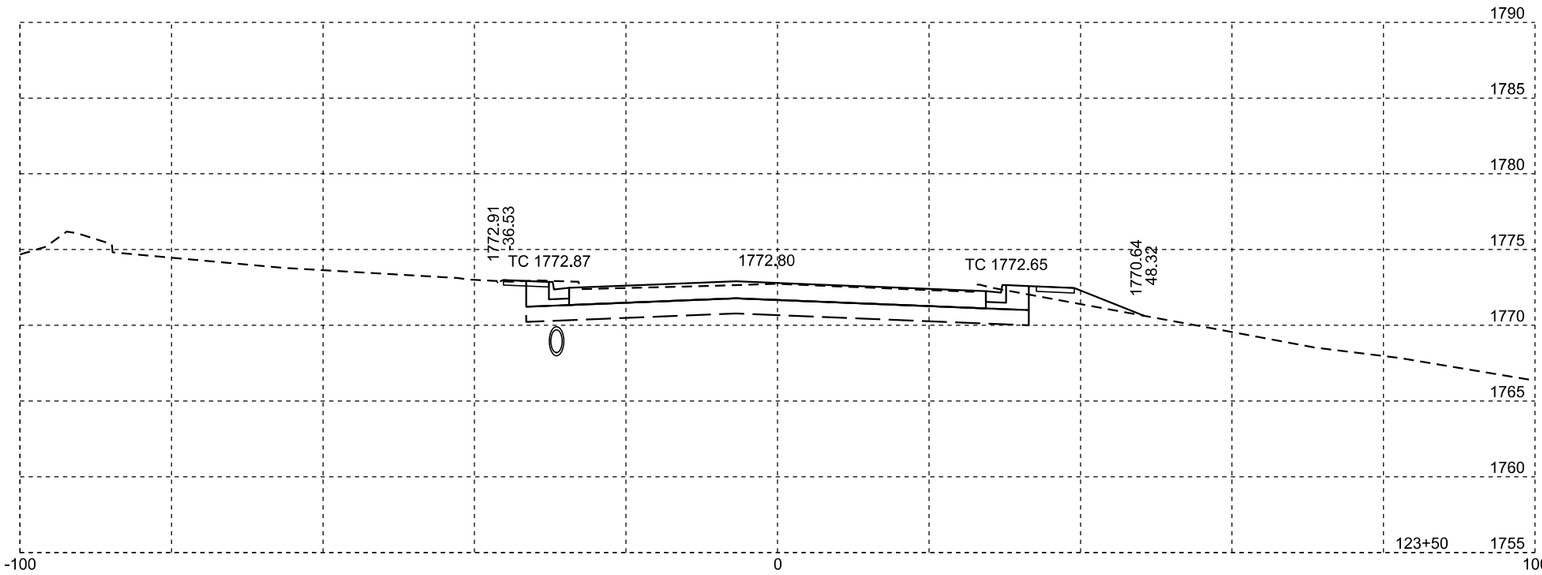

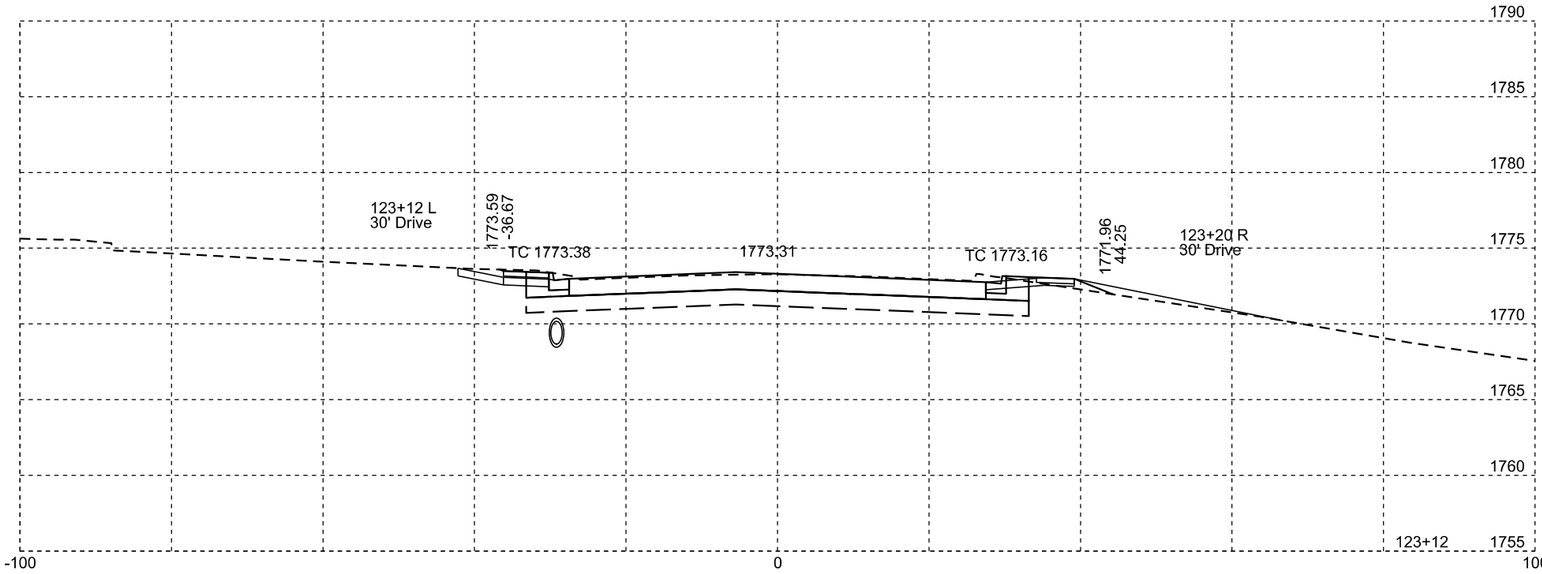

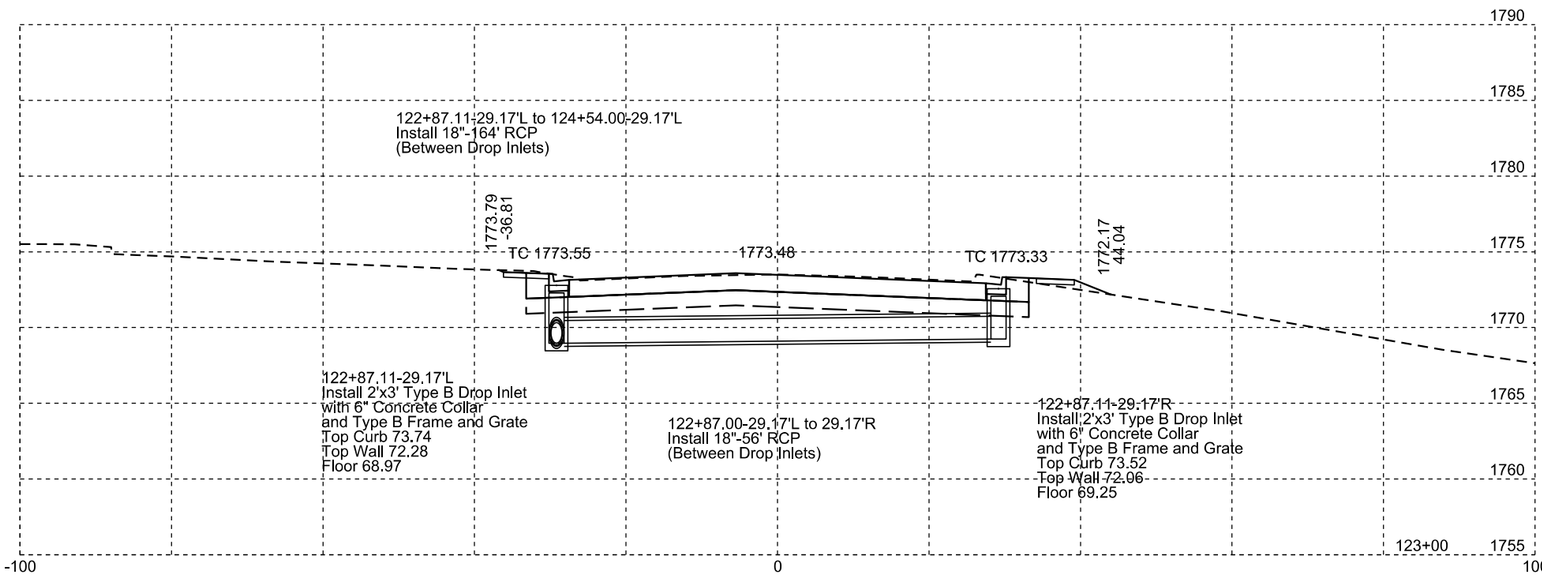

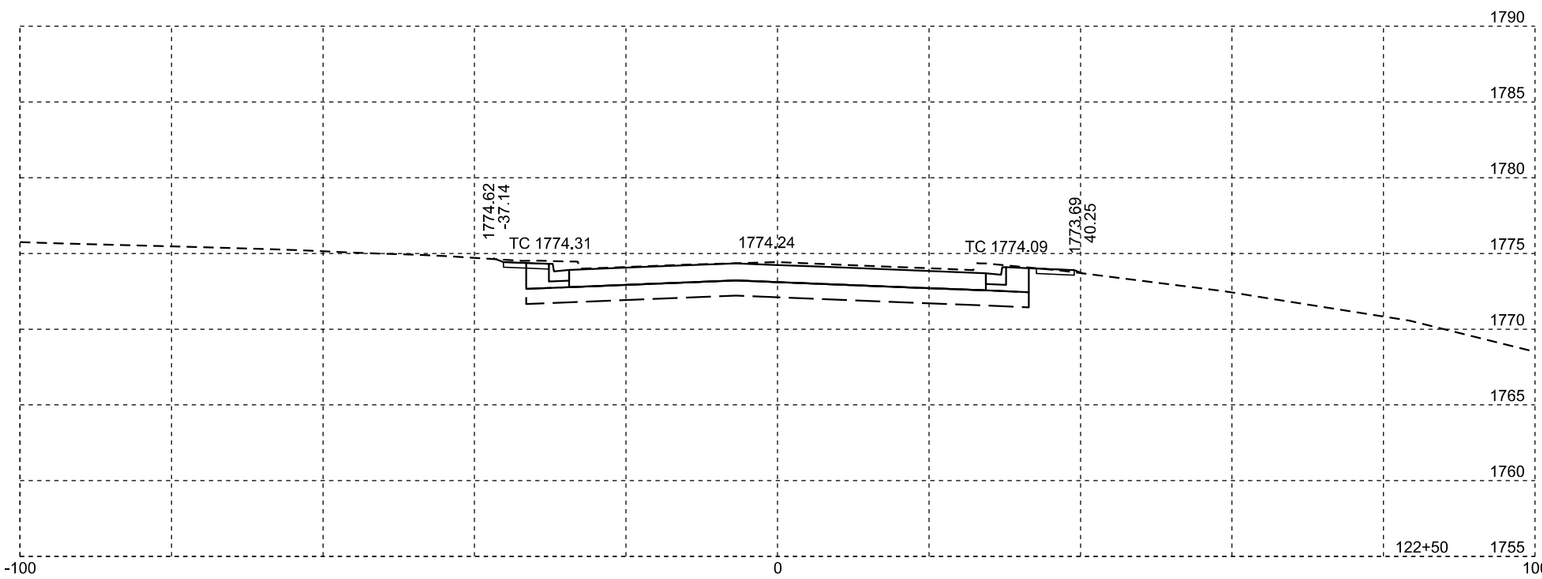

Plotting Date: 09/01/2015

STATE OF SOUTH DAKOTA	PROJECT	SHEET NO.	TOTAL SHEETS
	P 0081(93)157	X18	X47

STATE OF SOUTH DAKOTA	PROJECT	SHEET NO.	TOTAL SHEETS
	P 0081(93)157	X19	X47

Plotting Date: 09/01/2015

STATE OF SOUTH DAKOTA	PROJECT	SHEET NO.	TOTAL SHEETS
	P 0081(93)157	X20	X47

Plotting Date: 09/01/2015

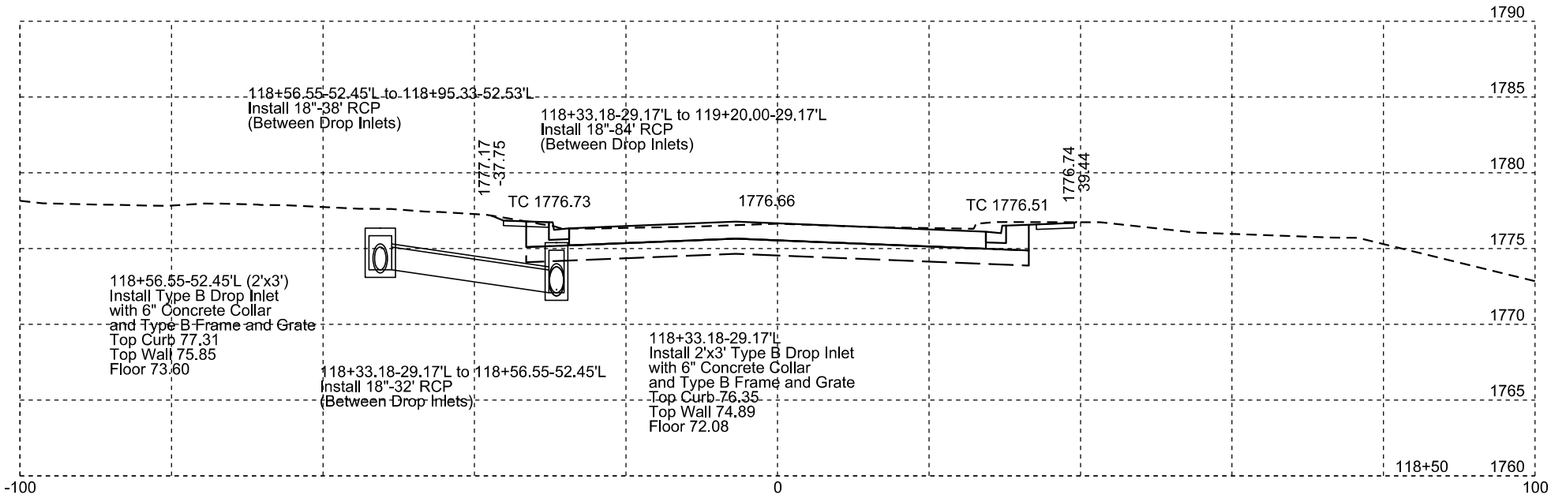

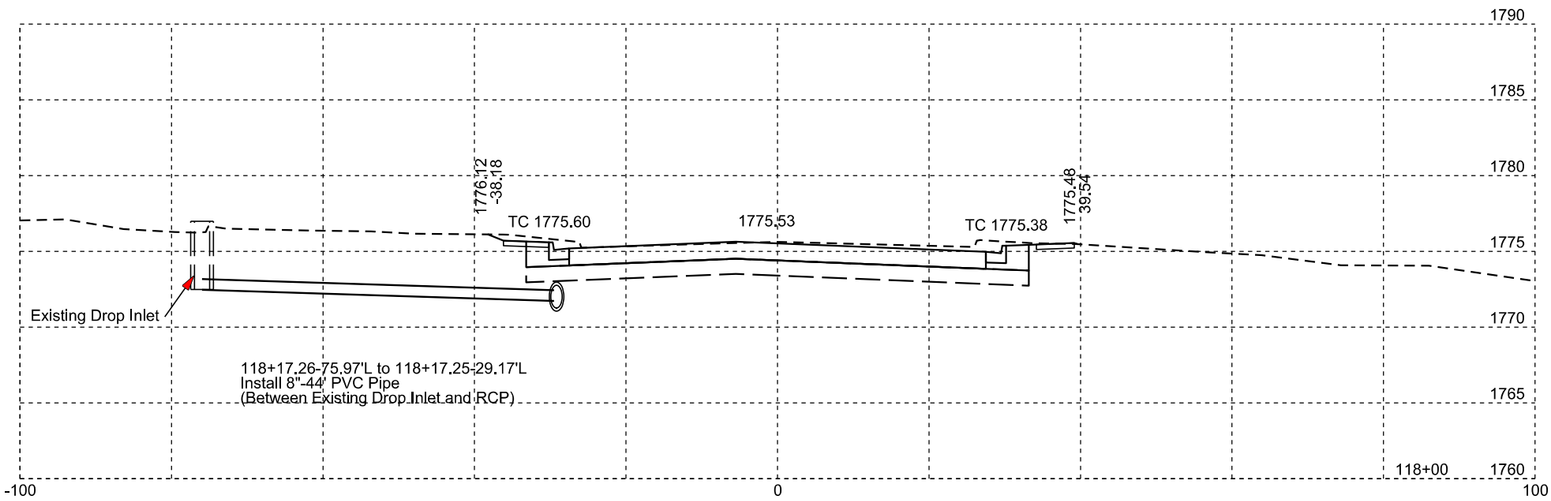

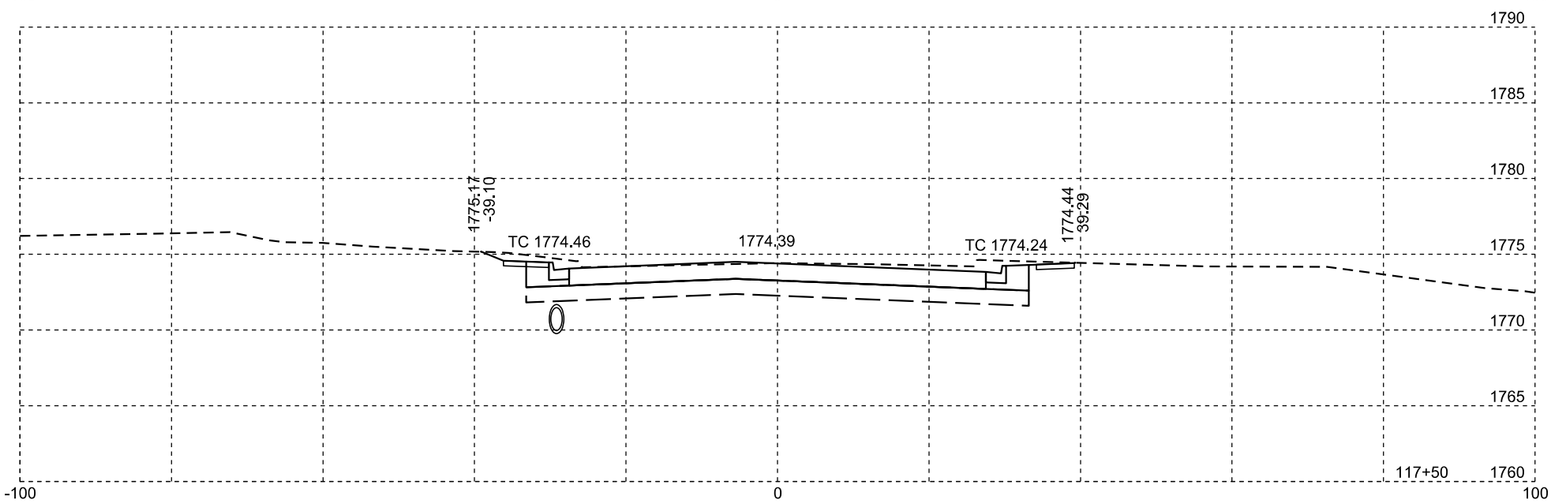

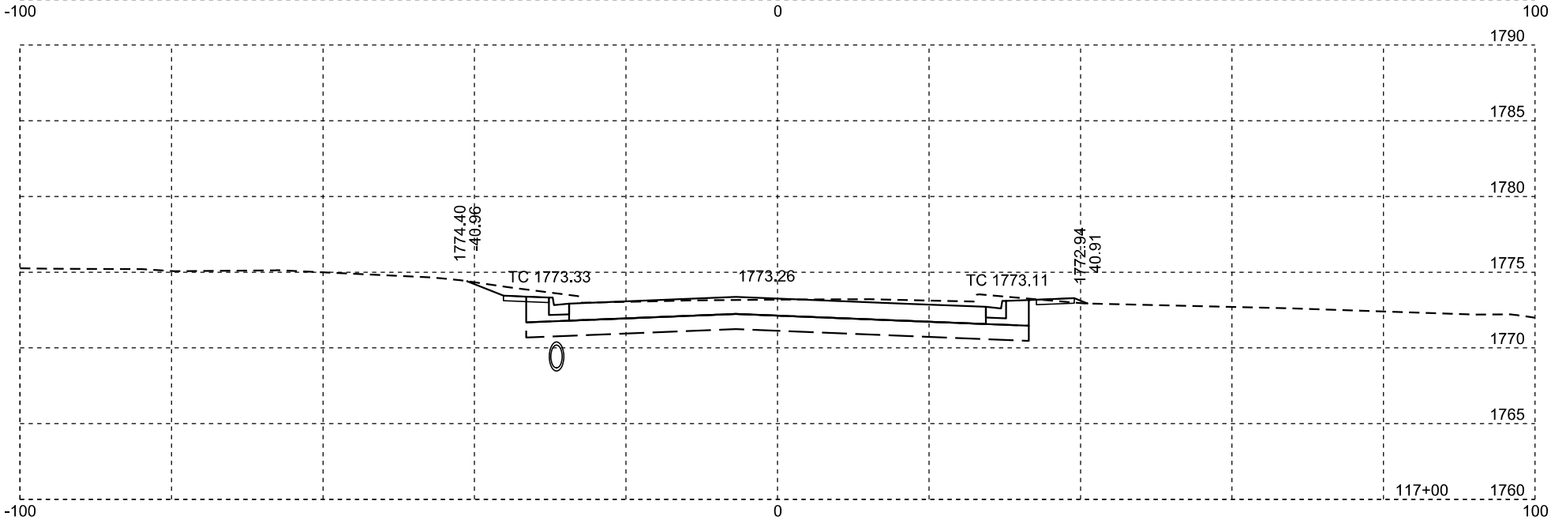

Plotting Date: 09/01/2015

STATE OF SOUTH DAKOTA	PROJECT	SHEET NO.	TOTAL SHEETS
	P 0081(93)157	X21	X47

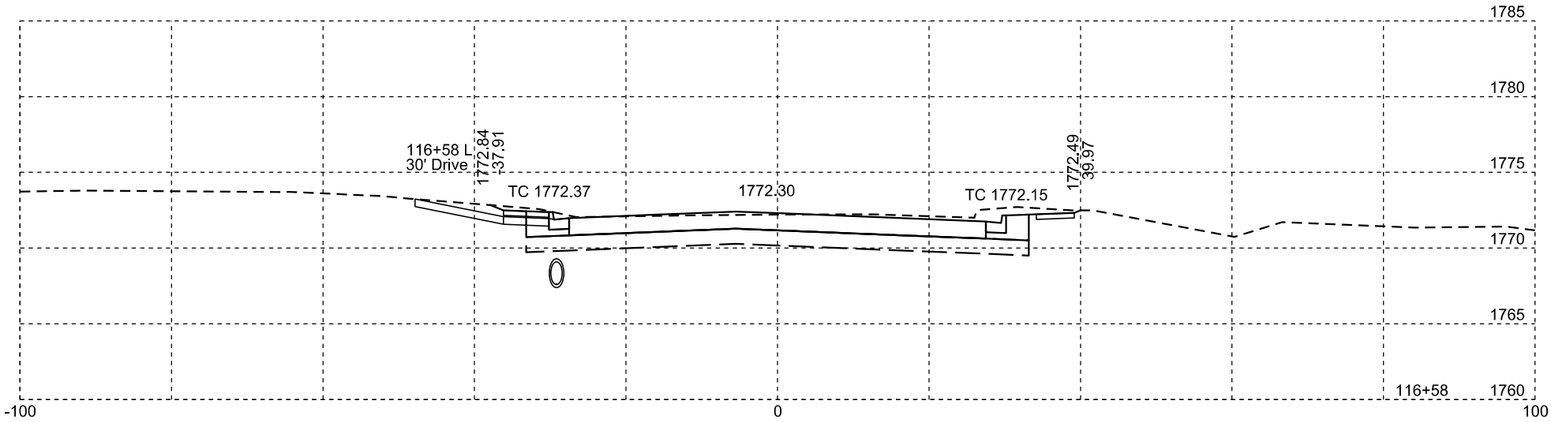

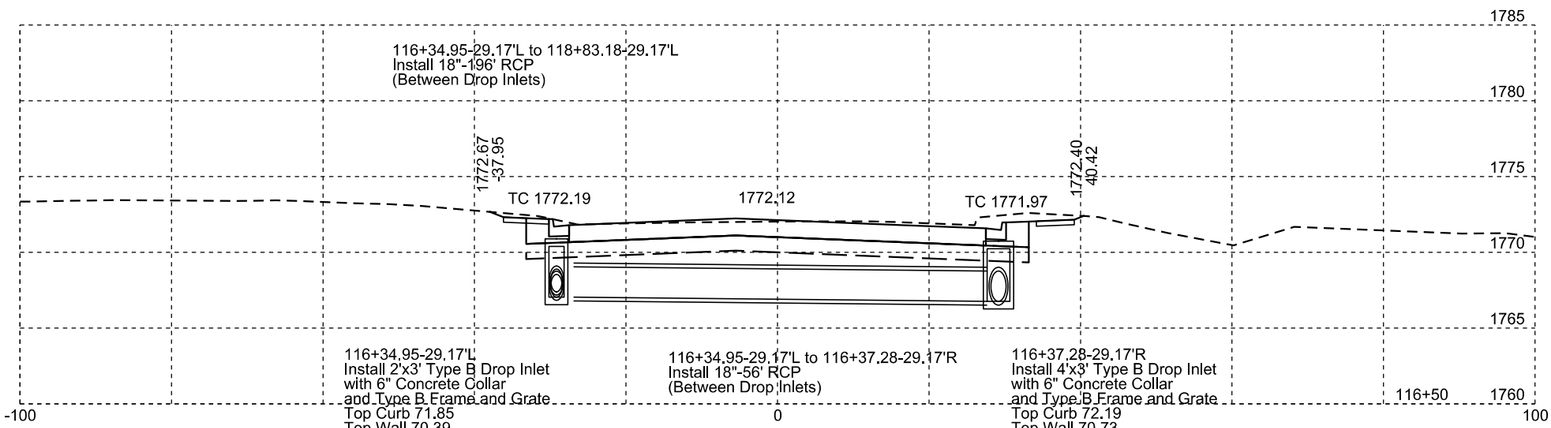

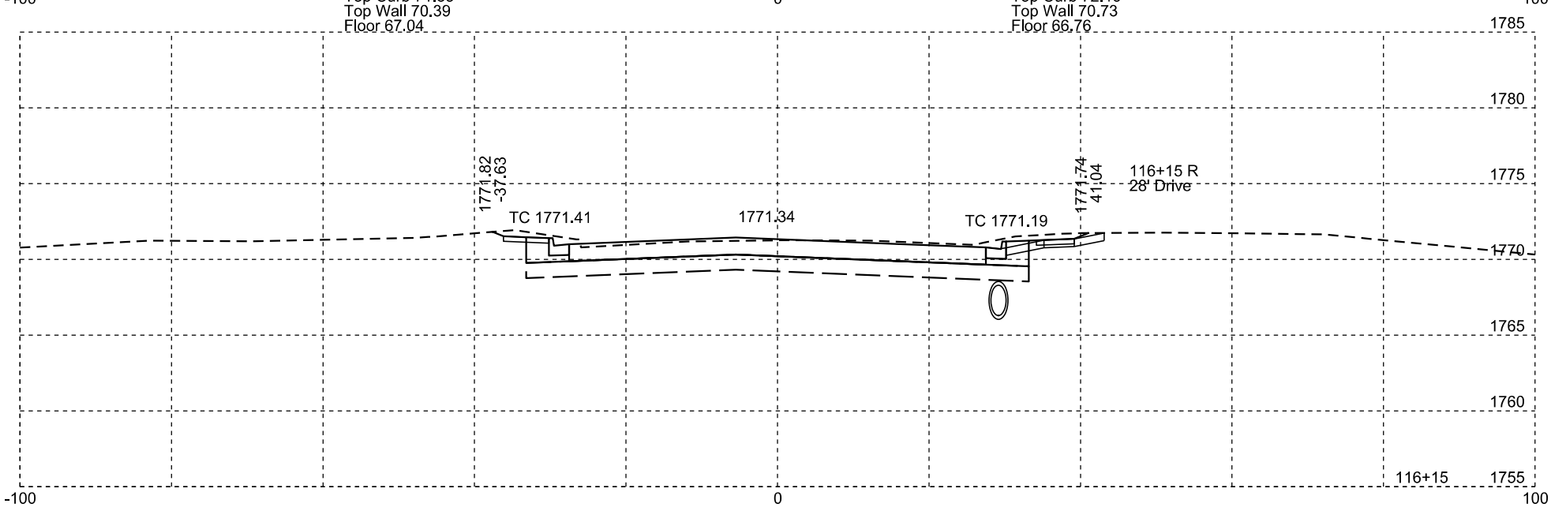

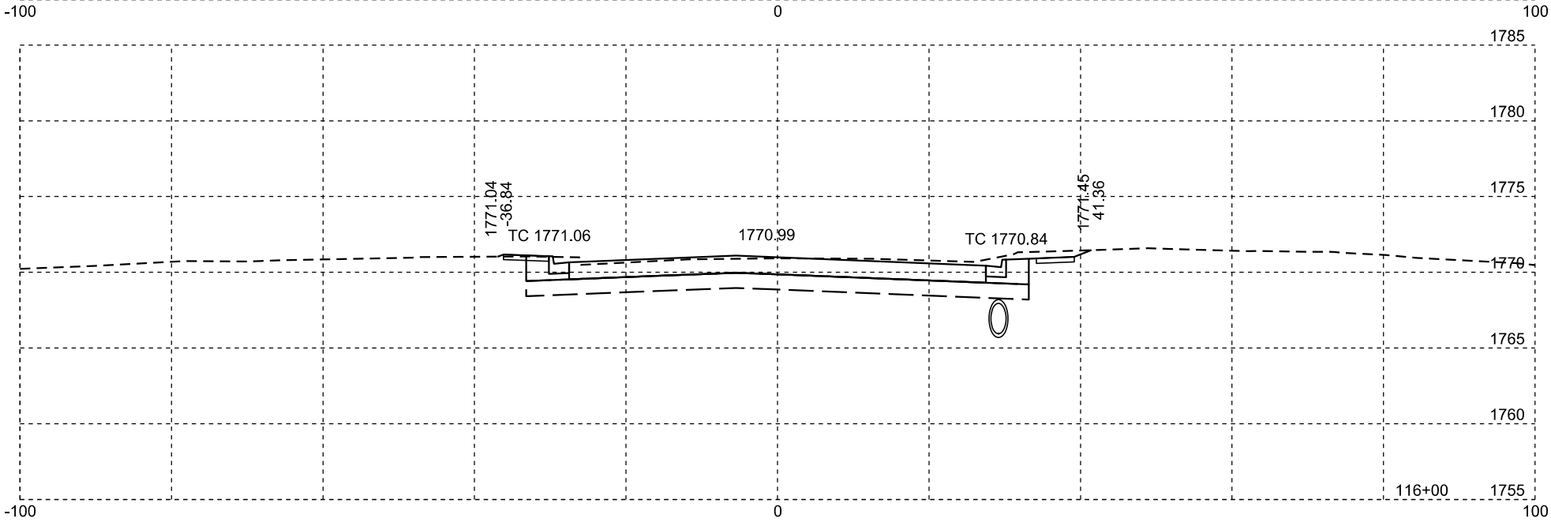

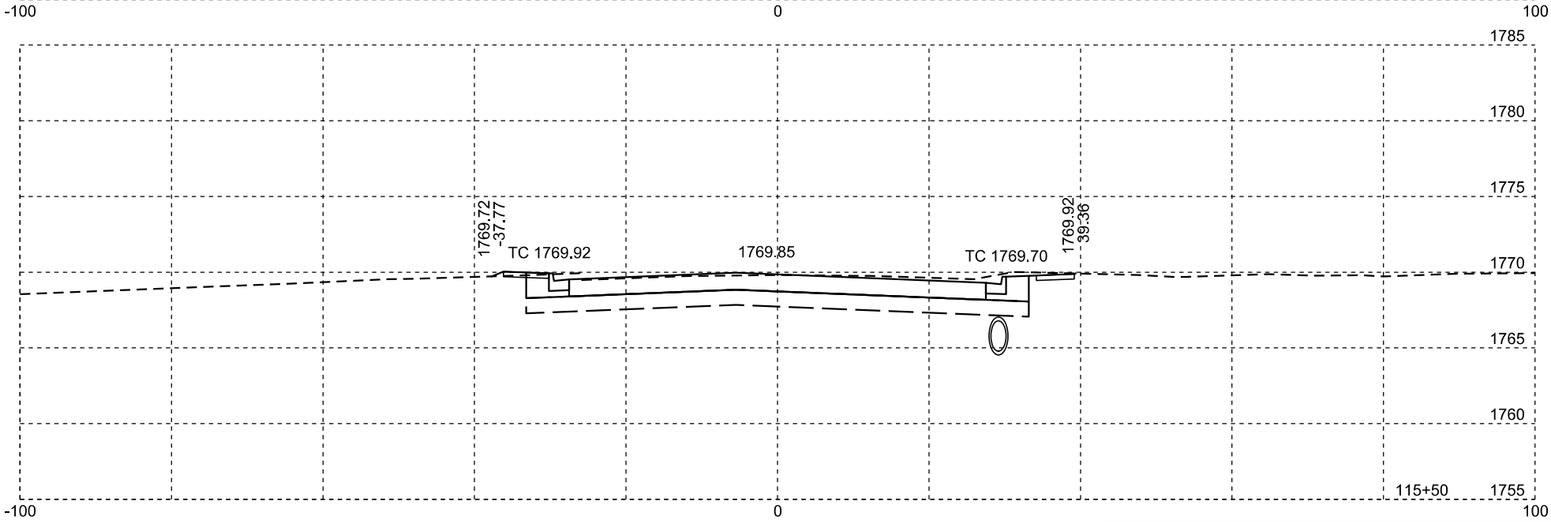

Plotting Date: 09/01/2015

STATE OF SOUTH DAKOTA	PROJECT	SHEET NO.	TOTAL SHEETS
	P 0081(93)157	X22	X47

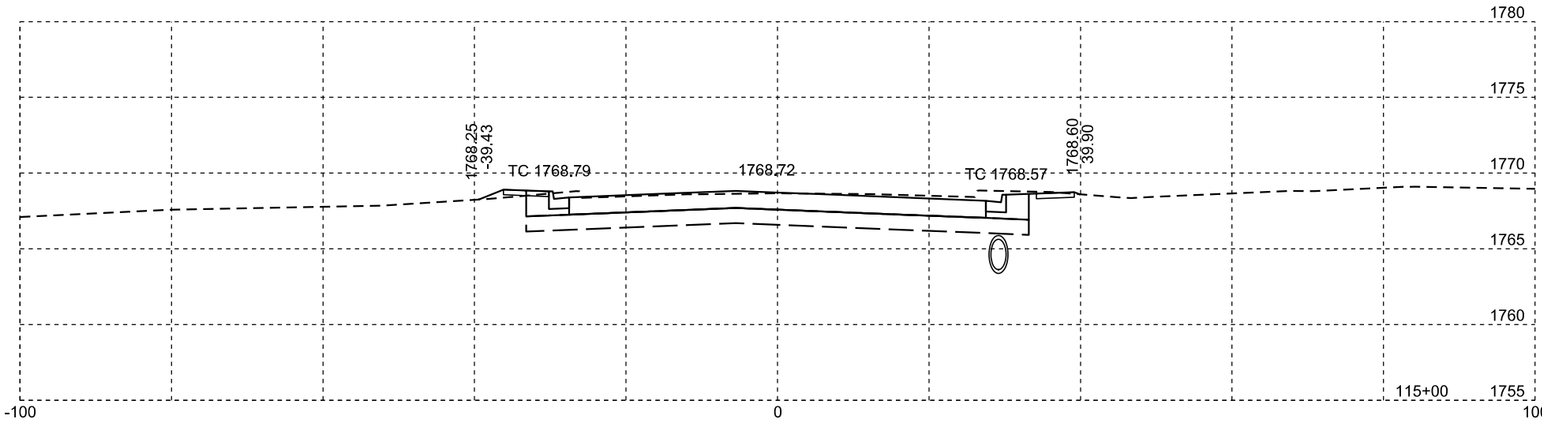

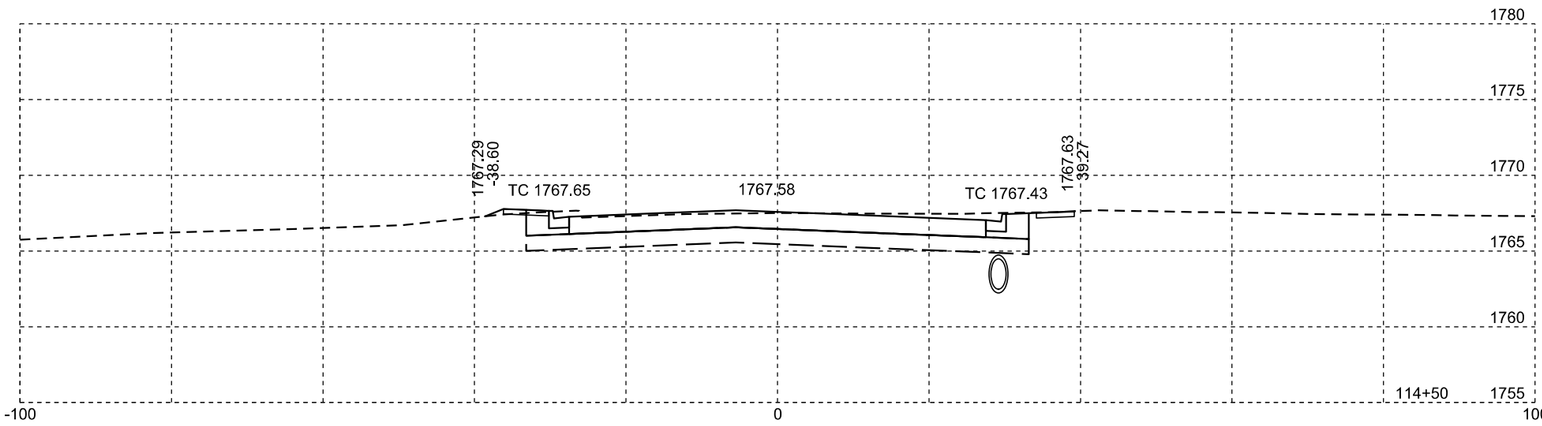

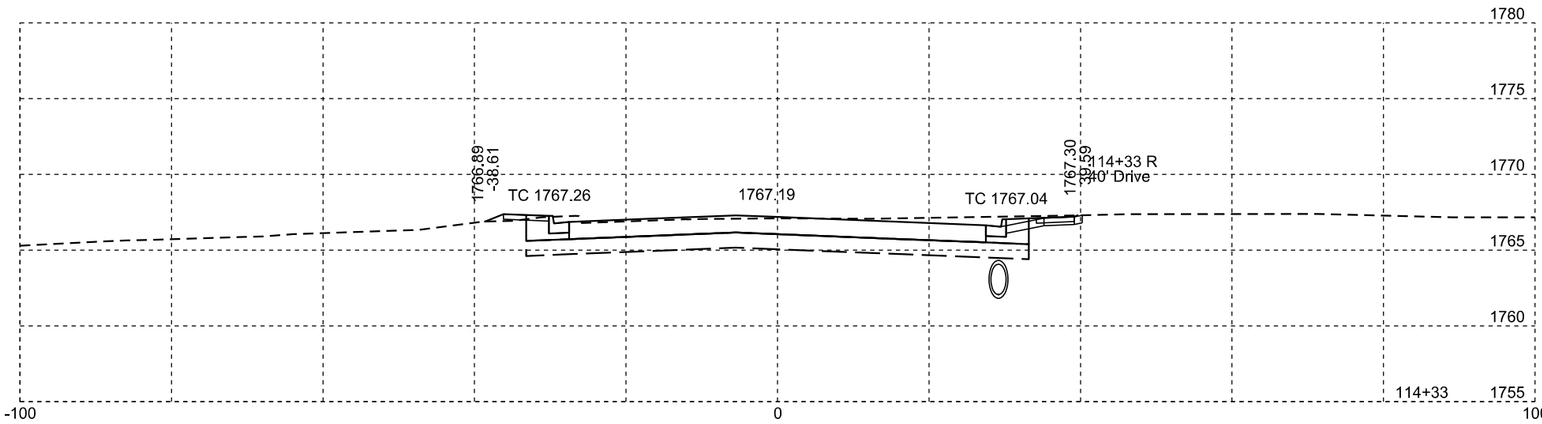

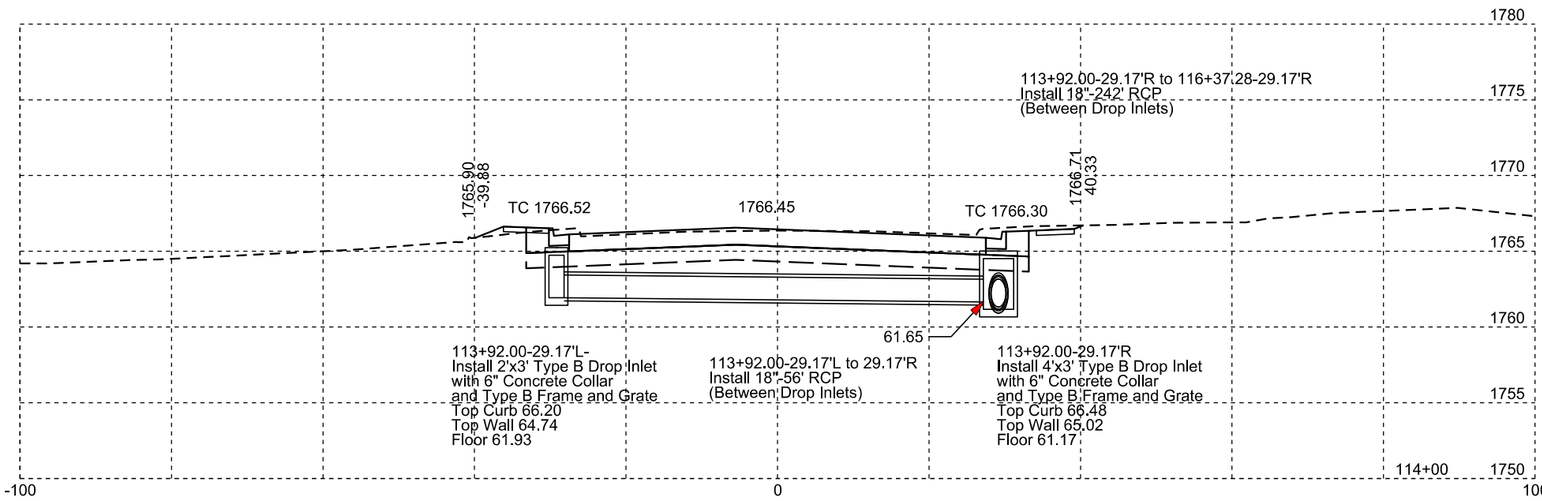

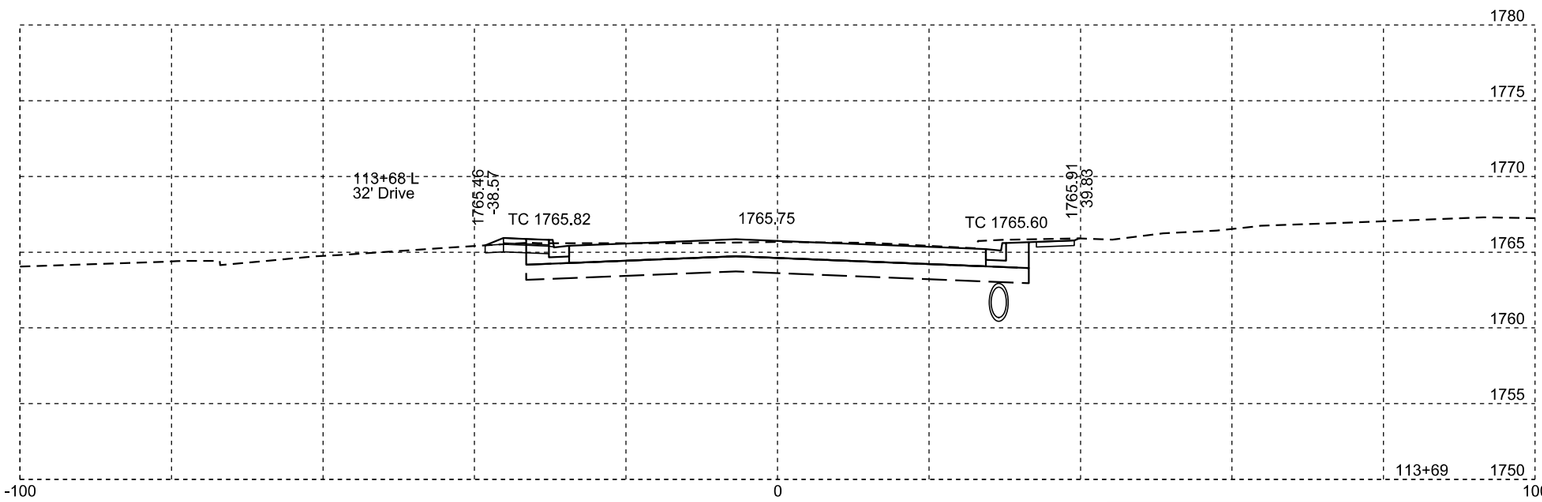

Plotting Date: 09/01/2015

STATE OF SOUTH DAKOTA	PROJECT	SHEET NO.	TOTAL SHEETS
	P 0081(93)157	X23	X47

STATE OF SOUTH DAKOTA	PROJECT	SHEET NO.	TOTAL SHEETS
	P 0081(93)157	X24	X47

Plotting Date: 09/01/2015

STATE OF SOUTH DAKOTA	PROJECT	SHEET NO.	TOTAL SHEETS
	P 0081(93)157	X25	X47

Plotting Date: 09/01/2015

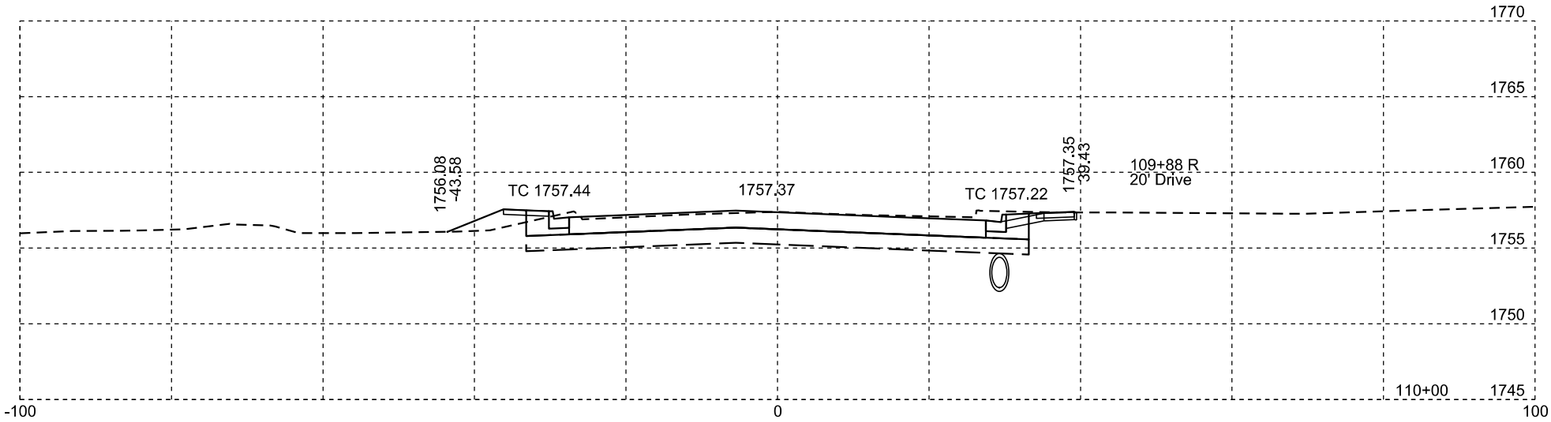

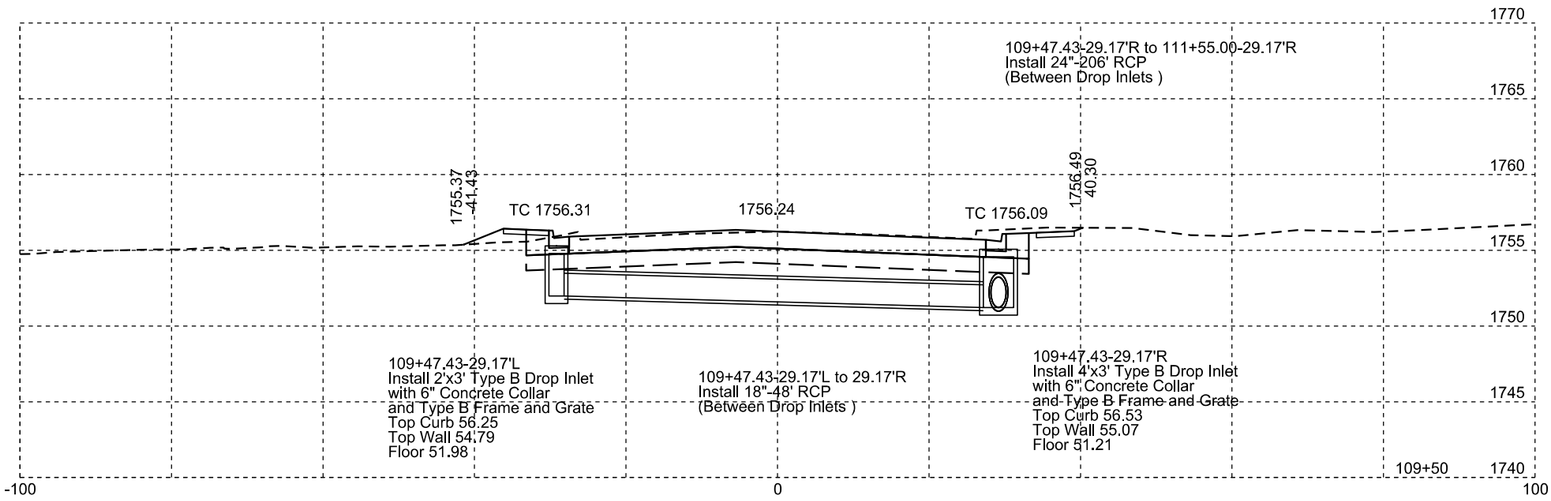

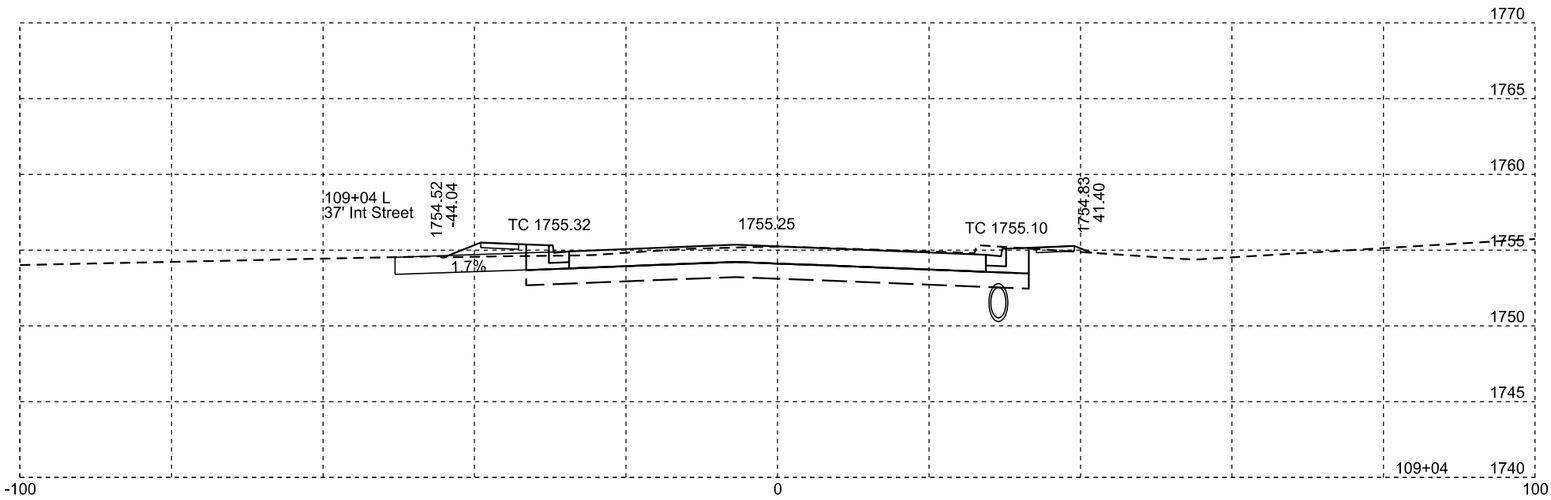

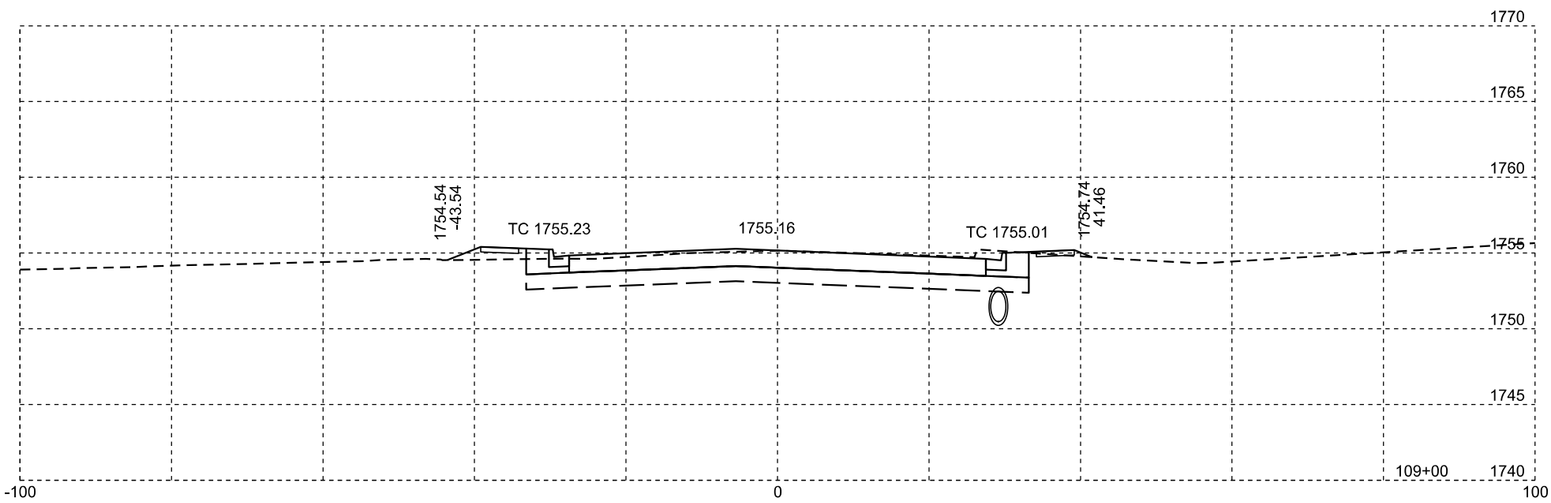

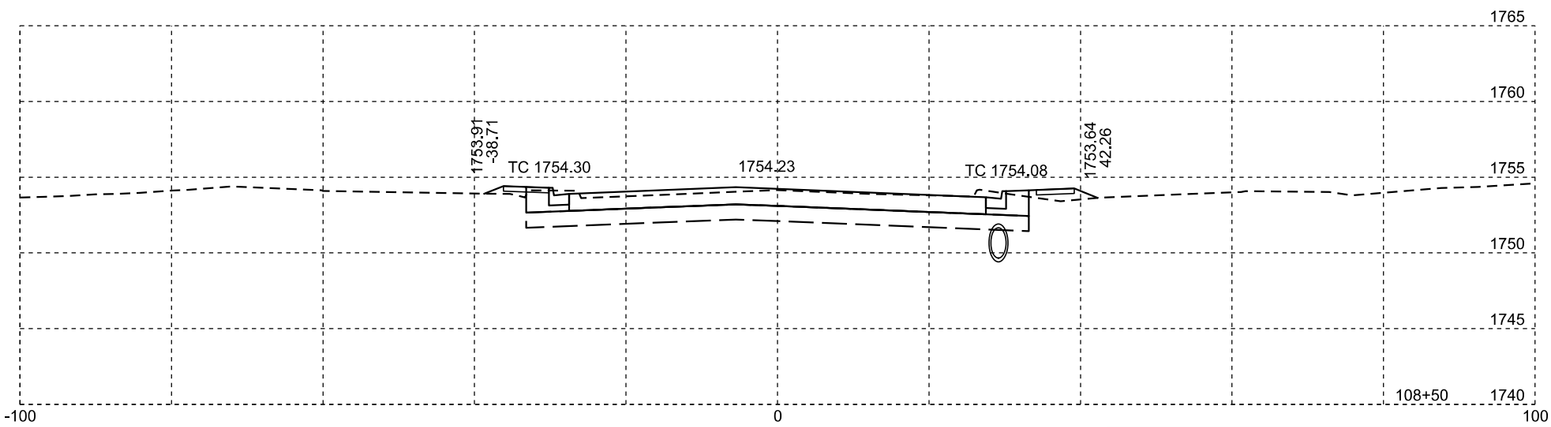

Plotting Date: 09/01/2015

STATE OF SOUTH DAKOTA	PROJECT	SHEET NO.	TOTAL SHEETS
	P 0081(93)157	X26	X47

STATE OF SOUTH DAKOTA	PROJECT	SHEET NO.	TOTAL SHEETS
	P 0081(93)157	X27	X47

Plotting Date: 09/01/2015

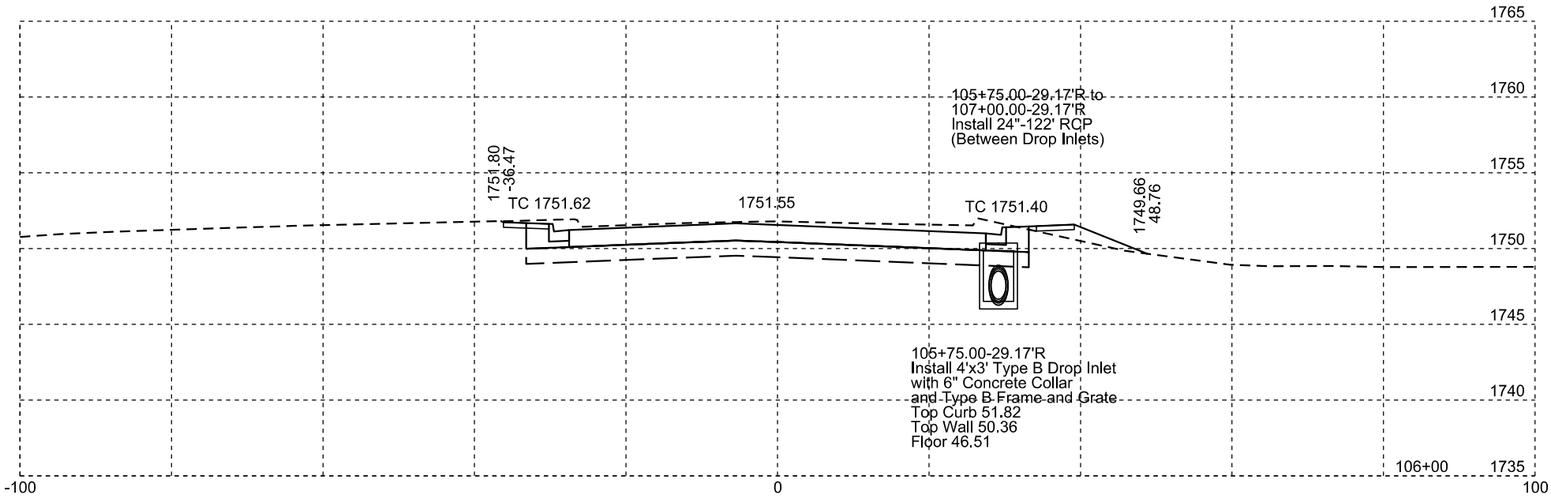

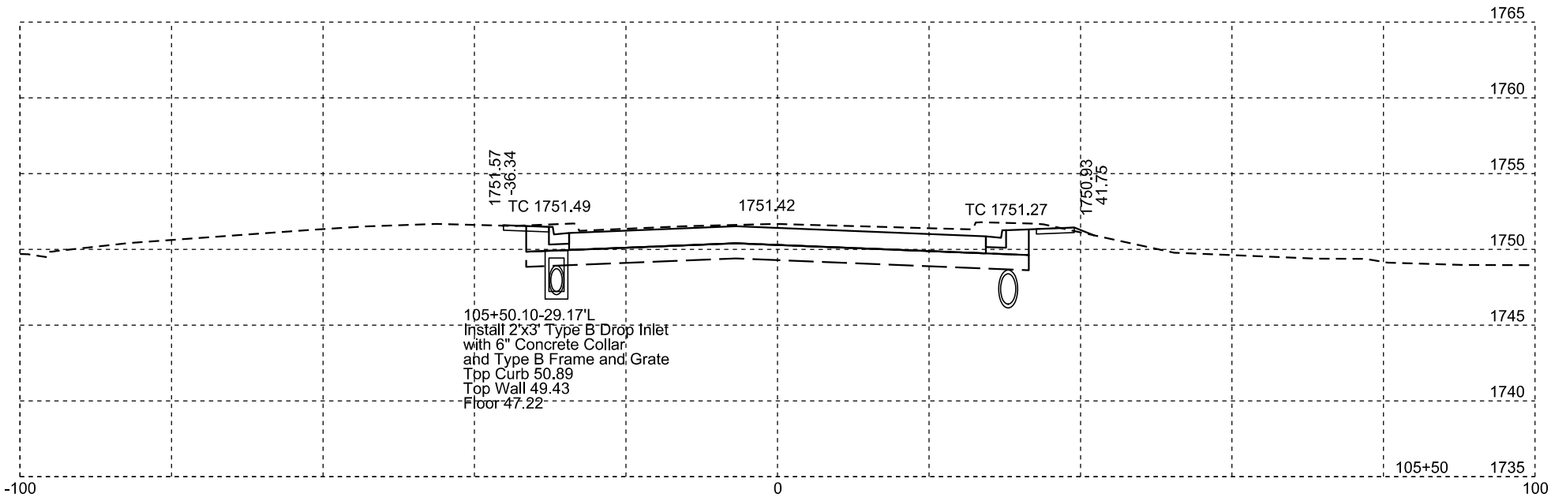

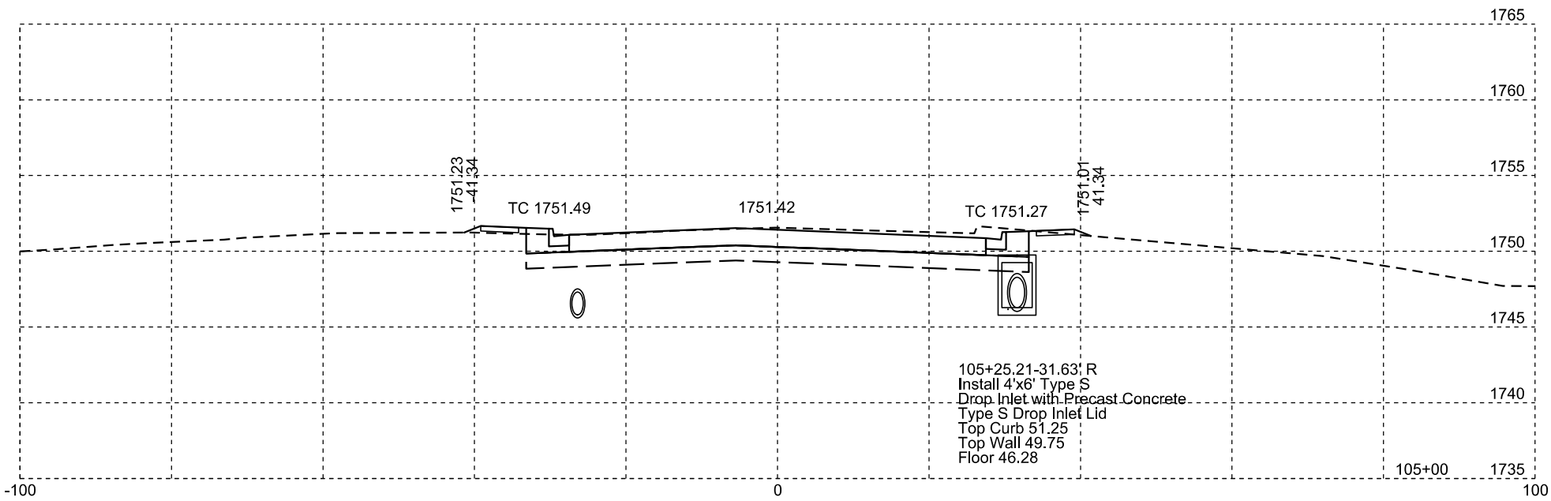

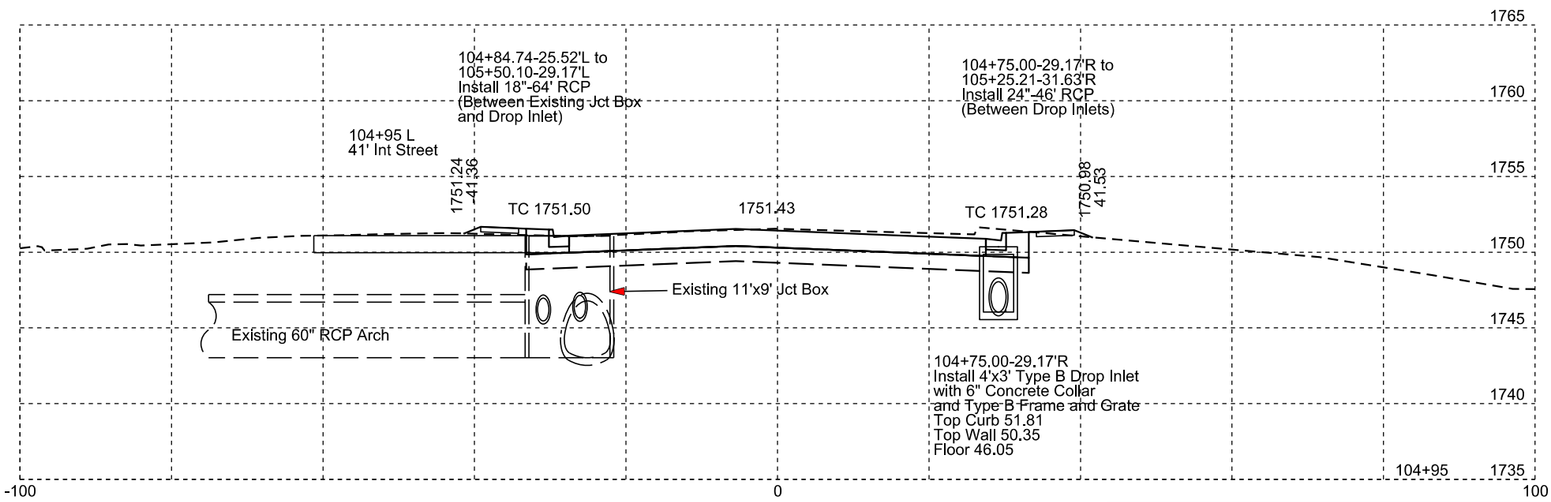

Plotting Date: 09/01/2015

STATE OF SOUTH DAKOTA	PROJECT	SHEET NO.	TOTAL SHEETS
	P 0081(93)157	X28	X47

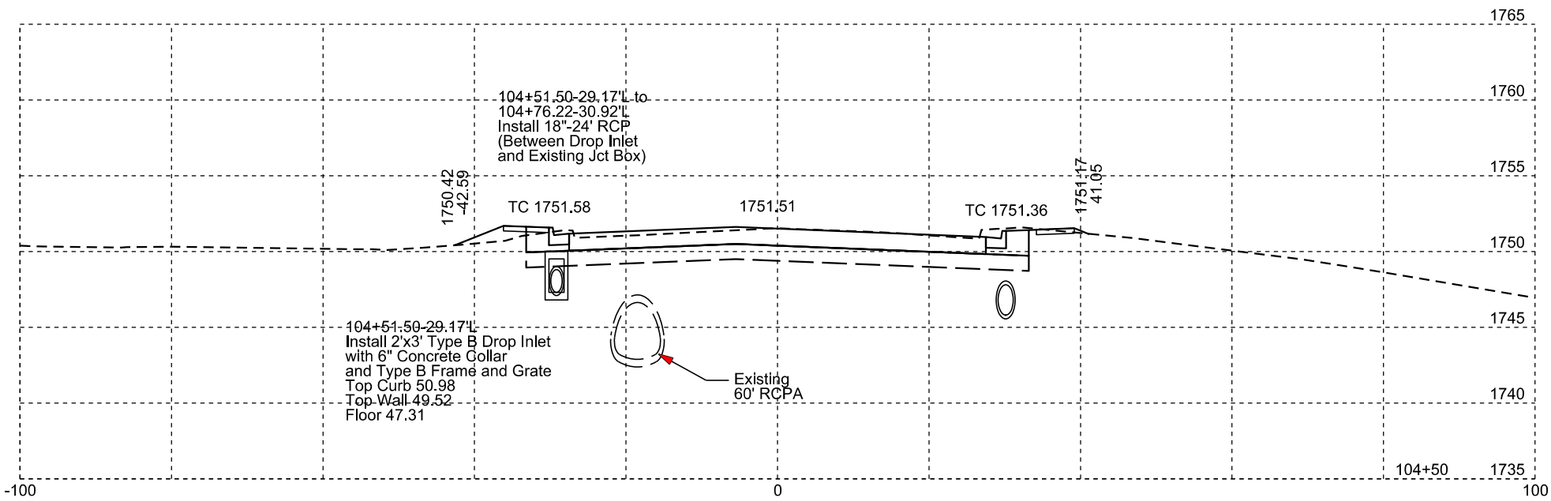

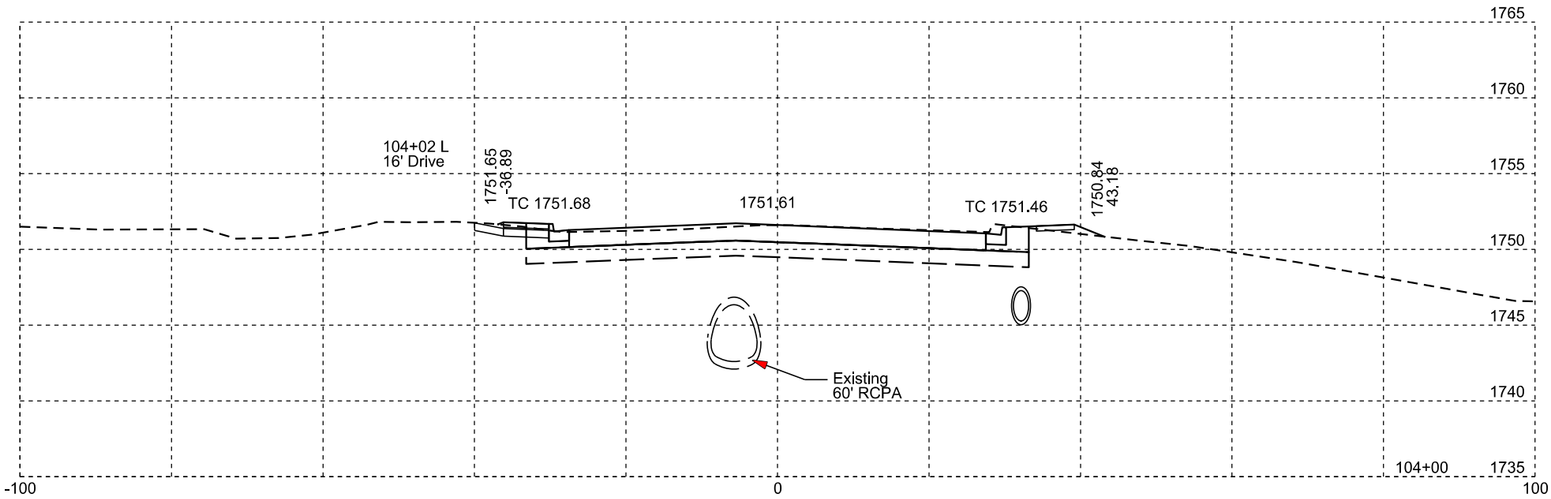

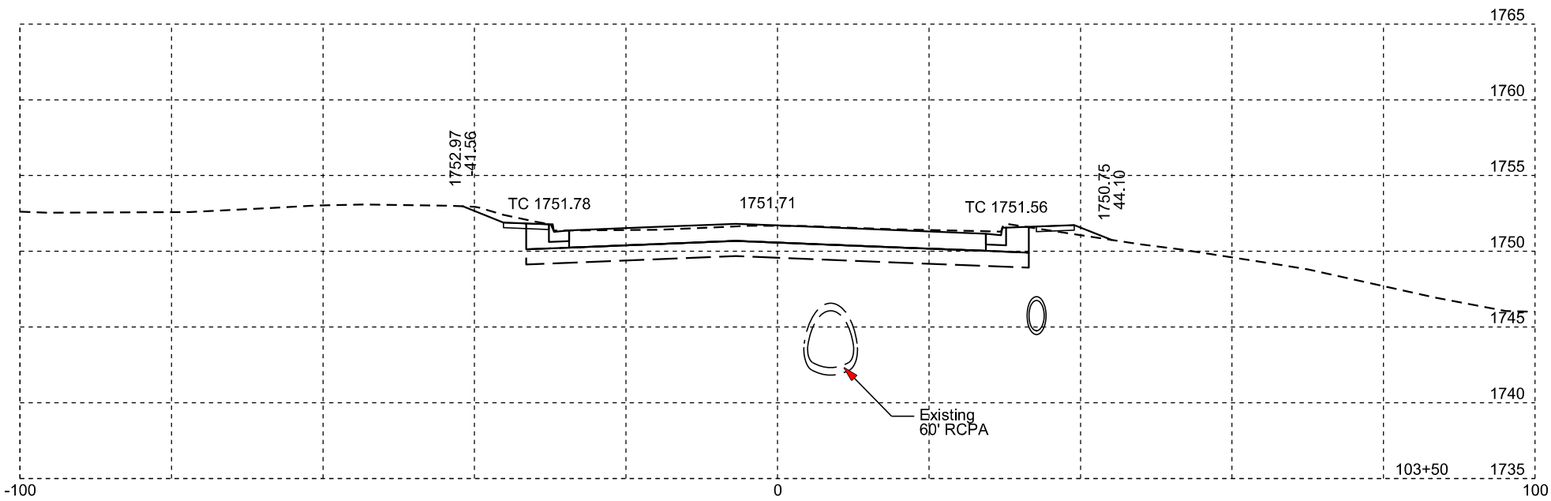

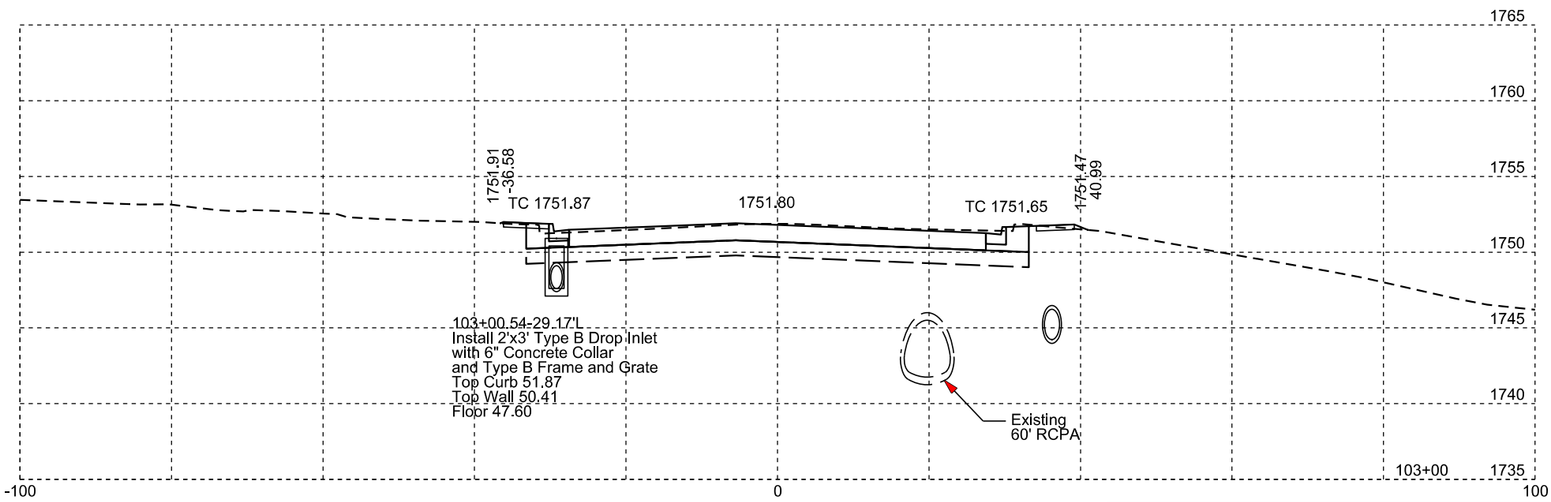

Plotting Date: 09/01/2015

STATE OF SOUTH DAKOTA	PROJECT	SHEET NO.	TOTAL SHEETS
	P 0081(93)157	X29	X47

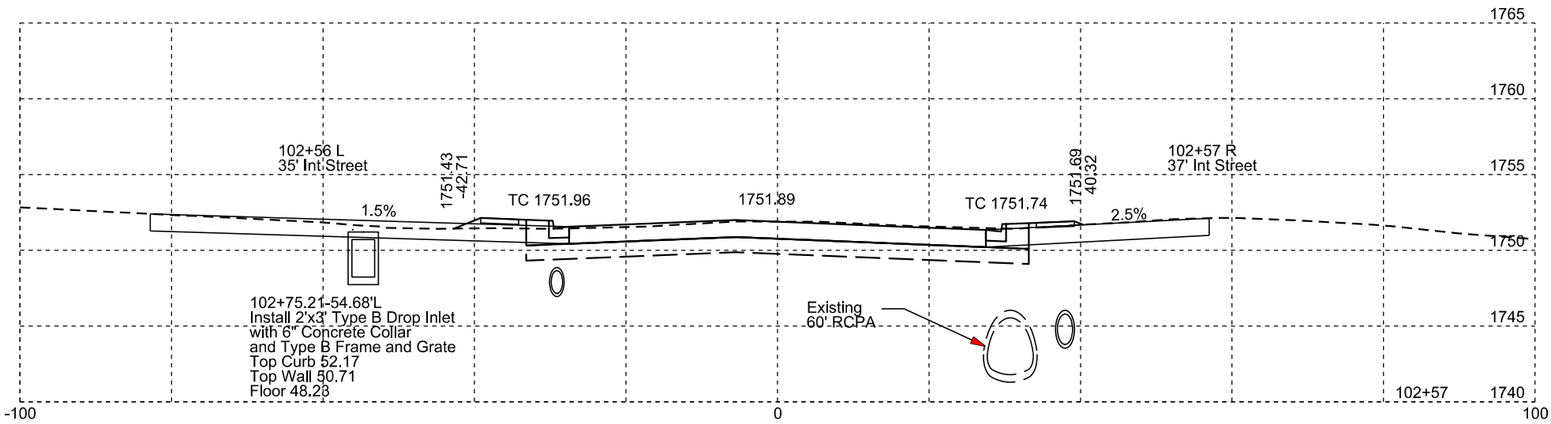

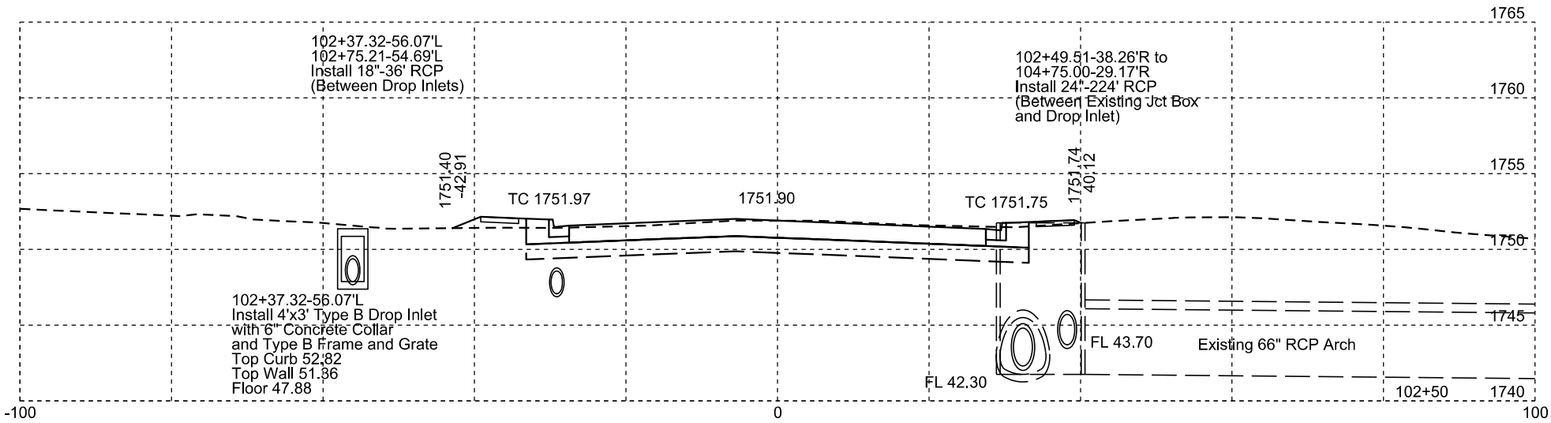

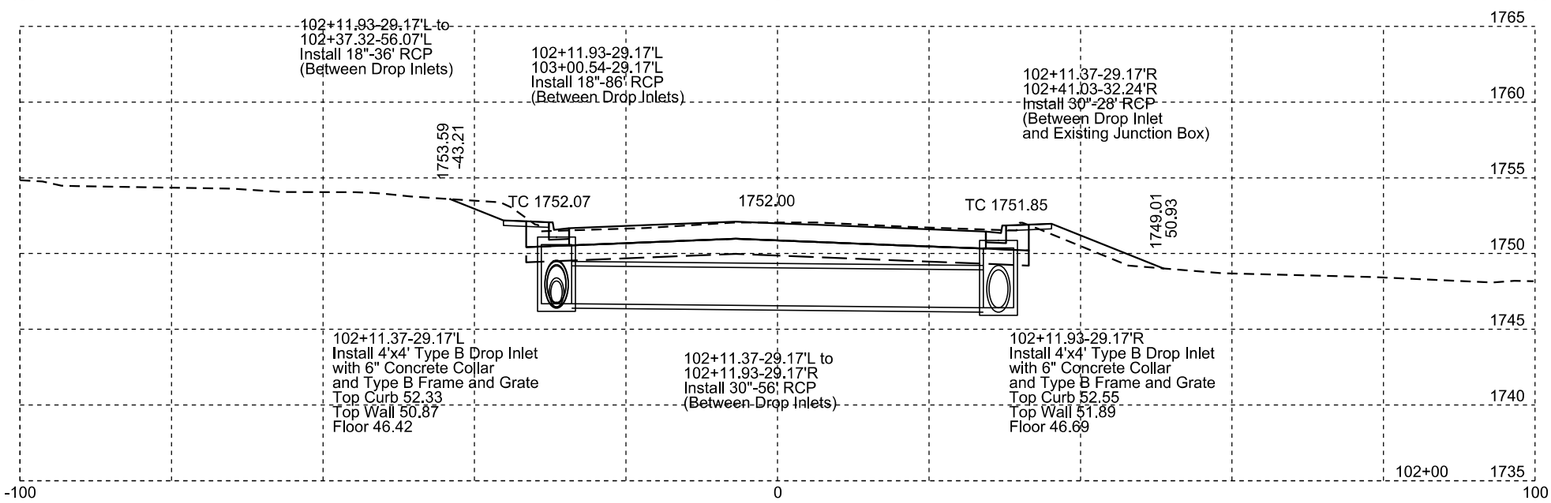

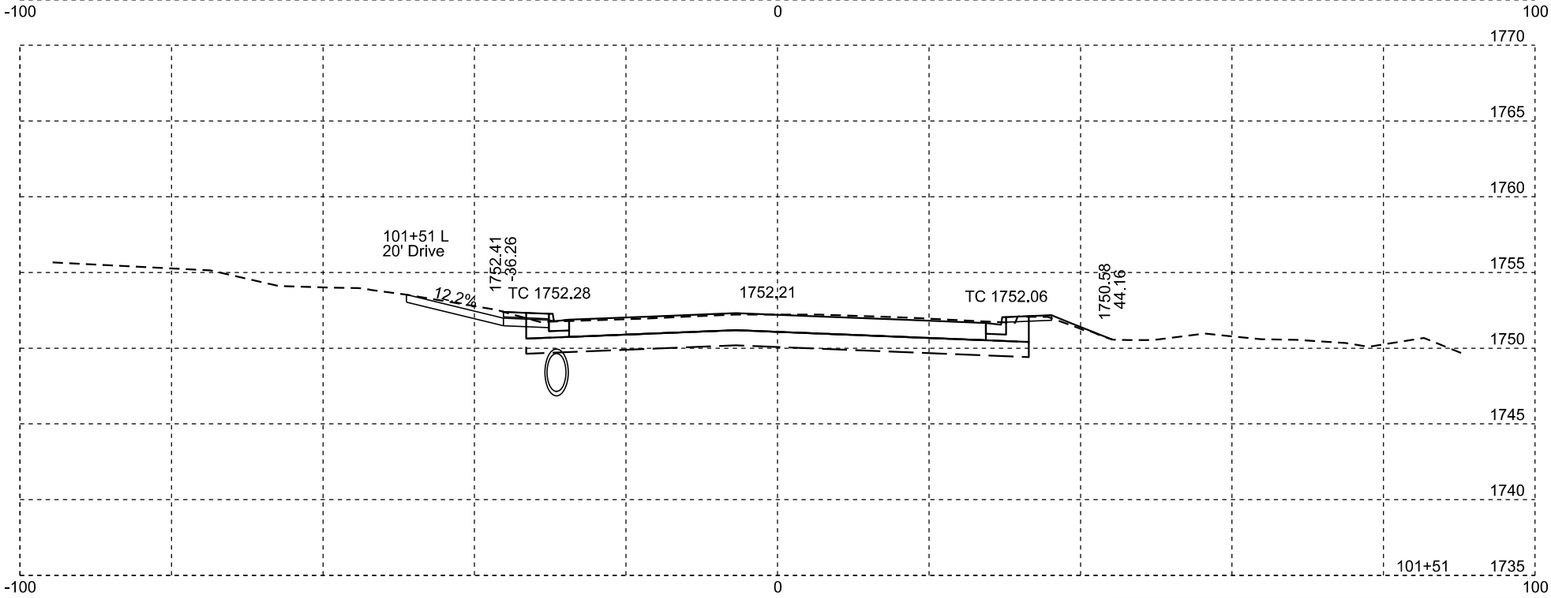

Plotting Date: 09/01/2015

STATE OF SOUTH DAKOTA	PROJECT	SHEET NO.	TOTAL SHEETS
	P 0081(93)157	X30	X47

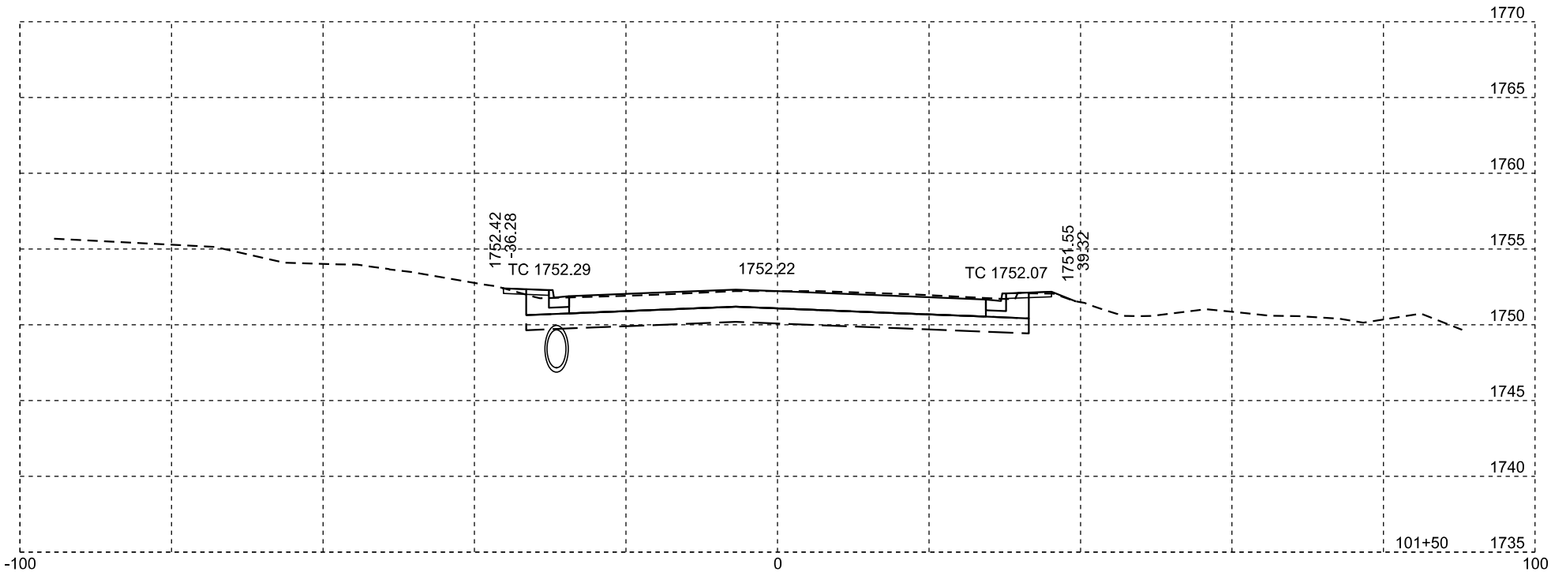

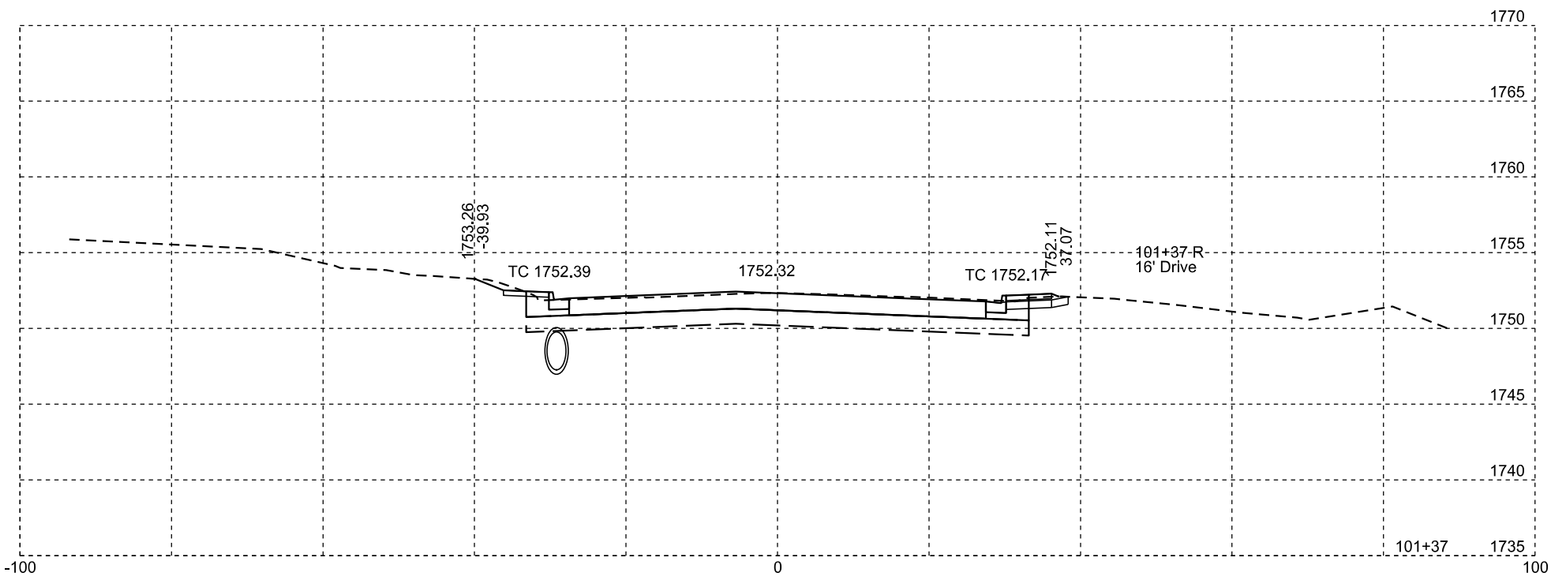

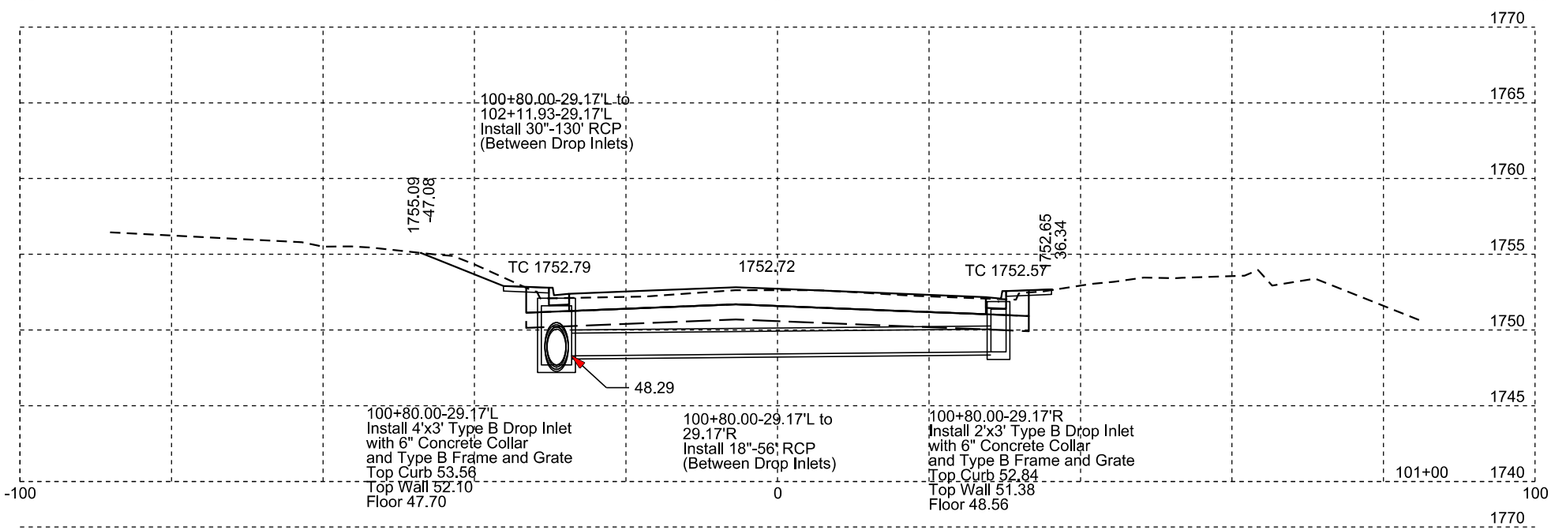

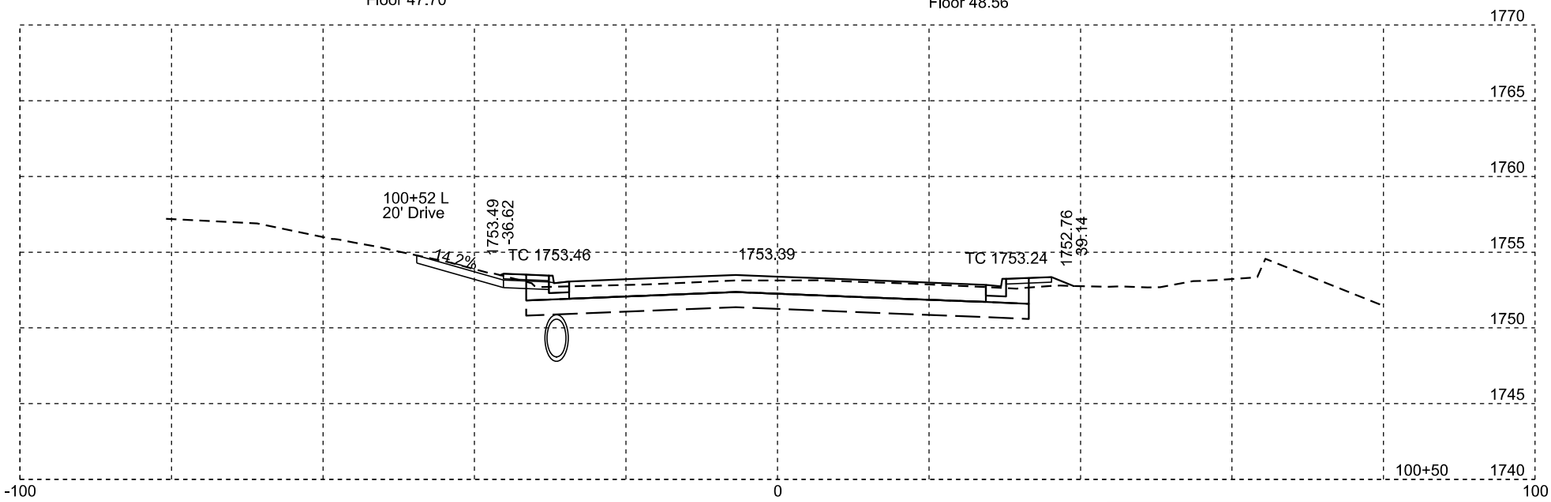

Plotting Date: 09/01/2015

STATE OF SOUTH DAKOTA	PROJECT	SHEET NO.	TOTAL SHEETS
	P 0081(93)157	X31	X47

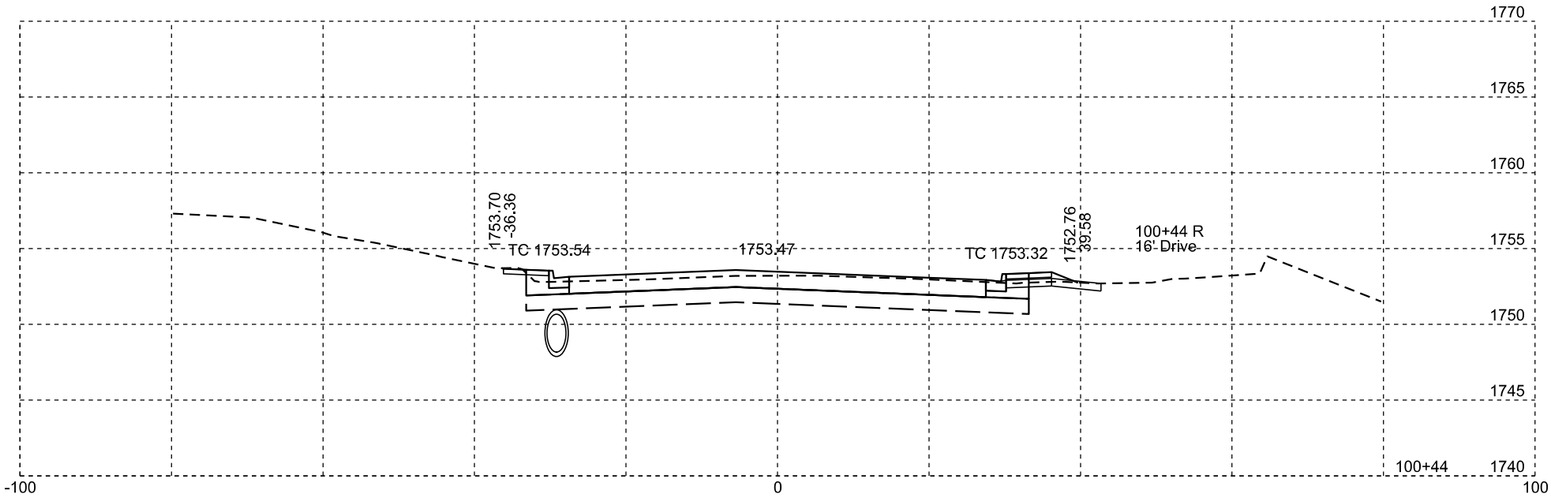

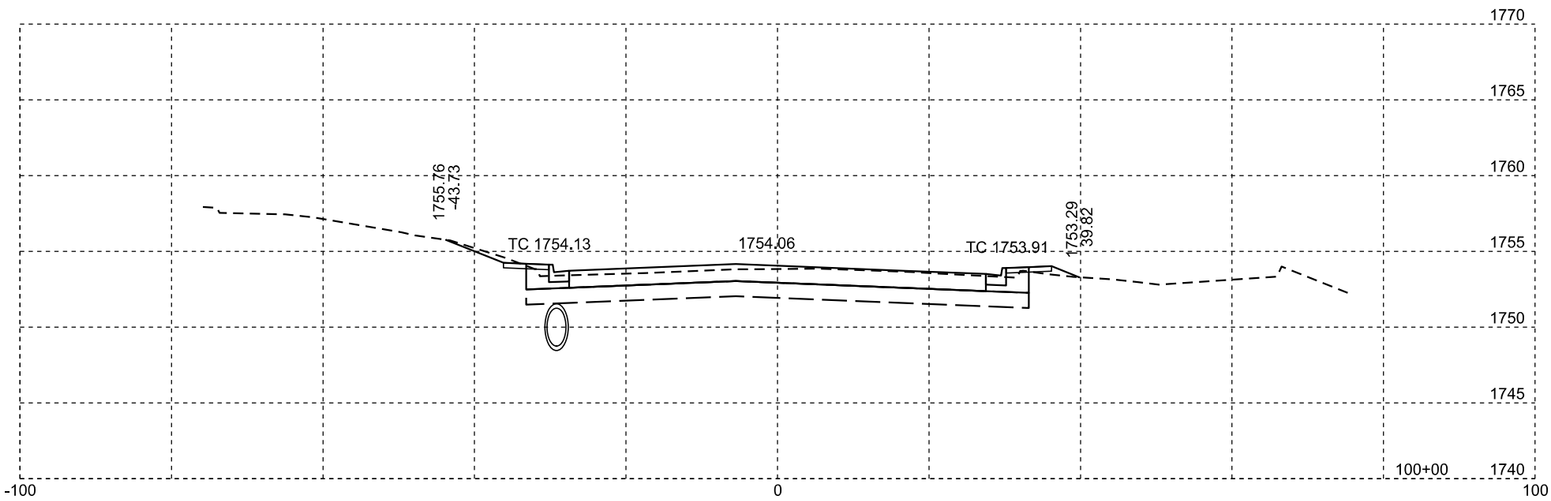

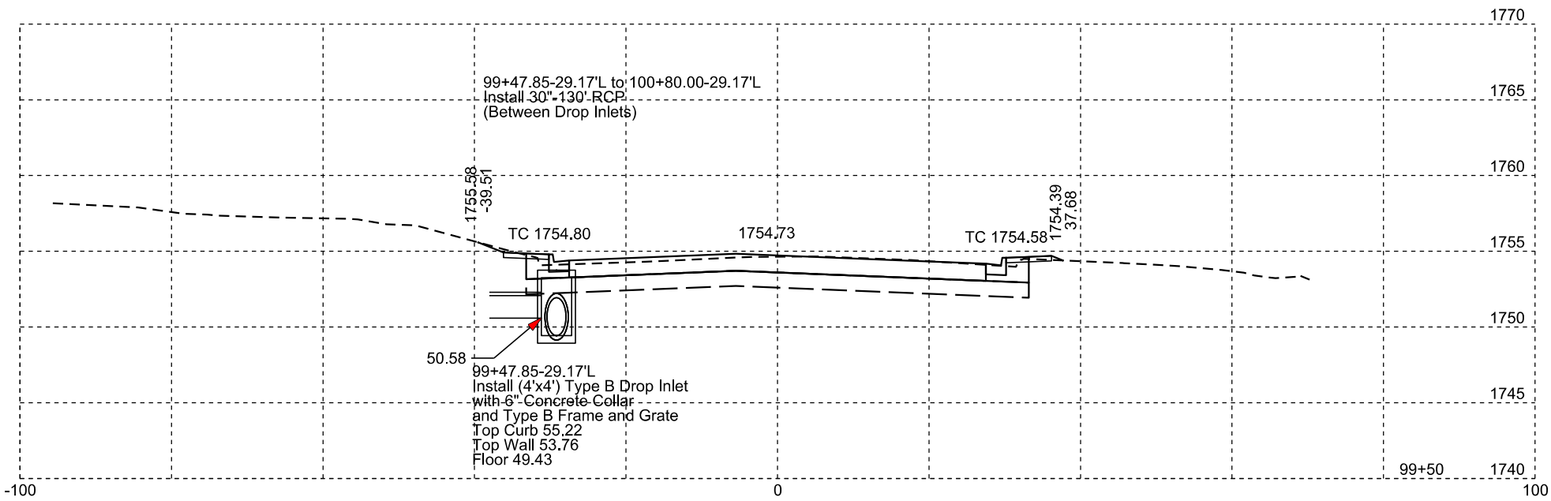

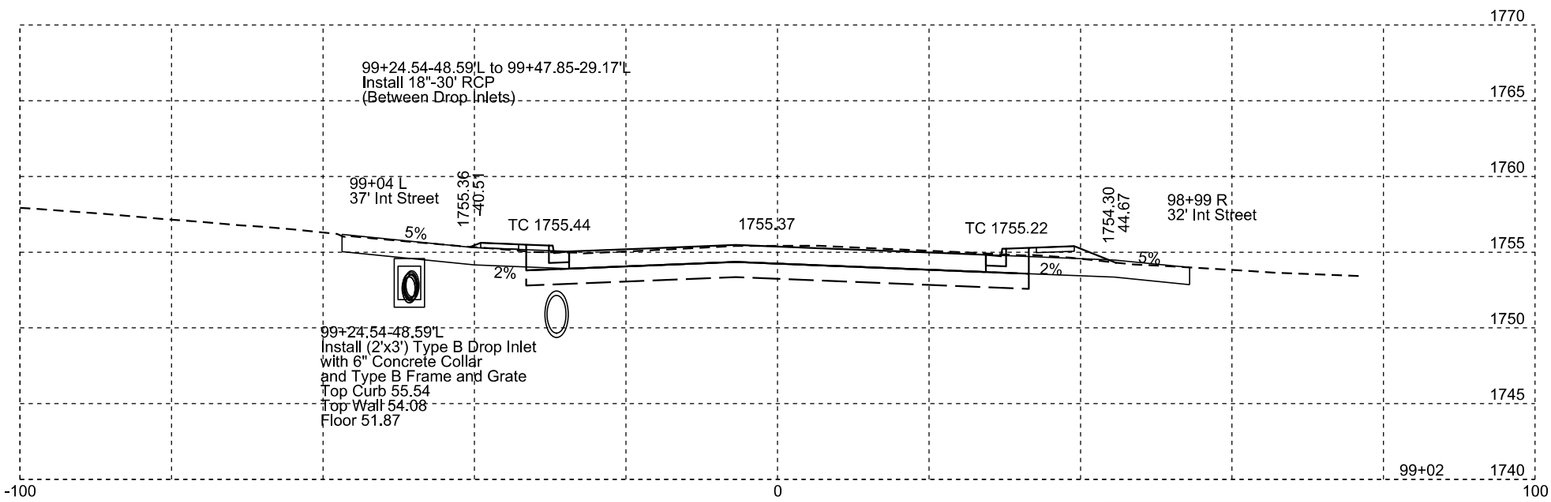

Plotting Date: 09/01/2015

STATE OF SOUTH DAKOTA	PROJECT	SHEET NO.	TOTAL SHEETS
	P 0081(93)157	X32	X47

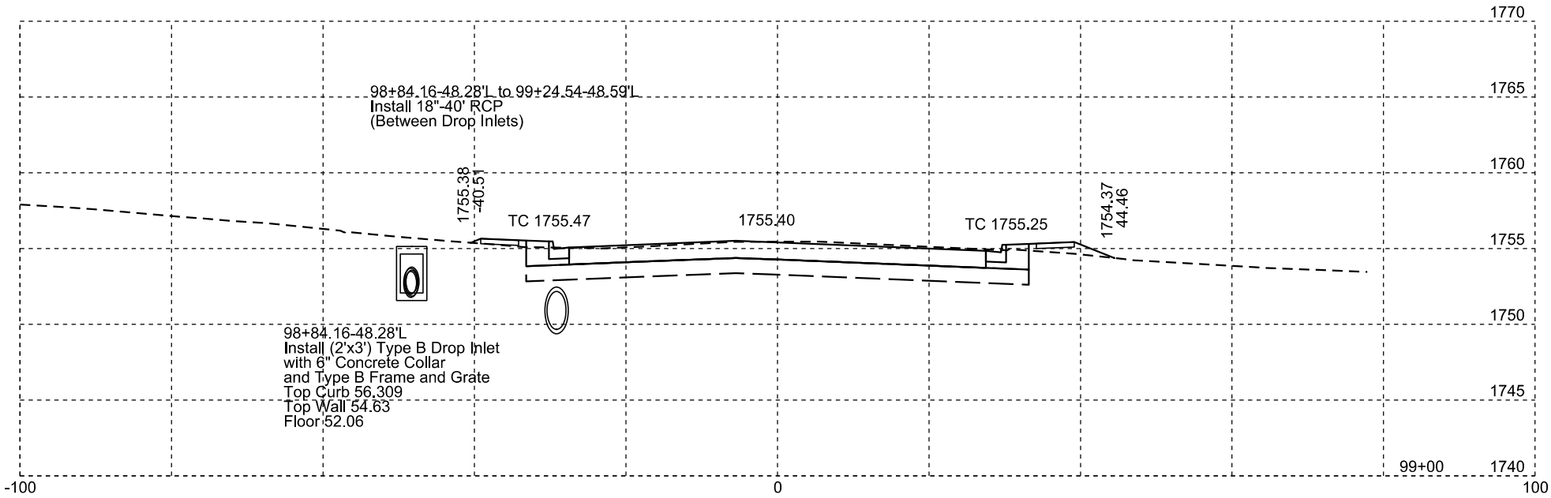

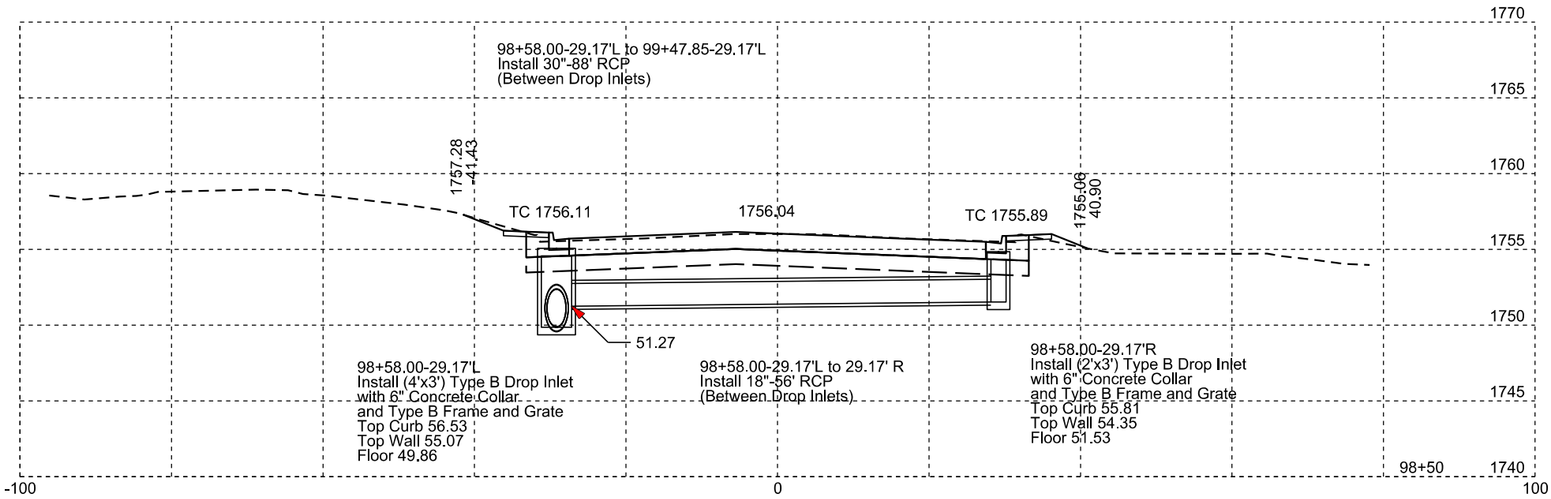

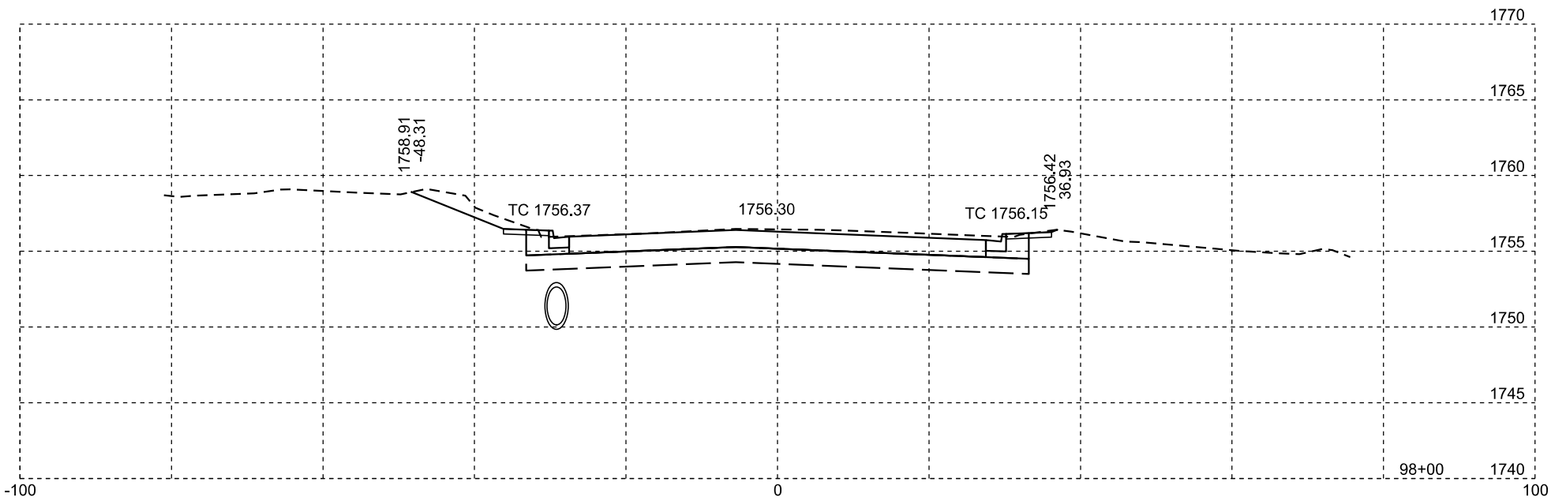

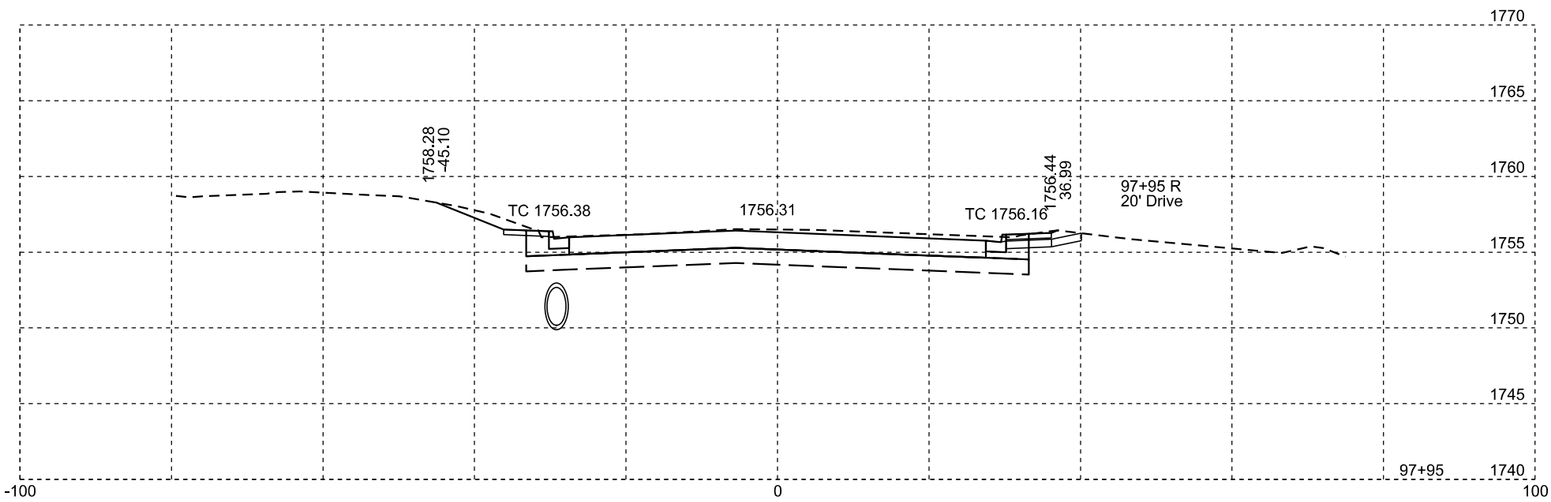

Plotting Date: 09/01/2015

STATE OF SOUTH DAKOTA	PROJECT	SHEET NO.	TOTAL SHEETS
	P 0081(93)157	X33	X47

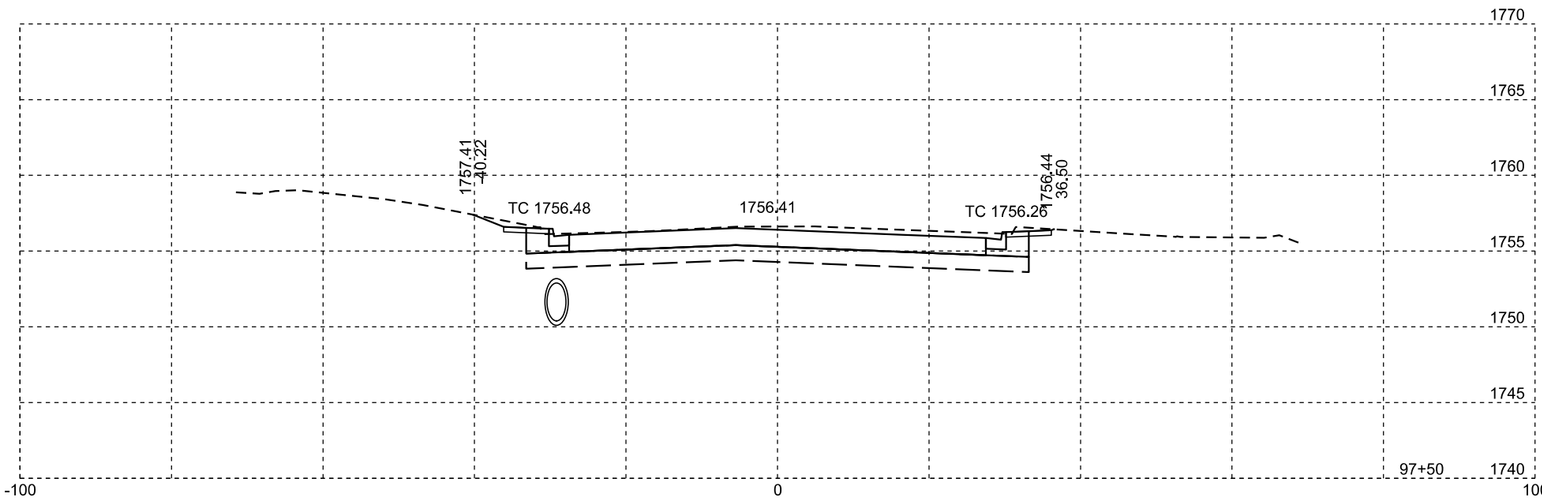

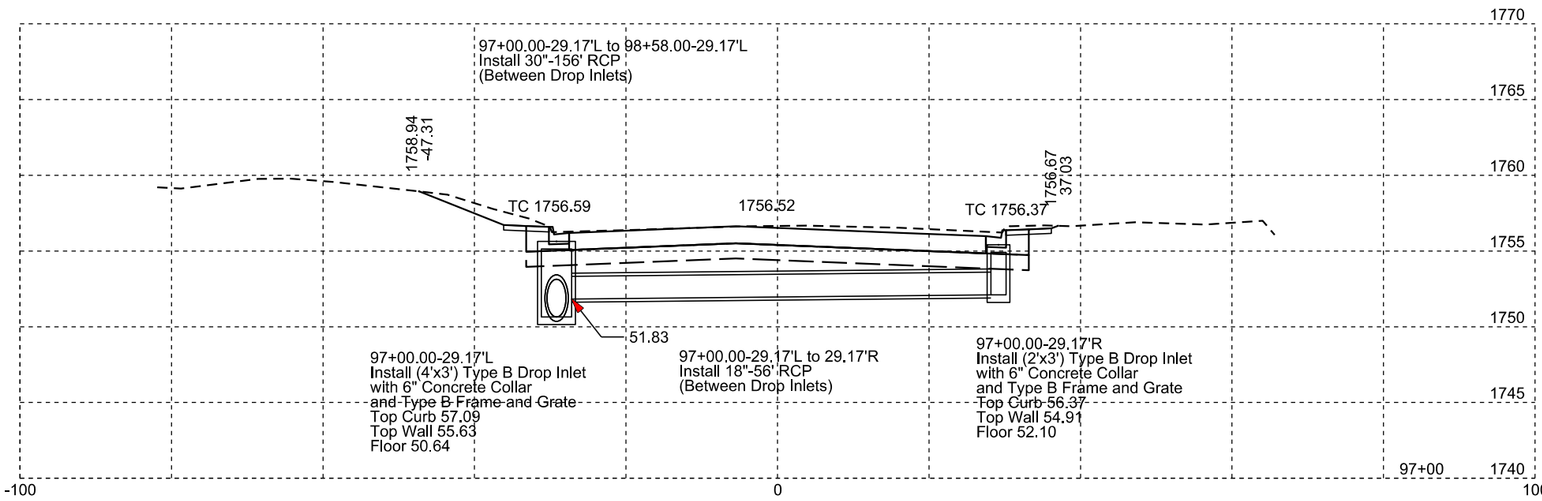

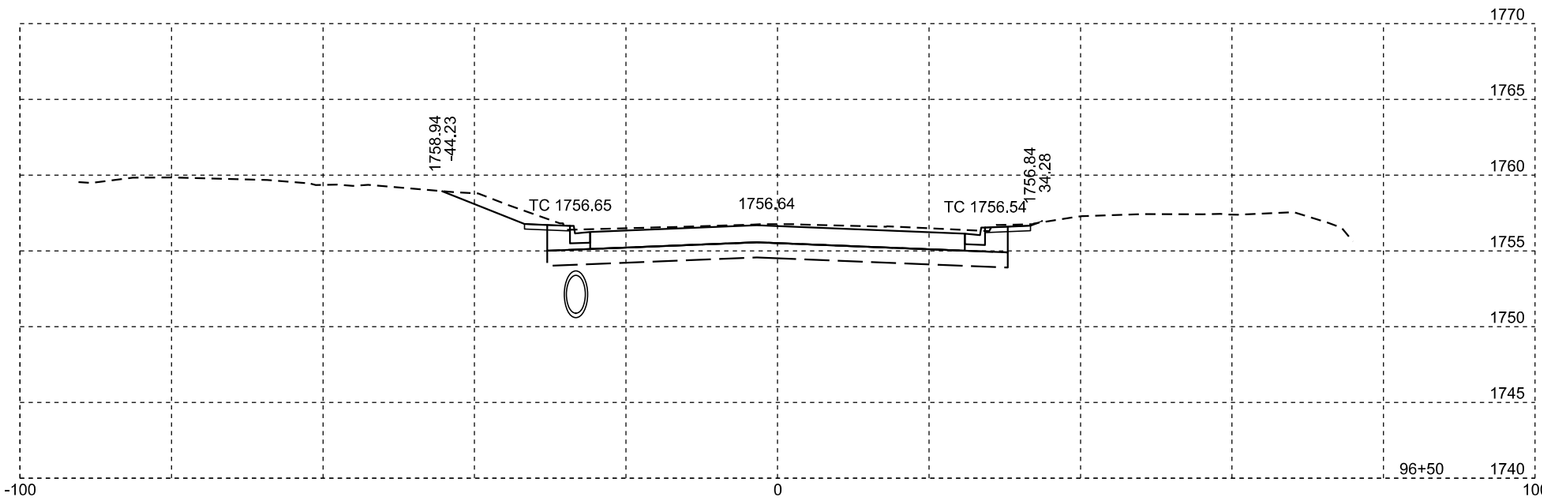

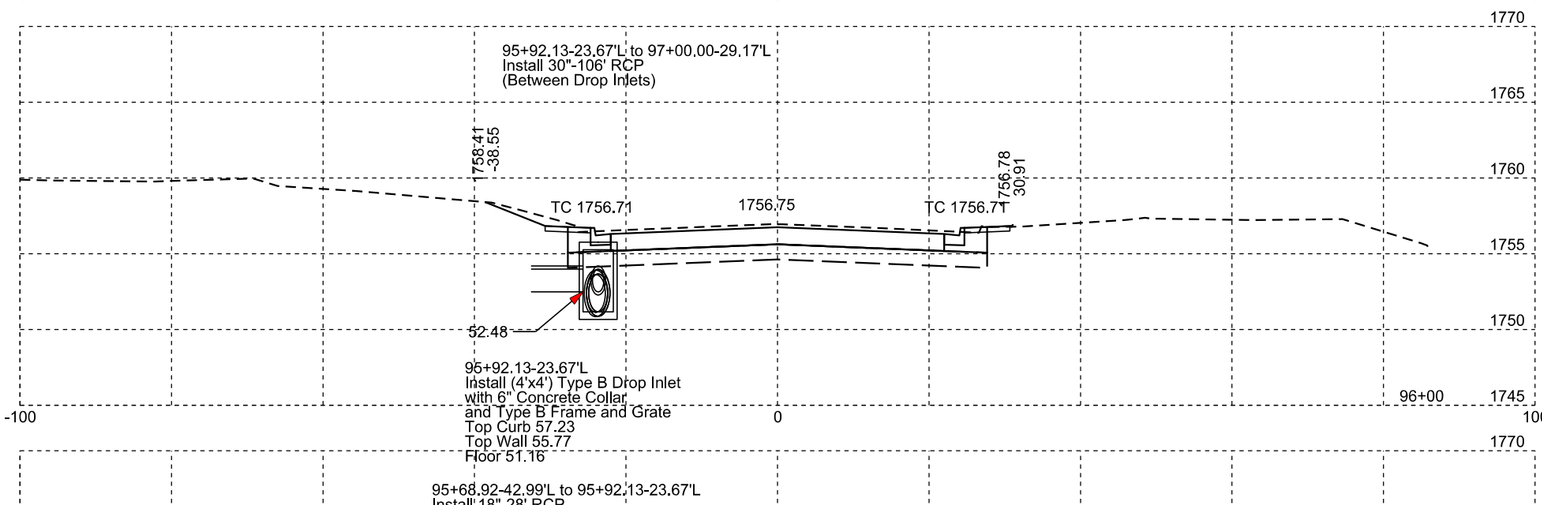

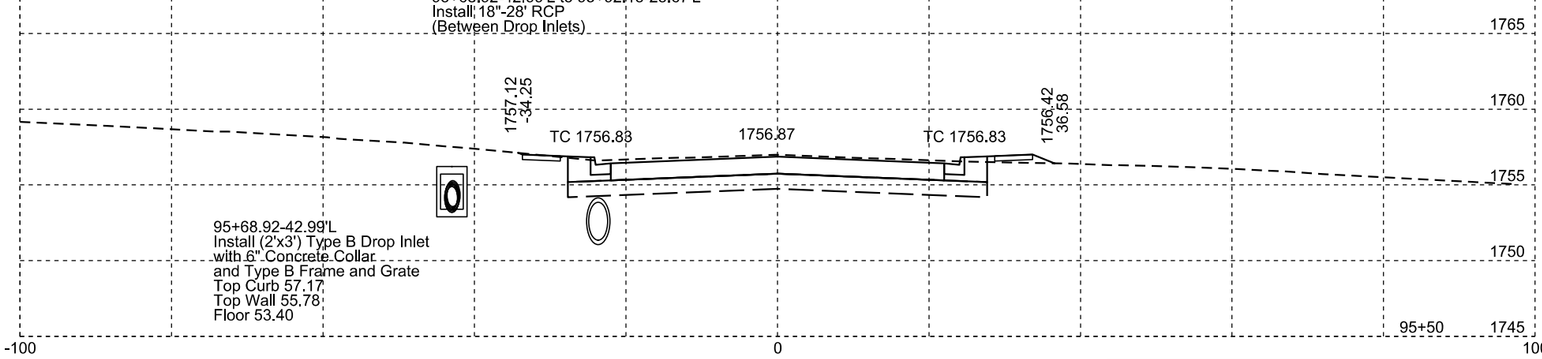

Plotting Date: 09/01/2015

STATE OF SOUTH DAKOTA	PROJECT	SHEET NO.	TOTAL SHEETS
	P 0081(93)157	X34	X47

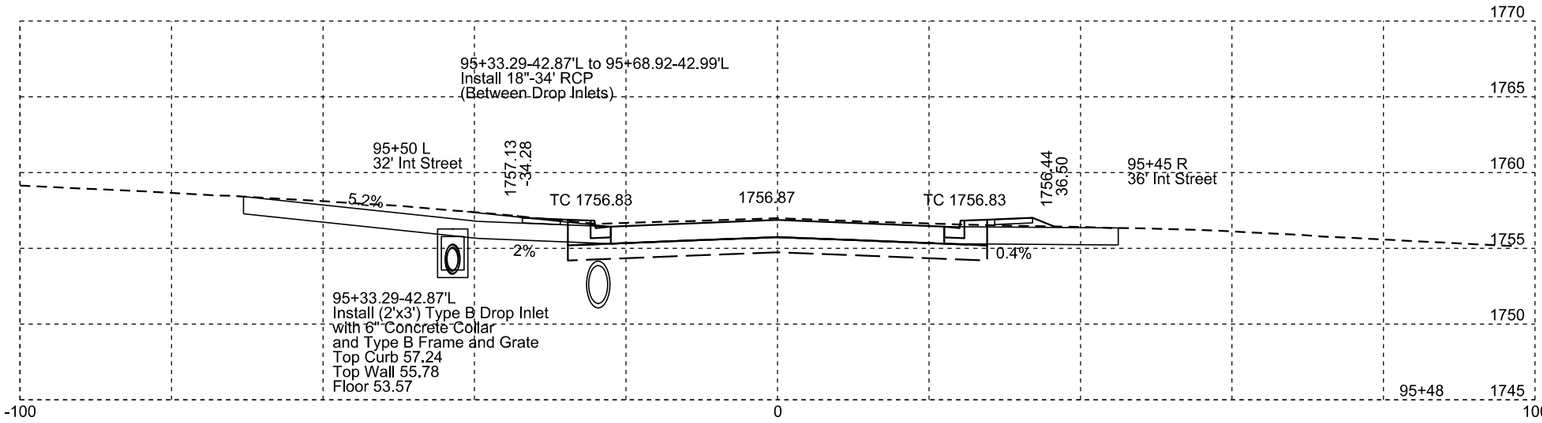

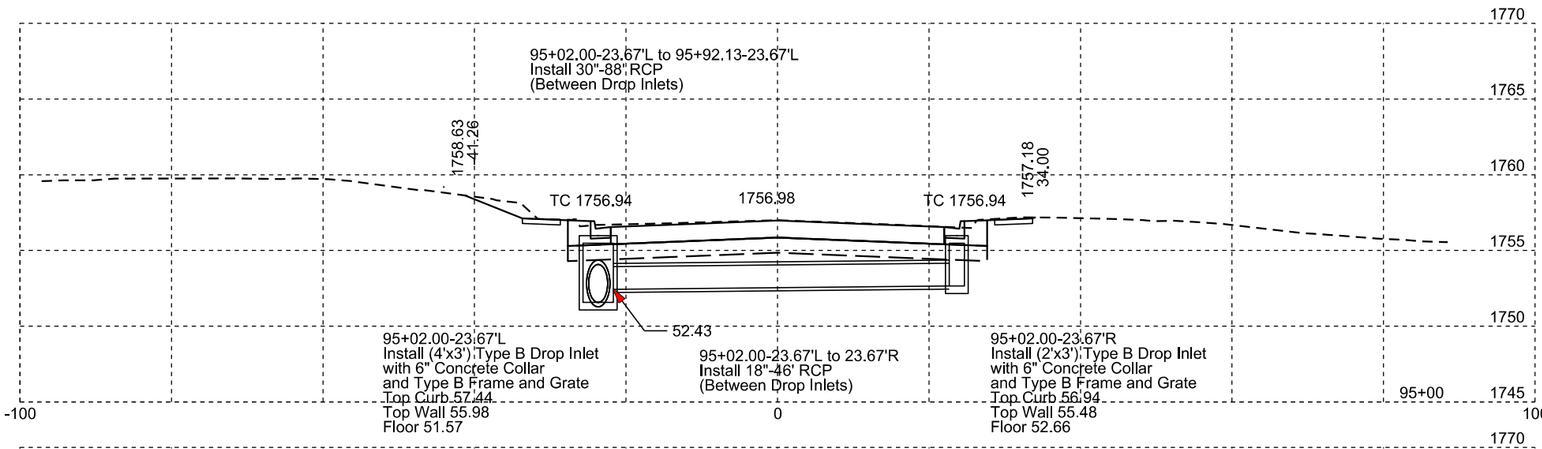

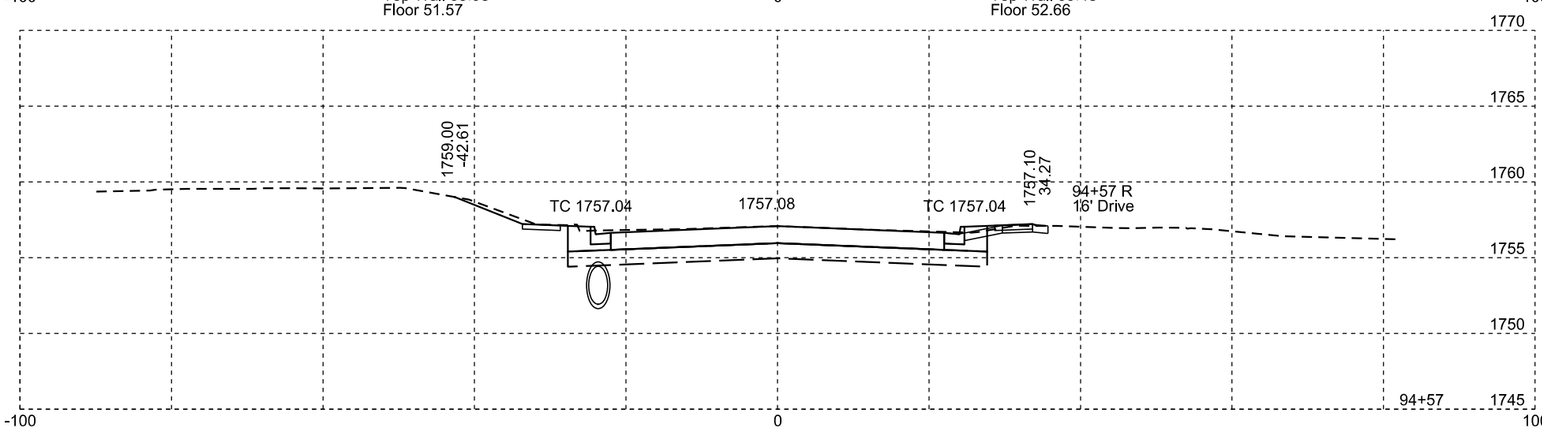

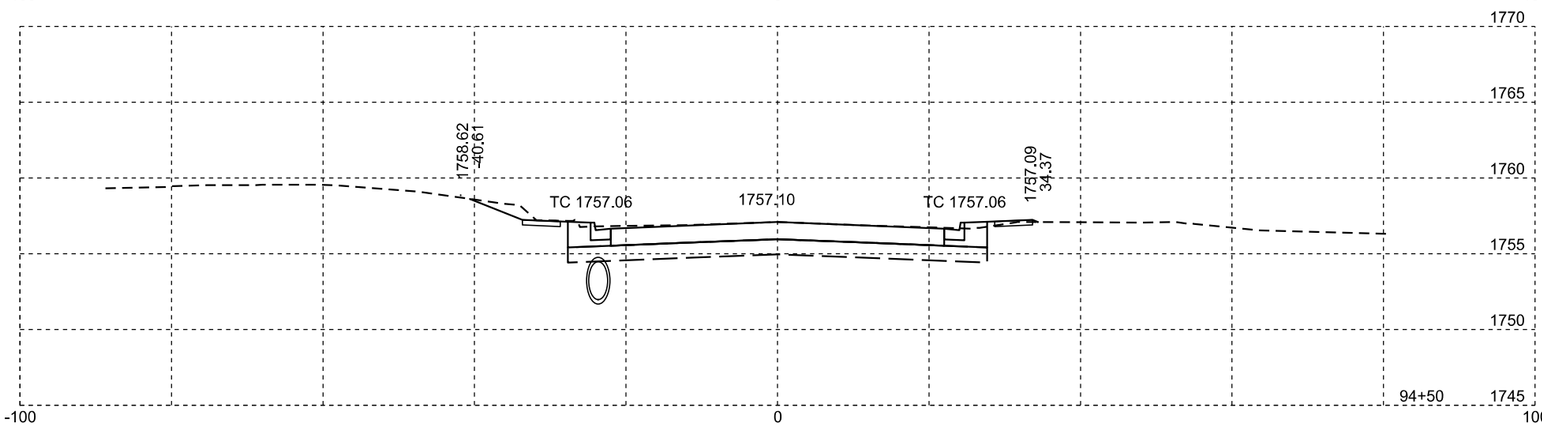

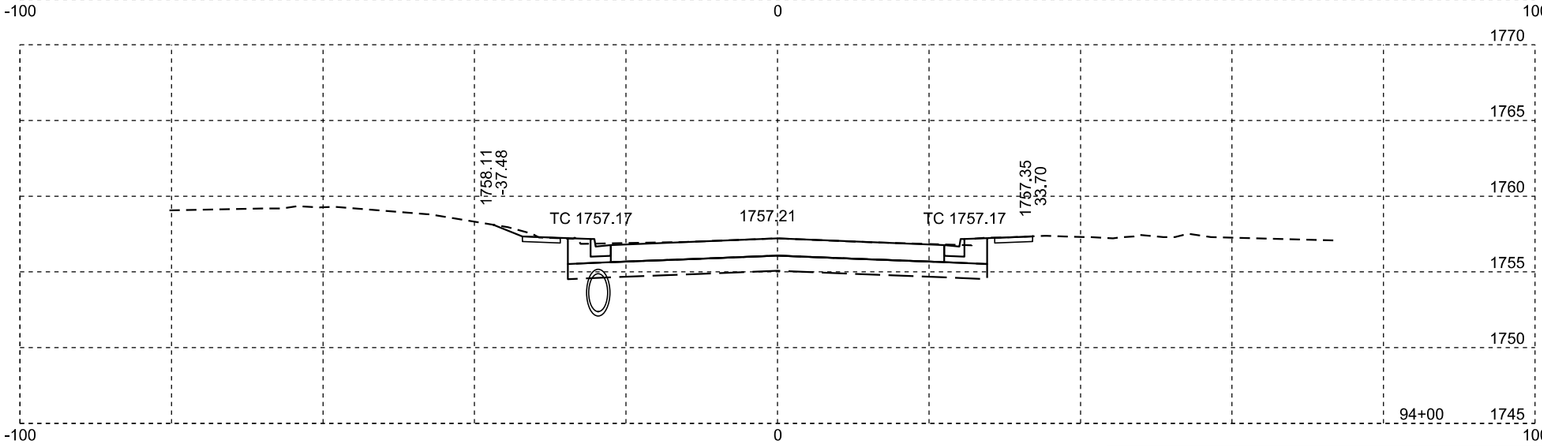

Plotting Date: 09/01/2015

STATE OF SOUTH DAKOTA	PROJECT	SHEET NO.	TOTAL SHEETS
	P 0081(93)157	X35	X47

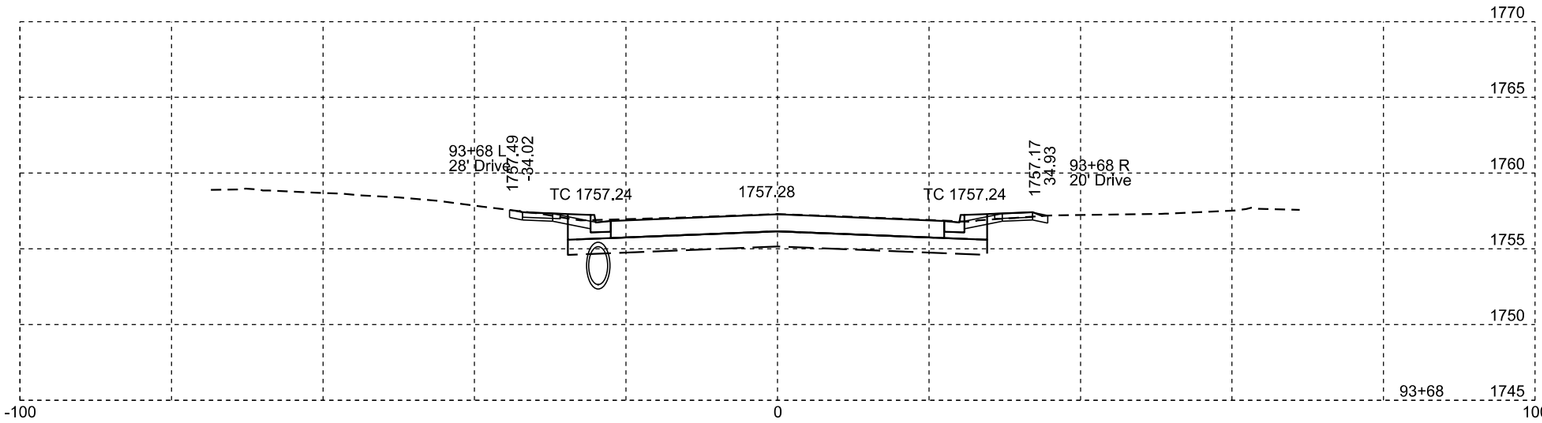

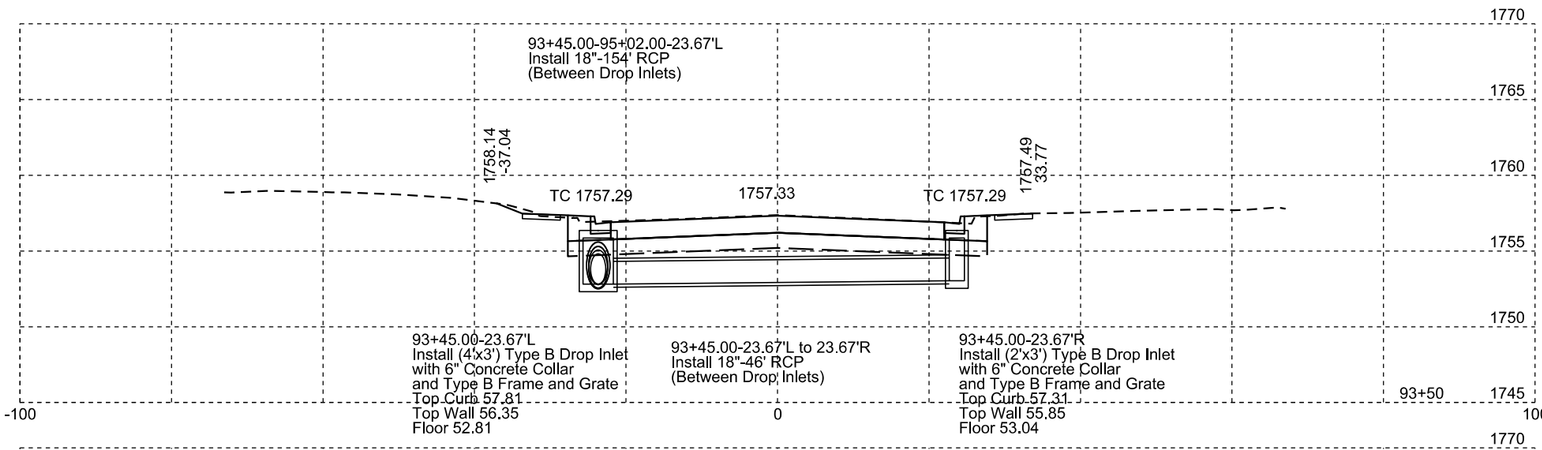

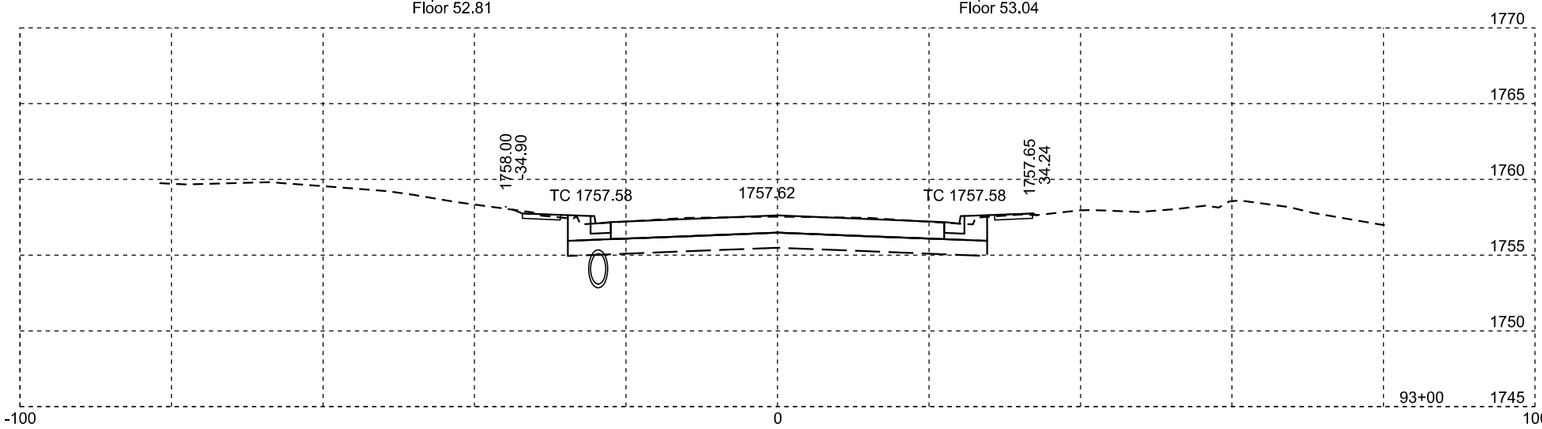

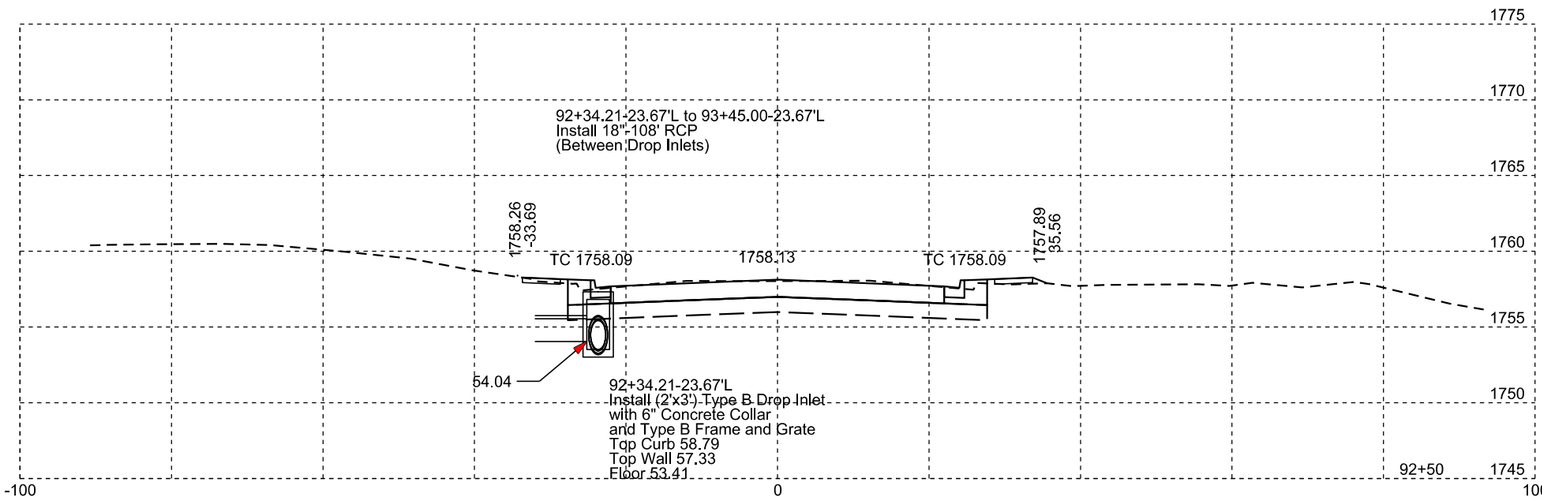

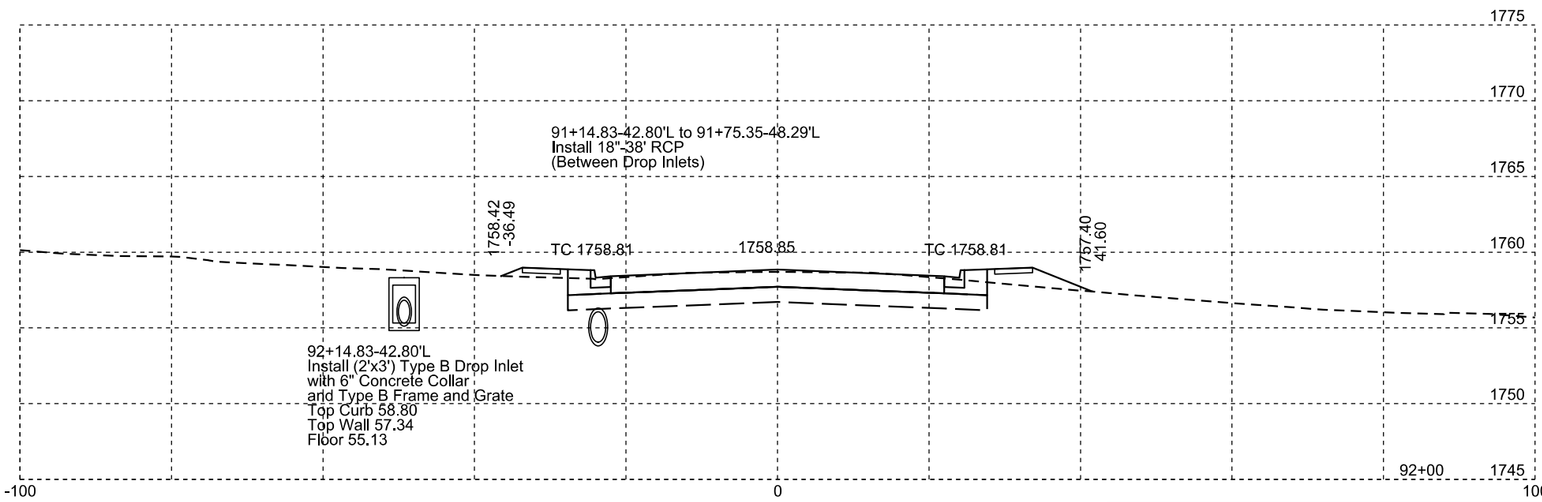

Plotting Date: 09/01/2015

STATE OF SOUTH DAKOTA	PROJECT	SHEET NO.	TOTAL SHEETS
	P 0081(93)157	X36	X47

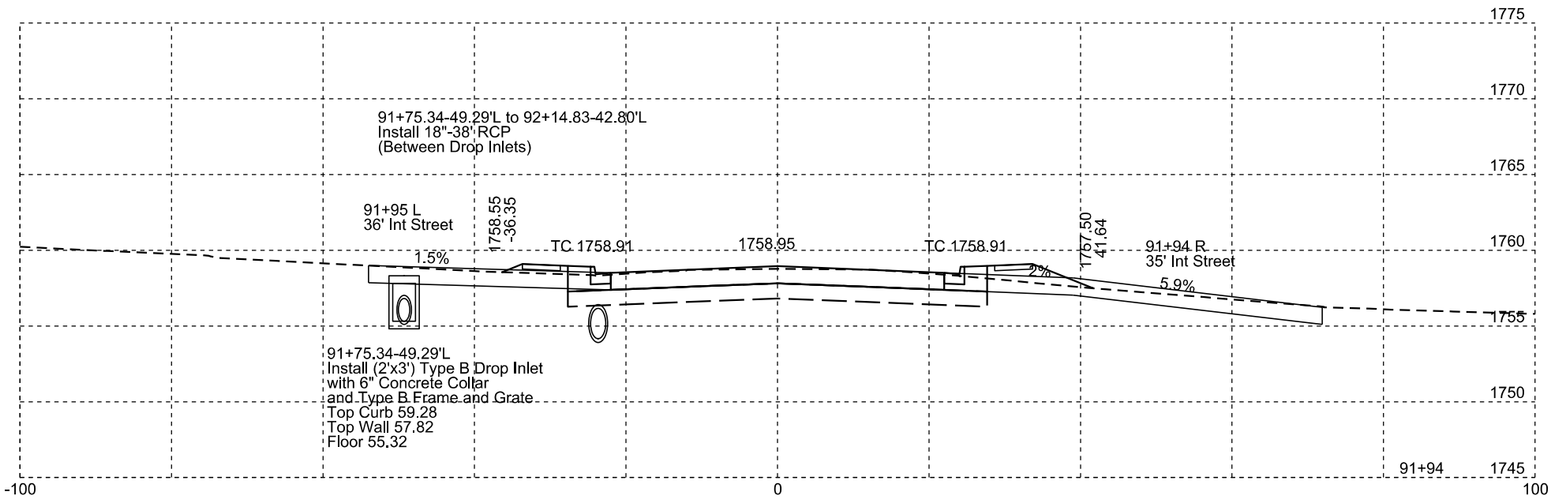

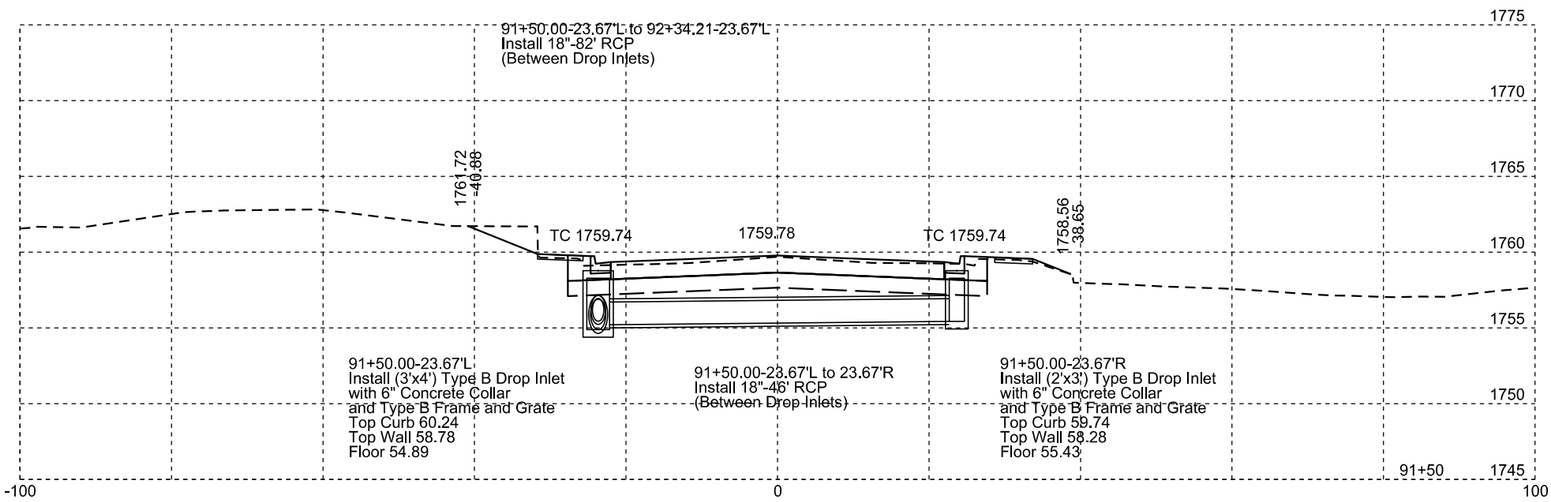

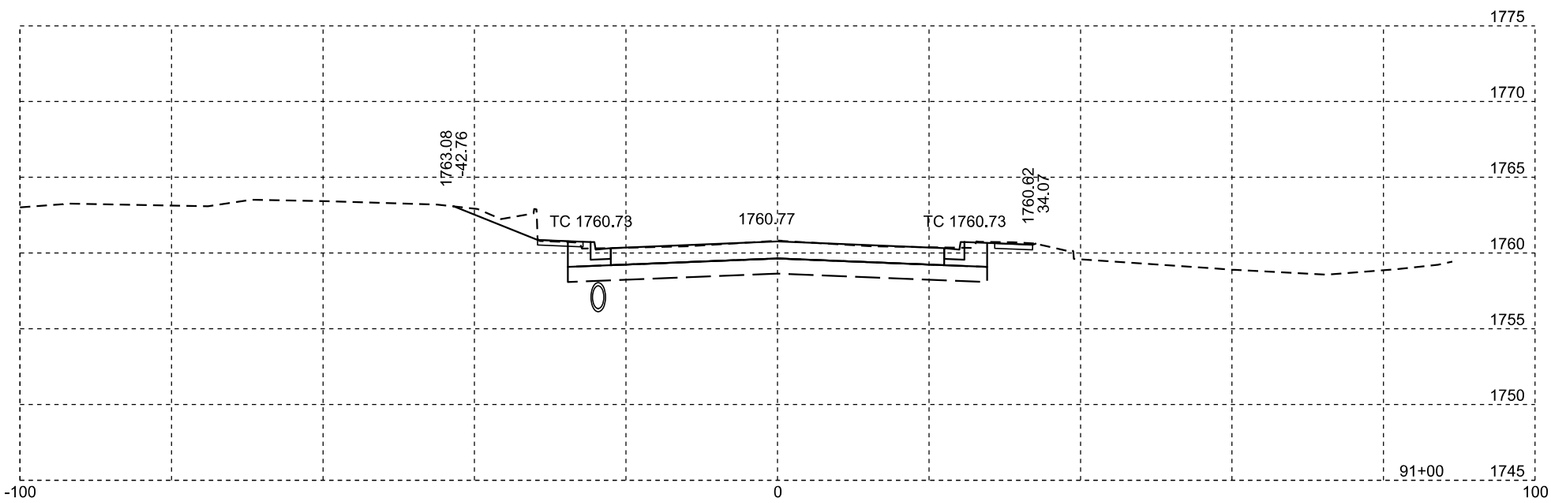

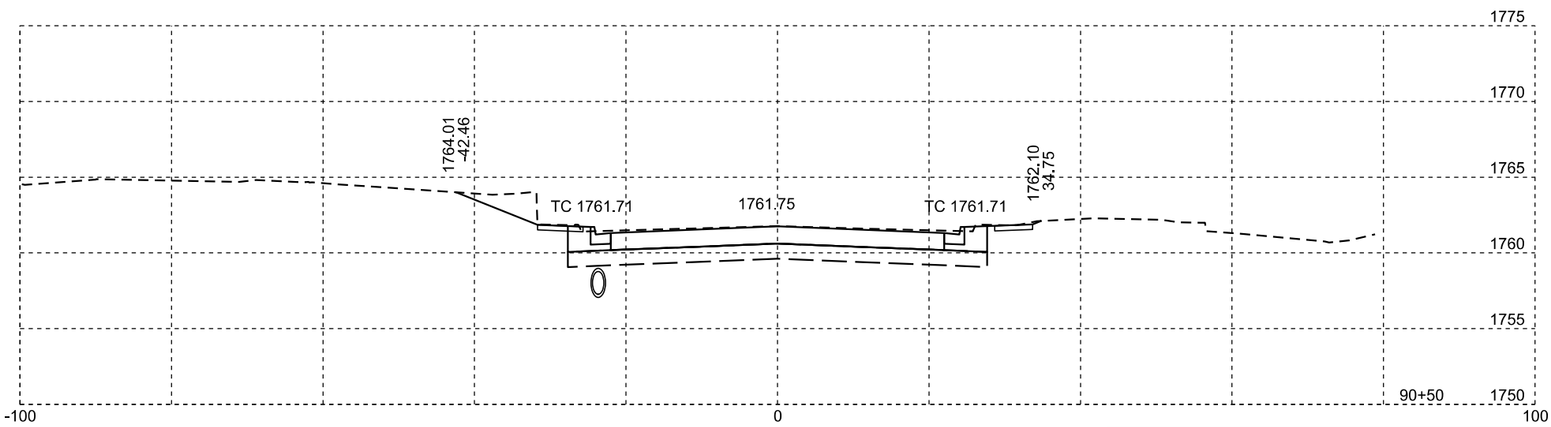

Plotting Date: 09/01/2015

STATE OF SOUTH DAKOTA	PROJECT	SHEET NO.	TOTAL SHEETS
	P 0081(93)157	X37	X47

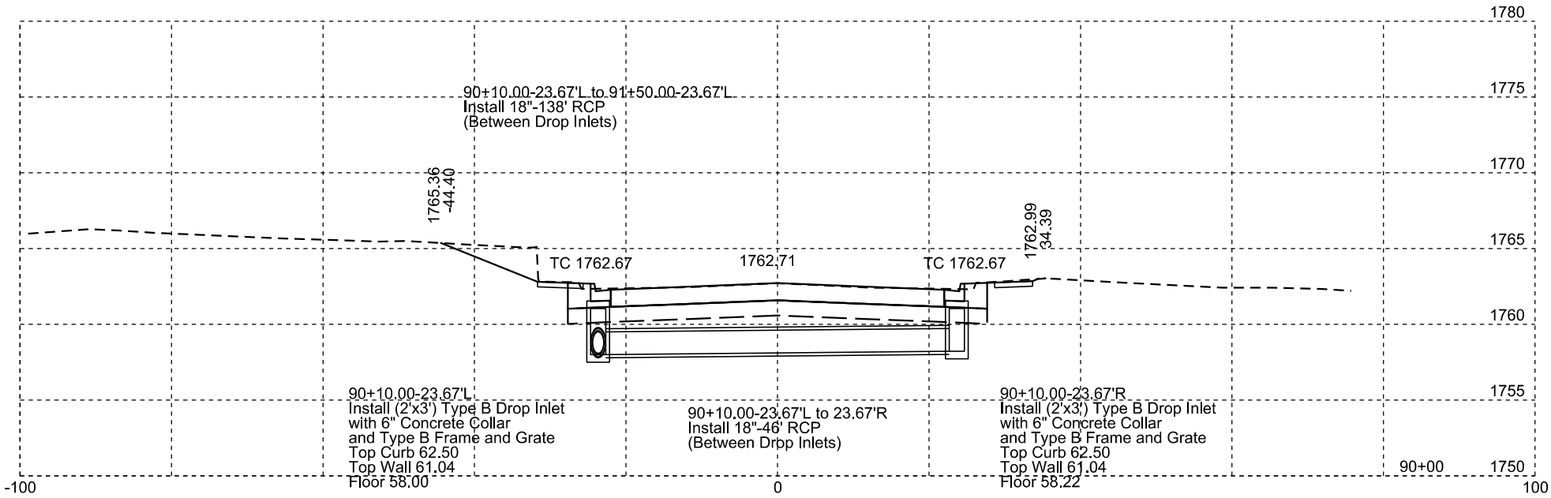

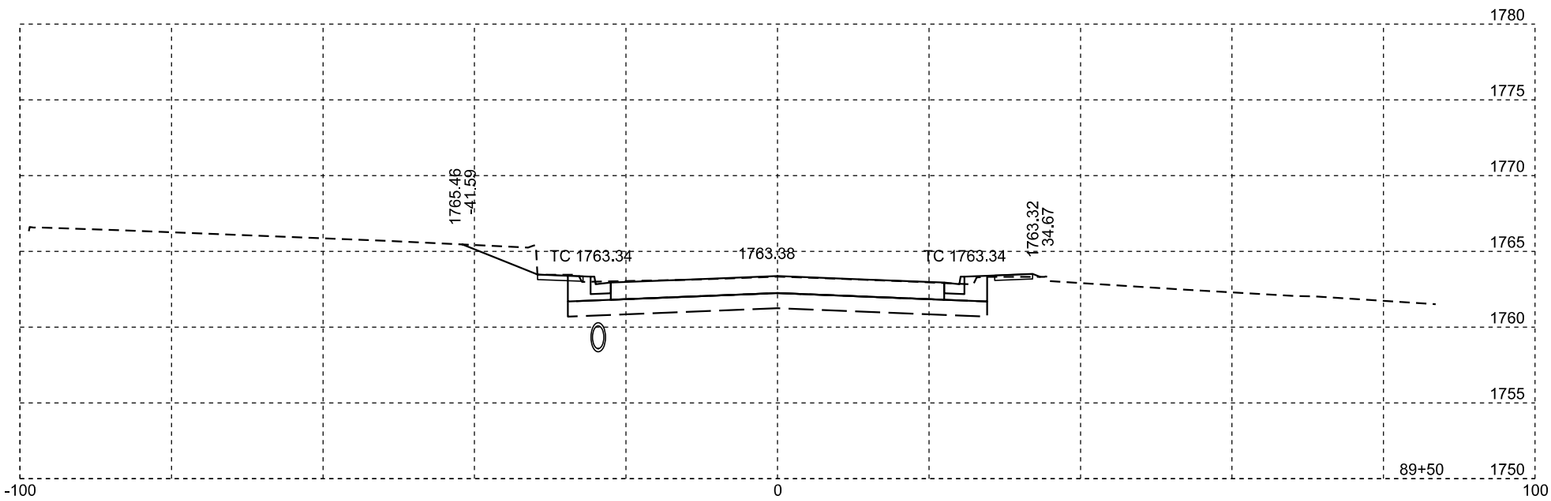

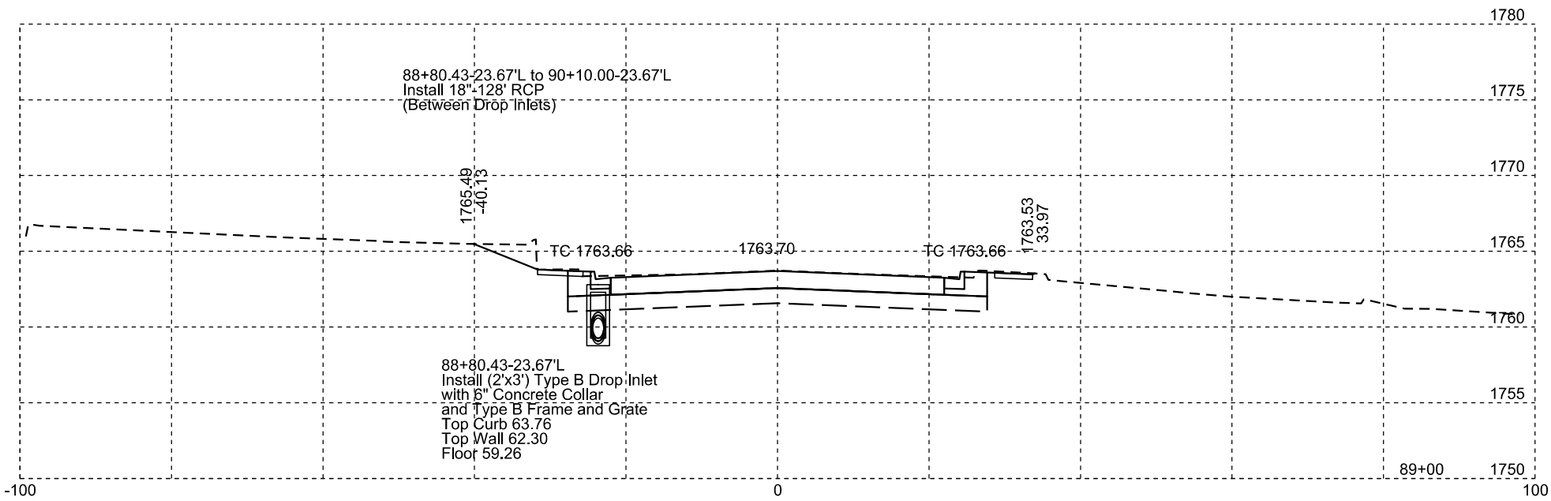

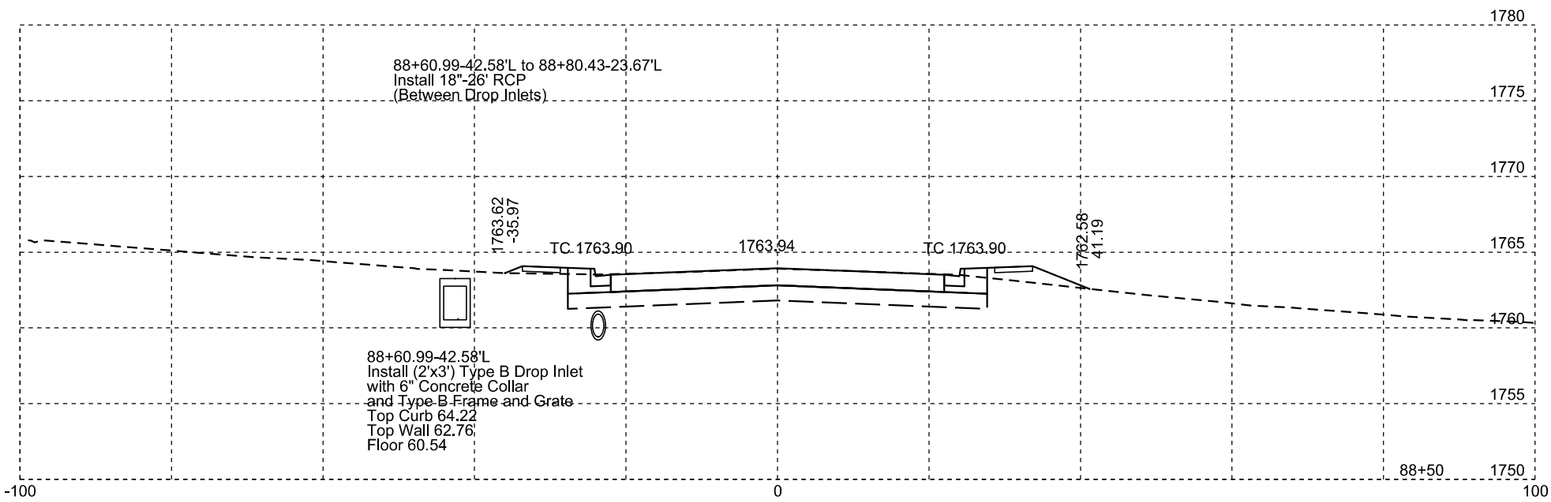

Plotting Date: 09/01/2015

STATE OF SOUTH DAKOTA	PROJECT	SHEET NO.	TOTAL SHEETS
	P 0081(93)157	X38	X47

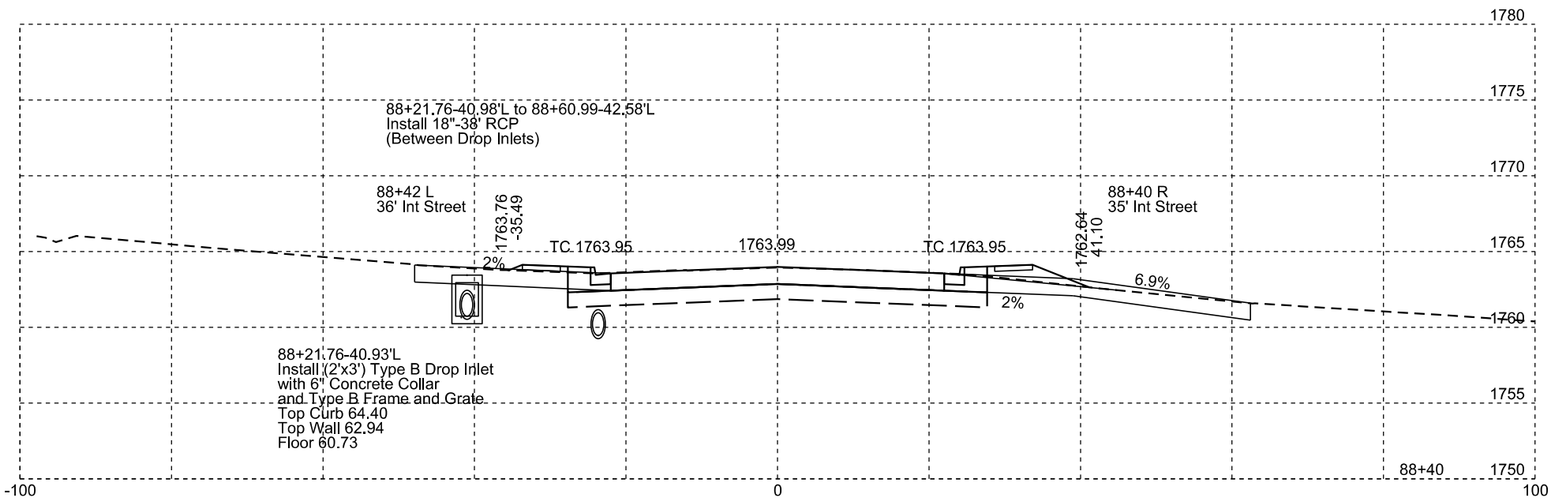

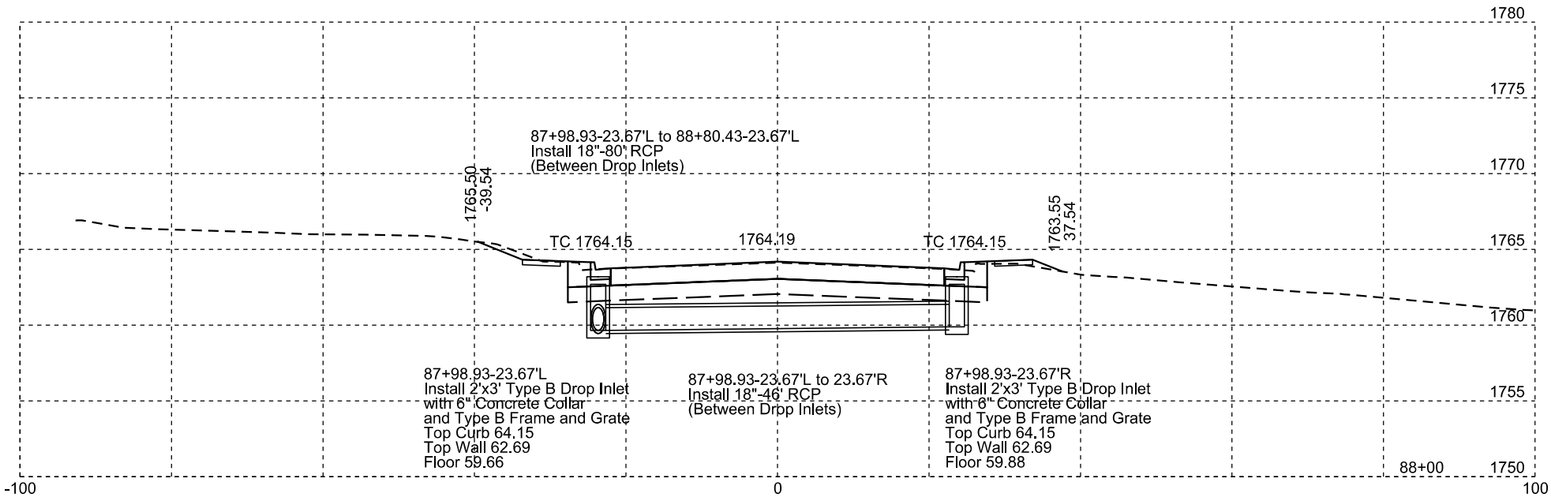

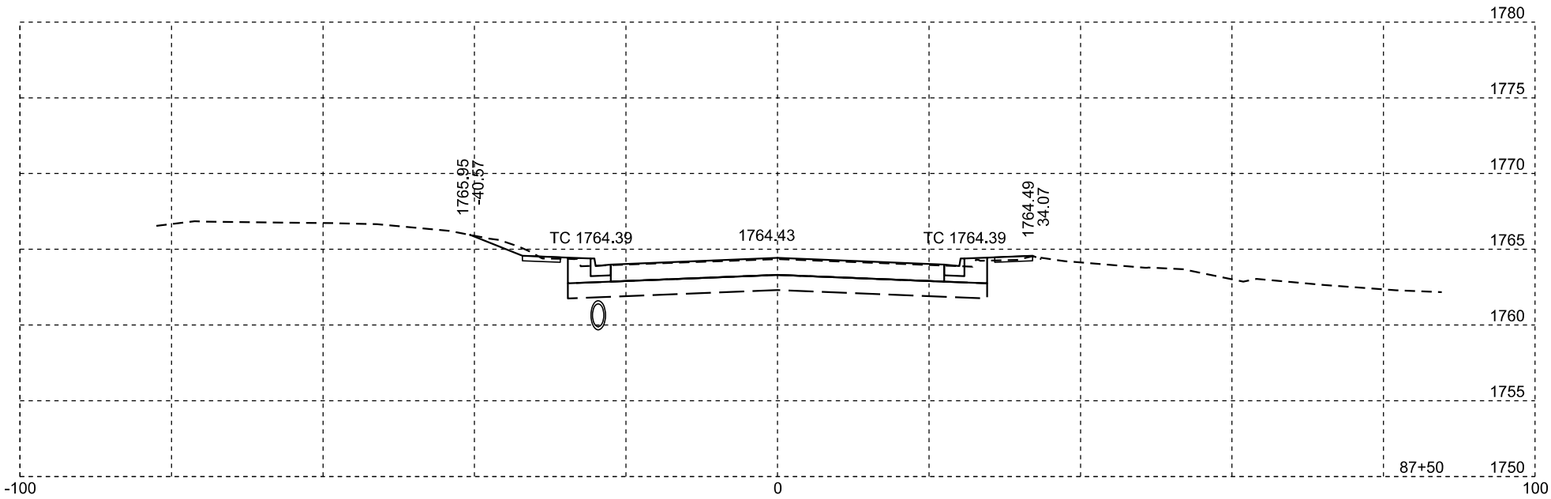

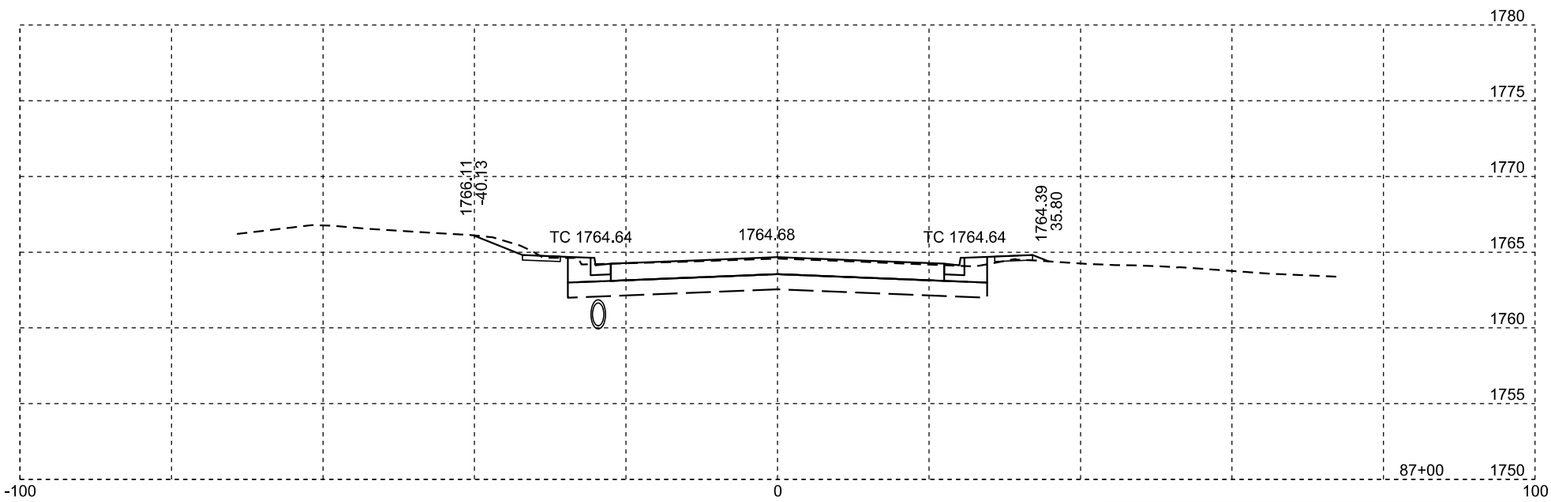

Plotting Date: 09/01/2015

STATE OF SOUTH DAKOTA	PROJECT	SHEET NO.	TOTAL SHEETS
	P 0081(93)157	X39	X47

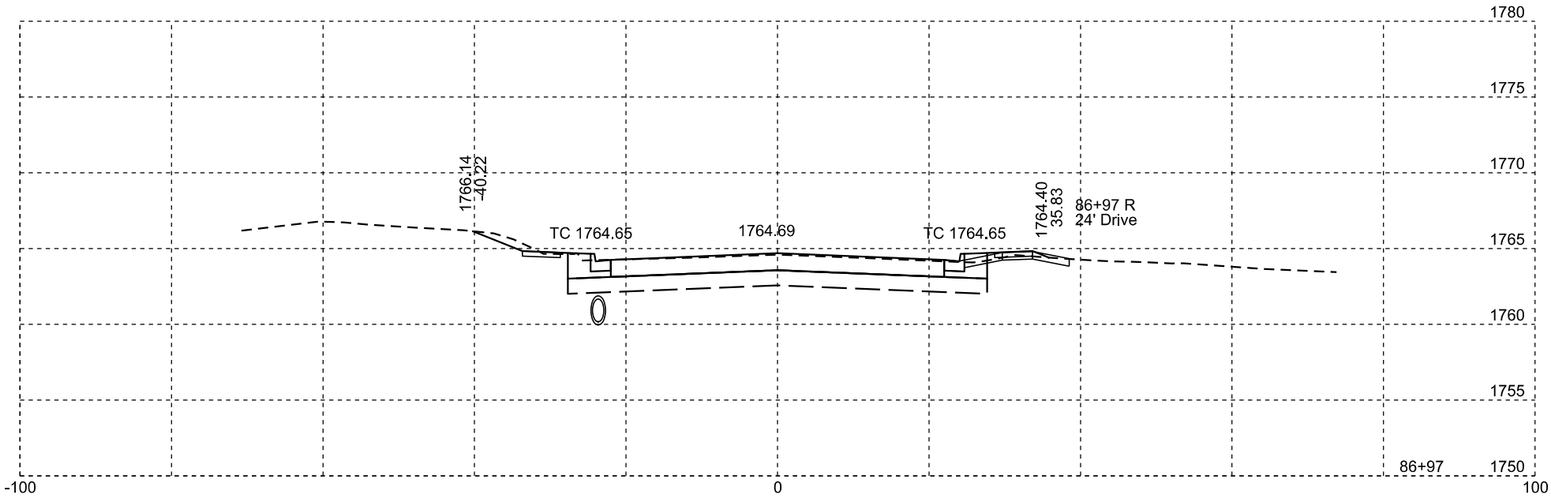

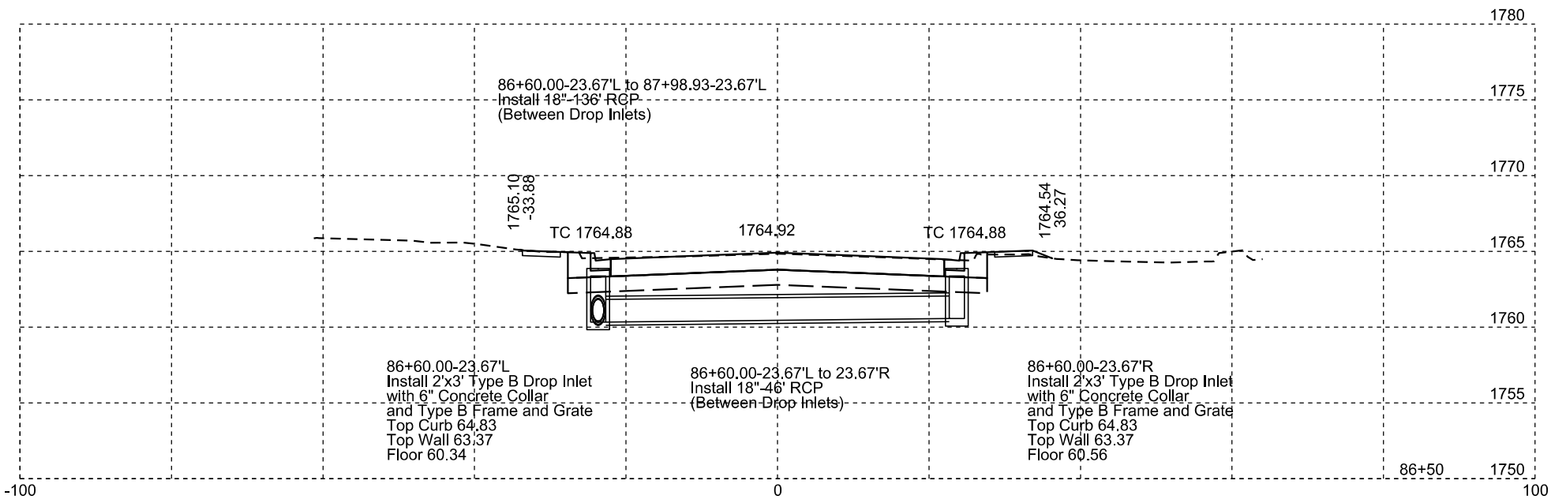

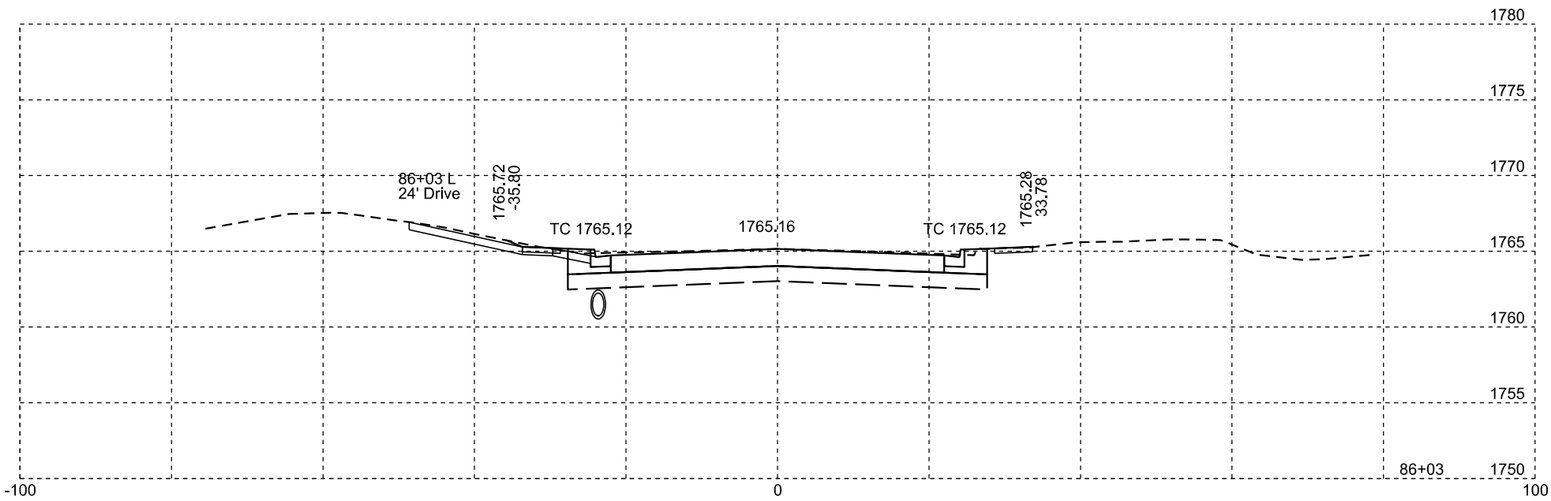

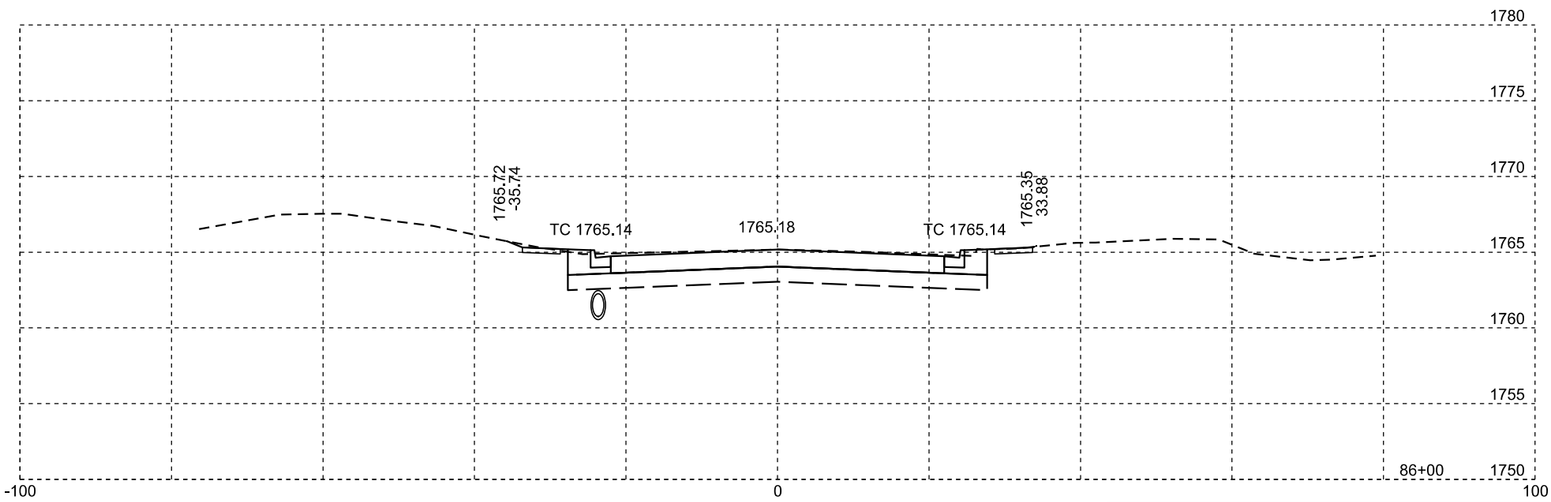

Plotting Date: 09/01/2015

STATE OF SOUTH DAKOTA	PROJECT	SHEET NO.	TOTAL SHEETS
	P 0081(93)157	X40	X47

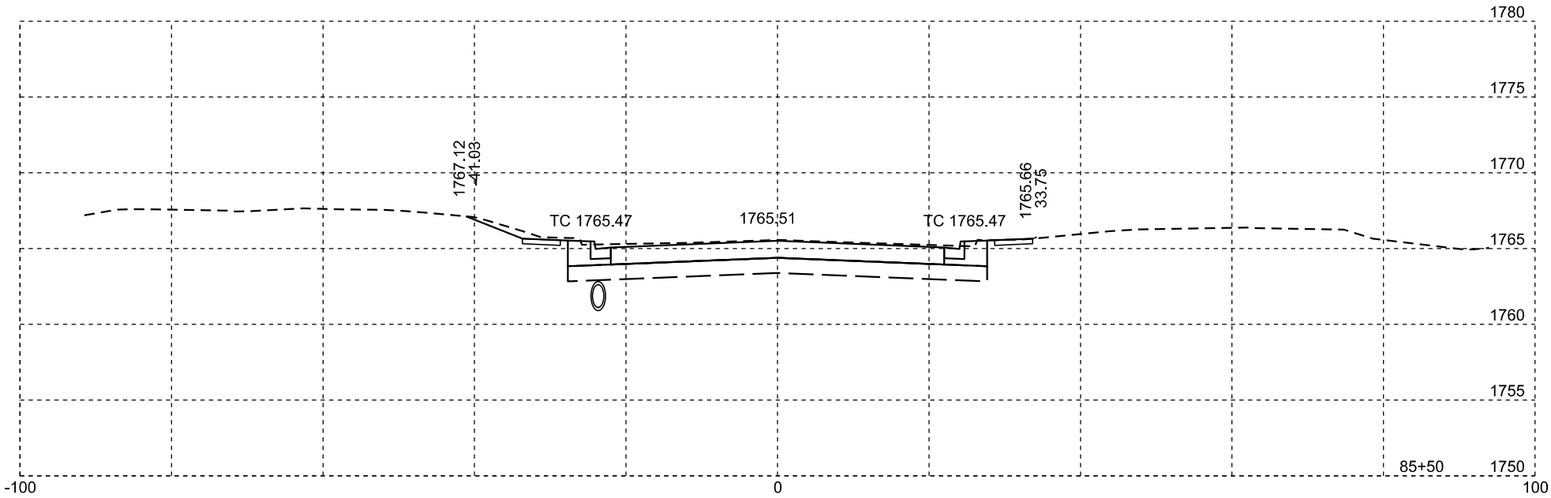

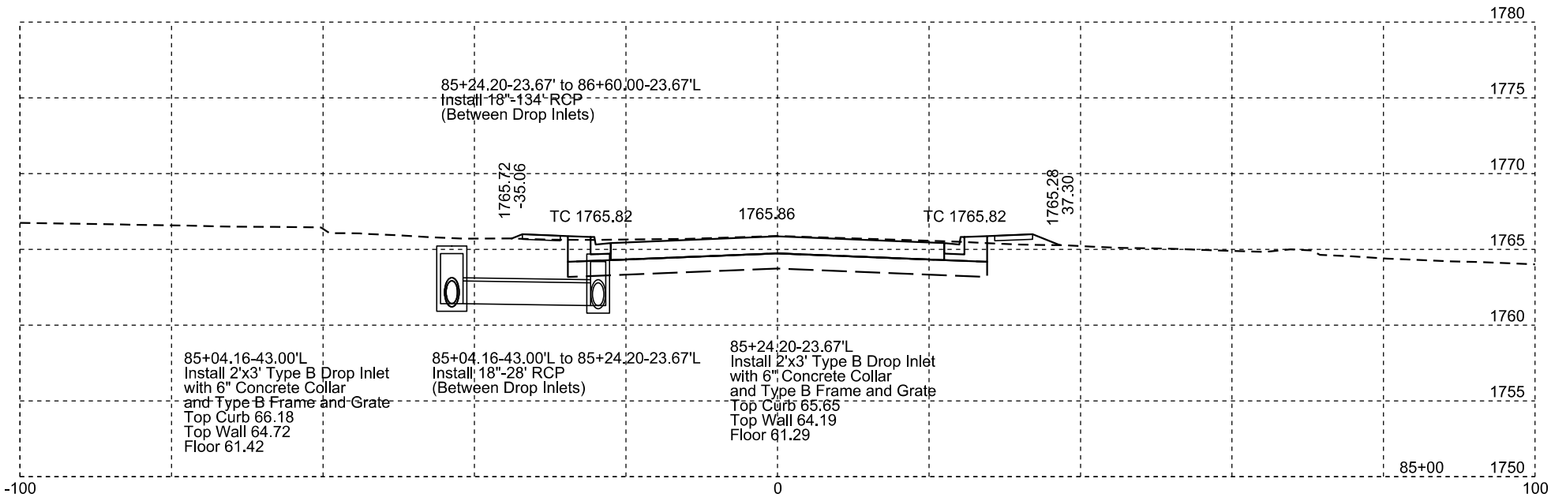

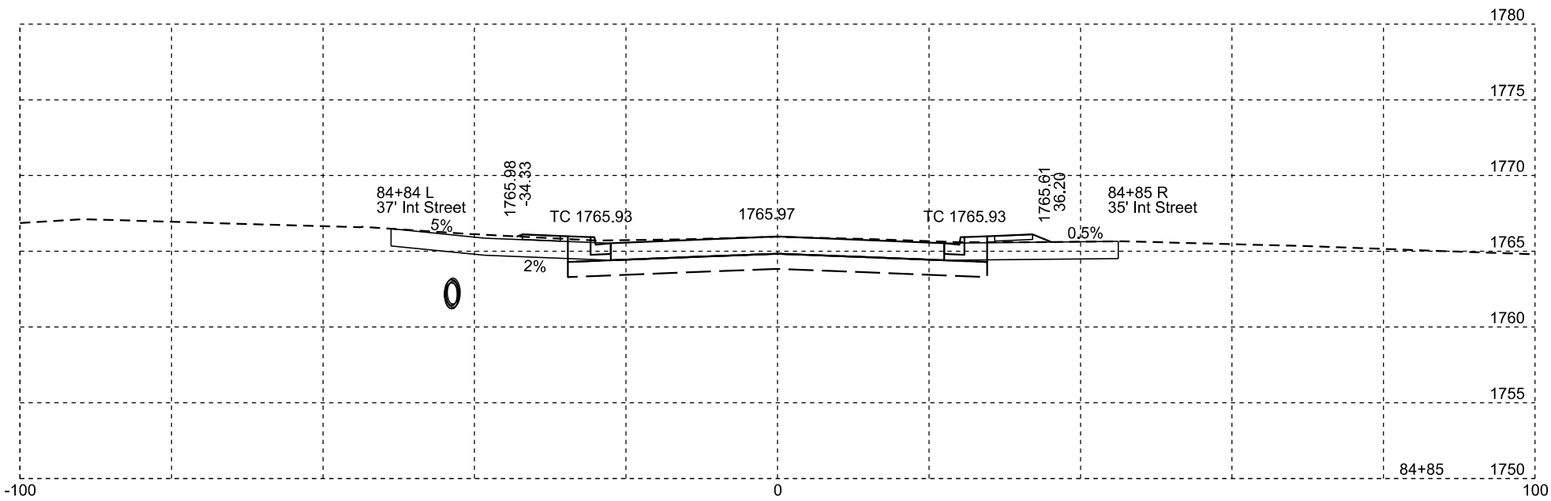

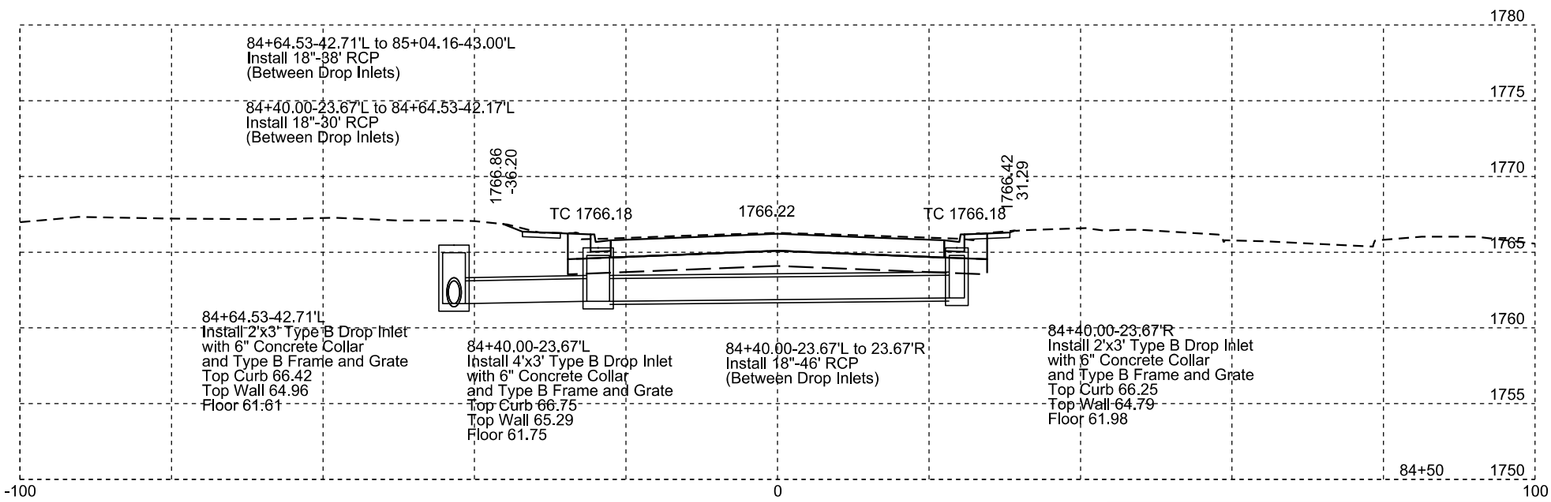

Plotting Date: 09/01/2015

STATE OF SOUTH DAKOTA	PROJECT	SHEET NO.	TOTAL SHEETS
	P 0081(93)157	X41	X47

STATE OF SOUTH DAKOTA	PROJECT	SHEET NO.	TOTAL SHEETS
	P 0081(93)157	X42	X47

Plotting Date: 09/01/2015

STATE OF SOUTH DAKOTA	PROJECT	SHEET NO.	TOTAL SHEETS
	P 0081(93)157	X43	X47

Plotting Date: 09/01/2015

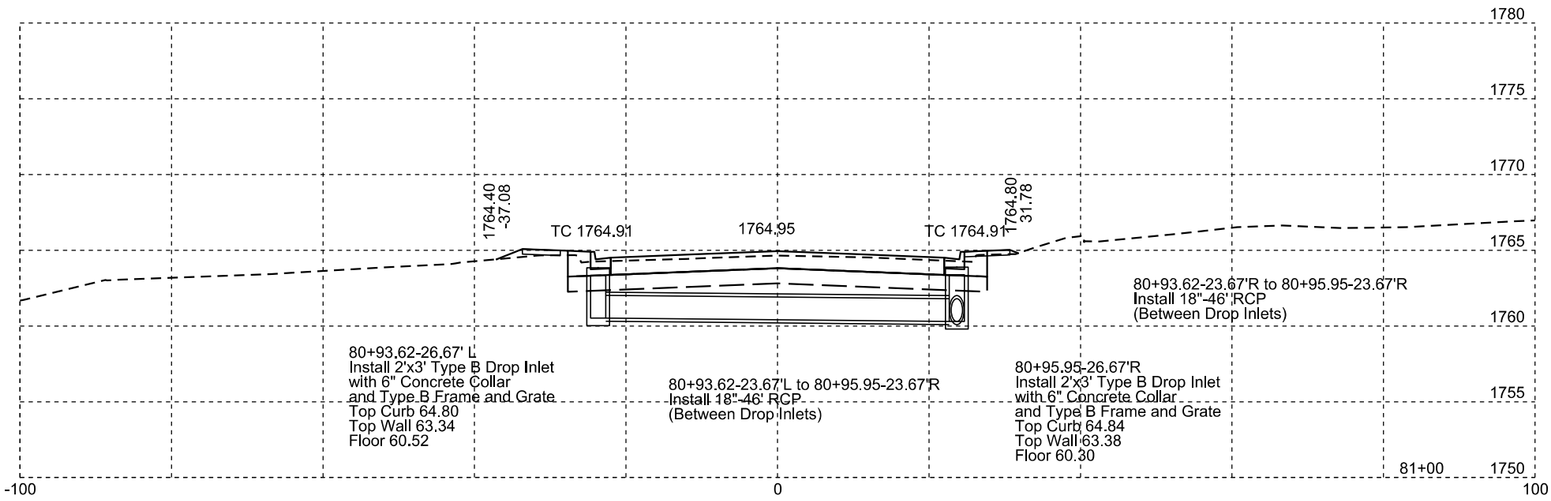

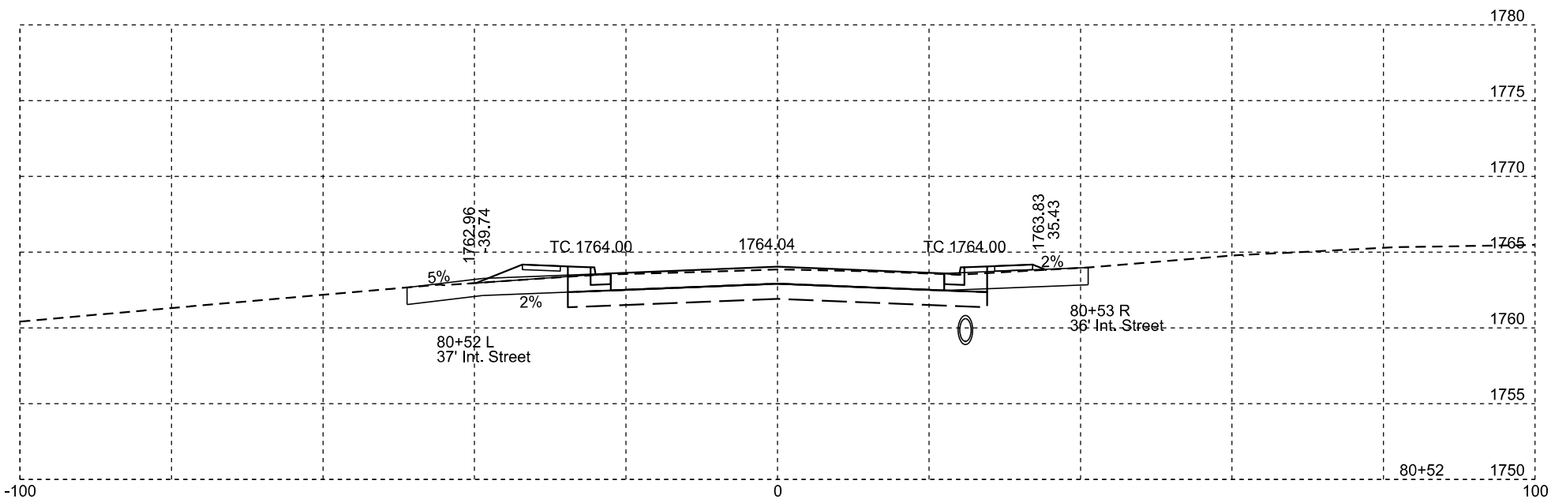

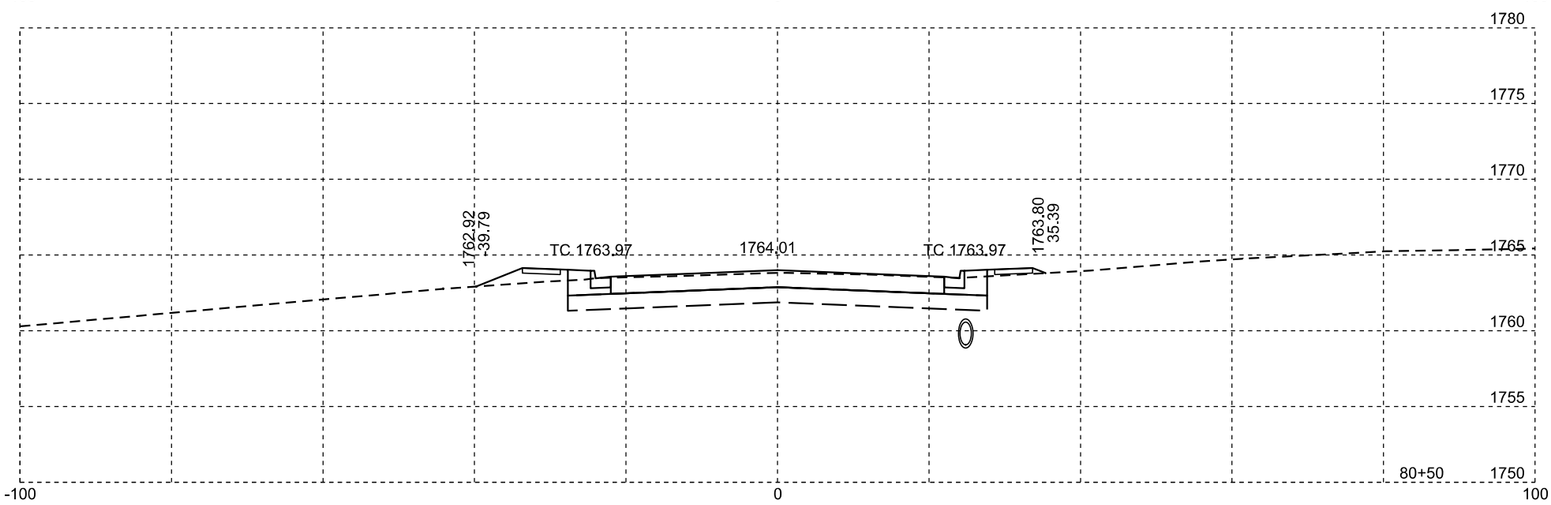

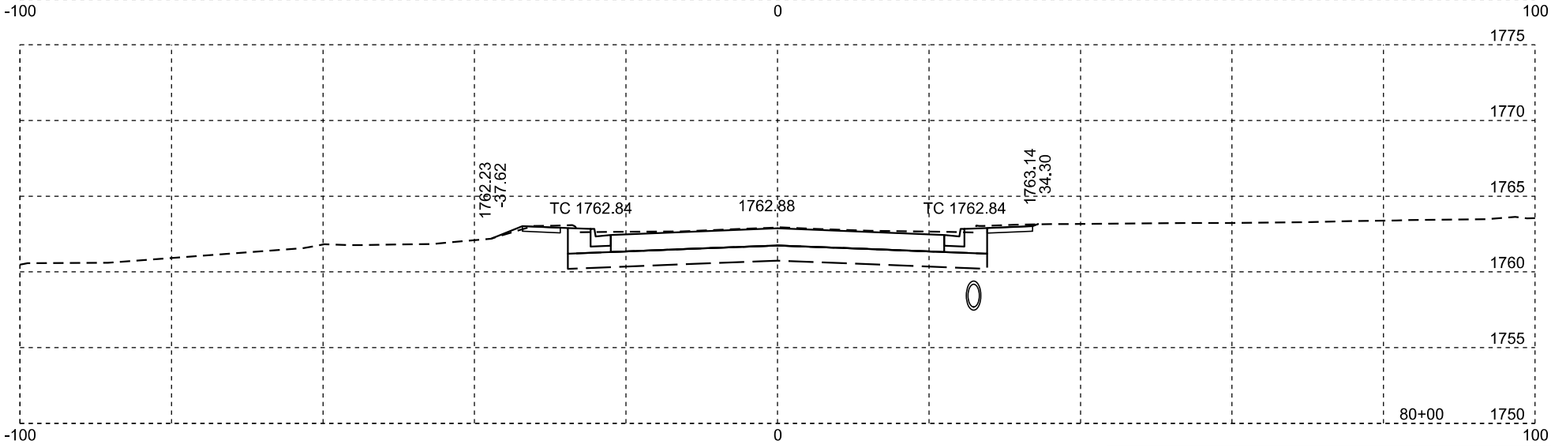

Plotting Date: 09/01/2015

STATE OF SOUTH DAKOTA	PROJECT	SHEET NO.	TOTAL SHEETS
	P 0081(93)157	X44	X47

STATE OF SOUTH DAKOTA	PROJECT	SHEET NO.	TOTAL SHEETS
	P 0081(93)157	X45	X47

Plotting Date: 09/01/2015

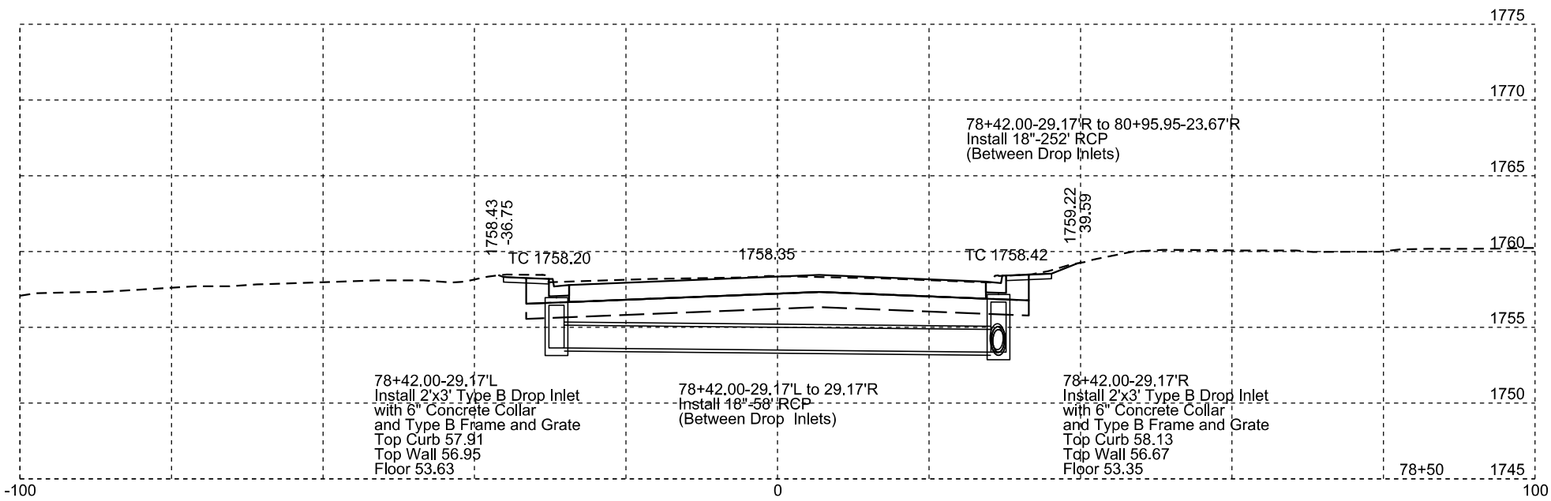

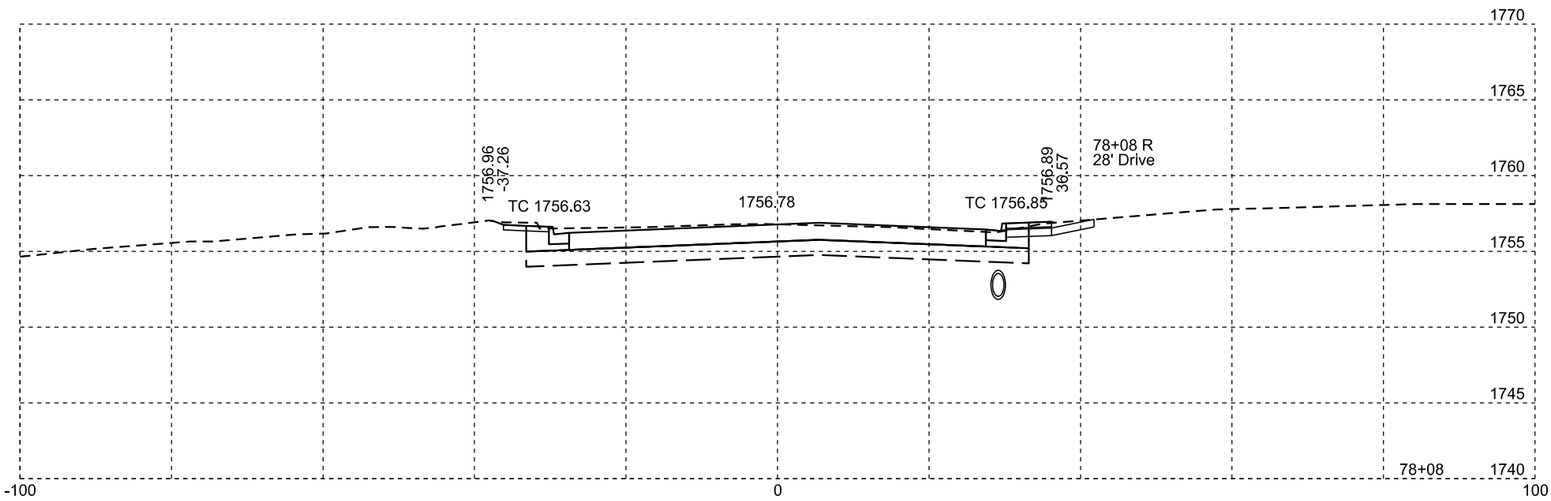

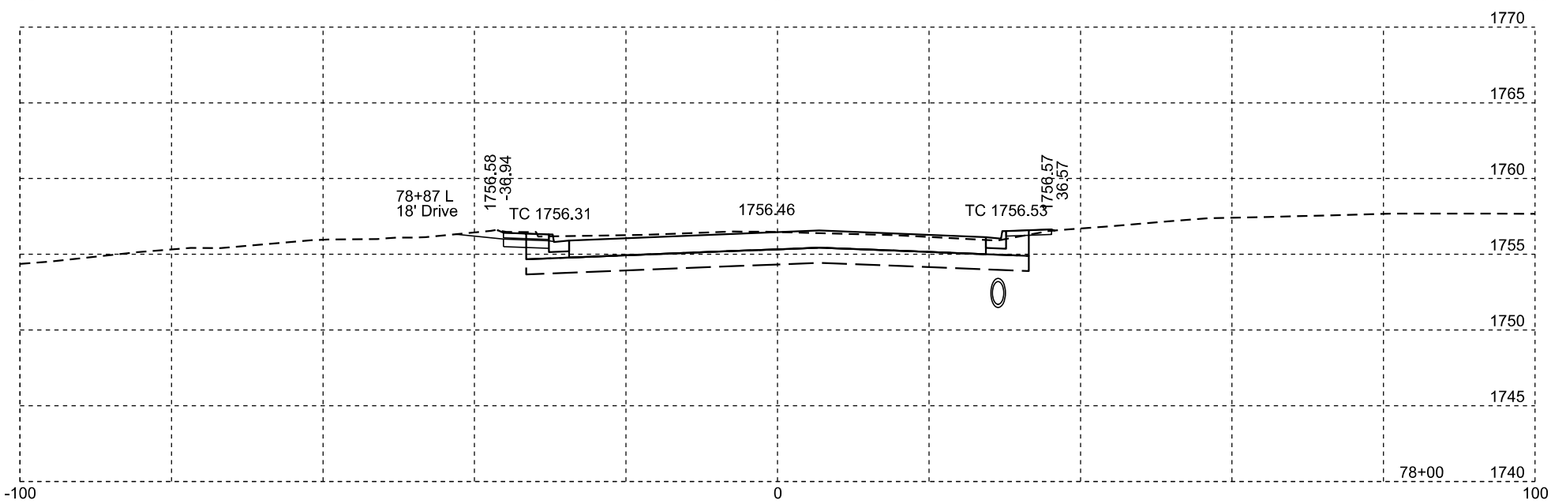

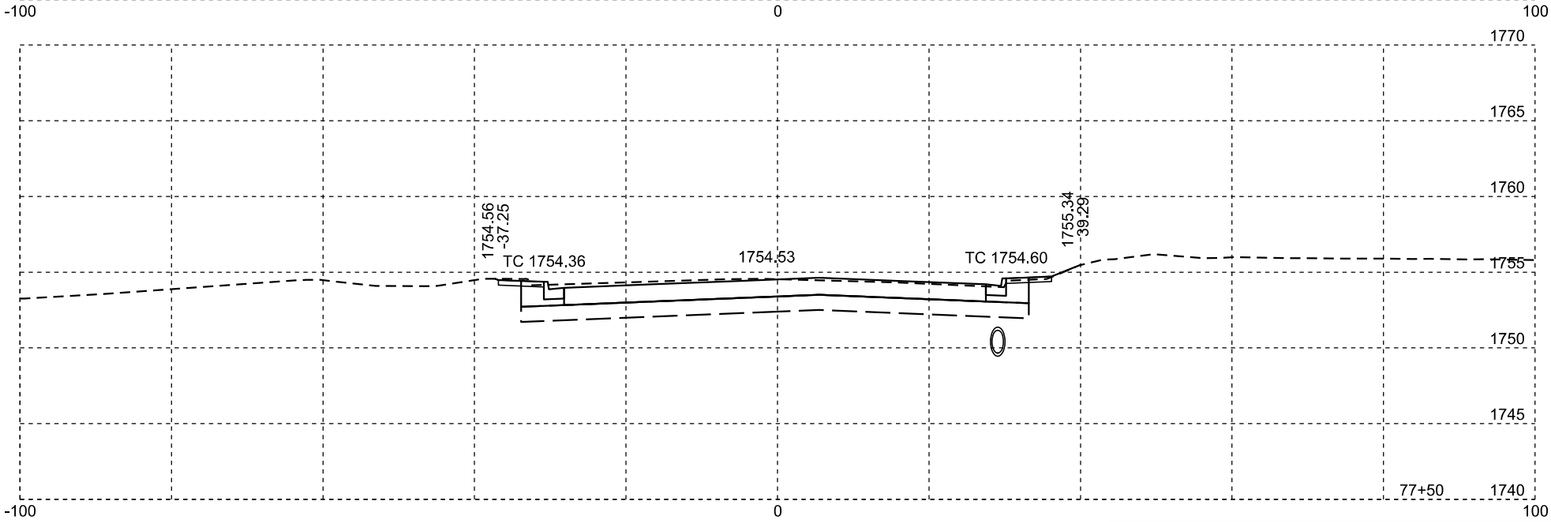

Plotting Date: 09/01/2015

STATE OF SOUTH DAKOTA	PROJECT	SHEET NO.	TOTAL SHEETS
	P 0081(93)157	X46	X47

STATE OF SOUTH DAKOTA	PROJECT	SHEET NO.	TOTAL SHEETS
	P 0081(93)157	X47	X47

Plotting Date: 09/01/2015