FOR BIDDING PURPOSES ONLY

STATE OF SOUTH DAKOTA	PROJECT	SHEET	TOTAL SHEETS
	NH0016(79)67	B1	B135

PLOTTING DATE: 11-12-15

SECTION B - GRADING PLANS

INDEX OF SHEETS

B1:	General Layout with Index
B2-B27:	Estimate of Quantities, General Notes and Tables
B28-B31:	Typical Sections
B32-B33:	Horizontal Alignment Data
B34:	Control Data
B35:	Subsurface Utility Locations
B36:	Topography Symbology and Legend
B37-B42:	ROW Layout Sheets
B43-B67:	Plan and Profile Sheets
B68-B72:	Pavement Removal Layout Sheets
B73-B84:	Curb and Gutter Layout Sheets
B85-B91:	Curb Ramp Details
B92-B95:	Retaining Wall Details
B96-B103:	Retaining Wall Layout Sheets
B104-105:	Special Details
B106-B135:	Standard Plates

END NH 0016(79)67
Mt. Rushmore Rd.
Station 103+76.67

END GRADING NH 0016(79)67
Mt. Rushmore Rd.
Station 88+01.30

EXCEPTION
Station 99+85.55 to
Station 101+84.57

BEGIN NH 0016(79)67
Mt. Rushmore Rd.
Station 62+50.00

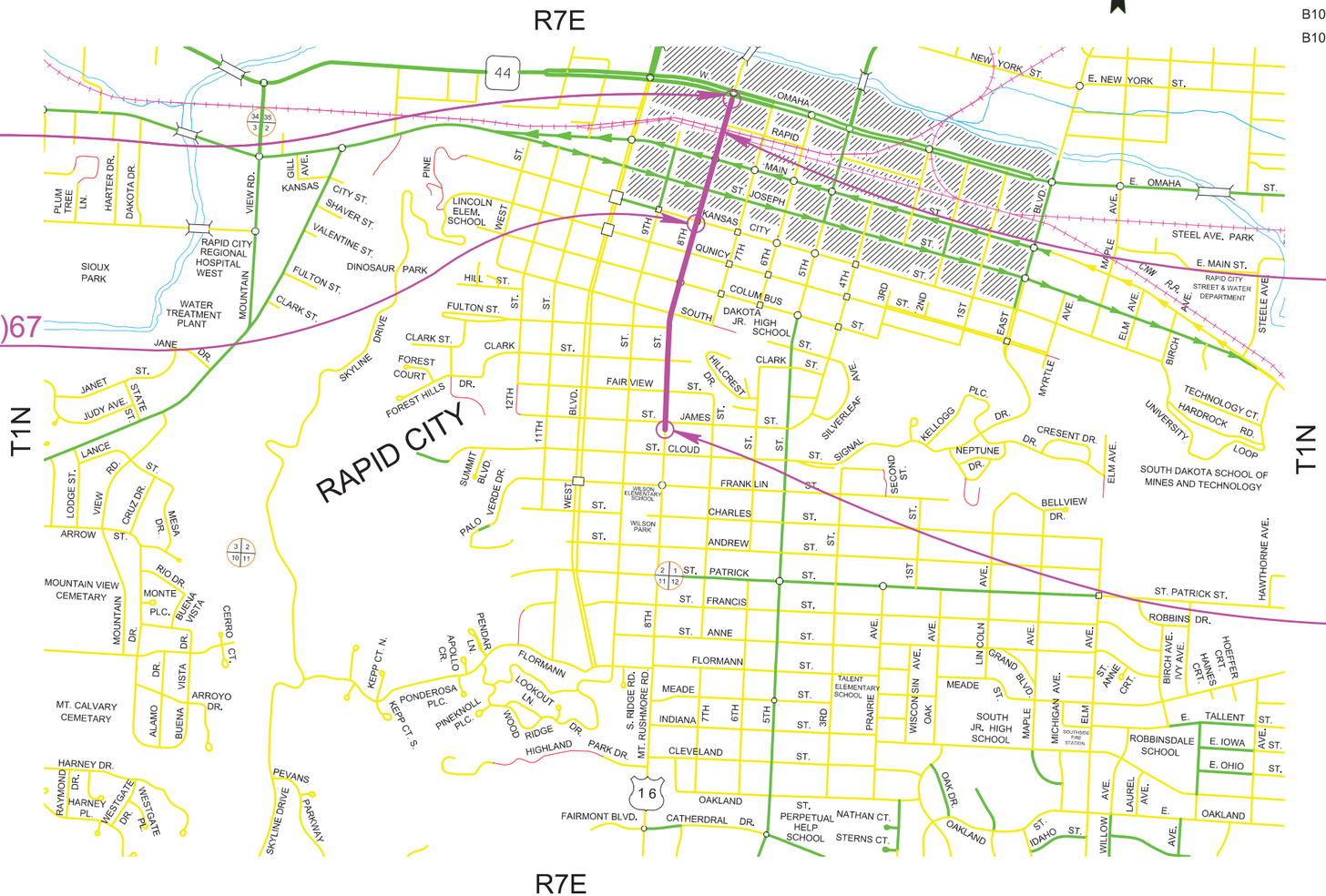

Ferber Engineering Company, Inc.
Civil Engineering • Water Resources • Transportation • Land Surveying • GIS
729 East Watertown St, Rapid City, SD 57701 ~ www.ferberengineering.com
Phone: (605) 343-3311 ~ Fax: (605) 343-3399

11-12-15 P:\12-117\AutoCAD\PlanSheets\027C\Section B\027C-GRAD-PP TITLE.dwg

SECTION B ESTIMATE OF QUANTITIES

REV 1-21-16 JRV

BID ITEM NUMBER	ITEM	QUANTITY	UNIT
009E0010	Mobilization	Lump Sum	LS
009E3230	Grade Staking	3.051	Mile
009E3250	Miscellaneous Staking	0.705	Mile
009E3280	Slope Staking	0.705	Mile
009E3290	Structure Staking	13	Each
009E3300	Three Man Survey Crew	100.0	Hour
009E4300	Construction Schedule, Category III	Lump Sum	LS
100E0020	Clear and Grub Tree	7	Each
100E0100	Clearing	Lump Sum	LS
110E0300	Remove Concrete Curb and Gutter	893	Ft
110E0310	Remove Concrete Curb	43	Ft
110E0320	Remove Concrete Gutter	583	Ft
110E0400	Remove Drop Inlet	31	Each
110E0460	Remove Manhole	17	Each
110E1010	Remove Asphalt Concrete Pavement	5,016.1	SqYd
110E1100	Remove Concrete Pavement	21,945.4	SqYd
110E1110	Remove Concrete Approach Pavement	575.8	SqYd
110E1130	Remove Concrete Driveway Pavement	470.2	SqYd
110E1140	Remove Concrete Sidewalk	5,347.3	SqYd
110E1300	Remove Concrete Retaining Wall	2,126.1	Ft
110E1440	Remove Pavement Marking, Railroad Crossing	0	Each
120E0010	Unclassified Excavation	15,571	CuYd
120E0600	Contractor Furnished Borrow Excavation	250	CuYd
120E0900	Contaminated Material Excavation	100	CuYd
120E2000	Undercutting	9,086	CuYd
120E6100	Water for Embankment	131.5	MGal
205E0010	Dust Control Chloride	500	Lb
250E0020	Incidental Work, Grading	Lump Sum	LS
270E0020	Salvage and Stockpile Asphalt Mix Material	2,880.0	Ton
380E3540	8" PCC Approach Pavement	832.2	SqYd
380E3542	8" Fast Track Concrete Approach Pavement	138.0	SqYd
* 380E4010	6" PCC Fillet Section	12.8	SqYd
380E4090	10" PCC Fillet Section	711.7	SqYd
420E0300	Structure Excavation, Retaining Wall	100	CuYd
421E0100	Pipe Culvert Undercut	100	CuYd
421E1000	Footing Undercut	97	CuYd
450E0103	12" RCP Class 3, Furnish	4	Ft
450E0110	12" RCP, Install	4	Ft
450E0123	18" RCP Class 3, Furnish	2,046	Ft
450E0130	18" RCP, Install	2,046	Ft
450E0143	24" RCP Class 3, Furnish	184	Ft
450E0150	24" RCP, Install	184	Ft
450E0182	36" RCP Class 2, Furnish	94	Ft
450E0190	36" RCP, Install	94	Ft

BID ITEM NUMBER	ITEM	QUANTITY	UNIT
450E0192	42" RCP Class 2, Furnish	1,500	Ft
450E0200	42" RCP, Install	1,500	Ft
450E0202	48" RCP Class 2, Furnish	816	Ft
450E0210	48" RCP, Install	816	Ft
450E0416	24" RCP Bend, Furnish	2	Each
450E0417	24" RCP Bend, Install	2	Each
450E0700	RCP Tee, Furnish	10	Each
450E0701	RCP Tee, Install	10	Each
450E0900	RCP Cross, Furnish	1	Each
450E0901	RCP Cross, Install	1	Each
450E1200	RCP Increaser, Furnish	1	Each
450E1201	RCP Increaser, Install	1	Each
450E7001	8" High Density Polyethylene Pipe, Furnish	126	Ft
450E7002	8" High Density Polyethylene Pipe, Install	126	Ft
450E8450	Storm Sewer Video Inspection	2,230	Ft
451E3124	24" Pipe Cap	1	Each
462E0100	Class M6 Concrete	192.8	CuYd
464E0100	Controlled Density Fill	50.0	CuYd
470E0020	Pipe Handrail	383.3	Ft
470E0040	Steel Pedestrian Railing	732.1	Ft
480E0100	Reinforcing Steel	37,643	Lb
530E0310	Special Type C Concrete Retaining Wall	1,693	SqFt
530E0470	Gravity Large Concrete Block Wall	2,838	SqFt
600E0200	Type II Field Laboratory	1	Each
621E0040	4' Chain Link Fence with Top Rail	55	Ft
621E0410	Pedestrian Swing Gate	1	Each
* 650E0060	Type B66 Concrete Curb and Gutter	268	Ft
650E0060	Type B66 Concrete Curb and Gutter	1,164	Ft
650E0100	Type B610 Concrete Curb and Gutter	6,491	Ft
650E1100	Type F610 Concrete Curb and Gutter	69	Ft
650E4660	Type P6 Concrete Gutter	738	Ft
650E4700	Type P10 Concrete Gutter	296	Ft
* 651E0040	4" Concrete Sidewalk	199	SqFt
651E0040	4" Concrete Sidewalk	37,944	SqFt
651E0160	6" Reinforced Concrete Sidewalk	402	SqFt
651E0540	4" Colored Concrete Sidewalk	34,829	SqFt
651E0760	6" Reinforced Colored Concrete Sidewalk	727	SqFt
651E7000	Type 1 Detectable Warnings	460	SqFt
670E1200	Type B Frame and Grate Assembly	66	Each
670E3300	Type E Frame and Grate	1	Each
670E5340	4' x 11' Precast Concrete Type S Drop Inlet Lid	1	Each
670E5342	4' x 6' Precast Concrete Type S Drop Inlet Lid	1	Each
670E5400	Precast Drop Inlet Collar	67	Each
671E5502	2" Adjusting Ring for Manhole	7	Each

BID ITEM NUMBER	ITEM	QUANTITY	UNIT
671E6010	Type A10 Manhole Frame and Lid	2	Each
680E0040	4" Underdrain Pipe	968	Ft
900E0015	Multiple Mailbox Support	1	Each
900E0900	Curb Stop	36	Each
900E5145	Bollard	6	Each
998E0100	Railroad Protective Insurance	Lump Sum	LS

*** - Denotes Non-Participating**

REGISTERED PROFESSIONAL ENGINEER
REG. NO. 8019
JOHN RAYMOND VAN BEEK
SOUTH DAKOTA
1/21/16

GRADING OPERATIONS

Water for Embankment is estimated at the rate of 10 gallons of water per cubic yard of Embankment minus Waste.

Special sections of the roadway different than the typical sections shall be constructed to the limits shown on the cross sections. If significant changes to the cross sections are necessary during construction, the Engineer shall contact the Designer for the proposed change.

A copy of the soils profile is available for review at the Rapid City Region office.

TYPE II FIELD LABORATORY

The lab shall be equipped with an internet connection such as DSL, cable modem, or other approved service. The internet connection shall be provided with a multi-port wireless router. The internet connection shall be a minimum speed of 512 Kb unless limited by job location and approved by the DOT. Prior to installing the wireless router the Contractor shall submit the wireless router's technical data to the Area Office to check for compatibility with the state's computer equipment. The internet connection is intended for state personnel usage only. The Contractor's personnel are prohibited from using the internet connection unless pre-approved by the Project Engineer.

The Contractor shall submit a copy of each monthly bill for calls charged to this phone at the end of each month. The Project Engineer will then audit the bills to ensure all calls are legitimate and then initiate a Construction Change Order (CCO) to reimburse the Contractor for the actual phone calls made, including local and long distance calls. Reimbursement will not be made for fees associated with the purchase, installation, disconnection, monthly line charges, and incidentals involved in the installation, maintenance, and disconnection of the phone (including attachments). These items shall be incidental to the contract unit price per each for "Type II Field Laboratory".

UTILITIES

The Contractor shall be aware that the existing utilities shown in the plans were surveyed prior to the design of this project and might have been relocated or replaced by a new utility facility prior to construction of this project, might be relocated or replaced by a new utility facility during the construction of this project, or might not require adjustment and may remain in its current location. The Contractor shall contact each utility owner and confirm the status of all existing and new utility facilities. The utility contact information is provided elsewhere in the plans or bidding documents.

Black Hills Power
The Company's OH facilities will be relocated prior to construction with one exception: BHP has until 1 May 2016 to remove the OH pole located in the northwest quadrant of the Mt Rushmore Rd and St James St intersection. Removal of existing Company owned street lights will be accomplished by BHP during construction and the sequencing of removal shall be coordinated between the Contractor and the Company as to keep the highway illuminated during construction.

Century Link
The existing concrete vaults (12'X6'X7') at approximate Stations 65+23-34'L, 69+14-37'L, 73+17-38'L, 75+56-37'L, 79+05-38'L, 82+75-32'L and 87+04-32'L and connecting concrete duct will be removed by Century Link. The Contractor shall notify Century Link at least 7 days prior to the date that any vault or duct needs to be removed and coordinate backfilling of vault/duct voids with Century Link.

UTILITIES CONTINUED

Montana Dakota Utilities
The Company's facilities will be adjusted according to the table below:

SUMMARY OF CONFLICTS AND ADJUSTMENT PLAN

Approximate Conflict Location	Conflict Description	Adjustment Plan
Sta 65+47L	4" steel medium pressure gas main crosses proposed 42" RCP	Retire east-west crossing of Mt. Rushmore Rd
Sta 67+03L	6" steel medium pressure gas main in conflict with proposed inlet/RCP	Build gas main offset around proposed inlet
Sta 67+95L	6" steel medium pressure gas main in conflict with proposed inlet/RCP	Build gas main offset around proposed inlet
Sta 69+33L/R	4" steel medium pressure gas main crosses proposed 18" & 42" RCP	Retire east-west crossing of Mt. Rushmore Rd
Sta 78+93L	6" steel medium pressure gas main MIGHT be in conflict with proposed RCP	Verify depth of gas main and adjust, if necessary.
Sta 82+90L	4" steel low pressure and 4" steel intermediate pressure gas mains MIGHT be in conflict with proposed 48" RCP	Verify depth of gas mains and adjust, if necessary.
Sta 84+70L (Quincy St Sta 4+30R)	4" steel intermediate pressure gas main MIGHT be in conflict with proposed 18" RCP	Verify depth of gas main and adjust, if necessary.
Sta 86+93L	6" steel low pressure gas main likely in conflict with proposed 48" RCP	Verify depth of gas main and adjust, if necessary

City of Rapid City
The City will be replacing water and sanitary sewer facilities under Project Number 13-2139 / CIP #50950 / PCN X03L.

Utility Contact Information:
Black Hills Power
PO Box 1400
Rapid City SD 57709
Alan Van Bochove – 605-721-2270

Century Link
612 Mt. Rushmore Road
Rapid City, SD 57701
Keith Nelson - 605-394-4720

Montana Dakota Utilities
PO Box 1060
Rapid City SD 57709
Kristopher James – 605-355-4021
Cell: 605-757-8124

MidContinent Communications
1624 Concourse Ct.
Rapid City, SD 57703
Terry Hofer - 605-791-7123

VAST
809 Deadwood Ave
Rapid City SD 57702
Julie Burckhard – 605-415-0692

SDN Communications
1089 Rand Rd
Rapid City SD 57702
Paul Lowe – 605-390-3502

City of Rapid City - Engineering Services
300 Sixth St.
Rapid City, SD 57701
Todd Peckosh - 605-394-4154

City of Rapid City - Utility Maintenance
605 Steele Ave.
Rapid City, SD 57701
Chip Petrik – 605-394-4163

REGISTERED PROFESSIONAL ENGINEER
REG. NO. 8019
JOHN RAYMOND VAN BEEK
SOUTH DAKOTA
1/21/16

CLEARING

REV 1-21-16 JRV

Before clearing activities begin, the Contractor shall contact the Engineer to determine the limits of clearing for the project. If any trees, shrubs, landscaping, etc. that are supposed to remain within the limits of work are damaged or destroyed by the Contractor, the Contractor shall replace them with the same size and type at the Contractor's expense.

MAINTENANCE OF DRAINAGE ON THE PROJECT SITE

All earthwork and pipe installation shall be completed in such a manner that drainage is maintained throughout the project. This work may involve installation of temporary tie-ins, dikes, pumping of water, plugging inlets, and temporary diversion of water utilizing pipes.

The Contractor shall coordinate embankment operations and pipe installations so that drainage is continuous, but does not damage new or existing grading sections. If necessary, temporary pipe, temporary connections, plugs, and channels may be used to avoid damage to new or existing grade or partial omission of permanent drainage features may be required. In addition, permanent drainage features may need to be installed in phases to match sequencing. The cost to install, maintain, and remove temporary items and any incidentals necessary for partial installations of permanent drainage features shall be incidental to the various pipe bid items.

MAINTENANCE OF LANDSCAPING

Vegetation that has been damaged or disturbed by the Contractor outside the easement area, ROW or grading limits shown on the plans shall be replaced at no cost to the State.

Landowners adjacent to the work areas may have irrigation systems with trunk lines running through the removal limits. The Contractor shall coordinate with landowners to ensure that areas no longer served due to the severed trunk lines remain irrigated. When grading work is complete Contractor shall reattach all severed irrigation lines.

RESTRICTED WORK AREA

The Contractor's work limits shall be confined to the area within the existing right-of-way for the parcels noted in the table below until the late spring of 2016. The Engineer will notify the Contractor of the date when work outside of the existing right-of-way may proceed.

Parcel No.	Street	Station	to	Station	L/R
8	US 16	75+22		76+37	R
8	South St.	5+48		6+00	R
A27	South St.	6+00		6+51	R
A25	US 16	74+03		74+32	R
A28	South St.	6+51		6+92	R
A29	South St.	7+12		7+62	R

BUS STOPS

There are permanent bus stops at Station 63+10 Rt, 63+91 Lt, 70+74 Lt, 74+97 Lt, 80+34 Rt, 81+41 Lt, and 86+76 Lt. The bus stops at 80+34 Rt and 86+76 Lt also have associated benches. The bus stops are administered by the City of Rapid City's Rapid Transit System (phone number 605-394-6631). The Contractor shall provide the City a minimum of one week's notice to remove any benches within the project site. The Contractor will be responsible for removing and resetting the existing bus stop signs – see Section S for additional information.

Each bus stop location shall have an alighting area with a minimum dimension of 8' perpendicular to the curb and 5' parallel to the curb. The parallel grade shall be the same as the street while the perpendicular grade shall not be steeper than two percent. The alighting areas are to be constructed with 4" concrete sidewalk. The locations of the alighting areas are shown on the curb and gutter layout sheets. Adjustment of the locations of the alighting areas will be allowed only with the approval of the Rapid Transit System.

SHRINKAGE FACTOR: Undercut +20%
Embankment +50%

TABLE OF EXCAVATION QUANTITIES

Station	Station	Excavation (CuYd)	*Undercut (CuYd)	Total Exc (CuYd)	** Waste (CuYd)
62+50	88+01	6235	9086	15321	2171

*The quantities for these items are in the Estimate of Quantities under their respective bid items.
**The quantities for waste is for information only.
**Waste material shall be hauled off site to a location furnished by the Contractor and approved by the Engineer at no additional cost to the State.

"Unclassified Excavation" and "Undercutting" will be paid for based on the quantities shown in the "Estimate of Quantities". No field measurement will be taken. If a change is necessary during construction which affects these quantities, the area in which the change was made will be measured and the affected quantities will be adjusted accordingly.

The Table of Excavation Quantities includes all earthwork to be completed for the mainline alignment and for all side streets.

TABLE OF UNCLASSIFIED EXCAVATION

Excavation (CuYd)	6235
Undercut (CuYd)	9086
Storm Sewer Trench Backfill Excavation*	250
Total	15571

*Where material taken from the pipe trench is saturated and drying the material is impractical, material previously removed from the site as "Waste" may be returned for use as trench backfill material. Material shall be similar in composition to adjacent soil and approved by the Engineer. A quantity of 250 cubic yards of "Storm Sewer Trench Backfill Excavation" has been included in the Table of Unclassified Excavation.

PROCEDURES FOR DETERMINING UNCLASSIFIED EXCAVATION QUANTITY

When plan quantities are used for payment, the Unclassified Excavation quantity shall be used for final payment.

The Excavation quantities and the Table of Unclassified Excavation have been reduced by the volume of in place surfacing that will be removed and/or salvaged.

The volume of in place Concrete Surfacing removed will NOT be paid for as Unclassified Excavation.

UNDERCUTTING

In all cut sections the earthen subgrade shall be undercut 1 foot below the earthen subgrade surface. The undercut material or other suitable material, as directed by the Engineer, shall then be replaced and compacted to the density specified for the section being constructed.

Shallow embankment sections, fills less than 1 foot in height measured at the finished subgrade shoulders, shall be undercut to ensure a minimum 1 foot height of earth embankment for the entire width of roadbed. The upper 6 inches of undercut material that consists of topsoil with a high humus content shall be used as topsoil, placed in the fill slopes outside the shoulders of the earthen subgrade, or placed in the lower portion (below 4 foot depth) in fills which are greater than 4 feet in height. The remaining undercut soil and soil obtained from adjacent excavation (excluding the upper 6 inches) shall then be replaced and compacted to the density specified for the section being constructed.

The plan shown quantity will be the basis of payment. However, if there are additional areas of undercut other than what is shown in the plans, the Engineer shall direct removal of these areas and the additional areas will be measured according to the Engineer.

TABLE OF UNDERCUTTING

Station	to	Station	Quantity (CuYd)
62+50		88+01	9086
		Total:	9086

SALVAGE AND STOCKPILE ASPHALT MIX MATERIAL

REV 12-30-15 JRV

The existing mainline pavement section from approximately Station 62+50 to Station 88+01 consists of 2.5" of asphalt overlay on concrete pavement. Asphalt concrete removal above the existing concrete pavement shall be included in the contract unit price for "Salvage and Stockpile Asphalt Mix Material".

The asphalt overlay shall be salvaged and used as temporary material for the maintenance of vehicular accesses during construction. An estimated 2880 tons (1524 Cubic Yards) of asphalt mix shall be salvaged from approximately Station 62+50 to Station 88+01 and stockpiled at a site furnished by the Contractor and satisfactory to the Engineer. The quantity of salvage asphalt mix may vary from the plans. No adjustment will be made to the contract unit price for variations of the quantity of "Salvage and Stockpile Asphalt Mix Material."

This temporary material shall be maintained and replaced as necessary by the Contractor and remain in place until preparation for final pavement surfacing begins. The salvaged asphalt mix shall then become the property of the Contractor and removed from the site at no cost to the State. The costs for hauling, placing, compacting, maintaining, removing, and disposing of temporary material for accesses shall be incidental to the contract lump sum price for "Traffic Control, Miscellaneous".

UNSTABLE SUBGRADE

Some areas of unstable subgrade may be exposed after the removal of the existing pavement. These areas should be excavated and recompacted using the existing soil or replacement soil. If, in the opinion of the Engineer, the area will not stabilize by this method, reinforcement fabric (MSE) and granular material may be used. Stabilization will be accomplished by undercutting the subgrade and placing a layer of fabric at the bottom of the undercut. The undercut will then be backfilled with granular material and compacted. Contact the Geotechnical Engineering Activity (605-773-3725) for assistance should the use of reinforcement fabric become necessary.

A quantity of 11,399 square yards of reinforcement fabric (MSE) have been included in the materials quantities for bidding purposes. This quantity is assumed to cover 9,912 square yards (74.34' x 1200') of subgrade. The bid quantity has been increased by 15% to account for overlaps. 6245 tons of granular material have been included in Gravel Cushion bid item for use as backfill. Refer to Section F for bid item quantities and specifications. These quantities can be adjusted or eliminated by CCO, depending on field conditions.

The top of the subgrade shall be prepared by smoothing the surface of the subgrade to minimize any ruts, ridges, and depressions. Any rocks or other protrusions that might damage the fabric will be removed. The fabric will be unrolled perpendicular to the centerline and overlapped a minimum of 2 feet.

The fabric will be placed as taut as possible with minimal wrinkles. Placement will be done so that subsequent granular cover material does not shove, wrinkle or distort the in place fabric. The overlaps will be shingled in a manner that assures granular material will not be forced under the fabric during backfilling operations. The fabric may be held in place with small piles of granular material or staples.

Granular material will be dumped at least 20 feet behind the leading edge of the backfill and pushed into place with a loader or dozer from the covered areas to the uncovered areas. No traffic will be allowed on the uncovered fabric. The granular material will be placed in 8 inch lifts or as directed by the Engineer. The granular material will be compacted to 95% maximum dry density as determined by the Specified Density Method.

STORM SEWER PIPE TRENCHES

Back to back Type B inlets located in the medians and adjacent to the left turn lanes will be difficult to backfill with conventional methods. The area between the Type B inlets and connecting pipe shall be backfilled with Controlled Density Fill. A quantity of 50 cubic yards of Controlled Density Fill has been included in the estimate for use at these areas and additional areas identified by the Engineer.

In pipe trenches where the bottom of the trench is saturated and unstable, 1 foot of material may be removed from the bottom of the trench and replaced and recompacted with granular backfill material. The Engineer shall determine which pipe will be undercut. The granular material will conform to Section 421.2.A of the Specifications. Note that in accordance with the Specifications, the furnishing and placement of the backfill material is incidental to the contract unit price per cubic yard for "Pipe Culvert Undercut". A quantity of 100 cubic yards of Pipe Culvert Undercut has been included in the estimate for use as directed by the Engineer

In areas where high groundwater is encountered, the length of trench excavations should be limited and backfilled immediately upon completion of the pipe installation. Sumps and dewatering equipment may be required.

The below table contains the rate of pipe culvert undercut per foot of pipe length and should be used as an aid in determining the actual amount of undercut to be performed during construction. The table is derived from the drawing below and conforms to the Specifications. When calculating pipe culvert undercut, the length of pipe ends should be included in the overall pipe length.

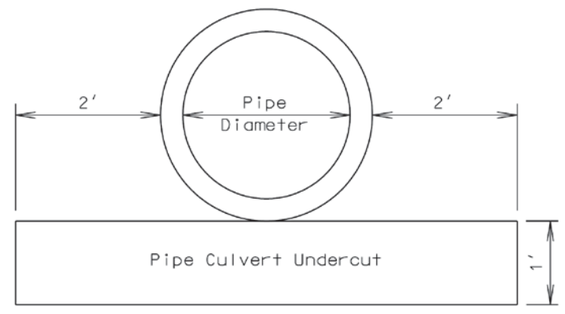

Pipe Diameter (In)	Round Pipe Undercut Rate for 1' Depth (CuYd/Ft)	Arch Pipe Undercut Rate for 1' Depth (CuYd/Ft)
24	0.2407	0.2577
30	0.2623	0.2847
36	0.2840	0.3110
42	0.3056	0.3337
48	0.3272	0.3596
54	0.3488	0.3827
60	0.3704	0.4105
66	0.3920	---

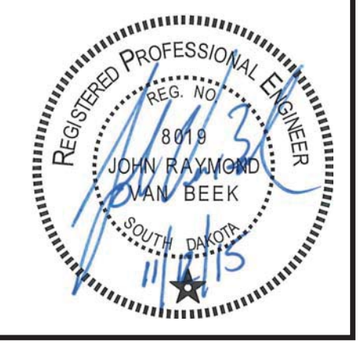

INCIDENTAL WORK, GRADING

Station	to Station	L/R	Remarks
62+65-7'	63+42-6'	L	Take Out 76'-18" RCP
62+81-33'	63+17-33'	L	Take Out 34'-24" RCP
63+07-34'	63+14-34'	L	Take Out 4'-10" PVC
63+14-34'	63+42-6'	R/L	Take Out 46'-12" RCP
63+17-33'	63+41-31'	L	Take Out 20'-24" RCP
63+41-31'	63+42-6'	L	Take Out 22'-12" RCP
63+41-31'	65+95-27'	L	Take Out 254'-30" Arch RCP
60+50	67+21	R	Remove Landscaping & Irrigation
64+39	64+56	L	Remove and Reset Landscaping
64+81	65+30	L	Remove Landscaping
65+51	65+62	L	Remove and Reset Landscaping
65+95-27'	67+02-25'	L	Take Out 108'-36" RCP
66+71	66+91	L	Remove and Reset Landscaping
66+84-37'	67+05-37'	R	Take Out 16'-12" PVC
66+90	67+19	R	Remove and Reset Landscaping
67+02-25'	67+24-26'	L	Take Out 22'-36" RCP
67+02-33'	67+02-25'	L	Take Out 8'-10" PVC
67+05-37'	67+23-0'	R	Take Out 38'-12" RCP
67+05-37'	67+68-37'	R	Take Out 62'-12" RCP
67+19-52'	67+05-37'	R	Take Out 20'-12" PVC
67+24-26'	67+23-00'	L/R	Take Out 24'-10" PVC
67+24-26'	69+52-30'	L	Take Out 226'-42" RCP
67+50'	69+20'	R	Remove Landscaping
67+52	68+04	R	Remove and Reset Landscaping
67+68-37'	67+94-37	R	Take Out 20'- 12" RCP
69+40	69+85	L	Remove and Reset Landscaping
69+52-30'	70+95-32'	L	Take Out 144'-42" RCP
69+52-34'	69+52-30'	L	Take Out 4'-18" PVC
70+67-34'	70+74-34'	R	Take Out 4'-12" PVC
70+74-34'	71+11-33'	R/L	Take Out 76'-12" RCP
70+94-53'	70+74-34'	R	Take Out 28'-12" PVC
70+95-32'	71+11-33'	L	Take Out 18'-42" RCP
71+11-33'	74+88-27'	L	Take Out 378'-42" RCP
71+17-53'	70+94-53'	R	Take Out 22'-12" PVC
74+32	74+82	R	Remove Landscaping & Lilacs
74+32	74+82	R	Remove and Reset Fence & Gate
74+82'	75+22'	R	Remove Landscaping & Irrigation
74+88-27'	76+47-34'	L	Take Out 162'-42" RCP
74+88-36'	74+88-27'	L	Take Out 8'-18" PVC
75+80'	76+51'	L	Remove Landscaping, Rock and Timbers
76+37-39'	76+47-34'	L	Take Out 6'-15" PVC
76+47-34'	80+32-30'	L	Take Out 386'-42" RCP
76+48-31'	76+57-32'	R	Take Out 8'-12" PVC
76+57-32'	76+47-34'	R/L	Take Out 64'-12" RCP
77+39'	78+29'	R	Remove Sprinkler System
79+36-57'	80+39-53'	L	Remove Landscaping
80+21-36'	80+56-32'	R	Take Out 30'-12" PVC
80+32-30'	80+55-31'	L	Take Out 22'-42" RCP
80+32-37'	80+32-30'	L	Take Out 6'-18" PVC
80+55-31'	80+78-31'	L	Take Out 18'-36" RCP
80+56-32'	80+55-31'	R/L	Take Out 60'-12" RCP
80+56-72'	80+56+32'	R	Take Out 38'-10" PVC
80+56-73'	80+59-57'	L	Take Out 14'-15" PVC
80+59-57'	80+80-58'	L	Take Out 20'-15" RCP
80+78-31'	80+79-19'	L	Take Out 12'-48" RCP
80+79-19'	80+89-9'	L	Take Out 16'-48" RCP
80+80-34'	80+80-39'	L	Tale Out 4'-48" RCP
80+80-39'	80+80-58'	L	Take Out 18'-48"
80+80-58'	80+81-227'	L	Take Out 220'-48" RCP

INCIDENTAL WORK, GRADING (CONTINUED)

Station	to Station	L/R	Remarks
80+89-9'	81+64-9'	L	Take Out 76'-48" RCP
81+23-58'	80+80-58'	L	Take Out 42'-12" RCP
81+38'	82+77'	R	Remove and Reset Landscaping
81+64-9'	81+64-22'	L	Take Out 14'-4" HDPE
81+64-9'	84+09-9'	L	Take Out 246'-48" RCP
83+10-36'	84+15-36'	L	Take out Parking Meters and Salvage to City of Rapid City
84+09-9'	84+09-1'	L	Take Out 8'-12" RCP
84+09-9'	84+09-19'	L	Take Out 12'-12" RCP
84+09-9'	84+80-9'	L	Take Out 70'-48" RCP
84+33-36'	84+51-30'	R	Take Out 12'-12" PVC
84+34-66'	84+28-36'	L	Take Out 28'-15" RCP
84+56-72'	84+55-57'	L	Take Out 14'-12" PVC
84+74-56'	84+55-57'	L	Take Out 18'-15" RCP
84+74-56'	84+73-10'	L	Take Out 46'-15" RCP
84+80-9'	85+06-9'	L	Take Out 26'-48" RCP
85+06-9'	88+01-10'	L	Take Out 296'-48" RCP
85+06-57'	85+06-9'	L	Take Out 46'-12" RCP
85+06-57'	85+23-55'	L	Take Out 16'-12" RCP
St. James Street			
4+01	4+66	R	Remove Landscaping
South Street			
5+85	5+85	L	Remove Light
6+75	7+25	L	Remove Fence Post and Landscaping
6+25	6+75	L	Remove Sprinkler System and Rose Bushes

TABLE OF CLEAR AND GRUB TREE

Station	Offset	Quantity (Ea)
Mainline		
65+65	40' R	1
70+04	61' R	1
72+09	56' R	1
72+88	39' R	1
75+33	52' R	1
St. James Street		
4+02	26' R	1
4+18	26' R	1
	Total:	7

REMOVAL OF EXISTING CONCRETE PAVEMENT

Existing asphalt concrete and/or existing asphalt concrete patch work that was placed above the existing concrete pavement is included in the quantity for "Salvage and Stockpile Asphalt Mix Material". The Contractor shall dispose of the concrete pavement at a site approved by the Engineer. The existing mainline pavement section from approximately Station 62+50 to Station 88+01 consists of 2.5" of asphalt on 9" of concrete pavement. The existing 9-inch P.C.C. pavement is typically 64 feet wide and is reinforced with welded wire fabric. The welded wire fabric weighs not less than 60 pounds per 100 square feet. The longitudinal wires are No. 1 gauge and are spaced 6 inches center to center and the transverse wires are No. 4 gauge and are spaced 12 inches center to center. Longitudinal joints are reinforced with No. 5x30" deformed tie bars spaced 48" center to center. Transverse joints are reinforced with 1-¼" steel dowel bars spaced 12" center to center. This information is from Underlying Plans and actual pavement thicknesses may vary.

See Section F – Reclaimed Concrete Aggregate for additional information on use of existing concrete pavement in lieu of gravel cushion.

TABLE OF CONCRETE PAVEMENT REMOVAL

Station	to Station	Description	Quantity (SqYd)
62+50	88+01	Mainline	21945.4
		Total:	21945.4

TABLE OF IN-PLACE SURFACING

(For informational purposes only)

Station	Offset (Ft)	L/R	EXISTING THICKNESSES* AC (In)	PCC (In)	Granular Base (In)
65+60	22.5	R	2.5	9.25	8
73+70	24.5	L	2.5	9.5	8.5
80+10	16.5	R	2.5	9.25	8.25
87+50	26.5	L	2.25	7.5	10.5

*The thicknesses listed are as recorded at these specific locations during exploration of existing soil conditions. See REMOVAL OF EXISTING CONCRETE PAVEMENT for general pavement thickness and composition.

TABLE OF CONCRETE APPROACH PAVEMENT REMOVAL

Station	to Station	L/R	Quantity (SqYd)
Mainline			
64+30.27	64+45.49	L	12.4
65+76.07	66+10.86	R	27.9
68+48.39	68+73.41	L	20.5
69+16.86	69+45.49	L	20.9
73+67.90	73+79.84	R	9.3
78+28.82	78+62.59	L	29.1
78+66.96	78+77.13	R	17.1
78+96.54	79+28.70	L	27.1
79+35.76	79+64.06	R	24.7
85+40.84	85+68.79	L	27.7
86+09.60	86+39.40	L	27.5
87+66.69	87+92.62	R	24.4
St. James Street			
5+67.10	5+99.36	L	51.6
Fairview Street			
5+61.56	5+95.81	R	77.8
5+68.85	5+98.11	L	50.3
Clark Street (West)			
3+23.78	3+59.05	L	11.2
3+74.61	4+09.88	L	10.6
Fulton Street			
3+97.96	4+13.17	R	39.7
4+24.66	4+46.67	L	24.0
South Street			
3+57.58	3+73.33	L	21.4
4+22.03	4+43.41	R	20.6
		Total:	575.8

TABLE OF CONCRETE DRIVEWAY PAVEMENT REMOVAL

Station	to	Station	L/R	Quantity (SqYd)
Mainline				
63+99.67		65+07.55	R	158.0
64+32.27		64+40.82	L	19.0
73+65.17		73+80.76	R	47.4
78+23.49		79+34.65	L	88.5
79+42.21		79+60.49	L	5.4
83+87.99		84+30.43	R	68.3
86+53.37		86+78.56	L	44.3
Quincy				
3+91.98		4+49.86	L	39.3
			Total:	470.2

TABLE OF ASPHALT CONCRETE PAVEMENT REMOVAL

Station	to	Station	L/R	Quantity (SqYd)
Mainline				
63+99.73		66+87.52	R	381.7
65+30.16		65+54.28	L	84.4
67+69.17		67+74.56	L	4.7
67+79.29		68+01.90	L	19.8
68+04.18		69+39.05	R	111.5
68+06.65		69+21.53	L	183.1
73+24.88		74+38.11	L	237.1
74+45.75		74+81.65	L	98.7
77+61.35		78+14.10	L	15.1
78+80.75		79+54.20	R	127.0
82+77.65		82+98.96	R	29.2
82+80.37		82+99.37	L	27.4
85+68.69		86+12.12	L	42.2
86+79.24		86+99.47	L	5.0
86+80.04		86+98.56	R	5.0
87+43.91		88+01.83	R	31.2
St. James Street				
3+24.70		4+52.63	L/R	395.8
5+48.03		5+84.53	L/R	113.7
Fairview Street				
3+70.91		4+52.67	L/R	496.7
5+47.40		6+42.41	L/R	359.2
Clark Street (West)				
3+22.72		4+53.47	L/R	410.7
Clark Street (East)				
0+46.41		0+69.14	L/R	51.4
Fulton Street				
3+91.08		4+52.89	L/R	467.8
South Street				
3+53.13		4+43.44	L/R	548.0
3+99.72		4+46.94	R	36.6
5+43.56		7+22.60	L/R	733.1
			Total:	5016.1

TABLE OF CONCRETE CURB AND GUTTER REMOVAL

Station	to	Station	L/R	Quantity (Ft)
Mainline				
82+79.95		82+80.08	L	12.8
82+76.61		82+79.84	R	15.0
82+99.81		82+99.85	L	13.1
St. James Street				
3+24.53		4+52.63	R	127.9
3+24.53		3+31.72	L	9.0
3+47.34		3+71.52	L	26.6
3+94.33		4+06.43	L	12.2
4+47.97		4+52.38	L	4.4
5+47.70		5+67.17	L	19.3
5+48.24		5+84.46	R	36.1
Fairview Street				
3+70.91		4+52.67	L	81.8
4+43.78		4+52.43	R	8.7
5+47.32		5+61.57	R	14.0
5+47.54		5+68.84	L	21.3
5+95.78		6+42.49	R	46.7
5+98.15		6+42.50	L	44.3
Clark Street				
3+22.69		3+24.19	L	1.4
3+59.18		3+74.65	L	15.5
3+78.18		3+89.07	R	10.9
4+09.97		4+53.23	L	43.2
4+31.54		4+53.03	R	21.5
Fulton Street				
3+91.83		4+25.17	L	36.2
4+46.67		4+49.02	L	20.2
South Street				
3+53.28		3+58.18	L	4.7
3+70.73		4+13.11	R	50.3
3+73.60		3+84.14	L	10.6
4+08.07		4+43.28	L	35.1
4+43.42		4+45.68	R	14.3
5+81.74		6+35.15	R	53.5
6+51.25		6+89.18	R	37.9
6+70.63		6+79.23	L	8.6
6+91.38		7+20.10	L	28.7
7+12.81		7+19.88	R	7.1
			Total:	892.9

TABLE OF CONCRETE GUTTER REMOVAL

Station	to	Station	L/R	Quantity (Ft)
St. James Street				
3+28.50		3+50.77	L	21.9
3+71.52		3+94.33	L	22.8
4+06.43		4+47.97	L	41.5
5+67.17		5+99.31	L	32.1
Fairview Street				
5+61.57		5+95.78	R	34.2
5+68.84		5+98.15	L	29.3
Clark Street (West)				
3+24.19		3+59.18	L	34.8
3+74.65		4+09.97	L	35.3
3+89.07		4+31.54	R	42.5
Fulton Street				
3+98.83		4+13.16	R	14.2
South Street				
3+53.39		3+70.73	R	17.3
3+58.18		3+73.63	L	15.4
3+84.13		4+08.03	L	23.9
5+43.40		6+70.59	L	127.1
5+44.40		5+82.92	R	38.4
6+35.15		6+51.25	R	16.1
6+78.77		6+91.40	L	12.6
6+89.19		7+12.84	R	23.6
			Total:	583.0

TABLE OF CONCRETE CURB REMOVAL

Station	to	Station	L/R	Quantity (Ft)
Mainline				
64+97.19		65+04.73	L	7.5
65+11.62		65+19.99	L	9.0
68+03.38		68+04.77	R	7.2
Fairview Street				
5+65.75		5+73.10	L	19.2
			Total:	42.9

REGISTERED PROFESSIONAL ENGINEER
REG. NO. 8019
JOHN RAYMOND VAN BEEK
SOUTH DAKOTA
11/13/15

REV 1-21-16 JRV

TABLE OF SIDEWALK REMOVAL

Station	to Station	L/R	Quantity (SqYd)
Mainline			
62+50.0	63+34.06	L	50.7
63+09.00	63+34.06	R	34.4
63+67.10	67+18.67	R	208.1
63+67.29	67+19.15	L	279.5
67+52.07	70+92.01	R	220.0
67+52.07	71+13.97	L	235.0
69+37.87	70+87.43	R	41.3
71+17.80	76+71.41	R	380.9
71+23.24	73+67.89	R	58.0
71+47.15	75+14.01	L	257.9
73+79.78	76+65.52	R	70.9
75+52.63	76+66.91	L	132.3
77+06.66	80+69.37	L	332.4
77+06.94	80+69.07	R	247.5
77+13.03	78+77.94	R	39.0
81+11.30	82+75.30	R	275.5
81+11.79	82+79.02	L	183.8
82+99.43	84+68.85	L	139.8
82+99.92	84+69.21	R	310.9
85+11.32	88+01.69	R	454.8
85+12.09	88+01.69	L	365.6
St. James Street			
3+24.77	4+52.78	R	86.6
3+26.60	4+54.28	L	72.3
5+50.48	5+71.35	L	11.6
Fairview Street			
3+70.88	3+76.53	R	2.8
3+70.88	4+52.60	L	46.0
4+04.74	4+52.8	R	26.0
5+47.90	6+03.22	L	30.2
5+48.22	6+02.83	R	29.7
Clark Street (West)			
3+81.64	4+52.82	L	44.2
4+15.78	4+53.01	R	20.2
Clark Street (East)			
0+46.44	0+69.95	R	11.6
Fulton Street			
3+91.85	4+52.97	R	33.7
4+03.90	4+49.37	L	24.5
South Street			
3+73.57	4+46.36	R	26.2
4+07.90	4+51.24	L	36.1
5+48.27	8+18.44	R	196.7
5+48.29	7+20.13	L	120.9
Columbus Street			
4+12.11	4+50.51	L	38.6
4+28.33	4+39.74	R	6.1
5+48.78	5+70.30	L	11.9
5+49.18	5+70.46	R	11.7
Quincy Street			
3+92.28	4+49.37	R	31.6
3+92.28	4+46.22	L	44.3
5+59.61	5+83.97	R	36.0
5+63.97	5+83.98	L	29.5
		Total:	5347.3

TABLE OF RETAINING WALL REMOVAL

This table includes the removal of all railings located above retaining walls.

Station	to Station	L/R	Quantity (Ft)
Mainline			
69+38.12	69+93.12	R	56.9
69+37.95	69+39.65	R	9.8
69+44.22	69+45.60	R	7.9
69+48.29	69+75.37	R	43.5
69+79.48	70+08.16	R	44.5
69+97.23	70+33.14	R	40.6
70+12.06	70+81.86	R	78.0
70+37.28	70+85.14	R	50.5
71+17.86	71+58.06	R	48.6
71+22.69	72+03.05	R	84.3
71+62.35	72+22.59	R	80.8
71+79.11	72+64.70	L	96.9
72+07.36	73+02.86	R	103.3
72+25.20	72+35.62	R	26.1
72+38.52	72+61.76	R	34.0
72+65.65	72+85.91	R	30.1
72+90.42	73+22.44	R	42.6
73+07.20	73+67.82	R	67.6
73+26.28	73+65.61	R	80.4
73+78.51	74+02.52	R	63.8
73+79.94	74+02.66	R	29.3
74+05.74	74+08.51	R	27.9
74+06.85	75+03.05	R	100.7
74+10.73	74+11.47	R	7.8
74+15.43	74+18.51	R	8.1
74+15.31	74+67.94	R	68.3
74+71.09	75+20.01	R	60.3
75+07.20	76+37.92	R	129.8
75+22.70	76+36.32	R	127.5
75+80.26	76+02.68	L	28.7
75+80.31	76+46.33	L	79.7
76+43.50	76+66.12	R	23.2
77+12.36	77+33.54	R	24.7
77+38.66	78+02.26	R	70.2
78+06.19	78+77.98	R	74.8
76+27.06	76+47.32	L	34.1
South Street			
5+48.23	5+80.71	R	40.5
6+51.22	6+70.87	R	20.6
6+77.08	7+03.01	R	57.8
6+89.87	6+92.18	R	21.9
		Total:	2126.1

TABLE OF MANHOLE REMOVAL

The removal of all storm sewer manholes and junction boxes shall be paid per each at the contract unit price for “Remove Manhole”.

Station	L/R	Quantity (Each)
63+14-34’	R	1
63+17-33’	L	1
63+41-31’	L	1
63+42-6’	L	1
67+05-37’	R	1

TABLE OF MANHOLE REMOVAL (CONTINUED)

Station	L/R	Quantity (Each)
67+24-26’	L	1
67+68-37’	R	1
70+74-34’	R	1
76+47-34’	L	1
76+57-32’	R	1
80+55-31’	L	1
80+56-32’	R	1
80+78-31’	L	1
80+80-39’	L	1
84+80-9’	L	1
86+83-40’	L	1
86+84-370’	L	1
	Total:	17

TABLE OF DROP INLET REMOVAL

All costs for removal of the frame and grate assembly shall be incidental to the contract unit price per each for “Remove Drop Inlet”.

Station	L/R	Quantity (Each)
63+04-34’	R	1
63+07-34’	R	1
67+02-33’	L	1
67+20-52’	R	1
67+22-543’	L	1
67+51-60’	R	1
69+52-34’	L	1
69+56-33’	L	1
70+64-34’	R	1
70+67-34’	R	1
70+95-34’	L	1
70+98-34’	L	1
71+17-53’	R	1
74+88-36’	L	1
76+37-39’	L	1
76+44-32’	R	1
76+48-32’	R	1
80+21-36’	R	1
80+32-37’	L	1
80+56-73’	L	1
80+56-73’	R	1
80+59-57’	L	1
81+23-58’	L	1
84+28-36’	L	1
84+33-36’	R	1
84+34-66’	L	1
84+55-57’	L	1
84+56-72’	L	1
84+74-56’	L	1
85+06-57’	L	1
85+23-55’	L	1
	Total:	31

REGISTERED PROFESSIONAL ENGINEER
REG. NO. 8019
JOHN RAYMOND VAN BEEK
SOUTH DAKOTA
1/21/16

CONCRETE PIPE CONNECTIONS

Pipe connections to existing pipes, manholes, junction boxes, and drop inlets shall be done by breaking a hole into the existing structure and inserting the pipe. A concrete collar shall then be poured around the pipe in the area of the connection.

When it is not possible to use a normal pipe joint (male-female ends), connections to existing pipe shall be made by placing a 2' wide by 6" thick M6 concrete collar around the outside of the connection. The concrete collar shall be reinforced with 6x6 W2.9 x W2.9 wire mesh.

All costs for constructing the concrete collars including materials and labor shall be incidental to the contract unit price per foot for the corresponding pipe bid item.

STORM SEWER

Reinforced concrete pipe may be either bell and spigot or tongue and groove. The pipe sections shall be adjoined such that the ends are fully entered and the inner surfaces are reasonably flush and even.

Lift holes in the reinforced concrete pipe shall be plugged with grout.

Watertight joints are required for all reinforced concrete pipe, drop inlets, manholes, and junction boxes on this project.

Watertight joint seals shall conform to the following requirements:

1. Reinforced Concrete Pipe (Circular): Gasketed pipe shall conform to the requirements of ASTM C443. Non-gasketed concrete pipe shall be sealed with a mastic joint seal conforming to the requirements of ASTM C990 and encased with a minimum 2' wide by 6" thick M6 concrete collar reinforced with 6x6 W2.9 x W2.9 wire mesh.

2. Reinforced Concrete Pipe (Arch): Joints shall be sealed with a waterstop seal meeting the requirements of ASTM C990. Waterstop seals shall consist of hydrophilic compounds such as Waterstop-RX or ConSeal CS-231.

3. Drop Inlets, Manholes, and Junction Boxes: Joints shall be sealed with a waterstop seal or seal wrap meeting the requirements of ASTM C990 or encased with a minimum 2' wide by 6" thick M6 concrete collar reinforced with 6x6 W2.9 x W2.9 wire mesh. Waterstop seal shall contain hydrophilic compounds such as Waterstop-RX or ConSeal CS-231. Seal wrap shall be a self-adhesive external joint wrap such as ConWrap CS-217 or Mar Mac Seal Wrap.

Gaskets and seals (mastic, waterstop, and seal wraps) shall be installed in accordance with the manufacturer's recommendations.

The cost for furnishing and installing all gaskets, mastic joint seal, waterstop seal, seal wrap, concrete collars, and for plugging the lift holes shall be incidental to the contract unit price per foot for the corresponding pipe bid item.

Install length for all storm sewer pipes are called out by the measurement taken from the inside wall of junction boxes/inlets, the center of tees and the PI's of bends and rounded up to the nearest even number increment (2, 4, 6, etc).

The laying length of tees and bends has been removed in the Pipe Table so only the required length of pipe is quantified. The length called out in the table of storm sewer pipe is the length called out in the Estimate of Quantities. For estimating purposes it is assumed that each leg of all tees and bends will be four feet.

Pipes are designed linearly from center of junction box/inlet to center of junction box/inlet which, in some cases, causes the pipes to graphically appear to enter the corner of a junction box or inlet. In cases where the pipe is not perpendicular to the junction box wall, the Contractor shall match center of pipe to the horizontal center of the junction box wall.

Portions of storm sewer at stations 82+70 Rt and 86+00 Rt shall be constructed of 8" HDPE pipe, fittings, and inlets. Inlets shall be 8" Nyloplast Inline Drains with grate, or approved equal. This system is intended to keep roof downspouts from outletting water across the sidewalk. All inlets, fittings, bends and appurtenances necessary to complete this portion of the storm sewer system shall be incidental to the contract unit price per foot for "8" High Density Polyethylene Pipe, Furnish" or "8" High Density Polyethylene Pipe, Install".

STORM SEWER VIDEO INSPECTION

All newly installed pipe culverts and storm sewer pipe 24" in diameter and smaller, shall pass a video inspection. The video inspection shall consist of viewing the inside of all pipe culverts and storm sewer installed to determine proper alignment, grade, joining, etc.

Straight alignment shall be checked either by lamping or by laser beam. Lamping shall be conducted by viewing the pipe from inside a drop inlet or storm sewer manhole to determine proper alignment. It is the Contractor's responsibility to notify the Engineer that the pipe culverts and storm sewers have been inspected and shall provide the Engineer with a video recording of each length of pipe inspected, including documented location, in feet, of each run of pipe inspected by video. Video inspections shall be completed after all grading operations are complete and prior to surfacing. No surfacing, including gravel cushion will be allowed until the Engineer has received and viewed the video, presented findings to the Contractor, and directed corrective actions, if necessary.

Video inspection shall be completed unless specified otherwise.

All costs to video inspect the various pipe bid items shall be incidental to the contract unit price per foot of "Storm Sewer Video Inspection." If defective workmanship of material or construction is noted, the Contractor, at no expense to the State, shall correct the deficiency. The Contractor shall perform additional video inspections to review if the repairs were made properly and in accordance with the specifications. The expense of any additional video inspections will be borne entirely by the Contractor. The Contractor shall be responsible for all related costs, including concrete or asphalt resurfacing if the street has been surfaced. The Contractor shall be required to repair all deficiencies. The State may cause to take any actions necessary for any items not completed or repaired in a timely manner.

DROP INLETS

The plan shown quantities of the drop inlet components such as Class M6 Concrete, Reinforcing Steel, Type B Frame and Grate Assembly, Type E Frame and Grate, Precast Drop Inlet Collar, and Precast Concrete Type S Drop Inlet Lid will be the basis of payment for these items.

If additions or reductions to the number of drop inlets are ordered by the Engineer, payment for the components required to construct the drop inlets will be made at the contract unit prices for the components of the drop inlets.

TABLE OF DROP INLETS AND QUANTITIES

Station	L/R	Drop Inlet Size	Drop Inlet Type	Class M6 Concrete (CuYd)	Reinf. Steel (Lb)	Concrete Collar (Each)	Frame and Grate/ Lid Type
63+96.9	L	5.5'X5.5'	B	4.1	1236	1	B
63+96.9	R	3'X4'	B	1.5	180	1	B
65+14.5	L	5.5'X5.5'	B	4.2	1256	1	B
65+14.5	R	2'X3'	B	0.9	98	1	B
65+99.3	L	5.5'X5.5'	B	4.3	1267	1	B
65+99.3	R	2'X3'	B	0.9	98	1	B
66+83.8	R	2'X3'	B	1.0	103		None
66+83.8	L	2'X3'	B	1.1	114		None
66+83.8	L	2'X3'	B	1.1	114	1	B
67+03.2	L	2'X3'	B	0.9	100	1	B
67+77.3	L	5.5'X5.5'	B	4.4	1287	1	B
67+95.0	L	7'X11'	S	9.2	2256		S
67+95.0	R	2'X3'	B	7.5	1955	1	B
67+95.0	R	2'X3'	B	2.9	474	1	B
67+95.0	R	2'X3'	B	1.1	112	1	B
68+25.0	L	5.5'X5.5'	B	4.5	1326	1	B
68+88.0	R	2'X3'	B	1.0	108	1	B
69+08.0	L	5.5'X5.5'	B	3.7	561	1	B
69+08.0	R	4'X6'	S	3.3	516		S
69+64.3	L	5.5'X5.5'	B	5.1	1445	1	B
69+64.3	R	2'X3'	B	1.0	108	1	B
70+67.8	L	5.5'X5.5'	B	5.3	1483	1	B
70+67.8	R	2'X3'	B	0.9	98	1	B
73+09.4	L	5.5'X5.5'	B	5.7	1570	1	B

REGISTERED PROFESSIONAL ENGINEER
REG. NO. 8019
JOHN RAYMOND VAN BEEK
SOUTH DAKOTA
12/2/15

TABLE OF DROP INLETS AND QUANTITIES (CONTINUED)

Station	L/R	Drop Inlet Size	Drop Inlet Type	Class M6 Concrete (CuYd)	Reinf. Steel (Lb)	Concrete Collar (Each)	Frame and Grate/ Lid Type
73+09.4	R	2'X3'	B	0.9	98	1	B
74+84.5	L	5.5'X5.5'	B	5.9	1610	1	B
74+84.5	R	2'X3'	B	0.9	98	1	B
76+37.2	R	2'X3'	B	0.9	98	1	B
76+37.3	L	5.5'X5.5'	B	4.8	1382	1	B
76+37.3	L	2'X3'	B	1.1	110	1	B
76+37.3	L	2'X3'	B	1.0	109	1	B
77+33.2	R	2'X3'	B	1.0	102	1	B
78+64.5	L	5.5'X5.5'	B	4.3	1278	1	B
78+64.5	R	2'X3'	B	0.9	91	1	B
79+88.7	L	5.5'X5.5'	B	4.9	1392	1	B
80+36.3	R	2'X3'	B	0.9	96	1	B
80+36.3	L	2'X3'	B	1.0	106	1	B
80+36.3	L	2'X3'	B	1.0	107	1	B
81+56.2	L	5.5'X5.5'	B	5.4	1506	1	B
82+67.9	L	5.5'X5.5'	B	5.1	1446	1	B
82+67.9	R	2'X3'	B	0.9	98	1	B
84+34.6	R	2'X3'	B	0.9	98	1	B
84+34.6	L	2'X3'	B	1.1	111	1	B
84+34.6	L	2'X3'	B	1.1	112	1	B
84+38.6	L	5.5'X5.5'	B	5.1	1440	1	B
86+40.2	L	5.5'X5.5'	B	4.7	1364	1	B
86+40.2	R	2'X3'	B	0.8	90	1	B
87+89.5	L	5.5'X5.5'	B	4.8	1379	1	B
St James Street							
3+28.7	L	2'X3'	B	0.8	87	1	B
3+28.7	R	2'X3'	B	0.9	100	1	B
4+38.7	R	2'X3'	B	0.9	97	1	B
4+38.7	L	2'X3'	B	0.8	87	1	B
5+58.5	L	2'X3'	B	0.9	100	1	B
5+58.5	R	2'X3'	B	0.9	98	1	B
5+81.7	R	2'X3'	B	0.9	91	1	B
South Street							
5+59.2	L	3'X4'	B	1.7	203	1	B
5+60.3	R	2'X3'	B	1.1	113	1	B
Quincy Street							
4+29.2	R	2'X3'	B	1.1	113	1	B
4+33.7	L	3'X4'	B	1.7	201	1	B
Fairview Street							
4+37.7	L	2'X3'	B	1.1	113	1	B
5+59.5	L	2'X3'	B	0.8	90	1	B
5+59.5	R	2'X3'	B	0.1	98	1	B
6+39.3	R	2'X3'	B	1.0	102	1	B
6+39.3	L	2'X3'	B	1.0	104	1	B
Columbus Street							
4+30.0	R	2'X3'	B	1.0	109	1	B
4+33.7	L	2'X3'	B	1.7	168	1	B
5+70.5	R	2'X3'	B	0.9	94	1	B
5+70.5	L	2'X3'	B	1.0	107	1	B

TABLE OF DROP INLETS AND QUANTITIES (CONTINUED)

Station	L/R	Drop Inlet Size	Drop Inlet Type	Class M6 Concrete (CuYd)	Reinf. Steel (Lb)	Concrete Collar (Each)	Frame and Grate/ Lid Type
Clark Street							
0+65.4	R	2'X3'	B	1.3	127	1	B
0+65.4	L	2'X3'	B	0.9	94	1	B
			Totals	157.5	34682	67	

Total Type B Frame and Grate Assembly	66
Total Type E Frame and Grate	1
Total 4' x 6' Precast Concrete Type S Drop Inlet Lid	1
Total 4' x 11' Precast Concrete Type S Drop Inlet Lid	1

TEMPORARY DROP INLET COVER (STEEL PLATE)

Drop inlets at stations 66+83.8 – 3.2' LT and 66+83.8 – 7.8' LT shall be installed temporarily without the 6-inch concrete collar and Type B frame and grate. After primary installation the Contractor shall place a 1-inch thick Grade A-36 Steel Plate over the Drop Inlet. The Steel Plate shall match the exterior dimensions of the drop inlet and be secured to the top of box using a minimum of four half-inch diameter, three-inch long concrete anchor bolts. The four anchors shall be placed at the corners of the box in the center of the wall. No separate payment will be made for the temporary Steel Plate, all items required for the proper installation shall be considered incidental to the various bid items associated to the drop inlet installation.

TABLE OF JUNCTION BOXES AND QUANTITIES

Station	L/R	Size L'xW'xH'	Frame and Lid (Type)	Class M6 Concrete (CuYd)	Reinf Steel (Lb)	2" Adjusting Ring For Manhole (Ea)
80+80.0	L	6'X6'X8'	A10	7.8	1545	4
87+96.3	L	6'X6'X6.5'	A10	7.0	1416	3
			Totals:	14.8	2961	7

Total Type A10 Manhole Frame and Lid: 2

TABLE OF PARKING CURB STOPS

Station	to	Station	L/R	Quantity (Ea)
64+01		65+24	R	14
66+53		66+86	R	4
Fairview Street				
4+07		4+39	R	4
Clark Street (West)				
3+30		4+35	L	10
4+05		4+38	R	4
			Total:	36

6" CONCRETE BOLLARDS

All labor, material and equipment necessary to furnish and install 6" concrete bollards as shown on the detail included in these plans shall be included in the contract unit price per each for "Bollard".

TABLE OF 6" CONCRETE BOLLARDS

Station	L/R	Quantity (Ea)
67+09	L	1
67+16	L	1
67+56	R	1
67+64	R	1
80+46	L	1
80+55	L	1
	Total:	6

CLUSTER MAILBOX SUPPORT PAD

The Contractor shall install a concrete mailbox support pad adjacent to the alley on the east side of Parcel A22. The exact location of the concrete pad shall be determined by the Engineer and the USPS representative in the field. In general, the concrete pad shall be 4 foot square, 8 inches thick, reinforced with #4 rebar spaced 14 inches on center both directions and installed on 8 inches of compacted aggregate base course. The contractor will be responsible for providing a concrete pad that meets USPS requirements. The contractor shall coordinate with the Engineer on the proper postal representative to contact during the project.

All costs for site preparation and construction of a concrete pad meeting USPS requirements will be paid for at the contract unit price per each for "Multiple Mailbox Support".

10" PCC FILLET SECTIONS

Payment for "10" PCC Fillet Section" shall be based on plans quantity. If additions or reductions to the area of PCC fillet sections are ordered by the Engineer, payment will be made in accordance with the contract unit price per square yard for "10" PCC Fillet Section".

8" FAST TRACK CONCRETE APPROACH PAVEMENT

See the Table of Pavement, Curb and Gutter, and Sidewalk Quantities for locations and quantities of 8" Fast Track Concrete Approach Pavement. For additional information refer to the note titled "Fast Track Concrete" in Section F of these plans.

REGISTERED PROFESSIONAL ENGINEER
REG. NO. 8019
JOHN RAYMOND VAN BEEK
SOUTH DAKOTA
12/2/15

MEDIAN CROSSWALK

The crosswalk through the median between Stations 71+30 and 71+74 shall have approximately 51 feet of Type B6 curb placed along the south and west sides of the sidewalk as shown on the plans. The Type B6 curb shall be considered incidental to the sidewalk bid item. No separate payment will be made.

TYPE 1 DETECTABLE WARNINGS

Detectable warnings shall be in compliance with the Americans with Disabilities Act regulations.

The detectable warnings shall be installed according to the manufacturer's installation instructions.

A concrete thickness equal to the adjacent concrete sidewalk thickness and 2 inches of granular cushion material shall be placed below the Type 1 Detectable Warnings. When concrete is placed below the detectable warnings then the concrete thickness shall be transitioned at the rate of 1" per foot to match the adjacent concrete sidewalk thickness.

The detectable warnings shall be a yellow color for application in concrete curb ramps.

When Type 1 Detectable Warnings are specified, the Contractor shall furnish and install only one of the products listed in the Type 1 Detectable Warnings table.

Type 1 Detectable Warnings

Product	Manufacturer
Alertcast Composite Replaceable Cast in Place	Cape Fear Systems, III, LLC 215 South Water Street, Suite 103 Wilmington, NC 28401 877-232-6287 http://www.alerttile.com/
Detectable Warning Tile Composite Replaceable Wet-Set	ADA Solutions, Inc. North Billerica, MA 01862 800-372-0519 http://www.adatile.com
Access Tile Composite Replaceable Cast in Place	Access Products Inc. 241 Main Street, Suite 100 Buffalo, NY 14203 888-679-4022 http://www.accesstile.com/
Armorcast Detectable Warning Tile Composite Replaceable Wet-Set	Armorcast Products Company 13230 Saticoy Street North Hollywood, CA 91605 818-982-3600 http://www.armorcastprod.com/

CONCRETE SIDEWALK

The concrete sidewalk shall be constructed in accordance with Section 651 of the Specifications. The sidewalk standard plates in this plan set are typical of this project with the exception of all sidewalk cross slopes should be constructed as shown on the typical sections, the sidewalk widths, boulevard widths, and other special details are shown on the Curb and Gutter Layout sheets.

Thickened-edge sidewalk shall be installed in all locations where railing is to be installed into the sidewalk. Payment for thickened-edge sidewalk shall be incidental to the bid item "4" Concrete Sidewalk".

All reinforced sidewalk shall have rebar placed as shown in Detail A on Standard Plate 651.70.

COLORED CONCRETE SIDEWALK

The Colored Concrete Sidewalk shall have the integral color Kailua (#677) by Davis Colors at a rate of 4 lbs per 94 lbs of cement, or approved equal. The colored concrete shall be cured with an acrylic sealer according to manufacturer's recommendations for the integral color. No white pigmented cure shall be used. All costs for coloring shall be incidental to the contract unit price per square foot for the various colored concrete sidewalk.

RETAINING WALLS

See the Special Provision for Patterning Special Type C Retaining Wall for information on the patterning and coloring of retaining walls. It is the intent for the walls to match, to the extent practical, what was recently installed with Project NH0016(78)67, PCN 01TH at 2202, 2305, 2315 and 2501 Mt. Rushmore Road.

The concrete to be used for the form-lined walls shall conform to section 462 (M6) with the following exceptions: The maximum Water/Cementitious ratio of the concrete shall be 0.43, the concrete mix shall contain a High Range Water Reducer, and the slump at time of placement shall be between 4 and 7 inches.

Payment for the patterning and the coloring of the walls shall be Incidental to the contract unit price per square foot for Special Type C Retaining Wall.

TABLE OF SPECIAL TYPE C RETAINING WALL

Station	to	Station	L/R	Quantity (SqFt)
63+89.5		64+12.4	L	44.0
64+18.7		64+31.1	L	28.8
69+49.6		69+74.9	R	133.9
69+54.2		70+87.4	R	367.4
69+79.9		70+07.9	R	86.0
70+12.9		70+78.2	R	112.2
77+38.8		78+38.0	R	319.2
78+09.7		78+69.2	R	108.7
78+64.2		78+77.7	R	46.8
St. James Street - Walls With Shear Key Footing				
3+78.0		4+27.1	R	103.9
4+32.4		4+53.0	R	77.3
South Street				
5+49.8		5+91.5	L	204.8
			Total	1730.2

GRAVITY LARGE BLOCK RETAINING WALLS

Specifications

1. Design Specifications: AASHTO LRFD Bridge Design Specifications, 2014 Edition.
2. Construction Specifications: South Dakota Standard Specifications for Roads and Bridges, 2015 Edition and Required Provisions, Supplemental Specifications and Special Provisions as included in the Proposal.

Structure Removal

All existing structures shall be removed in their entirety to allow the placement of the Gravity Large Block Retaining Walls at the proposed locations. Disturbance of in-place material should be kept to a minimum. Any materials removed or otherwise disturbed during structure removal shall be replaced, up to within 6 inches of the bottom of the wall elevation, using a cohesive backfill material. This cohesive backfill material shall be compacted to 97% maximum dry density as determined by SD 104. The 6 inches of material immediately below the wall shall meet the gradation specified for granular backfill material.

Foundation Preparation

Foundation preparation shall consist of placing the gravity large concrete block retaining wall system on a granular leveling pad. Prior to placement of the granular leveling pad all spoil or loose material shall be removed and the area wetted then proof rolled to ensure adequate density. The leveling pad shall be constructed using granular material conforming to the specifications for base course in Section 882 of the Specifications and compacted according to Section 260.3.B. All costs for equipment, labor, tools, and incidentals required for the undercutting and use or disposal of the excavated material and for furnishing, placing, watering, and compacting the granular material used in the foundation preparation shall be paid for at the contract unit price per cubic yard for Footing Undercut.

GRAVITY LARGE BLOCK RETAINING WALLS (CONTINUED)

Retaining Wall

1. The Gravity Large Concrete Block Retaining Wall shall be on the current approved products list located at the following website address: http://apps.sd.gov/applications/HC60ApprovedProducts/main.aspx

2. The Contractor shall consult with an approved wall company and obtain design calculations and construction plans prepared by a South Dakota Registered Professional Engineer. Two copies of this data shall be forwarded to the Bridge Construction Engineer a minimum of 2 weeks in advance of construction for approval. Construction plans shall include plan view, elevation view (to include elevations), typical cross sections, foundation and drainage details, material and construction specifications, and a detailed listing of all quantities required for wall construction including concrete retaining wall blocks, excavation, granular backfill and foundation preparation.

3. The concrete used in casting the gravity large concrete blocks shall meet or exceed the block system specifications for the concrete design mix including fresh concrete properties and concrete strength. Blocks shall be given a lot number for tracking purposes that is associated with test results for fresh concrete properties and compressive strength. Each lot number shall be certified by the block manufacturer that the fresh concrete properties and the compressive strength met the block system's minimum specifications.

4. The minimum embedment depth to the bottom of the wall for gravity large concrete block retaining wall shall be 1.0 ft.

6. Construction of the wall shall begin at the lowest course and proceed upwards. The underdrain shall be placed prior to wall backfill placement. The underdrain shall also be functional to prevent water from backing up into the wall backfill. The lowest course must be placed and backfilled in its entirety prior to construction of any subsequent courses. Backfill placement must be placed in successive horizontal lifts.

7. Drainage fill for the gravity large concrete block retaining wall system shall meet the criteria as set by the wall block manufacturer and shall be incidental to contract unit price per square foot for “Gravity Large Concrete Block Retaining Wall.”

8. The embankment and retaining wall shall be brought up in horizontal lifts simultaneously. Compaction behind the retaining wall shall be in accordance with Section 120 of the Specifications.

9. The retaining wall shall be installed in accordance to the selected wall companies' instructions, specifications, and approved shop drawings.

11. Quantities for Gravity Large Concrete Block Wall, Structure Excavation, Retaining Wall and Footing Undercut are for bidding purposes only. Actual quantities for the listed items must be determined from design calculations as incorporated in the shop drawings supplied by the wall designer and will be adjusted accordingly for pay purposes. The various bid items will be full compensation for construction of the Gravity Large Concrete Block Wall.

Underdrain

1. An underdrain system shall be installed behind the wall as shown and detailed on the Gravity Large Concrete Block Retaining Wall Typical Section. The underdrain system shall consist of 4” diameter slotted corrugated polyethylene tubing installed behind the wall and 4 inch diameter corrugated polyethylene tubing from the end of the wall to the outlet as shown. Care shall be taken near the ends of the wall to ensure positive drainage.

GRAVITY LARGE BLOCK RETAINING WALLS (CONTINUED)

2. The polyethylene tubing shall conform to Section 990 of the Specifications.

3. All costs involved in furnishing and installing the 4 inch diameter slotted corrugated polyethylene tubing and 4 inch corrugated polyethylene tubing shall be included in the contract unit price per foot for “4” Underdrain Pipe.”

TABLE OF GRAVITY LARGE BLOCK RETAINING WALL

Station	to	Station	L/R	Quantity (SqFt)
71+22		71+56	R	265.1
71+35		76+36	R	2097.0
71+65		71+96	R	49.8
75+09		76+19	R	169.0
South Street				
5+77		6+92	R	257.1
			Total	2838.0

RAILING

Railing shall be installed on the proposed thickened-edge sidewalk at the locations listed below. The railing system shall be as detailed within these plans. Contractor shall submit detailed shop plans prior to beginning fabrication of the railing system for the Bridge Construction Engineer’s approval in accordance with the Specifications. Handrail installed in conjunction with Steel Pedestrian Railing shall be incidental to the Steel Pedestrian Railing bid item. All costs associated with furnishing and installing railing shall be incidental to the contract unit price per foot for “Pipe Handrail” or “Steel Pedestrian Railing”.

TABLE OF PIPE HANDRAIL

Location	L/R	Quantity (Ft)
71+22 to 71+58	R	35.5
71+63 to 71+96	R	32.7
74+76 to 74+93	R	16.7
74+98 to 76+25	R	124.2
	Total:	209.1

TABLE OF STEEL PEDESTRIAN RAILING

Location	L/R	Quantity (Ft)
69+54 to 70+87	R	157.4
71+96 to 74+77	R	280.9
	Total:	438.3

TABLE OF STEEL PEDESTRIAN RAILING WITH HANDRAIL

Location	L/R	Quantity (Ft)
71+41 to 71+96	R	56.1
74+77 to 76+36	R	153.6
78+10 to 78+69	R	59.4
78+64 to 78+78	R	24.7
	Total:	293.8

SLIP RESISTANT COATING FOR CONCRETE STAIRWAY

Curing compounds shall not be utilized on concrete stairway treads during the concrete curing process. Curing shall be accomplished with a double layer of burlap mats and polyethylene sheeting.

The Contractor shall apply a 2” wide slip resistant coating at the front of each stairway tread for the full width of the tread.

The slip resistant coating shall be a red, tile red, or brick red color. The coating shall be a single component epoxy and have a minimum coefficient of friction value of 0.9 for dry and 0.9 for wet as determined by ASTM F 609.

The slip resistant coating shall be applied in accordance with the manufacturer’s recommendations.

All cost for furnishing and applying the slip resistant epoxy coating including equipment, labor, and materials shall be incidental to various contract items.

TABLE OF REINFORCING STEEL

Item	Quantity (Lb)
Drop Inlets	34682
Junction Boxes	2961
Total:	37643

TABLE OF EPOXY COATED REINFORCING STEEL

Item	Quantity (Lb)
Stairways	1693
Total:	1693

TABLE OF CLASS M6 CONCRETE

Item	Quantity (CuYd)
Drop Inlets	157.50
Junction Boxes	14.80
Stairways	20.51
Total:	192.81

REGISTERED PROFESSIONAL ENGINEER
REG. NO. 8019
JOHN RAYMOND VAN BEEK
SOUTH DAKOTA
12/2/15

TABLE OF CONCRETE STAIRWAYS IN GRAVITY LARGE CONCRETE BLOCK RETAINING WALLS

Station	L/R	Top Landing Elev.	Bottom Landing Elev.	No. of Steps (w)	Class M6 Concrete (CuYd)	Epoxy Coated Reinf. Steel (Lb)	* Struct. Exc. (CuYd)	Pipe Handrail (Ft)
71+60	R	3295.19	3288.19	13	2.92	203	5.05	35.3
73+67	R	3293.53	3290.71	4	1.39	100	2.26	15.2
76+25	R	3279.69	3283.19	6	1.73	124	2.88	19.7
				Totals:	6.04	427	10.19	70.2

TABLE OF CONCRETE STAIRWAYS IN SPECIAL TYPE C RETAINING WALLS

Station	L/R	Top Landing Elev.	Bottom Landing Elev.	No. of Steps (w)	Class M6 Concrete (CuYd)	Epoxy Coated Reinf. Steel (Lb)	* Struct. Exc. (CuYd)	Pipe Handrail (Ft)
64+16	L	3290.93	3288.18	4	2.09	188	5.28	15.2
69+77	R	3291.34	3287.42	6	2.86	257	7.63	19.7
70+10	R	3290.62	3288.82	2	1.46	131	3.46	10.7
74+09	R	3289.98	3288.01	3	1.72	121	4.14	12.9
78+69	R	3271.80	3268.65	5	2.42	213	6.23	17.4
St. James Street								
3+75	R	3294.56	3293.06	2	1.42	126	3.31	10.7
4+30	R	3293.79	3290.31	5	2.50	230	6.56	17.4
				Totals:	14.47	1266	36.61	104.0

* The quantities for structure excavation are for informational purposes only. Payment for all work necessary for structure excavation shall be incidental to the various contract unit prices for the items listed in the above table.

CHAIN LINK FENCE

The existing chain link fence on the property located in the southwest quadrant of St. James Street and Mt. Rushmore Road will be disturbed and shall be replaced. The existing fence shall be removed as needed to facilitate retaining wall construction. New fence and a pedestrian gate shall be provided as identified in the following table:

TABLE OF CHAIN LINK FENCE

Location	Type	Length (Ft)
St. James		
4+03.9 43.2' R to 4+04.0 41.2' R	Regular 48"	2
4+03.9 41.2' R to 4+26.2 41.2' R	Regular 48"	23
4+23.2 41.2' R to 4+26.2 48.6' R	Regular 48"	7
4+26.2 48.6' R to 4+33.2 48.6' R	Regular 48" with 4' Ped Gate	7
4+33.2 48.6' R to 4+33.2 41.2' R	Regular 48"	7
4+33.2 41.2' R to 4+40.7 41.2' R	Regular 48"	7
4+40.7 41.2' R to 4+40.7 43.2' R	Regular 48"	2
	Total:	55

REGISTERED PROFESSIONAL ENGINEER
REG. NO. 8019
JOHN RAYMOND VAN BEEK
SOUTH DAKOTA
11/13/15

TABLE OF CONSTRUCTION STAKING

(See Special Provision for Contractor Staking)

Roadway and Description	Begin Station	End Station	Number of Lanes	Length (Ft)	Length (Mile)	Lane Factor	*Sets of Stakes	**Grade Staking Quantity (Mile)	Miscellaneous Staking Quantity (Mile)	Slope Staking Quantity (Mile)	Structure Staking Quantity (Each)
					Grade Staking						
US 16 (5 Lanes AC Pavement)	62+49.97	63+11.61	5	61.6	0.012	2.5	1	0.029	0.012	0.012	
US 16 (5 Lanes PCCP)	63+11.61	64+55.26	5	143.7	0.027	2.5	2	0.136	0.027	0.027	
US 16 (Transistion from 5 Lanes to 4 Lanes PCCP)	64+55.26	65+15.32	5	60.1	0.011	2.5	2	0.057	0.011	0.011	
US 16 (4 Lanes PCCP)	65+15.32	65+70.99	4	55.7	0.011	2	2	0.042	0.011	0.011	
US 16 (Transistion from 4 Lanes to 5 Lanes PCCP)	65+70.99	66+30.99	5	60.0	0.011	2.5	2	0.057	0.011	0.011	
US 16 (5 Lanes PCCP)	66+30.99	67+21.52	5	90.5	0.017	2.5	2	0.086	0.017	0.017	
US 16 (Transition from 5 lane to 6 Lanes PCCP)	67+21.52	67+49.49	6	28.0	0.005	3	2	0.032	0.005	0.005	
US 16 (6 Lanes PCCP)	67+49.49	67+84.90	6	35.4	0.007	3	2	0.040	0.007	0.007	
US 16 (Transistion from 6 lanes to 5 lanes PCCP)	67+84.90	68+29.16	6	44.3	0.008	3	2	0.050	0.008	0.008	
US 16 (5 Lanes PCCP)	68+29.16	68+65.24	5	36.1	0.007	2.5	2	0.034	0.007	0.007	
US 16 (Transition from 5 lanes to 4 Lanes PCCP)	68+65.24	69+04.83	5	39.6	0.007	2.5	2	0.037	0.007	0.007	
US 16 (4 Lanes PCCP)	69+04.83	75+49.40	4	644.6	0.122	2	2	0.488	0.122	0.122	
US 16 (Transition from 4 Lanes to 5 lanes PCCP)	75+49.40	75+88.83	5	39.4	0.007	2.5	2	0.037	0.007	0.007	
US 16 (5 Lanes PCCP)	75+88.83	77+94.60	5	205.8	0.039	2.5	2	0.195	0.039	0.039	
US 16 (Transition from 5 lanes to 4 Lanes PCCP)	77+94.60	78+34.20	5	39.6	0.007	2.5	2	0.037	0.007	0.007	
US 16 (4 Lanes PCCP)	78+34.20	78+91.04	4	56.8	0.011	2	2	0.043	0.011	0.011	
US 16 (Transistion from 4 Lanes to 5 Lanes PCCP)	78+91.04	79+30.63	5	39.6	0.007	2.5	2	0.037	0.007	0.007	
US 16 (5 Lanes PCCP)	79+30.63	79+91.72	5	61.1	0.012	2.5	2	0.058	0.012	0.012	
US 16 (Transition from 5 lanes to 6 lanes PCCP)	79+91.72	80+35.97	6	44.3	0.008	3	2	0.050	0.008	0.008	
US 16 (6 Lanes PCCP)	80+35.97	80+71.40	6	35.4	0.007	3	2	0.040	0.007	0.007	
US 16 (Transistion from 6 lanes to 5 lanes PCCP)	80+71.40	81+07.38	6	36.0	0.007	3	2	0.041	0.007	0.007	
US 16 (5 Lanes PCCP)	81+07.38	82+48.00	5	140.6	0.027	2.5	2	0.133	0.027	0.027	
US 16 (Transistion from 5 Lanes to 4 Lanes PCCP)	82+48.00	82+87.95	5	40.0	0.008	2.5	2	0.038	0.008	0.008	
US 16 (Transistion from 4 Lanes to 5 Lanes PCCP)	82+87.95	83+30.38	5	42.4	0.008	2.5	2	0.040	0.008	0.008	
US 16 (5 Lanes PCCP)	83+30.38	85+72.15	5	241.8	0.046	2.5	2	0.229	0.046	0.046	
US 16 (Transition from 5 lanes to 6 lanes PCCP)	85+72.15	86+53.84	6	81.7	0.015	3	2	0.093	0.015	0.015	
US 16 (6 Lanes PCCP)	86+53.84	88+01.30	6	147.5	0.028	3	2	0.168	0.028	0.028	
US 16 Special Type C Retaining Wall	63+89.40	64+31.30									1
US 16 Special Type C Retaining Wall	64+46.30	65+30.40									1
US 16 Special Type C Retaining Wall	69+49.40	70+78.20									2
US 16 Large Block Gravity Retaining Wall	71+24.10	71+95.80									2
US 16 Large Block Gravity Retaining Wall	71+95.80	75+22.70									1
US 16 Large Block Gravity Retaining Wall	75+22.70	76+35.20									2
US 16 Special Type C Retaining Wall	77+38.70	78+77.40									1
St. James Street (2 Lanes AC Pavement)	3+24.85	3+57.83	2	33.0	0.006	1	2	0.012	0.006	0.006	
St. James Street (3 Lanes AC Pavement)	3+57.83	4+43.48	3	85.7	0.016	1.5	2	0.049	0.016	0.016	
St. James Street (2 Lanes PCCP)	4+43.48	4+68.52	2	25.0	0.005	1	2	0.009	0.005	0.005	
St. James Street (2 Lanes PCCP)	5+31.52	5+56.48	2	25.0	0.005	1	2	0.009	0.005	0.005	
St. James Street (2 Lanes AC Pavement)	5+56.48	5+84.18	2	27.7	0.005	1	2	0.010	0.005	0.005	
US 16 Special Type C Retaining Wall	3+71.80	4+53.00									1
Fairview Street (6 Lanes AC Pavement)	3+70.93	4+37.05	6	66.1	0.013	3	2	0.075	0.013	0.013	
Fairview Street (2 Lanes AC Pavement)	4+37.05	4+43.39	2	6.3	0.001	1	2	0.002	0.001	0.001	
Fairview Street (2 Lanes PCCP)	4+43.39	4+68.46	2	25.1	0.005	1	2	0.009	0.005	0.005	
Fairview Street (2 Lanes PCCP)	5+31.54	5+56.51	2	25.0	0.005	1	2	0.009	0.005	0.005	
Fairview Street (2 Lanes AC Pavement)	5+56.51	6+42.00	2	85.5	0.016	1	2	0.032	0.016	0.016	
Clark Street West (4 Lanes AC Pavement)	3+23.08	3+90.08	4	67.0	0.013	2	2	0.051	0.013	0.013	
Clark Street West (6 Lanes AC Pavement	3+90.08	4+43.49	6	53.4	0.010	3	2	0.061	0.010	0.010	
Clark Street West (2 Lanes PCCP)	4+43.49	4+68.50	2	25.0	0.005	1	2	0.009	0.005	0.005	
Clark Street East (2 Lanes PCCP)	0+31.50	0+46.50	2	15.0	0.003	1	2	0.006	0.003	0.003	
Clark Street East (2 Lanes AC Pavement)	0+46.50	0+68.70	2	22.2	0.004	1	2	0.008	0.004	0.004	
Fulton Street (3 Lanes AC Pavement)	3+91.83	4+16.27	4	24.4	0.005	2	2	0.019	0.005	0.005	
Fulton Street (3 Lanes AC Pavement)	4+16.27	4+43.61	5	27.3	0.005	2.5	2	0.026	0.005	0.005	
Fulton Street (2 Lanes PCCP)	4+43.61	4+68.54	2	24.9	0.005	1	2	0.009	0.005	0.005	
South Street (3 Lanes AC Pavement)	3+78.47	4+43.50	3	65.0	0.012	1.5	2	0.037	0.012	0.012	

REGISTERED PROFESSIONAL ENGINEER
REG. NO. 8019
JOHN RAYMOND VAN BEEK
SOUTH DAKOTA
11/17/15

TABLE OF CONSTRUCTION STAKING (CONTINUED)

(See Special Provision for Contractor Staking)

Grade Staking (Continued)

Roadway and Description	Begin Station	End Station	Number of Lanes	Length (Ft)	Length (Mile)	Lane Factor	*Sets of Stakes	**Grade Staking Quantity (Mile)	Miscellaneous Staking Quantity (Mile)	Slope Staking Quantity (Mile)	Structure Staking Quantity (Each)
South Street (2 Lanes PCCP)	4+43.50	4+68.73	2	25.2	0.005	1	2	0.010	0.005	0.005	
South Street (2 Lanes PCCP)	5+31.76	5+58.32	2	26.6	0.005	1	2	0.010	0.005	0.005	
South Street (4 Lanes AC Pavement)	5+58.32	7+19.63	4	161.3	0.031	2	2	0.122	0.031	0.031	
US 16 Large Block Gravity Retaining Wall	5+66.60	6+94.54									2
Columbus Street (4 Lanes AC Pavement)	4+12.26	4+31.30	4	19.0	0.004	2	2	0.014	0.004	0.004	
Columbus Street (Transition From 4 Lanes to 2 Lanes AC Pavement)	4+31.30	4+39.37	4	8.1	0.002	2	2	0.006	0.002	0.002	
Columbus Street (2 Lanes PCCP)	4+39.37	4+68.46	2	29.1	0.006	1	2	0.011	0.006	0.006	
Columbus Street (2 Lanes PCCP)	5+31.46	5+56.42	2	25.0	0.005	1	2	0.009	0.005	0.005	
Columbus Street (Transition From 2 Lanes to 4 Lanes AC Pavement)	5+56.42	5+68.71	4	12.3	0.002	2	2	0.009	0.002	0.002	
Columbus Street (4 Lanes AC Pavement)	5+68.71	5+77.46	4	8.8	0.002	2	2	0.007	0.002	0.002	
Quincy Street (4 Lanes AC Pavement)	3+92.28	4+30.79	4	38.5	0.007	2	2	0.029	0.007	0.007	
Quincy Street (Transition From 4 Lanes to 2 Lanes AC Pavement)	4+30.79	4+43.11	4	12.3	0.002	2	2	0.009	0.002	0.002	
Quincy Street (2 Lanes PCCP)	4+43.11	4+67.98	2	24.9	0.005	1	2	0.009	0.005	0.005	
Quincy Street (2 Lanes PCCP)	5+31.98	5+56.96	2	25.0	0.005	1	2	0.009	0.005	0.005	
Quincy Street (Transition From 2 Lanes to 4 Lanes AC Pavement)	5+56.96	5+68.30	4	11.3	0.002	2	2	0.009	0.002	0.002	
Quincy Street (4 Lanes AC Pavement)	5+68.30	5+84.01	4	15.7	0.003	2	2	0.012	0.003	0.003	
							Totals	3.051	0.705	0.705	13

* 1 = Blue Top Stakes Only (Asphalt Concrete Pavement)
2 = Blue Top and Paving Hub Stakes (PCC Pavement)

** Grade Staking Quantity = (Length) x (Lane Factor) x (Sets of Stakes)

REGISTERED PROFESSIONAL ENGINEER
REG. NO.
8019
JOHN RAYMOND
VAN BEEK
SOUTH DAKOTA
11/18/15

PIPE QUANTITIES

FOR BIDDING PURPOSES ONLY

STATE OF SOUTH DAKOTA	PROJECT	SHEET	TOTAL SHEETS
	NH0016(79)67	B16	B135

PLOTTING DATE: 11-13-15 REV 12-02-15 JRV

		Reinforced Concrete																High Density Polyethylene (HDPE)		
		Circular						Tee	Tee	Tee	Tee	Tee	Tee	Cap	Cross	Bend	Increaser	Circular	Tee	Bend
		12" RCP Cl 3	18" RCP Cl 3	24" RCP Cl 3	36" RCP CL 2	42" RCP Cl 2	48" RCP Cl 2	24" x 18"	24" x 24"	36" x 18"	42" x 18"	48" x 12"	48" x 18"	24"	48" x 18"	24" 45°	24" x 36"	8"	8" x 8"	8" 90°
Alignment	Station - Offset (L/R)	Ft	Ft	Ft	Ft	Ft	Ft	Each	Each	Each	Each	Each	Each	Each	Each	Each	Each	Ft	Each	Each
Clark Street East																				
	0+65.37 - 12.7' RT TO 0+65.37 - 11.7' LT		24																	
Columbus Street																				
	4+12.19 - 9.2' RT TO 4+30.04 - 9.2' RT						18													
	4+29.96 - 33.4' RT TO 4+30.04 - 9.2' RT		24																	
	4+30.04 - 9.2' RT TO 4+66.86 - 9.4' RT						34													
	4+30.04 - 9.2' RT		-4				-8						1							
	4+33.75 - 31.1' LT TO 4+66.76 - 33.7' LT		32																	
	5+70.46 - 33.8' RT TO 5+70.46 - 33.7' LT		66																	
Fairview Street																				
	4+37.72 - 38.1' LT TO 4+62.16 - 59.3' LT		26																	
	4+37.72 - 15.3' RT TO 4+56.92 - 32.6' RT		24																	
	5+59.52 - 15.7' RT TO 5+59.52 - 15.7' LT		30																	
	6+39.27 - 15' RT TO 5+59.52 - 15.7' RT		78																	
	6+39.27 - 15' RT TO 6+39.27 - 15.7' LT		30																	
Mainline NH0016(79)67																				
	62+65.18 - 6.9' LT TO 62+70.43 - 6.9' LT			4																
	62+70.43 - 6.9' LT TO 62+93.22 - 29.4' LT			32																
	62+70.43 - 6.9' LT			-8												1				
	62+85.19 - 33.1' LT TO 62+93.22 - 33.1' LT			10																
	62+93.22 -29.4' LT TO 62+93.22 - 33.1' LT			4																
	62+93.22 - 29.4' LT			-8												1				
	62+93.22 - 33.1' LT TO 63+01.2 - 33.1' LT			8																
	62+93.22 - 33.1' LT			-12					1											
	63+01.20 - 33.2' LT TO 63+35.08 - 33.1' LT				34															
	63+01.20 - 33.2' LT																1			
	63+00.50 - 33.2' RT TO 63+34.84 - 33.2' RT			36										1						
	63+34.84 - 33.2' RT TO 63+96.90 - 33.2' RT			62																
	63+34.8 - 33.2' RT		-4	-8				1												
	63+35.08 - 33.1' LT TO 63+96.90 - 33.2' LT				60															
	63+35.1 - 33.1' LT		-4			-8				1										
	63+96.90 - 33.2' RT TO 63+96.90 - 33.2' LT			64																
	63+96.90 - 33.2' LT TO 65+14.51 - 33.2' LT					114														
	65+14.51 - 33.2' RT TO 65+14.51 - 33.2' LT		64																	
	65+14.51 - 33.2' LT TO 65+99.28 - 33.2' LT					82														
	65+99.28 - 33.2' RT TO 65+99.28 - 33.2' LT		64																	
	65+99.28 - 33.2' LT TO 66+83.79 - 33.2' LT					84														
	66+83.79 - 7.8' LT TO 66+83.79 - 33.2' LT		26																	
	66+83.79 - 3.2' LT TO 66+83.79 - 7.8' LT		4																	
	66+83.79 - 33.2' RT TO 66+83.79 - 3.2' LT		36																	
	66+83.79 - 33.2' LT TO 67+03.16 - 33.2' LT					20														
	66+83.8 - 33.2' LT		-4			-8					1									
	67+03.16 - 43.2' LT TO 67+03.16 - 33.2' LT		10																	

REGISTERED PROFESSIONAL ENGINEER
REG. NO. 8019
JOHN RAYMOND VAN BEEK
SOUTH DAKOTA
12/2/15

11-13-15 P:\12-117\AutoCAD\PlanSheets\027C\Section_B\027C-TABLE_OF_PIPE_QUANTITIES.dwg

PIPE QUANTITIES

FOR BIDDING PURPOSES ONLY

STATE OF SOUTH DAKOTA	PROJECT	SHEET	TOTAL SHEETS
	NH0016(79)67	B17	B135

PLOTTING DATE: 11-13-15 REV 12-02-15 JRV

		Reinforced Concrete																High Density Polyethylene (HDPE)		
		Circular						Tee	Tee	Tee	Tee	Tee	Tee	Cap	Cross	Bend	Increaser	Circular	Tee	Bend
		12" RCP Cl 3	18" RCP Cl 3	24" RCP Cl 3	36" RCP CL 2	42" RCP Cl 2	48" RCP Cl 2	24" x 18"	24" x 24"	36" x 18"	42" x 18"	48" x 12"	48" x 18"	24"	48" x 18"	24" 45°	24" x 36"	8"	8" x 8"	8" 90°
Alignment	Station - Offset (L/R)	Ft	Ft	Ft	Ft	Ft	Ft	Each	Each	Each	Each	Each	Each	Each	Each	Each	Each	Ft	Each	Each
	67+03.16 - 33.2' LT TO 67+77.27 - 33.2' LT					72														
	67+03.2 - 33.2' LT		-4			-8					1									
	67+19.77 - 59.5' RT TO 66+83.79 - 33.2' RT		42																	
	67+77.27 - 33.2' LT TO 67+95.00 - 37.7' LT					10														
	67+95.00 - 42.2' RT TO 67+95.00 - 7.8' RT		34																	
	67+95.00 - 7.8' RT TO 67+95.00 - 3.2' RT		4																	
	67+95.00 - 3.2' RT TO 67+95.00 - 37.7' LT		38																	
	67+95.00 - 37.7' LT TO 68+25.00 - 33.2' LT					22														
	68+25.00 - 33.2' LT TO 69+08.00 - 33.2' LT					78														
	68+88.00 - 33.2' RT TO 69+08.00 - 36.2' RT		16																	
	69+08.00 - 36.2' RT TO 69+64.34 - 33.2' RT		52																	
	69+08.00 - 36.2' RT TO 69+08.00 - 33.2' LT		66																	
	69+08.00 - 33.2' LT TO 69+64.34 - 33.2' LT					52														
	69+64.34 - 33.2' LT TO 70+67.80 - 33.2' LT					98														
	70+67.80 - 33.2' RT TO 70+67.80 - 33.2' LT		64																	
	70+67.80 - 33.2' LT TO 71+18.10 - 33.2' LT					48														
	71+17.10 - 65.4' RT TO 71+18.10 - 33.2' LT		98																	
	71+18.10 - 33.2' LT TO 73+09.36 - 33.2' LT					190														
	71+18.1 - 33.2' LT		-4			-8					1									
	73+09.36 - 33.2' RT TO 73+09.36 - 33.2' LT		64																	
	73+09.36 - 33.2' LT TO 74+84.46 - 33.2' LT					170														
	74+84.46 - 33.2' RT TO 74+84.46 - 33.2' LT		64																	
	74+84.46 - 33.2' LT TO 76+37.31 - 33.2' LT					152														
	76+37.23 - 33.2' RT TO 76+37.28 - 3.2' LT		36																	
	76+37.28 - 7.8' LT TO 76+37.31 - 33.2' LT		22																	
	76+37.28 - 3.2' LT TO 76+37.28 - 7.8' LT		4																	
	76+37.31 - 33.2' LT TO 77+33.19 - 31.9' LT					98														
	77+33.19 - 33.2' RT TO 77+33.19 - 31.9' LT		66																	
	77+33.19 - 31.9' LT TO 78+64.45 - 33.2' LT					130														
	77+33.2 - 31.9' LT		-4			-8					1									
	78+64.45 - 33.2' RT TO 78+64.45 - 33.2' LT		64																	
	78+64.45 - 33.2' LT TO 79+88.72 - 33.2' LT					120														
	79+88.72 - 33.2' LT TO 80+36.33 - 33.2' LT						46													
	80+36.33 - 7.8' LT TO 80+36.33 - 33.2' LT		26																	
	80+36.33 - 3.2' LT TO 80+36.33 - 7.8' LT		4																	
	80+36.33 - 33.2' RT TO 80+36.33 - 3.2' LT		36																	
	80+36.33 - 33.2' LT TO 80+80.02 - 33.2' LT						42													
	80+36.3 - 33.2' LT		-4				-8						1							
	80+80.02 - 33.2' LT TO 81+23.09 - 33.2' LT						42													
	81+22.85 - 70.5' RT TO 81+23.09 - 33.2' LT		104																	
	81+23.09 - 33.2' LT TO 81+56.19 - 33.2' LT						32													
	81+23.1 - 33.2' LT		-8				-8								1					
	81+56.19 - 33.2' LT TO 82+67.92 - 33.2' LT						108													

REGISTERED PROFESSIONAL ENGINEER
REG. NO. 8019
JOHN RAYMOND VAN BEEK
SOUTH DAKOTA
12/2/15

11-13-15 P:\12-117\AutoCAD\PlanSheets\027C\Section_B\027C-TABLE OF PIPE QUANTITIES.dwg

PIPE QUANTITIES

FOR BIDDING PURPOSES ONLY

STATE OF SOUTH DAKOTA	PROJECT	SHEET	TOTAL SHEETS
	NH0016(79)67	B18	B135

PLOTTING DATE: 11-13-15 REV 12-02-15 JRV

		Reinforced Concrete																High Density Polyethylene (HDPE)		
		Circular						Tee	Tee	Tee	Tee	Tee	Tee	Cap	Cross	Bend	Increaser	Circular	Tee	Bend
		12" RCP Cl 3	18" RCP Cl 3	24" RCP Cl 3	36" RCP CL 2	42" RCP Cl 2	48" RCP Cl 2	24" x 18"	24" x 24"	36" x 18"	42" x 18"	48" x 12"	48" x 18"	24"	48" x 18"	24" 45°	24" x 36"	8"	8" x 8"	8" 90°
Alignment	Station - Offset (L/R)	Ft	Ft	Ft	Ft	Ft	Ft	Each	Each	Each	Each	Each	Each	Each	Each	Each	Each	Ft	Each	Each
	82+67.92 - 33.2' RT TO 82+67.92 - 33.2' LT		64																	
	82+67.92 - 33.2' LT TO 84+38.65 - 33.2' LT						166													
	82+67.92 - 33.2' RT TO 82+71.89 - 51' RT																	18		
	84+34.63 - 7.8' LT TO 84+38.65 - 33.2' LT		22																	
	84+34.63 - 3.2' LT TO 84+34.63 - 7.8' LT		4																	
	84+34.63 - 33.2' RT TO 84+34.63 - 3.2' LT		36																	
	84+38.65 - 33.2' LT TO 86+40.25 - 33.7' LT						198													
	85+66.18 - 51' RT TO 85+66.20 - 37.7' RT																	14		
	85+66.20 - 37.7' RT TO 86+40.23 - 37.7' RT																	76		
	85+66.2 - 37.7' RT																			1
	86+40.04 - 51.3' RT TO 86+40.23 - 37.7' RT																	14		
	86+40.23 - 37.7' RT TO 86+40.25 - 33.7' RT																	4		
	86+40.2 - 37.7' RT																		1	
	86+40.25 - 33.7' RT TO 86+40.25 - 33.7' LT		64																	
	86+40.25 - 33.7' LT TO 86+82.93 - 33.7' LT						40													
	86+82.93 - 33.7' LT TO 87+89.53 - 34.67' LT						104													
	86+82.93 - 41.2' LT TO 86+82.93 - 33.7' LT	8																		
	86+82.9 - 33.7' LT	-4					-8					1								
	87+89.53 - 34.7' LT TO 87+89.53 - 10.1' LT						18													
Quincy Street																				
	4+29.24 - 33.7' RT TO 4+66.87 - 50.5' RT		38																	
	4+29.24 - 33.7' RT TO 4+33.69 - 31.1' LT		62																	
South Street																				
	5+59.17 - 38' LT TO 5+33.17 - 43.4' LT		24																	
	5+60.32 - 15.7' RT TO 5+59.17 - 38' LT		52																	
St. James Street																				
	3+28.67 - 15.7' RT TO 3+28.67 - 15.7' LT		30																	
	3+28.67 - 15.7' RT TO 4+38.73 - 15.7' RT		108																	
	4+38.73 - 15.7' RT TO 4+66.91 - 15.6' RT		28																	
	4+38.73 - 15.7' RT TO 4+38.73 - 15.3' LT		30																	
	5+33.05 - 46.4' LT TO 5+58.54 - 15.7' LT		36																	
	5+58.54 - 15.7' RT TO 5+33.18 - 15.7' RT		24																	
	5+81.69 - 15.7' RT TO 5+58.54 - 15.7' RT		22																	
	TOTAL	4	2046	184	94	1500	816	1	1	1	4	1	2	1	1	2	1	126	1	1

REGISTERED PROFESSIONAL ENGINEER
REG. NO. 8019
JOHN RAYMOND VAN BEEK
SOUTH DAKOTA
12/2/15

11-13-15 P:\12-117\AutoCAD\PlanSheets\027C\Section B\027C-TABLE OF PIPE QUANTITIES.dwg

TABLE OF PAVEMENT, CURB AND GUTTER, AND SIDEWALK QUANTITIES

FOR BIDDING PURPOSES ONLY

STATE OF SOUTH DAKOTA	PROJECT	SHEET	TOTAL SHEETS
	NH0016(79)67	B19	B135

PLOTTING DATE: 12-2-15 REV 12-02-15 JRV

			CONCRETE CURB AND GUTTER			CONCRETE GUTTER		PCC FILLET SECTION		PCC APPROACH PAVEMENT			CONCRETE SIDEWALK		COLORED CONCRETE SIDEWALK		DETECTABLE WARNINGS
			TYPE B		TYPE F	TYPE P				TYPE A	TYPE B	TYPE A FAST TRACK					TYPE 1
			610	66	610	6	10	10"	6"	8"	8"	8"	4"	6" REINFORCED	4"	6" REINFORCED	
Station to Station		L/R	Ft	Ft	Ft	Ft	Ft	SqYd	SqYd	SqYd	SqYd	SqYd	SqFt	SqFt	SqFt	SqFt	
Mainline																	
62+49.91	63+11.52	R		61.6													
62+50.09	63+11.70	L		61.6													
62+50.13	63+32.69	L											184.1				
63+09.04	63+32.12	R											258.4				
63+11.52	63+36.52	R						26.0									
63+11.70	63+36.70	L						25.9									
63+14.21	34.79'	R															10
63+14.52		L															10
63+16.68	63+33.85	R													105.2		
63+64.47	63+89.47	R						35.9									
63+64.75	63+89.75	L						25.9									
63+89.53	65+19.20	R													1059.2		
63+95.43	64+03.07	L													88.1		
63+67.64	64+31.75	L											481.1				
63+67.56	65+25.20	R											914.9				
63+86.93		L															10
63+87.04		R															10
63+89.36	64+03.06	L													104.4		
63+89.46	65+25.20	R	135.8														
63+89.56	63+19.20	R													1148.4		
63+89.75	64+31.76	L	42.0														
64+13.06	64+25.76	L													105.0		
64+31.76	64+45.76	L					**										
64+38.75		L										35.8					
64+45.76	65+30.43	L	84.7														
64+46.53	65+30.43	L											585.7				
64+51.76	65+24.45	L													601.6		
65+25.20	65+55.20	R					30.0										
65+30.43	65+50.43	L					20.0										
65+40.19		R								58.3							
65+40.44		L								40.5							
65+50.43	67+06.78	L	157.8														
65+50.43	67+19.12	L											1143.0				
65+55.20	66+96.45	R	141.2														
65+55.20	67+17.07	R											885.8				
65+56.43	66+67.22	L													784.8		
65+61.20	67+05.07	R													1203.2		
66+96.03	67+18.82	R													350.3		
67+12.16		R															10
67+13.81		L															10
67+52.45	67+73.92	L													194.1		
67+52.61	69+20.23	R											808.4				
67+54.78	67+86.76	R											191.7				
Subtotal: Sheet total			561.5	123.2	0.0	0.0	50.0	113.7	0.0	98.8	0.0	35.8	5453.1	0.0	5744.25	0.0	60.0

REGISTERED PROFESSIONAL ENGINEER
REG. NO. 8019
JOHN RAYMOND VAN BEEK
SOUTH DAKOTA
12/2/15

**Denotes that this quantity of Type P Concrete Gutter is included in the area of the adjacent Type A Fast Track PCC Approach. No additional payment will be made.

P:\12-117\AutoCAD\PlanSheets\027C\Section_B\027C-SDDOT_PCCS_QUANTITIES.dwg 12-2-15

TABLE OF PAVEMENT, CURB AND GUTTER, AND SIDEWALK QUANTITIES

FOR BIDDING PURPOSES ONLY

STATE OF SOUTH DAKOTA	PROJECT	SHEET	TOTAL SHEETS
	NH0016(79)67	B20	B135

PLOTTING DATE: 12-2-15 REV 12-02-15 JRV

			CONCRETE CURB AND GUTTER			CONCRETE GUTTER		PCC FILLET SECTION		PCC APPROACH PAVEMENT			CONCRETE SIDEWALK		COLORED CONCRETE SIDEWALK		DETECTABLE WARNINGS
			TYPE B		TYPE F	TYPE P				TYPE A	TYPE B	TYPE A FAST TRACK					TYPE 1
			610	66	610	6	10	10"	6"	8"	8"	8"	4"	6" REINFORCED	4"	6" REINFORCED	
Station to Station		L/R	Ft	Ft	Ft	Ft	Ft	SqYd	SqYd	SqYd	SqYd	SqYd	SqFt	SqFt	SqFt	SqFt	
Mainline cont.																	
67+54.16	68+48.91	L											530.4				
67+58.37		R															10
67+59.06		L															10
67+66.16	67+84.50	L													147.9		
67+62.53	67+86.53	R													82.9		
67+64.45	69+20.23	R	157.1														
67+64.52	69+14.34	R													965.5		
67+74.78	68+48.91	L	74.1														
67+84.50	68+05.50	L														172.7	
67+85.44	76+39.00	L	855.9														
67+85.44	76+38.90	R	855.4														
67+86.53	68+02.47	R														39.3	
67+86.75	68+04.18	R												86.9			
68+02.47	69+14.23	R													935.5		
68+03.35	69+20.24	R											582.4				
68+05.50	68+42.94	L													307.6		
68+48.91	68+72.91	L					**										
68+60.93		L										53.3					
68+72.91	69+20.40	L	47.5														
68+72.91	69+20.35	L											258.2				
68+78.91	69+14.40	L													291.7		
69+20.23	69+40.23	R					**										
69+20.40	69+40.40	L					20.0										
69+30.23		R										48.9					
69+30.41		L								40.3							
69+39.69	70+91.76	R											1804.3				
69+40.23	70+79.43	R	139.2														
69+40.40	70+91.41	L	151.0														
69+40.40	71+13.33	L											1049.2				
69+46.23	70+84.27	R													681.5		
69+46.40	70+76.44	L													995.6		
70+86.48	71+13.52	L													304.1		
70+86.44	71+00.72	L													112.6		
71+28.43	71+81.31	R/L											286.7				
71+18.15	76+70.59	R											3816.3				
71+30.43	76+45.63	R	510.8														
71+32.92		R															10
71+32.94		R															10
71+36.79	74+76.81	R													1615.1		
71+47.29	71+74.31	L													302.2		
71+47.29	73+20.30	L											1092.7				
71+59.58	71+74.31	L													89.4		
Subtotal: Sheet total			2791	0.0	0.0	0.0	20.0	0.0	0.0	40.3	0.0	102.2	9420.2	86.9	6831.6	212.0	40.0

REGISTERED PROFESSIONAL ENGINEER
REG. NO. 8019
JOHN RAYMOND VAN BEEK
SOUTH DAKOTA
12/2/15

**Denotes that this quantity of Type P Concrete Gutter is included in the area of the adjacent Type A Fast Track PCC Approach. No additional payment will be made.

P:\12-117\AutoCAD\PlanSheets\027C\Section B\027C-SDDOT PCCS QUANTITIES.dwg 12-2-15

TABLE OF PAVEMENT, CURB AND GUTTER, AND SIDEWALK QUANTITIES

FOR BIDDING PURPOSES ONLY

STATE OF SOUTH DAKOTA	PROJECT	SHEET	TOTAL SHEETS
	NH0016(79)67	B21	B135

PLOTTING DATE: 12-2-15 REV 12-02-15 JRV

			CONCRETE CURB AND GUTTER			CONCRETE GUTTER		PCC FILLET SECTION		PCC APPROACH PAVEMENT			CONCRETE SIDEWALK		COLORED CONCRETE SIDEWALK		DETECTABLE WARNINGS
			TYPE B		TYPE F	TYPE P				TYPE A	TYPE B	TYPE A FAST TRACK					TYPE 1
			610	66	610	6	10	10"	6"	8"	8"	8"	4"	6" REINFORCED	4"	6" REINFORCED	
Station to Station		L/R	Ft	Ft	Ft	Ft	Ft	SqYd	SqYd	SqYd	SqYd	SqYd	SqFt	SqFt	SqFt	SqFt	
Mainline cont.																	
71+69.41	73+20.30	L	150.9														
71+76.81		L															10.0
71+76.82		L															10.0
71+79.31	73+14.30	L													1025.8		
73+30.30		L								41.0							
73+20.30	73+40.30	L					20.0										
73+40.30	74+89.18	L	148.9														
73+40.30	75+11.33	L											1268.7				
73+46.21	74+76.54	L													1022.3		
74+86.54	74+99.84	L													99.5		
74+86.54	75+11.52	L													247.0		
75+46.16	75+46.15	L	1.7														
75+48.83	76+74.75	L											856.0				
75+50.00	75+75.12	L													32.0		
75+52.99	76+52.98	L													938.9		
75+60.15	76+63.19	L	108.5														
76+50.96	76+68.96	L													38.6		
76+54.73		R															10.0
76+55.27		L															10.0
76+57.56	76+74.21	L													135.9		
76+77.24	76+77.26	L	3.6														
77+06.34	78+80.87	R											1646.3				
77+06.46	78+29.39	L											772.7				
77+23.72		R															10.0
77+24.24		L															10.0
77+26.25	78+68.16	R													955.2		
77+26.74	78+23.69	L													839.7		
77+28.75	78+74.16	R	145.4														
77+28.78	78+29.39	L	100.6														
77+39.80	80+38.33	L	300.0														
77+39.80	80+33.33	R	300.0														
78+29.39	78+53.39	L					24.0										
78+41.39		L								52.3							
78+53.38	79+06.41	L											265.1				
78+53.39	79+06.41	L	53.0														
78+58.93	79+00.41	L													324.3		
78+74.16	79+04.16	R					30.0										
78+89.15		R								59.4							
79+04.16	80+46.20	R	141.9														
79+04.20	80+68.53	R											1104				
79+06.41	79+30.41	L					24										
79+10.09	80+32.37	R													1139.1		
Subtotal: Sheet total			1454.5	0.0	0.0	0.0	98.0	0.0	0.0	152.7	0.0	0.0	5912.8	0.0	6798.3	0.0	60.0

REGISTERED PROFESSIONAL ENGINEER
REG. NO. 8019
JOHN RAYMOND VAN BEEK
SOUTH DAKOTA
12/2/15

**Denotes that this quantity of Type P Concrete Gutter is included in the area of the adjacent Type A Fast Track PCC Approach. No additional payment will be made.

P:\12-117\AutoCAD\PlanSheets\027C\Section_B\027C-SDDOT_PCCS_QUANTITIES.dwg 12-2-15

TABLE OF PAVEMENT, CURB AND GUTTER, AND SIDEWALK QUANTITIES

FOR BIDDING PURPOSES ONLY

STATE OF SOUTH DAKOTA	PROJECT	SHEET	TOTAL SHEETS
	NH0016(79)67	B22	B135

PLOTTING DATE: 12-2-15 REV 12-02-15 JRV

			CONCRETE CURB AND GUTTER			CONCRETE GUTTER		PCC FILLET SECTION		PCC APPROACH PAVEMENT			CONCRETE SIDEWALK		COLORED CONCRETE SIDEWALK		DETECTABLE WARNINGS
			TYPE B		TYPE F	TYPE P				TYPE A	TYPE B	TYPE A FAST TRACK					TYPE 1
			610	66	610	6	10	10"	6"	8"	8"	8"	4"	6" REINFORCED	4"	6" REINFORCED	
Station to Station		L/R	Ft	Ft	Ft	Ft	Ft	SqYd	SqYd	SqYd	SqYd	SqYd	SqFt	SqFt	SqFt	SqFt	
Mainline cont.																	
79+18.40		L								52.3							
79+30.41	80+68.75	L											918.5				
79+30.41	80+56.43	L	127.4														
79+36.33	80+44.15	L													716.0		
80+50.47		L															10.0
80+50.73		L															10.0
81+09.43	82+79.40	L											1159.4				
81+09.87	82+79.17	R											1049				
81+27.21		R															10.0
81+27.90		L															10.0
81+29.70	82+73.16	R													1310.5		
81+32.20	82+79.17	R	147.0														
81+32.43	82+79.40	L	147.0														
81+43.20	84+35.18	L	293.5														
81+43.20	84+35.18	R	293.5														
81+46.16	82+73.40	L													1177.9		
82+79.17	82+99.17	R					20										
82+79.40	82+99.40	L					20										
82+89.17		R								46.1							
82+89.35		L								46.2							
82+99.17	84+67.98	R											971.3				
82+99.17	84+46.08	R	146.9														
82+99.40	84+46.17	L	146.8														
82+99.40	84+68.46	L											1009.0				
83+05.17	84+47.68	R													1277.4		
83+05.40	84+47.68	L													1373.9		
84+44.96	84+68.42	R													421.2		
84+45.44	84+68.52	L													347.4		
84+50.18		R															10.0
84+50.20		L															10.0
85+09.76	85+32.41	R													394.9		
85+09.84	85+32.33	L													339.3		
85+10.05	85+37.84	L											262.5				
85+10.52	86+79.27	R											924.4				
85+28.15		R															10.0
85+28.16		L															10.0
85+30.65	86+63.27	R													774.5		
85+30.61	85+95.05	L														515.3	
85+32.08	86+79.27	R	147.2														
85+32.17	86+01.00	L			68.8												
85+37.99	86+01.00	L												315.1			
86+01.00	86+29.00	L					28										
Subtotal: Sheet total			1449.3	0.0	68.8	0.0	68.0	0.0	0.0	144.6	0.0	0.0	6294.1	315.1	8133.0	515.3	80.0

REGISTERED PROFESSIONAL ENGINEER
REG. NO.
8019
JOHN RAYMOND
VAN BEEK
SOUTH DAKOTA
12/2/15

**Denotes that this quantity of Type P Concrete Gutter is included in the area of the adjacent Type A Fast Track PCC Approach. No additional payment will be made.

P:\12-117\AutoCAD\PlanSheets\027C\Section_B\027C-SDDOT_PCCS_QUANTITIES.dwg 12-2-15

TABLE OF PAVEMENT, CURB AND GUTTER, AND SIDEWALK QUANTITIES

FOR BIDDING PURPOSES ONLY

STATE OF SOUTH DAKOTA	PROJECT	SHEET	TOTAL SHEETS
	NH0016(79)67	B23	B135

PLOTTING DATE: 12-30-15 REV 12-30-15 JRV

			CONCRETE CURB AND GUTTER			CONCRETE GUTTER		PCC FILLET SECTION		PCC APPROACH PAVEMENT			CONCRETE SIDEWALK		COLORED CONCRETE SIDEWALK		DETECTABLE WARNINGS
			TYPE B		TYPE F	TYPE P				TYPE A	TYPE B	TYPE A FAST TRACK					TYPE 1
			610	66	610	6	10	10"	6"	8"	8"	8"	4"	6" REINFORCED	4"	6" REINFORCED	
Station to Station		L/R	Ft	Ft	Ft	Ft	Ft	SqYd	SqYd	SqYd	SqYd	SqYd	SqFt	SqFt	SqFt	SqFt	
Mainline cont.																	
86+15.00		L								56.8							
86+29.00	86+79+15	L											253.0				
86+29.00	86+79.42	L	50.4														
86+35.00	86+73.42	L													317.6		
86+79.27	86+99.27	R					20.0										
86+79.42	86+99.42	L					20.0										
86+89.27		R								45.9							
86+89.42		L								44.0							
86+99.27	87+72.72	R	73.5														
86+99.41	88+00.00	L											507.1				
86+99.42	88+01.30	L	101.9														
86+99.27	88.00.00	R											509.9				
87+05.27	87+66.78	R													566.1		
87+15.40	88+00.00	L													634.1		
87+72.72	87+92.72	R					20.0										
87+82.73		R								33.6							
87+92.72	88+01.30	R	8.5														
87+98.71	88+00.00	R													4.4		
St. James Street																	
3+24.79	4+52.51	L											731.5				
3+24.85	3+38.17	L		13.3													
3+24.85	3+59.15	R		34.3													
3+24.85	4+52.66	R											799.4				
3+38.17	3+50.17	L				12.0											
3+50.16	3+59.17	L		9.0													
3+50.02	3+64.16	L													203.4		
3+50.31	3+55.16	L													60.3		
3+54.16	4+52.66	R											93.5*				
3+54.16	4+52.51	L											105.5*				
3+57.83	4+40.73	L		106.7													
3+59.14	3+66.84	R							3.2*								
3+59.17	3+66.83	L							3.2*								
3+64.83	4+31.83	R		87.6*													
3+64.84	4+31.83	L		87.8*													
3+66.83	4+29.83	R				63.0											
3+66.84	4+29.83	L				63.0											
4+29.84	4+37.49	R							3.2*								
4+29.84	4+37.48	L							3.2*								
4+32.50	4+52.51	L													275.8		
4+32.50	4+52.66	R													275.8		
Subtotal: Sheet total			234.3	163.3	0.0	138.0	60.0	0.0	12.8	180.3	0.0	0.0	2999.9	0.0	2337.5	0.0	0.0

REGISTERED PROFESSIONAL ENGINEER
REG. NO.
8019
JOHN RAYMOND
VAN BEEK
SOUTH DAKOTA
12/30/15

* Denotes Non-Participating.
**Denotes that this quantity of Type P Concrete Gutter is included in the area of the adjacent Type A Fast Track PCC Approach. No additional payment will be made.

12-30-15 P:\12-117\AutoCAD\PlanSheets\027C\Section B\027C-SDDOT_PCCS_QUANTITIES.dwg

TABLE OF PAVEMENT, CURB AND GUTTER, AND SIDEWALK QUANTITIES

FOR BIDDING PURPOSES ONLY

STATE OF SOUTH DAKOTA	PROJECT	SHEET	TOTAL SHEETS
	NH0016(79)67	B24	B135

PLOTTING DATE: 12-30-15 REV 12-30-15 JRV

			CONCRETE CURB AND GUTTER			CONCRETE GUTTER		PCC FILLET SECTION		PCC APPROACH PAVEMENT			CONCRETE SIDEWALK		COLORED CONCRETE SIDEWALK		DETECTABLE WARNINGS
			TYPE B		TYPE F	TYPE P				TYPE A	TYPE B	TYPE A FAST TRACK					TYPE 1
			610	66	610	6	10	10"	6"	8"	8"	8"	4"	6" REINFORCED	4"	6" REINFORCED	
Station to Station		L/R	Ft	Ft	Ft	Ft	Ft	SqYd	SqYd	SqYd	SqYd	SqYd	SqFt	SqFt	SqFt	SqFt	
St James Street cont.																	
4+37.50	4+43.57	R		6.1													
4+37.50	4+43.40	L		5.9													
4+55.04		L															10.0
4+55.13		R															10.0
5+43.61		L															10.0
5+43.71		R															10.0
5+46.08	5+69.48	L													331.5		
5+48.00	5+69.30	L											106.6				
5+56.40	5+69.48	L		13.2													
5+56.58	5+84.18	R		27.6													
5+69.48	5+94.48	L				25.0											
5+81.84		L								20.6							
5+94.48	6+00.48	L		6.0													
Fairview Street																	
3+70.88	4+41.11	R											350.0				
3+70.93	3+72.06	L		22.6													
3+70.93	3+75.93	R		5.0													
3+70.93	4+40.93	R											350.0				
3+71.38	4+51.72	L											480.7				
3+72.06	4+39.05	L		67.0*													
3+75.93	4+40.93	R				65.0											
4+39.05	4+43.38	L		25.8*													
4+40.93	4+43.61	R		2.7													
5+47.99	5+67.71	R													333.6		
5+48.28	6+02.72	R											282.9				
5+55.57	5+68.57	L													155.6		
5+55.57	6+02.72	L											239.7				
5+56.40	5+68.71	L		12.3													
5+56.62	5+67.71	R		11.1													
5+67.71	5+93.71	R				24.0											
5+68.71	5+92.71	L				24.0											
5+80.67		R								21.1							
5+80.70		L								20.0							
5+92.71	6+42.00	L		49.3													
5+93.71	6+42.00	R		48.3													
66+96.45	67+21.45	R						26.1									
67+06.78	67+21.78	L						11.7									
67+49.45	67+64.45	R						11.7									
67+49.78	67+74.78	L						26.1									
Clark Street (West)																	
3+23.08	3+28.08	L		5.0													
3+28.08	4+39.08	L				111.0											
Subtotal: Sheet total			0.0	215.1	0.0	249.0	0.0	75.6	0.0	61.7	0.0	0.0	1809.9	0.0	820.7	0.0	40.0

REGISTERED PROFESSIONAL ENGINEER
REG. NO. 8019
JOHN RAYMOND VAN BEEK
SOUTH DAKOTA
12/30/15

* Denotes Non-Participating.
**Denotes that this quantity of Type P Concrete Gutter is included in the area of the adjacent Type A Fast Track PCC Approach. No additional payment will be made.

12-30-15 P:\12-117\AutoCAD\PlanSheets\027C\Section_B\027C-SDDOT_PCCS_QUANTITES.dwg

TABLE OF PAVEMENT, CURB AND GUTTER, AND SIDEWALK QUANTITIES

FOR BIDDING PURPOSES ONLY

STATE OF SOUTH DAKOTA	PROJECT	SHEET	TOTAL SHEETS
	NH0016(79)67	B25	B135

PLOTTING DATE: 12-2-15 REV 12-02-15 JRV

Station to Station		L/R	CONCRETE CURB AND GUTTER TYPE B 610 Ft	CONCRETE CURB AND GUTTER TYPE B 66 Ft	CONCRETE CURB AND GUTTER TYPE F 610 Ft	CONCRETE GUTTER TYPE P 6 Ft	CONCRETE GUTTER TYPE P 10 Ft	PCC FILLET SECTION 10" SqYd	PCC FILLET SECTION 6" SqYd	PCC APPROACH PAVEMENT TYPE A 8" SqYd	PCC APPROACH PAVEMENT TYPE B 8" SqYd	PCC APPROACH PAVEMENT TYPE A FAST TRACK 8" SqYd	CONCRETE SIDEWALK 4" SqFt	CONCRETE SIDEWALK 6" REINFORCED SqFt	COLORED CONCRETE SIDEWALK 4" SqFt	COLORED CONCRETE SIDEWALK 6" REINFORCED SqFt	DETECTABLE WARNINGS TYPE 1
Clark Street (West) cont.																	
3+80.00	3+90.08	R		10.1													
3+81.55	4+52.55	L											383.1				
3+90.08	4+39.08	R				49.0											
4+14.57		R								32.8							
4+19.05	4+52.60	R											171.2				
4+39.08	4+43.51	L		4.4													
4+39.08	4+43.50	R		4.4													
4+55.07		L															10.0
4+55.12		R															10.0
70+79.43	70+94.43	R						11.7									
70+91.41	71+16.41	L						25.9									
71+15.43	71+30.43	R						11.7									
71+44.41	71+69.41	L						26.0									
0+39.00		R															10.0
0+39.01		L															10.0
0+43.13	0+66.44	R													85.9		
0+46.49	0+68.70	R		22.2													
0+46.53	0+68.70	L		22.2													
0+53.54	0+69.84	R											88.7				
Fulton Street																	
3+91.83	4+52.13	L											400.4				
3+91.83	4+15.57	L													117.5		
3+91.80	4+47.75	L				56.0											
3+91.80	4+38.27	R				46.5											
3+91.83	4+23.75	L		31.9													
3+91.83	4+16.27	R		24.4													
3+91.83	4+52.47	R											403.3				
3+91.83	4+08.31	R													56.9		
4+11.27	4+16.27	R													14.9		
4+23.75	4+47.75	L				24.0											
4+35.71		L								21.8							
4+38.27	4+43.61	R		23.0													
4+47.75	4+47.75	L		24.0													
4+54.74		L															10.0
4+54.87		R															10.0
74+89.18	75+14.18	L						25.9									
75+46.15	75+60.15	L						95.5									
75+46.16	75+51.17	L						20.7									
South Street																	
3+78.47	4+51.10	L											507.9				
3+78.42	4+49.97	R											468.4				
3+78.42	4+16.08	R													276.7		
Subtotal: Sheet total			0.0	166.6	0.0	175.5	0.0	217.4	0.0	54.6	0.0	0.0	2423.0	0.0	551.9	0.0	60.0

REGISTERED PROFESSIONAL ENGINEER
REG. NO. 8019
JOHN RAYMOND VAN BEEK
SOUTH DAKOTA
12/2/15

**Denotes that this quantity of Type P Concrete Gutter is included in the area of the adjacent Type A Fast Track PCC Approach. No additional payment will be made.

P:\12-117\AutoCAD\PlanSheets\027C\Section_B\027C-SDDOT_PCGS_QUANTITIES.dwg 12-2-15

TABLE OF PAVEMENT, CURB AND GUTTER, AND SIDEWALK QUANTITIES

FOR BIDDING PURPOSES ONLY

STATE OF SOUTH DAKOTA	PROJECT	SHEET	TOTAL SHEETS
	NH0016(79)67	B26	B135

PLOTTING DATE: 12-2-15 REV 12-02-15 JRV

			CONCRETE CURB AND GUTTER			CONCRETE GUTTER		PCC FILLET SECTION		PCC APPROACH PAVEMENT			CONCRETE SIDEWALK		COLORED CONCRETE SIDEWALK		DETECTABLE WARNINGS
			TYPE B		TYPE F	TYPE P				TYPE A	TYPE B	TYPE A FAST TRACK					TYPE 1
			610	66	610	6	10	10"	6"	8"	8"	8"	4"	6" REINFORCED	4"	6" REINFORCED	
Station to Station		L/R	Ft	Ft	Ft	Ft	Ft	SqYd	SqYd	SqYd	SqYd	SqYd	SqFt	SqFt	SqFt	SqFt	
South Street cont.																	
3+78.47	3+83.75	L		5.3													
3+78.47	4+21.30	R		42.8													
3+78.50	4+45.30	R				66.9											
3+83.75	4+07.75	L				24.0											
3+95.76		L								19.0							
4+07.75	4+43.59	L		35.9													
4+07.76	4+50.91	L													594.8		
4+15.23	4+21.28	R													17.7		
4+21.30	4+45.30	R				24.0											
4+45.30	4+47.30	R		23.8													
4+52.46		R															10.0
4+53.53		L															10.0
5+52.92	7+19.63	L											1119.3				
5+50.33		R															10.0
5+50.46		L															10.0
5+52.81	6+86.93	L													635.6		
5+57.15	7+49.10	L		236.2													
5+58.30	6+90.63	R		132.3													
5+62.84	7+51.01	R											955.1				
6+90.63	7+12.63	R				22.0											
6+91.93	7+19.63	L													117.8		
7+01.65		R								18.9							
7+12.63	7+19.63	R		7.0													
76+45.63	76+73.73	R						29.2									
76+63.19	76+77.11	L						11.2									
76+77.17	76+72.75	L						20.7									
77+03.74	77+28.78	L						24.8									
77+03.75	77+28.75	R						25.9									
Columbus Street																	
3+92.26	4+43.55	R		59.4													
3+92.30	3+98.78	L		6.5													
3+96.21	4+43.51	L											423.5				
4+28.37	4+49.47	R											148.8				
4+32.84	4+43.51	L													61.3		
4+33.00	4+43.66	R													155.9		
5+50.13	5+67.18	L													301.3		
5+50.13	5+70.00	L											102.4				
5+50.19	5+67.42	R													319.1		
5+50.19	5+70.00	R											100.8				
Subtotal: Sheet total			0.0	549.2	0.0	136.9	0.0	111.8	0.0	37.9	0.0	0.0	2849.9	0.0	2203.5	0.0	40.0

REGISTERED PROFESSIONAL ENGINEER
REG. NO.
8019
JOHN RAYMOND
VAN BEEK
SOUTH DAKOTA
12/2/15

**Denotes that this quantity of Type P Concrete Gutter is included in the area of the adjacent Type A Fast Track PCC Approach. No additional payment will be made.

12-2-15 P:\12-117\AutoCAD\PlanSheets\027C\Section_B\027C-SDDOT_PCCS_QUANTITIES.dwg

TABLE OF PAVEMENT, CURB AND GUTTER, AND SIDEWALK QUANTITIES

FOR BIDDING PURPOSES ONLY

STATE OF SOUTH DAKOTA	PROJECT	SHEET	TOTAL SHEETS
	NH0016(79)67	B27	B135

PLOTTING DATE: 12-2-15 REV 12-02-15 JRV

			CONCRETE CURB AND GUTTER			CONCRETE GUTTER		PCC FILLET SECTION		PCC APPROACH PAVEMENT			CONCRETE SIDEWALK		COLORED CONCRETE SIDEWALK		DETECTABLE WARNINGS
			TYPE B		TYPE F	TYPE P				TYPE A	TYPE B	TYPE A FAST TRACK					TYPE 1
			610	66	610	6	10	10"	6"	8"	8"	8"	4"	6" REINFORCED	4"	6" REINFORCED	
Station to Station		L/R	Ft	Ft	Ft	Ft	Ft	SqYd	SqYd	SqYd	SqYd	SqYd	SqFt	SqFt	SqFt	SqFt	
Quincy Street																	
3+92.26	4+51.02	R											295.2				
3+92.31	4+50.96	L											322.6				
3+98.78	4+30.79	L				26.0											
4+12.26	4+17.57	L		5.3													
4+12.26	4+43.57	R		39.2													
4+14.80		L								37.8							
4+17.57	4+30.07	L				13.0											
4+23.81		L									23.5						
4+30.07	4+43.41	L		21.4													
4+30.79	4+43.10	L		20.4													
4+32.69	4+50.96	L													315.5		
4+32.78	4+51.01	R													326.6		
4+46.04		R															10.0
4+46.05		L															10.0
4+53.47		L															10.0
4+53.48		R															10.0
5+43.65		L															10.0
5+43.69		R															10.0
5+46.13	5+84.02	L											188.2				
5+46.13	5+66.58	L													369.2		
5+46.21	5+67.58	R													397.2		
5+47.67		R															10.0
5+47.68		L															10.0
5+49.05	5+83.95	R											174.4				
5+56.37	5+57.46	L		29.1													
5+56.51	5+83.95	R		35.8													
5+56.58	5+57.46	R		29.1													
5+56.95	5+84.01	L		34.6													
80+46.20	80+71.20	R						26.0									
80+56.43	80+71.42	L						11.7									
81+07.20	81+32.20	R						25.8									
81+07.43	81+32.43	L						26.0									
84+46.08	84+71.08	R						26.0									
84+46.17	84+71.17	L						25.9									
85+07.08	85+32.08	R						25.9									
85+07.17	85+32.17	L						25.9									
Subtotal: Sheet total			0.0	214.9	0.0	39.0	0.0	193.2	0.0	37.8	23.5	0.0	980.4	0.0	1408.5	0.0	80.0
Total: Grand			6490.6	1432.3	68.8	738.4	296.0	711.7	12.8	808.7	23.5	138.0	38143.3	402.0	34829.2	727.3	460.0

REGISTERED PROFESSIONAL ENGINEER
REG. NO. 8019
JOHN RAYMOND VAN BEEK
SOUTH DAKOTA
12/2/15

**Denotes that this quantity of Type P Concrete Gutter is included in the area of the adjacent Type A Fast Track PCC Approach. No additional payment will be made.

12-2-15 P:\12-117\AutoCAD\PlanSheets\027C\Section B\027C-SDDOT PCCS QUANTITIES.dwg

TYPICAL GRADING SECTIONS

63+12 To 67+79
76+45 To 77+34
80+44 To 81+37
84+41 To 88+01

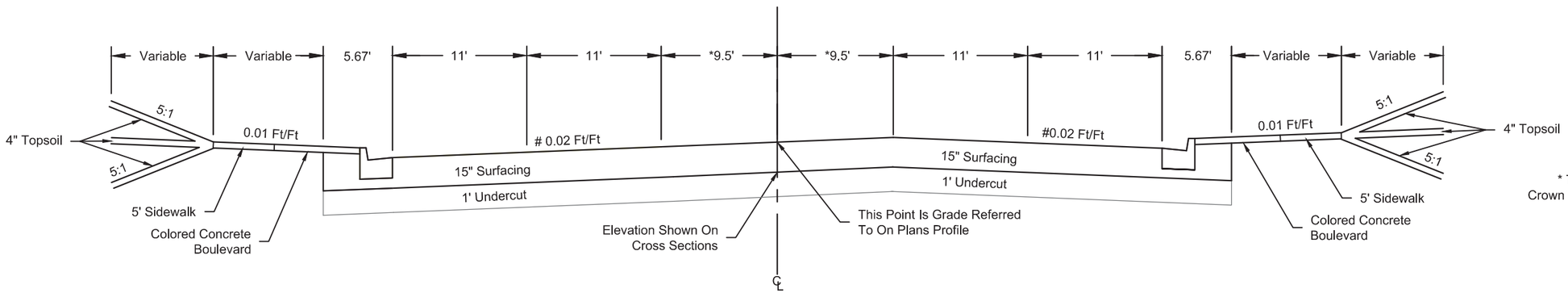

* Transition 9.5' To 11'
Crown Transitions 9.5' R to 0' R :
84+71 To 85+07

Table of Cross Slopes - Mt. Rushmore Road

Station	# Slope LT of CL	# Slope RT of CL
62+50.00	0.96%	-1.84%
63+11.60	-2.00%	-2.00%
87+75.30	-2.00%	-2.00%
88+01.30	-1.25%	-1.47%

69+05 To 74+23

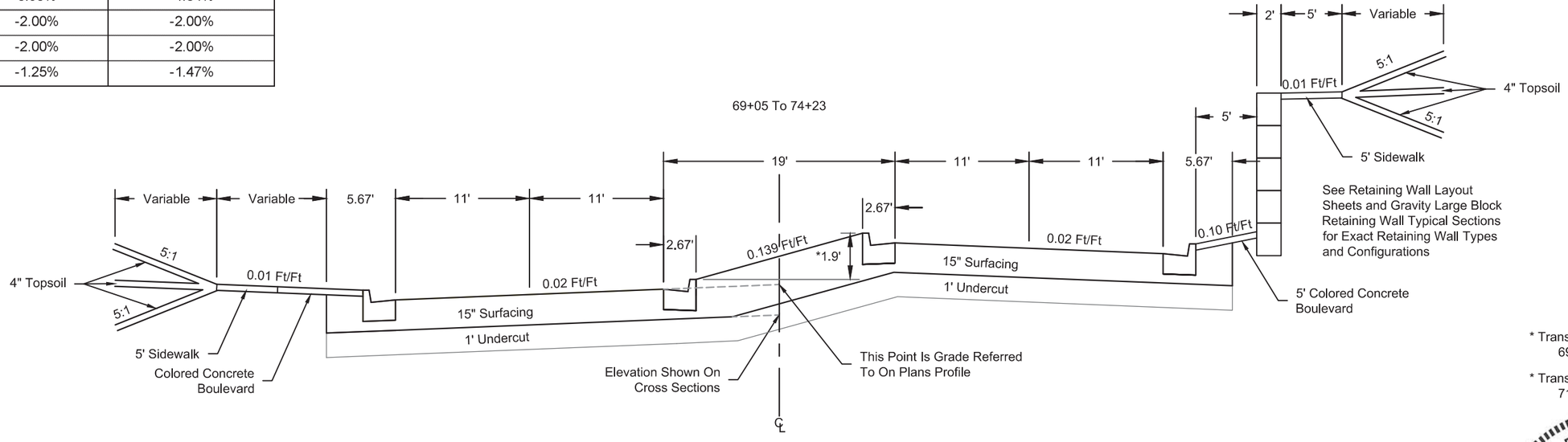

See Retaining Wall Layout Sheets and Gravity Large Block Retaining Wall Typical Sections for Exact Retaining Wall Types and Configurations

* Transition 0.38' To 1.90' :
69+08 To 70+66

* Transition 1.90' To 0.38' :
71+41 To 74+23

11-12-15 P:\12-117\AutoCAD\PlanSheets\027C\Section_B\027C-TYPSEC.dwg

FOR BIDDING PURPOSES ONLY

STATE OF SOUTH DAKOTA	PROJECT	SHEET	TOTAL SHEETS
	NH0016(79)67	B29	B135

PLOTTING DATE: 11-12-15

TYPICAL GRADING SECTIONS

74+23 To 75+49
78+34 To 78+91
82+88 To 82+91

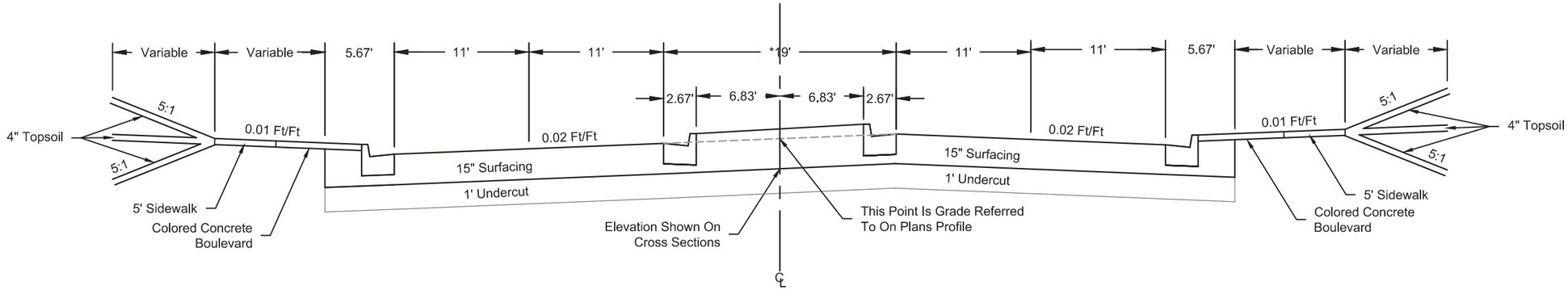

*Transition 19' to 8':

75+49 To 75+89
78+91 To 79+31
82+91 To 83+30

75+89 To 76+45
79+31 To 80+44
83+30 To 84+41

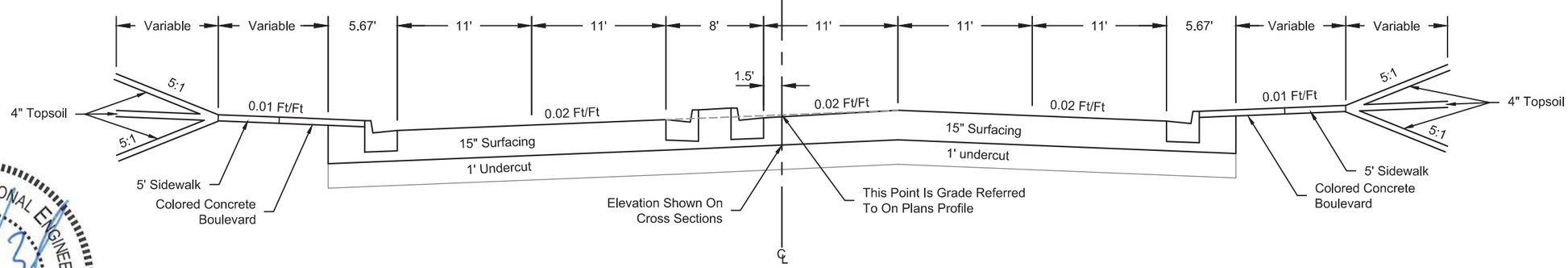

67+79 To 68+65
77+34 To 77+95
81+37 To 82+48

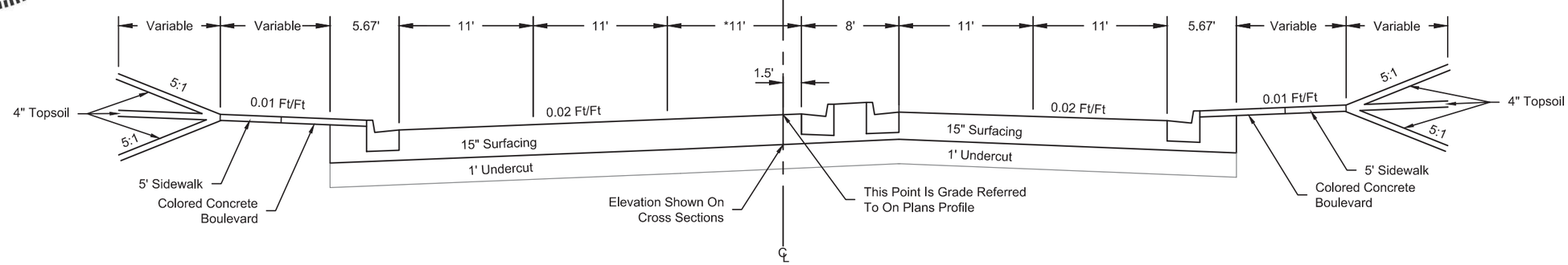

* Transition 11' to 0' :

68+65 To 69+05
77+95 To 78+34
82+48 To 82+88

11-12-15 P:\12-117\AutoCAD\PlanSheets\027C\Section B\027C-TYPSEC.dwg

FOR BIDDING PURPOSES ONLY

TYPICAL GRADING SECTIONS

3+25 to 5+84 (St. James Street)
3+71 to 6+42 (Fairview Street)
3+29 to 4+69 (Clark Street West)
4+45 to 7+20 (South Street)

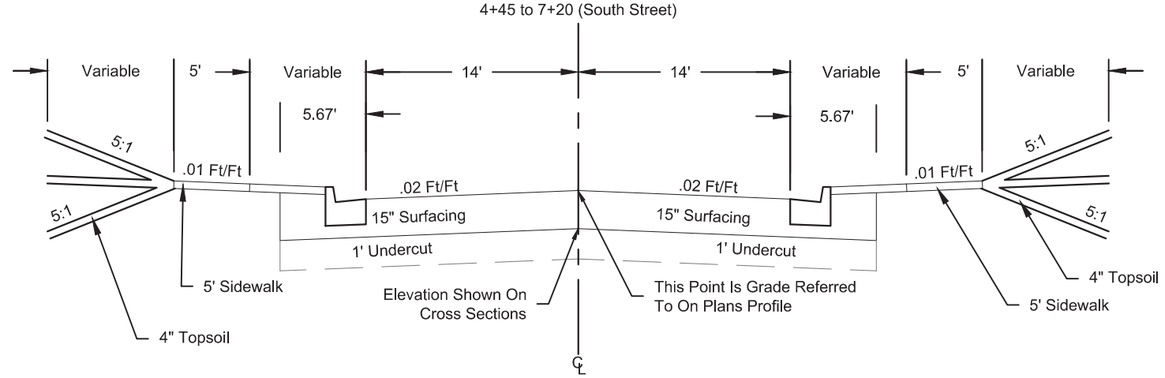

0+32 to 0+69 (Clark Street East)

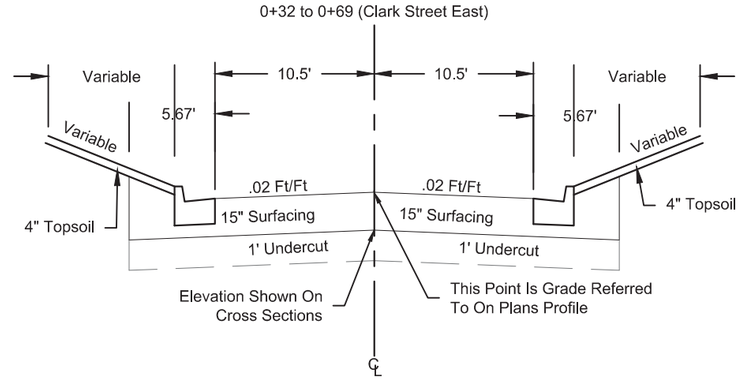

3+92 to 4+69 (Fulton Street)
3+79 to 4+21 (South Street)

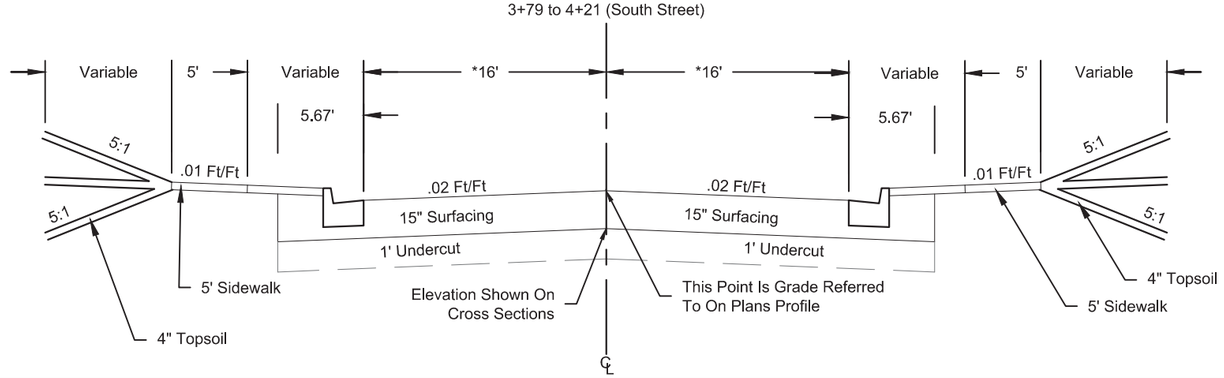

*Transition 16' to 14' (South Street):

4+21 to 4+45

Table of Cross Slopes - St James Street

Station	Slope LT of CL	Slope RT of CL
3+24.85	-7.17%	-3.97%
3+39.25	-2.00%	-2.00%
4+16.00	-2.00%	-2.00%
4+33.56	-0.92%	0.92%
5+56.57	-0.92%	0.92%
5+84.17	-3.86%	-3.62%

Table of Cross Slopes - Fairview Street

Station	Slope LT of CL	Slope RT of CL
3+70.93	-6.88%	-4.38%
3+84.33	-2.00%	-2.00%
4+43.39	-0.75%	0.75%
5+56.62	-0.75%	0.75%
6+42.00	0.36%	-5.37%

Table of Cross Slopes - Clark Street East

Station	Slope LT of CL	Slope RT of CL
0+31.50	-0.50%	0.50%
0+46.50	-0.50%	0.50%
0+68.70	-3.45%	-1.46%

Table of Cross Slopes - Clark Street West

Station	Slope LT of CL	Slope RT of CL
3+23.08	-3.76%	-4.74%
3+39.08	-2.00%	-2.00%
4+00.00	-2.00%	-2.00%
4+43.50	-0.50%	0.50%
4+68.50	-0.50%	0.50%

Table of Cross Slopes - Fulton Street

Station	Slope LT of CL	Slope RT of CL
3+91.77	-2.00%	-2.00%
3+99.94	-2.00%	-2.00%
4+43.50	-0.50%	0.50%
4+68.50	-0.50%	0.50%

Table of Cross Slopes - South Street

Station	Slope LT of CL	Slope RT of CL
3+78.47	-2.00%	-2.00%
3+80.00	-2.00%	-2.00%
4+43.50	-4.46%	4.46%
5+58.32	-4.46%	4.46%
7+09.63	-4.46%	4.46%
7+19.63	-7.60%	-0.58%

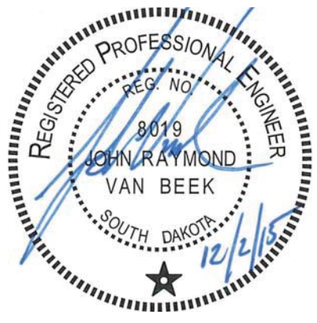

TYPICAL GRADING SECTIONS

Table of Cross Slopes - Columbus Street

Station	Slope LT of CL	Slope RT of CL
3+96.21	-4.04%	-0.75%
4+43.43	-1.86%	1.86%
5+56.42	-1.86%	1.86%
5+97.48	-4.36%	0.90%

Table of Cross Slopes - Quincy Street

Station	Slope LT of CL	Slope RT of CL
3+92.28	-2.97%	-2.49%
4+42.92	-0.97%	0.97%
5+56.54	-0.97%	0.97%
5+83.98	-3.28%	-2.18%

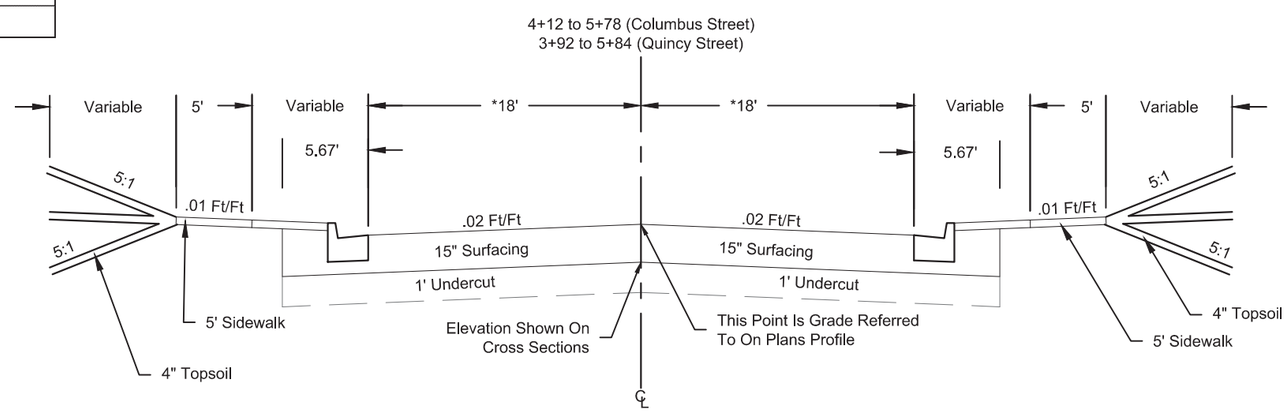

*32':

Columbus Street
4+12 to 4+30
5+69 to 5+78

Quincy Street
3+92 to 4+31
5+69 to 5+84

*Transition 32' to 18' :

4+32 to 4+39 (Columbus Street)
4+31 to 4+39 (Quincy Street)

*Transition 18' to 32' :

5+61 to 5+69 (Columbus Street)
5+61 to 5+69 (Quincy Street)

HORIZONTAL ALIGNMENT DATA

FOR BIDDING PURPOSES ONLY

STATE OF SOUTH DAKOTA	PROJECT	SHEET	TOTAL SHEETS
	NH0016(79)67	B32	B135

PLOTTING DATE: 11-12-15

MAINLINE

Type	Station			Northing	Easting
POB	0+00			640899.18	1206543.78
		TL = 1700.00'	N 1°54'45" E		
PI	17+00.00			642598.24	1206600.51
		TL = 244.33'	N 1°40'42" E		
PC	19+44.33			642842.46	1206607.67
PI	19+99.96	R = 5000.00	Delta = 1°16'29"	642898.06	1206609.30
PT	20+55.58			642953.61	1206612.17
PI	20+55.58	TL = 243.78'	N 2°57'12" E	642953.61	1206612.17
PC	22+99.36			643197.07	1206624.73
PI	24+00.01	R = 5000.00	Delta = 2°18'23"	643297.59	1206629.91
PT	25+00.63			643398.23	1206631.05
		TL = 133.57'	N 0°38'49" E		
PI	26+34.20			643531.79	1206632.56
		TL = 310.33'	N 2°01'20" E		
PI	29+44.53			643841.93	1206643.51
		TL = 412.55'	N 2°02'46" E		
PI	33+57.08			644254.21	1206658.24
		TL = 376.45'	N 2°00'12" E		
PI	37+33.53			644630.43	1206671.40
		TL = 375.48'	N 2°01'29" E		
PI	41+09.01			645005.68	1206684.66
		TL = 372.81'	N 2°26'51" E		
PI	44+81.81			645378.14	1206700.58
		TL = 351.88'	N 1°26'23" E		
PI	48+33.69			645729.91	1206709.42
		TL = 757.57'	N 1°59'08" E		
PI	55+91.26			646487.03	1206735.67
		TL = 380.66'	N 1°51'12" E		
PI	59+71.92			646867.48	1206747.98
		TL = 378.64'	N 2°03'46" E		
PI	63+50.56			647245.88	1206761.61
		TL = 1228.34'	N 2°00'28" E		
PC	75+78.91			648473.47	1206804.64
PI	76+35.41	R = 511.00	Delta = 12°37'11"	648529.94	1206806.62
PT	76+91.46			648584.61	1206820.89
		TL = 2685.21'	N 14°37'38" E		
POE	103+76.67			651182.80	1207498.99

The coordinates shown on this sheet are based on the South Dakota State Plane Coordinate System.
South Zone (NAD 83/96); epoch 2002.00; Geoid 03; SF = 0.999769814
The elevations shown on this sheet are based on NAVD 88.

REGISTERED PROFESSIONAL ENGINEER
REG. NO. 8019
JOHN RAYMOND VAN BEEK
SOUTH DAKOTA
11/12/15

11-12-15 P:\12-117\AutoCAD\PlanSheets\027C\Section_B\027C-HORIZALIGN.dwg

HORIZONTAL ALIGNMENT DATA

FOR BIDDING PURPOSES ONLY

STATE OF SOUTH DAKOTA	PROJECT	SHEET	TOTAL SHEETS
	NH0016(79)67	B33	B135

PLOTTING DATE: 11-12-15

SAINT JAMES STREET

Type	Station			Northing	Easting
POB	0+00			647264.71	1206261.96
		TL = 1000.00'	S 87°50'53" E		
POE	10+00.00			647227.15	1207261.26

FULTON STREET

Type	Station			Northing	Easting
POB	0+00			648443.47	1206303.28
		TL = 500.00'	S 87°50'29" E		
POE	5+00.00			648424.63	1206802.93

FAIRVIEW STREET

Type	Station			Northing	Easting
POB	0+00			647649.67	1206275.46
		TL = 1000.00'	S 87°49'31" E		
POE	10+00.00			647611.73	1207274.74

SOUTH STREET

Type	Station			Northing	Easting
POB	0+00			648709.19	1206336.66
		TL = 997.87'	S 75°22'35" E		
POE	9+97.87			648457.26	1207302.20

CLARK STREET EAST

Type	Station			Northing	Easting
POB	0+00			648000.28	1206788.05
		TL = 500.00'	S 88°00'08" E		
POE	5+00.00			647982.85	1207287.75

COLUMBUS STREET

Type	Station			Northing	Easting
POB	0+00			649096.80	1206437.82
		TL = 1000.00'	S 75°15'35" E		
POE	10+00.00			648842.36	1207404.91

CLARK STREET WEST

Type	Station			Northing	Easting
POB	0+00			648042.69	1206289.23
		TL = 500.00'	S 88°00'08" E		
POE	5+00.00			648025.26	1206788.93

QUINCY STREET

Type	Station	Distance	Direction	Northing	Easting
POB	0+00			649483.12	1206538.64
		TL = 1000.00'	S 75°19'22" E		
POE	10+00.00			649229.74	1207506.01

The coordinates shown on this sheet are based on the South Dakota State Plane Coordinate System.
South Zone (NAD 83/96); epoch 2002.00; Geoid 03; SF = 0.999769814
The elevations shown on this sheet are based on NAVD 88.

REGISTERED PROFESSIONAL ENGINEER
REG. NO. 8019
JOHN RAYMOND VAN BEEK
SOUTH DAKOTA
11/12/15

11-12-15 P:\12-117\AutoCAD\PlanSheets\027C\Section B\027C-HORIZALIGN.dwg

CONTROL DATA

FOR BIDDING PURPOSES ONLY

STATE OF SOUTH DAKOTA	PROJECT	SHEET	TOTAL SHEETS
	NH0016(79)67	B34	B135

PLOTTING DATE: 11-12-15

HORIZONTAL AND VERTICAL CONTROL POINTS						
Point	Station	Offset	Description	Northing	Easting	Elevation
CP1000	71+61.78	41.06 LT	NW QUAD 8TH ST/CLARK ST	648058.04	1206748.99	3284.36
CP1001	70+85.45	40.87 RT	SE QUAD 8TH ST/CLARK ST	647978.89	1206828.20	3286.54
CP1002	67+69.21	42.13 LT	NW QUAD 8TH ST/FAIRVIEW ST	647665.75	1206734.17	3285.22
CP1003	67+09.92	54.51 RT	SE QUAD 8TH ST/FAIRVIEW ST	647603.11	1206828.68	3287.52
CP1004	59+50.52	51.96 LT	SW QUAD 8TH ST/ST CLOUD ST	646847.78	1206695.35	3298.47
CP1005	60+02.54	53.55 RT	NE QUAD 8TH ST/ST CLOUD ST	646896.16	1206802.60	3295.86
CP1006	80+52.19	38.03 RT	SE QUAD 8TH ST/COLUMBUS ST	648924.05	1206948.79	3263.19
CP1007	83+99.19	45.83 RT	SE QUAD 8TH ST/QUINCY ST	649257.84	1207043.96	3257.31
CP1008	86+78.10	44.38 RT	E SIDE 8TH ST @ ALLEY BETWEEN QUINCY ST & KANSAS CITY ST	649528.07	1207112.99	3252.74
LM	88+37.40	49.48 RT	SE QUAD 8TH ST/KANSAS CITY ST	649680.92	1207158.15	3249.88
CP1010	89+27.13	48.77 LT	NW QUAD 8TH ST/ KANSAS CITY ST	649792.55	1207085.75	3247.89
CP1011	73+63.70	37.53 LT	W SIDE 8TH ST ARBEITER & BADIUK FINANCIAL PLANNING	648259.72	1206759.60	3282.45
CP2773	76+43.69	45.78 LT	PAPA JOHNS NE CORNER OF PARKING	648545.28	1206765.82	3278.77
ML1821	84+37.24	41.67 LT	SW QUAD 8TH ST/QUINCY ST	649316.75	1206968.91	3256.41

The coordinates shown on this sheet are based on the South Dakota State Plane Coordinate System.
South Zone (NAD 83/96); epoch 2002.00; Geoid 03; SF = 0.999769814
The elevations shown on this sheet are based on NAVD 88.

REGISTERED PROFESSIONAL ENGINEER
REG. NO.
8019
JOHN RAYMOND
VAN BEEK
SOUTH DAKOTA
11/12/15

11-12-15 P:\12-117\AutoCAD\PlanSheets\027C\Section B\027C-CTRL DATA.dwg

SUBSURFACE UTILITY LOCATIONS

FOR BIDDING PURPOSES ONLY

STATE OF SOUTH DAKOTA	PROJECT	SHEET	TOTAL SHEETS
	NH0016(79)67	B35	B135

PLOTTING DATE: 11-12-15

Subsurface utility explorations were done at the following locations. The information below states what was located in the specified areas. This table is provided to aid the Contractor during construction and does not substitute or replace the requirements of SD One Call. All information is approximate and the Contractor shall verify all utility locations before construction in those areas as mandated in SDCL 49-7A.

Baseline Alignment: Mainline (US HWY 16/Mt. Rushmore Road)

Test Hole	Station	Offset	Side	Finding	Existing Ground Elev.	Utility Depth in Ft.	Utility Elevation	Northing	Easting
TH1	65+45.64	49.36	L	4” Natural Gas	3288.26	6.04	3282.22	647442.571	1206719.118
TH2	67+80.57	41.48	L	6” Natural Gas	3285.51	3.22	3282.29	647677.084	1206735.224
TH3	69+34.36	38.00	L	2” Natural Gas	3284.60	2.89	3281.71	647830.656	1206744.089
TH4	78+94.03	35.79	L	2” Natural Gas	3266.77	2.48	3264.29	648789.566	1206837.388
TH5	80+52.59	49.33	L	2” Fiber	3263.05	3.98	3259.07	648946.404	1206864.329
TH 7A	82+94.36	52.13	L	4” Natural Gas	3258.30	3.24	3255.06	649181.047	1206922.674
TH7B	82+95.07	52.18	L	6” Natural Gas	3258.38	2.81	3255.57	649181.746	1206922.803
TH8	85+33.31	45.19	L	2-2” Fiber Optic	3255.09	2.74	3252.35	649410.496	1206989.731
TH9	86+92.94	50.98	L	6” Natural Gas	3251.95	2.93	3249.02	649566.417	1207024.445
TH10	87+85.51	10.29	L	30” Sanitary Sewer	3250.16	3.39	3246.77	649645.709	1207087.193

REGISTERED PROFESSIONAL ENGINEER
REG. NO.
8019
JOHN RAYMOND
VAN BEEK
SOUTH DAKOTA
11/12/15

The coordinates shown on this sheet are based on the South Dakota State Plane Coordinate System.
South Zone (NAD 83/96); epoch 2002.00; Geoid 03; SF = 0.999769814
The elevations shown on this sheet are based on NAVD 88.

11-12-15 P:\12-117\AutoCAD\PlanSheets\027C\Section B\027C-SUBSURFACEUTIL.dwg

FOR BIDDING PURPOSES ONLY

STATE OF SOUTH DAKOTA	PROJECT	SHEET	TOTAL SHEETS
	NH0016(79)67	B36	B135

PLOTTING DATE: 11-12-15

EXISTING TOPOGRAPHY SYMBOLOGY AND LEGEND

Anchor
Antenna
Approach
Assumed Corner
Azimuth Marker
BBQ Grill/ Fireplace
Bearing Tree
Bench Mark
Box Culvert
Bridge
Brush
Buildings
Bulk Tank
Cattle Guard
Cemetery
Centerline
Cistern
Clothes Line
Commercial Sign Double Face
Commercial Sign One Post
Commercial Sign Overhead
Commercial Sign Two Post
Concrete Symbol
Creek Edge
Curb/Gutter
Curb
Dam Grade/Dike/Levee
Deck Edge
Ditch Block
Doorway Threshold
Drainage Profile
Drop Inlet
Edge Of Asphalt
Edge Of Concrete
Edge Of Gravel
Edge Of Other
Edge Of Shoulder
Elec. Trans./Power Jct. Box
Fence Barbwire
Fence Chainlink
Fence Electric
Fence Misc.
Fence Rock
Fence Snow
Fence Wood
Fence Woven
Fire Hydrant
Flag Pole
Flower Bed
Gas Valve Or Meter
Gas Pump Island
Grain Bin
Guardrail
Guide Sign One Post
Guide Sign Two Post
Gutter
Guy Pole
Haystack

Hedge
Highway R.O.W. Marker
Interstate Close Gate
Iron Pin
Irrigation Ditch
Lake Edge
Lawn Sprinkler
Mailbox
Manhole Electric
Manhole Gas
Manhole Misc
Manhole Sanitary Sewer
Manhole Storm Sewer
Manhole Telephone
Manhole Water
Merry-Go-Round
Microwave Radio Tower
Misc. Line
Misc. Property Corner
Misc. Post
Overhang Or Encroachment
Overhead Utility Line — OH —
Parking Meter
Pipe With End Section
Pipe With Headwall
Pipe Without End Section
Playground Slide
Playground Swing
Power And Light Pole
Power And Telephone Pole
Power Meter
Power Pole
Power Pole And Transformer
Power Tower Structure
Propane Tank
Property Pipe
Property Pipe With Cap
Property Stone
Public Telephone
Railroad Crossing Signal
Railroad Milepost Marker
Railroad Profile
Railroad R.O.W. Marker
Railroad Signs
Railroad Switch
Railroad Track
Railroad Trestle
Rebar
Rebar With Cap
Reference Mark
Regulatory Sign One Post
Regulatory Sign Two Post
Retaining Wall
Riprap
River Edge
Rock And Wire Baskets
Rockpiles
Satellite Dish
Septic Tank

Shrub Tree
Sidewalk
Sign Face
Sign Post
Slough Or Marsh
Spring
Stream Gauge
Street Marker
Subsurface Utility Exploration Test Hole
Telephone Fiber Optics — T/F —
Telephone Junction Box
Telephone Pole
Television Cable Jct Box
Television Tower
Test Wells/Bore Holes
Traffic Signal
Trash Barrel
Tree Belt
Tree Coniferous
Tree Deciduous
Tree Stumps
Triangulation Station
Underground Electric Line — P —
Underground Gas Line — G —
Underground High Pressure Gas Line — HG —
Underground Sanitary Sewer — S —
Underground Storm Sewer — S —
Underground Tank
Underground Telephone Line — T —
Underground Television Cable — TV —
Underground Water Line — W —
Warning Sign One Post
Warning Sign Two Post
Water Fountain
Water Hydrant
Water Meter
Water Tower
Water Valve
Water Well
Weir Rock
Windmill
Wingwall
Witness Corner

State and National Line
County Line
Section Line
Quarter Line
Sixteenth Line
Property Line
Construction Line
R. O. W. Line
New R. O. W. Line
Cut and Fill Limits
Control of Access
New Control of Access
Proposed ROW
(After Property Disposal)

11-12-15 P:\12-117\AutoCAD\PlanSheets\027C\Section B\027C-TOPOG SYMB & LEGEND.dwg

ROW LAYOUT

FOR BIDDING PURPOSES ONLY

STATE OF SOUTH DAKOTA	PROJECT	SHEET	TOTAL SHEETS
	NH0016(79)67	B37	B135

PLOTTING DATE: 12-2-15 REV 12-02-15 JRV

REGISTERED PROFESSIONAL ENGINEER
REG. NO. 8019
JOHN RAYMOND VAN BEEK
SOUTH DAKOTA
12/2/15

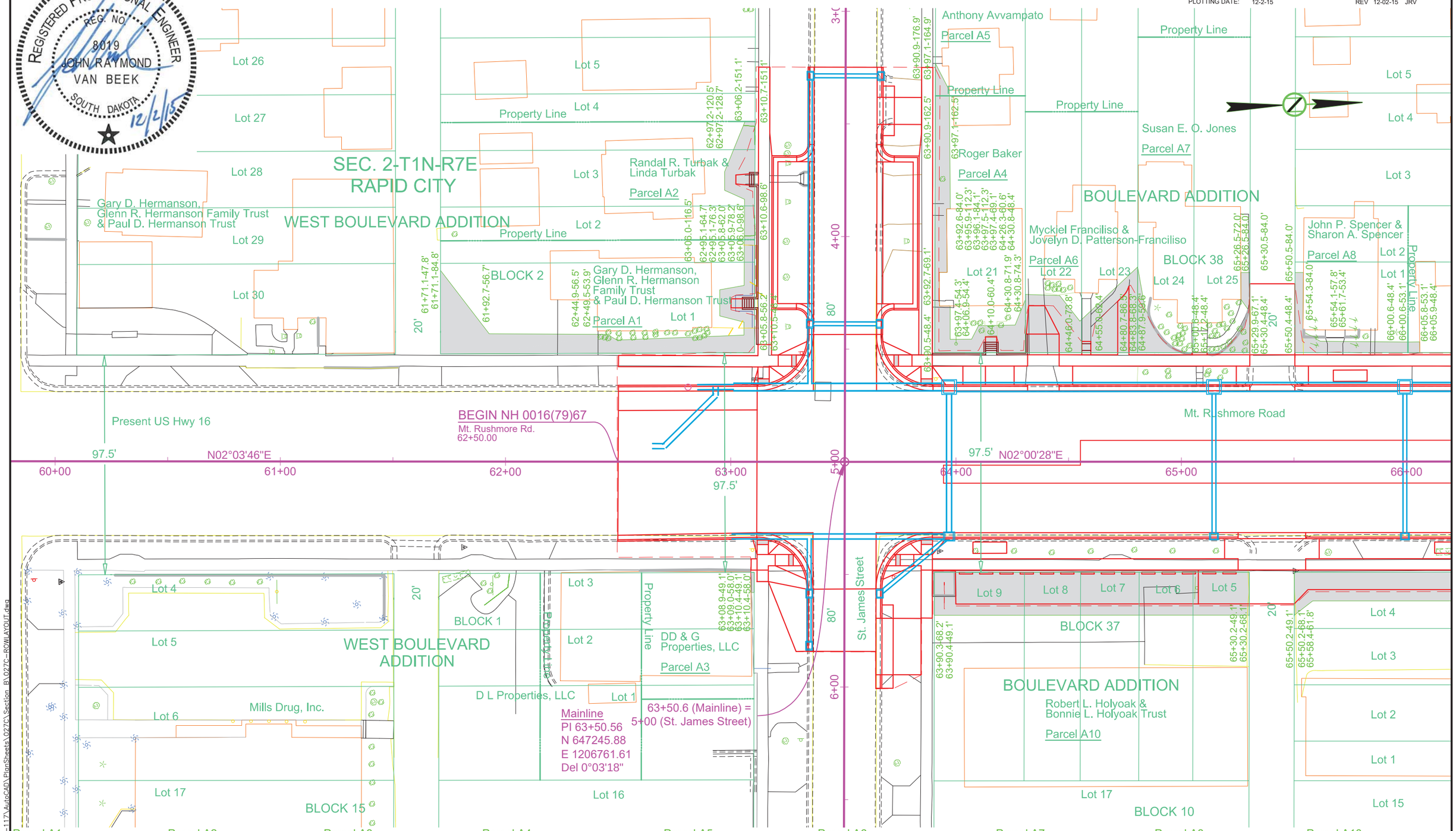

Parcel A1
61+71.1 to 63+10.5 L
Temporary easement for cut
containing 1745 sq ft,
more or less

Parcel A2
62+97.2 to 63+10.7 L
Temporary easement for cut
containing 430 sq ft,
more or less

Parcel A3
63+08.9 to 63+10.4 R
Temporary easement for cut
containing 13 sq ft,
more or less

Parcel A4
63+90.5 to 64+30.8 L
Temporary easement for
cut and drive
containing 1011 sq ft, more or less

Parcel A5
63+90.9 to 63+97.1 L
Temporary easement for cut
containing 52 sq ft,
more or less

Parcel A6
64+30.8 to 64+80.6 L
Temporary easement for
cut and drive
containing 1234 sq ft, more or less

Parcel A7
64+80.6 to 65+30.5 L
Temporary easement for cut
containing 336 sq ft,
more or less

Parcel A8
65+50.4 to 66+00.6 L
Temporary easement for cut
containing 373 sq ft,
more or less

Parcel A10
63+90.3 to 65+30.2 R
Temporary easement for cut
containing 2666 sq ft,
more or less

12-2-15 P:\12-117\AutoCAD\PlanSheets\027C\Section B\027C-ROWLAYOUT.dwg

ROW LAYOUT

FOR BIDDING PURPOSES ONLY

STATE OF SOUTH DAKOTA	PROJECT	SHEET	TOTAL SHEETS
	NH0016(79)67	B38	B135

PLOTTING DATE: 11-12-15

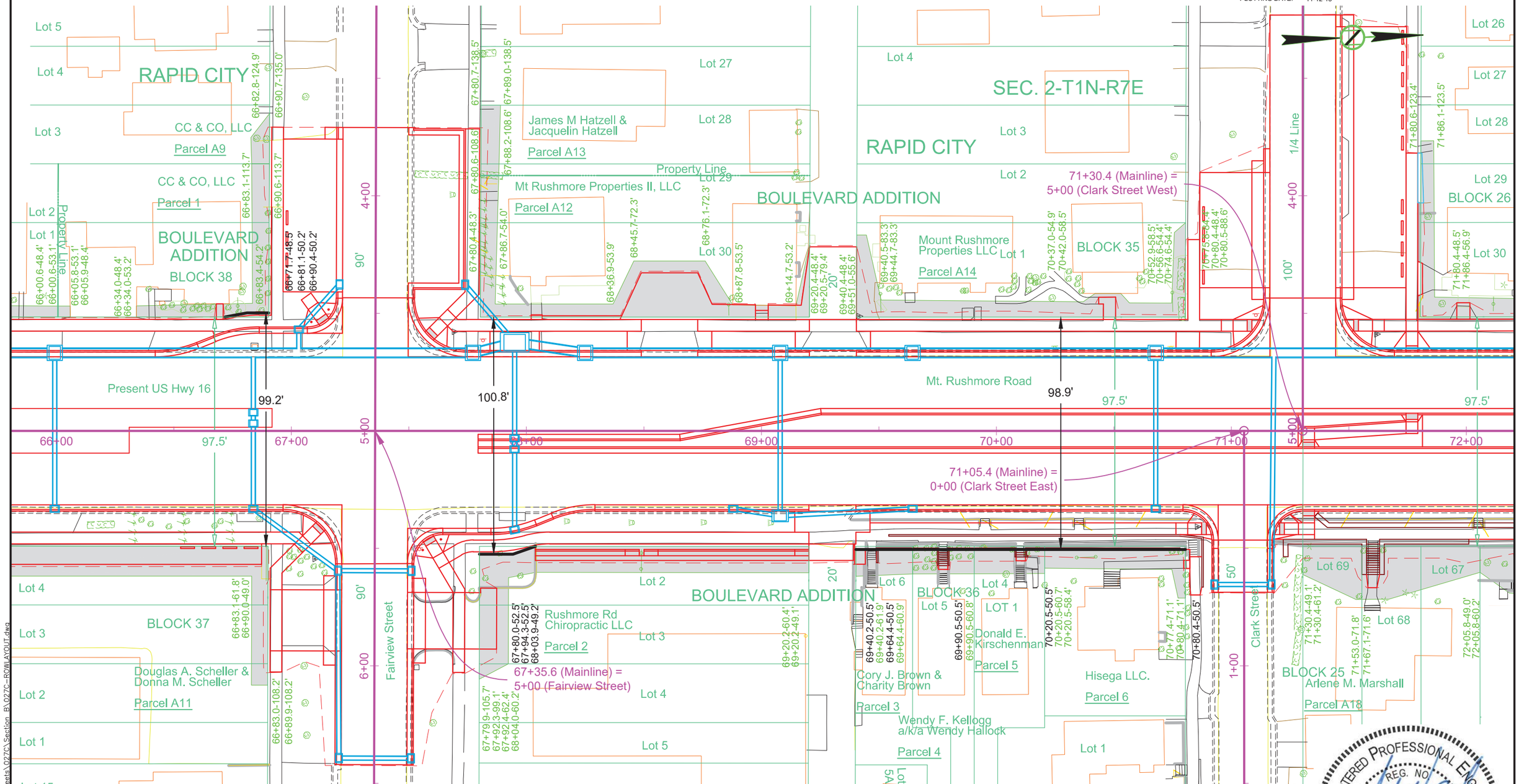

Parcel 1
66+00.6 to 66+05.9 L
Temporary easement for cut containing 24 sq ft, more or less

Parcel 1
66+34.0 to 66+90.6 L
Temporary easement for cut containing 705 sq ft, more or less

Parcel A9
66+82.8 to 66+90.7 L
Temporary easement for cut containing 126 sq ft, more or less

Parcel A11
65+50.2 to 66+90.0 R
Temporary easement for cut containing 2132 sq ft, more or less

Parcel A12
67+80.4 to 69+20.5 L
Temporary easement for cut and drive containing 1963 sq ft, more or less

Parcel A13
67+80.6 to 67+89.0 L
Temporary easement for cut containing 238 sq ft, more or less

Parcel A14
69+40.4 to 70+80.5 L
Temporary easement for cut and drive containing 1364 sq ft, more or less

Parcel 2
67+79.9 to 69+20.2 R
Temporary easement for cut and drive containing 2030 sq ft, more or less

Parcel 3
69+40.2 to 69+64.4 R
Temporary easement for cut containing 263 sq ft, more or less

Parcel 4
69+64.4 to 69+90.5R
Temporary easement for cut containing 271 sq ft, more or less

Parcel 5
69+90.5 to 70+20.5 R
Temporary easement for cut containing 308 sq ft, more or less

Parcel 6
70+20.5 to 70+80.4 R
Temporary easement for cut containing 546 sq ft, more or less

Parcel A18
71+30.4 to 72+05.8 R
Temporary easement for cut containing 1364 sq ft, more or less

REGISTERED PROFESSIONAL ENGINEER
REG. NO. 8019
JOHN RAYMOND VAN BEEK
SOUTH DAKOTA
11-12-15

11-12-15 P:\12-117\AutoCAD\PlanSheets\027C\Section B\027C-ROWLAYOUT.dwg

ROW LAYOUT

FOR BIDDING PURPOSES ONLY

STATE OF SOUTH DAKOTA	PROJECT	SHEET	TOTAL SHEETS
	NH0016(79)67	B39	B135

PLOTTING DATE: 01-21-16 REV 01-21-16 JRV

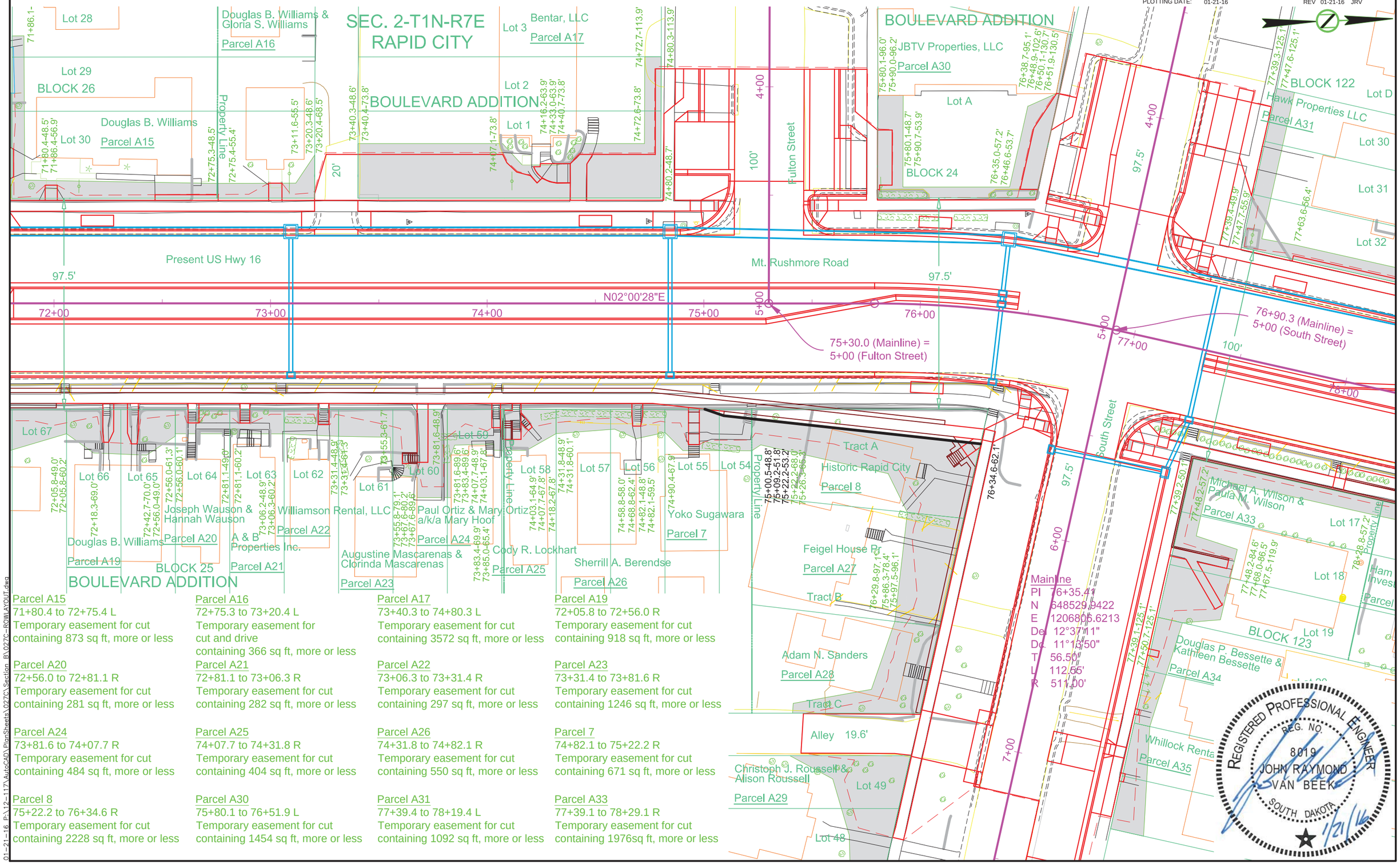

Parcel A15
71+80.4 to 72+75.4 L
Temporary easement for cut
containing 873 sq ft, more or less

Parcel A16
72+75.3 to 73+20.4 L
Temporary easement for
cut and drive
containing 366 sq ft, more or less

Parcel A17
73+40.3 to 74+80.3 L
Temporary easement for cut
containing 3572 sq ft, more or less

Parcel A19
72+05.8 to 72+56.0 R
Temporary easement for cut
containing 918 sq ft, more or less

Parcel A20
72+56.0 to 72+81.1 R
Temporary easement for cut
containing 281 sq ft, more or less

Parcel A21
72+81.1 to 73+06.3 R
Temporary easement for cut
containing 282 sq ft, more or less

Parcel A22
73+06.3 to 73+31.4 R
Temporary easement for cut
containing 297 sq ft, more or less

Parcel A23
73+31.4 to 73+81.6 R
Temporary easement for cut
containing 1246 sq ft, more or less

Parcel A24
73+81.6 to 74+07.7 R
Temporary easement for cut
containing 484 sq ft, more or less

Parcel A25
74+07.7 to 74+31.8 R
Temporary easement for cut
containing 404 sq ft, more or less

Parcel A26
74+31.8 to 74+82.1 R
Temporary easement for cut
containing 550 sq ft, more or less

Parcel 7
74+82.1 to 75+22.2 R
Temporary easement for cut
containing 671 sq ft, more or less

Parcel 8
75+22.2 to 76+34.6 R
Temporary easement for cut
containing 2228 sq ft, more or less

Parcel A30
75+80.1 to 76+51.9 L
Temporary easement for cut
containing 1454 sq ft, more or less

Parcel A31
77+39.4 to 78+19.4 L
Temporary easement for cut
containing 1092 sq ft, more or less

Parcel A33
77+39.1 to 78+29.1 R
Temporary easement for cut
containing 1976sq ft, more or less

01-21-16 P:\12-117\AutoCAD\PlanSheets\0270\Section B\0270-ROWLAYOUT.dwg

ROW LAYOUT

FOR BIDDING PURPOSES ONLY

STATE OF SOUTH DAKOTA	PROJECT	SHEET	TOTAL SHEETS
	NH0016(79)67	B40	B135

PLOTTING DATE: 11-12-15

REGISTERED PROFESSIONAL ENGINEER
REG. NO. 8019
JOHN RAYMOND VAN BEEK
SOUTH DAKOTA
11-12-15

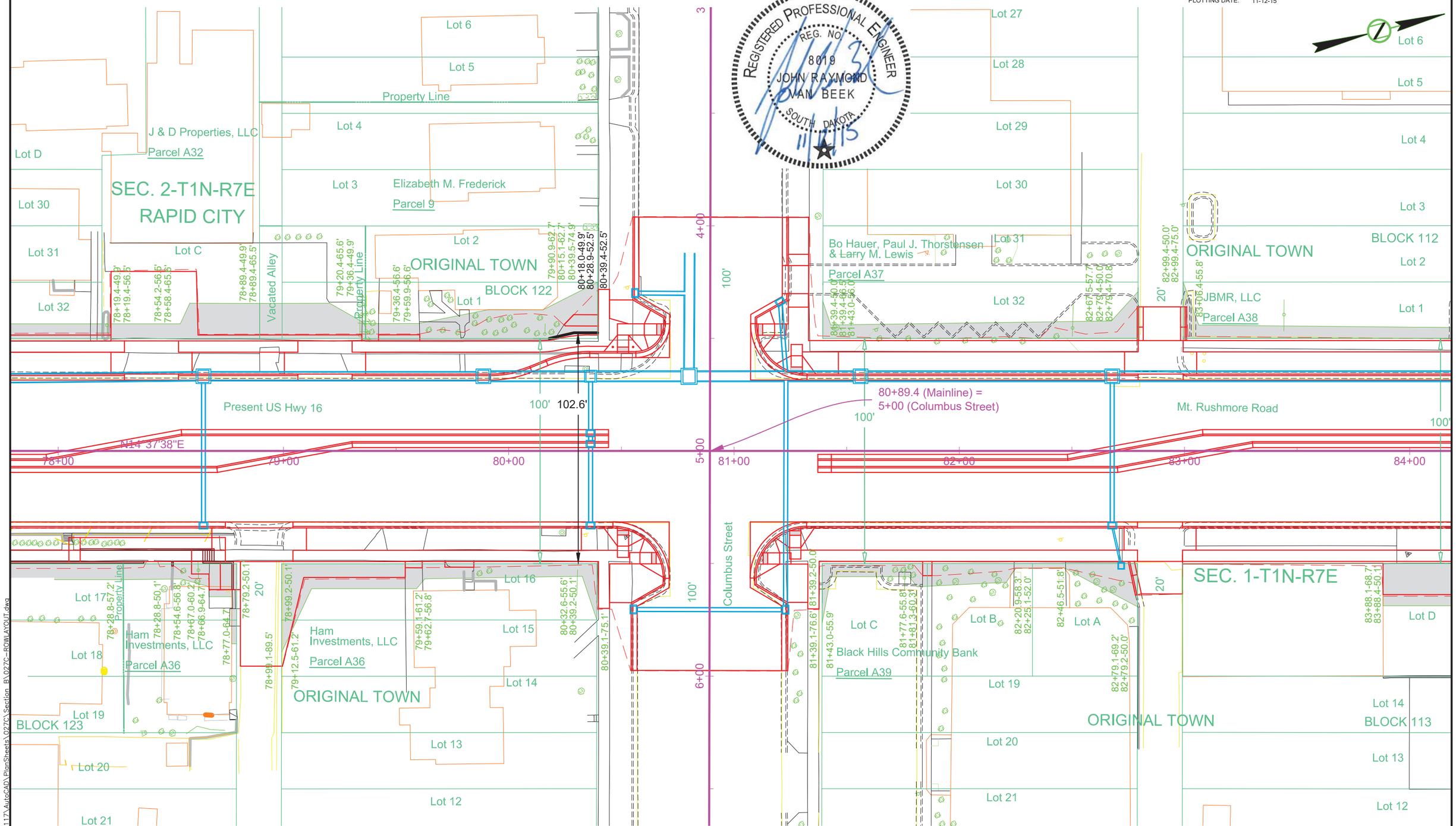

Parcel A32
78+19.4 to 79+36.4 L
Temporary easement for
cut and drive
containing 1500 sq ft, more or less

Parcel 9
79+36.4 to 80+39.5 L
Temporary easement for
cut and drive
containing 1183 sq ft, more or less

Parcel A36
78+28.8 to 78+79.2 R
Temporary easement for
cut and drive
containing 505 sq ft, more or less

Parcel A36
78+99.1 to 80+39.2 R
Temporary easement for
cut and drive
containing 1416 sq ft, more or less

Parcel A37
81+39.4 to 82+79.4 L
Temporary easement for
cut and drive
containing 1063 sq ft, more or less

Parcel A38
82+99.4 to 84+39.4 L
Temporary easement for
cut and drive
containing 989 sq ft, more or less

Parcel A39
81+39.1 to 82+79.2 R
Temporary easement for
cut and drive
containing 1065 sq ft, more or less

11-12-15 P:\12-117\AutoCAD\PlanSheets\027C\Section B\027C-ROWLAYOUT.dwg

ROW LAYOUT

FOR BIDDING PURPOSES ONLY

STATE OF SOUTH DAKOTA	PROJECT	SHEET	TOTAL SHEETS
	NH0016(79)67	B41	B135

PLOTTING DATE: 11-12-15

REGISTERED PROFESSIONAL ENGINEER
REG. NO. 8019
JOHN RAYMOND VAN BEEK
SOUTH DAKOTA
11/12/15

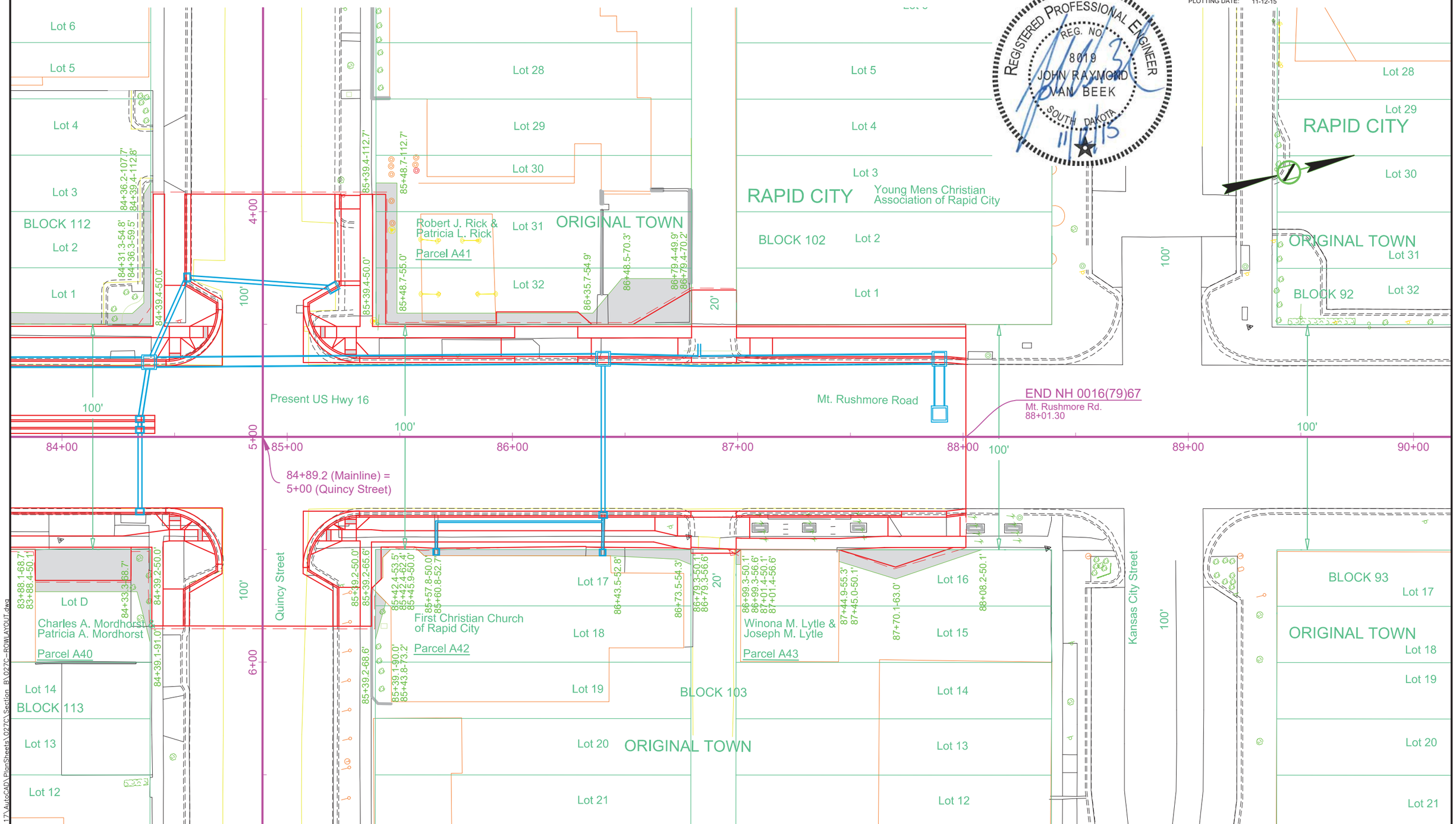

Parcel A40
83+88.1 to 84+39.2 R
Temporary easement for cut
containing 1016 sq ft, more or less

Parcel A41
85+39.4 to 86+79.4 L
Temporary easement for
cut and drive
containing 1807 sq ft, more or less

Parcel A42
85+39.1 to 85+43.8 R
Temporary easement for cut
containing 49 sq ft, more or less

Parcel A42
85+39.2 to 85+45.9 R
Temporary easement for cut
containing 52 sq ft, more or less

Parcel A42
85+57.8 to 86+79.3 R
Temporary easement for cut
containing 365 sq ft, more or less

Parcel A43
86+99.3 to 87+01.4 R
Temporary easement for cut
containing 14 sq ft, more or less

Parcel A43
87+44.9 to 88+08.2 R
Temporary easement for cut
containing 474 sq ft, more or less

11-12-15 P:\12-117\AutoCAD\PlanSheets\027C\Section B\027C-ROWLAYOUT.dwg

SOUTH STREET ROW LAYOUT

FOR BIDDING PURPOSES ONLY

STATE OF SOUTH DAKOTA	PROJECT	SHEET	TOTAL SHEETS
	NH0016(79)67	B42	B135

PLOTTING DATE: 01-21-16 REV 01-21-16 JRV

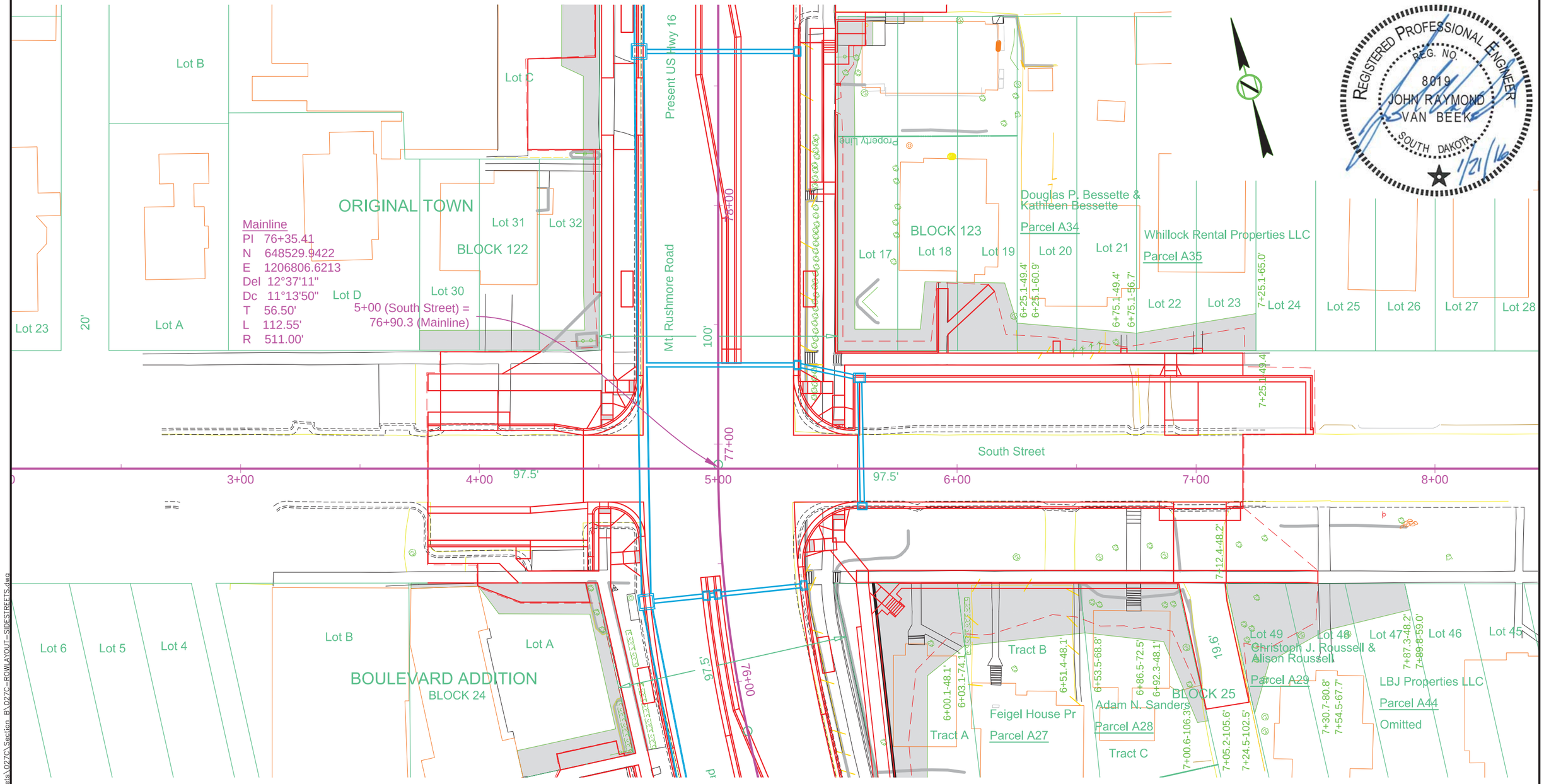

REGISTERED PROFESSIONAL ENGINEER
REG. NO. 8019
JOHN RAYMOND VAN BEEK
SOUTH DAKOTA
1/21/16

Parcel A27
6+00.1 to 6+52.2 R
Temporary easement
for cut
containing 1193 sq ft, more or less

Parcel A28
6+51.4 to 7+05.2 R
Temporary easement for
cut and drive
containing 1239 sq ft, more or less

Parcel A29
7+12.4 to 7+89.8 R
Temporary easement for
cut and drive
containing 1740 sq ft, more or less

Parcel A34
6+25.1 to 6+75.1 L
Temporary easement
for cut
containing 472 sq ft, more or less

Parcel A35
6+75.1 to 7+25.1 L
Temporary easement
for cut
containing 573 sq ft, more or less

Parcel A44

Omitted

01-21-16 P:\12-117\AutoCAD\PlanSheets\027C\Section B\027C-ROWLAYOUT-SIDESTREETS.dwg

STATE OF SOUTH DAKOTA	PROJECT	SHEET	TOTAL SHEETS
	NH0016(79)67	B43	B135

PLOTTING DATE: 12-2-15 REV 12-02-15 JRV

FOR BIDDING PURPOSES ONLY

62+65.18 - 6.89' L to
62+70.43 - 6.86' L
Install 24" - 4' RCP
(Between Connect to
Existing & 45 Deg Bend)

62+70.43 - 6.86' L to
62+93.22 - 29.40' L
Install 24" - 32' RCP
(Between RC Bends)

62+85.19 - 33.06' L to
62+93.22 - 33.12' L
Install 24" - 10' RCP
(Between Tie to Existing
and RC Tee)

62+93.22 - 29.40' L to
62+93.22 - 33.12' L
Install 24" - 4' RCP
(Between RC Bend and
RC Tee)

62+93.22 - 33.12' L to
63+01.20 - 33.17' L
Install 24" - 8' RCP
(Between RC Tee &
Increaser)

63+00.50 - 33.17' R to
63+34.84 - 33.15' R
Install 24" - 36' RCP
(Between RC Cap
& RC Tee)

63+01.20 - 33.17' L to
63+35.08 - 33.12' L
Install 36" - 34' RCP
(Between Increaser
& RC Tee)

63+34.84 - 33.15' R to
63+96.90 - 33.17' R
Install 24" - 62' RCP
(Between RC Tee
& Drop Inlet)

63+35.08 - 33.12' L to
63+96.90 - 33.17' L
Install 36" - 60' RCP
(Between RC Tee
& Drop Inlet)

63+96.90 - 33.17' L to
65+14.51 - 33.17' L
Install 42" - 114' RCP
(Between Drop Inlets)

63+96.90 - 33.17' R to
63+96.90 - 33.17' L
Install 24" - 64' RCP
(Between Drop Inlets)

65+14.51 - 33.17' L to
65+99.28 - 33.17' L
Install 42" - 80' RCP
(Between Drop Inlets)

65+14.51 - 33.17' R to
65+14.51 - 33.17' L
Install 18" - 64' RCP
(Between Drop Inlets)

65+99.28 - 33.17' L to
66+83.79 - 33.17' L
Install 42" - 82' RCP
(Between Drop Inlet
& RC Tee)

65+99.28 - 33.17' R to
65+99.28 - 33.17' L
Install 18" - 64' RCP
(Between Drop Inlets)

Install 5.5'x5.5' Type B Drop
Inlet With 6" Concrete Collar
and Type B Frame and Grate
at the Following Locations:
63+96.90-33.17' L
65+14.51-33.17' L
65+99.28-33.17' L

63+11.8-59' L to 63+11.8-96' L
Remove Chainlink Fence & Gate

63+11.8-59' L to 63+11.8-96' L
Install Chainlink Fence & Gate

Install 3'x3' Type B Drop
Inlet With 6" Concrete Collar
and Type B Frame and Grate
at the Following Locations:
65+14.51-33.17' R
65+99.28-33.17' R

63+96.9-33.17' R
Install 3'x4' Type B Drop
Inlet with 6" Concrete Collar
and Type B Frame and Grate

Install Pipe Fittings
at the Following Locations:

62+70.43-6.86' L	24" RC 45 Deg Bend
62+93.22-29.40' L	24" RC 45 Deg Bend
62+93.22-33.12' L	24"x24" RC Tee
63+00.50-33.17' R	24" RC Cap
63+01.20-33.17' L	24" to 36" RC Increaser
63+34.84-33.15' R	24"x18" RC Tee
63+35.08-33.12' L	36"x18" RC Tee

64+98.1-54' L
Do Not Disturb
Sign

64+83.8-68' L To
65+29.9-67' L
Do Not Disturb
Landscaping
& Bushes

64+83.8-69' L To
65+29.9-67' L
Do Not Disturb
Concrete Edging,
Posts & Rope

65+59.5-52' L To
65+76.9-52' L
Do Not Disturb Landscaping
Outside Work Limits

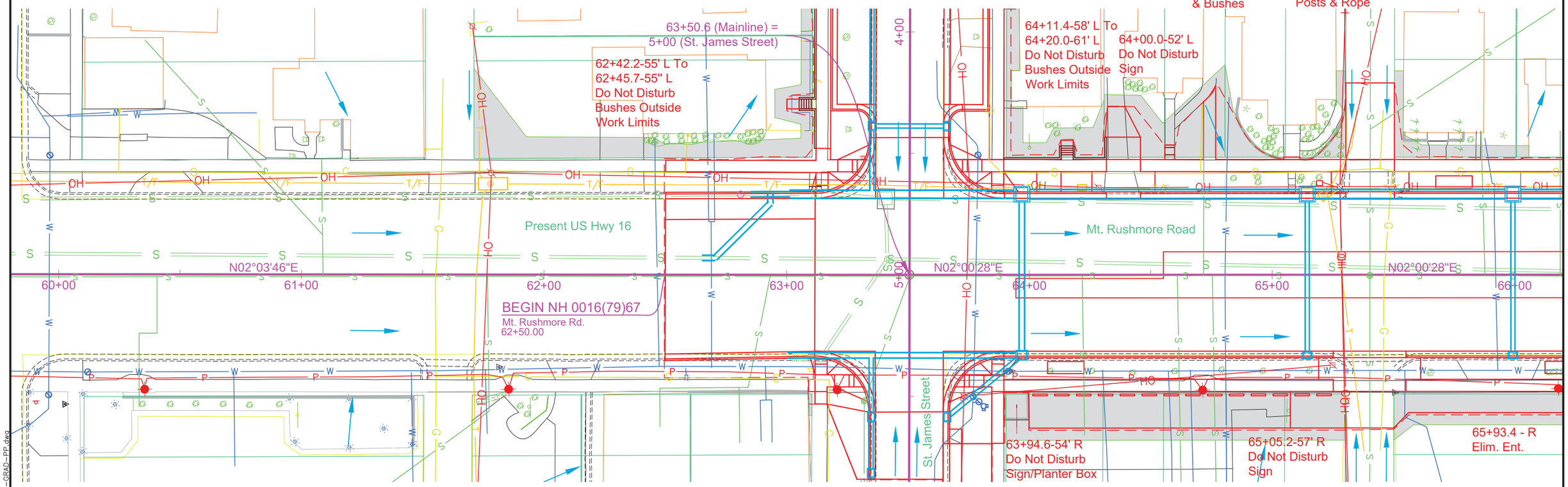

62+65-7' L to 63+42-6' L
Take Out 76'-18" RCP
(Incidental Work, Grading)

62+85-33' L to 63+17-33' L
Take Out 30'-24" RCP
(Incidental Work, Grading)

63+07-34' R to 63+14-34' R
Take Out 4'-10" PVC
(Incidental Work, Grading)

63+14-34' R to 63+42-6' L
Take Out 46'-12" RCP
(Incidental Work, Grading)

63+17-33' L to 63+41-31' L
Take Out 20'-24" RCP
(Incidental Work, Grading)

63+41-31' L to 63+42-6' L
Take Out 22'-12" RCP
(Incidental Work, Grading)

63+41-31' L to 65+95-27' L
Take Out 254'-30" Arch RCP
(Incidental Work, Grading)

65+95-27' L to 67+02-25' L
Take Out 108'-36" RCP
(Incidental Work, Grading)

Remove Drop Inlets
with Frame and Grate
at the Following Locations:
63+04-34'R
63+07-34'R

Remove Junction Box
with Frame and Grate
at the Following Locations:
63+14-34'R
63+17-33'L
63+41-31'L

63+42-6'L
Remove Manhole
with Frame and Lid

REGISTERED PROFESSIONAL ENGINEER
REG. NO.
8019
JOHN RAYMOND
VAN BEEK
SOUTH DAKOTA
12/2/15

12-2-15 P:\12-117\AutoCAD\PlanSheets\027C\Section_B\027C-GRAD-PP.dwg

STATE OF SOUTH DAKOTA	PROJECT	SHEET	TOTAL SHEETS
	NH0016(79)67	B44	B135
	PLOTTING DATE: 11-12-15		

FOR BIDDING PURPOSES ONLY

REGISTERED PROFESSIONAL ENGINEER
REG. NO. 8019
JOHN RAYMOND VAN BEEK
SOUTH DAKOTA
11/12/15

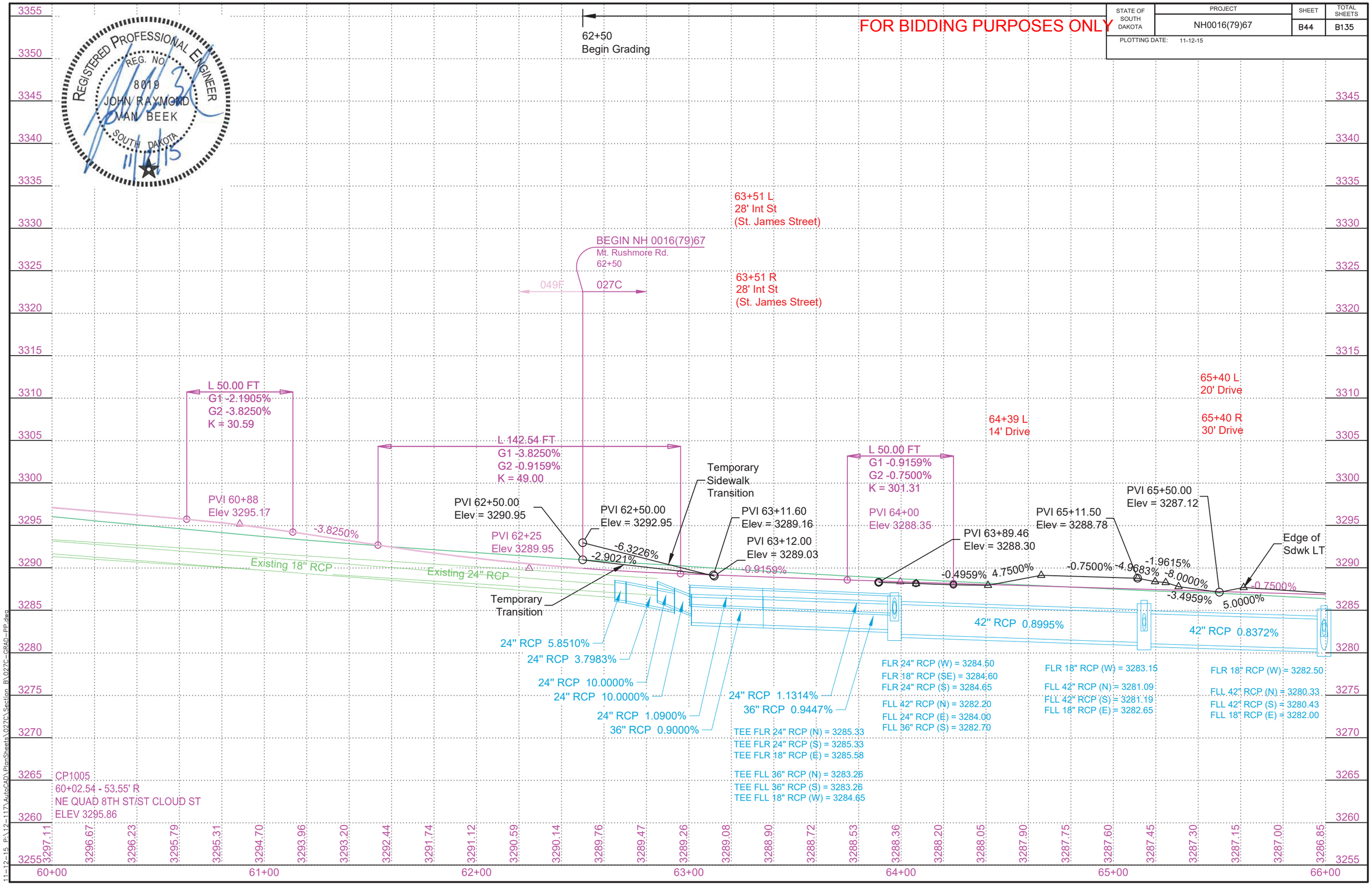

11-12-15 P:\12-117\AutoCAD\PlanSheets\027C\Section B\027C-GRAD-PP.dwg

STATE OF SOUTH DAKOTA	PROJECT	SHEET	TOTAL SHEETS
	NH0016(79)67	B45	B135

PLOTTING DATE: 11-12-15

FOR BIDDING PURPOSES ONLY

66+83.79 - 3.17' L to
66+83.79 - 7.83' L
Install 18" - 4' RCP
(Between Drop Inlets)

66+83.79 - 7.83' L to
66+83.79 - 33.17' L
Install 18" - 26' RCP
(Between Drop Inlet
& RC Tee)

66+83.79 - 33.17' L to
67+03.16 - 33.17' L
Install 42" - 20' RCP
(Between RC Tees)

66+83.79 - 33.17' R to
66+83.79 - 3.17' L
Install 18" - 36' RCP
(Between Drop Inlets)

66+83.79 - 33.17' R to
67+19.77 - 59.47' R
Install 18" - 42' RCP
(Between Drop Inlets)

67+03.16 - 33.17' L to
67+77.27 - 33.17' L
Install 42" - 72' RCP
(Between RC Tee & Drop
Inlet)

67+03.16 - 43.17' L to
67+03.16 - 33.17' L
Install 18" - 10' RCP
(Between Drop Inlet
& RC Tee)

67+77.27 - 33.17' L to
67+95.00 - 37.67' L
Install 42" - 10' RCP
(Between Drop Inlets)

67+95.00 - 3.17' R to
67+95.00 - 37.67' L
Install 18" - 38' RCP
(Between Drop Inlets)

67+95.00 - 7.83' R to
67+95.00 - 3.17' R
Install 18" - 4' RCP
(Between Drop Inlets)

67+95.00 - 37.67' L to
68+25.00 - 33.17' L
Install 42" - 22' RCP
(Between Drop Inlets)

67+95.00 - 42.15' R to
67+95.00 - 7.83' R
Install 18" - 34' RCP
(Between Drop Inlets)

68+25.00 - 33.17' L to
69+08.00 - 33.17' L
Install 42" - 78' RCP
(Between RC Tee
& Drop Inlet)

68+88.00 - 33.17' R to
69+08.00 - 36.17' R
Install 18" - 16' RCP
(Between Drop Inlets)

69+08.00 - 33.17' L to
69+64.34 - 33.17' L
Install 42" - 52' RCP
(Between Drop Inlets)

69+08.00 - 36.17' R to
69+08.00 - 33.17' L
Install 18" - 66' RCP
(Between Drop Inlets)

69+08.00 - 36.17' R to
69+64.34 - 33.17' R
Install 18" - 52' RCP
(Between Drop Inlets)

69+64.34 - 33.17' L to
70+67.80 - 33.17' L
Install 42" - 98' RCP
(Between Drop Inlets)

70+67.80 - 33.17' L to
71+18.10 - 33.17' L
Install 42" - 48' RCP
(Between Drop Inlet
& RC Tee)

70+67.80 - 33.17' R to
70+67.80 - 33.17' L
Install 18" - 64' RCP
(Between Drop Inlets)

71+17.10 - 65.37' R to
71+18.10 - 33.17' L
Install 18" - 98' RCP
(Between Drop Inlet
& RC Tee)

71+18.10 - 33.17' L to
73+09.36 - 33.17' L
Install 42" - 190' RCP
(Between RC Tee
& Drop Inlet)

Install 2'x3' Type B Drop Inlet with Steel Plate Cover
at the Following Locations:
66+83.79-3.17' L
66+83.79-7.83' L

67+95.00-37.67' L
Install 7'x11' Type S Drop Inlet
Base and Precast Concrete
Type S Drop Inlet Lid

Install 2'x3' Type B Drop Inlet with 6" Concrete Collar
and Type B Frame and Grate
at the Following Locations:

66+83.79-33.17' R
67+03.16-43.17' L
67+95.00-3.17' R
67+95.00-7.83' R
67+95.00-42.15' R
68+88.00-33.17' R
69+64.34-33.17' R
70+67.80-33.17' R

Install 6" Concrete Bollards
at the following locations:
67+08.54-46.32' L
67+15.85-51.56' L
67+55.89-50.72' R
67+63.67-46.20' R

Install 5.5'x5.5' Type B Drop
Inlet with 6" Concrete Collar
and Type B Frame and Grate
at the Following Locations:
67+77.27-33.17' L
68+25.00-33.17' L
69+08.00-33.17' L
69+64.34-33.17' L
70+67.80-33.17' L

69+08.00-36.17' R
Install 4'x6' Type S Drop Inlet
Base and Precast Concrete
Type S Drop Inlet Lid

Install Pipe Fittings
at the Following Locations:

66+83.79-33.17' L	42"x18" RC Tee
67+03.16-33.17' L	42"x18" RC Tee
71+18.10-33.17' L	42"x18" RC Tee

REGISTERED PROFESSIONAL ENGINEER
REG. NO. 8019
JOHN RAYMOND VAN BEEK
SOUTH DAKOTA
11/12/15

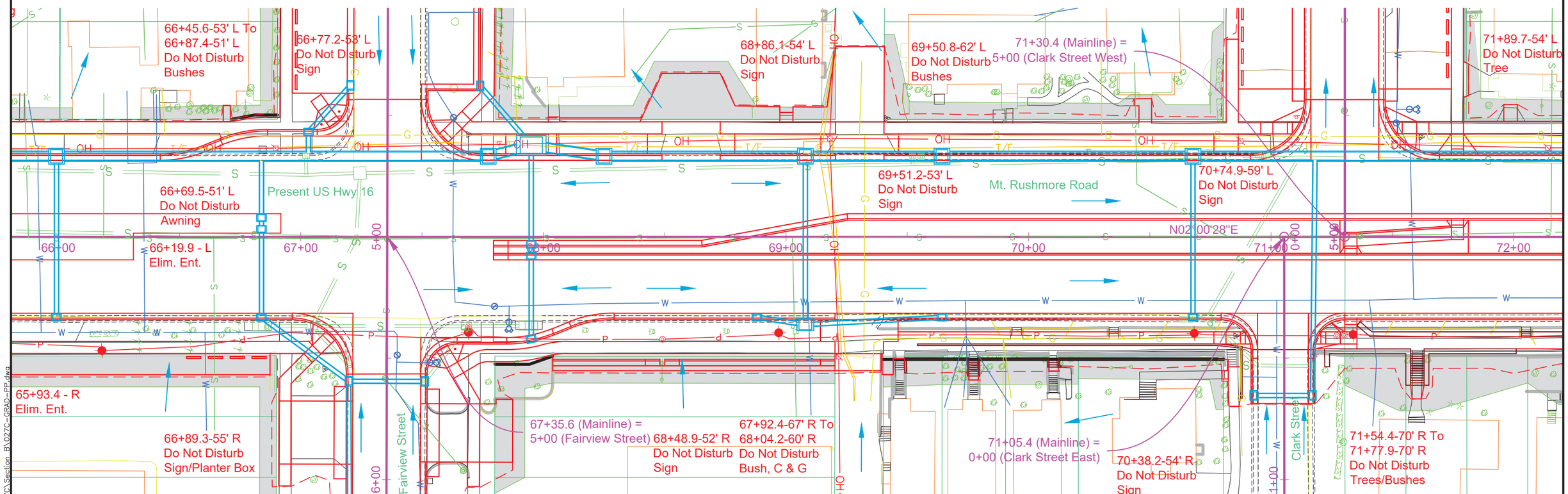

66+84-37' R to 67+05-37' R
Take Out 16'-12" PVC
(Incidental Work, Grading)

67+02-25' L to 67+24-26' L
Take Out 22'-36" RCP
(Incidental Work, Grading)

67+02-33' L to 67+02-25' L
Take Out 8'-10" PVC
(Incidental Work, Grading)

67+05-37' R to 67+23-0' R
Take Out 38'-12" RCP
(Incidental Work, Grading)

67+05-37' R to 67+68-37' R
Take Out 62'-12" RCP
(Incidental Work, Grading)

67+19-52' R to 67+05-37' R
Take Out 20'-12" PVC
(Incidental Work, Grading)

67+24-26' L to 67+23-0' R
Take Out 24'-10" PVC
(Incidental Work, Grading)

67+24-26' L to 69+52-30' L
Take Out 226'-42" RCP
(Incidental Work, Grading)

67+68-37' R to 67+94-37' R
Take Out 20'-12" RCP
(Incidental Work, Grading)

69+52-30' L to 70+95-32' L
Take Out 144'-42" RCP
(Incidental Work, Grading)

69+52-34' L to 69+52-30' L
Take Out 4'-18" PVC
(Incidental Work, Grading)

70+67-34' R to 70+74-34' R
Take Out 4'-12" PVC
(Incidental Work, Grading)

70+74-34' R to 71+11-33' L
Take Out 76'-12" RCP
(Incidental Work, Grading)

70+94-53' R to 70+74-34' R
Take Out 28'-12" PVC
(Incidental Work, Grading)

70+95-32' L to 71+11-33' L
Take Out 18'-42" RCP
(Incidental Work, Grading)

71+11-33' L to 74+88-27' L
Take Out 378'-42" RCP
(Incidental Work, Grading)

71+17-53' R to 70+94-53' R
Take Out 22'-12" PVC
(Incidental Work, Grading)

Remove Drop Inlets
with Frame and Grate
at the Following Locations:

67+02-33'L	70+64-34'R
67+20-52'R	70+67-34'R
67+22-543'L	70+95-34'L
67+51-60'R	70+98-34'L
69+52-34'L	71+17-53'R
69+56-33'L	

Remove Junction Box
with Frame and Grate
at the Following Locations:
67+05-37'R
67+24-26'L
67+68-37'R
70+74-34'R

11-12-15 P:\12-117\AutoCAD\PlanSheets\027C\Section B\027C-GRAD-PP.dwg

STATE OF SOUTH DAKOTA	PROJECT	SHEET	TOTAL SHEETS
	NH0016(79)67	B46	B135
PLOTTING DATE: 11-12-15			

FOR BIDDING PURPOSES ONLY

REGISTERED PROFESSIONAL ENGINEER
REG. NO. 8019
JOHN RAYMOND VAN BEEK
SOUTH DAKOTA
11-12-15

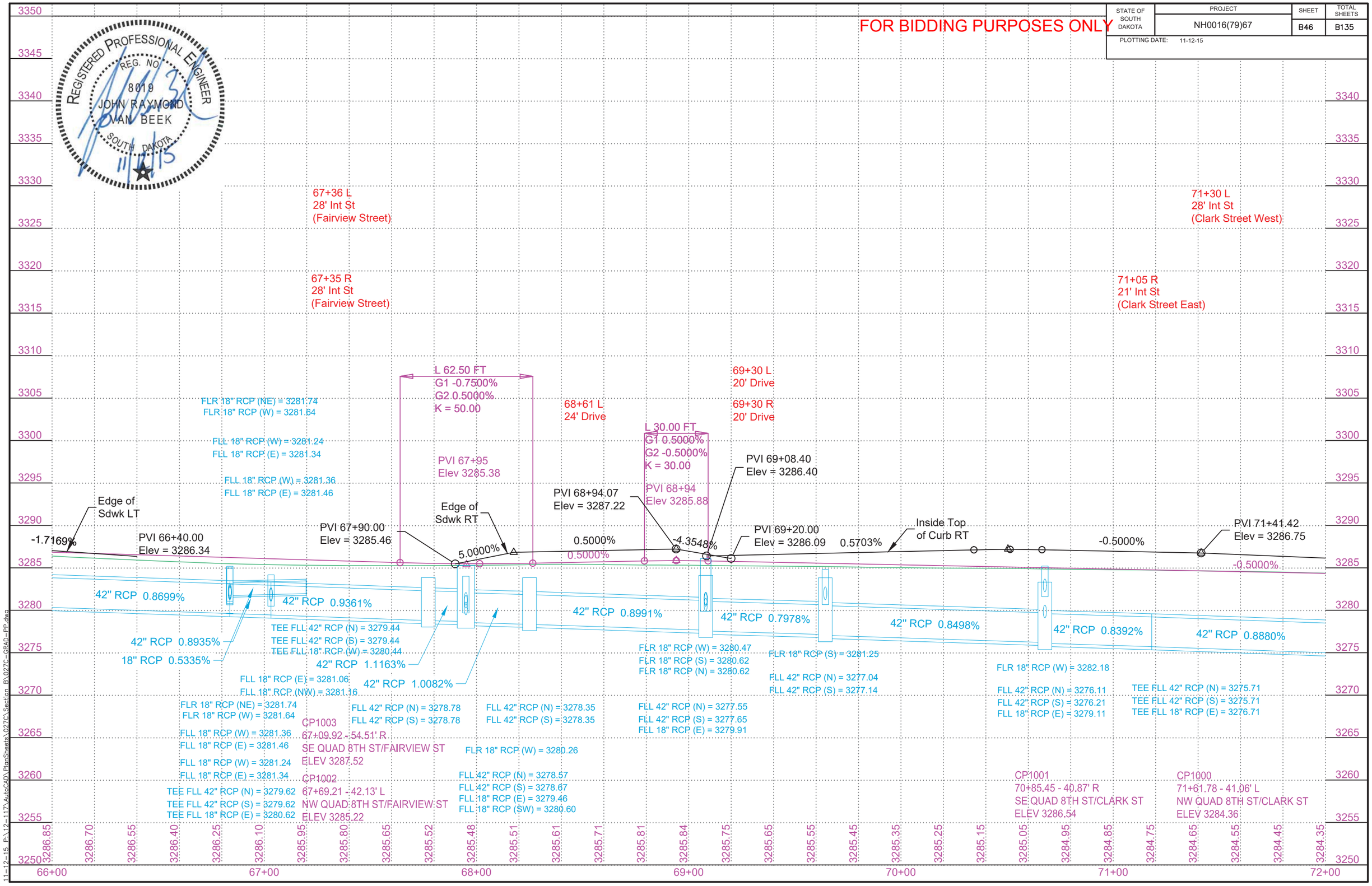

11-12-15 P:\12-117\AutoCAD\PlanSheets\0270\Section BJ0270-GRAD-PP.dwg

FOR BIDDING PURPOSES ONLY

STATE OF SOUTH DAKOTA	PROJECT	SHEET	TOTAL SHEETS
	NH0016(79)67	B47	B135

PLOTTING DATE: 11-12-15

73+09.36 - 33.17' L to
74+84.46 - 33.17' L
Install 42" - 170' RCP
(Between Drop Inlets)

73+09.36 - 33.17' R to
73+09.36 - 33.17' L
Install 18" - 64' RCP
(Between Drop Inlets)

74+84.46 - 33.17' L to
76+37.31 - 33.16' L
Install 42" - 152' RCP
(Between Drop Inlets)

74+84.46 - 33.17' R to
74+84.46 - 33.17' L
Install 18" - 64' RCP
(Between Drop Inlets)

76+37.23 - 33.17' R to
76+37.28 - 3.17' L
Install 18" - 36' RCP
(Between Drop Inlets)

76+37.28 - 3.17' L to
76+37.28 - 7.83' L
Install 18" - 4' RCP
(Between Drop Inlets)

76+37.28 - 7.83' L to
76+37.31 - 33.16' L
Install 18" - 22' RCP
(Between Drop Inlets)

76+37.31 - 33.16' L to
77+33.19 - 31.85' L
Install 42" - 98' RCP
(Between Drop Inlet
& RC Tee)

77+33.19 - 31.85' L to
78+64.45 - 33.17' L
Install 42" - 130' RCP
(Between RC Tee
& Drop Inlet)

77+33.19 - 33.17' R to
77+33.19 - 31.85' L
Install 18" - 66' RCP
(Between Drop Inlet
& RC Tee)

Install 5.5'x5.5' Type B Drop
Inlet with 6" Concrete Collar
and Type B Frame and Grate
at the Following Locations:
73+09.36-33.17' L
74+84.46-33.17' L
76+37.31-33.16' L

77+33.19-31.85' L
Install 42"x18" RC Tee

Install 2x3 Type B Drop
Inlet with 6" Concrete Collar
and Type B Frame and Grate
at the Following Locations:
73+09.36-33.17' R
74+84.46-33.17' R
76+37.23-33.17' R
76+37.28-3.16' L
76+37.28-7.83' L
77+33.19-33.17' R

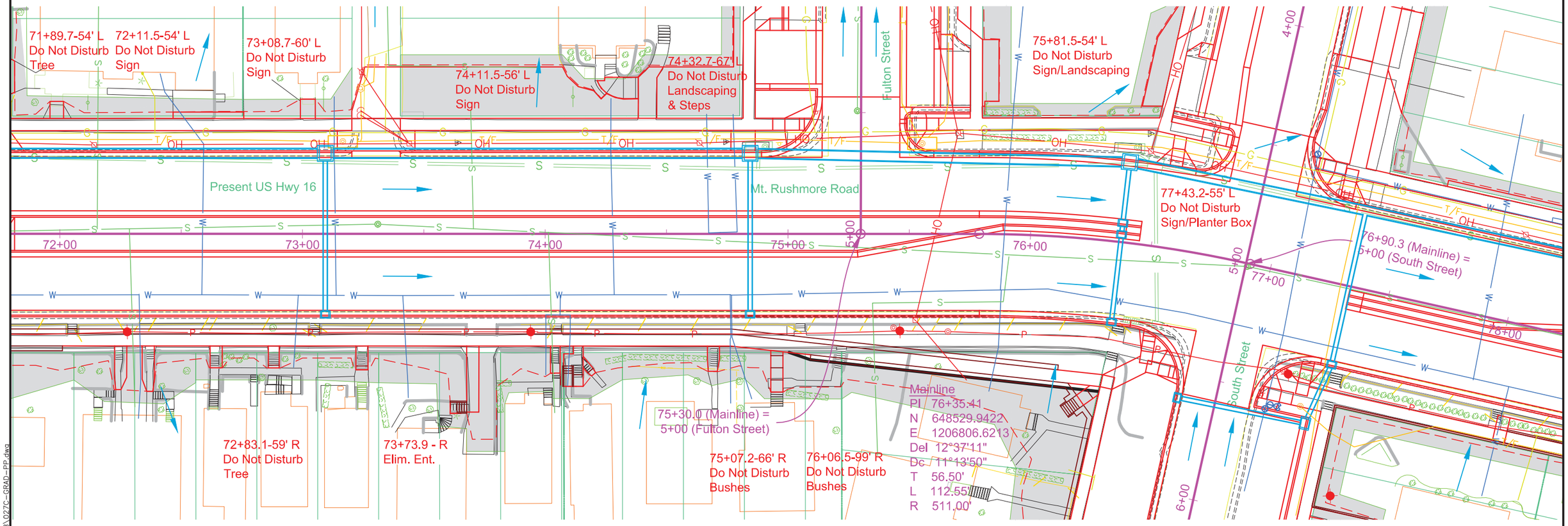

74+88-27' L to 76+47-34' L
Take Out 162'-42" RCP
(Incidental Work, Grading)

74+88-36' L to 74+88-27' L
Take Out 8'-18" PVC
(Incidental Work, Grading)

76+37-39' L to 76+47-34' L
Take Out 6'-15" PVC
(Incidental Work, Grading)

76+47-34' L to 80+32-30' L
Take Out 386'-42" RCP
(Incidental Work, Grading)

76+48-31' R to 76+57-32' R
Take Out 8'-12" PVC
(Incidental Work, Grading)

76+57-32' R to 76+47-34' L
Take Out 64'-12" RCP
(Incidental Work, Grading)

Remove Drop Inlets
with Frame and Grate
at the Following Locations:
74+88-36'L
76+37-39'L
76+44-32'R
76+48-32'R

Remove Junction Box
with Frame and Grate
at the Following Locations:
76+47-34'L
76+57-32'R

REGISTERED PROFESSIONAL ENGINEER
REG. NO. 8019
JOHN RAYMOND VAN BEEK
SOUTH DAKOTA
11-12-15

11-12-15 P:\12-117\AutoCAD\PlanSheets\027C\Section B\027C-GRAD-PP.dwg

STATE OF SOUTH DAKOTA	PROJECT	SHEET	TOTAL SHEETS
	NH0016(79)67	B48	B135

PLOTTING DATE: 11-12-15

FOR BIDDING PURPOSES ONLY

REGISTERED PROFESSIONAL ENGINEER
REG. NO. 8019
JOHN RAYMOND VAN BEEK
SOUTH DAKOTA
11/12/15

Exc	6235	Emb	1498
Undercut	9086	50% 749	2247
	15321	Undercut 9086	
		20% 1817	10903
		Waste	2171
		Total	15321

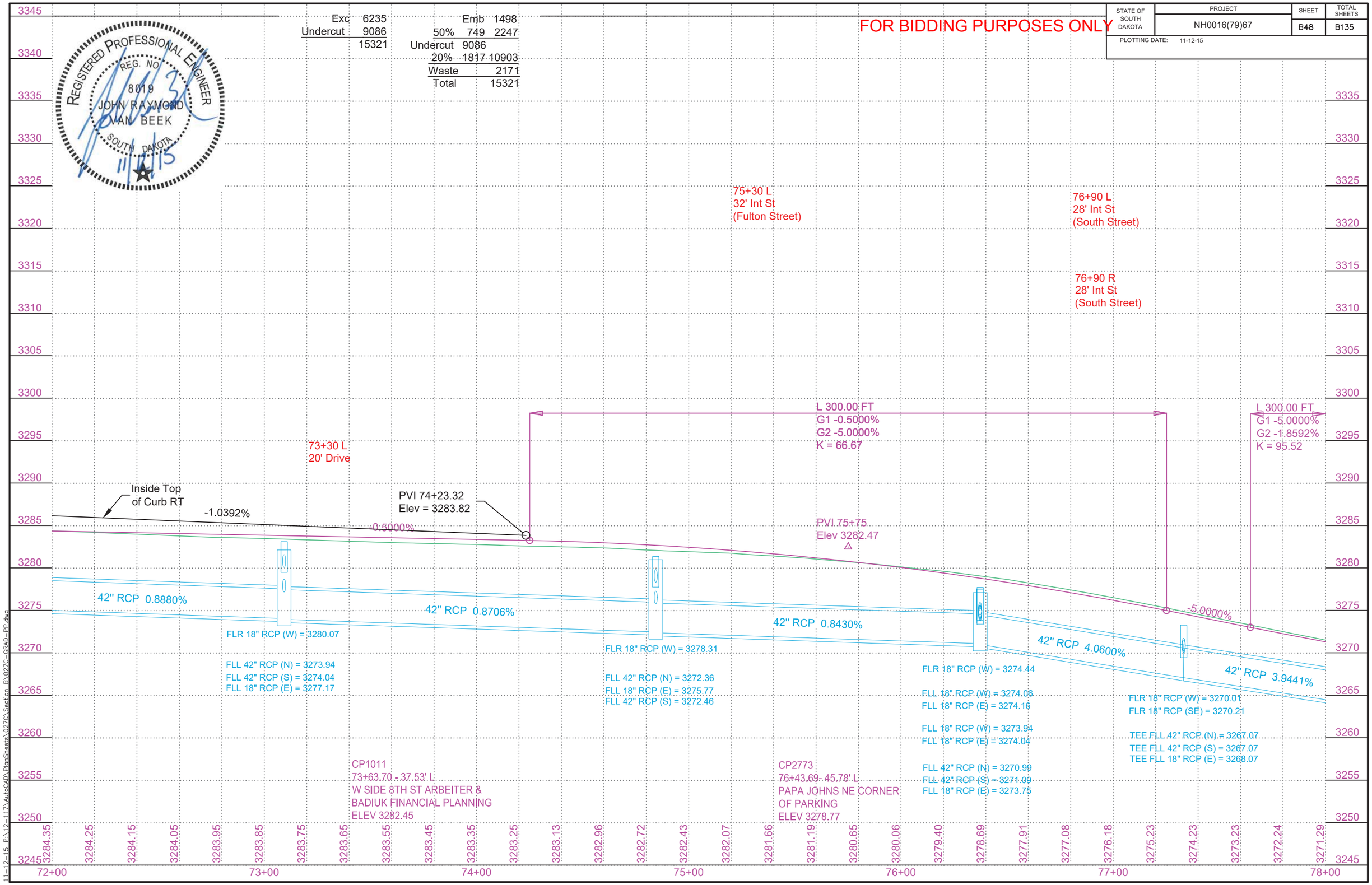

11-12-15 P:\12-117\AutoCAD\PlanSheets\027C\Section B\027C-GRAD-PP.dwg

STATE OF SOUTH DAKOTA	PROJECT	SHEET	TOTAL SHEETS
	NH0016(79)67	B49	B135

PLOTTING DATE: 11-12-15

FOR BIDDING PURPOSES ONLY

78+64.45 - 33.17' L to 79+88.72 - 33.17' L
Install 42" - 120' RCP (Between Drop Inlets)

78+64.45 - 33.17' R to 78+64.45 - 33.17' L
Install 18" - 64' RCP (Between Drop Inlets)

79+88.72 - 33.17' L to 80+36.33 - 33.17' L
Install 48" - 46' RCP (Between Drop Inlet & RC Tee)

80+36.33 - 3.17' L to 80+36.33 - 7.83' L
Install 18" - 4' RCP (Between Drop Inlets)

80+36.33 - 7.83' L to 80+36.33 - 33.17' L
Install 18" - 26' RCP (Between Drop Inlet & RC Tee)

80+36.33 - 33.17' L to 80+80.02 - 33.16' L
Install 48" - 42' RCP (Between RC Tee & JBox)

80+36.33 - 33.17' R to 80+36.33 - 3.17' L
Install 18" - 36' RCP (Between Drop Inlets)

80+80.02 - 33.16' L to 81+23.09 - 33.18' L
Install 48" - 42' RCP (Between JBox & RC Cross)

81+22.85 - 70.53' R to 81+23.09 - 33.18' L
Install 18" - 104' RCP (Between Drop Inlet & RC Cross)

81+23.09 - 33.18' L to 81+56.19 - 33.17' L
Install 48" - 32' RCP (Between RC Cross & Drop Inlet)

81+56.19 - 33.17' L to 82+67.92 - 33.17' L
Install 48" - 108' RCP (Between Drop Inlets)

82+67.92 - 33.17' L to 84+38.65 - 33.17' L
Install 48" - 166' RCP (Between Drop Inlets)

82+67.92 - 33.17' R to 82+67.92 - 33.17' L
Install 18" - 64' RCP (Between Drop Inlets)

82+67.92 - 33.17' R to 82+71.89 - 51.00' R
Install 8" - 18' PVC (Between Drop Inlet & Plastic Inline Inlet)

80+80.02-33.16' L
Install 6'x6' Junction Box With Type A10 Manhole Frame and Lid

Install 2'x3' Type B Drop Inlet with 6" Concrete Collar and Type B Frame and Grate at the Following Locations:
78+56.45-33.17' R
80+36.33-3.17' L
80+36.33-7.83' L
80+36.33-33.17' R
82+67.92-33.17' R

82+71.89-51.00' R
Install 8" Plastic Inline Standard Inlet With Special Frame and Grate

Install 5.5'x5.5' Type B Drop Inlet with 6" Concrete Collar and Type B Frame and Grate at the Following Locations:
78+56.45-33.17' L
79+88.72-33.17' L
81+56.19-33.17' L
82+67.92-33.17' L

Install Pipe Fittings at the Following Locations:
80+36.33-33.17' L
81+23.09-33.18' L
48"x18" RC Tee
48"x18" RC Cross

Install 6" Concrete Bollards at the following locations:
80+46.24-46.17' L
80+55.24-46.17' L

REGISTERED PROFESSIONAL ENGINEER
REG. NO. 8019
JOHN RAYMOND VAN BEEK
SOUTH DAKOTA
11-12-15

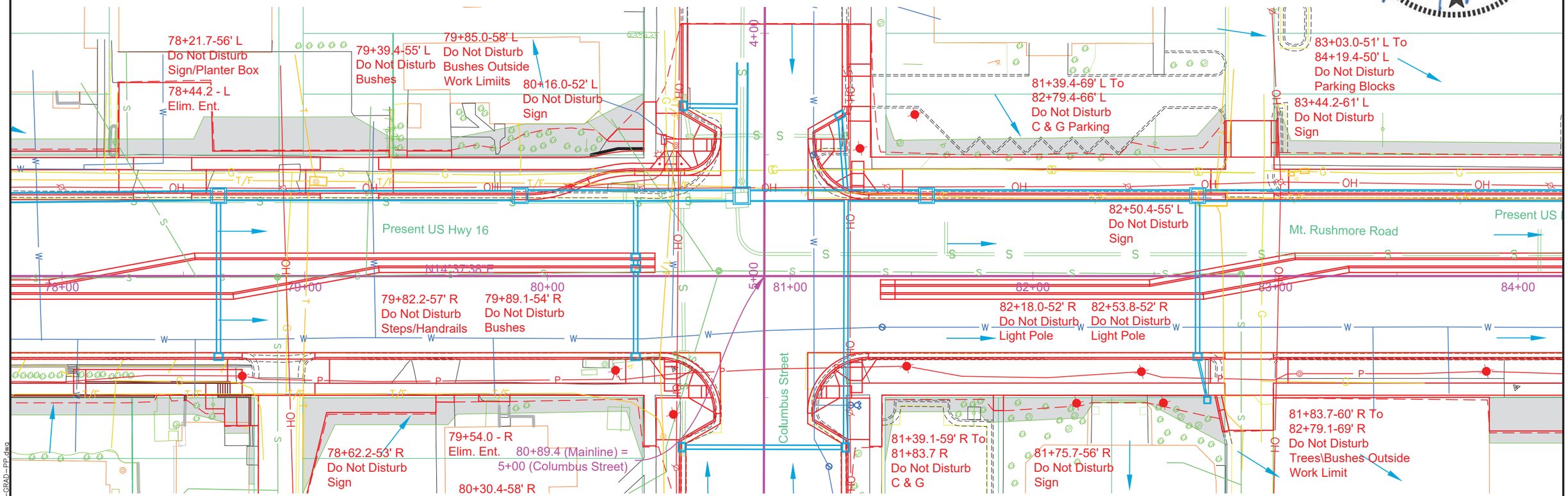

80+21-36' R to 80+56-32' R
Take Out 30'-12" PVC
(Incidental Work, Grading)

80+32-30' L to 80+55-31' L
Take Out 22'-42" RCP
(Incidental Work, Grading)

80+32-37' L to 80+32-30' L
Take Out 6'-18" PVC
(Incidental Work, Grading)

80+55-31' L to 80+78-31' L
Take Out 18'-36" RCP
(Incidental Work, Grading)

80+56-32' R to 80+55-31' L
Take Out 60'-12" RCP
(Incidental Work, Grading)

80+56-72' R to 80+56-32' R
Take Out 38'-10" PVC
(Incidental Work, Grading)

80+56-73' L to 80+59-57' L
Take Out 14'-15" PVC
(Incidental Work, Grading)

80+59-57' L to 80+80-58' L
Take Out 20'-15" RCP
(Incidental Work, Grading)

80+78-31' L to 80+79-19' L
Take Out 12'-48" RCP
(Incidental Work, Grading)

80+79-19' L to 80+89-9' L
Take Out 16'-48" RCP
(Incidental Work, Grading)

80+80-34' L to 80+80-39' L
Take Out 4'-48" RCP
(Incidental Work, Grading)

80+80-39' L to 80+80-58' L
Take Out 18'-48" RCP
(Incidental Work, Grading)

80+80-58' L to 80+81-277' L
Take Out 220'-48" RCP
(Incidental Work, Grading)

80+89-9' L to 81+64-9' L
Take Out 76'-48" RCP
(Incidental Work, Grading)

81+23-58' L to 80+80-58' L
Take Out 42'-12" RCP
(Incidental Work, Grading)

81+64-9' L to 81+64-22' L
Take Out 14'-4" HDPE
(Incidental Work, Grading)

81+64-9' L to 84+09-9' L
Take Out 246'-48" RCP
(Incidental Work, Grading)

Remove Drop Inlets with Frame and Grate at the Following Locations:
80+21-36'R
80+32-37'L
80+56-73'L
80+56-73'R
80+59-57'L
81+23-58'L

Remove Junction Box with Frame and Grate at the Following Locations:
80+55-31'L
80+56-32'R
80+78-31'L

80+80-39'L
Remove Manhole With Frame And Lid

11-12-15 P:\12-117\AutoCAD\PlanSheets\027C\Section BV027C-GRAD-PP.dwg

STATE OF SOUTH DAKOTA	PROJECT	SHEET	TOTAL SHEETS
	NH0016(79)67	B50	B135
PLOTTING DATE: 11-12-15			

FOR BIDDING PURPOSES ONLY

REGISTERED PROFESSIONAL ENGINEER
REG. NO
8019
JOHN RAYMOND
VAN BEEK
SOUTH DAKOTA
11/12/15

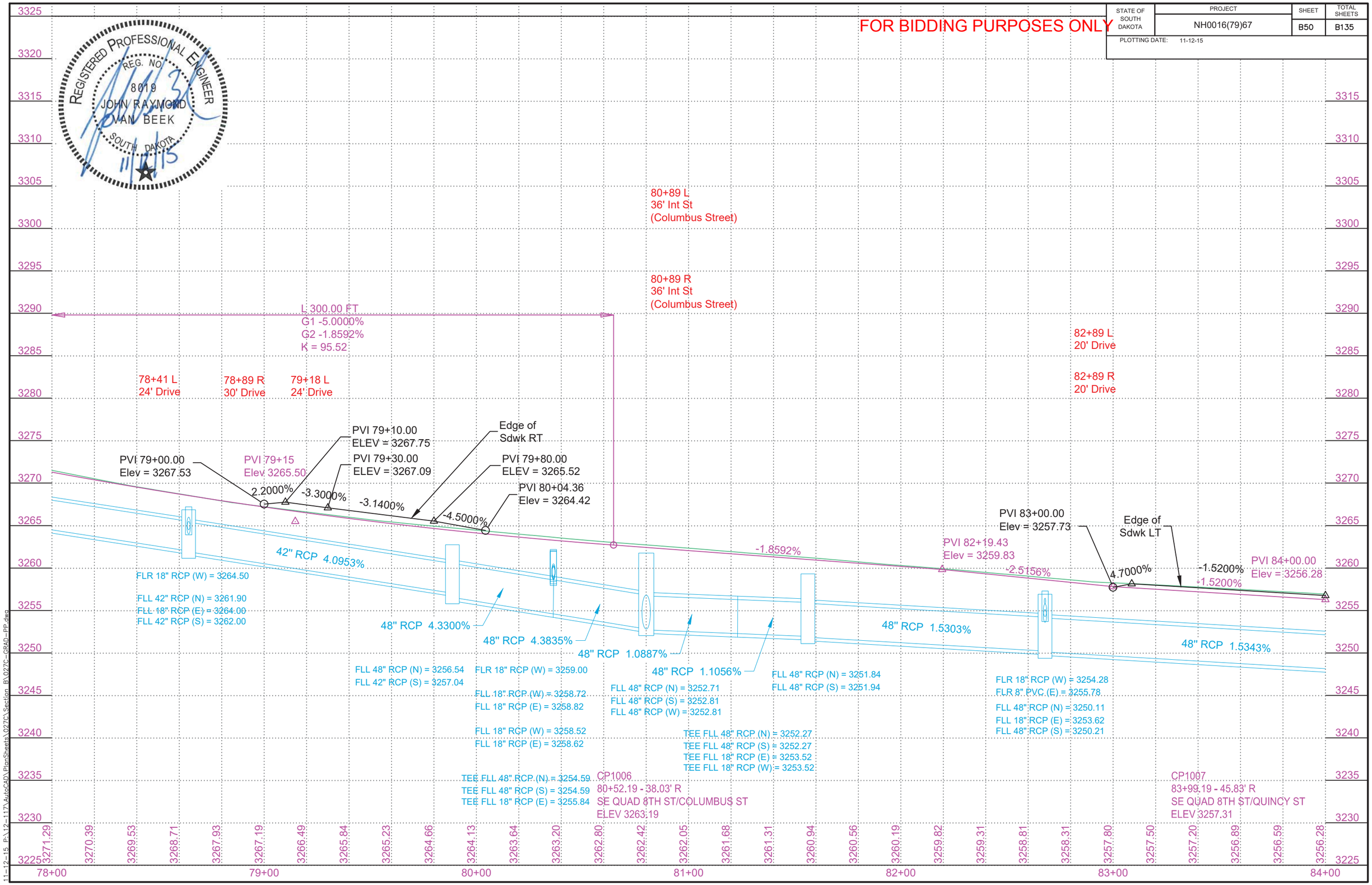

11-12-15 P:\12-117\AutoCAD\PlanSheets\027C\Section B\027C-GRAD-PP.dwg

STATE OF SOUTH DAKOTA	PROJECT	SHEET	TOTAL SHEETS
	NH0016(79)67	B51	B135

PLOTTING DATE: 11-12-15

FOR BIDDING PURPOSES ONLY

84+34.63 - 3.17' L to
84+34.63 - 7.83' L
Install 18" - 4' RCP
(Between Drop Inlets)

84+34.63 - 7.83' L to
84+38.65 - 33.17' L
Install 18" - 22' RCP
(Between Drop Inlets)

84+34.63 - 33.17' R to
84+34.63 - 3.17' L
Install 18" - 36' RCP
(Between Drop Inlets)

84+38.65 - 33.17' L to
86+40.25 - 34.67' L
Install 48" - 198' RCP
(Between Drop Inlets)

85+66.18 - 51.01' R to
85+66.20 - 37.67' R
Install 8" - 14' PVC
(Between PVC Bend &
Plastic Inline Inlet)

85+66.20 - 37.67' R to
86+40.23 - 37.67' R
Install 8" - 76' PVC
(Between PVC Bend PVC
Tee)

86+40.04 - 51.32' R to
86+40.23 - 37.67' R
Install 8" - 14' PVC
(Between PVC Tee &
Plastic Inline Inlet)

86+40.23 - 37.67' R to
86+40.25 - 34.67' R
Install 8" - 4' PVC
(Between Drop Inlet &
PVC Tee)

86+40.25 - 34.67' L to
86+82.93 - 33.67' L
Install 48" - 40' RCP
(Between Drop Inlet
& RC Tee)

86+40.25 - 34.67' R to
86+40.25 - 34.67' L
Install 18" - 66' RCP
(Between Drop Inlets)

86+82.93 - 33.67' L to
87+89.53 - 34.67' L
Install 48" - 104' RCP
(Between RC Tee
& Drop Inlet)

86+82.93 - 41.22' L to
86+82.93 - 33.67' L
Install 12" - 8' RCP
(Between Connect to
Existing
& RC Tee)

87+89.53 - 34.67' L to
87+89.53 - 10.14' L
Install 48" - 20' RCP
(Between Drop Inlet
& Junction Box)

Install 8" Plastic Inline
Standard Inlet
with Special Frame and Grate
at the Following Locations:
85+66.18-51.01' R
86+40.04-51.32' R

Install 2'x3' Type B Drop
Inlet with 6" Concrete Collar
and Type B Frame and Grate
at The Following Locations:
84+34.63-3.17' L
84+34.63-7.83' L
84+34.63-33.17' R
86+40.25-33.67' R

87+96.29-10.14' L
Install 6'x6' Junction Box
with Type A10 Manhole
Frame and Lid

Install 2'x3' Type B Drop
Inlet with 6" Concrete Collar
and Type B Frame and Grate
at the Following Locations:
84+38.65-33.17' L
86+40.25-33.67' L
87+96.29-33.67' L

Install Pipe Fittings
at the Following Locations:

85+66.20-37.67' R	8" PVC 90 Deg Elbow
86+40.23-37.67' R	8"x8" PVC Tee
86+82.93-33.67' L	48"x12" RC Tee

REGISTERED PROFESSIONAL ENGINEER
REG. NO. 8019
JOHN RAYMOND VAN BEEK
SOUTH DAKOTA
11/12/15

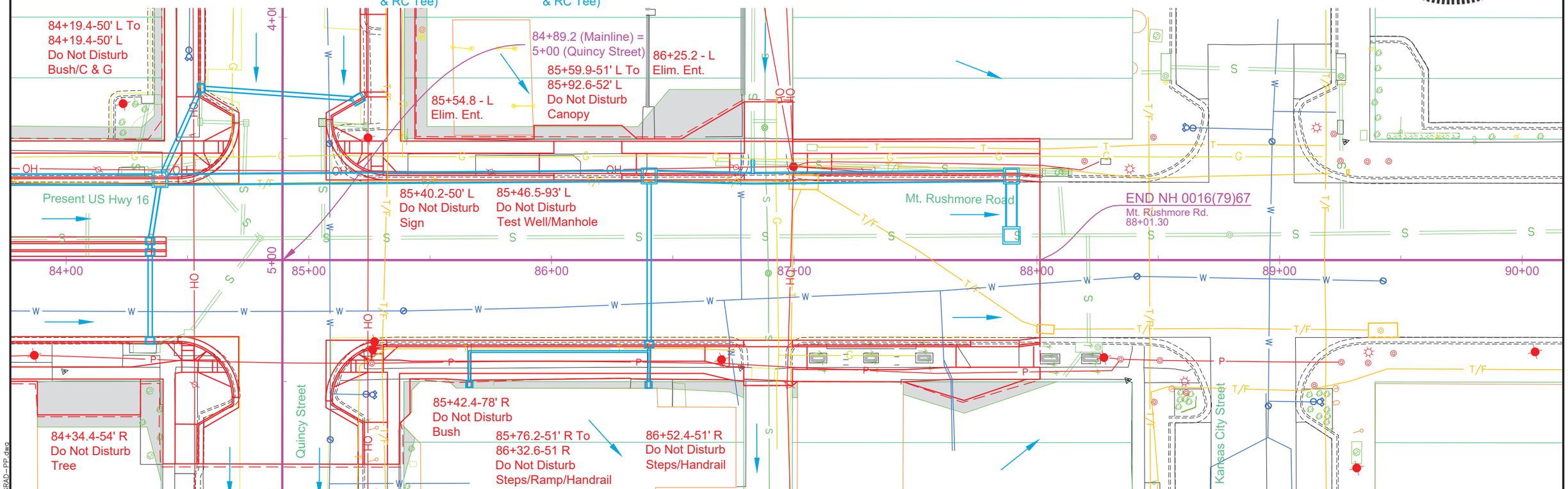

84+09-9' L to 84+09-1' L
Take Out 8'-12" RCP
(Incidental Work, Grading)

84+09-9' L to 84+09-19' L
Take Out 12'-12" RCP
(Incidental Work, Grading)

84+09-9' L to 84+80-9' L
Take Out 70'-48" RCP
(Incidental Work, Grading)

84+28-36' L to 84+54-40' L
Take Out 22'-18" PVC
(Incidental Work, Grading)

84+33-36' R to 84+51-30' R
Take Out 12'-12" PVC
(Incidental Work, Grading)

84+34-66' L to 84+28-36' L
Take Out 28'-15" RCP
(Incidental Work, Grading)

84+51-30' R to 84+80-9' L
Take Out 46'-12" RCP
(Incidental Work, Grading)

84+54-40' L to 84+80-9' L
Take Out 34'-12" RCP
(Incidental Work, Grading)

84+56-72' L to 84+55-57' L
Take Out 14'-12" PVC
(Incidental Work, Grading)

84+74-56' L to 84+55-57' L
Take Out 18'-15" RCP
(Incidental Work, Grading)

84+74-56' L to 84+73-10' L
Take Out 46'-15" RCP
(Incidental Work, Grading)

84+80-9' L to 85+06-9' L
Take Out 26'-48" RCP
(Incidental Work, Grading)

85+06-9' L to 88+01-10' L
Take Out 296'-48" RCP
(Incidental Work, Grading)

85+06-57' L to 85+06-9' L
Take Out 46'-12" RCP
(Incidental Work, Grading)

85+06-57' L to 85+23-55' L
Take Out 16'-12" RCP
(Incidental Work, Grading)

Remove Drop Inlets
with Frame and Grate
at the Following Locations:
84+28-36'L
84+33-36'R
84+34-66'L
84+55-57'L
84+56-72'L
84+74-56'L
85+06-57'L
85+23-55'L

Remove Junction Box
with Frame and Grate
at the Following Locations:
84+51-30'R
84+56-38'L

Remove Manholes
with Frame and Lid
at the Following Locations:
84+80-9'L
86+83-40'L
86+84-370'L

11-12-15 P:\12-117\AutoCAD\PlanSheets\027C\Section B\027C-GRAD-PP.dwg

STATE OF SOUTH DAKOTA	PROJECT	SHEET	TOTAL SHEETS
	NH0016(79)67	B52	B135

PLOTTING DATE: 11-12-15

FOR BIDDING PURPOSES ONLY

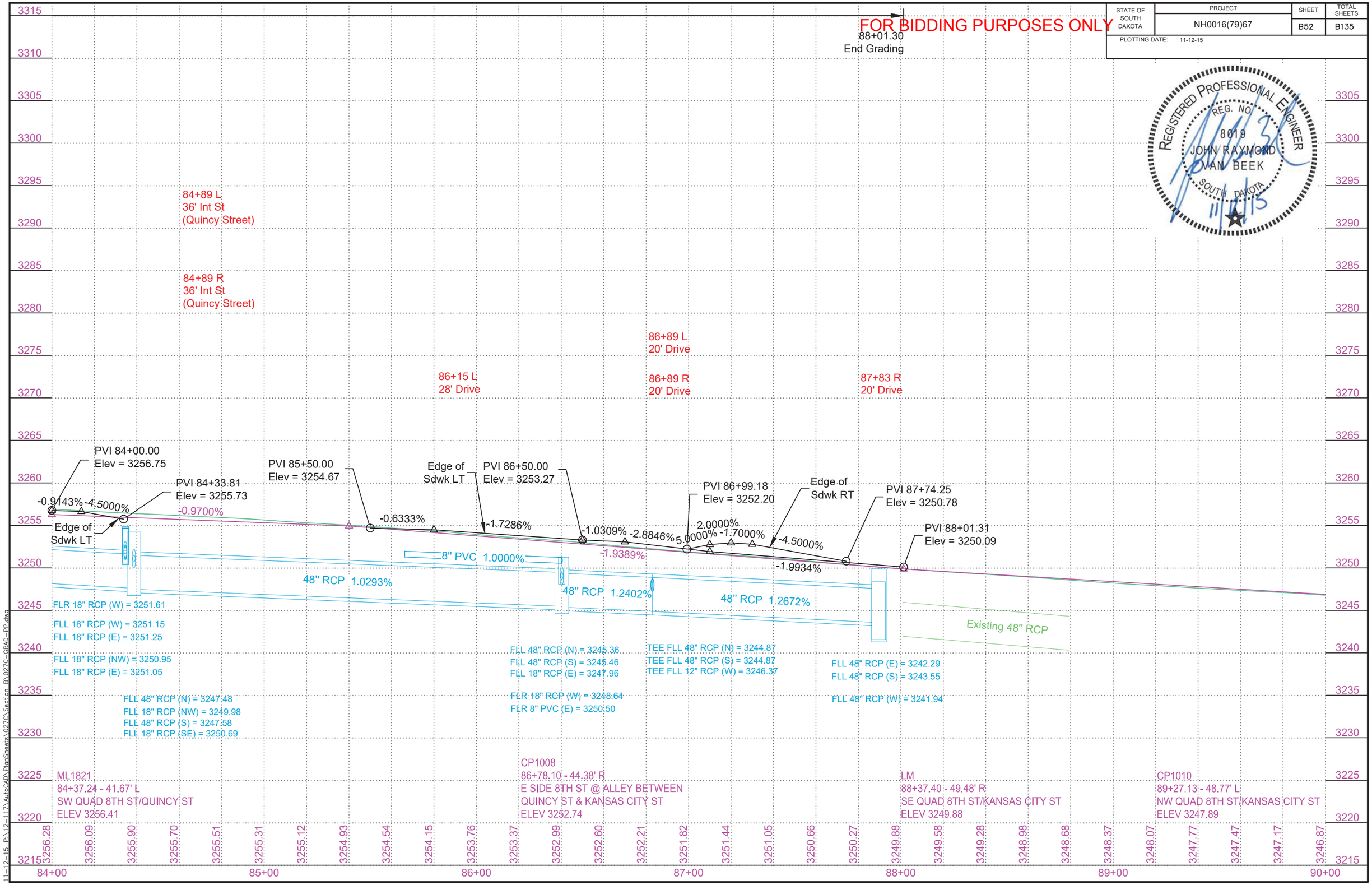

11-12-15 P:\12-117\AutoCAD\PlanSheets\027C\Section B\027C-GRAD-PP.dwg

STATE OF SOUTH DAKOTA	PROJECT	SHEET	TOTAL SHEETS
	NH0016(79)67	B53	B135

PLOTTING DATE: 11-12-15

ST. JAMES STREET PLAN

FOR BIDDING PURPOSES ONLY

3+28.67 - 15.67' R to
3+28.67 - 15.67' L
Install 18" - 30' RCP
(Between Drop Inlets)

3+28.67 - 15.67' R to
4+38.73 - 15.67' R
Install 18" - 108' RCP
(Between Drop Inlets)

4+38.73 - 15.67' R to
4+38.73 - 15.34' L
Install 18" - 30' RCP
(Between Drop Inlets)

4+38.73 - 15.67' R to
4+66.91 - 15.58' R
Install 18" - 28' RCP
(Between Drop Inlet
& RC Tee)

5+33.05 - 46.38' L to
5+58.54 - 15.67' L
Install 18" - 36' RCP
(Between Drop Inlets)

5+58.54 - 15.67' R to
5+33.18 - 15.72' R
Install 18" - 24' RCP
(Between Drop Inlet
& RC Tee)

5+81.69 - 15.67' R to
5+58.54 - 15.67' R
Install 18" - 22' RCP
(Between Drop Inlets)

Install 2'x3' Type B Drop
Inlet with 6" Concrete Collar
and Type B Frame and Grate
at the Following Locations:
3+28.67-15.67' L
3+28.67-15.67' R
4+38.73-15.67' R
5+58.54-15.67' L
5+58.54-15.67' R
5+81.69-15.67' R

4+38.73-15.34' L
Install 2'x3' Type B Drop
Inlet with 6" Concrete Collar
and Type E Frame and Grate

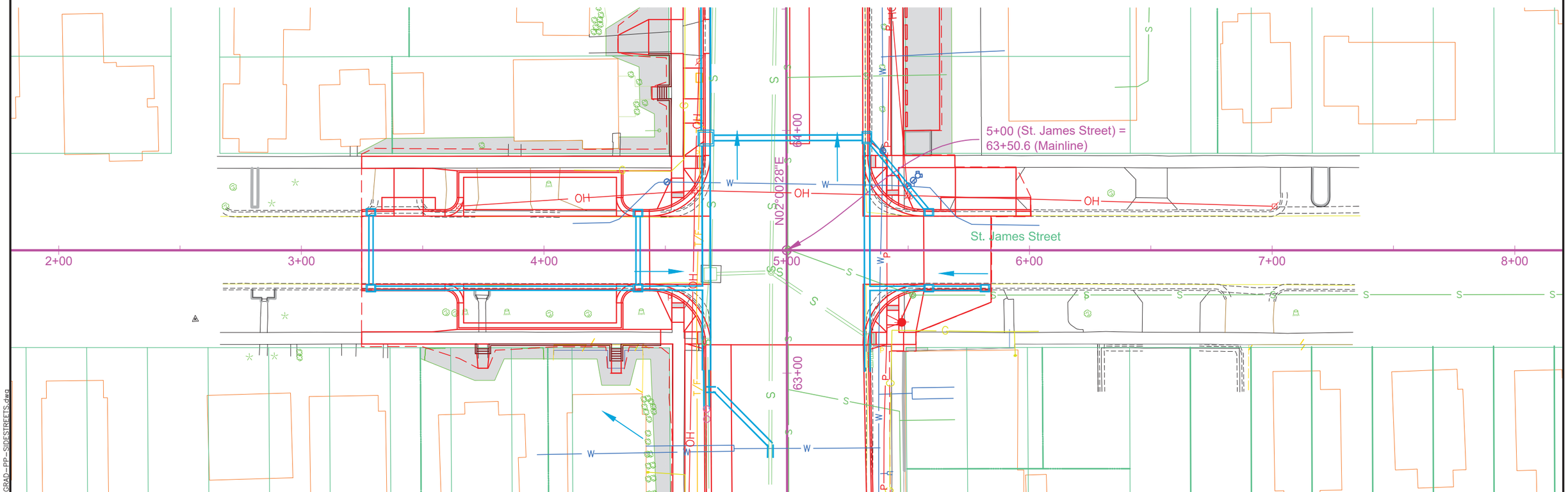

REGISTERED PROFESSIONAL ENGINEER
REG. NO.
8019
JOHN RAYMOND
VAN BEEK
SOUTH DAKOTA
11/12/15

11-12-15 P:\12-117\AutoCAD\PlanSheets\027C\Section B\027C-GRAD-PP-SIDESTREETS.dwg

SAINT JAMES STREET PROFILE

FOR BIDDING PURPOSES ONLY

STATE OF SOUTH DAKOTA	PROJECT	SHEET	TOTAL SHEETS
	NH0016(79)67	B54	B135

PLOTTING DATE: 11-12-15

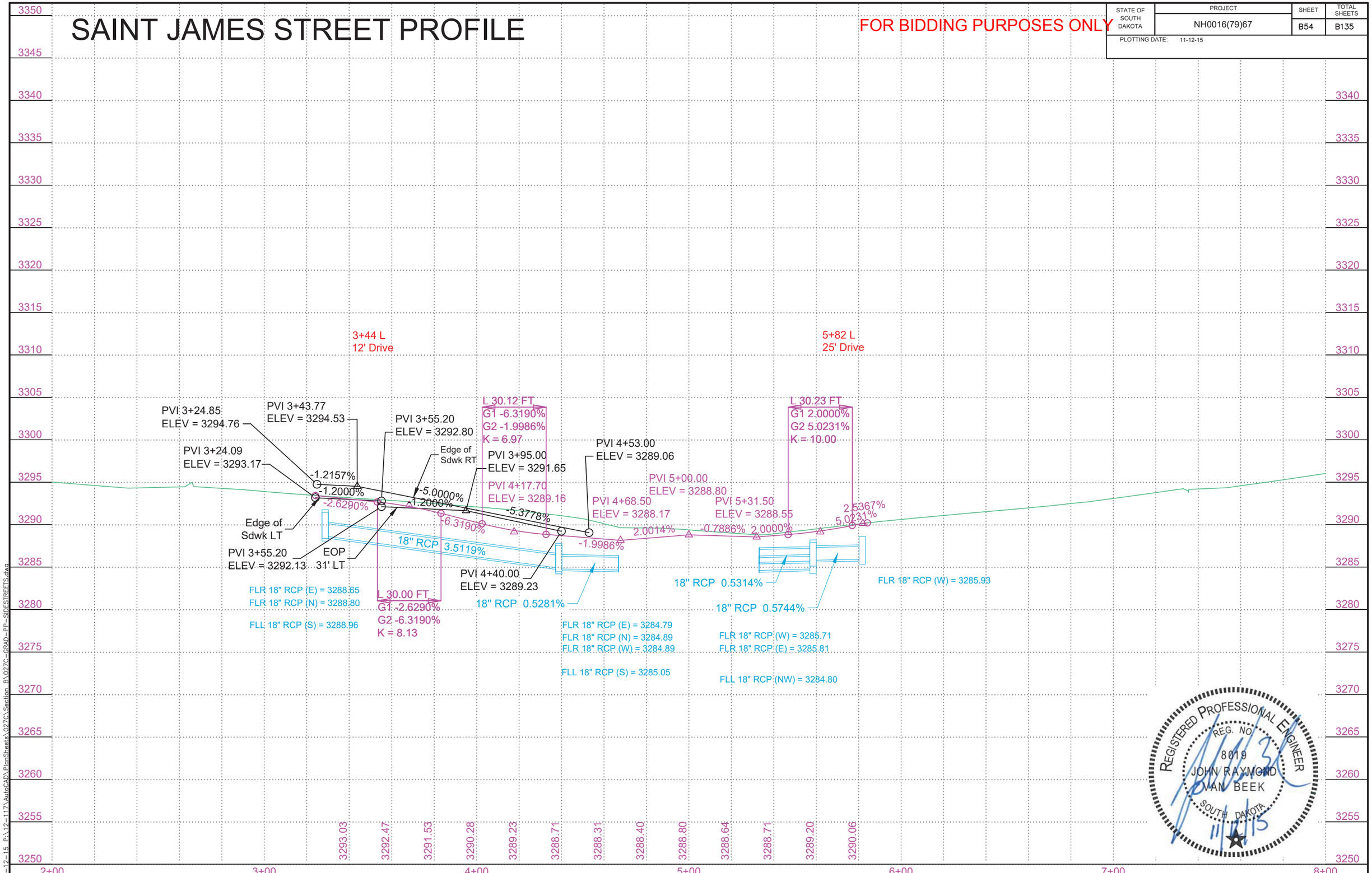

REGISTERED PROFESSIONAL ENGINEER
REG. NO. 8019
JOHN RAYMOND VAN BEEK
SOUTH DAKOTA
11/12/15

11-12-15 P:\12-117\AutoCAD\PlanSheets\027C\Section B\027C-GRAD-PP-SIDESTREETS.dwg

FAIRVIEW STREET PLAN

FOR BIDDING PURPOSES ONLY

STATE OF SOUTH DAKOTA	PROJECT	SHEET	TOTAL SHEETS
	NH0016(79)67	B55	B135

PLOTTING DATE: 11-12-15

4+37.72 - 15.34' R to
4+56.92 - 32.58' R
Install 18" - 24' RCP
(Between Drop Inlets)

4+37.72 - 38.13' L to
4+62.16 - 59.27' L
Install 18" - 26' RCP
(Between Drop Inlets)

5+59.52 - 15.67' R to
5+59.52 - 15.67' L
Install 18" - 30' RCP
(Between Drop Inlets)

6+39.27 - 15.00' R to
5+59.52 - 15.67' R
Install 18" - 78' RCP
(Between Drop Inlets)

6+39.27 - 15.00' R to
6+39.27 - 15.67' L
Install 18" - 30' RCP
(Between Drop Inlets)

Install 2'x3' Type B Drop
Inlet with 6" Concrete Collar
and Type B Frame and Grate
at the Following Locations:
4+37.72-38.13' L
5+59.52-15.67' L
5+59.52-15.67' R
6+39.27-15.00' R
6+39.27-15.67' L

4+37.70-15.34' R
Install 2'x3' Type B Drop
Inlet with 6" Concrete Collar
and Type E Frame and Grate

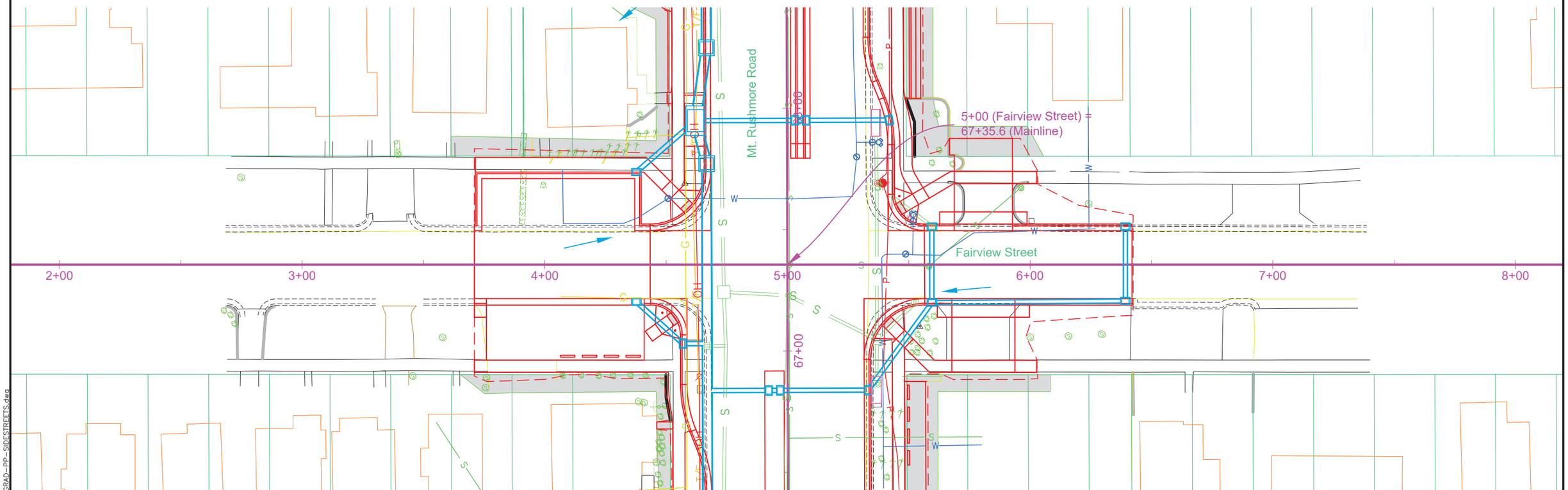

REGISTERED PROFESSIONAL ENGINEER
REG. NO.
8019
JOHN RAYMOND
VAN BEEK
SOUTH DAKOTA
11/12/15

11-12-15 P:\12-117\AutoCAD\PlanSheets\027C\Section_B\027C-GRAD-PP-SIDESTREETS.dwg

FAIRVIEW STREET PROFILE

FOR BIDDING PURPOSES ONLY

STATE OF SOUTH DAKOTA	PROJECT	SHEET	TOTAL SHEETS
	NH0016(79)67	B56	B135

PLOTTING DATE: 11-12-15

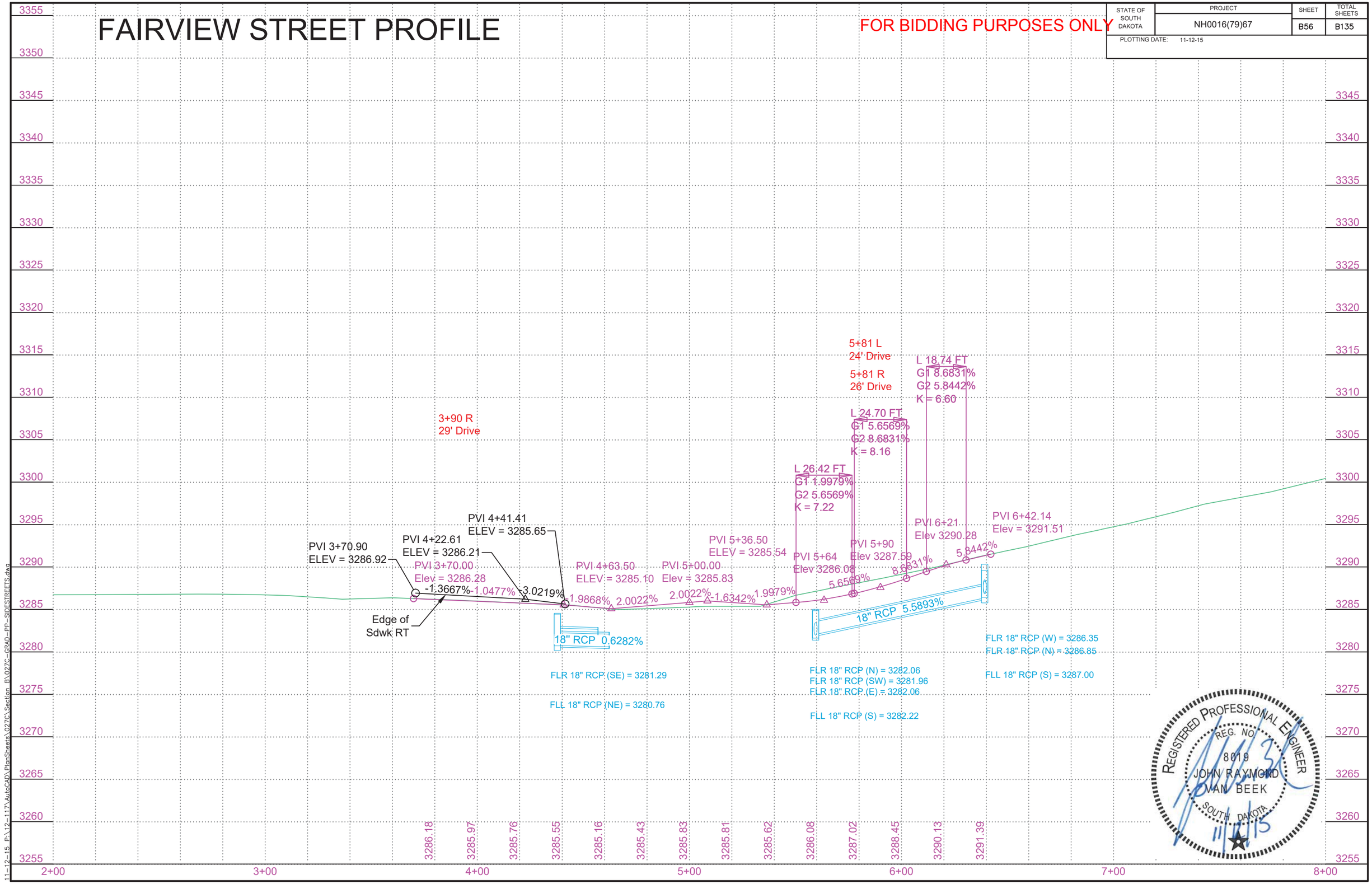

REGISTERED PROFESSIONAL ENGINEER
REG. NO. 8019
JOHN RAYMOND VAN BEEK
SOUTH DAKOTA
11/12/15

11-12-15 P:\12-117\AutoCAD\PlanSheets\027C\Section B\027C-GRAD-PP-SIDESTREETS.dwg

CLARK STREET PLAN

FOR BIDDING PURPOSES ONLY

STATE OF SOUTH DAKOTA	PROJECT	SHEET	TOTAL SHEETS
	NH0016(79)67	B57	B135

PLOTTING DATE: 11-12-15

0+65.37 - 12.67' R to
0+65.37 - 11.67' L
Install 18" - 24' RCP
(Between Drop Inlets)

Install 2'x3' Type B Drop
Inlet with 6" Concrete Collar
and Type B Frame and Grate
at the Following Locations:
0+65.37-11.67' L
0+65.37-12.67' R

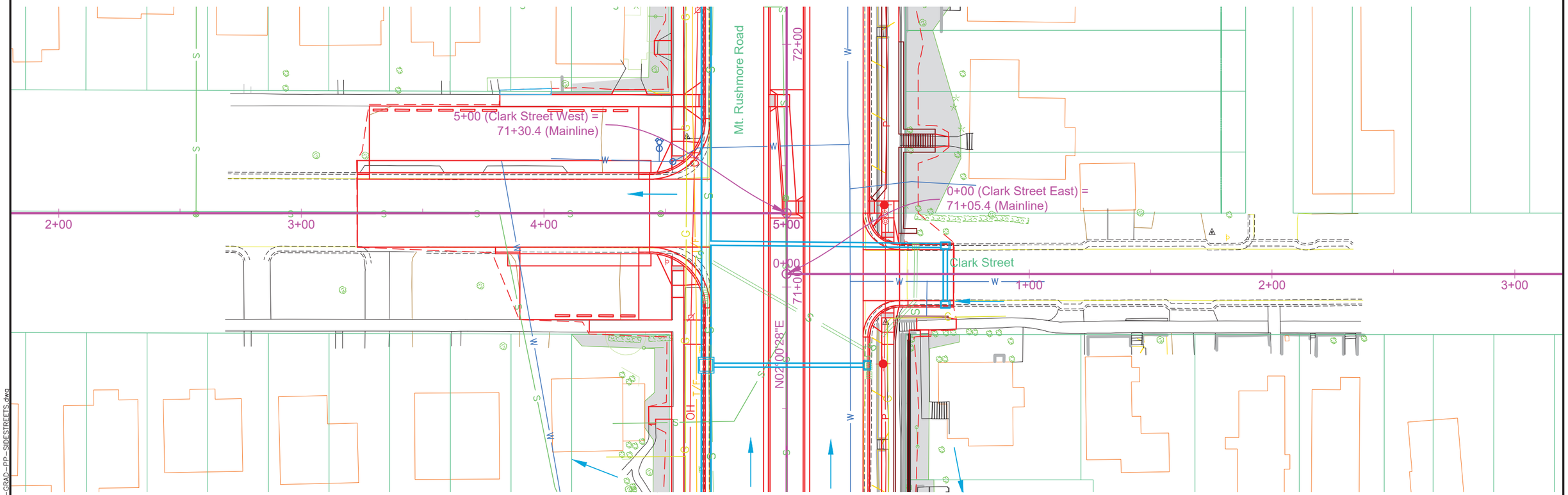

11-12-15 P:\12-117\AutoCAD\PlanSheets\027C\Section B\027C-GRAD-PP-SIDESTREETS.dwg

CLARK STREET EAST PROFILE

FOR BIDDING PURPOSES ONLY

STATE OF SOUTH DAKOTA	PROJECT	SHEET	TOTAL SHEETS
	NH0016(79)67	B58	B135

PLOTTING DATE: 11-12-15

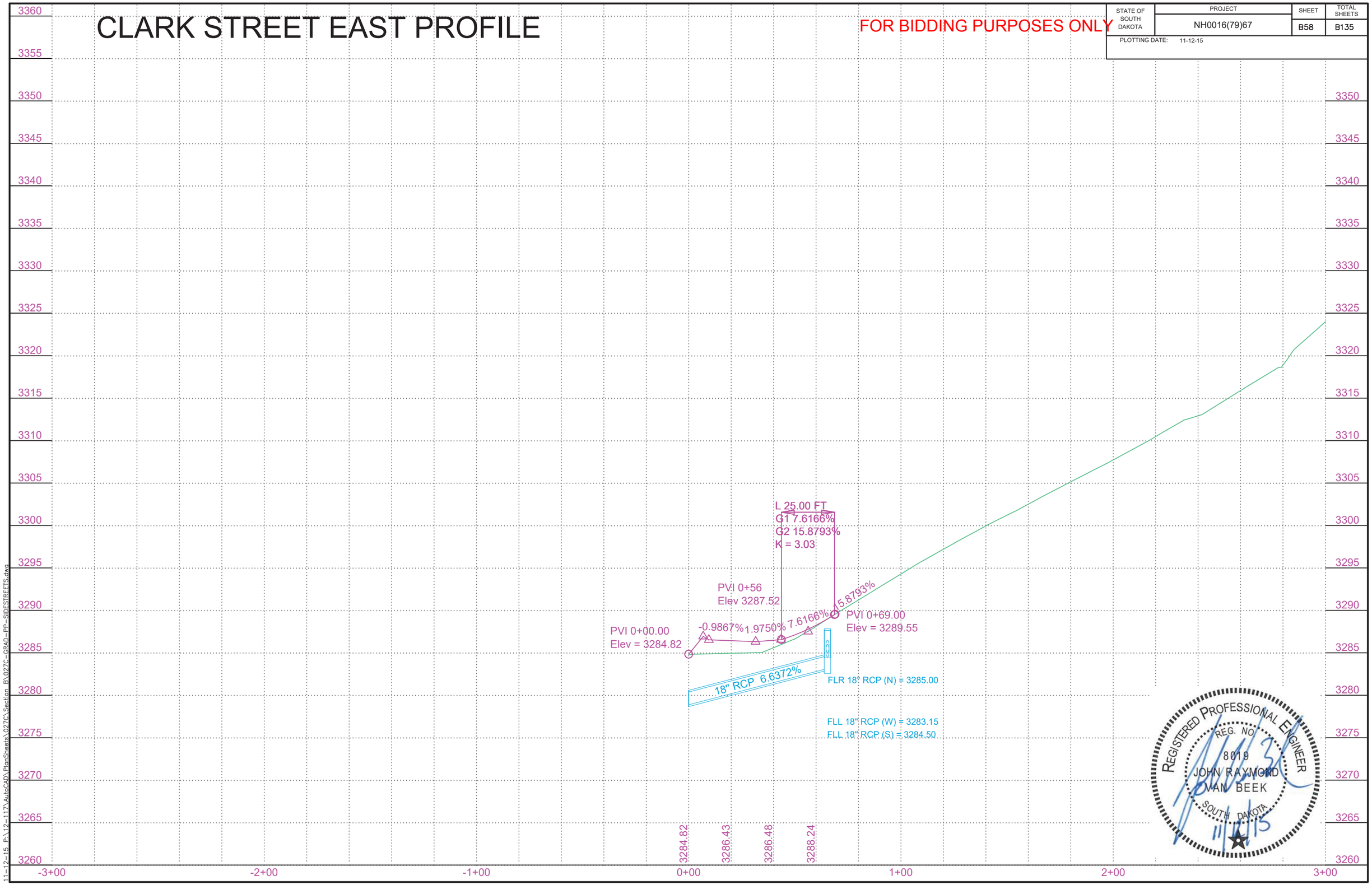

11-12-15 P:\12-117\AutoCAD\PlanSheets\027C\Section B\027C-GRAD-PP-SIDESTREETS.dwg

CLARK STREET WEST PROFILE

FOR BIDDING PURPOSES ONLY

STATE OF SOUTH DAKOTA	PROJECT	SHEET	TOTAL SHEETS
	NH0016(79)67	B59	B135

PLOTTING DATE: 12-2-15 REV 12-02-15 JRV

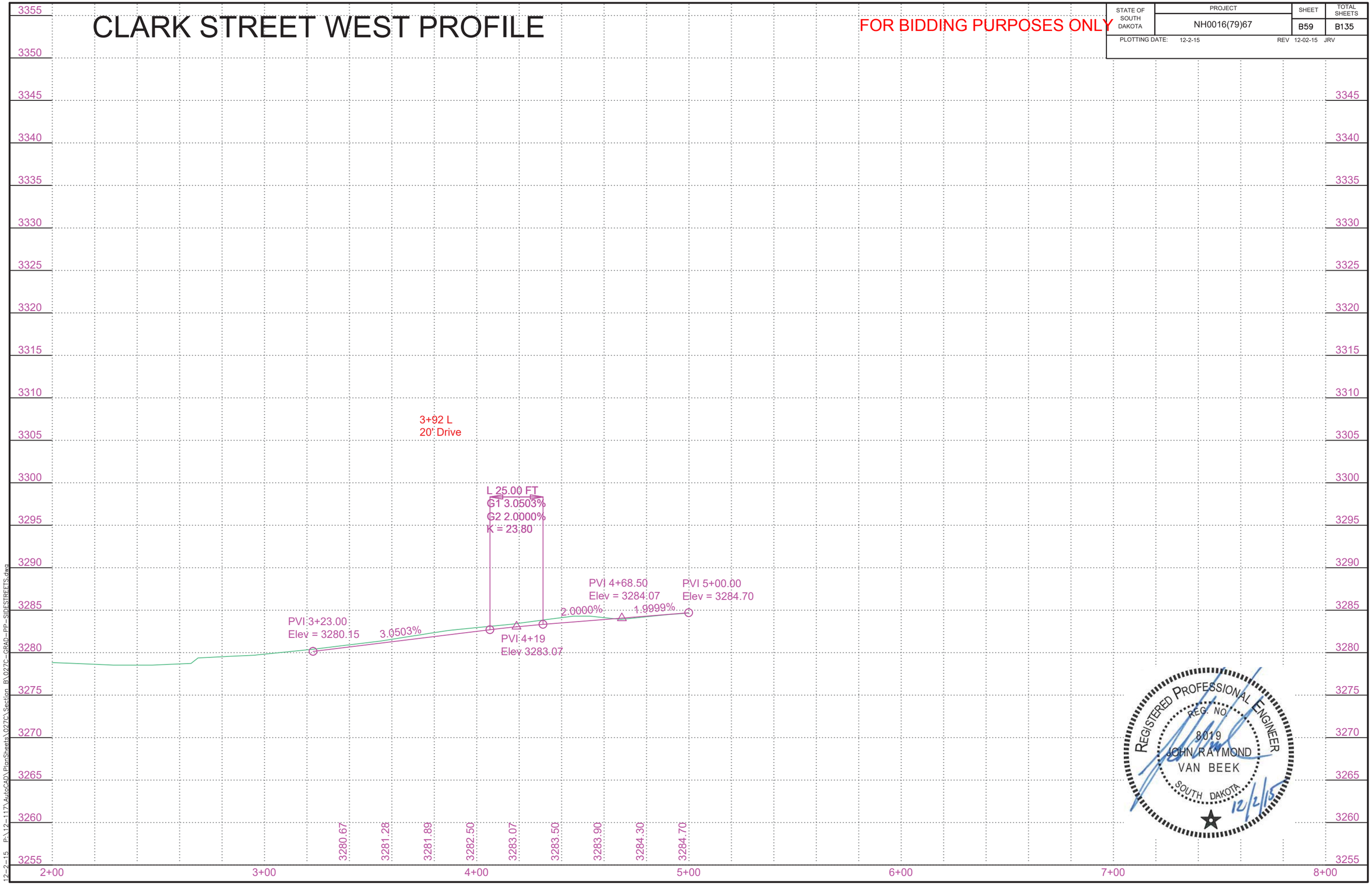

12-2-15 P:\12-117\AutoCAD\PlanSheets\027C\Section B\027C-GRAD-PP-SIDESTREETS.dwg

FULTON STREET PLAN

FOR BIDDING PURPOSES ONLY

STATE OF SOUTH DAKOTA	PROJECT	SHEET	TOTAL SHEETS
	NH0016(79)67	B60	B135

PLOTTING DATE: 01-21-16 REV 01-21-16 JRV

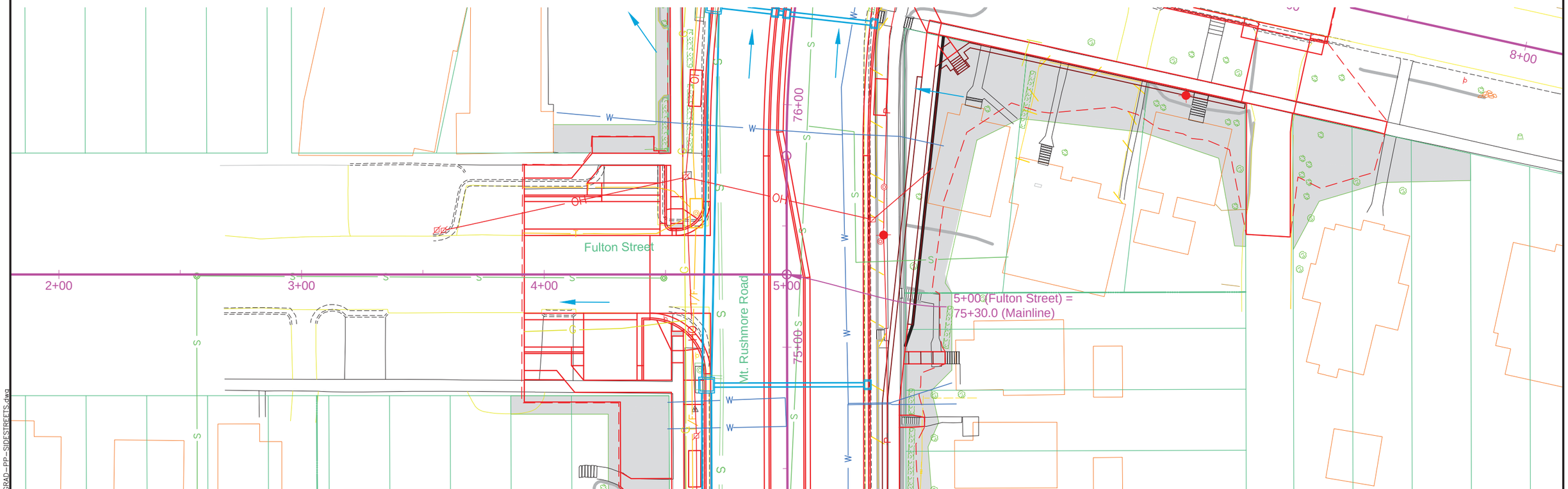

REGISTERED PROFESSIONAL ENGINEER
REG. NO. 8019
JOHN RAYMOND VAN BEEK
SOUTH DAKOTA
1/21/16

01-21-16 P:\12-117\AutoCAD\PlanSheets\027C\Section B\027C-GRAD-PP-SIDESTREETS.dwg

FULTON STREET PROFILE

FOR BIDDING PURPOSES ONLY

STATE OF SOUTH DAKOTA	PROJECT	SHEET	TOTAL SHEETS
	NH0016(79)67	B61	B135

PLOTTING DATE: 11-12-15

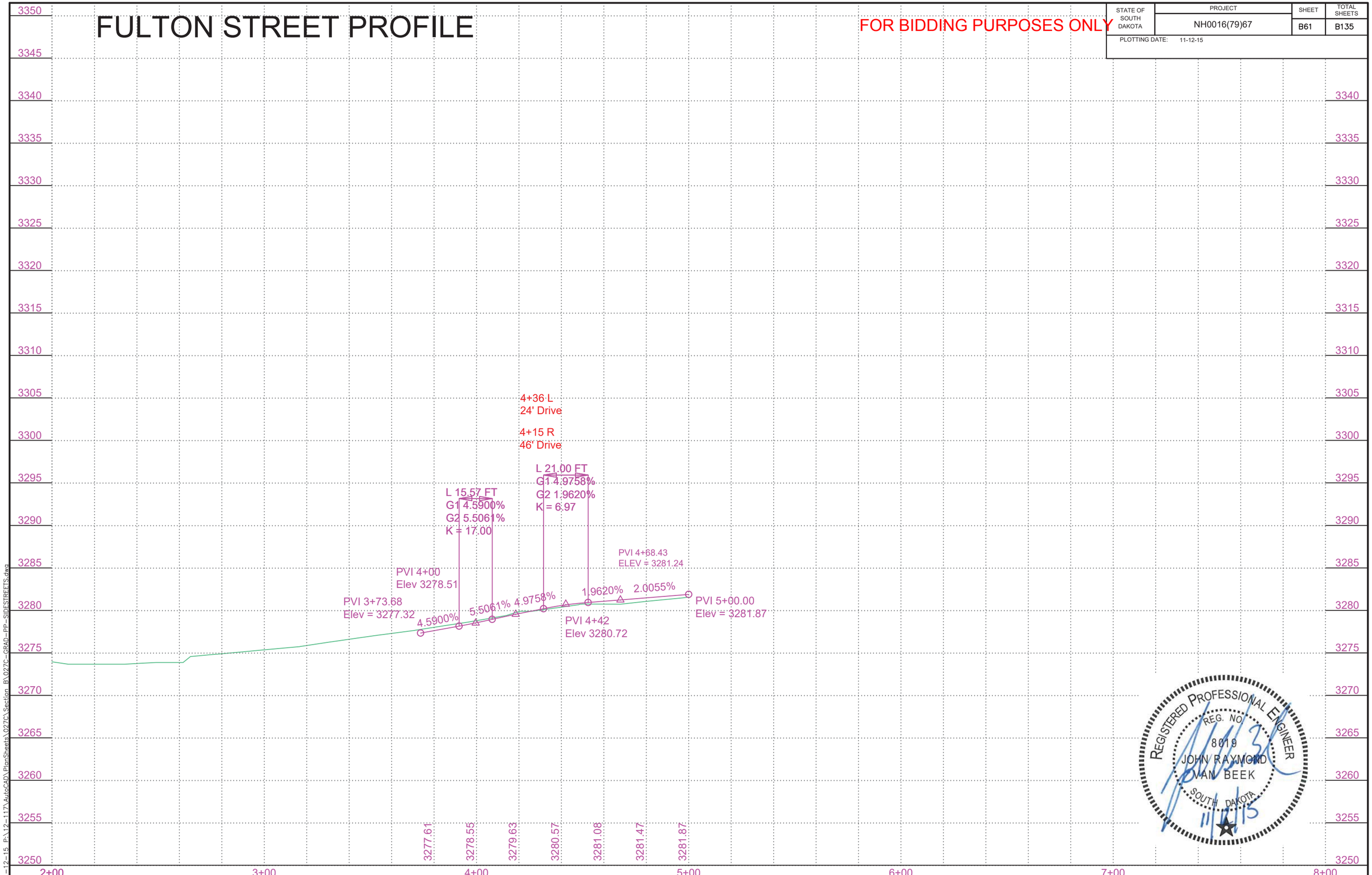

REGISTERED PROFESSIONAL ENGINEER
REG. NO.
8019
JOHN RAYMOND
VAN BEEK
SOUTH DAKOTA
11/12/15

11-12-15 P:\12-117\AutoCAD\PlanSheets\027C\Section B\027C-GRAD-PP-SIDESTREETS.dwg

SOUTH STREET PLAN

FOR BIDDING PURPOSES ONLY

STATE OF SOUTH DAKOTA	PROJECT	SHEET	TOTAL SHEETS
	NH0016(79)67	B62	B135

PLOTTING DATE: 01-21-16 REV 01-21-16 JRV

5+59.17 - 38.00' L to
5+33.17 - 43.44' L
Install 18" - 24' RCP
(Between Drop Inlets)

5+60.32 - 15.67' R to
5+59.17 - 38.00' L
Install 18" - 52' RCP
(Between Drop Inlets)

5+60.32-15.67' R
Install 2'x3' Type B Drop
Inlet with 6" Concrete Collar
and Type B Frame and Grate

5+59.17-38.00' L
Install 3'x4' Type B Drop
Inlet with 6" Concrete Collar
and Type B Frame and Grate

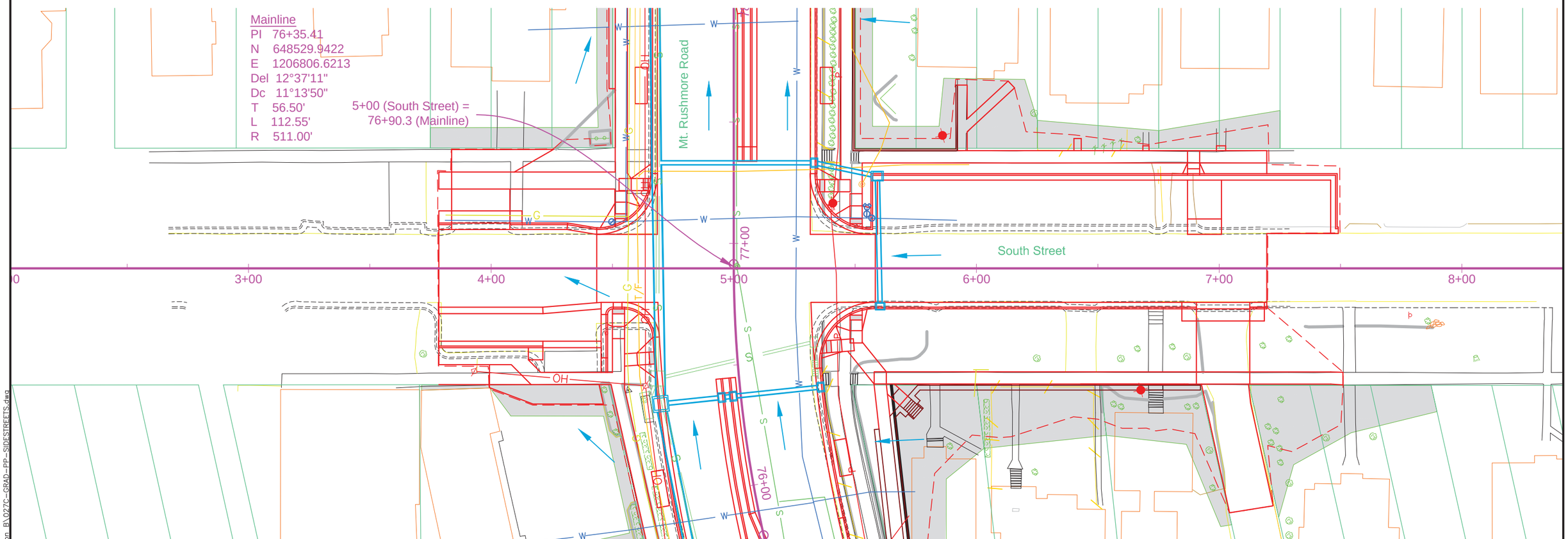

REGISTERED PROFESSIONAL ENGINEER
REG. NO.
8019
JOHN RAYMOND
VAN BEEK
SOUTH DAKOTA
1/21/16

01-21-16 P:\12-117\AutoCAD\PlanSheets\027C\Section B\027C-GRAD-PP-SIDESTREETS.dwg

SOUTH STREET PROFILE

FOR BIDDING PURPOSES ONLY

STATE OF SOUTH DAKOTA	PROJECT	SHEET	TOTAL SHEETS
	NH0016(79)67	B63	B135

PLOTTING DATE: 11-12-15

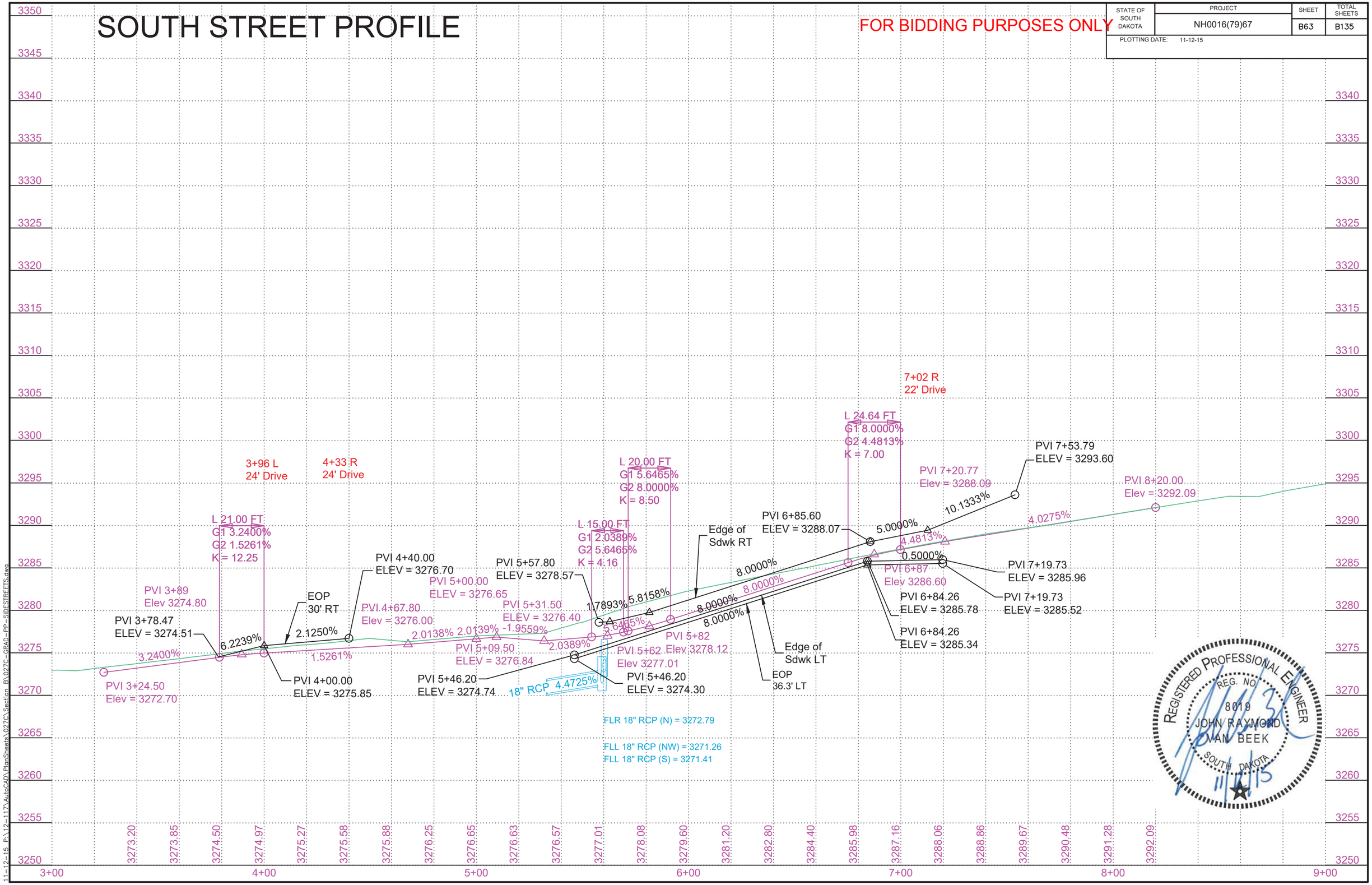

11-12-15 P:\12-117\AutoCAD\PlanSheets\027C\Section B\027C-GRAD-PP-SIDESTREETS.dwg

COLUMBUS STREET PLAN

FOR BIDDING PURPOSES ONLY

STATE OF SOUTH DAKOTA	PROJECT	SHEET	TOTAL SHEETS
	NH0016(79)67	B64	B135

PLOTTING DATE: 11-12-15

4+12.19 - 9.18' R to
4+30.04 - 9.24' R
Install 48" - 18' RCP
(Between Connect to Existing
& RC Tee)

4+29.96 - 33.38' R to
4+30.04 - 9.24' R
Install 18" - 24' RCP
(Between Drop Inlet
& RC Tee)

4+30.04 - 9.24' R to
4+66.86 - 9.36' R
Install 48" - 34' RCP
(Between RC Tee
& JBox)

4+33.75 - 31.08' L to
4+66.76 - 33.71' L
Install 18" - 32' RCP
(Between Drop Inlet
& RC Cross)

5+70.46 - 33.82' R to
5+70.46 - 33.68' L
Install 18" - 66' RCP
(Between Drop Inlets)

Install 2'x3' Type B Drop
Inlet with 6" Concrete Collar
and Type B Frame and Grate
at the Following Locations:
4+29.96-33.38' R
4+33.75-31.08' L
5+70.46-33.68' L
5+70.46-33.82' R

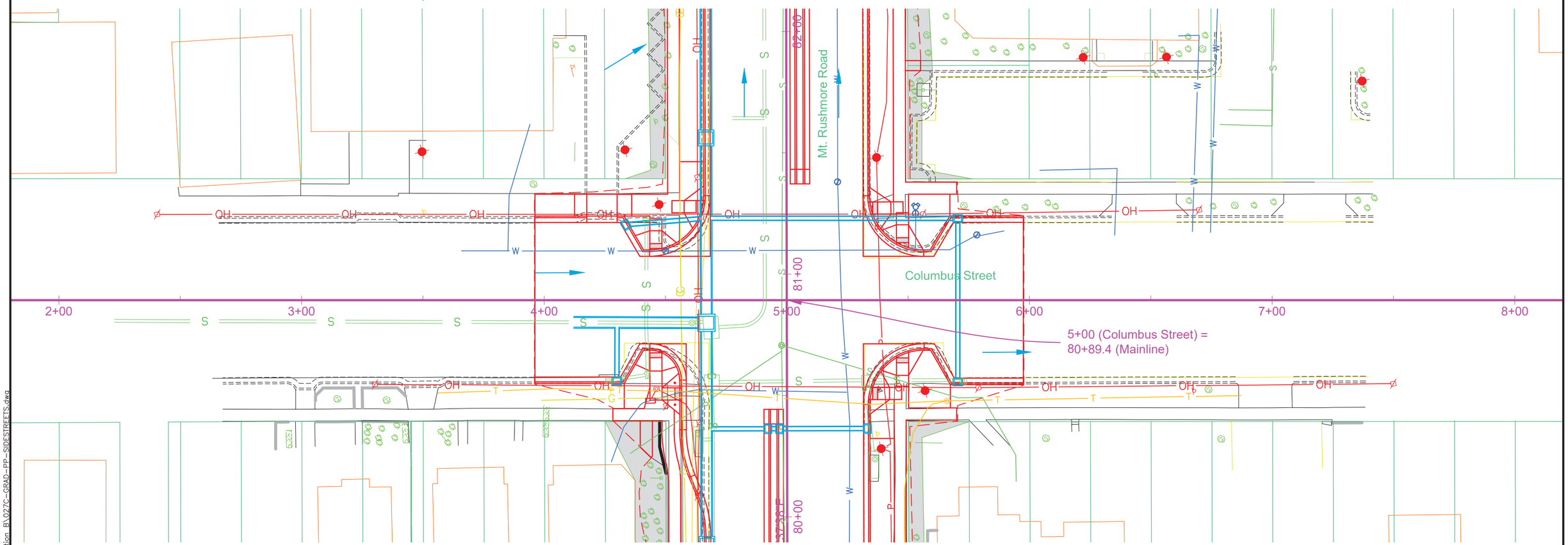

REGISTERED PROFESSIONAL ENGINEER
REG. NO.
8019
JOHN RAYMOND
VAN BEEK
SOUTH DAKOTA
11-12-15

11-12-15 P:\12-117\AutoCAD\PlanSheets\027C\Section B\027C-GRAD-PP-SIDESTREETS.dwg

COLUMBUS STREET PROFILE

FOR BIDDING PURPOSES ONLY

STATE OF SOUTH DAKOTA	PROJECT	SHEET	TOTAL SHEETS
	NH0016(79)67	B65	B135

PLOTTING DATE: 11-12-15

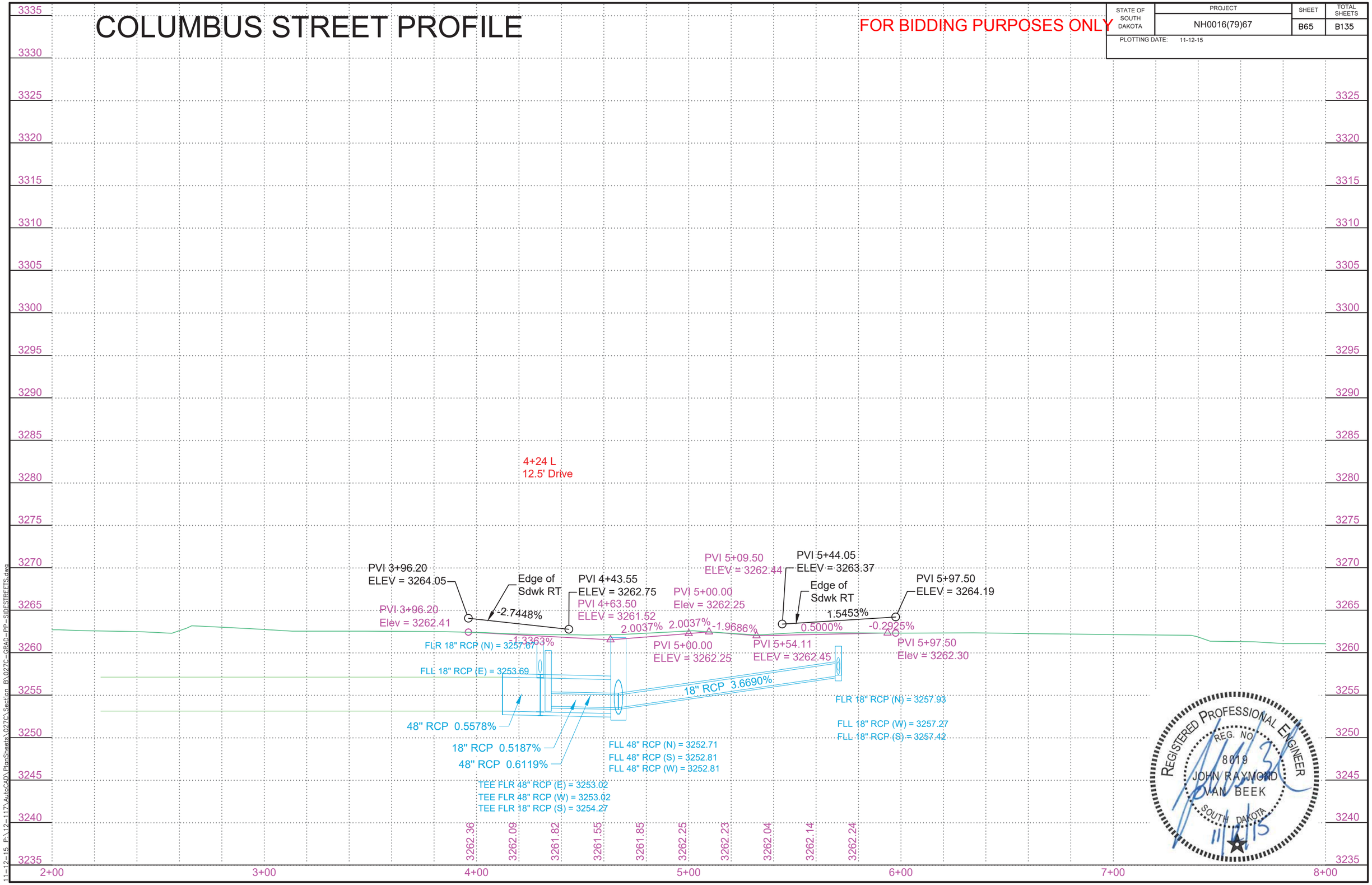

11-12-15 P:\12-117\AutoCAD\PlanSheets\027C\Section B\027C-GRAD-PP-SIDESTREETS.dwg

QUINCY STREET PLAN

FOR BIDDING PURPOSES ONLY

STATE OF SOUTH DAKOTA	PROJECT	SHEET	TOTAL SHEETS
	NH0016(79)67	B66	B135

PLOTTING DATE: 11-12-15

4+29.24 - 33.67' R to
4+33.69 - 31.10' L
Install 18" - 62' RCP
(Between Drop Inlets)

4+29.24 - 33.67' R to
4+66.87 - 50.50' R
Install 18" - 38' RCP
(Between Drop Inlets)

4+29.24-33.67' R
Install 2'x3' Type B Drop
Inlet with 6" Concrete Collar
and Type B Frame and Grate

4+33.69-31.10' L
Install 3'x4' Type B Drop
Inlet with 6" Concrete Collar
and Type B Frame and Grate

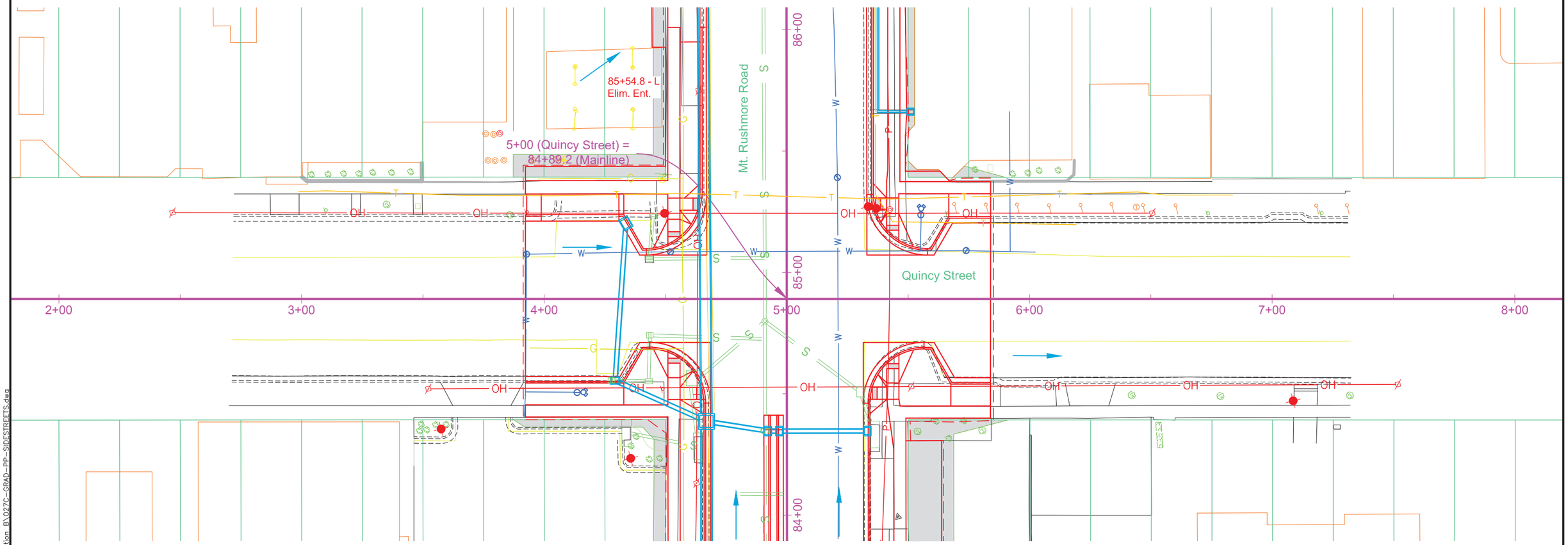

REGISTERED PROFESSIONAL ENGINEER
REG. NO.
8019
JOHN RAYMOND
VAN BEEK
SOUTH DAKOTA
11/12/15

11-12-15 P:\12-117\AutoCAD\PlanSheets\027C\Section B\027C-GRAD-PP-SIDESTREETS.dwg

QUINCY STREET PROFILE

FOR BIDDING PURPOSES ONLY

STATE OF SOUTH DAKOTA	PROJECT	SHEET	TOTAL SHEETS
	NH0016(79)67	B67	B135

PLOTTING DATE: 11-12-15

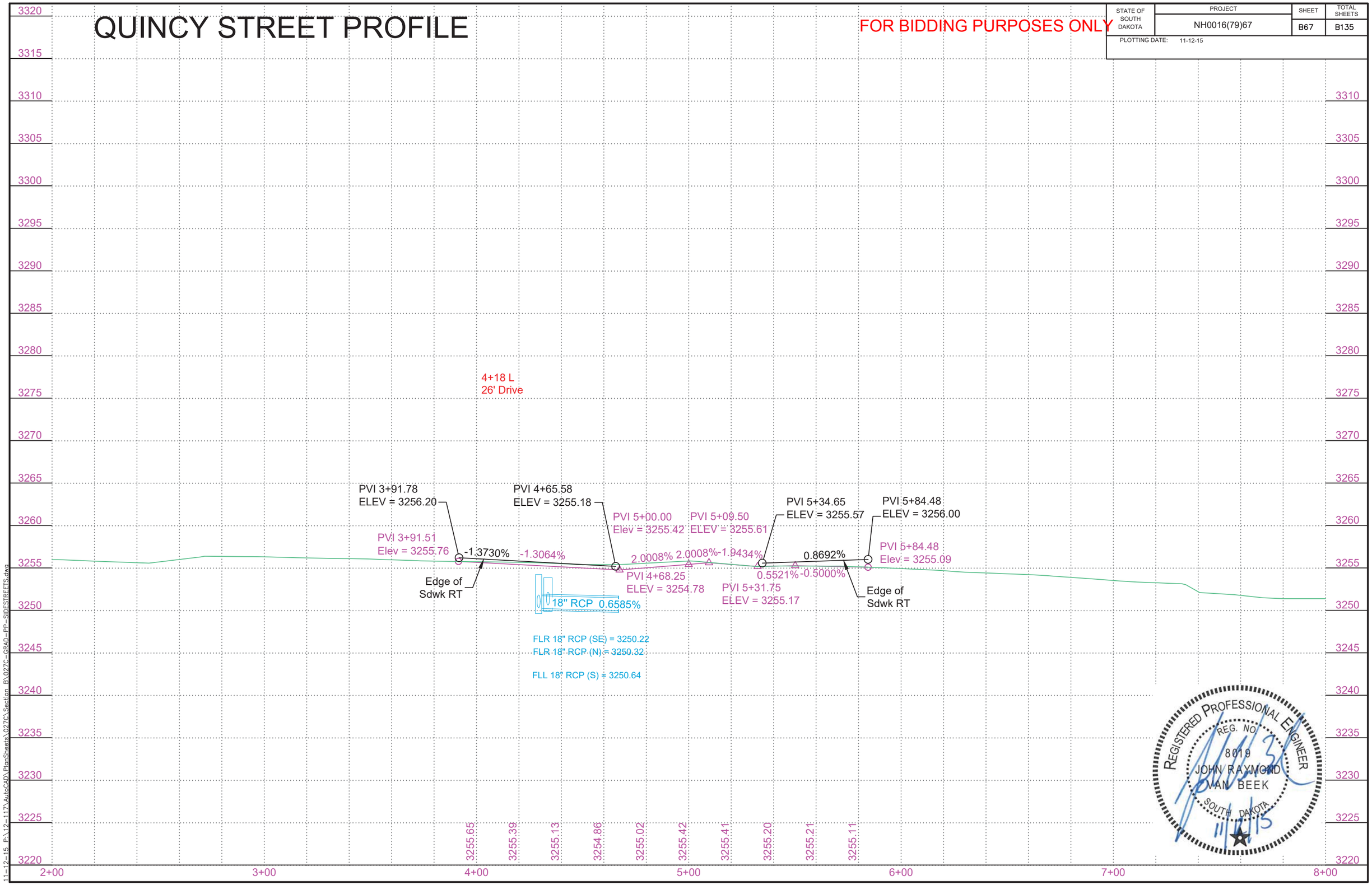

REGISTERED PROFESSIONAL ENGINEER
REG. NO. 8019
JOHN RAYMOND VAN BEEK
SOUTH DAKOTA
11/13/15

11-12-15 P:\12-117\AutoCAD\PlanSheets\027C\Section B\027C-GRAD-PP-SIDESTREETS.dwg

PAVEMENT REMOVAL LAYOUT

FOR BIDDING PURPOSES ONLY

STATE OF SOUTH DAKOTA	PROJECT	SHEET	TOTAL SHEETS
	NH0016(79)67	B68	B135

PLOTTING DATE: 11-12-15

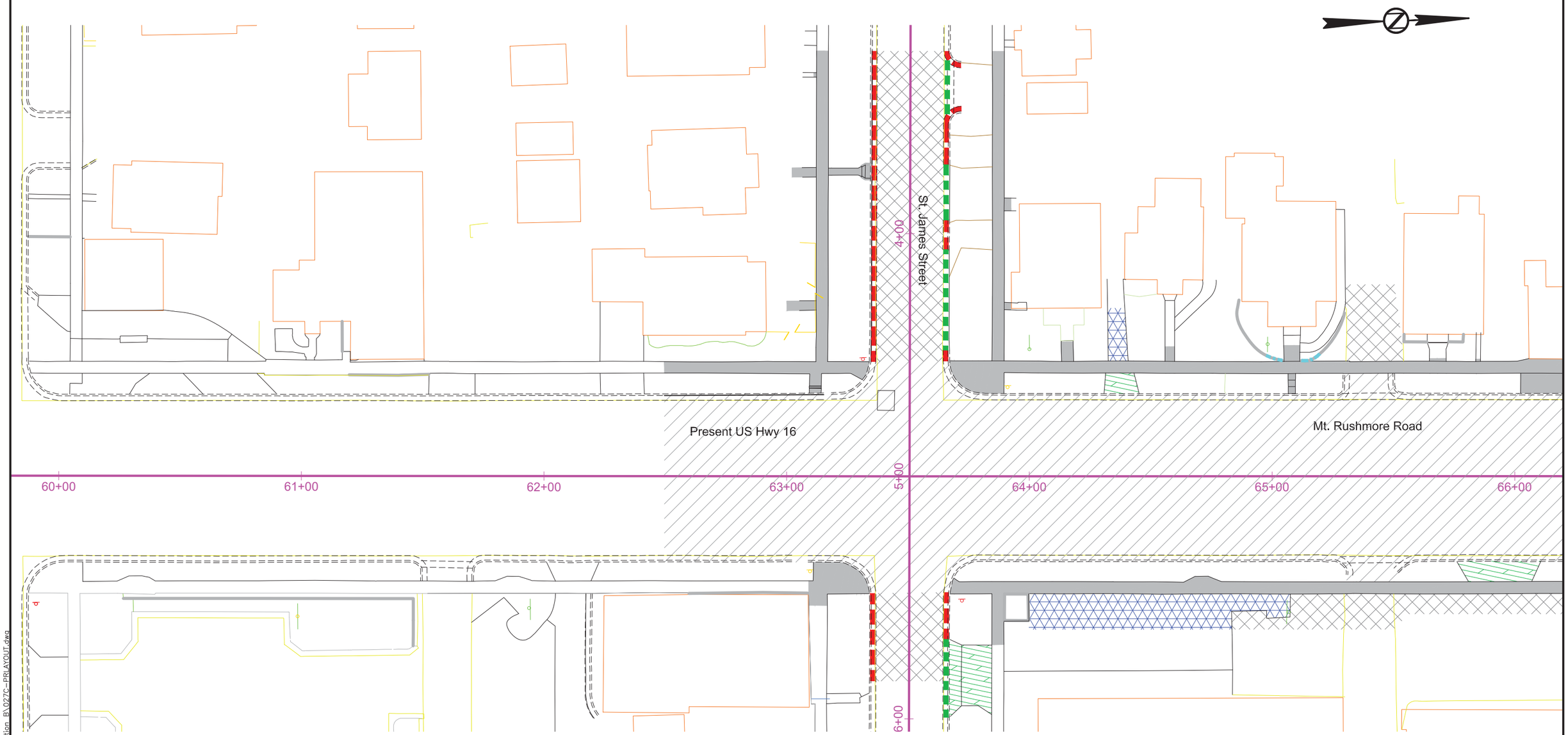

REMOVE CONCRETE PAVEMENT

REMOVE CONCRETE DRIVEWAY PAVEMENT

REMOVE ASPHALT CONCRETE PAVEMENT

REMOVE CONCRETE SIDEWALK/STAIRS

REMOVE CONCRETE APPROACH PAVEMENT

REMOVE CONCRETE MEDIAN PAVEMENT

REMOVE CONCRETE CURB

REMOVE CONCRETE CURB AND GUTTER

REMOVE CONCRETE GUTTER

REMOVE RETAINING WALL

REGISTERED PROFESSIONAL ENGINEER
REG. NO. 8019
JOHN RAYMOND VAN BEEK
SOUTH DAKOTA
11/12/15

11-12-15 P:\12-117\AutoCAD\PlanSheets\027C\Section_B\027C-PRLAYOUT.dwg

PAVEMENT REMOVAL LAYOUT

FOR BIDDING PURPOSES ONLY

STATE OF SOUTH DAKOTA	PROJECT	SHEET	TOTAL SHEETS
	NH0016(79)67	B69	B135

PLOTTING DATE: 11-12-15

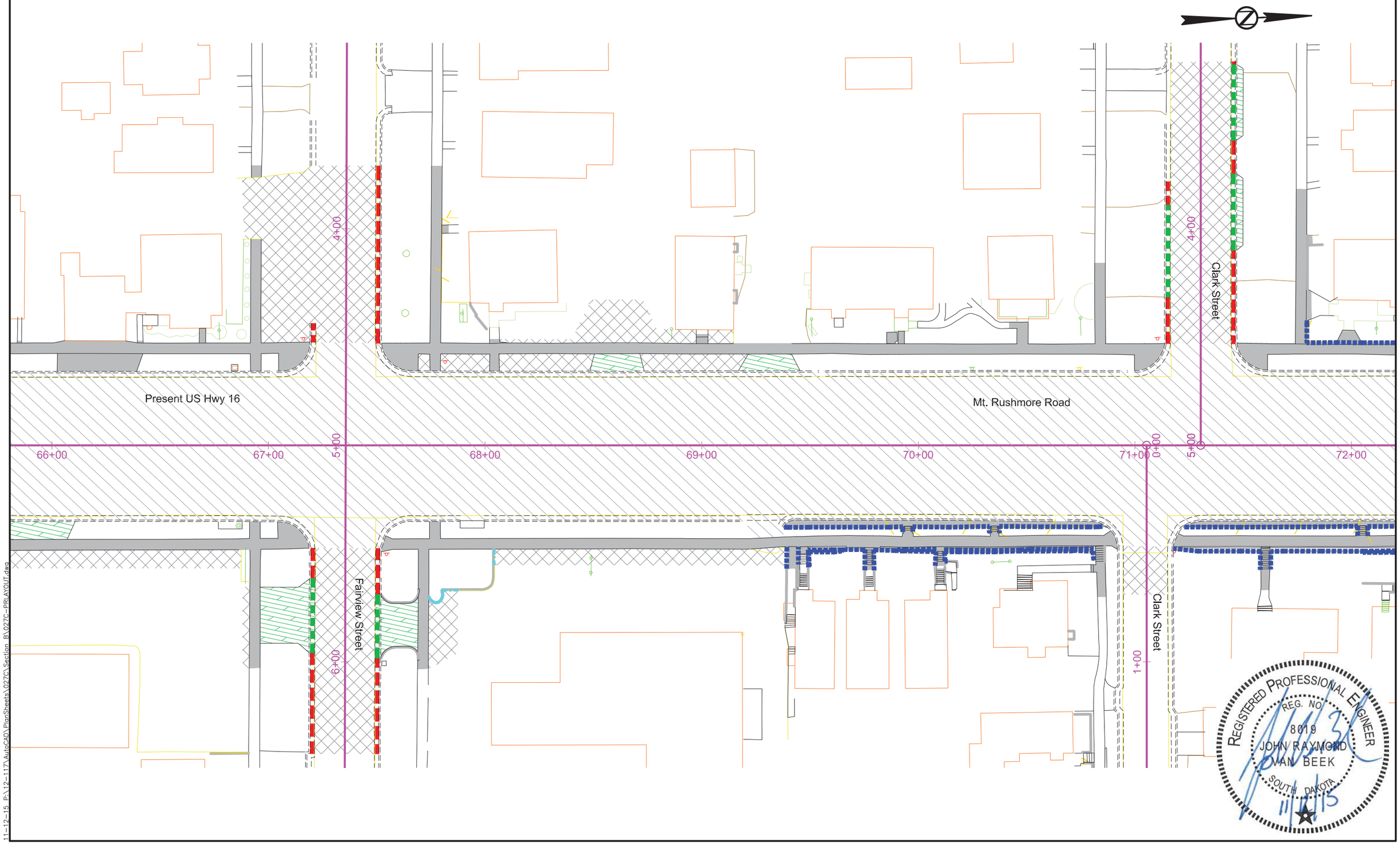

11-12-15 P:\12-117\AutoCAD\PlanSheets\027C\Section BV027C-PRLAYOUT.dwg

PAVEMENT REMOVAL LAYOUT

FOR BIDDING PURPOSES ONLY

STATE OF SOUTH DAKOTA	PROJECT	SHEET	TOTAL SHEETS
	NH0016(79)67	B70	B135

PLOTTING DATE: 01-21-16 REV 01-21-16 JRV

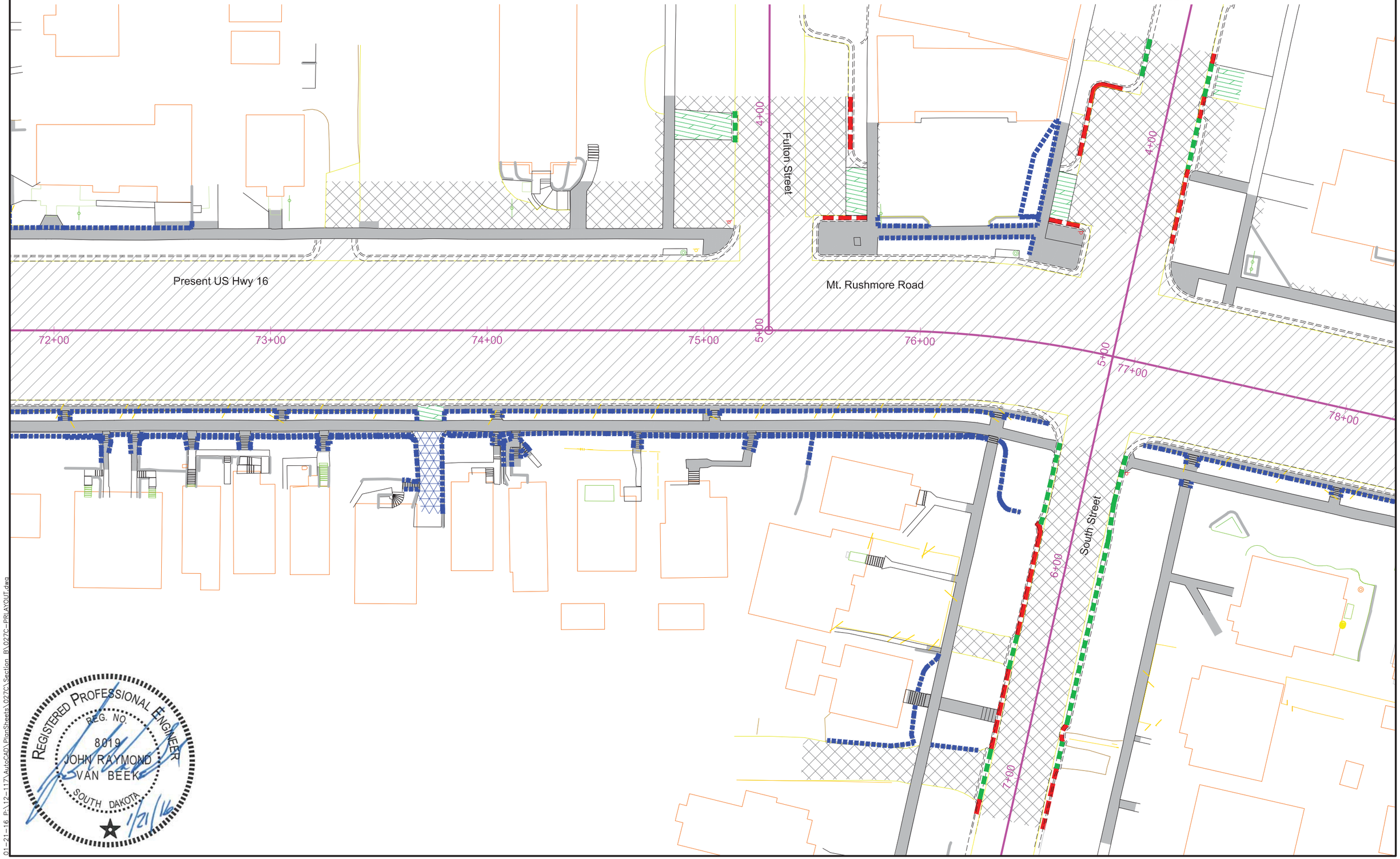

REGISTERED PROFESSIONAL ENGINEER
REG. NO.
8019
JOHN RAYMOND
VAN BEEK
SOUTH DAKOTA
1/21/16

01-21-16, P:\12-117\AutoCAD\PlanSheets\027C\Section, B\027C-PRLAYOUT.dwg

PAVEMENT REMOVAL LAYOUT

FOR BIDDING PURPOSES ONLY

STATE OF SOUTH DAKOTA	PROJECT	SHEET	TOTAL SHEETS
	NH0016(79)67	B71	B135

PLOTTING DATE: 11-12-15

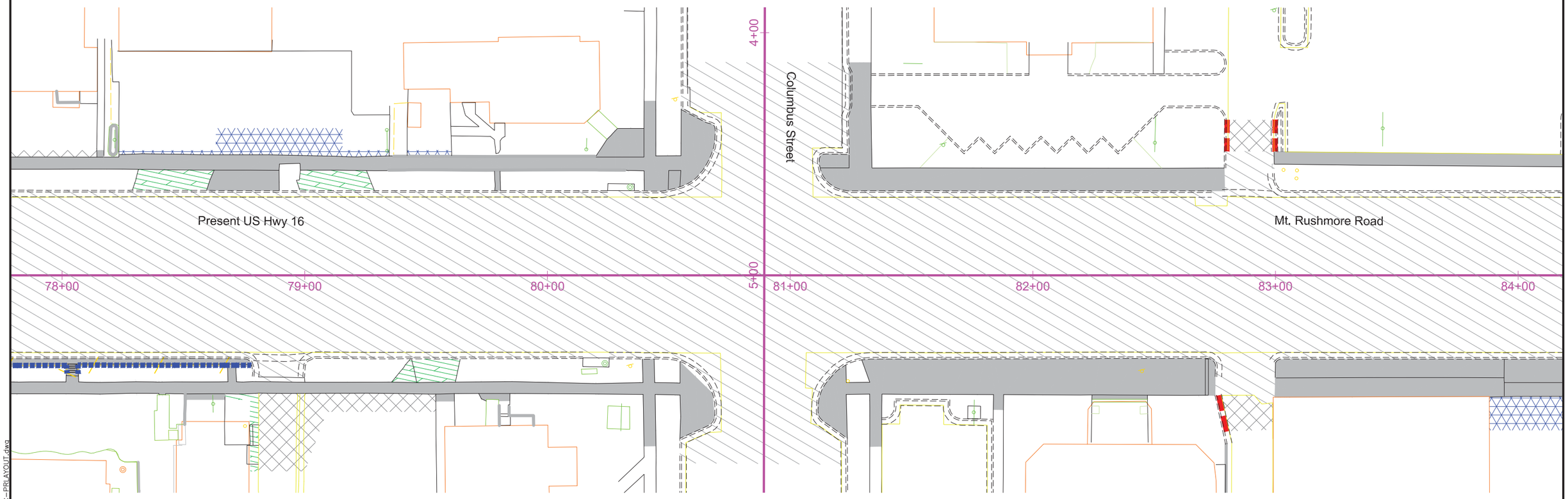

REGISTERED PROFESSIONAL ENGINEER
REG. NO.
8019
JOHN RAYMOND
VAN BEEK
SOUTH DAKOTA
11/12/15

11-12-15 P:\12-117\AutoCAD\PlanSheets\027C\Section B\027C-PRLAYOUT.dwg

PAVEMENT REMOVAL LAYOUT

FOR BIDDING PURPOSES ONLY

STATE OF SOUTH DAKOTA	PROJECT	SHEET	TOTAL SHEETS
	NH0016(79)67	B72	B135

PLOTTING DATE: 11-12-15

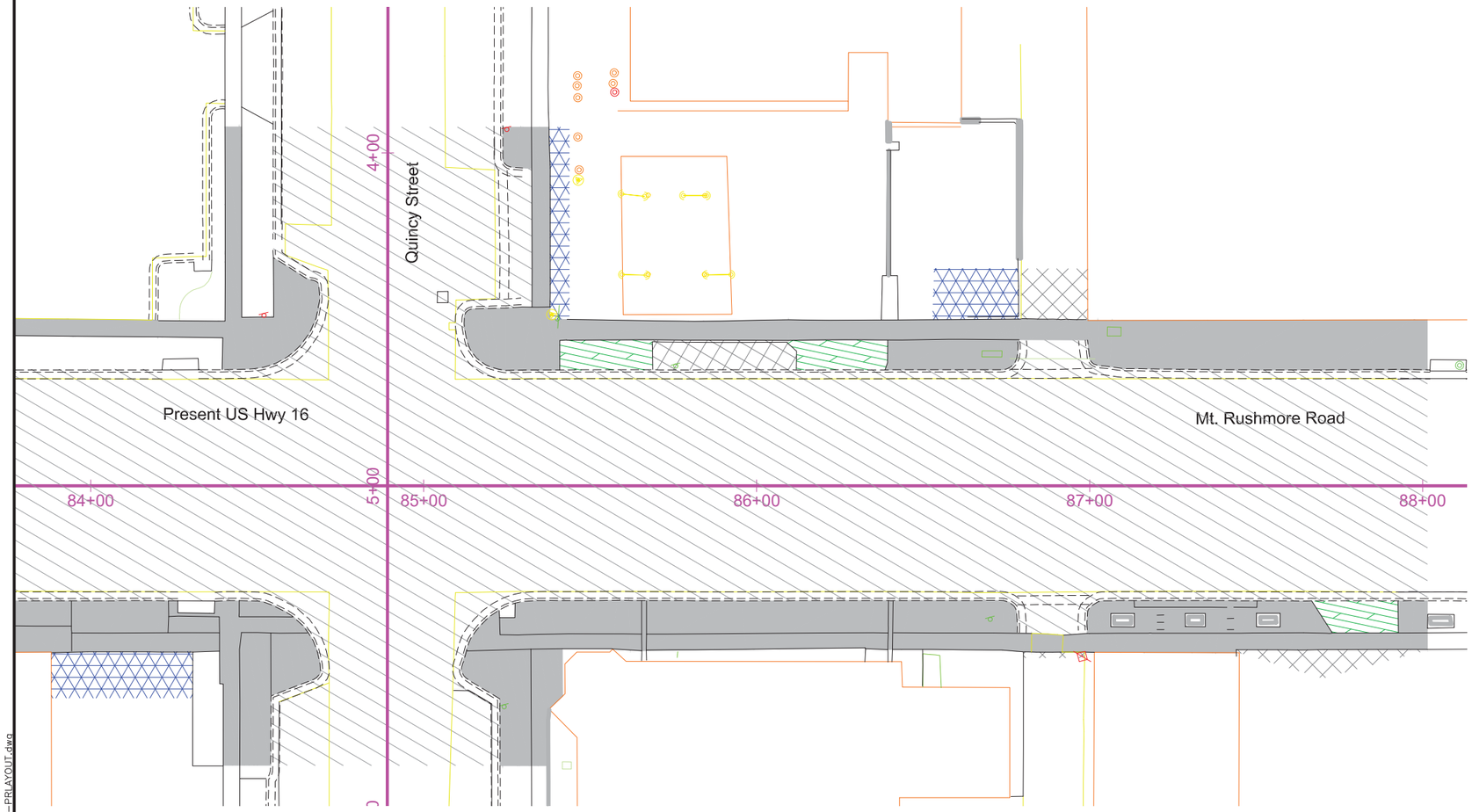

REGISTERED PROFESSIONAL ENGINEER
REG. NO.
8019
JOHN RAYMOND
VAN BEEK
SOUTH DAKOTA
11/12/15

11-12-15 P:\12-117\AutoCAD\PlanSheets\027C\Section_B\027C-PRLAYOUT.dwg

CURB & GUTTER LAYOUT

FOR BIDDING PURPOSES ONLY

STATE OF SOUTH DAKOTA	PROJECT	SHEET	TOTAL SHEETS
	NH0016(79)67	B73	B135

PLOTTING DATE: 12-2-15 REV 12-02-15 JRV

1
62+50.09 - 31.21' L
Begin Str Type B66 C & G
EOP El 3291.65

2
63+11.70 - 31.50' L
End Str Type B66 C & G
Begin 25' Rad Fillet
TC El 3288.93

3
63+36.70 - 56.46' L
End 25' Rad Fillet
Begin Str Type B66 C & G
TC El 3289.18

4
63+64.75 - 56.56' L
End Str Type B66 C & G
Begin 25' Rad Fillet
TC El 3288.93

5
63+89.75 - 31.50' L
End 25' Rad Fillet
Begin Str Type B610 C & G
TC El 3288.22

6
64+31.76 - 31.50' L
End Str Type B610 C & G
Begin Type P10 Gutter
Theor TC El 3287.88

7
64+45.76 - 31.50' L
End Type P10 Gutter
Begin Str Type B610 C & G
Theor TC El 3287.78

8
65+30.43 - 31.50' L
End Str Type B610 C & G
Begin Type P10 Gutter
Theor TC El 3287.14

9
65+50.43 - 31.50' L
End Type P10 Gutter
Begin Str Type B610 C & G
Theor TC El 3286.99

10
62+49.91 - 32.71' R
Begin Str Type B66 C & G
EOP El 3290.75

11
63+11.52 - 31.50' R
End Str Type B66 C & G
Begin 25' Rad Fillet
TC El 3289.31

12
63+36.52 - 56.54' R
End 25' Rad Fillet
Begin Str Type B66 C & G
TC El 3289.62

13
63+64.47 - 56.44' R
End Str Type B66 C & G
Begin 25' Rad Fillet
TC El 3289.36

14
63+89.47 - 31.50' R
End 25' Rad Fillet
Begin Str Type B610 C & G
TC El 3288.60

15
65+25.20 - 31.50' R
End Str Type B610 C & G
Begin Type P10 Gutter
Theor TC El 3287.56

16
65+55.20 - 31.50' R
End Type P10 Gutter
Begin Str Type B610 C & G
Theor TC El 3287.34

17
63+94.46 - 9.50' R
EOP 3288.60

18
63+94.46 - 1.50' R
EOP 3288.44

19
64+55.26 - 1.50' R
EOP 3287.96

20
64+55.26 - 9.50' L
EOP 3287.74

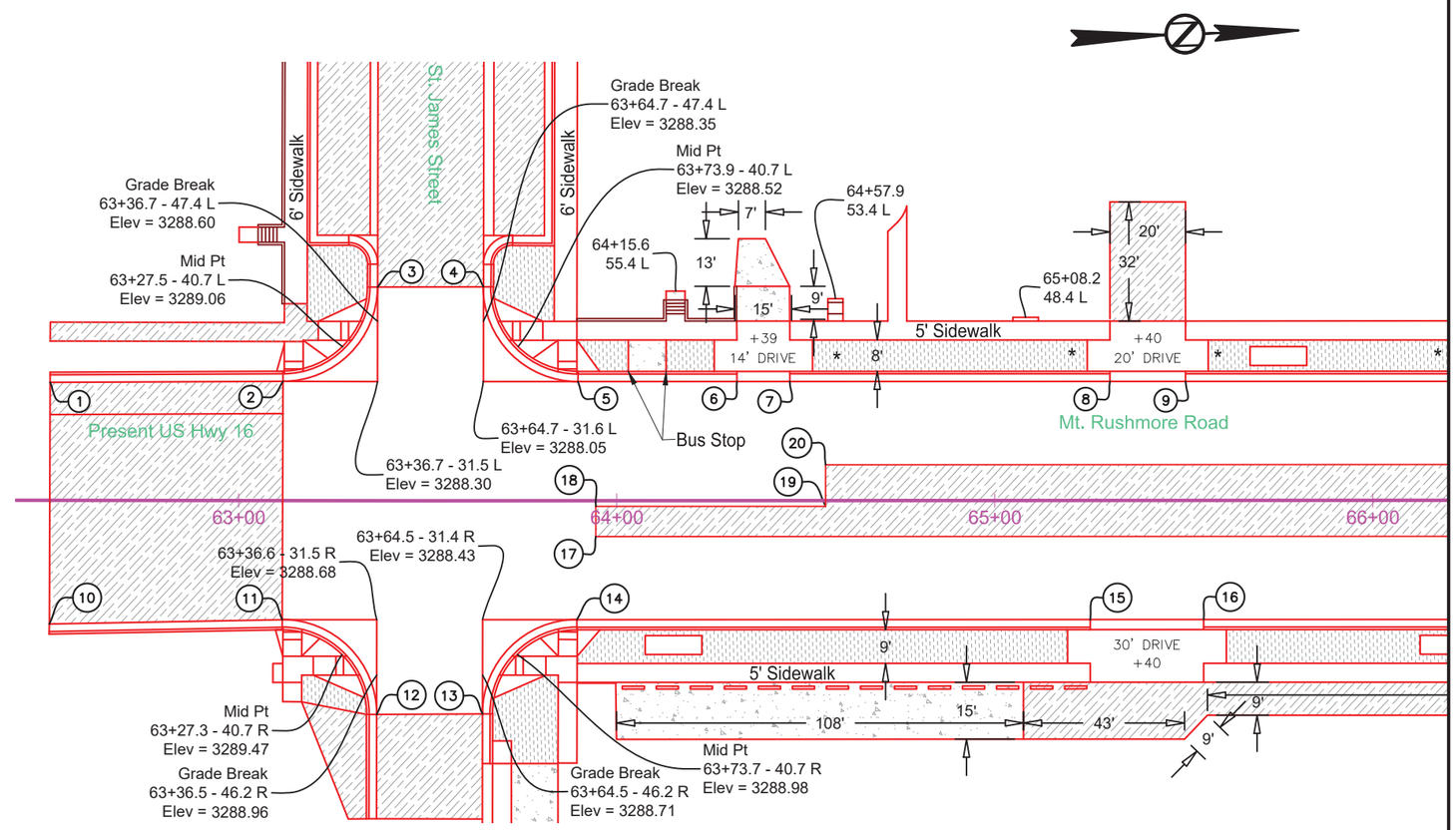

ASPHALT

CONCRETE

COLORED CONCRETE BOULEVARD

REINFORCED CONCRETE SIDEWALK

GRAVEL

REINFORCED COLORED CONCRETE SIDEWALK

REGISTERED PROFESSIONAL ENGINEER
REG. NO. 8019
JOHN RAYMOND VAN BEEK
SOUTH DAKOTA
12/2/15

* Slope Varies. See Profile Sheets.

12-2-15 P:\12-117\AutoCAD\PlanSheets\027C\Section B\027C-CURB.dwg

CURB & GUTTER LAYOUT

FOR BIDDING PURPOSES ONLY

STATE OF SOUTH DAKOTA	PROJECT	SHEET	TOTAL SHEETS
	NH0016(79)67	B74	B135

PLOTTING DATE: 12-2-15 REV 12-02-15 JRV

REGISTERED PROFESSIONAL ENGINEER REG. NO. 8019 JOHN RAYMOND VAN BEEK SOUTH DAKOTA 12/2/15

1
66+42.07 - 31.50' L
End Str Type B610 C & G
Begin 50' Rad
Type B610 C & G
TC El 3286.30

2
66+60.64 - 35.08' L
End 50' Rad
Type B610 C & G
Begin Str Type B610 C & G
TC El 3286.09

3
66+67.76 - 37.92' L
End Str Type B610 C & G
Begin 50' Rad
Type B610 C & G
TC El 3285.98

4
66+86.33 - 41.50' L
End 50' Rad
Type B610 C & G
Begin Str Type B610 C & G
TC El 3285.77

5
67+06.78 - 41.50' L
End Str Type B610 C & G
Begin 15' Rad Fillet
TC El 3285.64

6
67+21.78 - 56.46' L
End 15' Rad Fillet
Begin Str Type B66 C & G
TC El 3285.86

7
67+49.78 - 56.57' L
End Str Type B66 C & G
Begin 25' Rad Fillet
TC El 3285.65

8
67+74.78 - 31.50' L
End 25' Rad Fillet
Begin Str Type B610 C & G
TC El 3285.32

9
68+48.91 - 31.50' L
End Str Type B610 C & G
Begin Type P10 Gutter
Theor TC El 3285.42

10
68+72.91 - 31.50' L
End Type P10 Gutter
Begin Str Type B610 C & G
Theor TC El 3285.54

11
69+20.40 - 31.50' L
End Str Type B610 C & G
Begin Type P10 Gutter
Theor TC El 3285.52

12
69+40.40 - 31.50' L
End Type P10 Gutter
Begin Str Type B610 C & G
Theor TC El 3285.42

13
70+91.41 - 31.50' L
End Str Type B610 C & G
Begin 25' Rad Fillet
TC El 3284.66

14
71+16.41 - 56.50' L
End 25' Rad Fillet
Begin Str Type B66 C & G
TC El 3284.04

15
71+44.41 - 56.50' L
End Str Type B66 C & G
Begin 25' Rad Fillet
TC El 3283.90

16
71+69.41 - 31.50' L
End 25' Rad Fillet
Begin Str Type B610 C & G
TC El 3284.27

17
66+96.45 - 31.50' R
End Str Type B610 C & G
Begin 25' Rad Fillet
TC El 3286.28

18
67+21.45 - 56.57' R
End 25' Rad Fillet
Begin Str Type B66 C & G
TC El 3286.48

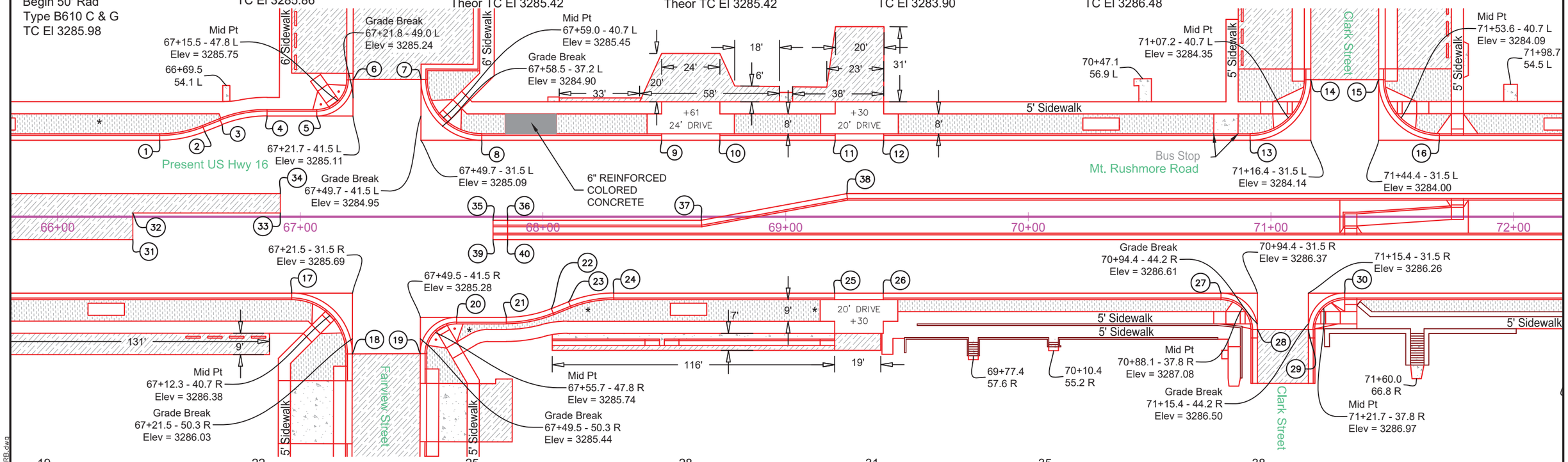

19
67+49.45 - 56.46' R
End Str Type B66 C & G
Begin 15' Rad Fillet
TC El 3286.26

20
67+64.45 - 41.50' R
End 15' Rad Fillet
Begin Str Type B610 C & G
TC El 3285.57

21
67+84.90 - 41.50' R
End Str Type B610 C & G
Begin 50' Rad
Type B610 C & G
TC El 3285.46

22
68+03.47 - 37.92' R
End 50' Rad
Type B610 C & G
Begin Str Type B610 C & G
TC El 3285.50

23
68+10.59 - 35.08' R
End Str Type B610 C & G
Begin 50' Rad
Type B610 C & G
TC El 3285.57

24
68+29.16 - 31.50' R
End 50' Rad
Type B610 C & G
Begin Str Type B610 C & G
TC El 3285.70

25
69+20.23 - 31.50' R
End Str Type B610 C & G
Begin Type P10 Gutter
Theor TC El 3286.03

26
69+40.23 - 31.50' R
End Type P10 Gutter
Begin Str Type B610 C & G
Theor TC El 3286.14

27
70+79.43 - 31.50' R
End Str Type B610 C & G
Begin 15' Rad Fillet
TC El 3286.84

28
70+94.43 - 46.50' R
End 15' Rad Fillet
Begin Str Type B66 C & G
TC El 3287.25

29
71+15.43 - 46.50' R
End Str Type B66 C & G
Begin 15' Rad Fillet
TC El 3287.14

30
71+30.43 - 31.50' R
End 15' Rad Fillet
Begin Str Type B610 C & G
TC El 3286.59

31
66+30.99 - 9.50' R
EOP 3286.81

32
66+30.99 - 1.50' L
EOP 3286.59

33
66+91.79 - 1.50' L
EOP 3286.13

34
66+91.79 - 9.50' L
EOP 3285.97

35
67+79.44 - 1.50' R
Begin Curb Taper
Theor TC El 3285.96

36
67+85.44 - 1.50' R
End Curb Taper
Begin Str Type B610 C & G
TC El 3285.94

37
68+65.24 - 1.50' R
End Str Type B610 C & G
Begin Str Type B610 C & G
TC El 3286.13

38
69+25.24 - 9.50' L
End Str Type B610 C & G
Begin Str Type B610 C & G
TC El 3285.93

39
67+79.44 - 9.50' R
Begin Curb Taper
Theor TC El 3286.12

40
67+85.44 - 9.50' R
End Curb Taper
Begin Str Type B610 C & G
TC El 3286.10

* Slope Varies. See Profile Sheets.

12-2-15 P:\12-117\AutoCAD\PlanSheets\027C\Section B\027C-CURB.dwg

CURB & GUTTER LAYOUT

FOR BIDDING PURPOSES ONLY

STATE OF SOUTH DAKOTA	PROJECT	SHEET	TOTAL SHEETS
	NH0016(79)67	B75	B135

PLOTTING DATE: 12-2-15 REV 12-02-15 JRV

1
73+20.30 - 31.50' L
End Str Type B610 C & G
Begin Type P10 Gutter
Theor TC El 3283.52

2
73+40.30 - 31.50' L
End Type P10 Gutter
Begin Str Type B610 C & G
Theor TC El 3283.42

3
74+89.18 - 31.50' L
End Str Type B610 C & G
Begin 25' Rad Fillet
TC El 3282.37

4
75+14.18 - 56.43' L
End 25' Rad Fillet
Begin Str Type B66 C & G
TC El 3281.18

5
75+51.17 - 52.19' L
End Str Type B66 C & G
Begin 5' Rad Fillet
TC El 3281.18

6
75+46.16 - 47.21' L
End 5' Rad Fillet
Begin Str Type B610 C & G
TC El 3281.12

7
75+46.15 - 45.54' L
End Str Type B610 C & G
Begin 14' Rad Fillet
TC El 3281.14

8
75+60.15 - 31.50' L
End 14' Rad Fillet
Begin Str Type B610 C & G
TC El 3280.95

9
75+78.91 - 31.50' L
End Str Type B610 C & G
Begin 542.50' Rad
Type B610 C & G
TC El 3280.45

10
76+63.19 - 31.50' L
End 542.50' Rad
Type B610 C & G
Begin 15' Rad Fillet
TC El 3277.56

11
76+77.05 - 46.32' L
End 15' Rad Fillet
Begin Str Type B66 C & G
Theor TC El 3276.81

12
76+77.14 - 49.92' L
End Str Type B66 C & G
Begin 5' Rad Fillet
Theor TC El 3276.76

13
76+72.75 - 55.08' L
End 5' Rad Fillet
Begin Str Type B66 C & G
TC El 3276.72

14
77+03.74 - 56.50' L
End Str Type B66 C & G
Begin 25' Rad Fillet
TC El 3275.37

15
77+28.78 - 31.50' L
End 25' Rad Fillet
Begin Str Type B610 C & G
TC El 3274.56

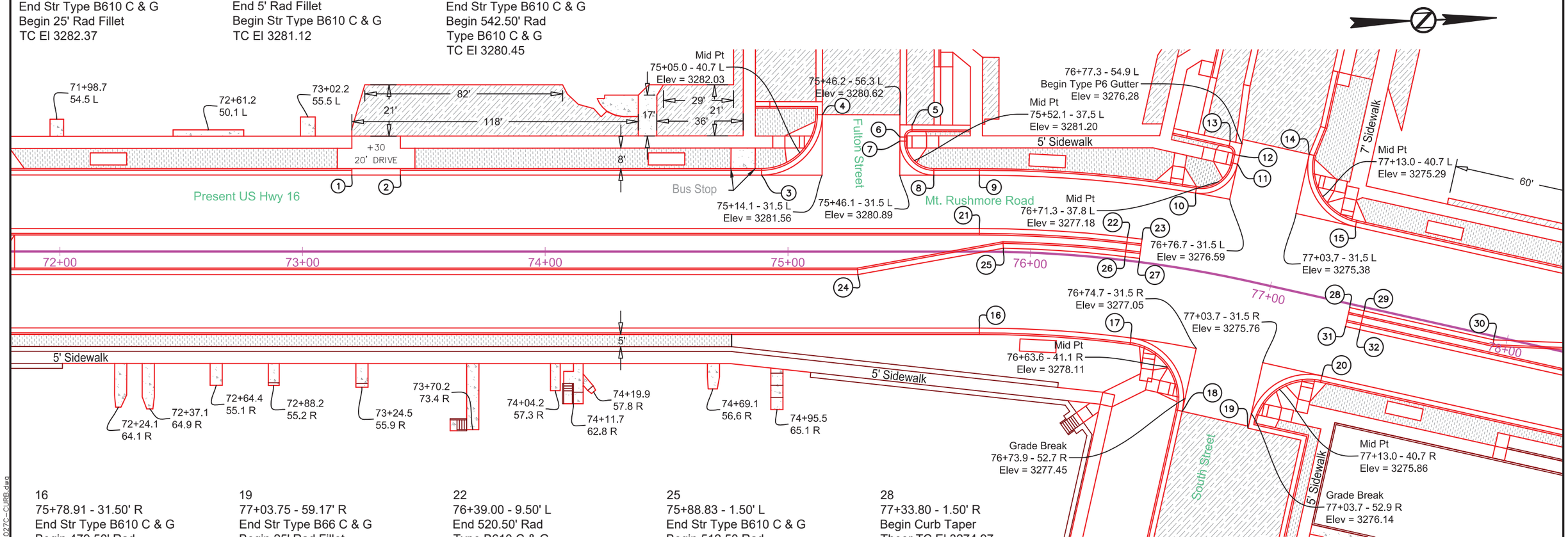

16
75+78.91 - 31.50' R
End Str Type B610 C & G
Begin 479.50' Rad
Type B610 C & G
TC El 3280.83

17
76+45.63 - 31.50' R
End 479.50' Rad
Type B610 C & G
Begin 25' Rad Fillet
TC El 3278.62

18
76+73.73 - 58.05' R
End 25' Rad Fillet
Begin Str Type P6 Gutter
TC El 3277.99

19
77+03.75 - 59.17' R
End Str Type B66 C & G
Begin 25' Rad Fillet
TC El 3276.76

20
77+28.75 - 31.50' R
End 25' Rad Fillet
Begin Str Type B610 C & G
TC El 3274.94

21
75+78.91 - 9.50' L
End Str Type B610 C & G
Begin 520.50' Rad
Type B610 C & G
TC El 3280.89

22
76+39.00 - 9.50' L
End 520.50' Rad
Type B610 C & G
Begin Curb Taper
TC El 3278.93

23
76+44.89 - 9.50' L
End 520.50' Rad
End Curb Taper
Theor TC El 3278.71

24
75+28.85 - 9.50' R
End Str Type B610 C & G
Begin Str Type B610 C & G
TC El 3282.49

25
75+88.83 - 1.50' L
End Str Type B610 C & G
Begin 512.50 Rad
Type B610 C & G
TC El 3280.76

26
76+38.90 - 1.50' L
Begin Curb Taper
TC El 3279.10

27
76+44.89 - 1.50' L
End 512.50' Rad
Type B610 C & G
End Curb Taper
Theor TC El 3278.87

28
77+33.80 - 1.50' R
Begin Curb Taper
Theor TC El 3274.97

29
77+39.80 - 1.50' R
End Curb Taper
Begin Str Type B610 C & G
TC El 3274.67

30
77+94.60 - 1.50' R
End Str Type B610 C & G
Begin Str Type B610 C & G
TC El 3271.95

31
77+33.80 - 9.50' R
Begin Curb Taper
Theor TC El 3275.13

32
77+39.80 - 9.50' R
End Curb Taper
Begin Str Type B610 C & G
TC El 3274.83

REGISTERED PROFESSIONAL ENGINEER
REG. NO. 8019
JOHN RAYMOND VAN BEEK
SOUTH DAKOTA
12/2/15

* Slope Varies. See Profile Sheets.

12-2-15 P:\12-117\AutoCAD\PlanSheets\027C\Section B\027C-CURB.dwg

CURB & GUTTER LAYOUT

FOR BIDDING PURPOSES ONLY

STATE OF SOUTH DAKOTA	PROJECT	SHEET	TOTAL SHEETS
	NH0016(79)67	B76	B135

PLOTTING DATE: 12-30-15 REV 12-30-15 JRV

1
78+29.39 - 31.50' L
End Str Type B610 C & G
Begin Type P10 Gutter
Theor TC El 3269.75

2
78+53.39 - 31.50' L
End Type P10 Gutter
Begin Str Type B610 C & G
Theor TC El 3268.74

3
79+06.41 - 31.50' L
End Str Type B610 C & G
Begin Type P10 Gutter
Theor TC El 3266.73

4
79+30.41 - 31.50' L
End Type P10 Gutter
Begin Str Type B610 C & G
Theor TC El 3265.92

5
79+91.72 - 31.50' L
End Str Type B610 C & G
Begin 50' Rad
Type B610 C & G
TC El 3264.11

6
80+10.29 - 35.08' L
End 50' Rad
Type B610 C & G
Begin Str Type B610 C & G
TC El 3263.57

7
80+17.41 - 37.92' L
End Str Type B610 C & G
Begin 50' Rad
Type B610 C & G
TC El 3263.35

8
80+35.97 - 41.50' L
End 50' Rad
Type B610 C & G
Begin Str Type B610 C & G
TC El 3262.85

9
80+56.43 - 41.50' L
End Str Type B610 C & G
Begin 15' Rad Fillet
TC El 3262.46

10
80+71.42 - 56.47' L
End 15' Rad Fillet
Begin Str Type B66 C & G
TC El 3262.52

11
81+07.43 - 56.55' L
End Str Type B66 C & G
Begin 25' Rad Fillet
TC El 3261.85

12
81+32.43 - 31.50' L
End 25' Rad Fillet
Begin Str Type B610 C & G
TC El 3261.22

13
82+79.40 - 31.50' L
End Str Type B610 C & G
Begin Type P10 Gutter
Theor TC El 3258.09

14
82+99.40 - 31.50' L
End Type P10 Gutter
Begin Str Type B610 C & G
Theor TC El 3257.59

15
78+74.16 - 31.50' R
End Str Type B610 C & G
Begin Type P10 Gutter
Theor TC El 3268.30

16
79+04.16 - 31.50' R
End Type P10 Gutter
Begin Str Type B610 C & G
Theor TC El 3267.19

17
80+46.20 - 31.50' R
End Str Type B610 C & G
Begin 25' Rad Fillet
TC El 3263.22

18
80+71.20 - 56.55' R
End 25' Rad Fillet
Begin Str Type B66 C & G
TC El 3262.86

REGISTERED PROFESSIONAL ENGINEER
REG. NO. 8019
JOHN RAYMOND VAN BEEK
SOUTH DAKOTA
12/30/15

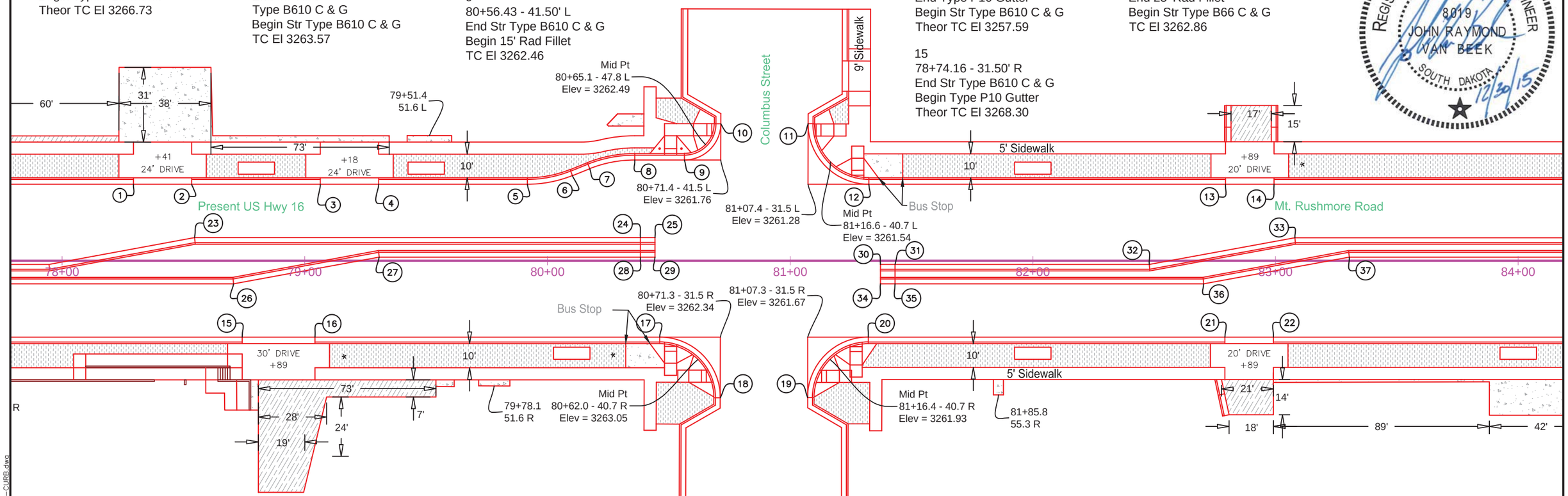

19
81+07.20 - 56.45' R
End Str Type B66 C & G
Begin 25' Rad Fillet
TC El 3262.19

20
81+32.20 - 31.50' R
End 25' Rad Fillet
Begin Str Type B610 C & G
TC El 3261.60

21
82+79.17 - 31.50' R
End Str Type B610 C & G
Begin Type P10 Gutter
Theor TC El 3258.48

22
82+99.17 - 31.50' R
End Type P10 Gutter
Begin Str Type B610 C & G
Theor TC El 3257.97

23
78+54.60 - 9.50' L
End Str Type B610 C & G
Begin Str Type B610 C & G
TC El 3269.13

24
80+38.33 - 9.50' L
End Str Type B610 C & G
Begin Curb Taper
TC El 3263.44

25
80+44.33 - 9.50' L
End Curb Taper
Theor TC El 3263.32

26
78+70.63 - 9.50' R
End Str Type B610 C & G
Begin Str Type B610 C & G
TC El 3268.88

27
79+30.63 - 1.50' L
End Str Type B610 C & G
Begin Str Type B610 C & G
TC El 3266.51

28
80+38.33 - 1.50' L
End Str Type B610 C & G
Begin Curb Taper
TC El 3263.60

29
80+44.33 - 1.50' L
End Curb Taper
Theor TC El 3263.48

30
81+37.20 - 1.50' R
Begin Curb Taper
Theor TC El 3261.79

31
81+43.20 - 1.50' R
End Curb Taper
Begin Str Type B610 C & G
TC El 3261.68

32
82+48.00 - 1.50' R
End Str Type B610 C & G
Begin Str Type B610 C & G
TC El 3259.52

33
83+08.00 - 9.50' L
End Str Type B610 C & G
Begin Str Type B610 C & G
TC El 3257.89

34
81+37.20 - 9.50' R
Begin Curb Taper
Theor TC El 3261.95

35
81+43.20 - 9.50' R
End Curb Taper
Begin Str Type B610 C & G
TC El 3261.84

36
82+70.38 - 9.50' R
End Str Type B610 C & G
Begin Str Type B610 C & G
TC El 3259.14

37
83+30.38 - 1.50' L
End Str Type B610 C & G
Begin Str Type B610 C & G
TC El 3257.71

* Slope Varies. See Profile Sheets.

12-30-15 P:\12-117\AutoCAD\PlanSheets\027C\Section B\027C-CURB.dwg

CURB & GUTTER LAYOUT

FOR BIDDING PURPOSES ONLY

STATE OF SOUTH DAKOTA	PROJECT	SHEET	TOTAL SHEETS
	NH0016(79)67	B77	B135

PLOTTING DATE: 12-2-15 REV 12-02-15 JRV

1
84+46.17 - 31.50' L
End Str Type B610 C & G
Begin 25' Rad Fillet
TC El 3255.61

2
84+71.17 - 56.48' L
End 25' Rad Fillet
Begin Str Type B66 C & G
TC El 3255.66

3
85+07.17 - 57.87' L
End Str Type B66 C & G
Begin 25' Rad Fillet
TC El 3255.32

4
85+32.17 - 33.00' L
End 25' Rad Fillet
Begin StrType F610 C & G
TC El 3254.74

5
86+01.00 - 33.00' L
End Str Type F610 C & G
Begin Type P10 Gutter
Theor TC El 3253.48

6
86+29.00 - 33.00' L
End Type P10 Gutter
Begin Str Type B610 C & G
TC El 3252.94

7
86+79.42 - 33.00' L
End Str Type B610 C & G
Begin Type P10 Gutter
Theor TC El 3251.96

8
86+99.42 - 33.00' L
End Type P10 Gutter
Begin Str Type B610 C & G
Theor TC El 3251.57

9
87+92.72 - 33.00' L
End Str Type B610 C & G
Begin Str Type B610 C & G
TC El 3249.94

10
88+01.30 - 32.20' L
End Str Type B610 C & G
Match Existing
TC El 3249.59

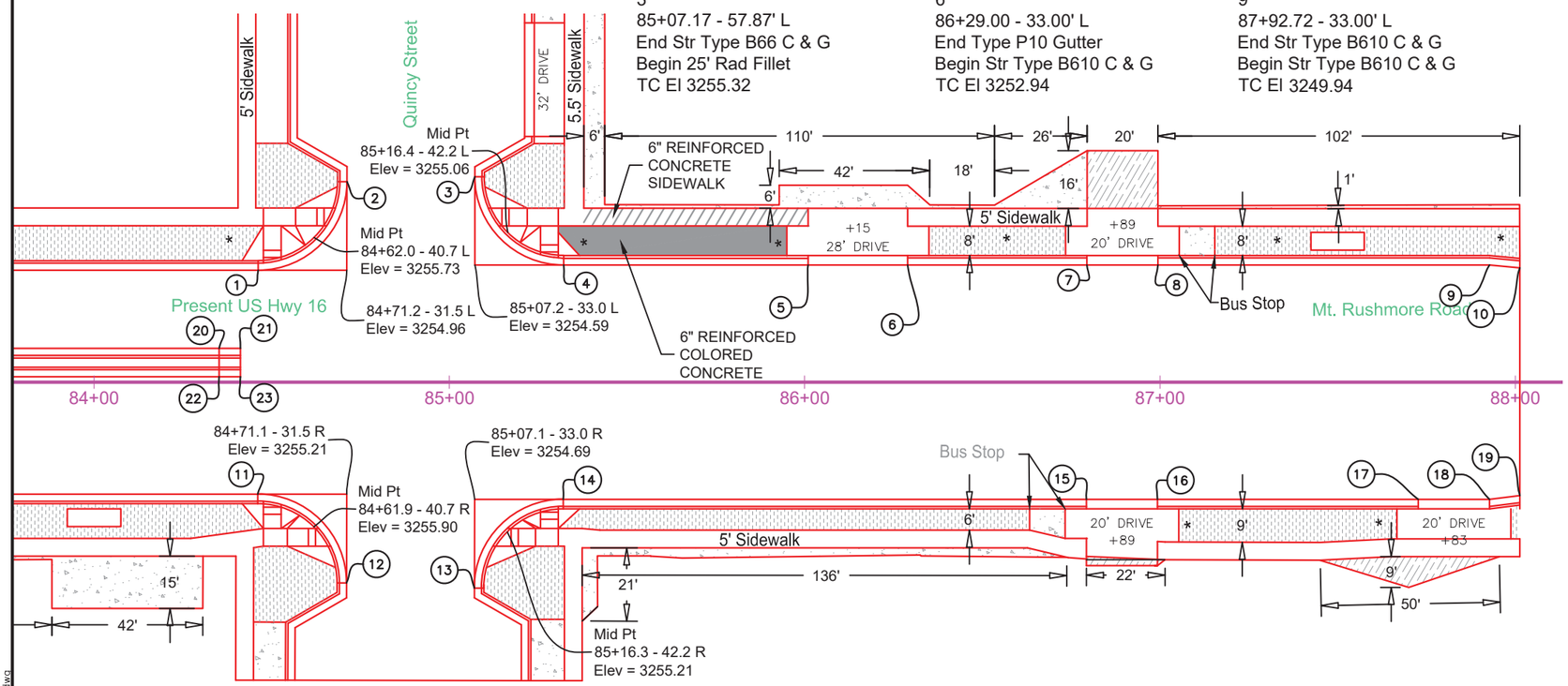

11
84+46.08 - 31.50' R
End Str Type B610 C & G
Begin 25' Rad Fillet
TC El 3255.99

12
84+71.08 - 56.52' R
End 25' Rad Fillet
Begin Str Type B66 C & G
TC El 3255.80

13
85+07.08 - 57.98' R
End Str Type B66 C & G
Begin 25' Rad Fillet
TC El 3255.42

14
85+32.08 - 33.00' R
End 25' Rad Fillet
Begin Str Type B610 C & G
TC El 3254.74

15
86+79.27 - 33.00' R
End Str Type B610 C & G
Begin Type P10 Gutter
Theor TC El 3251.97

16
86+99.27 - 33.00' R
End Type P10 Gutter
Begin Str Type B610 C & G
Theor TC El 3251.58

17
87+72.72 - 33.00' R
End Str Type B610 C & G
Begin Type P10 Gutter
Theor TC El 3250.15

18
87+92.72 - 33.00' R
End Type P10 Gutter
Begin Str Type B610 C & G
Theor TC El 3249.89

19
88+01.30 - 31.91' R
End Str Type B610 C & G
Match Existing
TC El 3249.61

20
84+35.18 - 9.50' L
End Str Type B610 C & G
Begin Curb Taper
TC El 3256.15

21
84+41.18 - 9.50' L
End Curb Taper
Theor TC El 3256.09

22
84+35.18 - 1.50' L
End Str Type B610 C & G
Begin Curb Taper
TC El 3256.31

23
84+41.18 - 1.50' L
End Curb Taper
Theor TC El 3256.25

REGISTERED PROFESSIONAL ENGINEER
REG. NO. 8019
JOHN RAYMOND VAN BEEK
SOUTH DAKOTA
12/2/15

* Slope Varies. See Profile Sheets.

12-2-15 P:\12-117\AutoCAD\PlanSheets\027C\Section B\027C-CURB.dwg

STATE OF SOUTH DAKOTA	PROJECT	SHEET	TOTAL SHEETS
	NH0016(79)67	B78	B135

PLOTTING DATE: 12-2-15 REV 12-02-15 JRV

ST. JAMES STREET CURB & GUTTER LAYOUT

FOR BIDDING PURPOSES ONLY

1
3+24.85 - 14.00' L
Match Existing
Begin Str Type B66 C & G
TC El 3292.82

2
3+38.17 - 14.00' L
End Str Type B66 C & G
Begin Type P6 Gutter
Theor TC El 3293.14

3
3+50.17 - 14.00' L
End Type P6 Gutter
Begin Str Type B66 C & G
Theor TC El 3292.88

4
3+55.17 - 14.00' L
End Str Type B66 C & G
Begin Str Type B66 C & G
TC El 3292.75

5
3+59.17 - 14.00' L
End Str Type B66 C & G
Begin 7.67' Rad Fillet
TC El 3292.62

6
3+66.83 - 21.67' L
End 7.67' Rad Fillet
Begin Str Type B66 C & G
TC El 3292.36

7
3+66.83 - 30.06' L
End Str Type B66 C & G
Begin StrType B66 C & G
TC El 3292.39

8
4+29.83 - 30.06' L
End Str Type B66 C & G
Begin Str Type B66 C & G
TC El 3290.18

9
4+29.83 - 21.67' L
End Str Type B66 C & G
Begin 7.67' Rad Fillet
TC El 3289.63

10
4+37.50 - 14.00' L
End 7.67' Rad Fillet
Begin Str Type B66 C & G
TC El 3289.04

11
3+24.85 - 14.00' R
Match Existing
Begin Str Type B66 C & G
TC El 3293.27

12
3+59.16 - 14.00' R
End Str Type B66 C & G
Begin 7.67' Rad Fillet
TC El 3292.62

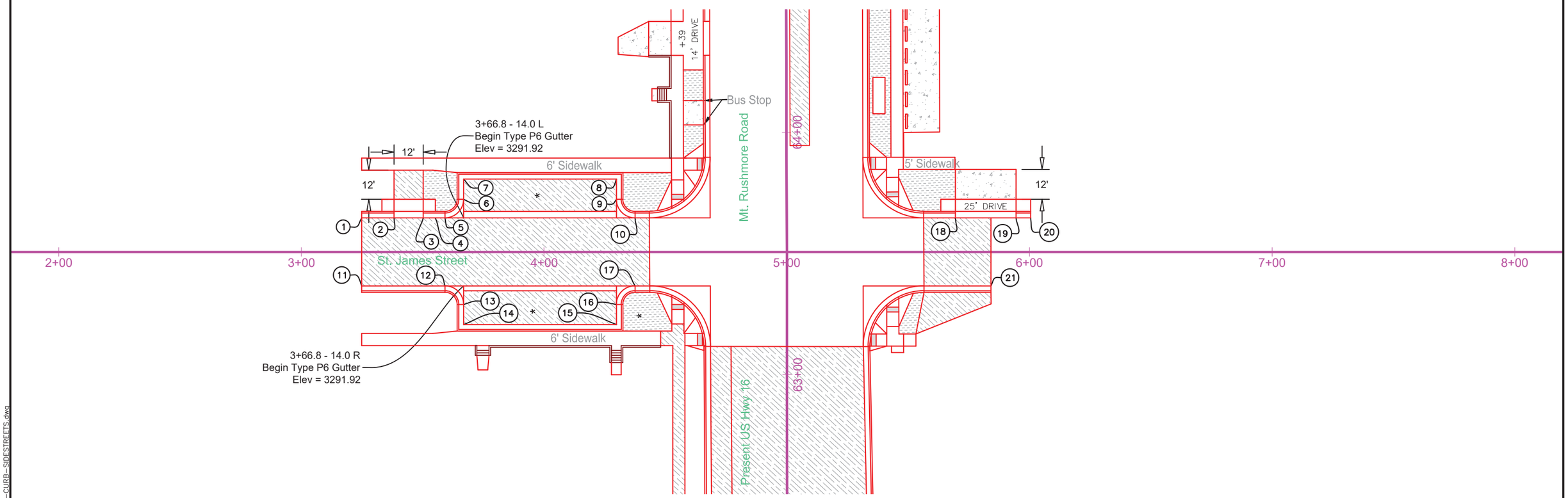

ASPHALT

CONCRETE

COLORED CONCRETE BOULEVARD

REINFORCED CONCRETE SIDEWALK

GRAVEL

REINFORCED COLORED CONCRETE SIDEWALK

13
3+66.83 - 21.67' R
End 7.67' Rad Fillet
Begin Str Type B66 C & G
TC El 3292.78

14
3+66.83 - 29.97' R
End Str Type B66 C & G
Begin Str Type B66 C & G
TC El 3293.27

15
4+29.83 - 29.97' R
End Str Type B66 C & G
Begin Str Type B66 C & G
TC El 3290.12

16
4+29.83 - 21.67' R
End Str Type B66 C & G
Begin 7.67' Rad Fillet
TC El 3289.69

17
4+37.50 - 14.00' R
End 7.67' Rad Fillet
Begin Str Type B66 C & G
TC El 3289.30

18
5+69.48 - 14.00' L
End Str Type B66 C & G
Begin Type P6 Gutter
Theor TC El 3289.64

19
5+94.48 - 14.00' L
End Type P6 Gutter
Begin Str Type B66 C & G
Theor TC El 3290.19

20
6+00.48 - 14.00' L
End Str Type B66 C & G
Match Existing
TC El 3290.35

21
5+84.18 - 14.00' R
Match Existing
Begin Str Type B66 C & G
TC El 3290.06

REGISTERED PROFESSIONAL ENGINEER
REG. NO.
8019
JOHN RAYMOND
VAN BEEK
SOUTH DAKOTA
12/2/15

* Slope Varies. See Profile Sheets.

12-2-15 P:\12-117\AutoCAD\PlanSheets\027C\Section B\027C-CURB-SIDESTREETS.dwg

FAIRVIEW STREET CURB & GUTTER LAYOUT

FOR BIDDING PURPOSES ONLY

STATE OF SOUTH DAKOTA	PROJECT	SHEET	TOTAL SHEETS
	NH0016(79)67	B79	B135

PLOTTING DATE: 12-2-15 REV 12-02-15 JRV

1
3+70.93 - 14.00' L
Match Existing
Begin Str Type B66 C & G
TC El 3285.71

2
3+74.05 - 14.00' L
End Str Type B66 C & G
Begin Str Type B66 C & G
TC El 3285.83

3
3+74.05 - 35.46' L
End Str Type B66 C & G
Begin Str Type B66 C & G
TC El 3285.68

4
4+37.05 - 35.46' L
End Str Type B66 C & G
Begin Str Type B66 C & G
TC El 3285.53

5
4+37.05 - 14.00' L
End Str Type B66 C & G
Begin Str Type B66 C & G
TC El 3285.61

6
3+70.93 - 14.00' R
Match Existing
Begin Str Type B66 C & G
TC El 3286.06

7
3+75.93 - 14.00' R
End Str Type B66 C & G
Begin Type P6 Gutter
Theor TC El 3286.12

8
4+40.93 - 14.00' R
End Type P6 Gutter
Begin Str Type B66 C & G
Theor TC El 3285.88

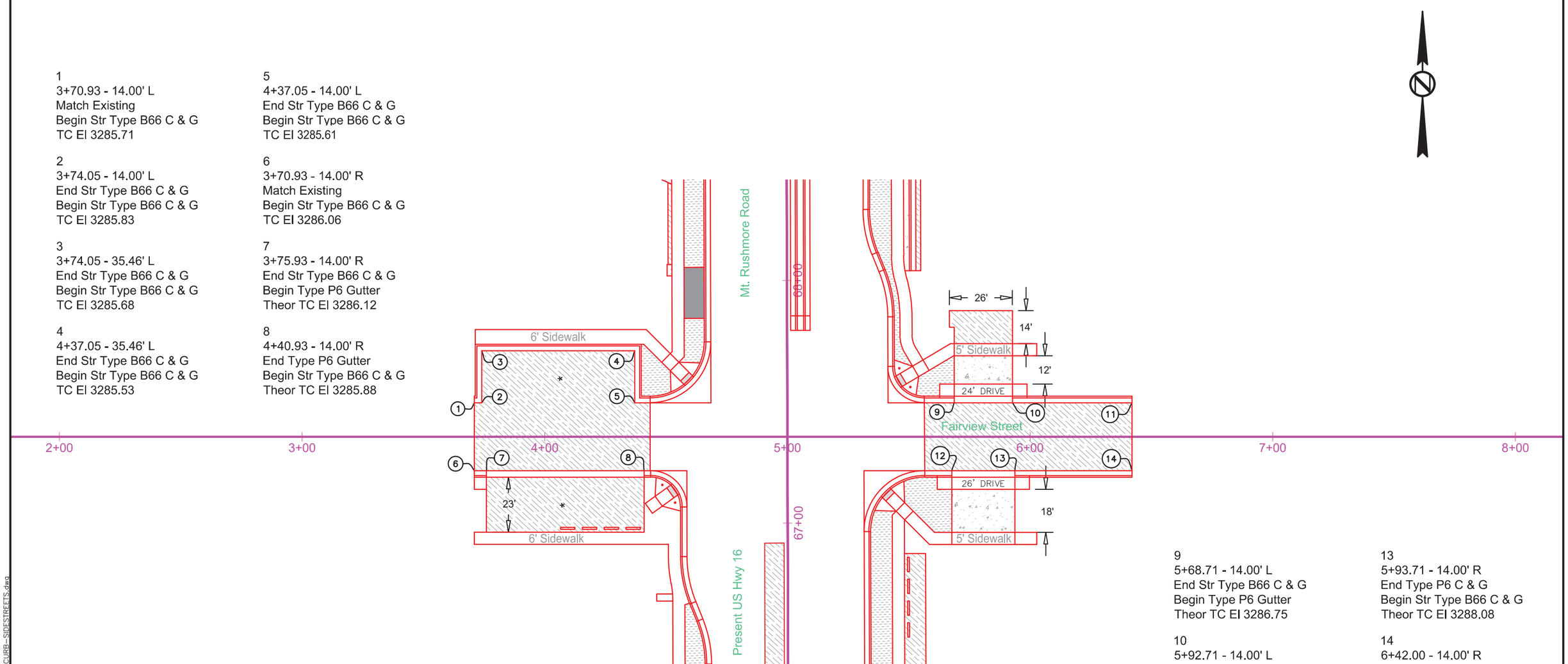

9
5+68.71 - 14.00' L
End Str Type B66 C & G
Begin Type P6 Gutter
Theor TC El 3286.75

10
5+92.71 - 14.00' L
End Type P6 Gutter
Begin Str Type B66 C & G
Theor TC El 3288.24

11
6+42.00 - 14.00' L
End Str Type B66 C & G
Match Existing
TC El 3291.95

12
5+67.71 - 14.00' R
End Str Type B66 C & G
Begin Type P6 Gutter
Theor TC El 3286.78

13
5+93.71 - 14.00' R
End Type P6 C & G
Begin Str Type B66 C & G
Theor TC El 3288.08

14
6+42.00 - 14.00' R
End Str Type B66 C & G
Match Existing
TC El 3291.15

REGISTERED PROFESSIONAL ENGINEER
REG. NO. 8019
JOHN RAYMOND VAN BEEK
SOUTH DAKOTA
12/2/15

* Slope Varies. See Profile Sheets.

12-2-15 P:\12-117\AutoCAD\PlanSheets\027C\Section_B\027C-CURB-SIDESTREETS.dwg

CLARK STREET CURB & GUTTER LAYOUT

FOR BIDDING PURPOSES ONLY

STATE OF SOUTH DAKOTA	PROJECT	SHEET	TOTAL SHEETS
	NH0016(79)67	B80	B135

PLOTTING DATE: 12-2-15 REV 12-02-15 JRV

1
3+23.09 - 14.00' L
Match Existing
Begin Str Type B66 C & G
TC El 3280.00

2
3+28.08 - 14.00' L
End Str Type B66 C & G
Begin Type P6 Gutter
Theor TC El 3280.22

3
4+39.08 - 14.00' L
End Type P6 Gutter
Begin Str Type B66 C & G
Theor TC El 3283.70

4
3+80.00 - 14.00' R
Match Existing
Begin Str Type B66 C & G
TC El 3282.01

5
3+90.08 - 14.00' R
End Str Type B66 C & G
Begin Type P6 Gutter
Theor TC El 3282.32

6
4+39.08 - 14.00' R
End Type P6 Gutter
Begin Str Type B66 C & G
Theor TC El 3283.80

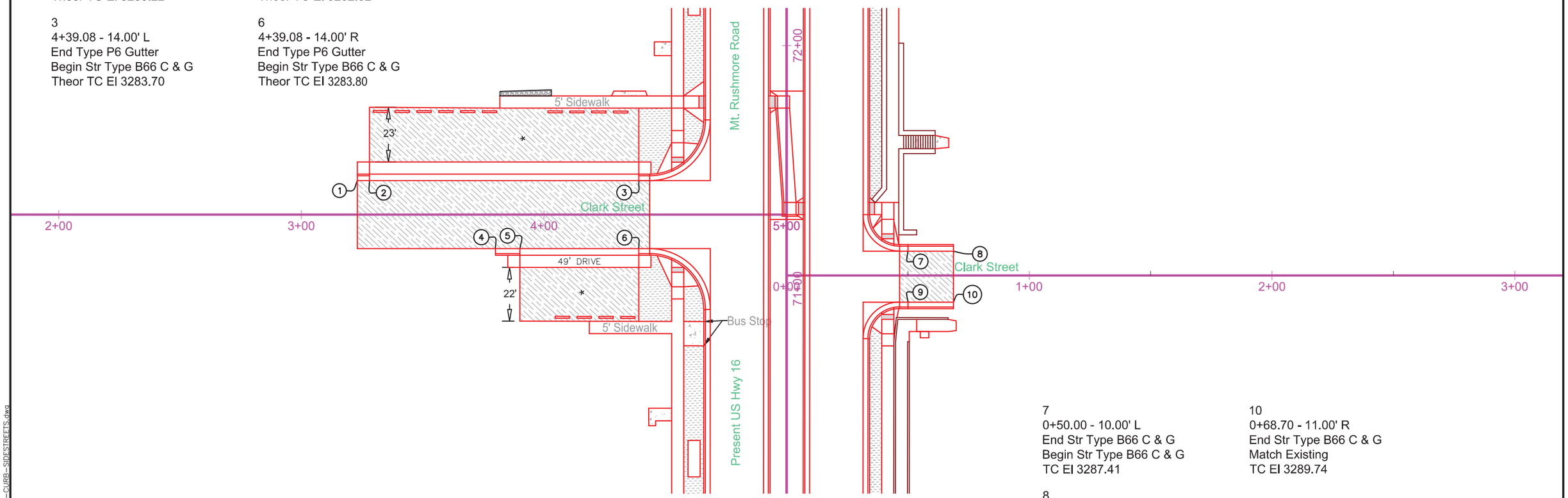

7
0+50.00 - 10.00' L
End Str Type B66 C & G
Begin Str Type B66 C & G
TC El 3287.41

8
0+68.70 - 10.00' L
End Str Type B66 C & G
Match Existing
TC El 3289.55

9
0+50.00 - 11.00' R
End Str Type B66 C & G
Begin Str Type B66 C & G
TC El 3287.53

10
0+68.70 - 11.00' R
End Str Type B66 C & G
Match Existing
TC El 3289.74

REGISTERED PROFESSIONAL ENGINEER
REG. NO. 8019
JOHN RAYMOND VAN BEEK
SOUTH DAKOTA
12/2/15

* Slope Varies. See Profile Sheets.

12-2-15 P:\12-117\AutoCAD\PlanSheets\027C\Section_B\027C-CURB-SIDESTREETS.dwg

FULTON STREET CURB & GUTTER LAYOUT

FOR BIDDING PURPOSES ONLY

STATE OF SOUTH DAKOTA	PROJECT	SHEET	TOTAL SHEETS
	NH0016(79)67	B81	B135

PLOTTING DATE: 12-2-15 REV 12-02-15 JRV

1
3+91.83 - 30.03' L
Match Existing
Begin Str Type B66 C & G
TC El 3278.42

2
4+23.75 - 30.03' L
End Str Type B66 C & G
Begin Type P6 Gutter
Theor TC El 3280.21

3
4+47.75 - 44.96' L
Begin Str Type B66 C & G
Theor TC El 3281.52

4
4+47.75 - 30.03' L
End Type P6 Gutter
Begin Str Type B66 C & G
Theor TC El 3281.32

5
4+47.75 - 16.00' L
End Type P6 Gutter
Theor TC El 3281.07

6
3+91.83 - 29.96' R
Begin Str Type B66 C & G
TC El 3278.41

7
4+11.27 - 29.97' R
End Str Type B66 C & G
Begin Str Type B66 C & G
TC El 3279.52

8
4+16.27 - 29.98' R
End Str Type B66 C & G
TC El 3279.83

9
4+38.27 - 43.61' R
Begin Str Type B66 C & G
Theor TC El 3281.29

10
4+38.27 - 16.00' R
End Type P6 Gutter
End Str Type B66 C & G
Begin Str Type B66 C & G
TC El 3280.93

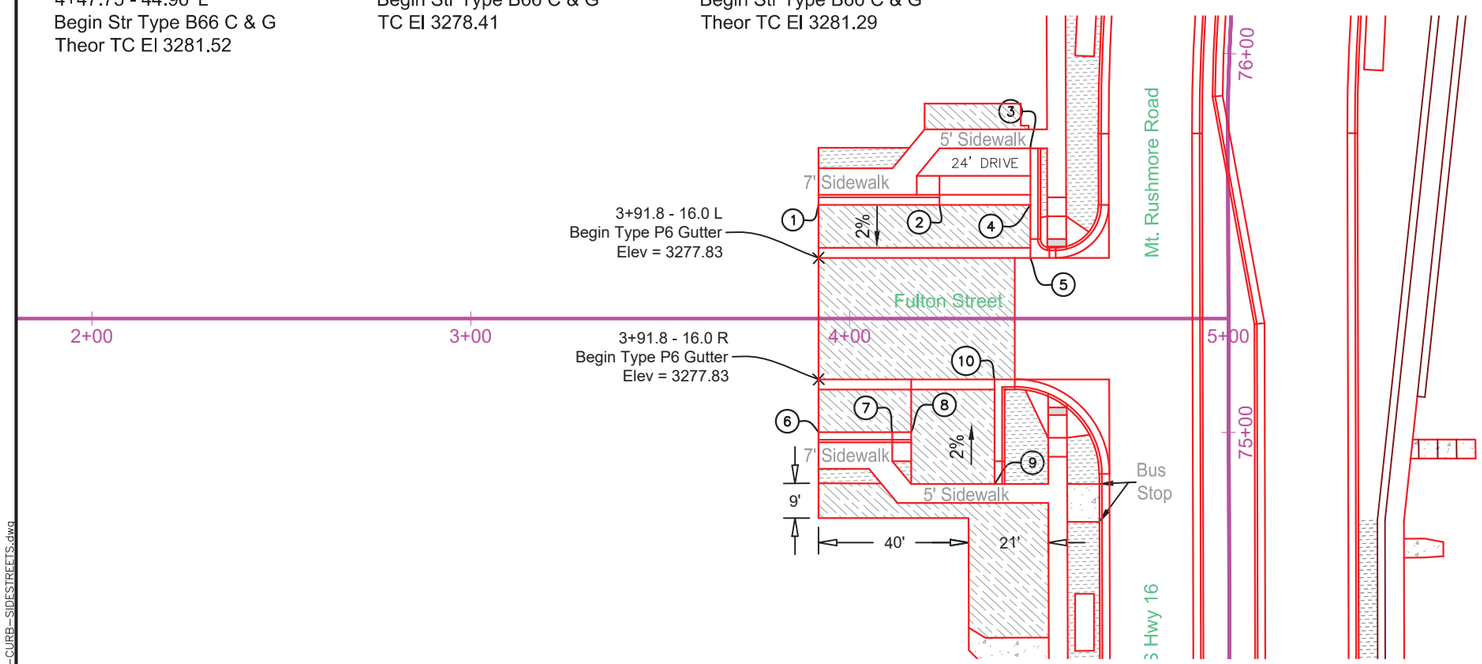

REGISTERED PROFESSIONAL ENGINEER
REG. NO.
8019
JOHN RAYMOND
VAN BEEK
SOUTH DAKOTA
12/2/15

* Slope Varies. See Profile Sheets.

12-2-15 P:\12-117\AutoCAD\PlanSheets\027C\Section B\027C-CURB-SIDESTREETS.dwg

SOUTH STREET CURB & GUTTER LAYOUT

FOR BIDDING PURPOSES ONLY

STATE OF SOUTH DAKOTA	PROJECT	SHEET	TOTAL SHEETS
	NH0016(79)67	B82	B135

PLOTTING DATE: 12-2-15 REV 12-02-15 JRV

1
3+78.47 - 16.00' L
Match Existing
Begin Str Type B66 C & G
TC El 3274.53

2
3+83.75 - 16.00' L
End Str Type B66 C & G
Begin Type P6 Gutter
Theor TC El 3274.66

3
4+07.75 - 16.00' L
End Type P6 Gutter
Begin Str Type B66 C & G
Theor TC El 3274.99

4
4+31.28 - 16.00' L
End Str Type B66 C & G
Begin Str Type B66 C & G
TC El 3275.21

5
3+78.47 - 30.01' R
Begin Str Type B66 C & G
TC El 3274.71

6
4+21.30 - 30.01' R
End Str Type B66 C & G
Begin Type P6 Gutter
Theor TC El 3276.70

7
4+45.30 - 42.84' R
Begin Str Type B66 C & G
TheorTC El 3278.18

8
4+45.30 - 36.84' R
End Str Type B66 C & G
Begin Str Curb Taper
TC El 3277.58

9
4+45.30 - 30.01' R
End Type P6 Gutter
Begin Str Type B66 C & G
TC El 3277.21

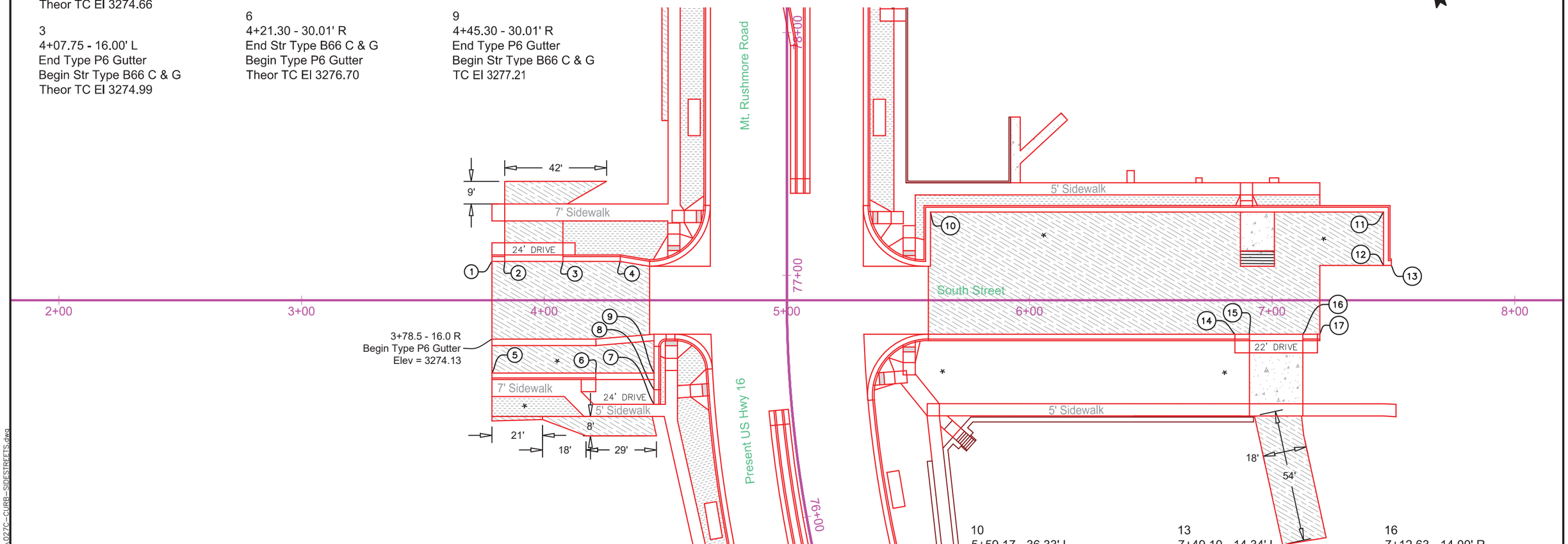

10
5+59.17 - 36.33' L
End Str Type B66 C & G
Begin Str Type B66 C & G
TC El 3275.78

11
7+45.93 - 36.33' L
End Str Type B66 C & G
Begin Str Type B66 C & G
TC El 3288.11

12
7+45.93 - 14.34' L
End Str Type B66 C & G
Begin Str Type B66 C & G
TC El 3288.42

13
7+49.10 - 14.34' L
End Str Type B66 C & G
Match Existing
TC El 3288.50

14
6+84.63 - 14.00' R
End Str Type B66 C & G
Begin Type P6 Gutter
TC El 3287.32

15
6+90.63 - 14.00' R
End Str Type B66 C & G
Begin Type P6 Gutter
Theor TC El 3287.70

16
7+12.63 - 14.00' R
End Type P6 Gutter
Begin Str Type B66 C & G
Theor TC El 3288.54

17
7+19.63 - 14.00' R
End Str Type B66 C & G
Match Existing
TC El 3288.36

* Slope Varies. See Profile Sheets.

REGISTERED PROFESSIONAL ENGINEER
REG. NO. 8019
JOHN RAYMOND VAN BEEK
SOUTH DAKOTA
12/2/15

12-2-15 P:\12-117\AutoCAD\PlanSheets\027C\Section B\027C-CURB-SIDESTREETS.dwg

COLUMBUS STREET CURB & GUTTER LAYOUT

FOR BIDDING PURPOSES ONLY

STATE OF SOUTH DAKOTA	PROJECT	SHEET	TOTAL SHEETS
	NH0016(79)67	B83	B135

PLOTTING DATE: 12-2-15 REV 12-02-15 JRV

1
3+96.21 - 31.98' L
Match Exsting
Begin Str Type B66 C & G
TC El 3261.51

2
4+17.57 - 31.98' L
End Str Type B66 C & G
Begin Type P6 Gutter
Theor TC El 3261.55

3
4+30.07 - 31.98' L
End Type P6 Gutter
Begin Str Type B66 C & G
Theor TC El 3261.57

4
4+31.30 - 31.98' L
End Str Type B66 C & G
Begin Str Type B66 C & G
TC El 3261.57

5
4+39.37 - 18.00' L
End Str Type B66 C & G
Begin Str Type B66 C & G
TC El 3261.87

6
3+96.21 - 31.71' R
Match Existing
Begin Str Type B66 C & G
TC El 3262.57

7
4+31.46 - 31.71' R
End Str Type B66 C & G
Begin Str Type B66 C & G
TC El 3262.72

8
4+39.37 - 18.00' R
End Str Type B66 C & G
Begin StrType B66 C & G
TC El 3262.53

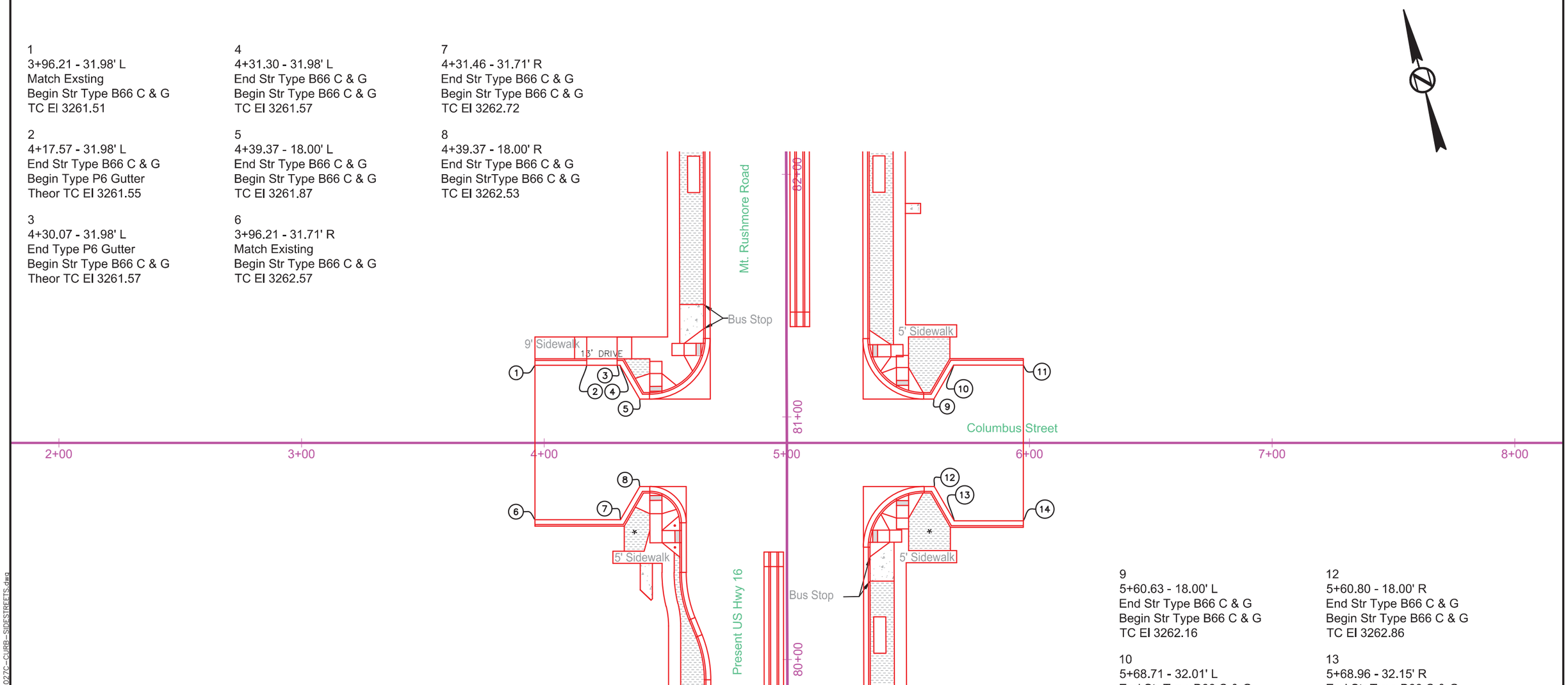

9
5+60.63 - 18.00' L
End Str Type B66 C & G
Begin Str Type B66 C & G
TC El 3262.16

10
5+68.71 - 32.01' L
End Str Type B66 C & G
Begin Str Type B66 C & G
TC El 3261.75

11
5+97.47 - 32.01' L
End Str Type B66 C & G
Match Existing
TC El 3261.30

12
5+60.80 - 18.00' R
End Str Type B66 C & G
Begin Str Type B66 C & G
TC El 3262.86

13
5+68.96 - 32.15' R
End Str Type B66 C & G
Begin Str Type B66 C & G
TC El 3263.09

14
5+97.47 - 32.15' R
End Str Type B66 C & G
Match Existing
TC El 3262.99

REGISTERED PROFESSIONAL ENGINEER
REG. NO. 8019
JOHN RAYMOND VAN BEEK
SOUTH DAKOTA
12/2/15

* Slope Varies. See Profile Sheets.

12-2-15 P:\12-117\AutoCAD\PlanSheets\027C\Section B\027C-CURB-SIDESTREETS.dwg

QUINCY STREET CURB & GUTTER LAYOUT

FOR BIDDING PURPOSES ONLY

STATE OF SOUTH DAKOTA	PROJECT	SHEET	TOTAL SHEETS
	NH0016(79)67	B84	B135

PLOTTING DATE: 12-2-15 REV 12-02-15 JRV

1
3+92.30 - 32.00' L
Match Existing
Begin Str Type B66 C & G
TC El 3255.20

2
3+98.79 - 32.00' L
End Str Type B66 C & G
Begin Type P6 Gutter
Theor TC El 3255.20

3
4+30.79 - 32.00' L
End Type P6 Gutter
Begin Str Type B66 C & G
TC El 3255.19

4
4+31.24 - 32.00' L
End Str Type B66 C & G
Begin Str Type B66 C & G
TC El 3255.19

5
4+39.33 - 18.00' L
End Str Type B66 C & G
Begin Str Type B66 C & G
TC El 3255.34

6
3+92.26 - 32.00' R
Match Existing
Begin Str Type B66 C & G
TC El 3255.35

7
4+31.24 - 32.00' R
End Str Type B66 C & G
Begin Str Type B66 C & G
TC El 3255.70

8
4+39.33 - 18.00' R
End Str Type B66 C & G
Begin Str Type B66 C & G
TC El 3255.67

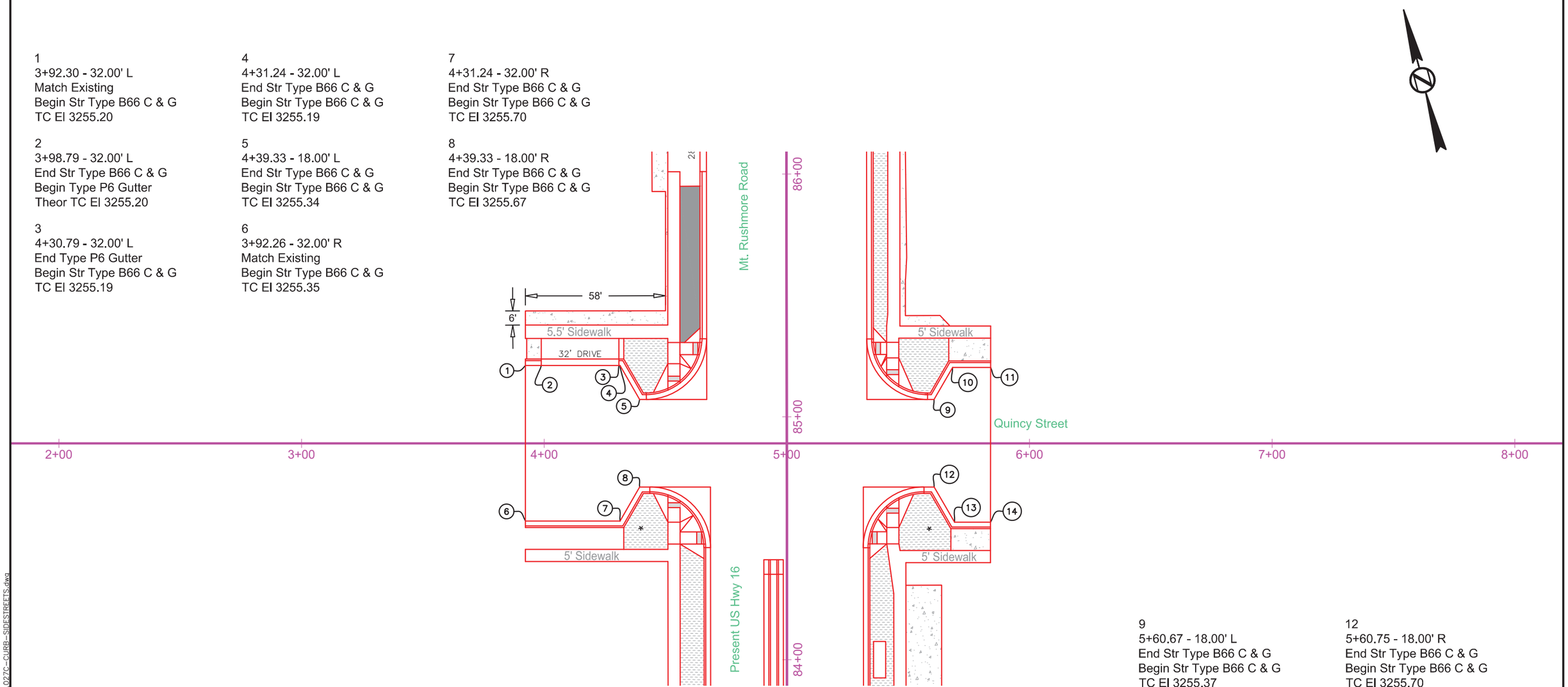

9
5+60.67 - 18.00' L
End Str Type B66 C & G
Begin Str Type B66 C & G
TC El 3255.37

10
5+68.30 - 31.20' L
End Str Type B66 C & G
Begin Str Type B66 C & G
TC El 3254.96

11
5+84.01 - 31.20' L
End Str Type B66 C & G
Match Existing
TC El 3254.47

12
5+60.75 - 18.00' R
End Str Type B66 C & G
Begin Str Type B66 C & G
TC El 3255.70

13
5+69.12 - 32.50' R
End Str Type B66 C & G
Begin Str Type B66 C & G
TC El 3255.41

14
5+83.95 - 32.50' R
End Str Type B66 C & G
Match Existing
TC El 3254.78

REGISTERED PROFESSIONAL ENGINEER
REG. NO. 8019
JOHN RAYMOND VAN BEEK
SOUTH DAKOTA
12/2/15

* Slope Varies. See Profile Sheets.

12-2-15 P:\12-117\AutoCAD\PlanSheets\027C\Section B\027C-CURB-SIDESTREETS.dwg

STATE OF SOUTH DAKOTA	PROJECT	SHEET	TOTAL SHEETS
	NH0016(79)67	B85	B135

PLOTTING DATE: 12-2-15 REV 12-02-15 JRV

CURB RAMP LAYOUT

FOR BIDDING PURPOSES ONLY

(INTERSECTION OF MT. RUSHMORE RD & ST. JAMES ST.)

1
63+12.02 - 34.17' LT
Bottom of Taper
Theor TC El 3288.93

2
63+14.52 - 34.82' LT
Begin Detectable Warning
and Ramp Slope

3
63+14.53 - 42.04' LT
End Ramp Slope

4
63+17.02 - 34.81' LT
Bottom of Taper
Theor TC El 3288.97

5
63+29.00 - 42.39' LT
Bottom of Taper
Theor TC El 3289.07

6
63+29.00 - 44.89' LT
Begin Detectable Warning
and Ramp Slope

7
63+21.00 - 44.89' LT
End Ramp Slope

8
63+32.08 - 47.39' LT
Bottom of Taper
Theor TC El 3289.11

9
63+69.36 - 47.40' LT
Bottom of Taper
Theor TC El 3288.67

10
63+72.43 - 44.90' LT
Begin Detectable Warning
and Ramp Slope

11
63+80.43 - 44.90' LT
End Ramp Slope

12
63+72.43 - 42.40' LT
Bottom of Taper
Theor TC El 3288.56

13
63+84.43 - 34.81' LT
Bottom of Taper
Theor TC El 3288.31

14
63+86.93 - 34.81' LT
Begin Detectable Warning
and Ramp Slope

15
63+86.95 - 42.40' LT
End Ramp Slope

16
63+89.43 - 34.17' LT
Bottom of Taper
Theor TC El 3288.22

17
63+11.71 - 34.17' RT
Bottom of Taper
Theor TC El 3289.31

18
63+14.21 - 34.78' RT
Begin Detectable Warning
and Ramp Slope

19
63+14.20 - 41.17' RT
End Ramp Slope

20
63+16.71 - 34.78' RT
Bottom of Taper
Theor TC El 3289.36

21
63+27.76 - 41.17' RT
Bottom of Taper
Theor TC El 3289.48

22
63+27.76 - 43.67' RT
Begin Detectable Warning
and Ramp Slope

23
63+19.76 - 43.67' RT
End Ramp Slope

24
63+31.32 - 46.17' RT
Bottom of Taper
Theor TC El 3289.53

25
63+69.67 - 46.17' RT
Bottom of Taper
Theor TC El 3289.11

26
63+73.23 - 43.67' RT
Begin Detectable Warning
and Ramp Slope

27
63+81.23 - 43.67' RT
End Ramp Slope

28
63+73.23 - 41.17' RT
Bottom of Taper
Theor TC El 3289.00

29
63+84.54 - 34.72' RT
Bottom of Taper
Theor TC El 3288.68

30
63+87.04 - 34.73' RT
Begin Detectable Warning
and Ramp Slope

31
63+87.02 - 41.17' RT
End Ramp Slope

32
63+89.54 - 34.17' RT
Bottom of Taper
Theor TC El 3288.60

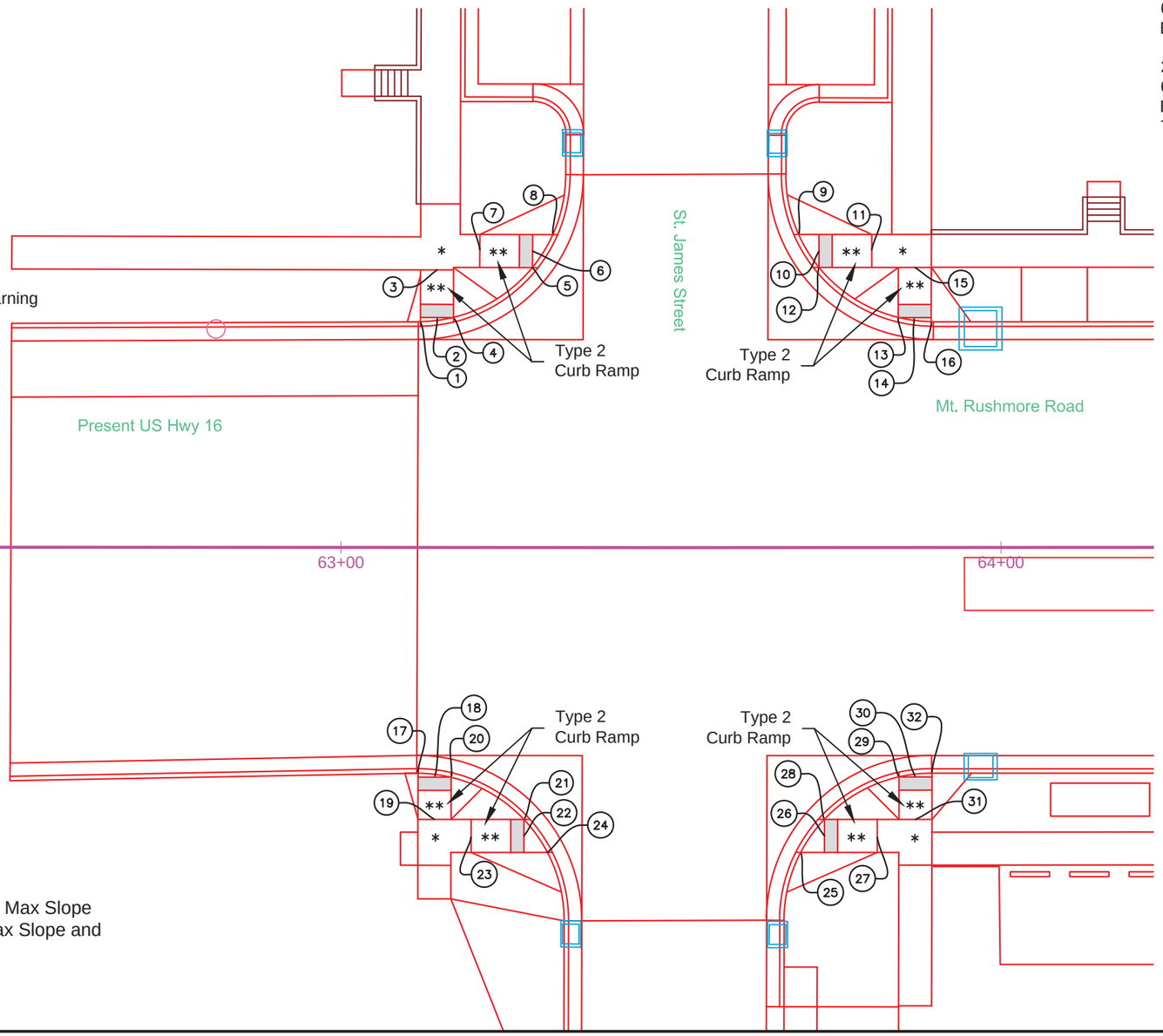

LEGEND:
* Turning Space with 1.5% Max Slope
** Curb Ramp with 7.5% Max Slope and 1.5% Max Cross Slope
Detectable Warning

REGISTERED PROFESSIONAL ENGINEER
REG. NO. 8019
JOHN RAYMOND VAN BEEK
SOUTH DAKOTA
12/2/15

12-2-15 P:\12-117\AutoCAD\PlanSheets\027C\Section B\027C-CURB-RAMP.dwg

CURB RAMP LAYOUT

(INTERSECTION OF MT. RUSHMORE RD & FAIRVIEW ST.)

FOR BIDDING PURPOSES ONLY

STATE OF SOUTH DAKOTA	PROJECT	SHEET	TOTAL SHEETS
	NH0016(79)67	B86	B135

PLOTTING DATE: 12-2-15 REV 12-02-15 JRV

1
67+11.78 - 45.23' LT
Bottom of Taper
Theor TC El 3285.70

2
67+13.81 - 46.68' LT
Begin Detectable Warning
and Ramp Slope

3
67+09.20 - 53.12' LT
End Ramp Slope

4
67+15.84 - 48.14' LT
Bottom of Taper
Theor TC El 3285.76

5
67+57.30 - 42.60' LT
Bottom of Taper
Theor TC El 3285.49

6
67+59.07 - 40.83' LT
Begin Detectable Warning
and Ramp Slope

7
67+64.68 - 46.42' LT
End Ramp Slope

8
67+60.83 - 39.06' LT
Bottom of Taper
Theor TC El 3285.41

9
67+10.40 - 39.06' RT
Bottom of Taper
Theor TC El 3286.34

10
67+12.16 - 40.83' RT
Begin Detectable Warning
and Ramp Slope

11
67+06.56 - 46.42' RT
End Ramp Slope

12
67+13.93 - 42.60' RT
Bottom of Taper
Theor TC El 3286.42

13
67+56.21 - 47.33' RT
Bottom of Taper
Theor TC El 3285.73

14
67+58.37 - 46.07' RT
Begin Detectable Warning
and Ramp Slope

15
67+62.36 - 52.91' RT
End Ramp Slope

16
67+60.53 - 44.81' RT
Bottom of Taper
Theor TC El 3285.65

LEGEND:
* Turning Space with 1.5% Max Slope
** Curb Ramp with 7.5% Max Slope and 1.5% Max Cross Slope
Detectable Warning

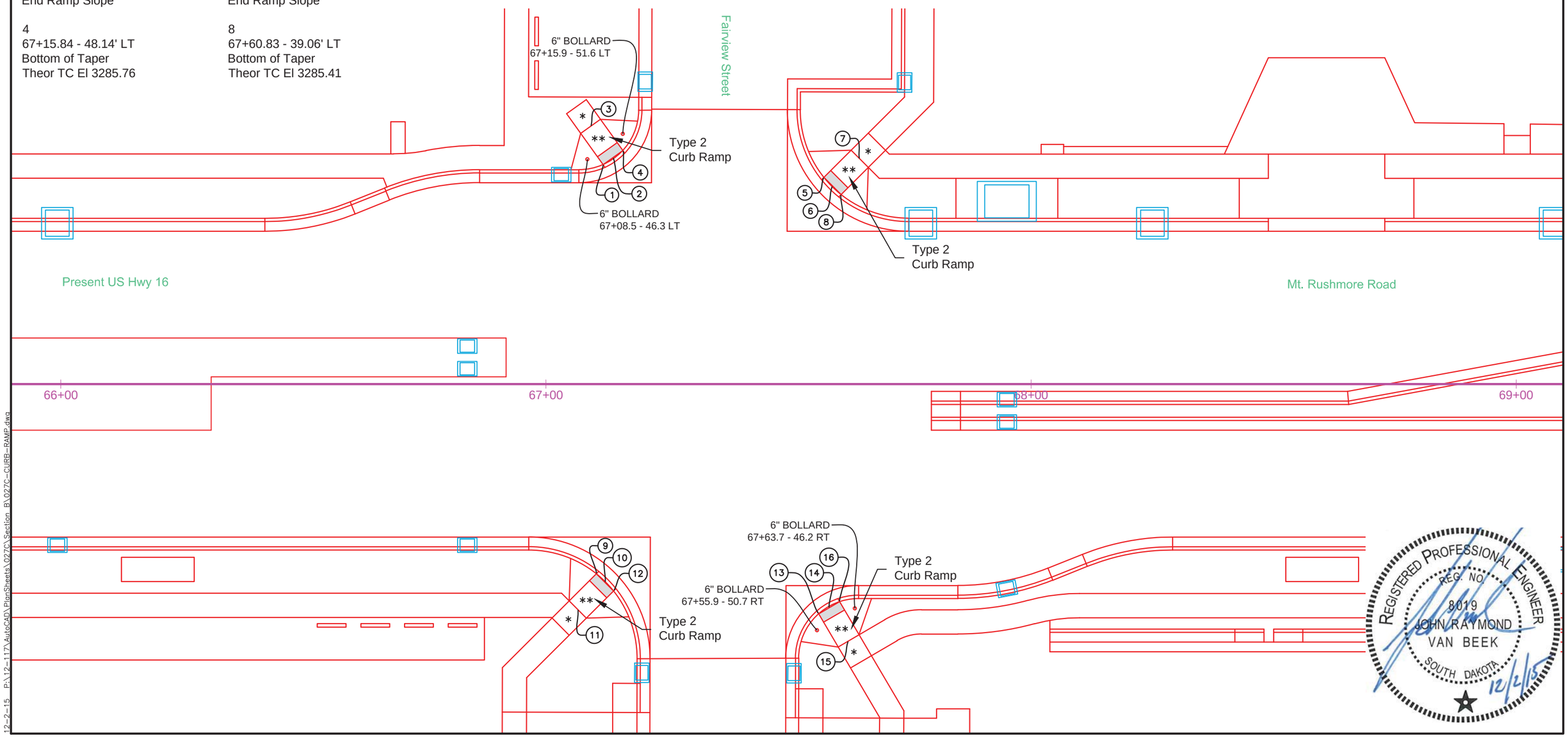

REGISTERED PROFESSIONAL ENGINEER
REG. NO.
8019
JOHN RAYMOND
VAN BEEK
SOUTH DAKOTA
12/2/15

12-2-15 P:\12-117\AutoCAD\PlanSheets\027C\Section B\027C-CURB-RAMP.dwg

CURB RAMP LAYOUT

(INTERSECTION OF MT. RUSHMORE RD & CLARK ST.)

FOR BIDDING PURPOSES ONLY

STATE OF SOUTH DAKOTA	PROJECT	SHEET	TOTAL SHEETS
	NH0016(79)67	B87	B135

PLOTTING DATE: 12-2-15 REV 12-02-15 JRV

1
71+08.72 - 42.39' LT
Bottom of Taper
Theor TC El 3284.33

2
71+08.72 - 44.89' LT
Begin Detectable Warning
and Ramp Slope

3
71+00.72 - 44.89' LT
End Ramp Slope

4
71+08.72 - 47.39' LT
Bottom of Taper
Theor TC El 3284.23

5
71+49.00 - 47.44' LT
Bottom of Taper
Theor TC El 3283.99

6
71+52.06 - 44.94' LT
Begin Detectable Warning
and Ramp Slope

7
71+60.06 - 44.94' LT
End Ramp Slope

8
71+52.06 - 42.44' LT
Bottom of Taper
Theor TC El 3284.06

9
71+74.32 - 34.17' LT
Bottom of Taper
Theor TC El 3284.25

10
71+76.82 - 34.17' LT
Begin Detectable Warning
and Ramp Slope

11
71+76.81 - 42.46' LT
End Ramp Slope

12
71+79.32 - 34.17' LT
Bottom of Taper
Theor TC El 3284.23

13
71+30.43 - 6.83' RT
Bottom of Taper
Theor TC El 3286.81

14
71+32.93 - 6.83' RT
Begin Detectable Warning
and Ramp Slope

15
71+32.93 - 3.84' RT
End Ramp Slope

16
71+35.43 - 6.83' RT
Bottom of Taper
Theor TC El 3286.78

17
71+74.34 - 6.82' LT
Bottom of Taper
Theor TC El 3284.71

18
71+76.81 - 6.83' LT
Begin Detectable Warning
and Ramp Slope

LEGEND:
* Turning Space with 1.5% Max Slope
** Curb Ramp with 7.5% Max Slope and 1.5% Max Cross Slope
Detectable Warning

REGISTERED PROFESSIONAL ENGINEER
REG. NO. 8019
JOHN RAYMOND VAN BEEK
SOUTH DAKOTA
12/2/15

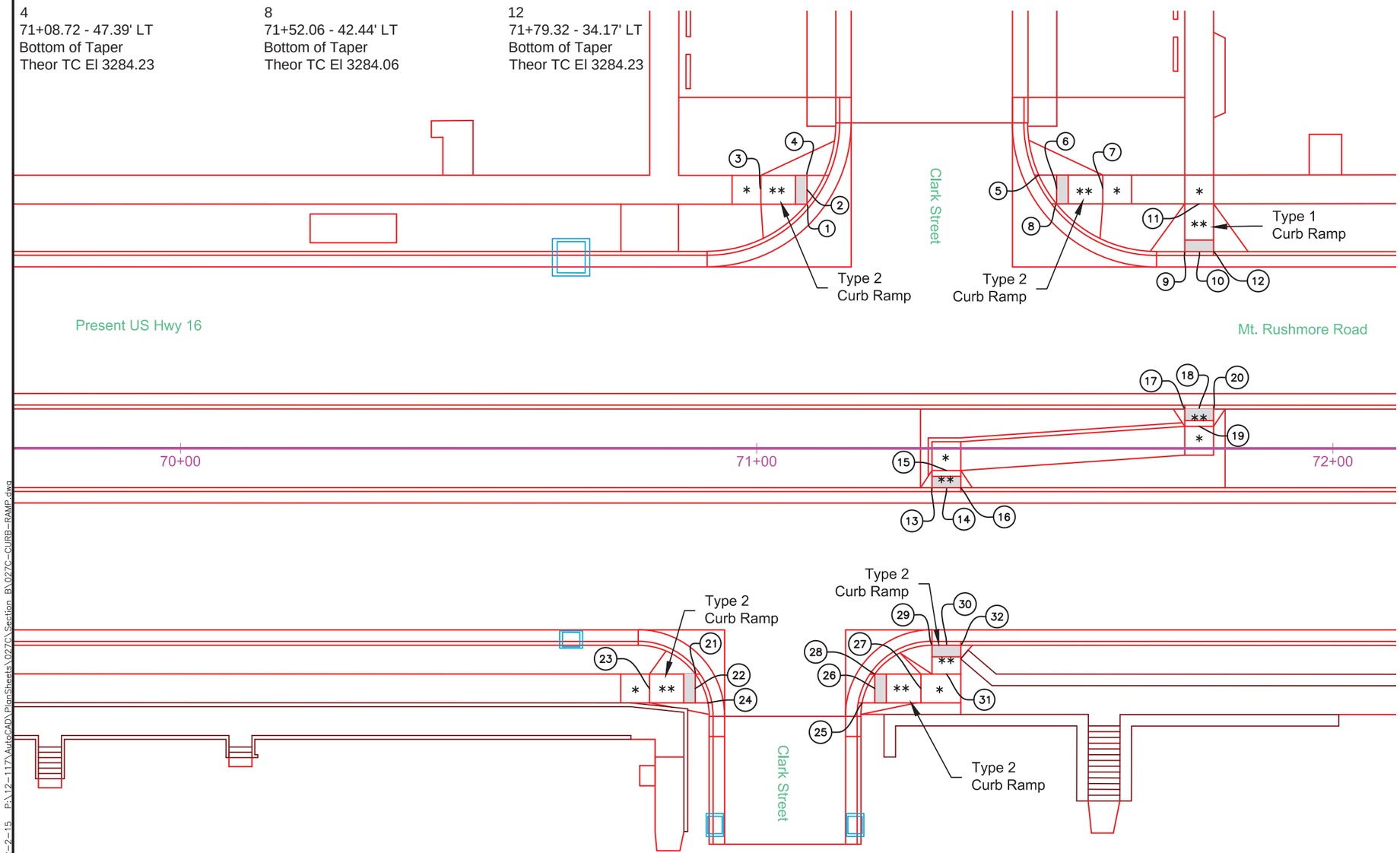

19
71+76.81 - 3.83' LT
End Ramp Slope

20
71+79.31 - 6.83' LT
Bottom of Taper
Theor TC El 3284.65

21
70+89.34 - 39.16' RT
Bottom of Taper
Theor TC El 3287.10

22
70+89.34 - 41.66' RT
Begin Detectable Warning
and Ramp Slope

23
70+81.42 - 41.66' RT
End Ramp Slope

24
70+91.54 - 44.16' RT
Bottom of Taper
Theor TC El 3287.20

25
71+18.32 - 44.16' RT
Bottom of Taper
Theor TC El 3287.10

26
71+20.52 - 41.66' RT
Begin Detectable Warning
and Ramp Slope

27
71+28.52 - 41.66' RT
End Ramp Slope

28
71+20.52 - 39.16' RT
Bottom of Taper
Theor TC El 3287.00

29
71+30.43 - 34.17' RT
Bottom of Taper
Theor TC El 3286.59

30
71+32.93 - 34.17' RT
Begin Detectable Warning
and Ramp Slope

31
71+32.93 - 39.16' RT
End Ramp Slope

32
71+35.43 - 34.17' RT
Bottom of Taper
Theor TC El 3286.51

12-2-15 P:\12-117\AutoCAD\PlanSheets\027C\Section B\027C-CURB-RAMP.dwg

CURB RAMP LAYOUT

(INTERSECTION OF MT. RUSHMORE RD & FULTON ST.)

FOR BIDDING PURPOSES ONLY

STATE OF SOUTH DAKOTA	PROJECT	SHEET	TOTAL SHEETS
	NH0016(79)67	B88	B135

PLOTTING DATE: 12-2-15 REV 12-02-15 JRV

REGISTERED PROFESSIONAL ENGINEER
REG. NO. 8019
JOHN RAYMOND VAN BEEK
SOUTH DAKOTA
12/2/15

1
75+06.73 - 42.69' LT
Bottom of Taper
Theor TC El 3282.08

2
75+06.73 - 45.19' LT
Begin Detectable Warning
and Ramp Slope

3
74+98.73 - 45.19' LT
End Ramp Slope

4
75+09.68 - 47.65' LT
Bottom of Taper
Theor TC El 3282.18

5
75+48.89 - 47.72' LT
Bottom of Taper
Theor TC El 3281.12

6
75+49.17 - 45.22' LT
Begin Detectable Warning
and Ramp Slope

7
75+57.17 - 45.22' LT
End Ramp Slope

8
75+49.17 - 42.72' LT
Bottom of Taper
Theor TC El 3281.03

LEGEND:
* Turning Space with 1.5% Max Slope
** Curb Ramp with 7.5% Max Slope and 1.5% Max Cross Slope
Detectable Warning

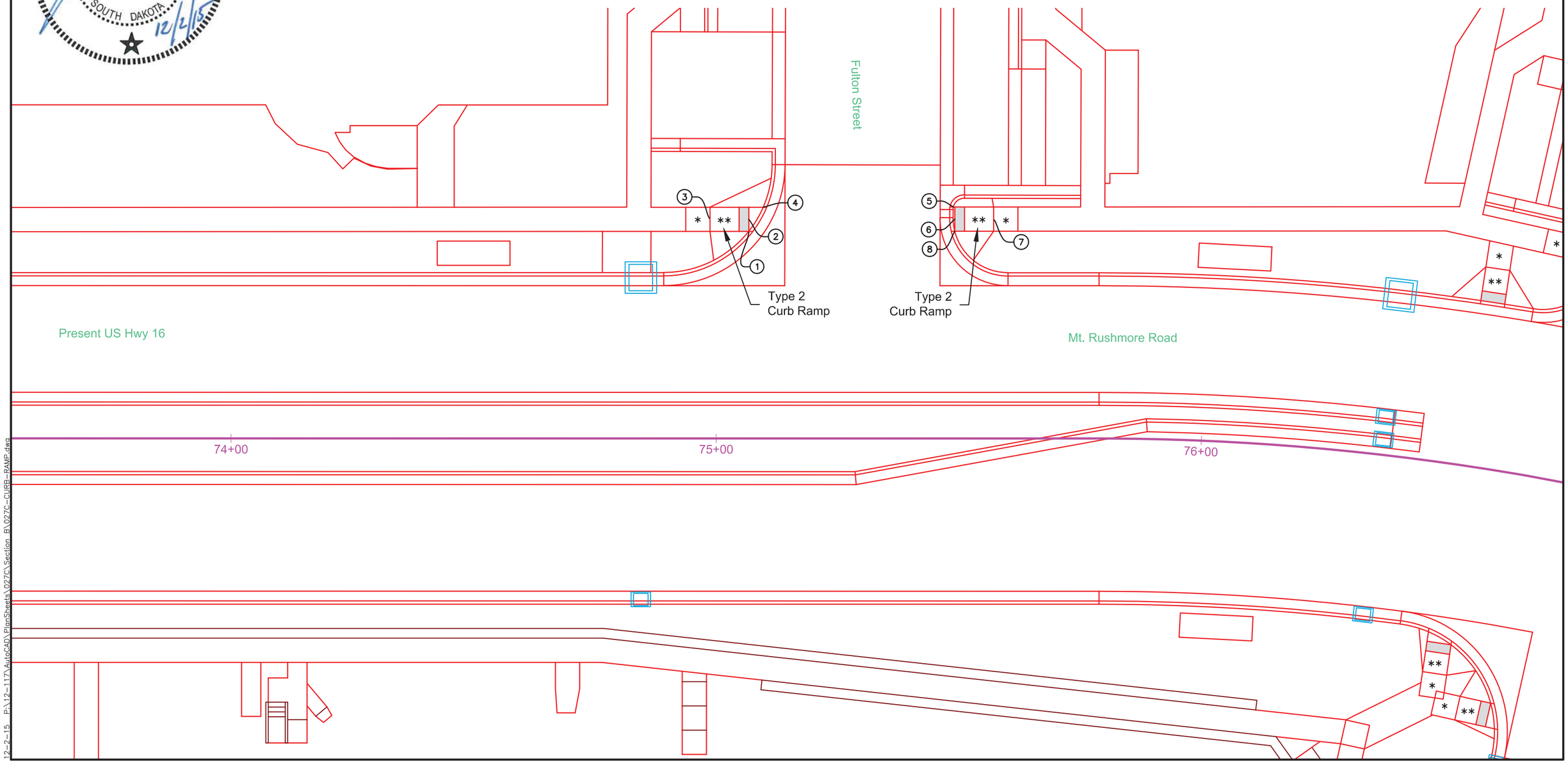

12-2-15 P:\12-117\AutoCAD\PlanSheets\027C\Section B\027C-CURB-RAMP.dwg

CURB RAMP LAYOUT

(INTERSECTION OF MT. RUSHMORE RD & SOUTH ST.)

FOR BIDDING PURPOSES ONLY

STATE OF SOUTH DAKOTA	PROJECT	SHEET	TOTAL SHEETS
	NH0016(79)67	B89	B135

PLOTTING DATE: 12-2-15 REV 12-02-15 JRV

LEGEND:

- * Turning Space with 1.5% Max Slope
- ** Curb Ramp with 7.5% Max Slope and 1.5% Max Cross Slope
- Detectable Warning

1
76+52.93 - 34.17' LT
Bottom of Taper
Theor TC El 3277.96

2
76+55.27 - 34.16' LT
Begin Detectable Warning
and Ramp Slope

3
76+55.27 - 41.16' LT
End Ramp Slope

4
76+57.61 - 34.17' LT
Bottom of Taper
Theor TC El 3277.77

5
76+74.55 - 45.34' LT
Bottom of Taper
Theor TC El 3276.84

6
76+74.60 - 47.84' LT
Begin Detectable Warning
and Ramp Slope

7
76+67.99 - 48.12' LT
End Ramp Slope

8
76+74.70 - 50.33' LT
Bottom of Taper
Theor TC El 3276.75

9
77+07.69 - 49.05' LT
Bottom of Taper
Theor TC El 3275.43

10
77+10.21 - 46.55' LT
Begin Detectable Warning
and Ramp Slope

11
77+17.02 - 46.55' LT
End Ramp Slope

12
77+10.21 - 44.05' LT
Bottom of Taper
Theor TC El 3275.38

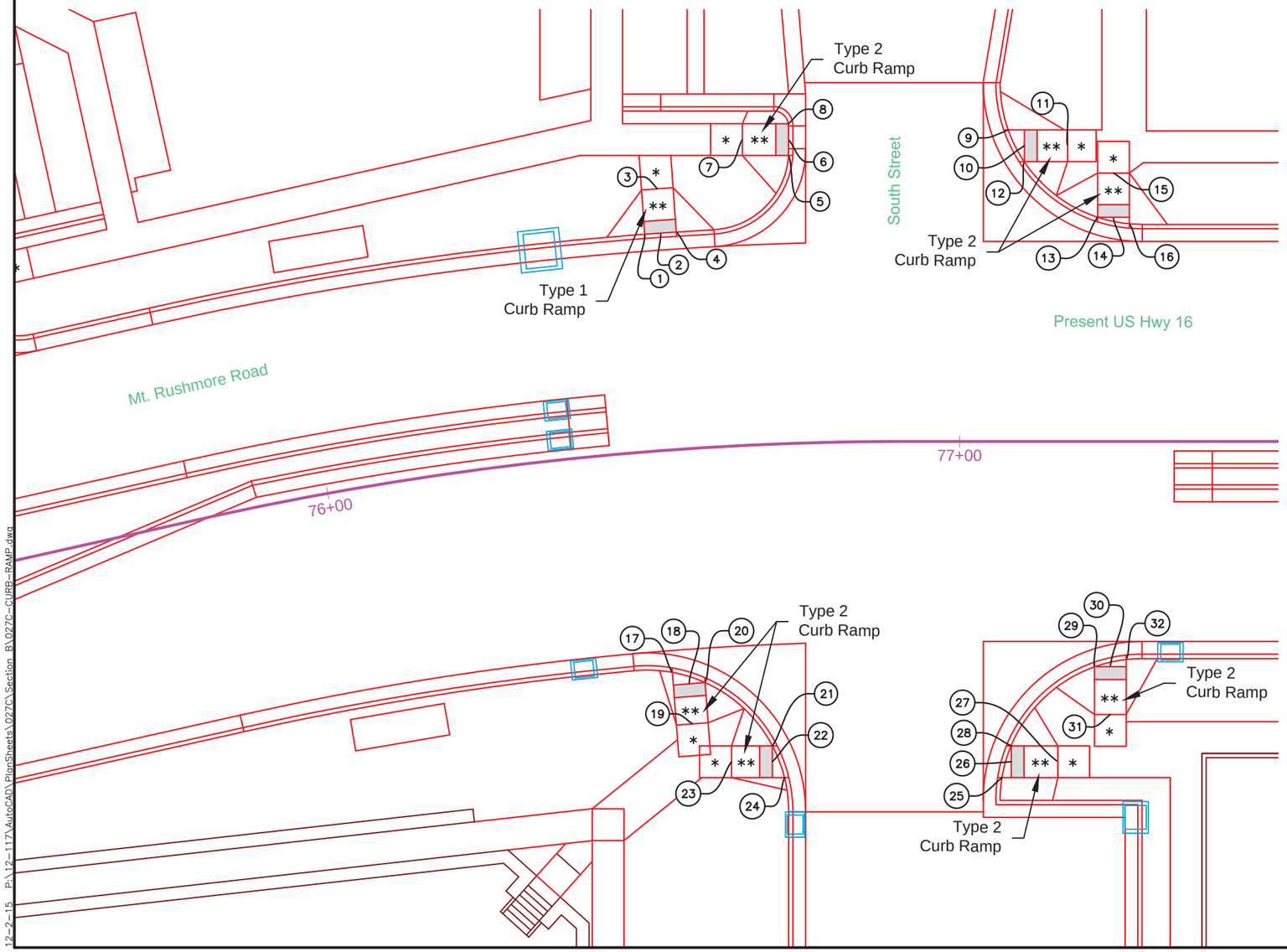

13
77+21.74 - 35.30' LT
Bottom of Taper
Theor TC El 3274.84

14
77+24.24 - 35.30' LT
Begin Detectable Warning
and Ramp Slope

15
77+24.24 - 42.27' LT
End Ramp Slope

16
77+26.74 - 34.26' LT
Bottom of Taper
Theor TC El 3274.74

17
76+52.04 - 34.95' RT
Bottom of Taper
Theor TC El 3278.42

18
76+54.73 - 36.93' RT
Begin Detectable Warning
and Ramp Slope

19
76+54.76 - 43.26' RT
End Ramp Slope

20
76+57.43 - 36.91' RT
Bottom of Taper
Theor TC El 3278.32

21
76+68.36 - 47.45' RT
Bottom of Taper
Theor TC El 3278.05

22
76+68.23 - 49.95' RT
Begin Detectable Warning
and Ramp Slope

23
76+61.10 - 49.61' RT
End Ramp Slope

24
76+70.23 - 52.53' RT
Bottom of Taper
Theor TC El 3278.02

25
77+06.71 - 52.92' RT
Bottom of Taper
Theor TC El 3276.56

26
77+08.13 - 50.42' RT
Begin Detectable Warning
and Ramp Slope

27
77+15.47 - 50.42' RT
End Ramp Slope

28
77+08.13 - 47.92' RT
Bottom of Taper
Theor TC El 3276.37

29
77+21.25 - 35.47' RT
Bottom of Taper
Theor TC El 3275.07

30
77+23.75 - 35.47' RT
Begin Detectable Warning
and Ramp Slope

31
77+23.75 - 42.97' RT
End Ramp Slope

32
77+26.25 - 34.31' RT
Bottom of Taper
Theor TC El 3275.00

REGISTERED PROFESSIONAL ENGINEER
REG. NO. 8019
JOHN RAYMOND VAN BEEK
SOUTH DAKOTA
12/2/15

12-2-15 P:\12-117\AutoCAD\PlanSheets\027C\Section B\027C-CURB-RAMP.dwg

STATE OF SOUTH DAKOTA	PROJECT	SHEET	TOTAL SHEETS
	NH0016(79)67	B90	B135

PLOTTING DATE: 12-2-15 REV 12-02-15 JRV

CURB RAMP LAYOUT

FOR BIDDING PURPOSES ONLY

(INTERSECTION OF MT. RUSHMORE RD & COLUMBUS ST.)

1
80+48.24 - 44.17' LT
Bottom of Taper
Theor TC El 3262.61

2
80+50.74 - 44.17' LT
Begin Detectable Warning
and Ramp Slope

3
80+50.74 - 51.50' LT
End Ramp Slope

4
80+53.24 - 44.17' LT
Bottom of Taper
Theor TC El 3262.52

5
80+67.70 - 51.50' LT
Bottom of Taper
Theor TC El 3262.50

6
80+67.70 - 54.00' LT
Begin Detectable Warning
and Ramp Slope

7
80+60.19 - 54.00' LT
End Ramp Slope

8
80+68.76 - 56.50' LT
Bottom of Taper
Theor TC El 3262.52

9
81+10.10 - 56.42' LT
Bottom of Taper
Theor TC El 3261.85

10
81+10.68 - 53.92' LT
Begin Detectable Warning
and Ramp Slope

11
81+18.01 - 53.92' LT
End Ramp Slope

12
81+10.68 - 51.42' LT
Bottom of Taper
Theor TC El 3261.76

REGISTERED PROFESSIONAL ENGINEER
REG. NO. 8019
JOHN RAYMOND VAN BEEK
SOUTH DAKOTA
12/2/15

LEGEND:
* Turning Space with 1.5% Max Slope
** Curb Ramp with 7.5% Max Slope and 1.5% Max Cross Slope
Detectable Warning
Pedestrian Push Button Pole and 30" x 48" Clear Space with 1.5% Slope

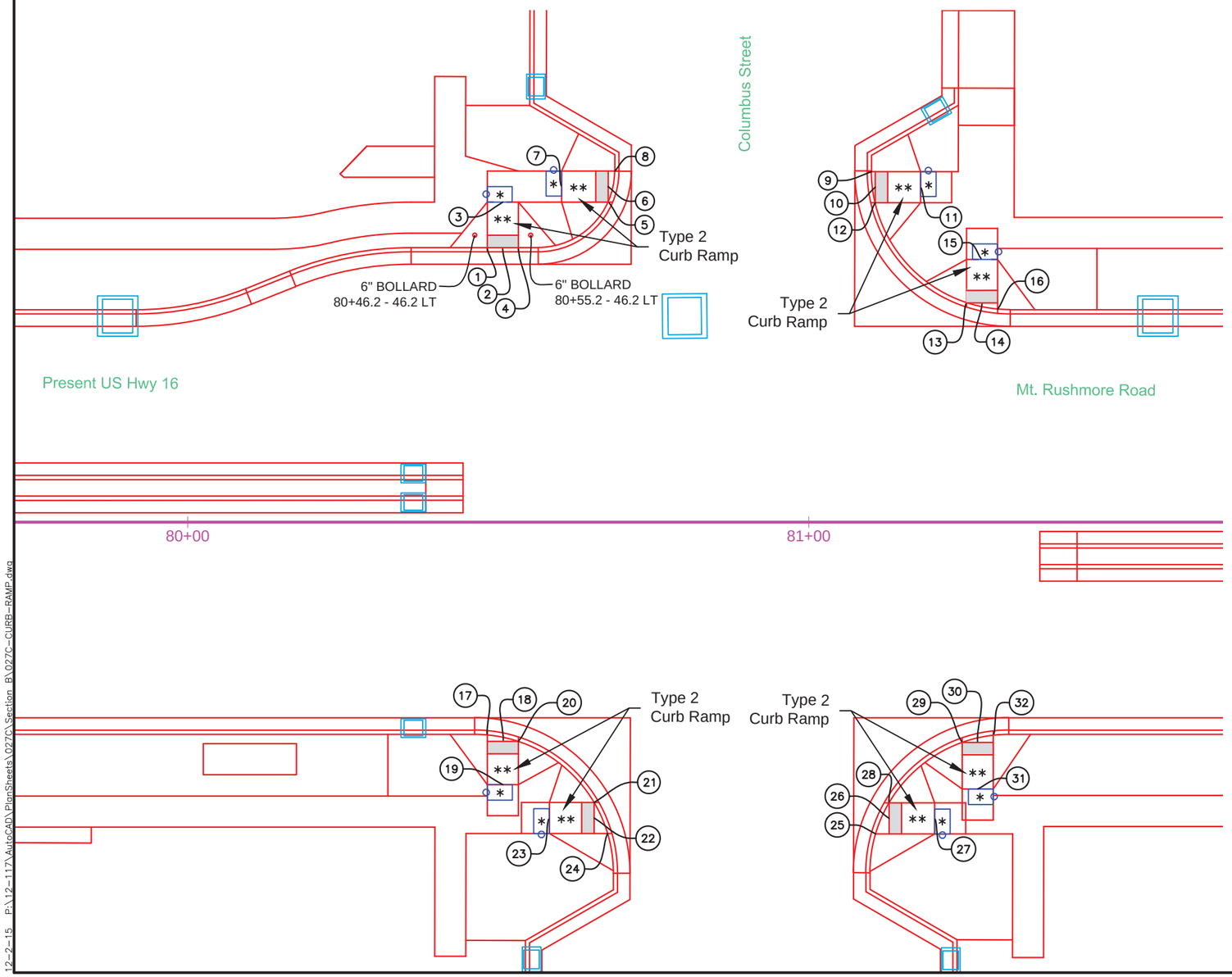

13
81+25.39 - 35.31' LT
Bottom of Taper
Theor TC El 3261.35

14
81+27.89 - 35.30' LT
Begin Detectable Warning
and Ramp Slope

15
81+27.89 - 42.27' LT
End Ramp Slope

16
81+30.39 - 34.26' LT
Bottom of Taper
Theor TC El 3261.26

17
80+48.24 - 34.26' RT
Bottom of Taper
Theor TC El 3263.20

18
80+50.74 - 35.30' RT
Begin Detectable Warning
and Ramp Slope

19
80+50.74 - 42.27' RT
End Ramp Slope

20
80+53.24 - 35.30' RT
Bottom of Taper
Theor TC El 3263.15

21
80+65.42 - 45.12' RT
Bottom of Taper
Theor TC El 3262.99

22
80+65.42 - 47.62' RT
Begin Detectable Warning
and Ramp Slope

23
80+58.22 - 47.63' RT
End Ramp Slope

24
80+67.60 - 50.12' RT
Bottom of Taper
Theor TC El 3262.93

25
81+10.77 - 50.22' RT
Bottom of Taper
Theor TC El 3261.70

26
81+12.93 - 47.72' RT
Begin Detectable Warning
and Ramp Slope

27
81+20.27 - 47.72' RT
End Ramp Slope

28
81+12.93 - 45.22' RT
Bottom of Taper
Theor TC El 3261.62

29
81+24.70 - 35.47' RT
Bottom of Taper
Theor TC El 3261.74

30
81+27.20 - 35.47' RT
Begin Detectable Warning
and Ramp Slope

31
81+27.20 - 42.97' RT
End Ramp Slope

32
81+29.70 - 34.31' RT
Bottom of Taper
Theor TC El 3261.65

12-2-15 P:\12-117\AutoCAD\PlanSheets\027C\Section B\027C-CURB-RAMP.dwg

CURB RAMP LAYOUT

(INTERSECTION OF MT. RUSHMORE RD & QUINCY ST.)

FOR BIDDING PURPOSES ONLY

STATE OF SOUTH DAKOTA	PROJECT	SHEET	TOTAL SHEETS
	NH0016(79)67	B91	B135

PLOTTING DATE: 12-2-15 REV 12-02-15 JRV

LEGEND:

- * Turning Space with 1.5% Max Slope
- ** Curb Ramp with 7.5% Max Slope and 1.5% Max Cross Slope
- Detectable Warning

1
84+47.68 - 34.22' LT
Bottom of Taper
Theor TC El 3255.62

2
84+50.18 - 35.14' LT
Begin Detectable Warning
and Ramp Slope

3
84+50.18 - 44.03' LT
End Ramp Slope

4
84+52.68 - 35.14' LT
Bottom of Taper
Theor TC El 3255.66

5
84+64.70 - 44.03' LT
Bottom of Taper
Theor TC El 3255.71

6
84+64.70 - 46.53' LT
Begin Detectable Warning
and Ramp Slope

7
84+56.70 - 46.53' LT
End Ramp Slope

8
84+67.22 - 49.03' LT
Bottom of Taper
Theor TC El 3255.69

9
85+11.74 - 49.01' LT
Bottom of Taper
Theor TC El 3255.17

10
85+14.77 - 46.51' LT
Begin Detectable Warning
and Ramp Slope

11
85+21.93 - 46.51' LT
End Ramp Slope

12
85+14.77 - 44.01' LT
Bottom of Taper
Theor TC El 3255.10

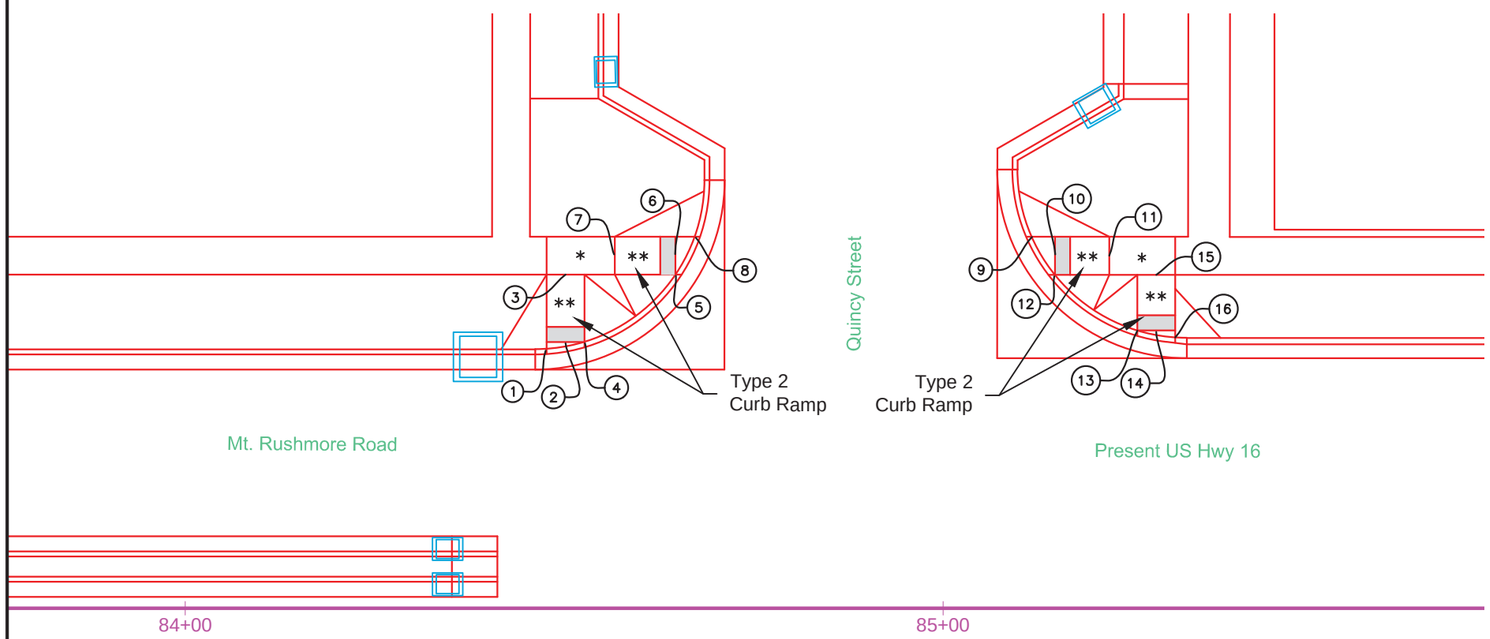

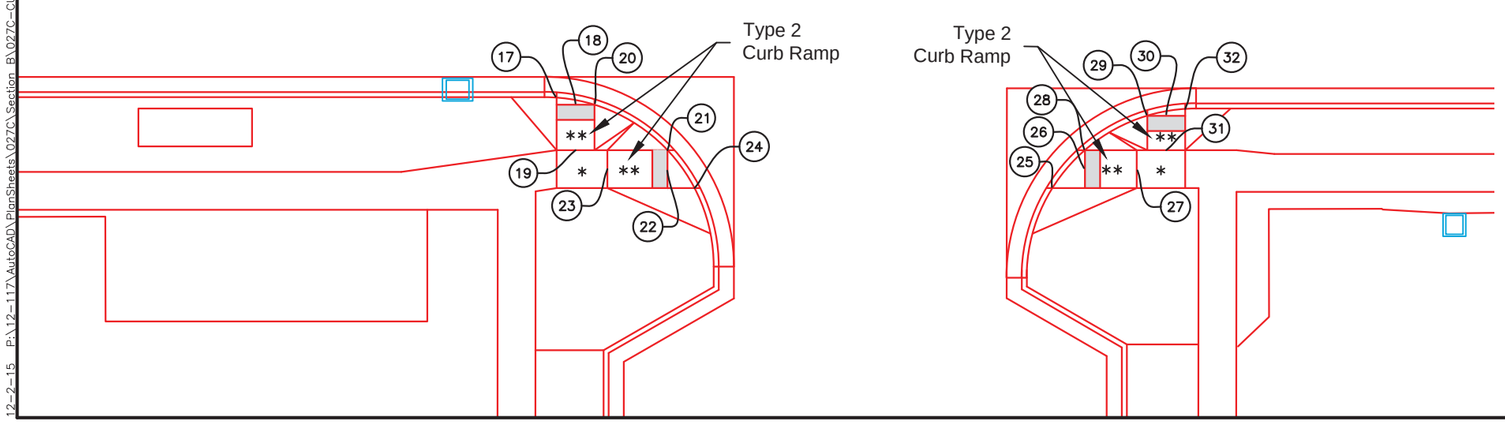

13
85+25.65 - 36.64' LT
Bottom of Taper
Theor TC El 3254.83

14
85+28.15 - 36.64' LT
Begin Detectable Warning
and Ramp Slope

15
85+28.15 - 44.00' LT
End Ramp Slope

16
85+30.65 - 35.72' LT
Bottom of Taper
Theor TC El 3254.76

17
84+47.68 - 34.23' RT
Bottom of Taper
Theor TC El 3255.98

18
84+50.18 - 35.17' RT
Begin Detectable Warning
and Ramp Slope

19
84+50.18 - 41.17' RT
End Ramp Slope

20
84+52.68 - 35.17' RT
Bottom of Taper
Theor TC El 3255.95

21
84+62.31 - 41.17' RT
Bottom of Taper
Theor TC El 3255.89

22
84+62.31 - 43.67' RT
Begin Detectable Warning
and Ramp Slope

23
84+54.39 - 43.67' RT
End Ramp Slope

24
84+65.87 - 46.17' RT
Bottom of Taper
Theor TC El 3255.84

25
85+13.14 - 46.17' RT
Bottom of Taper
Theor TC El 3255.28

26
85+17.40 - 43.67' RT
Begin Detectable Warning
and Ramp Slope

27
85+24.25 - 43.67' RT
End Ramp Slope

28
85+17.40 - 41.17' RT
Bottom of Taper
Theor TC El 3255.19

29
85+25.65 - 36.61' RT
Bottom of Taper
Theor TC El 3254.87

30
85+28.15 - 36.61' RT
Begin Detectable Warning
and Ramp Slope

31
85+28.15 - 41.17' RT
End Ramp Slope

32
85+30.65 - 35.72' RT
Bottom of Taper
Theor TC El 3254.76

12-2-15 P:\12-117\AutoCAD\PlanSheets\027C\Section B\027C-CURB-RAMP.dwg

SPECIAL TYPE C CONCRETE RETAINING WALL DETAIL

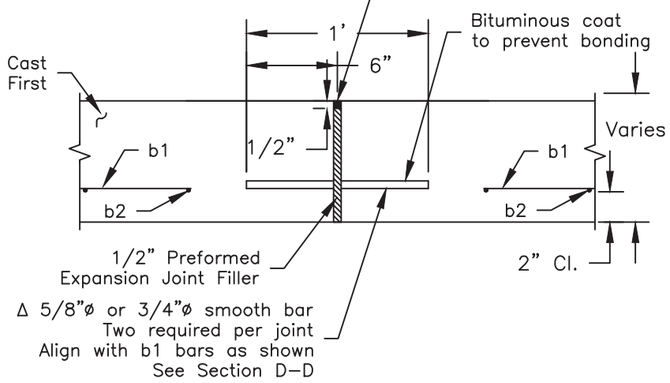

ELEVATION VIEW
EXPANSION JOINT FOR FOOTING

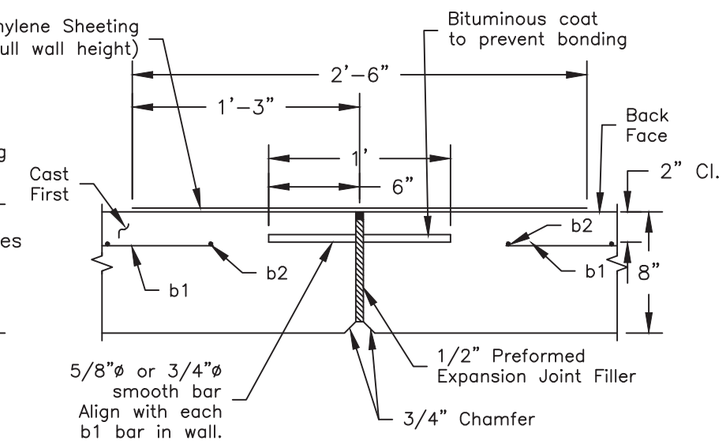

DETAIL A
PLAN VIEW
EXPANSION JOINT FOR WALL

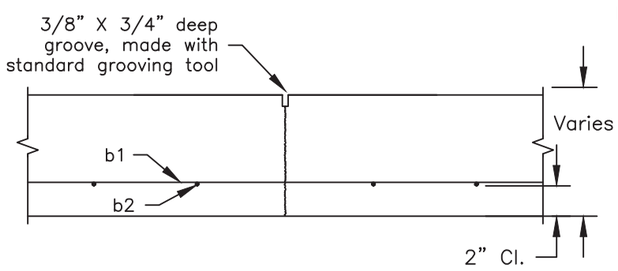

ELEVATION VIEW
CONTRACTION JOINT FOR FOOTING

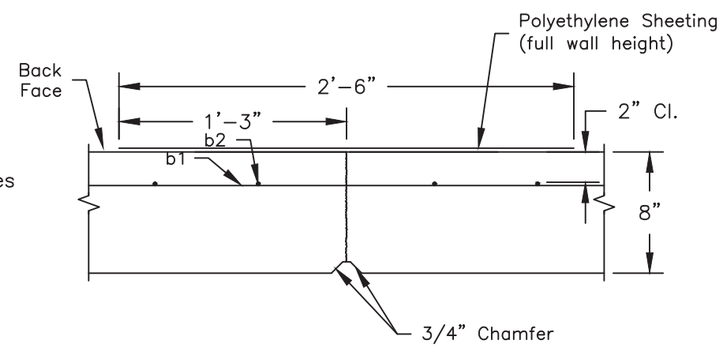

PLAN VIEW
CONTRACTION JOINT FOR WALL

GENERAL NOTES:

The Special Type C Concrete Retaining Wall shall be placed adjacent to pavement or curb and gutter as show in section D–D.
* The sidewalk width of the Special Type C Concrete Retaining Wall shall not be wider than 8 feel or narrower than 5 feet. See plans for specified width.

In the areas where the retaining wall footing is to be placed, a 2 inch thickness of cushion material shall be placed and compacted. The cushion material shall conform to section 651.2 C. of the Specifications.

All rebar shall be #4, epoxy coated and conform to Sections 480 and 1010 of the Specifications.

All concrete shall be Class M6 and conform to Section 462 of the Specifications.

For variable height walls, the top b1 bar shall be placed parallel to the top of the wall.

The b1 bars shall be lapped a minimum of 12 inches.

A 3/4 inch chamfer shall be provided on all exposed retaining wall edges.

Use Detail B for constructing corners in the retaining wall.

The maximum expansion joint spacing shall be 90 feet and the maximum contraction joint spacing shall be 30 feet. The contraction and expansion joints shall be placed to match pavement or curb joints where possible.

The exposed retaining wall surfaces shall receive a finish in accordance with Special Provisions. The exposed surface of the retaining wall footing, when used as a sidewalk, shall receive a broom finish.

The Special Type C Concrete Retaining Wall shall be measured to the nearest square foot of the front face area.

All costs for excavation, furnishing and placing backfill and cushion material, labor, equipment, preformed expansion joint filler, all reinforcing steel including the smooth bars, and all concrete except in the areas of PCC driveway and approach pavement, shall be incidental to the contract unit price per square foot for "Special Type C Concrete Retaining Wall".

The concrete used for the retaining wall footing that extends into the approach and/or driveway pavement shall be paid for at the contract unit price per square yard for the corresponding "PCC Approach Pavement" and/or "PCC Driveway Pavement" bid items.

11-12-15 P:\12-117\AutoCAD\PlanSheets\027C\Section B\027C-WALL-SPECIAL DTL.dwg

FOR BIDDING PURPOSES ONLY

SPECIAL TYPE C CONCRETE RETAINING WALL DETAIL

Use No. 4 bars for all reinforcing steel unless specified otherwise.

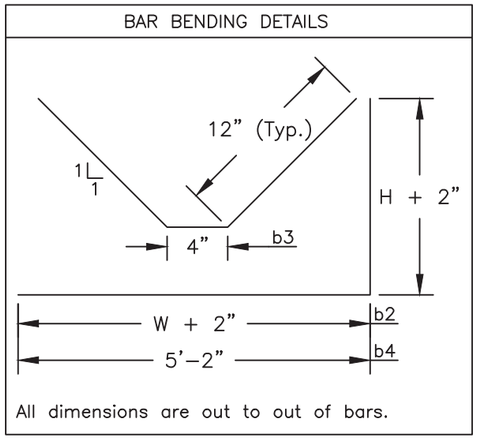

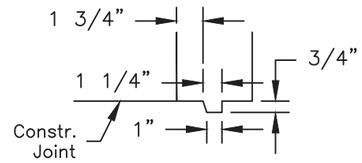

DETAIL C
SECTION OF KEYWAY SHOWING CONSTRUCTION JOINT BETWEEN WALL AND FOOTING

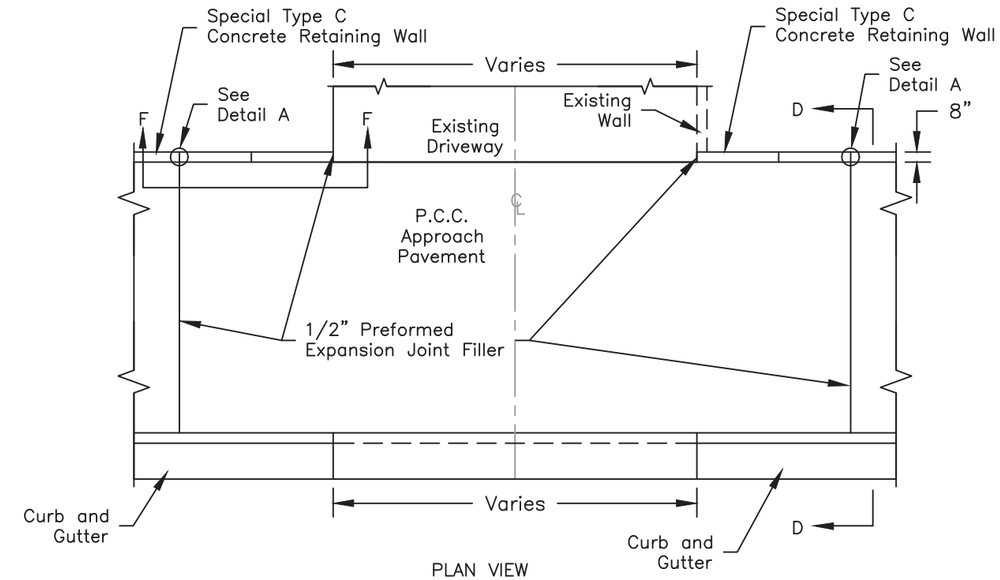

PLAN VIEW
SPECIAL TYPE C CONCRETE RETAINING WALL ON P.C.C. APPROACH PAVEMENT

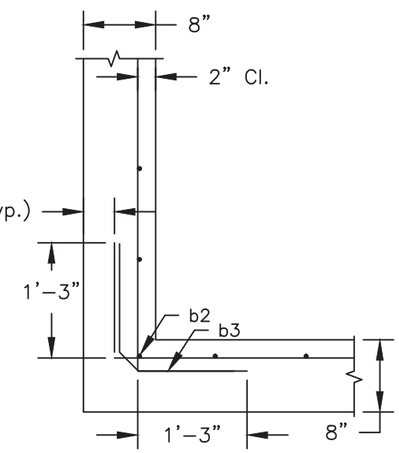

DETAIL B
PLAN VIEW OF WALL CORNER DETAIL

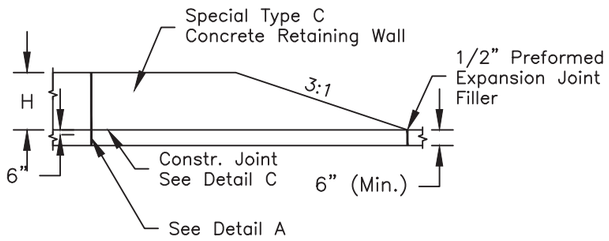

VIEW F-F

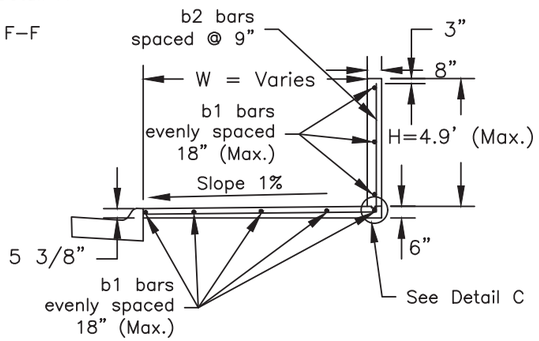

SECTION D-D

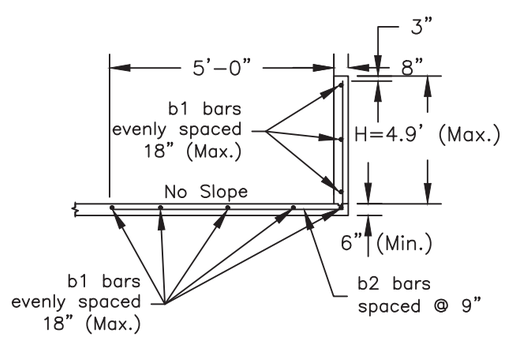

SECTION E-E

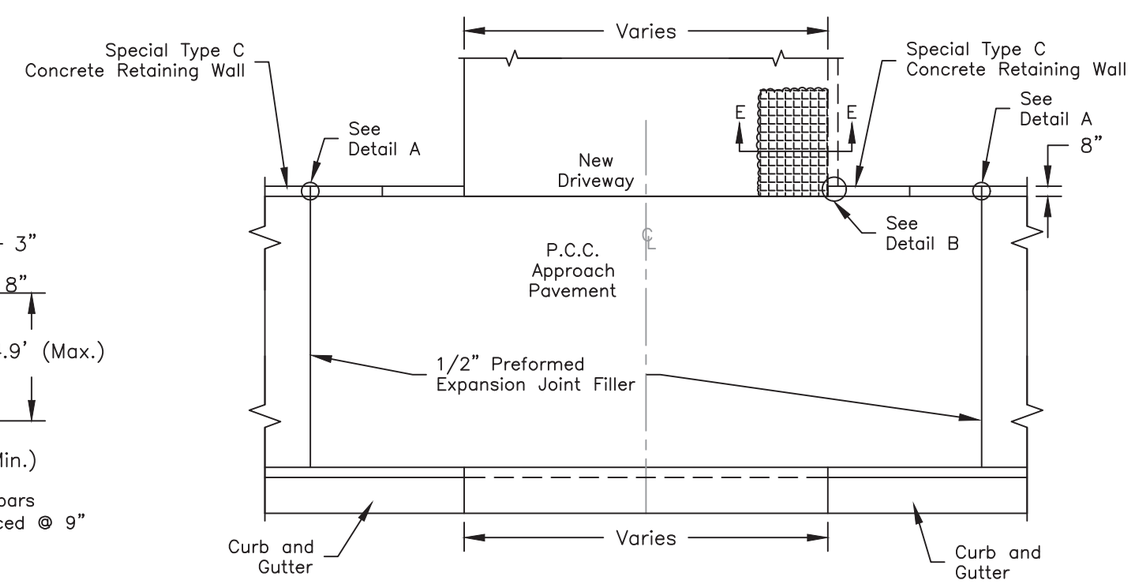

PLAN VIEW
SPECIAL TYPE C CONCRETE RETAINING WALL ON P.C.C. DRIVEWAY AND APPROACH PAVEMENT

11-12-15 P:\12-117\AutoCAD\PlanSheets\027C\Section B\027C-WALL-SPECIAL DTL.dwg

ST. JAMES ST. SPECIAL TYPE C CONCRETE RETAINING WALL WITH SHEAR KEY FOOTING DETAIL

Use No. 4 bars for all reinforcement steel unless specified otherwise.

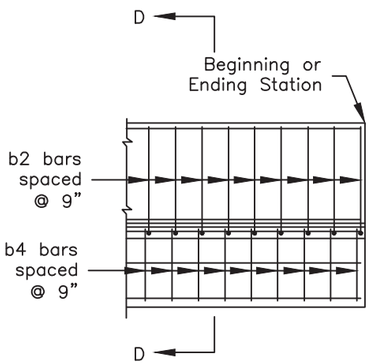

ELEVATION VIEW SPECIAL TYPE C CONCRETE RETAINING WALL

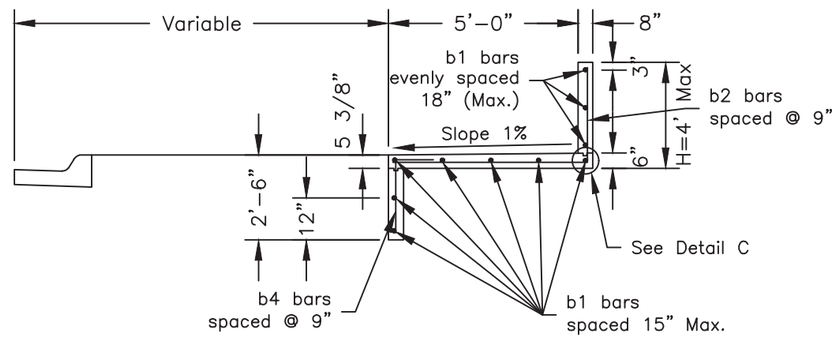

SECTION D–D

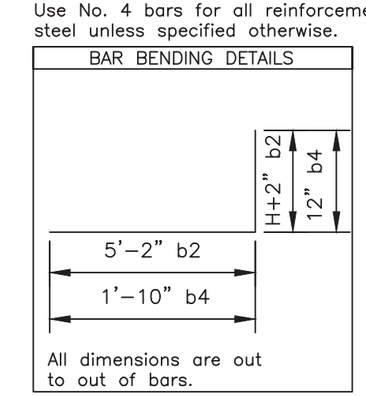

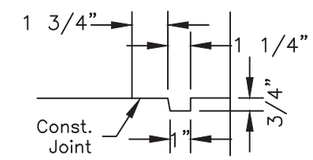

DETAIL "C"
SECTION OF KEYWAY SHOWING CONSTRUCTION JOINT BETWEEN WALL AND FOOTING

GENERAL NOTES:

In the areas where the retaining wall footing is to be placed, a 2 inch thickness of cushion material shall be placed and compacted. The cushion material shall conform to Section 651.2 C. of the Specifications.

All concrete shall be Class M6 and conform to Section 462 of the Specifications.

All rebar shall be #4, epoxy coated and conform to Sections 480 and 1010 of the Specifications.

For variable height walls, the top b1 bar shall be placed parallel to the top of the wall.

The b1 bars shall be lapped a minimum of 12 inches.

A 3/4 inch chamfer shall be provided on all exposed retaining wall edges.

The maximum expansion joint spacing shall be 90 feet and the maximum contraction joint spacing shall be 30 feet. The contraction and expansion joints shall be placed to match pavement or curb joints where possible.

The exposed retaining wall surfaces shall receive a finish in accordance with Special Provisions. The exposed surface of the retaining wall footing, when used as a sidewalk, shall receive a broom finish.

The Special Type C Concrete Retaining Wall shall be measured to the nearest square foot of front face area.

All costs for excavation, furnishing and placing backfill and cushion material, labor, equipment, preformed expansion joint filler, all reinforcing steel including the No. 5 smooth bars, and all concrete, shall be incidental to the contract unit price per square foot for "Special Type C Concrete Retaining Wall".

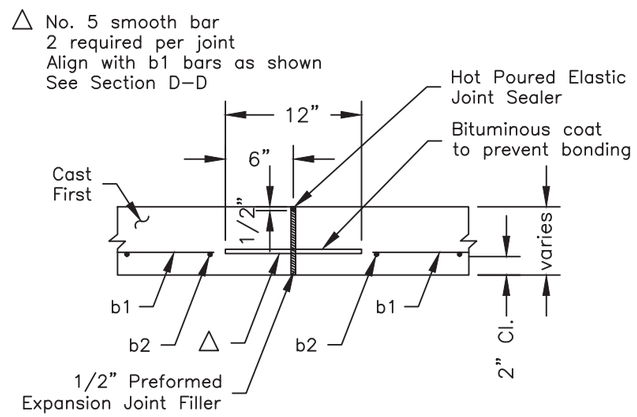

ELEVATION VIEW
EXPANSION JOINT FOR FOOTING

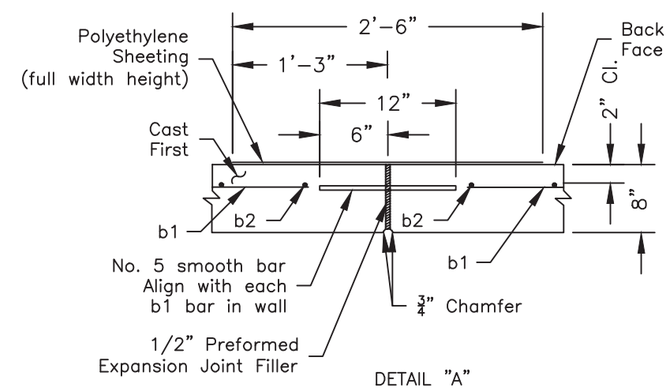

DETAIL "A"
PLAN VIEW
EXPANSION JOINT FOR WALL

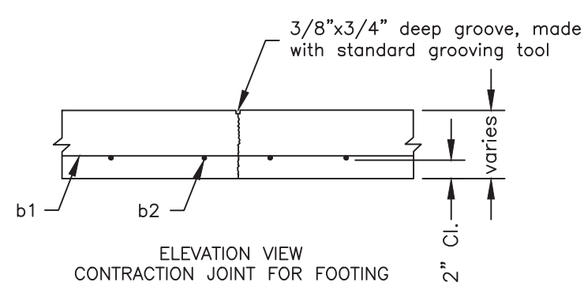

ELEVATION VIEW
CONTRACTION JOINT FOR FOOTING

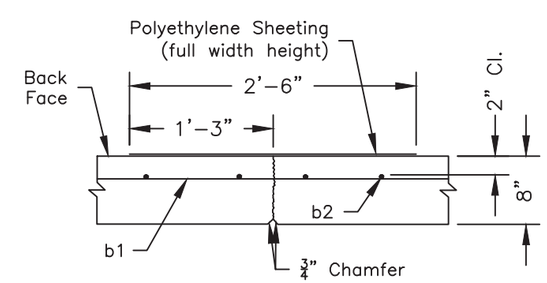

PLAN VIEW
CONTRACTION JOINT FOR WALL

11-12-15 P:\12-117\AutoCAD\PlanSheets\0270\Section B\027C-WALL-SPECIAL DTL.dwg

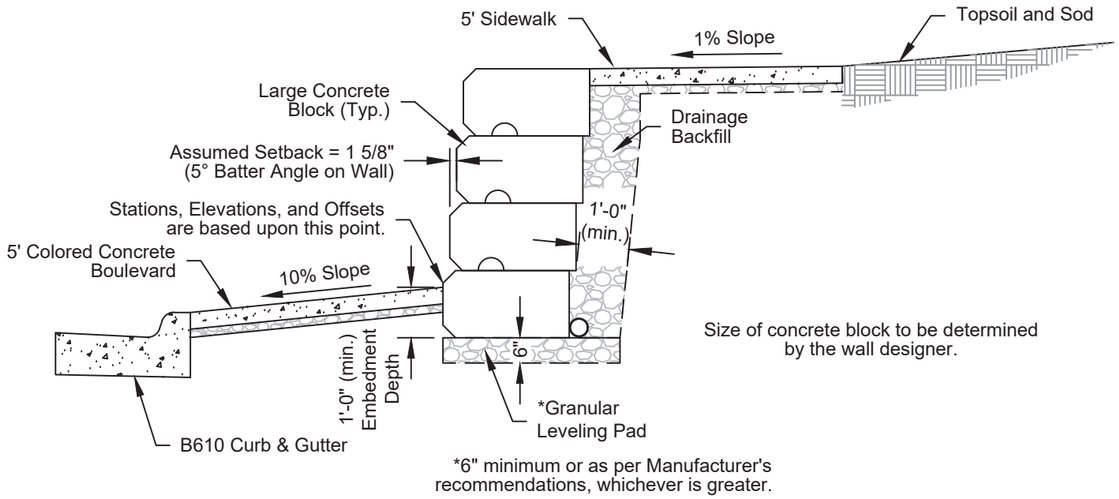

GRAVITY LARGE CONCRETE
BLOCK RETAINING WALL TYPICAL SECTION
N.T.S.

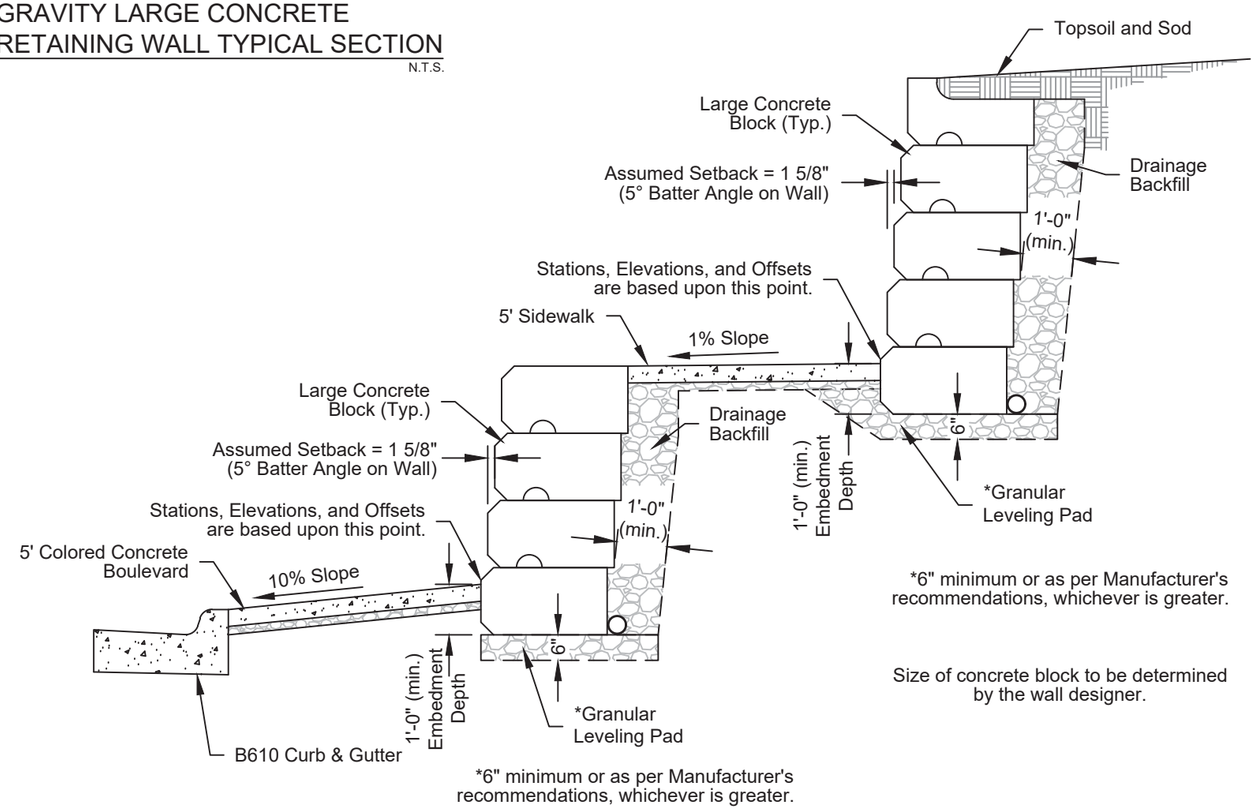

GRAVITY LARGE CONCRETE
BLOCK RETAINING WALLS (TIERED)
TYPICAL SECTION
N.T.S.

11-12-15 P:\12-117\AutoCAD\PlanSheets\027C\Section B\027C-WALL-SPECIAL DTL.dwg

FOR BIDDING PURPOSES ONLY

RETAINING WALL LAYOUTS

(SPECIAL TYPE C WALLS)

Note: Stations And Offsets Are To Front Face of Wall Unless Otherwise Noted.

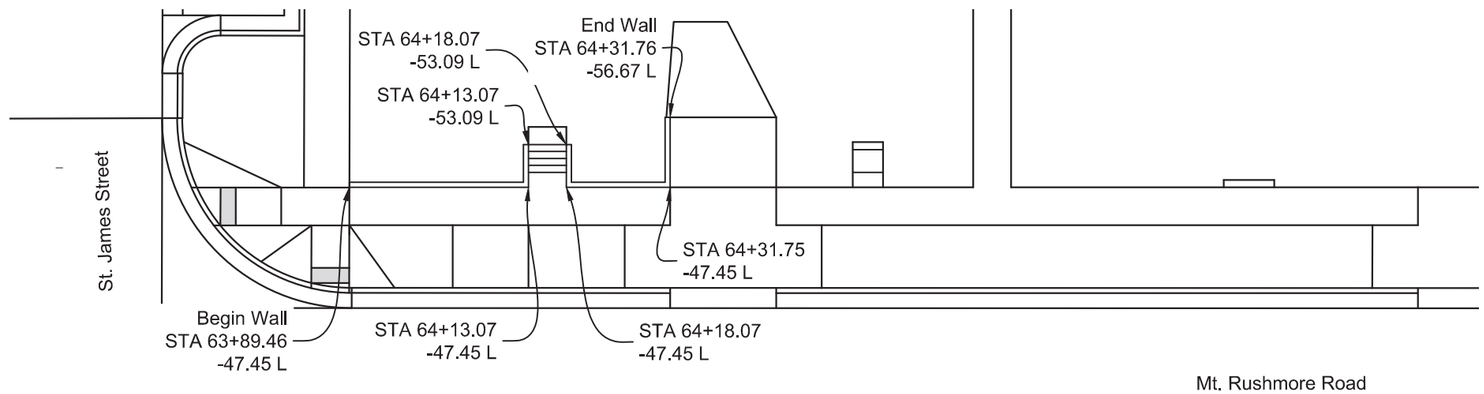

PLAN

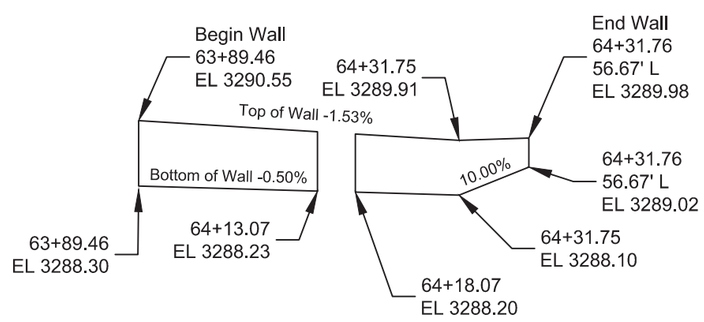

ELEVATION

* See Special Provision for Patterning Special Type C Retaining Wall.

11-12-15 P:\12-117\AutoCAD\PlanSheets\027C\Section_B\027C-WALL.dwg

RETAINING WALL LAYOUTS

(SPECIAL TYPE C WALLS)

Note: Stations And Offsets Are To Front Face of Wall Unless Otherwise Noted.

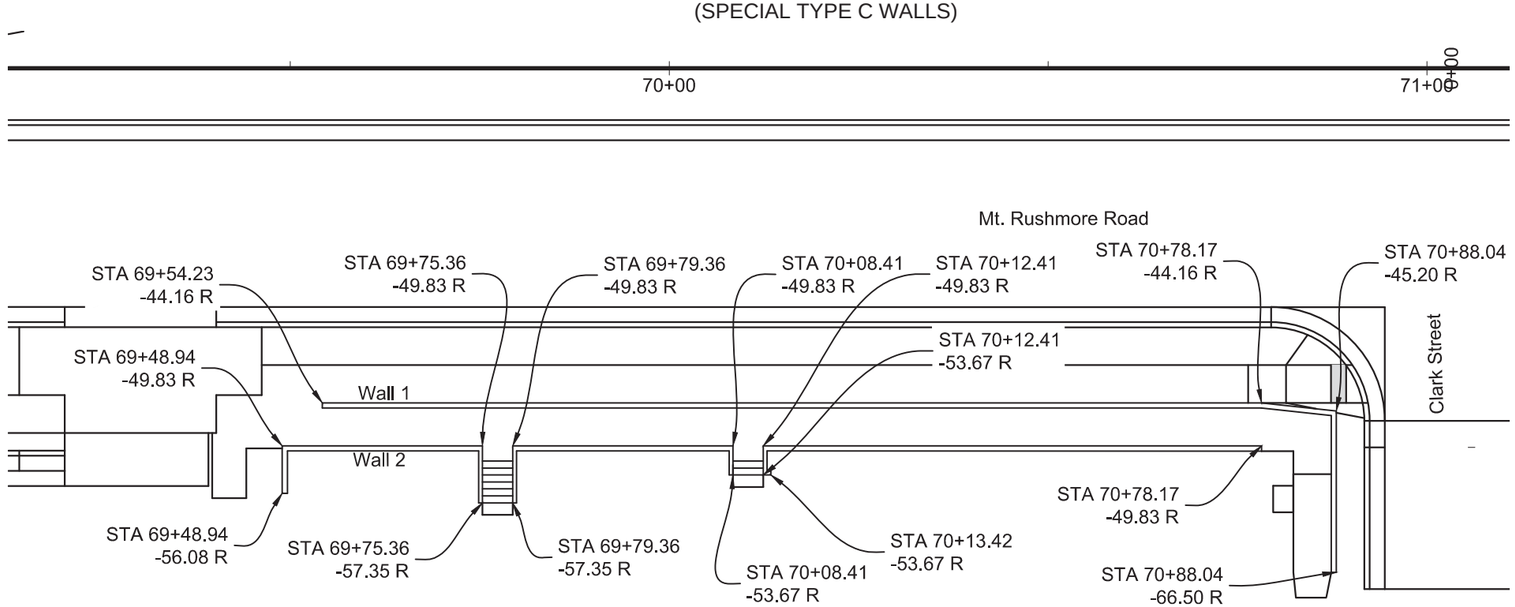

PLAN

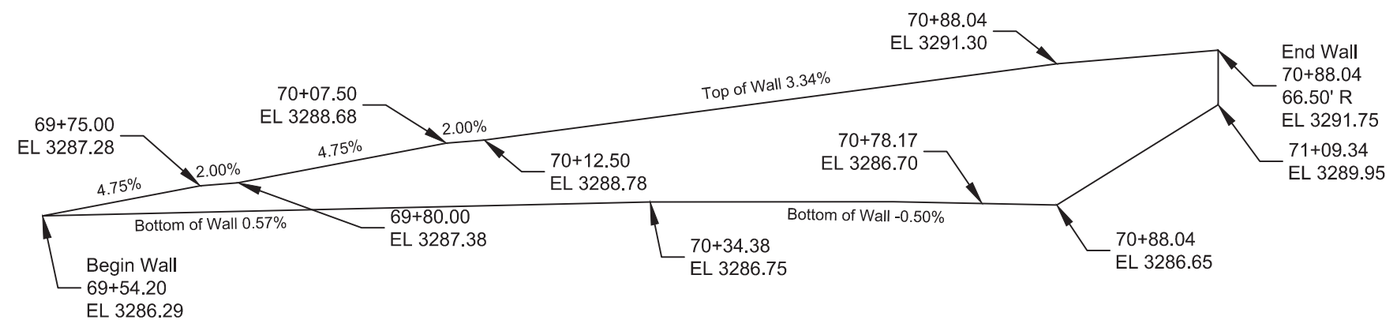

WALL 1 ELEVATION

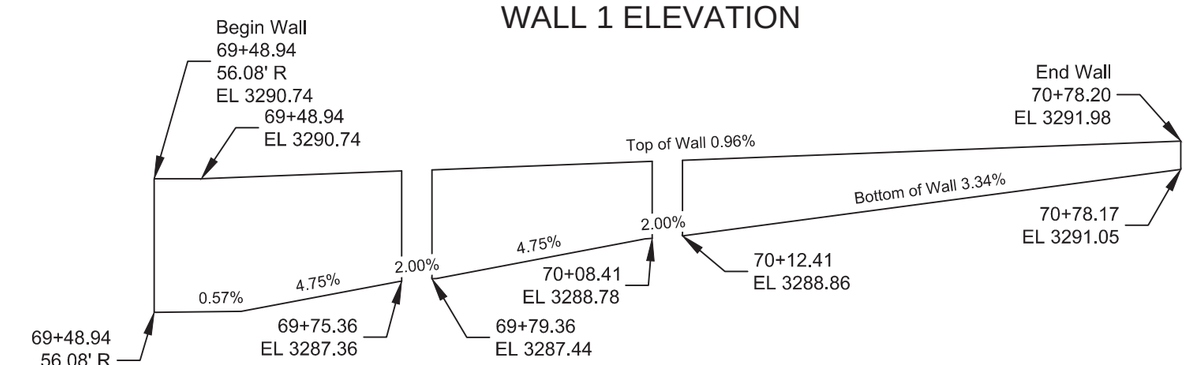

WALL 2 ELEVATION

* See Special Provision for Patterning Special Type C Retaining Wall.

01-21-16 P:\12-117\AutoCAD\PlanSheets\027C\Section B\027C-WALL.dwg

FOR BIDDING ~~PURPOSES~~ ONLY

STATE OF SOUTH DAKOTA	PROJECT	SHEET	TOTAL SHEETS
	NH0016(79)67	B98	B135

PLOTTING DATE: 11-12-15

RETAINING WALL LAYOUTS

(GRAVITY LARGE BLOCK WALLS)

Note: Stations And Offsets Are To Front Face of Wall Otherwise Noted.

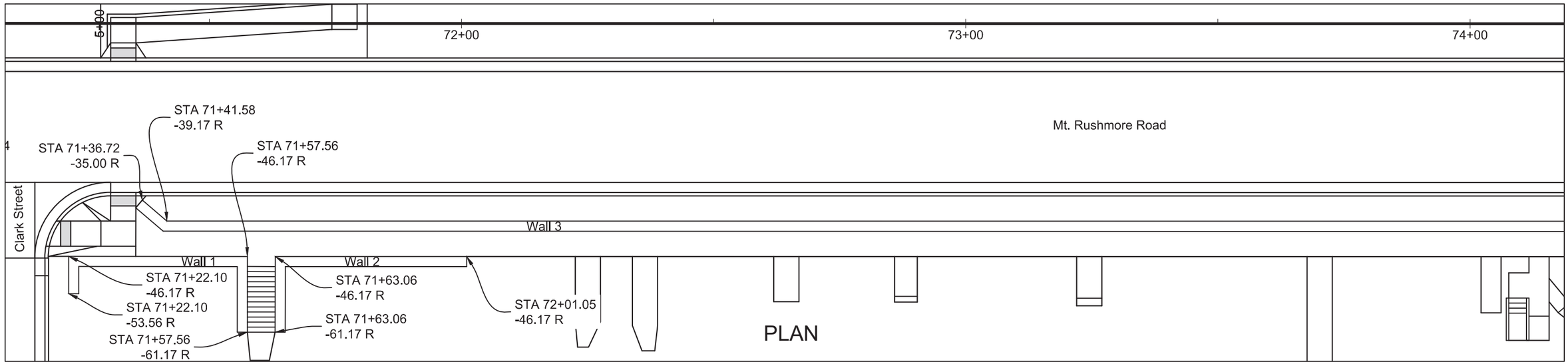

PLAN

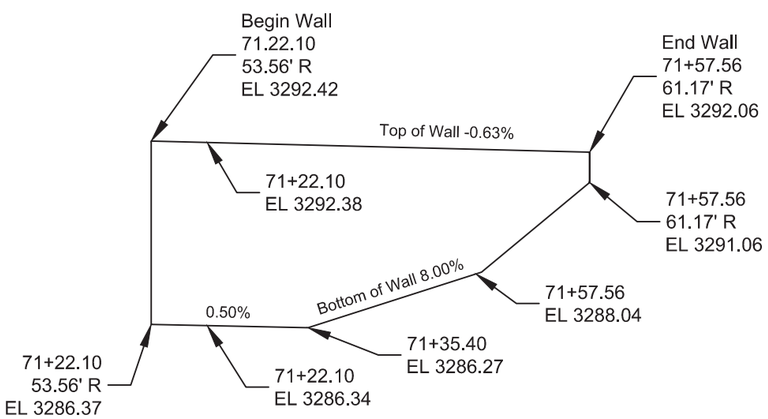

WALL 1 ELEVATION

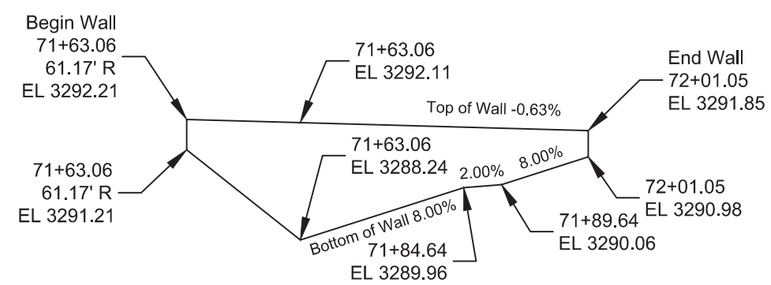

WALL 2 ELEVATION

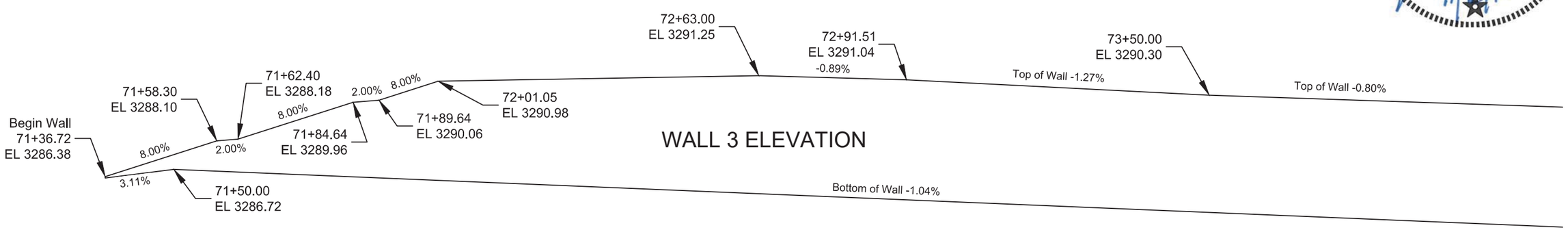

WALL 3 ELEVATION

11-12-15 P:\12-117\AutoCAD\PlanSheets\027C\Section B\027C-WALL.dwg

STATE OF SOUTH DAKOTA	PROJECT	SHEET	TOTAL SHEETS
	NH0016(79)67	B99	B135

PLOTTING DATE: 11-12-15

FOR BIDDING PURPOSES ONLY

RETAINING WALL LAYOUTS

(GRAVITY LARGE BLOCK WALLS)

Note: Stations And Offsets Are To Front Face of Wall Unless Otherwise Noted.

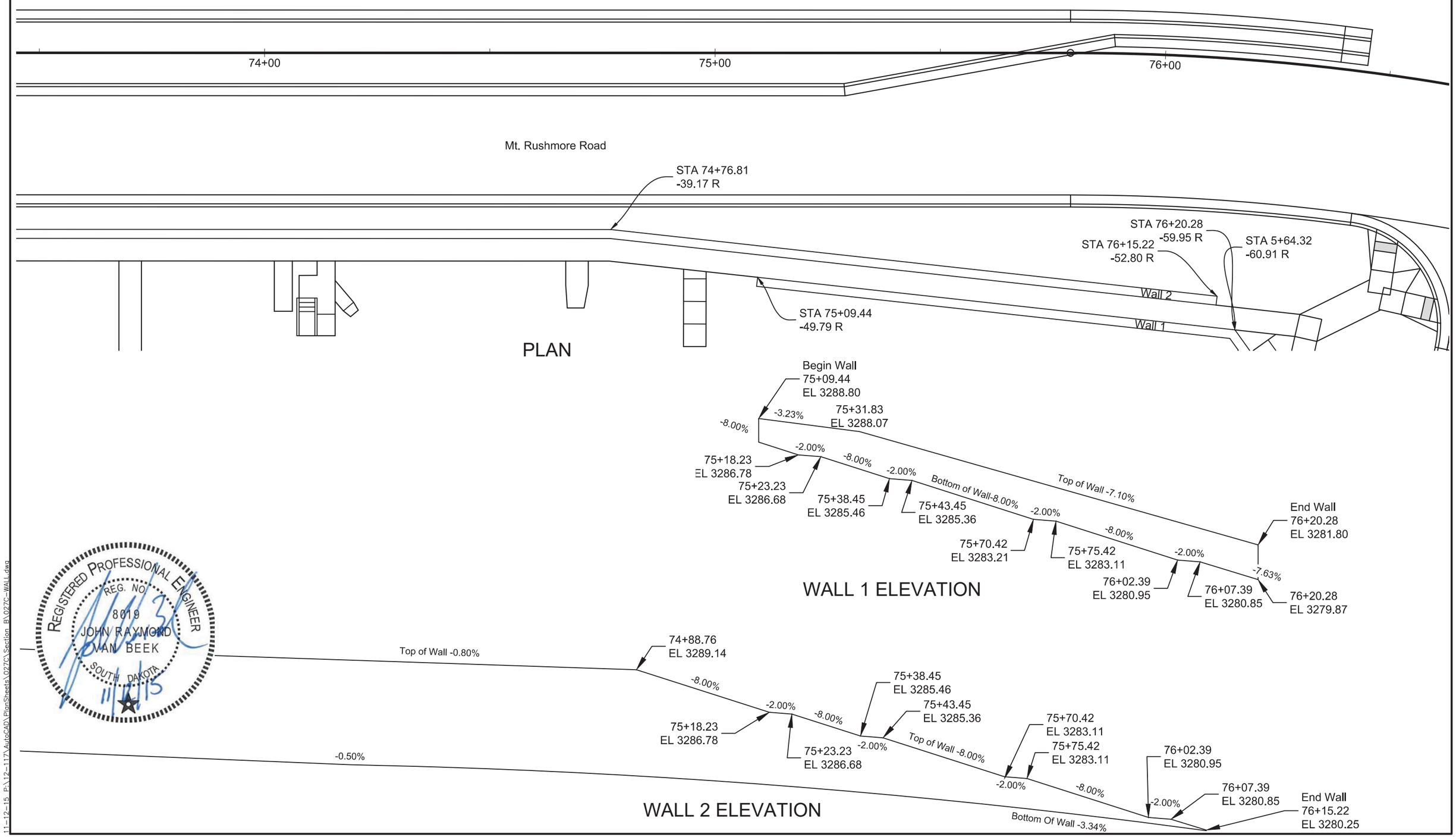

REGISTERED PROFESSIONAL ENGINEER
REG. NO. 8019
JOHN RAYMOND VAN BEEK
SOUTH DAKOTA
11/12/15

11-12-15 P:\12-117\AutoCAD\PlanSheets\027C\Section B\027C-WALL.dwg

STATE OF SOUTH DAKOTA	PROJECT	SHEET	TOTAL SHEETS
	NH0016(79)67	B100	B135

PLOTTING DATE: 11-12-15

FOR BIDDING PURPOSES ONLY

RETAINING WALL LAYOUTS

(SPECIAL TYPE C WALLS)

Note: Stations And Offsets Are To Front Face of Wall Unless Otherwise Noted.

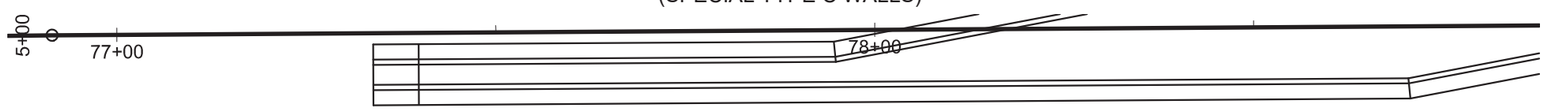

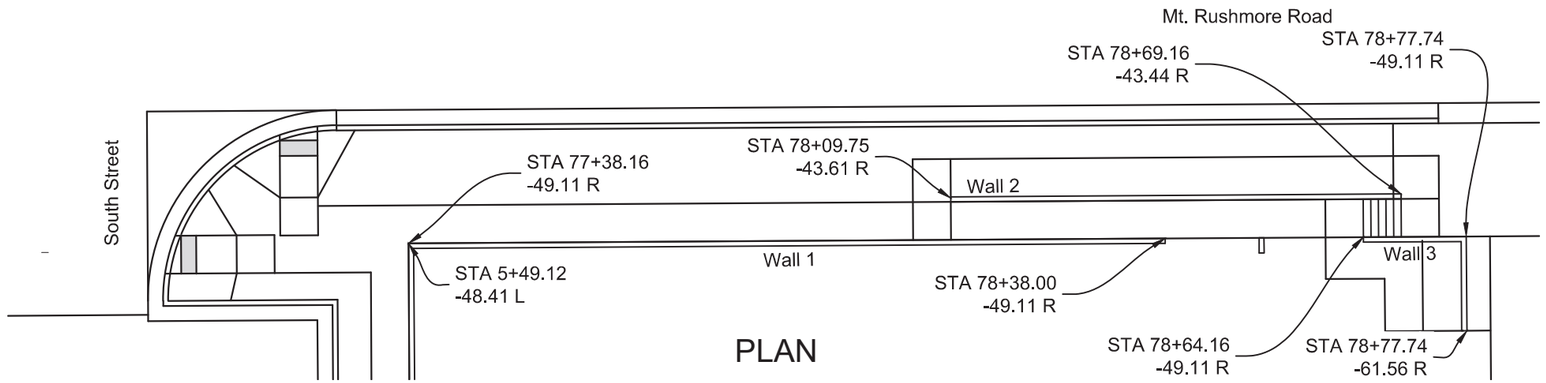

PLAN

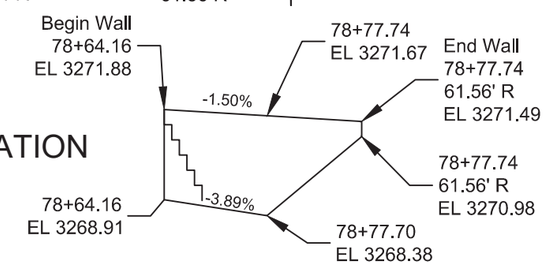

WALL 3 ELEVATION

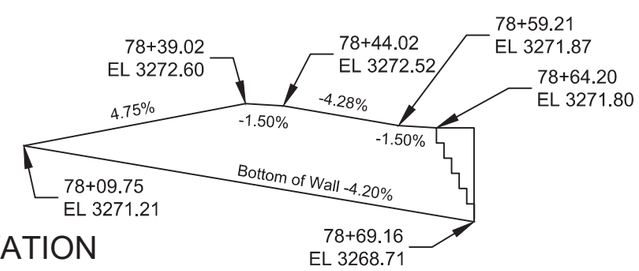

WALL 2 ELEVATION

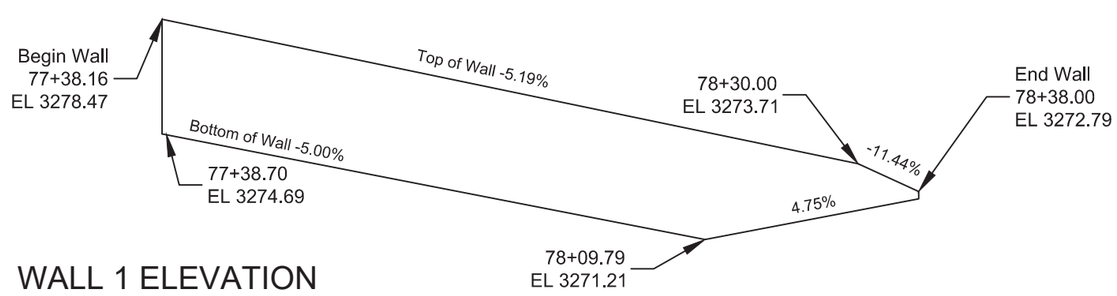

WALL 1 ELEVATION

* See Special Provision for Patterning Special Type C Retaining Wall.

11-12-15 P:\12-117\AutoCAD\PlanSheets\027C\Section B\027C-WALL.dwg

RETAINING WALL LAYOUTS

(SPECIAL TYPE C WALLS)

Note: Stations And Offsets Are To Front Face of Wall Unless Otherwise Noted.

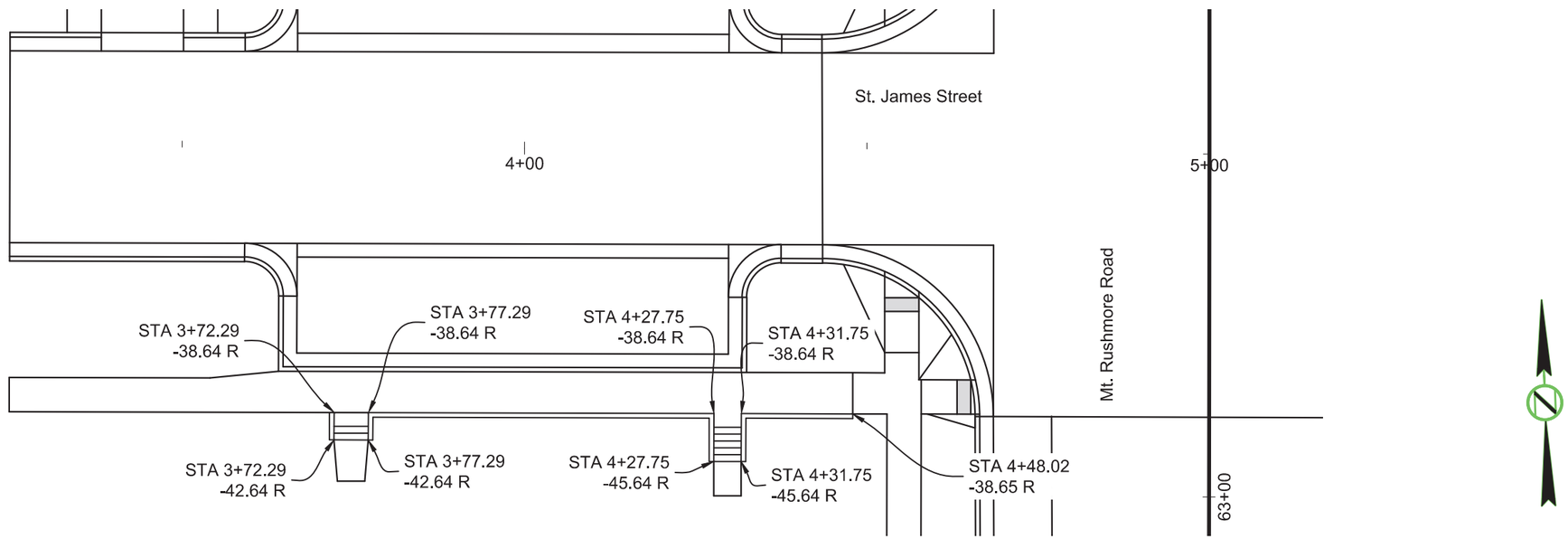

PLAN

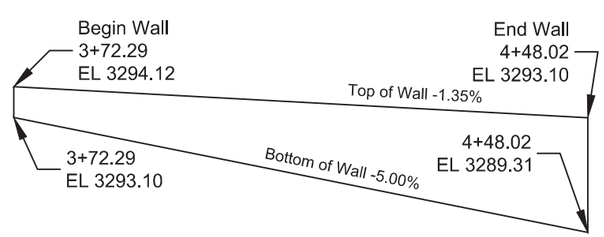

ELEVATION

* See Special Provision for Patterning Special Type C Retaining Wall.

11-12-15 P:\12-117\AutoCAD\PlanSheets\027C\Section B\027C-WALL.dwg

STATE OF SOUTH DAKOTA	PROJECT	SHEET	TOTAL SHEETS
	NH0016(79)67	B102	B135

PLOTTING DATE: 11-12-15

RETAINING WALL LAYOUTS

FOR BIDDING PURPOSES ONLY

(SPECIAL TYPE C WALLS)

Note: Stations And Offsets Are To Front Face of Wall Unless Otherwise Noted.

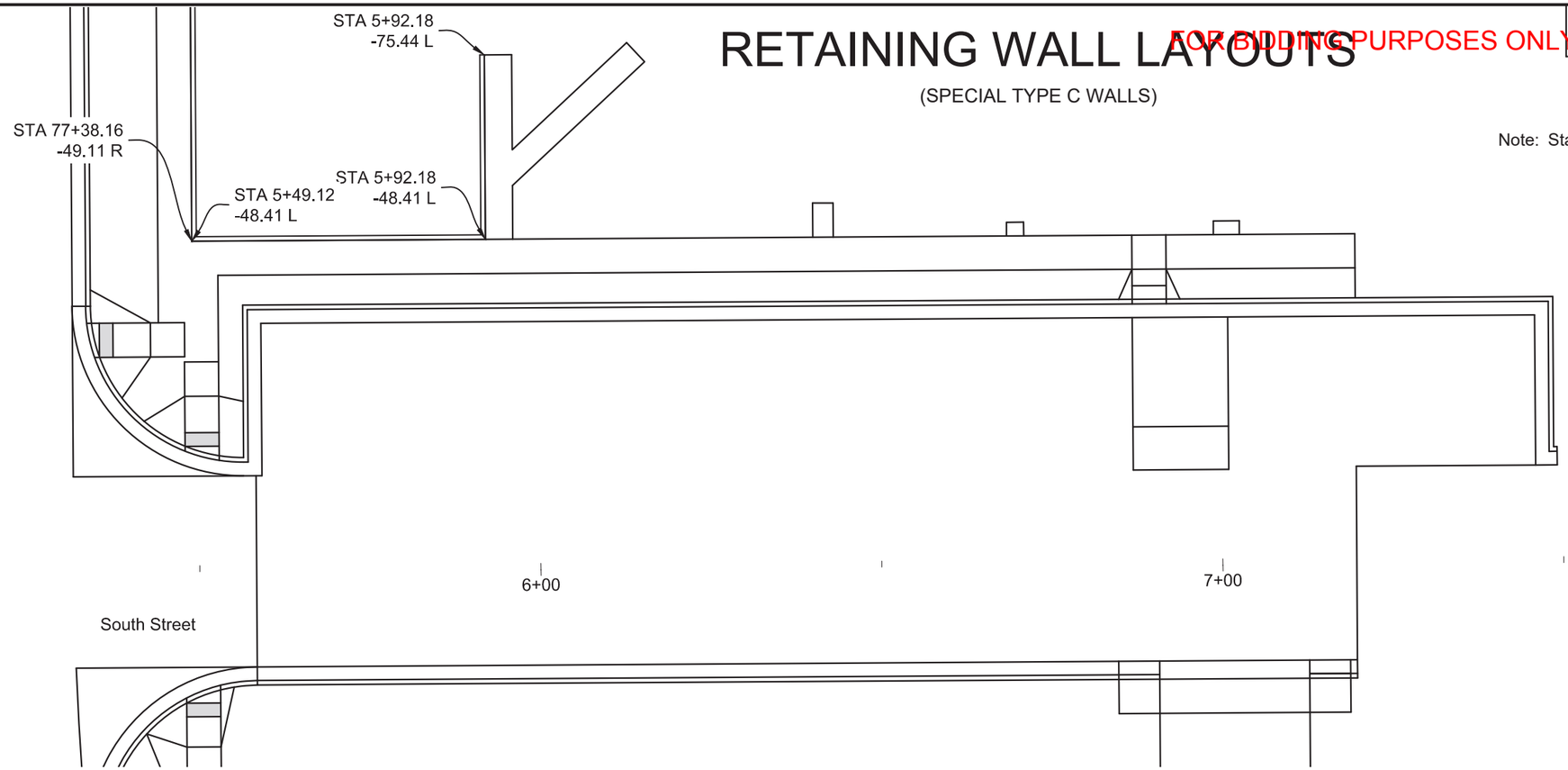

PLAN

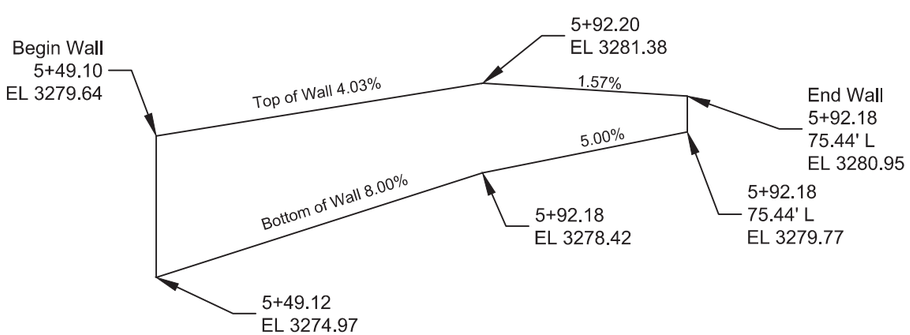

ELEVATION

* See Special Provision for Patterning Special Type C Retaining Wall.

11-12-15 P:\12-117\AutoCAD\PlanSheets\027C\Section B\027C-WALL.dwg

RETAINING WALL LAYOUTS

FOR BIDDING PURPOSES ONLY

(GRAVITY LARGE BLOCK WALLS)

STATE OF SOUTH DAKOTA	PROJECT	SHEET	TOTAL SHEETS
	NH0016(79)67	B103	B135

PLOTTING DATE: 11-12-15

Note: Stations And Offsets Are To Front Face of Wall Unless Otherwise Noted.

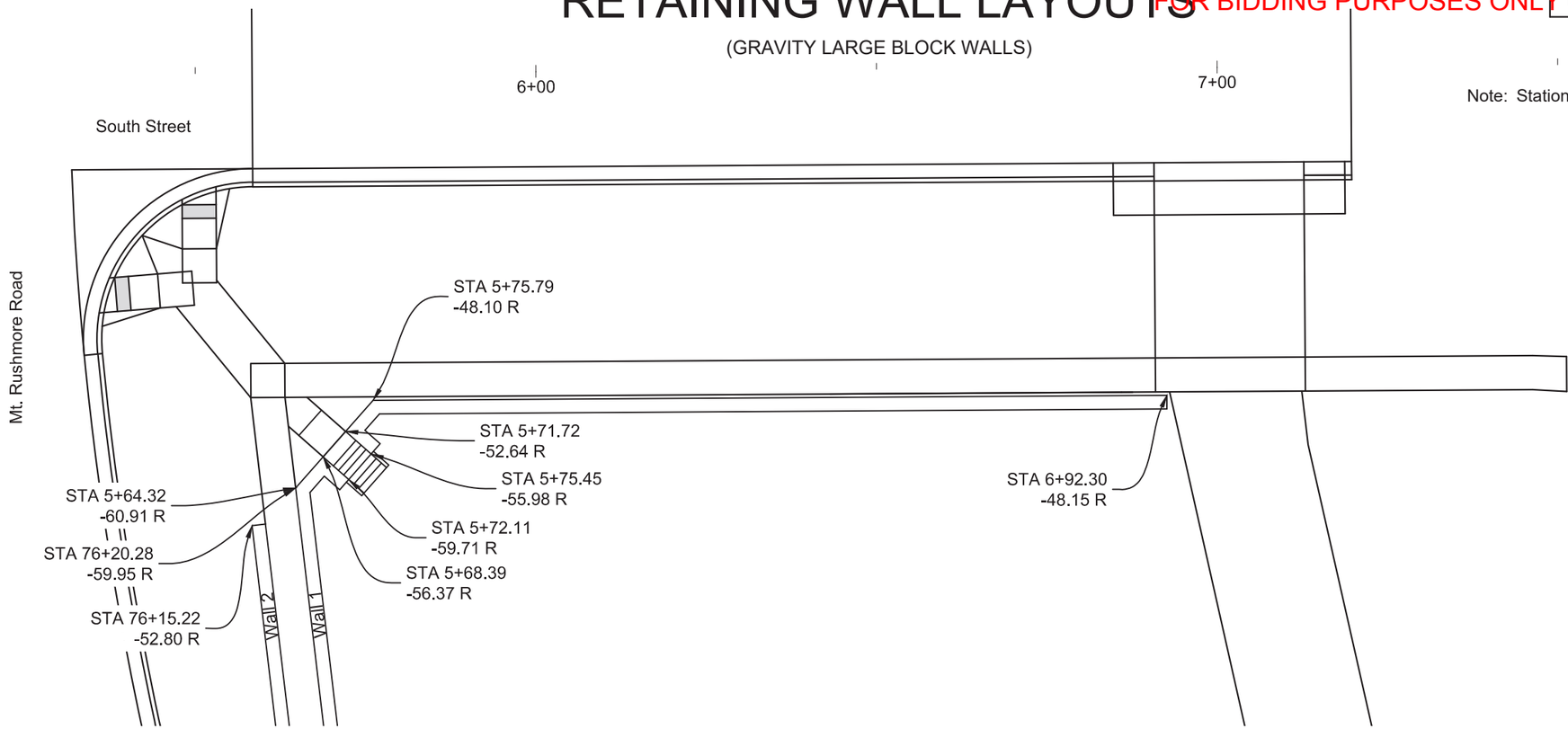

PLAN

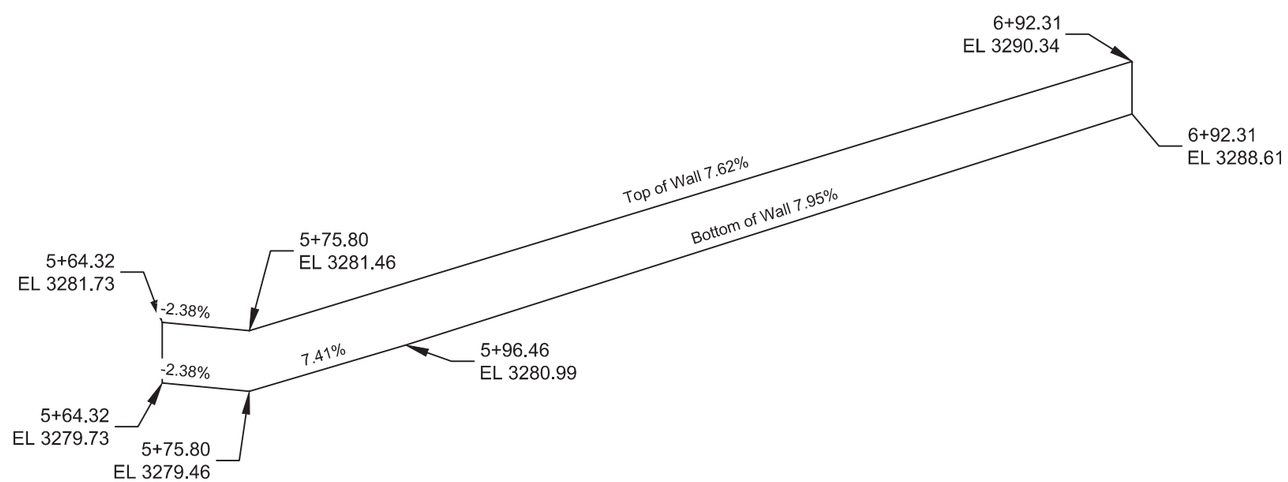

ELEVATION

REGISTERED PROFESSIONAL ENGINEER
REG. NO. 8019
JOHN RAYMOND VAN BEEK
SOUTH DAKOTA
11/12/15

11-12-15 P:\12-117\AutoCAD\PlanSheets\027C\Section B\027C-WALL.dwg

STATE OF SOUTH DAKOTA	PROJECT	SHEET	TOTAL SHEETS
	NH0016(79)67	B104	B135

PLOTTING DATE: 01-21-16 REV 01-21-16 JRV

FOR BIDDING PURPOSES ONLY

STEEL RAIL DETAILS

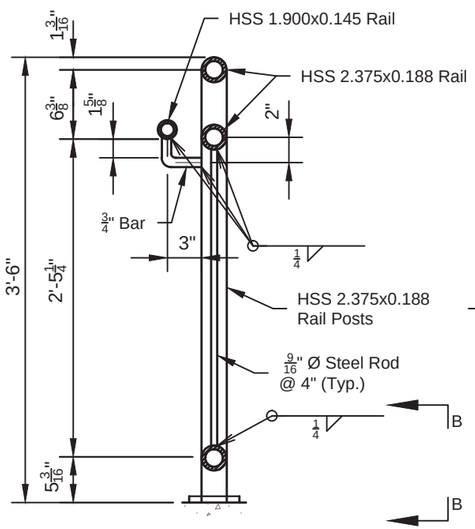

TYPICAL SECTION WITH HANDRAIL

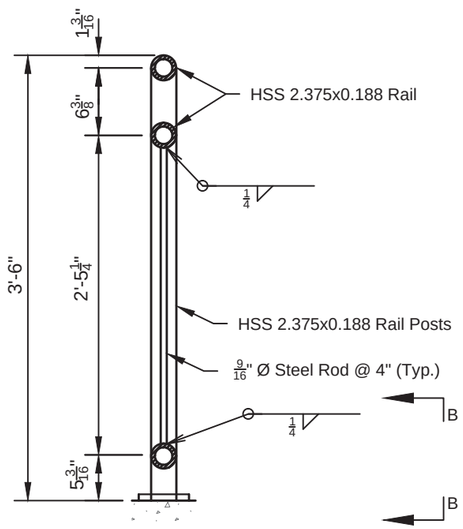

TYPICAL SECTION WITHOUT HANDRAIL

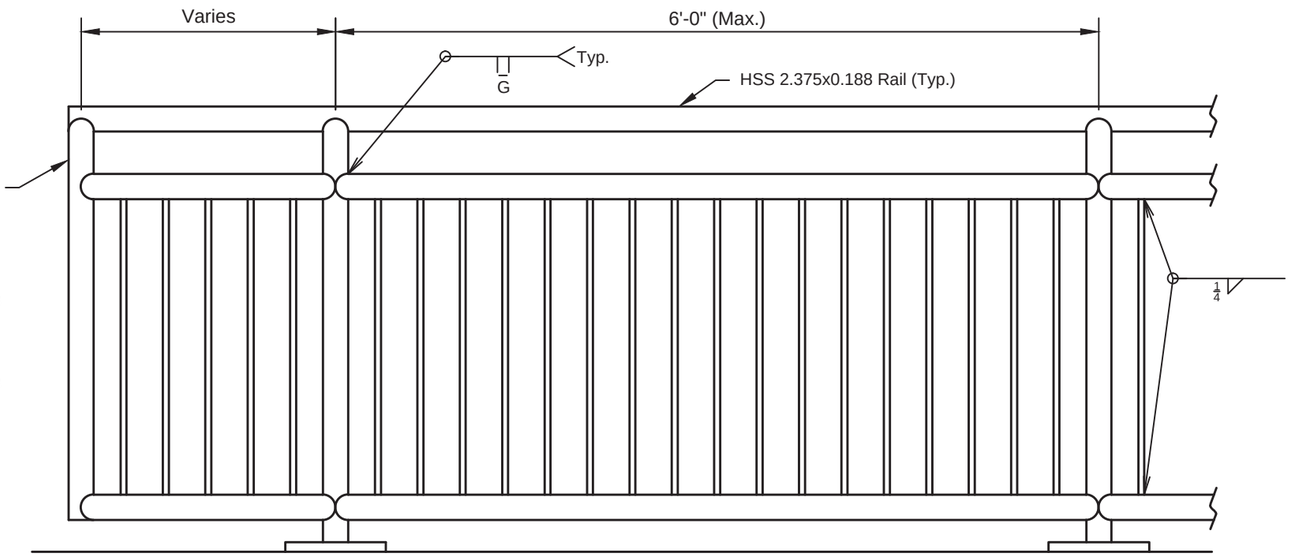

ELEVATION

STEEL PEDESTRIAN RAIL

1. The Contractor shall provide shop drawings to the Engineer prior to the fabrication of the railing.
2. All rail posts shall be built vertical.
3. Steel pipe for railing shall conform to ASTM specification A500, Grade B. Railpost base plates shall conform to ASTM A709, Grade 36.
4. Anchor bolts and nuts shall conform to ASTM A307. Washers shall be in accordance with ASTM F436. Hardware shall be galvanized in accordance with ASTM A153. The bolts shall be hex head "Structural" type with heavy hex lock nuts and round washers.
5. All anchor bolts shall be tightened to a Torque of 120 ft/lbs (approximated without the use of a calibrated torque wrench).
6. Painting of steel railing shall be done in accordance with section 411 of the standard specifications. The finish color shall be an approved black.
7. Welding and weld inspection shall be done in accordance with the current edition of AWS D1.1 Structural Welding Code.
8. The cost of structural steel, anchor bolts, painting, galvanizing, welding and weld inspection and that which is incidental to the fabrication of the steel pedestrian railing shall be included in the unit price bid per foot for Steel Pedestrian Railing.

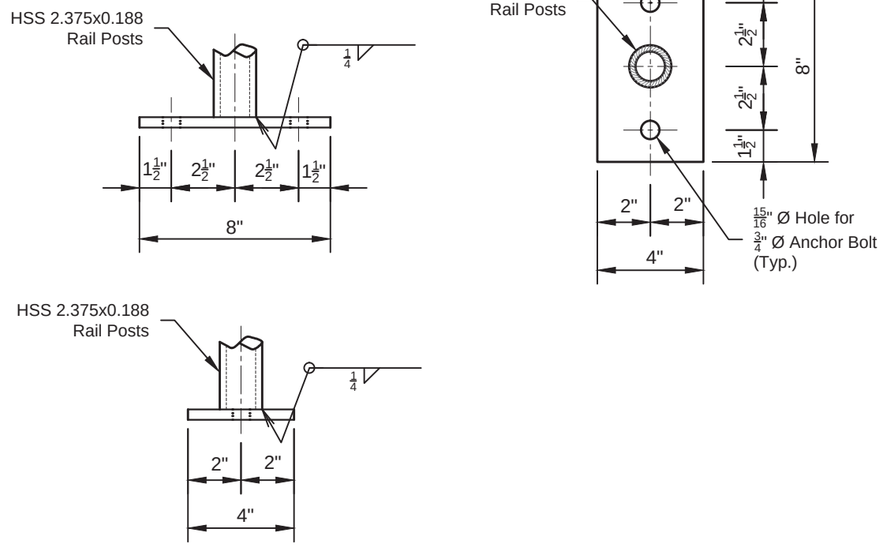

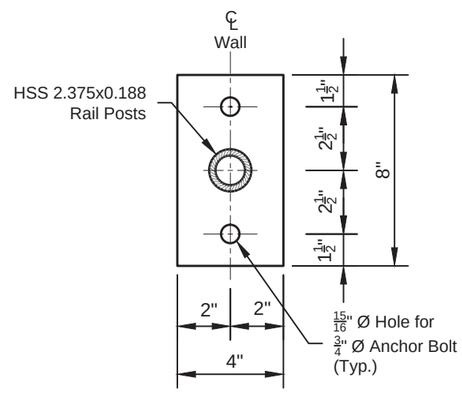

RAIL SPLICE DETAILS
(PEDESTRIAN RAIL AND HANDRAIL)

BASE PLATE DETAILS

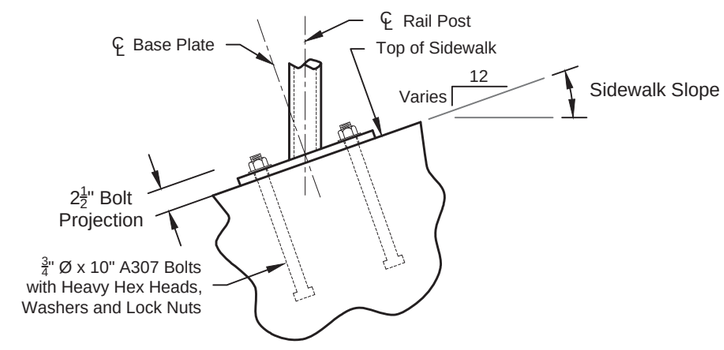

VIEW B-B

REGISTERED PROFESSIONAL ENGINEER
REG. NO. 8019
JOHN RAYMOND VAN BEEK
SOUTH DAKOTA
1/21/16

01-21-16, P:\12-117\AutoCAD\PlanSheets\027C\Section_B\027C-SPECIAL_DTL.dwg

FOR BIDDING PURPOSES ONLY

STATE OF SOUTH DAKOTA	PROJECT	SHEET	TOTAL SHEETS
	NH0016(79)67	B105	B135

PLOTTING DATE: 12-1-15 REV 12-02-15 JRV

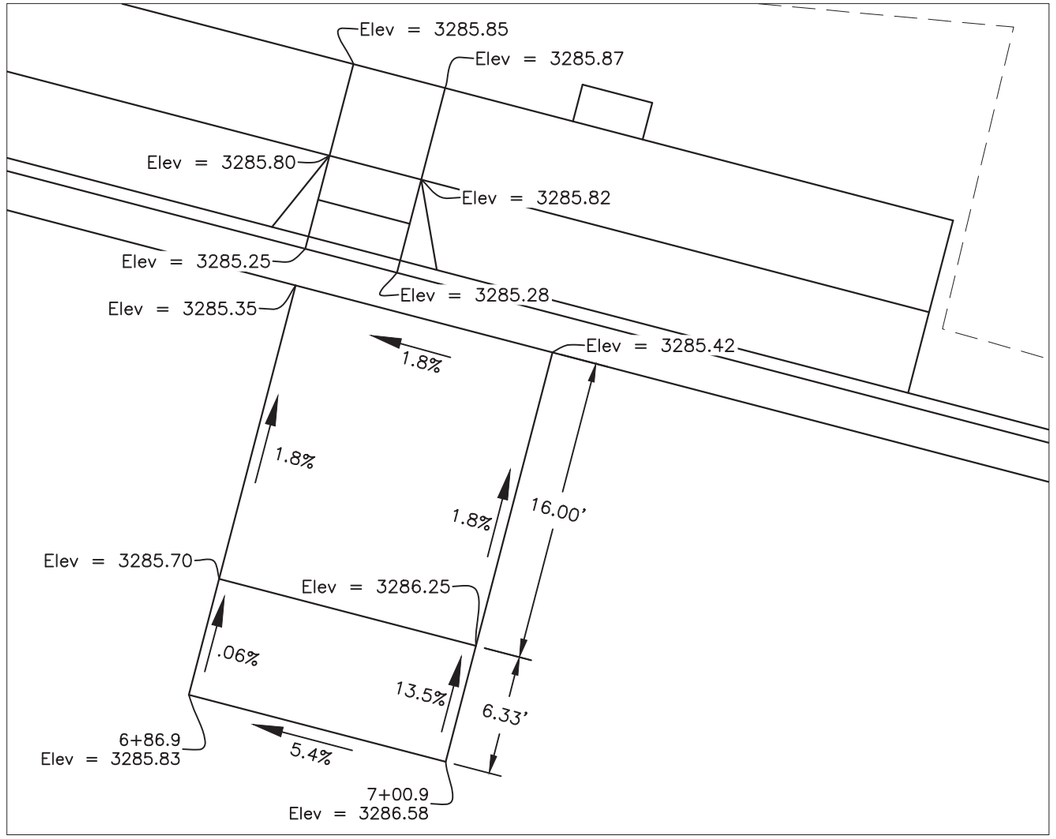

SOUTH STREET ACCESSIBLE PARKING AREA

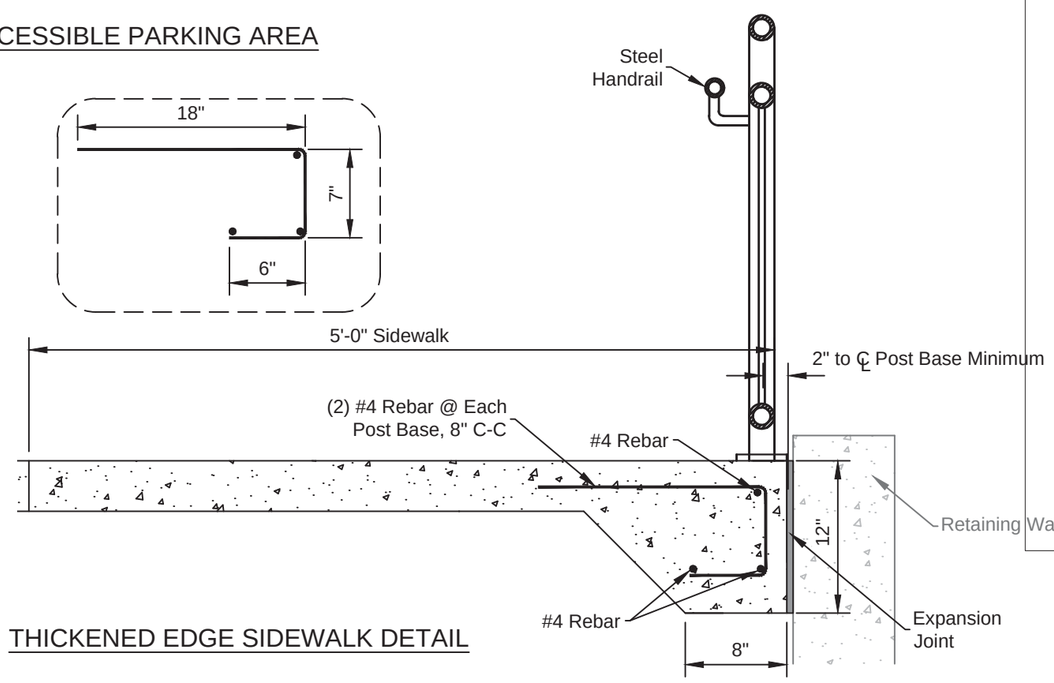

THICKENED EDGE SIDEWALK DETAIL

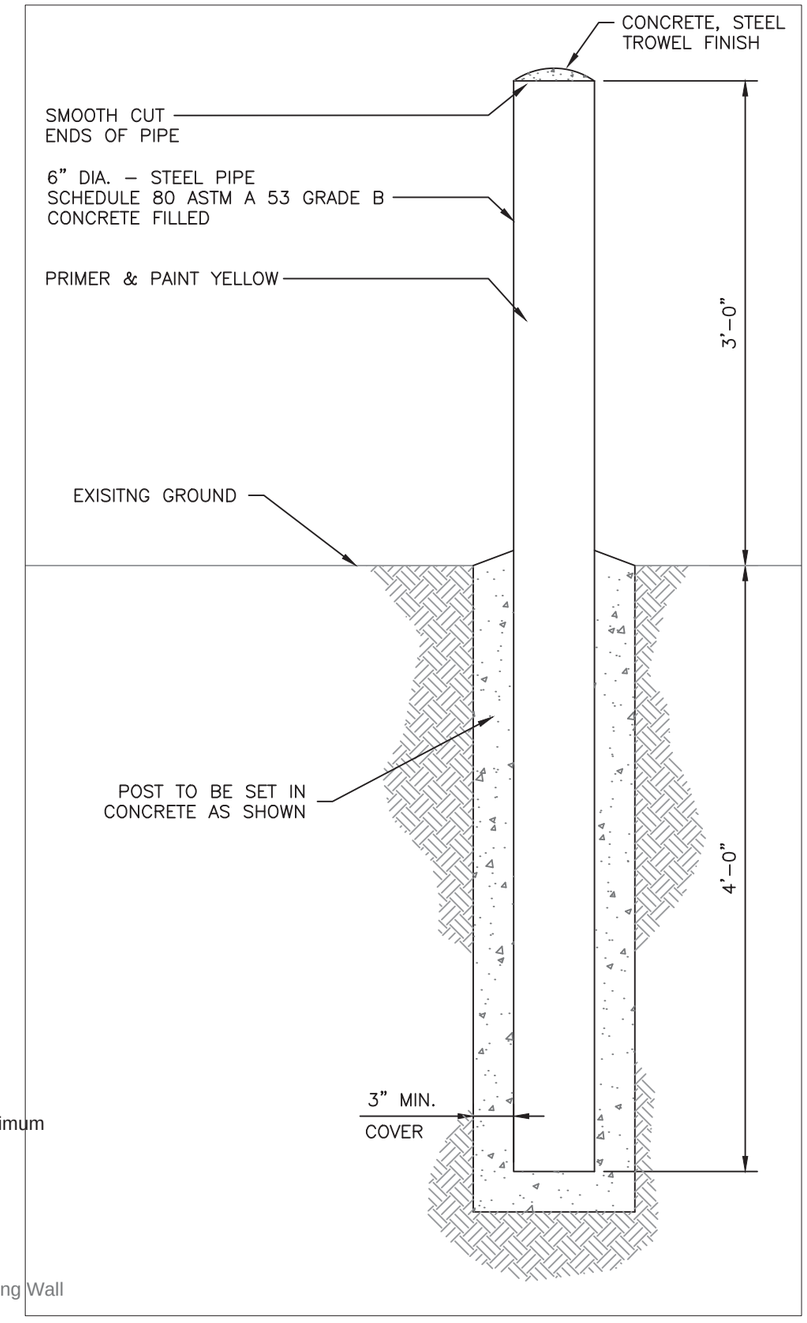

6" CONCRETE BOLLARD DETAIL DETAIL

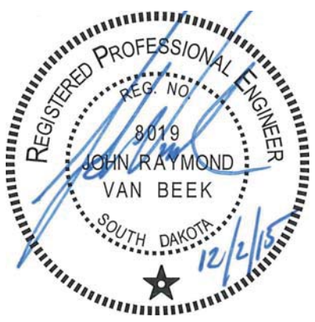

12-1-15 P:\12-117\AutoCAD\PlanSheets\027C\Section B\027C-SPECIAL DTL.dwg

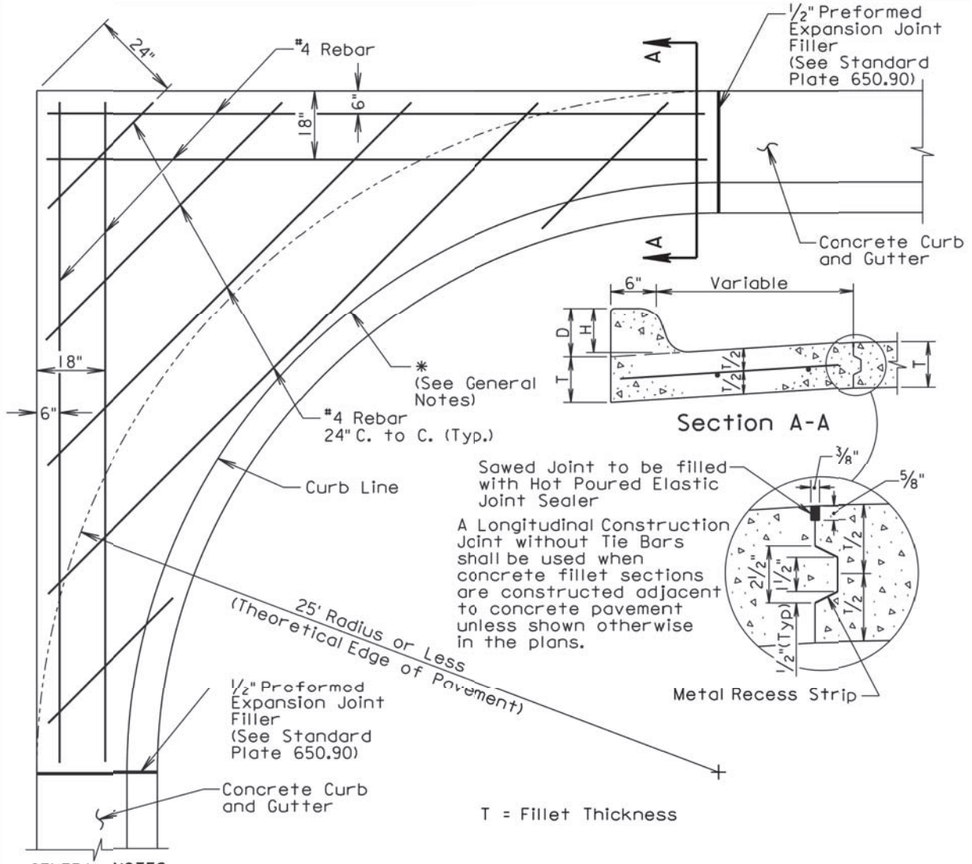

GENERAL NOTES:

* If a curb ramp is constructed adjacent to a PCC fillet section, the curb will need to be modified. Refer to the corresponding curb ramp standard plate or other special details in the plans for modification of the PCC fillet section.

Dimensions D, H, and T shall conform to those shown on the appropriate curb and gutter standard plate.

All rebar shall be in conformance with Sections 480 and 1010 of the Specifications. All rebar shall have a minimum of 3" clear cover.

Class M6 Concrete shall be used in construction of the fillets.

The concrete curb shall be monolithic with the concrete fillet. No separate payment for this curb will be made as the curb is considered a part of the fillet.

Joints shall be constructed at 10' intervals except when fillets are constructed adjacent to PCC Pavement. If there is adjacent PCC Pavement the joints shall be extended from edge of pavement through the fillet section as directed by the Engineer.

The cost for all materials, labor, and incidentals necessary to construct the PCC fillet section with curb and gutter shall be incidental to the contract unit price per square yard for the corresponding PCC fillet section bid item.

June 26, 2015

Published Date: 4th Qtr. 2015	SDDOT	PCC FILLET SECTION WITH TYPE B CURB AND GUTTER	PLATE NUMBER 380.16
			Sheet 1 of 1

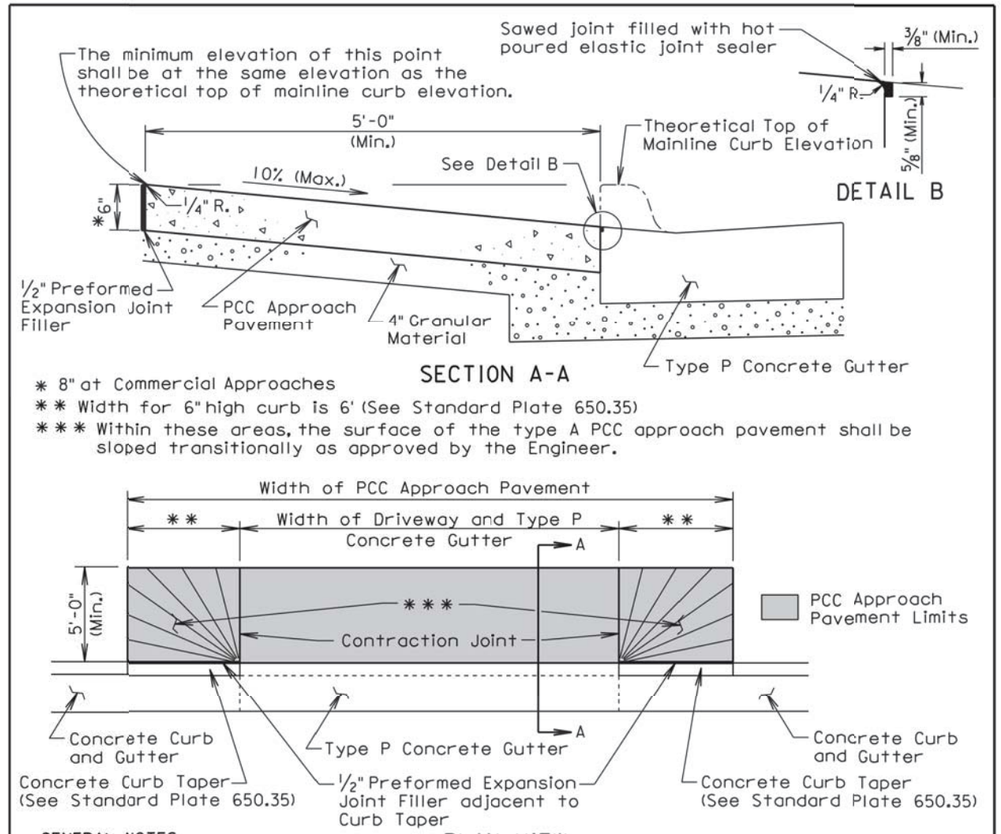

* 8" at Commercial Approaches

** Width for 6" high curb is 6' (See Standard Plate 650.35)

*** Within these areas, the surface of the type A PCC approach pavement shall be sloped transitionally as approved by the Engineer.

GENERAL NOTES:

The concrete for the type A PCC approach pavement and adjacent driveway shall comply with the requirements of the Standard Specifications for class M6 concrete unless otherwise stated in the plans.

Contraction joints in the type A PCC approach pavement shall be 1 1/2 inches deep if formed in the fresh concrete using a suitable grooving tool. If a saw is used to cut the contraction joints, then the depth of the joint shall be at least 1/4 the thickness of the approach pavement. Additional contraction joints not shown in the Plan View shall be spaced as follows:

One joint at the center of the approach for driveways 16' to 24' wide.
Two joints spaced at equal intervals for driveways greater than 24' to 40' wide.

All costs for furnishing and placing the type A PCC approach pavement and constructing the expansion and contraction joints including labor, equipment, and materials including the earthen backfill shall be incidental to the contract unit price per square yard for the corresponding PCC Approach Pavement bid item.

All costs for excavation required for placing the type A PCC approach pavement and granular material shall be incidental to the contract unit price per cubic yard for "Unclassified Excavation". All costs for furnishing and placing the granular material shall be incidental to the contract unit price per ton for the corresponding granular material bid item.

September 6, 2013

Published Date: 4th Qtr. 2013	SDDOT	TYPE A PCC APPROACH PAVEMENT	PLATE NUMBER 380.40
			Sheet 1 of 1

11-12-15 P:\12-117\AutoCAD\PlanSheets\0270\Section B\027C-DETL-STANDARD.dwg

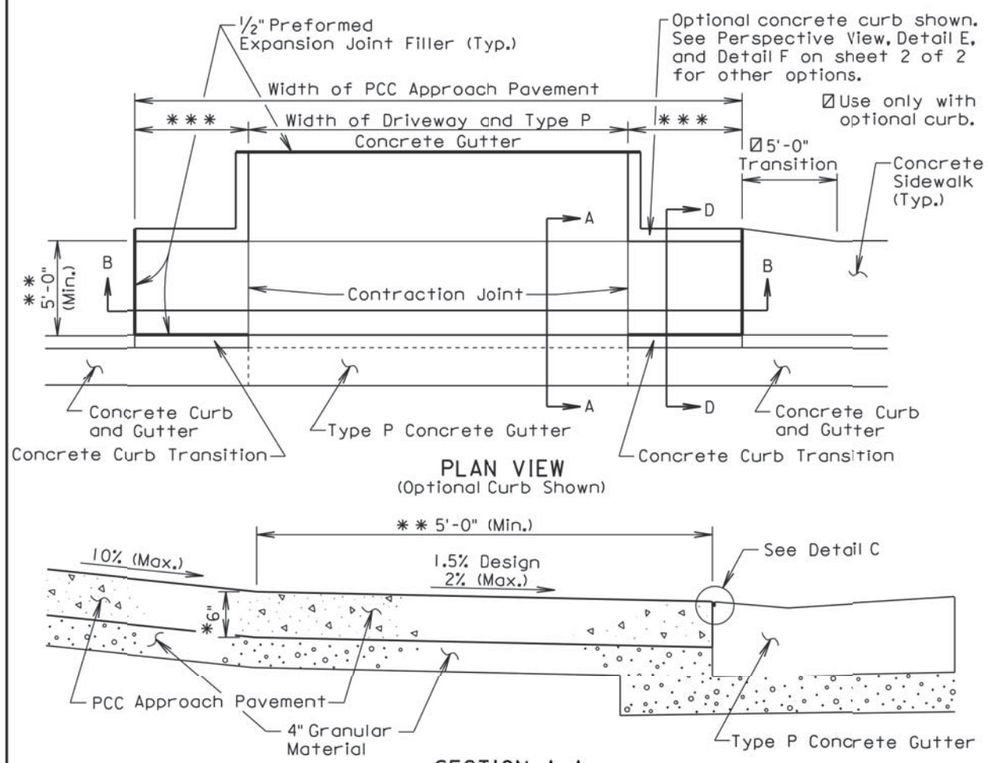

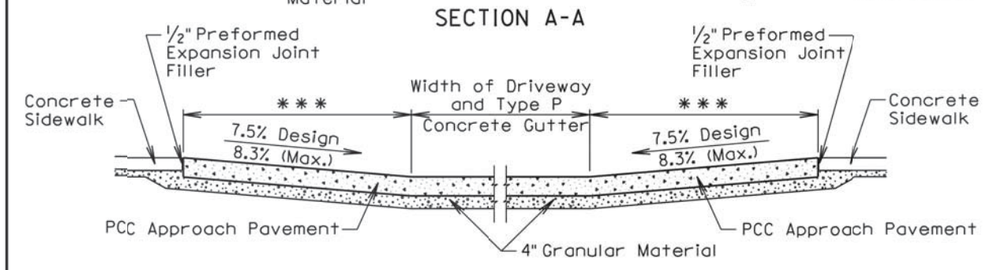

∗ 8" at Commercial Approaches

∗∗ Sidewalk width is 5' unless specified otherwise in the plans. The cross slope of the sidewalk is designed at 1.5% and shall not be steeper than 2% unless specified otherwise in the plans.

∗∗∗ The slope of the type B PCC approach pavement in these areas shall match the slope of the concrete curb transition and the length shall not be longer than 15'. The slope is designed at 7.5% and shall not be steeper than 8.3% unless specified otherwise in the plans.

September 6, 2015

Published Date: 4th Qtr. 2015	SDDOT	TYPE B PCC APPROACH PAVEMENT	PLATE NUMBER 380.41 Sheet 1 of 2

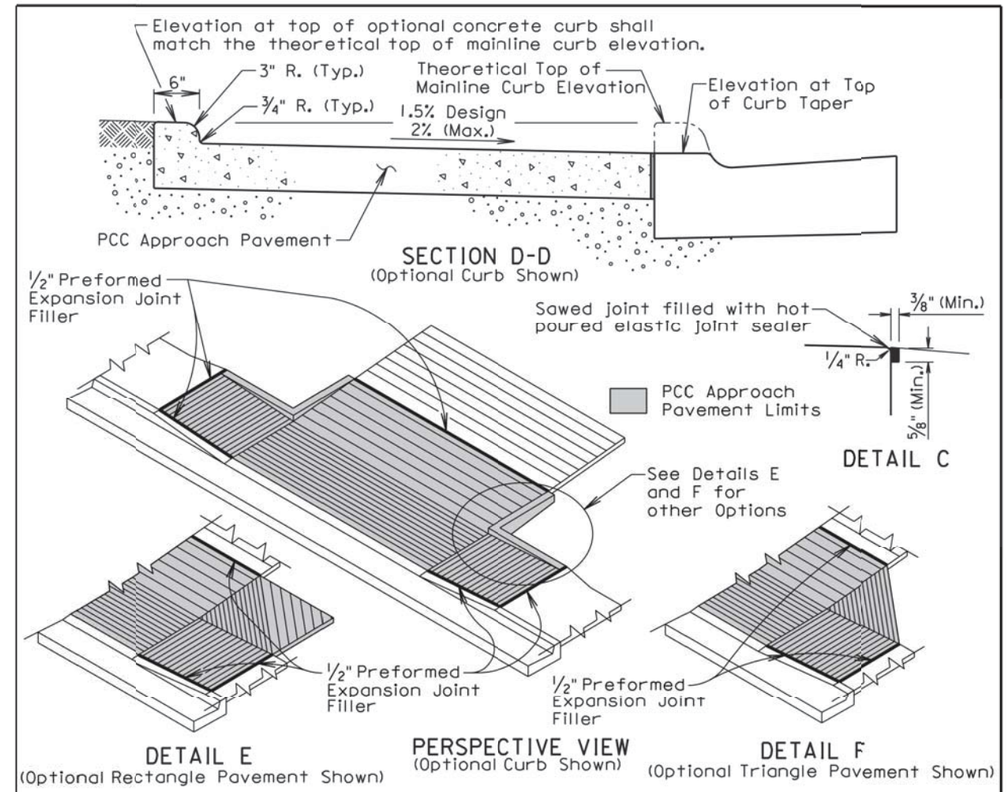

GENERAL NOTES:

Use the plan specified option for the pavement adjacent to the driveway and sidewalk. The options are shown above in the Perspective View, Detail E, and Detail F.

The concrete for the type B PCC approach pavement and adjacent driveway shall comply with the requirements of the Specifications for class M6 concrete unless otherwise stated in the plans.

Contraction joints in the type B PCC approach pavement shall be 1 1/2 inches deep if formed in the fresh concrete using a suitable grooving tool. If a saw is used to cut the contraction joints, then the depth of the joint shall be at least 1/4 the thickness of the approach pavement. Additional contraction joints not shown in the Plan View shall be spaced as follows:

One joint at the center of the approach for driveways 16' to 24' wide.
Two joints spaced at equal intervals for driveways greater than 24' to 40' wide.

All costs for furnishing and placing the type B PCC approach pavement and constructing the expansion and contraction joints including labor, equipment, and materials including the earthen backfill shall be incidental to the contract unit price per square yard for the corresponding PCC Approach Pavement bid item.

All costs for excavation required for placing the type B PCC approach pavement and granular material shall be incidental to the contract unit price per cubic yard for "Unclassified Excavation". All costs for furnishing and placing the granular material shall be incidental to the contract unit price per ton for the corresponding granular material bid item.

September 6, 2015

Published Date: 4th Qtr. 2015	SDDOT	TYPE B PCC APPROACH PAVEMENT	PLATE NUMBER 380.41 Sheet 2 of 2

11-12-15 P:\12-117\AutoCAD\PlanSheets\027C\Section B\027C-DETL-STANDARD.dwg

TOLERANCES IN DIMENSIONS

Diameter: ±1.5% for 24" Dia. or less and ±1% or 3/8" whichever is more for 27" Dia. or greater.
Diameters at joints: ± 3/16" for 30" Dia. or less and ± 1/4" for 36" or greater.
Length of joint (j): ± 1/4".
Wall thickness (T): not less than design T by more than 5% or 3/16", whichever is greater.
Laying length: shall not underrun by more than 1/2".

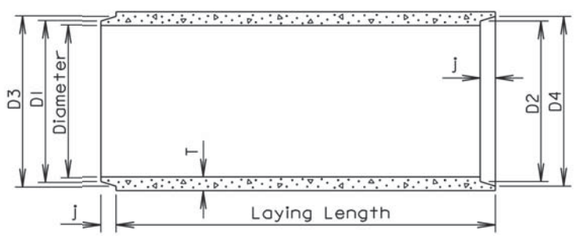

LONGITUDINAL SECTION

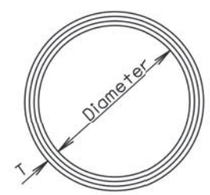

END VIEW

GENERAL NOTES:

Construction of R. C. P. shall conform to the requirements of Section 990 of the Specifications.

Not more than 2 four-foot sections shall be permitted near the ends of any culvert. Four-foot lengths shall be used only to secure the required length of culvert.

Diam. (in.)	Approx. Wt. /Ft. (lb.)	T (in.)	J (in.)	D1 (in.)	D2 (in.)	D3 (in.)	D4 (in.)
12	92	2	1 3/4	13 1/4	13 5/8	13 7/8	14 1/4
15	127	2 1/4	2	16 1/2	16 7/8	17 1/4	17 5/8
18	168	2 1/2	2 1/4	19 5/8	20	20 3/8	20 3/4
21	214	2 3/4	2 1/2	22 7/8	23 1/4	23 3/4	24 1/8
24	265	3	2 3/4	26	26 3/8	27	27 3/8
27	322	3 1/4	3	29 1/4	29 5/8	30 1/4	30 5/8
30	384	3 1/2	3 1/4	32 3/8	32 3/4	33 1/2	33 7/8
36	524	4	3 3/4	38 3/4	39 1/4	40	40 1/2
42	685	4 1/2	4	45 1/8	45 5/8	46 1/2	47
48	867	5	4 1/2	51 1/2	52	53	53 1/2
54	1070	5 1/2	4 1/2	57 7/8	58 3/8	59 3/8	59 7/8
60	1296	6	5	64 1/4	64 3/4	66	66 1/2
66	1542	6 1/2	5 1/2	70 5/8	71 1/8	72 1/2	73
72	1810	7	6	77	77 1/2	79	79 1/2
78	2098	7 1/2	6 1/2	83 3/8	83 7/8	85 5/8	86 1/8
84	2410	8	7	89 3/4	90 1/4	92 1/8	92 5/8
90	2740	8 1/2	7	95 3/4	96 1/4	98 1/8	98 5/8
96	2950	9	7	102 1/8	102 5/8	104 1/2	105
102	3075	9 1/2	7 1/2	109	109 1/2	111 1/2	112
108	3870	10	7 1/2	115 1/2	116	118	118 1/2

June 26, 2015

Published Date: 4th Qtr. 2015

SDDOT

REINFORCED CONCRETE PIPE

PLATE NUMBER 450.01

Sheet 1 of 1

GENERAL NOTES:

1. All concrete shall be Class M6 in accordance with Section 462.
2. All reinforcing steel shall be epoxy coated and shall conform to ASTM A615, Grade 60. Epoxy coating shall conform to ASTM A775.
3. Use 2 inch clear cover on all reinforcing steel except as shown.
4. All concrete shall be thoroughly tamped and spaded against forms to leave a smooth surface without honeycomb. Finish of step treads to be steel troweled and then brush finished with brush strokes on treads at right angles to width. All exposed edges shall be chamfered 3/4 inch except as shown.
5. Place concrete on undisturbed soil. If backfilling is necessary, compact with mechanical tampers to the satisfaction of the Engineer.
6. The concrete sidewalk shall be constructed in accordance with Section 651.
7. Cost of the double thickness of 1/2 inch Preformed Expansion Joint Filler shall be incidental to the contract unit price per cubic yard for "Class M6 Concrete".

SPECIAL NOTE:

Details for construction of the concrete stairway and handrails shown on sheet 2 of 2 are typical only, and are not intended to depict specific installations. Adjust the length of the stairway as required to fit specific site requirements. Use the formulas given on this sheet to adjust the unit price bid quantities to the required length of the stairway. Refer to project plans for requirements of individual locations. Alternate design details may be submitted through proper channels to the Office of Bridge Design for approval, including aluminum handrail installation.

REINFORCING SCHEDULE

Mk.	△No.	Size	△ Length	Type
b1	★	4	2h + 5	Str.
b2	6	4	h + 1.67	17A
b3	⌖	4	h + 4.67	17A
e	7	4	5' - 8"	S12
g1	7	4	1.12w + 2.0	19B
g2	2	4	1.12w + 3.7	19B
p	2w + 7	4	6' - 2"	Str.

Bending Details

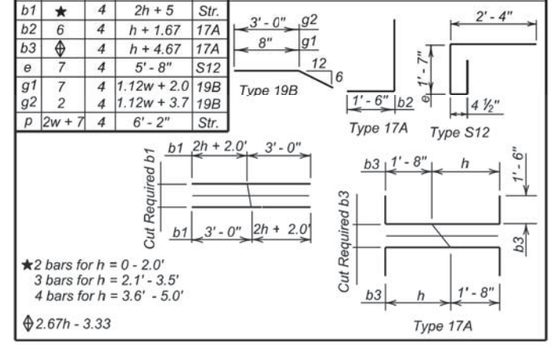

★2 bars for h = 0 - 2.0'
3 bars for h = 2.1' - 3.5'
4 bars for h = 3.6' - 5.0'

⌖ 2.67h - 3.33

ESTIMATED QUANTITIES

ITEM	UNIT	△QUANTITY
Class M6 Concrete	Cu. Yd.	$0.87 + 0.23w + 0.04h^2$
Structure Excavation, Miscellaneous	Cu. Yd.	$1.79 + 0.59w + 0.15h^2$
Epoxy Coated Reinforcing Steel	Lb.	⌖
Pipe Handrail	Ft.	6.22 + 2.24w
Sidewalk	Sq. Ft.	33

⌖ $72.62 + 14.97w + 1.78h^2 + 12.78h$ for h = 0 - 2.0'
$75.96 + 14.97w + 1.78h^2 + 14.12h$ for h = 2.1' - 3. 5'
$79.30 + 14.97w + 1.78h^2 + 15.46h$ for h = 3.6' - 5.0'

△ w = Number of steps NOT including landings (i. e. w = 9 in Sec. A - A).

August 8, 2014

Published Date: 4th Qtr. 2015

SDDOT

CONCRETE STAIRWAY FOR TYPE C CONCRETE RETAINING WALL

PLATE NUMBER 460.20

Sheet 1 of 2

11-12-15 P:\12-117\AutoCAD\PlanSheets\0270\Section B\0270-DETL-STANDARD.dwg

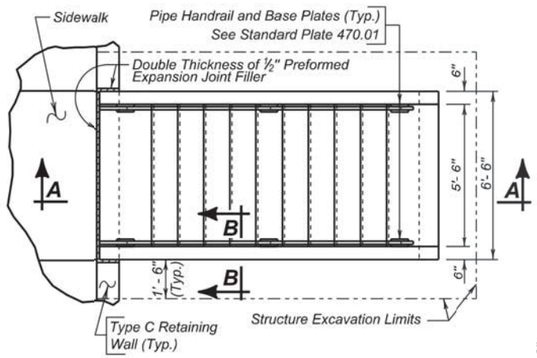

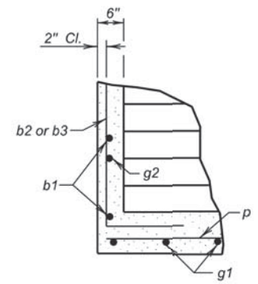

SEC. B - B

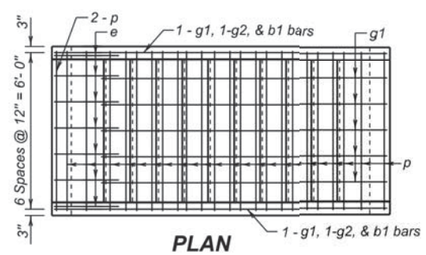

PLAN

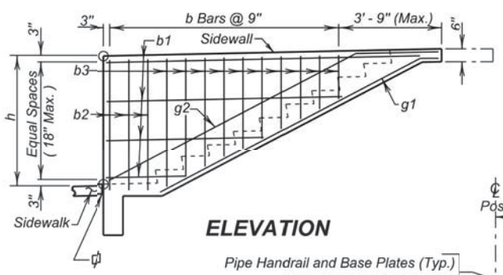

ELEVATION

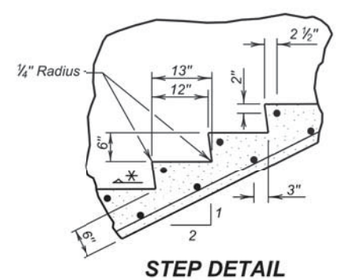

STEP DETAIL

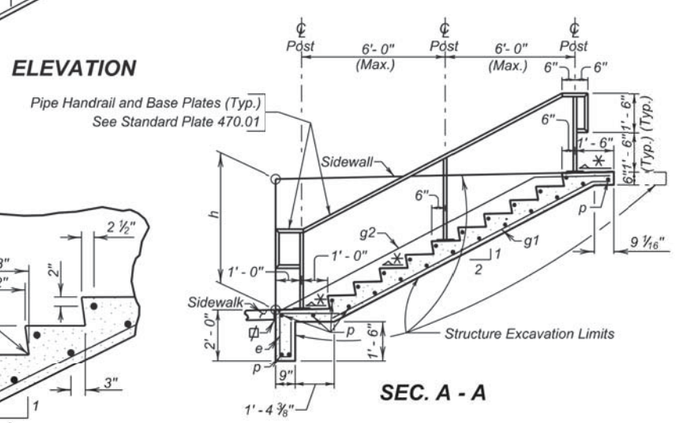

SEC. A - A

⊠ Double Thickness of ½" Preformed Expansion Joint Filler
✳ Slope ¼" per foot.

August 8, 2014

Published Date: 4th Qtr. 2015	SDDOT	CONCRETE STAIRWAY FOR TYPE C CONCRETE RETAINING WALL	PLATE NUMBER 460.20
			Sheet 2 of 2

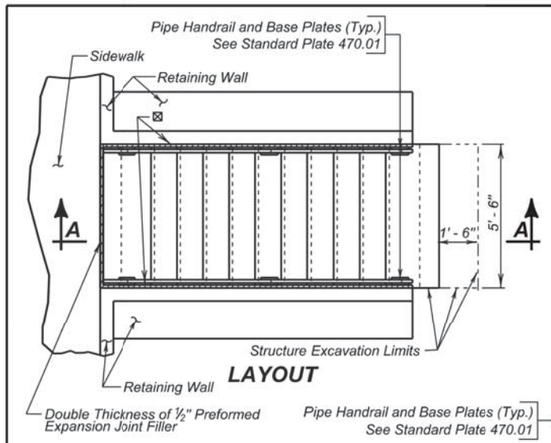

LAYOUT

✳ Slope ¼" per foot.

⊠ ½" Preformed Expansion Joint Filler or Double Thickness of ½" Preformed Expansion Joint Filler

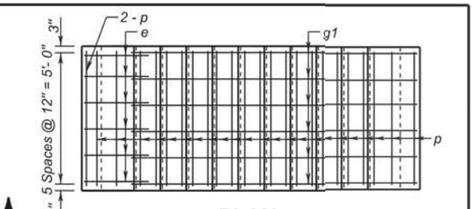

PLAN

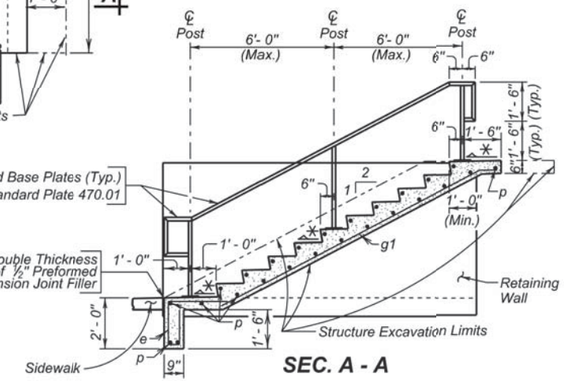

SEC. A - A

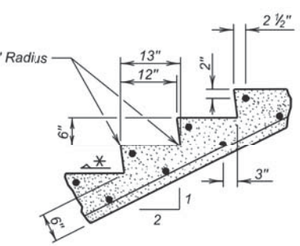

STEP DETAIL

REINFORCING SCHEDULE

MK.	△No.	Size	△Length	Type
e	6	4	5' - 8"	S12
g1	6	4	1.12w + 2.0	19B
p	2w + 7	4	5' - 2"	Str.

Bending Details

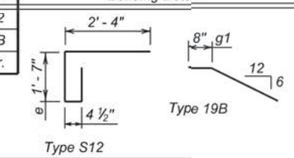

ESTIMATED QUANTITIES

ITEM	UNIT	△QUANTITY
Class M6 Concrete	Cu. Yd.	0.71 + 0.17w
Structure Excavation (Misc.)	Cu. Yd.	1.02 + 0.31w
Epoxy Coated Reinforcing Steel	Lb.	54.89 + 11.39w
Pipe Handrail	Ft.	6.22 + 2.24w

△ w = Number of steps NOT including landings (i. e. w = 9 in Sec. A-A).

GENERAL NOTES:

1. All concrete shall be Class M6 in accordance with Section 462.
2. All reinforcing steel shall be epoxy coated and shall conform to ASTM A615, Grade 60. Epoxy coating shall conform to ASTM A775.
3. Use 2 inch clear cover on all reinforcing steel except as shown.
4. All concrete shall be thoroughly tamped and spaded against forms to leave a smooth surface without honeycomb. Finish of step treads to be steel troweled and then brush finished with brush strokes on treads at right angles to width. All exposed edges shall be chamfered ¾ inch except as shown.
5. Place concrete on undisturbed soil. If backfilling is necessary, compact with mechanical tampers to the satisfaction of the Engineer.
6. The concrete sidewalk shall be constructed in accordance with Section 651.
7. Cost of the ½ inch Preformed Expansion Joint Filler shall be incidental to the contract unit price per cubic yard for "Class M6 Concrete".

⊠ 8. Use double thickness of ½ inch Preformed Expansion Joint Filler if retaining wall parallel to sidewalk is longer than 75 feet.

SPECIAL NOTE:

Details for construction of the concrete stairway and handrails shown on this sheet are typical only, and are not intended to depict specific installations. Adjust the length of the stairway as required to fit specific site requirements. Use the formulas given on this sheet to adjust the unit price bid quantities to the required length of the stairway. Refer to project plans for requirements of individual locations. Alternate design details may be submitted through proper channels to the Office of Bridge Design for approval, including aluminum handrail installation.

August 8, 2014

Published Date: 4th Qtr. 2015	SDDOT	CONCRETE STAIRWAY IN RETAINING WALL	PLATE NUMBER 460.30
			Sheet 1 of 1

11-12-15 P:\12-117\AutoCAD\PlanSheets\027C\Section B\027C-DETL-STANDARD.dwg

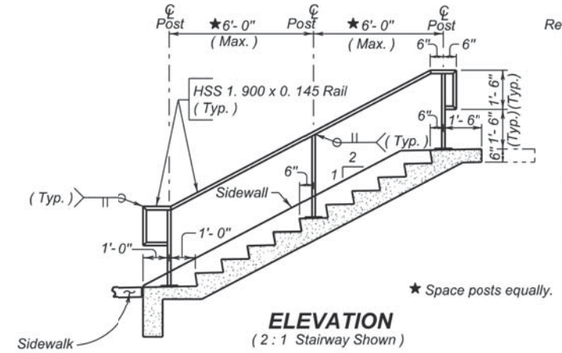

ELEVATION
(2 : 1 Stairway Shown)

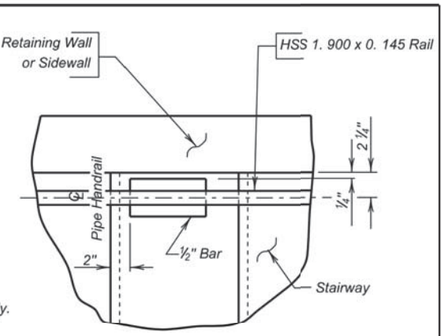

VIEW F - F

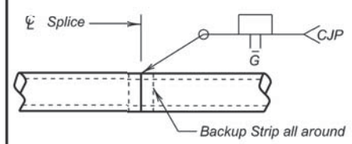

RAIL SPLICE DETAILS

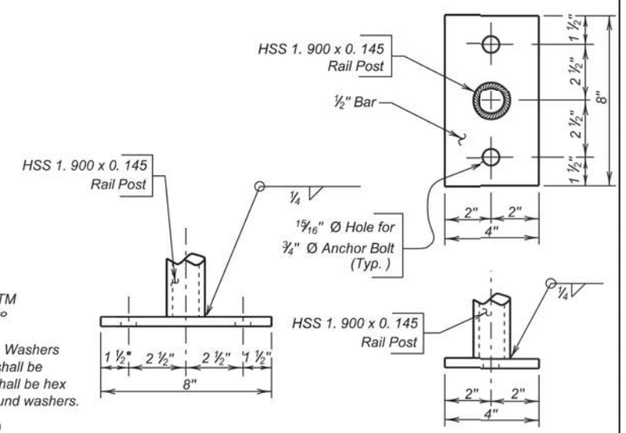

BASE PLATE DETAILS

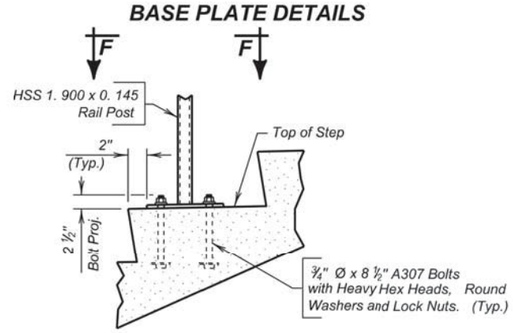

ANCHOR BOLT DETAIL

GENERAL NOTES:

1. All rail posts shall be built vertical.
2. Steel pipe for railing and posts shall conform to ASTM A500, Grade B. Railpost base plates shall conform to ASTM A709, Grade 36.
3. Anchor Bolts and nuts shall conform to ASTM A307. Washers shall be in accordance with ASTM F436. Hardware shall be galvanized in accordance with ASTM F2329. Bolts shall be hex head Structural type with heavy hex lock nuts and round washers.
4. All anchor bolts shall be tightened to a Torque of 120 ft-lbs (approximated without the use of a calibrated torque wrench).
5. Painting of steel railing shall be done in accordance with Section 411 of the Specifications. The finish color shall be Federal Standard 595B, color 27038 (semi-gloss black) unless stated otherwise in the plans.
6. Welding and weld inspection shall be done in accordance with AWS D1. 1-(Current Year) Structural Welding Code - Steel.
7. The cost of structural steel, anchor bolts, painting, galvanizing, fabrication and installation of the Pipe Handrail shall be incidental to welding, weld inspection and that which is incidental to the the contract unit price per foot for "Pipe Handrail".
8. Alternate rail designs, including aluminum rail, may be submitted through proper channels to the Office of Bridge Design for approval.

SHOP PLANS

The fabricator shall submit shop drawings in accordance with the Specifications.

June 26, 2015

Published Date: 4th Qtr. 2015	SDDOT	STAIRWAY HANDRAIL	PLATE NUMBER 470.01
			Sheet 1 of 1

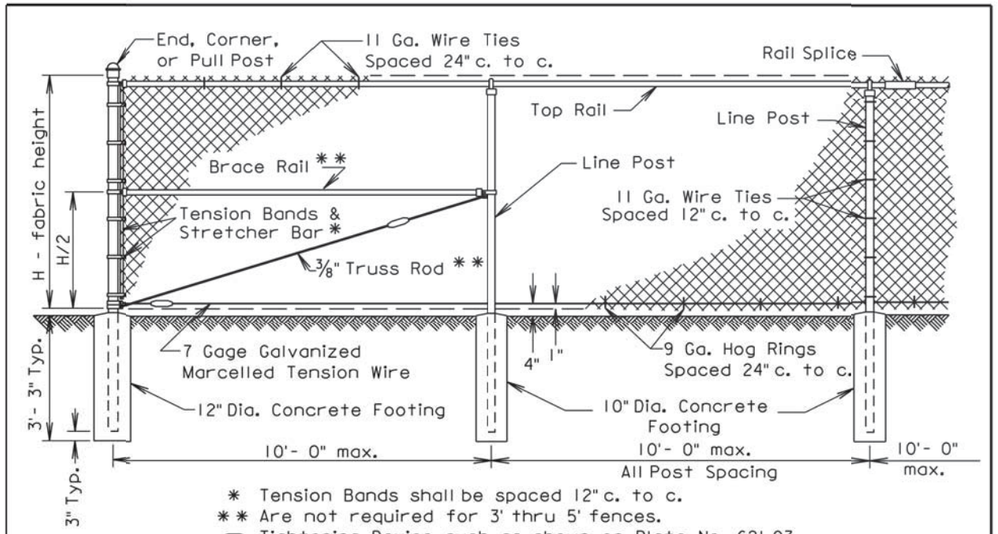

* Tension Bands shall be spaced 12" c. to c.
** Are not required for 3' thru 5' fences.
⬭ Tightening Device such as shown on Plate No. 621.03

Component	End, Corner & Pull Post		Line Post			Top & Brace Rail	
Type of Fabrication	Round Pipe Nominal	Roll Formed Steel	Round Pipe Nominal	"C" Section	H-Beam Steel	Round Pipe Nominal	Roll Formed Steel
Size	3.00" O. D.	3.5" x 3.5"	2.50" O. D.	1.875"x1.625"	2.25"x1.70"	1.625" O. D.	1.625"x1.25"
Weight (lb. / ft.)	5.79 or 4.64	5.14	3.65 or 3.12	2.34	3.43	2.27 or 1.84	1.35

GENERAL NOTES:

Specific details of manufacture of component parts of the complete fence construction shall be subject to the approval of the Engineer. Commercially available items produced specifically for the use intended shall be used wherever possible in the construction of the fence.

"H" (Height of Fabric) shall be as shown on the Plans. Fabric is available in the the following heights; 36", 42", 48", 60", 72", 84", 96", 108", 120", & 144". Fabric heights 60 inches and under shall be knuckled at both selvages. Fabric heights 72 inches and over shall be knuckled at one selvage and twisted at the other selvage.

Chain Link Fabric shall be 2" mesh, No. 9 gage galvanized wire securely fastened to Tension Wire, Line Post, Rails, Braces and Stretcher Bars spaced as shown hereon.

Fence may be constructed with either Round Pipe, "C" Section, "H" Beam, or roll Formed Steel components as shown in the table above. Line post may be Round Pipe, "C" Section, or "H" Beam. The Corner Post and Rails shall be either Round Pipe or Roll Formed Steel. The type of components used shall have prior approval by the Engineer before construction.

Where fence must cross small bodies of water (such as drainage areas or ponds) that could freeze during the winter, use 11 gage Hog Rings. Provide only two ties per Tension Wire and Top Rail between line posts.

A suitable method of rail splicing shall be used to allow for expansion and contraction while maintaining proper position of the Top Rail.

March 31, 2000

Published Date: 4th Qtr. 2015	SDDOT	CHAIN LINK FENCE WITH TOP RAIL	PLATE NUMBER 621.01
			Sheet 1 of 1

11-12-15 P:\12-117\AutoCAD\PlanSheets\027C\Section B\027C-DETL-STANDARD.dwg

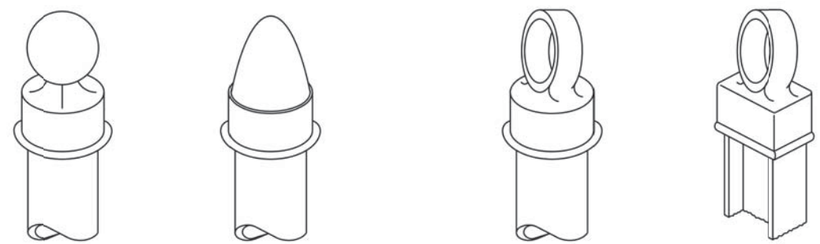

For End, Corner and Pull Posts

For Line Posts

Typical Post Tops
(Shown for example only)

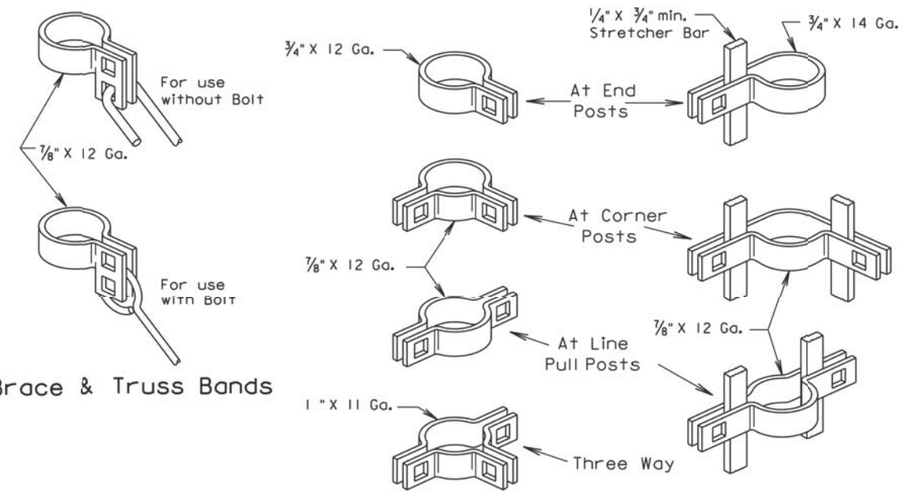

Brace & Truss Bands

Brace Bands

Tension Bands

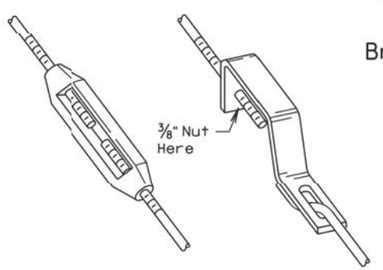

3/8" Turnbuckle

11 Ga. Tightener

Tightening Devices

NOTE: Bands shall be rectangular for "C" Section and "H" Beam Posts.

Straight Tip

Offset Tip

Rail Ends

March 31, 2000

Published Date: 4th Qtr. 2015

SDDOT

HARDWARE FOR CHAIN LINK FENCE

PLATE NUMBER 621.03

Sheet 1 of 1

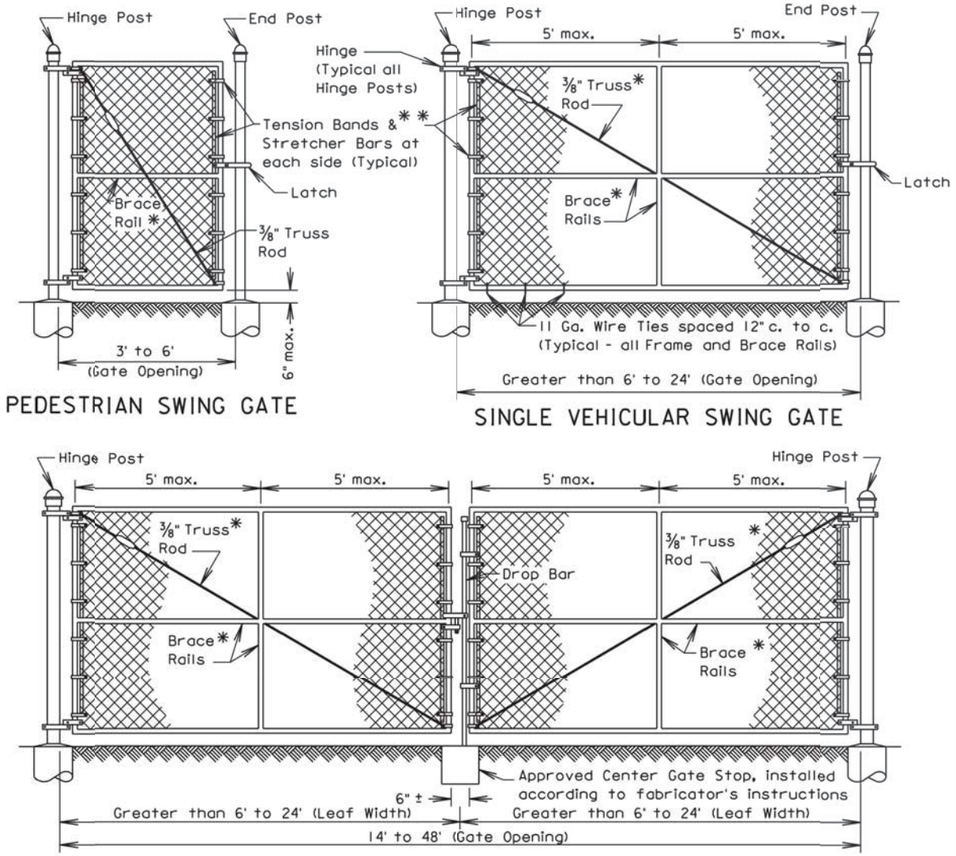

PEDESTRIAN SWING GATE

SINGLE VEHICULAR SWING GATE

DOUBLE VEHICULAR SWING GATE

Gate Opening		Frame Pipe Nominal	Brace Rail - Pipe Nominal
Width [1]	Height [2]		
3' to 8'	3' to 6'	1.50"	1.50"
>8' to 23'	6'	1.90"	1.50"
>8' to 23	> 6' to 12'	1.90"	1.90"

Gate Opening Width [1]	Hinge Post		Concrete Footing	
	Round Pipe Nominal	Roll Formed Steel	Depth	Diameter
3' to 6'	3.00"	3.50"X3.50"	36"	12"
> 6' to 13'	4.00"	—	42"	12"
> 13' to 18'	6.625"	—	48"	18"
> 18' to 23'	8.625"	—	48"	24"

NOTE: Gate frames may be constructed of bent or welded steel tubing installed according to fabricator's instructions and subject to the Engineer's approval.

* Are not required for gates 3' to 5' height or 5' or less in width.

** Tension Bands shall be spaced 12" c. to c.

⬭ Tightening Device such as shown on standard plate 621.03

1 Leaf width for Double Vehicular Swing Gate

2 Shall coincide with fence height

September 14, 2001

Published Date: 4th Qtr. 2015

SDDOT

SWING GATES FOR CHAIN LINK FENCE

PLATE NUMBER 621.10

Sheet 1 of 1

11-12-15 P:\12-117\AutoCAD\PlanSheets\027C\Section B\027C-DETL-STANDARD.dwg

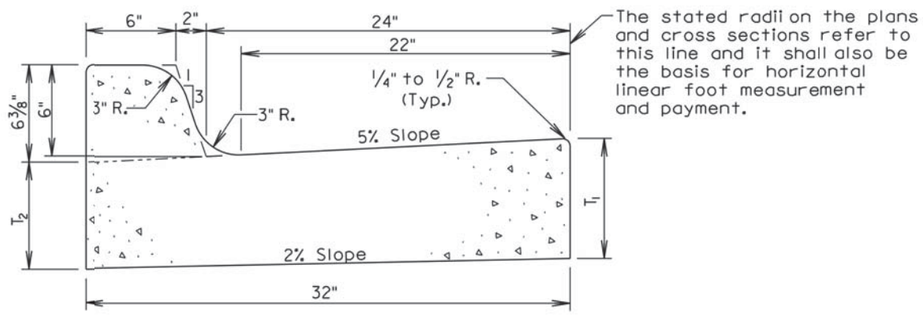

Type	T_1 (Inches)	T_2 (Inches)	Cu. Yd. Per Lin. Ft.	Lin. Ft. Per Cu. Yd.
B66	6	5 1/16	0.057	17.7
B67	7	6 1/16	0.065	15.4
B68	8	7 1/16	0.073	13.7
B68.5	8.5	7 9/16	0.077	13.0
B69	9	8 1/16	0.081	12.3
B69.5	9.5	8 9/16	0.085	11.7
B610	10	9 1/16	0.090	11.2
B610.5	10.5	9 9/16	0.094	10.7
B611	11	10 1/16	0.098	10.2
B611.5	11.5	10 9/16	0.102	9.8
B612	12	11 1/16	0.106	9.4

GENERAL NOTES:

When concrete curb and gutter longitudinally adjoins new concrete pavement, the method of attachment shall be by one of the methods shown on Standard Plate 380.11.

See Standard Plate 650.90 for expansion and contraction joints in the curb and gutter.

September 6, 2008

Published Date: 4th Qtr. 2015

SDDOT

TYPE B CONCRETE CURB AND GUTTER

PLATE NUMBER 650.01

Sheet 1 of 1

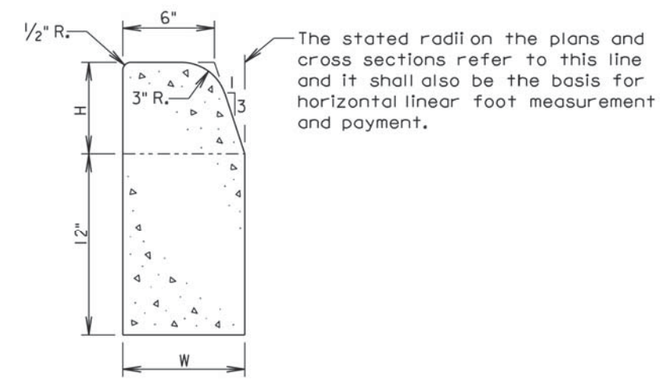

Type	H (Inches)	W (Inches)	Cu. Yd. Per Lin. Ft.	Lin. Ft. Per Cu. Yd.
B6	6	8	0.0353	28.4
B7	7	8 3/8	0.0383	26.1
B8	8	8 5/8	0.0414	24.1
B9	9	9	0.0449	22.3
B10	10	9 3/8	0.0485	20.6

GENERAL NOTES:

The concrete for the Type B Concrete Curb shall comply with the requirements of the Specifications for Class M6 Concrete.

A 1/2" preformed expansion joint filler shall be placed transversely in the curb at the following locations:

1. At each junction between the radius return of curb and curb which is parallel to the project centerline.
2. At each junction between the existing curb and new curb or curb and gutter.
3. At each junction between the curb and existing sidewalk to the depth of the sidewalk.

See Standard Plate 650.90 for contraction joints in the curb.

June 26, 2015

Published Date: 4th Qtr. 2015

SDDOT

TYPE B CONCRETE CURB

PLATE NUMBER 650.02

Sheet 1 of 1

11-12-15 P:\12-117\AutoCAD\PlanSheets\027C\Section B\027C-DETL-STANDARD.dwg

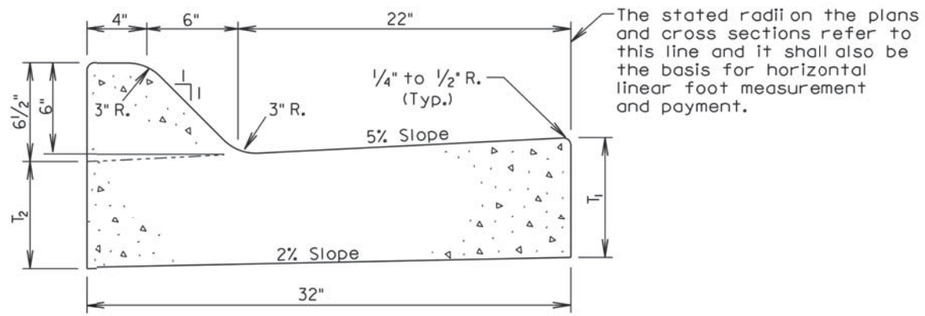

The stated radii on the plans and cross sections refer to this line and it shall also be the basis for horizontal linear foot measurement and payment.

Type	T_1 (Inches)	T_2 (Inches)	Cu. Yd. Per Lin. Ft.	Lin. Ft. Per Cu. Yd.
F66	6	5 1/16	0.057	17.6
F67	7	6 1/16	0.065	15.4
F68	8	7 1/16	0.073	13.6
F68.5	8.5	7 9/16	0.077	12.9
F69	9	8 1/16	0.082	12.3
F69.5	9.5	8 9/16	0.086	11.7
F610	10	9 1/16	0.090	11.1
F610.5	10.5	9 9/16	0.094	10.7
F611	11	10 1/16	0.098	10.2
F611.5	11.5	10 9/16	0.102	9.8
F612	12	11 1/16	0.106	9.4

GENERAL NOTES:

When concrete curb and gutter longitudinally adjoins new concrete pavement, the method of attachment shall be by one of the methods shown on Standard Plate 380.11.

See Standard Plate 650.90 for expansion and contraction joints in the curb and gutter.

September 6, 2008

Published Date: 4th Qtr. 2015 | SDDOT | TYPE F CONCRETE CURB AND GUTTER | PLATE NUMBER 650.20 | Sheet 1 of 1

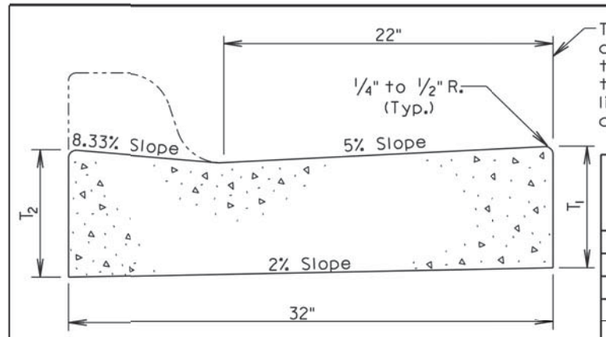

The stated radii on the plans and cross sections refer to this line and it shall also be the basis for horizontal linear foot measurement and payment.

TRANSVERSE SECTION

Type	T_1 (Inches)	T_2 (Inches)	Cu. Yd. Per Lin. Ft.	Lin. Ft. Per Cu. Yd.
P6	6	6 3/8	0.047	21.2
P7	7	7 3/8	0.055	18.1
P8	8	8 3/8	0.064	15.7
P8.5	8.5	8 7/8	0.068	14.8
P9	9	9 3/8	0.072	13.9
P9.5	9.5	9 7/8	0.076	13.2
P10	10	10 3/8	0.080	12.5
P10.5	10.5	10 7/8	0.084	11.9
P11	11	11 3/8	0.088	11.3
P11.5	11.5	11 7/8	0.092	10.8
P12	12	12 3/8	0.096	10.4

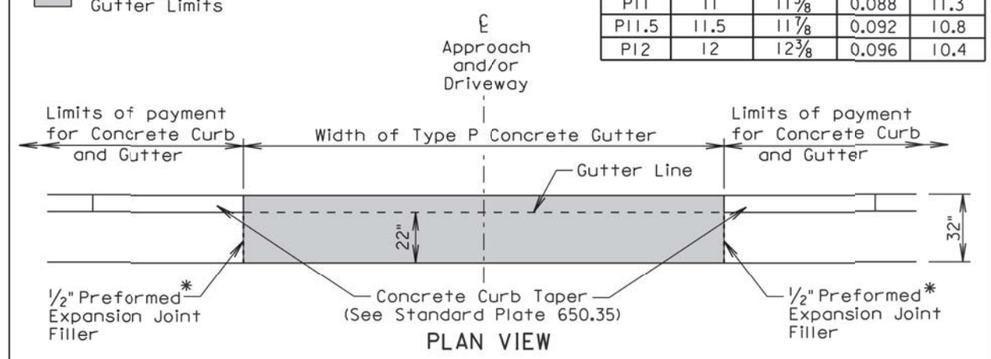

PLAN VIEW

* Joint will not be needed if concrete curb and gutter and type P concrete gutter is placed at the same time. If the 1/2" Preformed Expansion Joint Filler is provided, then the joint shall be sealed in accordance with Standard Plate 650.90.

GENERAL NOTES:

The concrete for the Type P Concrete Gutter shall comply with the requirements of the Specifications for Class M6 Concrete.

When concrete gutter longitudinally adjoins new concrete pavement, the method of attachment shall be by one of the methods shown on Standard Plate 380.11.

Transverse contraction joints shall be constructed at 10' intervals in the concrete gutter except when concrete gutter is constructed adjacent to mainline PCC pavement. When concrete gutter is constructed adjacent to mainline PCC pavement, a transverse contraction joint shall be constructed in the concrete gutter at each mainline PCC pavement transverse contraction joint location.

When concrete gutter is placed monolithically with mainline PCC pavement, the transverse contraction joints in the concrete gutter shall be sawed and sealed the same as the transverse contraction joints in the mainline PCC pavement.

When concrete gutter is not placed monolithically with the mainline PCC pavement and when the adjacent mainline surfacing is not PCC concrete, the transverse contraction joints in the concrete gutter shall be 1 1/2 inches deep if formed in the fresh concrete using a suitable grooving tool. If a saw is used to cut the contraction joints, then the depth of the joint shall be at least 1/4 the thickness of the concrete.

June 26, 2015

Published Date: 4th Qtr. 2015 | SDDOT | TYPE P CONCRETE GUTTER | PLATE NUMBER 650.30 | Sheet 1 of 1

11-12-15 P:\12-117\AutoCAD\PlanSheets\027C\Section B\027C-DETL-STANDARD.dwg

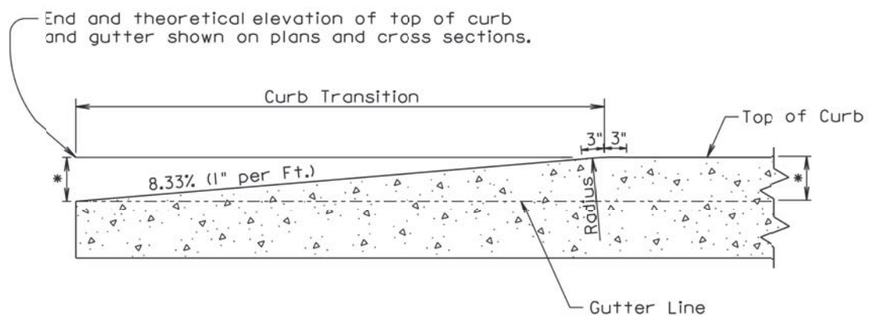

LONGITUDINAL SECTION OF CONCRETE CURB TAPER

September 14, 2005

Published Date: 4th Qtr. 2015	SDDOT	CONCRETE CURB TAPER	PLATE NUMBER 650.35
			Sheet 1 of 1

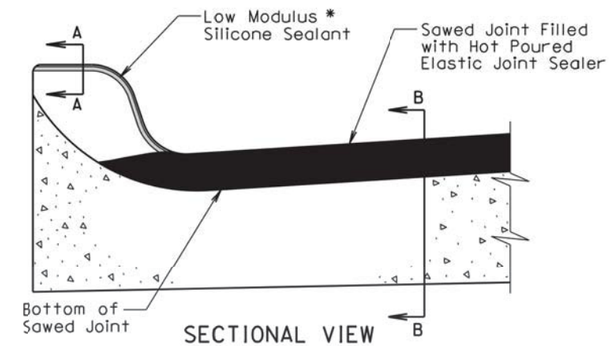

SECTIONAL VIEW

(Curb and Gutter Placed Monolithic with Adjacent Mainline PCC Pavement)

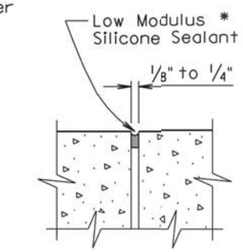

SECTION A-A

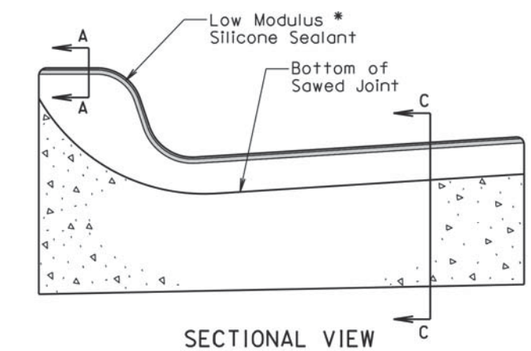

SECTIONAL VIEW

(Curb and Gutter not Placed Monolithic with Adjacent Mainline PCC Pavement or Mainline Surfacing is not PCC Pavement)

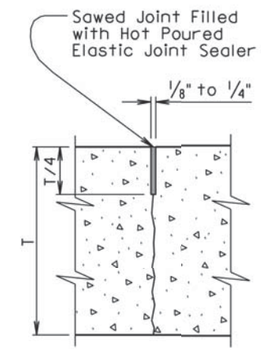

SECTION B-B

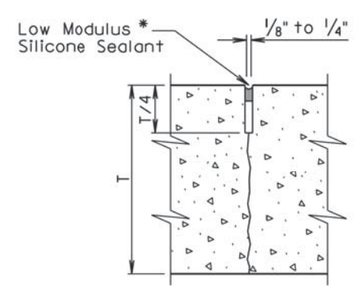

SECTION C-C

* The silicone sealant shall be placed such that it completely seals the joint and is bonded to the sides of the clean joint as approved by the Engineer.

September 6, 2013

Published Date: 4th Qtr. 2015	SDDOT	JOINTS IN CONCRETE CURB AND GUTTER	PLATE NUMBER 650.90
			Sheet 1 of 2

11-12-15 P:\12-117\AutoCAD\PlanSheets\027C\Section B\027C-DETL-STANDARD.dwg

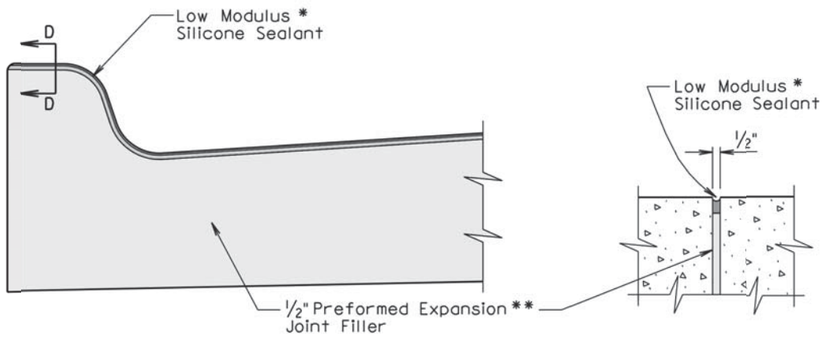

SECTIONAL VIEW
(Curb and Gutter at ½" Preformed Expansion Joint Filler Location)

SECTION D-D

* The silicone sealant shall be placed such that it completely seals the joint and is bonded to the sides of the clean joint as approved by the Engineer.

GENERAL NOTES:

For illustrative reason, only the type B curb and gutter is shown.

** A ½" preformed expansion joint filler shall be placed transversely in the curb and gutter at the following locations:

1. At each junction between the radius return of curb and gutter and curb and gutter which is parallel to the project centerline.
2. At each junction between new curb and gutter and existing curb and gutter.

Transverse contraction joints shall be constructed at 10' intervals in the concrete curb and gutter except when the concrete curb and gutter is constructed adjacent to mainline PCC pavement. When concrete curb and gutter is constructed adjacent to mainline PCC pavement, a transverse contraction joint shall be constructed in the concrete curb and gutter at each mainline PCC pavement transverse contraction joint location.

When concrete curb and gutter is not placed monolithically with the mainline PCC pavement or when the adjacent mainline surfacing is not PCC concrete, the transverse contraction joints in the concrete curb and gutter shall be 1½ inches deep if formed in the fresh concrete using a suitable grooving tool. If a saw is used to cut the contraction joints, then the depth of the joint shall be at least ¼ the thickness of the concrete and the joint shall be sealed in accordance with the details shown above.

September 6, 2013

Published Date: 4th Qtr. 2015	SDDOT	JOINTS IN CONCRETE CURB AND GUTTER	PLATE NUMBER 650.90
			Sheet 2 of 2

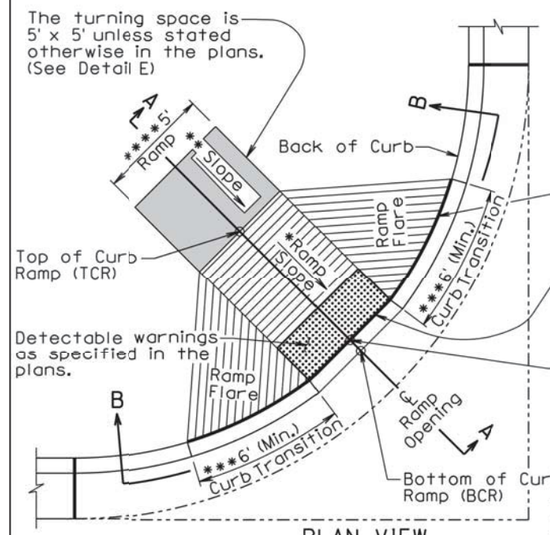

PLAN VIEW
(With 6'+ Curb Transition)

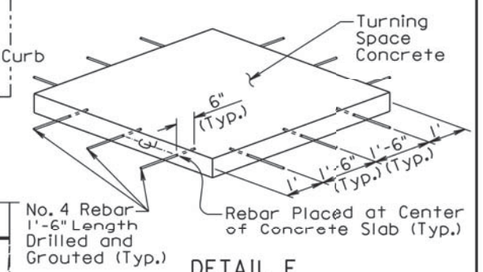

DETAIL E
ISOMETRIC VIEW
(If Turning Space concrete is placed monolithic with surrounding concrete, then this detail is not necessary.)

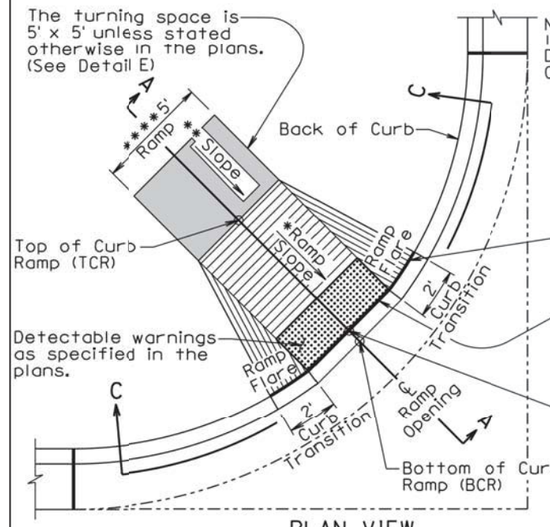

PLAN VIEW
(With 2' Curb Transition)

September 6, 2015

Published Date: 4th Qtr. 2015	SDDOT	TYPE 1 CURB RAMP (PERPENDICULAR CURB RAMP)	PLATE NUMBER 651.01
			Sheet 1 of 3

11-12-15 P:\12-117\AutoCAD\PlanSheets\027C\Section B\027C-DETL-STANDARD.dwg

Curb ramp slopes are designed at 7.5% unless stated otherwise in the plans. The curb ramp may have a maximum slope of 8.3% and shall not exceed 15' in length unless stated otherwise in the plans.

The curb ramp length may be computed based on the intersection of a continuous 1.5% theoretical slope from theoretical top of curb (TTOC) with the curb ramp using a
* continuous 7.5% curb ramp slope. The elevation of point TCR shall always be higher than the elevation of point TTOC unless specified otherwise in the plans. The curb ramp length dimension as shown in the plans shall be adjusted as necessary to meet all slope and length requirements based on field geometrics.

The cross slope of the ramp shall not be steeper than 2%. Plans are designed using a 1.5% slope unless stated otherwise in the plans.

** The slope in the turning space shall not be steeper than 2% in any direction of pedestrian travel. Plans are designed using a 1.5% slope unless stated otherwise in the plans.

*** The curb transition shall be a minimum of 6' long, a maximum of 10' long, and the curb transition slope shall not be steeper than 10% unless stated otherwise in the plans. The curb transition length shall be adjusted as necessary to meet slope and length requirements based on field geometrics.

**** The ramp width is 5' unless stated otherwise in the plans.

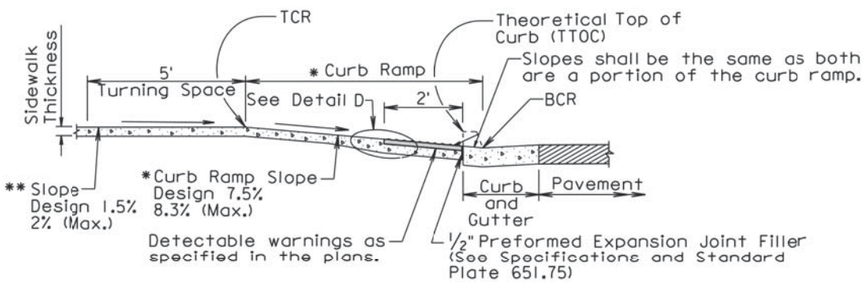

SECTION A-A

SECTIONAL VIEW B-B

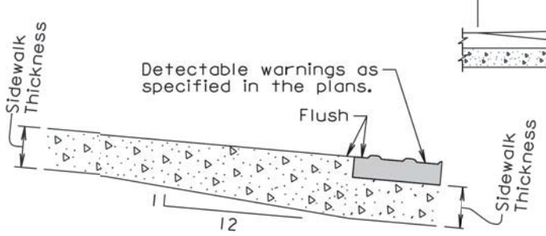

DETAIL D

SECTIONAL VIEW C-C

September 6, 2015

Published Date: 4th Qtr. 2015	SDDOT	TYPE 1 CURB RAMP (PERPENDICULAR CURB RAMP)	PLATE NUMBER 651.01
			Sheet 2 of 3

GENERAL NOTES:

For illustrative purpose only, type 1 detectable warnings are shown in the drawings.

For illustrative purpose only, PCC fillet sections are shown in the drawings. The curb ramp depicted on this standard plate may be used with a PCC fillet section or curb and gutter.

For illustrative purpose only, the curb ramp location is shown at the center of a PCC fillet section. The curb ramp shall be placed at the location stated in the plans.

Sidewalk shall not be placed adjacent to the curb ramp flares when a 2' curb transition is used unless shown otherwise in the plans.

* Care shall be taken to ensure a uniform grade on the curb ramp, free of sags and short grade changes.

Surface texture of the curb ramp shall be obtained by coarse brooming transverse to the slope of the curb ramp.

The normal gutter line profile shall be maintained through the area of the ramp opening.

Joints shall be sawed or tooled into the concrete adjacent to the detectable warnings to alleviate possible corner cracking.

Care shall be taken to ensure that the surface of the detectable warnings are clean and maintains a uniform color.

The detectable warnings shall be cut as necessary to fit the plan specified limits of the detectable warnings. Cost for cutting the detectable warnings shall be incidental to the corresponding detectable warning bid item.

There will be no separate payment for curb ramps. The curb ramp shall be measured and paid for at the contract unit price per square foot for the corresponding concrete sidewalk bid item. The square foot area of the detectable warnings shall be included in the measured and paid for quantity of sidewalk.

If rebar is placed in the Turning Space as depicted in DETAIL E, the cost of the materials, labor, and equipment to furnish and install the rebar shall be incidental to the contract unit price per square foot for the corresponding concrete sidewalk bid item.

The curb transitions and ramp opening shall be measured and paid for at the contract unit price per foot for the corresponding curb and gutter bid item when curb and gutter is used. The curb transitions and ramp opening shall be measured and paid for at the contract unit price per square yard for the corresponding PCC fillet section bid item when a PCC fillet section is used.

The type 1 detectable warnings shall be measured to the nearest square foot. All costs for furnishing and installing the type 1 detectable warnings including labor, equipment, materials, and incidentals shall be paid for at the contract unit price per square foot for "Type 1 Detectable Warnings".

The type 2 detectable warnings shall be measured to the nearest square foot. All costs for furnishing and installing the type 2 detectable warnings including labor, equipment, and materials, including adhesive, necessary sealant or grout, and necessary grinding shall be paid for at the contract unit price per square foot for "Type 2 Detectable Warnings".

September 6, 2015

Published Date: 4th Qtr. 2015	SDDOT	TYPE 1 CURB RAMP (PERPENDICULAR CURB RAMP)	PLATE NUMBER 651.01
			Sheet 3 of 3

11-12-15 P:\12-117\AutoCAD\PlanSheets\027C\Section B\027C-DETL-STANDARD.dwg

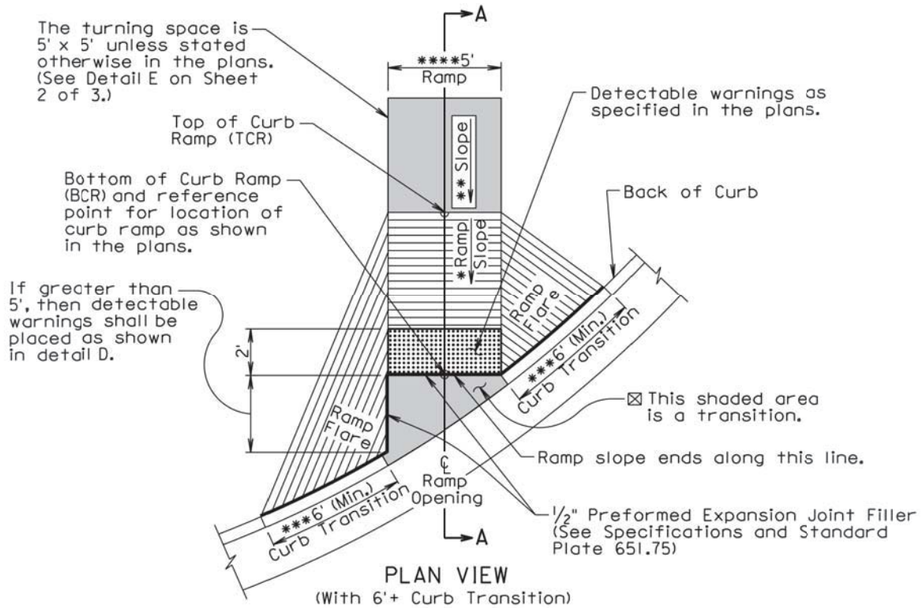

PLAN VIEW
(With 6'+ Curb Transition)

⊠ The slope within the transition area shall not be steeper than 5%. The concrete within the transition shall be placed monolithic with the curb and gutter or fillet section concrete. The concrete thickness within the transition shall be the same as the curb and gutter or fillet section concrete thickness.

*** The curb transition shall be a minimum of 6' long, a maximum of 10' long, and the curb transition slope shall not be steeper than 10% unless stated otherwise in the plans. The curb transition length shall be adjusted as necessary to meet slope and length requirements based on field geometrics.

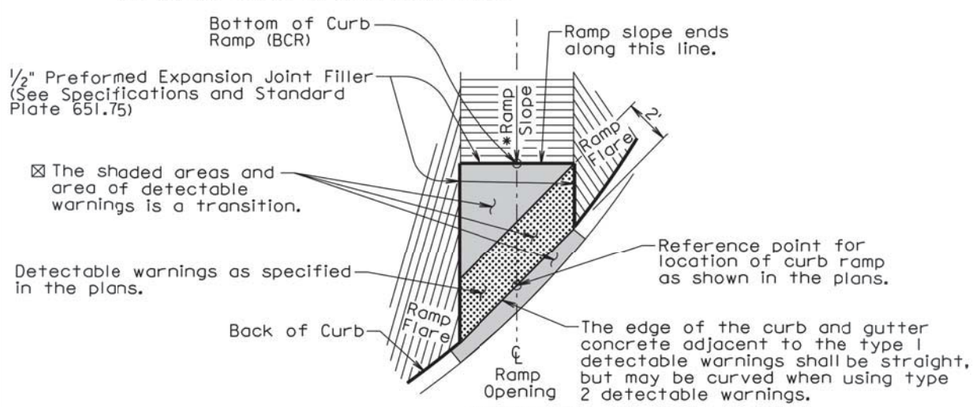

DETAIL D

September 6, 2015

Published Date: 4th Qtr. 2015	SDDOT	TYPE 2 CURB RAMP (DIRECTIONAL CURB RAMP)	PLATE NUMBER 651.02
			Sheet 1 of 3

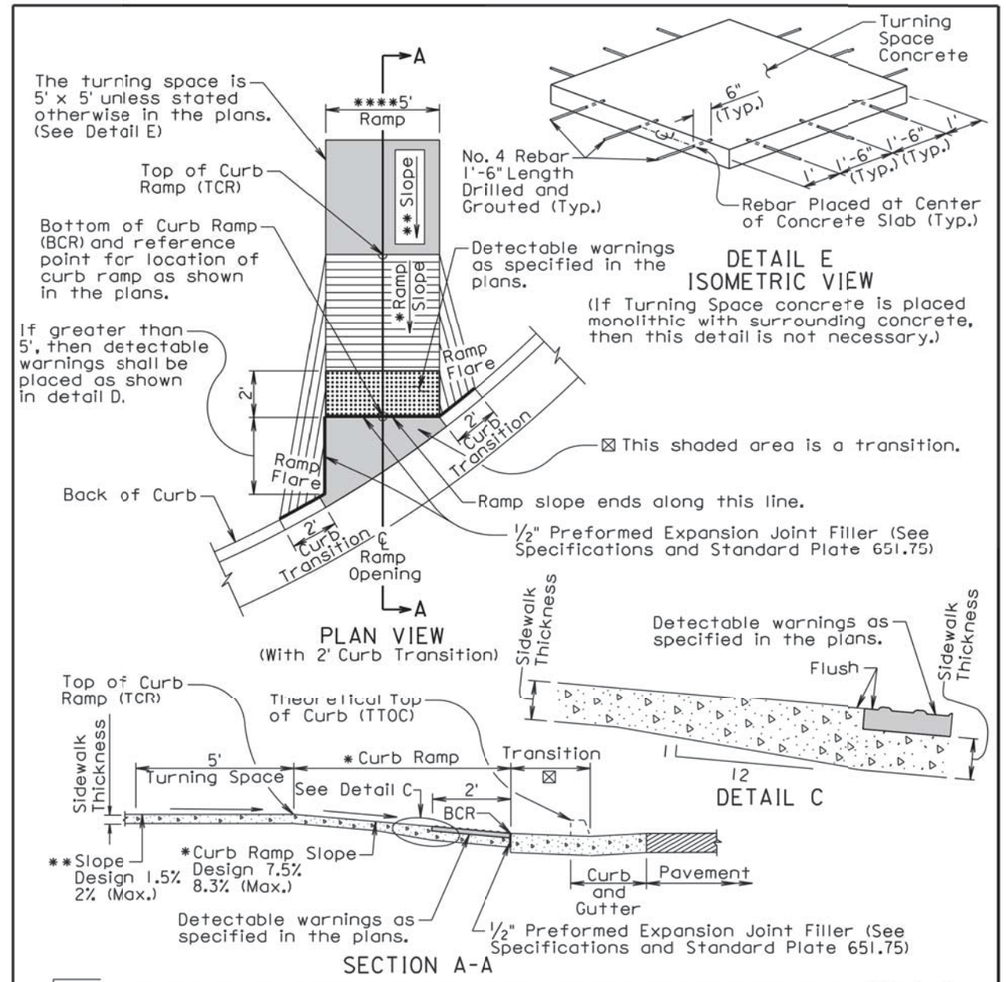

PLAN VIEW
(With 2' Curb Transition)

DETAIL E
ISOMETRIC VIEW
(If Turning Space concrete is placed monolithic with surrounding concrete, then this detail is not necessary.)

DETAIL C

SECTION A-A

* Curb ramp slopes are designed at 7.5% unless stated otherwise in the plans. The curb ramp may have a maximum slope of 8.3% and shall not exceed 15' in length unless stated otherwise in the plans.

The elevation of point TCR shall always be higher than the elevation of point TTOC unless specified otherwise in the plans. The curb ramp length dimension as shown in the plans shall be adjusted as necessary to meet all slope and length requirements based on field geometrics.

The cross slope of the ramp shall not be steeper than 2%. Plans are designed using a 1.5% slope unless stated otherwise in the plans.

** The slope in the turning space shall not be steeper than 2% in any direction of pedestrian travel. Plans are designed using a 1.5% slope unless stated otherwise in the plans.

**** The ramp width is 5' unless stated otherwise in the plans.

September 6, 2015

Published Date: 4th Qtr. 2015	SDDOT	TYPE 2 CURB RAMP (DIRECTIONAL CURB RAMP)	PLATE NUMBER 651.02
			Sheet 2 of 3

11-12-15 P:\12-117\AutoCAD\PlanSheets\027C\Section BV027C-DETL-STANDARD.dwg

GENERAL NOTES:

For illustrative purpose only, type I detectable warnings are shown in the drawings.

The curb ramp depicted on this standard plate may be used with a PCC fillet section or curb and gutter. The curb ramp shall be placed at the location stated in the plans.

Sidewalk shall not be placed adjacent to the curb ramp flares when a 2' curb transition is used unless shown otherwise in the plans.

* Care shall be taken to ensure a uniform grade on the curb ramp, free of sags and short grade changes.

Surface texture of the curb ramp shall be obtained by coarse brooming transverse to the slope of the curb ramp.

The normal gutter line profile shall be maintained through the area of the ramp opening.

Joints shall be sawed or tooled into the concrete adjacent to the detectable warnings to alleviate possible corner cracking.

Care shall be taken to ensure that the surface of the detectable warnings are clean and maintains a uniform color.

The detectable warnings shall be cut as necessary to fit the plan specified limits of the detectable warnings. Cost for cutting the detectable warnings shall be incidental to the corresponding detectable warning bid item.

There will be no separate payment for curb ramps. The curb ramp shall be measured and paid for at the contract unit price per square foot for the corresponding concrete sidewalk bid item. The square foot area of the detectable warnings shall be included in the measured and paid for quantity of sidewalk.

If rebar is placed in the Turning Space as depicted in DETAIL E, the cost of the materials, labor, and equipment to furnish and install the rebar shall be incidental to the contract unit price per square foot for the corresponding concrete sidewalk bid item.

The curb transitions and ramp opening shall be measured and paid for at the contract unit price per foot for the corresponding curb and gutter bid item when curb and gutter is used. The curb transitions and ramp opening shall be measured and paid for at the contract unit price per square yard for the corresponding PCC fillet section bid item when a PCC fillet section is used.

All costs for furnishing and installing the transition area at the base of the curb ramp shall be incidental to the contract unit price per foot for the corresponding curb and gutter bid item when curb and gutter is used and shall be incidental to the contract unit price per square yard for the corresponding PCC fillet section bid item when a PCC fillet section is used.

The type I detectable warnings shall be measured to the nearest square foot. All costs for furnishing and installing the type I detectable warnings including labor, equipment, materials, and incidentals shall be paid for at the contract unit price per square foot for "Type I Detectable Warnings".

The type 2 detectable warnings shall be measured to the nearest square foot. All costs for furnishing and installing the type 2 detectable warnings including labor, equipment, and materials, including adhesive, necessary sealant or grout, and necessary grinding shall be paid for at the contract unit price per square foot for "Type 2 Detectable Warnings".

September 6, 2015

Published Date: 4th Qtr. 2015	SDDOT	TYPE 2 CURB RAMP (DIRECTIONAL CURB RAMP)	PLATE NUMBER 651.02
			Sheet 3 of 3

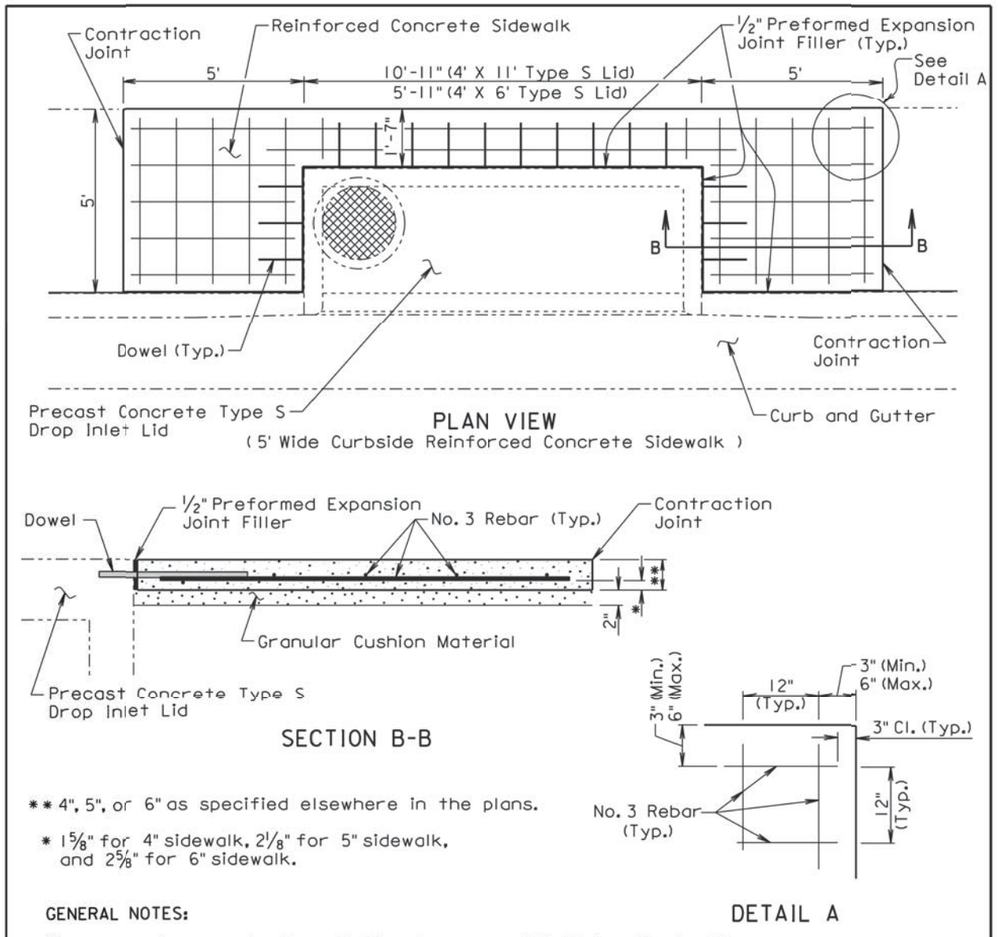

** 4", 5", or 6" as specified elsewhere in the plans.

* 1⅝" for 4" sidewalk, 2⅛" for 5" sidewalk, and 2⅝" for 6" sidewalk.

GENERAL NOTES:

The precast concrete Type S lids shown are 4' X 11' for illustrative purpose.

The cross slope of the sidewalk and precast concrete type S drop inlet lid shall be as specified elsewhere in the plans.

The reinforcing steel shall conform to Section 1010 of the Specifications. The Contractor shall be in conformance with the construction requirements of Section 480.3 of the Specifications.

When lapping of reinforcing steel is necessary, the No. 3 rebar shall be lapped 12".

The reinforced concrete sidewalk shall conform to the requirements of Section 651 of the Specifications.

All costs for constructing the reinforced concrete sidewalk including labor, equipment, tools, backfilling, furnishing and placing materials, including granular cushion, reinforcing steel, preformed expansion joint filler, and incidentals shall be included in the contract unit price per square foot for the corresponding reinforced concrete sidewalk bid item.

June 26, 2015

Published Date: 4th Qtr. 2015	SDDOT	REINFORCED CONCRETE SIDEWALK ADJACENT TO PRECAST CONCRETE TYPE S DROP INLET LID	PLATE NUMBER 651.70
			Sheet 1 of 2

11-12-15 P:\12-117\AutoCAD\PlanSheets\0270\Section B\0270-DETL-STANDARD.dwg

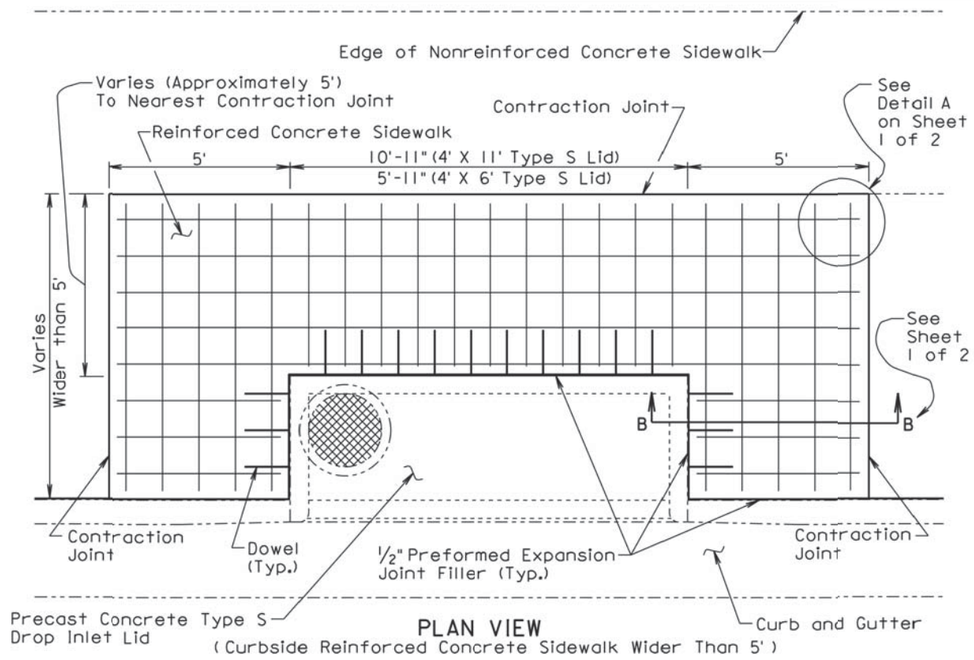

PLAN VIEW
(Curbside Reinforced Concrete Sidewalk Wider Than 5')

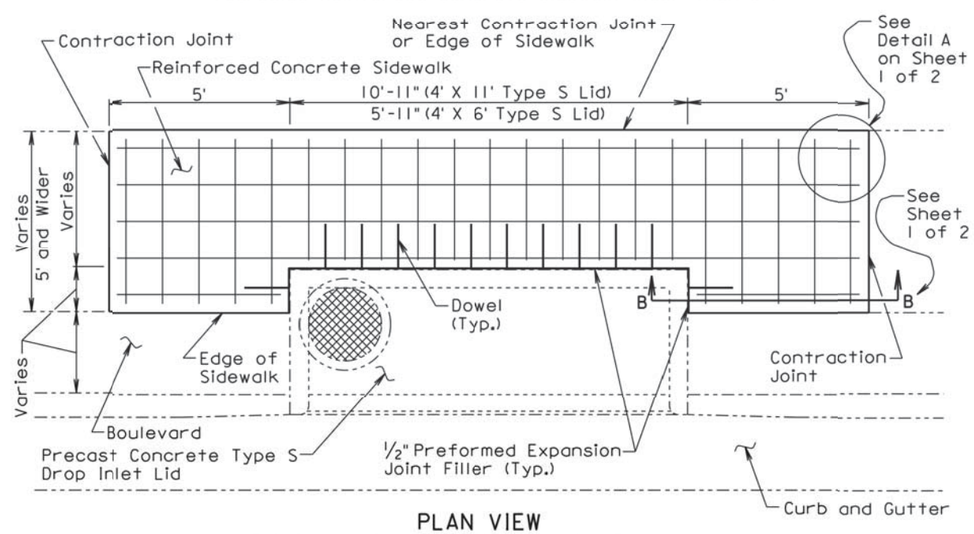

PLAN VIEW
(Reinforced Concrete Sidewalk With Boulevard)

June 26, 2015

Published Date: 4th Qtr. 2015	SDDOT	REINFORCED CONCRETE SIDEWALK ADJACENT TO PRECAST CONCRETE TYPE S DROP INLET LID	PLATE NUMBER 651.70 Sheet 2 of 2

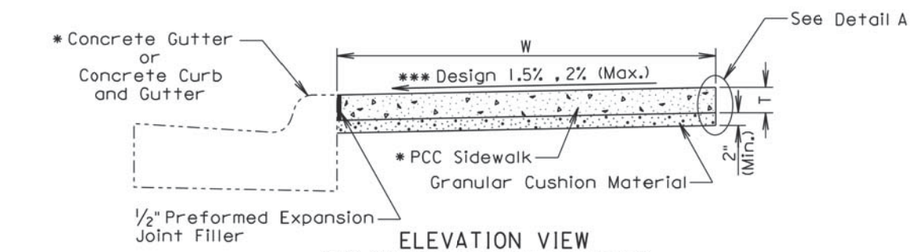

ELEVATION VIEW
(PCC Sidewalk without Boulevard)

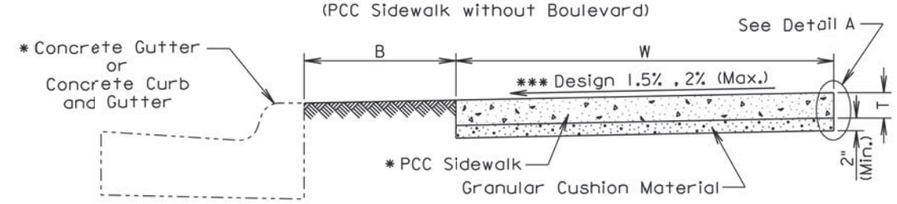

ELEVATION VIEW
(PCC Sidewalk with Boulevard)

B Width of boulevard as specified in the plans.
T Thickness of PCC sidewalk as specified in the plans.
W Width of PCC sidewalk as specified in the plans.
* Type as specified in the plans.

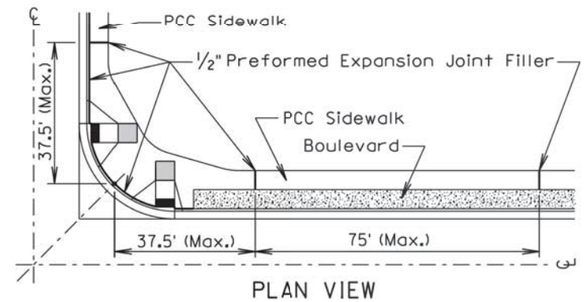

PLAN VIEW

GENERAL NOTES:

The PCC sidewalk shall be constructed in accordance with Section 651 of the Specifications.

*** The cross slope of the sidewalk is designed at 1.5% and the maximum slope allowed is 2% unless specified otherwise in the plans.

The maximum length between expansion joints in PCC sidewalk is 75 feet.

PCC sidewalk placed adjacent to intersection of roadways shall have an expansion joint placed transversely a maximum of 37.5 feet from the intersection. See PLAN VIEW.

An expansion joint in PCC sidewalk shall consist of a 1/2 inch thick preformed expansion joint filler material placed full depth and width of the PCC sidewalk.

** Large areas of PCC pavement adjacent to PCC sidewalk may require a different joint treatment than shown in the detail. If a different joint detail is necessary, plans will contain the joint detail and the Contractor shall construct the joint treatment in accordance with the plans.

September 6, 2015

Published Date: 4th Qtr. 2015	SDDOT	PCC SIDEWALK	PLATE NUMBER 651.75 Sheet 1 of 2

11-12-15 P:\12-117\AutoCAD\PlanSheets\027C\Section B\027C-DETL-STANDARD.dwg

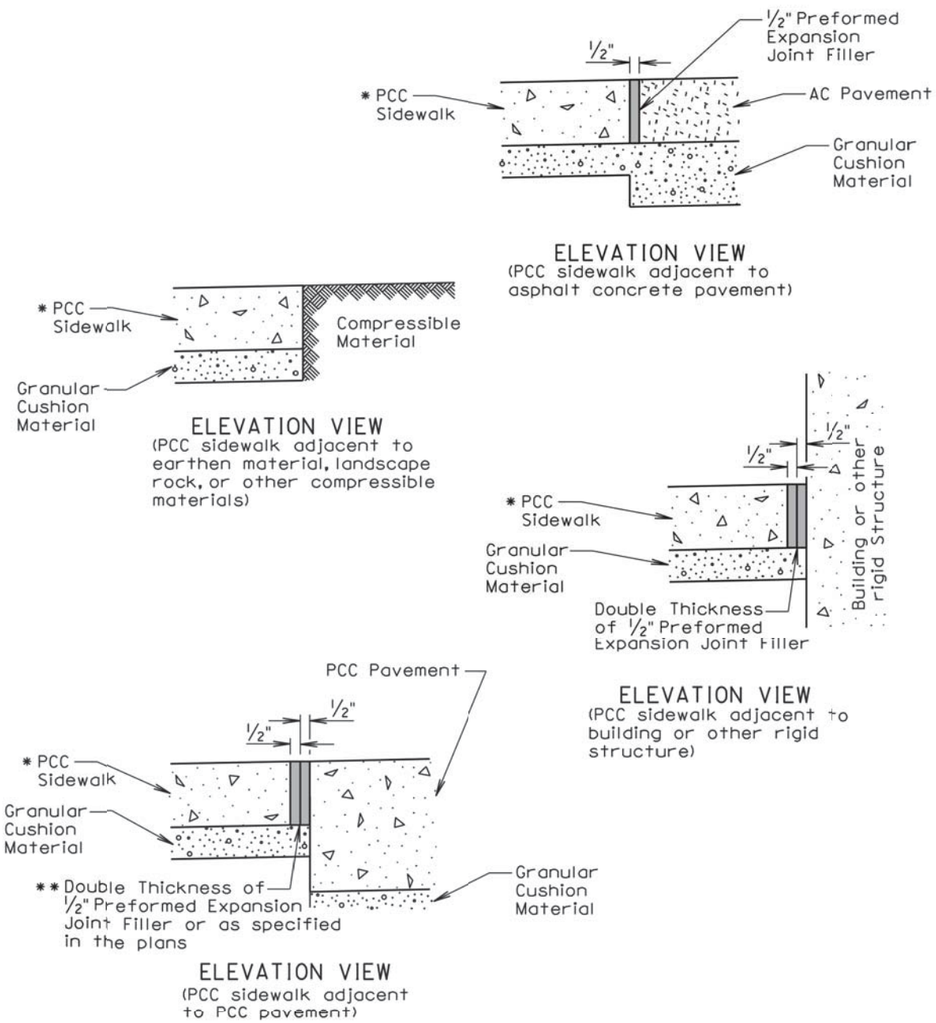

Detail A
(Use Appropriate Detail(s))

September 6, 2015

Published Date: 4th Qtr. 2015	SDDOT	PCC SIDEWALK	PLATE NUMBER 651.75
			Sheet 2 of 2

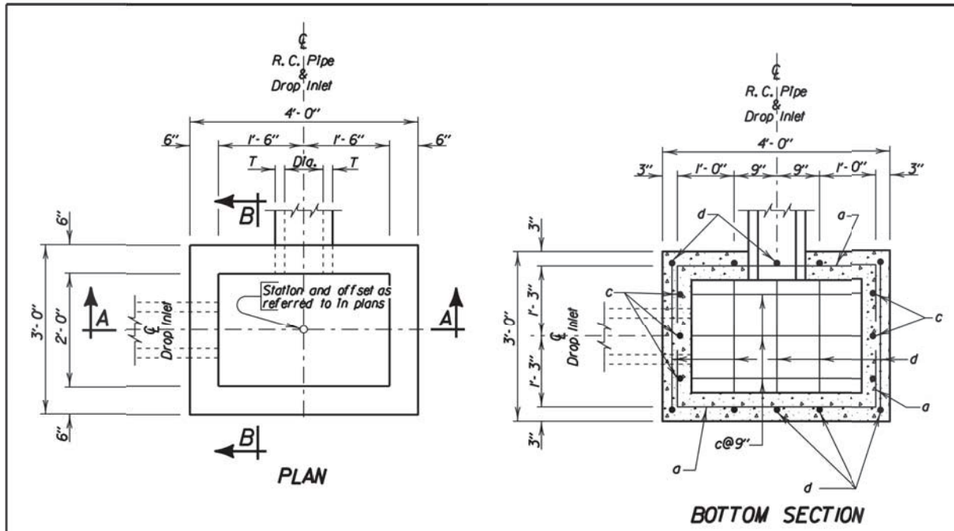

ESTIMATED QUANTITIES			
ITEM	UNIT	CONSTANT QUANTITY	VARIABLE QUANTITY
* Class M6 Concrete	Cu Yd	0.26	0.22H
Reinforcing Steel	Lb	37	20.04H
Frame and Grate Assembly	Each	1	———

PIPE DISPLACEMENT REDUCTIONS		
R.C. Pipe Diameter Inches	T Inches	Class M6 Concrete Cu Yd
12	2	0.03
15	2 1/4	0.04
18	2 1/2	0.05
24	3	0.09
27	3 1/4	0.11

DROP INLETS FOR 12" TO 27" DIAMETER PIPE

GENERAL NOTES:

* Reduce total quantities of concrete by the amount of concrete displaced by the pipe. The total quantity of concrete shall be computed to the nearest hundredth of a cubic yard. The total quantity of reinforcing steel shall be computed to the nearest pound.

Drop inlets shown may be modified by the addition or omission of connecting pipes as shown on the layouts.

Reinforcing steel shall conform to ASTM A615 Grade 60. The b bars shall be lapped 12 inches. Cut and bend reinforcing steel as required to place pipe(s) through the drop inlet wall.

Pipe shall not enter through a corner of the drop inlet.

Use 2" clear cover on all reinforcing steel unless otherwise noted.

Precasting of reinforced drop inlets will be permissible. Prior to precasting, the Contractor shall submit details to the Engineer for approval.

Maximum pipe diameter shall not exceed 18 inches on the 3 foot wide side and shall not exceed 27 inches on the 4 foot wide side of the drop inlet.

The dimension of H is in feet.

December 23, 2009

Published Date: 4th Qtr. 2015	SDDOT	2'X 3' TYPE B REINFORCED CONCRETE DROP INLET	PLATE NUMBER 670.01
			Sheet 1 of 2

11-12-15 P:\12-117\AutoCAD\PlanSheets\027C\Section BV027C-DETL-STANDARD.dwg

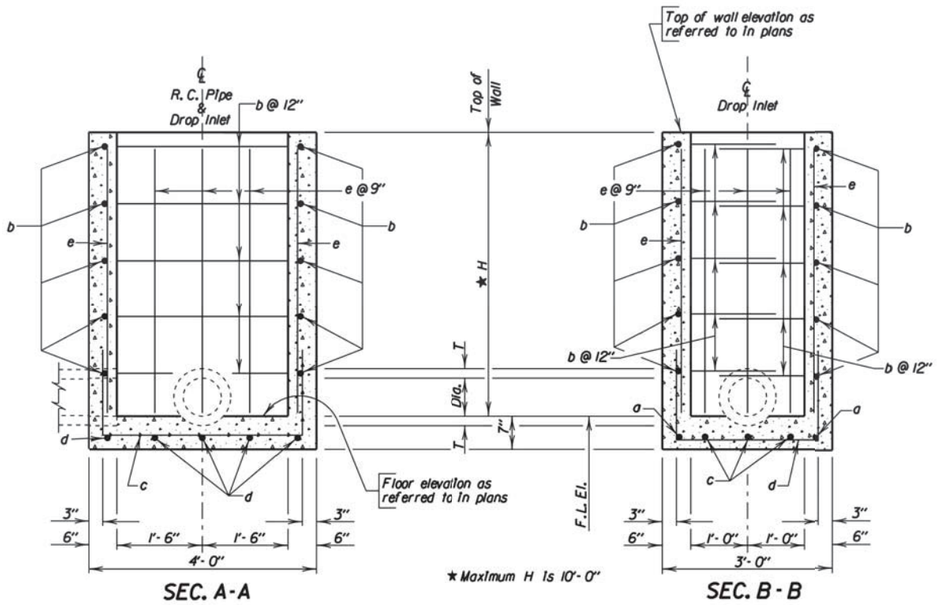

SEC. A-A

SEC. B-B

DROP INLETS FOR 12" TO 27" DIAMETER PIPE

REINFORCING SCHEDULE

MK.	No.	Size	Length	Type
a	2	4	5'- 6"	17
b	2H	4	7'- 0"	17
c	3	4	6'- 6"	17
d	5	4	5'- 6"	17
e	16	4	H - 2"	Str.

Bending Details

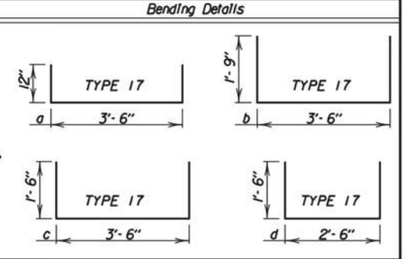

NOTE:
All dimensions are out to out of bars.

December 23, 2009

Published Date: 4th Qtr. 2015

SDDOT

2'X 3' TYPE B
REINFORCED CONCRETE DROP INLET

PLATE NUMBER 670.01

Sheet 2 of 2

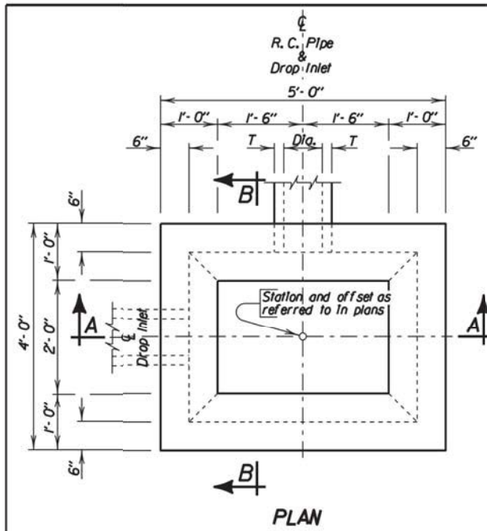

PLAN

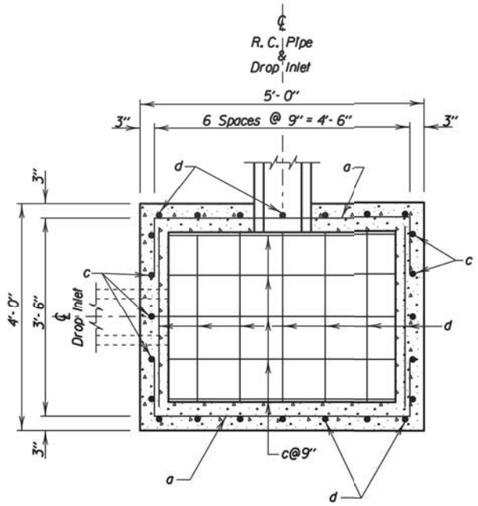

BOTTOM SECTION

PIPE DISPLACEMENT REDUCTIONS

R.C. Pipe Diameter Inches	T Inches	Class M6 Concrete Cu'd
12	2	0.03
15	2 1/4	0.04
18	2 1/2	0.05
24	3	0.09
30	3 1/2	0.14
36	4	0.20

ESTIMATED QUANTITIES

ITEM	UNIT	CONSTANT QUANTITY	VARIABLE QUANTITY
✳ Class M6 Concrete	Cu'd	0.72	0.30H
Reinforcing Steel	Lb	98	32.06H
Frame and Grate Assembly	Each	1	———

DROP INLETS FOR 12" TO 36" DIAMETER PIPE

GENERAL NOTES:

✳ Reduce total quantities of concrete by the amount of concrete displaced by the pipe. The total quantity of concrete shall be computed to the nearest hundredth of a cubic yard. The total quantity of reinforcing steel shall be computed to the nearest pound.

Drop inlets shown may be modified by the addition or omission of connecting pipes as shown on the layouts.

Reinforcing steel shall conform to ASTM A615 Grade 60. The b and f bars shall be lapped 12 inches. Cut and bend reinforcing steel as required to place pipe(s) through the drop inlet wall.

Pipe shall not enter through a corner of the drop inlet.

Use 2" clear cover on all reinforcing steel unless otherwise noted.

Precasting of reinforced drop inlets will be permissible. Prior to precasting, the Contractor shall submit details to the Engineer for approval.

Maximum pipe diameter shall not exceed 27 inches on the 4 foot wide side and shall not exceed 36 inches on the 5 foot wide side of the drop inlet.

The dimension of H is in feet.

December 23, 2009

Published Date: 4th Qtr. 2015

SDDOT

3'X 4' TYPE B
REINFORCED CONCRETE DROP INLET

PLATE NUMBER 670.02

Sheet 1 of 2

11-12-15 P:\12-117\AutoCAD\PlanSheets\027C\Section B\027C-DETL-STANDARD.dwg

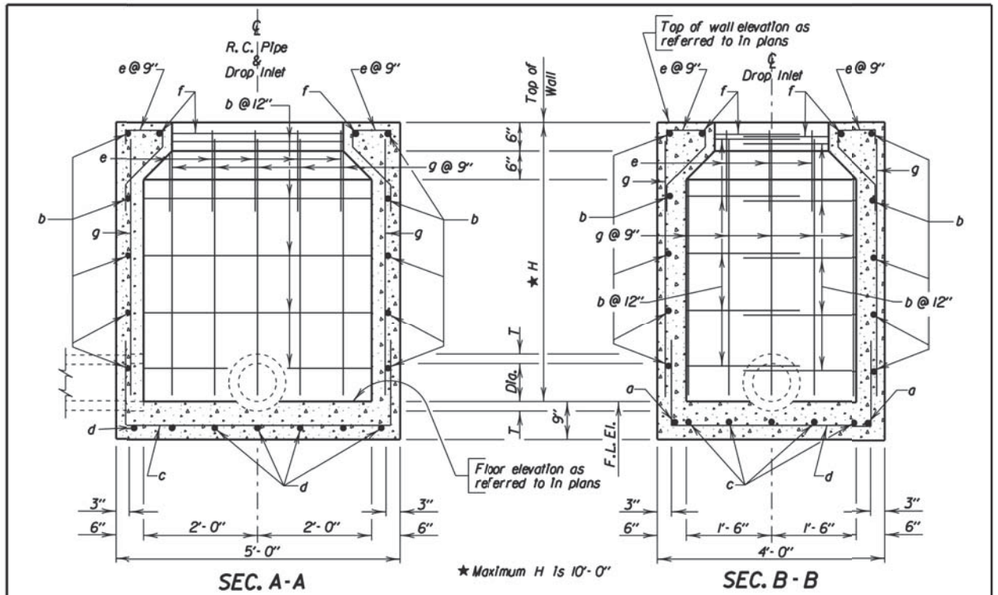

DROP INLETS FOR 12" TO 36" DIAMETER PIPE

REINFORCING SCHEDULE

MK.	No.	Size	Length	Type
a	2	4	6'- 6"	17
b	2H	4	9'- 0"	17
c	5	4	7'- 6"	17
d	7	4	6'- 6"	17
e	16	4	2'- 6"	16A
f	2	4	7'- 0"	17
g	24	4	H - 2"	Str.

NOTE:
All dimensions are out to out of bars.

Bending Details

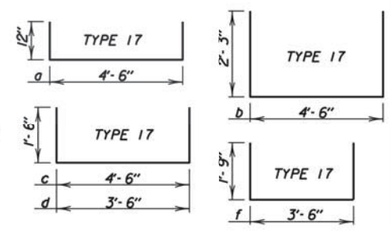

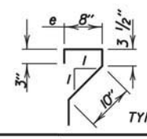

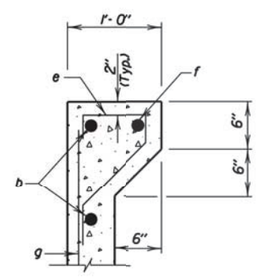

TYPICAL SEC. TOP OF WALL

December 23, 2009

Published Date: 4th Qtr. 2015

SDDOT

3'X 4' TYPE B
REINFORCED CONCRETE DROP INLET

PLATE NUMBER
670.02

Sheet 2 of 2

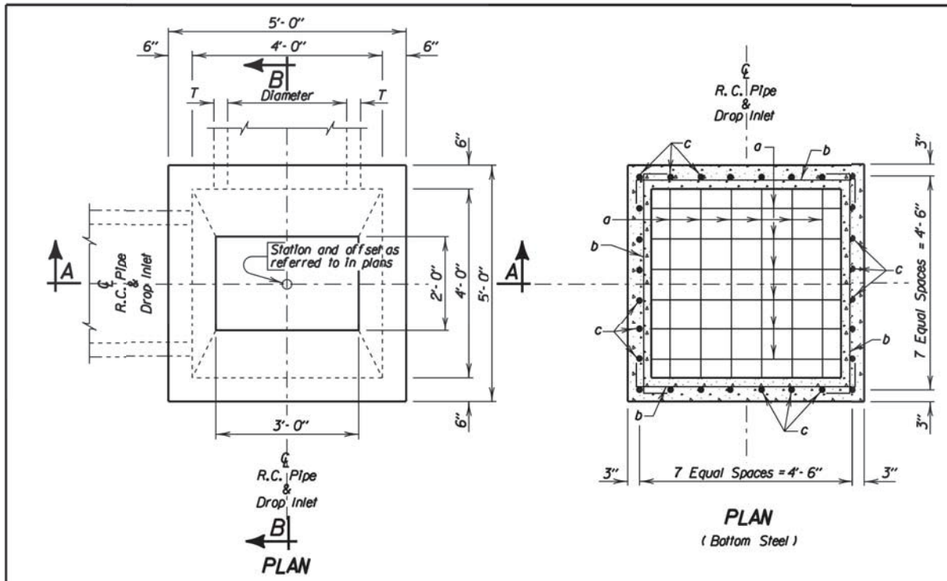

PIPE DISPLACEMENT REDUCTIONS

R.C. Pipe Diameter Inches	T Inches	Class M6 Concrete Cu'd
12	2	0.03
15	2 1/4	0.04
18	2 1/2	0.05
24	3	0.09
30	3 1/2	0.14
36	4	0.20

ESTIMATED QUANTITIES

ITEM	UNIT	CONSTANT QUANTITY	VARIABLE QUANTITY
✳ Class M6 Concrete	Cu'd	0.97	0.33H
Reinforcing Steel	Lb	207	43.90H
Frame and Grate Assembly	Each	1	——

DROP INLETS FOR 12" TO 36" DIAMETER PIPE

GENERAL NOTES:

✳ Reduce total quantities of concrete by the amount of concrete displaced by the pipe. The total quantity of concrete shall be computed to the nearest hundredth of a cubic yard. The total quantity of reinforcing steel shall be computed to the nearest pound.

Drop inlets shown may be modified by the addition or omission of connecting pipes as shown on the layouts.

Reinforcing steel shall conform to ASTM A615 Grade 60. Cut and bend reinforcing steel as required to place pipe(s) through the drop inlet wall.

Pipe shall not enter through a corner of the drop inlet.

Use 2" clear cover on all reinforcing steel unless otherwise noted.

Precasting of reinforced drop inlets will be permissible. Prior to precasting, the Contractor shall submit details to the Engineer for approval.

Maximum pipe diameter shall not exceed 36 inches.

The dimension of H is in feet.

December 23, 2009

Published Date: 4th Qtr. 2015

SDDOT

4'X 4' TYPE B
REINFORCED CONCRETE DROP INLET

PLATE NUMBER
670.04

Sheet 1 of 2

11-12-15 P:\12-117\AutoCAD\PlanSheets\027C\Section B\027C-DETL-STANDARD.dwg

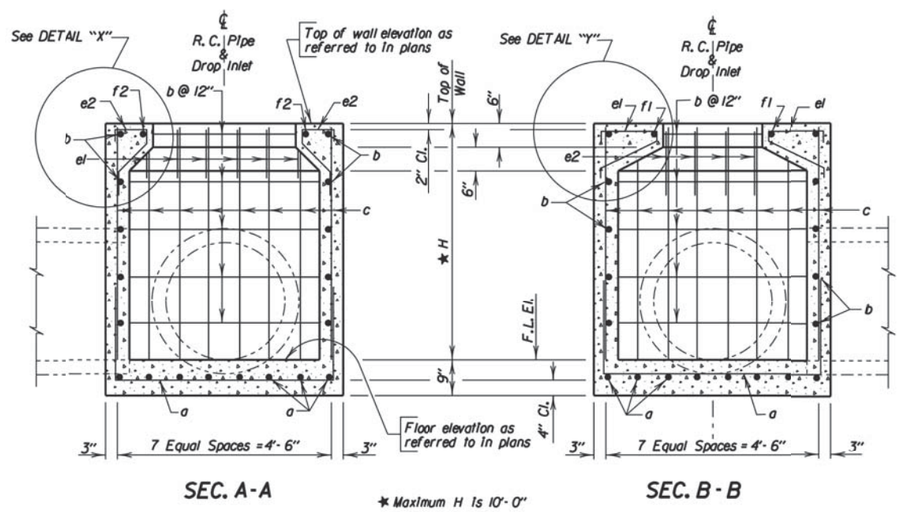

SEC. A-A

* Maximum H is 10'- 0"

SEC. B-B

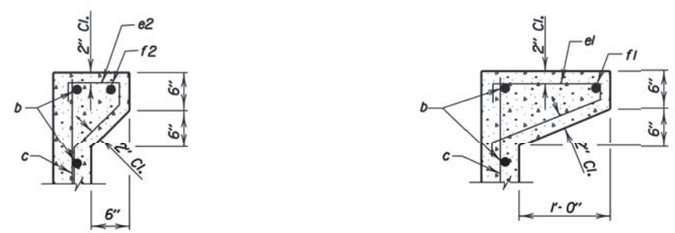

DETAIL "X"

DETAIL "Y"

DROP INLETS FOR 12" TO 36" DIAMETER PIPE

REINFORCING SCHEDULE

Mk.	No.	Size	Length	Type
a	16	5	8'- 0"	17
b	4H	4	5'- 6"	17
c	28	5	H- 2"	Str.
e1	12	5	3'- 3"	16A
e2	8	5	2'- 6"	16A
f1	2	5	4'- 6"	17
f2	2	5	3'- 6"	17

Bending Details

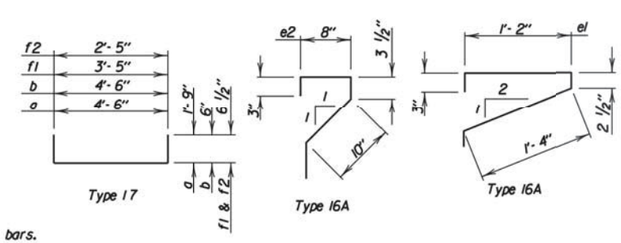

NOTE: All dimensions are out to out of bars.

December 23, 2009

Published Date: 4th Qtr. 2015

SDDOT

4' X 4' TYPE B
REINFORCED CONCRETE DROP INLET

PLATE NUMBER 670.04

Sheet 2 of 2

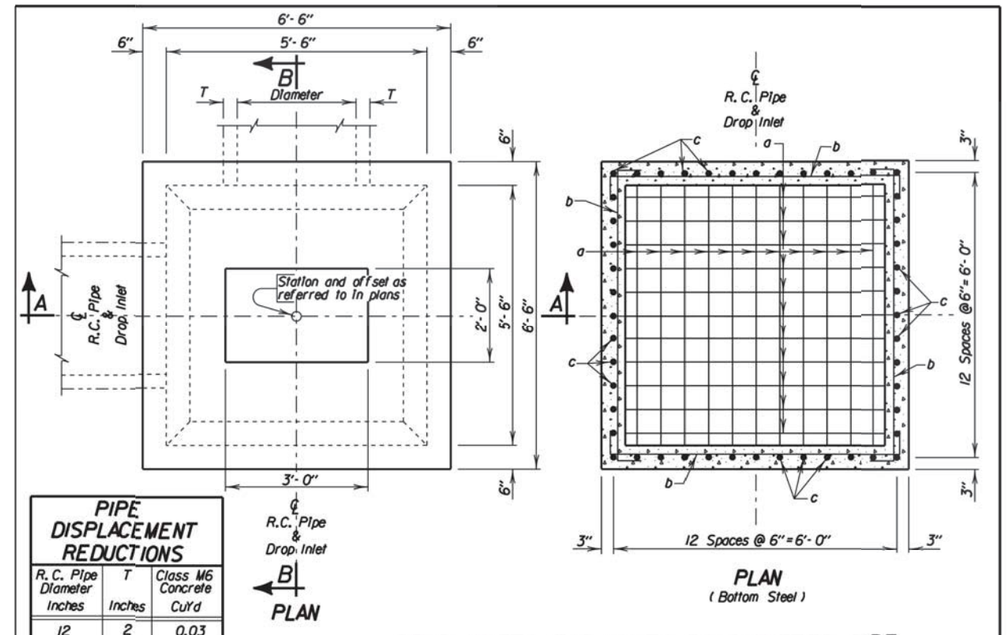

DROP INLETS FOR 12" TO 54" DIAMETER PIPE

PIPE DISPLACEMENT REDUCTIONS

R. C. Pipe Diameter Inches	T Inches	Class M6 Concrete Cu'd
12	2	0.03
15	2 1/4	0.04
18	2 1/2	0.05
24	3	0.09
30	3 1/2	0.14
36	4	0.20
42	4 1/2	0.26
48	5	0.34
54	5 1/2	0.43

ESTIMATED QUANTITIES

ITEM	UNIT	CONSTANT QUANTITY	VARIABLE QUANTITY
* Class M6 Concrete	Cu'd	2.13	0.44H
Reinforcing Steel	Lb	828	90.80H
Frame and Grate Assembly	Each	1	——

GENERAL NOTES:

* Reduce total quantities of concrete by the amount of concrete displaced by the pipe. The total quantity of concrete shall be computed to the nearest hundredth of a cubic yard. The total quantity of reinforcing steel shall be computed to the nearest pound.

Drop inlets shown may be modified by the addition or omission of connecting pipes as shown on the layouts.

Reinforcing steel shall conform to ASTM A615 Grade 60. Cut and bend reinforcing steel as required to place pipe(s) through the drop inlet wall.

Pipe shall not enter through a corner of the drop inlet.

Use 2" clear cover on all reinforcing steel unless otherwise noted.

Precasting of reinforced drop inlets will be permissible. Prior to precasting, the Contractor shall submit details to the Engineer for approval.

Maximum pipe diameter shall not exceed 54 inches.

Before the top slab is placed, grout shall be applied to all bearing surfaces.

The dimension of H is in feet.

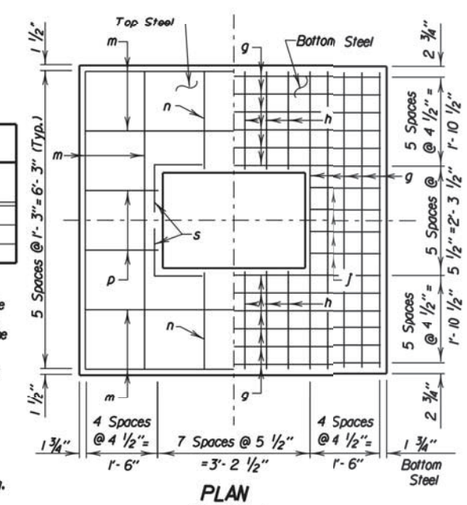

December 23, 2009

Published Date: 4th Qtr. 2015

SDDOT

5.5' X 5.5' TYPE B
REINFORCED CONCRETE DROP INLET

PLATE NUMBER 670.06

Sheet 1 of 2

11-12-15 P:\12-117\AutoCAD\PlanSheets\0270\Section B\0270-DETL-STANDARD.dwg

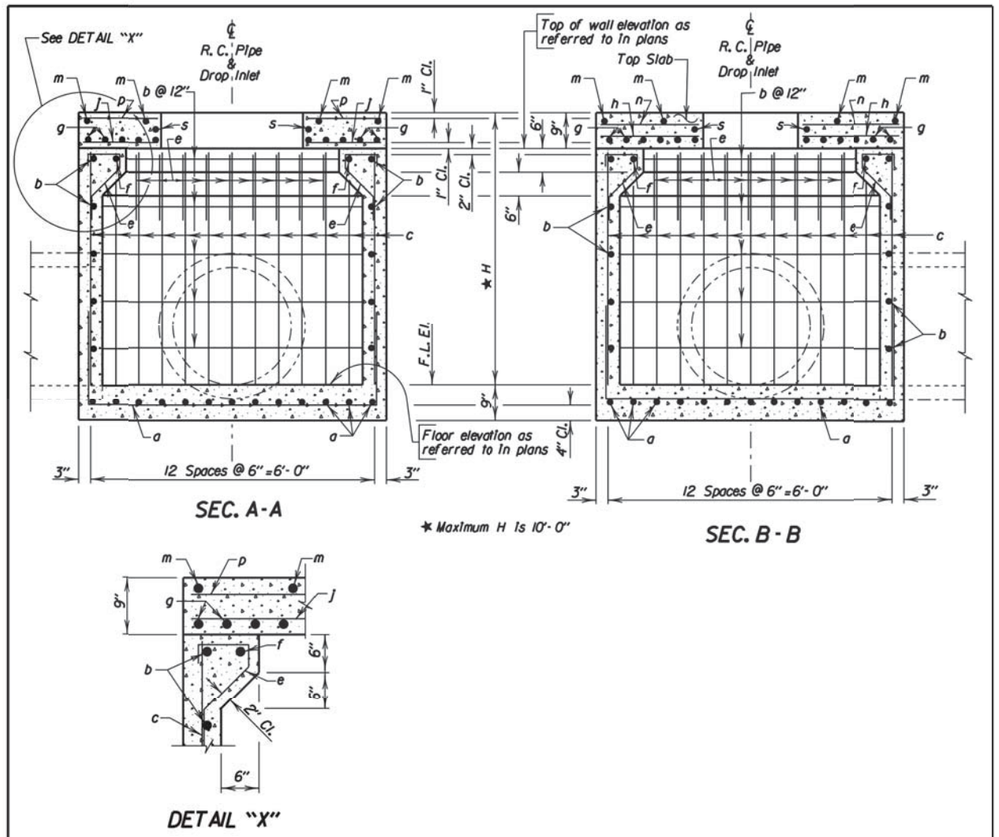

DROP INLETS FOR 12" TO 54" DIAMETER PIPE

REINFORCING SCHEDULE

Mk.	No.	Size	Length	Type
a	26	6	10'-0"	17
b	4(H-1)	4	7'-0"	17
c	48	6	H-11"	Str.
e	36	5	2'-6"	16A
f	4	5	6'-0"	17
g	22	7	6'-3"	Str.
h	12	7	2'-0"	Str.
j	8	7	1'-6"	Str.
m	8	4	6'-3"	Str.
n	4	4	2'-0"	Str.
p	4	4	1'-6"	Str.
s	4	4	2'-0"	17A

Bending Details

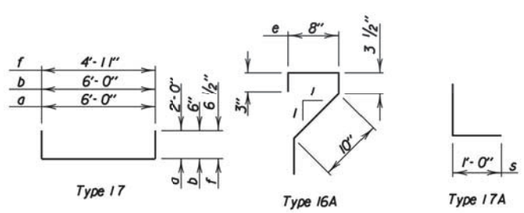

NOTE: All dimensions are out to out of bars.

December 23, 2009

Published Date: 4th Qtr. 2015

SDDOT

5.5' X 5.5' TYPE B REINFORCED CONCRETE DROP INLET

PLATE NUMBER 670.06

Sheet 2 of 2

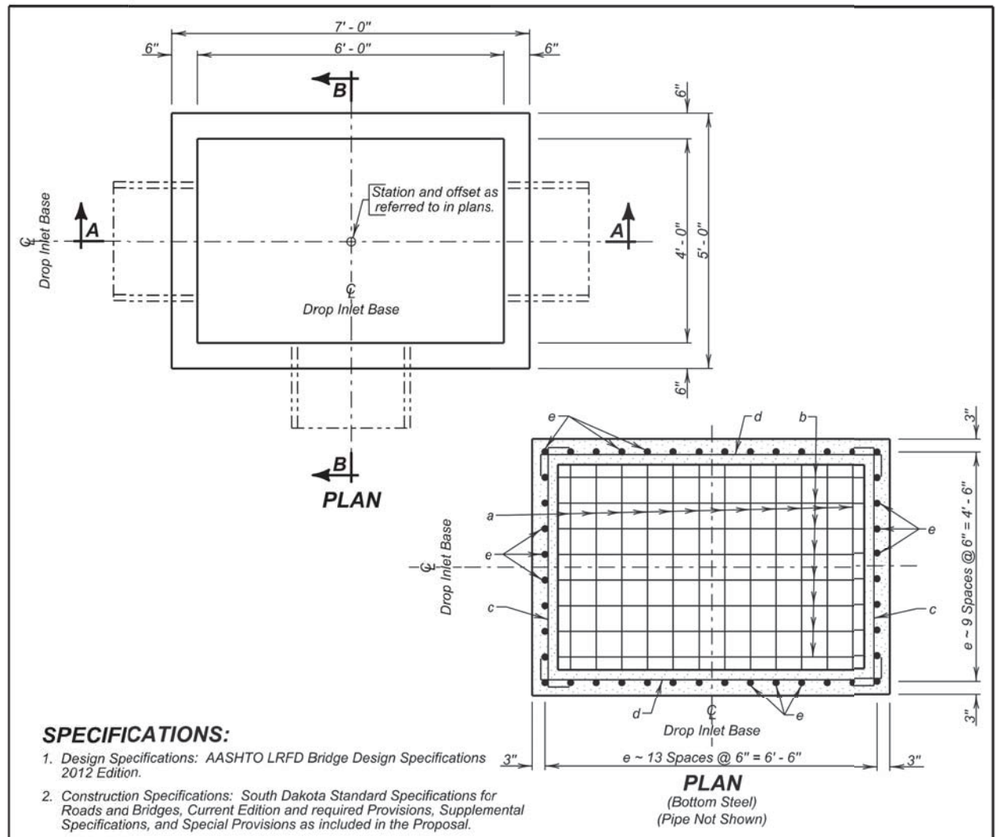

SPECIFICATIONS:

1. Design Specifications: AASHTO LRFD Bridge Design Specifications 2012 Edition.
2. Construction Specifications: South Dakota Standard Specifications for Roads and Bridges, Current Edition and required Provisions, Supplemental Specifications, and Special Provisions as included in the Proposal.

GENERAL NOTES:

1. Design Live Load: HL-93 loading. No construction loading in excess of legal load was considered.
2. Base is intended for use with a Precast Concrete Type S Drop Inlet Lid, Standard Plate 670.38. Base may be precast. If precast base used, and details differ from that shown, the precast base must be on the current approved list. The current approved list is available through proper channels from the SDDOT Office of Bridge Design.
3. To qualify for addition to the approved list, submit a checked design, by South Dakota Registered Professional Engineers and shop plans to the Office of Bridge Design for approval. Design shall be in accordance with the current edition of the AASHTO LRFD Bridge Design Specifications.
4. * Reduce total quantities of concrete by the amount of concrete displaced by the pipe. The total quantity of concrete shall be computed to the nearest hundredth of a cubic yard. The total quantity of reinforcing steel shall be computed to the nearest pound.
5. Inlets shown may be modified by the addition or omission of connecting pipes as shown on the layouts. Connecting pipes shall not enter the inlet through the corners.
6. Maximum R.C.P. diameter shall not exceed 36 inches (30 inches for R.C. Arch) on the 4-foot wide side and shall not exceed 54 inches (48 inches for R.C. Arch) on the 6-foot wide side of the Drop Inlet.
7. Reinforcing steel shall conform to ASTM A615 Grade 60. Cut and bend reinforcing steel as required to place pipe(s) through the inlet wall.
8. Use 1 inch clear cover on all reinforcing steel unless otherwise noted.
9. The dimension of H is in feet. Maximum H is 8 feet.

June 26, 2015

Published Date: 4th Qtr. 2015

SDDOT

4' X 6' TYPE S DROP INLET BASE

PLATE NUMBER 670.30

Sheet 1 of 2

11-12-15 P:\12-117\AutoCAD\PlanSheets\027C\Section B\027C-DETL-STANDARD.dwg

PIPE DISPLACEMENT REDUCTIONS

	Diameter (Inches)	Wall T (Inches)	Class M6 Concrete (Cu. Yd.)
R.C.P.	12	2	0.03
	15	2 ¼	0.04
	18	2 ½	0.05
	24	3	0.09
	30	3 ½	0.14
	36	4	0.20
	42	4 ½	0.26
	48	5	0.34
	54	5 ½	0.43
R.C. ARCH	18	2 ½	0.05
	24	3 ½	0.09
	30	4	0.14
	36	4 ½	0.19
	42	4 ½	0.24
	48	5	0.32

REINFORCING SCHEDULE

Mk.	No.	Size	Length	Type
a	14	5	9' - 6"	17
b	10	5	11' - 6"	17
c	2H	4	5' - 6"	17
d	2H	4	7' - 6"	17
e	44	4	H - 2"	Str.

Bending Details

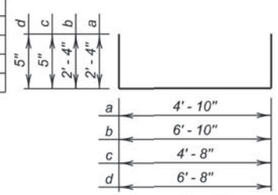

Type 17

NOTE:
All dimensions are out to out of bars

ESTIMATED QUANTITIES

ITEM	UNIT	CONSTANT QUANTITY	VARIABLE QUANTITY
* Class M6 Concrete	Cu.Yd.	0.97	0.41H
Reinforcing Steel	Lb.	253.77	46.76H

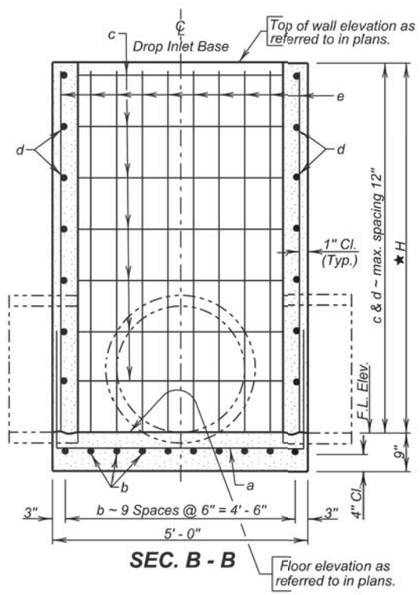

SEC. B - B

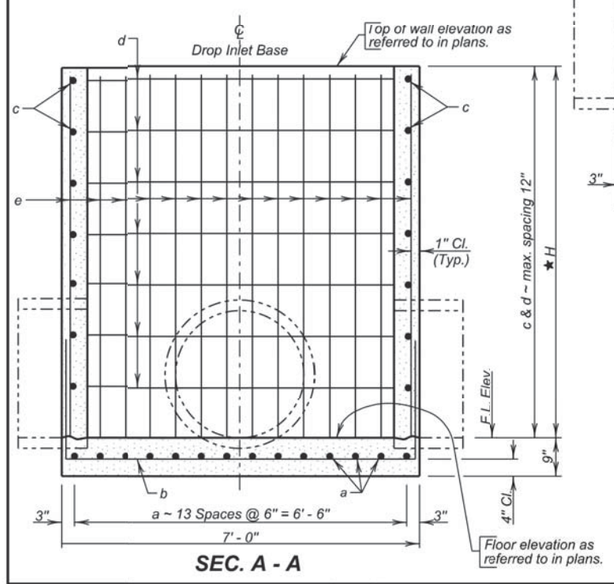

SEC. A - A

★ Maximum H is 8' - 0"

June 26, 2015

Published Date: 4th Qtr. 2015	SDDOT	4' X 6' TYPE S DROP INLET BASE	PLATE NUMBER 670.30
			Sheet 2 of 2

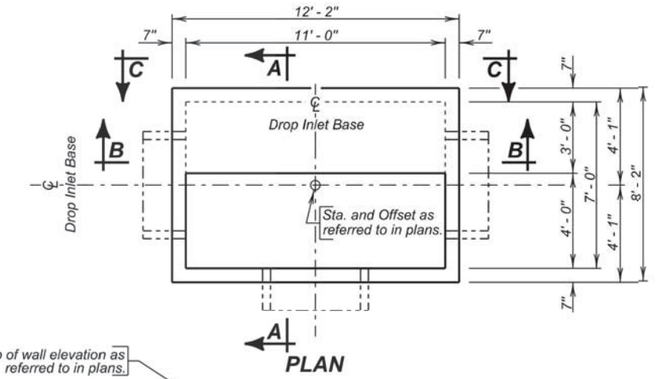

PLAN

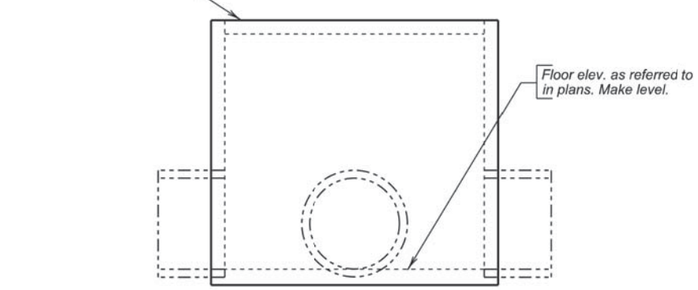

ELEVATION

SPECIFICATIONS:

1. Design Specifications: AASHTO LRFD Bridge Design Specifications, 2012 Edition.
2. Construction Specifications: South Dakota Standard Specifications for Roads and Bridges, Current Edition and required Provisions, Supplemental Specifications, and Special Provisions as included in the Proposal.

GENERAL NOTES:

1. Design Live Load: HL-93 loading. No construction loading in excess of legal load was considered.
2. Base is intended for use with a Precast Concrete Type S Drop Inlet Lid, Standard Plate 670.40. Base may be precast. If precast base used, and details differ from that shown, the precast base must be on the current approved list. The current approved list is available through proper channels from the SDDOT Office of Bridge Design.
3. To qualify for addition to the approved list, submit a checked design, by South Dakota Registered Professional Engineers and shop plans to the Office of Bridge Design for approval. Design shall be in accordance with the current edition of the AASHTO LRFD Bridge Design Specifications.
4. * Reduce total quantities of concrete by the amount of concrete displaced by the pipe. The total quantity of concrete shall be computed to the nearest hundredth of a cubic yard. The total quantity of reinforcing steel shall be computed to the nearest pound.
5. Inlets shown may be modified by the addition or omission of connecting pipes as shown on the layouts. Connecting pipes shall not enter the inlet through the corners.
6. Maximum R.C.P. diameter shall not exceed 66 inches (54 inches for R.C. Arch) on the 7-foot wide side of the Drop Inlet.
7. Reinforcing steel shall conform to ASTM A615 Grade 60. Cut and bend reinforcing steel as required to place pipe(s) through the inlet wall.
8. Use 1 inch clear cover on all reinforcing steel unless otherwise noted.
9. The dimension of H is in feet. Maximum H is 10 feet.

June 26, 2015

Published Date: 4th Qtr. 2015	SDDOT	7' X 11' TYPE S DROP INLET BASE	PLATE NUMBER 670.34
			Sheet 1 of 4

11-12-15 P:\12-117\AutoCAD\PlanSheets\0270\Section B\027C-DETL-STANDARD.dwg

FOR BIDDING PURPOSES ONLY

STATE OF SOUTH DAKOTA	PROJECT	SHEET	TOTAL SHEETS
	NH0016(79)67	B126	B135

PLOTTING DATE: 11-12-15

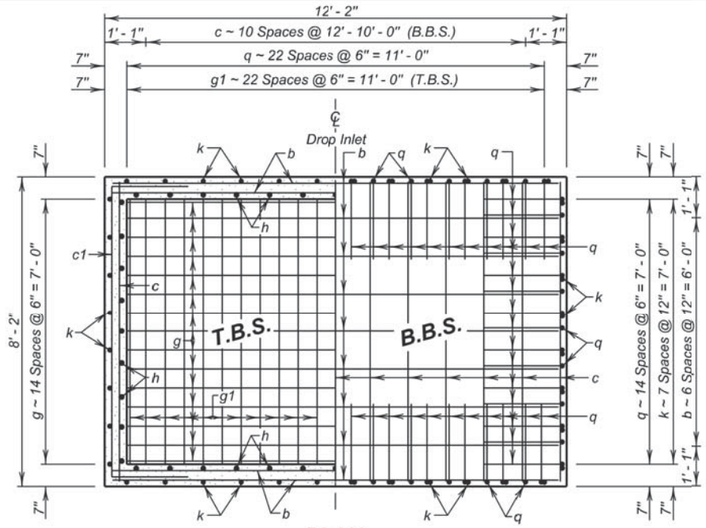

PLAN
(Bottom Slab)
(Pipe Not Shown)

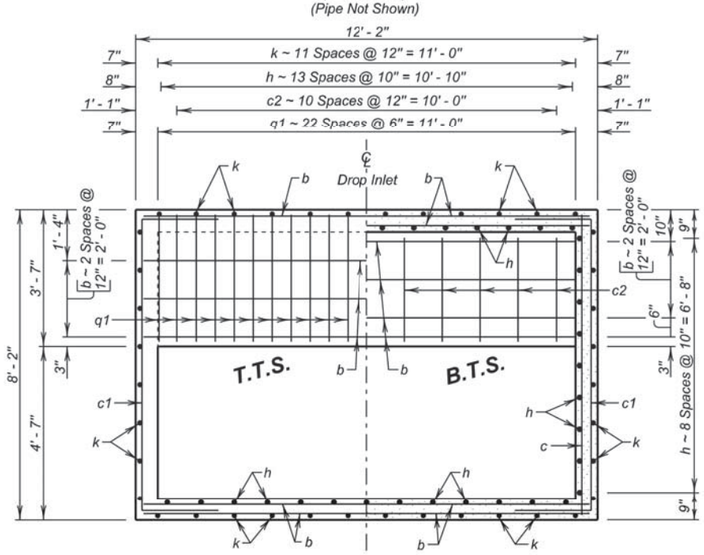

PLAN
(Top Slab)
(Pipe Not Shown)

LEGEND FOR PLACING RE-STEEL
T.T.S. - Top of Top Slab
B.T.S. - Bottom of Top Slab
T.B.S. - Top of Bottom Slab
B.B.S. - Bottom of Bottom Slab

June 26, 2015

Published Date: 4th Qtr. 2015

SDDOT

7' X 11' TYPE S DROP INLET BASE

PLATE NUMBER 670.34

Sheet 2 of 4

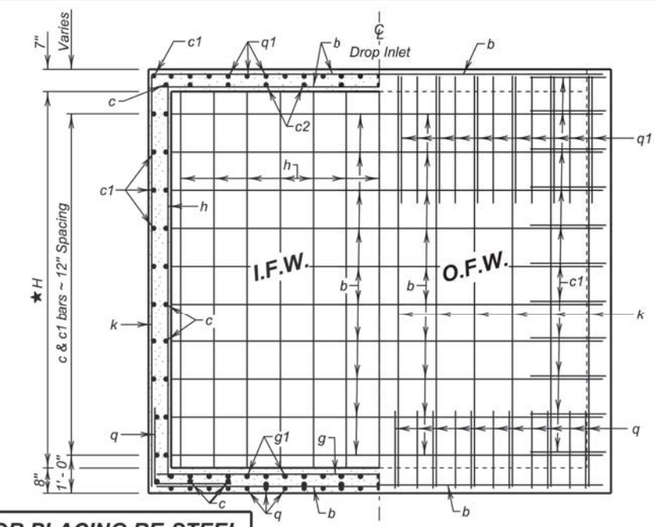

LEGEND FOR PLACING RE-STEEL
O.F.W. - Outside Face of Wall
I.F.W. - Inside Face of Wall

VIEW C - C
(Pipe Not Shown)

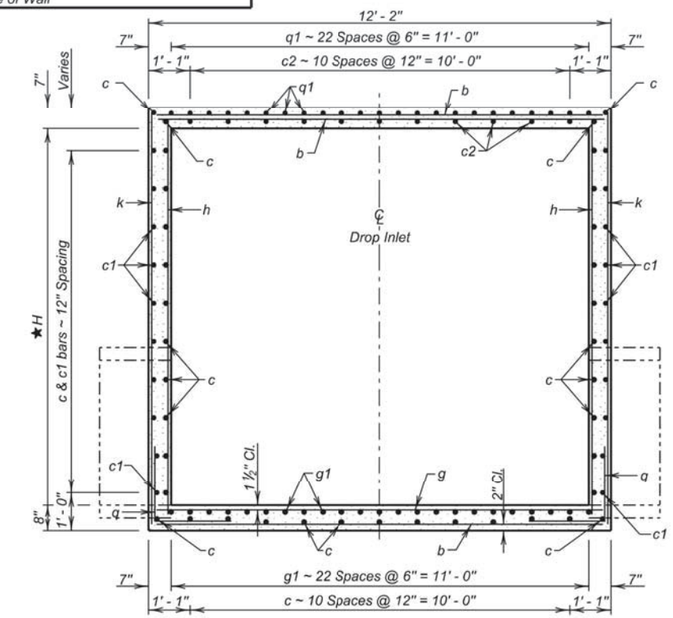

SEC. B - B

★ Maximum H is 10' - 0"

June 26, 2015

Published Date: 4th Qtr. 2015

SDDOT

7' X 11' TYPE S DROP INLET BASE

PLATE NUMBER 670.34

Sheet 3 of 4

11-12-15 P:\12-117\AutoCAD\PlanSheets\027C\Section B\027C-DETL-STANDARD.dwg

FOR BIDDING PURPOSES ONLY

STATE OF SOUTH DAKOTA	PROJECT	SHEET	TOTAL SHEETS
	NH0016(79)67	B127	B135

PLOTTING DATE: 11-12-15

REINFORCING SCHEDULE

Mk.	No.	Size	Length	Type
b	19 + 4H	4	11' - 9"	Str.
c	15 + 2H	4	7' - 9"	Str.
c1	2 + 2H	4	11' - 10"	17
c2	11	4	2' - 10"	Str.
g	15	5	11' - 9"	Str.
g1	23	5	7' - 9"	Str.
h	46	5	H + 5"	Str.
k	40	5	H + 5"	Str.
q	76	5	5' - 6"	17A
q1	23	5	6' - 8"	17A

Bending Details

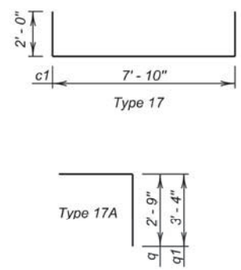

NOTE:
All dimensions are out to out of bars

ESTIMATED QUANTITIES

ITEM	UNIT	CONSTANT QUANTITY	VARIABLE QUANTITY
* Class M6 Concrete	Cu.Yd.	3.65	0.83H
Reinforcing Steel	Lb.	1266	147.26H

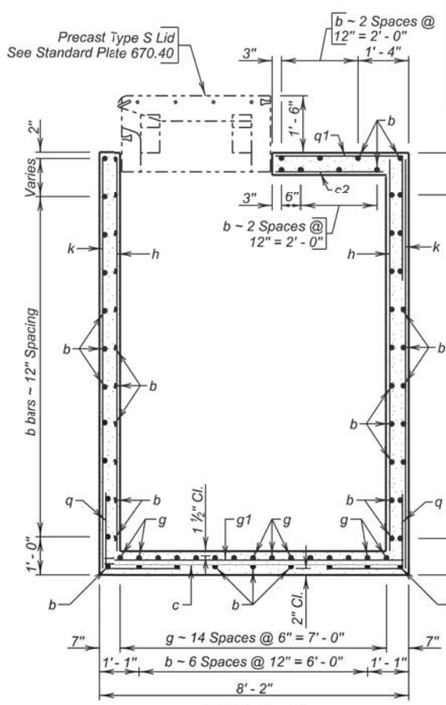

SEC. A - A
(Pipe Not Shown)

PIPE DISPLACEMENT REDUCTIONS

	Diameter (Inches)	Wall T (Inches)	Class M6 Concrete (Cu. Yd.)
R.C.P.	12	2	0.03
	15	2 ¼	0.04
	18	2 ½	0.06
	24	3	0.11
	30	3 ½	0.16
	36	4	0.23
	42	4 ½	0.31
	48	5	0.40
	54	5 ½	0.50
	60	6	0.61
R.C. ARCH	18	2 ½	0.06
	24	3 ½	0.11
	30	4	0.16
	36	4 ½	0.22
	42	4 ½	0.29
	48	5	0.37
	54	5 ½	0.46
	60	6	0.57
	72	7	0.82
	84	8	1.09

June 26, 2015

Published Date: 4th Qtr. 2015 | SDDOT | 7' X 11' TYPE S DROP INLET BASE | PLATE NUMBER 670.34 | Sheet 4 of 4

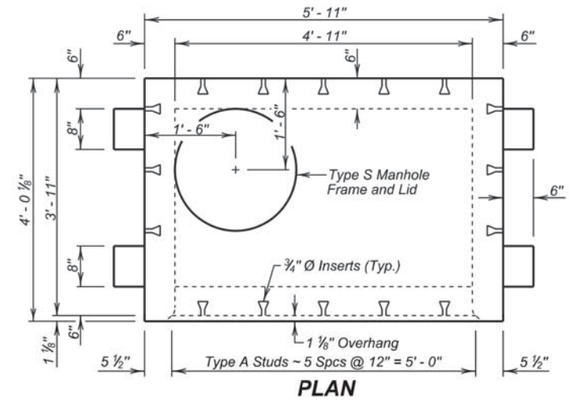

PLAN

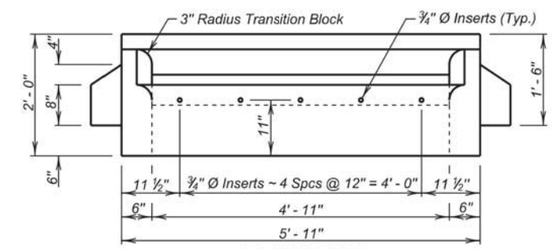

ELEVATION

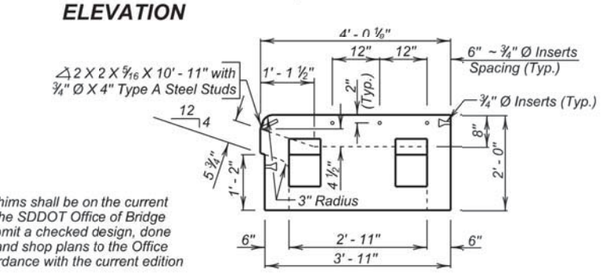

SIDE VIEW
(With Sidewalk Inserts)

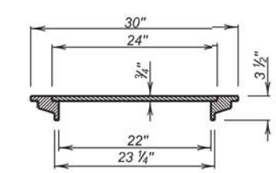

TYPICAL SECTION THROUGH TYPE S MANHOLE FRAME AND LID
(Weight 140 Lbs.)

December 23, 2012

GENERAL NOTES:

1. The Precast Concrete Type S Drop Inlet Lid and the shims shall be on the current approved list available through proper channels from the SDDOT Office of Bridge Design. To qualify for addition to the approved list, submit a checked design, done by South Dakota Registered Professional Engineers, and shop plans to the Office of Bridge Design for approval. Design shall be in accordance with the current edition of the AASHTO LRFD Bridge Design Specifications.
2. Design Live Load shall be HL - 93.
3. Concrete mix shall be as per fabricators design, however, minimum compressive strength shall not be less than 4500 psi. Type II Cement is required.
4. The Type S Manhole Frame and Lid shall conform to AASHTO M105, Class 30.
5. Structural Steel shall conform to ASTM A36. The ¾ inch diameter Headed Type A Steel Studs shall comform to Section 7 of the current edition of AWS D1. I Structural Steel Welding Code.
6. The ¾ inch diameter Concrete Inserts shall be galvanized or made of a corrosion resistant material. Provide ¾ inch diameter x 1' - 6" long dowels conforming to ASTM A615, Gr. 60 threaded to fit Inserts with each lid.
7. All costs associated with furnishing and installing the Precast Concrete Type S Drop Inlet Lid including the type S manhole frame and lid, shims, inserts, and dowels shall be included in the contract unit price per each for " 4' x 6' Precast Concrete Type S Drop Inlet Lid ".

Published Date: 4th Qtr. 2015 | SDDOT | 4' X 6' PRECAST CONCRETE TYPE S DROP INLET LID | PLATE NUMBER 670.38 | Sheet 1 of 1

11-12-15 P:\12-117\AutoCAD\PlanSheets\027C\Section B\027C-DETL-STANDARD.dwg

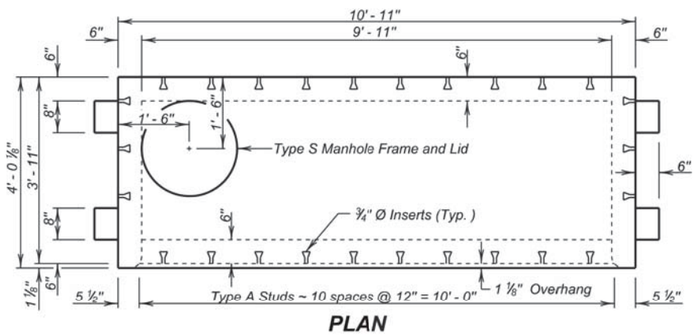

PLAN

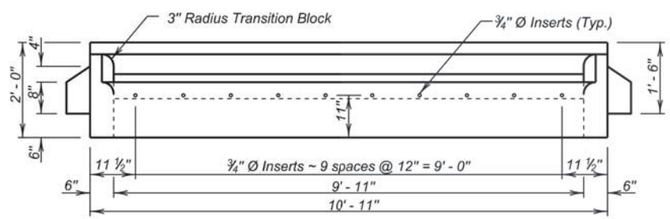

ELEVATION

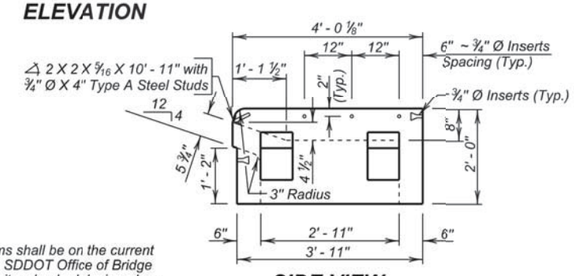

SIDE VIEW
(With Sidewalk Inserts)

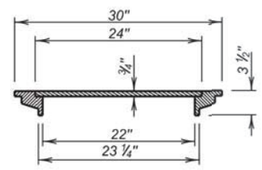

TYPICAL SECTION THROUGH TYPE S MANHOLE FRAME AND LID
(Weight 140 Lbs.)

GENERAL NOTES:

1. The Precast Concrete Type S Drop Inlet Lid and the shims shall be on the current approved list available through proper channels from the SDDOT Office of Bridge Design. To qualify for addition to the approved list, submit a checked design, done by South Dakota Registered Professional Engineers, and shop plans to the Office of Bridge Design for approval. Design shall be in accordance with the current edition of the AASHTO LRFD Bridge Design Specifications.
2. Design Live Load shall be HL - 93.
3. Concrete mix shall be as per fabricators design, however, minimum compressive strength shall not be less than 4500 psi. Type II Cement is required.
4. The Type S Manhole Frame and Lid shall conform to AASHTO M105, Class 30.
5. Structural Steel shall conform to ASTM A36. The ¾ inch diameter Headed Type A Steel Studs shall conform to Section 7 of the current edition of AWS D1. 1 Structural Steel Welding Code.
6. The ¾ inch diameter Concrete Inserts shall be galvanized or made of a corrosion resistant material. Provide ¾ inch diameter x 1' - 6" long dowels conforming to ASTM A615, Gr. 60 threaded to fit inserts with each lid.
7. All costs associated with furnishing and installing the Precast Concrete Type S Drop Inlet Lid including the type S manhole frame and lid, shims, inserts, and dowels shall be included in the contract unit price per each for " 4' x 11' Precast Concrete Type S Drop Inlet Lid ".

December 23, 2012

Published Date: 4th Qtr. 2015	SDDOT	4' X 11' PRECAST CONCRETE TYPE S DROP INLET LID	PLATE NUMBER 670.40
			Sheet 1 of 1

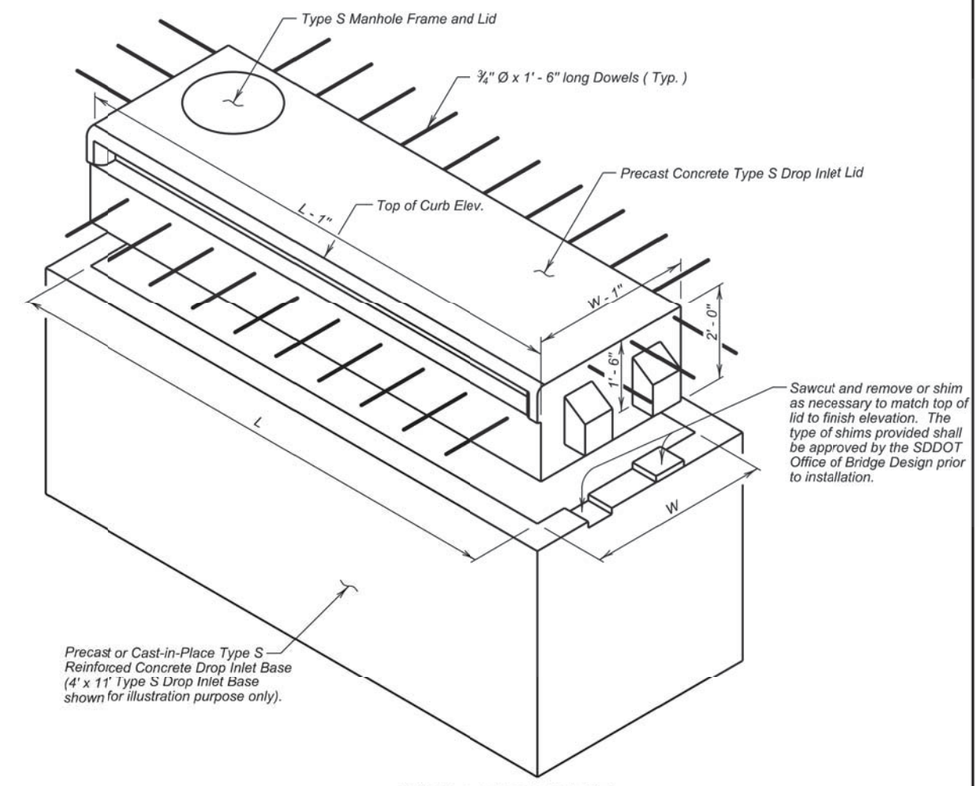

TYPE S DROP INLET

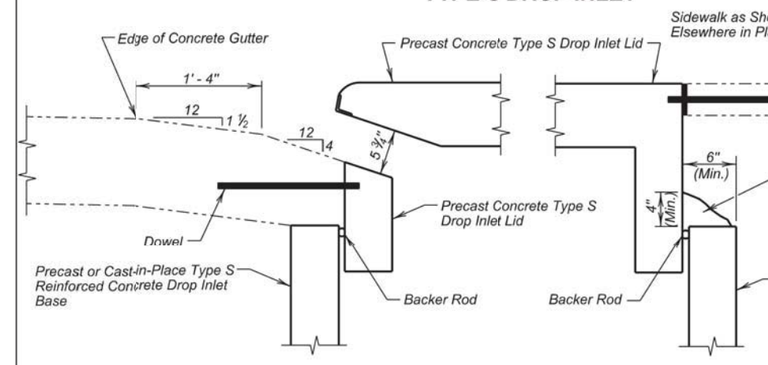

CONCRETE GUTTER DETAIL

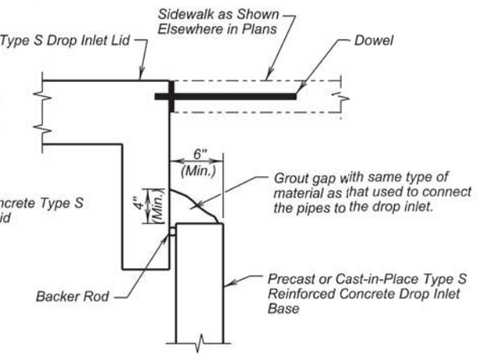

GROUTING DETAIL
(Sides and Back, Adjacent to Sidewalk)

December 23, 2012

Published Date: 4th Qtr. 2015	SDDOT	INSTALLATION DETAILS FOR PRECAST CONCRETE TYPE S DROP INLET LID	PLATE NUMBER 670.45
			Sheet 1 of 2

11-12-15 P:\12-117\AutoCAD\PlanSheets\027C\Section B\027C-DETL-STANDARD.dwg

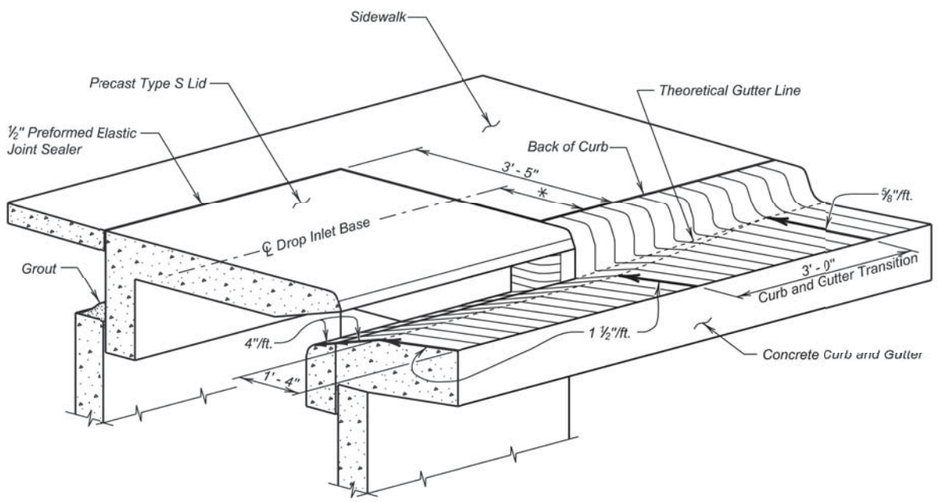

CURB AND GUTTER TRANSITION DETAILS

Drop Inlet Base Unit Size	* Distance
4' x 6'	1' - 5 ½"
4' x 11'	1' - 5 ½"
7' x 11'	2' - 11 ½"

GENERAL NOTES:

1. Dowels shall be used to anchor the precast concrete Type S drop inlet lid to the concrete gutter. See Standard Plate 670.38 or 670.40 as applicable. If there is sidewalk adjacent dowels shall be used to anchor the precast concrete Type S drop inlet lid to the sidewalk. If there is sidewalk adjacent to the drop inlet, the precast lid shall match the finish elevations and cross slopes of the sidewalk.
2. The sidewalk shall be steel reinforced when the sidewalk adjoins the precast lid. Refer to Standard Plate 651.70 for reinforced concrete sidewalk details.

December 23, 2012

Published Date: 4th Qtr. 2015	SDDOT	INSTALLATION DETAILS FOR PRECAST CONCRETE TYPE S DROP INLET LID	PLATE NUMBER 670.45 Sheet 2 of 2

GENERAL NOTE:

Top of grate elevation shall be 0.04' below theoretical elevation of gutter.

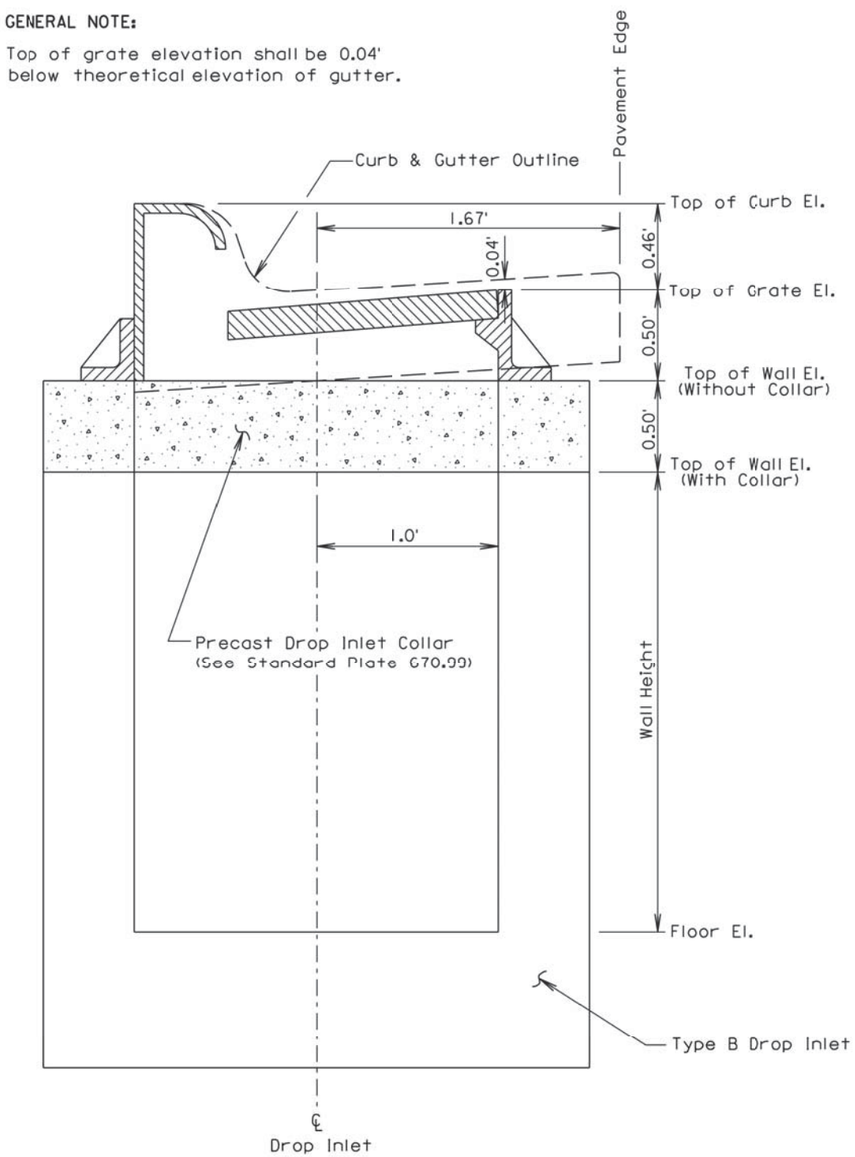

June 26, 2011

Published Date: 4th Qtr. 2015	SDDOT	INSTALLATION OF TYPE B DROP INLET	PLATE NUMBER 670.75 Sheet 1 of 1

11-12-15 P:\12-117\AutoCAD\PlanSheets\027C\Section B\027C-DETL-STANDARD.dwg

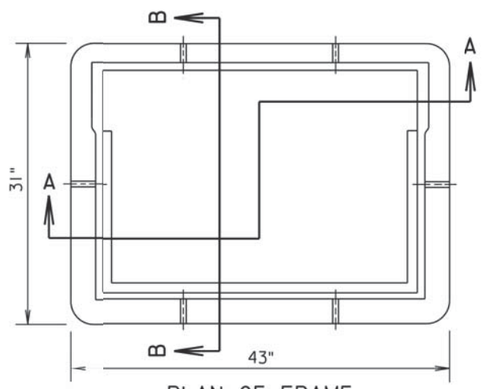

PLAN OF FRAME

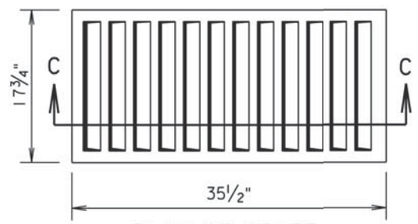

PLAN OF GRATE

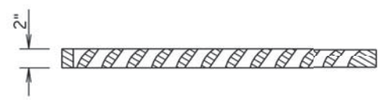

SECTION C-C

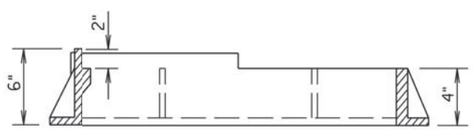

SECTION A-A

TOP VIEW OF CURB BOX

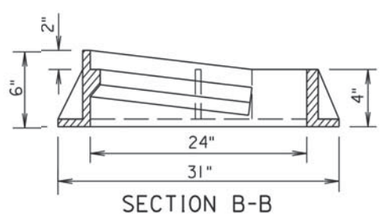

SECTION B-B

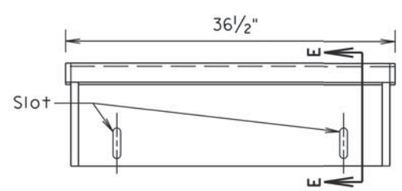

ELEVATION OF CURB BOX

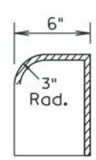

SECTION E-E

GENERAL NOTE:

Total weight of the assembly shall be 490 Lbs. minimum and the curb box shall be adjustable 6" to 9".

March 31, 2000

Published Date: 4th Qtr. 2015	SDDOT	TYPE B FRAME AND GRATE ASSEMBLY	PLATE NUMBER 670.80
			Sheet 1 of 1

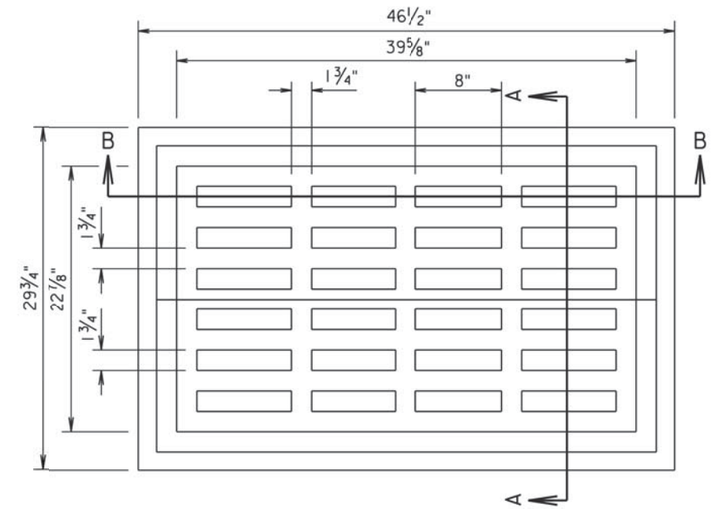

PLAN VIEW

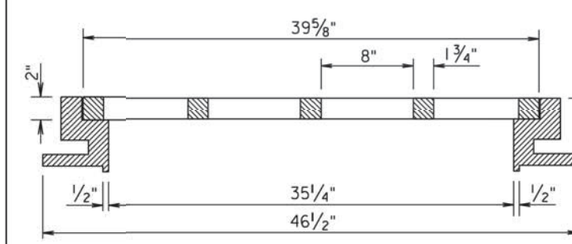

SECTION B-B

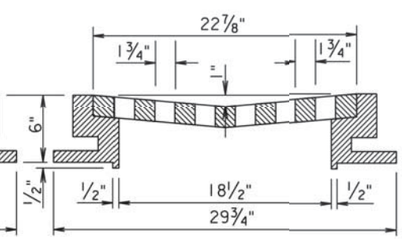

SECTION A-A

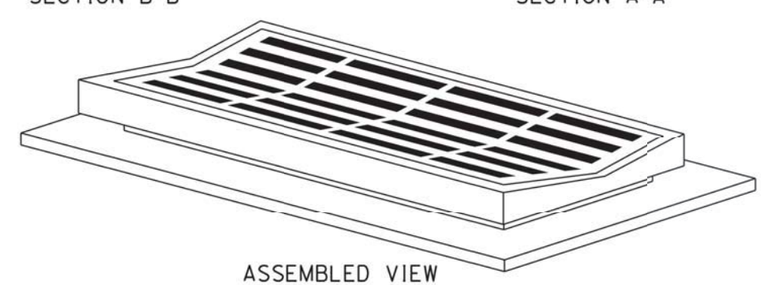

ASSEMBLED VIEW

GENERAL NOTES:

The total weight of frame and grate shall be 810 pounds minimum.
The Type E frame and grate is used typically with valley gutter.

April 9, 2006

Published Date: 4th Qtr. 2015	SDDOT	TYPE E FRAME AND GRATE	PLATE NUMBER 670.86
			Sheet 1 of 1

11-12-15 P:\12-117\AutoCAD\PlanSheets\027C\Section B\027C-DETL-STANDARD.dwg

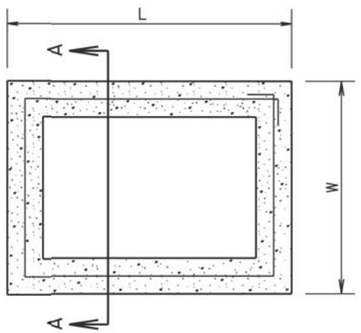

PLAN VIEW

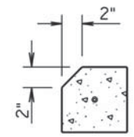

For Type D Drop Inlets only:
Use Precast Drop Inlet Collar with 2" chamfer on L sides only.

DETAIL B

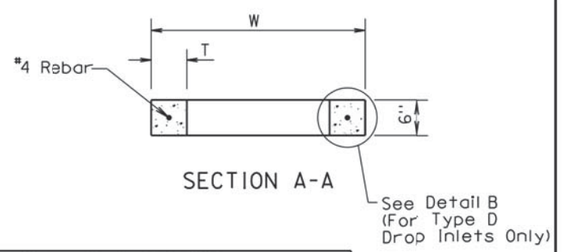

SECTION A-A

INFORMATIONAL QUANTITIES					
FRAME AND GRATE TYPE	L Ft-In	W Ft-In	T In	CLASS M6 CONCRETE CuYd	REINFORCING STEEL Lb
TYPE B	4'-0"	3'-0"	6	0.11	9
TYPE C	5'-0"	4'-0"	6	0.15	11
TYPE D	4'-0"	2'-6"	6	0.10	8

GENERAL NOTES:

All reinforcing steel shall conform to ASTM A615, Grade 60.

The ½" diameter bar shall lap 6" ± and shall be centered in the concrete.

The cost of furnishing and installing Precast Drop Inlet Collars, including labor, materials, and incidentals shall be incidental to the contract unit price per Each for "Precast Drop Inlet Collar".

March 31, 2000

Published Date: 4th Qtr. 2015	SDDOT	PRECAST DROP INLET COLLAR	PLATE NUMBER 670.99
			Sheet 1 of 1

11-12-15 P:\12-117\AutoCAD\PlanSheets\027C\Section B\027C-DETL-STANDARD.dwg

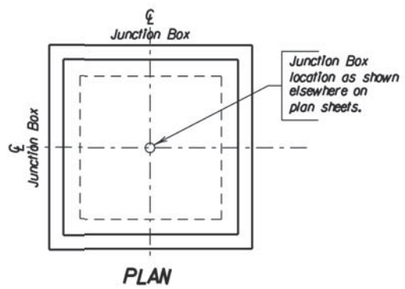

PLAN

SPECIFICATIONS

1. Design Specifications: AASHTO Specifications for Highway Bridges, 1996 Edition (Service Load).
2. Construction Specifications: South Dakota Standard Specifications for Roads and Bridges, Current Edition and required Provisions, Supplemental Specifications and/or Special Provisions as included in the Proposal.

DESIGN MIX OF CONCRETE

1. Mix shall be designed to produce a concrete having a minimum compressive strength of 4000 p.s.i. at 28 days.
2. Type II Cement is required.

GENERAL NOTES

1. Design Live Load: HS 20-44 and Alternate Loading. No construction loading in excess of legal Load was considered.
2. The design of the junction box is based on a maximum fill over the junction box of 5 feet.
3. Unit Stresses: Concrete fc = 1600 p.s.i.
   Reinforcing Steel fs = 24000 p.s.i.
4. All reinforcing steel shall conform to ASTM A615 Grade 60.
5. All exposed edges shall be chamfered ¾".
6. Use 1" clear cover on all reinforcing steel except as shown.
7. The cost of furnishing and installing the manhole steps shall be incidental to the contract unit price per Lb. for "Reinforcing steel".
8. Reinforcing steel shall be cut and bent in field as necessary to fit pipe and manhole openings. (Pipe openings are not shown in these details.) Number, size and location of pipes entering junction box are shown elsewhere on plan sheets.
9. All pipes entering the junction box must fit between the inside faces of the walls.

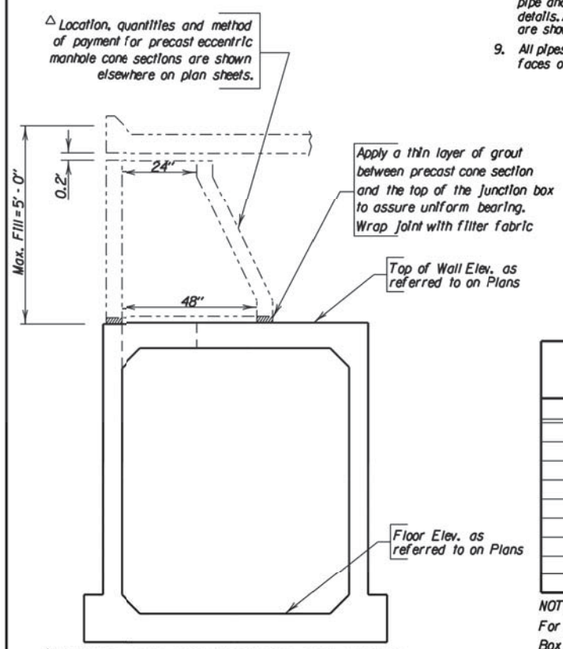

△ DETAIL OF CONNECTION BETWEEN PRECAST ECCENTRIC MANHOLE CONE SECTION AND JUNCTION BOX

ITEM	Class M6 Concrete	Reinforcing Steel
UNIT	Cu. Yd.	Lb.
H = 4' - 0"	5.53	1186
H = 4' - 6"	5.82	1215
H = 5' - 0"	6.10	1286
H = 5' - 6"	6.39	1316
H = 6' - 0"	6.67	1345
H = 6' - 6"	6.96	1416
H = 7' - 0"	7.24	1445
H = 7' - 6"	7.52	1475
H = 8' - 0"	7.81	1545

NOTE:
For informational purposes only, the estimated quantities for Junction Box height H are shown above. These quantities do not include quantity reduction for pipe openings, but do include the reduction for the 24" diameter manhole opening.

March 31, 2000

Published Date: 4th Qtr. 2015 | SDDOT | 6' X 6' JUNCTION BOX | PLATE NUMBER 671.02 | Sheet 1 of 3

REINFORCING SCHEDULE

	Mk.	No.	Size	Length	Type
H = 4' - 0"	Φa1	1	6	9' - 0"	T3
	Φa2	4	-	——	-
	h14	32	4	5' - 9"	17A
	k14	56	4	8' - 9"	17
	m2	22	6	7' - 9"	Str.
	n2	22	6	6' - 9"	Str.
	p2	56	4	6' - 0"	Str.
	q1	8	4	3' - 6"	17A
H = 4' - 6"	Φa1	1	6	9' - 0"	T3
	Φa2	4	-	——	-
	h15	32	4	6' - 3"	17A
	k15	56	4	9' - 3"	17
	m2	22	6	7' - 9"	Str.
	n2	22	6	6' - 9"	Str.
	p2	56	4	6' - 0"	Str.
	q1	8	4	3' - 6"	17A
H = 5' - 0"	Φa1	1	6	9' - 0"	T3
	Φa2	5	-	——	-
	h16	32	4	6' - 9"	17A
	k16	56	4	9' - 9"	17
	m2	22	6	7' - 9"	Str.
	n2	22	6	6' - 9"	Str.
	p2	64	4	6' - 0"	Str.
	q1	12	4	3' - 6"	17A
H = 5' - 6"	Φa1	1	6	9' - 0"	T3
	Φa2	5	-	——	-
	h17	32	4	7' - 3"	17A
	k17	56	4	10' - 3"	17
	m2	22	6	7' - 9"	Str.
	n2	22	6	6' - 9"	Str.
	p2	64	4	6' - 0"	Str.
	q1	12	4	3' - 6"	17A
H = 6' - 0"	Φa1	1	6	9' - 0"	T3
	Φa2	6	-	——	-
	h18	32	4	7' - 9"	17A
	k18	56	4	10' - 9"	17
	m2	22	6	7' - 9"	Str.
	n2	22	6	6' - 9"	Str.
	p2	64	4	6' - 0"	Str.
	q1	12	4	3' - 6"	17A
H = 6' - 6"	Φa1	1	6	9' - 0"	T3
	Φa2	6	-	——	-
	h19	32	4	8' - 3"	17A
	k19	56	4	11' - 3"	17
	m2	22	6	7' - 9"	Str.
	n2	22	6	6' - 9"	Str.
	p2	72	4	6' - 0"	Str.
	q1	16	4	3' - 6"	17A
H = 7' - 0"	Φa1	1	6	9' - 0"	T3
	Φa2	7	-	——	-
	h20	32	4	8' - 9"	17A
	k20	56	4	11' - 9"	17
	m2	22	6	7' - 9"	Str.
	n2	22	6	6' - 9"	Str.
	p2	72	4	6' - 0"	Str.
	q1	16	4	3' - 6"	17A
H = 7' - 6"	Φa1	1	6	9' - 0"	T3
	Φa2	7	-	——	-
	h21	32	4	9' - 3"	17A
	k21	56	4	12' - 3"	17
	m2	22	6	7' - 9"	Str.
	n2	22	6	6' - 9"	Str.
	p2	72	4	6' - 0"	Str.
	q1	16	4	3' - 6"	17A
H = 8' - 0"	Φa1	1	6	9' - 0"	T3
	Φa2	8	-	——	-
	h22	32	4	9' - 9"	17A
	k22	56	4	12' - 9"	17
	m2	22	6	7' - 9"	Str.
	n2	22	6	6' - 9"	Str.
	p2	80	4	6' - 0"	Str.
	q1	20	4	3' - 6"	17A

Bending Details

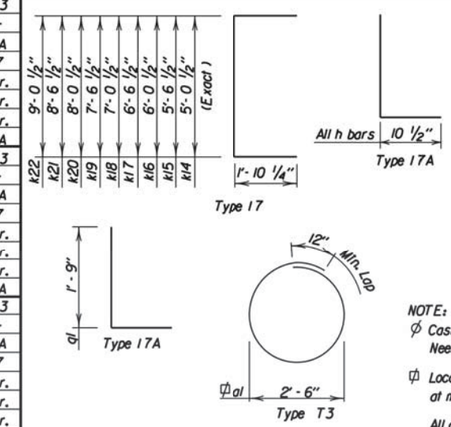

NOTE:
Φ Cast Iron Manhole Steps (R - 1980 - C) from Neenah Foundry or equivalant.

Φ Locate in center of top slab with 3" clearance at manhole opening.

All dimensions are out to out of bars.

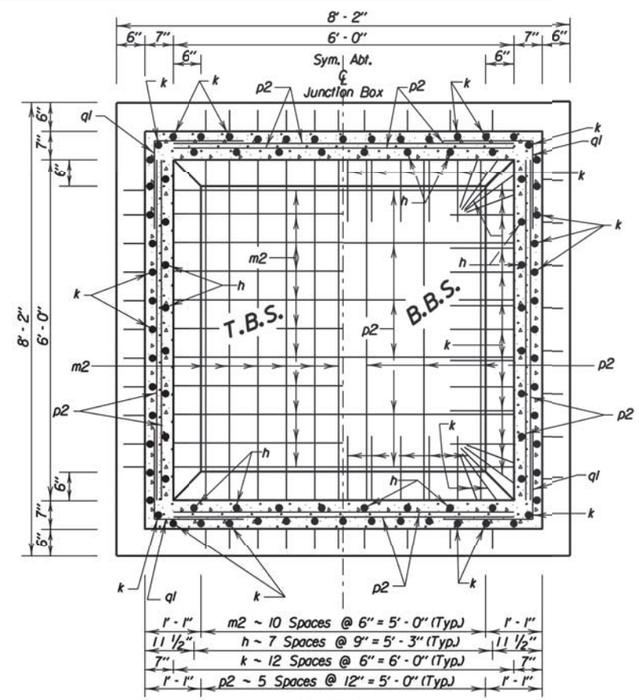

SEC. A-A

March 31, 2000

Published Date: 4th Qtr. 2015 | SDDOT | 6' X 6' JUNCTION BOX | PLATE NUMBER 671.02 | Sheet 2 of 3

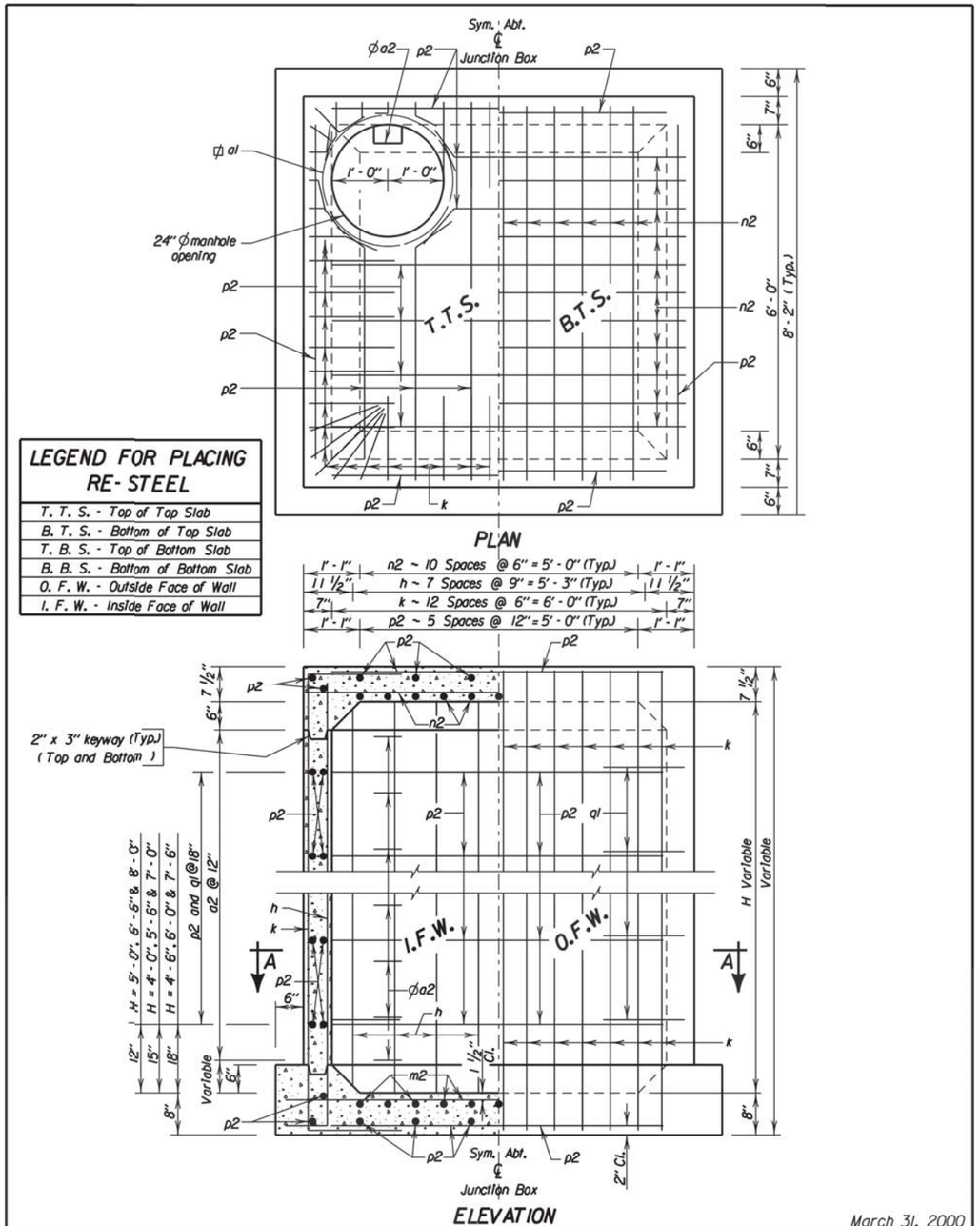

LEGEND FOR PLACING RE-STEEL

T. T. S. - Top of Top Slab
B. T. S. - Bottom of Top Slab
T. B. S. - Top of Bottom Slab
B. B. S. - Bottom of Bottom Slab
O. F. W. - Outside Face of Wall
I. F. W. - Inside Face of Wall

March 31, 2000

Published Date: 4th Qtr. 2015	SDDOT	6' X 6' JUNCTION BOX	PLATE NUMBER 671.02
			Sheet 3 of 3

11-12-15 P:\12-117\AutoCAD\PlanSheets\027C\Section B\027C-DETL-STANDARD.dwg

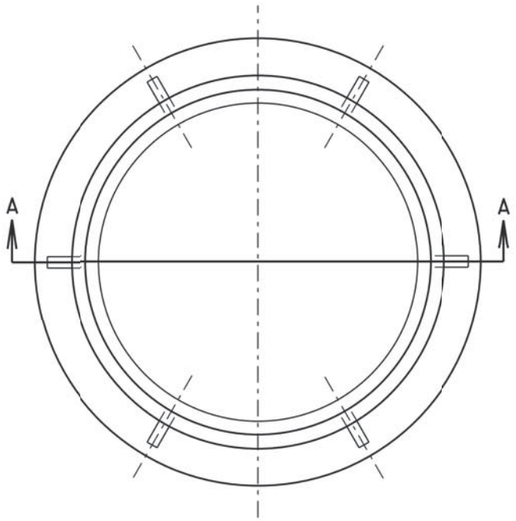

PLAN OF FRAME

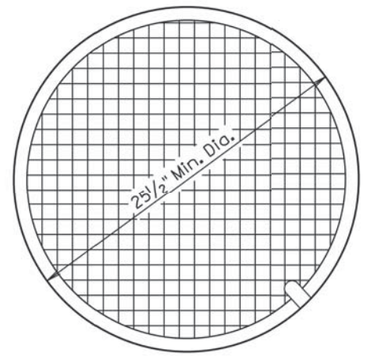

PLAN OF LID

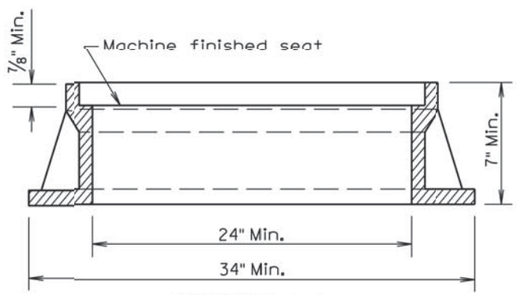

SECTION A-A

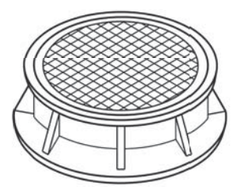

ASSEMBLED VIEW

TYPE	HEIGHT	MIN. WEIGHT
A7	7"	400Lbs.
A8	8"	440Lbs.
A9	9"	470Lbs.
A10	10"	480Lbs.

GENERAL NOTE:

Geometric pattern on top of lid other than that shown shall be approved by the Engineer.

March 31, 2000

Published Date: 4th Qtr. 2015	SDDOT	TYPE A MANHOLE FRAME AND LID	PLATE NUMBER 671.10 Sheet 1 of 1

11-12-15 P:\12-117\AutoCAD\PlanSheets\027C\Section B\027C-DETL-STANDARD.dwg

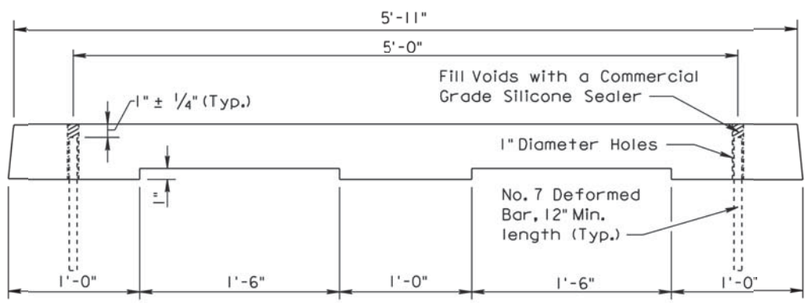

SIDE VIEW

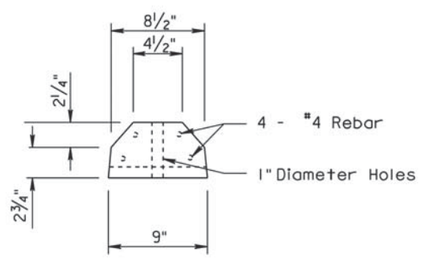

END VIEW

GENERAL NOTES:

Concrete shall be Class M6.

Reinforcing Steel shall conform to ASTM A615, Grade 60.

Maintain 1" clearance on reinforcing steel.

The weight of the Curb Stop shall be 220 lbs. ±10 lbs.

March 31, 2000

Published Date: 4th Qtr. 2015	SDDOT	PRECAST CONCRETE CURB STOP	PLATE NUMBER 900.10
			Sheet 1 of 1

11-12-15 P:\12-117\AutoCAD\PlanSheets\027C\Section B\027C-DETL-STANDARD.dwg