STATE OF SOUTH DAKOTA	PROJECT	SHEET	TOTAL SHEETS
	P 0017(08)42	S1	S18

Plotting Date: 11/09/2015

Section S: Permanent Signing Plans

INDEX OF SHEETS

S1	Front Sheet w/Index
S2	Estimate of Quantities with General Notes
S3 and S4	Sign Removal Table
S5 thru S7	Permanent Sign Installation Table
S8 thru S11	Signing Layouts
S12	Sign Details
S13 thru S15	Sign Erection Details
S16	Object Marker Erection Details
S17 and S18	Standard Plates

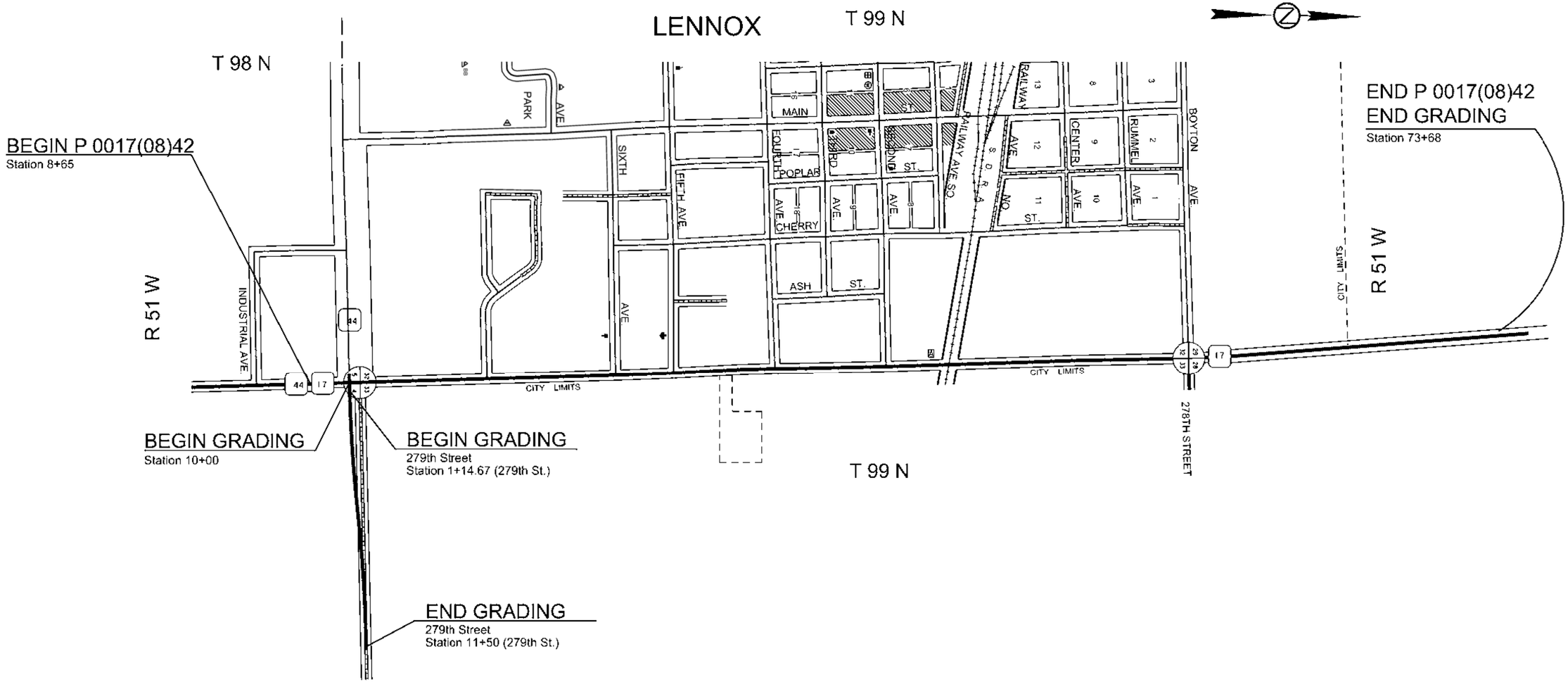

PLOT SCALE - 1:210.314

PLOTTED FROM - TRMLINT17

PLOT NAME - 1

FILE - ...\028V SIGNING CONTAINER.DGN

SECTION S PERMANENT SIGNING ESTIMATE OF QUANTITIES

BID ITEM NUMBER	ITEM	QUANTITY	UNIT
110E5010	Salvage Delineator	22	Each
110E5020	Salvage Traffic Sign	55	Each
632E0010	1.25' Diameter Breakaway Support Concrete Footing	52.0	Ft
632E1320	2.0"x2.0" Perforated Tube Post	150.6	Ft
632E1340	2.5"x2.5" Perforated Tube Post	217.4	Ft
632E2510	Type 2 Object Marker Back to Back	6	Each
632E3203	Flat Aluminum Sign, Nonremovable Copy High Intensity	183.0	SqFt
632E3205	Flat Aluminum Sign, Nonremovable Copy Super/Very High Intensity	60.9	SqFt
632E3520	Remove, Salvage, Relocate, and Reset Traffic Sign	3	Each

SCOPE OF PERMANENT SIGN WORK

The permanent sign work includes, but is not limited to, the following:

A. Items to be removed and salvaged by the Contractor:
   Existing permanent signs, supports, and hardware

B. Items to be furnished and installed by the Contractor:

1. Breakaway perforated tube post supports
2. Flat sheet aluminum signs as listed in the SIGN INSTALLATION TABLE and attaching hardware

SALVAGE TRAFFIC SIGN

Except as listed below, the Contractor shall neatly stockpile salvaged signs, posts, and related hardware [nuts, bolts, and miscellaneous mounting hardware] at the Sioux Falls Department of Transportation Maintenance Complex, 5316 W. 60th St. N., Sioux Falls, SD. Stockpiling of salvaged state material shall be coordinated with the Project Engineer and Mr. Ken Bennett (605.367.4970X2501).

Existing street name signs and supports shall be delivered to the City of Lennox Street Department at 812 West 1ST Street. Stockpiling of salvaged city material shall be coordinated with the Project Engineer and Mr. Dave Tipton (605.647.2989).

All bolts, nuts, and washers shall be placed in individual five-gallon pails.

Signs, reusable posts, and hardware damaged or lost shall be replaced in kind at the Contractor's expense.

Signs shall be separated from supports prior to stockpiling. Salvaged signs shall be neatly stockpiled without damaging them.

Cost for salvaging and delivering salvaged materials shall be incidental to the contract unit price per each for Salvage Traffic Sign.

REMOVE, SALVAGE, RELOCATE AND RESET PERMANENT SIGNS

The Contractor shall remove, salvage, relocate, and reset signs as indicated in the Permanent Sign Table and typified in the layout sheets.

With the realignment of 279TH Street, the SD17/279 ST rural street assembly in the removal table at 11+08R shall be reset at a location determined by the Engineer.

The Contractor shall replace in kind any signs, supports, support bases or related hardware lost or damaged during the time the signs were removed, salvaged, stockpiled and reset. Any replacement materials will be at the Contractor's expense.

Cost for removing, salvaging, stockpiling, and resetting is included in the contract unit price per each for Remove, Salvage, Relocate and Reset Traffic Sign.

FURNISH AND INSTALL TRAFFIC SIGNS

The signs listed on the Permanent Sign Table in the plans as new installations shall be provided for the locations specified.

Street name signs and flat aluminum signs 24" or less on the horizontal axis when installed shall be 0.080" flat sheet aluminum. Other flat aluminum signs greater than 24" on the horizontal axis when installed shall be 0.100" flat sheet aluminum.

SIGN LEGEND, BORDER AND BACKGROUND

All signs are to be installed in accordance with Sections 632 and 982 of the Specifications.

All sign sheeting shall conform to AASHTO DESIGNATION:M 268.

All sign legend, border and background sheeting material shall meet or exceed standards for ASTM D4956 classified Type IV high intensity sheeting or Type XI super/very high intensity sheeting, as indicated in the plans.

Sheeting material on warning signs designated Type XI shall be fluorescent yellow in color and meet or exceed standards for ASTM D4956 classified Type XI super/very high intensity microprismatic sheeting.

All auxiliary signs used with South Dakota state route markers shall have green borders with black legend or symbol on a high intensity white background.

Street signs shall be single-faced with black border and text on high intensity white sheeting.

SIGN POSTS

The plan post lengths shall be field verified by the Contractor.

Supports shall be cut to provide the proper sign height where necessary.

Breakaway anchor perforated tube post lengths listed in the Post Size/ Quantity columns of the Sign Installation table include 0.75' (9")/post minimum typical subgrade length. The actual subgrade length shall be as required by the manufacturer of the perforated tube post system.

Post anchors shall be 48" long. Two-piece anchor post systems are required for 2" perforated tube post anchor stub posts. Heavy duty 7 gauge galvanized steel anchor stub posts that do not require stiffener sleeves are required for 2 ½" perforated tube post non slip base post installations.

All sign support bases shall conform to Plate number 634.99.

STATE OF SOUTH DAKOTA	PROJECT	SHEET	TOTAL SHEETS
	P 0017(08)42	S3	S18

SIGN REMOVAL TABLE

SIGN DATA				
STATION	DESCRIPTION	SIGN SIZE Width X Hgt (FT)	SALVAGE TRAFFIC SIGN *	REMOVE AND RESET
SD 17			110E5020	632E3520
8+39 L		2.00X 1.00 2.00X 2.00 1.75X 1.25 2.00X 2.00	1{W}	
9+37 R		2.00X 2.00 1.75X 1.25 2.00X 2.00 1.75X 1.25	1{W}	
9+89 R		2.00X 2.00 1.75X 1.25 2.00X 2.00 1.75X 1.25	1{W}	
9+96 R	W1-7	4.00X 2.00	1{W}	
10+93 R	STOP	4.00X 4.00	1{W}	
11+08 R	279 ST SD17	1.50X 0.75 1.50X 0.75		1{U}
11+47 L		2.00X 2.00 2.00X 1.00 2.00X 2.00 1.75X 1.25	1{W}	
11+63 R	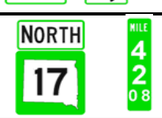	2.00X 2.00 1.75X 1.25 0.38X 1.25	1{W}	
14+94 R		5.00X 1.50	1{W}	
16+18 L		7.00X 2.50	1{2W}	
17+97 R	SPEEL LIMIT 45	2.00X 2.50	1{W}	
18+27 L	OBJECT MARKER OBJECT MARKER	0.50X 1.00 0.50X 1.00	1{U}	
18+27 R	OBJECT MARKER OBJECT MARKER	0.50X 1.00 0.50X 1.00	1{U}	
18+77 L	STOP	2.50X 2.50	1{W}	
COLUMN TOTALS			12	1

* -Number and type- [{U}-Channel {W}ood]- of support(s)

SIGN DATA				
STATION	DESCRIPTION	SIGN SIZE Width X Hgt (FT)	SALVAGE TRAFFIC SIGN *	REMOVE AND RESET
SD 17			110E5020	632E3520
18+81 L	PINE ST PRAIRIE DR	1.50X 0.50 1.50X 0.50	1{P}	
19+78 R		2.00X 3.00	1{W}	
20+51 L		1.75X 1.25 2.00X 2.00	1{W}	
22+73 R	NPZ PENNANT	4.00X 4.00	1{W}	
24+33 L	OBJECT MARKER OBJECT MARKER	0.50X 1.00 0.50X 1.00	1{U}	
24+33 R	OBJECT MARKER OBJECT MARKER	0.50X 1.00 0.50X 1.00	1{U}	
24+48 L	NPZ PENNANT SPEED LIMIT 45	4.00X 4.00 2.00X 2.50	1{W}	
26+99 L	STOP	2.50X 2.50	1{WU}	
27+05 L	E SIXTH AVE	2.50X 0.50	1{P}	
30+67 L	STOP	2.50X 2.50	1{W}	
30+68 L	FIFTH	1.50X 0.50	1{P}	
31+12 L	SPEED LIMIT 20 NO TRUCKS LIBRARY	2.00X 2.50 2.00X 1.50 2.00X 2.50	1{U}	
35+76 R		2.00X 3.00 1.75X 1.25	1{W}	
36+94 L	STOP	2.50X 2.50	1{WU}	
36+96 L	PINE ST FOURTH AVE	1.50X 0.50 1.50X 0.50	1{P}	
40+20 L	NPZ PENNANT	4.00X 4.00	1{W}	
40+51 R	GRADE CROSSING BUMP	3.00 ROUND 3.00X 3.00	1{W}	
42+74 R	NPZ PENNANT	4.00X 4.00	1{W}	
43+08 L	OBJECT MARKER OBJECT MARKER	0.50X 1.00 0.50X 1.00	1{U}	
43+08 R	OBJECT MARKER OBJECT MARKER	0.50X 1.00 0.50X 1.00	1{U}	
COLUMN TOTALS			18	0

SIGN REMOVAL TABLE

SIGN DATA				
STATION	DESCRIPTION	SIGN SIZE Width X Hgt (FT)	SALVAGE TRAFFIC SIGN *	REMOVE AND RESET
SD 17			110E5020	632E3520
43+87 L	SPEED LIMIT 45	2.00X 2.50	1{W}	
44+10 L	STOP	2.50X 2.50	1{W}	
44+15 R	SPEED LIMIT 45	2.00X 2.50	1{W}	
44+73 L	SECOND	1.50X 0.50	1{P}	
47+90 R	BUMP MARKER	1.50X 1.50	1{U}	
48+30 L	BUMP MARKER	1.50X 1.50	1{U}	
52+57 L	STOP	2.50X 2.50	1{W}	
52+94 L	PATHWAYS DR		1{P}	
55+72 L	GRADE CROSSING	3.00 ROUND	1{W}	
	BUMP	3.00X 3.00		
56+33 R	NPZ PENNANT	4.00X 4.00	1{W}	
57+21 L	OBJECT MARKER	0.50X 1.00	1{U}	
	OBJECT MARKER	0.50X 1.00		
57+21 R	OBJECT MARKER	0.50X 1.00	1{U}	
	OBJECT MARKER	0.50X 1.00		
59+23 R		1.50X 1.50		1{U}
		1.50X .50		
59+31 L		2.00X 3.00	1{W}	
60+85 R	42 (MRM)	0.38X 1.00	1{U}	
	42 (MRM)	0.38X 1.00		
62+38 L	NPZ PENNANT	4.00X 4.00	1{W}	
	SPEED LIMIT 45	2.00X 2.50		
63+38 L	FATALITY MARKER	2.00X 2.00	1{U}	
63+40 L	PINE ST	1.50X 0.50	1{P}	
	BOYNTON AVE	1.50X 0.50		
63+41 L	STOP	2.50X 2.50	1{W}	
COLUMN TOTALS			18	1

* -Number and type- [{U}-Channel {W}ood]- of support(s)

SIGN DATA				
STATION	DESCRIPTION	SIGN SIZE Width X Hgt (FT)	SALVAGE TRAFFIC SIGN *	REMOVE AND RESET
SD 17			110E5020	632E3520
63+87 R	STOP	3.00X 3.00	1{W}	
65+30 L	OBJECT MARKER	0.50X 1.00	1{U}	
	OBJECT MARKER	0.50X 1.00		
65+30 R	OBJECT MARKER	0.50X 1.00	1{U}	
	OBJECT MARKER	0.50X 1.00		
65+77 R		2.00X 1.00	1{W}	
		2.00X 2.00		
66+44 R	SPEED LIMIT 45	2.00X 2.50	1{W}	
68+76 L		1.50X 1.50		1{U}
		1.50X .50		
69+78 R		2.00X 3.00	1{W}	
72+33 R		3.00X 2.50	1{W}	
	LITTER CREW	2.50X 2.50		
COLUMN TOTALS			7	1
PROJECT TOTALS			**55**	**3**

STATE OF SOUTH DAKOTA	PROJECT	SHEET	TOTAL SHEETS
	P 0017(08)42	S5	S18

SIGN INSTALLATION TABLE

SIGN DATA									POST DATA						FOOTING DATA			
STATION	DESCRIPTION	SIGN CODE	SIGN SIZE (Ft)	SIGN AREA (SqFt) Type IV	SIGN AREA (SqFt) TYPE XI	OFFSET* (R)IGHT/ (L)EFT	SIGN FACES	COMMENTS	POST LENGTHS X INSIDE	POST LENGTHS X OUTSIDE	BREAK-AWAY #	SIZE/QUANTITY {Ft} 2.0"x2.0" TUBE	SIZE/QUANTITY {Ft}	SIZE/QUANTITY {Ft} 2.5"x2.5" TUBE	SIZE/QUANTITY {Ft}	FOOTINGS (Ft) BREAKAWAY 1.25' DIA.	FOOTINGS (Ft) BREAKAWAY	FOOTING LENGTHS INSIDE	FOOTING LENGTHS OUTSIDE
SD 17				632E3203	632E3205							632E1320		632E1340		632E0010			
SEE COMMENTS	R	SPECIAL	5.00X 2.00	10.0		16.0' R	SOUTH	INSTALL MIDWAY BETWEEN EXISTING DYNAMIC ENGINE BRAKING SIGN AND SPEED LIMIT 45 SIGN.	11.8'		A			11.8					
8+65 L		M3-2 M1-5	2.00X 1.00 2.00X 2.00	2.0 4.0		16.0' R	NORTH NORTH		12.8'		A			12.8					
9+00 R		M3-4 M1-5 M6-1	2.00X 1.00 2.00X 2.00 1.75X 1.25	2.0 4.0 2.2		16.0' R	SOUTH SOUTH SOUTH		14.1'		A			14.1					
9+52 R		M3-2 M1-5 M6-1	2.00X 1.00 2.00X 2.00 1.75X 1.25	2.0 4.0 2.2		1.6' R	WEST WEST WEST		14.1'		A			14.1					
10+28 R	STOP	R1-1	2.50X 2.50		5.2	12.0' R	EAST		14.3'		A	14.3							
11+65 R	SPEED LIMIT 45	R2-1	2.00X 2.50	5.0		16.0' R	SOUTH		14.3'		A	14.3							
12+00 L		M1-5 M6-6	2.00X 2.00 1.75X 1.25	4.0 2.2		2.0' R	NORTH		11.1'		A	11.1							
14+65 L		R3-9dP R3-9b	2.50X 1.00 2.00X 3.00	2.5 6.0		2.0' R	NORTH NORTH		11.8'		S			11.8		4.0		4.0	
14+65 R		R3-9cP R3-9b	2.50X 1.00 2.00X 3.00	2.5 6.0		16.0' R	SOUTH SOUTH		15.8'		S			15.8		4.0		4.0	
TOTALS THIS SHEET				60.6	5.2							39.7		80.3		8.0			

* - Distance from edge of shoulder or back of curb to edge of Sign.

\# - (S)lip Base, (A)nchor Stub Post

X -Plan post lengths are estimates. The post lengths shall be field verified by the Contractor.

STATE OF SOUTH DAKOTA	PROJECT	SHEET	TOTAL SHEETS
	P 0017(08)42	S6	S19

SIGN INSTALLATION TABLE

SIGN DATA									POST DATA							FOOTING DATA			
STATION	DESCRIPTION	SIGN CODE	SIGN SIZE (Ft)	SIGN AREA (SqFt)		OFFSET* (R)IGHT/ (L)EFT	SIGN FACES	COMMENTS	POST LENGTHS ✗		BREAK-AWAY #	SIZE/QUANTITY {Ft}				FOOTINGS (Ft) BREAKAWAY		FOOTING LENGTHS	
				Type IV	TYPE XI				INSIDE	OUTSIDE		2.0"x2.0" TUBE		2.5"x2.5" TUBE		1.25' DIA.		INSIDE	OUTSIDE
SD 17				632E3203	632E3205							632E1320		632E1340		632E0010			
16+15 L		D1-2a	7.50X 2.50	18.8		2.0' R	NORTH		8.0'	8.0'	S			16.0		8.0		4.0	4.0
16+15 R		SPECIAL	2.00X 3.00	6.0		16.0' R	SOUTH		14.8'		A	14.8							
17+65 L		M2-1	1.75X 1.25	2.2		2.0' R	NORTH		11.1'		A	11.1							
		M1-5	2.00X 2.00	4.0			NORTH												
18+80 L	STOP	R1-1	2.50X 2.50		5.2	2.0' R	WEST		11.0'		S			11.0		4.0		4.0	
	Pine St	D3-1	1.92X 0.75	1.5			WEST												
	Pine St	D3-1	1.92X 0.75	1.5			EAST												
	Prairie Dr	D3-1	2.33X 0.75	1.8			NORTH												
	Prairie Dr	D3-1	2.33X 0.75	1.8			SOUTH												
25+00 L	SPEED LIMIT 45	R2-1	2.00X 2.50	5.0		2.0' R	NORTH		10.3'		A	10.3							
27+05 L	STOP	R1-1	2.50X 2.50		5.2	2.0' R	WEST		11.0'		S			11.0		4.0		4.0	
	Pine St	D3-1	1.92X 0.75	1.5			WEST												
	Pine St	D3-1	1.92X 0.75	1.5			EAST												
	E 6th Av	D3-1	2.42X 0.75	1.9			NORTH												
	E 6th Av	D3-1	2.42X 0.75	1.9			SOUTH												
29+40 R	SPEED LIMIT 45	R2-1	2.00X 2.50	5.0		16.0' R	SOUTH		14.3'		A	14.3							
30+65 L	STOP	R1-1	2.50X 2.50		5.2	2.0' R	WEST		11.0'		S			11.0		4.0		4.0	
	Pine St	D3-1	1.92X 0.75	1.5			WEST												
	Pine St	D3-1	1.92X 0.75	1.5			EAST												
	E 5th Av	D3-1	2.42X 0.75	1.9			NORTH												
	E 5th Av	D3-1	2.42X 0.75	1.9			SOUTH												
36+00 L	SPEED LIMIT 45	R2-1	2.00X 2.50	5.0		2.0' R	NORTH		10.3'		A	10.3							
36+94 L	STOP	R1-1	2.50X 2.50		5.2	2.0' R	WEST		11.0'		S			11.0		4.0		4.0	
	Pine St	D3-1	1.92X 0.75	1.5			WEST												
	Pine St	D3-1	1.92X 0.75	1.5			EAST												
	E 4th Av	D3-1	2.42X 0.75	1.9			NORTH												
	E 4th Av	D3-1	2.42X 0.75	1.9			SOUTH												
38+30 R	SPEED LIMIT 45	R2-1	2.00X 2.50	5.0		2.0' R	SOUTH		10.3'		A	10.3							
TOTALS THIS SHEET				78.0	20.8							71.1		60.0		24.0			

*** - Distance from edge of shoulder or back of curb to edge of Sign.**

- (S)lip Base, (A)nchor Stub Post

✗ -Plan post lengths are estimates. The post lengths shall be field verified by the Contractor.

STATE OF SOUTH DAKOTA	PROJECT	SHEET	TOTAL SHEETS
	P 0017(08)42	S7	S18

SIGN INSTALLATION TABLE

SIGN DATA									POST DATA							FOOTING DATA			
STATION	DESCRIPTION	SIGN CODE	SIGN SIZE (Ft)	SIGN AREA (SqFt)		OFFSET* (R)IGHT/ (L)EFT	SIGN FACES	COMMENTS	POST LENGTHS X		BREAK-AWAY #	SIZE/QUANTITY {Ft}				FOOTINGS (Ft) BREAKAWAY		FOOTING LENGTHS	
				Type IV	TYPE XI				INSIDE	OUTSIDE		2.0"x2.0" TUBE		2.5"x2.5" TUBE		1.25' DIA.		INSIDE	OUTSIDE
SD 17				632E3203	632E3205							632E1320		632E1340		632E0010			
44+16 L	STOP	R1-1	2.50X 2.50		5.2	6.0' R	WEST		11.0'		S			11.0		4.0		4.0	
	Pine St	D3-1	1.92X 0.75	1.5			WEST												
	Pine St	D3-1	1.92X 0.75	1.5			EAST												
	E 2nd Av	D3-1	2.50X 0.75	1.9			NORTH												
	E 2nd Av	D3-1	2.50X 0.75	1.9			SOUTH												
46+10 R	RR X-ING	W10-1	3 ROUND		7.1	16.0' R	SOUTH		14.8'		A	14.8							
50+10 L	RR X-ING	W10-1	3 ROUND		7.1	2.0' R	NORTH		10.8'		A	10.8							
52+53 L	STOP	R1-1	2.50X 2.50		5.2	12.0' R	WEST		11.0'		S			11.0		4.0		4.0	
	Pine St	D3-1	1.92X 0.75	1.5			WEST												
	Pine St	D3-1	1.92X 0.75	1.5			EAST												
	Pathways Dr	D3-1	3.00X 0.75	2.3			NORTH												
	Pathways Dr	D3-1	3.00X 0.75	2.3			SOUTH												
63+39 L	STOP	R1-1	2.50X 2.50		5.2	2.0' R	WEST		11.0'		S			11.0		4.0		4.0	
	Pine St	D3-1	1.92X 0.75	1.5			WEST												
	Pine St	D3-1	1.92X 0.75	1.5			EAST												
	E Boynton Av	D3-1	3.25X 0.75	2.5			NORTH												
	E Boynton Av	D3-1	3.25X 0.75	2.5			SOUTH												
63+95 R	STOP	R1-1	2.50X 2.50		5.2	12.0' R	EAST		16.5'		A			16.5					
64+70 R	SPEED LIMIT 45	R2-1	2.00X 2.50	5.0		2.0' R	SOUTH		14.3'		A	14.3							
69+50 L		R3-9cP	2.50X 1.00	2.5		2.0' R	NORTH		11.8'		S			11.8		4.0		4.0	
		R3-9b	2.00X 3.00	6.0			NORTH												
69+50 R		R3-9dP	2.50X 1.00	2.5		2.0' R	SOUTH		15.8'		S			15.8		4.0		4.0	
		R3-9b	2.00X 3.00	6.0			SOUTH												
TOTALS THIS SHEET				44.4	34.9							39.9		77.1		20.0			
PROJECT TOTALS				**183.0**	**60.9**							**150.6**		**217.4**		**52.0**			

* - Distance from edge of shoulder or back of curb to edge of Sign.

\# - (S)lip Base, (A)nchor Stub Post

X -Plan post lengths are estimates. The post lengths shall be field verified by the Contractor.

STATE OF SOUTH DAKOTA	PROJECT	SHEET	TOTAL SHEETS
	P 0017(08)42	S8	S18

Plotting Date: 11/09/2015

PERMANENT SIGNING

SD17/PINE STREET

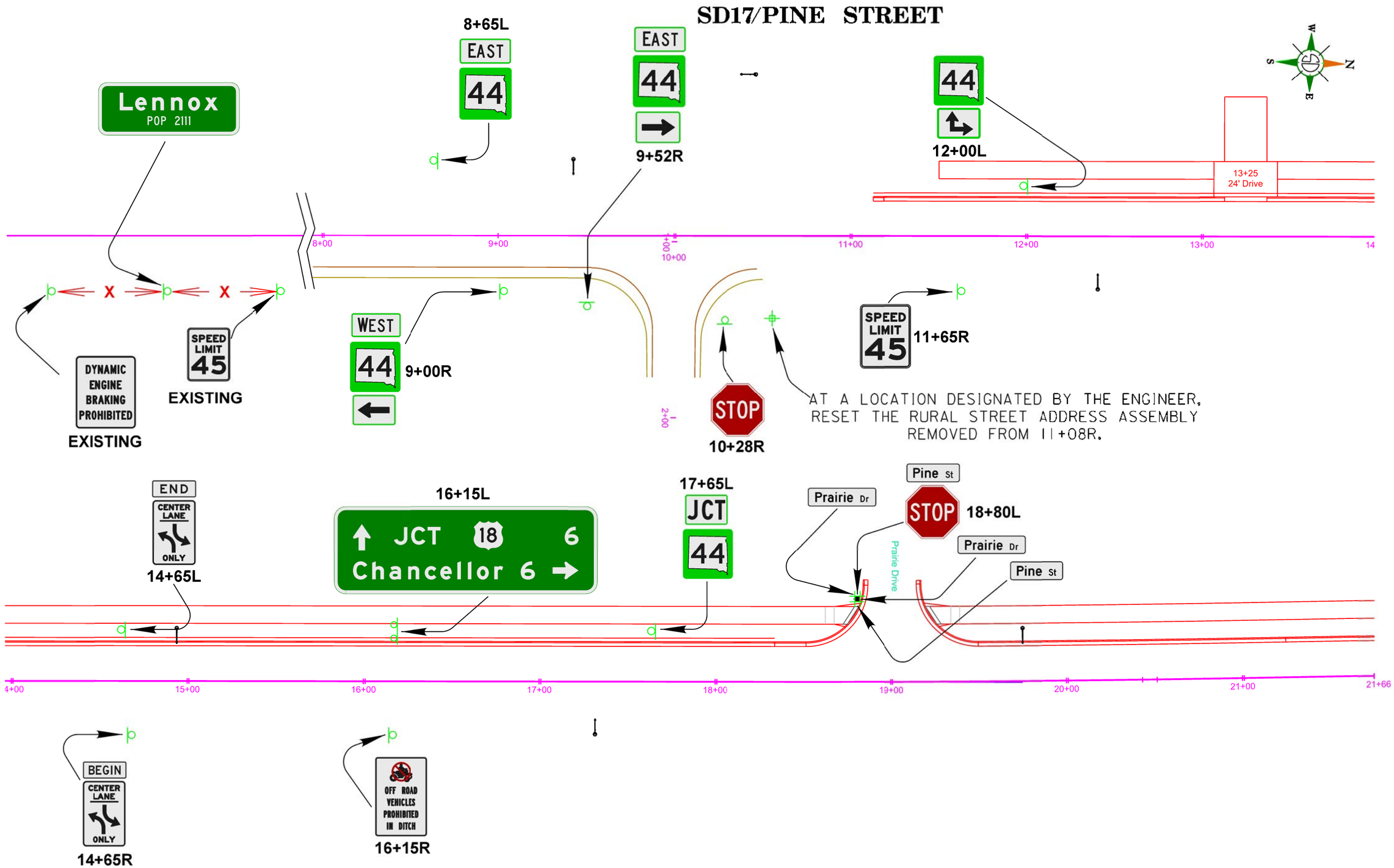

PLOT SCALE - 1:52.5786

PLOT NAME - 2

FILE - ...\028V SIGNING CONTAINER.DGN

PLOTTED FROM - TRMLINT17

STATE OF SOUTH DAKOTA	PROJECT	SHEET	TOTAL SHEETS
	P 0017(08)42	S9	S18

Plotting Date: 11/09/2015

PERMANENT SIGNING

SD17/PINE STREET

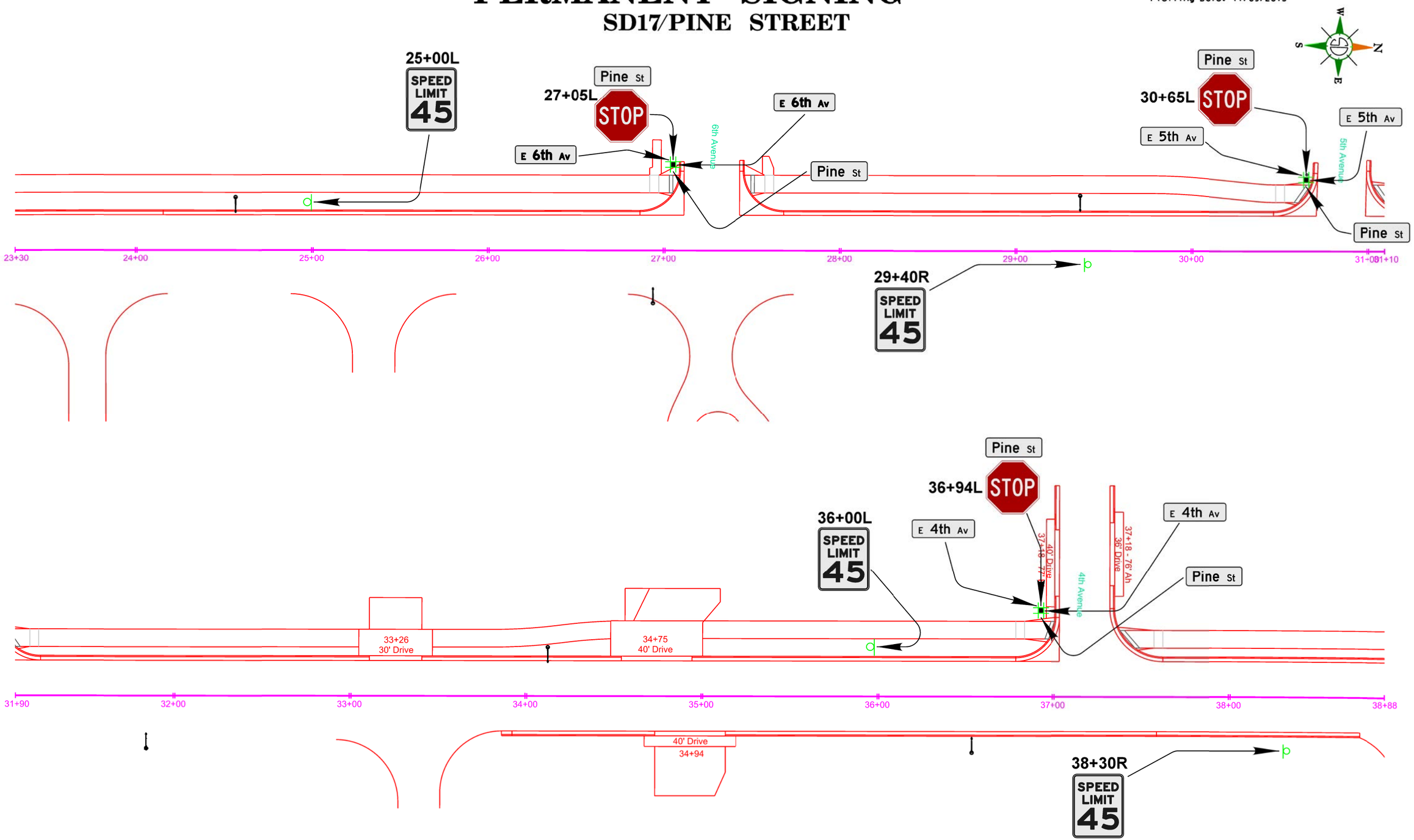

PLOT SCALE - 1:52.5786

PLOTTED FROM - TRM11NT17

PLOT NAME - 3

FILE - ...\028v SIGNING CONTAINER.DGN

STATE OF SOUTH DAKOTA	PROJECT	SHEET	TOTAL SHEETS
	P 0017(08)42	S10	S18

Plotting Date: 11/09/2015

PERMANENT SIGNING

SD17/PINE STREET

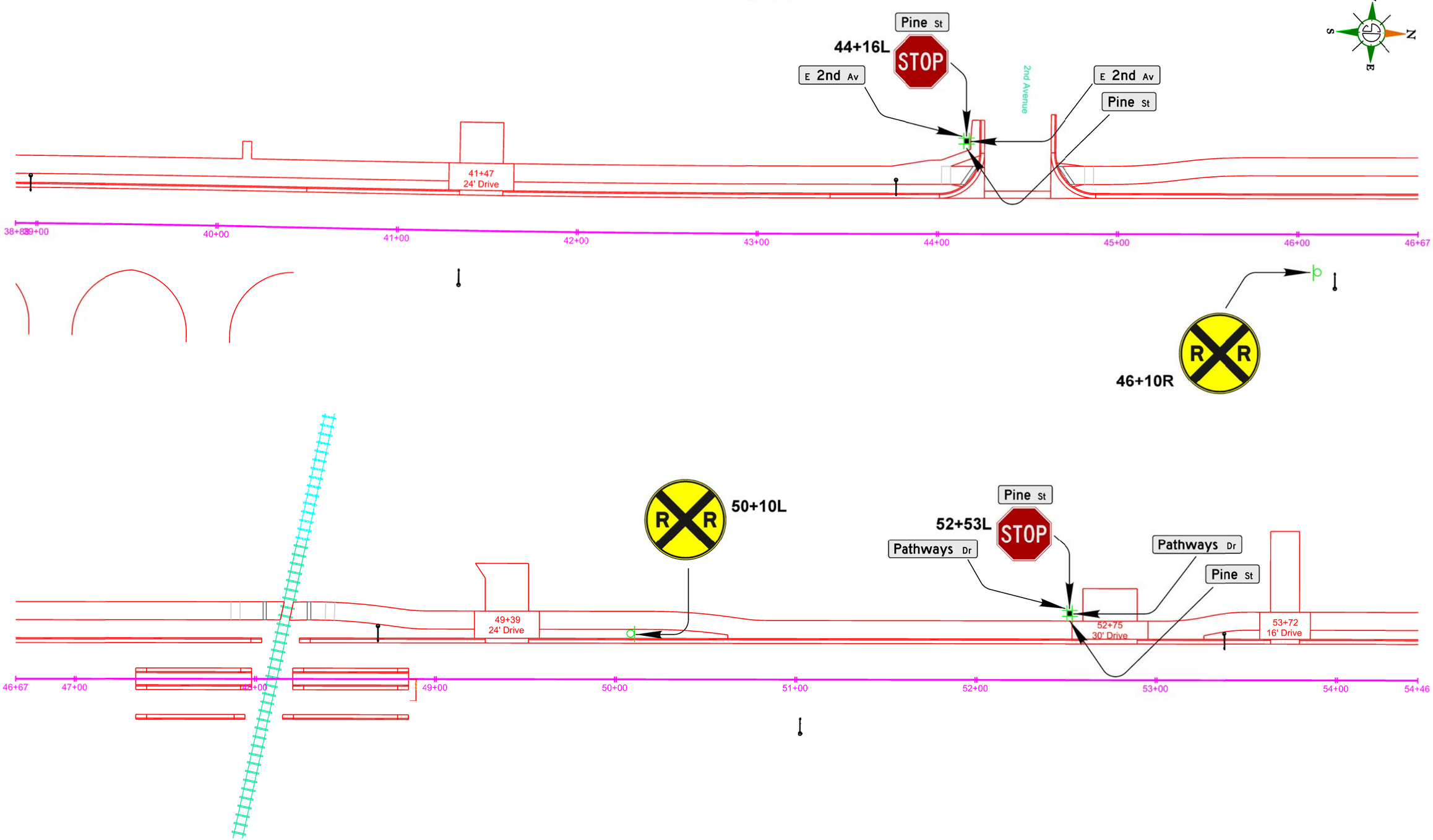

PLOT SCALE - 1:52.0258

PLOT NAME - 4

FILE - ...\028v SIGNING CONTAINER.DGN

PLOTTED FROM - TRM11NT17

STATE OF SOUTH DAKOTA	PROJECT	SHEET	TOTAL SHEETS
	P 0017(08)42	S11	S18

Plotting Date: 11/09/2015

PERMANENT SIGNING

SD17/PINE STREET

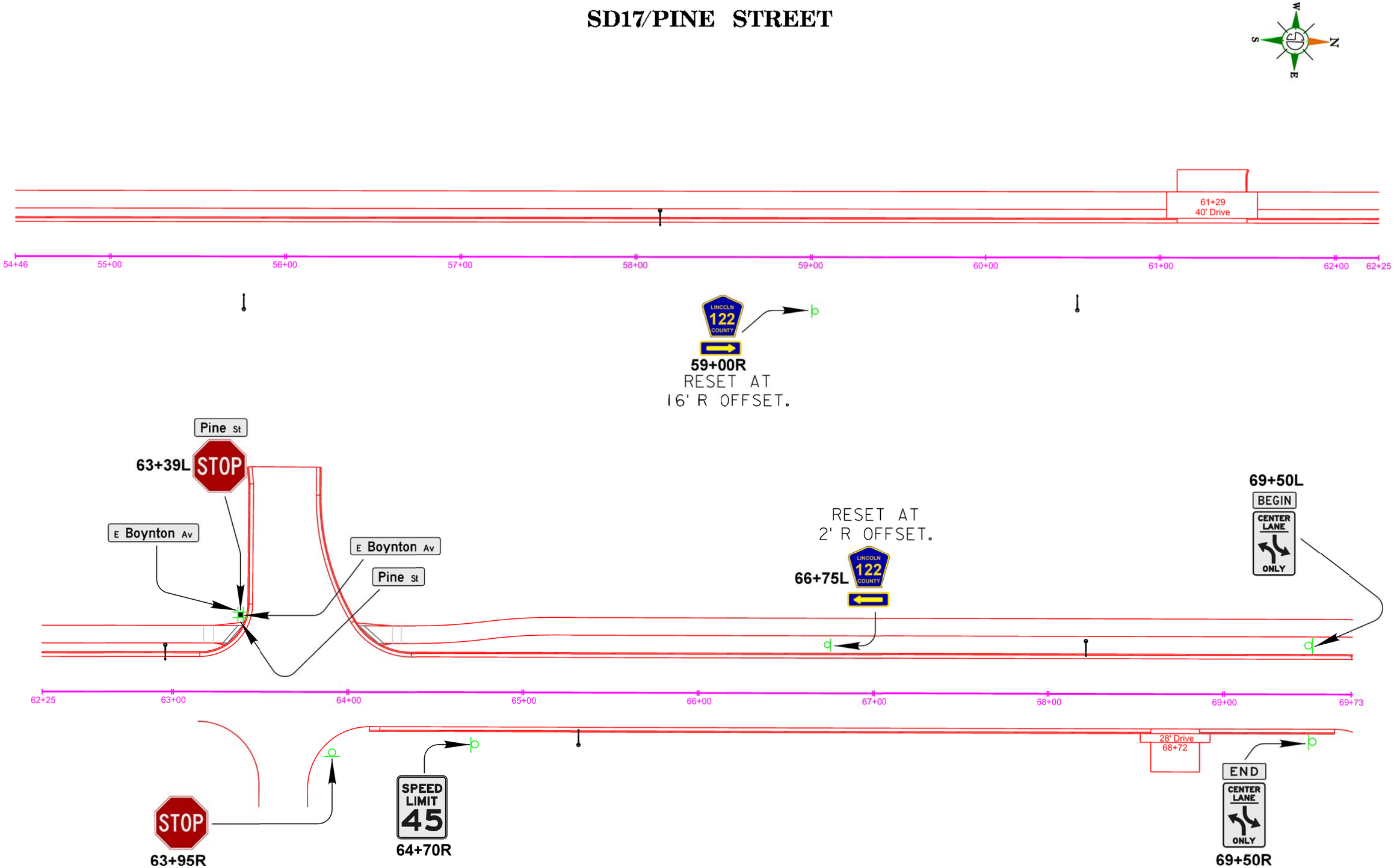

PLOT SCALE - 1:52.0258

PLOTTED FROM - TRM11NT17

PLOT NAME - 5

FILE - ...\028v SIGNING CONTAINER.DGN

STATE OF SOUTH DAKOTA	PROJECT	SHEET	TOTAL SHEETS
	P 0017(08)42	S12	S18

Plotting Date: 11/09/2015

FLAT ALUMINUM SIGNS WITH NONREMOVABLE COPY-HIGH INTENSITY

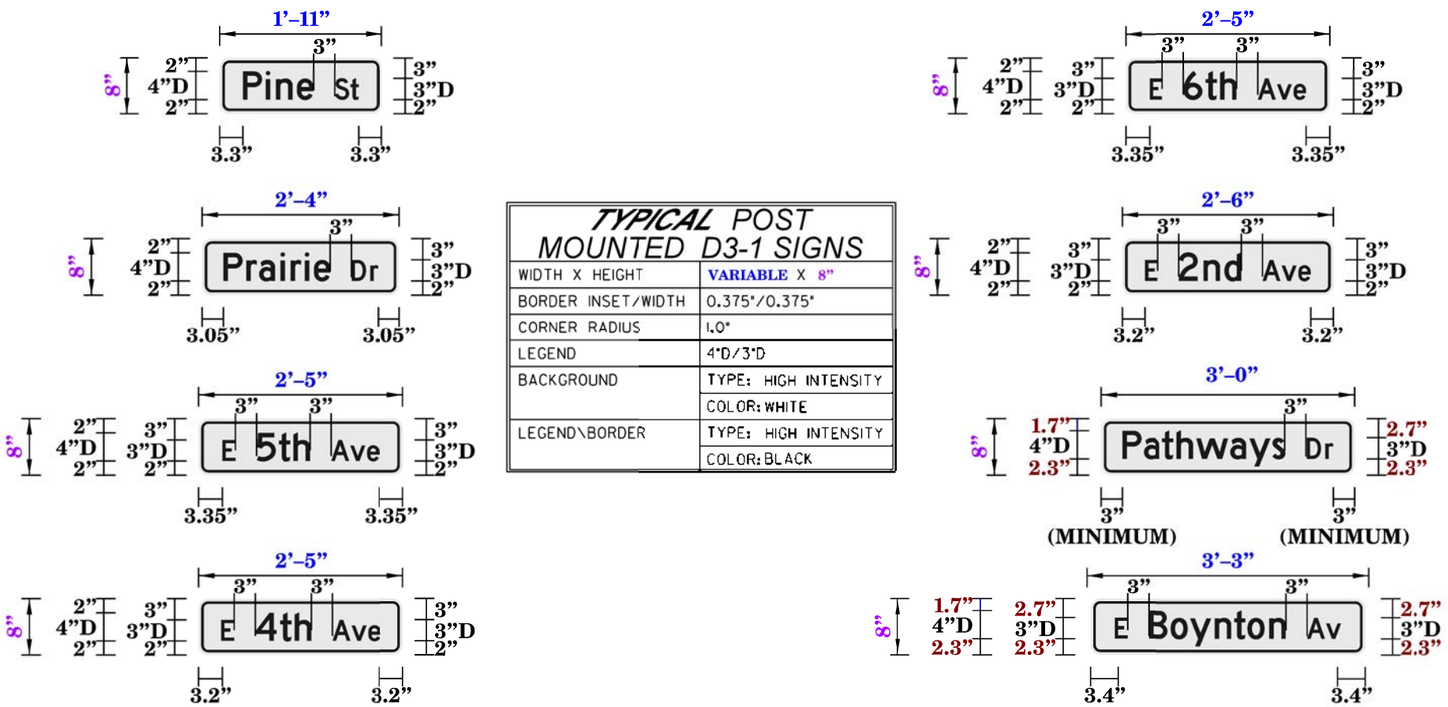

TYPICAL POST MOUNTED D3-1 SIGNS	
WIDTH X HEIGHT	VARIABLE X 8"
BORDER INSET/WIDTH	0.375"/0.375"
CORNER RADIUS	1.0"
LEGEND	4"D/3"D
BACKGROUND	TYPE: HIGH INTENSITY
	COLOR: WHITE
LEGEND\BORDER	TYPE: HIGH INTENSITY
	COLOR: BLACK

SIGN CODE	SPECIAL
WIDTH X HEIGHT	2'-0" X 3'-0"
BORDER-INSET/WIDTH	0.375"/0.625"
CORNER RADIUS	1.50"
LEGEND	3"B
BACKGROUND	TYPE: HIGH INTENSITY
	COLOR: WHITE
LEGEND/BORDER	TYPE: OPAQUE
	COLOR: BLACK

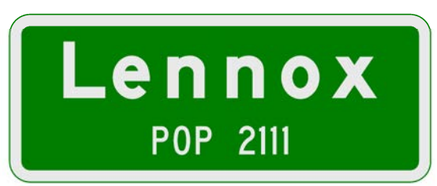

SIGN CODE	SPECIAL
WIDTH X HEIGHT	5'-0" X 2'-0"
BORDER-WIDTH	1.75"
CORNER RADIUS	3.0"
LEGEND	8"EM/4"C
BACKGROUND	TYPE: HIGH INTENSITY
	COLOR: GREEN
LEGEND/BORDER	TYPE: HIGH INTENSITY
	COLOR: WHITE

SYMBOL	X	Y	WID	HT
ARUP	6.4	18	6	9
M1-4	47.7	15	10	10
ARUP, 270 DEG	74.5	5	6	9

SIGN CODE	D1-2a
WIDTH X HEIGHT	7'-6" X 2'-6"
BORDER-WIDTH	1.50"
CORNER RADIUS	4.0"
LEGEND	6"EM
BACKGROUND	TYPE: HIGH INTENSITY
	COLOR: GREEN
LEGEND/BORDER	TYPE: HIGH INTENSITY
	COLOR: WHITE

PLOT SCALE - 1:1.79489
PLOTTED FROM - TRMIINT17
PLOT NAME - 6
FILE - ...\028V SIGNING CONTAINER.DGN

STATE OF SOUTH DAKOTA	PROJECT	SHEET	TOTAL SHEETS
	P 0017(08)42	S13	S18

Plotting Date: 11/09/2015

TYPICAL SIGN INSTALLATION DETAILS

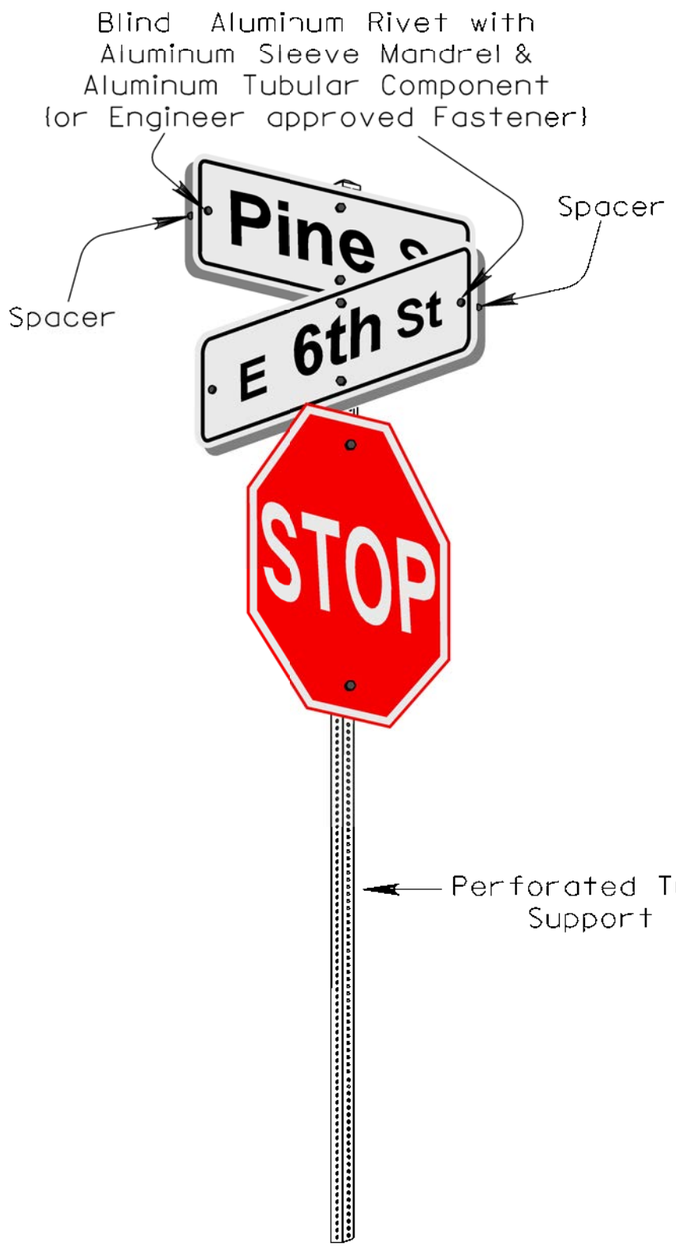

TYPICAL STOP SIGN WITH
STREET SIGNS ASSEMBLY

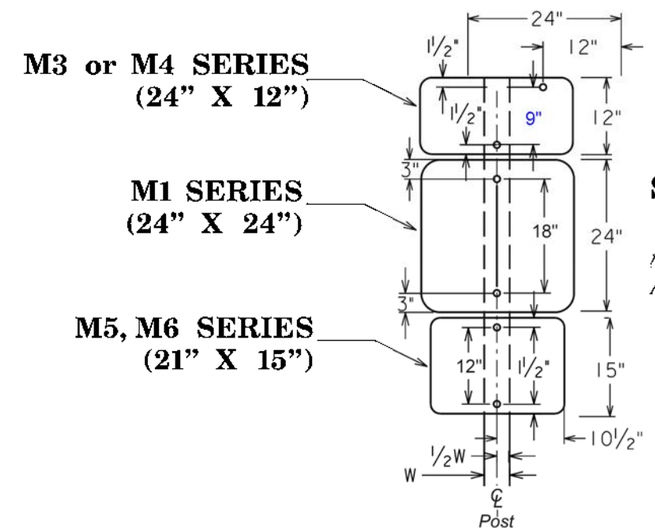

SQUARE TUBE SUPPORT
W/SIGN MOUNTED ON SUPPORT
(TYPICAL OF FASTENER LOCATIONS IN ANY MOUNTING CONFIGURATION)

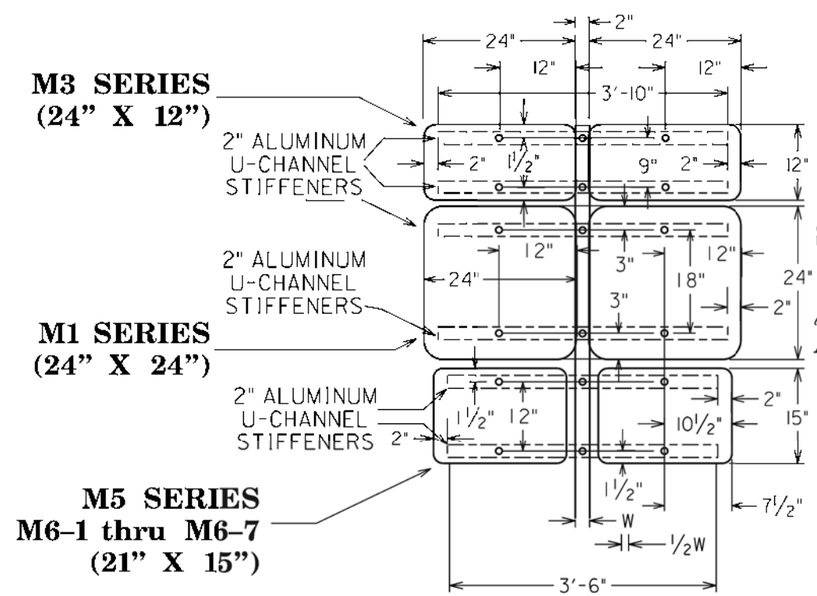

SQUARE TUBE SUPPORT
W/ALUMINUM CHANNEL BACKING
(TYPICAL OF FASTENER LOCATIONS IN ANY MOUNTING CONFIGURATION)

PLOT SCALE - 1:2.47123
PLOTTED FROM - TRM11NT17
PLOT NAME - ?
FILE - ...\028v SIGNING CONTAINER.DGN

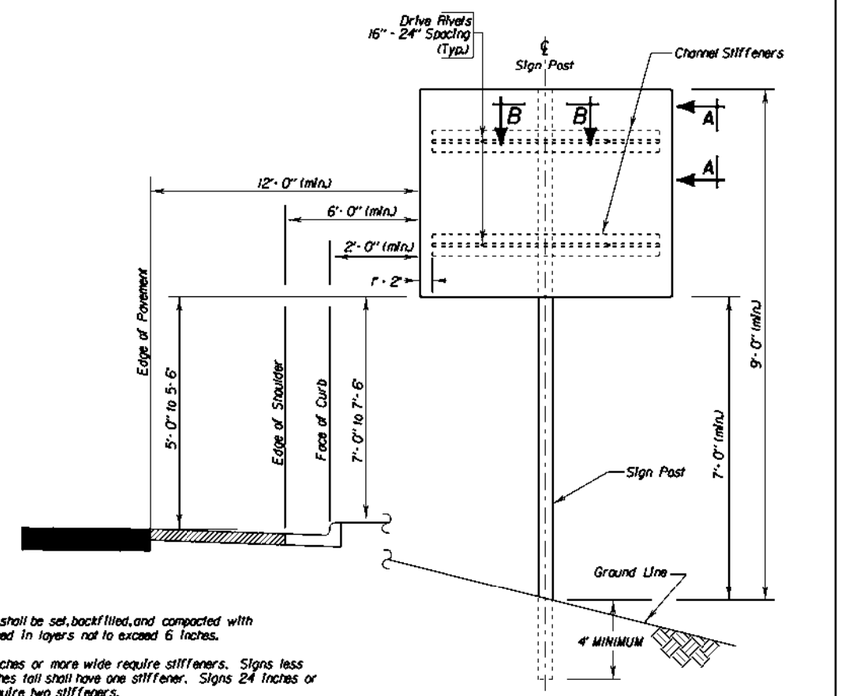

NOTES:

Wood posts shall be set, backfilled, and compacted with material placed in layers not to exceed 6 inches.

Signs 48 inches or more wide require stiffeners. Signs less than 24 inches tall shall have one stiffener. Signs 24 inches or more tall require two stiffeners.

W14-3 signs shall have a minimum of one stiffener.

ELEVATION

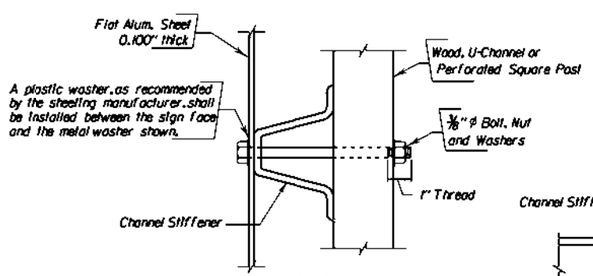

SEC. A-A

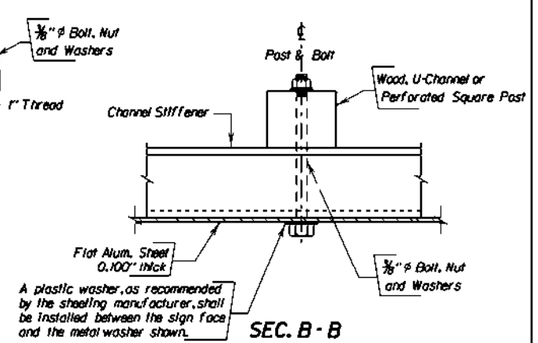

SEC. B-B

SINGLE POST BREAKAWAY SIGN SUPPORT
(Typical Sign and Stiffener Details)

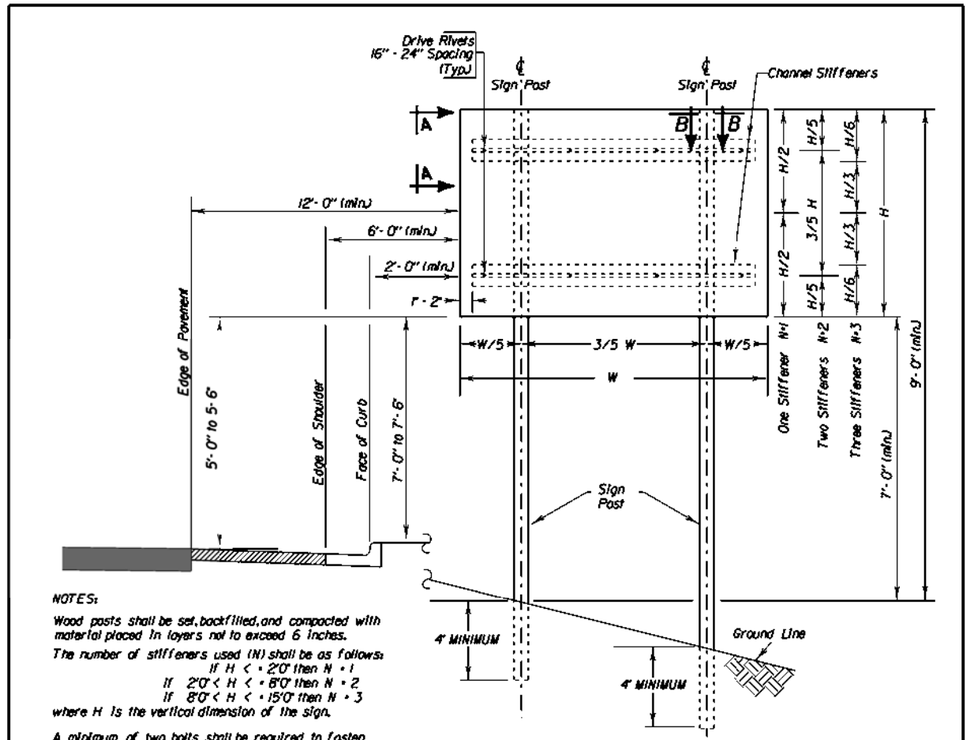

NOTES:

Wood posts shall be set, backfilled, and compacted with material placed in layers not to exceed 6 inches.

The number of stiffeners used (N) shall be as follows:

If H < = 2'0" then N = 1
If 2'0" < H < = 8'0" then N = 2
If 8'0" < H < = 15'0" then N = 3

where H is the vertical dimension of the sign.

A minimum of two bolts shall be required to fasten the sign to each post.

ELEVATION

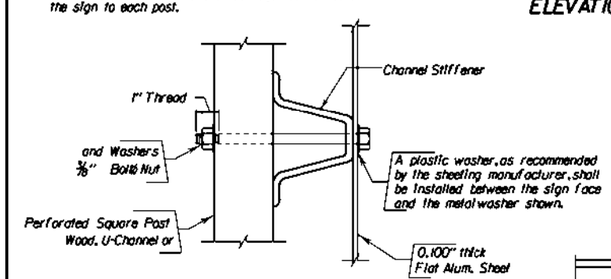

SEC. A-A

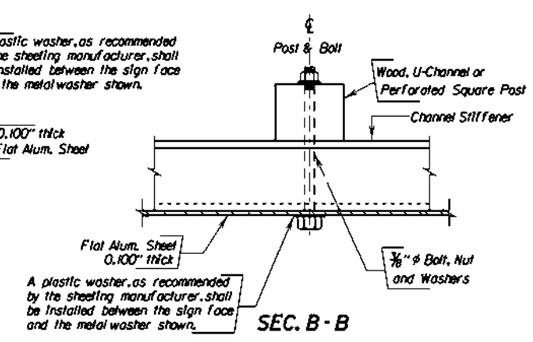

SEC. B-B

TWO POST BREAKAWAY SIGN SUPPORTS
(Typical Sign and Stiffener Details)

PLOT SCALE - 1:206.452
PLOTTED FROM - TRM11NT17
PLOT NAME - 8
FILE - ...\028V SIGNING CONTAINER.DGN

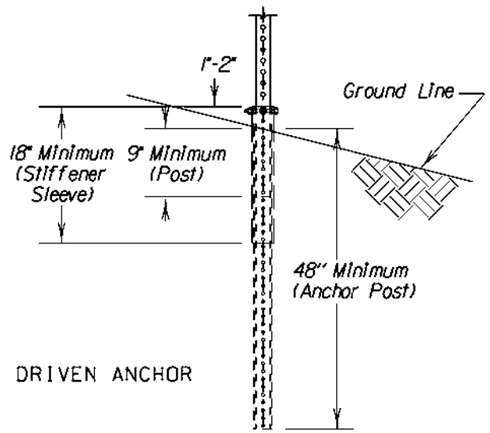

ELEVATION VIEW

POST SIZES		
Sign Post	2"	2¼"
Anchor Post	2¼"	2½"
Stiffener Sleeve	2½"	*3"

* - 7 Gauge Steel

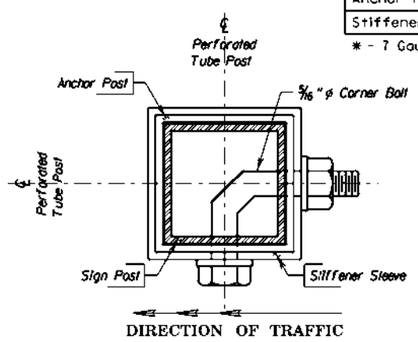

POST X-SECTION VIEW

NOTE:
Perforated tube post with breakaway anchor base shall be galvanized 12 gauge steel unless otherwise specified in the plans. Sign installations must meet or exceed NCHRP 350 or MASH breakaway requirements and be FHWA approved.

PERFORATED TUBE POST BREAKAWAY TWO-PIECE ANCHOR BASE DETAILS

(Typical)

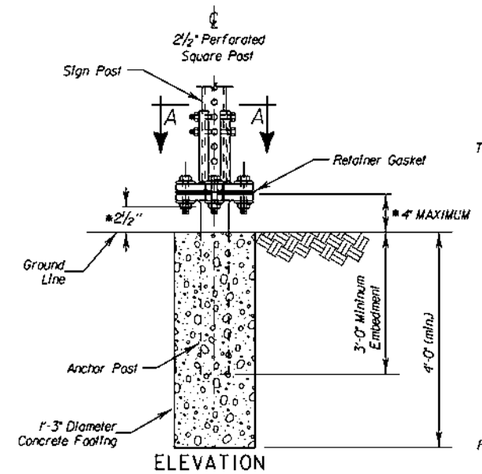

ELEVATION

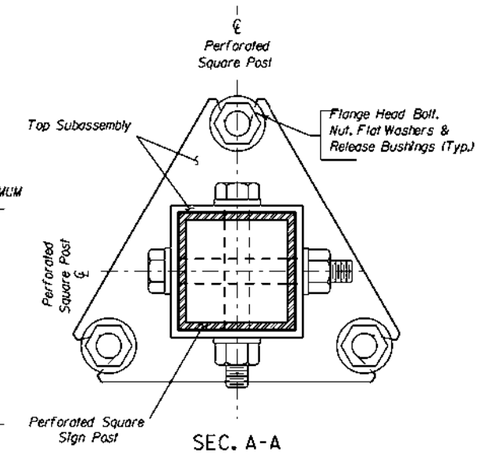

SEC. A-A

* — Dimensions shown may vary by Manufacturer. The Contractor shall use Manufacturer recommended assembly parts and procedures. Sign installations must meet NCHRP 350 or MASH breakaway requirements and be FHWA approved.

GENERAL NOTES-

1. Design Specification: AASHTO Standard Specifications for Structural Supports for Highway Signs, Luminaries and Traffic Signals, 4th Edition, with 2002, 2003, and 2004 Interims.

2. The manufacturer shall provide certification that the posts and hardware furnished have essentiall the same chemistry, mechanical properties and geometry as those used in the FHWA tests and will meet the FHWA change in velocity requirements.

3. The manufacturer shall provide certification that the breakaway system furnished will develop the full shear and bending yield strength of the sign post section being spliced.

4. All posts shall be galvanized in accordance with ASTM A653, Des. G-90.

5. All hardware shall be galvanized in accordance with ASTM A153.

SINGLE PERFORATED TUBE POST BREAKAWAY SUPPORT WITH SLIPBASE AND CONCRETE FOOTING

(Typical)

PLOT SCALE - 1:206.452
PLOTTED FROM - TRMLINT17
PLOT NAME - 9
FILE - ...\028V SIGNING CONTAINER.DGN

STATE OF SOUTH DAKOTA	PROJECT	SHEET	TOTAL SHEETS
	P 0017(08)42	S16	S18

Plotting Date: 11/09/2015

OBJECT MARKER ERECTION DETAILS

TYPICAL AT CULVERT, CATTLE PASS END, OR MULTIPLE PIPES WITH OUTSIDE DIMENSION OR A COMBINED WIDTH OF LESS THAN 60"

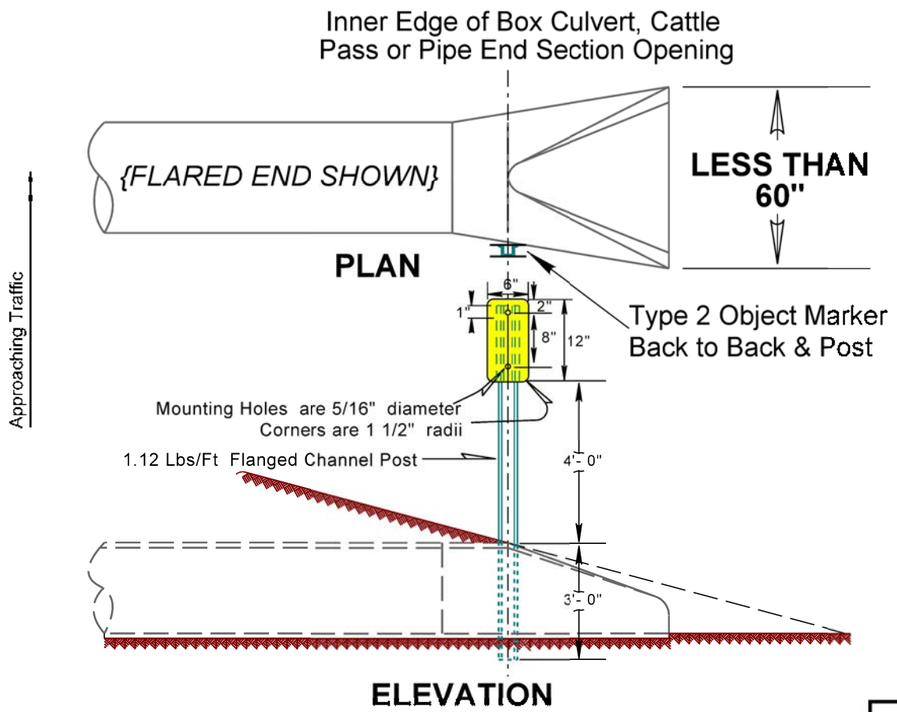

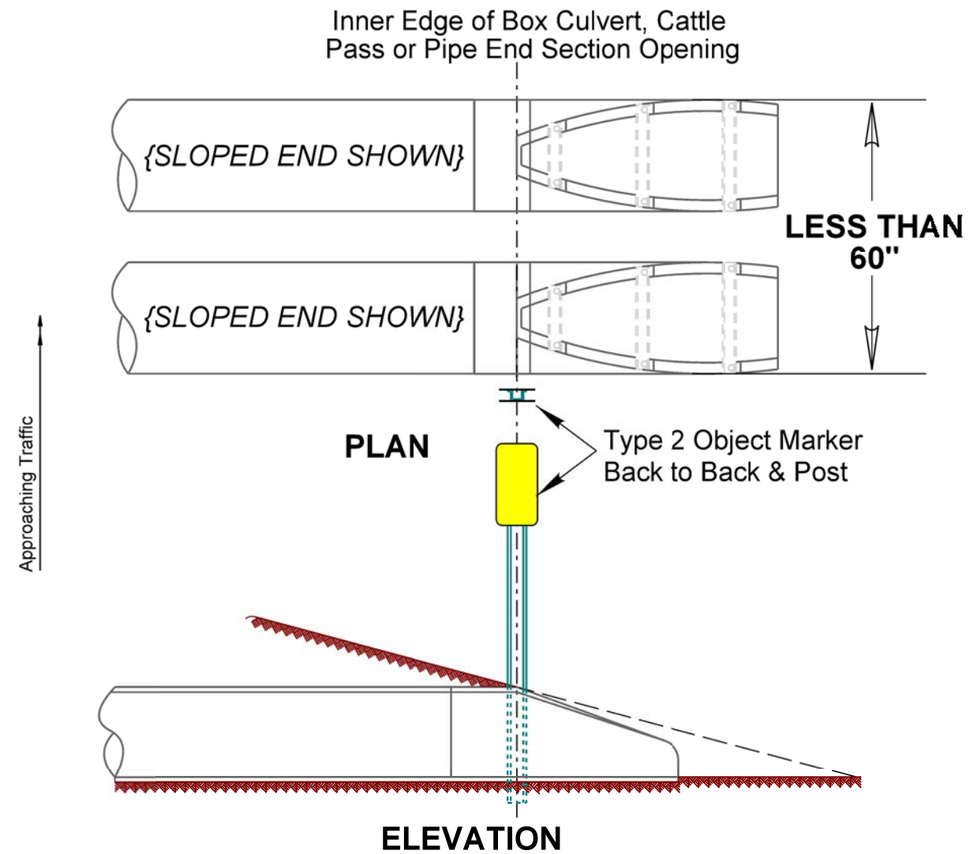

TYPE 2 OBJECT MARKER BACK TO BACK	
632E2510	
STATION (SD19)	QUANTITY
8+87 L&R	2
47+53 L&R	2
48+49 L&R	2
TOTAL	6

PLOT SCALE - 1:6.51974

PLOT NAME - 10

FILE - ...\028V SIGNING CONTAINER.DGN

PLOTTED FROM - TRMINT17

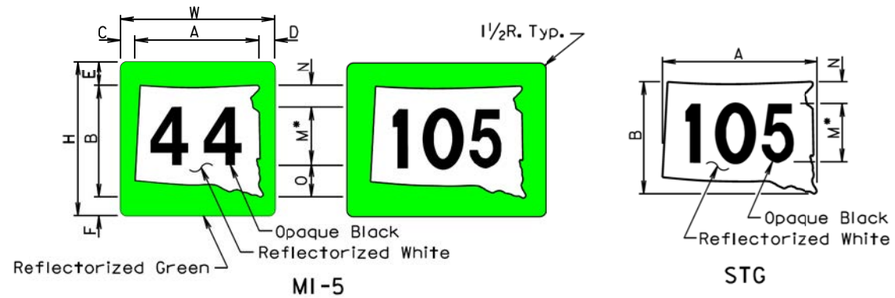

MI-5

STG

SIGN CODE	WxH	A	B	C	D	E	F	M*	N	O
MI-5	24x24	20½	18	2	1½	3½	2½	12D	2	4
MI-5**	30x24	24	18	2¼	1¾	3½	2½	12D	2	4
MI-5	30x30	25⅝	22½	2½	1⅞	4⅜	3⅛	15D	2½	5
MI-5	36x36	30¾	27	3	2¼	5¼	3¾	18D	3	6

SIGN CODE	AxB	M*	N
STG-24	24x18	10D	4
STG-32	32x24	12D	4¾
STG-48	48x36	18D	7
STG-64	64x48	24D	9½

*In the few cases where there is not enough space for the numerals, the standard "D" series font may be replaced with "C" series font if approved by the Engineer.

** 3 Digits

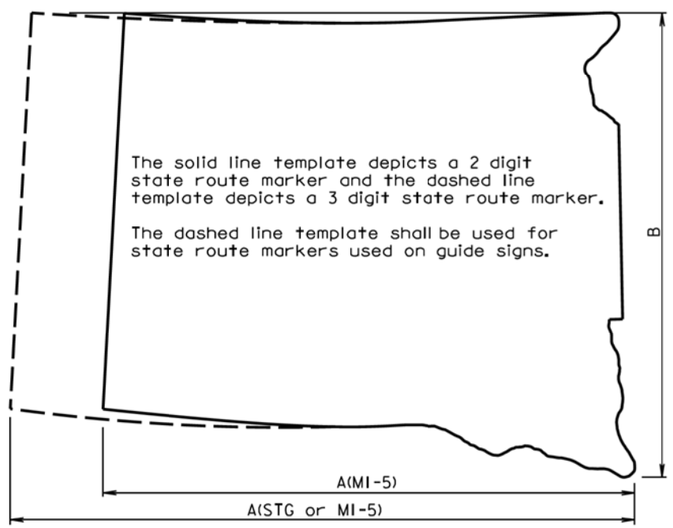

TEMPLATE FOR STATE ROUTE MARKER

GENERAL NOTES:

The unit for all dimensions shown is inches.

Numerals shall be "D" series font for all state route markers except as noted above.

December 23, 2003

Published Date: 4th Qtr. 2015	SDDOT	**STATE ROUTE MARKERS**	PLATE NUMBER 632.20
			Sheet 1 of 1

PLOT SCALE - 1:206.452

PLOTTED FROM - TRMLINT17

PLOT NAME - 11

FILE - ...\028V SIGNING CONTAINER.DGN

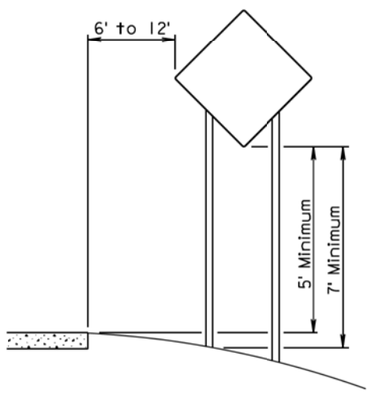

RURAL DISTRICT

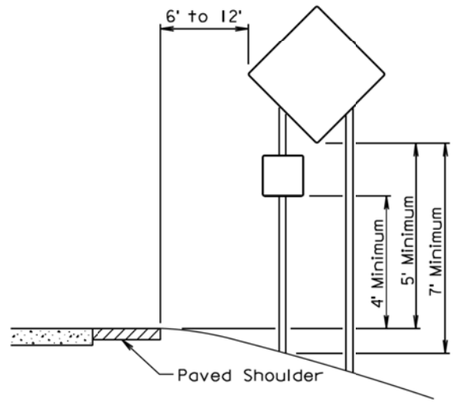

RURAL DISTRICT WITH SUPPLEMENTAL PLATE

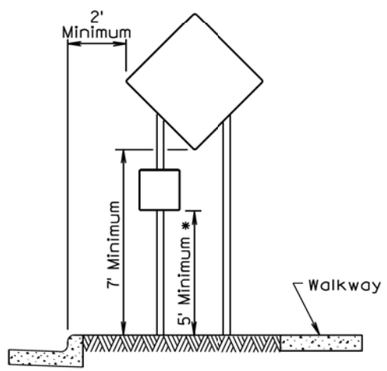

URBAN DISTRICT

* If the bottom of supplemental plate is mounted lower than 7 feet above a pedestrian walkway, the supplemental plate should not project more than 4" into the pedestrian facility.

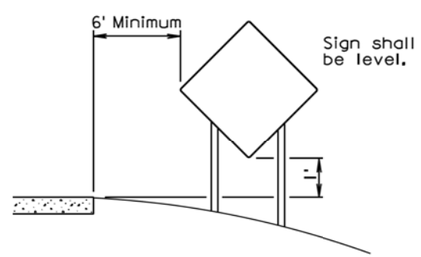

RURAL DISTRICT
3 DAY MAXIMUM
(Not applicable to regulatory signs)

September 22, 2014

Published Date: 4th Qtr. 2015	SDDOT	CRASHWORTHY SIGN SUPPORTS (Typical Construction Signing)	PLATE NUMBER 634.85 Sheet 1 of 1

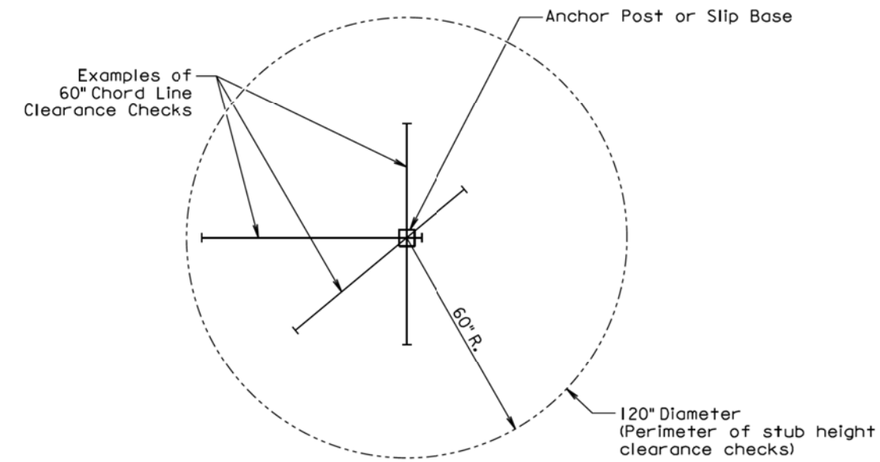

PLAN VIEW
(Examples of stub height clearance checks)

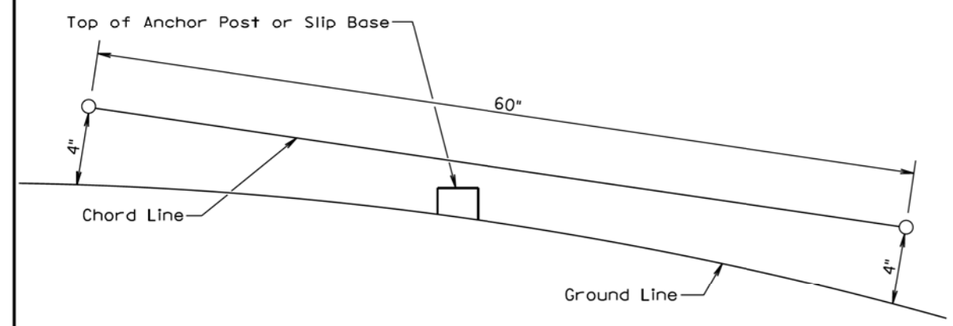

ELEVATION VIEW

GENERAL NOTES:

The top of anchor posts and slip bases SHALL NOT extend above a 60" chord line within a 120" diameter circle around the post with ends 4" above the ground.

At locations where there is curb and gutter adjacent to the breakaway sign support, the stub height shall be a maximum of 4" above the ground line at the localized area adjacent to the breakaway support stub.

The 4" stub height clearance is not necessary for U-channel lap splices where the support is designed to yield (bend) at the base.

July 1, 2005

Published Date: 4th Qtr. 2015	SDDOT	BREAKAWAY SUPPORT STUB CLEARANCE	PLATE NUMBER 634.99 Sheet 1 of 1