STATE OF SOUTH DAKOTA	PROJECT	SHEET	TOTAL SHEETS
	P 0017(08)42	X1	X55

Plotting Date: 11/18/2015

Section X: Cross Sections

INDEX OF SHEETS

X1	General Layout W/Index
X2 -X49	Mainline Cross Sections
X50-X55	XR010 Cross Sections

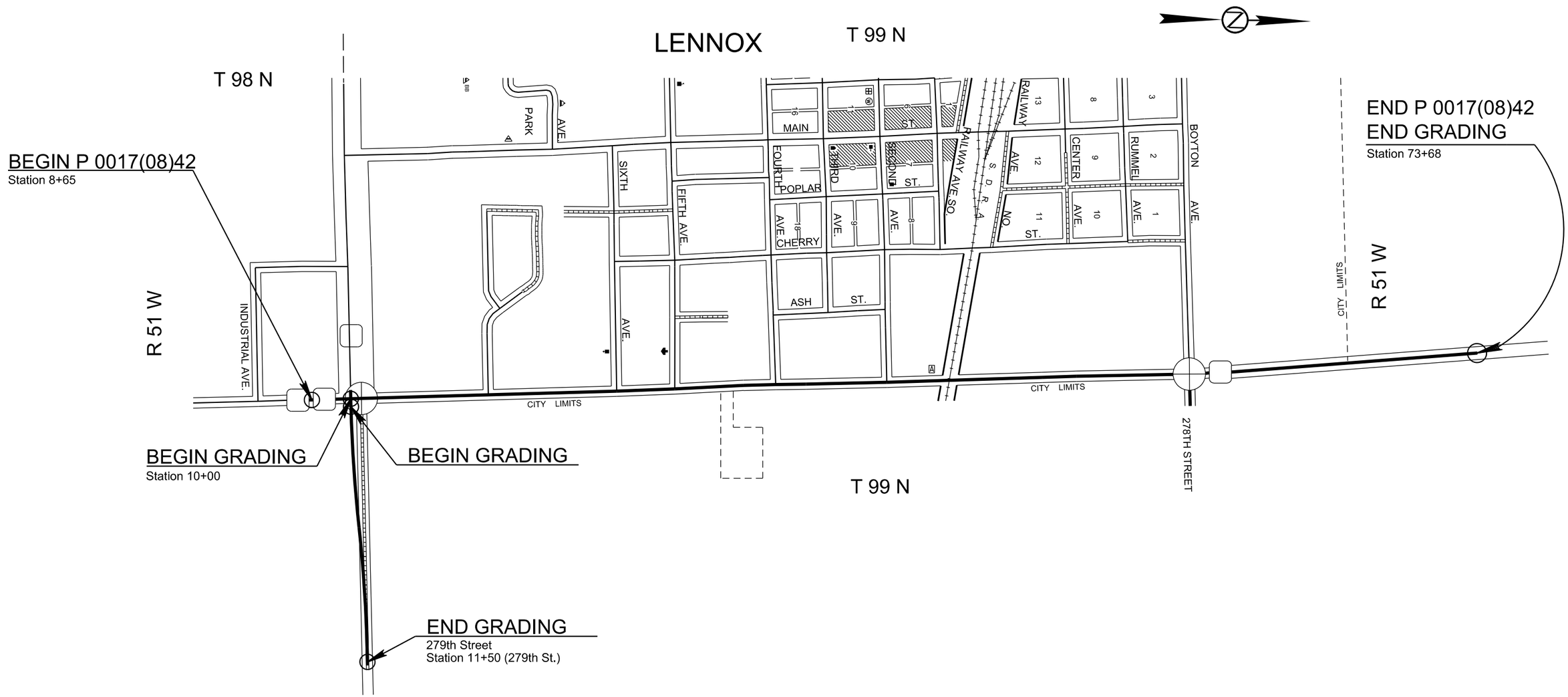

Plot Scale - 1:200

Plotted From - TRSF12140

Plot Name - 1

File - U:\rd\prj\llncc028V\title\X.dgn

STATE OF SOUTH DAKOTA	PROJECT	SHEET NO.	TOTAL SHEETS
	P 0017(08)42	X2	X55

Plotting Date: 11/18/2015

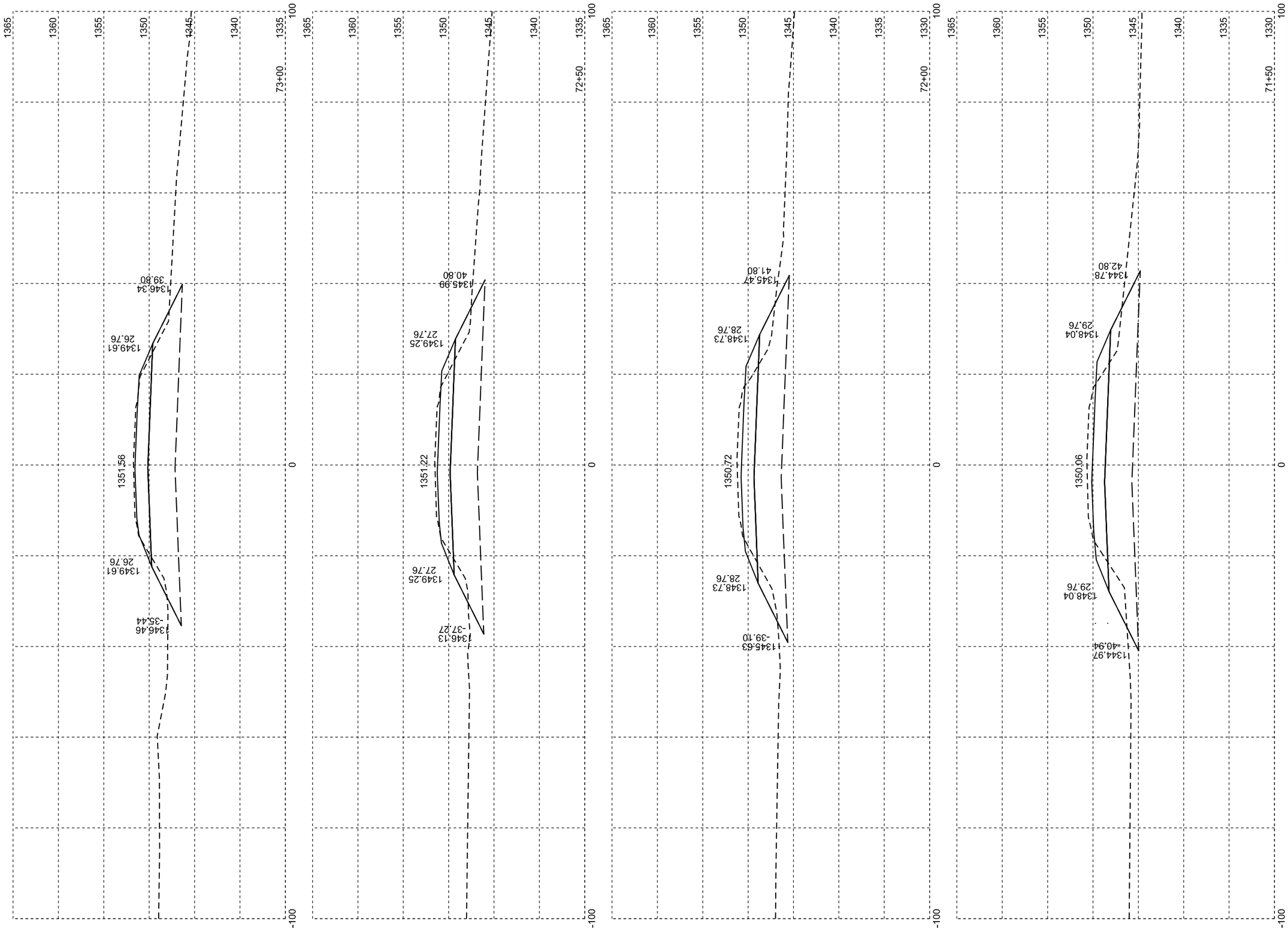

STATE OF SOUTH DAKOTA	PROJECT	SHEET NO.	TOTAL SHEETS
	P 0017(08)42	X3	X55

Plotting Date: 11/18/2015

STATE OF SOUTH DAKOTA	PROJECT	SHEET NO.	TOTAL SHEETS
	P 0017(08)42	X4	X55

Plotting Date: 11/18/2015

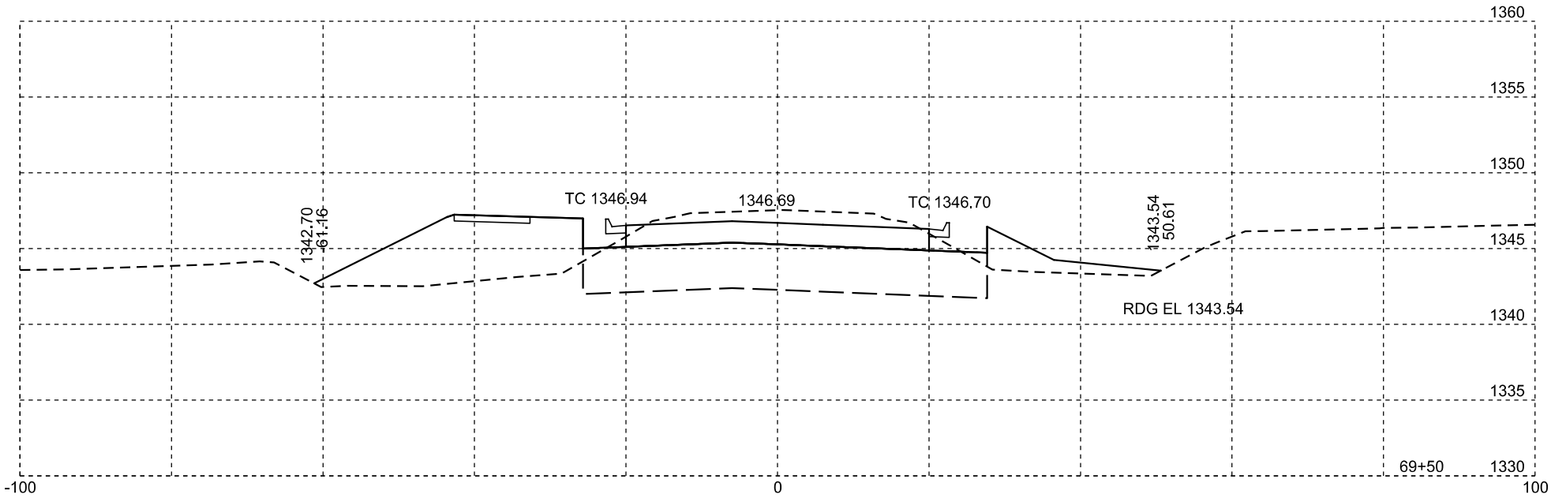

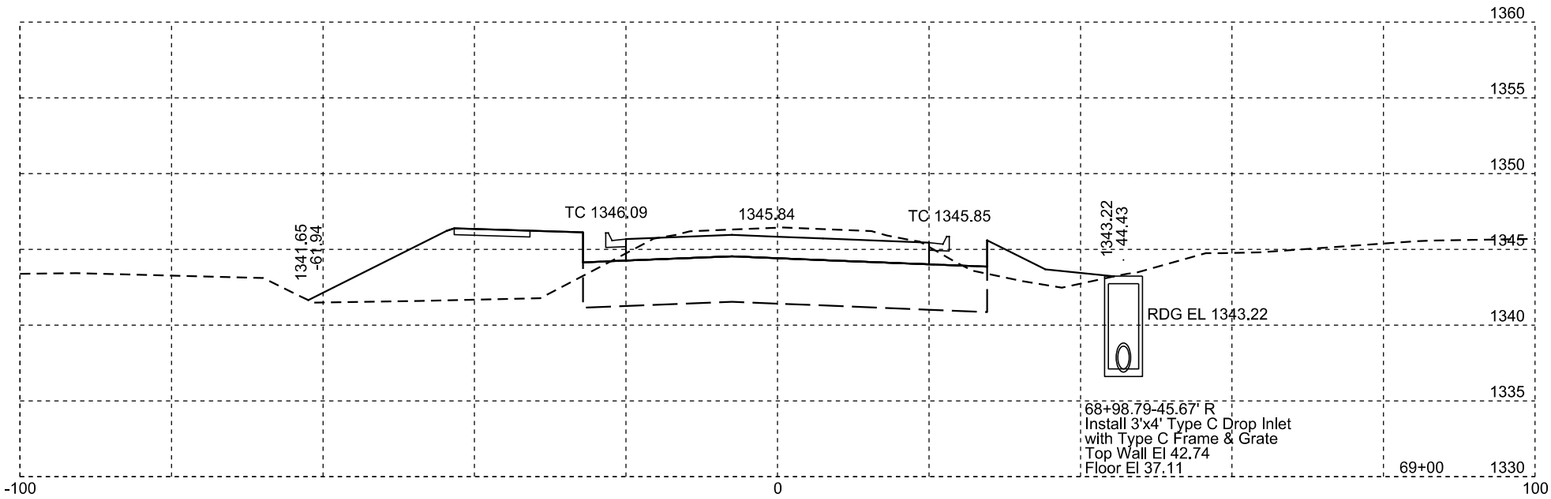

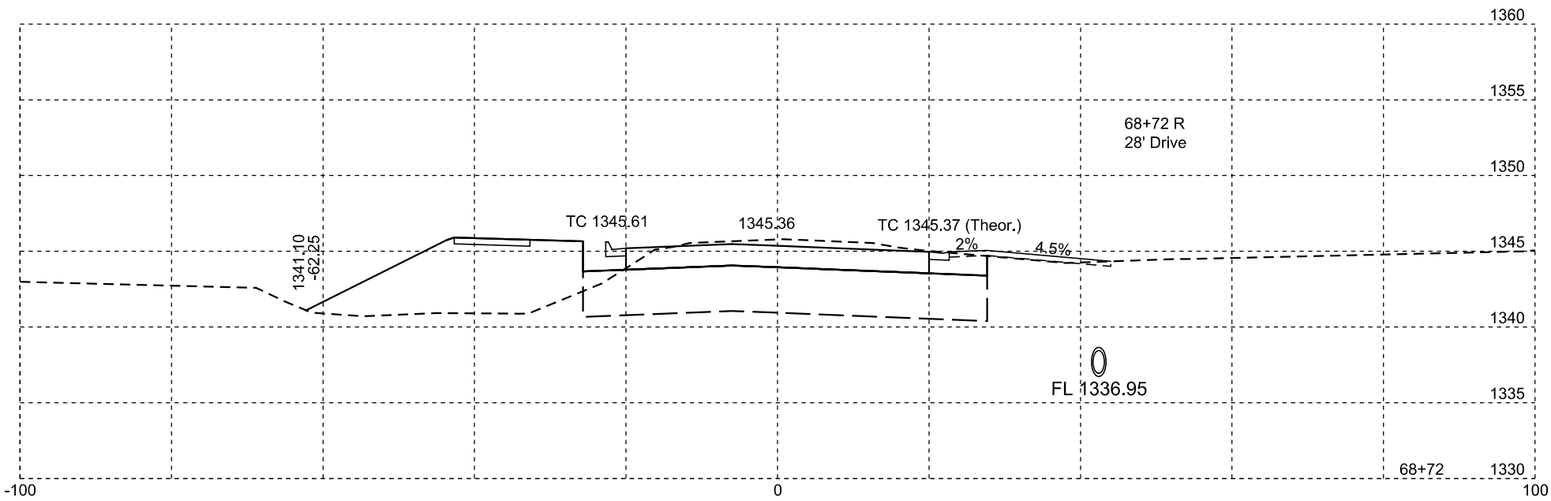

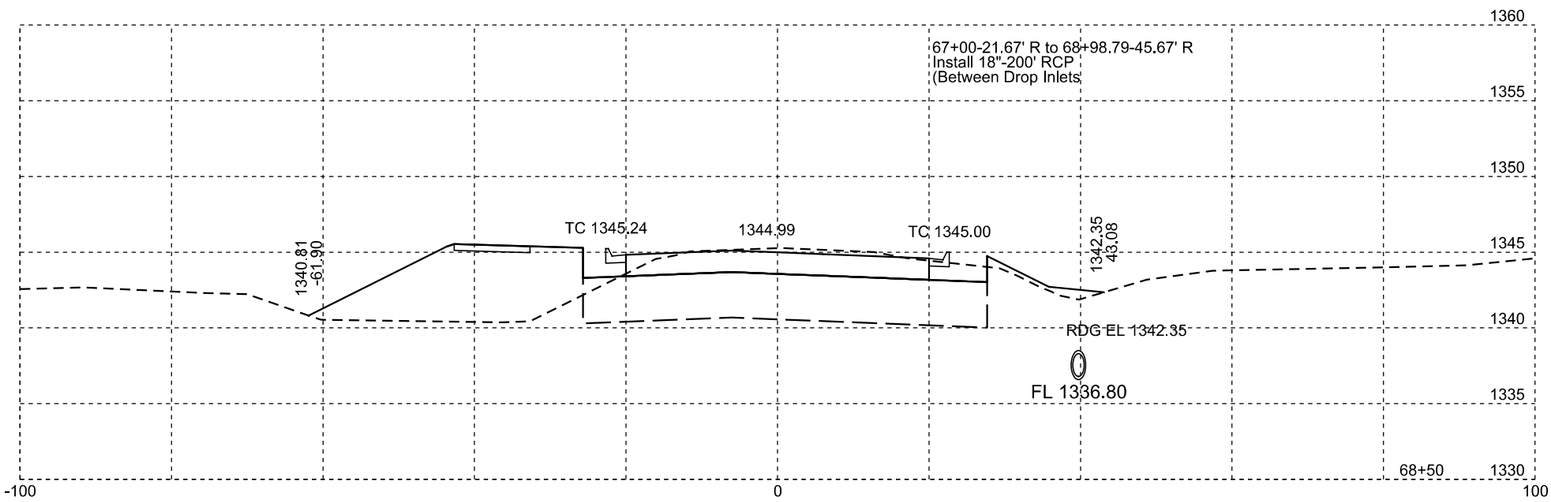

Plotting Date: 11/18/2015

STATE OF SOUTH DAKOTA	PROJECT	SHEET NO.	TOTAL SHEETS
	P 0017(08)42	X5	X55

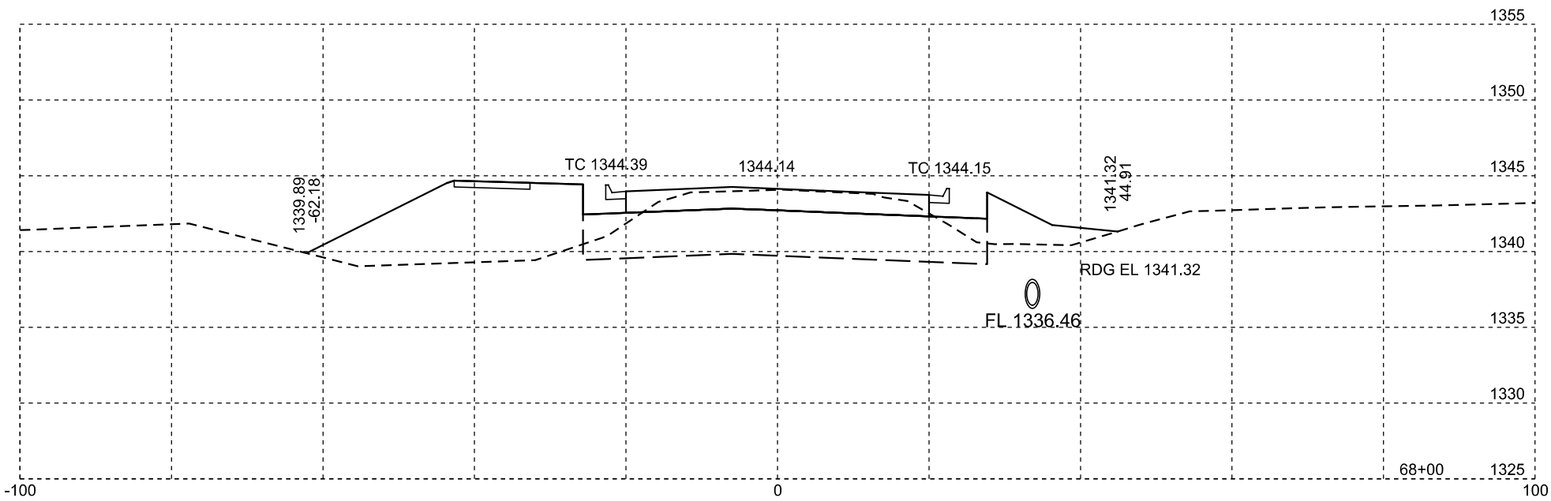

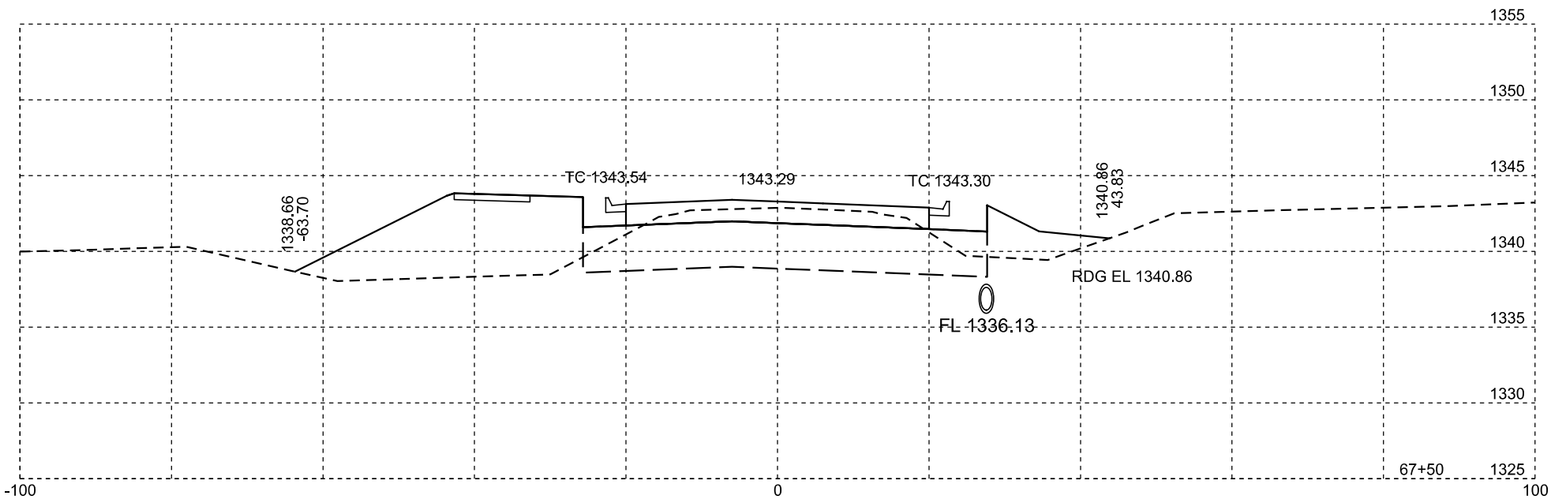

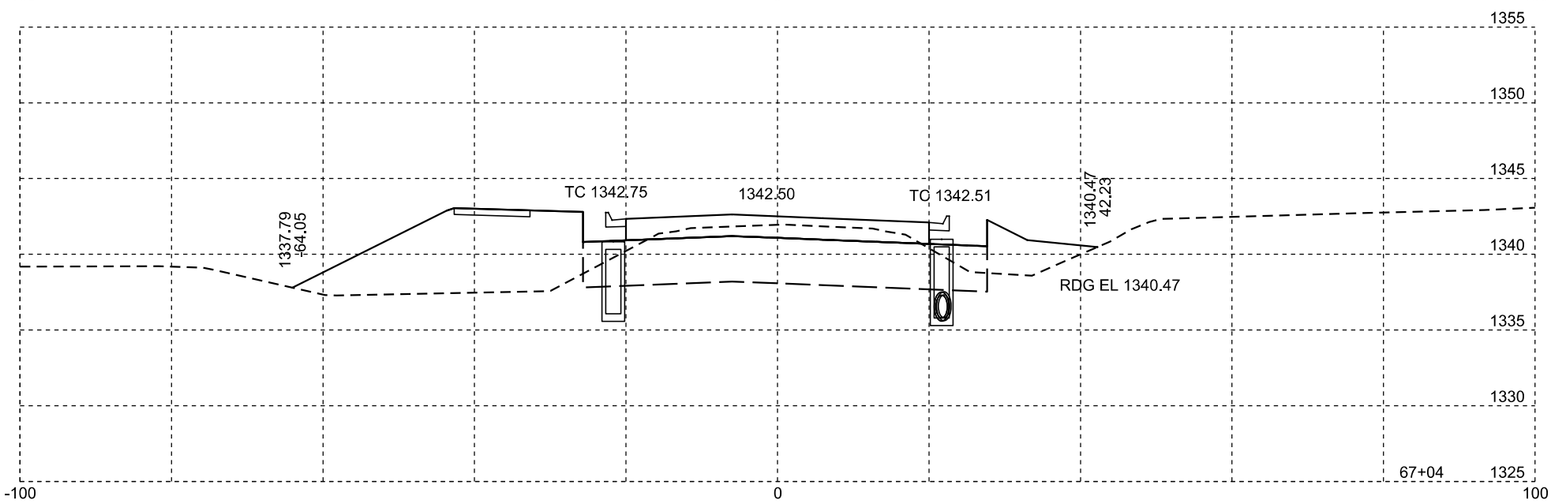

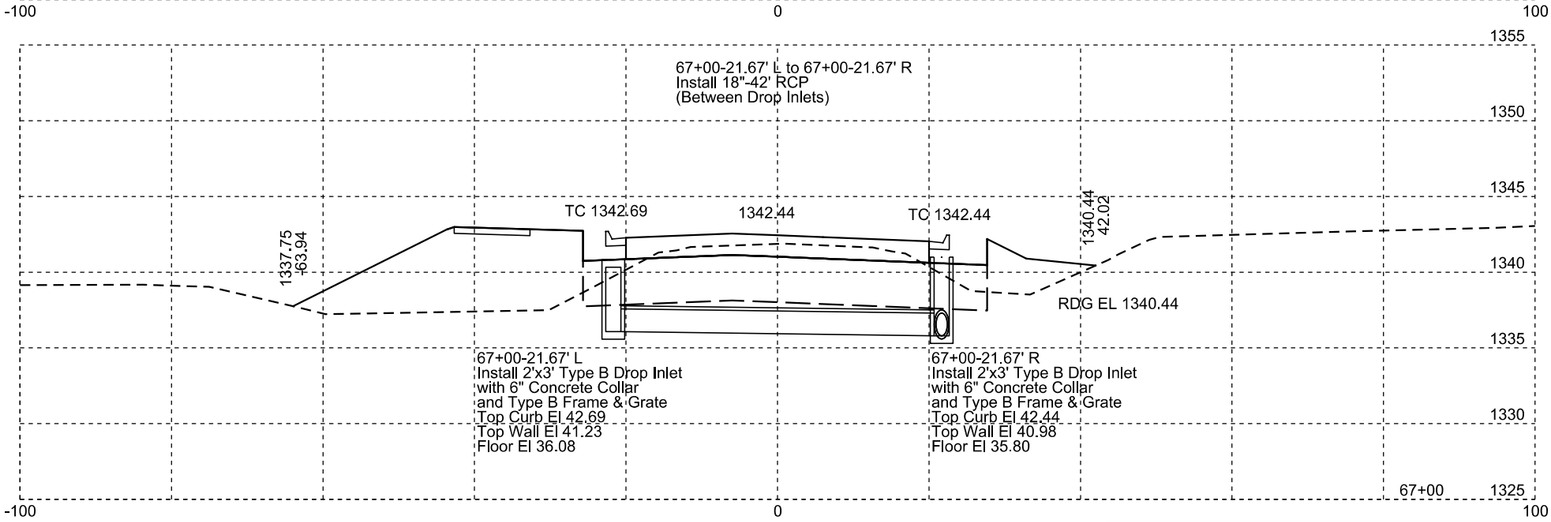

Plotting Date: 11/18/2015

STATE OF SOUTH DAKOTA	PROJECT	SHEET NO.	TOTAL SHEETS
	P 0017(08)42	X6	X55

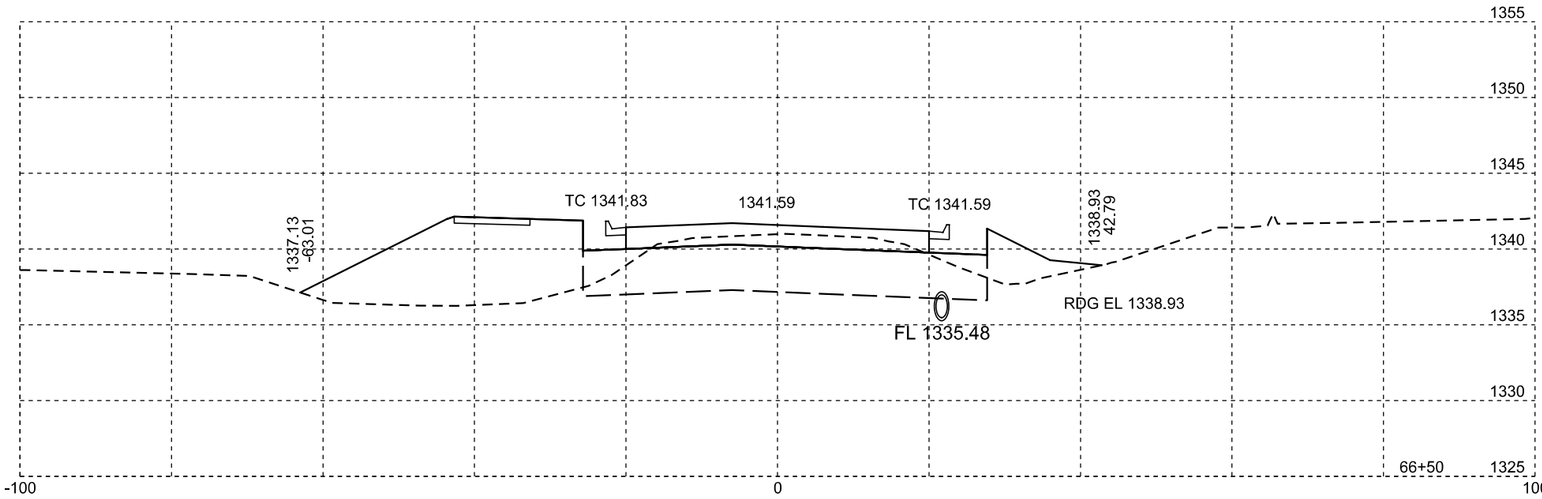

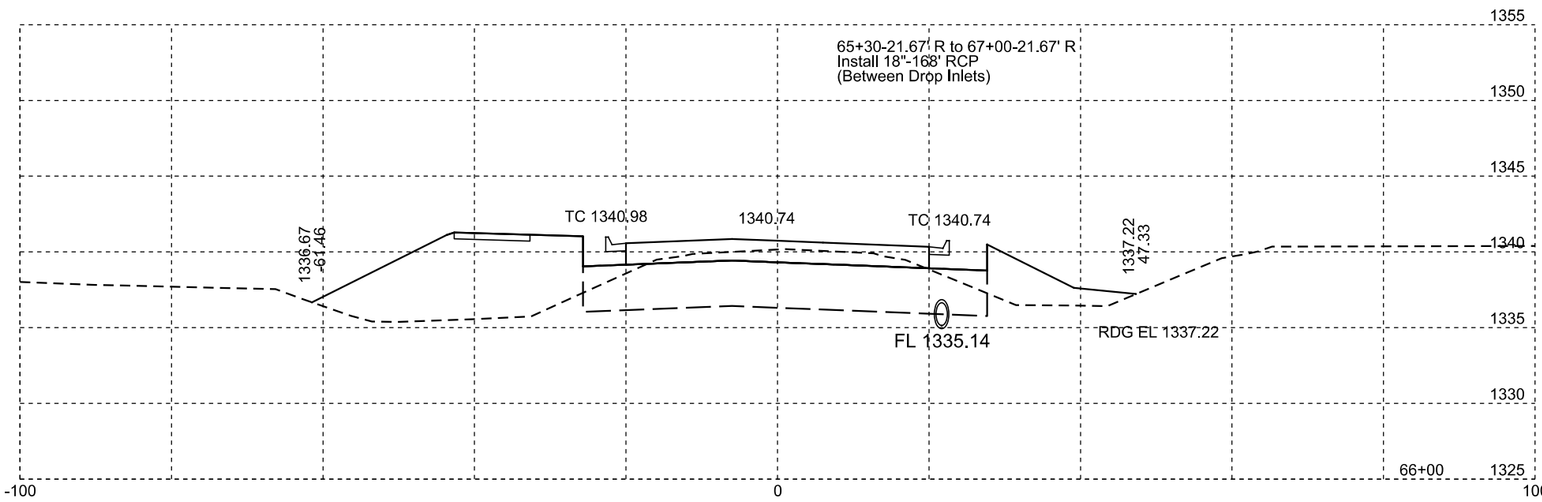

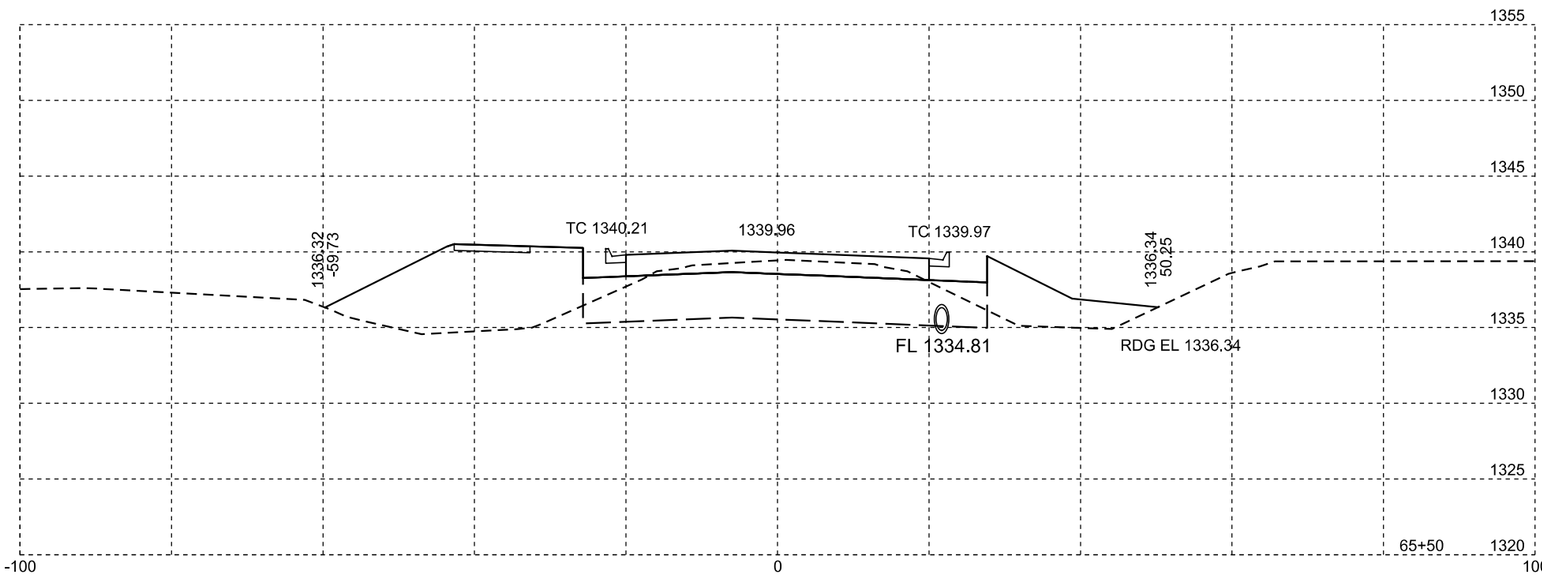

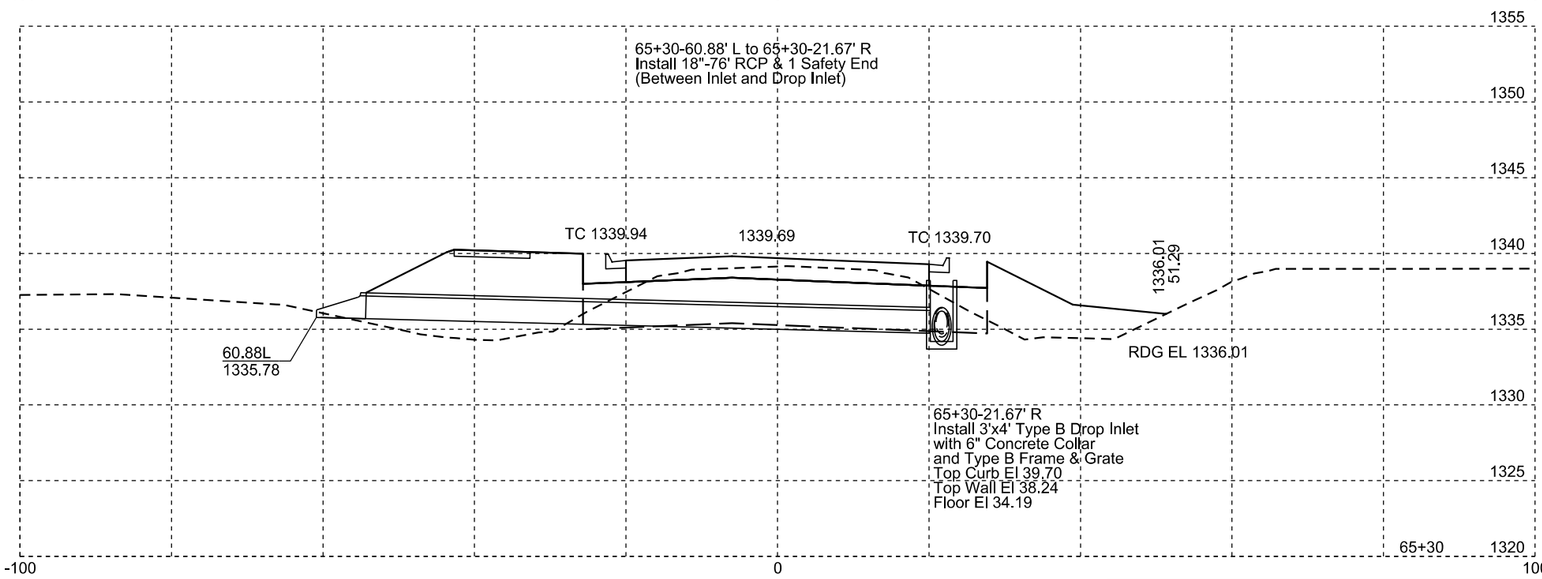

Plotting Date: 11/18/2015

STATE OF SOUTH DAKOTA	PROJECT	SHEET NO.	TOTAL SHEETS
	P 0017(08)42	X7	X55

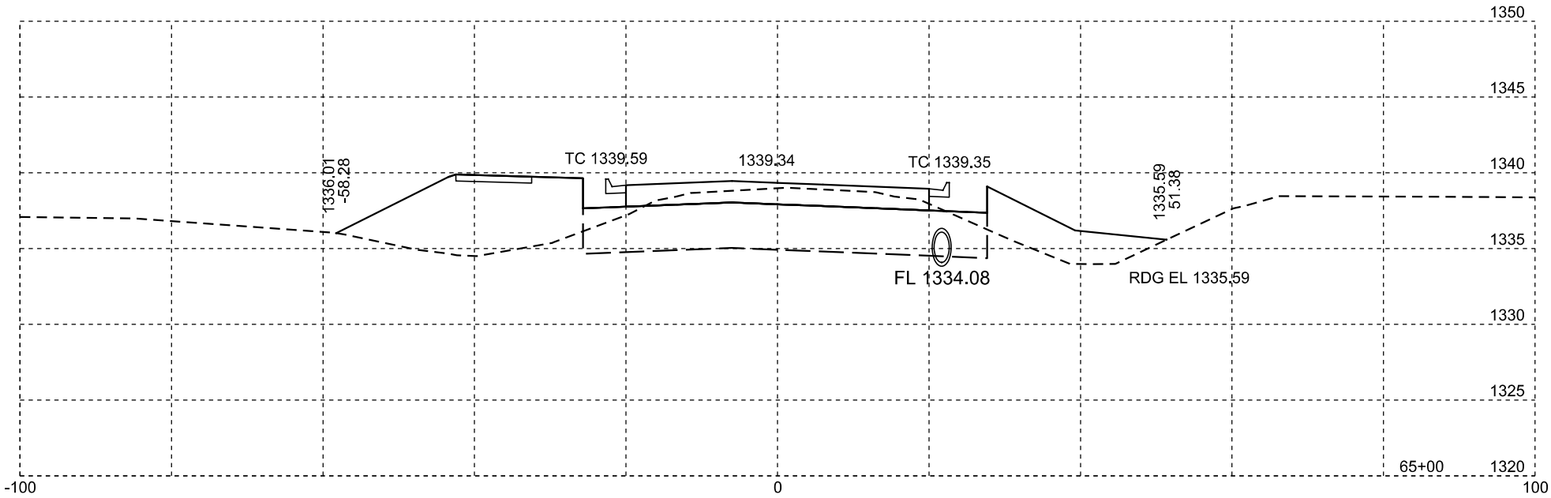

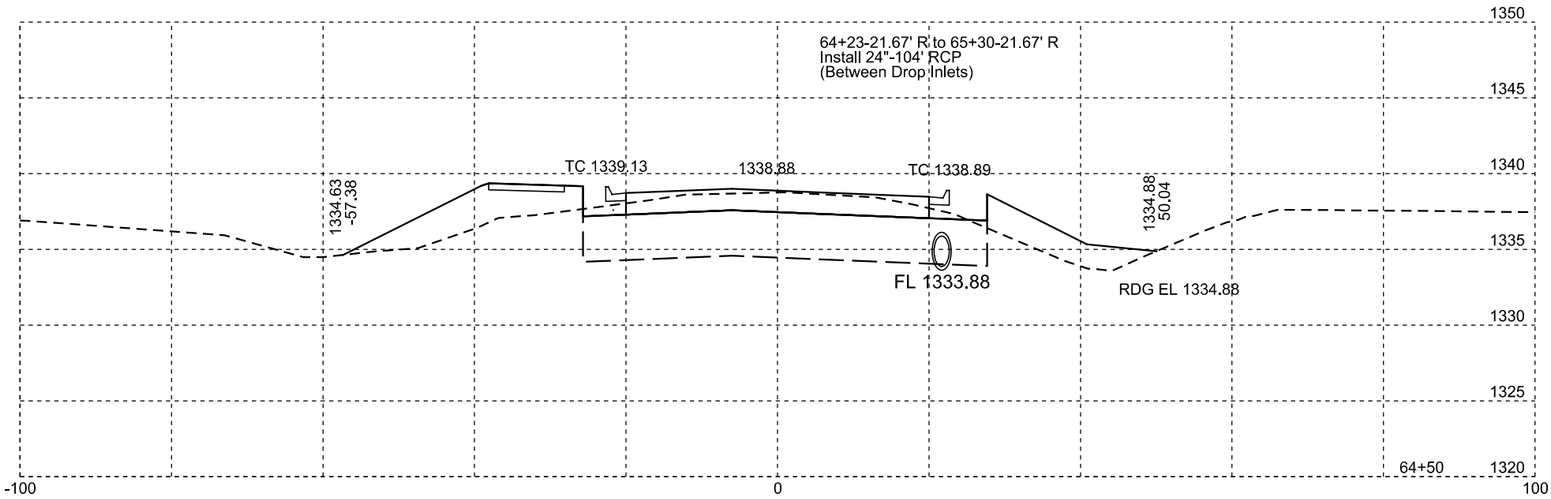

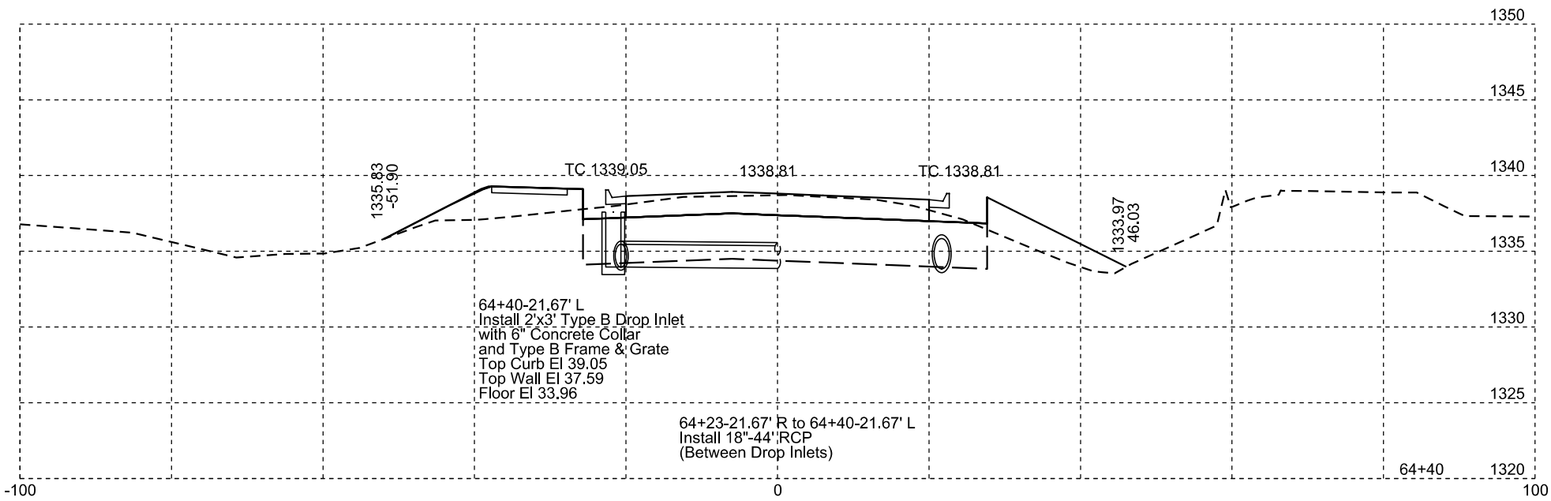

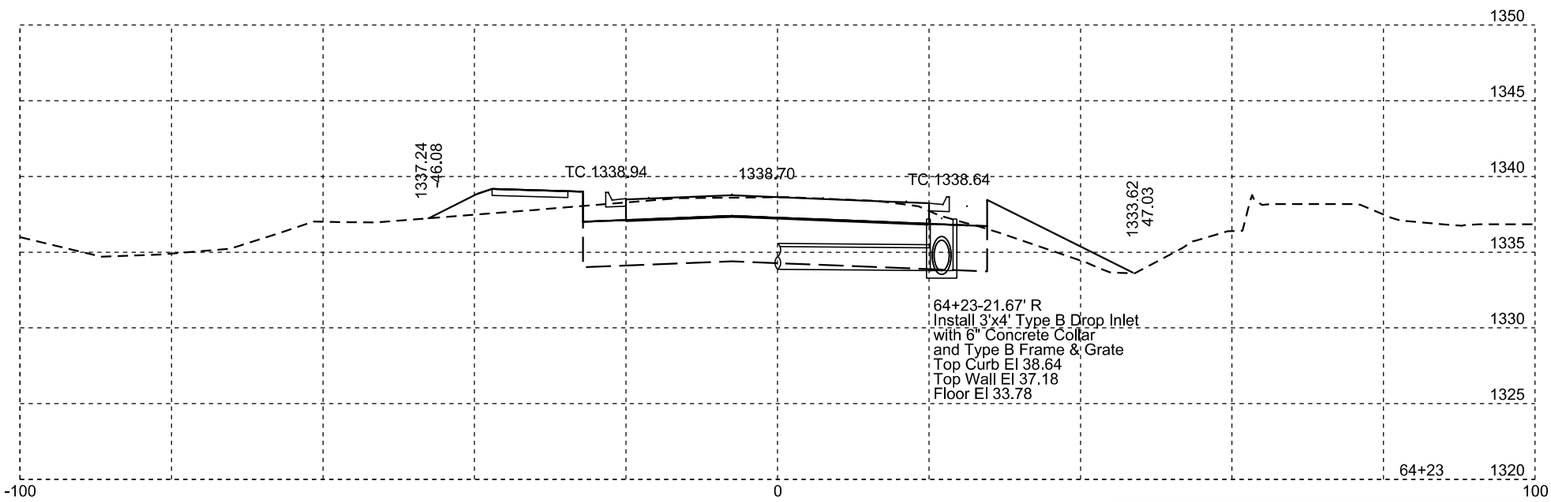

Plotting Date: 11/18/2015

STATE OF SOUTH DAKOTA	PROJECT	SHEET NO.	TOTAL SHEETS
	P 0017(08)42	X8	X55

STATE OF SOUTH DAKOTA	PROJECT	SHEET NO.	TOTAL SHEETS
	P 0017(08)42	X9	X55

Plotting Date: 11/18/2015

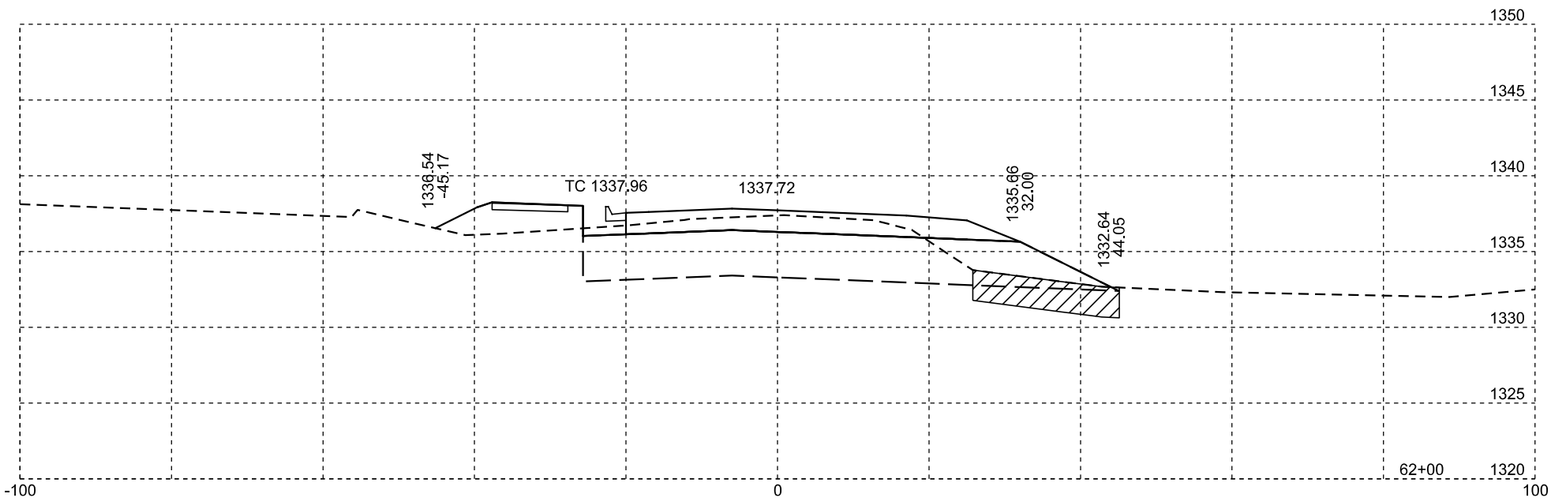

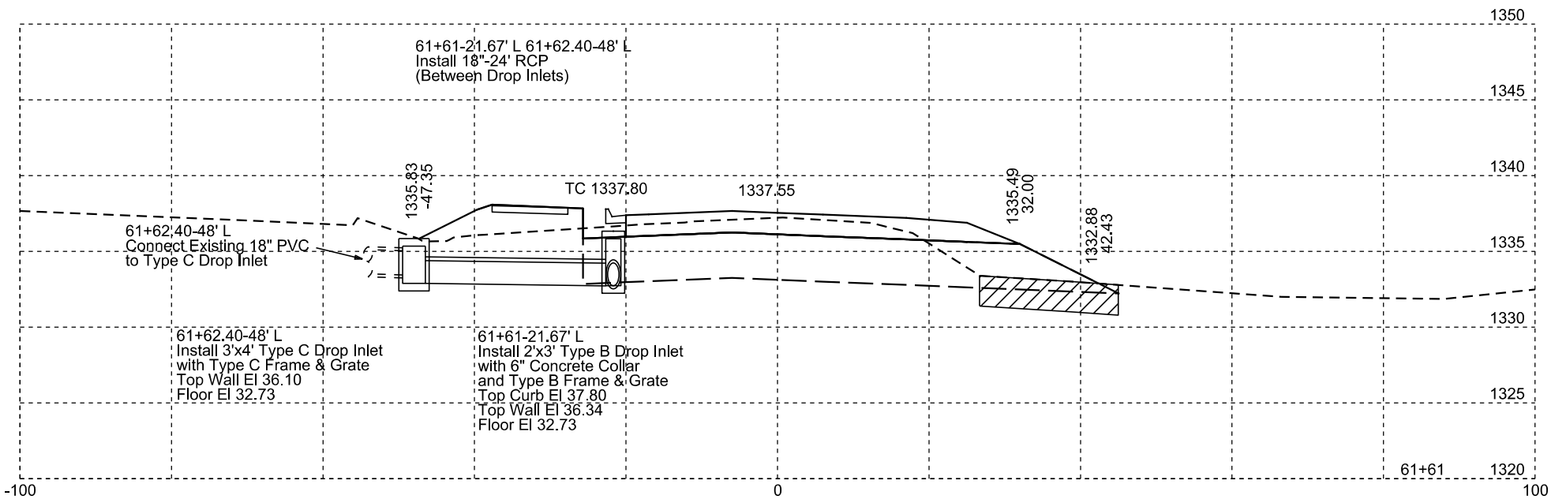

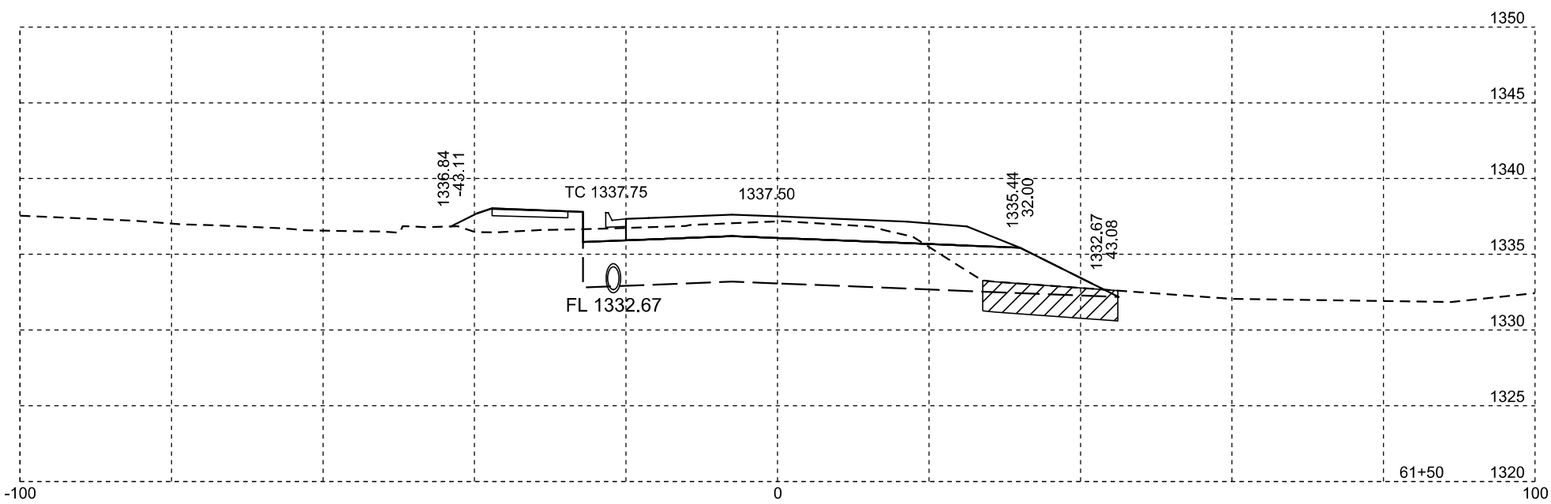

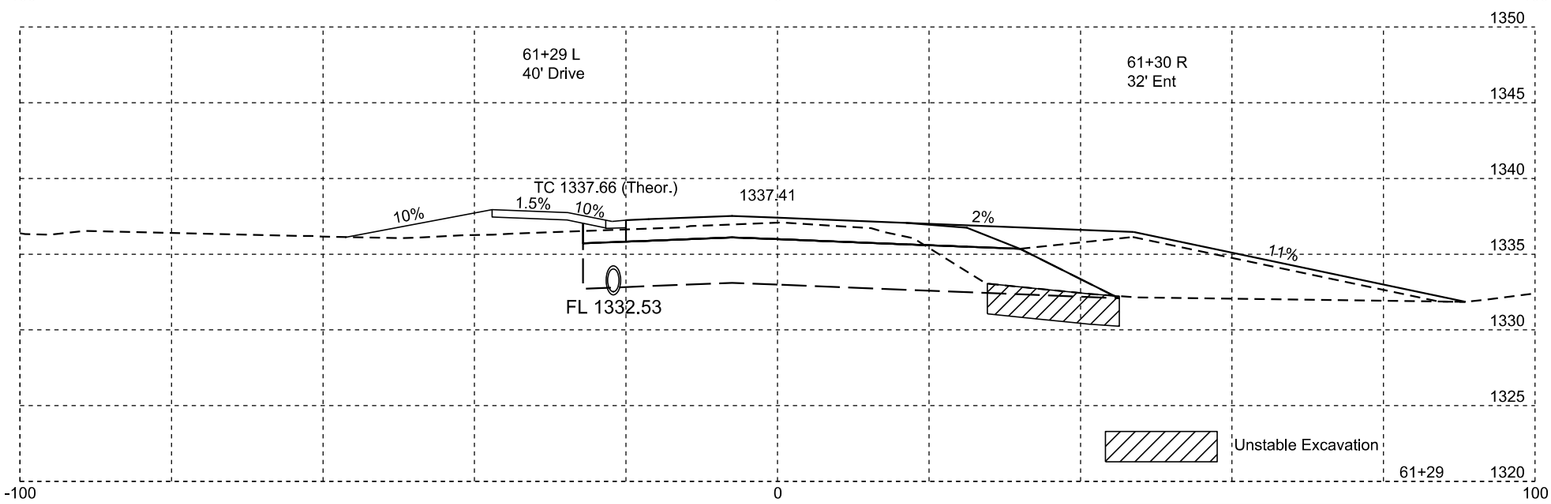

Plotting Date: 11/18/2015

STATE OF SOUTH DAKOTA	PROJECT	SHEET NO.	TOTAL SHEETS
	P 0017(08)42	X10	X55

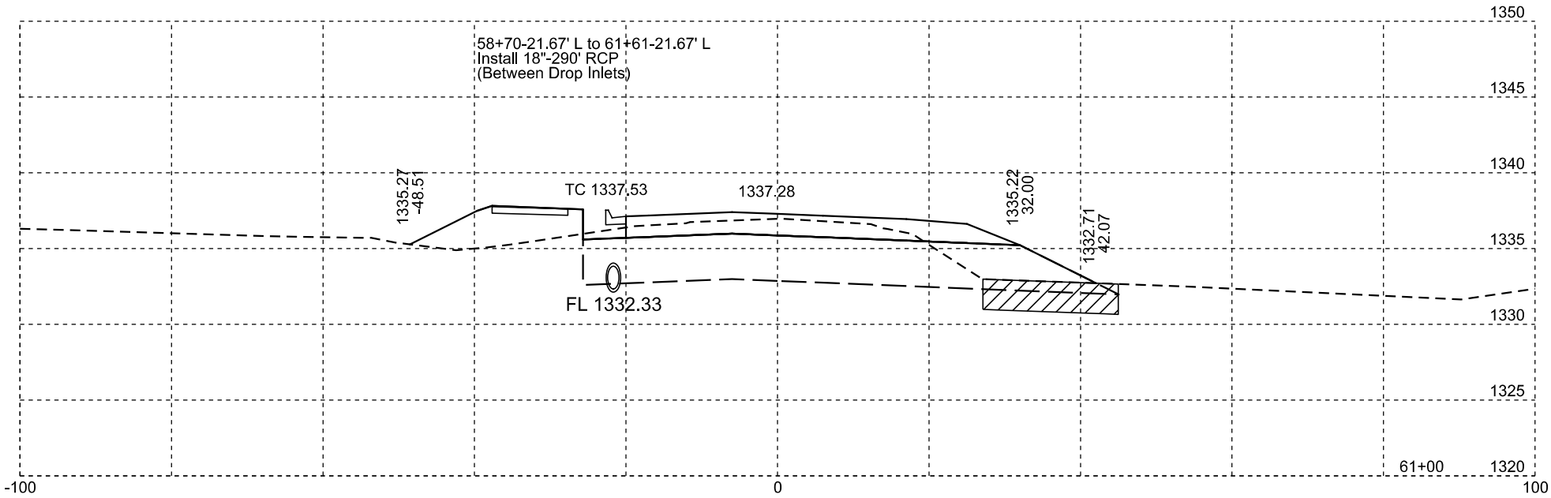

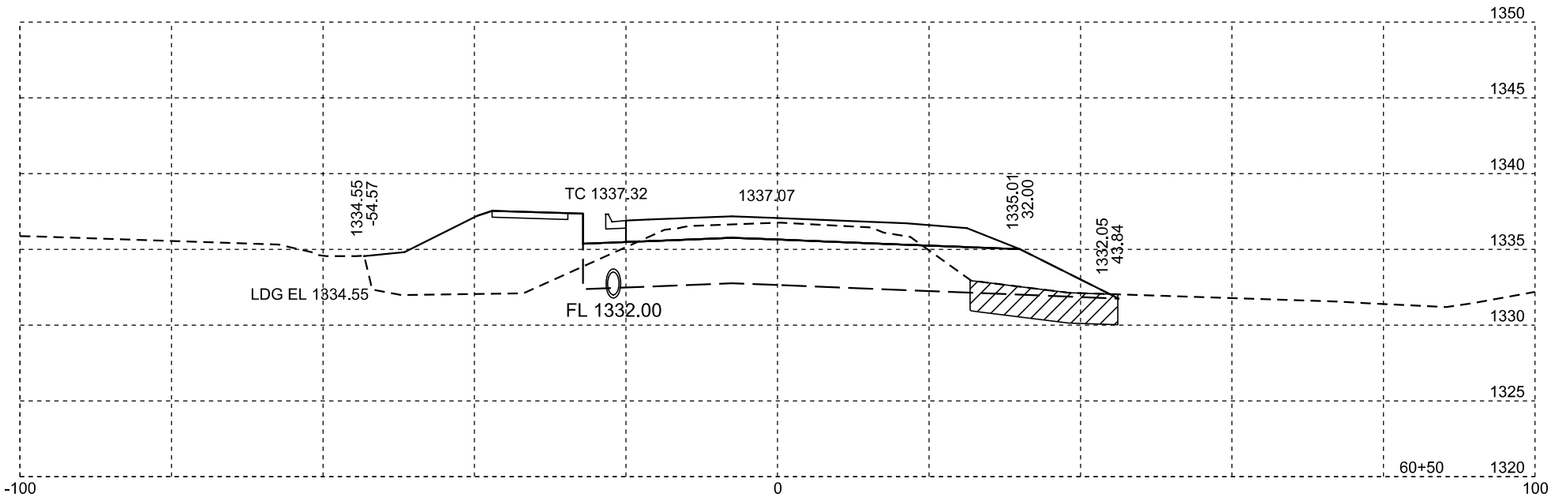

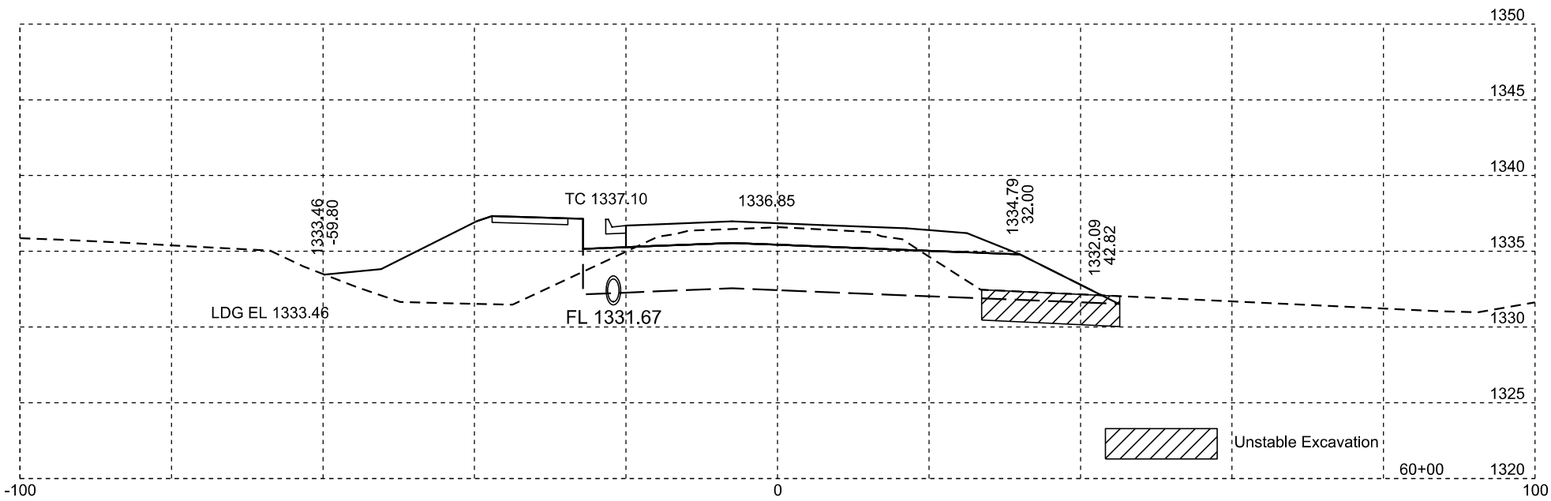

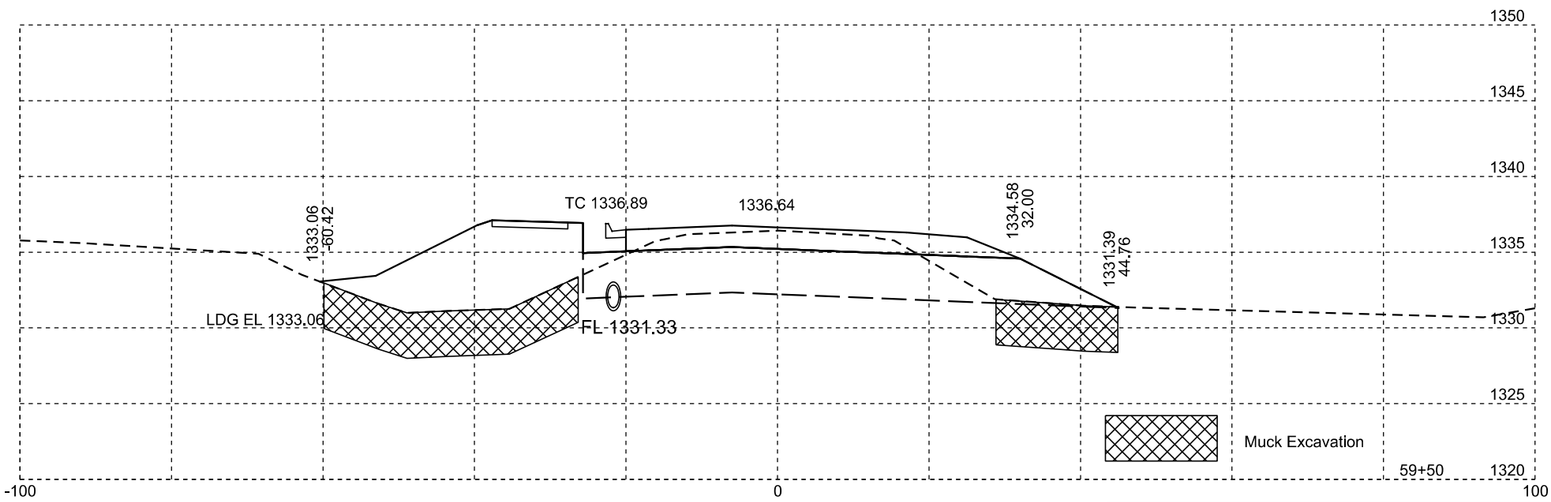

Plotting Date: 11/18/2015

STATE OF SOUTH DAKOTA	PROJECT	SHEET NO.	TOTAL SHEETS
	P 0017(08)42	X11	X55

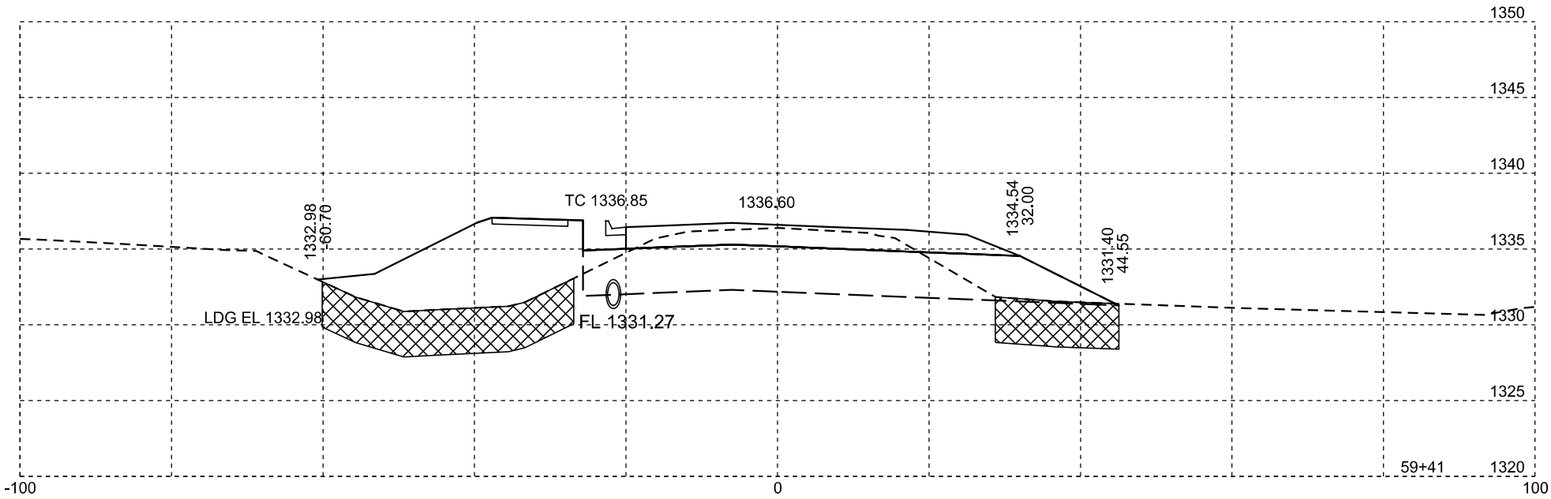

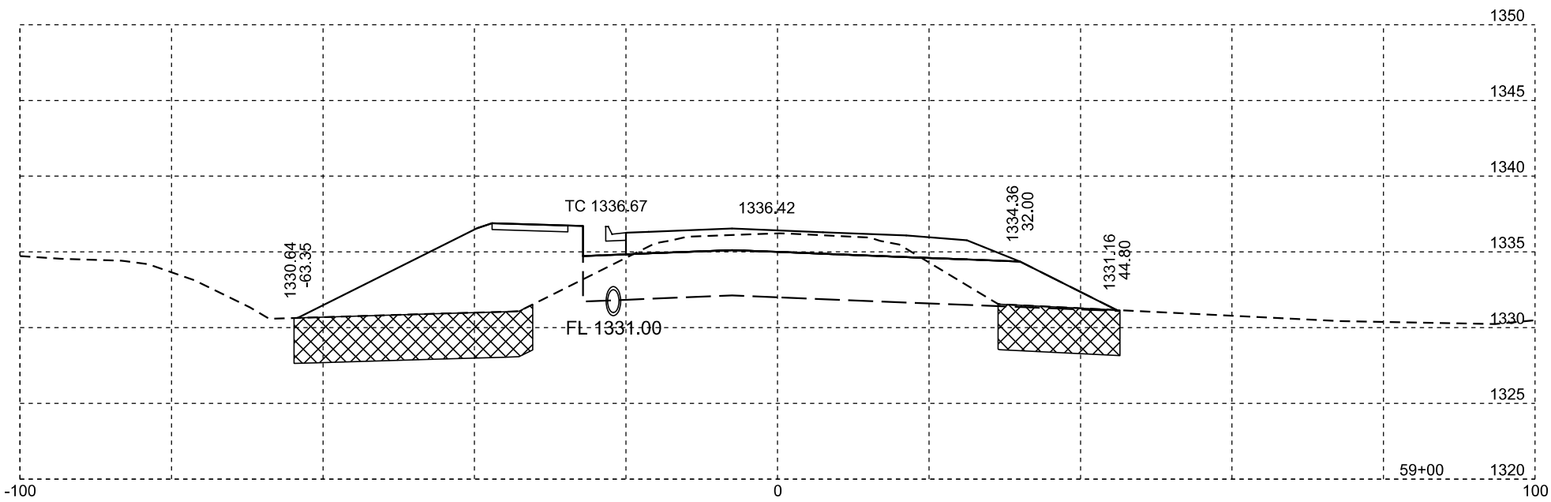

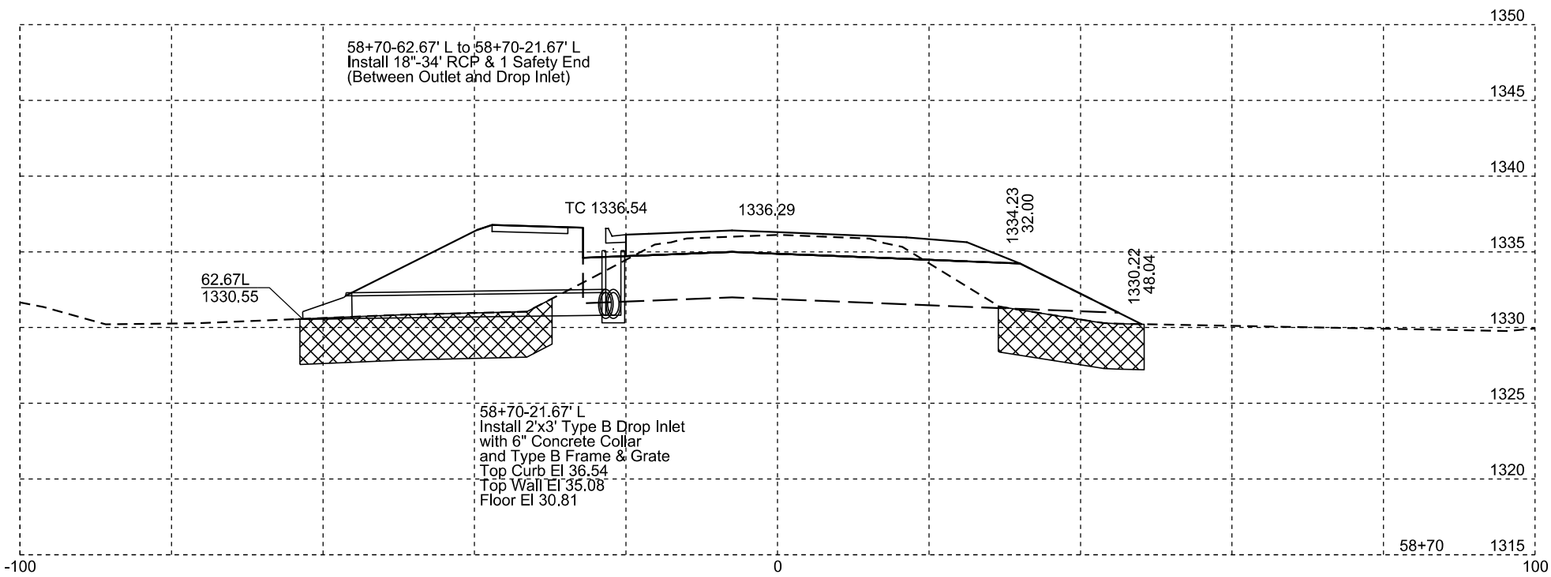

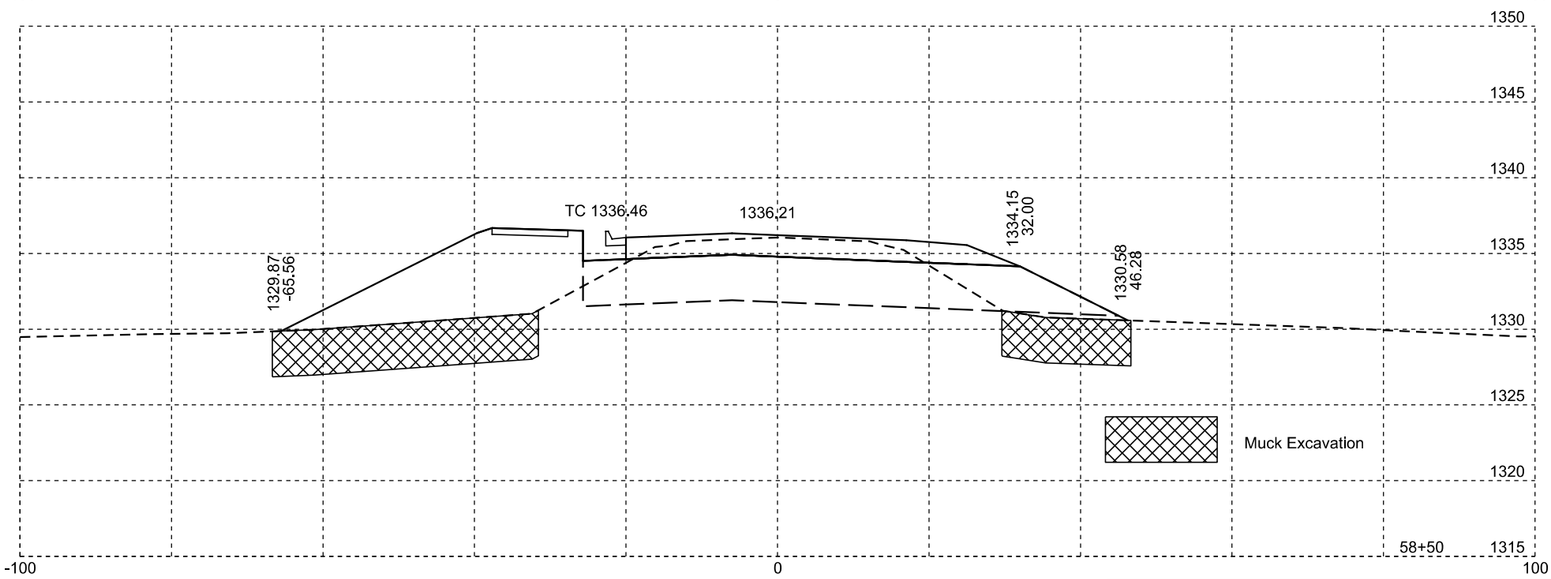

Plotting Date: 11/18/2015

STATE OF SOUTH DAKOTA	PROJECT	SHEET NO.	TOTAL SHEETS
	P 0017(08)42	X12	X55

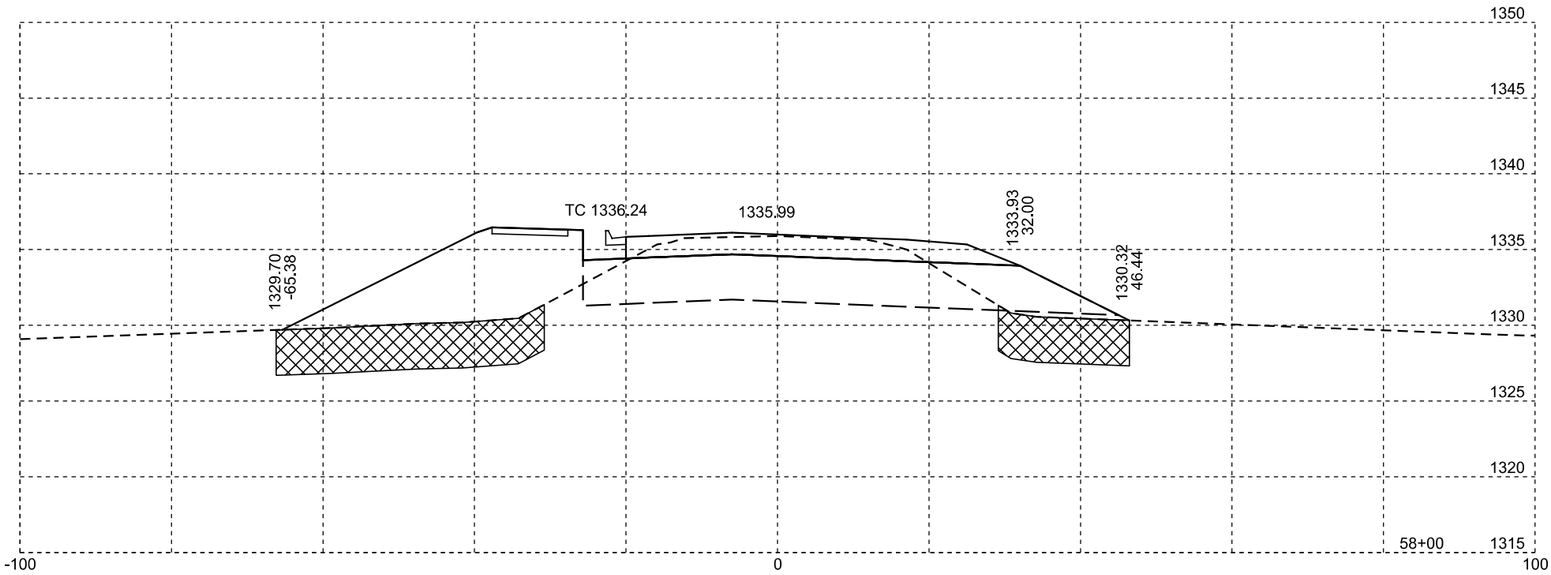

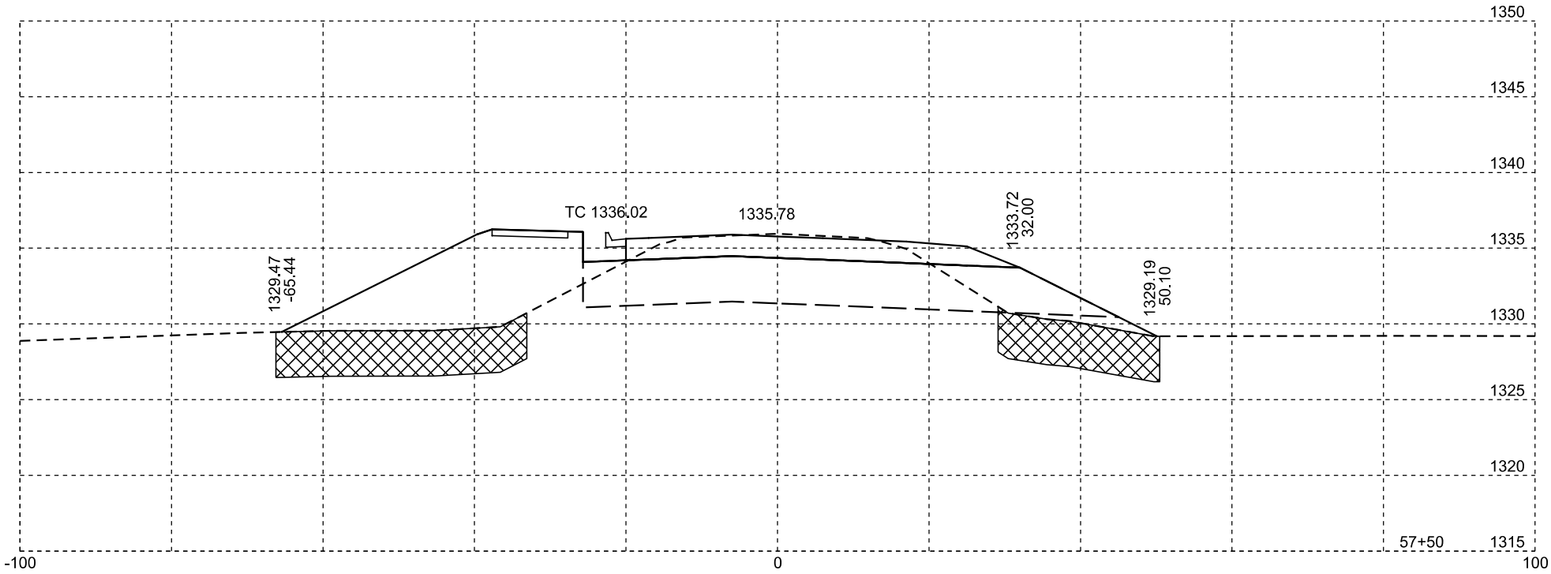

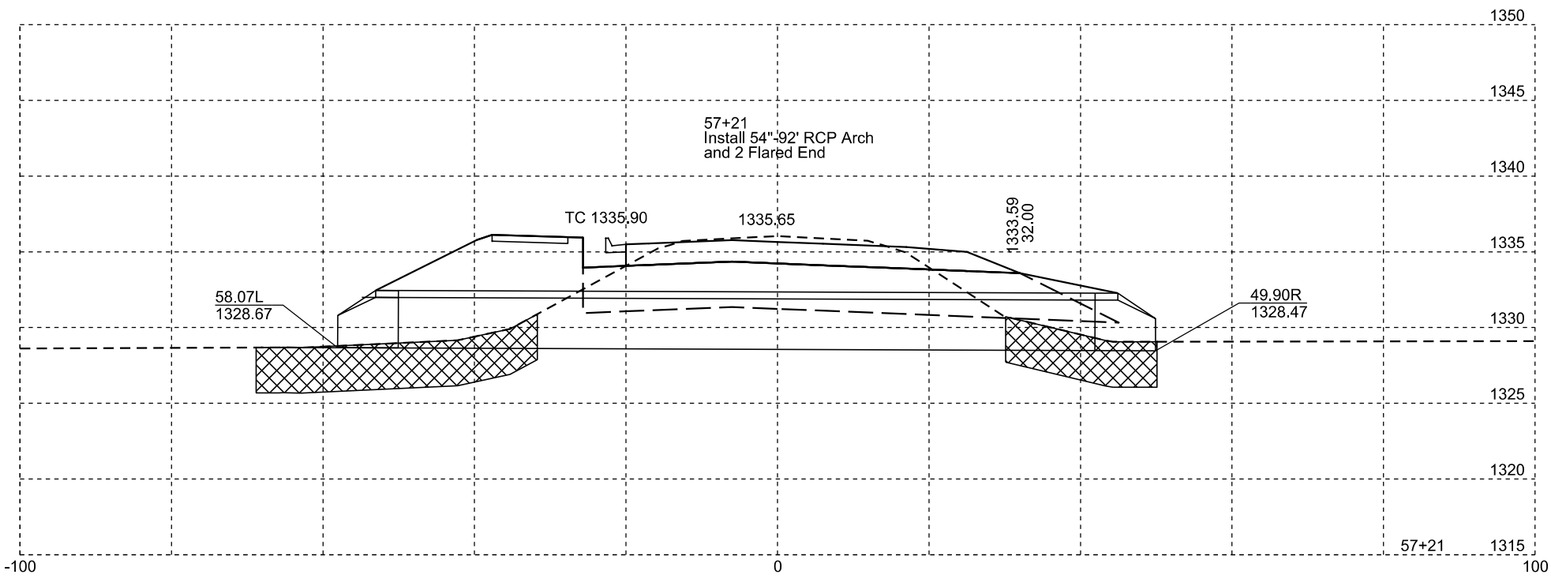

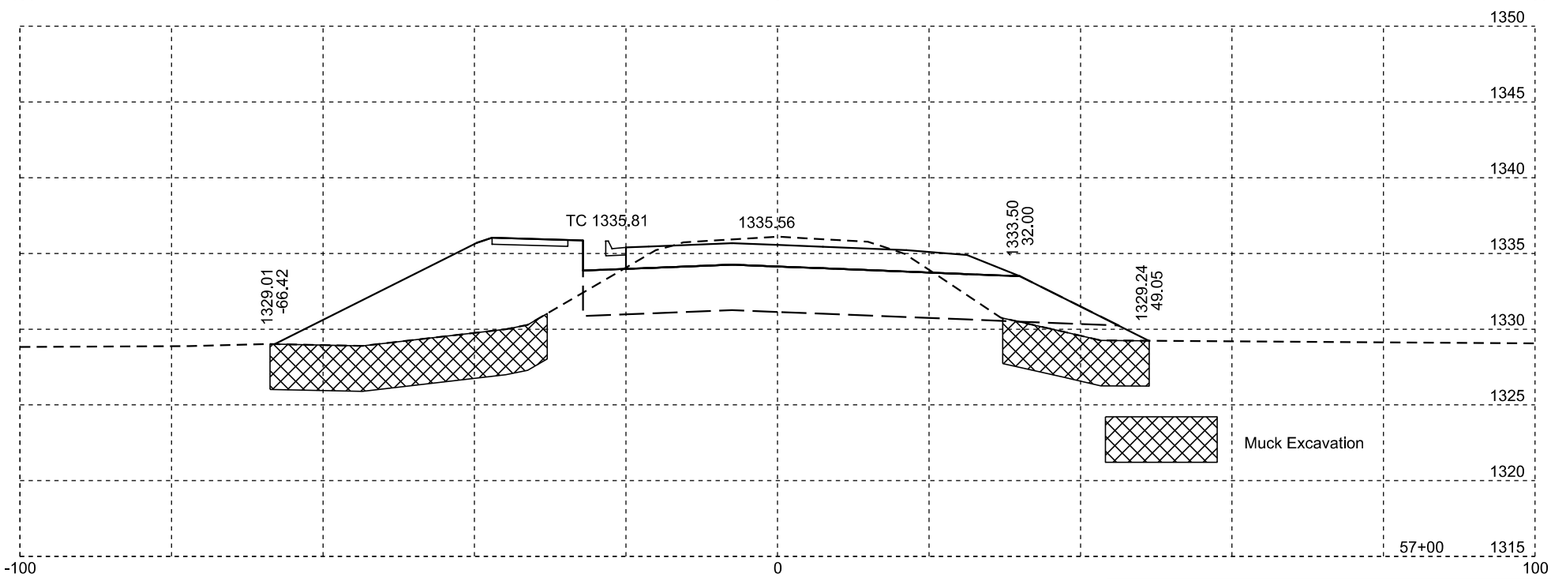

Plotting Date: 11/18/2015

STATE OF SOUTH DAKOTA	PROJECT	SHEET NO.	TOTAL SHEETS
	P 0017(08)42	X13	X55

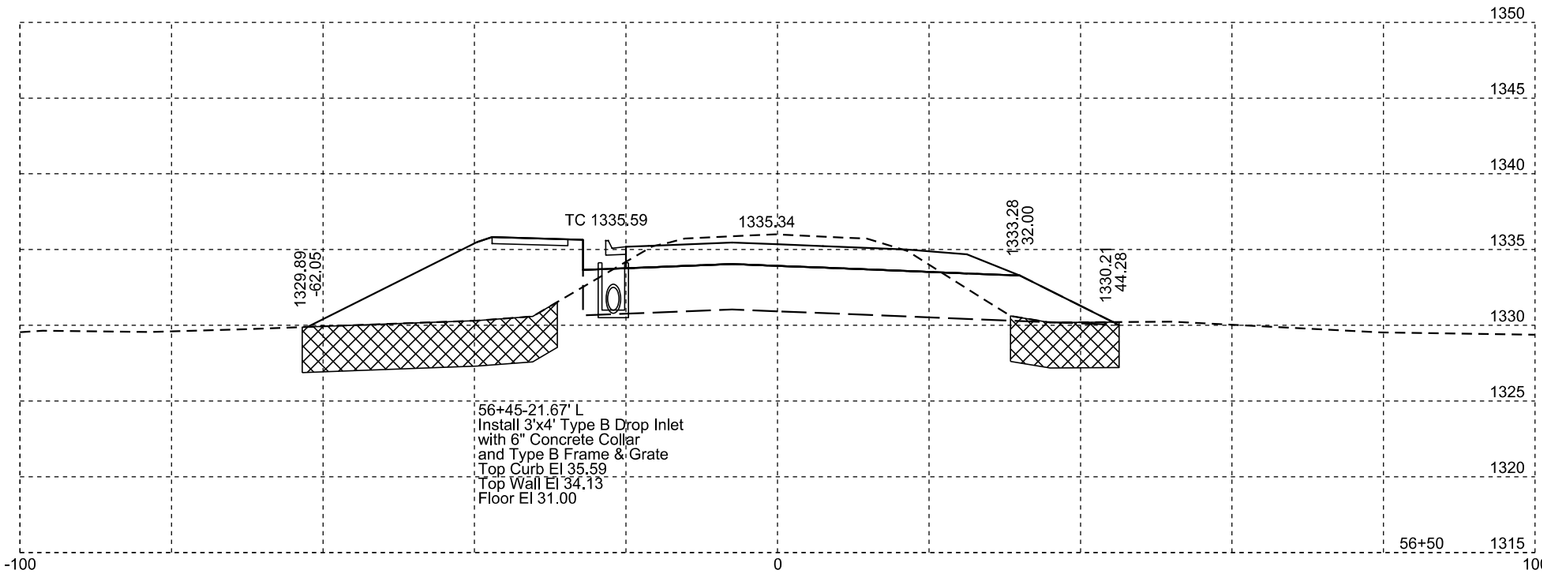

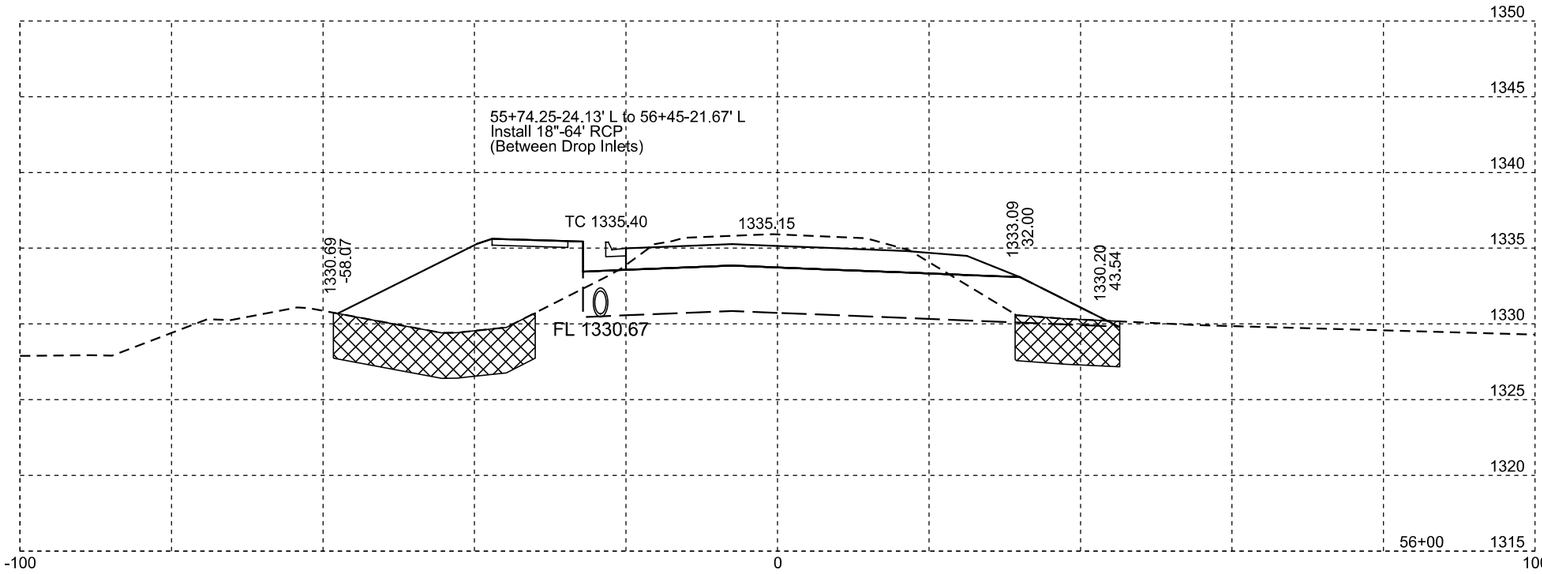

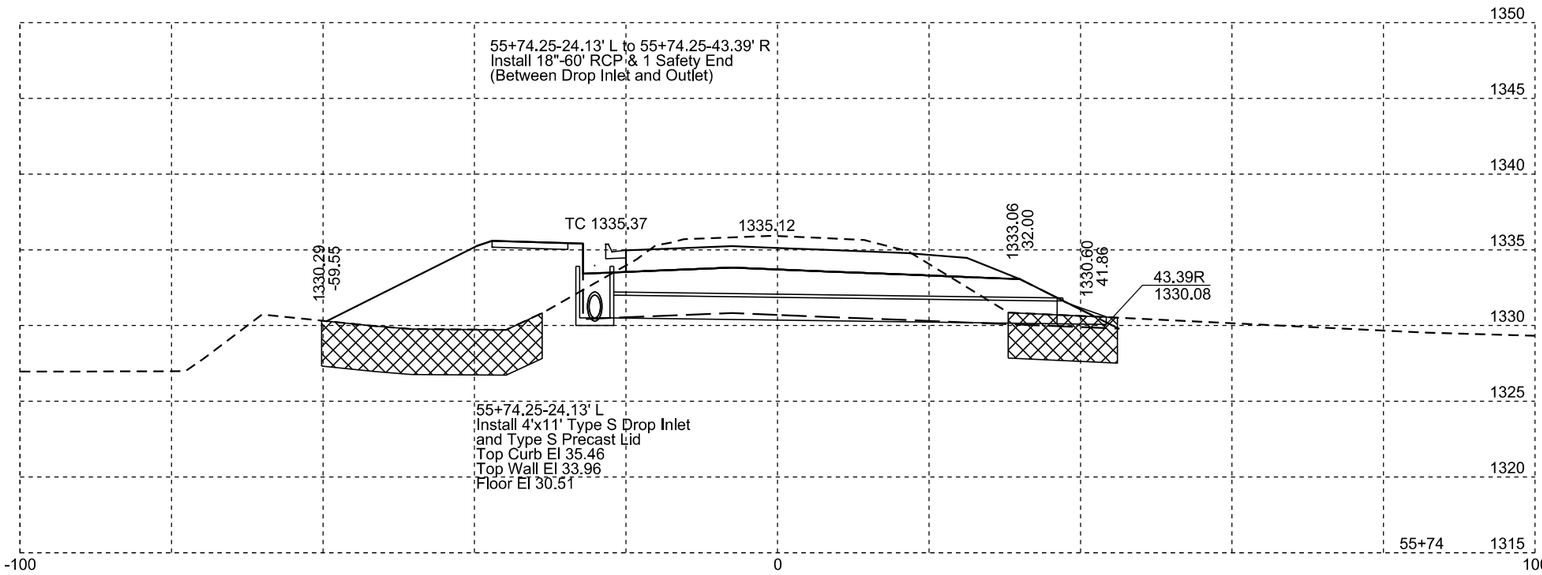

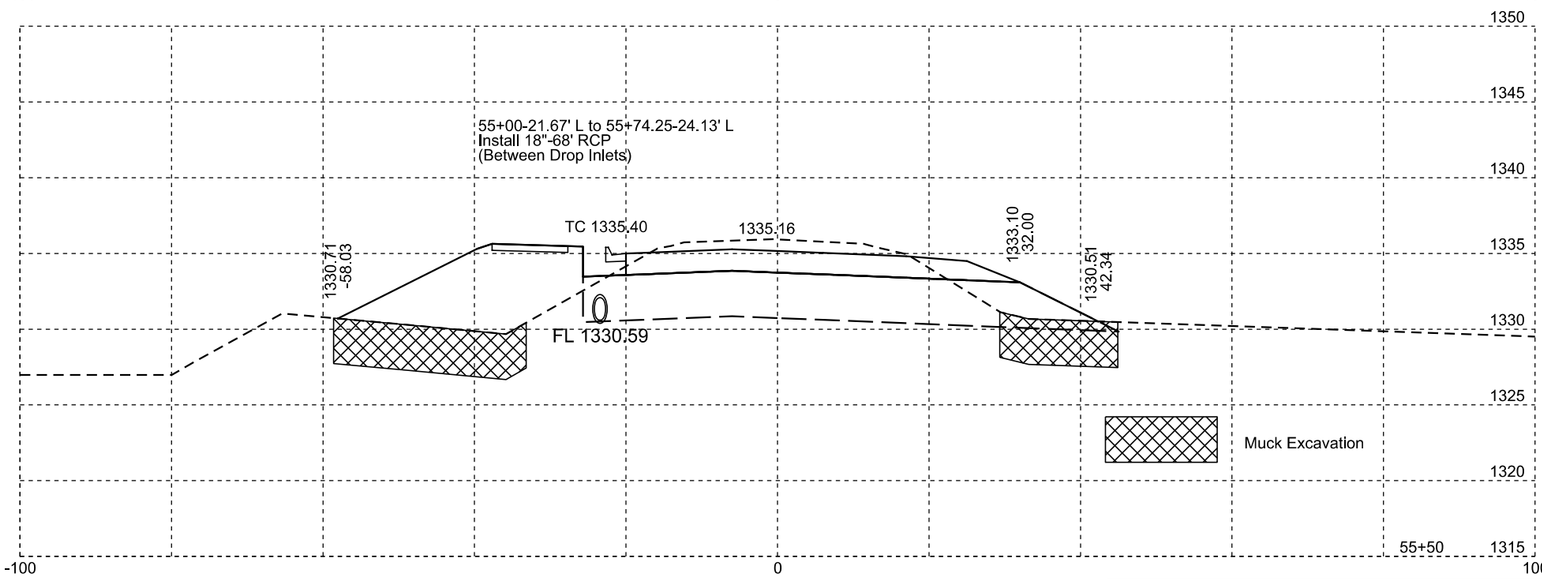

Plotting Date: 11/18/2015

STATE OF SOUTH DAKOTA	PROJECT	SHEET NO.	TOTAL SHEETS
	P 0017(08)42	X14	X55

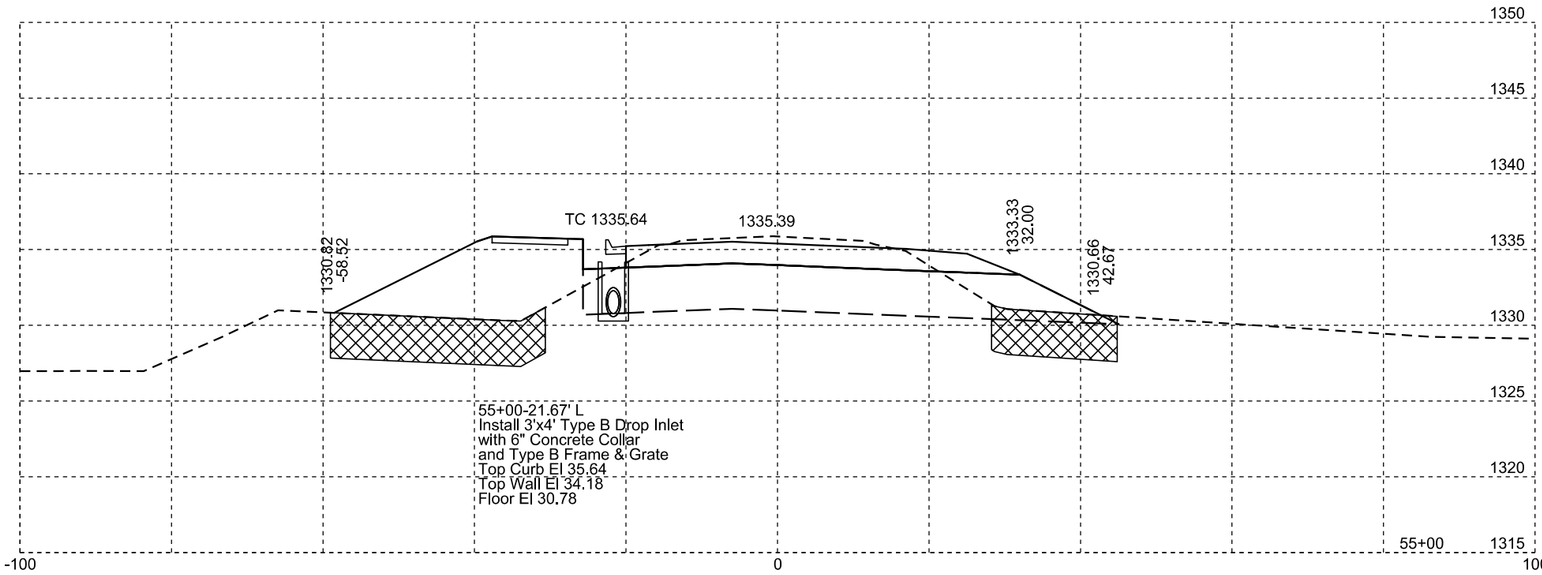

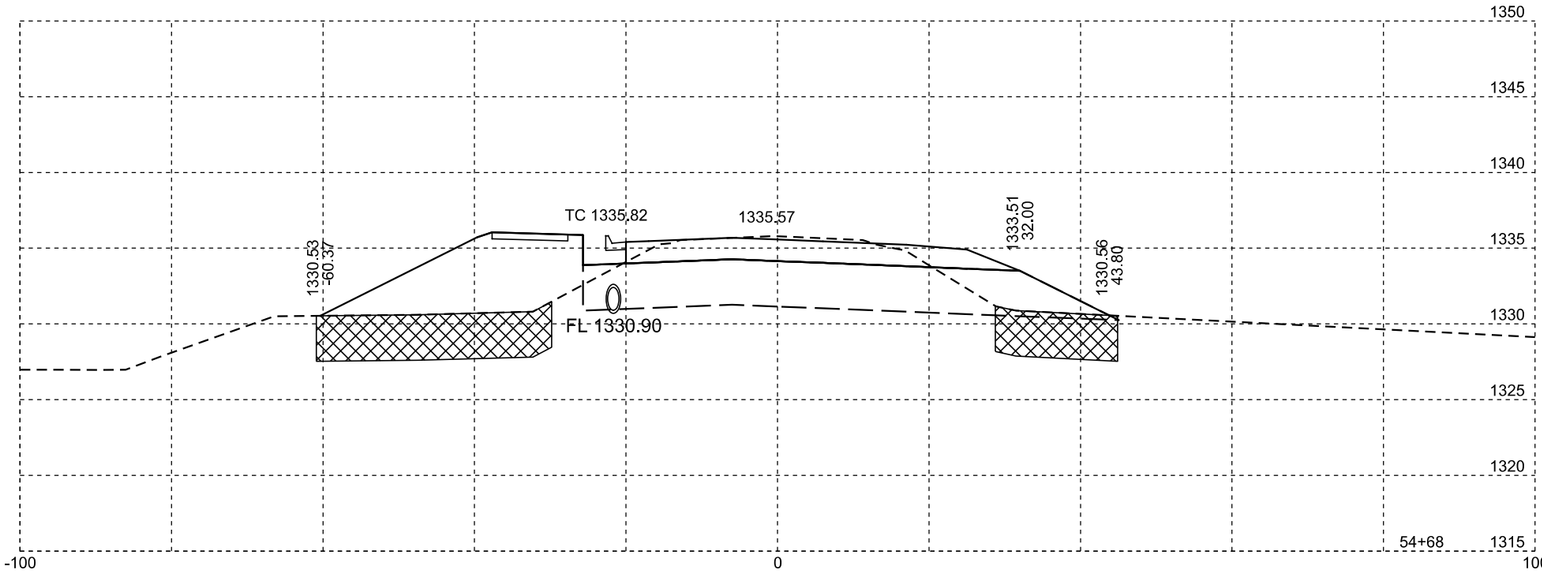

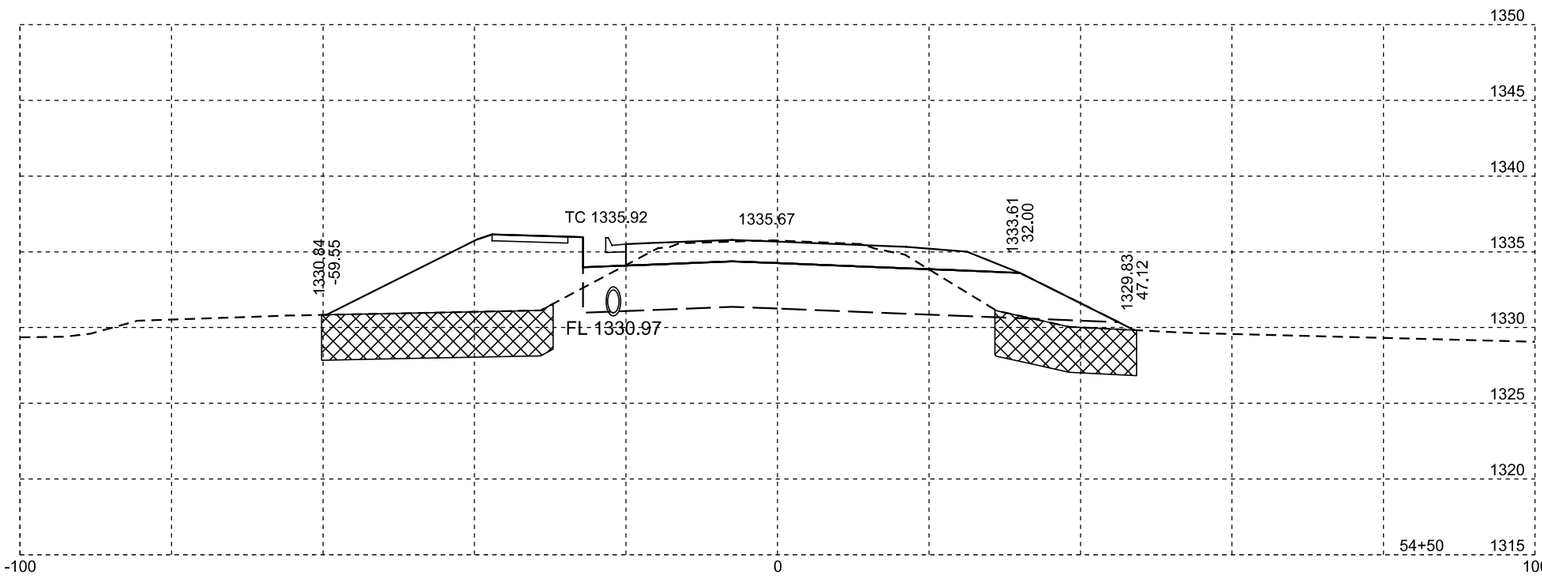

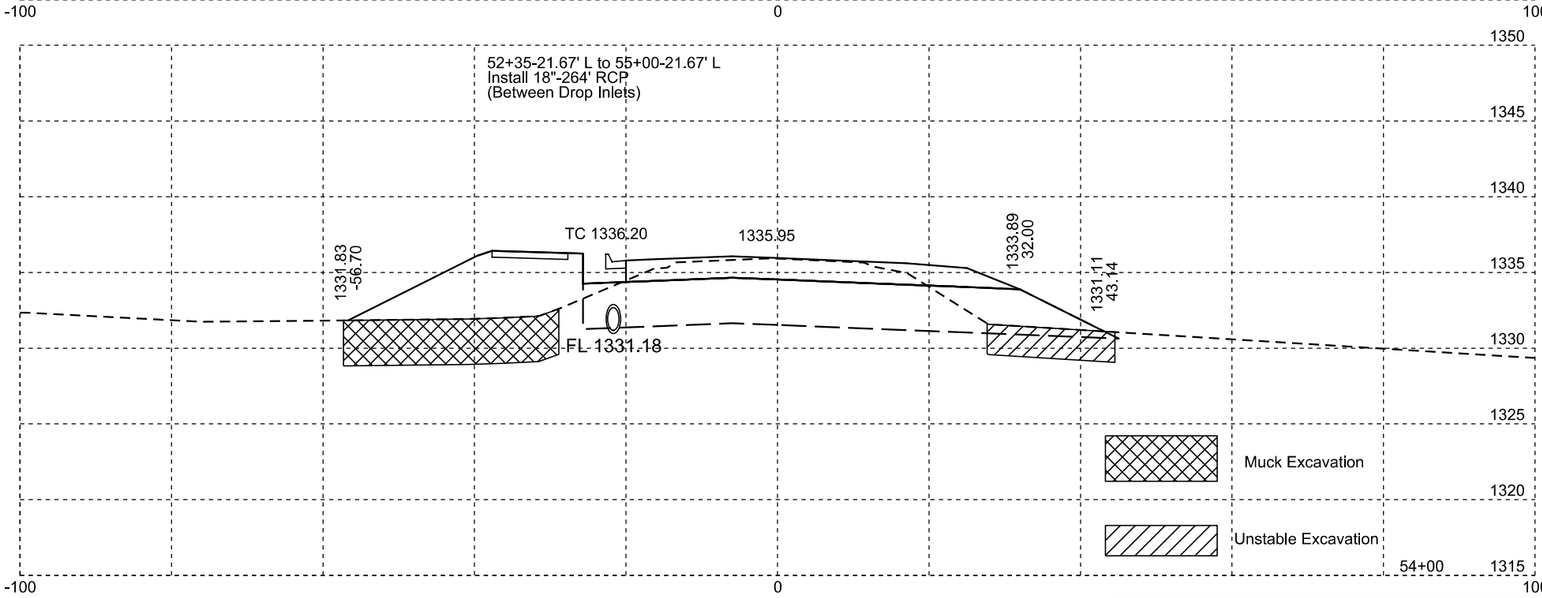

Plotting Date: 11/18/2015

STATE OF SOUTH DAKOTA	PROJECT	SHEET NO.	TOTAL SHEETS
	P 0017(08)42	X15	X55

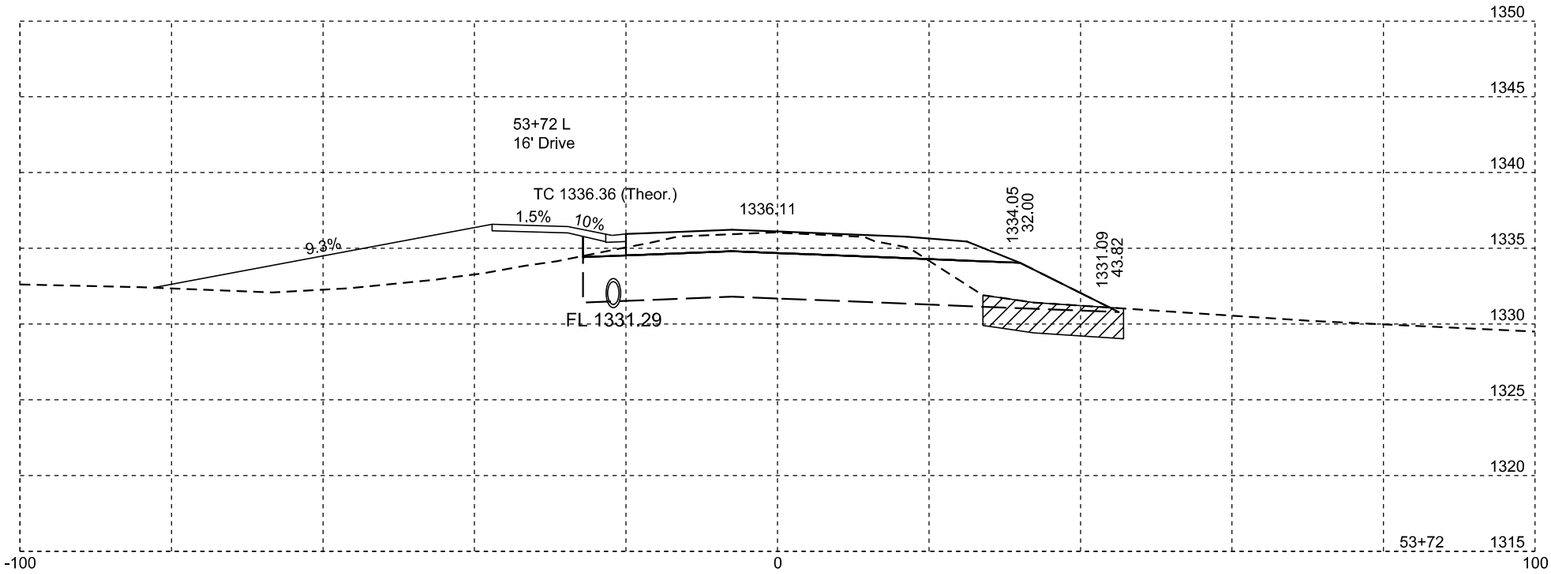

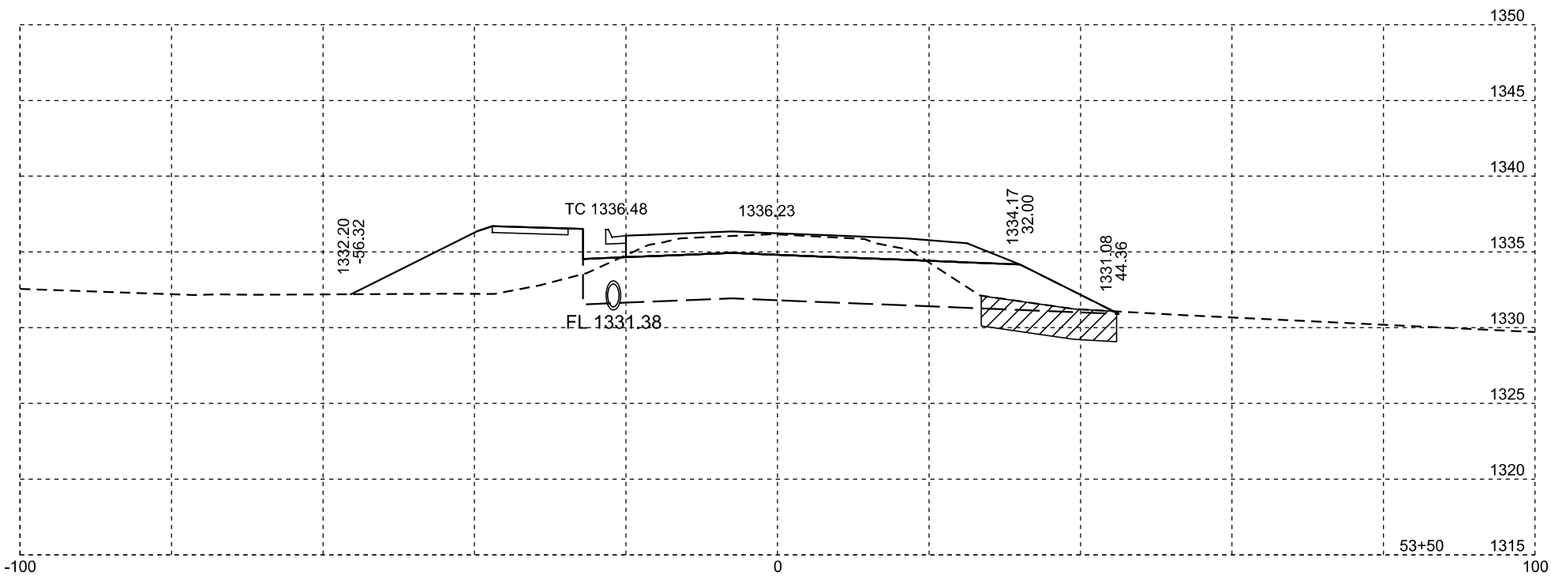

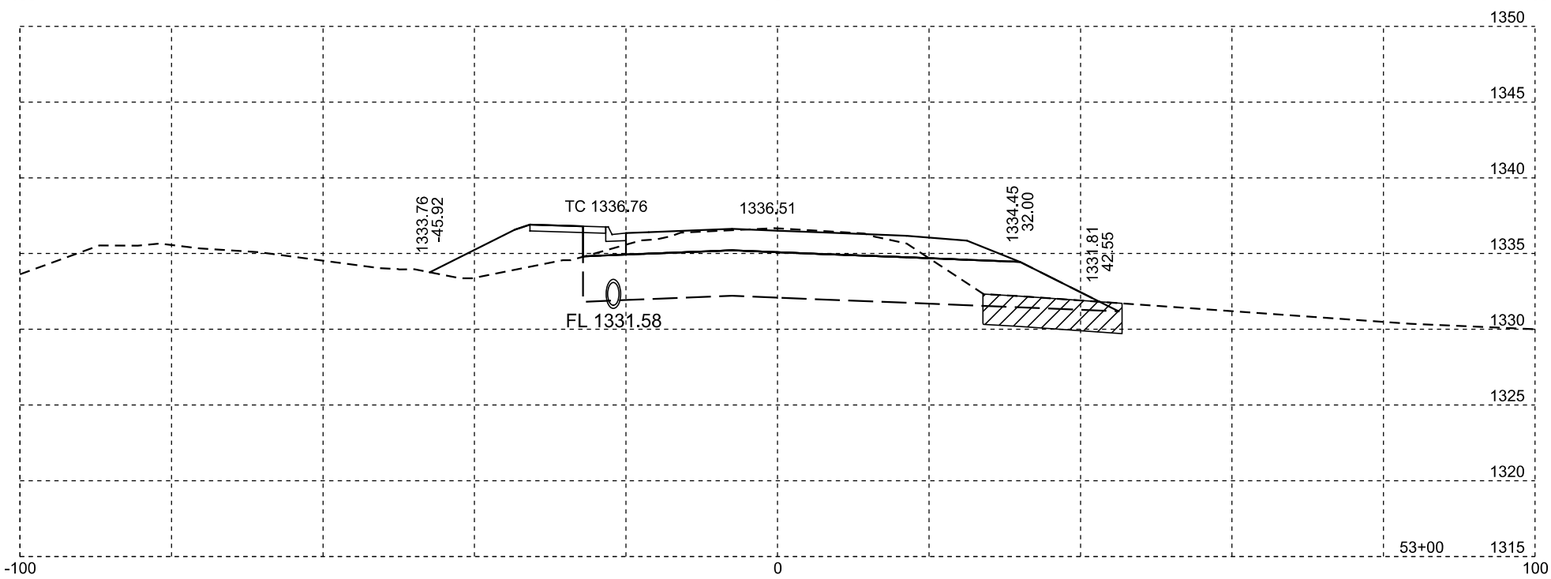

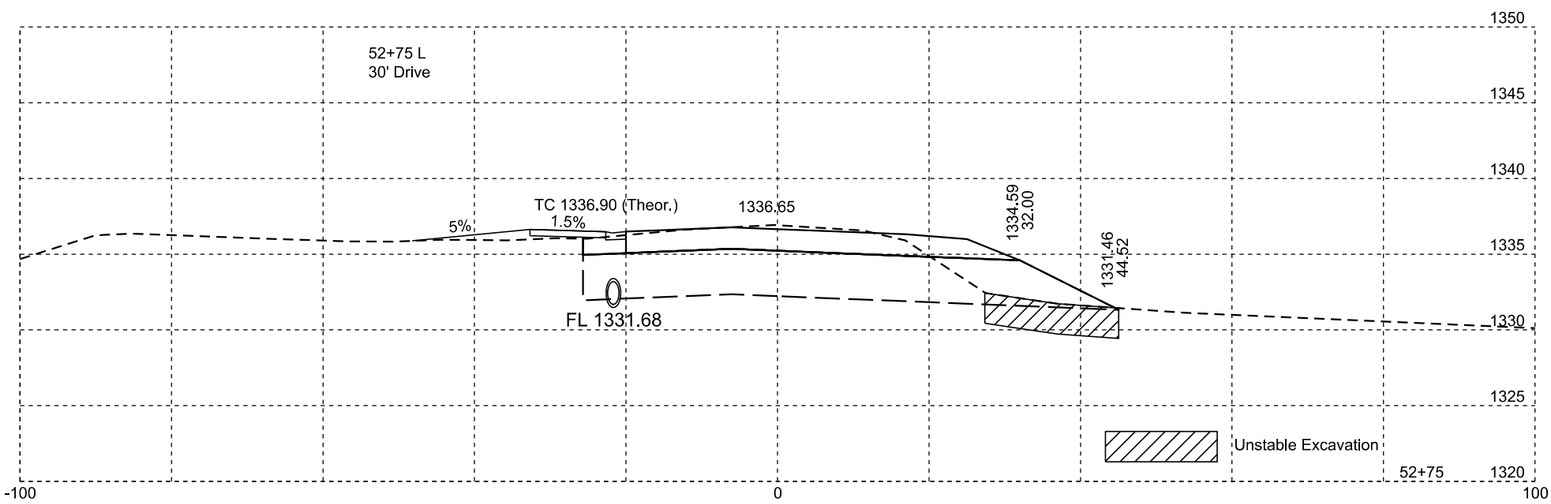

Plotting Date: 11/18/2015

STATE OF SOUTH DAKOTA	PROJECT	SHEET NO.	TOTAL SHEETS
	P 0017(08)42	X16	X55

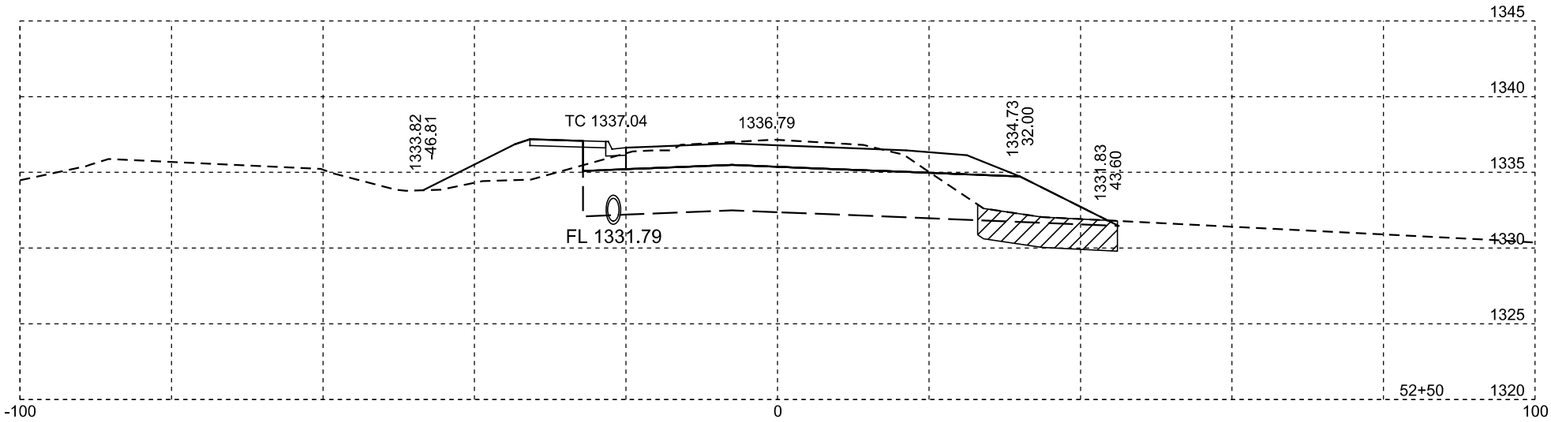

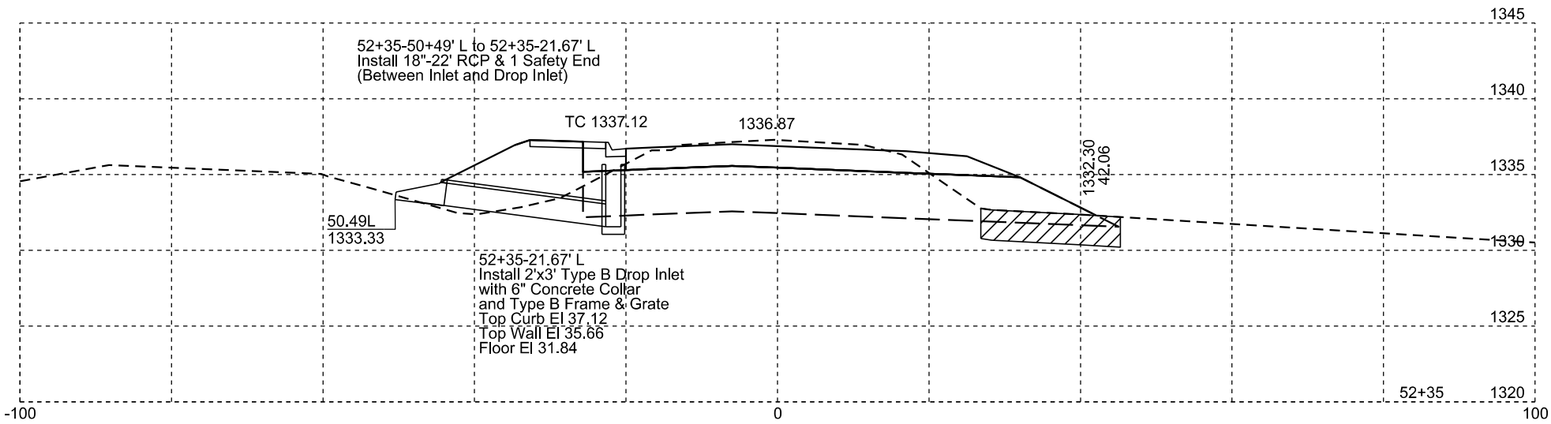

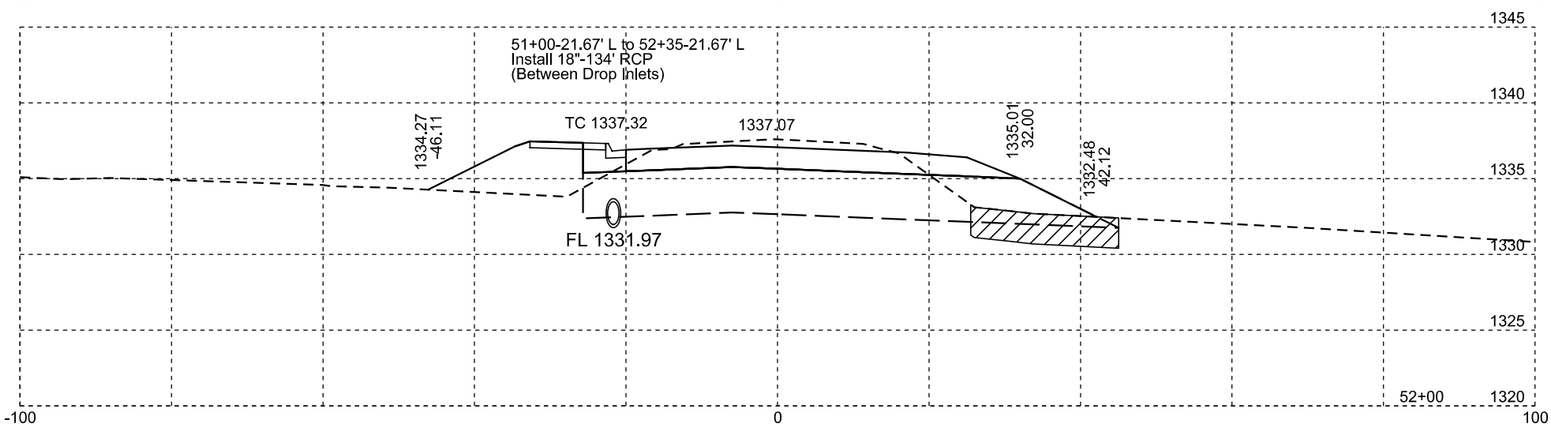

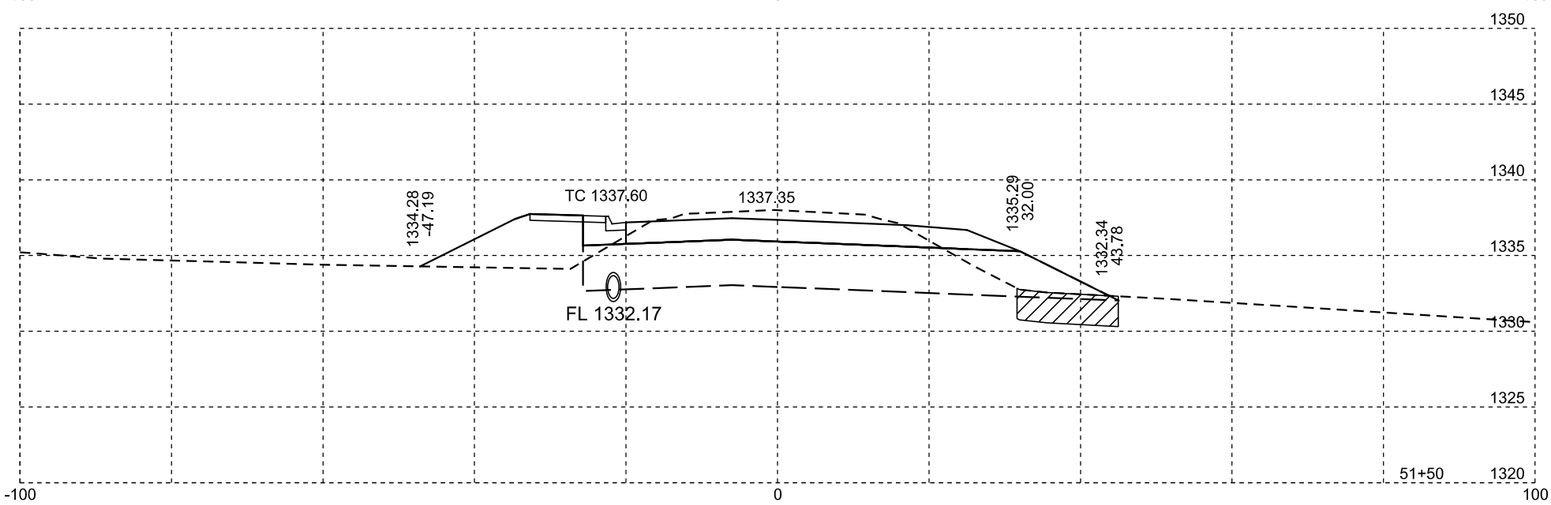

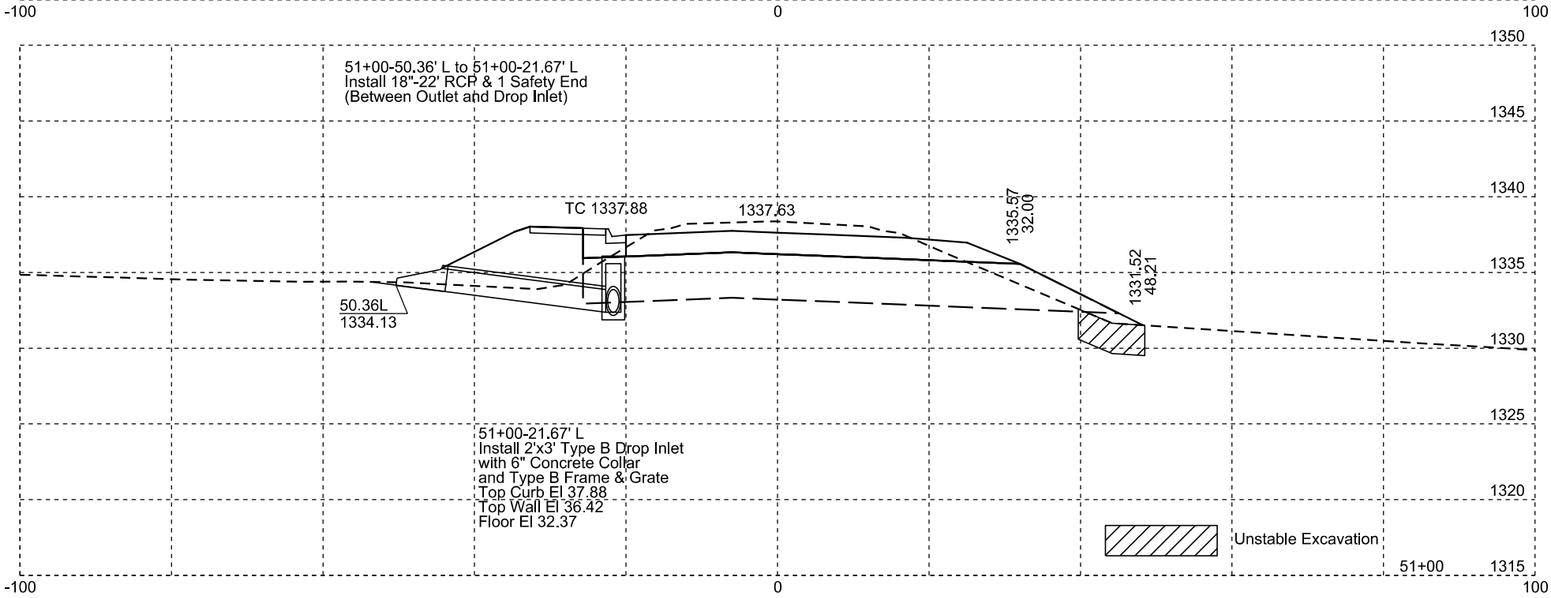

Plotting Date: 11/18/2015

STATE OF SOUTH DAKOTA	PROJECT	SHEET NO.	TOTAL SHEETS
	P 0017(08)42	X17	X55

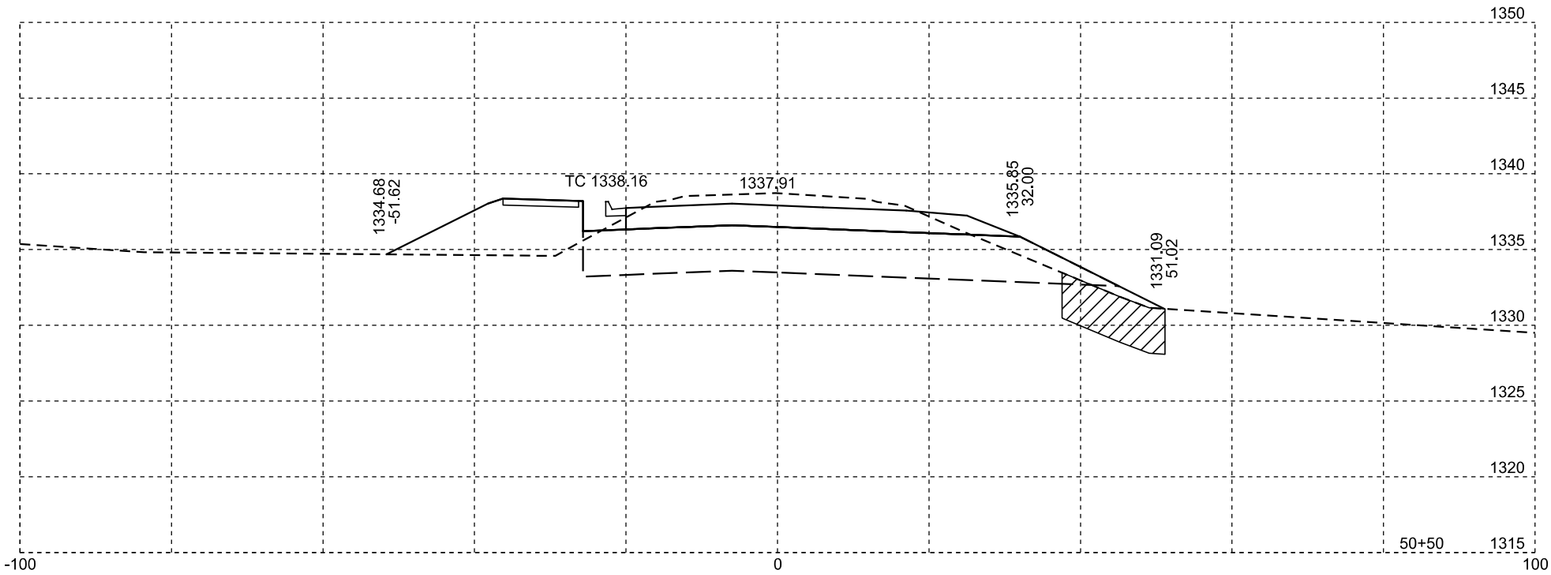

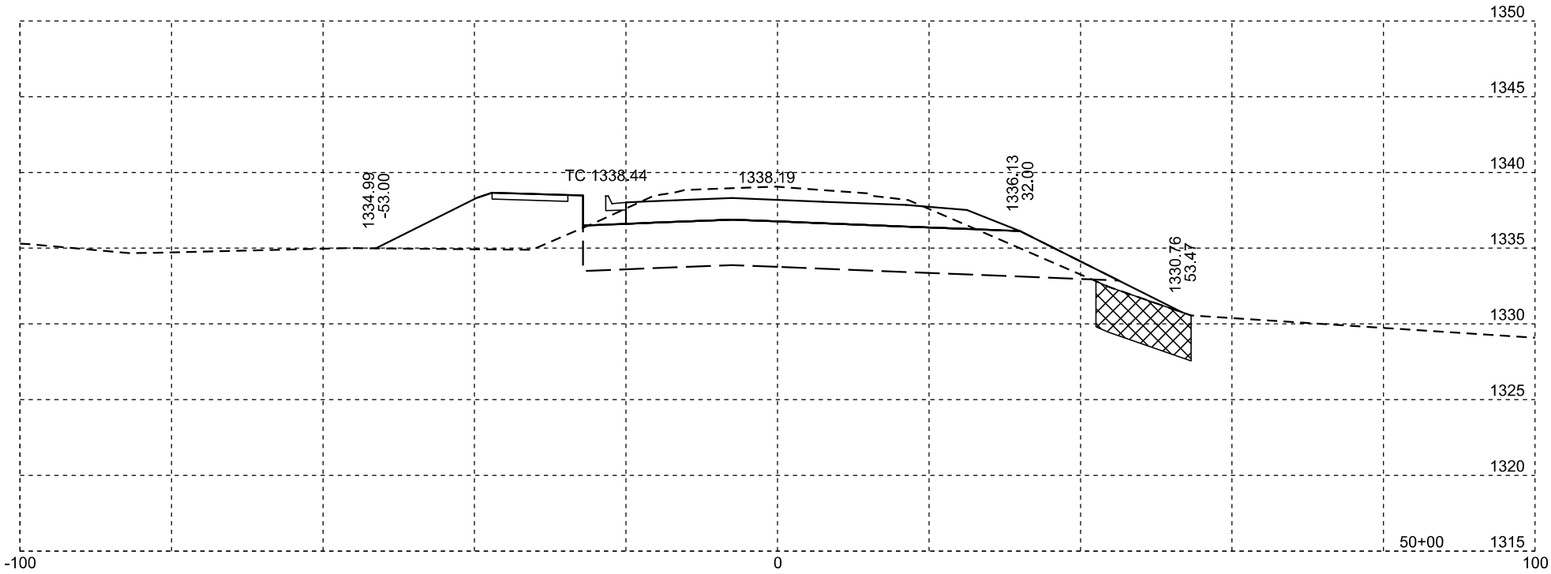

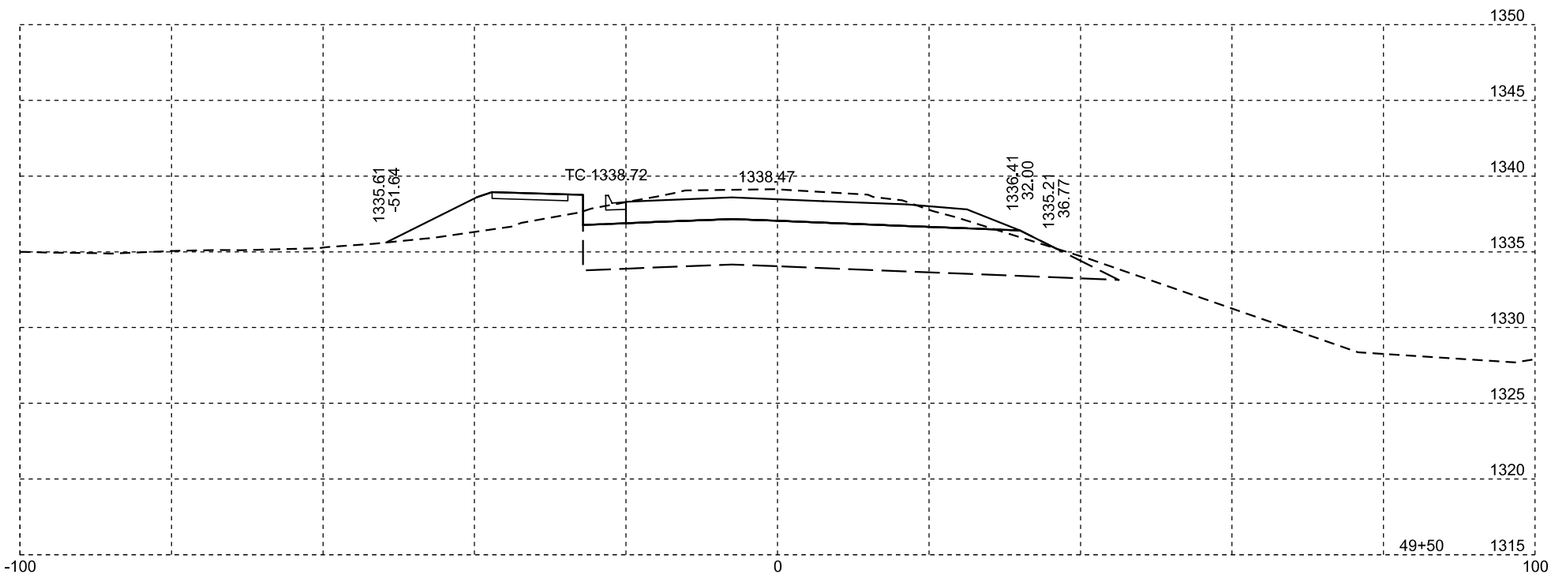

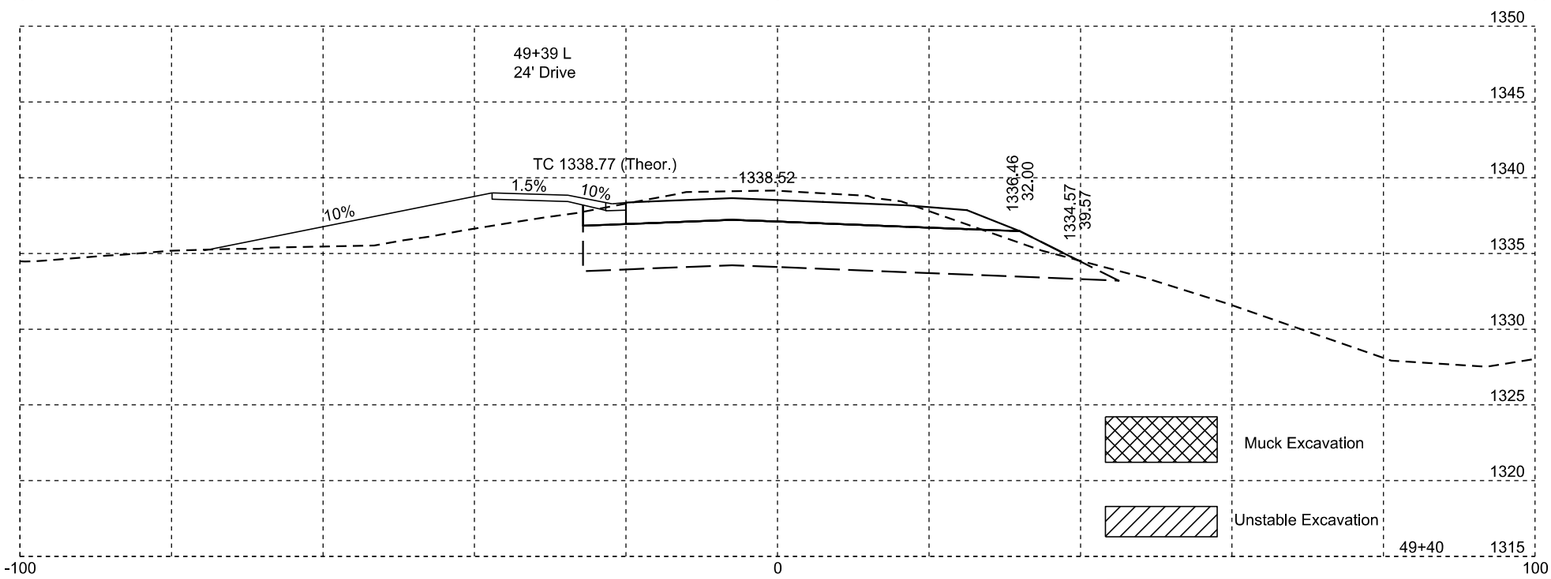

Plotting Date: 11/18/2015

STATE OF SOUTH DAKOTA	PROJECT	SHEET NO.	TOTAL SHEETS
	P 0017(08)42	X18	X55

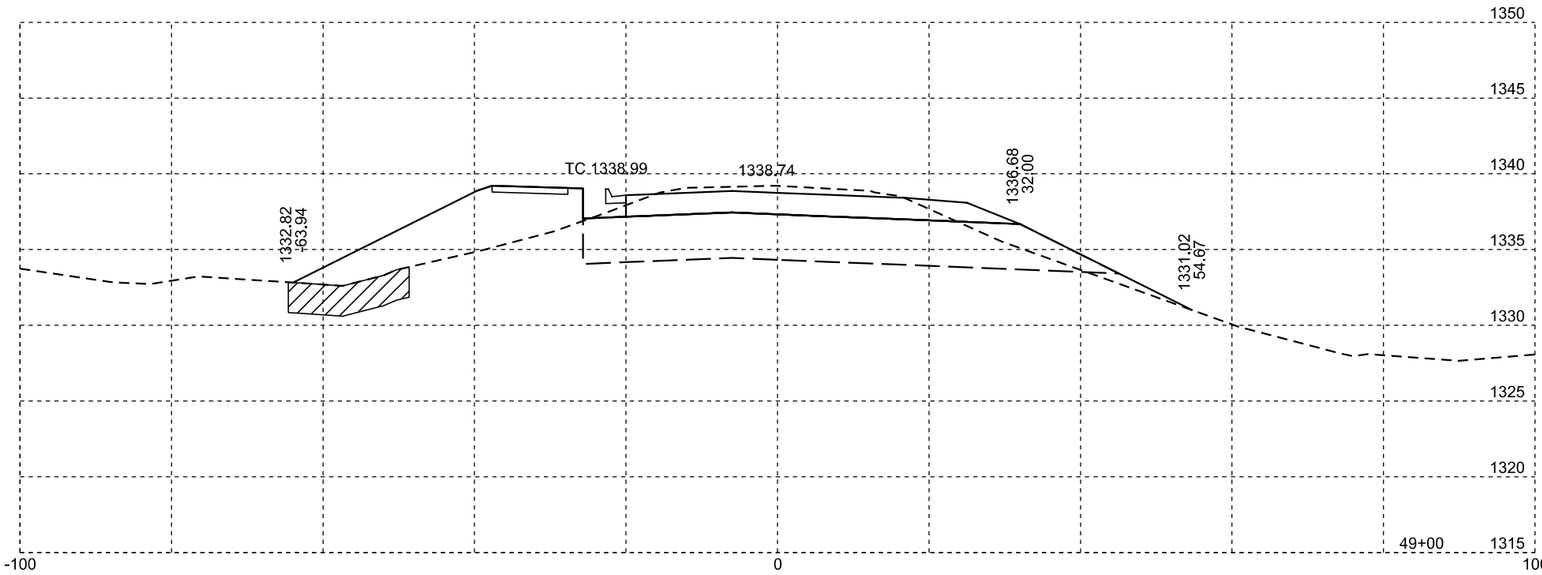

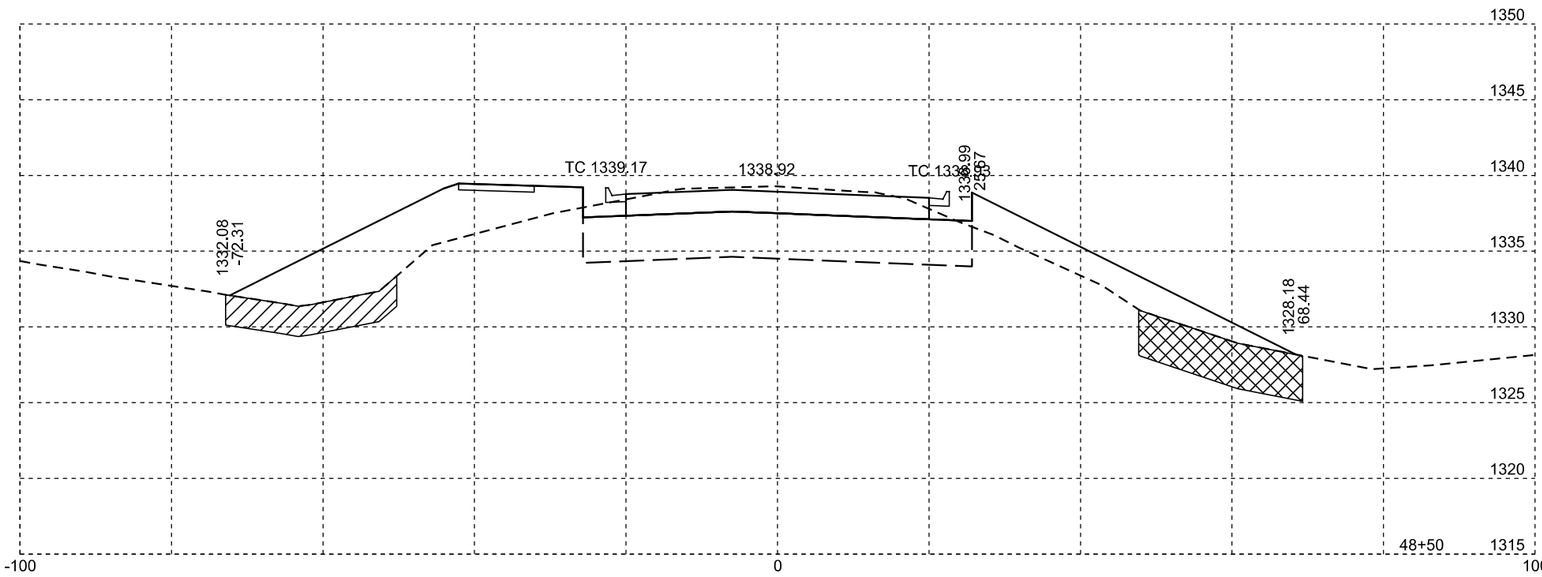

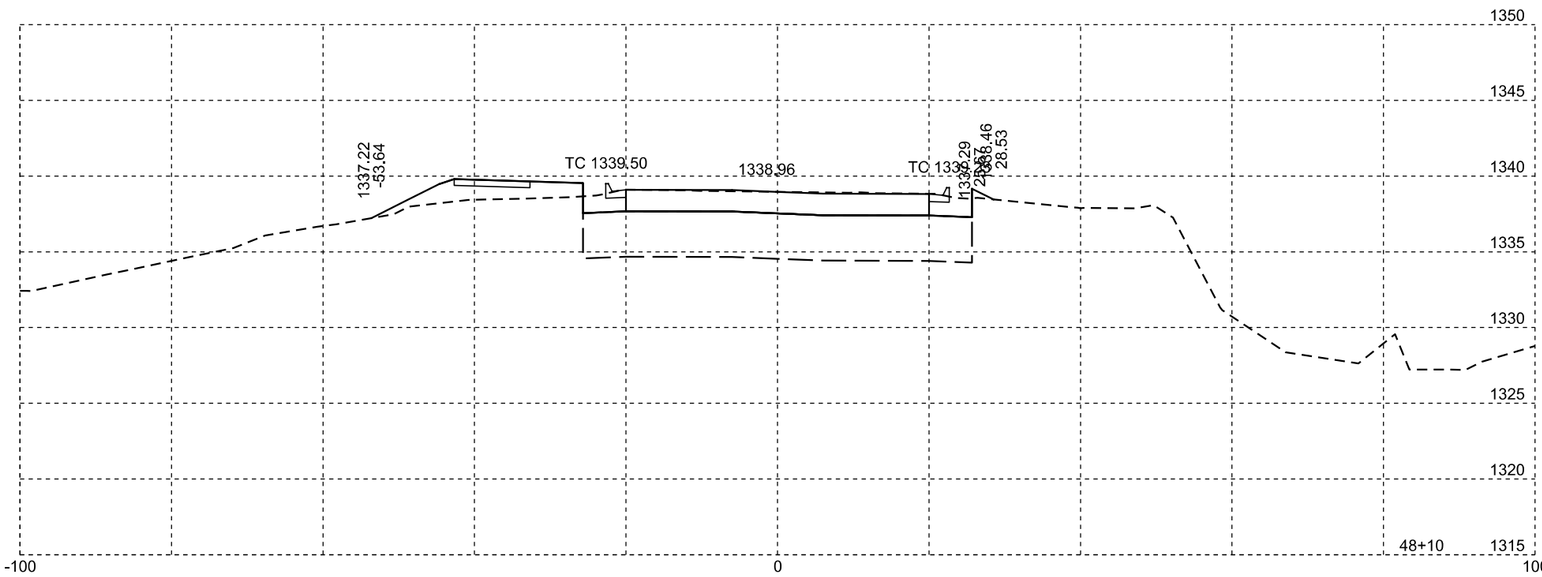

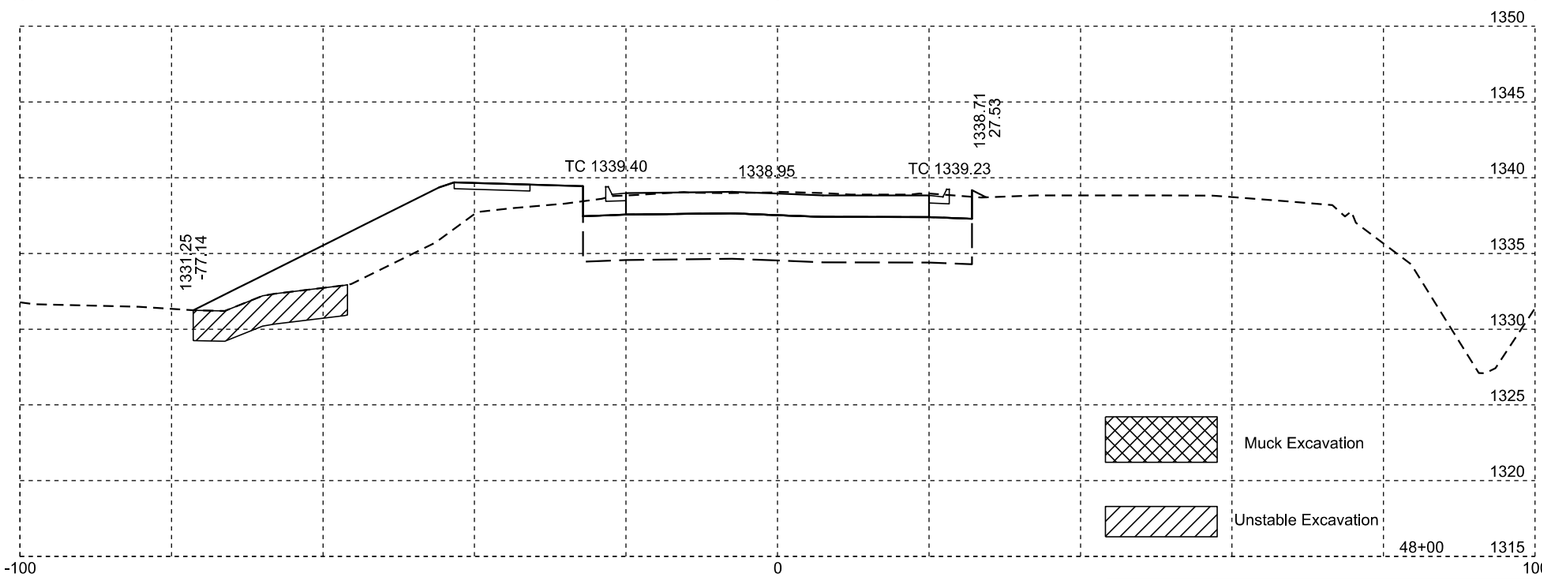

Plotting Date: 11/18/2015

STATE OF SOUTH DAKOTA	PROJECT	SHEET NO.	TOTAL SHEETS
	P 0017(08)42	X19	X55

STATE OF SOUTH DAKOTA	PROJECT	SHEET NO.	TOTAL SHEETS
	P 0017(08)42	X20	X55

Plotting Date: 11/18/2015

STATE OF SOUTH DAKOTA	PROJECT	SHEET NO.	TOTAL SHEETS
	P 0017(08)42	X21	X55

Plotting Date: 11/18/2015

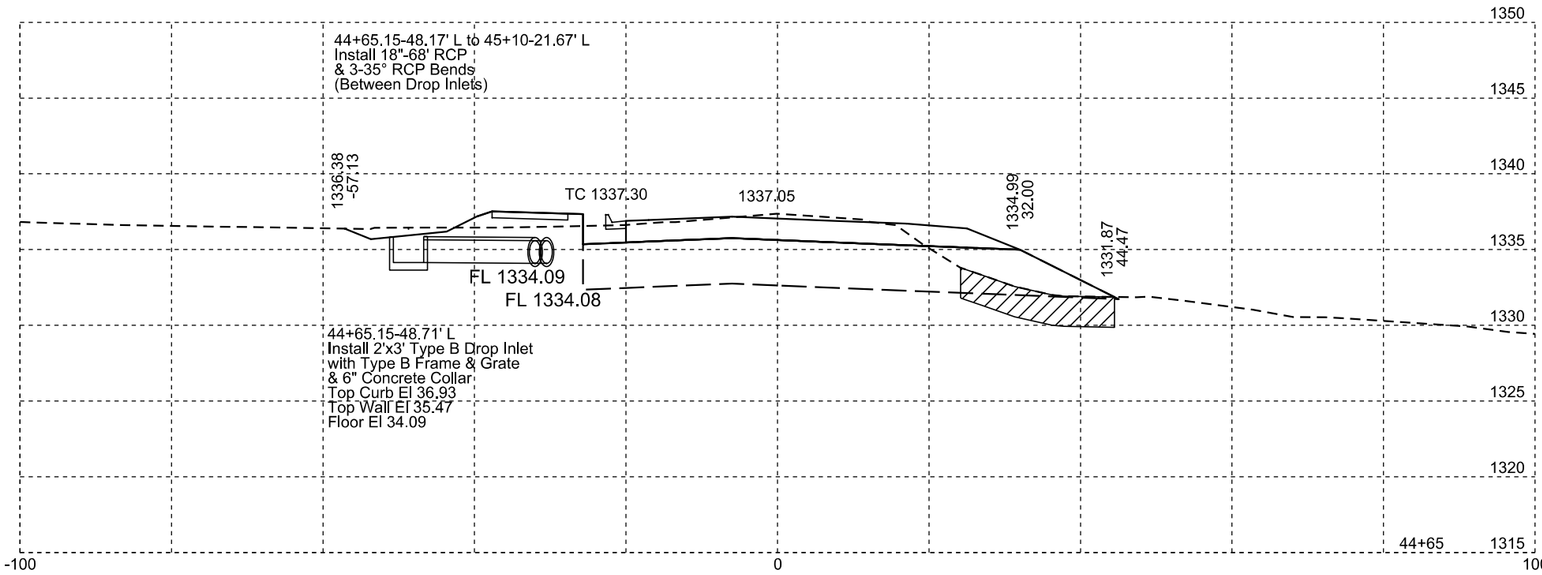

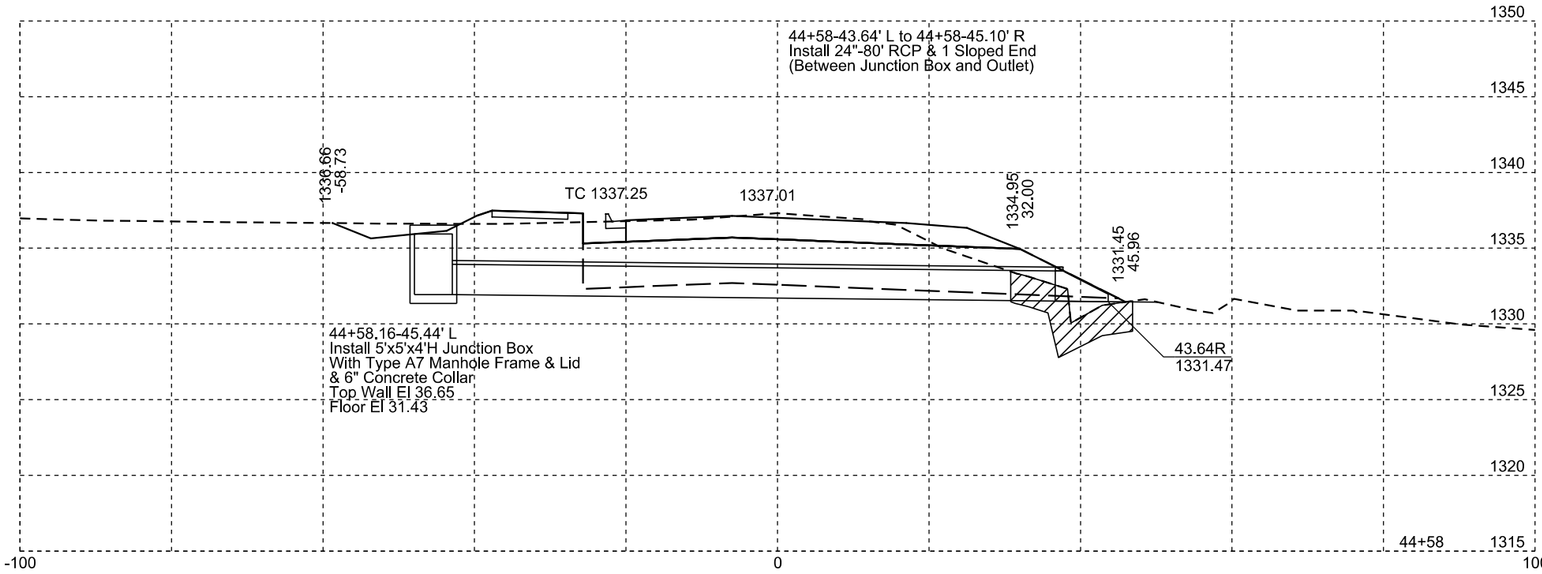

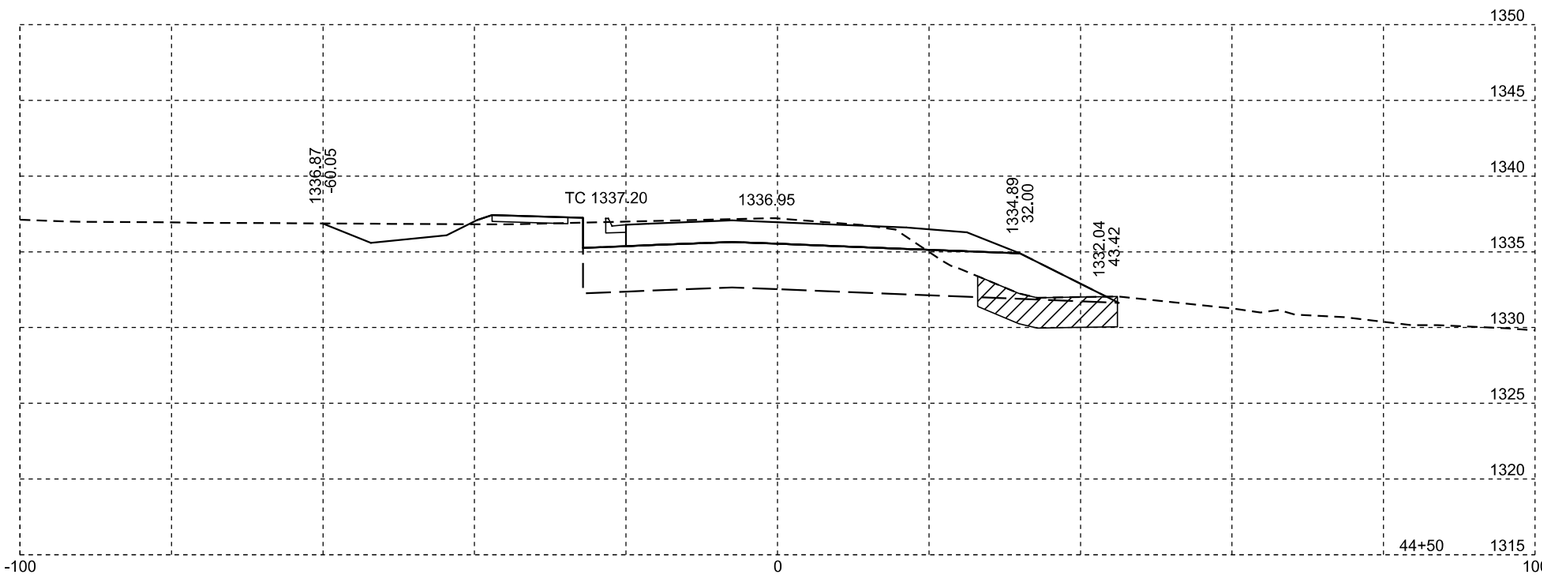

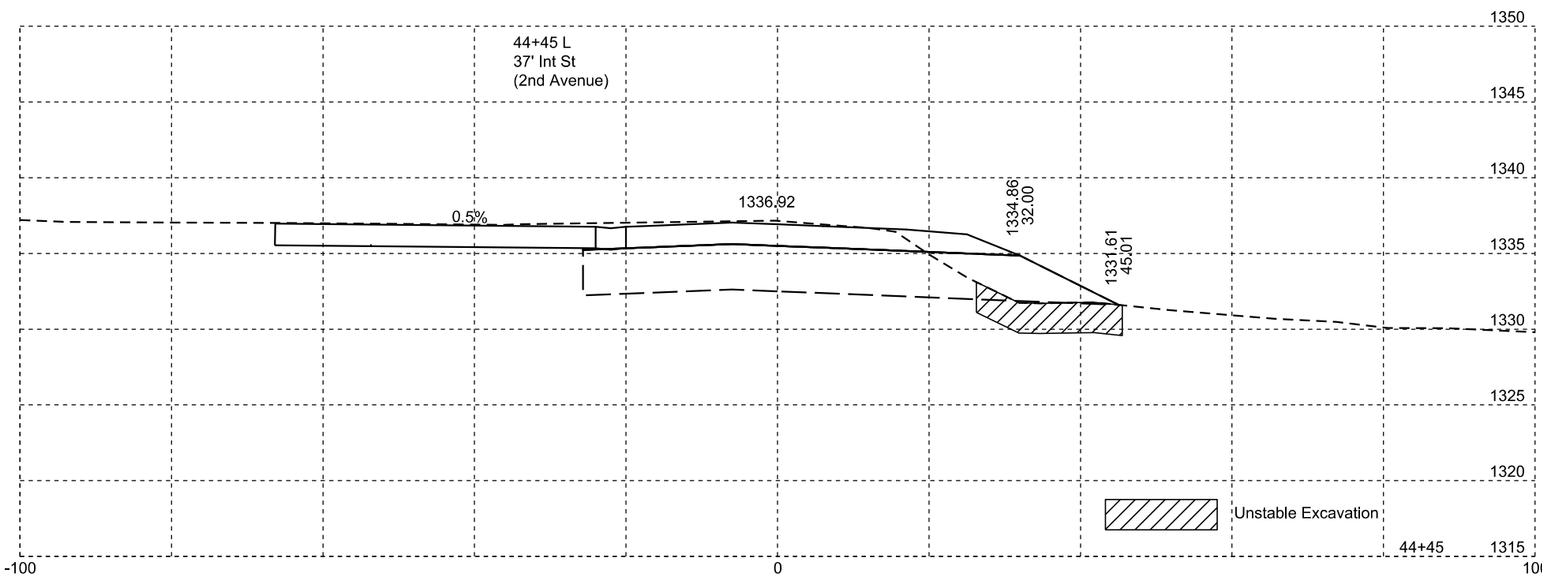

Plotting Date: 11/18/2015

STATE OF SOUTH DAKOTA	PROJECT	SHEET NO.	TOTAL SHEETS
	P 0017(08)42	X22	X55

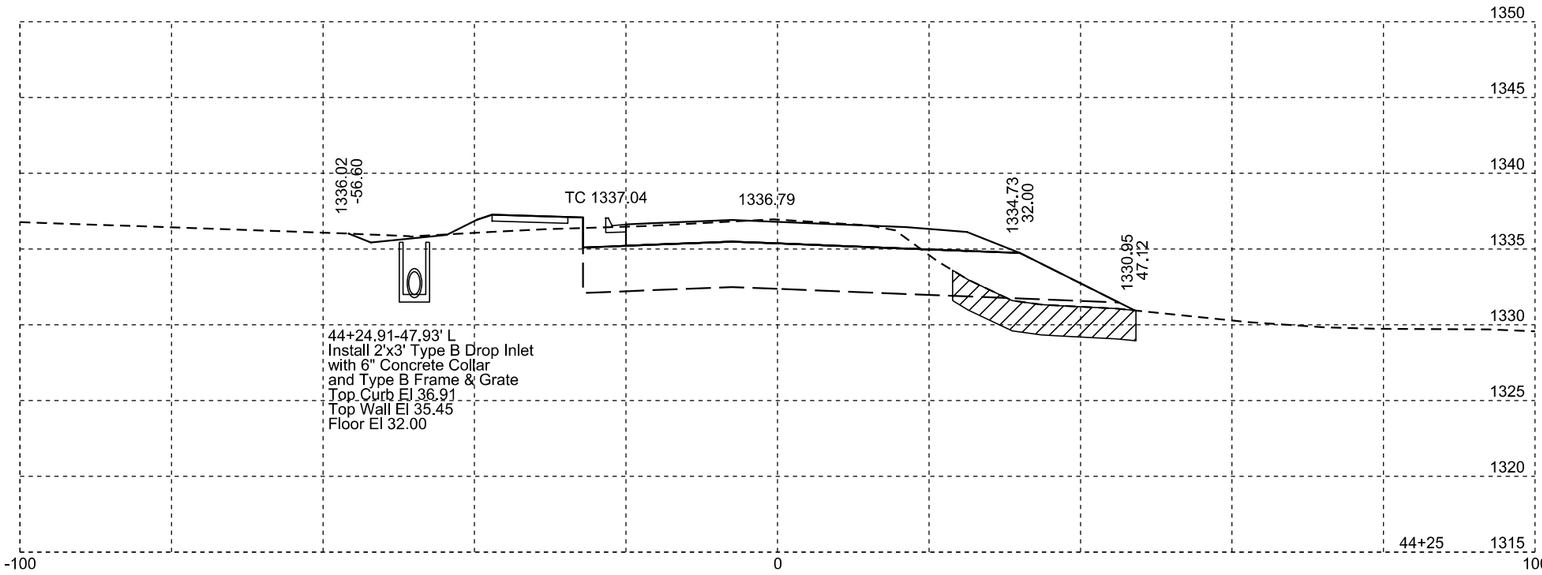

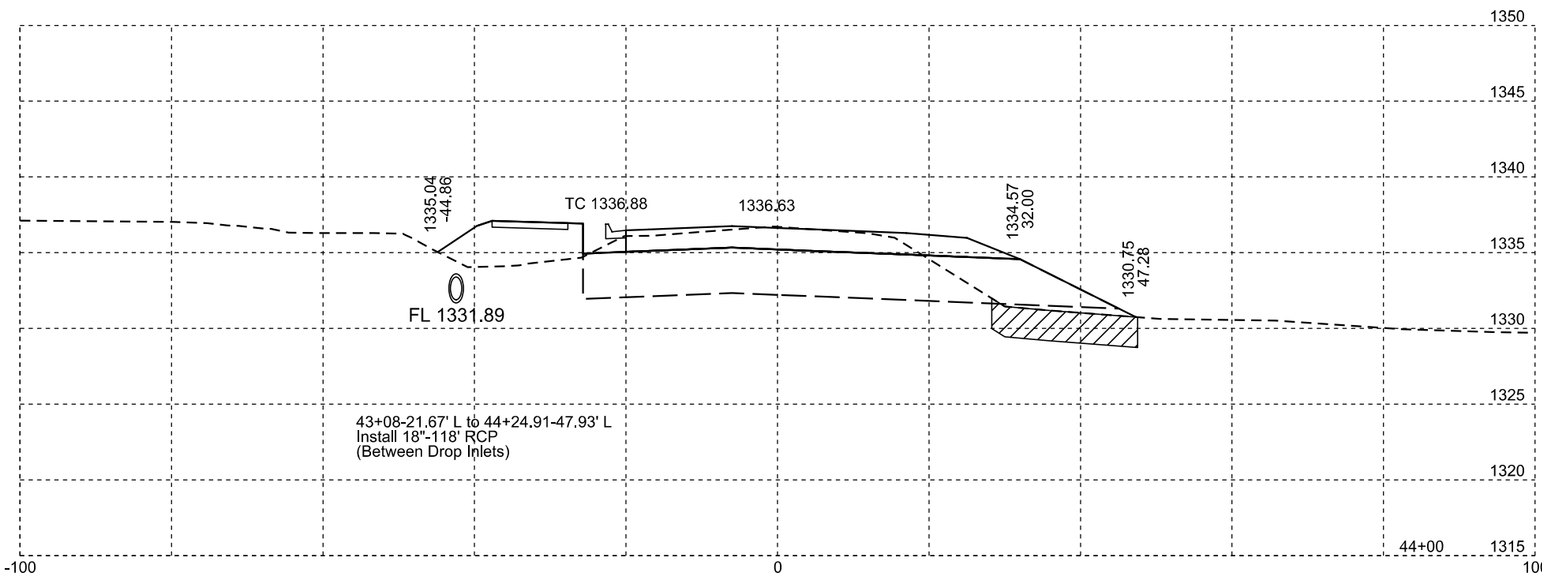

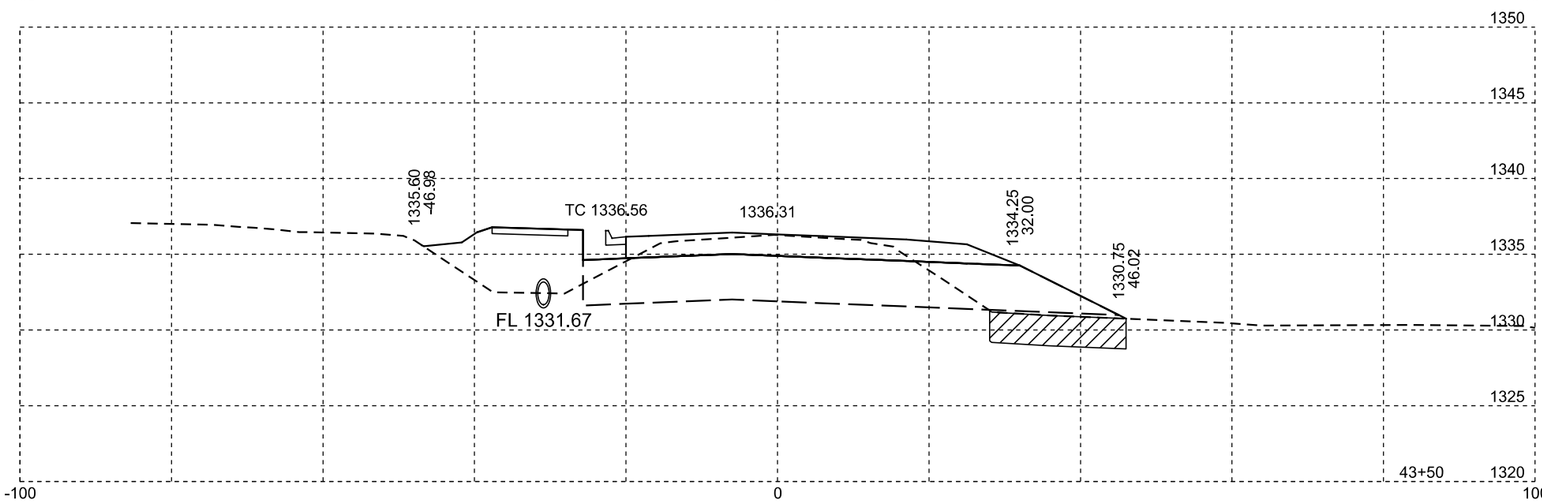

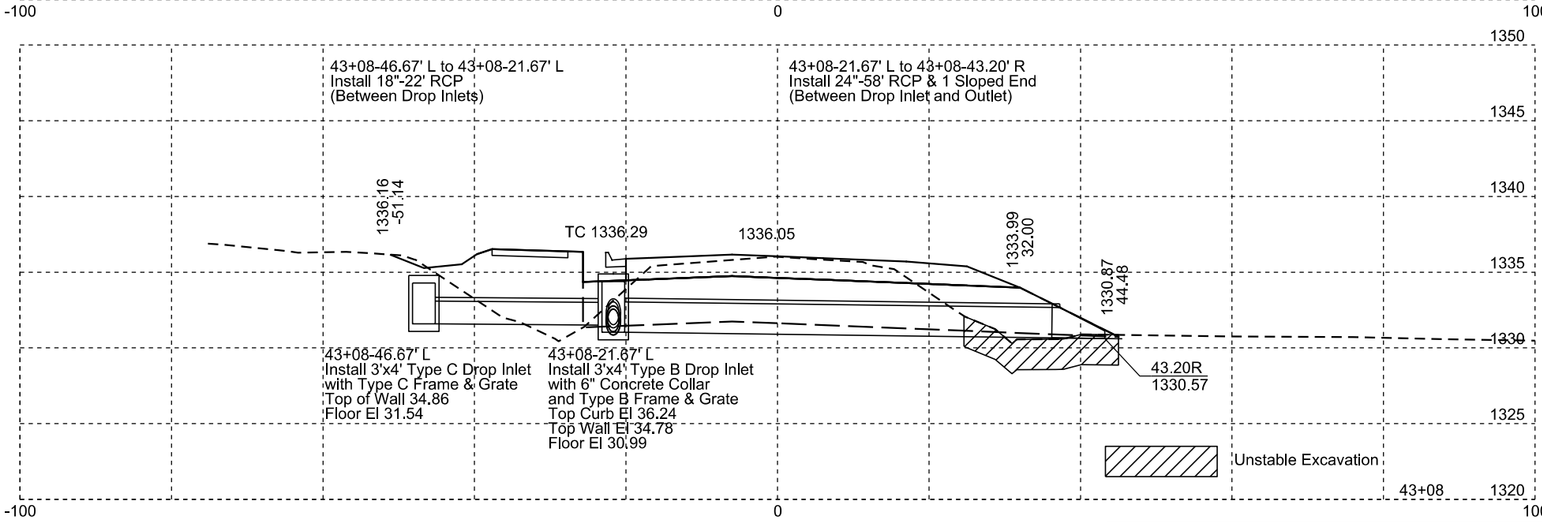

Plotting Date: 11/18/2015

STATE OF SOUTH DAKOTA	PROJECT	SHEET NO.	TOTAL SHEETS
	P 0017(08)42	X23	X55

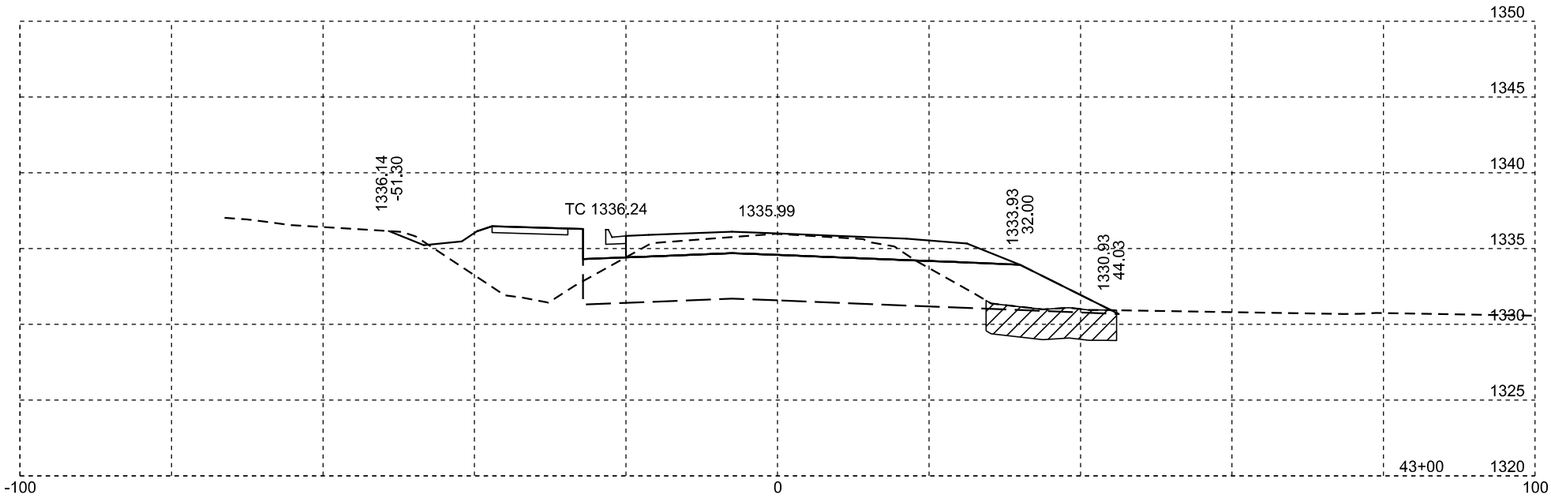

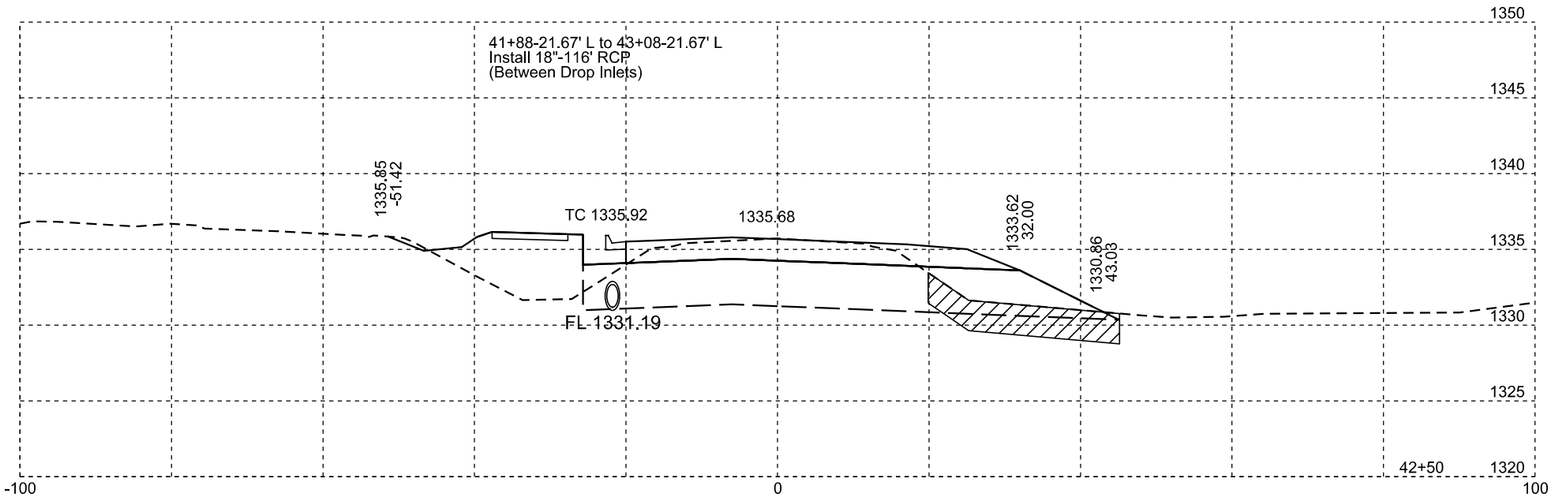

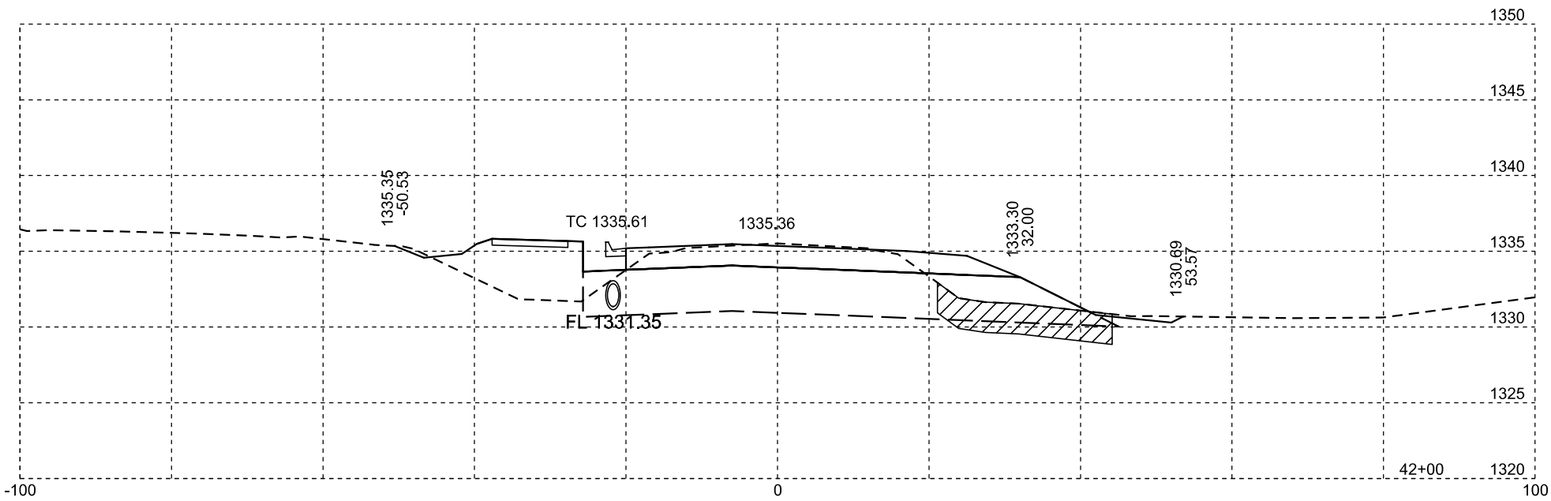

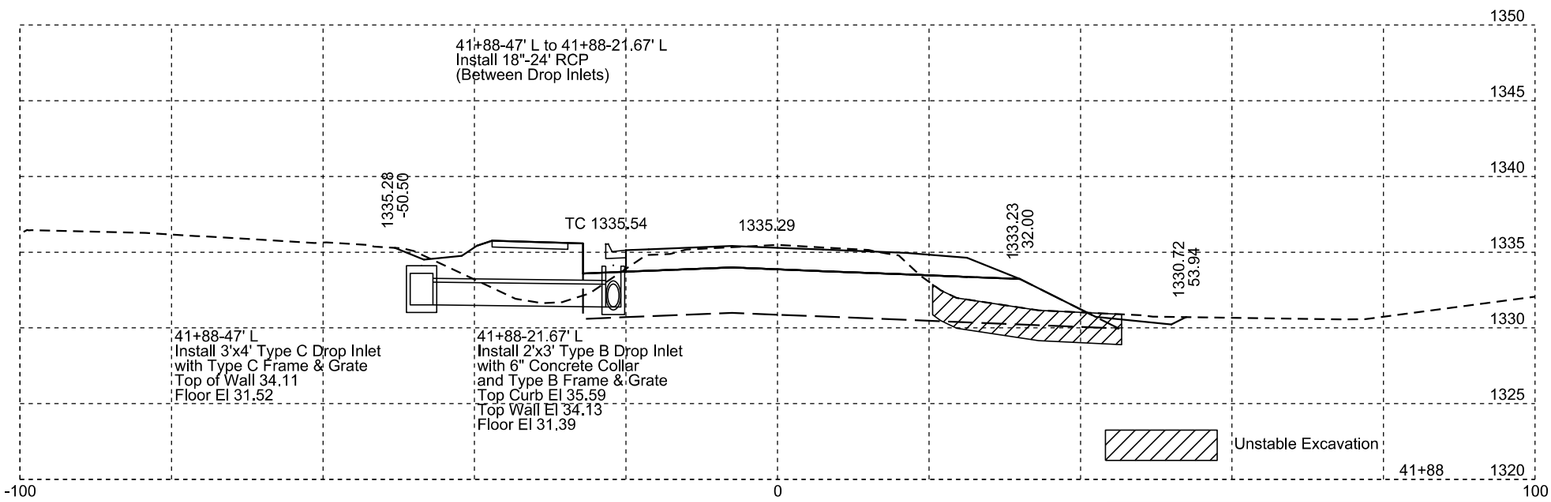

Plotting Date: 11/18/2015

STATE OF SOUTH DAKOTA	PROJECT	SHEET NO.	TOTAL SHEETS
	P 0017(08)42	X24	X55

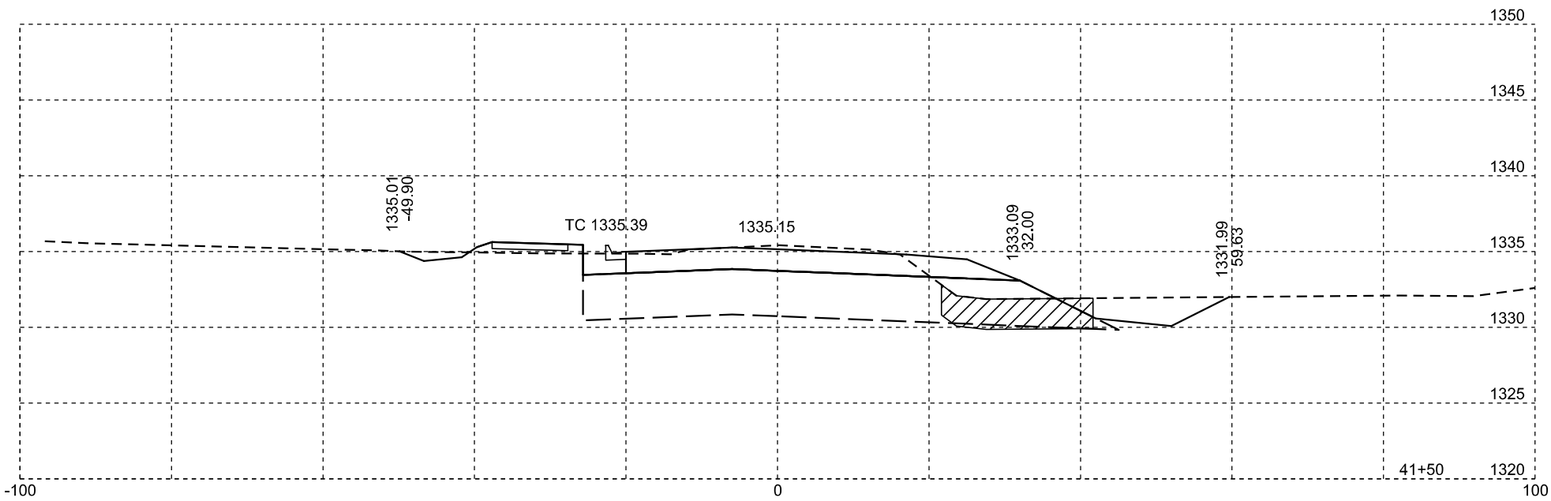

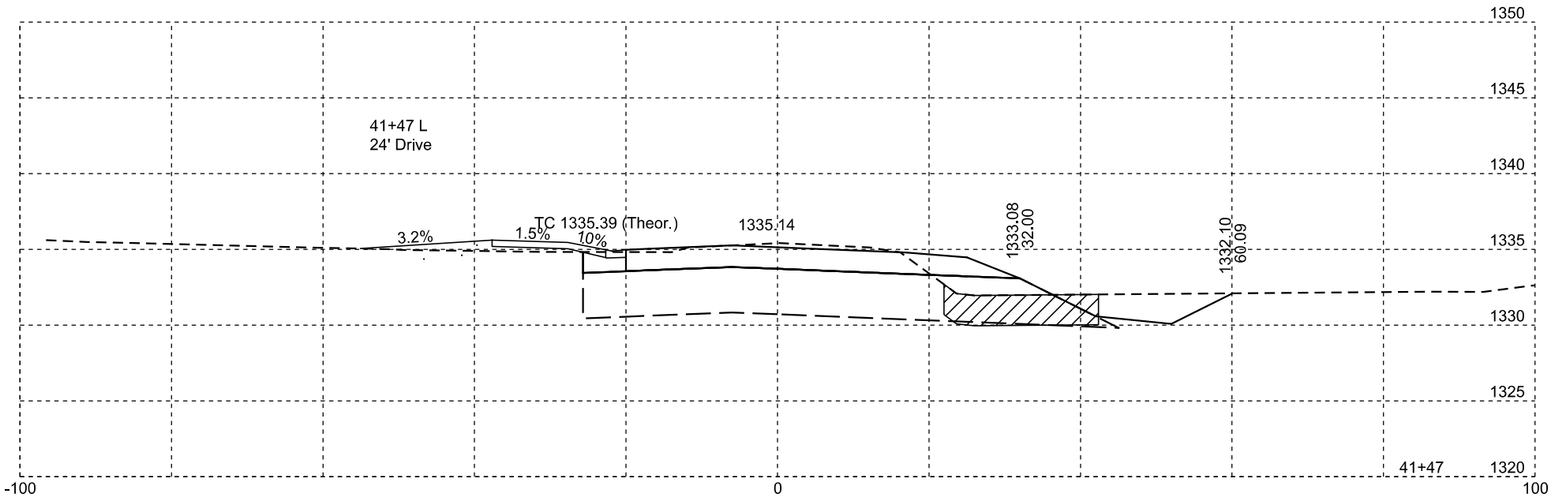

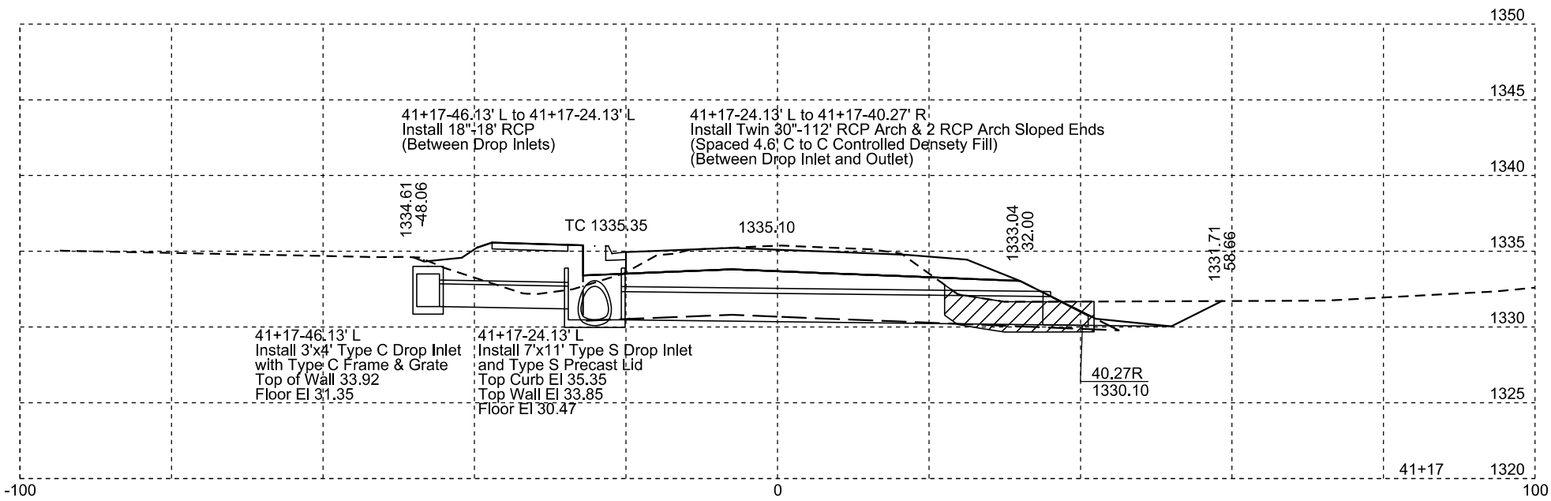

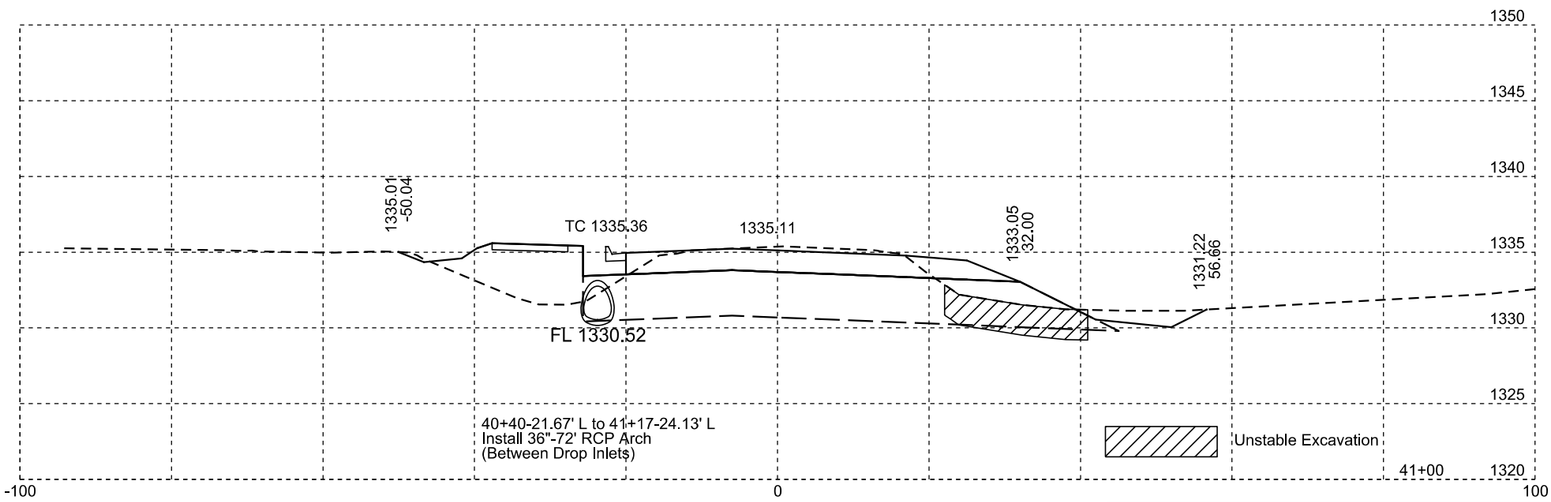

Plotting Date: 11/18/2015

STATE OF SOUTH DAKOTA	PROJECT	SHEET NO.	TOTAL SHEETS
	P 0017(08)42	X25	X55

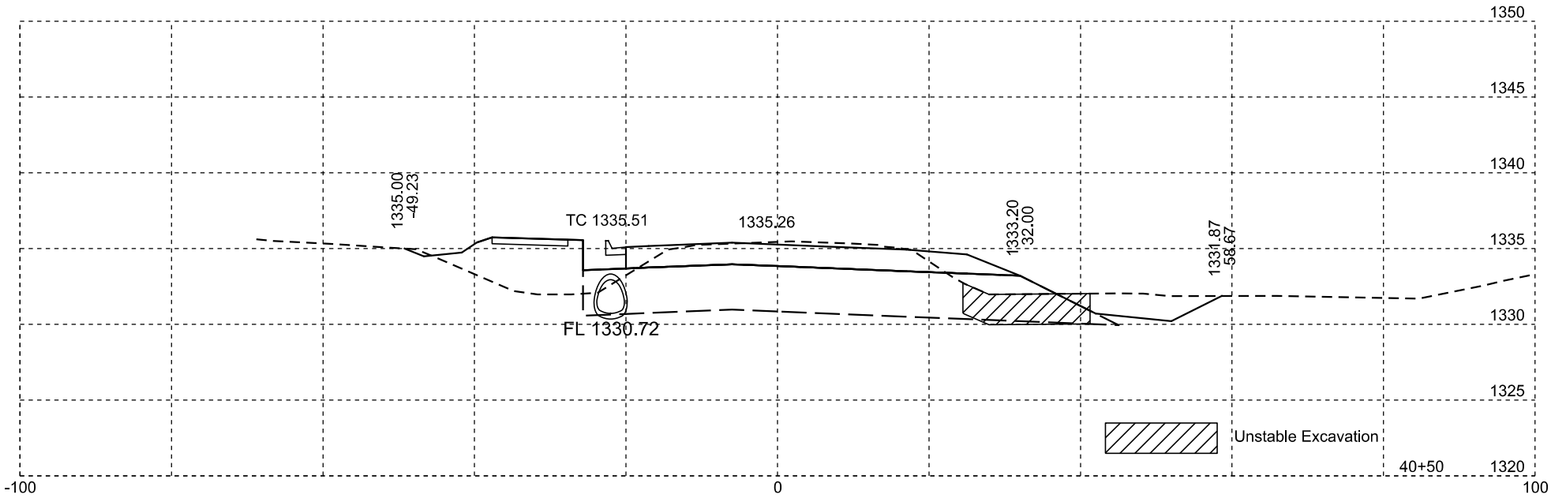

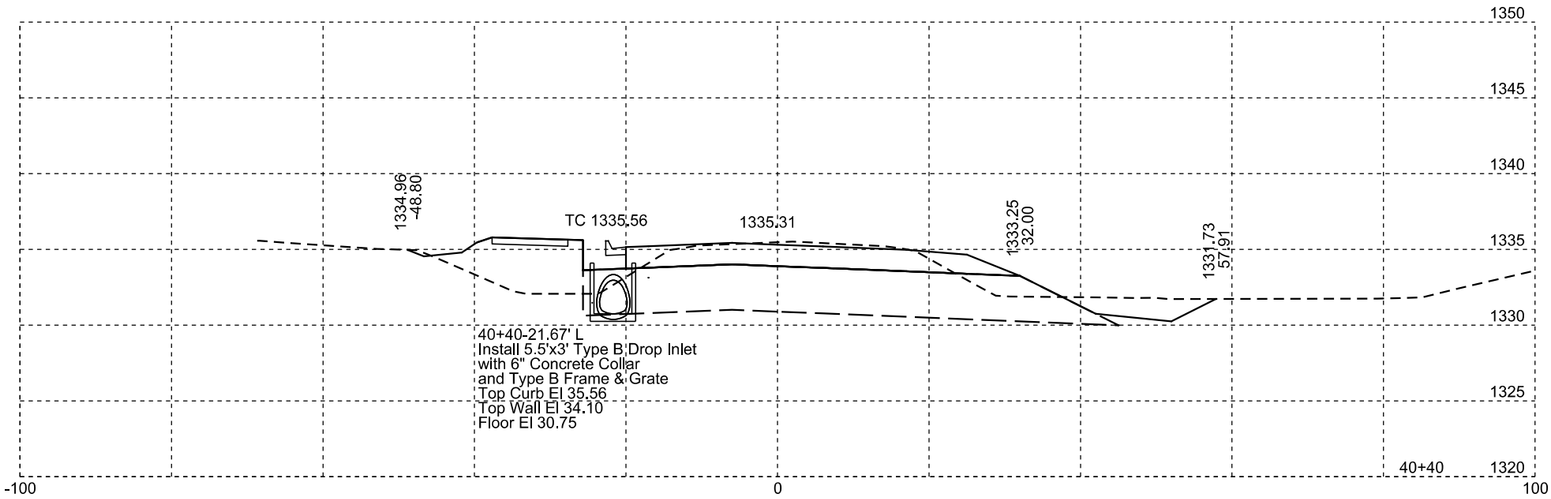

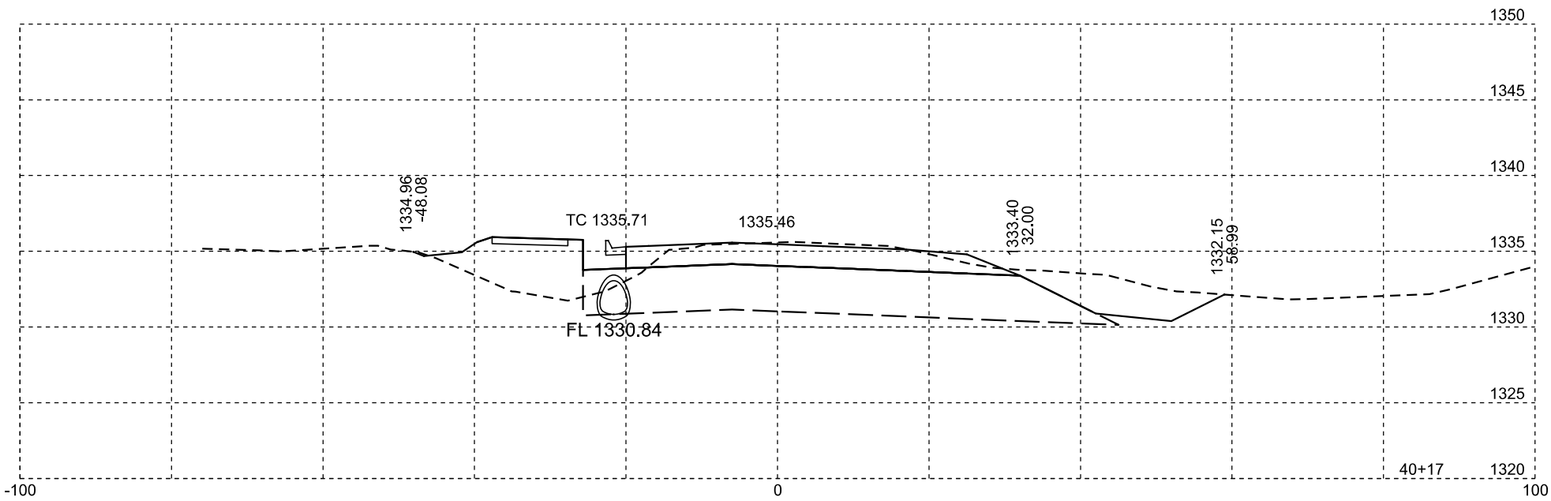

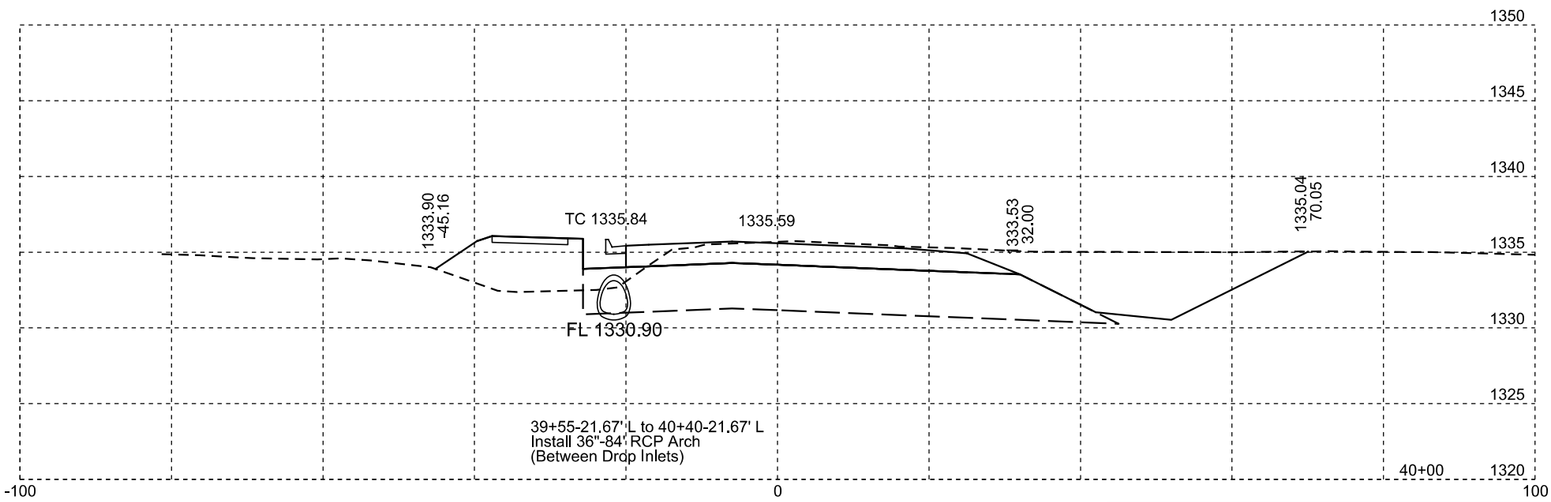

Plotting Date: 11/18/2015

STATE OF SOUTH DAKOTA	PROJECT	SHEET NO.	TOTAL SHEETS
	P 0017(08)42	X26	X55

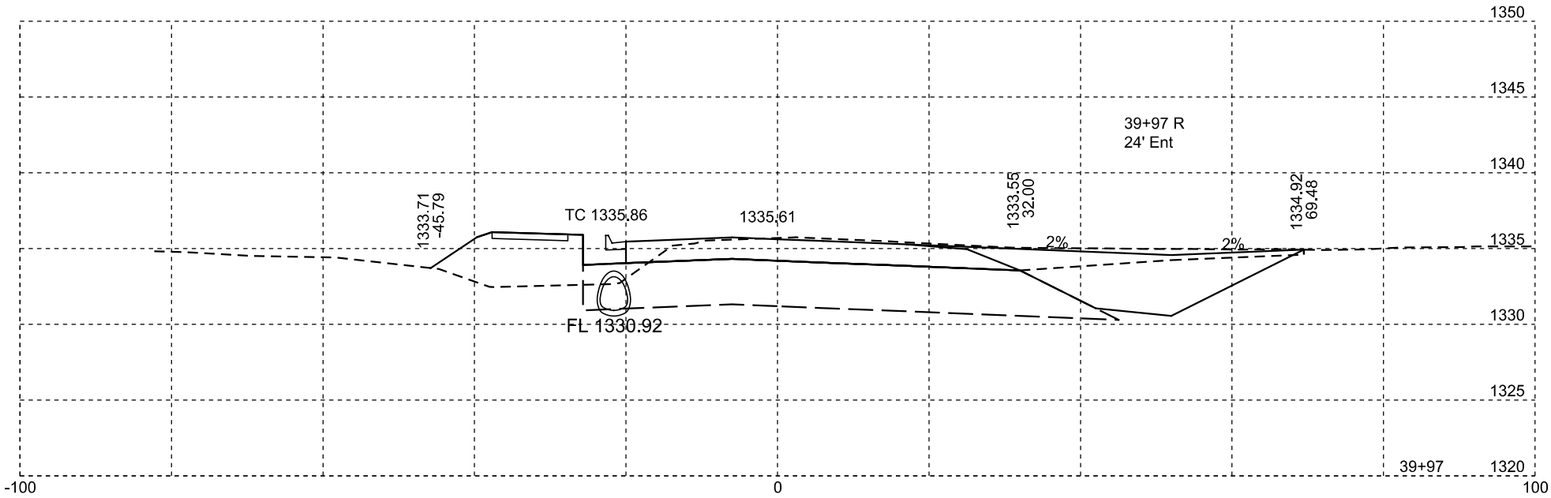

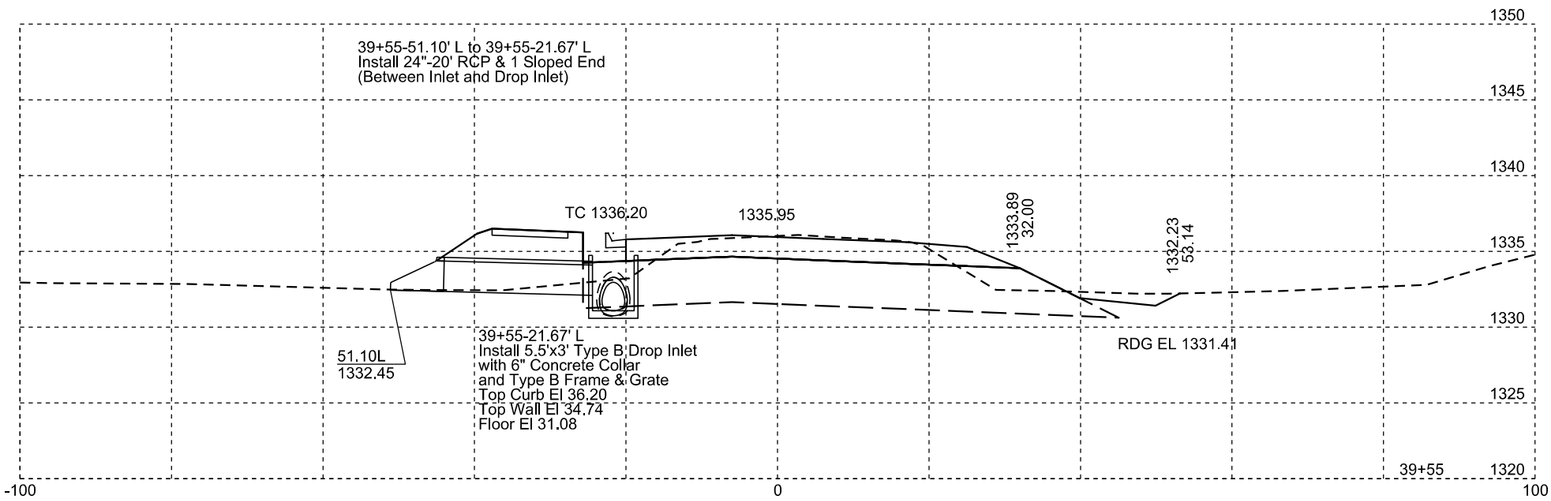

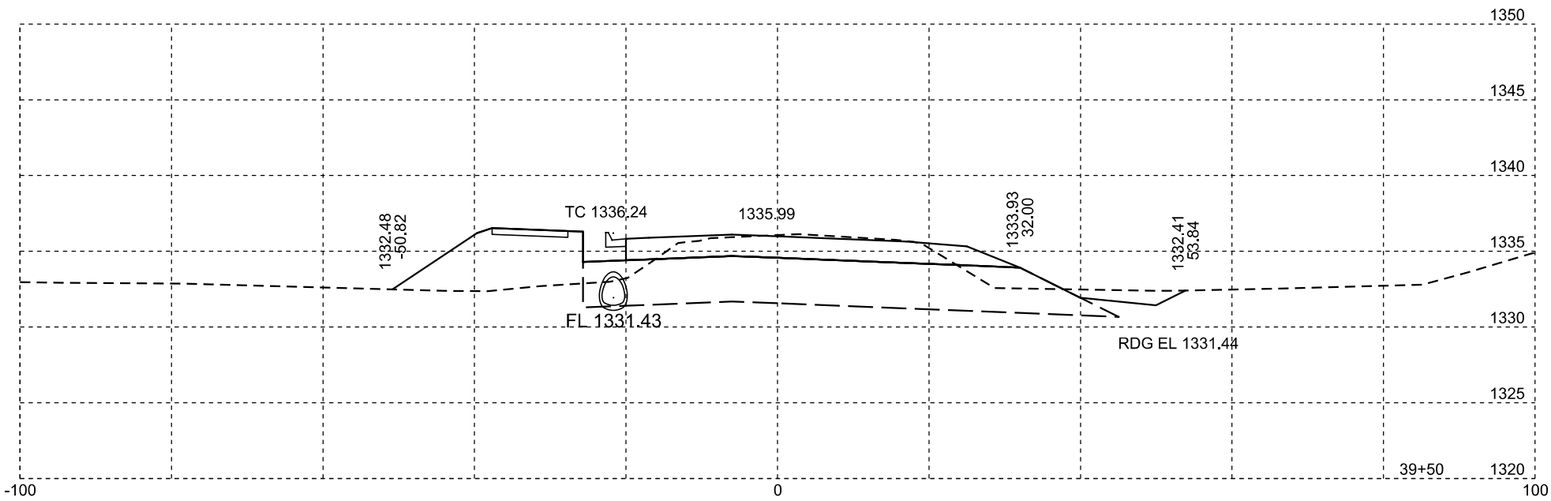

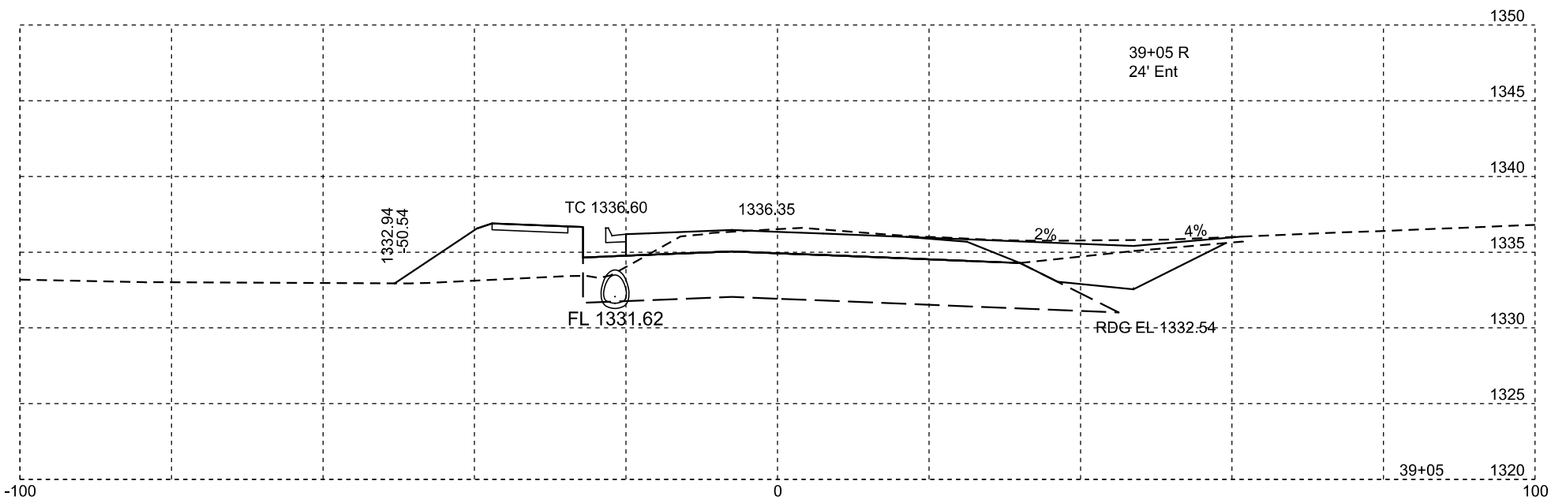

Plotting Date: 11/18/2015

STATE OF SOUTH DAKOTA	PROJECT	SHEET NO.	TOTAL SHEETS
	P 0017(08)42	X27	X55

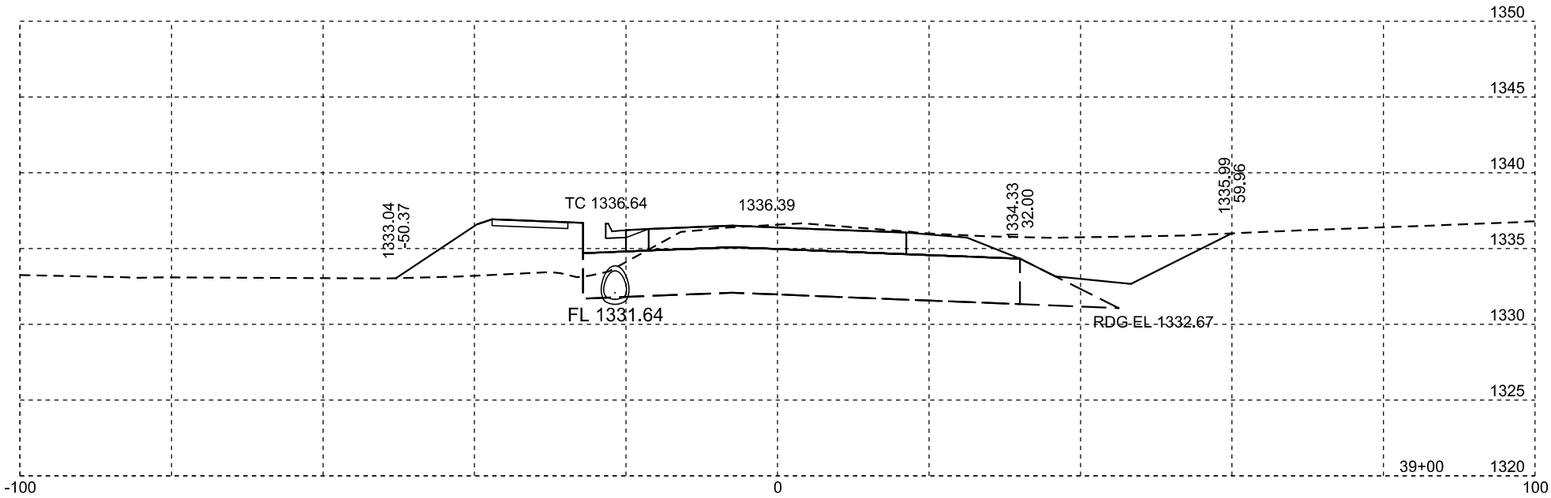

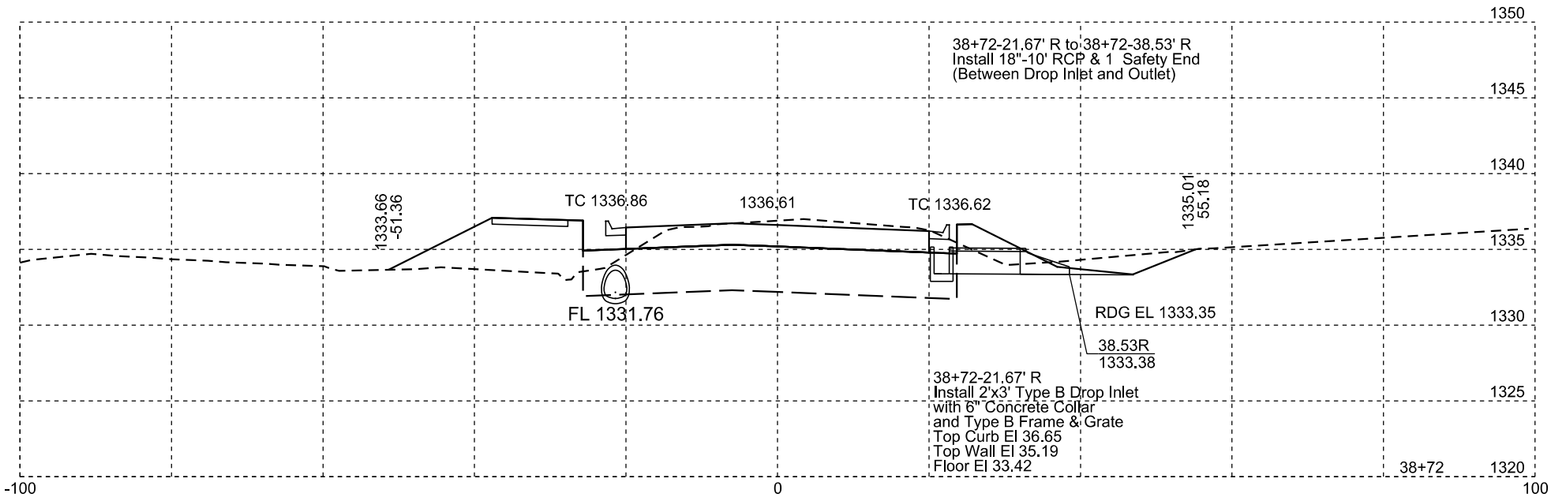

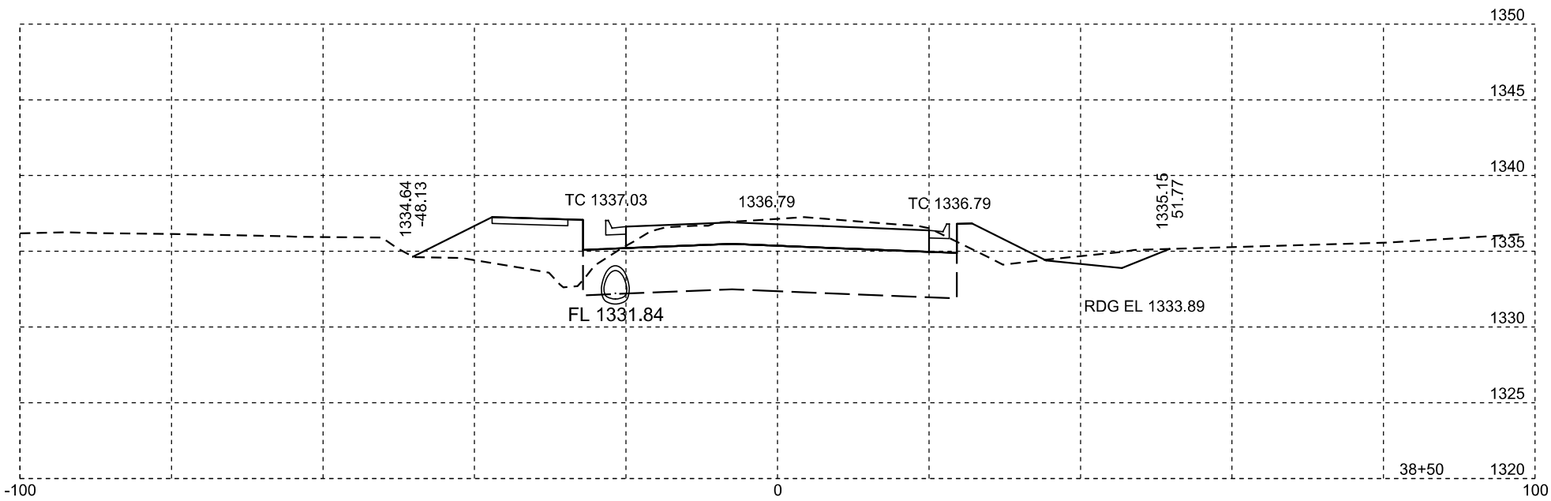

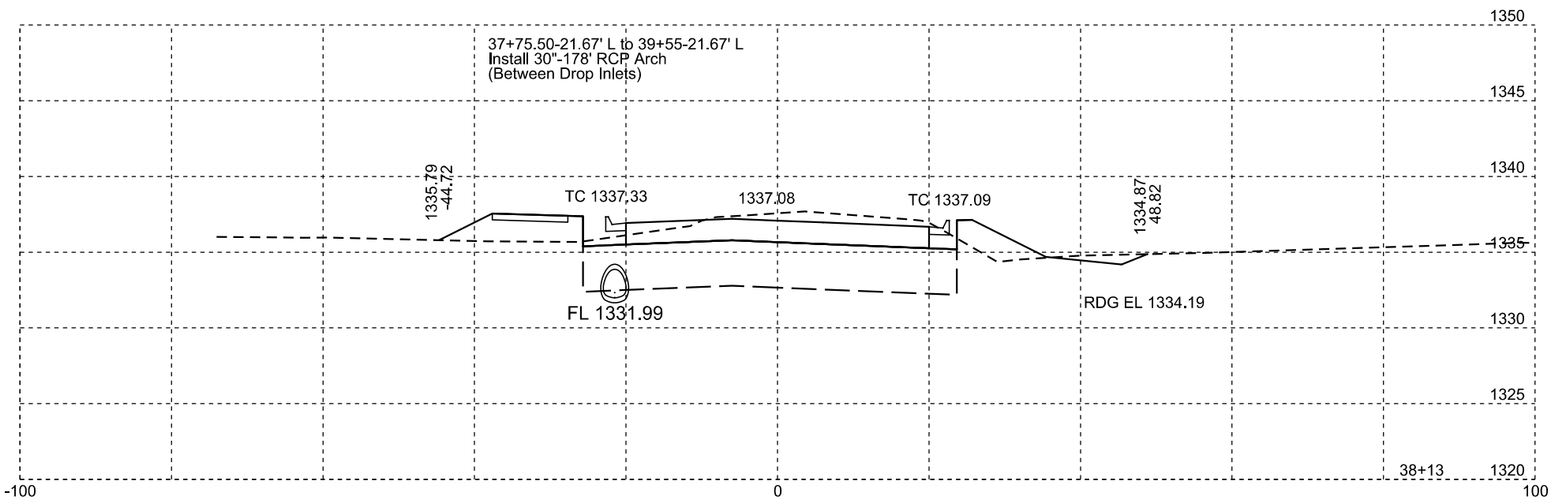

Plotting Date: 11/18/2015

STATE OF SOUTH DAKOTA	PROJECT	SHEET NO.	TOTAL SHEETS
	P 0017(08)42	X28	X55

STATE OF SOUTH DAKOTA	PROJECT	SHEET NO.	TOTAL SHEETS
	P 0017(08)42	X29	X55

Plotting Date: 11/18/2015

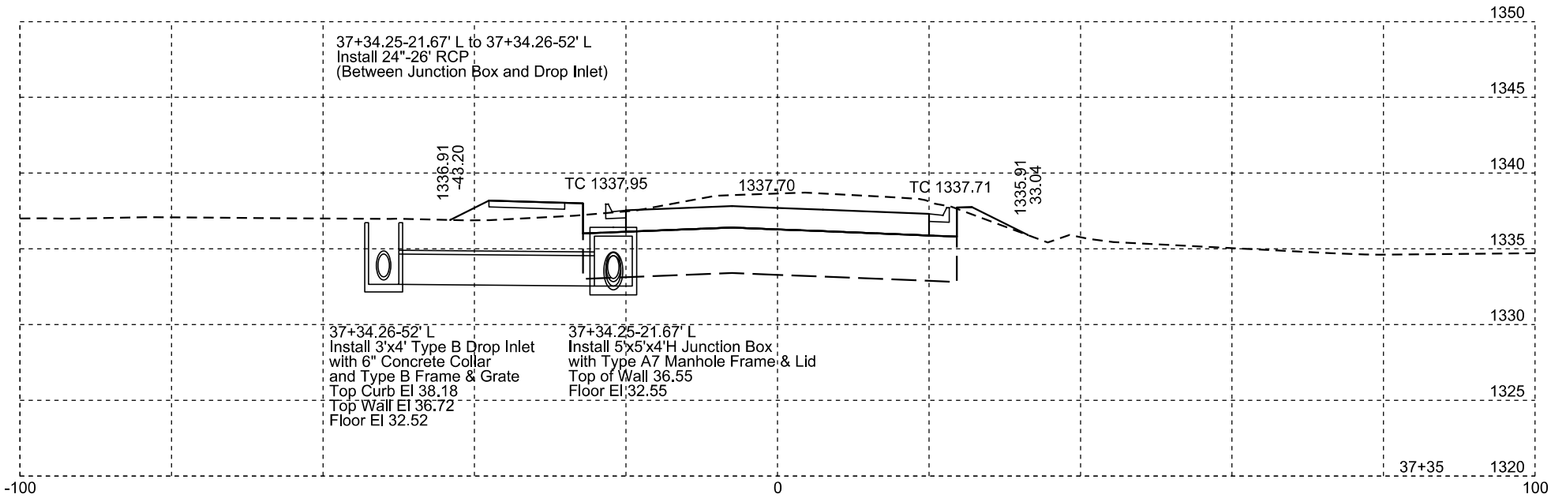

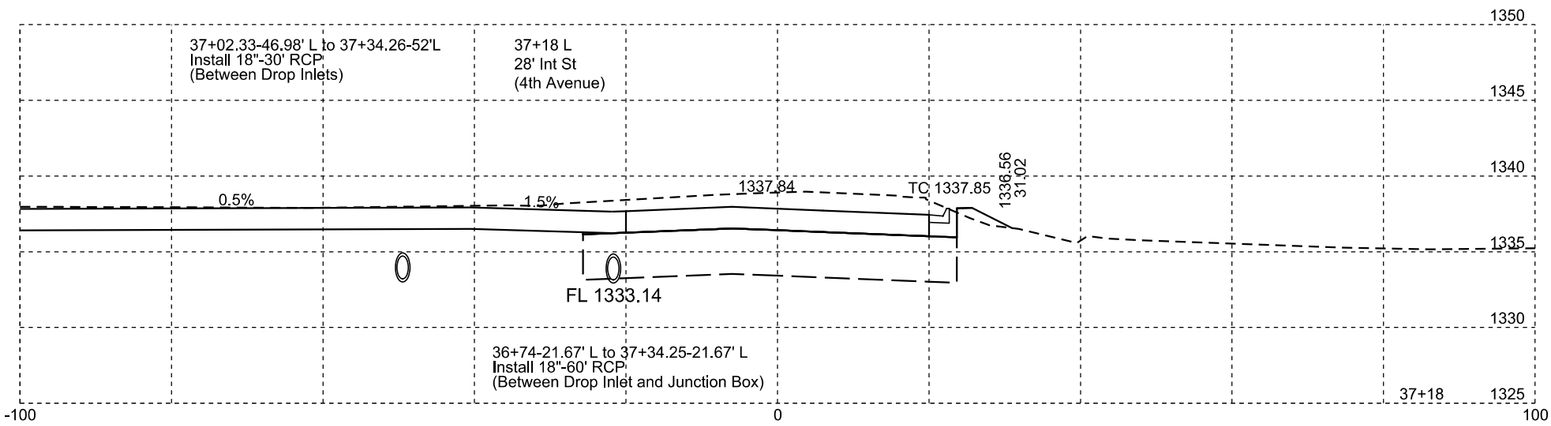

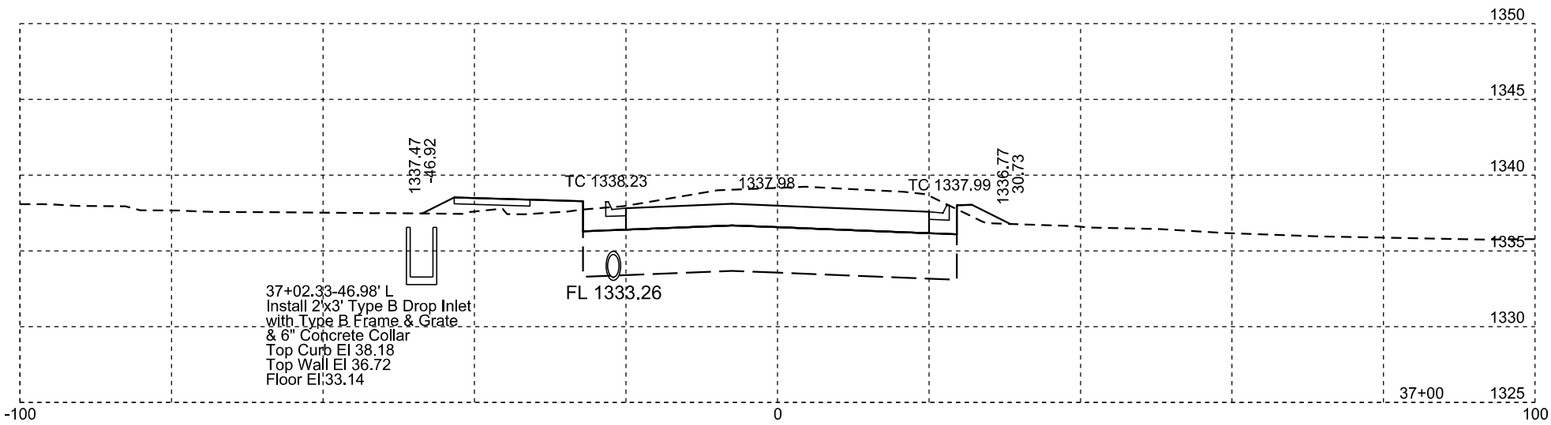

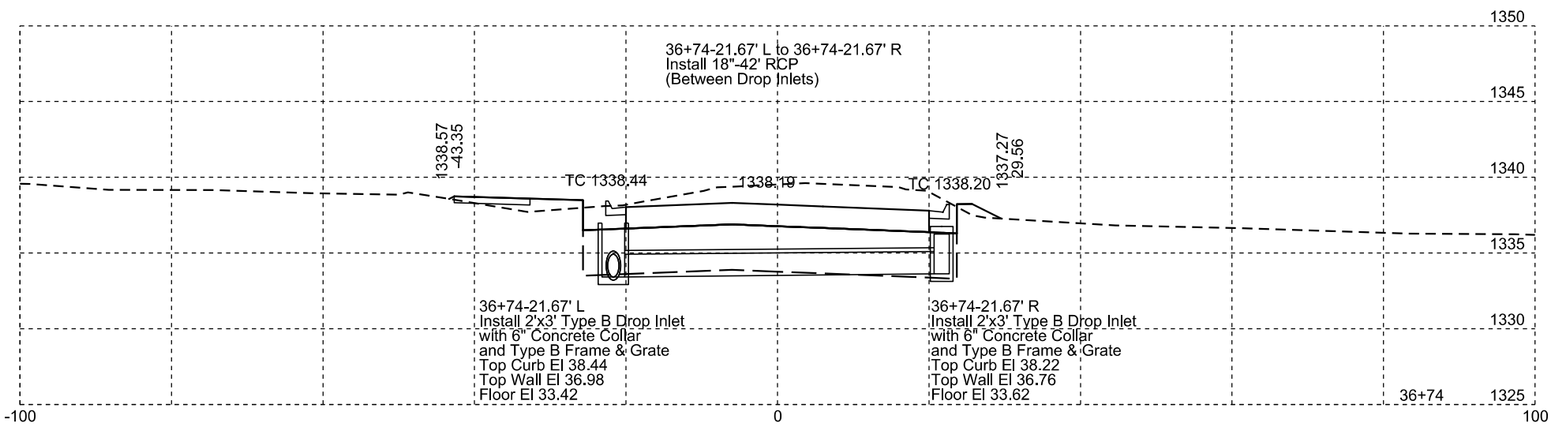

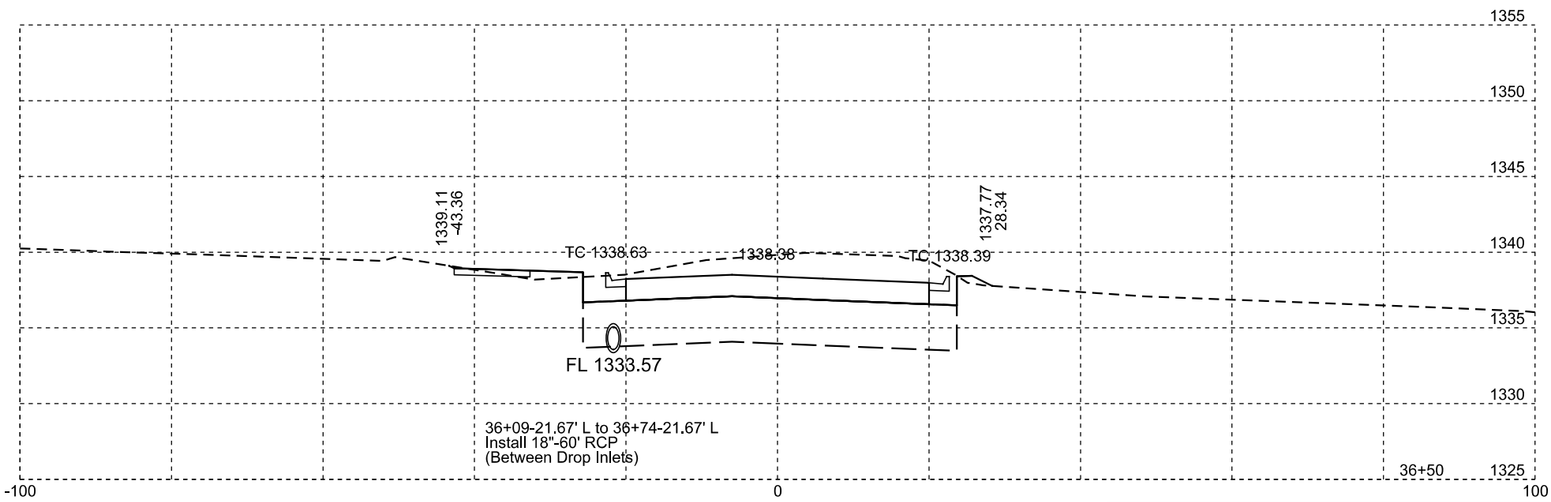

Plotting Date: 11/18/2015

STATE OF SOUTH DAKOTA	PROJECT	SHEET NO.	TOTAL SHEETS
	P 0017(08)42	X30	X55

STATE OF SOUTH DAKOTA	PROJECT	SHEET NO.	TOTAL SHEETS
	P 0017(08)42	X31	X55

Plotting Date: 11/18/2015

STATE OF SOUTH DAKOTA	PROJECT	SHEET NO.	TOTAL SHEETS
	P 0017(08)42	X32	X55

Plotting Date: 11/18/2015

STATE OF SOUTH DAKOTA	PROJECT	SHEET NO.	TOTAL SHEETS
	P 0017(08)42	X33	X55

Plotting Date: 11/18/2015

STATE OF SOUTH DAKOTA	PROJECT	SHEET NO.	TOTAL SHEETS
	P 0017(08)42	X34	X55

Plotting Date: 11/18/2015

STATE OF SOUTH DAKOTA	PROJECT	SHEET NO.	TOTAL SHEETS
	P 0017(08)42	X35	X55

Plotting Date: 11/18/2015

STATE OF SOUTH DAKOTA	PROJECT	SHEET NO.	TOTAL SHEETS
	P 0017(08)42	X36	X55

Plotting Date: 11/18/2015

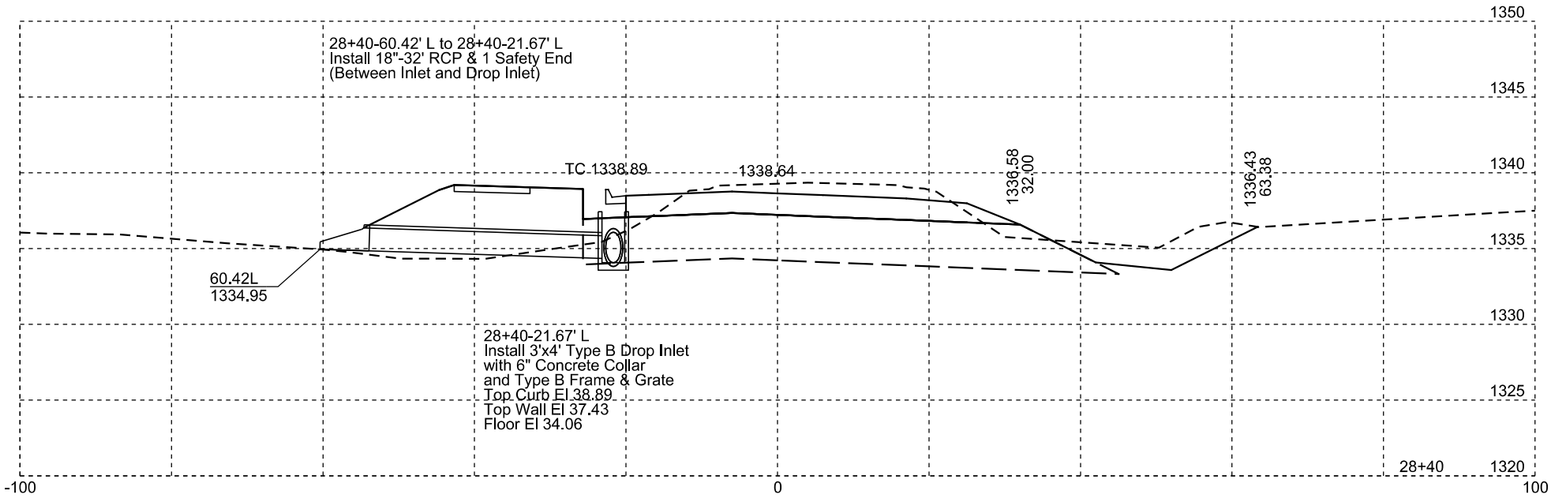

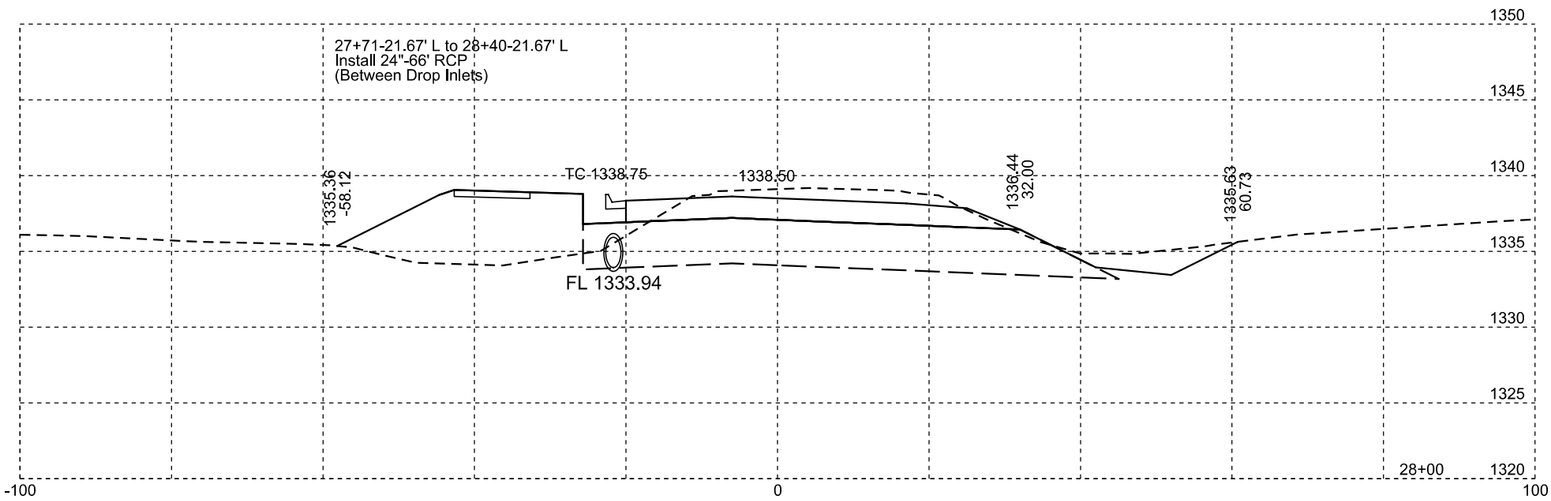

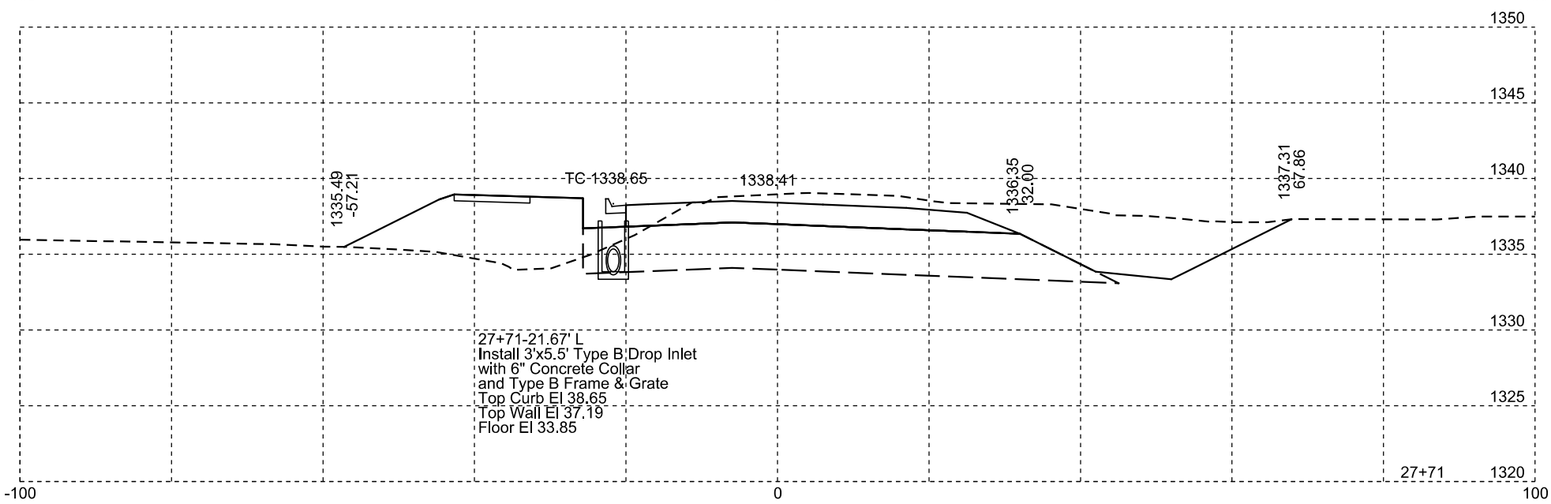

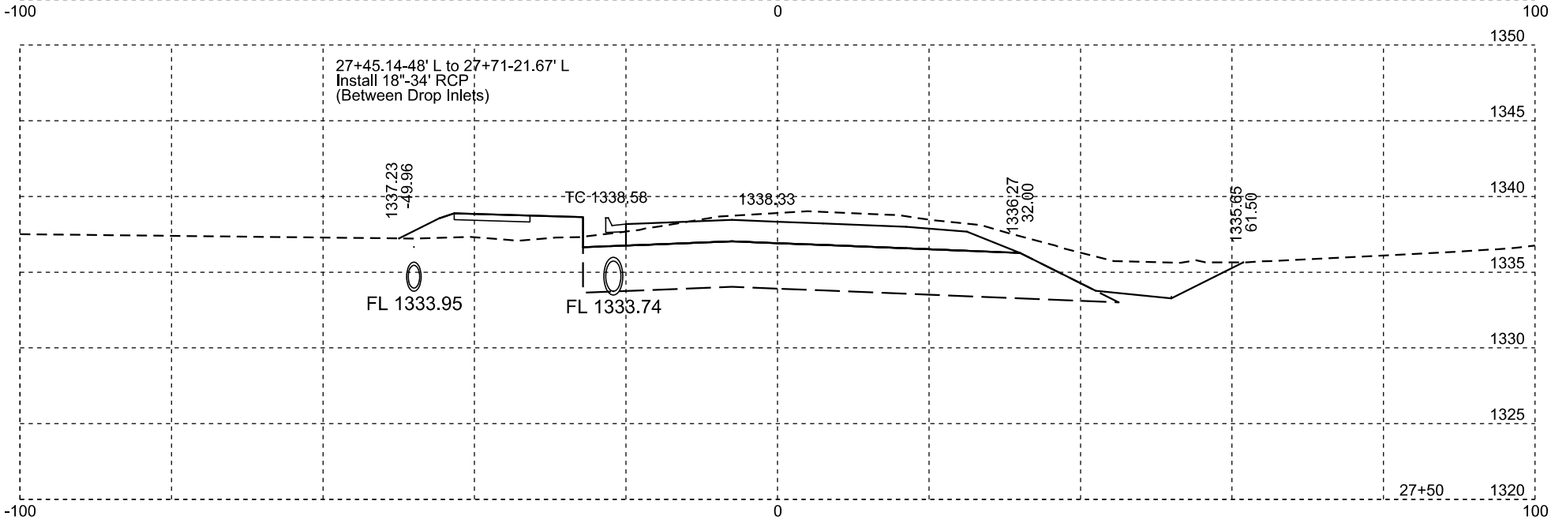

Plotting Date: 11/18/2015

STATE OF SOUTH DAKOTA	PROJECT	SHEET NO.	TOTAL SHEETS
	P 0017(08)42	X37	X55

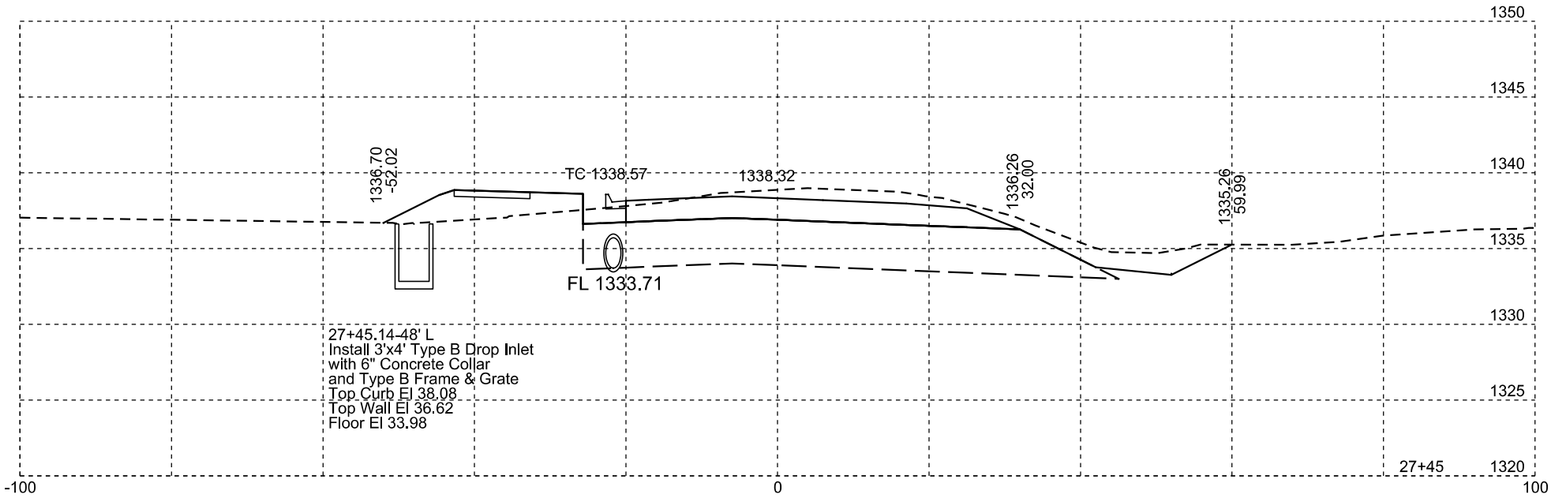

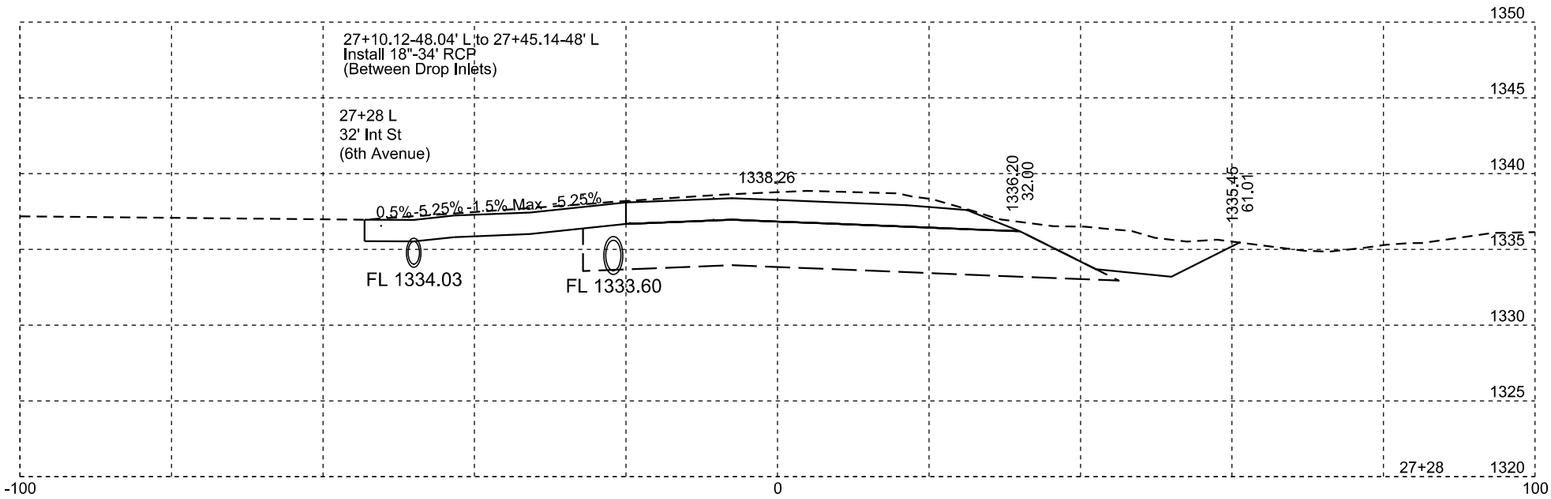

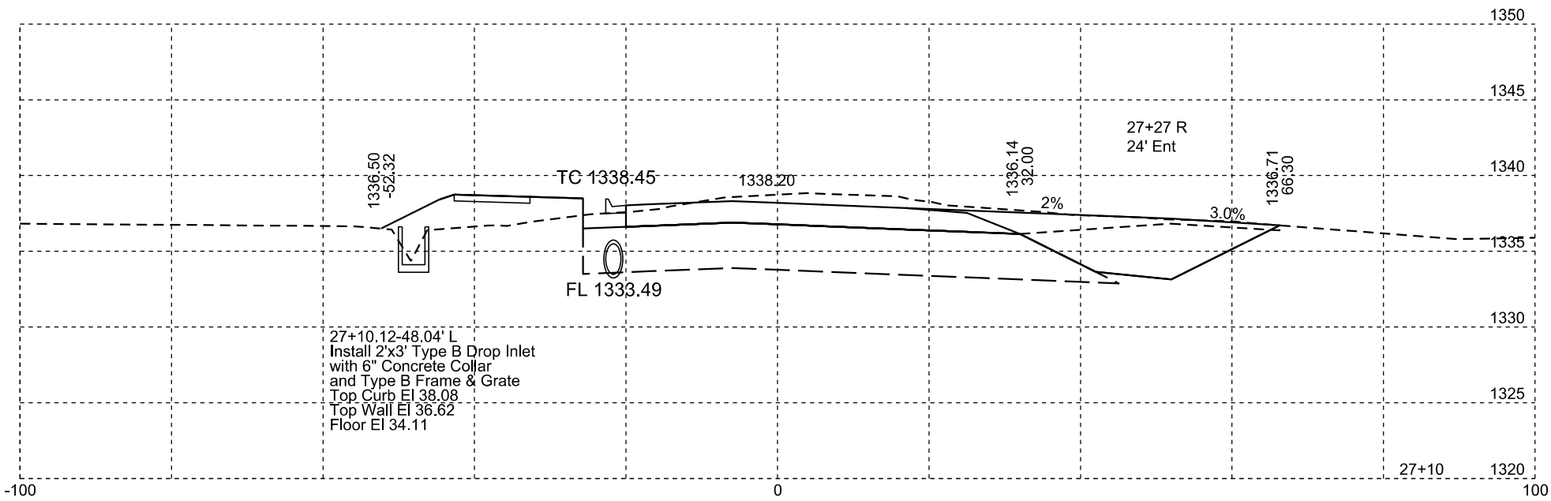

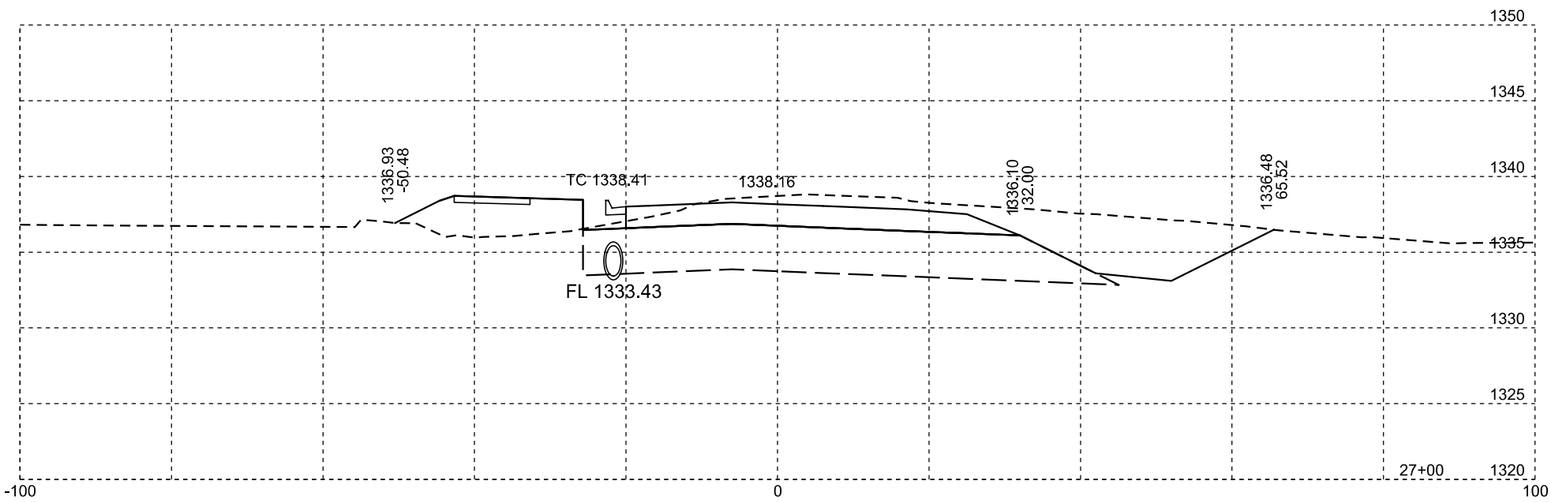

Plotting Date: 11/18/2015

STATE OF SOUTH DAKOTA	PROJECT	SHEET NO.	TOTAL SHEETS
	P 0017(08)42	X38	X55

STATE OF SOUTH DAKOTA	PROJECT	SHEET NO.	TOTAL SHEETS
	P 0017(08)42	X39	X55

Plotting Date: 11/18/2015

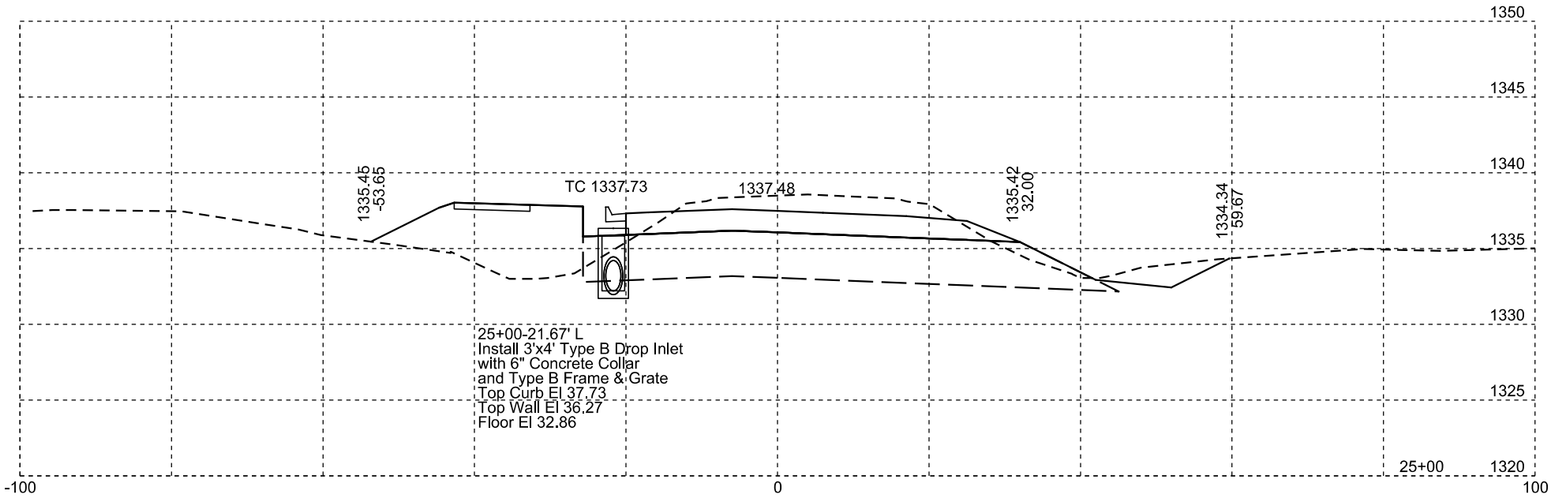

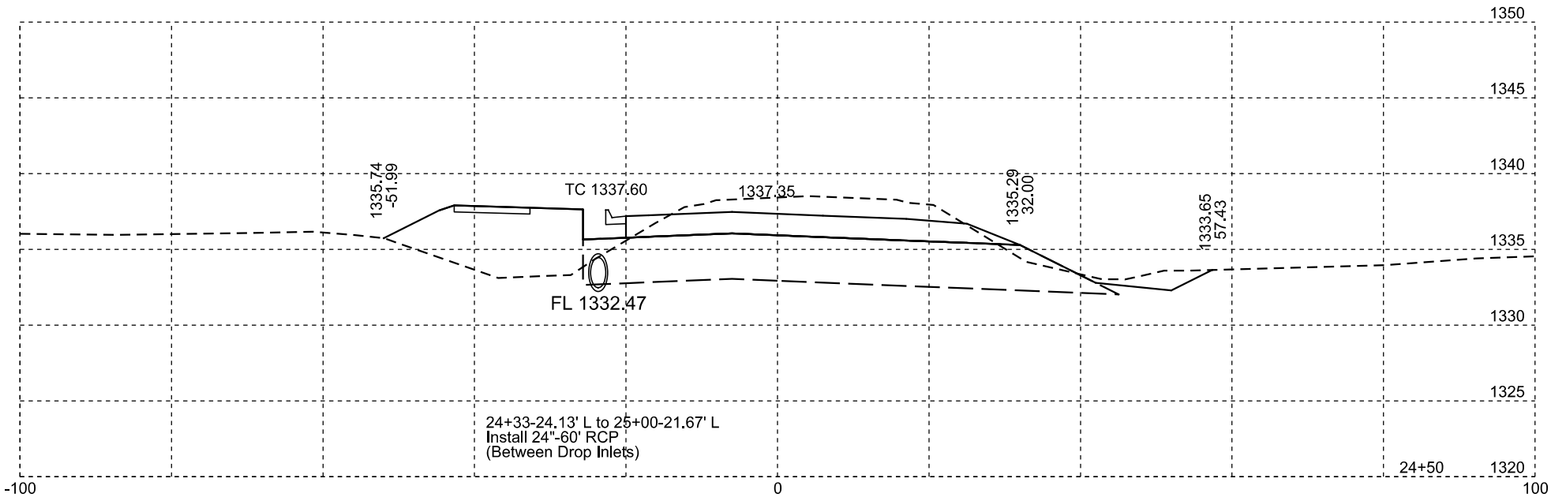

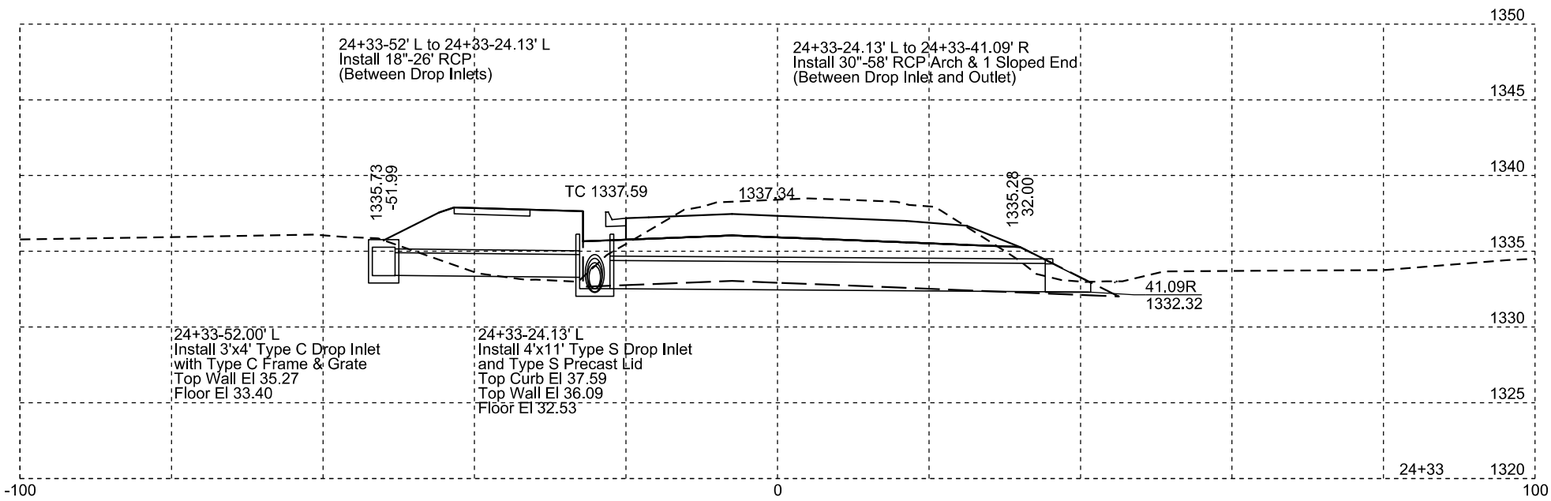

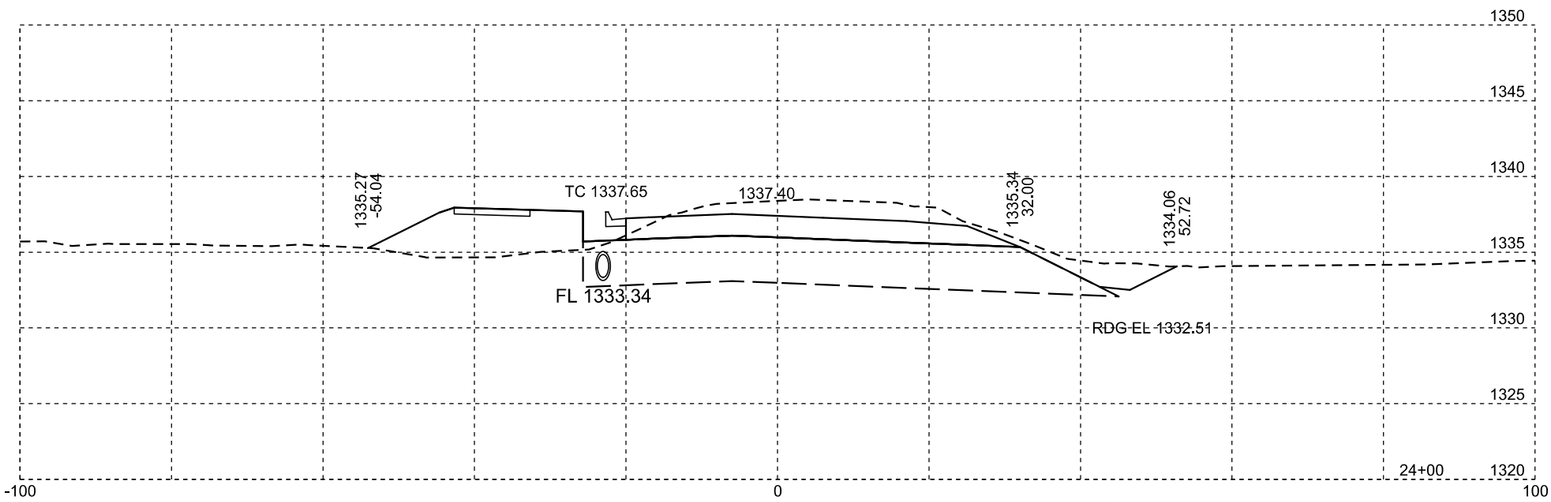

Plotting Date: 11/18/2015

STATE OF SOUTH DAKOTA	PROJECT	SHEET NO.	TOTAL SHEETS
	P 0017(08)42	X40	X55

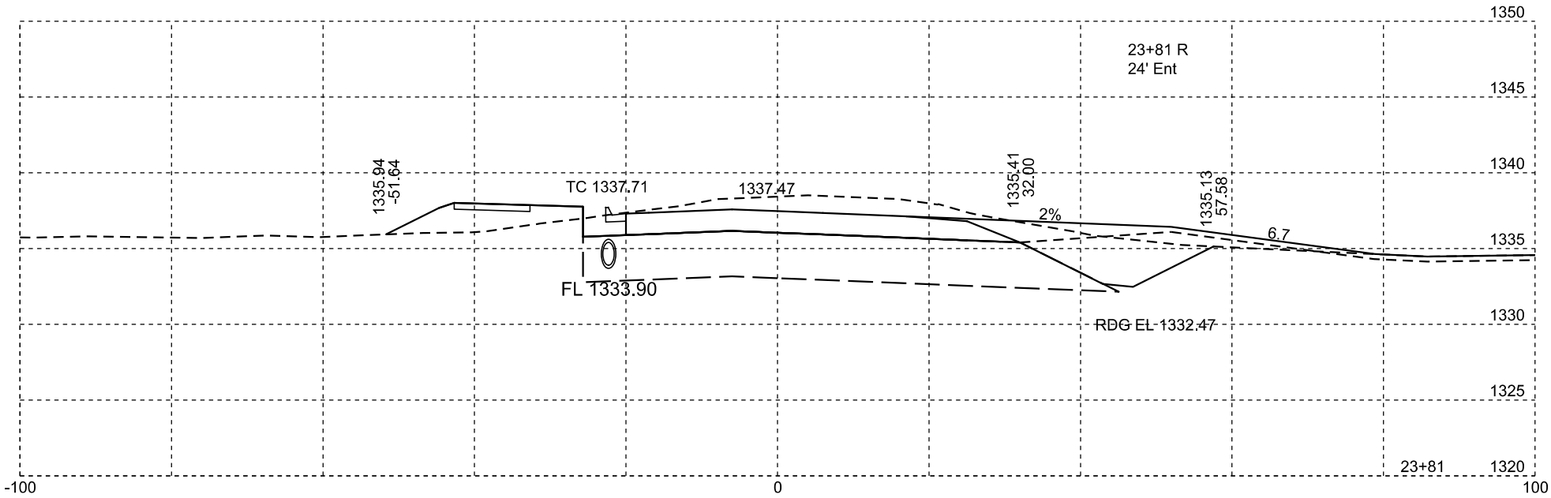

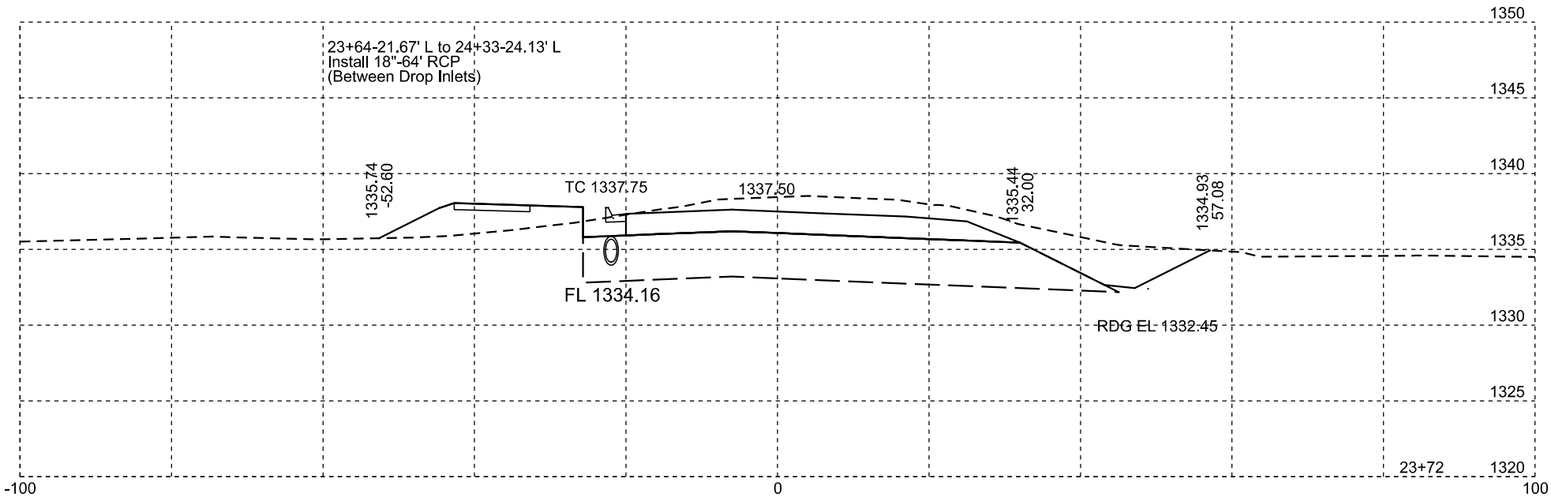

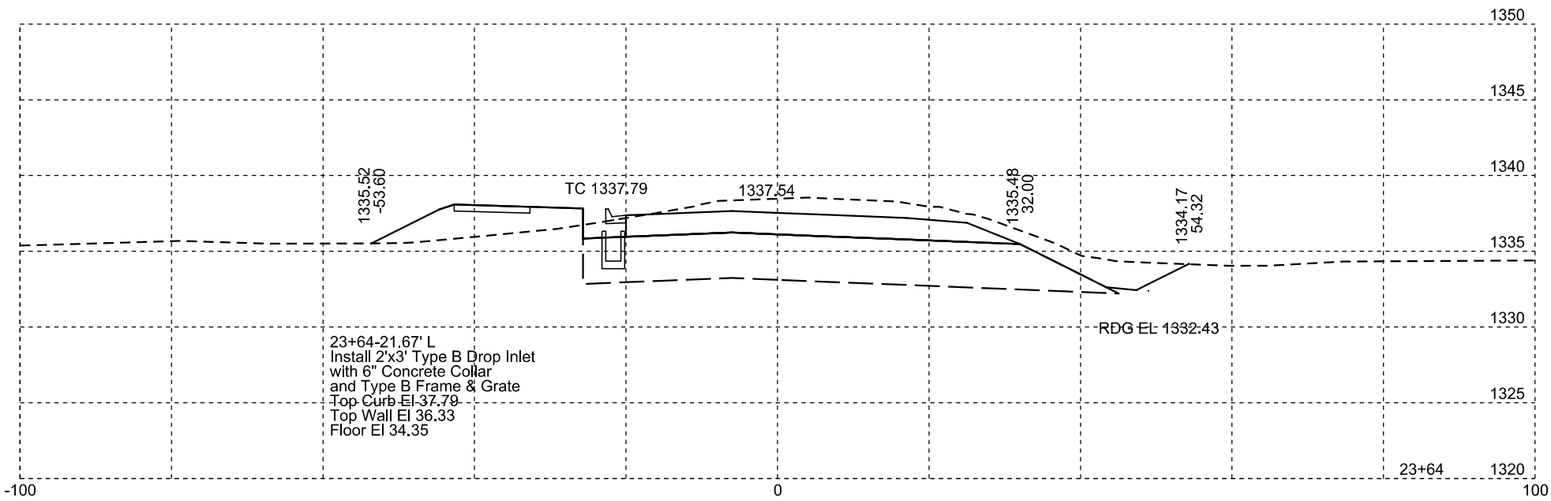

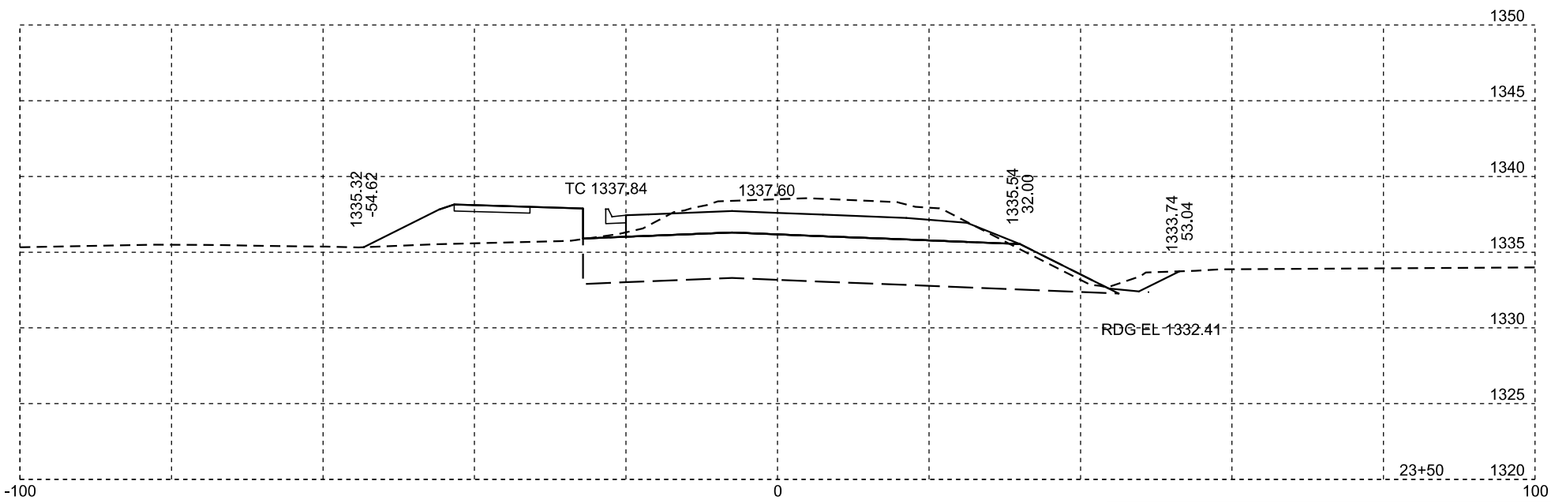

Plotting Date: 11/18/2015

STATE OF SOUTH DAKOTA	PROJECT	SHEET NO.	TOTAL SHEETS
	P 0017(08)42	X41	X55

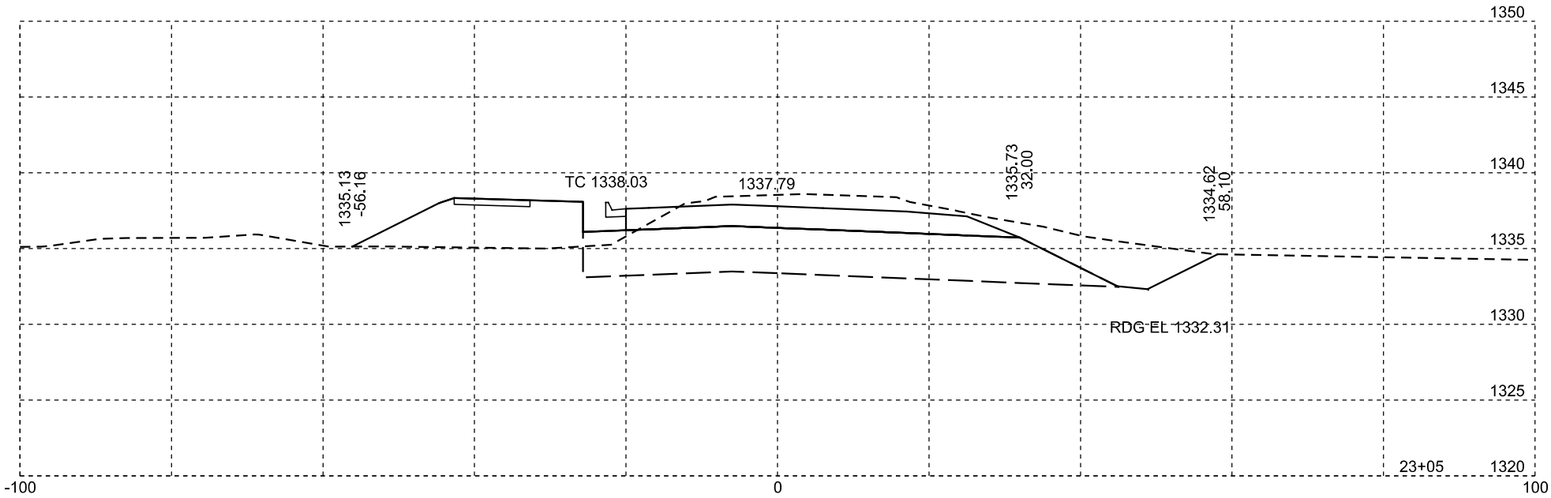

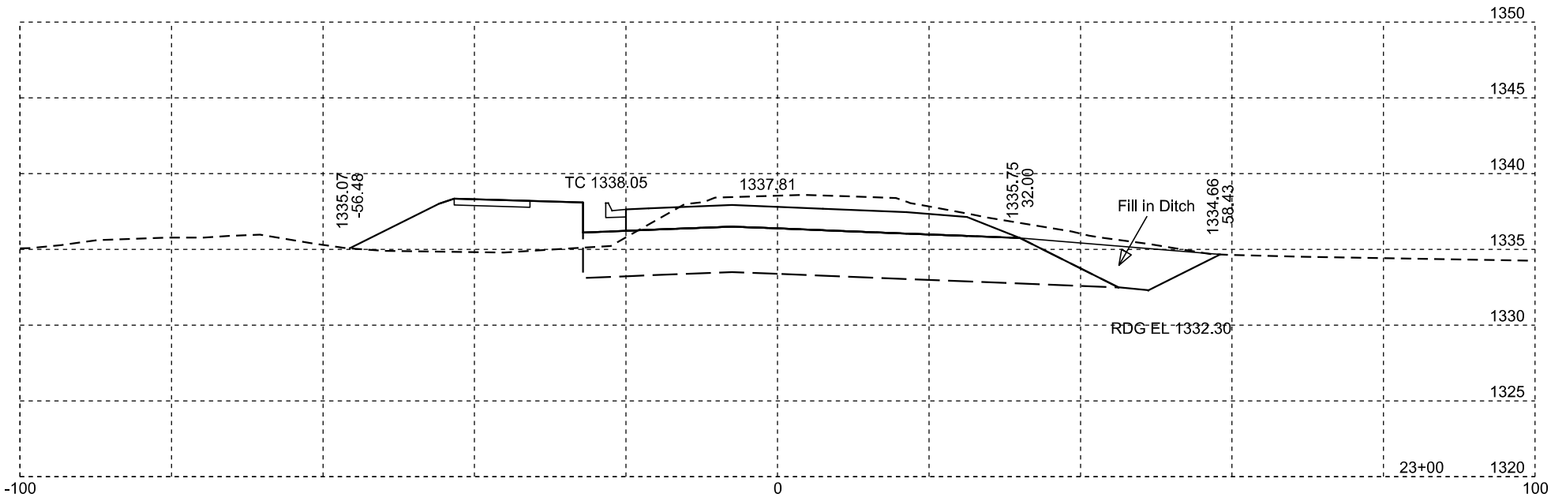

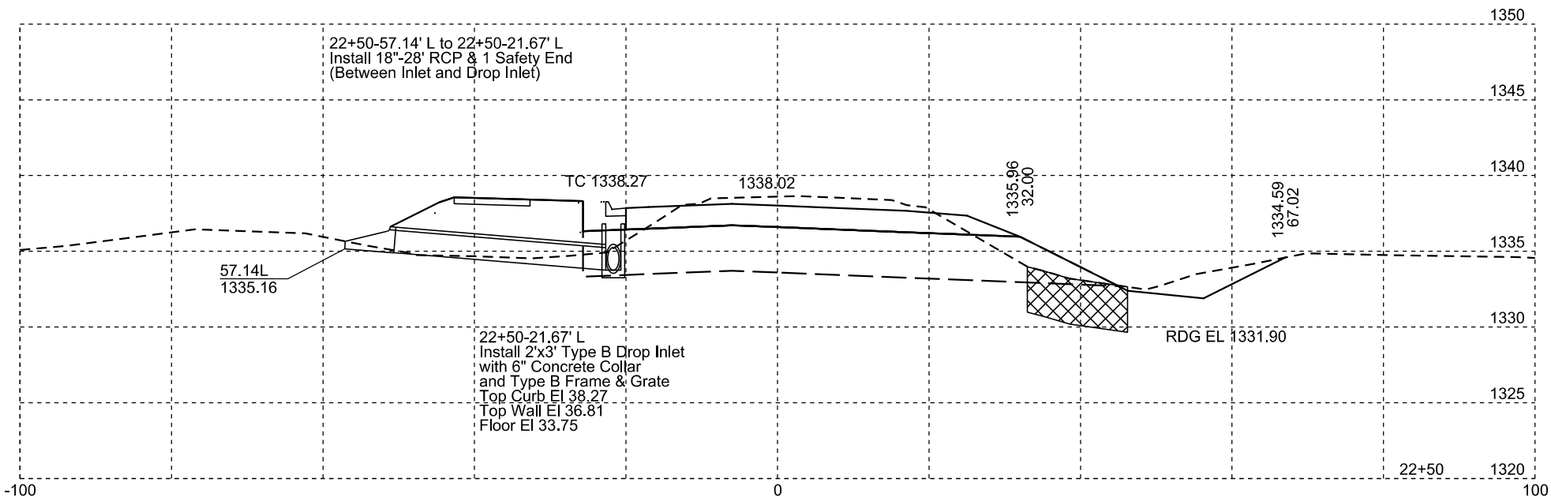

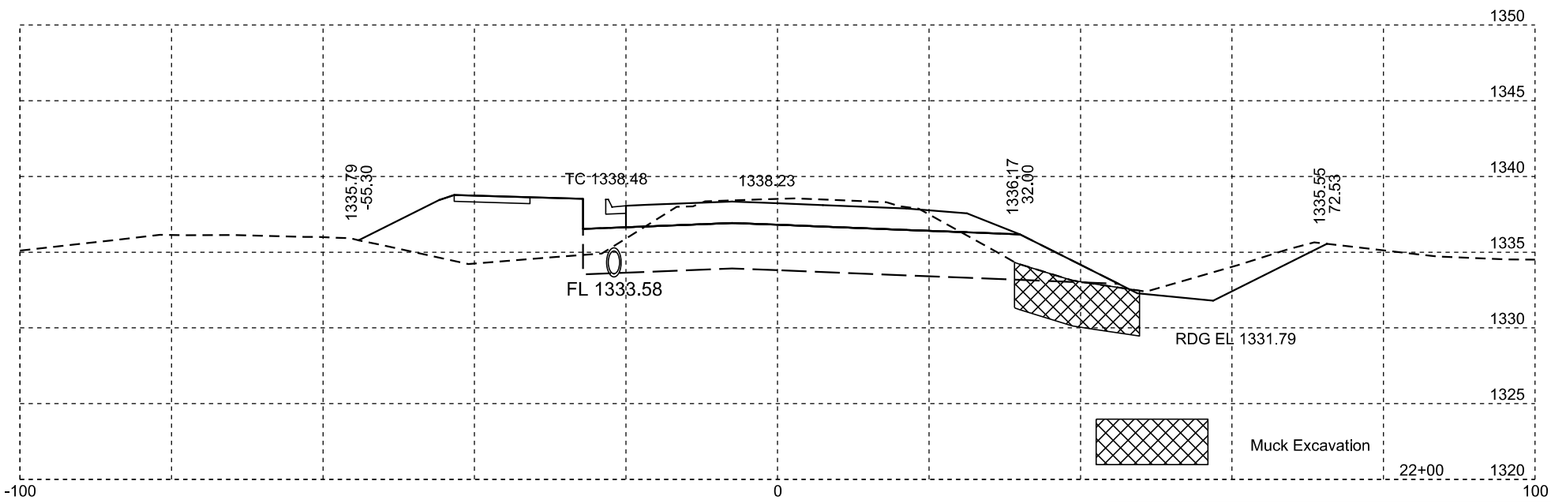

Plotting Date: 11/18/2015

STATE OF SOUTH DAKOTA	PROJECT	SHEET NO.	TOTAL SHEETS
	P 0017(08)42	X42	X55

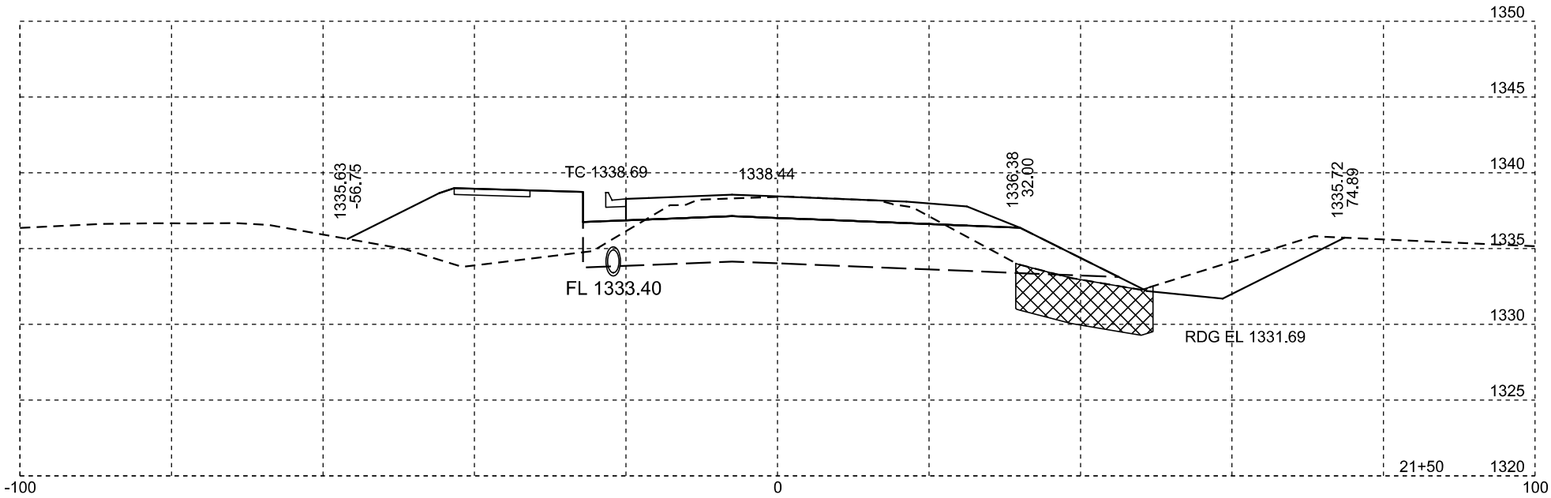

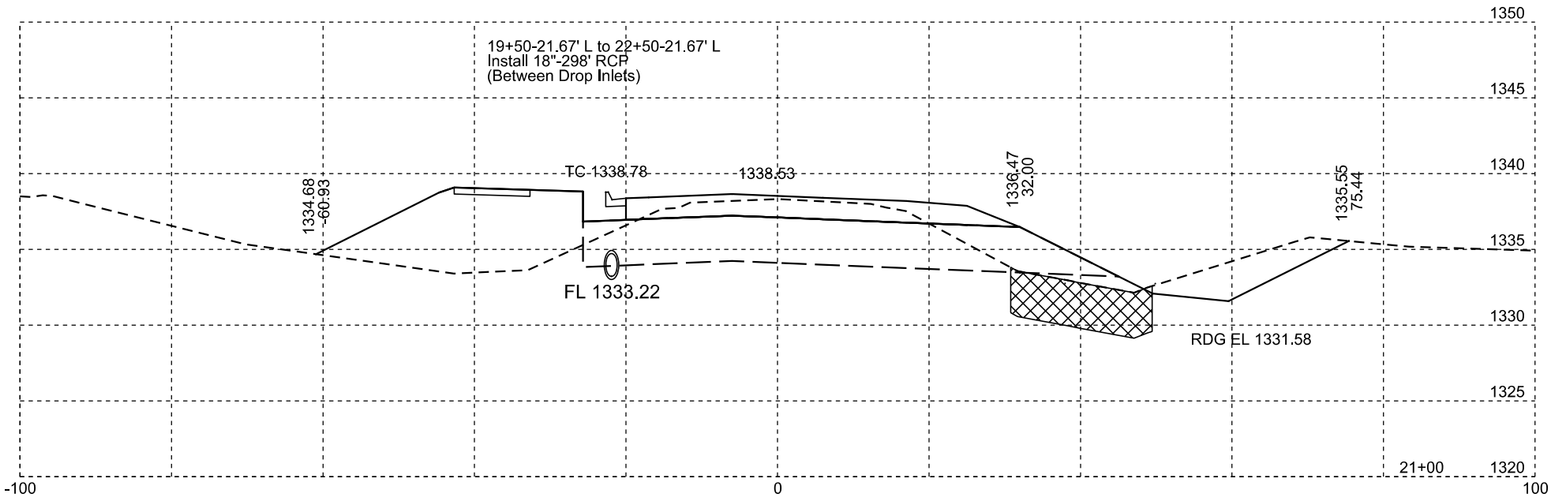

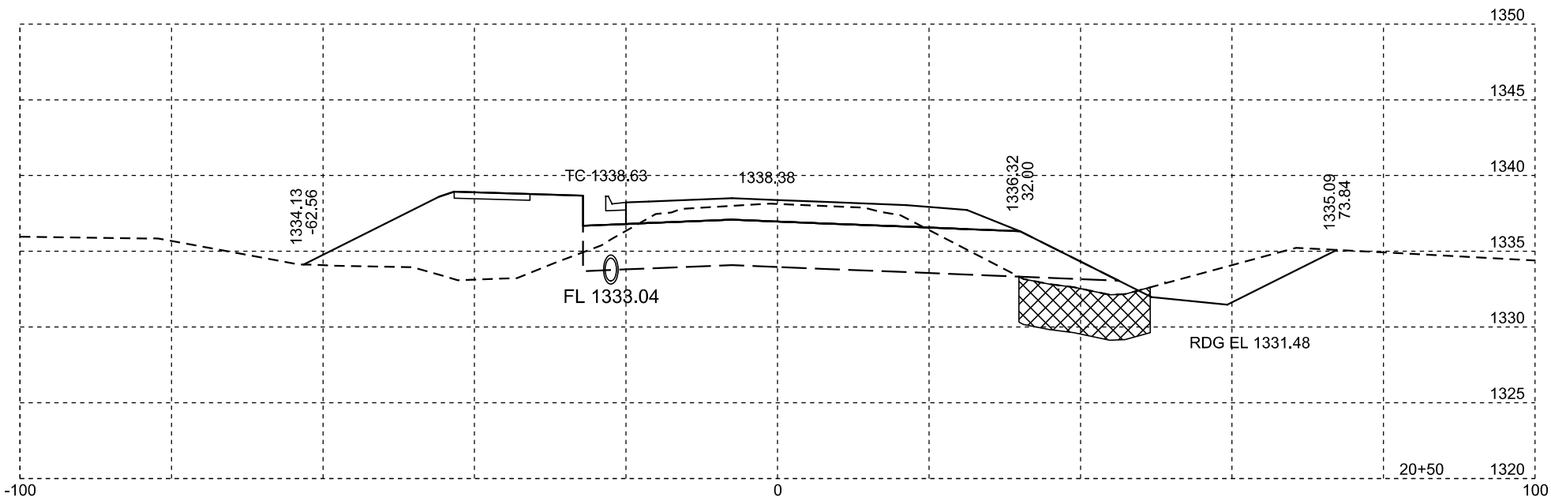

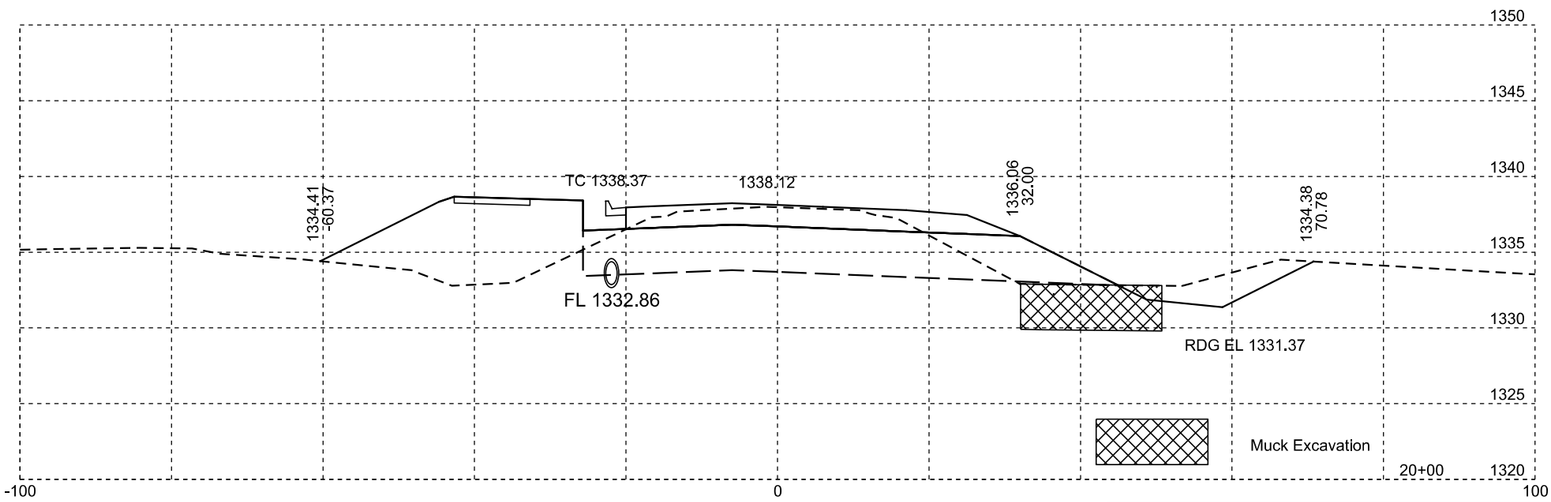

Plotting Date: 11/18/2015

STATE OF SOUTH DAKOTA	PROJECT	SHEET NO.	TOTAL SHEETS
	P 0017(08)42	X43	X55

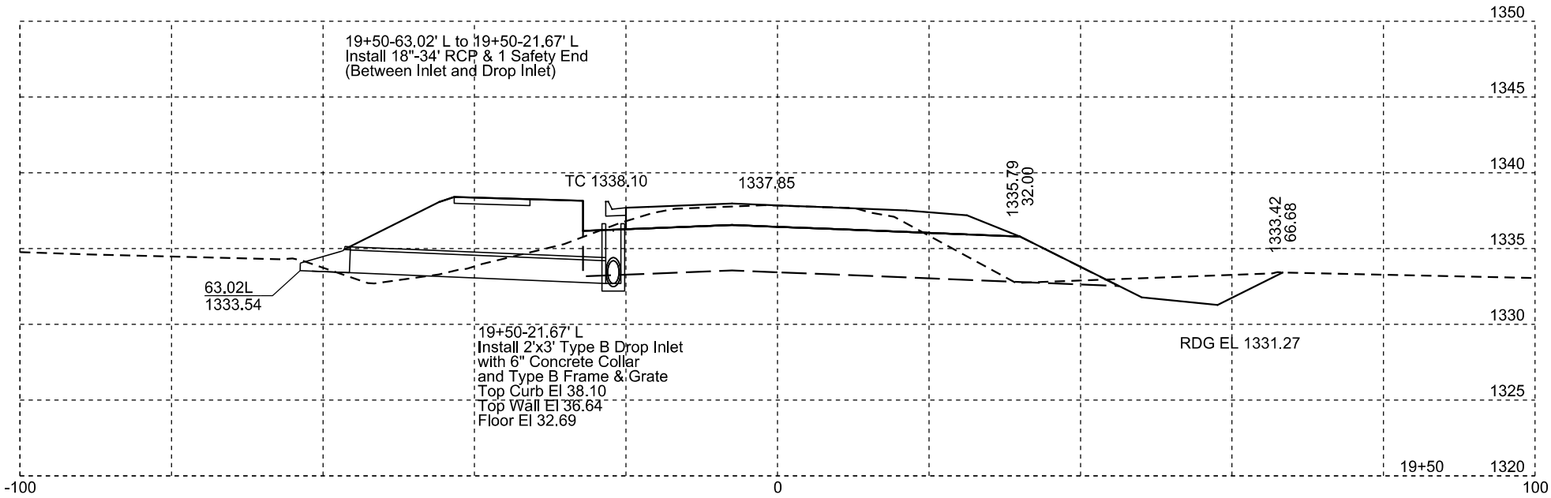

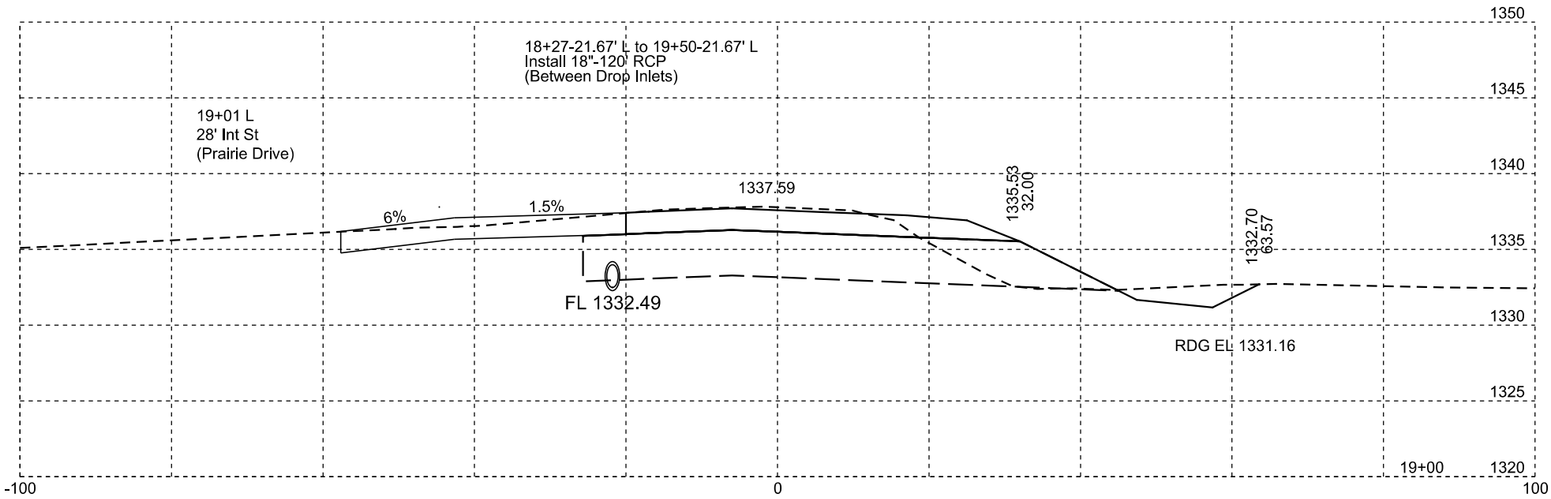

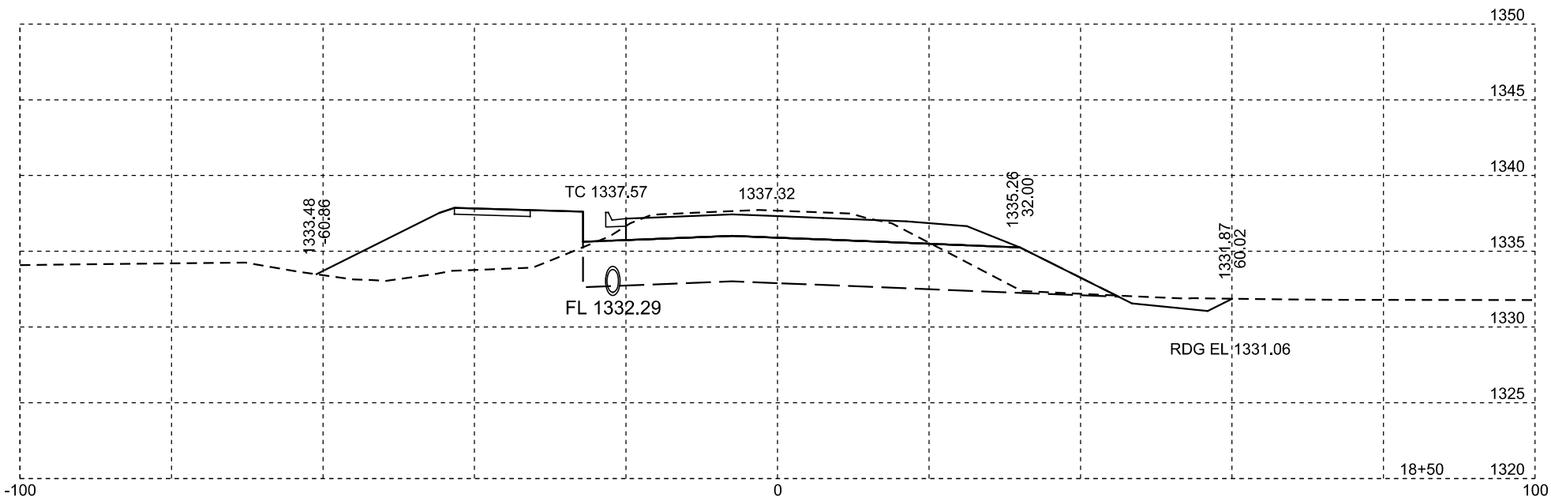

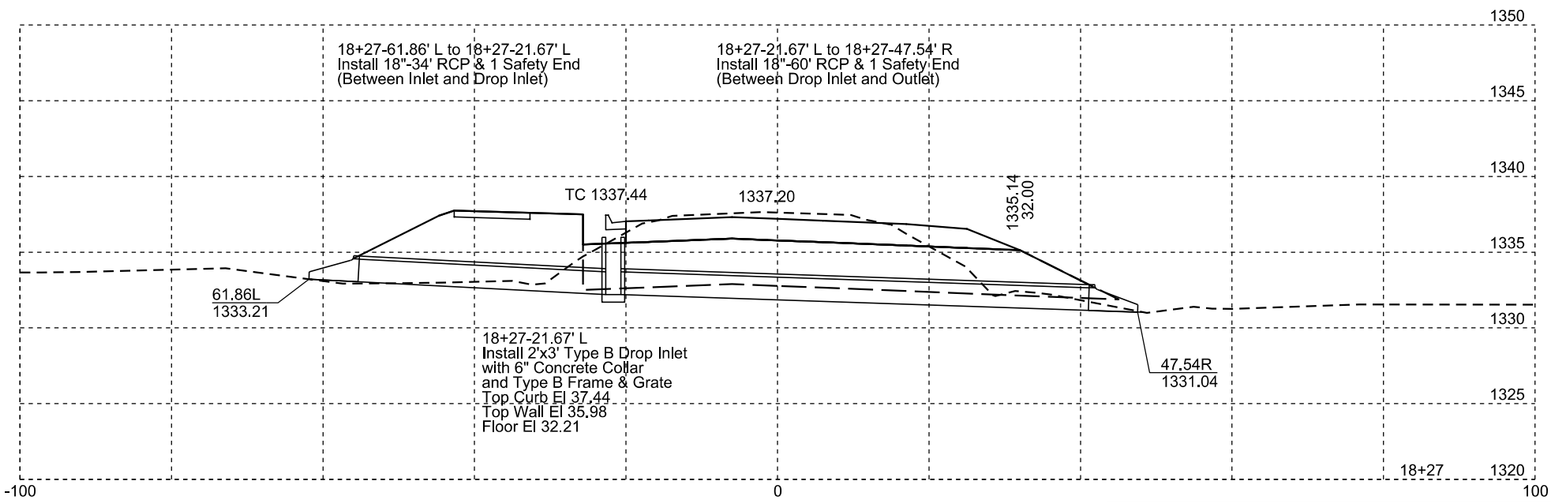

Plotting Date: 11/18/2015

STATE OF SOUTH DAKOTA	PROJECT	SHEET NO.	TOTAL SHEETS
	P 0017(08)42	X44	X55

STATE OF SOUTH DAKOTA	PROJECT	SHEET NO.	TOTAL SHEETS
	P 0017(08)42	X45	X55

Plotting Date: 11/18/2015

STATE OF SOUTH DAKOTA	PROJECT	SHEET NO.	TOTAL SHEETS
	P 0017(08)42	X46	X55

Plotting Date: 11/18/2015

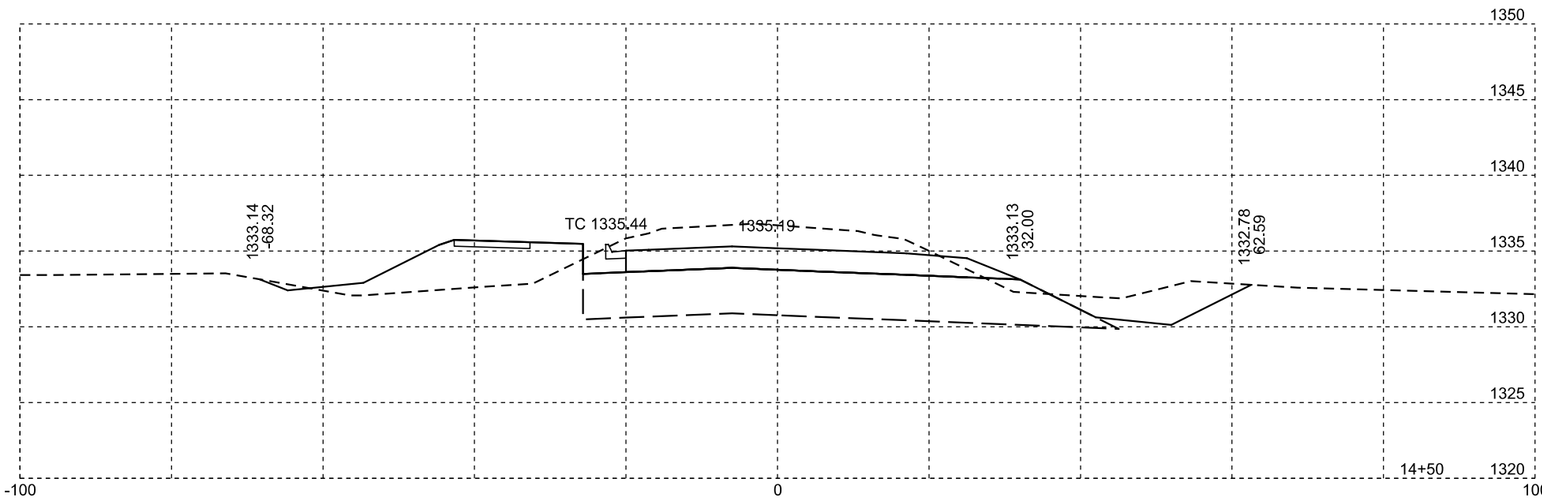

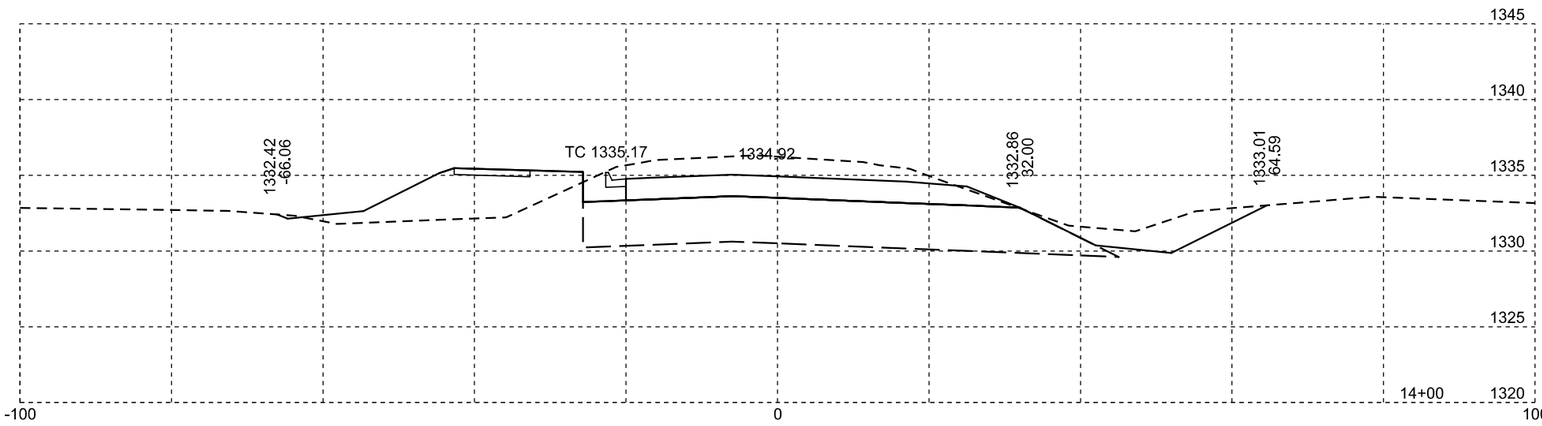

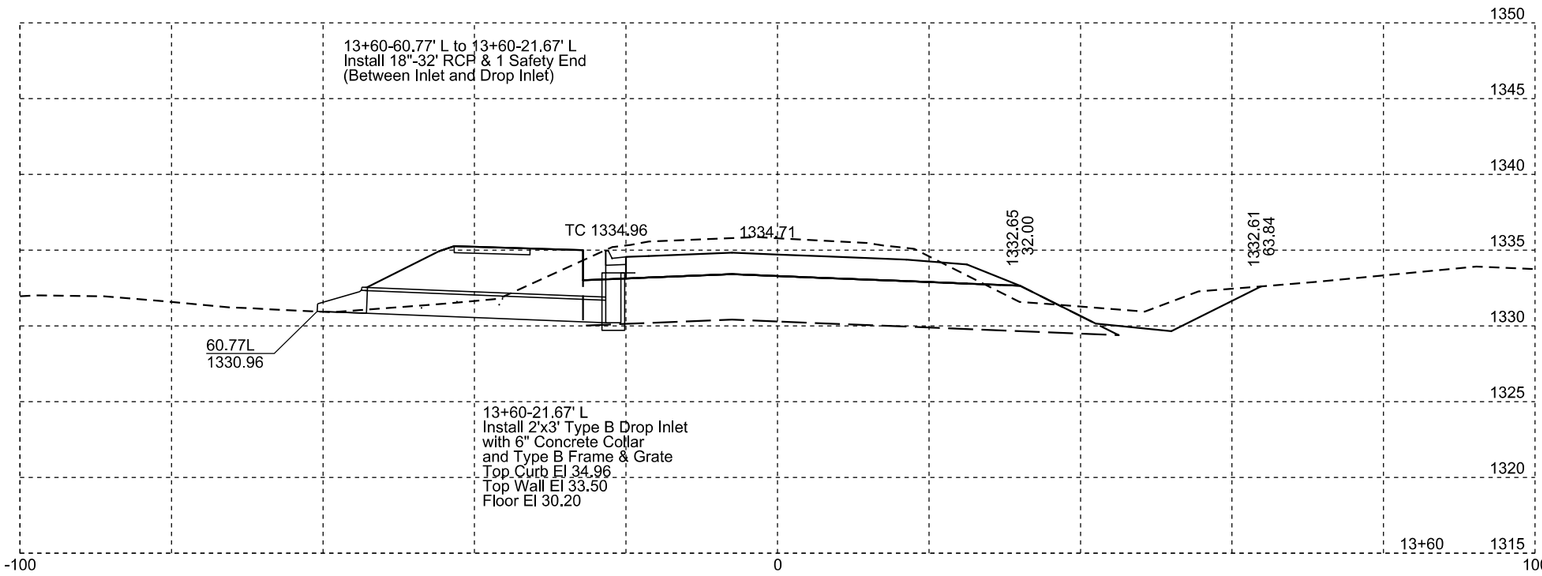

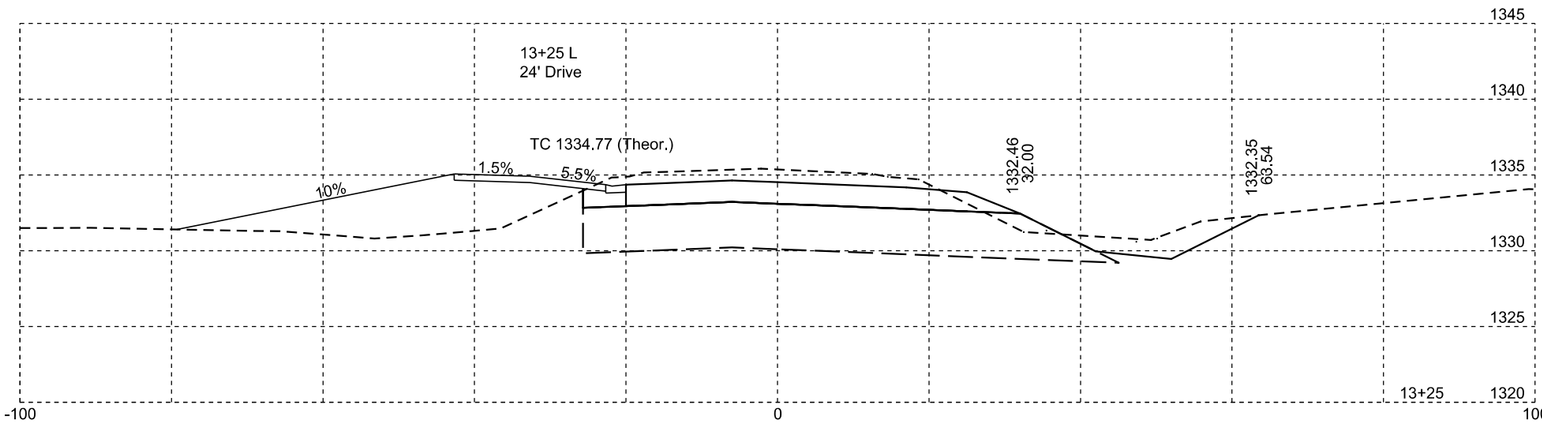

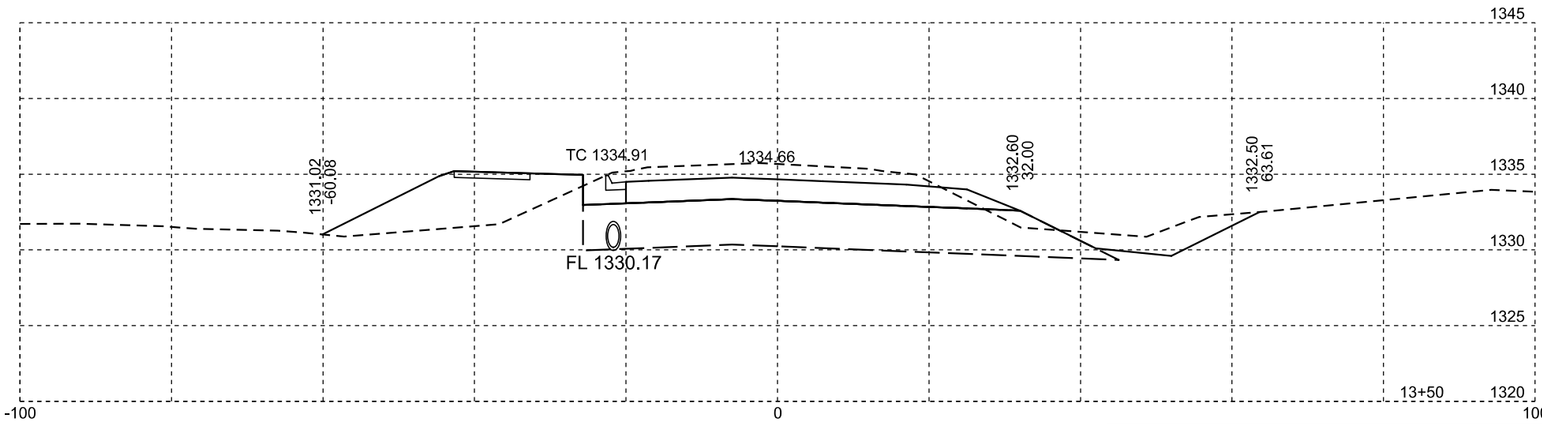

Plotting Date: 11/18/2015

STATE OF SOUTH DAKOTA	PROJECT	SHEET NO.	TOTAL SHEETS
	P 0017(08)42	X47	X55

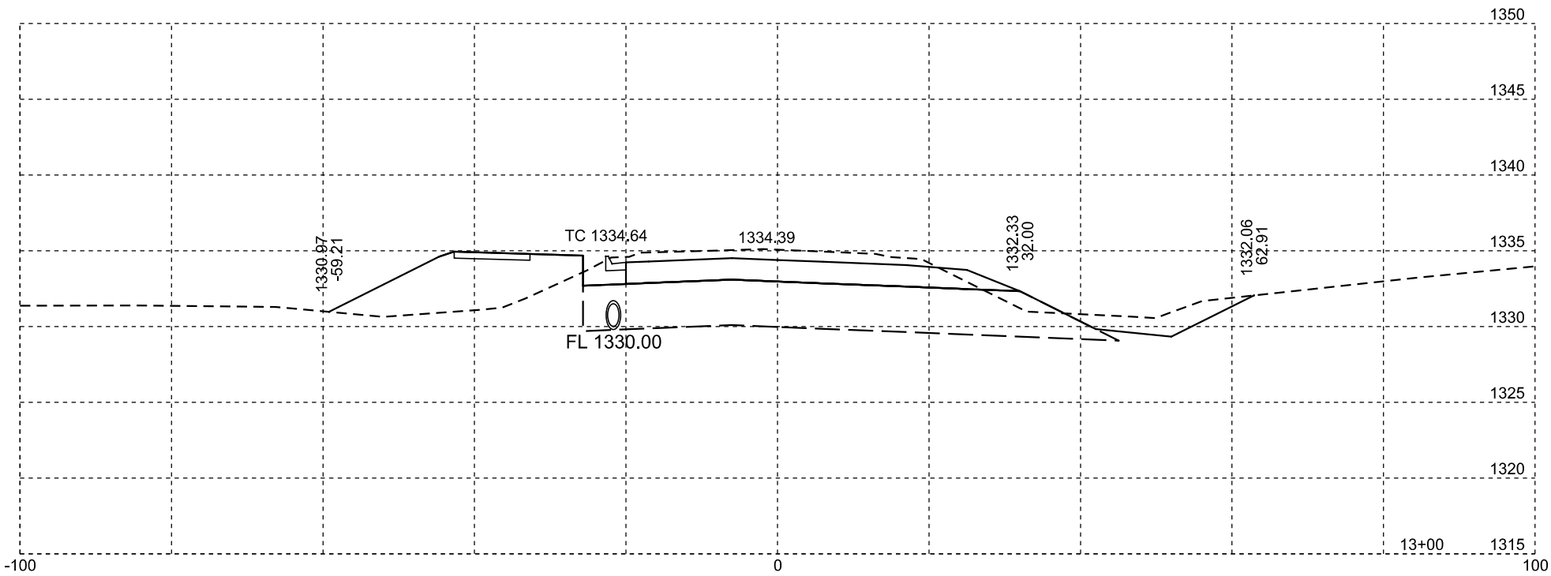

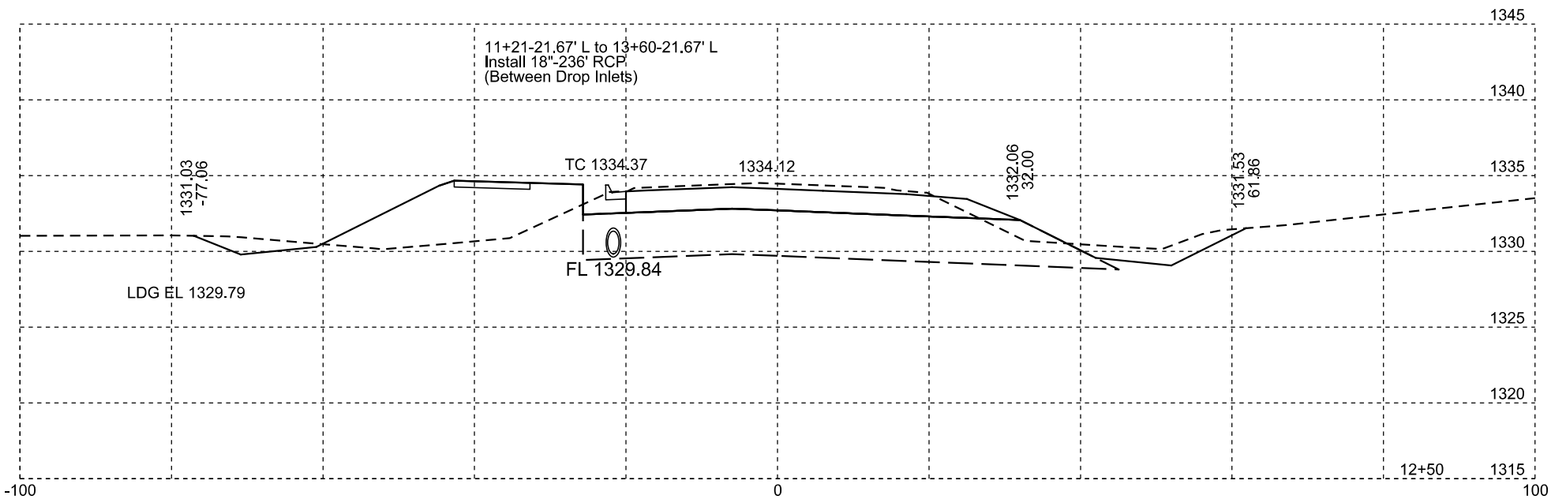

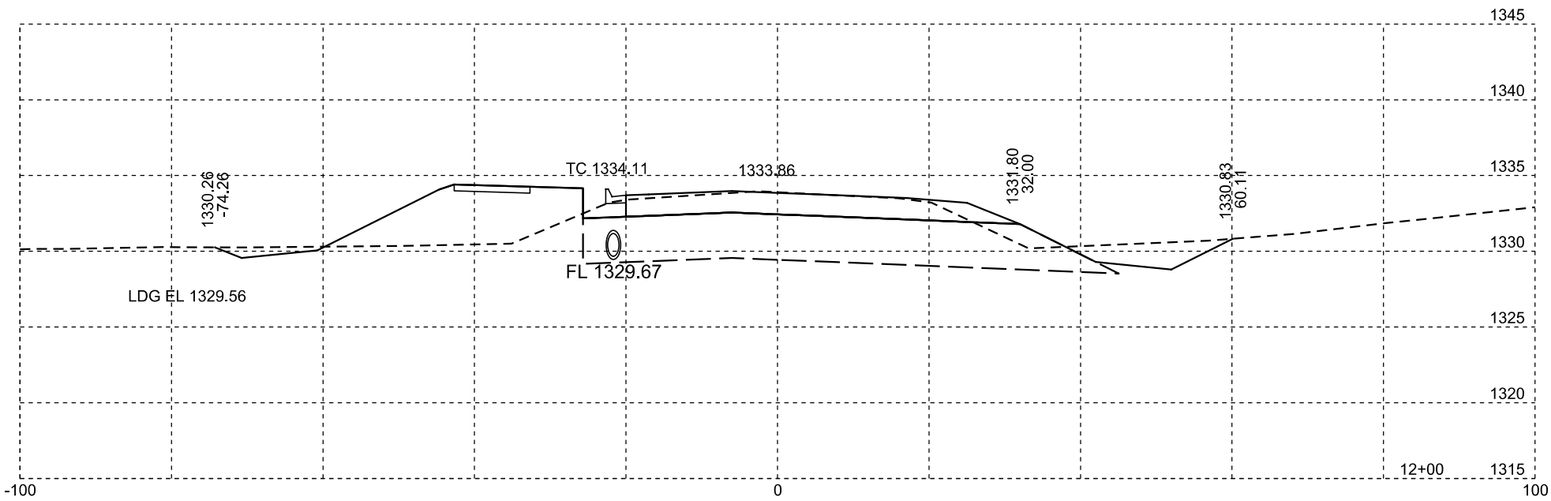

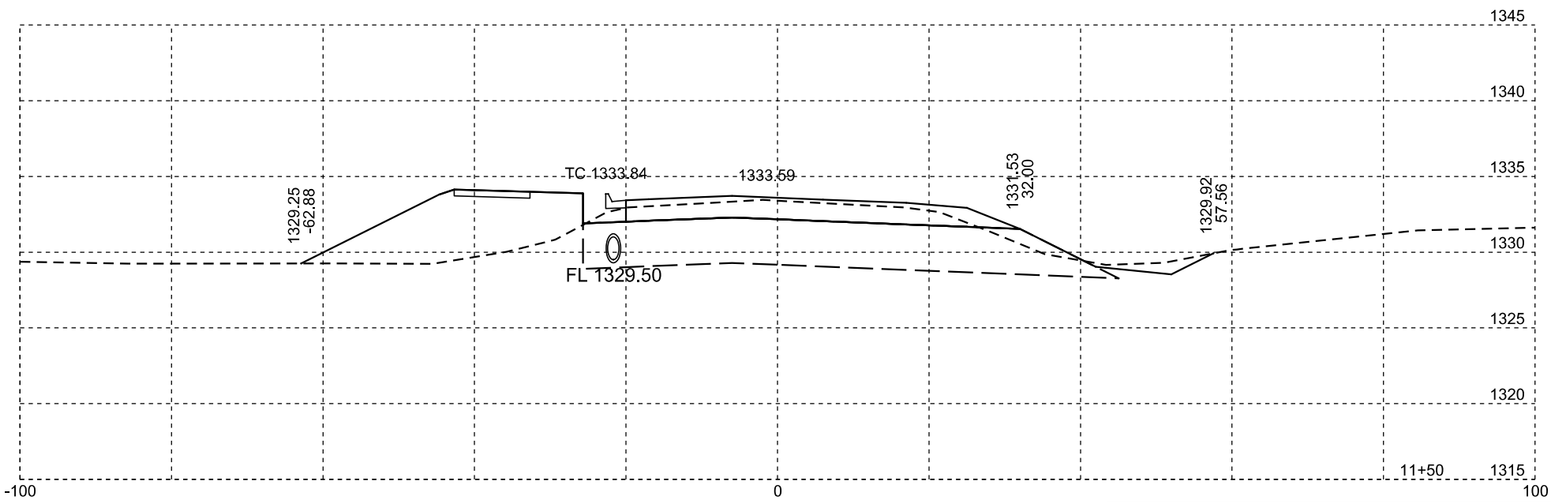

Plotting Date: 11/18/2015

STATE OF SOUTH DAKOTA	PROJECT	SHEET NO.	TOTAL SHEETS
	P 0017(08)42	X48	X55

STATE OF SOUTH DAKOTA	PROJECT	SHEET NO.	TOTAL SHEETS
	P 0017(08)42	X49	X55

Plotting Date: 11/18/2015

279th Street

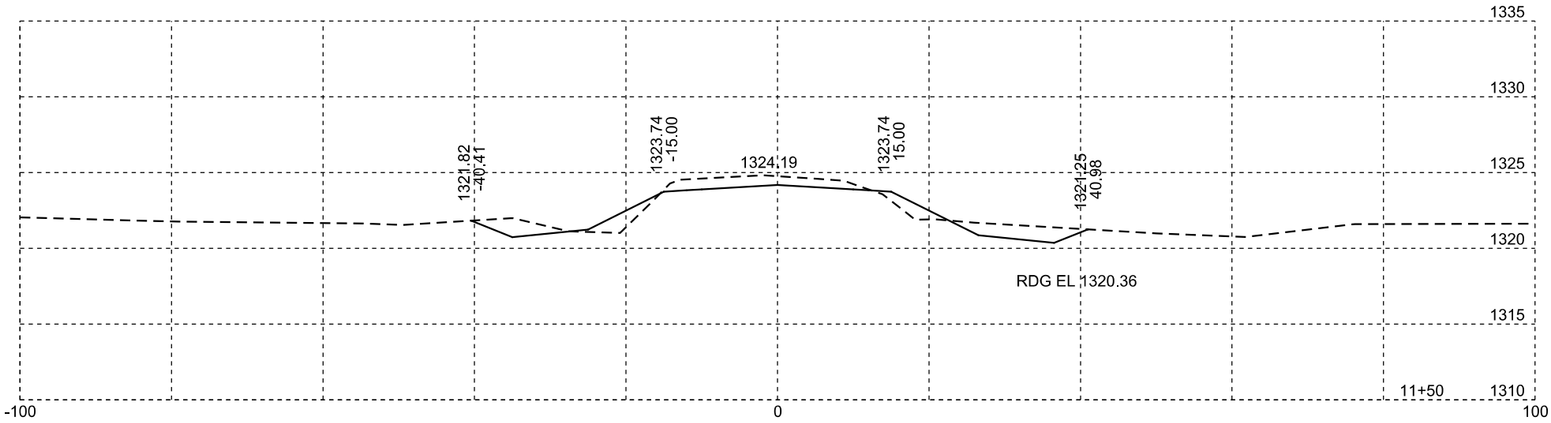

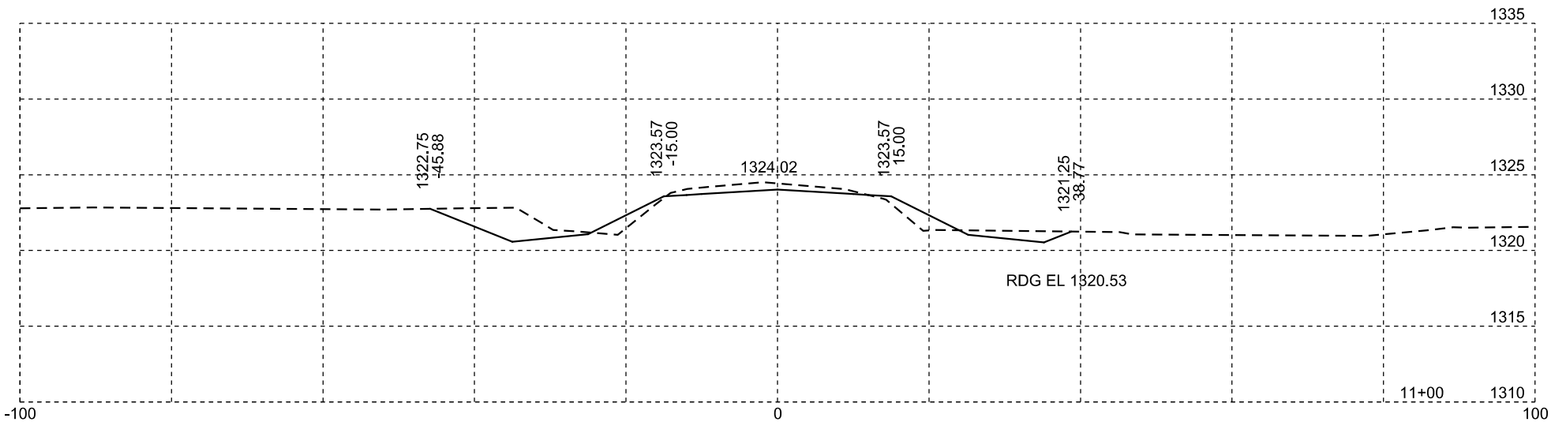

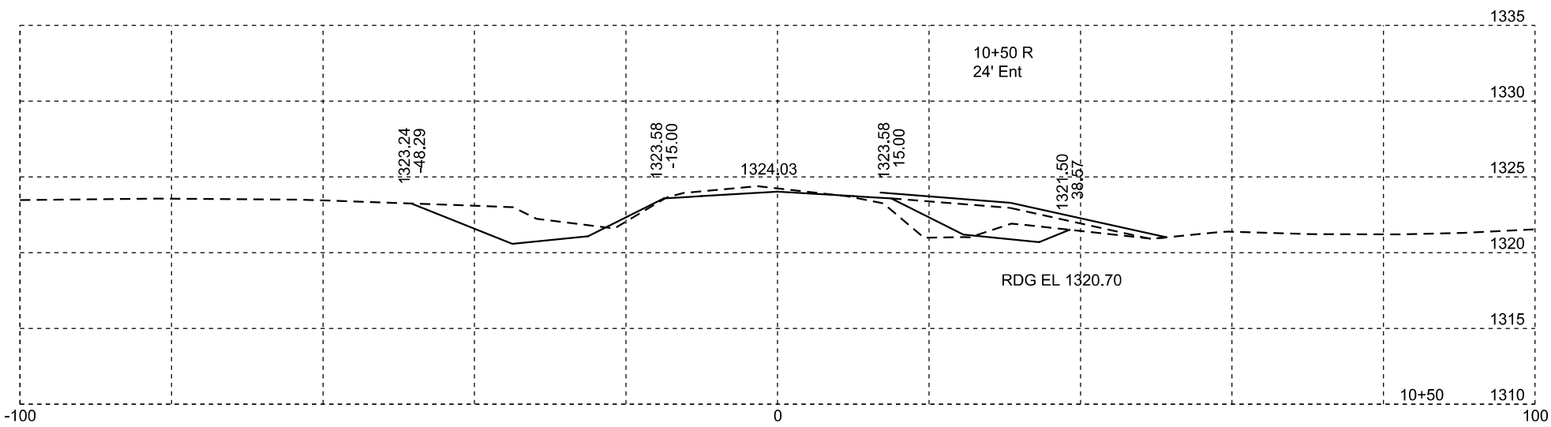

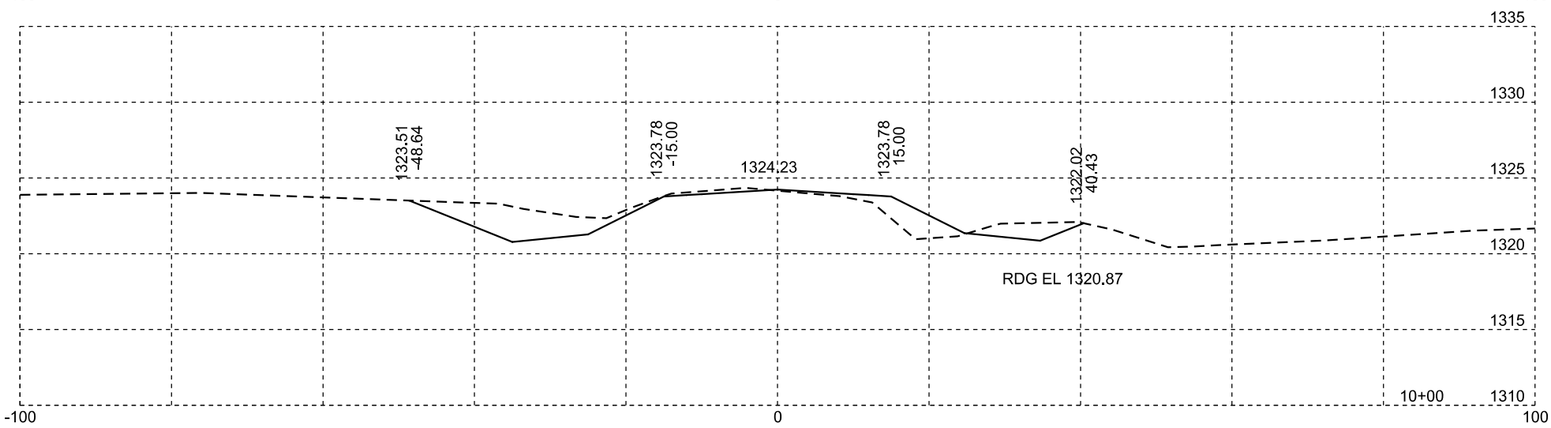

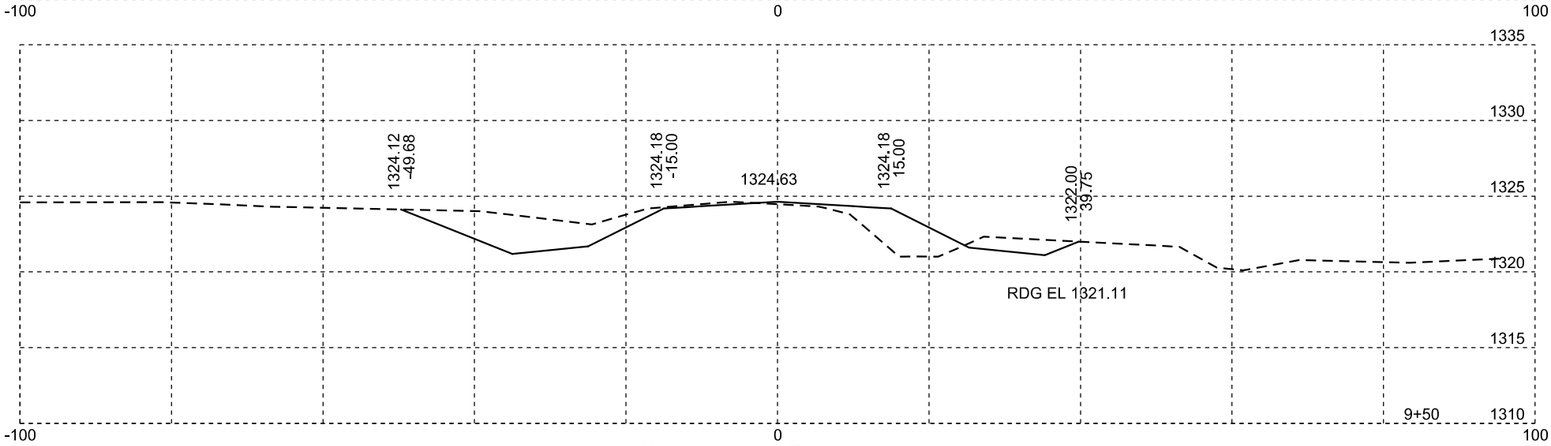

279th Street

Plotting Date: 11/18/2015

STATE OF SOUTH DAKOTA	PROJECT	SHEET NO.	TOTAL SHEETS
	P 0017(08)42	X50	X55

279th Street

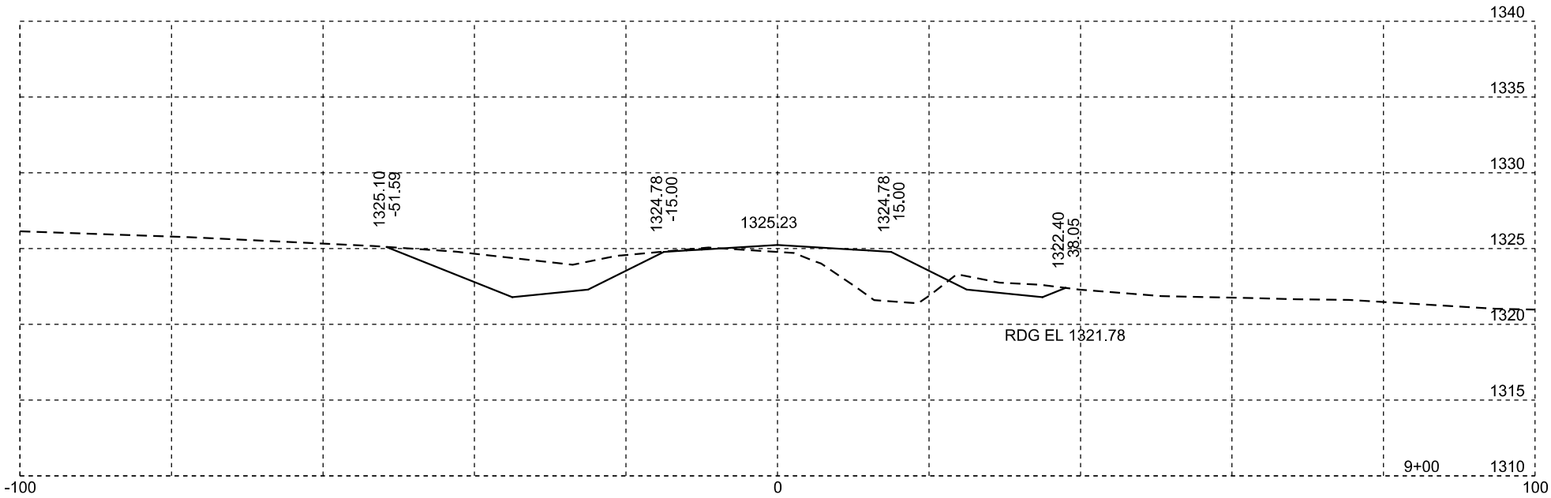

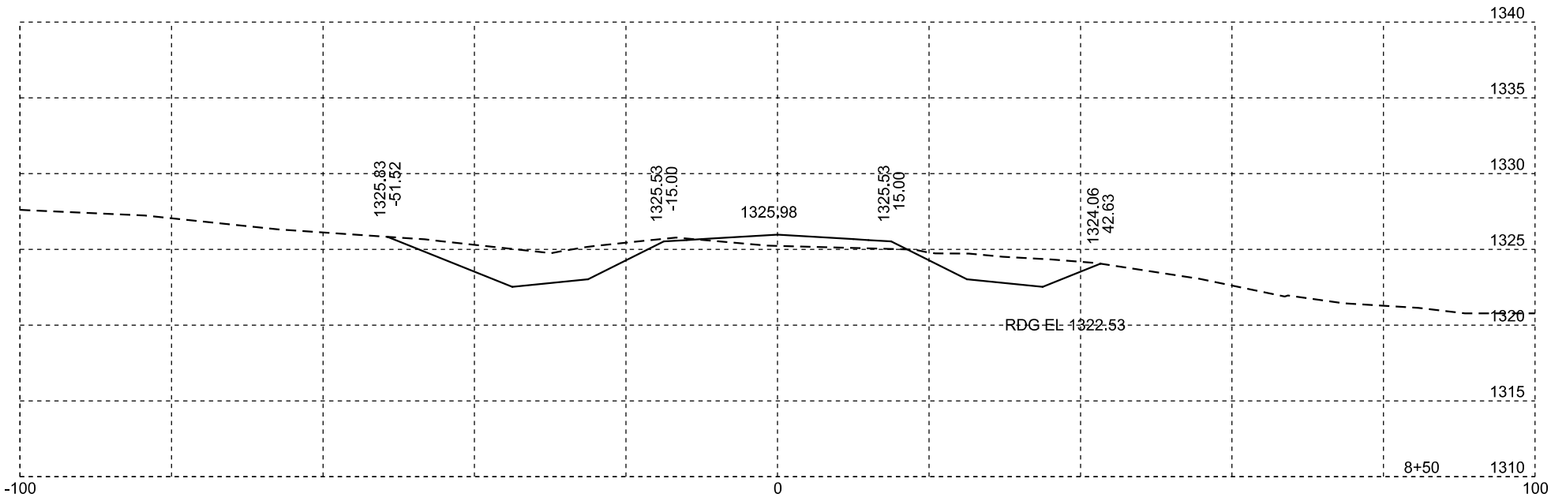

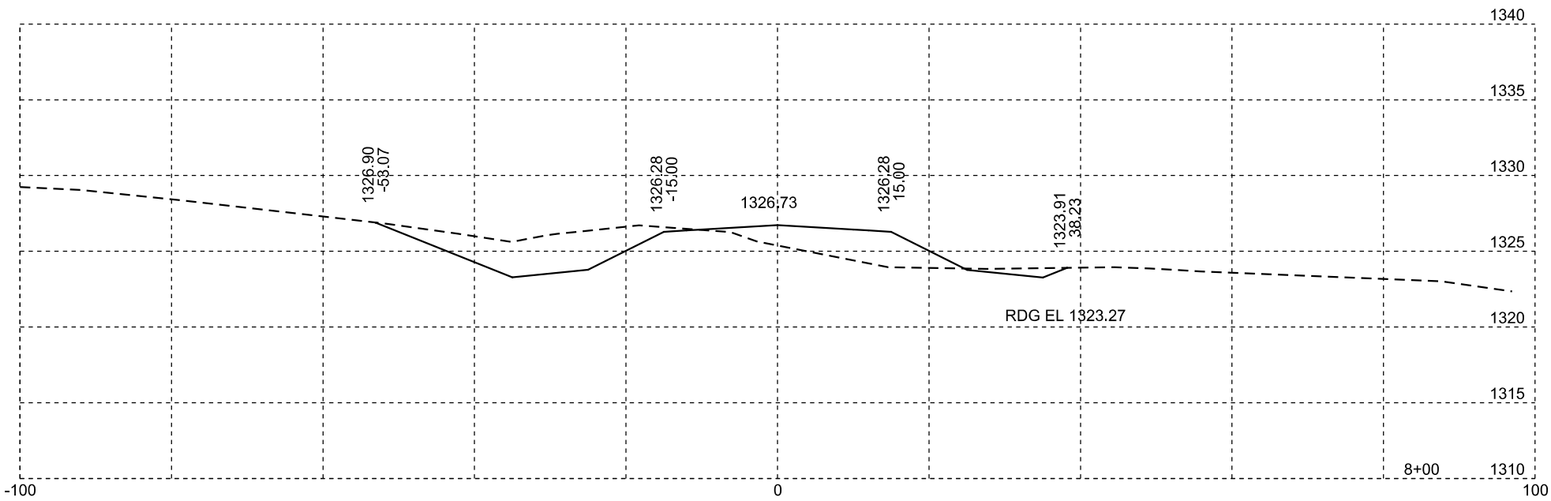

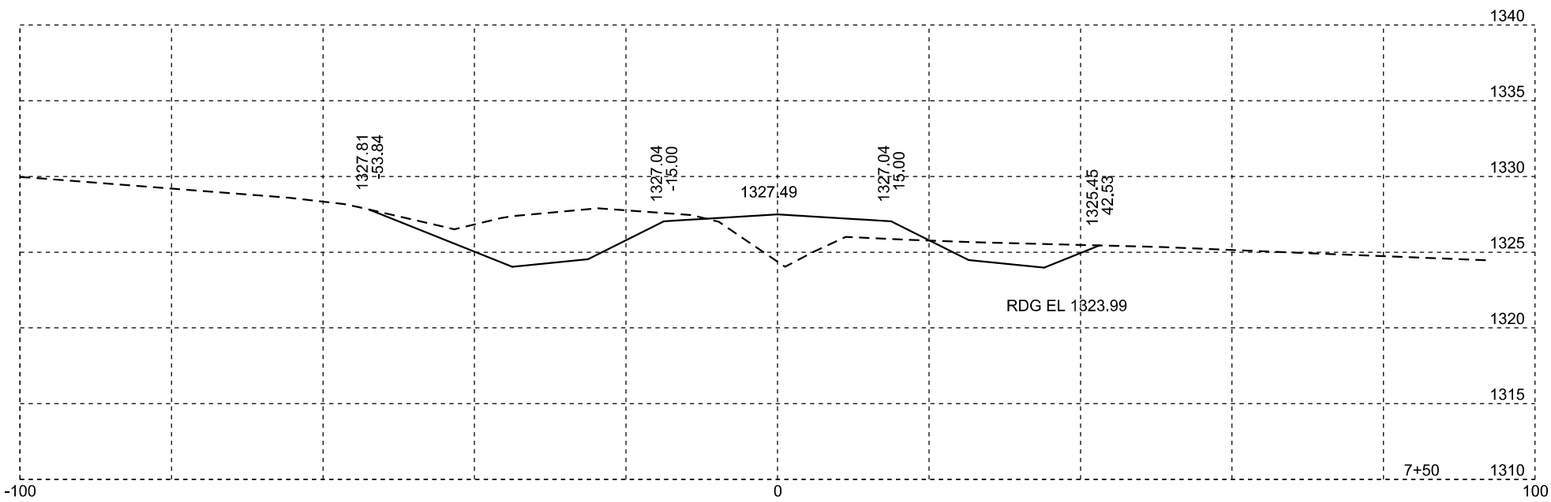

279th Street

Plotting Date: 11/18/2015

STATE OF SOUTH DAKOTA	PROJECT	SHEET NO.	TOTAL SHEETS
	P 0017(08)42	X51	X55

279th Street

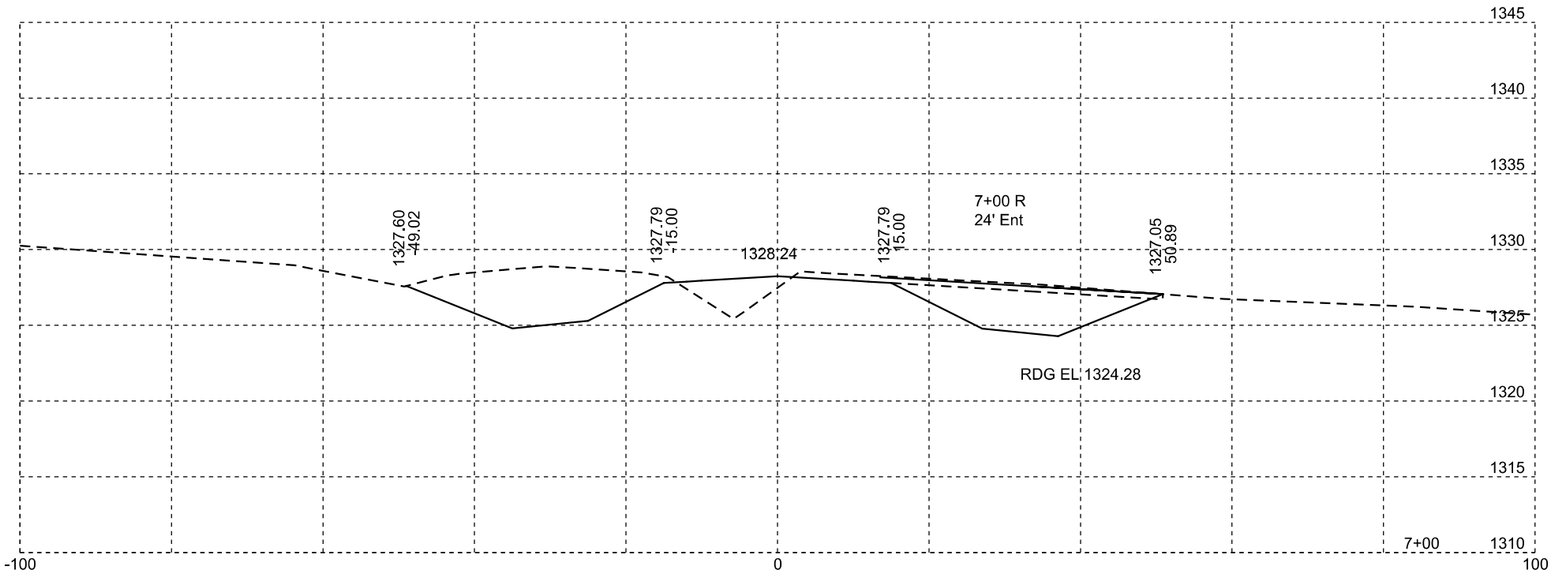

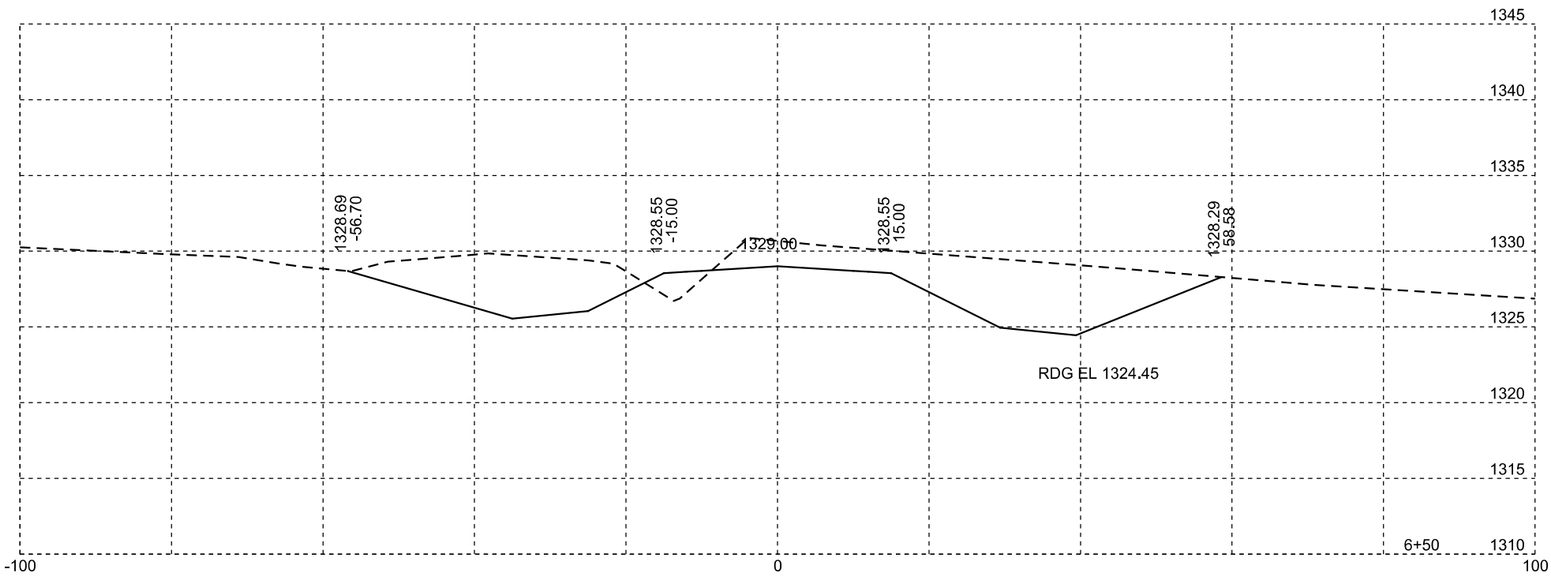

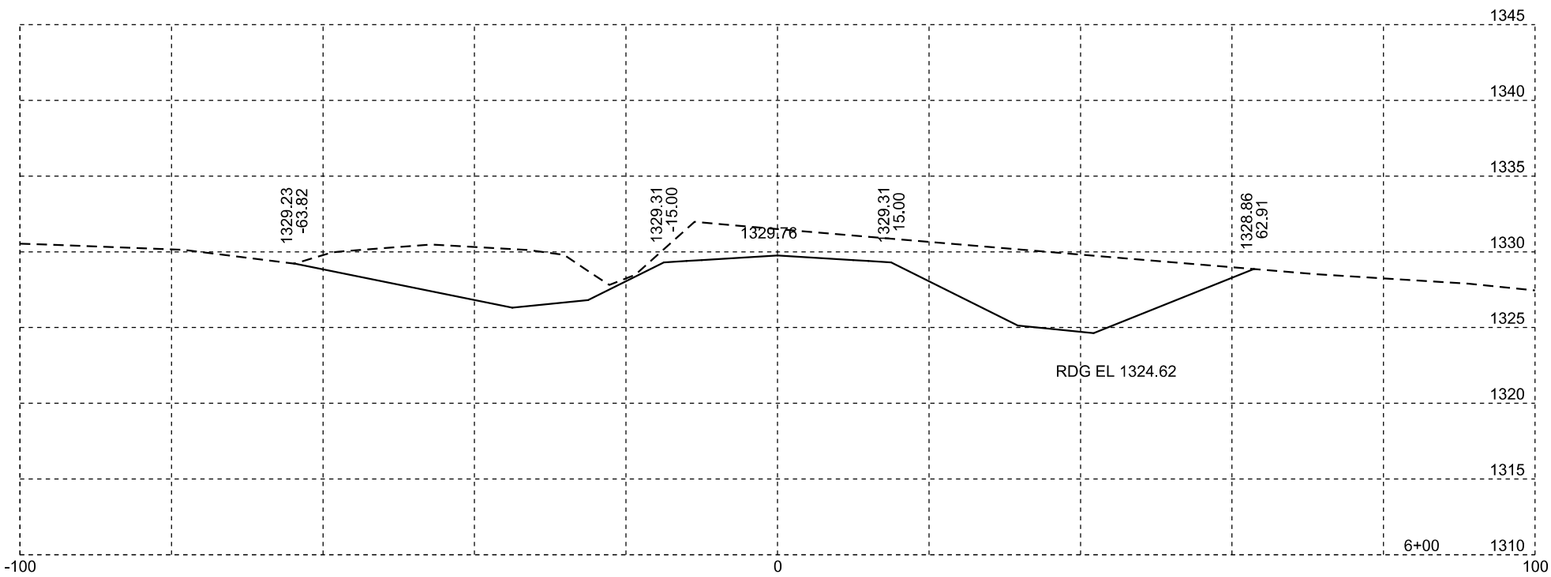

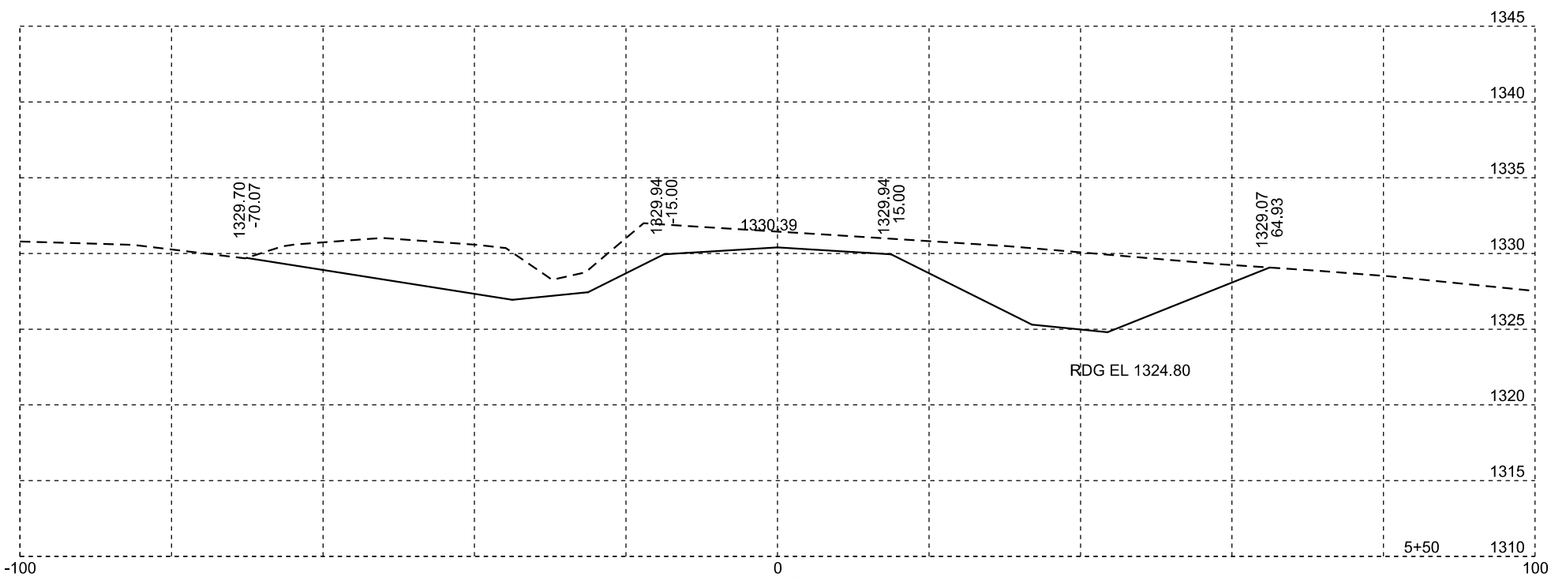

279th Street

Plotting Date: 11/18/2015

STATE OF SOUTH DAKOTA	PROJECT	SHEET NO.	TOTAL SHEETS
	P 0017(08)42	X52	X55

279th Street

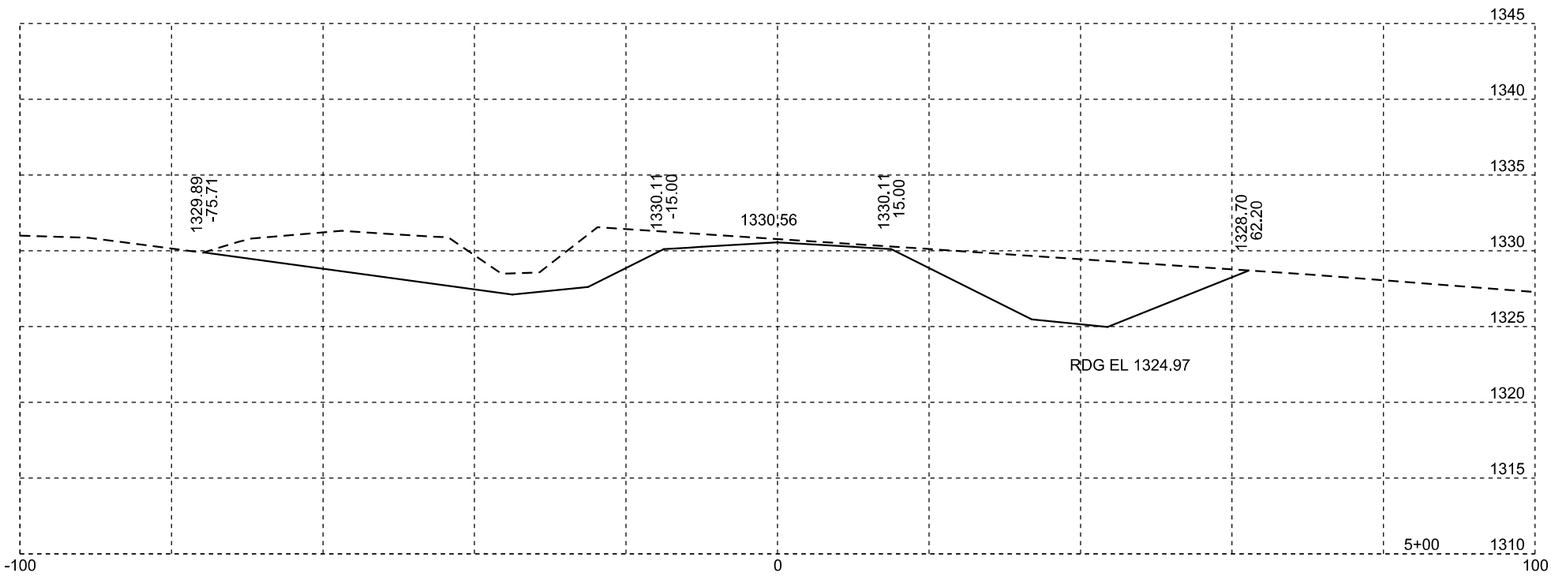

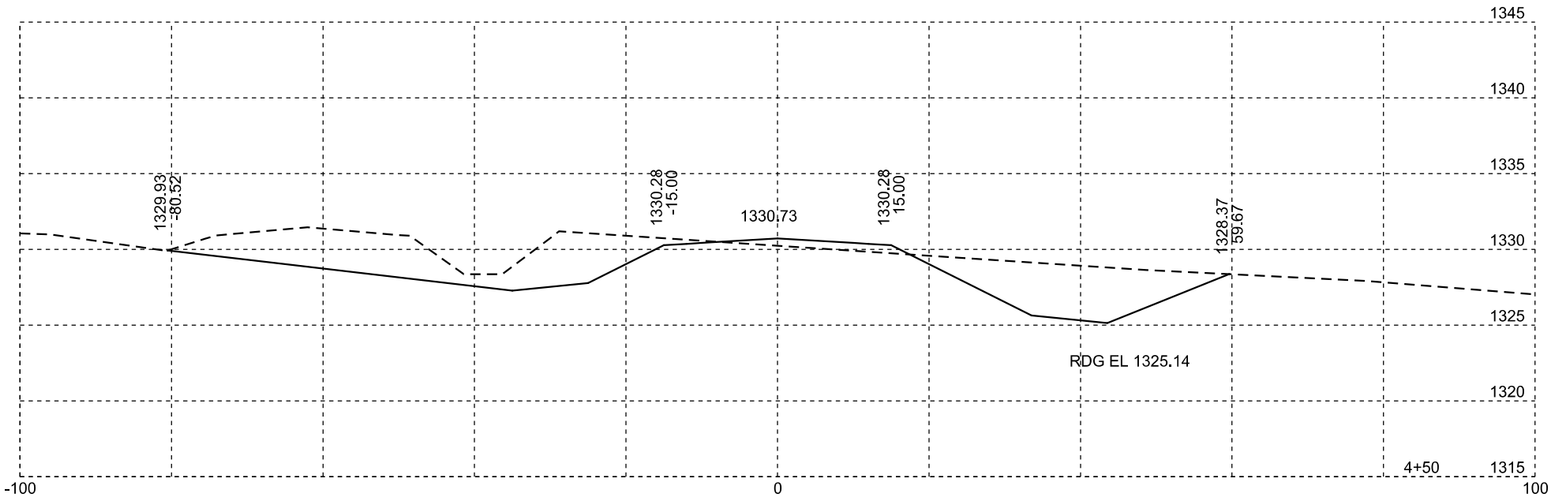

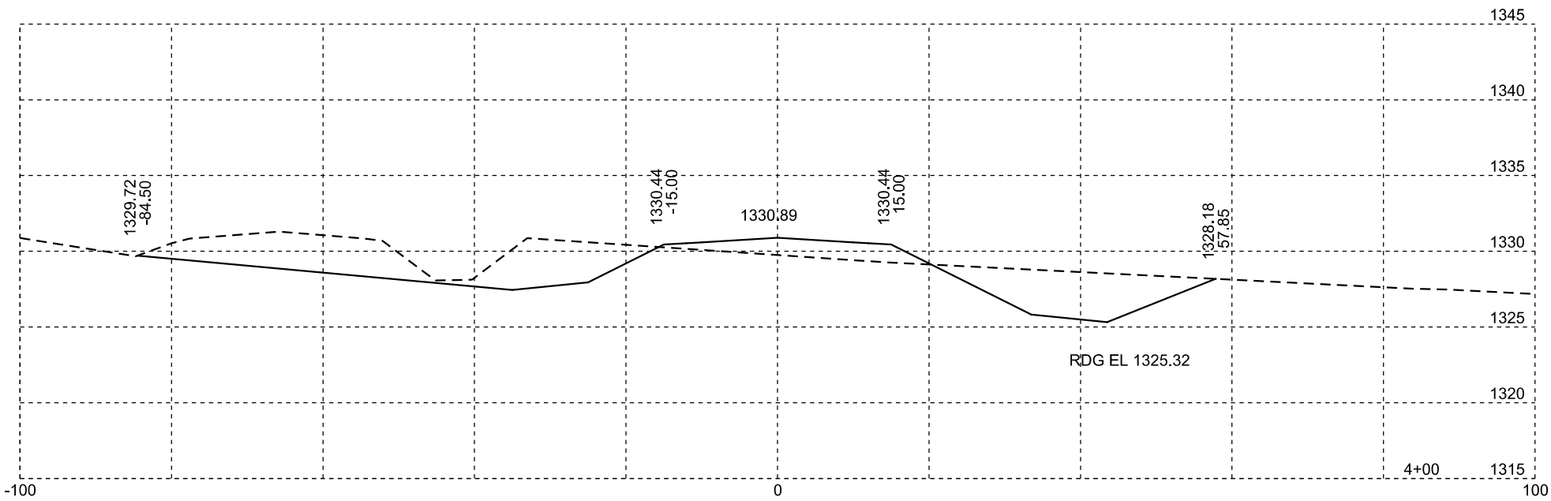

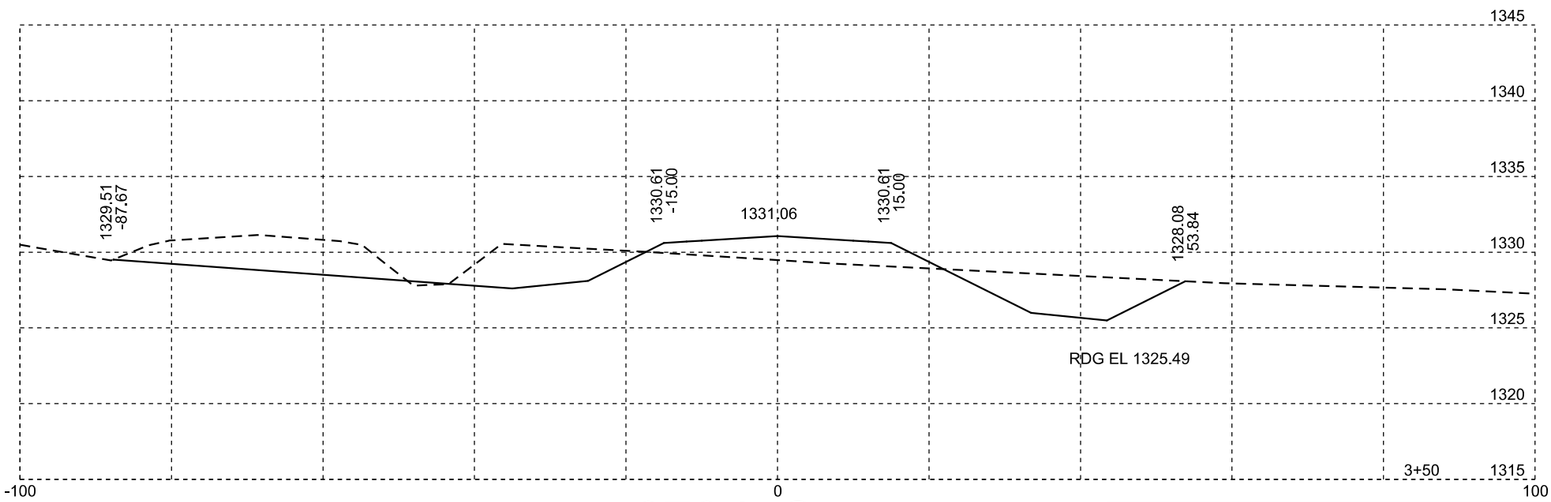

279th Street

Plotting Date: 11/18/2015

STATE OF SOUTH DAKOTA	PROJECT	SHEET NO.	TOTAL SHEETS
	P 0017(08)42	X53	X55

279th Street

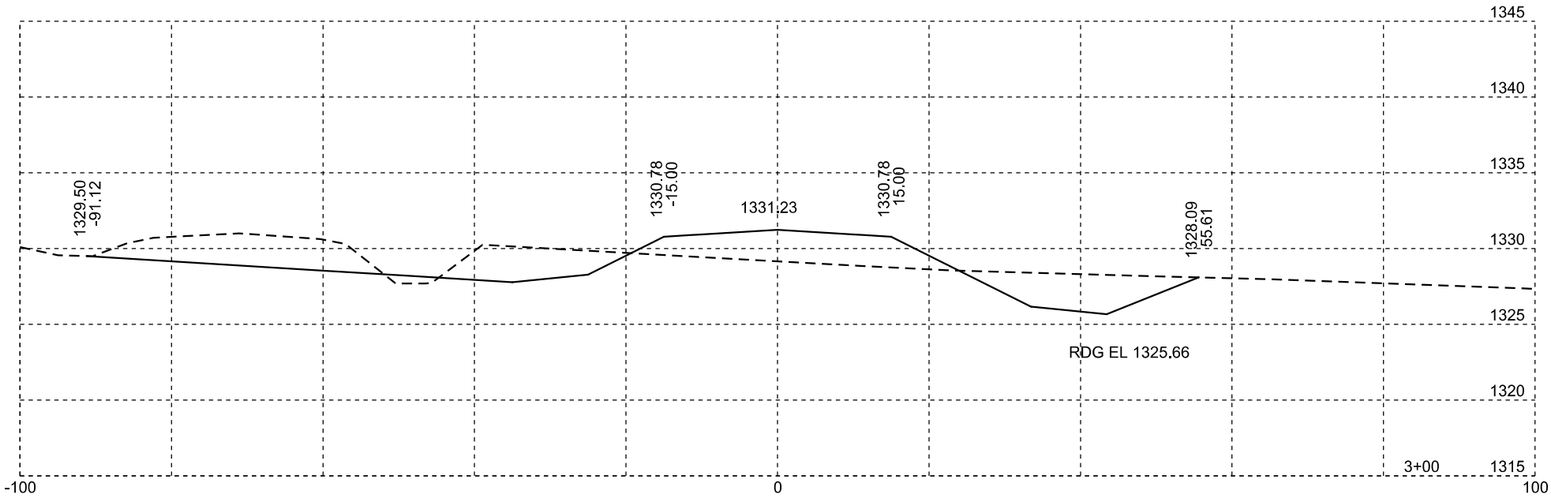

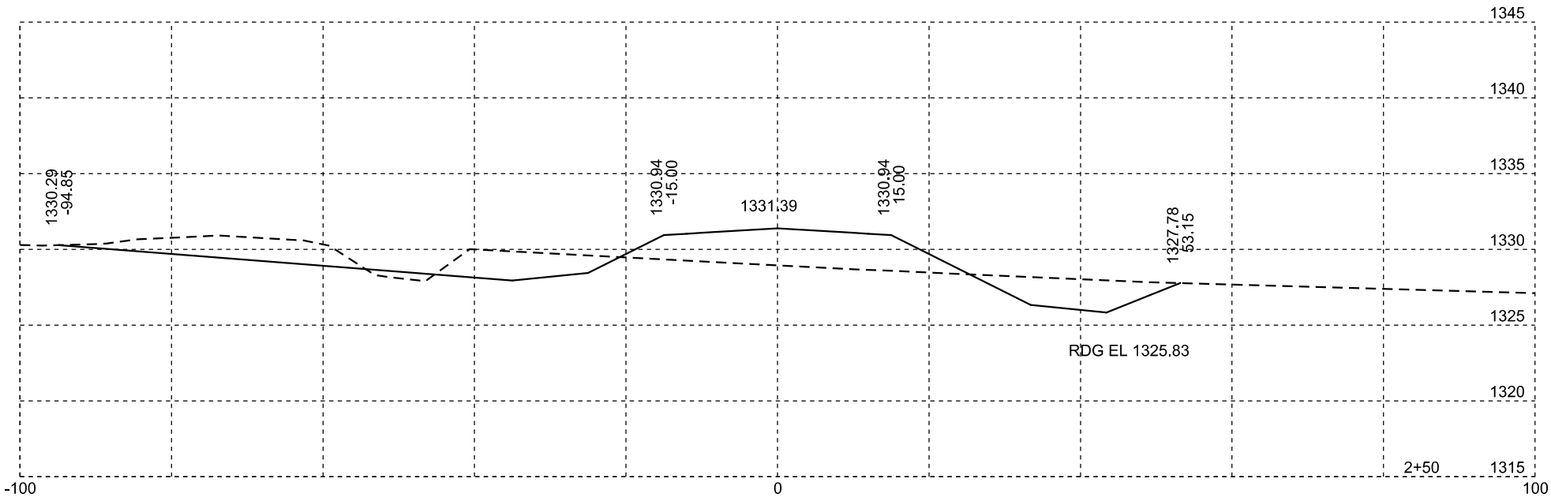

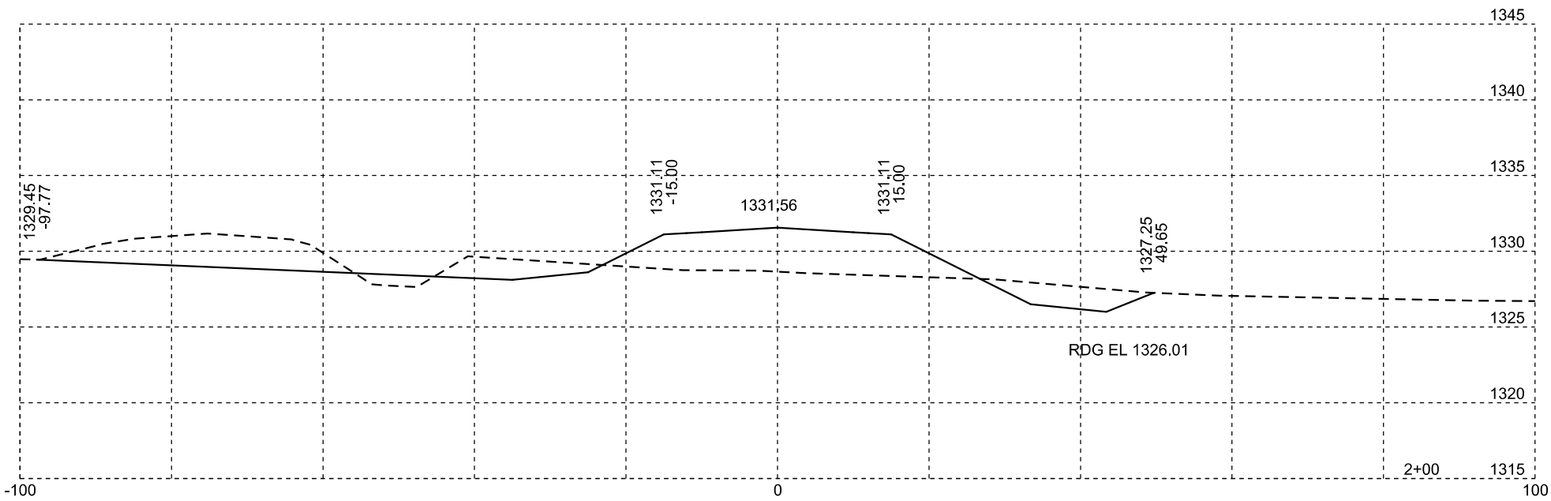

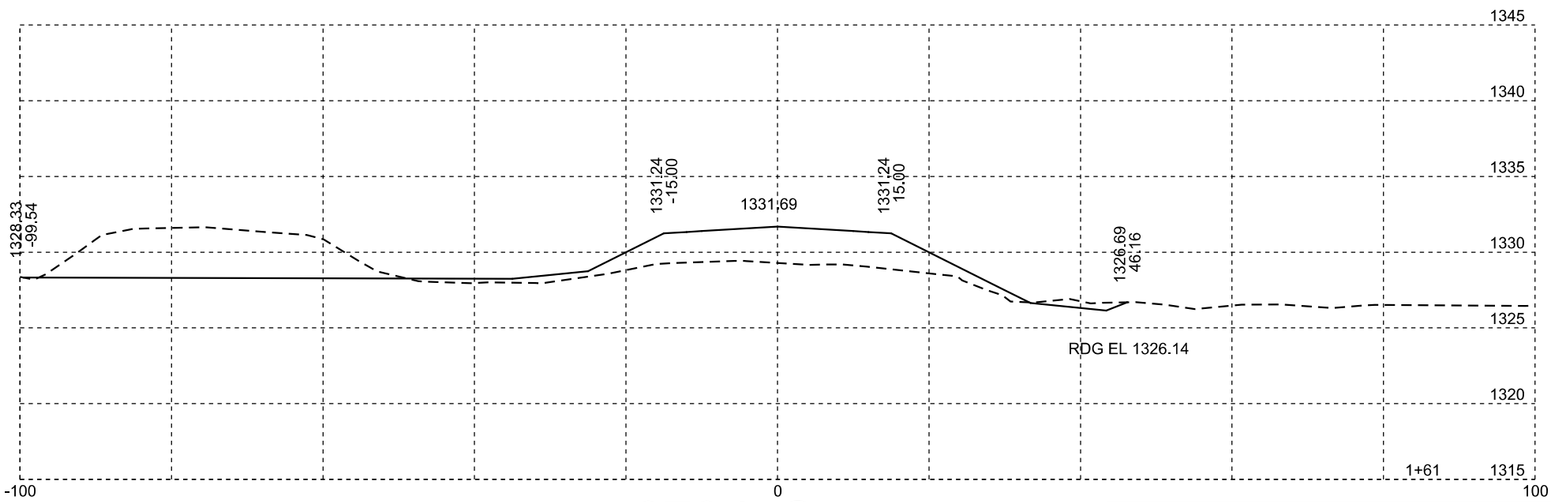

279th Street

Plotting Date: 11/18/2015

STATE OF SOUTH DAKOTA	PROJECT	SHEET NO.	TOTAL SHEETS
	P 0017(08)42	X54	X55

279th Street

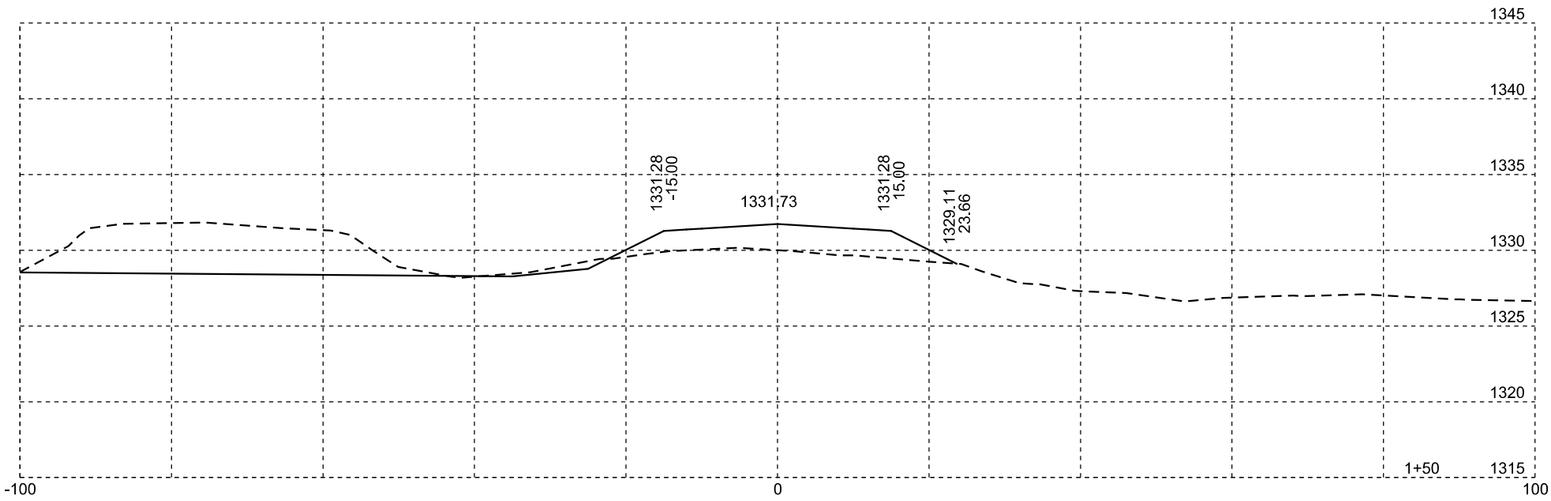

279th Street

Plotting Date: 11/18/2015

STATE OF SOUTH DAKOTA	PROJECT	SHEET NO.	TOTAL SHEETS
	P 0017(08)42	X55	X55