STATE OF SOUTH DAKOTA	PROJECT	SHEET	TOTAL SHEETS
	NH 0012(152)187, NH 0212(149)208, & P 1806(06)365	E1	E92

SECTION E: STRUCTURE PLANS

Revised by BWS on 2/11/2016

INDEX OF SHEETS

E1	General Layout with Index
E2	Estimate of Structural Quantities
E3-E42	Str. 65-000-020
E43-E65	Str. 16-737-253
E66-E92	Str. 54-056-158

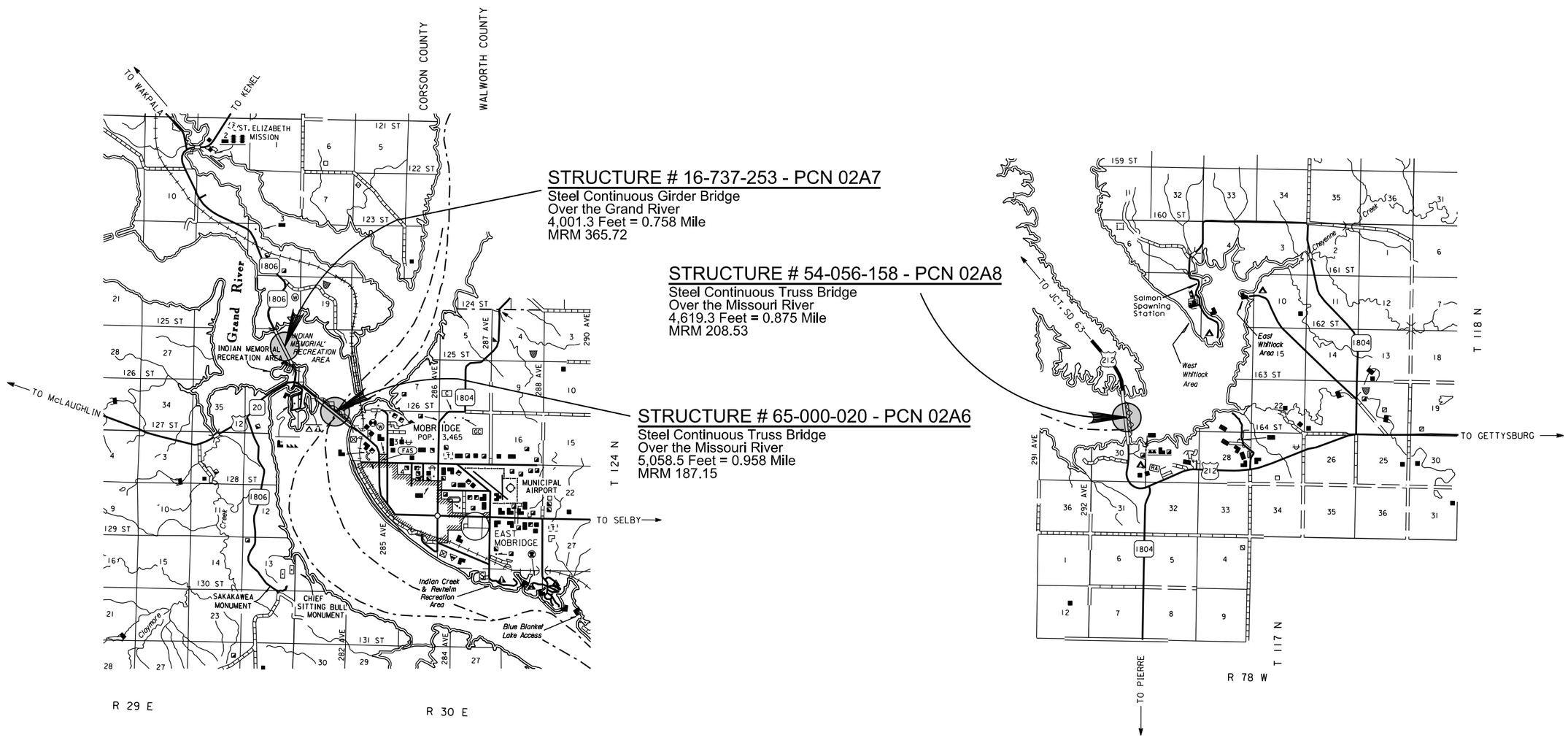

Section E - Estimate of Quantities

PCN 02A6 - Str. No. 65-000-020

BID ITEM NUMBER	ITEM	QUANTITY	UNIT
460E0174	Concrete Patching Material, Miscellaneous	24.6	CuFt
460E0190	Concrete Crack Injection/Sealing	72	In
460E0240	Concrete Crack Healer/Sealer	207	SqFt
460E0300	Breakout Structural Concrete	0.9	CuYd
480E5000	Galvanic Anode	25	Each

PCN 02A7 - Str. No. 16-737-253

BID ITEM NUMBER	ITEM	QUANTITY	UNIT
460E0174	Concrete Patching Material, Miscellaneous	36.6	CuFt
460E0300	Breakout Structural Concrete	1.4	CuYd
480E5000	Galvanic Anode	27	Each

PCN 02A8 - Str. No. 54-056-158

BID ITEM NUMBER	ITEM	QUANTITY	UNIT
460E0174	Concrete Patching Material, Miscellaneous	34.3	CuFt
460E0190	Concrete Crack Injection/Sealing	168	In
460E0300	Breakout Structural Concrete	1.3	CuYd
480E5000	Galvanic Anode	27	Each

STATE OF	PROJECT	SHEET NO.	TOTAL SHEETS
S.D.	NH 0012(152)187	E3	E92

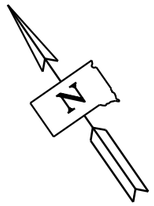

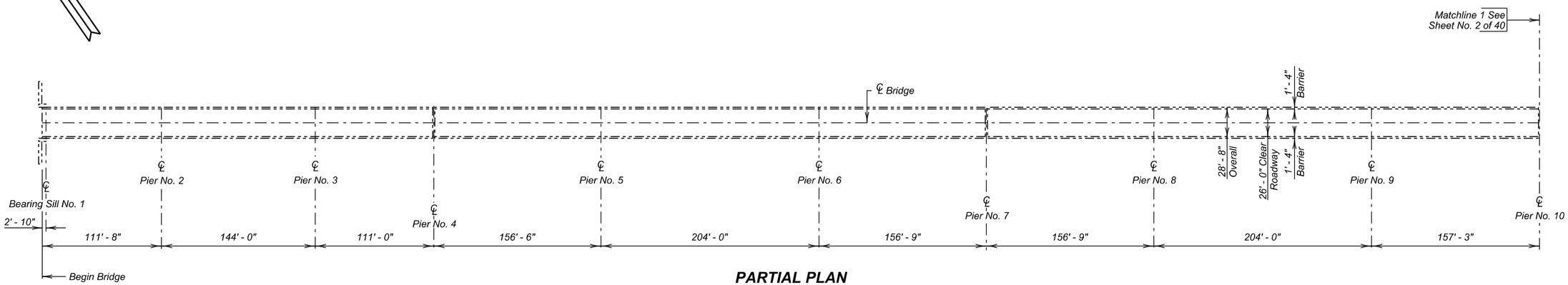

PARTIAL PLAN

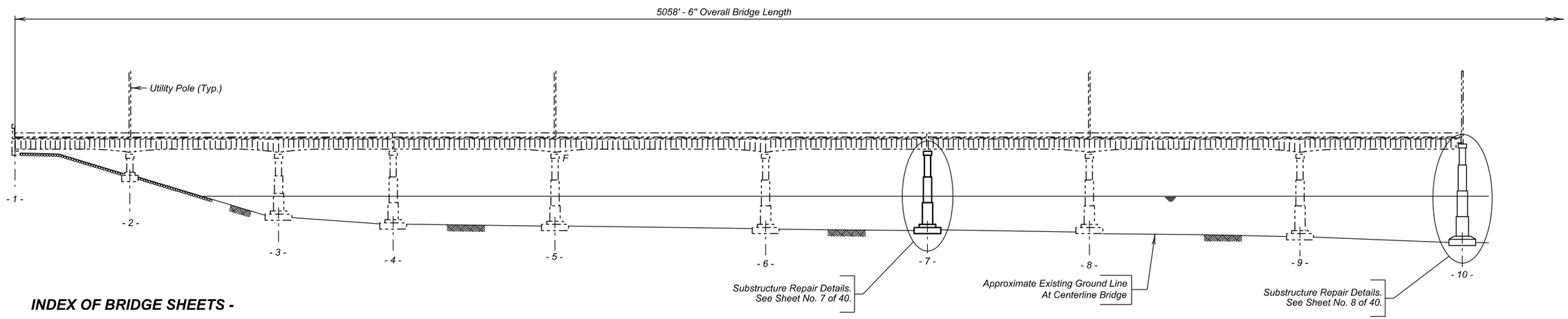

PARTIAL ELEVATION

INDEX OF BRIDGE SHEETS -

Sheet No. 1 - Layout for Upgrading
Sheet No. 2 - Layout for Upgrading (Continued)
Sheet No. 3 - Layout for Upgrading (Continued)
Sheet No. 4 - Layout for Upgrading (Continued)
Sheet No. 5 - Estimate of Structure Quantities and Notes
Sheet No. 6 - Notes (Continued)
Sheet No. 7 - Substructure Repair Details - Pier No. 7
Sheet No. 8 - Substructure Repair Details - Pier No. 10
Sheet No. 9 - Substructure Repair Details - Pier Nos. 13
Sheet No. 10 - Substructure Repair Details - Pier No. 14
Sheet No. 11 - Substructure Repair Details - Pier No. 15
Sheet No. 12 - Substructure Repair Details - Pier Nos. 16 thru 21
Sheet No. 13 thru 40 - Original Construction Plans

LAYOUT FOR UPGRADING

FOR

5058' - 6" BRIDGE OVER OAHE RESERVOIR

26' - 0" ROADWAY — 0° SKEW
OVER LAKE OAHE — SEC. 13-T124N-R80W
STR. NO. 65-000-020 — NH 0012(152)187
PCN 02A6

WALWORTH COUNTY

S. D. DEPT. OF TRANSPORTATION

MARCH 2016

PLANS BY :
OFFICE OF BRIDGE DESIGN, SOUTH DAKOTA DEPARTMENT OF TRANSPORTATION

DESIGNED BY	CK. DES. BY	DRAFTED BY	
BWS	MM	KR	Kevin N. Boeden
WLTH02A6	02A6RA01		BRIDGE ENGINEER

STATE OF	PROJECT	SHEET NO.	TOTAL SHEETS
S.D.	NH 0012(152)187	E4	E92

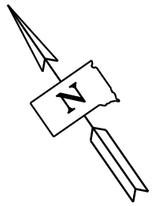

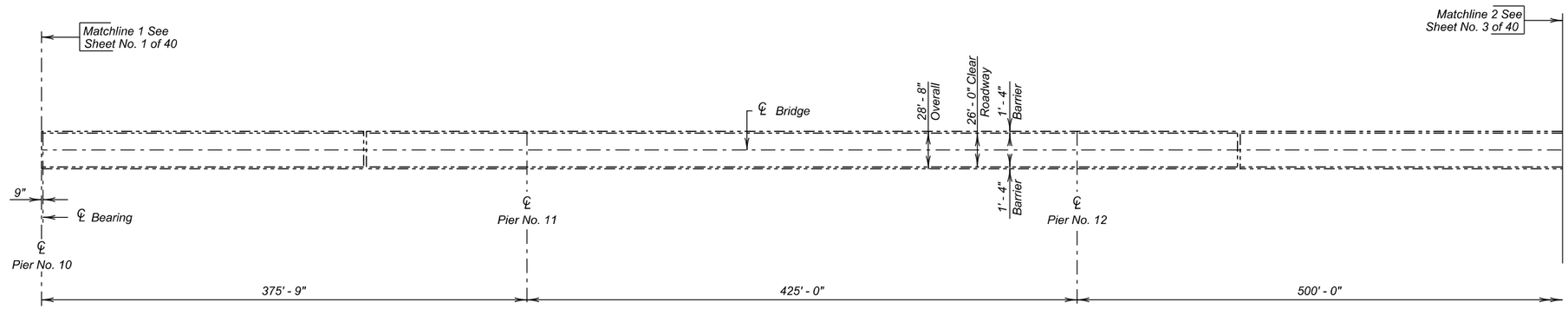

PARTIAL PLAN

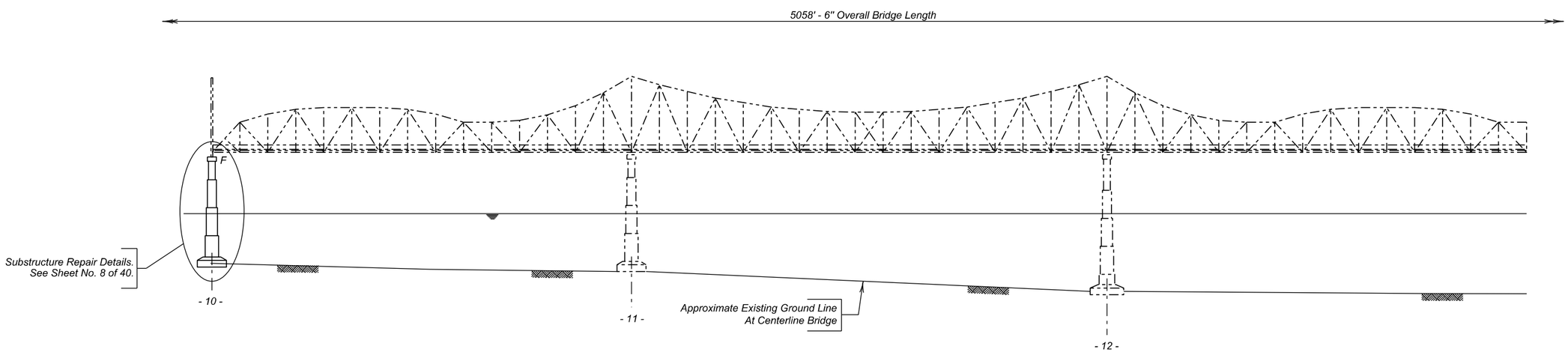

PARTIAL ELEVATION

NOTE:
Utility poles not shown at Pier Nos. 11 and 12 for clarity.

LAYOUT FOR UPGRADING (CONTINUED)

FOR

5058' - 6" BRIDGE OVER OAHE RESERVOIR

26' - 0" ROADWAY — 0° SKEW
OVER LAKE OAHE — SEC. 13-T124N-R80W
STR. NO. 65-000-020 — NH 0012(152)187

WALWORTH COUNTY

S. D. DEPT. OF TRANSPORTATION

MARCH 2016

DESIGNED BY	CK. DES. BY	DRAFTED BY	
BWS	MM	KR	Kevin N. Goeden
WLTH02A6	02A6RA02		BRIDGE ENGINEER

STATE OF	PROJECT	SHEET NO.	TOTAL SHEETS
S.D.	NH 0012(152)187	E5	E92

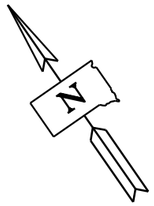

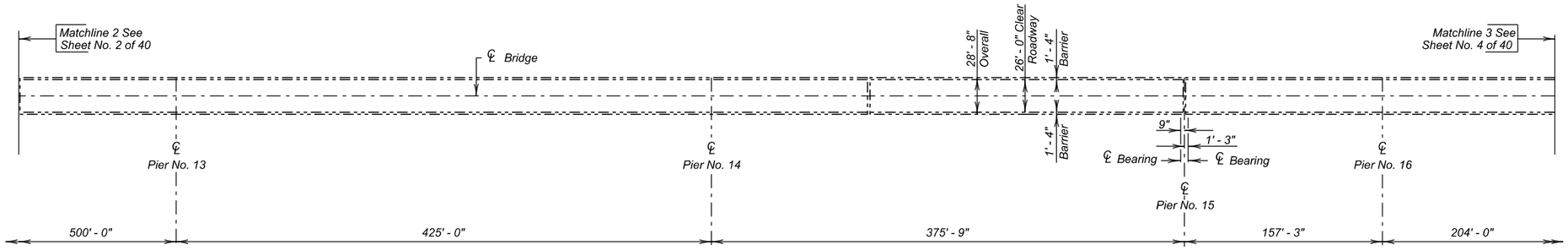

PARTIAL PLAN

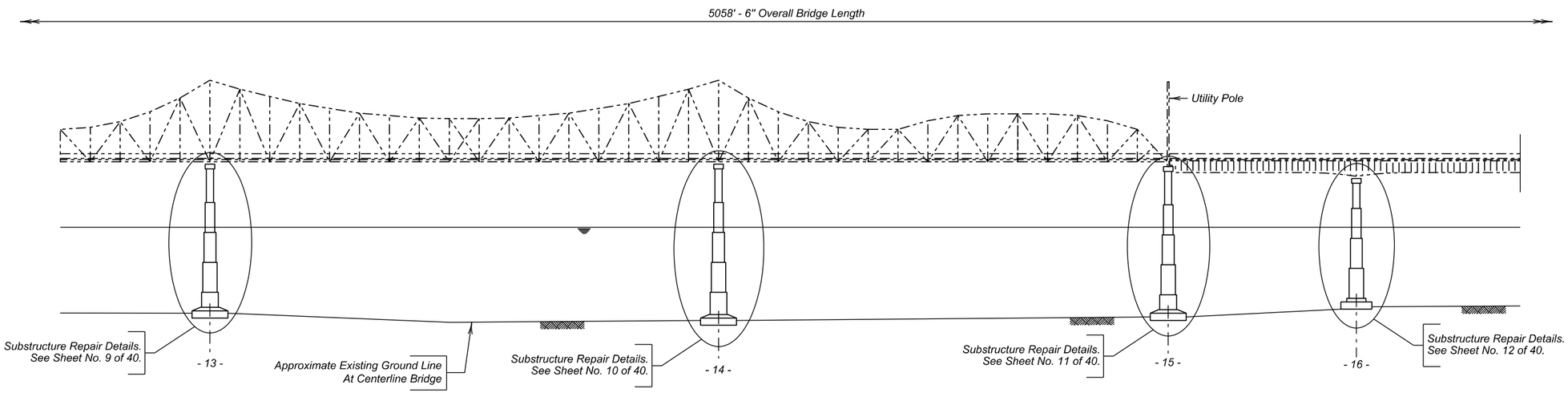

PARTIAL ELEVATION

LAYOUT FOR UPGRADING (CONTINUED)

FOR

5058' - 6" BRIDGE OVER OAHE RESERVOIR

26' - 0" ROADWAY — 0° SKEW
OVER LAKE OAHE — SEC. 13-T124N-R80W
STR. NO. 65-000-020 — NH 0012(152)187

WALWORTH COUNTY

S. D. DEPT. OF TRANSPORTATION

MARCH 2016

DESIGNED BY	CK. DES. BY	DRAFTED BY	
BWS	MM	KR	Kevin N. Goeden
WLTH02A6	02A6RA03		BRIDGE ENGINEER

STATE OF	PROJECT	SHEET NO.	TOTAL SHEETS
S.D.	NH 0012(152)187	E6	E92

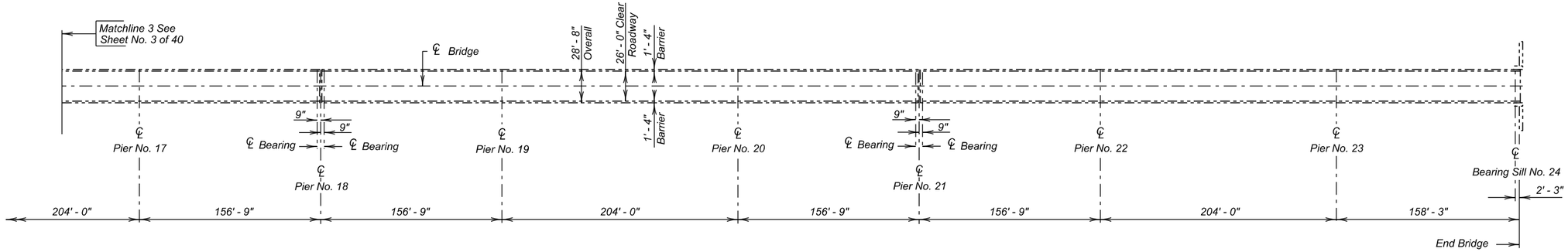

PARTIAL PLAN

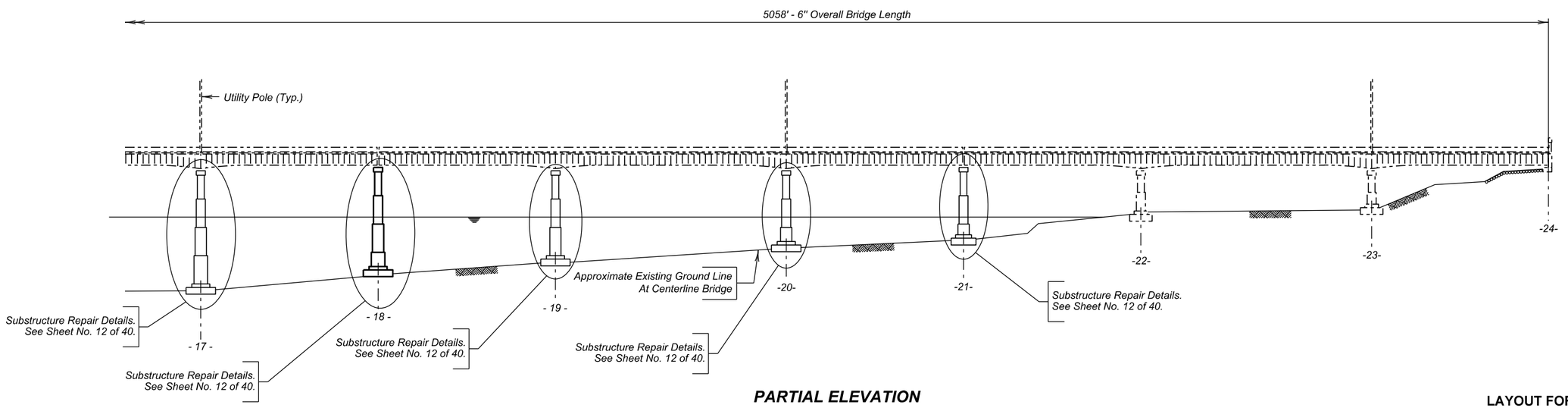

PARTIAL ELEVATION

LAYOUT FOR UPGRADING (CONTINUED)

FOR

5058' - 6" BRIDGE OVER OAHE RESERVOIR

26' - 0" ROADWAY — 0° SKEW
OVER LAKE OAHE — SEC. 13-T124N-R80W
STR. NO. 65-000-020 — NH 0012(152)187

WALWORTH COUNTY

S. D. DEPT. OF TRANSPORTATION

MARCH 2016

DESIGNED BY	CK. DES. BY	DRAFTED BY	
BWS	MM	KR	Kevin N. Boeden BRIDGE ENGINEER
WLTH02A6	02A6RA04		

ESTIMATE OF STRUCTURE QUANTITIES

ITEM NO.	DESCRIPTION	QUANTITY	UNIT
460E0174	Concrete Patching Material, Miscellaneous	24.6	CuFt
460E0190	Concrete Crack Injection/Sealing	72	In
460E0240	Concrete Crack Healer/Sealer	207.0	SqFt
460E0300	Breakout Structural Concrete	0.9	CuYd
480E5000	Galvanic Anode	25	Each

SPECIFICATIONS

1. Design Specifications: AASHTO Standard Specifications for Highway Bridges 2002 17th Edition with 2003 Interim using Working Stress Design.

2. Construction Specifications: South Dakota Standard Specifications for Roads and Bridges, 2015 Edition and Required Provisions, Supplemental Specifications and Special Provisions as included in the Proposal.

DETAILS AND DIMENSIONS OF EXISTING BRIDGE

All details and dimensions of the existing bridge contained in these plans are based on the original construction plans and shop plans and are provided as information only. It is the Contractor's responsibility to inspect and verify the actual field conditions and any necessary as-built dimensions affecting the satisfactory completion of the work required for this project.

SCOPE OF BRIDGE WORK & SEQUENCE OF OPERATIONS

All work on this structure shall be accomplished with the traffic control shown in the plans. Alternate sequence of operations may be submitted by the Contractor for approval by the Engineer two weeks prior to the pre-construction meeting.

1. Breakout areas of pier caps and columns to the limits shown in the plans.

2. Epoxy inject cracks in pier cap as shown in the plans.

3. Install galvanic anodes and repair areas with concrete patching materials.

4. Prepare surface and apply Concrete Crack Healer/Sealer as shown in the plans.

GENERAL CONSTRUCTION – BRIDGE

1. Use 2" clear cover on all reinforcing steel except as shown otherwise.

2. All exposed concrete corners and edges shall be chamfered 3/4" unless noted otherwise in the plans.

CONCRETE BREAKOUT

1. The existing pier cap and columns shall be broken out to the limits shown on the plans. Breakout limits shall be defined with a 3/4" deep sawcut (unless specified otherwise in these plans), where practical, as approved by the Engineer. Reinforcing steel that is exposed and is scheduled for use in the new construction shall be cleaned and straightened to the satisfaction of the Engineer. Care shall be taken not to damage the existing reinforcing steel that is to be reused in the new construction during concrete breakout. Any reinforcing steel that is damaged during concrete breakout shall be replaced or repaired, as approved by the Engineer, by the Contractor at no cost to the Department.

2. The railing on the pier caps may need to be removed and reattached in order to complete any concrete breakout and patching. The railing shall be reattached using 5/8" Dia. Bolts. All costs associated with railing removal and reattachment shall be incidental to the contract unit price for "Breakout Structural Concrete".

3. All broken out concrete shall be disposed of by the Contractor. Any disposal of discarded material shall be in accordance with the Environmental Commitment notes.

4. During concrete removal operations, no broken out concrete shall be allowed to fall into Lake Oahe.

5. Work on the repair areas shall only be accomplished when those areas are completely out of the water and shall remain out of the water for the length of cure period for the concrete patching material. If the repair areas in the plans are under the water, those areas may be removed from the plans at the direction of the engineer. The water level is controlled by the Corp of Engineers. The following links, which show the historic water levels as well as estimated future levels by the Corp of Engineers, are provided as a scheduling tool:

   http://www.nwd-mr.usace.army.mil/rcc/projdata/oahe.pdf

   http://www.nwd-mr.usace.army.mil/rcc/reports/resfcast.pdf

6. The contract unit price per cubic yard for "Breakout Structural Concrete" shall include breaking out concrete, cleaning, straightening existing reinforcing steel, and disposal of all broken out material.

CONCRETE CRACK INJECTION/SEALING

1. This work shall consist of cleaning the concrete surfaces adjacent to the cracks, installing epoxy injection ports or tees, sealing the surface of the cracks, and epoxy injecting the cracks.

2. Concrete surfaces adjacent to the cracks shall be cleaned to the extent necessary to achieve adequate bond for the surface sealant. The preparation shall not cause dust or other contaminants to penetrate the crack. The crack shall be cleaned of dust and debris using clean, oil free compressed air. The use of solvents or thinners shall not be permitted. In areas where there is delaminated concrete at crack locations, the delaminated concrete shall be removed prior to injection.

3. The cracks to be injected shall have injection ports or tees installed in them. The ports or tees shall be spaced between 6 to 12 inches, or as specified by the manufacturer, beginning at the lower most point of the crack. The ports or tees shall be placed in dust free holes made with either vacuum drills or chipping hammers.

4. The surface cracks between the ports shall be sealed using an epoxy paste or as specified by the manufacturer. The application of the surface crack sealer shall be limited to clean dry surfaces at a temperature of not less than 45°F.

5. Epoxy injection shall begin at the bottom of the crack and proceed upward using a process that will ensure complete penetration of the crack. The epoxy shall be injected at a low enough pressure to ensure that no further damage will be done to the member being repaired.

6. The injection epoxy shall conform to ASTM C881, Type IV, Grade 1.

7. After the epoxy has cured a minimum of 48 hours, the injection ports or tees shall be removed flush with the concrete surfaces and the surface crack sealer shall be ground smooth. Care shall be taken to ensure none of the debris falls into Lake Oahe.

8. The Contractor shall submit a Concrete Crack Injection/Sealing procedure in writing, for approval of the engineer, thirty days prior to performing the crack injection and notify the Department of the Contractor's schedule seven days prior to performing the crack injection.

9. The cracks to be injected will be measured in inches to the nearest inch. Measurement will be made of the overall crack length.

10. All costs of cleaning the concrete adjacent to the cracks to be sealed, installing the ports or tees, sealing and injecting the cracks, and removal and grinding of the ports and sealant including labor, equipment, and incidentals necessary to complete the work shall be incidental to the contract unit price per inch for "Concrete Crack Injection/Sealing".

ESTIMATE OF STRUCTURE QUANTITIES AND NOTES

FOR

5058' - 6" BRIDGE OVER OAHE RESERVOIR

STR. NO. 65-000-020

MARCH 2016

DESIGNED BY	CK. DES. BY	DRAFTED BY	
BWS	MM	BWS	Kevin N. Goeden
WLTH02A6	02A6RA05		BRIDGE ENGINEER

PIER REPAIR

1. After all delaminated concrete has been removed, the area shall be abrasive blasted and blown clean with clean, dry, oil-free compressed air at 90 psi.

2. The concrete patching material used in the bent cap patching applications shall be supplied as the following or an equivalent as approved by the Office of Bridge Design:

   Vertical Patch
   Symons
   2400 Arthur Avenue
   Elk Grove Village, IL 60007
   Phone: (847) 298-3200
   Web site: www.symons.com

   Meadow-Patch 20
   W. R. Meadows, Inc.
   P.O. Box 338
   Hampshire, IL 60140-0338
   Phone: (847) 214-2100
   Web site: www.wrmeadows.com

   Speed Crete Red Line
   The Euclid Chemical Company
   19218 Redwood Rd.
   Cleveland, OH 44110
   Phone: (800) 321-7628
   Web site: www.euclidchemical.com

3. The concrete patching material shall be extended with aggregate of the quality, size and gradation specified in the manufacturer's technical literature.

4. The pier shall be rebuilt to the dimensions of the original construction plans unless otherwise shown on the plans. When used, cap forms may be removed when the concrete attains a compressive strength of 2000 psi.

5. All costs associated with accessing, furnishing, placing and finishing the concrete patching material including all equipment, labor and incidentals shall be incidental to the contract unit price per cubic foot for "Concrete Patching Material, Miscellaneous".

CONCRETE CRACK HEALER/SEALER

1. The contractor shall furnish and place the Concrete Crack Healer/Sealer on the surfaces as specified in this plan set.

2. The Concrete Crack Healer/Sealer shall be supplied as one of the following:

   Unitex Pro-Poxy 40 LV LM
   Dayton Superior Corporation
   1125 Byers Road
   Miamisburg, OH 45342
   (937)866-0711

   Dural 335, Dural 50 LM
   The Euclid Chemical Co.
   19215 Redwood Road
   Cleveland, OH 44110
   (800)321-7628

   Sikadur 55 SLV
   Sika – US
   201 Polito Avenue
   Lyndhurst, NJ 07071
   1-800-933-SIKA

3. The Healer/Sealer shall be placed in accordance with the manufacturer's recommendations and as approved by the engineer.

4. For the epoxy healer/sealer, provide a distribution system or distributor capable of accurately blending the epoxy resin and hardening agent, and uniformly and accurately applying the epoxy material at the specified rate to the surface.

5. Immediately prior to application of the healer sealer, clean the entire surface with clean, dry, oil-free compressed air at 90 psi. to remove all material that may interfere with the bonding or curing of the healer sealer.

6. After the epoxy mixture and the surface have been prepared, apply the healer/sealer to the surface and allow it to penetrate the surface per the manufacturer's recommendations. Care shall be taken to ensure no Healer/Sealer falls into Lake Oahe.

7. The contractor shall provide manufacturer's product literature and installation instructions to the Engineer 10 days prior to installation.

8. All costs associated with placing the Concrete Crack Healer/Sealer including labor, equipment, materials and incidentals shall be included in the contract unit price per square foot for "Concrete Crack Healer/Sealer".

GALVANIC ANODE

1. The Contractor shall furnish and place Galvanic anodes in the concrete repair areas specified in this plan set.

2. The galvanic anodes shall be supplied as one of the following:

   a. Galvashield XP2
      Vector Corrosion Technologies
      13312 N 56th St, Suite 102
      Tampa, FL 33617
      Phone: (813) 830-7566
      Website: www.vector-corrosion.com

   b. Sentinel Silver
      Euclid Chemical Company
      19218 Redwood Road
      Cleveland, OH 44110
      Phone: (800) 321-7628
      Website: www.euclidchemical.com

   c. Sika Galvashield XP+
      Sika Corporation US
      201 Polito Avenue
      Lyndhurst, NJ 07071
      Phone: (800) 933-7452
      Website: http://usa.sika.com

3. The anodes shall be placed in accordance with manufacturer's recommendations and as approved by the Engineer. The anodes have not been shown on the drawings. The Contractor shall provide shop drawings of the galvanic anode installation including locations of the individual anodes to the Office of Bridge Design.

4. The anodes shall be placed with a minimum ¾" cover and shall be set in Embedding Mortar per the manufacturer's recommendations. The anodes shall be fully encased in the concrete repair material. Where adequate cover does not exist, a concrete pocket shall be chipped out behind the anode to provide sufficient cover. The Contractor may need to chip around the reinforcing bar locally at the anode installation to make the electrical connection. The reinforcing steel at the connection location shall be cleaned per the manufacturer's recommendations to provide sufficient electrical connection and mechanical bond.

5. The electrical continuity of the electrical connections and reinforcing steel shall be confirmed per the manufacturer's recommendations.

6. The Contractor shall provide manufacturer's product literature and installation instructions to the Engineer 10 days prior to installation.

7. All costs associated with placing anodes including labor, equipment, materials and incidentals shall be included in the contract unit price per each for "Galvanic Anode".

NOTES (CONTINUED)

FOR

5058' - 6" BRIDGE OVER OAHE RESERVOIR

STR. NO. 65-000-020

MARCH 2016

DESIGNED BY	CK. DES. BY	DRAFTED BY	
BWS	MM	BWS	Kevin N. Goeden
WLTH02A6	02A6RA06		BRIDGE ENGINEER

STATE OF	PROJECT	SHEET NO.	TOTAL SHEETS
S.D.	NH 0012(152)187	E9	E92

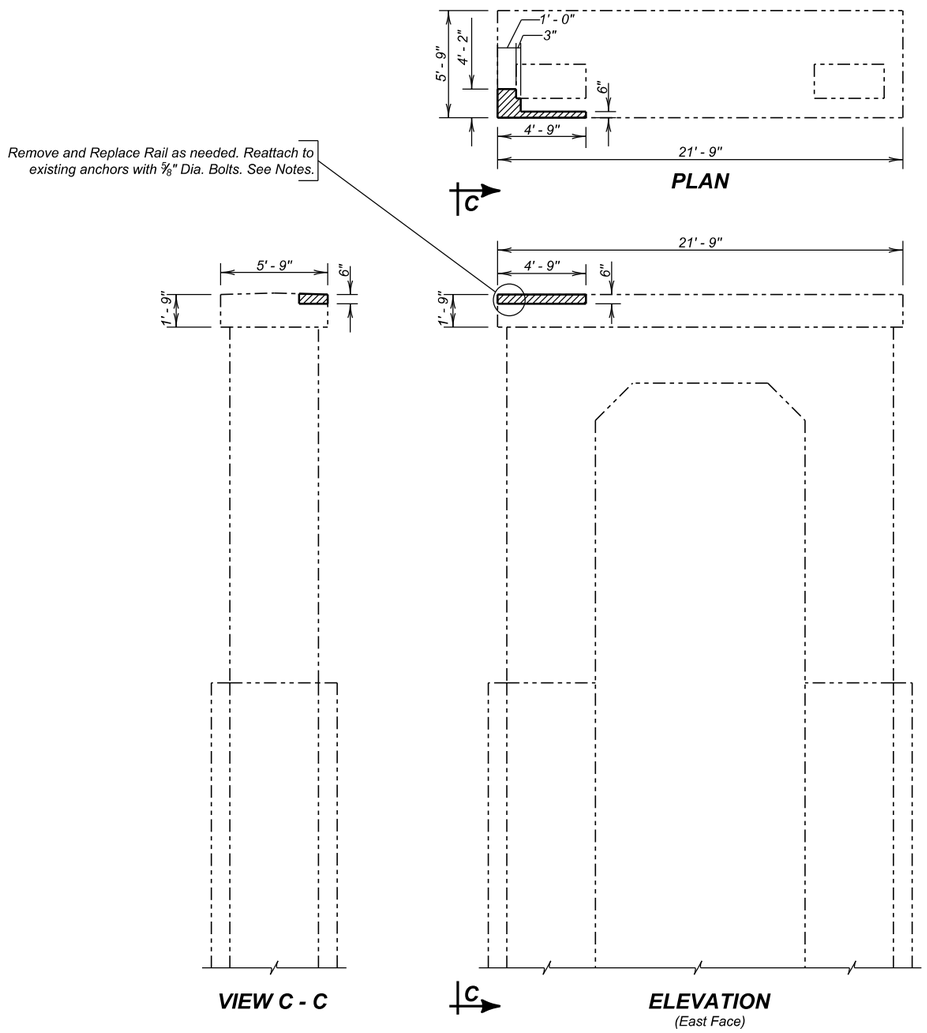

LEGEND:

Shaded areas indicate limits of Concrete Patching.

SUBSTRUCTURE REPAIR DETAILS (BENT NO. 7)

FOR

5058' - 6" BRIDGE OVER OAHE RESERVOIR

26' - 0" ROADWAY — 0° SKEW
OVER LAKE OAHE — SEC. 13-T124N-R80W
STR. NO. 65-000-020 — NH 0012(152)187

WALWORTH COUNTY

S. D. DEPT. OF TRANSPORTATION

MARCH 2016

DESIGNED BY	CK. DES. BY	DRAFTED BY	
BWS	MM	KR	Kevin N. Goeden
WLTH02A6	02A6RA07		BRIDGE ENGINEER

STATE OF	PROJECT	SHEET NO.	TOTAL SHEETS
S.D.	NH 0012(152)187	E10	E92

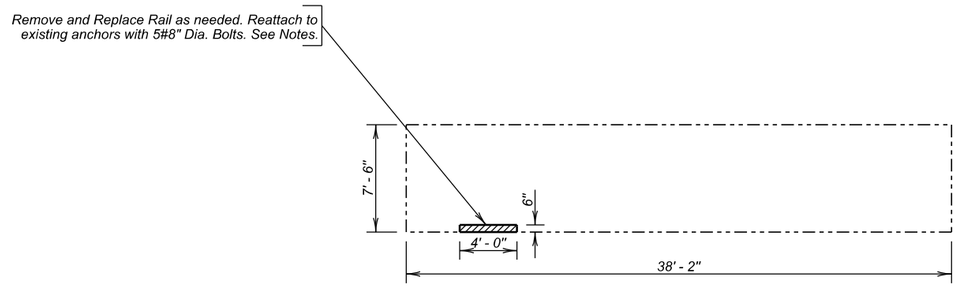

PLAN

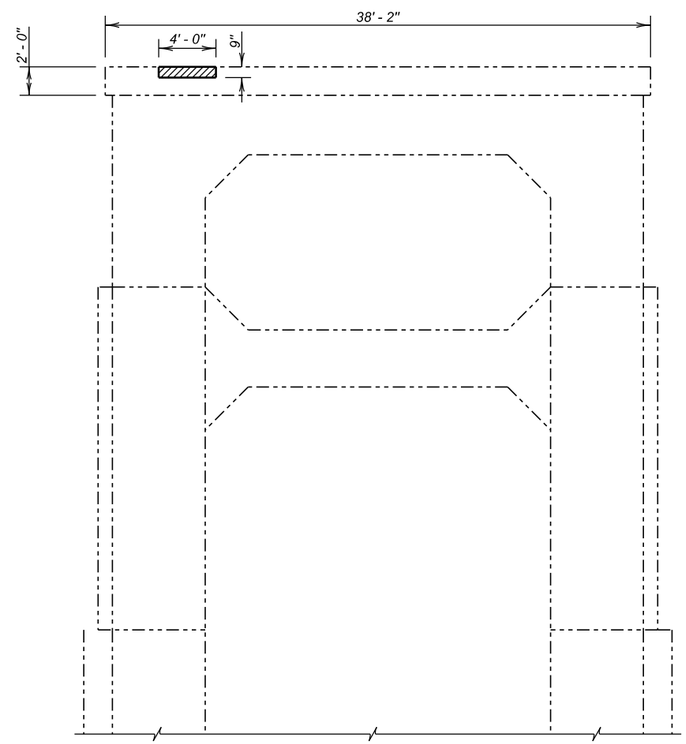

ELEVATION
(West Face)

LEGEND:

Shaded areas indicate limits of Concrete Patching.

SUBSTRUCTURE REPAIR DETAILS (CONTINUED)
(BENT NO. 10)

FOR

5058' - 6" BRIDGE OVER OAHE RESERVOIR

26' - 0" ROADWAY — 0° SKEW
OVER LAKE OAHE — SEC. 13-T124N-R80W
STR. NO. 65-000-020 — NH 0012(152)187

WALWORTH COUNTY

S. D. DEPT. OF TRANSPORTATION

MARCH 2016

DESIGNED BY	CK. DES. BY	DRAFTED BY	
BWS	MM	KR	Kevin N. Goeden
WLTH02A6	02A6RA08		BRIDGE ENGINEER

STATE OF	PROJECT	SHEET NO.	TOTAL SHEETS
S.D.	NH 0012(152)187	E11	E92

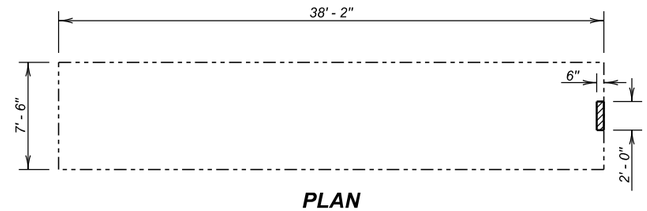

PLAN
(BENT NO. 13)

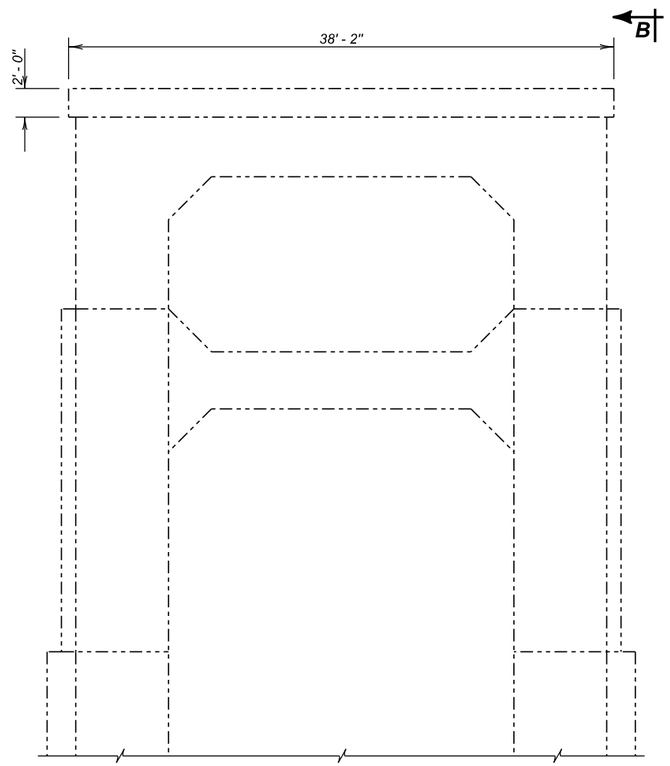

ELEVATION
(BENT NO. 13 - West Face)

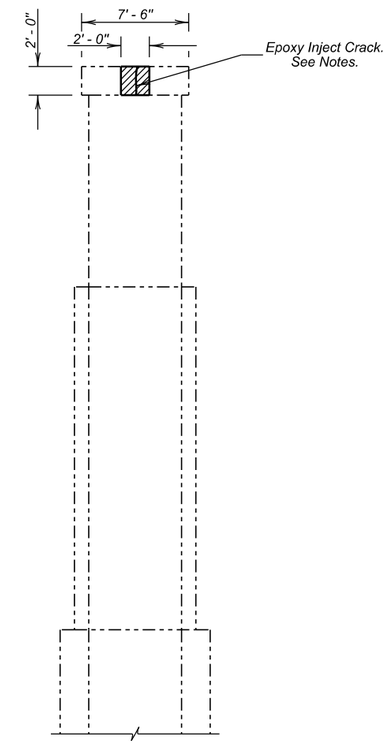

VIEW B - B
(BENT NO. 13)

LEGEND:

Shaded areas indicate limits of Concrete Patching.

ESTIMATED QUANTITIES

ITEM	UNIT	QUANTITY
Concrete Crack Injection Sealing	In.	72

SUBSTRUCTURE REPAIR DETAILS (CONTINUED)
(BENT NO. 13)

FOR

5058' - 6" BRIDGE OVER OAHE RESERVOIR

26' - 0" ROADWAY — 0° SKEW
OVER LAKE OAHE — SEC. 13-T124N-R80W
STR. NO. 65-000-020 — NH 0012(152)187

WALWORTH COUNTY

S. D. DEPT. OF TRANSPORTATION

MARCH 2016

DESIGNED BY	CK. DES. BY	DRAFTED BY	
BWS	MM	KR	Kevin N. Goeden
WLTH02A6	02A6RA09		BRIDGE ENGINEER

STATE OF	PROJECT	SHEET NO.	TOTAL SHEETS
S.D.	NH 0012(152)187	E12	E92

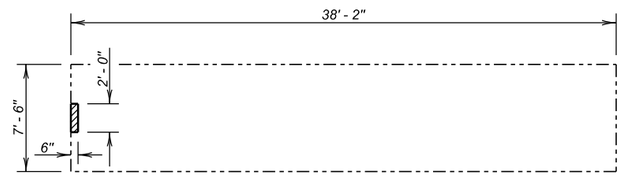

PLAN

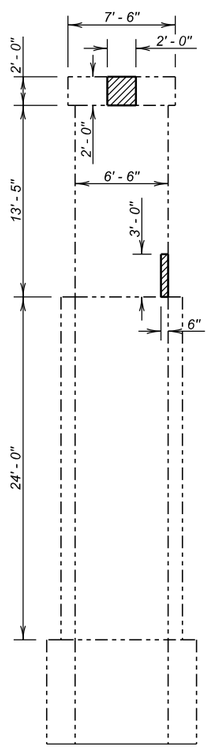

VIEW A - A

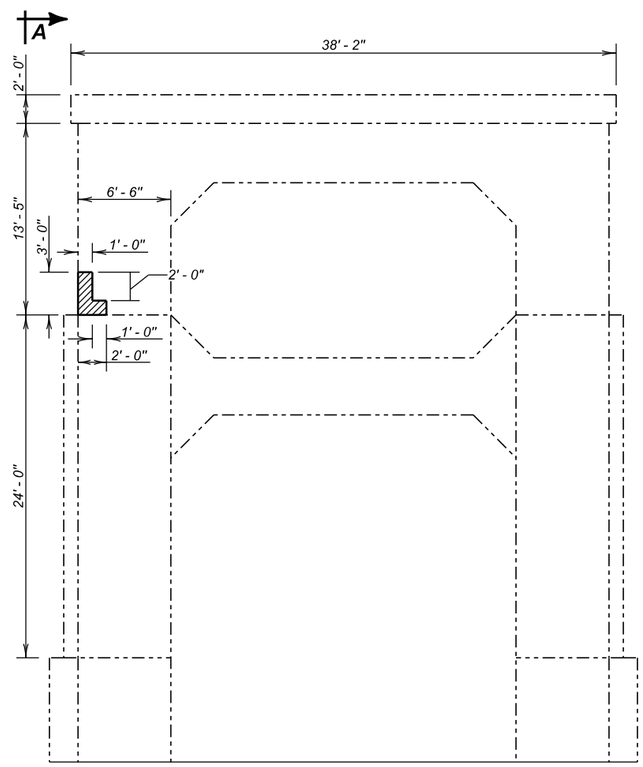

ELEVATION
(East Face)

LEGEND:

Shaded areas indicate limits of Concrete Patching.

SUBSTRUCTURE REPAIR DETAILS (CONTINUED)
(BENT NO. 14)

FOR

5058' - 6" BRIDGE OVER OAHE RESERVOIR

26' - 0" ROADWAY — 0° SKEW
OVER LAKE OAHE — SEC. 13-T124N-R80W
STR. NO. 65-000-020 — NH 0012(152)187

WALWORTH COUNTY

S. D. DEPT. OF TRANSPORTATION

MARCH 2016

DESIGNED BY	CK. DES. BY	DRAFTED BY	
BWS	MM	KR	Kevin N. Goeden
WLTH02A6	02A6RA10		BRIDGE ENGINEER

STATE OF	PROJECT	SHEET NO.	TOTAL SHEETS
S.D.	NH 0012(152)187	E13	E92

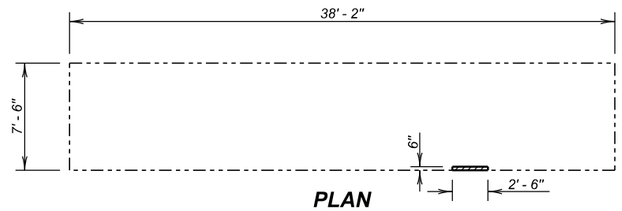

PLAN

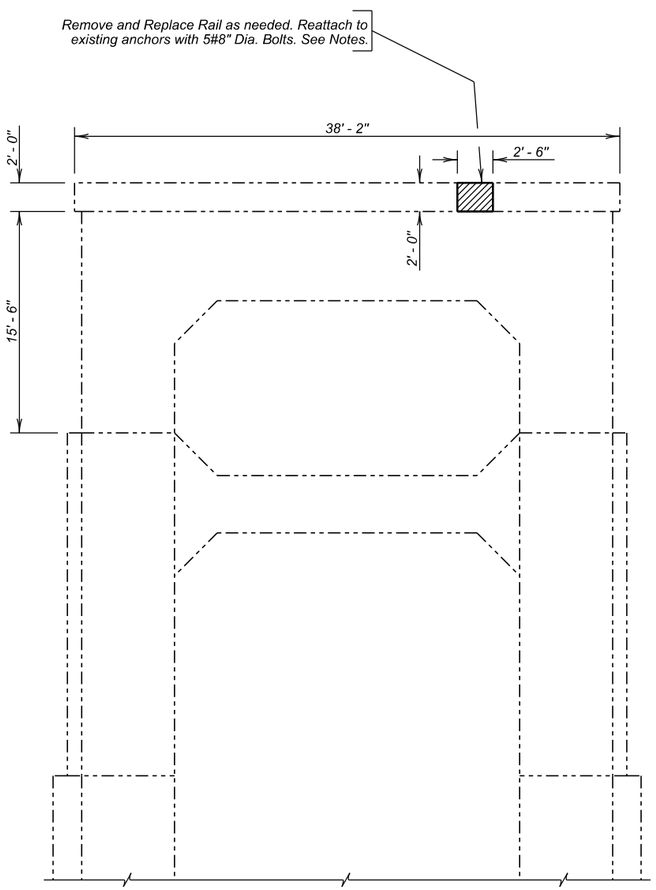

ELEVATION
(West Face)

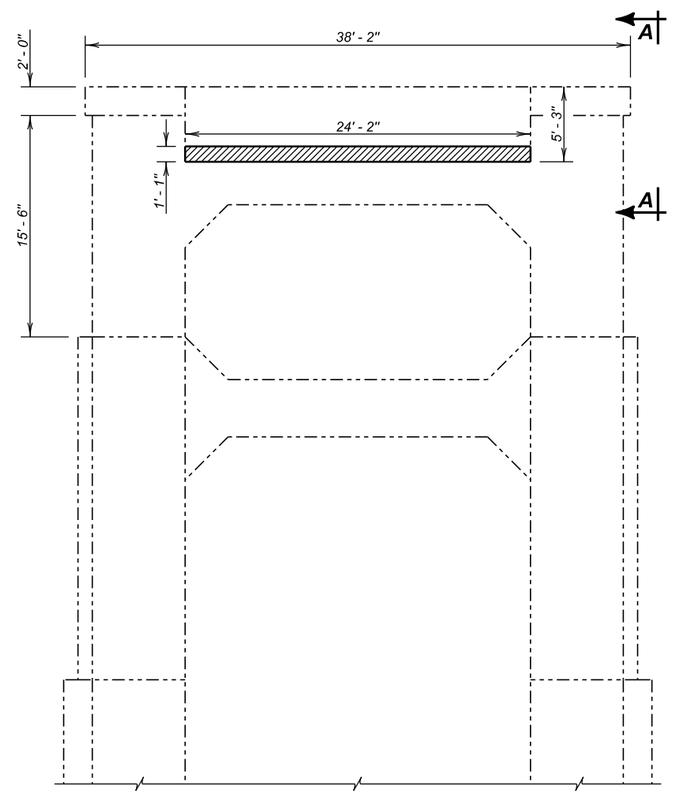

ELEVATION
(East Face)

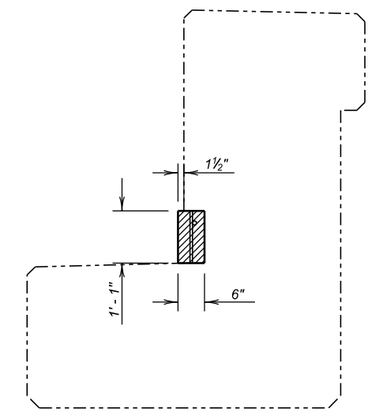

VIEW A - A

LEGEND:

Shaded areas indicate limits of Concrete Patching.

ESTIMATED QUANTITIES		
ITEM	UNIT	QUANTITY
Breakout Structural Concrete	Cu. Yd.	0.9
Galvanic Anode	Each	25
Concrete Patching Material, Miscellaneous	Cu. Ft.	24.6

SUBSTRUCTURE REPAIR DETAILS (CONTINUED)
(BENT NO. 15)

FOR

5058' - 6" BRIDGE OVER OAHE RESERVOIR

26' - 0" ROADWAY — 0° SKEW
OVER LAKE OAHE — SEC. 13-T124N-R80W
STR. NO. 65-000-020 — NH 0012(152)187

WALWORTH COUNTY
S. D. DEPT. OF TRANSPORTATION
MARCH 2016

DESIGNED BY	CK. DES. BY	DRAFTED BY	
BWS	MM	KR	Kevin N. Boeden
WLTH02A6	02A6RA11		BRIDGE ENGINEER

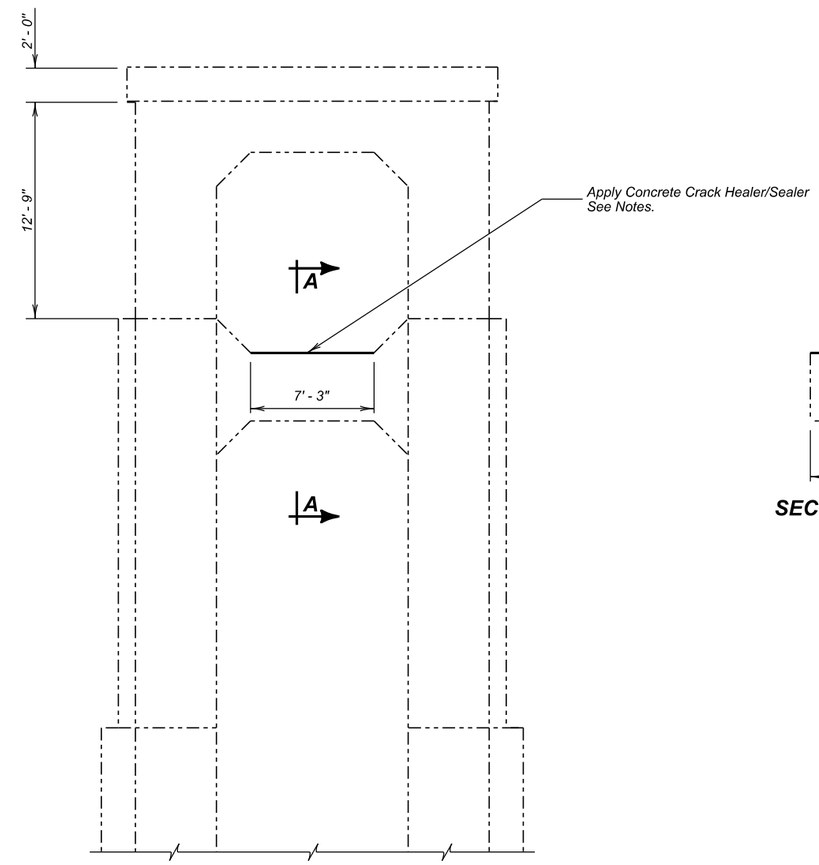

ELEVATION

(BENT NOS. 16, 17, 18, 19, 20, and 21 - East Face)

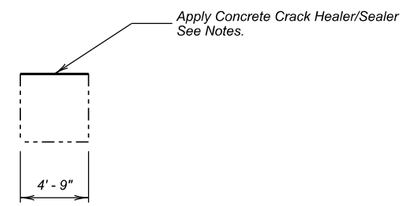

SECTION A - A

ESTIMATED QUANTITIES		
ITEM	UNIT	QUANTITY
Concrete Crack Healer/Sealer	Sq. Ft.	207.0

SUBSTRUCTURE REPAIR DETAILS (CONTINUED)
(BENT NO. 16, 17, 18, 19, 20, & 21)

FOR

5058' - 6" BRIDGE OVER OAHE RESERVOIR

26' - 0" ROADWAY — 0° SKEW
OVER LAKE OAHE — SEC. 13-T124N-R80W
STR. NO. 65-000-020 — NH 0012(152)187

WALWORTH COUNTY

S. D. DEPT. OF TRANSPORTATION

MARCH 2016

DESIGNED BY	CK. DES. BY	DRAFTED BY	
BWS	MM	KR	Kevin N. Goeden
WLTH02A6	02A6RA12		BRIDGE ENGINEER

STATE OF	PROJECT	SHEET NO.	TOTAL SHEETS
S.D.	NH 0012(152)187	E15	E92

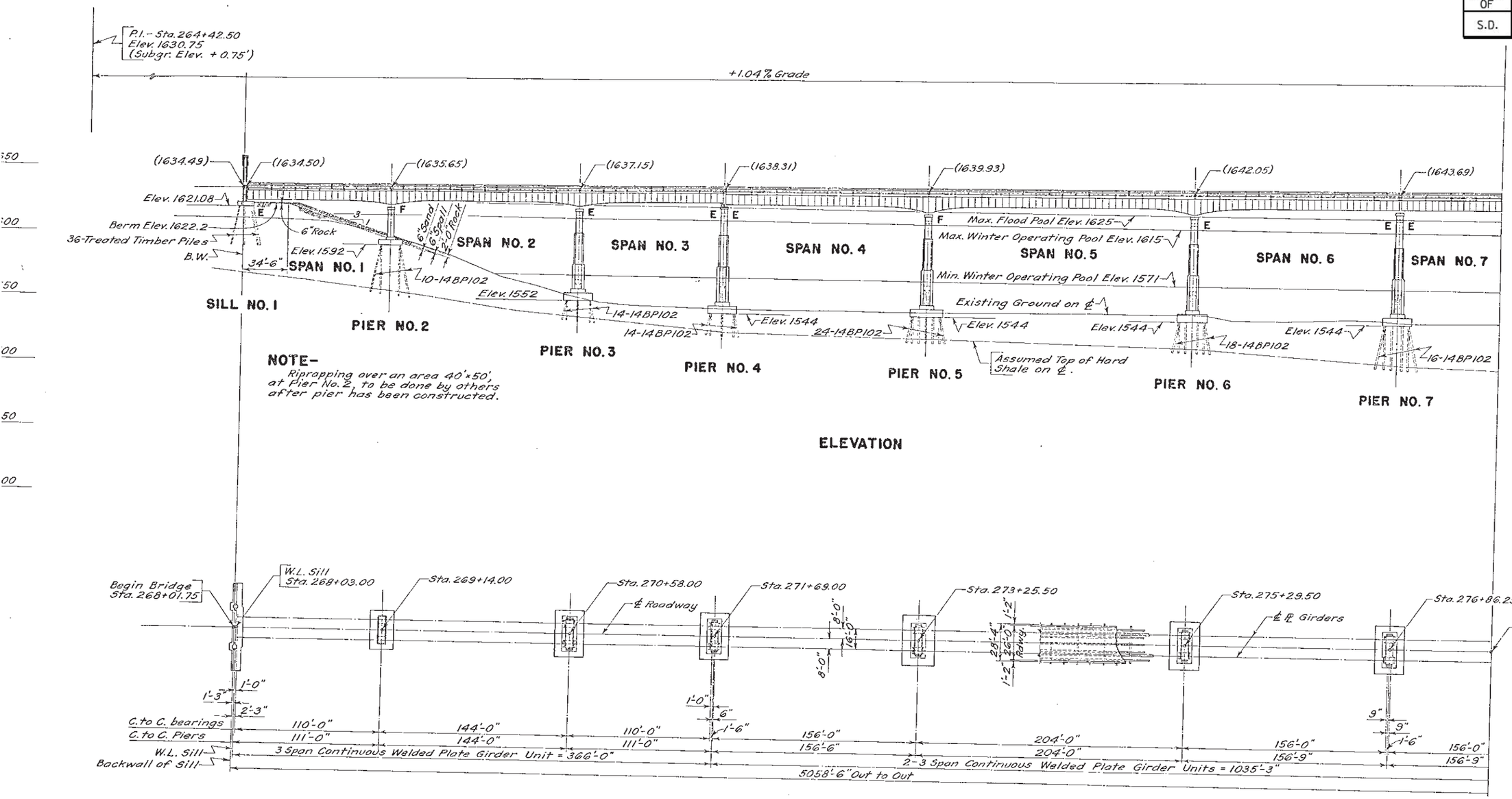

LEGEND

(1634.49) = Elev. Top of Slab at Curb
E = Expansion Bearing
F = Fixed Bearing
W.L. = Working Line
B.W. = Back Wall

B.M. No. 31 - Elev. 1604.41
Iron Pin & Gds.
150' Lt. Sta. 262+00

B.M. No. 32 - Elev. 1610.76
Iron Pin & Gds.
150' Rt. Sta. 269+00

B.M. No. 32A - Elev. 1548.11
Iron Pin & Gds.
115' Lt. Sta. 271+00

NOTE-
Riprapping over an area 40'x50', at Pier No. 2, to be done by others after pier has been constructed.

ORIGINAL CONSTRUCTION PLANS

GENERAL DRAWING
FOR
5058'-6" BRIDGE OVER OAHE RESERVOIR
26'-0" ROADWAY
STA. 268+01.75 TO 318+60.25 WAR 180(1)
ON US HWY. NO. 12 CORSON-WALWORTH COUNTIES
SOUTH DAKOTA H20-44
DEPARTMENT OF HIGHWAYS
MARCH 1957 (13) OF (40)

DESIGNED BY	DRAWN BY	CHECKED BY	APPROVED
	H.A.	ASF	

STATE OF	PROJECT	SHEET NO.	TOTAL SHEETS
S.D.	NH 0012(152)187	E16	E92

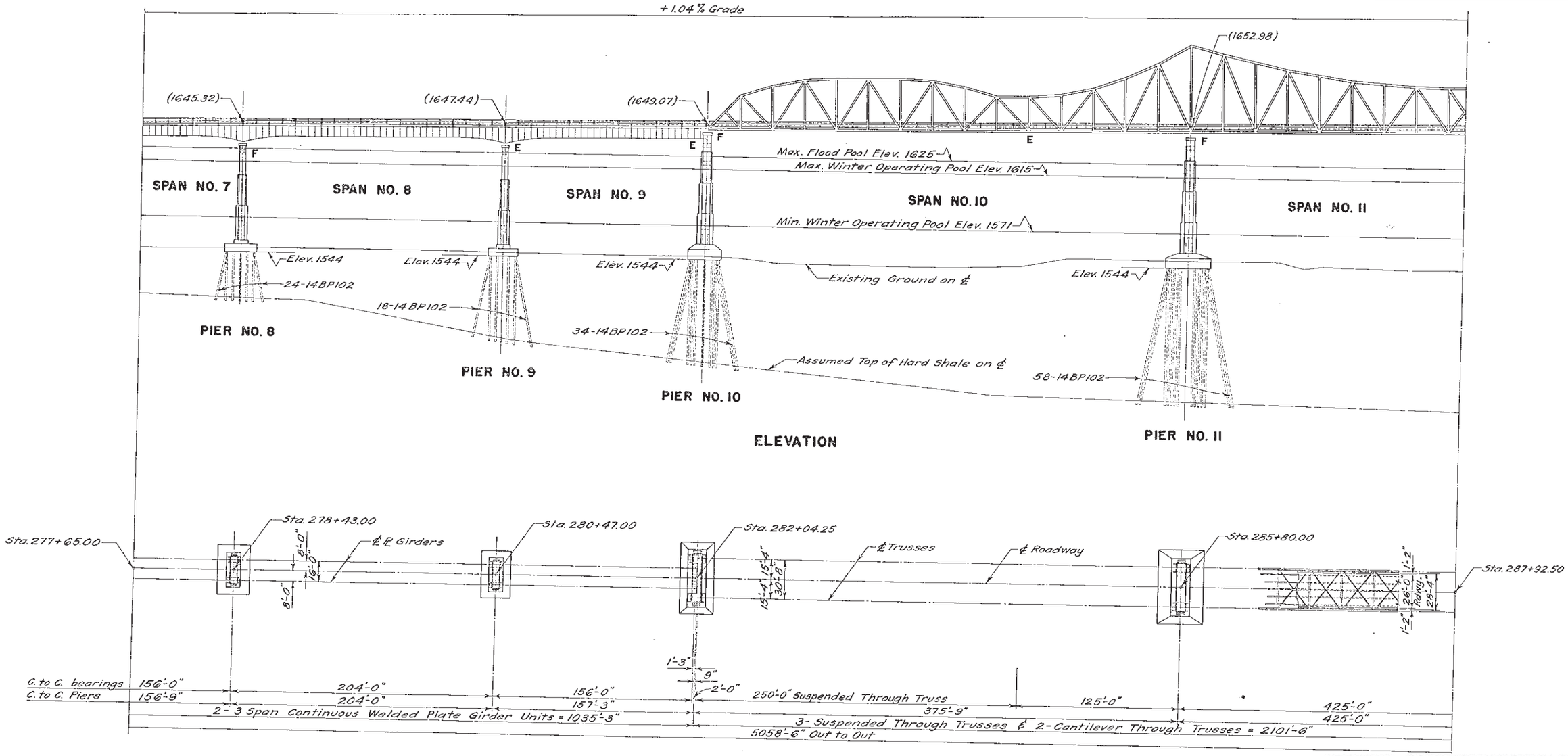

LEGEND

(1645.32) = Elev. Top of Slab at Curb
E = Expansion Bearing
F = Fixed Bearing

B.M. No. 33 - Elev. 1547.91
Iron Pin ℄ Gds.
125' Lt. Sta. 280+00

ORIGINAL CONSTRUCTION PLANS

GENERAL DRAWING
FOR
5058'-6" BRIDGE OVER OAHE RESERVOIR
26'-0" ROADWAY

STA. 268+01.75 TO 318+60.25 WAR 180(1)
ON US HWY. NO. 12 CORSON-WALWORTH COUNTIES
SOUTH DAKOTA H20-44
DEPARTMENT OF HIGHWAYS
MARCH 1957 (14) OF (40)

DESIGNED BY	DRAWN BY	CHECKED BY	APPROVED
	H.A.	ASF	

STATE OF	PROJECT	SHEET NO.	TOTAL SHEETS
S.D.	NH 0012(152)187	E17	E9

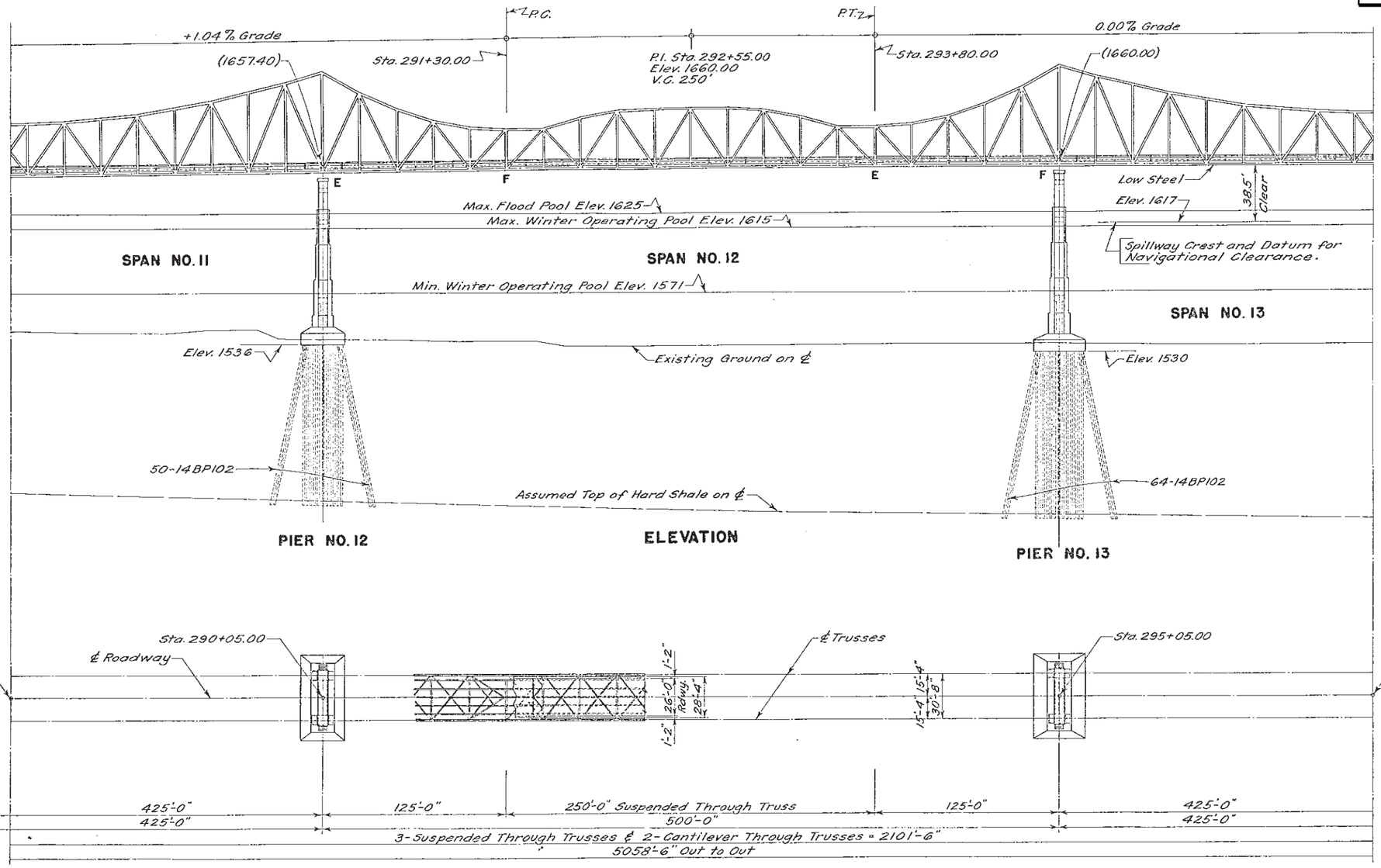

PLAN

LEGEND

(1657.40) = Elev. Top of Slab at Curb
E = Expansion Bearing
F = Fixed Bearing

B.M. No. 34 - Elev. 1545.86
Iron Pin & Gds.
100' Rt. Sta. 289+15

ORIGINAL CONSTRUCTION PLANS

GENERAL DRAWING
FOR

5058'-6" BRIDGE OVER OAHE RESERVOIR

26'-0" ROADWAY

STA. 268+01.75 TO 318+60.25 WAR 180 (1)

ON US HWY. NO. 12 CORSON-WALWORTH COUNTIES

SOUTH DAKOTA H20-44

DEPARTMENT OF HIGHWAYS

MARCH 1957 15 OF 40

DESIGNED BY	DRAWN BY	CHECKED BY	APPROVED
	H.A.	ASF	

STATE OF	PROJECT	SHEET NO.	TOTAL SHEETS
S.D.	NH 0012(152)187	E18	E92

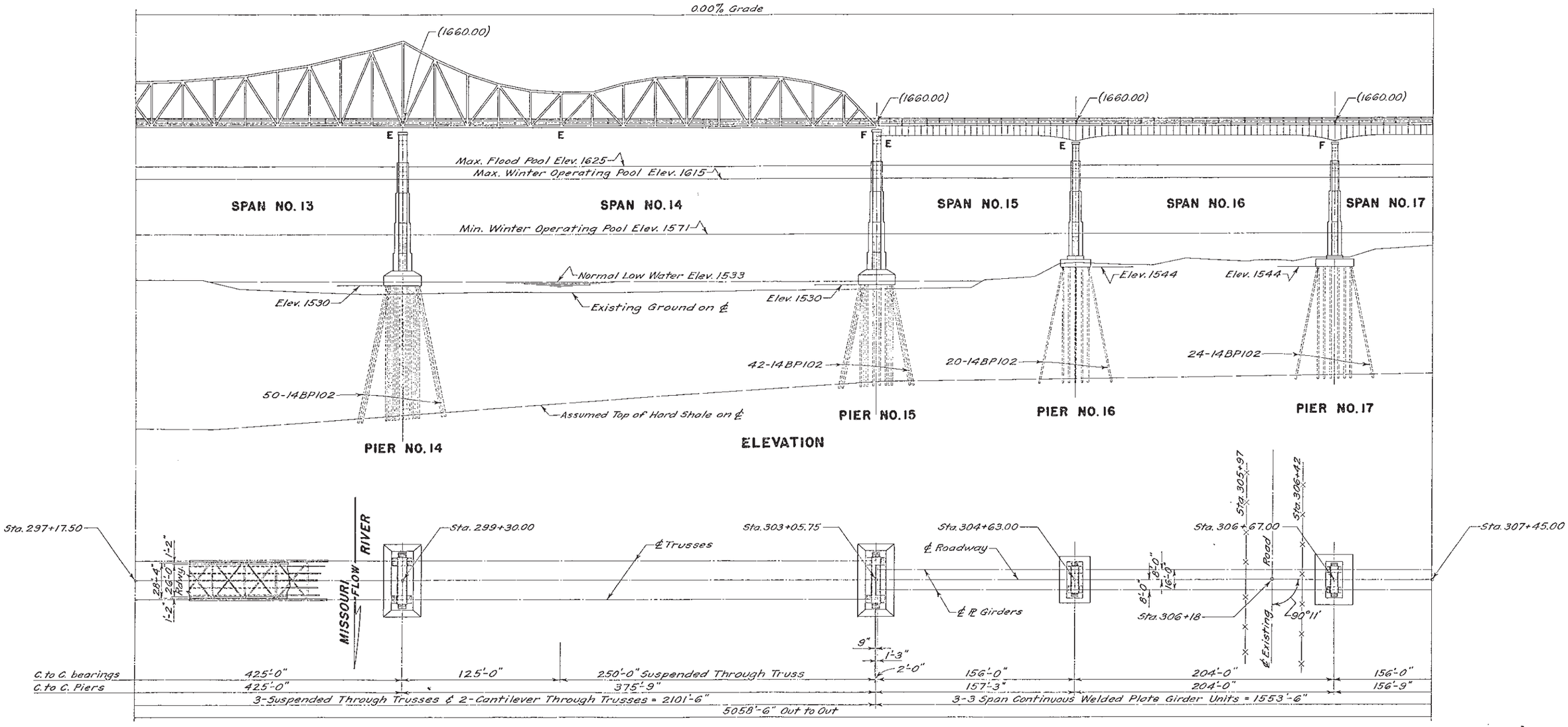

LEGEND

(1660.00) = Elev. Top of Slab at Curb
E = Expansion Bearing
F = Fixed Bearing

ORIGINAL CONSTRUCTION PLANS

GENERAL DRAWING
FOR
5058'-6" BRIDGE OVER OAHE RESERVOIR
26'-0" ROADWAY
STA. 268+01.75 TO 318+60.25 WAR 160 (1)
ON US HWY. NO. 12 CORSON-WALWORTH COUNTIES
SOUTH DAKOTA H20-44
DEPARTMENT OF HIGHWAYS
MARCH 1957 16 OF 40

DESIGNED BY	DRAWN BY	CHECKED BY	APPROVED
	H.A.	ASF	BRIDGE ENGINEER

STATE OF	PROJECT	SHEET NO.	TOTAL SHEETS
S.D.	NH 0012(152)187	E19	E92

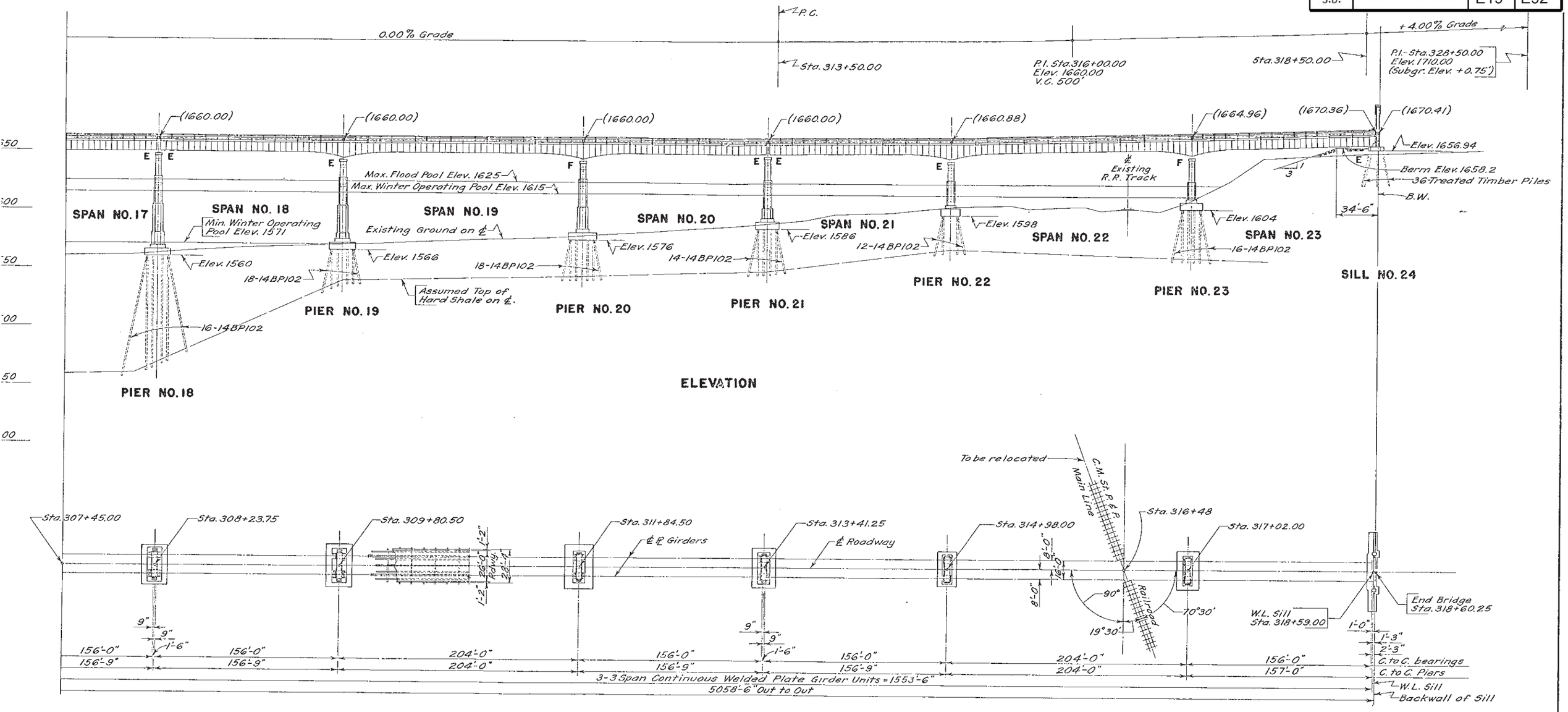

LEGEND

(1660.00) = Elev. Top of Slab at Curb
E = Expansion Bearing
F = Fixed Bearing
W.L. = Working Line
B.W. = Back Wall

B.M. No. 35 - Elev. 1578.93
Re. Bar & Gds. - In fence line
127' Rt. Sta. 312+50

B.M. No. 36 - Elev. 1654.70
Re. Bar & Gds.
100' Rt. Sta. 320+00

ORIGINAL CONSTRUCTION PLANS

GENERAL DRAWING
FOR

5058'-6" BRIDGE OVER OAHE RESERVOIR

26'-0" ROADWAY

STA. 268+01.75 TO 318+60.25 WAR 180 (1)

ON US HWY. NO. 12 CORSON-WALWORTH COUNTIES

SOUTH DAKOTA H20-44

DEPARTMENT OF HIGHWAYS

MARCH 1957 17 OF 40

DESIGNED BY	DRAWN BY	CHECKED BY	APPROVED
	H.A.	ASF	

STATE OF	PROJECT	SHEET NO.	TOTAL SHEETS
S.D.	NH 0012(152)187	E20	E92

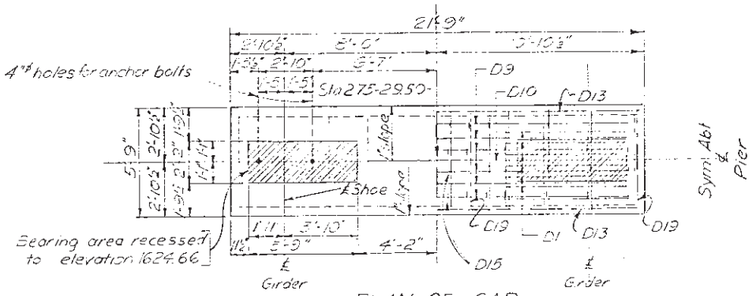

PLAN OF CAP

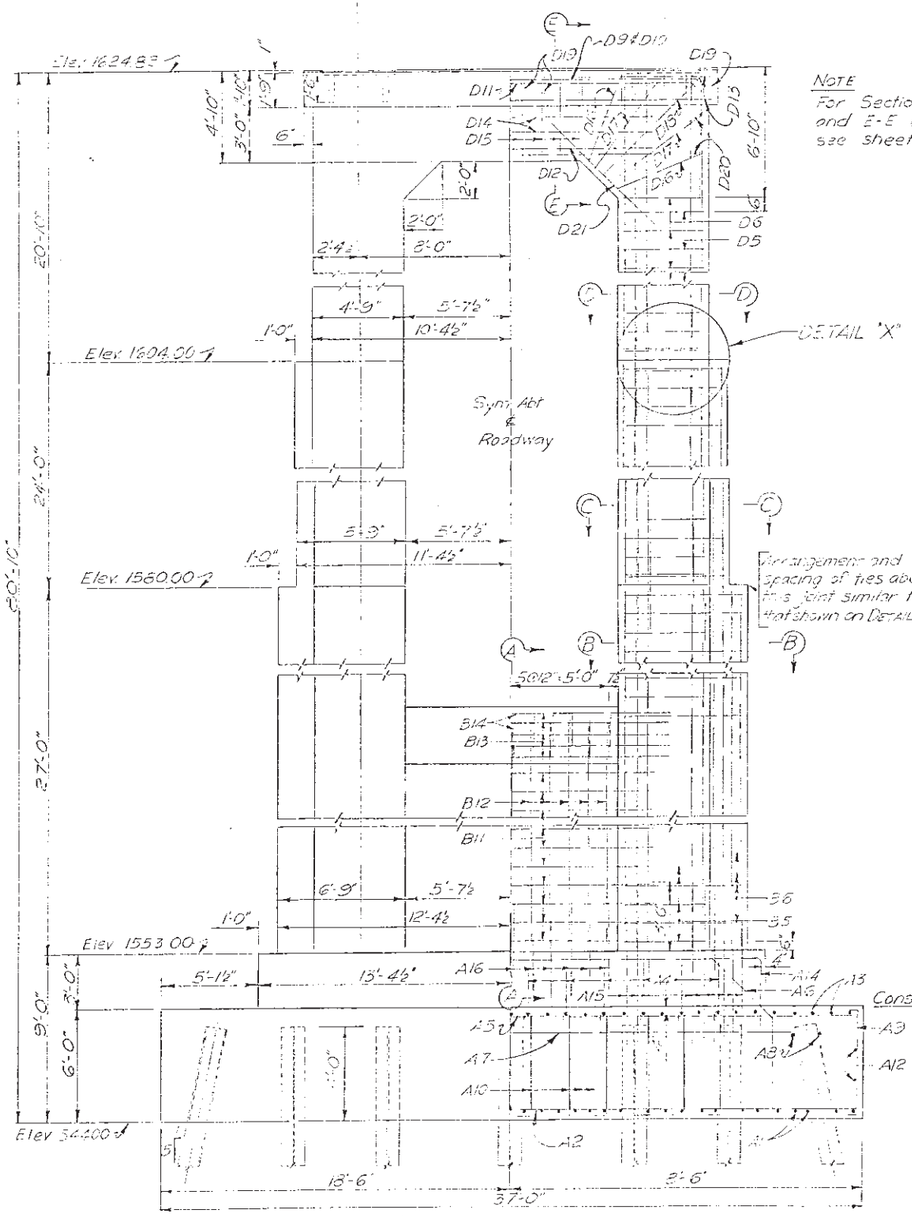

SIDE ELEVATION

NOTE
For Sections B-B, C-C, D-D and E-E and Detail "X" see sheet No. 56

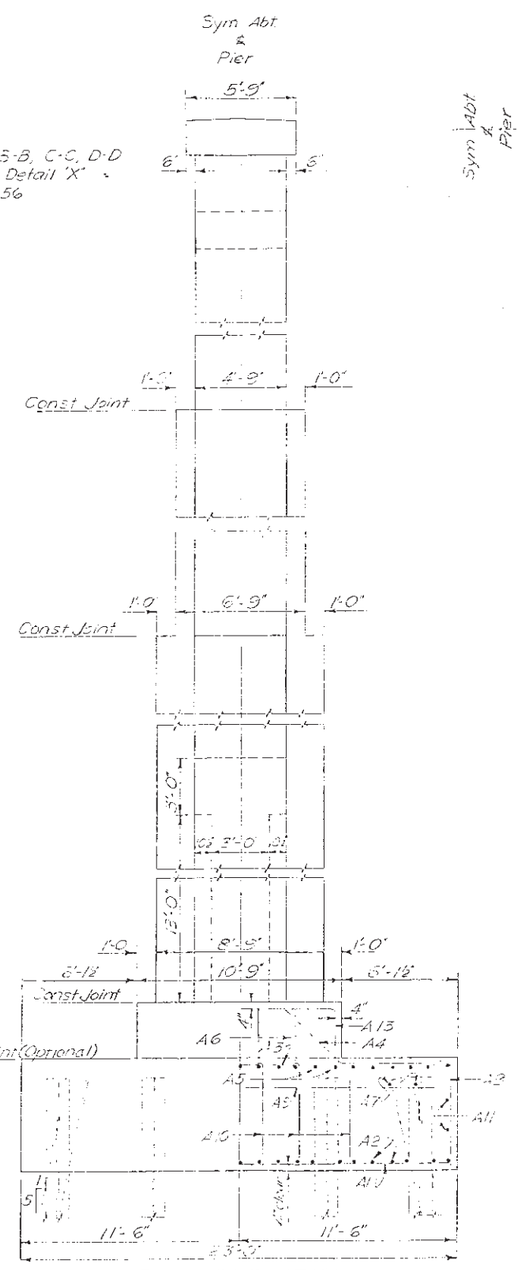

END ELEVATION

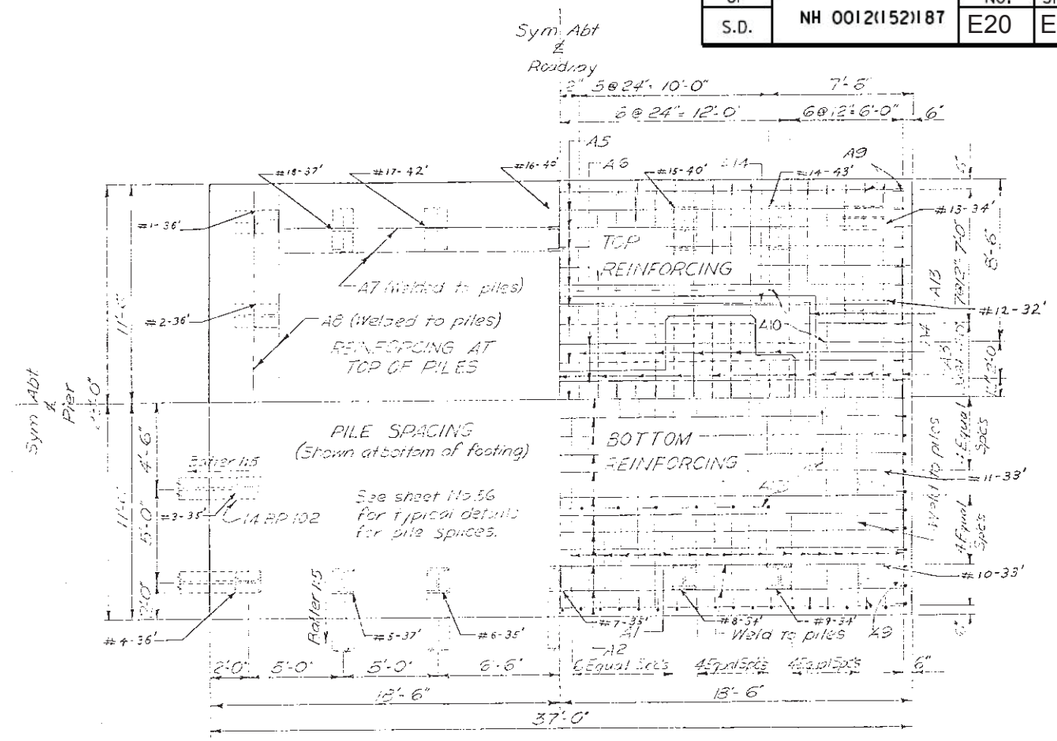

PLAN OF FOOTING
See sheet No. 56 for typical details for welding of re-bars to piles

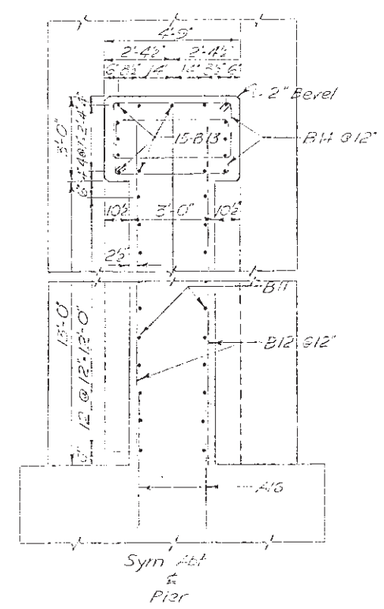

SECTION A-A
(Footing re-steel not shown)

ORIGINAL CONSTRUCTION PLANS

DETAILS OF PIER NO. 6
FOR
5058'-6" BRIDGE OVER OAHE RESERVOIR
26'-0" ROADWAY

STA. 268+01.75 TO 318+60.25 WAR 180(1)
ON US HWY. NO. 12 CORSON-WALWORTH COUNTIES
SOUTH DAKOTA H20-44
DEPARTMENT OF HIGHWAYS
AUG. 1957 (18) OF (40)

DESIGNED BY	DRAWN BY	CHECKED BY	APPROVED
	RJ	E.K.	BRIDGE ENGINEER

STATE OF	PROJECT	SHEET NO.	TOTAL SHEETS
S.D.	NH 0012(152)187	E21	E92

REINFORCING SCHEDULE

Mark	No.	Size	Length	Type	A	B	C	D	E	F	H	K	O
A1	38	11	22'-3"	Str.									
A2	23	11	36'-3"	Str.									
A3	25	6	22'-6"	Str.									
A4	12	6	25'-0"	3A		6'-0"	4'-4½"	4'-3"	4'-4½"	6'-0"	3'-1"		22'-5"
A5	19	6	36'-6"	Str.									
A6	4	6	39'-0"	3A		4'-11"	4'-4½"	20'-5"	4'-4½"	4'-11"	3'-1"		36'-5"
A7	4	8	29'-0"	Str.									
A8	4	8	22'-0"	Str.									
A9	112	6	6'-6"	S10		0'-6"	5'-6"	0'-6"					
A10	32	5	6'-9"	18A	0'-7"	5'-6"	0'-8"						
A11	4	6	36'-6"	Str.									
A12	4	6	22'-6"	Str.									
A13	2	5	18'-0"	17		4'-0"	10'-2"	4'-0"					
A14	2	5	34'-0"	17		4'-0"	26'-2"	4'-0"					
A15	120	11	8'-6"	Str.									
A16	22	8	5'-0"	Str.									
B1	48	11	30'-0"	Str.									
B2	72	11	26'-9"	Str.									
B3	48	11	6'-6"	24		3'-6"	2'-0"	1'-0"			1'-0"	1'-9"	6'-3"
B5	56	6	24'-0"	T1	0'-6"	3'-2"	6'-4"	3'-2"	6'-4"				
B6	56	6	20'-0"	T1	0'-6"	3'-2"	6'-4"	3'-2"	6'-4"				
B7	224	4	2'-3"	T5	0'-6"	1'-4"	0'-5"						
B8	224	4	3'-3"	T5	0'-6"	2'-2"	0'-7"						
B9	112	4	3'-3"	T5	0'-6"	2'-2"	0'-7"						
B10	56	4	2'-3	T5	0'-6"	1'-4"	0'-5"						
B11	26	6	15'-0"	Str.									
B12	22	8	15'-0"	Str.									
B13	15	11	17'-0"	Str.									
B14	22	6	13'-0	T1	0'-6"	4'-0"	2'-0"	4'-0"	2'-0"				
C1	24	11	27'-0"	Str.									
C2	72	11	23'-9"	Str.									
C3	48	11	6'-6"	24		3'-6"	2'-0"	1'-0"			1'-0"	1'-9"	6'-3"
C4	8	11	6'-0"	Str.									
C5	56	6	20'-0"	T1	0'-6"	3'-2"	6'-4"	3'-2"	6'-4"				
C6	56	6	18'-0"	T1	0'-6"	3'-2"	5'-4"	3'-2"	5'-4"				
C7	104	4	2'-3"	T5	0'-6"	1'-4"	0'-5"						
C8	208	4	2'-3"	T5	0'-6"	1'-2"	0'-7"						
C9	104	4	2'-3"	T5	0'-6"	1'-2"	0'-7"						

Mark	No.	Size	Length	Type	A	B	C	D	E	F	H	K	O
D1	12	11	26'-9"	20		6'-6"	20'-6"						
D2	68	11	20'-3"	Str.									
D5	36	6	16'-0"	T1	0'-6"	3'-2"	4'-4"	3'-2"	4'-4"				
D6	36	6	16'-0"	T1	0'-6"	3'-2"	4'-4"	3'-2"	4'-4"				
D7	128	4	2'-3"	T5	0'-6"	1'-4"	0'-5"						
D8	128	4	2'-3"	T5	0'-6"	1'-4"	0'-5"						
D9	6	11	32'-6"	17		6'-5"	20'-2"	6'-5"					
D10	1	11	12'-6"	Str.									
D11	4	11	24'-0"	17		2'-6"	19'-6"	2'-6"					
D12	11	11	15'-0"	Str.									
D13	4	6	21'-3"	Str.									
D14	4	8	15'-0"	Str.									
D15	16	6	12'-6"	S6	0'-6"	4'-4"	2'-9"	4'-4"					
D16	8	6	14'-0"	S6	0'-6"	5'-0"	2'-11"	5'-0"					
D17	8	6	16'-3"	S6	0'-6"	6'-2"	2'-11"	6'-2"					
D18	4	6	19'-0"	S6	0'-6"	7'-7	2'-11"	7'-7"					
D19	14	5	9'-0"	S6	0'-6"	1'-4"	5'-4"	1'-4"					
D20	4	5	6'-0"	S10		0'-10"	4'-4"	0'-10"					
D21	8	11	8'-0"	Str.									

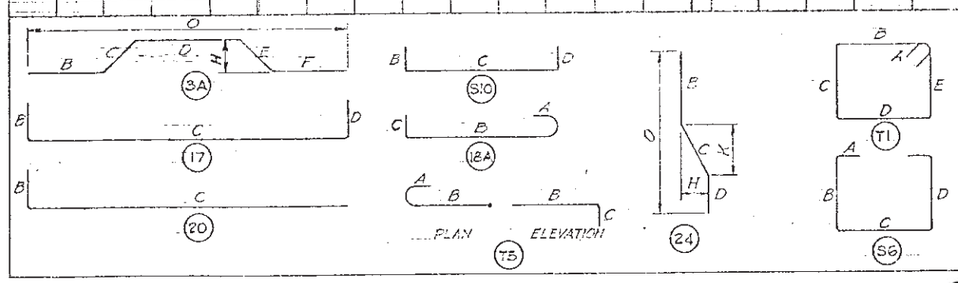

Note - All dimensions are out to out of bar. Figures in circles show types.

ESTIMATED QUANTITIES

ITEM		UNIT	QUANTITIES	
Class "A" Concrete		Cu.Yd.	457.1	
Reinforcing Steel		Lb.	80,630	
Driving Steel	Actual Length	Lin. Ft.	18 @ 30' = 540	18 @ 6.52 = 36.22'
Bearing Piles	For Test Pile	Each	* None	
14 BP 102	For Pile Splices	Each	None	4 Splices
Structure Excavation		Cu.Yd.	160	

*See Sheet No. 51

ORIGINAL CONSTRUCTION PLANS

DETAILS OF PIER NO. 6

FOR

5058'-6" BRIDGE OVER OAHE RESERVOIR

26'-0" ROADWAY

STA. 268+01.75 TO 318+60.25 WAR 180(1)

ON US HWY. NO. 12 CORSON-WALWORTH COUNTIES

SOUTH DAKOTA H20-44

DEPARTMENT OF HIGHWAYS

AUG. 1957 19 OF 40

DESIGNED BY	DRAWN BY	CHECKED BY	APPROVED
	E.K. F.P.K.	A.S.F.	BRIDGE ENGINEER

STATE OF	PROJECT	SHEET NO.	TOTAL SHEETS
S.D.	NH 0012(152)187	E22	E92

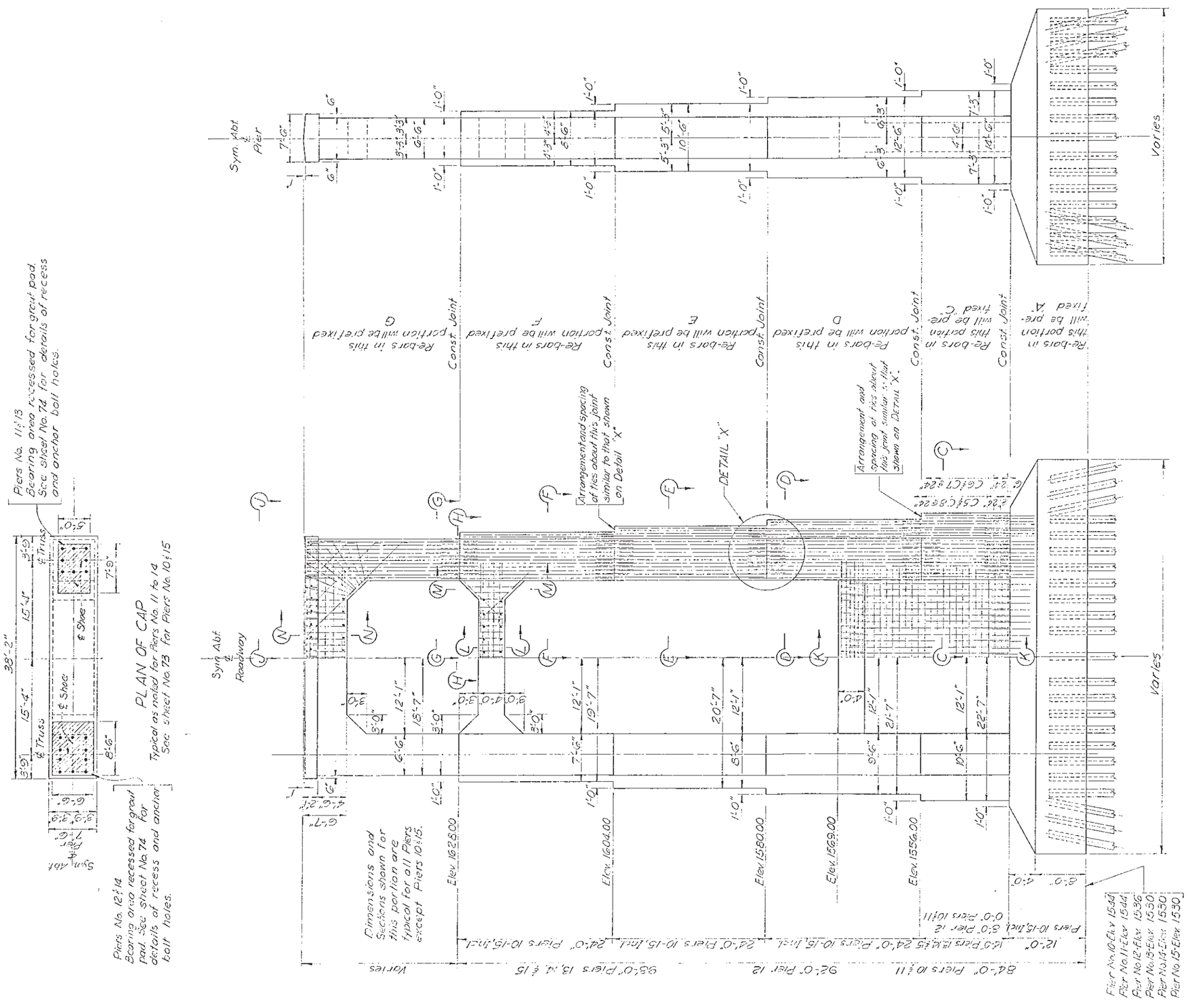

ORIGINAL CONSTRUCTION PLANS

STANDARD DETAILS OF PIERS NOS. 10–15
FOR
5058'-6" BRIDGE OVER OAHE RESERVOIR
26'-0" ROADWAY
STA. 268+01.75 TO 318+60.25 WAR 180(1)
ON US HWY. NO. 12 CORSON-WALWORTH COUNTIES
SOUTH DAKOTA H20-44
DEPARTMENT OF HIGHWAYS
AUG. 1957 (20) OF (40)

DESIGNED BY	DRAWN BY	CHECKED BY	APPROVED
	KCW	ASF	BRIDGE ENGINEER

STATE OF	PROJECT	SHEET NO.	TOTAL SHEETS
S.D.	NH 0012(152)187	E23	E92

Ties D5 & D8 alternate with D6 & D7 at 1'-0" centers.
Ties D9, D10, D11, & D12 in plane with D6 & D7 at 2'-0" centers.

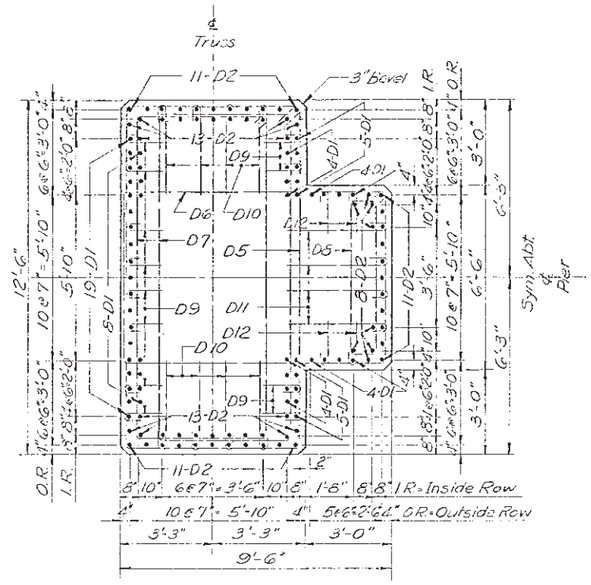

SEC. D-D

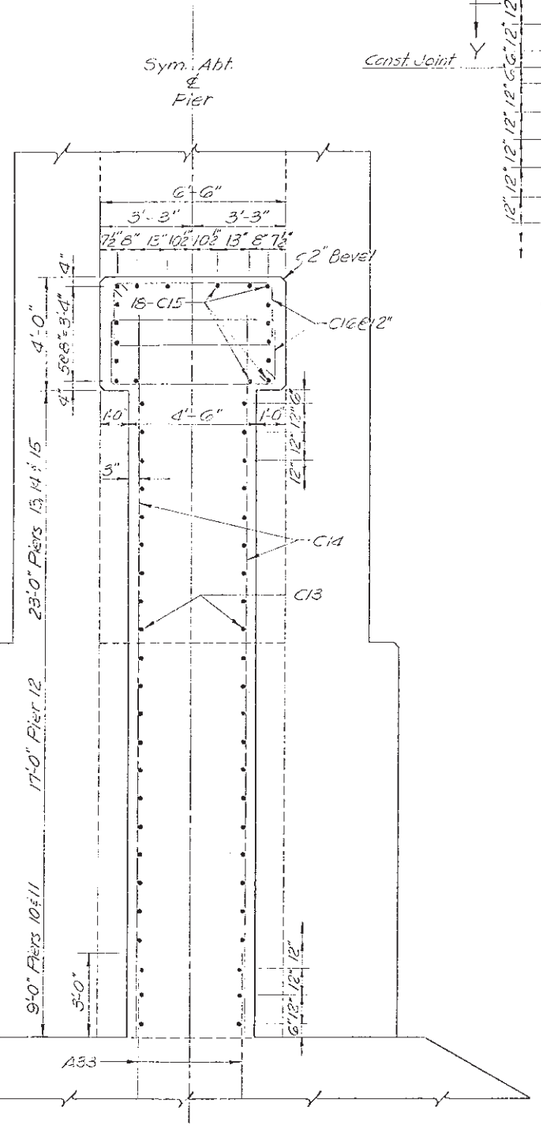

SEC. K-K

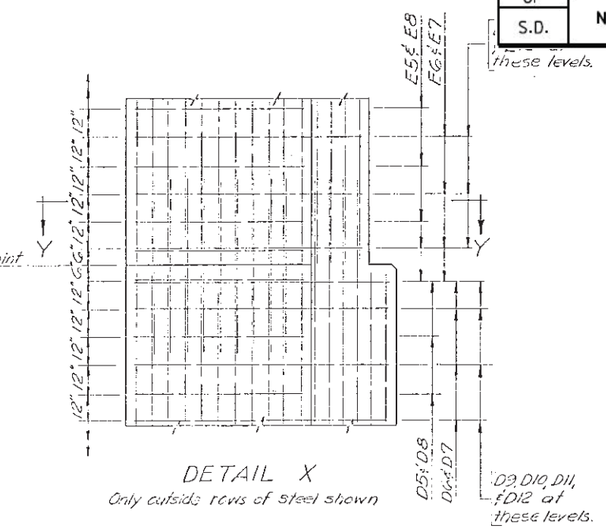

DETAIL X

Only outside rows of steel shown

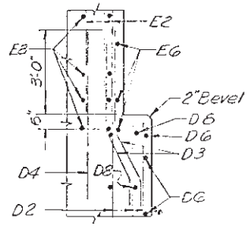

SEC. Z-Z

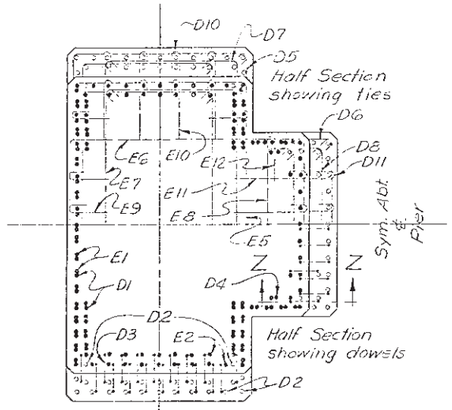

SEC. Y-Y

Ties C5 & C8 alternate with C6 & C7 at 1'-0" centers.
Ties C9, C10, C11, & C12 in plane with C6 & C7 at 2'-0" centers.

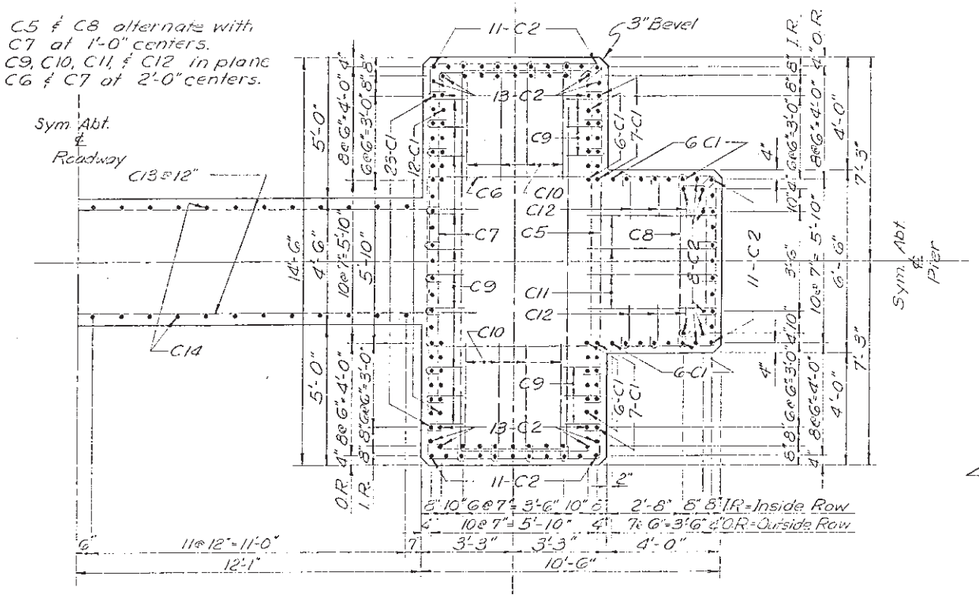

SEC. C-C

ORIGINAL CONSTRUCTION PLANS

STANDARD DETAILS OF PIERS NOS. 10-15
FOR
5058'-6" BRIDGE OVER OAHE RESERVOIR
26'-0" ROADWAY

STA. 268+01.75 TO 318+60.25 WAR 180(1)
ON US HWY. NO. 12 CORSON-WALWORTH COUNTIES
SOUTH DAKOTA H20-44
DEPARTMENT OF HIGHWAYS
AUG. 1957 (21) OF (40)

DESIGNED BY	DRAWN BY	CHECKED BY	APPROVED
	K.C.W.	AS	BRIDGE ENGINEER

STATE OF	PROJECT	SHEET NO.	TOTAL SHEETS
S.D.	NH 0012(152)187	E24	E92

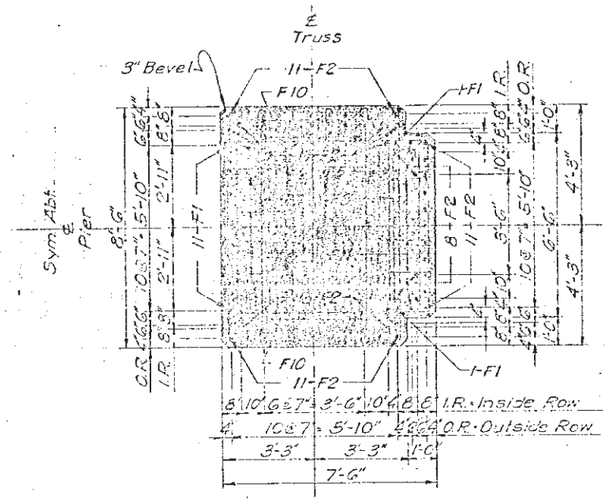

SEC. F-F

Ties F5 & F8 alternate with F6 & F7 at 1'-0" centers.
Ties F9, F10 & F11 in plane with F6 & F7 at 2'-0" centers.

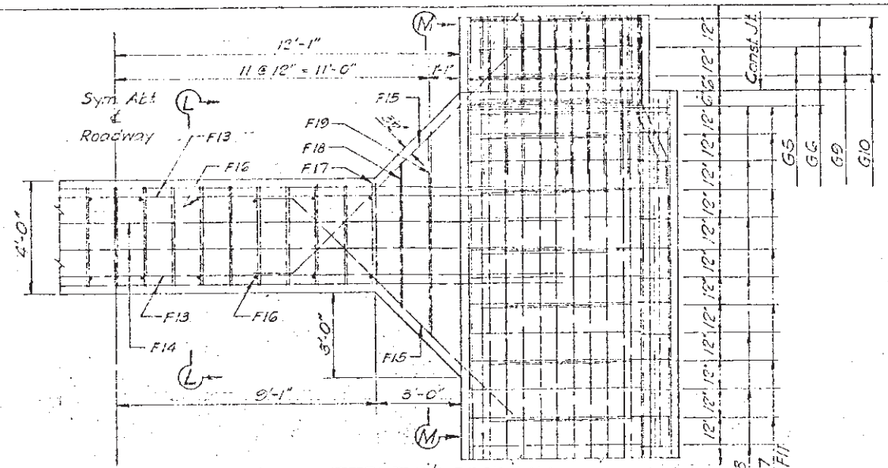

PART ELEV. OF STRUT & COLUMN

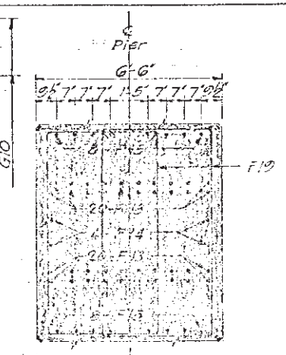

SEC. M-M

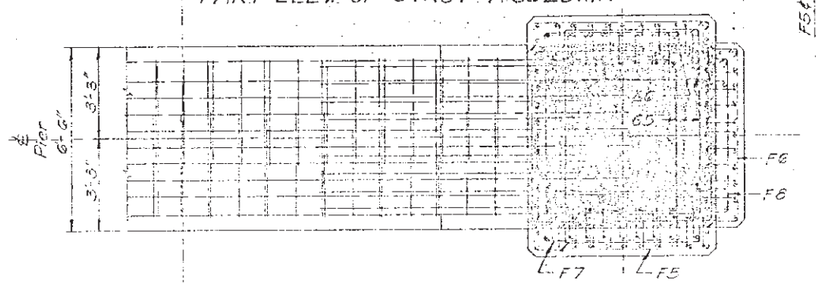

SEC. H-H

Ties F9, F10, F11, G5 & G10 not shown.

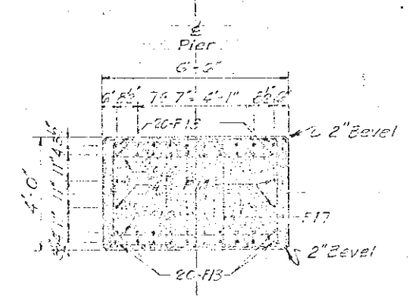

SEC. L-L

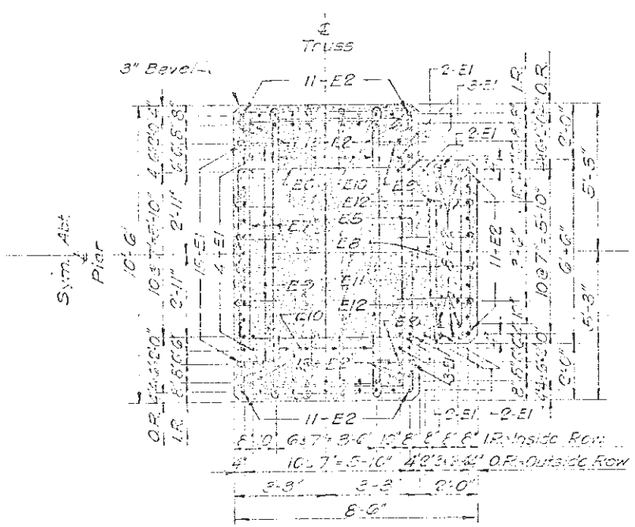

SEC. E-E

Ties E5 & E6 alternate with E3 & E7 at 1'-0" centers.
Ties E9, E10, E11 & E12 in plane with E6 & E7 at 2'-0 centers.

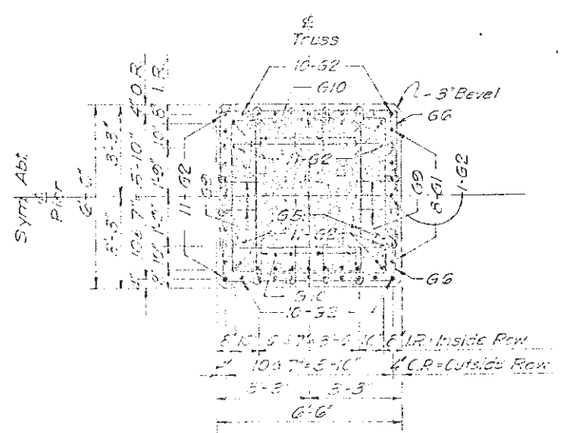

Section typical for Piers Nos. 11 & 13

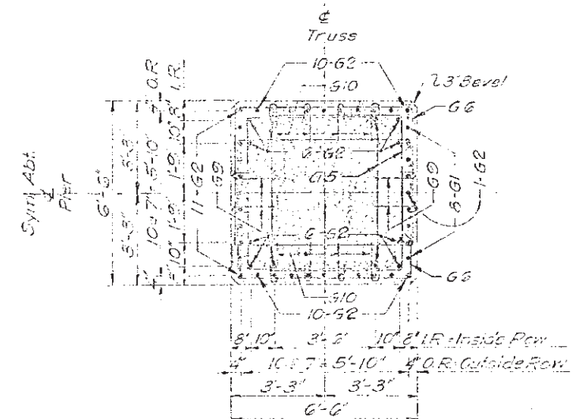

Section typical for Piers Nos. 12 & 14

SEC. G-G

Ties G5 alternate with G6 at 1'-0" centers.
Ties G9 in plane with G5 at 2'-0" centers.
Ties G10 in plane with G6 at 2'-0" centers.

ORIGINAL CONSTRUCTION PLANS

STANDARD DETAILS OF PIERS NOS. 10-15
FOR
5058'-6" BRIDGE OVER OAHE RESERVOIR
26'-0" ROADWAY
STA. 268+01.75 TO 318+60.25 WAR 160(1)
ON US HWY. NO. 12 CORSON-WALWORTH COUNTIES
SOUTH DAKOTA H20-44
DEPARTMENT OF HIGHWAYS
AUG. 1957 22 OF 40

DESIGNED BY	DRAWN BY	CHECKED BY	APPROVED
E.K.	A.S.F.	E.K.	BRIDGE ENGINEER

STATE OF	PROJECT	SHEET NO.	TOTAL SHEETS
S.D.	NH 0012(152)187	E25	E92

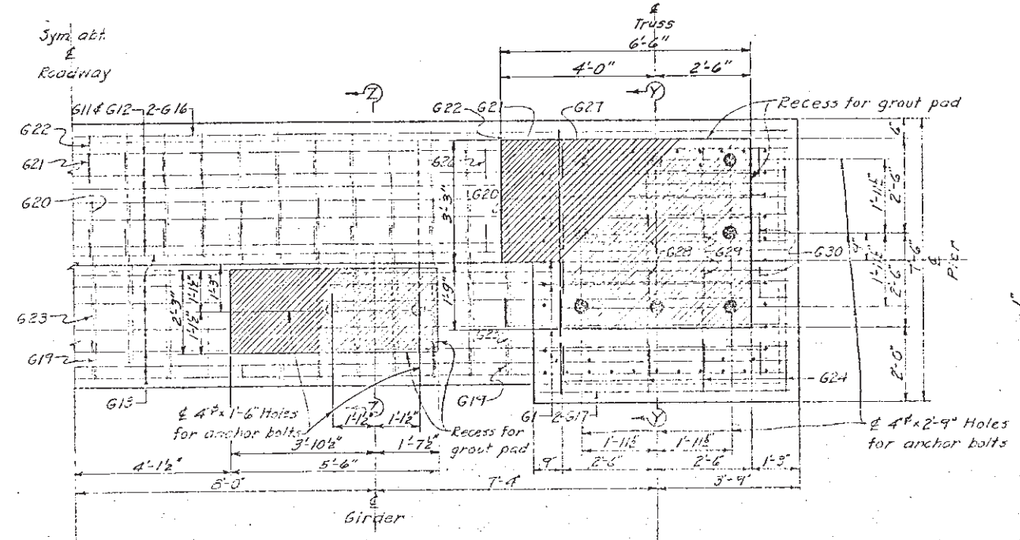

VIEW J-J
Pier No.10 shown, No.15 opp. hand.

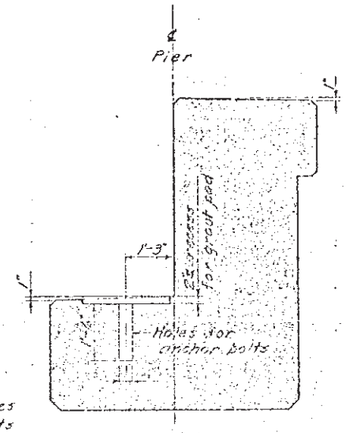

SEC. Z-Z

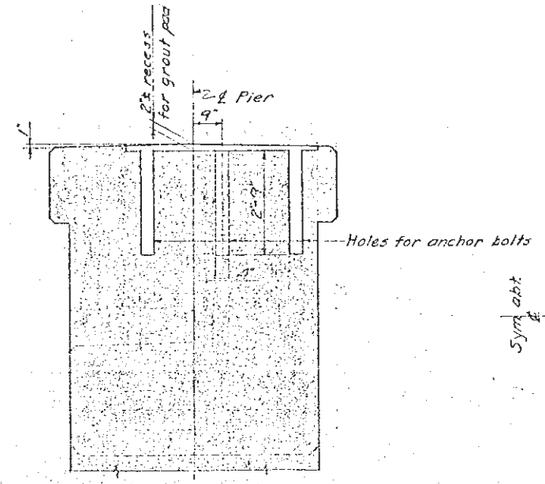

SEC. Y-Y

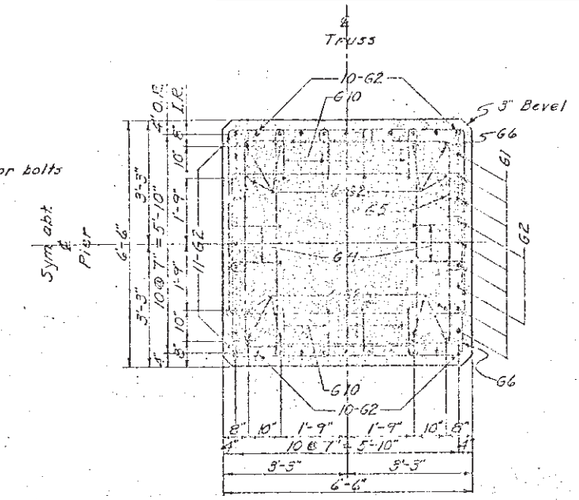

SEC. G-G
Ties G5 alternate with G6 at 1'-0" centers.
Ties G9 in plane with G5 at 2'-0" centers.
Ties G10 in plane with G6 at 2'-0" centers.

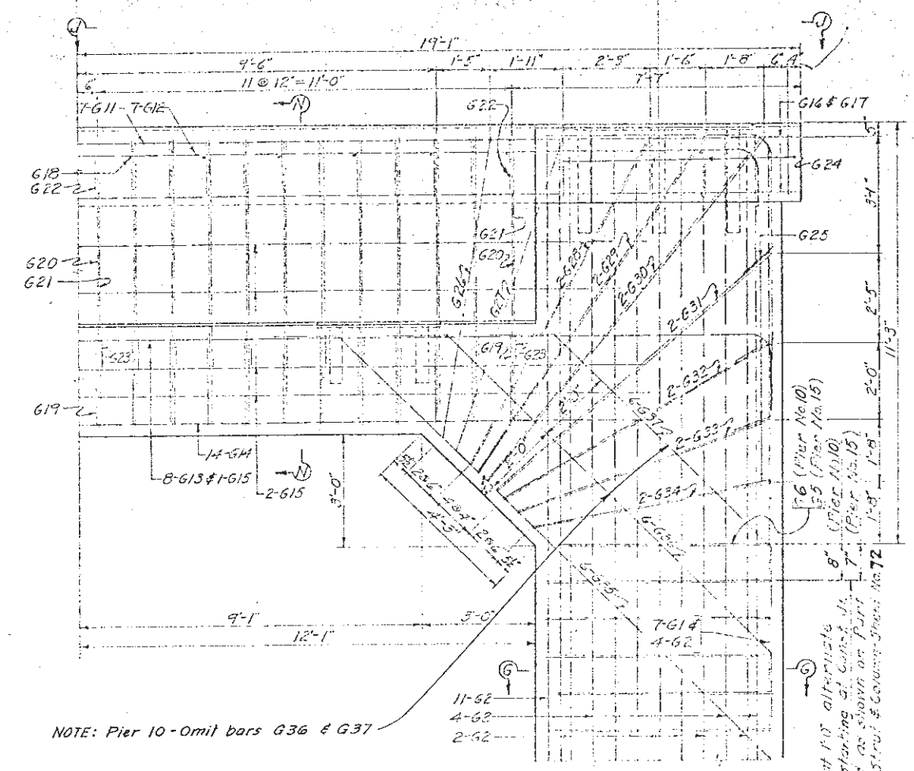

NORTH ELEV. OF CAP
Pier No.10 shown, No.15 opp. hand.

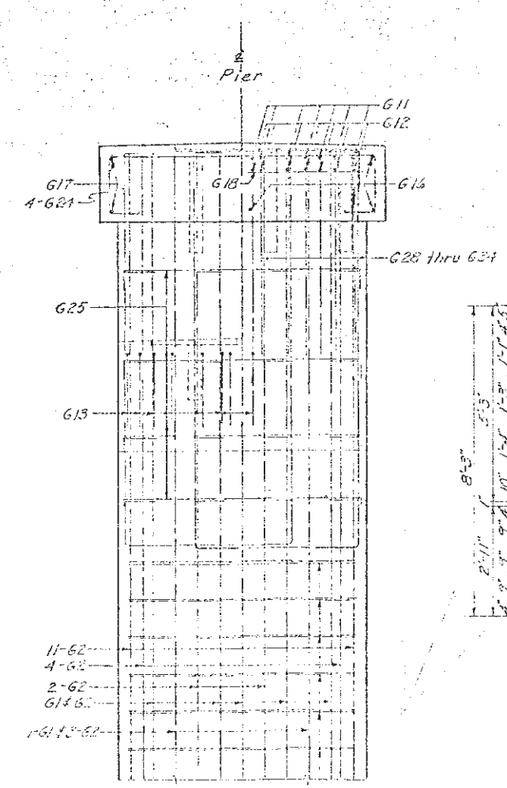

END ELEV. OF CAP
Pier No.10 shown, No.15 opp. hand.

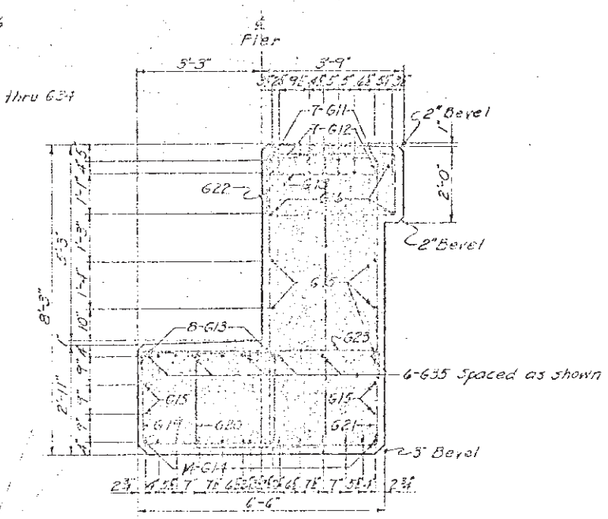

SEC. N-N

ORIGINAL CONSTRUCTION PLANS

STANDARD DETAILS OF PIERS NO. 10 & 15
FOR
5058'-6" BRIDGE OVER OAHE RESERVOIR
26'-0" ROADWAY
STA. 268+01.75 TO 318+60.25 WAR 180(1)
ON US HWY. NO. 12 CORSON-WALWORTH COUNTIES
SOUTH DAKOTA H20-44
DEPARTMENT OF HIGHWAYS
AUG. 1957 (23) OF (40)

DESIGNED BY	DRAWN BY	CHECKED BY	APPROVED
			BRIDGE ENGINEER

STATE OF	PROJECT	SHEET NO.	TOTAL SHEETS
S.D.	NH 0012(152)187	E26	E92

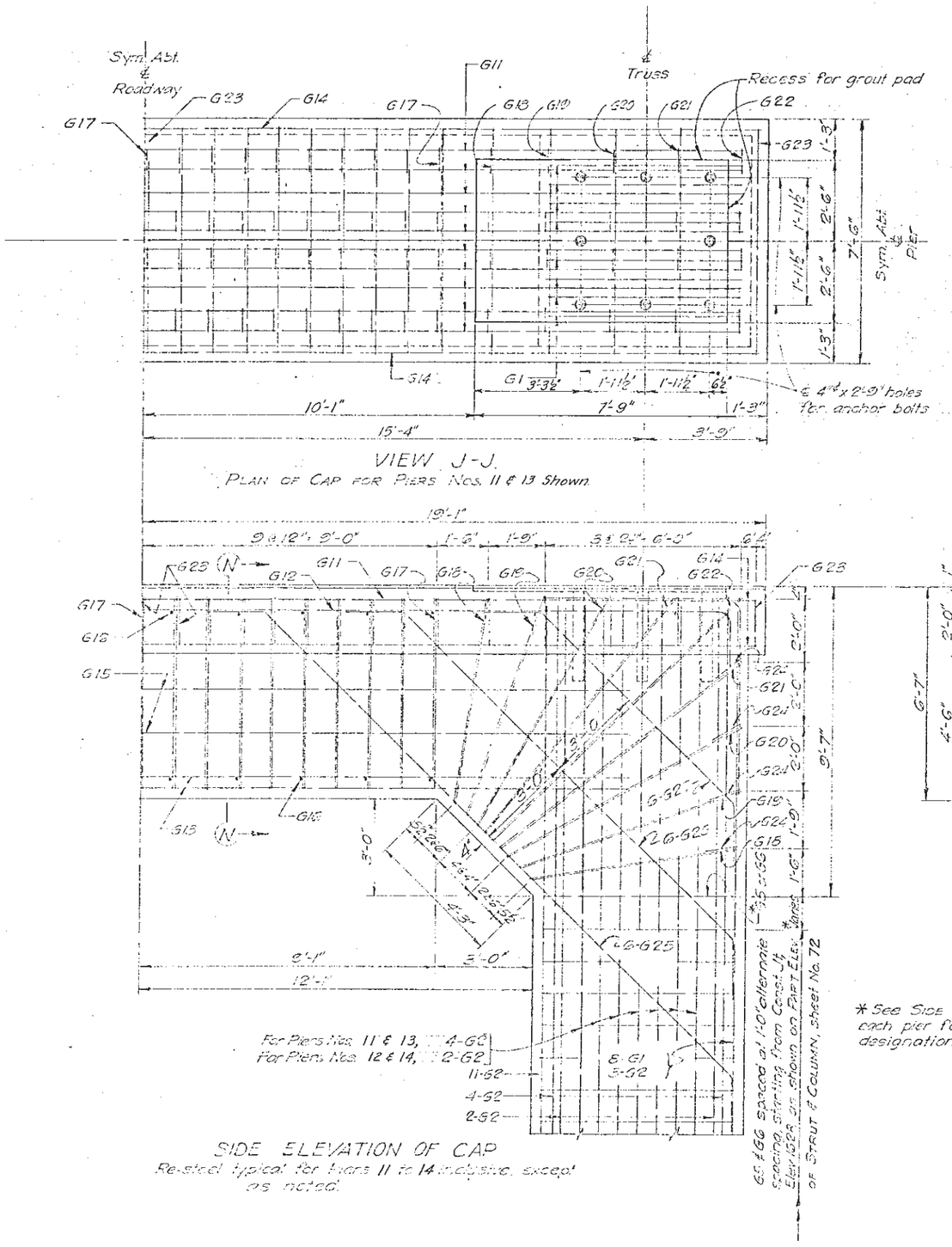

VIEW J-J.
PLAN OF CAP FOR PIERS Nos. 11 & 13 Shown.

SIDE ELEVATION OF CAP
Re-steel typical for Piers 11 to 14 inclusive, except as noted.

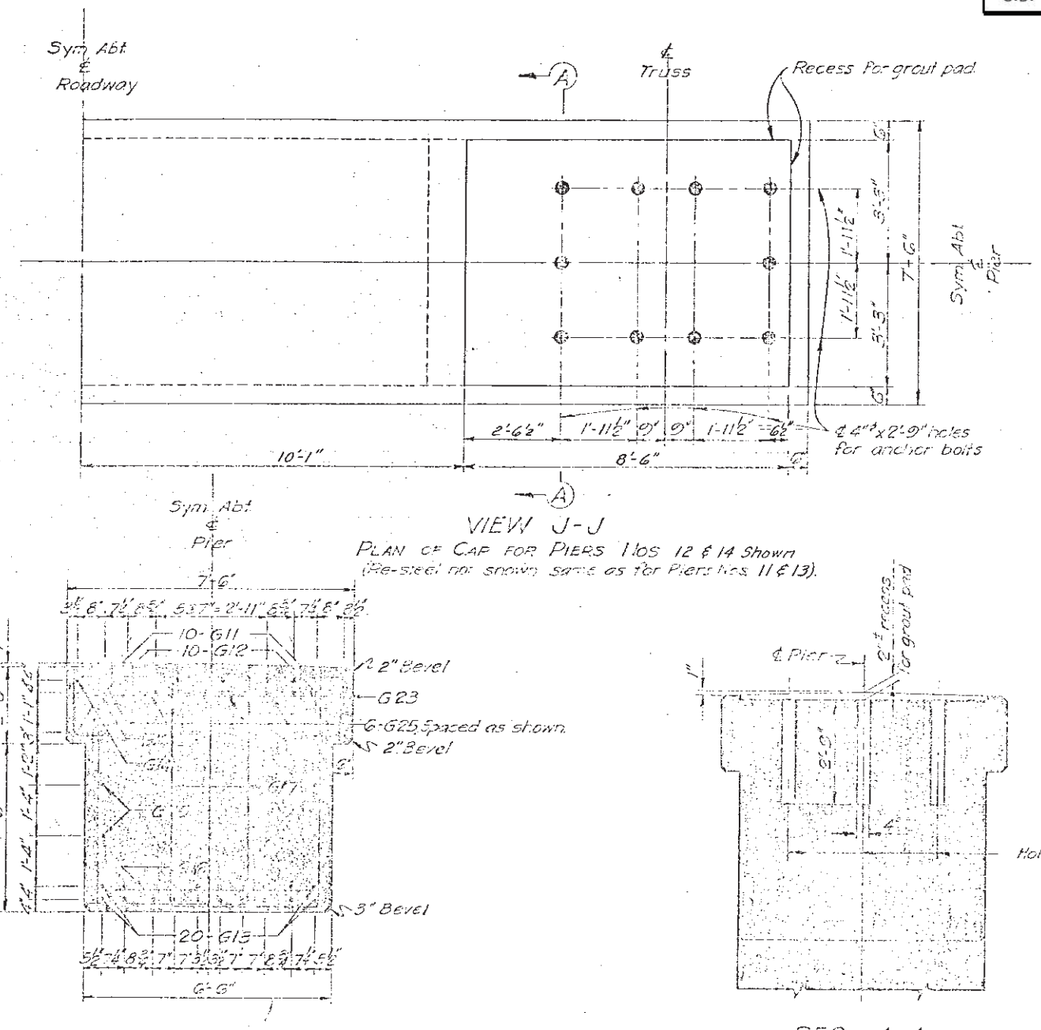

VIEW J-J
PLAN OF CAP FOR PIERS Nos. 12 & 14 Shown
(Re-steel not shown, same as for Piers Nos. 11 & 13).

SEC. N-N

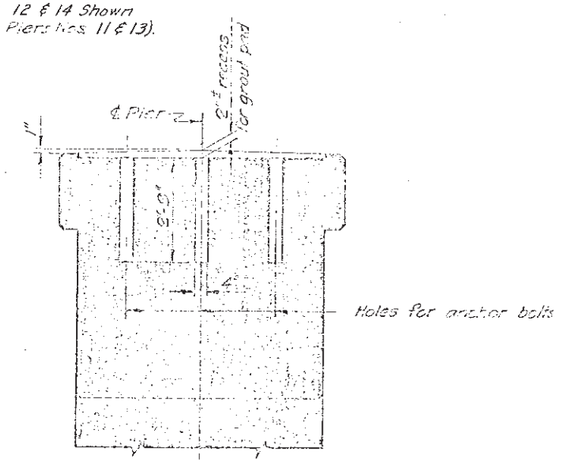

SEC. A-A

* See Side Elevation drawing of each pier for spacing and bar designation at this location.

ORIGINAL CONSTRUCTION PLANS

STANDARD DETAILS OF PIERS NOS. 11-14
FOR
5056'-6" BRIDGE OVER OAHE RESERVOIR
26'-0" ROADWAY
STA. 268+01.75 TO 318+60.25 WAR 100(1)
ON US HWY. NO. 12 CORSON-WALWORTH COUNTIES
SOUTH DAKOTA R20-44
DEPARTMENT OF HIGHWAYS
AUG. 1957 (24) OF (40)

DESIGNED BY	DRAWN BY	CHECKED BY	APPROVED
E.K.	[illegible]	E.K.	R. Kaun, LINE OF ENGINEER

STATE OF	PROJECT	SHEET NO.	TOTAL SHEETS
S.D.	NH 0012(152)187	E27	E92

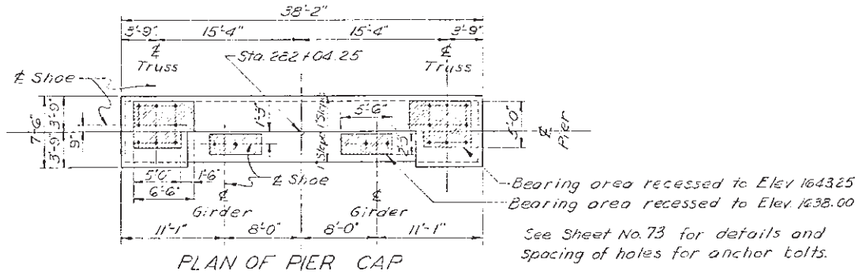

See Sheet No. 73 for details and spacing of holes for anchor bolts.

PLAN OF PIER CAP

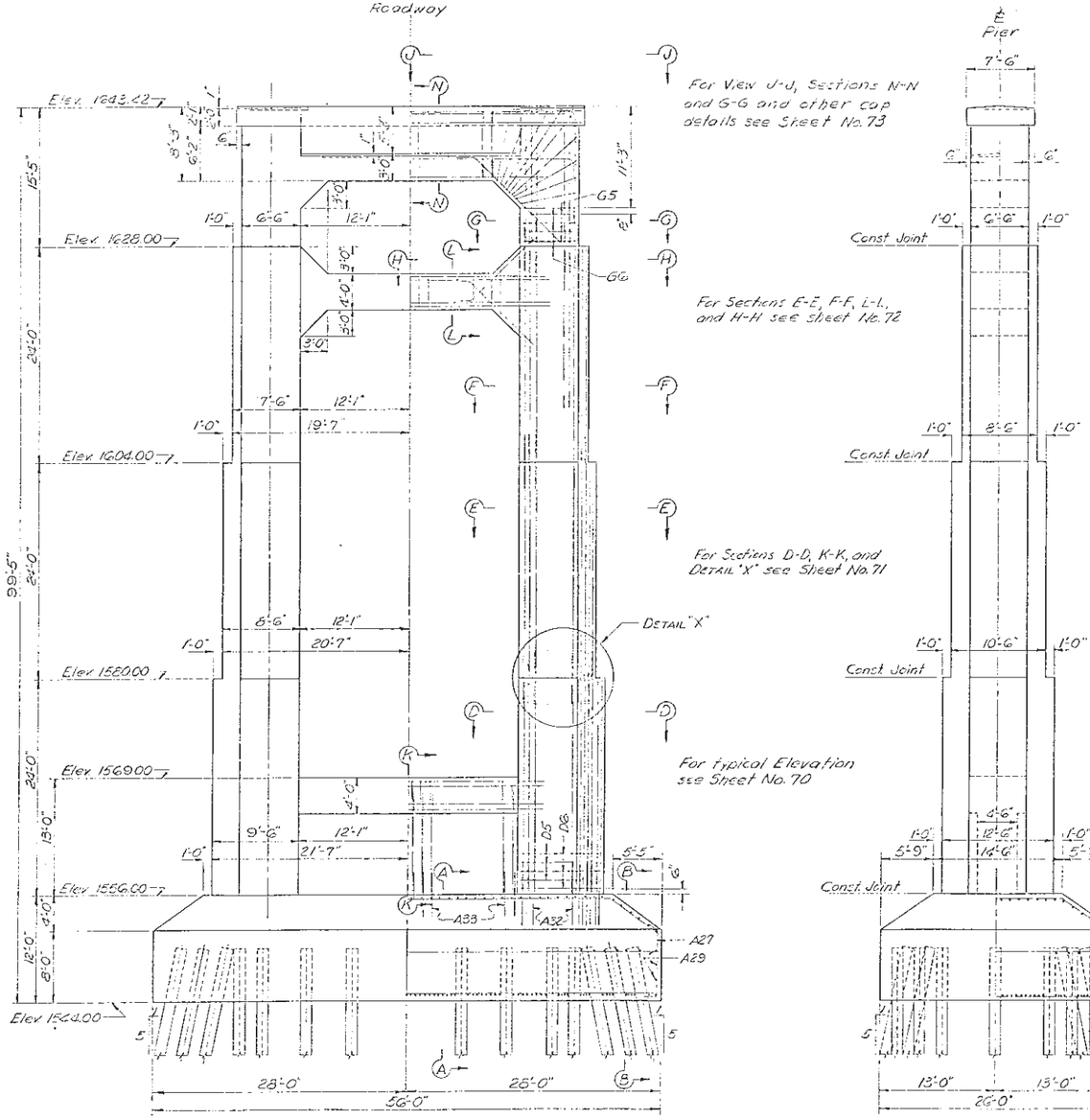

SIDE ELEVATION

END ELEVATION

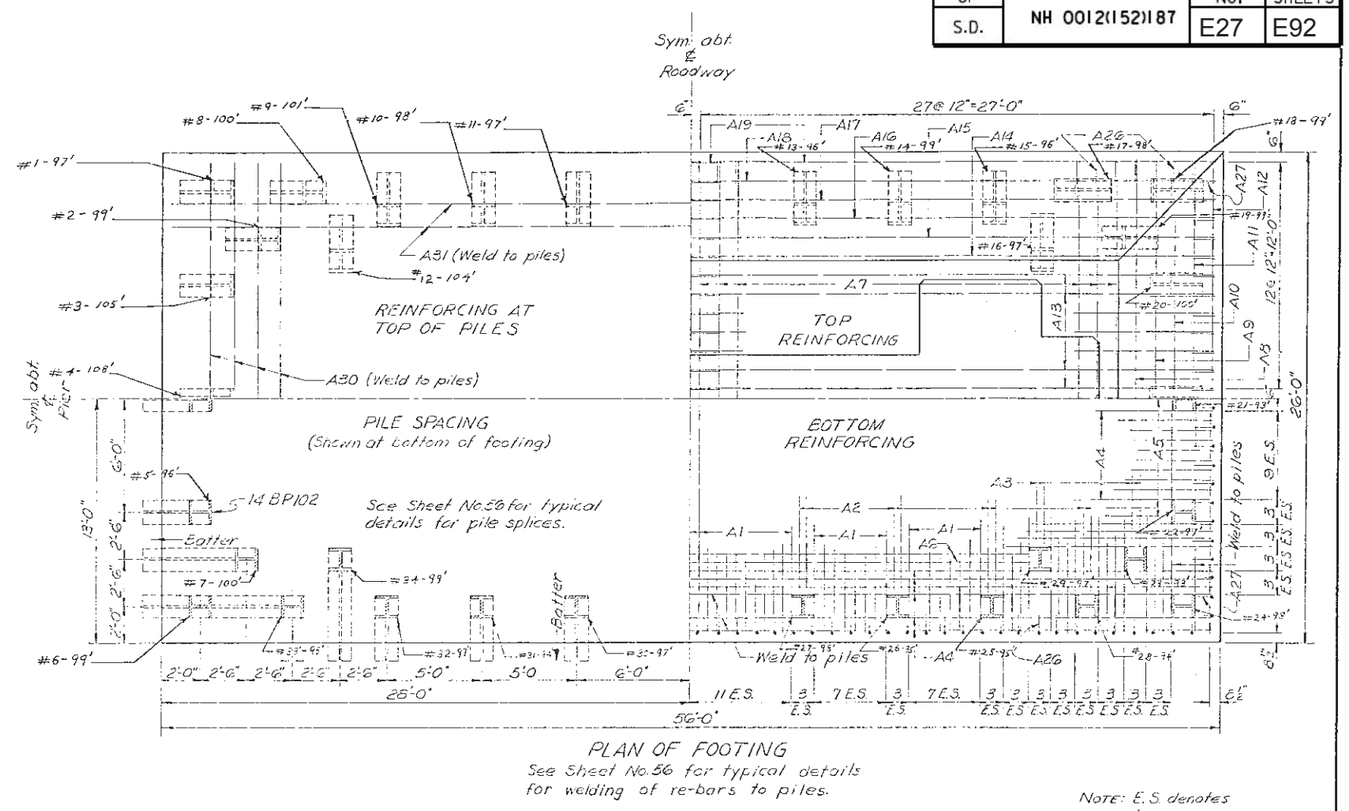

PLAN OF FOOTING

See Sheet No. 56 for typical details for welding of re-bars to piles.

Note: E.S. denotes equal spaces.

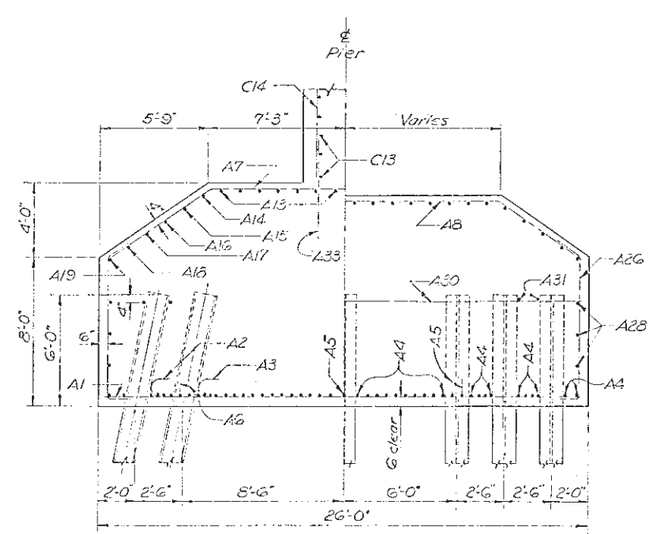

HALF SEC. A-A

HALF SEC. B-B

ORIGINAL CONSTRUCTION PLANS

DETAILS OF PIER NO. 10

FOR

5058'-6" BRIDGE OVER OAHE RESERVOIR

26'-0" ROADWAY

STA. 268+01.75 TO 318+60.25 WAR 180(1)

ON US HWY. NO. 12 CORSON-WALWORTH COUNTIES

SOUTH DAKOTA H20-44

DEPARTMENT OF HIGHWAYS

AUG. 1957 (25) OF (40)

DESIGNED BY	DRAWN BY	CHECKED BY	APPROVED
	K.C.N.	ASF	BRIDGE ENGINEER

STATE OF	PROJECT	SHEET NO.	TOTAL SHEETS
S.D.	NH 0012(152)187	E28	E92

REINFORCING - SCHEDULE

Mark	No.	Size	Length	Type	A	B	C	D	E	H	K	O
A1	91	9	25'-0"	Str.								
A2	16	1	22'-3"	1	1'-1"	20'-1"						
A3	8		17'-3"	1	1'-1"	15'-1"						
A4	40		55'-0"	Str.								
A5	5		52'-3"	1	1'-1"	50'-1"						
A6	4	9	47'-3"	1	1'-1"	45'-1"						
A7	46	7	28'-0"	22		6'-10"	14'-4"	6'-10"		3'-11"	5'-7"	25'-6"
A8	2	1	27'-6"	22		5'-8"	16'-2"	5'-8"		3'-3"	4'-8"	25'-6"
A9	2		27'-0"	22		4'-4"	18'-4"	4'-4"		2'-6"	3'-7"	25'-6"
A10	2		26'-6"	22		3'-0"	20'-6"	3'-0"		1'-9"	2'-6"	25'-6"
A11	2		26'-0"	22		1'-9"	22'-6"	1'-9"		1'-0"	1'-5"	25'-4"
A12	2		25'-6"	22		0'-6"	24'-6"	0'-6"		0'-3½"	0'-5"	25'-4"
A13	28		30'-6"	19		6'-6"	24'-0"			3'-11"	5'-3"	29'-3"
A14	4		30'-6"	19		6'-2"	24'-4"			3'-8"	5'-0"	29'-4"
A15	4		30'-3"	19		5'-0"	25'-3"			3'-0"	4'-0"	29'-3"
A16	4		30'-0"	19		3'-10"	26'-2"			2'-4"	3'-1"	29'-3"
A17	4		29'-9"	19		2'-8"	27'-1"			1'-7"	2'-2"	29'-3"
A18	4		29'-6"	19		1'-6"	28'-0"			0'-11"	1'-2"	29'-2"
A19	4	7	29'-3"	19		0'-4"	28'-11"			0'-2"	0'-3"	29'-2"
A26	108	5	9'-3"	23		1'-0"	7'-2"	1'-3"		1'-0½"	0'-8½"	7'-10½"
A27	48	5	9'-3"	23		1'-0"	7'-2"	1'-3"		1'-0"	0'-9"	7'-11"
A28	6	5	55'-0"	Str.								
A29	6	5	25'-0"	Str.								
A30	8	8	24'-0"	Str.								
A31	4	8	54'-0"	Str.								
A32	240	10	7'-0"	Str.								
A33	48	9	6'-0"	Str.								
C13	18	6	28'-0"	Str.								
C14	48	9	12'-0"	Str.								
C15	18	10	30'-0"	Str.								
C16	48	6	16'-6"	T1	0'-6"	5'-6"	2'-3"	5'-6"	2'-3"			
D1	106	10	27'-0"	Str.								
D2	134	10	23'-9"	Str.								
D3	98	10	6'-6"	24		3'-6"	2'-0"	1'-0"		1'-0"	1'-9"	6'-3"
D4	4	10	6'-0"	Str.								
D5	24	5	37'-0"	T1	0'-5"	12'-0½"	6'-0½"	12'-0½"	6'-0½"			
D6	26	5	31'-0"	T1	0'-5"	9'-0½"	6'-0½"	9'-0½"	6'-0½"			
D7	52	5	32'-9"	T1	0'-5"	11'-4½"	4'-6½"	11'-4½"	4'-6½"			
D8	24	4	13'-3"	T1	0'-4½"	5'-4½"	0'-10½"	5'-4½"	0'-10½"			
D9	312	4	2'-3"	T5	0'-6"	1'-3"	0'-6"					
D10	208	4	4'-3"	T5	0'-6"	3'-3"	0'-6"					
D11	104	4	4'-6"	T5	0'-6"	3'-6"	0'-6"					
D12	104	4	2'-3"	T5	0'-6"	1'-3"	0'-6"					
E1	66	10	27'-0"	Str.								
E2	134	10	23'-9"	Str.								
E3	98	10	6'-6"	24		3'-6"	2'-0"	1'-0"		1'-0"	1'-9"	6'-3"
E4	4	10	6'-0"	Str.								
E5	28	5	33'-0"	T1	0'-5"	10'-0½"	6'-0½"	10'-0½"	6'-0½"			
E6	28	5	29'-0"	T1	0'-5"	8'-0½"	6'-0½"	8'-0½"	6'-0½"			
E7	56	5	28'-9"	T1	0'-5"	9'-4½"	4'-6½"	9'-4½"	4'-6½"			
E8	28	4	13'-3"	T1	0'-4½"	5'-4½"	0'-10½"	5'-4½"	0'-10½"			
E9	208	4	2'-3"	T5	0'-6"	1'-3"	0'-6"					
E10	208	4	3'-3"	T5	0'-6"	2'-3"	0'-6"					
E11	104	4	3'-6"	T5	0'-6"	2'-6"	0'-6"					
E12	52	4	2'-3"	T5	0'-6"	1'-3"	0'-6"					

Mark	No.	Size	Length	Type	A	B	C	D	E	H	K	O
F1	26	10	27'-0"	Str.								
F2	134	10	23'-9"	Str.								
F3	98	10	6'-6"	24		3'-6"	2'-0"	1'-0"		1'-0"	1'-9"	6'-3"
F5	28	5	29'-0"	T1	0'-5"	8'-0½"	6'-0½"	8'-0½"	6'-0½"			
F6	28	5	27'-0"	T1	0'-5"	7'-0½"	6'-0½"	7'-0½"	6'-0½"			
F7	56	5	24'-9"	T1	0'-5"	7'-4½"	4'-6½"	7'-4½"	4'-6½"			
F8	28	4	13'-3"	T1	0'-4½"	5'-4½"	0'-10½"	5'-4½"	0'-10½"			
F9	104	4	2'-3"	T5	0'-6"	1'-3"	0'-6"					
F10	208	4	2'-3"	T5	0'-6"	1'-3"	0'-6"					
F11	104	4	2'-6"	T5	0'-6"	1'-6"	0'-6"					
F13	40	10	30'-0"	Str.								
F14	4	8	30'-0"	Str.								
F15	32	8	12'-0"	19		1'-0"	11'-0"			0'-9"	0'-9"	11'-9"
F16	20	5	6'-0"	Str.								
F17	38	6	16'-0"	T1	0'-6"	3'-10"	3'-8"	3'-10"	3'-8"			
F18	4	6	19'-6"	T1	0'-6"	3'-10"	5'-5"	3'-10"	5'-5"			
F19	4	6	23'-6"	T1	0'-6"	3'-10"	7'-5"	3'-10"	7'-5"			
G1	14	10	20'-9"	20		6'-0"	15'-0"					
G2	90	10	14'-9"	Str.								
G5	16	5	20'-6"	T1	0'-5"	5'-4½"	4'-6½"	5'-4½"	4'-6½"			
G6	16	5	22'-6"	T1	0'-5"	6'-0½"	4'-10½"	6'-0½"	4'-10½"			
G9	24	4	2'-3"	T5	0'-6"	1'-3"	0'-6"					
G10	48	4	2'-3"	T5	0'-6"	1'-3"	0'-6"					
G11	7	10	48'-0"	17		6'-0"	36'-6"	6'-0"				
G12	7	10	40'-0"	17		2'-4"	35'-10"	2'-4"				
G13	8	10	40'-0"	17		2'-0"	36'-6"	2'-0"				
G14	14	10	30'-0"	Str.								
G15	9	8	28'-0"	Str.								
G16	3	6	37'-6"	Str.								
G17	4	6	6'-6"	Str.								
G18	14	5	3'-0"	Str.								
G19	24	1	9'-0"	56	0'-6"	2'-5"	3'-6"	2'-5"				
G20	24		14'-3"	56	0'-6"	2'-5"	3'-6"	7'-9"				
G21	24		19'-0"	56	0'-5"	7'-9"	3'-0"	7'-9"				
G22	24		7'-0"	56	0'-5"	1'-7"	3'-4"	1'-7"				
G23	24		7'-9"	17		0'-10"	6'-3"	0'-10"				
G24	8		11'-3"	56	0'-8"	1'-7"	7'-7"	1'-7"				
G25	8		8'-3"	17		1'-1"	6'-3"	1'-1"				
G26	2		20'-6"	56	0'-9"	8'-2"	3'-0"	8'-2"				
G27	2		22'-0"		0'-10"	8'-10"	3'-0"	8'-10"				
G28	4		25'-6"		0'-8"	10'-0"	4'-6"	10'-0"				
G29	4		27'-0"		0'-8"	10'-9"	4'-6"	10'-9"				
G30	4		29'-0"		0'-8"	11'-9"	4'-6"	11'-9"				
G31	4		25'-0"		0'-8"	9'-9"	4'-6"	9'-9"				
G32	4		22'-0"		0'-8"	8'-3"	4'-6"	8'-3"				
G33	4		20'-0"		0'-9"	7'-2"	4'-6"	7'-2"				
G34	4	5	18'-6"	56	0'-9"	6'-5"	4'-6"	6'-5"				
G35	12	10	19'-6"	22		1'-9"	16'-0"	1'-9"		1'-3"	1'-3"	18'-6"
G36	12	6	15'-6"	22		1'-9"	12'-0"	1'-9"		1'-3"	1'-3"	14'-6"
G37	12	6	11'-6"	22		1'-9"	8'-0"	1'-9"		1'-3"	1'-3"	10'-6"

Bar Bends

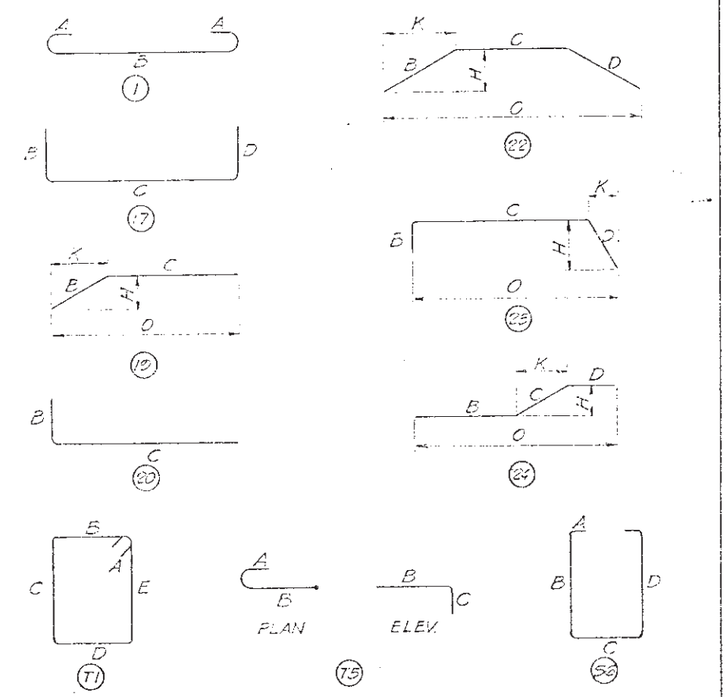

All dimensions are out to out of bar.
Figures in circles show types.

ESTIMATED QUANTITIES

Item	Unit	Quantities
Class "A" Concrete	Cu.Yd.	1890
Reinforcing Steel	Lb.	155,160
Driving Steel Adjustment	Lin. Ft.	34 @ 95 = 3230
Bearing Piles Test Pile	Each	One
14 BP 102 Pile Splices	Each	34
Structure Excavation	Cu.Yd.	160

Lgth in place, 348336 = 9'-12"

53 Splices

*See Sheet No. 51

ORIGINAL CONSTRUCTION PLANS

DETAILS OF PIER NO. 10

FOR

5058'-6" BRIDGE OVER OAHE RESERVOIR

26'-0" ROADWAY

STA. 268+01.75 TO 318+60.25 WAR 180(1)

ON U S HWY. NO. 12 CORSON-WALWORTH COUNTIES

SOUTH DAKOTA H20-44

DEPARTMENT OF HIGHWAYS

AUG. 1957 26 OF 40

DESIGNED BY	DRAWN BY	CHECKED BY	APPROVED
	G.S. 11-21-57	E.K.	K. R. Kurr, BRIDGE ENGINEER

STATE OF	PROJECT	SHEET NO.	TOTAL SHEETS
S.D.	NH 0012(152)187	E29	E92

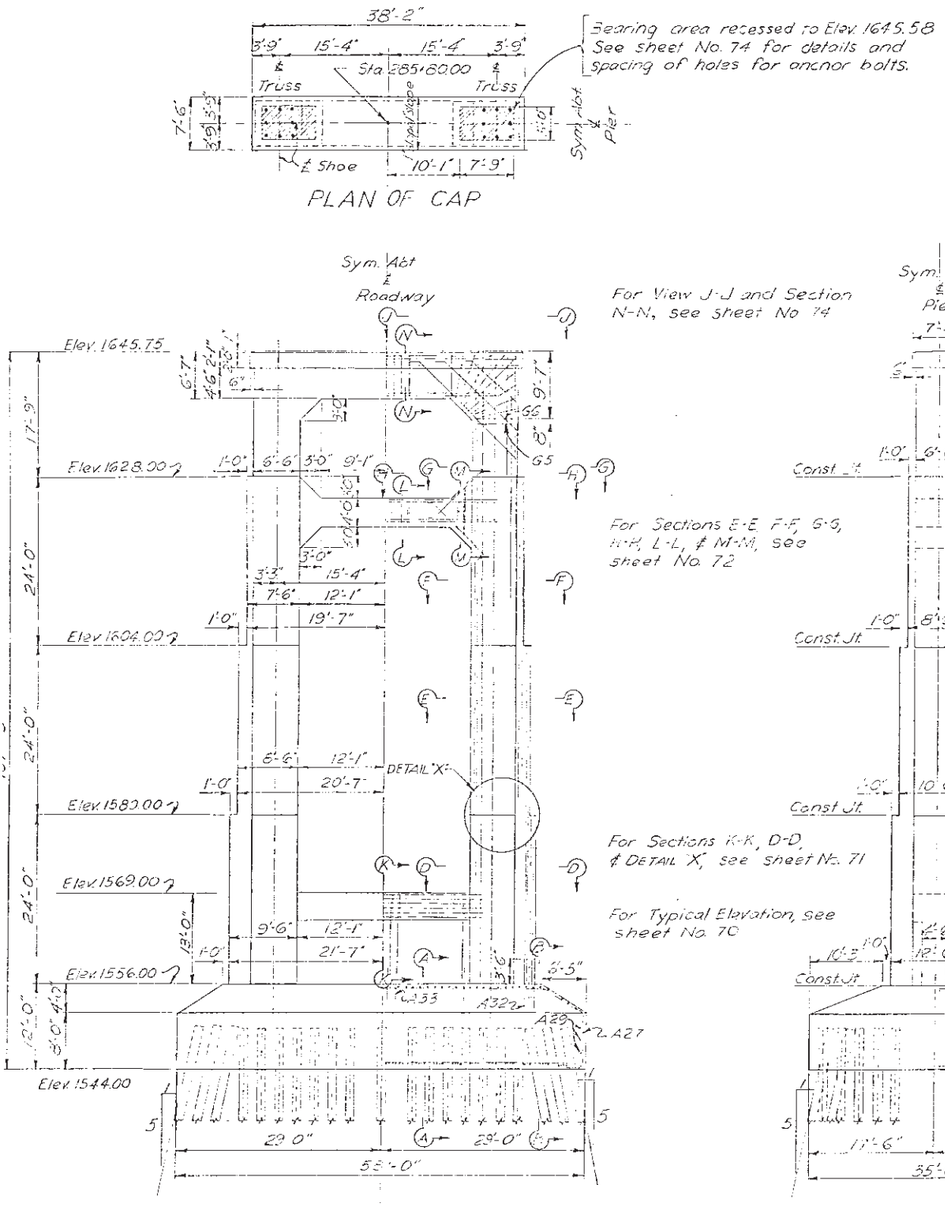

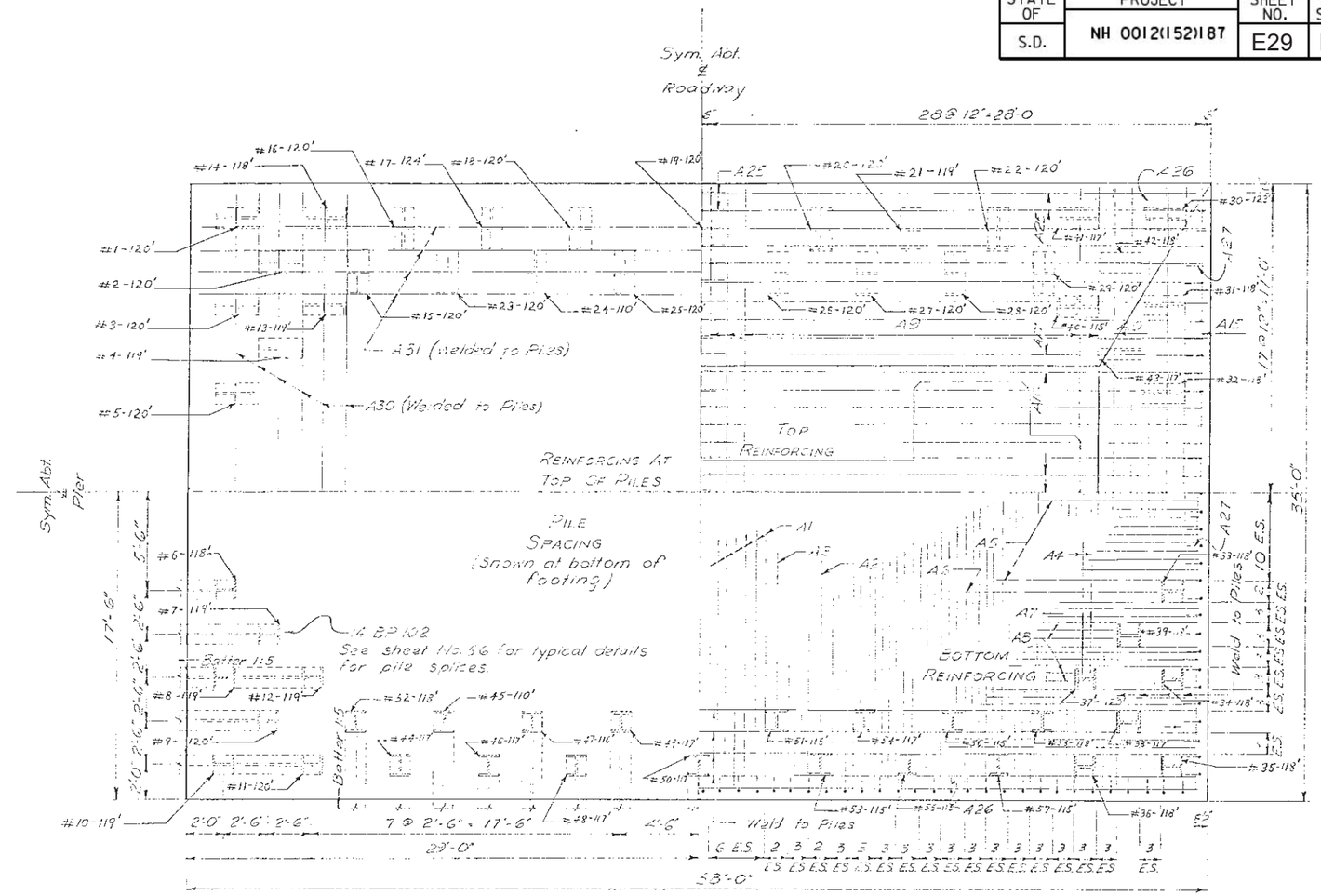

PLAN OF FOOTING

See sheet No. 56 for typical details for welding of re-bars to piles.

NOTE: E.S. denotes Equal Spaces

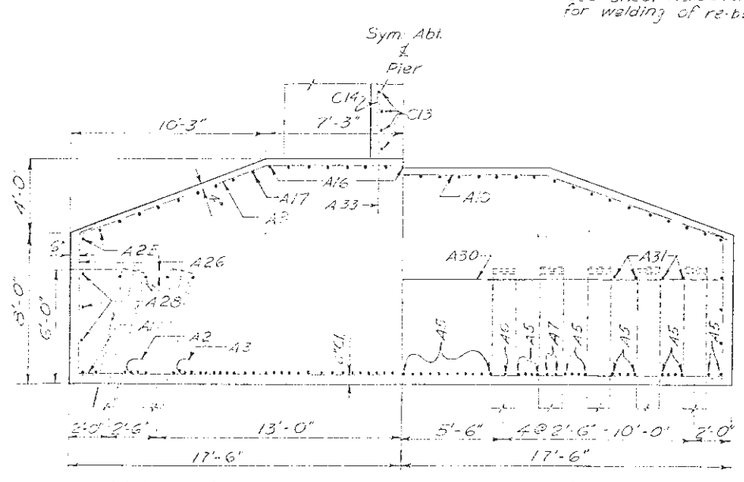

ORIGINAL CONSTRUCTION PLANS

DETAILS OF PIER NO. 11

FOR

5058'-6" BRIDGE OVER OAHE RESERVOIR

26'-0" ROADWAY

STA. 268+01.75 TO 318+60.25 WAR 180(1)

ON US HWY. NO. 12 CORSON-WALWORTH COUNTIES

SOUTH DAKOTA H20-44

DEPARTMENT OF HIGHWAYS

AUG. 1957 27 OF 40

DESIGNED BY	DRAWN BY	CHECKED BY	APPROVED
		ASF	BRIDGE ENGINEER

STATE OF	PROJECT	SHEET NO.	TOTAL SHEETS
S.D.	NH 0012(152)187	E30	E92

REINFORCING SCHEDULE

MARK	NO	SIZE	LENGTH	TYPE	A	B	C	D	E	H	K	O
A1	90	11	34'-0"	Str.								
A2	11		31'-9"	1	1'-5"	28'-11"						
A3	14		26'-9	1	1'-5"	23'-11"						
A4	4		21'-9"	1	1'-5"	18'-11"						
A5	57		57'-0"	Str.								
A6	2		54'-9"	1	1'-5"	51'-11"						
A7	4		49'-9"	1	1'-5"	46'-11"						
A8	4	11	44'-9"	1	1'-5"	41'-11"						
A9	46	9	36'-0"	22		10'-10"	14'-4"	10'-10"		3'-11"	10'-1"	34'-6"
A10	2		35'-6"			9'-3"	17'-0"	9'-3"		3'-4"	8'-8"	34'-4"
A11	2		35'-6"			7'-6"	20'-6"	7'-6"		2'-8"	7'-0"	34'-6"
A12	2		35'-3"			5'-10"	23'-7"	5'-10"		2'-1"	5'-5"	34'-5"
A13	2		35'-0"			4'-1"	26'-10"	4'-1"		1'-6"	3'-10"	34'-6"
A14	2		34'-9"			2'-5"	29'-11"	2'-5"		0'-10"	2'-3"	34'-5"
A15	2		34'-6"	22		0'-8"	33'-2"	0'-8"		0'-3"	0'-7"	34'-4"
A16	30		31'-6"	19		7'-4"	24'-2"			3'-11"	6'-3"	30'-5"
A17	4		31'-3"			6'-9"	24'-6"			3'-7"	5'-9"	30'-3"
A18	4		31'-3"			6'-1"	25'-2"			3'-2"	5'-2"	30'-4"
A19	4		31'-0"			5'-4"	25'-8			2'-10"	4'-6"	30'-2"
A20	4		31'-0"			4'-7"	26'-5"			2'-5"	3'-11	30'-4"
A21	4		31'-0"			3'-10"	27'-2"			2'-0"	3'-3"	30'-5"
A22	4		30'-9"			3'-2"	27'-7"			1'-8"	2'-8"	30'-3"
A23	4		30'-6"			2'-5"	28'-1"			1'-3"	2'-1"	30'-2"
A24	4		30'-6"	19		1'-8"	28'-10"			0'-10"	1'-5"	30'-3"
A25	8	9	30'-3"	19		0'-10"	29'-5"			0'-5"	0'-9"	30'-2"
A26	112	6	9'-3"	23		1'-0"	7'-2"	1'-3"		1'-2"	0'-5"	7'-7"
A27	66	6	9'-3"	23		1'-0"	7'-2"	1'-3"		1'-1"	0'-8"	7'-10"
A28	6	5	57'-0"	Str.								
A29	6	5	34'-0"									
A30	12	8	33'-0"									
A31	8	8	56'-0"									
A32	240	11	7'-0"									
A33	48	9	6'-0"	Str.								
C13	18	6	28'-0"	Str.								
C14	48	9	12'-0"	Str.								
C15	18	11	30'-0"	Str.								
C16	48	6	16'-6"	T1	0'-6"	2'-3"	5'-6"	2'-3"	5'-6"			
D1	106	11	27'-0"	Str.								
D2	134	11	23'-9"	Str.								
D3	98	11	6'-6"	24		3'-6"	2'-0"	1'-0"		1'-0"	1'-9"	6'-3"
D4	4	11	6'-0"	Str.								
D5	24	6	37'-3"	T1	0'-6"	6'-1"	12'-1"	6'-1"	12'-1"			
D6	26	6	31'-3"	T1	0'-6"	6'-1"	9'-1"	6'-1"	9'-1"			
D7	52	5	32'-9"	T1	0'-5"	4'-7"	11'-5"	4'-7"	11'-5"			
D8	24	4	13'-3"	T1	0'-4½	0'-11"	5'-5"	0'-11"	5'-5"			
D9	312	4	2'-3"	T5	0'-6"	1'-3"	0'-6"					
D10	208	4	4'-3"	T5	0'-6"	3'-3"	0'-6"					
D11	104	4	4'-6"	T5	0'-6"	3'-6"	0'-6"					
D12	104	4	2'-3"	T5	0'-6"	1'-3"	0'-6"					
E1	66	11	27'-0"	Str.								
E2	134	11	23'-9	Str.								
E3	98	11	6'-6"	24		3'-6"	2'-0"	1'-0"		1'-0"	1'-9"	6'-3"
E4	4	11	6'-0"	Str.								
E5	28	6	33'-3"	T1	0'-6"	6'-1"	10'-1"	6'-1"	10'-1"			
E6	28	6	29'-3"	T1	0'-6"	6'-1"	8'-1"	6'-1"	8'-1"			
E7	56	5	28'-9"	T1	0'-5"	4'-7"	9'-5"	4'-7"	9'-5			
E8	28	4	13'-3"	T1	0'-4½	0'-11"	5'-5"	0'-11"	5'-5			
E9	208	4	2'-3"	T5	0'-6"	1'-3"	0'-6"					
E10	208	4	3'-3"	T5	0'-6"	2'-3"	0'-6"					
E11	104	4	3'-6"	T5	0'-6"	2'-6"	0'-6"					
E12	52	4	2'-3"	T5	0'-6"	1'-3"	0'-6"					

MARK	NO	SIZE	LENGTH	TYPE	A	B	C	D	E	H	K	O
F1	26	11	27'-0"	Str.								
F2	134	11	23'-9"	Str.								
F3	98	11	6'-6"	24		3'-6"	2'-0"	1'-0"		1'-0"	1'-9"	6'-3"
F5	28	6	29'-3"	T1	0'-6"	6'-1"	8'-1"	6'-1"	8'-1"			
F6	28	6	27'-3"	T1	0'-6"	6'-1"	7'-1"	6'-1"	7'-1"			
F7	56	5	24'-9"	T1	0'-5"	4'-7"	7'-5"	4'-7"	7'-5"			
F8	28	4	13'-3"	T1	0'-4½	0'-11"	5'-5"	0'-11"	5'-5"			
F9	104	4	2'-3"	T5	0'-6"	1'-3"	0'-6"					
F10	208	4	2'-3"	T5	0'-6"	1'-3"	0'-6"					
F11	104	4	2'-6"	T5	0'-6"	1'-6"	0'-6"					
F13	40	10	30'-0"	Str.								
F14	4	8	30'-0"	Str.								
F15	32	8	12'-0"	19		1'-0"	11'-0"			0'-9"	0'-9"	11'-9"
F16	20	5	6'-0"	Str.								
F17	38	6	16'-0"	T1	0'-6"	3'-10"	3'-8"	3'-10"	3'-8"			
F18	4	6	19'-6"	T1	0'-6"	3'-10"	5'-5"	3'-10"	5'-5"			
F19	4	6	23'-6"	T1	0'-6"	3'-10"	7'-5"	3'-10"	7'-5"			
G1	16	11	23'-3"	20		6'-2"	17'-4"					
G2	108	11	17'-0"	Str.								
G5	24	6	21'-0"	T1	0'-6"	4'-7"	5'-5"	4'-7"	5'-5"			
G6	24	6	23'-0"	T1	0'-6"	4'-11"	6'-1"	4'-11"	6'-1"			
G9	40	4	2'-3"	T5	0'-6"	1'-3"	0'-6"					
G10	80	4	2'-3"	T5	0'-6"	1'-3"	0'-6"					
G11	10	10	48'-0"	17		6'-0"	36'-6"	6'-0"				
G12	10	10	40'-0"	17		2'-4"	35'-10"	2'-4"				
G13	20	10	30'-0"	Str.								
G14	4	6	37'-6"	Str.								
G15	4	8	30'-0"	Str.								
G16	24	5	6'-0"	Str.								
G17	38	5	17'-6"	S6	0'-9"	6'-1"	3'-10"	6'-1"				
G18	8	5	18'-9"	S6	0'-9"	6'-7"	4'-0"	6'-7"				
G19	8	5	20'-0"	S6	0'-9"	7'-3"	4'-0"	7'-3"				
G20	8	5	22'-0"	S6	0'-9"	8'-3"	4'-0"	8'-3"				
G21	8	5	24'-6"	S6	0'-9"	9'-6"	4'-0"	9'-6"				
G22	4	5	27'-0"	S6	0'-9"	10'-9"	4'-0"	10'-9"				
G23	29	5	11'-9"	S6	0'-9"	1'-7"	7'-1"	1'-7"				
G24	8	5	8'-0"	17		1'-0"	6'-1"	1'-0"				
G25	12	11	24'-0"	22		1'-9"	20'-6"	1'-9"		1'-3"	1'-3"	23'-0"
G26	12	6	18'-0"	22		1'-9"	14'-6"	1'-9"		1'-3"	1'-3"	17'-0"
G27	12	6	12'-0"	22		1'-9"	8'-6"	1'-9"		1'-3"	1'-3"	11'-0"

BAR BENDS

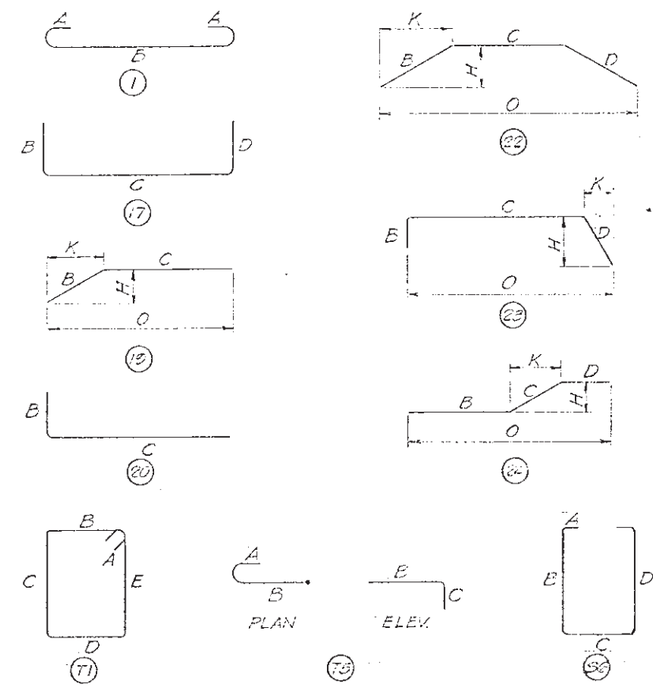

All dimensions are out to out of bar.
Figures in circles show types.

ESTIMATED QUANTITIES

ITEM		UNIT	QUANTITIES	
Class "A" Concrete		Cu.Yd.	1417.9	
Reinforcing Steel		Lb.	215,200	
Driving Steel	Actual Length	Lin.Ft.	5,865 @ 115' = 6,670	Left in Place 5551 + 1355 = 116'-1"
Bearing Piles	Test Pile	Each	One	
14 B 102	Pile Splices	Each	116	116 Splices
Structure Excavation		Cu.Yd.	480	

*See Sheet No. 51.

ORIGINAL CONSTRUCTION PLANS

DETAILS OF PIER NO. 11

FOR

5068'-6" BRIDGE OVER OAHE RESERVOIR

26'-0" ROADWAY

STA. 266+01.75 TO 318+60.25 WAR 130(1)

ON U S HWY. NO. 12 CORSON-WALWORTH COUNTIES

SOUTH DAKOTA H20-44

DEPARTMENT OF HIGHWAYS

AUG. 1957 28 OF 40

DESIGNED BY	DRAWN BY	CHECKED BY	APPROVED
	ASF	E.K.	K.R. Sears BRIDGE ENGINEER

STATE OF	PROJECT	SHEET NO.	TOTAL SHEETS
S.D.	NH 0012(152)187	E31	E92

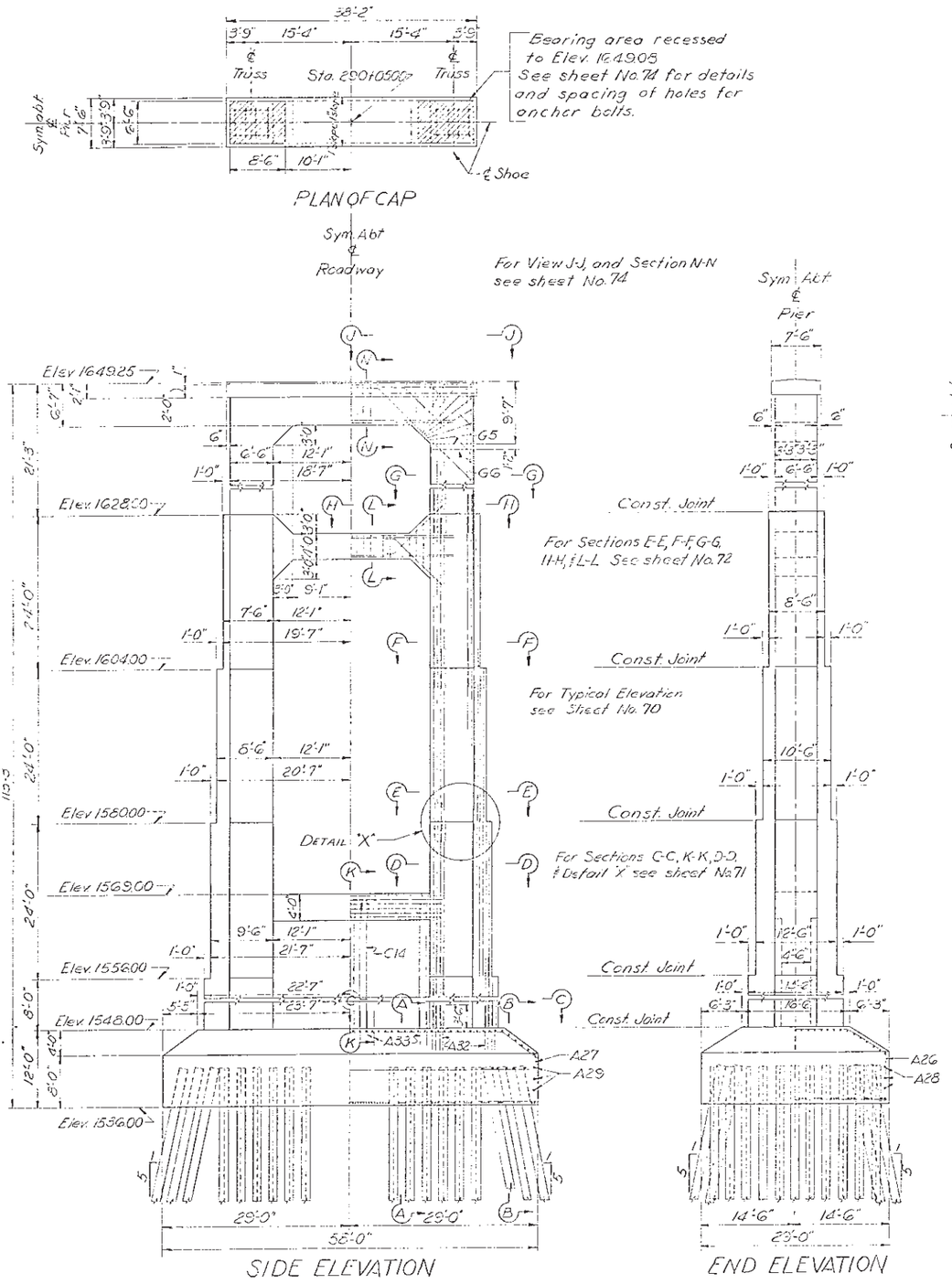

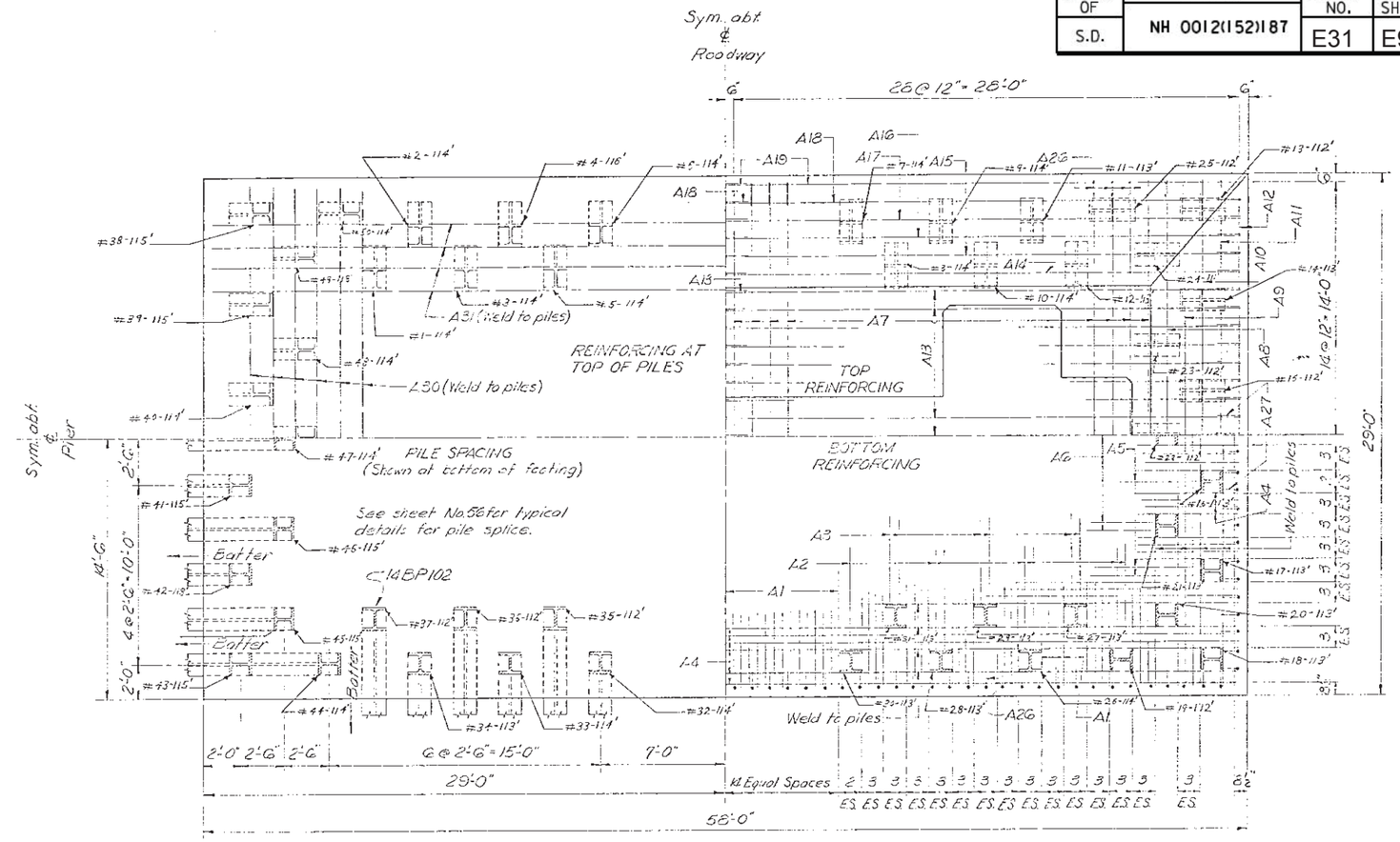

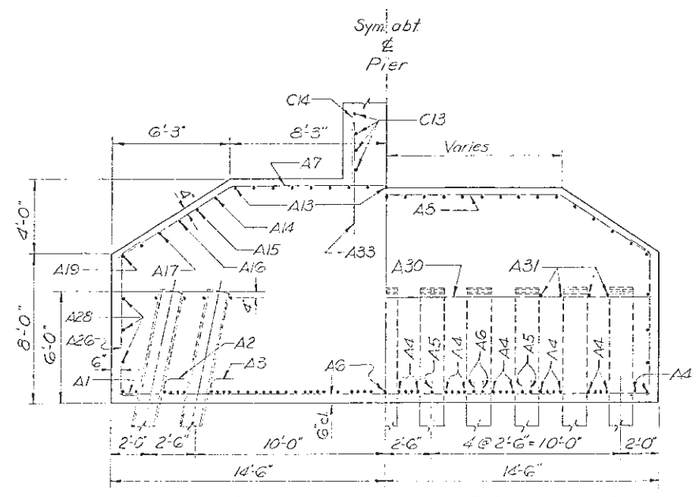

ORIGINAL CONSTRUCTION PLANS

DETAILS OF PIER NO. 12

FOR

5058'-6" BRIDGE OVER OAHE RESERVOIR

26'-0" ROADWAY

STA. 268+01.75 TO 318+60.25 WAR 180(1)

ON US HWY. NO. 12 CORSON-WALWORTH COUNTIES

SOUTH DAKOTA H20-44

DEPARTMENT OF HIGHWAYS

AUG. 1957 (29) OF (40)

DESIGNED BY	DRAWN BY	CHECKED BY	APPROVED
	A.S.W.	ASF	BRIDGE ENGINEER

STATE OF	PROJECT	SHEET NO.	TOTAL SHEETS
S.D.	NH 0012(152)187	E32	E92

REINFORCING SCHEDULE

MARK	NO.	SIZE	LENGTH	TYPE	A	B	C	D	E	H	K	O
A1	97	10	28'-0"	Str.								
A2	14	10	25'-6"	1	1'-3"	23'-0"						
A3	12	10	20'-6"	1	1'-3"	18'-0"						
A4	44	10	57'-0"	Str.								
A5	6	10	54'-6"	1	1'-3"	52'-0"						
A6	5	10	49'-6"	1	1'-3"	47'-0"						
A7	48	8	30'-9"	22		7'-4"	16'-1"	7'-4"		3'-11"	6'-2"	28'-5"
A8	2		30'-3"			6'-0"	18'-3"	6'-0"		3'-3"	5'-1"	28'-5"
A9	2		30'-0"			4'-8"	20'-8"	4'-8"		2'-6"	3'-11"	28'-6"
A10	2		29'-6"			3'-3"	23'-0"	3'-3"		1'-9"	2'-9"	28'-6"
A11	2		29'-0"			1'-11"	25'-2"	1'-11"		1'-0"	1'-8"	28'-6"
A12	2		28'-6"	22		0'-7"	27'-4"	0'-7"		0'-3"	0'-6"	28'-4"
A13	34		31'-9"	19		6'-7"	25'-2"			3'-11"	5'-3"	30'-5"
A14	4		31'-6"			5'-8"	25'-10"			3'-4"	4'-7"	30'-5"
A15	4		31'-3"			4'-7"	26'-8"			2'-9"	3'-8"	30'-4"
A16	4		31'-0"			3'-6"	27'-6"			2'-1"	2'-10"	30'-4"
A17	4		30'-9"			2'-5"	28'-4"			1'-5"	1'-11"	30'-3"
A18	4		30'-6"			1'-4"	29'-2"			0'-10"	1'-1"	30'-3"
A19	4	8	30'-6"	19		0'-4"	30'-2"			0'-2"	0'-3"	30'-5"
A26	112	6	9'-3"	23		1'-0"	7'-2"	1'-3"		1'-0½"	0'-8"	7'-10"
A27	54	6	9'-3"	23		1'-0"	7'-2"	1'-3"		1'-0"	0'-9"	7'-11"
A28	6	5	57'-0"	Str.								
A29	6	5	28'-0"	1								
A30	12	8	27'-0"									
A31	8	8	56'-0"									
A32	280	10	7'-0"	1								
A33	48	9	6'-0"	Str.								
C1	146	10	11'-0"	Str.								
C2	134	10	7'-9"	Str.								
C3	98	10	6'-6"	24		3'-6"	2'-0"	1'-0"		1'-0"	1'-9"	6'-3"
C4	4	10	6'-0"	Str.								
C5	8	5	41'-0"	T1	0'-5"	6'-0½"	14'-0½"	6'-0½"	14'-0½"			
C6	10	5	33'-0"	T1	0'-5"	6'-0½"	10'-0½"	6'-0½"	10'-0½"			
C7	20	5	36'-9"	T1	0'-5"	4'-6½"	13'-4½"	4'-6½"	13'-4½"			
C8	8	4	13'-3"	T1	0'-4½"	0'-10½"	5'-4½"	0'-10½"	5'-4½"			
C9	160	4	2'-3"	T5	0'-6"	1'-3"	0'-6"					
C10	80	4	5'-3"	T5	0'-6"	4'-3"	0'-6"					
C11	40	4	5'-6"	T5	0'-6"	4'-6"	0'-6"					
C12	60	4	2'-3"	T5	0'-6"	1'-3"	0'-6"					
C13	34	6	28'-0"	Str.								
C14	48	9	20'-0"	Str.								
C15	18	11	30'-0"	Str.								
C16	48	6	16'-6"	T1	0'-6"	2'-3"	5'-6"	2'-3"	5'-6"			
D1	106	10	27'-0"	Str.								
D2	134	10	23'-9"	Str.								
D3	98	10	6'-6"	24		3'-6"	2'-0"	1'-0"		1'-0"	1'-9"	6'-3"
D4	4	10	6'-0"	Str.								
D5	28	5	37'-0"	T1	0'-5"	6'-0½"	12'-0½"	6'-0½"	12'-0½"			
D6	28	5	31'-0"	T1	0'-5"	6'-0½"	9'-0½"	6'-0½"	9'-0½"			
D7	56	5	32'-9"	T1	0'-5"	4'-6½"	11'-4½"	4'-6½"	11'-4½"			
D8	28	4	13'-3"	T1	0'-4½"	0'-10½"	5'-4½"	0'-10½"	5'-4½"			
D9	312	4	2'-3"	T5	0'-6"	1'-3"	0'-6"					
D10	208	4	4'-3"	T5	0'-6"	3'-3"	0'-6"					
D11	104	4	4'-6"	T5	0'-6"	3'-6"	0'-6"					
D12	104	4	2'-3"	T5	0'-6"	1'-3"	0'-6"					

MARK	NO.	SIZE	LENGTH	TYPE	A	B	C	D	E	H	K	O
E1	66	10	27'-0"	Str.								
E2	134	10	23'-9"	Str.								
E3	98	10	6'-6"	24		3'-6"	2'-0"	1'-0"		1'-0"	1'-9"	6'-3"
E4	4	10	6'-0"	Str.								
E5	28	5	33'-0"	T1	0'-5"	6'-0½"	10'-0½"	6'-0½"	10'-0½"			
E6	28	5	29'-0"	T1	0'-5"	6'-0½"	8'-0½"	6'-0½"	8'-0½"			
E7	56	5	28'-9"	T1	0'-5"	4'-6½"	9'-4½"	4'-6½"	9'-4½"			
E8	28	4	13'-3"	T1	0'-4½"	0'-10½"	5'-4½"	0'-10½"	5'-4½"			
E9	208	4	2'-3"	T5	0'-6"	1'-3"	0'-6"					
E10	208	4	3'-3"	T5	0'-6"	2'-3"	0'-6"					
E11	104	4	3'-6"	T5	0'-6"	2'-6"	0'-6"					
E12	52	4	2'-3"	T5	0'-6"	1'-3"	0'-6"					
F1	26	10	27'-0"	Str.								
F2	134	10	23'-9"	Str.								
F3	98	10	6'-6"	24		3'-6"	2'-0"	1'-0"		1'-0"	1'-9"	6'-3"
F5	28	5	29'-0"	T1	0'-5"	6'-0½"	8'-0½"	6'-0½"	8'-0½"			
F6	28	5	27'-0"	T1	0'-5"	6'-0½"	7'-0½"	6'-0½"	7'-0½"			
F7	56	5	24'-9"	T1	0'-5"	4'-6½"	7'-4½"	4'-6½"	7'-4½"			
F8	28	4	13'-3"	T1	0'-4½"	0'-10½"	5'-4½"	0'-10½"	5'-4½"			
F9	104	4	2'-3"	T5	0'-6"	1'-3"	0'-6"					
F10	208	4	2'-3"	T5	0'-6"	1'-3"	0'-6"					
F11	104	4	2'-6"	T5	0'-6"	1'-6"	0'-6"					
F13	40	10	30'-0"	Str.								
F14	4	8	30'-0"	Str.								
F15	32	8	12'-0"	19		1'-0"	11'-0"			0'-9"	0'-9"	11'-9"
F16	20	5	6'-0"	Str.								
F17	38	6	16'-0"	T1	0'-6"	3'-10"	3'-8"	3'-10"	3'-8"			
F18	4	6	19'-6"	T1	0'-6"	3'-10"	5'-5"	3'-10"	5'-5"			
F19	4	6	23'-6"	T1	0'-6"	3'-10"	7'-5"	3'-10"	7'-5"			
G1	16	10	26'-9"	20		6'-1"	20'-11"					
G2	88	10	20'-6"	Str.								
G5	32	5	20'-9"	T1	0'-5"	4'-6½"	5'-4½"	4'-6½"	5'-4½"			
G6	28	5	22'-9"	T1	0'-5"	4'-10½"	6'-0½"	4'-10½"	6'-0½"			
G9	56	4	2'-3"	T5	0'-6"	1'-3"	0'-6"					
G10	96	4	2'-3"	T5	0'-6"	1'-3"	0'-6"					
G11	10	10	48'-0"	17		6'-0"	36'-6"	6'-0"				
G12	10	10	40'-0"	17		2'-4"	35'-10"	2'-4"				
G13	20	10	30'-0"	Str.								
G14	4	6	37'-6"	Str.								
G15	4	8	30'-0"	Str.								
G16	24	5	6'-0"	Str.								
G17	38		17'-6"	S6	0'-9"	6'-1"	3'-10"	6'-1"				
G18	8		18'-9"			6'-7"	4'-0"	6'-7"				
G19	8		20'-0"			7'-3"	4'-0"	7'-3"				
G20	8		22'-0"			8'-3"	4'-0"	8'-3"				
G21	8		24'-6"			9'-6"	4'-0"	9'-6"				
G22	4		27'-0"			10'-9"	4'-0"	10'-9"				
G23	29		11'-9"	S6	0'-9"	1'-7"	7'-1"	1'-7"				
G24	8	5	8'-0"	17		1'-0"	6'-1"	1'-0"				
G25	12	8	24'-0"	22		1'-9"	20'-6"	1'-9"		1'-3"	1'-3"	23'-0"
G26	12	6	18'-0"	22		1'-9"	14'-6"	1'-9"		1'-3"	1'-3"	17'-0"
G27	12	6	12'-0"	22		1'-9"	8'-6"	1'-9"		1'-3"	1'-3"	11'-0"

BAR BENDS

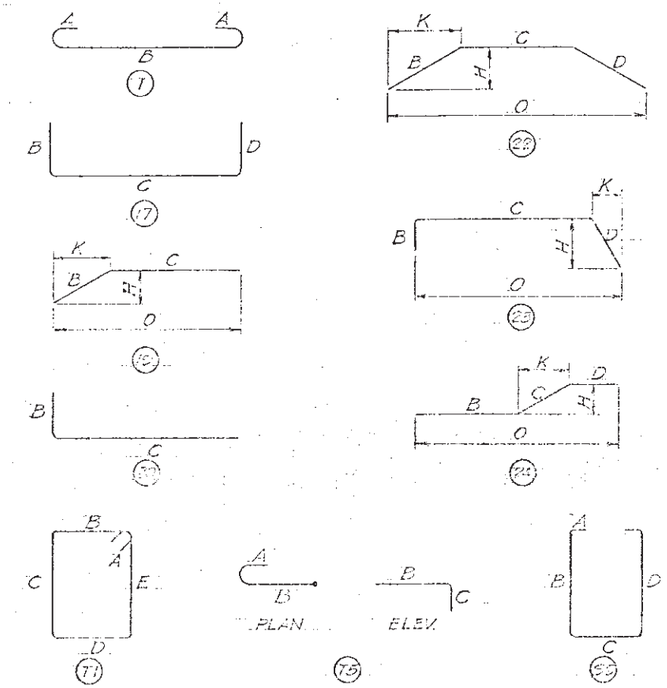

All dimensions are out to out of bar.
Figures in circles show types.

ESTIMATED QUANTITIES

ITEM	UNIT	QUANTITIES
Class "A" Concrete	Cu.Yd.	1409.6
Reinforcing Steel	Lb.	193,000
Driving Steel	Actual Length	Lin.Ft. 50 120 6,000
Bearing Piles 14 BP102	Test Pile	Each One
	Pile Splices	Each 100
Structure Excavation	Cu.Yd.	260

*See Sheet No. 51

ORIGINAL CONSTRUCTION PLANS

DETAILS OF PIER NO. 12

FOR

6088'-6" BRIDGE OVER OAHE RESERVOIR

26'-0" ROADWAY

STA. 266+01.75 TO 318+60.25 WAR 160(1)

ON U S HWY. NO. 12 CORSON-WALWORTH COUNTIES

SOUTH DAKOTA H20-44

DEPARTMENT OF HIGHWAYS

AUG. 1957 (30) OF (40)

DESIGNED BY	DRAWN BY	CHECKED BY	APPROVED
	ASE	E.K.	BRIDGE ENGINEER

STATE OF	PROJECT	SHEET NO.	TOTAL SHEETS
S.D.	NH 0012(152)187	E33	E92

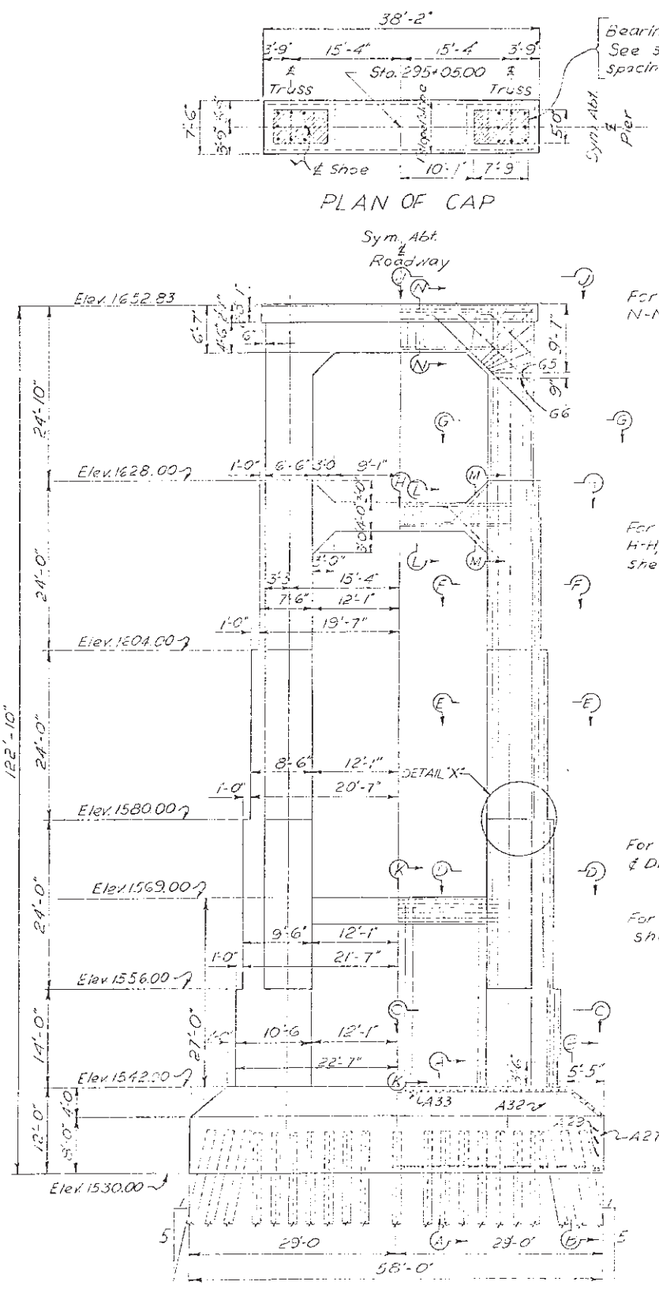

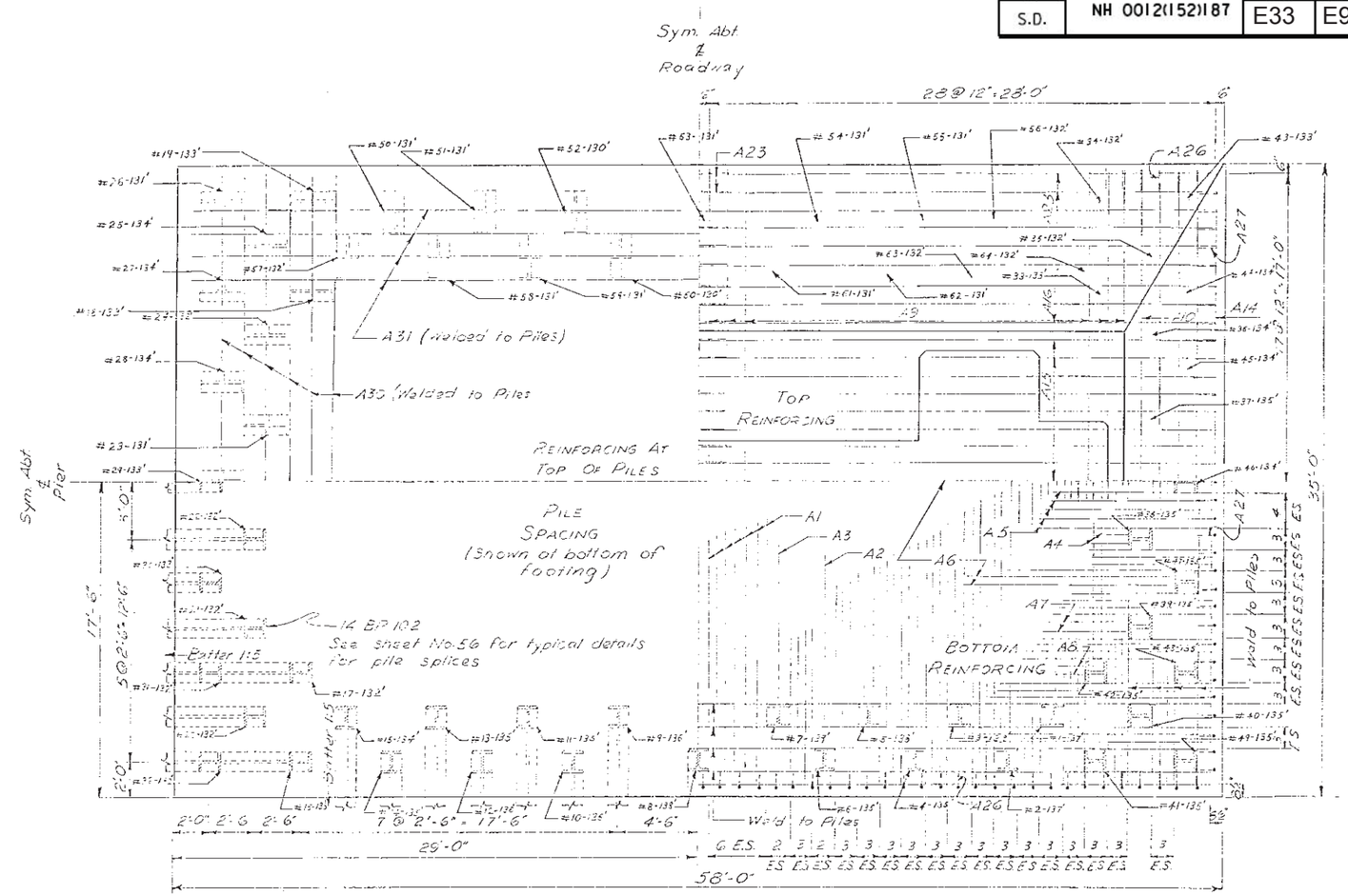

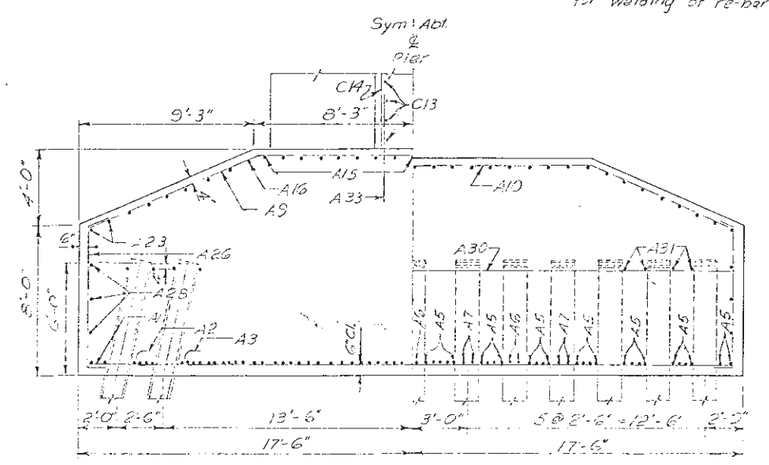

ORIGINAL CONSTRUCTION PLANS

DETAILS OF PIER NO. 13

FOR

5058'-6" BRIDGE OVER OAHE RESERVOIR

26'-0" ROADWAY

STA. 268+01.75 TO 318+60.25 WAR 180(1)

ON US HWY. NO. 12 CORSON-WALWORTH COUNTIES

SOUTH DAKOTA H20-44

DEPARTMENT OF HIGHWAYS

AUG. 1957 (31) OF (40)

DESIGNED BY	DRAWN BY	CHECKED BY	APPROVED
		AST	BRIDGE ENGINEER

STATE OF	PROJECT	SHEET NO.	TOTAL SHEETS
S.D.	NH 0012(152)187	E34	E92

REINFORCING SCHEDULE

MARK	NO.	SIZE	LENGTH	TYPE	A	B	C	D	E	H	K	O
A1	90	11	34'-0"	Str								
A2	11		31'-9"	1	1'-5"	28'-11"						
A3	14		26'-9"	1	1'-5"	23'-11"						
A4	4		21'-9"	1	1'-5"	18'-11"						
A5	54		57'-0"	Str								
A6	5		54'-9"	1	1'-5"	51'-11"						
A7	8		49'-9"	1	1'-5"	46'-11"						
A8	4	11	44'-9"	1	1'-5"	41'-11"						
A9	48	9	36'-0"	22		9'-11"	16'-2"	9'-11"		3'-11"	9'-1"	34'-4"
A10	2		35'-9"			8'-2"	19'-5"	8'-2"		3'-3"	7'-6"	34'-5"
A11	2		35'-6"			6'-4"	22'-10"	6'-4"		2'-6"	5'-10"	34'-6"
A12	2		35'-0"			4'-5"	26'-2"	4'-5"		1'-9"	4'-1"	34'-4"
A13	2		34'-9"			2'-7"	29'-7"	2'-7"		1'-0"	2'-5"	34'-5"
A14	2		34'-6"	22		0'-10"	32'-10"	0'-10"		0'-4"	0'-9"	34'-4"
A15	34		31'-9"	19		6'-7"	25'-2"			3'-11"	5'-3"	30'-5"
A16	4		31'-6"			6'-0"	25'-6"			3'-7"	4'-10"	30'-4"
A17	4		31'-6"			5'-3"	26'-3"			3'-2"	4'-3"	30'-6"
A18	4		31'-3"			4'-7"	26'-8"			2'-8"	3'-8"	30'-4"
A19	4		31'-3"			3'-10"	27'-5"			2'-3"	3'-1"	30'-6"
A20	4		31'-0"			3'-1"	27'-11"			1'-10"	2'-6"	30'-5"
A21	4		30'-9"			2'-4"	28'-5"			1'-5"	1'-11"	30'-4"
A22	4		30'-9"			1'-7"	29'-2"			1'-0"	1'-3"	30'-5"
A23	8	9	30'-6"	19		0'-11"	29'-7"			0'-7"	0'-9"	30'-4"
A26	112	6	9'-3"	23		1'-0"	7'-2"	1'-3"		1'-2"	0'-6"	7'-8"
A27	66	6	9'-3"	23		1'-0"	7'-2"	1'-3"		1'-0"	0'-9"	7'-11"
A28	6	5	57'-0"	Str								
A29	6	5	34'-0"	Str								
A30	12	8	33'-0"	Str								
A31	8	8	56'-0"	Str								
A32	280	11	7'-0"	Str								
A33	48	9	6'-0"	Str								
C1	146	11	17'-0"	Str								
C2	134	11	13'-9"	Str								
C3	98	11	6'-6"	24		3'-6"	2'-0"	1'-0"		1'-0"	1'-9"	6'-3"
C4	4	11	6'-0"	Str								
C5	14	6	41'-3"	T1	0'-6"	6'-1"	14'-1"	6'-1"	14'-1"			
C6	16	6	33'-3"	T1	0'-6"	6'-1"	10'-1"	6'-1"	10'-1"			
C7	32	5	36'-9"	T1	0'-5"	4'-7"	13'-5"	4'-7"	13'-5"			
C8	14	4	13'-3"	T1	0'-4½"	0'-11"	5'-5"	0'-11"	5'-5"			
C9	256	4	2'-3"	T5	0'-6"	1'-3"	0'-6"					
C10	128	4	5'-3"	T5	0'-6"	4'-3"	0'-6"					
C11	64	4	5'-6"	T5	0'-6"	4'-6"	0'-6"					
C12	96	4	2'-3"	T5	0'-6"	1'-3"	0'-6"					
C13	46	6	28'-0"	Str								
C14	48	9	26'-0"	Str								
C15	18	11	30'-0"	Str								
C16	48	6	16'-6"	T1	0'-6	2'-3"	5'-6"	2'-3"	5'-6"			
D1	106	11	27'-0"	Str								
D2	134	11	23'-0"	Str								
D3	98	11	6'-6"	24		3'-6"	2'-0"	1'-0"		1'-0"	1'-9"	6'-3"
D4	4	11	6'-0"	Str								
D5	28	6	37'-3"	T1	0'-6"	6'-1"	12'-1"	6'-1"	12'-1"			
D6	28	6	31'-3"	T1	0'-6'	6'-1"	9'-1"	6'-1"	9'-1"			
D7	56	5	32'-9"	T1	0'-5"	4'-7"	11'-5"	4'-7"	11'-5"			
D8	28	4	13'-3"	T1	0'-4½"	0'-11"	5'-5"	0'-11"	5'-5"			
D9	312	4	2'-3"	T5	0'-6"	1'-3"	0'-6"					
D10	208	4	4'-3"	T5	0'-6"	3'-3"	0'-6"					
D11	104	4	4'-6"	T5	0'-6"	3'-6"	0'-6"					
D12	104	4	2'-3"	T5	0'-6"	1'-3"	0'-6"					

MARK	NO.	SIZE	LENGTH	TYPE	A	B	C	D	E	H	K	O
E1	66	11	27'-0"	Str								
E2	134	11	23'-9"	Str								
E3	98	11	6'-6"	24		3'-6"	2'-0"	1'-0"		1'-0"	1'-9"	6'-3"
E4	4	11	6'-0"	Str								
E5	28	6	33'-3"	T1	0'-6"	6'-1"	10'-1"	6'-1"	10'-1"			
E6	28	6	29'-3"	T1	0'-6"	6'-1"	8'-1"	6'-1"	8'-1"			
E7	56	5	28'-9"	T1	0'-5"	4'-7"	9'-5"	4'-7"	9'-5"			
E8	28	4	13'-3"	T1	0'-4½"	0'-11"	5'-5"	0'-11"	5'-5"			
E9	208	4	2'-3"	T5	0'-6"	1'-3"	0'-6"					
E10	208	4	3'-3"	T5	0'-6"	2'-3"	0'-6"					
E11	104	4	3'-6"	T5	0'-6"	2'-6"	0'-6"					
E12	52	4	2'-3"	T5	0'-6"	1'-3"	0'-6"					
F1	26	11	27'-0"	Str								
F2	134	11	23'-9"	Str								
F3	98	11	6'-6"	24		3'-6"	2'-0"	1'-0"		1'-0"	1'-9"	6'-3"
F5	28	6	29'-3"	T1	0'-6"	6'-1"	8'-1"	6'-1	8'-1"			
F6	28	6	27'-3"	T1	0'-6"	6'-1"	7'-1"	6'-1"	7'-1"			
F7	56	5	24'-9"	T1	0'-5"	4'-7	7'-5"	4'-7"	7'-5"			
F8	28	4	13'-3"	T1	0'-4½"	0'-11"	5'-5"	0'-11"	5'-5"			
F9	104	4	2'-3"	T5	0'-6"	1'-3"	0'-6"					
F10	208	4	2'-3"	T5	0'-6	1'-3"	0'-6"					
F11	104	4	2'-6"	T5	0'-6"	1'-6"	0'-6"					
F13	40	10	30'-0"	Str								
F14	4	8	30'-0"	Str								
F15	32	8	12'-0"	19		1'-0"	11'-0"			0'-9"	0'-9"	11'-9"
F16	20	5	6'-0"	Str								
F17	38	6	16'-0"	T1	0'-6"	3'-10"	3'-8"	3'-10"	3'-8"			
F18	4	6	10'-6"	T1	0'-6"	3'-10"	5'-5"	3'-10"	5'-5"			
F19	4	6	23'-6"	T1	0'-6"	3'-10"	7'-5"	3'-10"	7'-5"			
G1	16	11	30'-3"	20		6'-0"	24'-6"					
G2	108	11	24'-3"	Str								
G5	40	6	21'-0"	T1	0'-6"	4'-7"	5'-5"	4'-7"	5'-5"			
G6	36	6	23'-0"	T1	0'-6"	4'-11"	6'-1"	4'-11"	6'-1"			
G9	72	4	2'-3"	T5	0'-6"	1'-3"	0'-6"					
G10	128	4	2'-3"	T5	0'-6"	1'-3"	0'-6"					
G11	10	10	48'-0"	17		6'-0"	36'-6"	6'-0"				
G12	10	10	40'-0"	17		2'-4"	35'-10"	2'-4"				
G13	20	10	30'-0"	Str								
G14	4	6	37'-6"	Str								
G15	4	8	30'-0"	Str								
G16	24	5	6'-0"	Str								
G17	38	5	17'-6"	S6	0'-9"	6'-1"	3'-10"	6'-1"				
G18	8	5	18'-9"	S6	0'-9"	6'-7"	4'-0"	6'-7"				
G19	8	5	20'-0"	S6	0'-9"	7'-3"	4'-0"	7'-3"				
G20	8	5	22'-0"	S6	0'-9"	8'-3"	4'-0"	8'-3"				
G21	8	5	24'-6"	S6	0'-9"	9'-6"	4'-0"	9'-6"				
G22	4	5	27'-0"	S6	0'-9"	10'-9"	4'-0"	10'-9"				
G23	29	5	11'-9"	S6	0'-9"	1'-7"	7'-1"	1'-7"				
G24	8	5	8'-0"	17		1'-0"	6'-1"	1'-0"				
G25	12	11	24'-0"	22		1'-9"	20'-6"	1'-9"		1'-3"	1'-3"	23'-0"
G26	12	6	18'-0"	22		1'-9"	14'-6"	1'-9"		1'-3"	1'-3"	17'-0"
G27	12	6	12'-0"	22		1'-9"	8'-6"	1'-9"		1'-3"	1'-3"	11'-0"

BAR BENDS

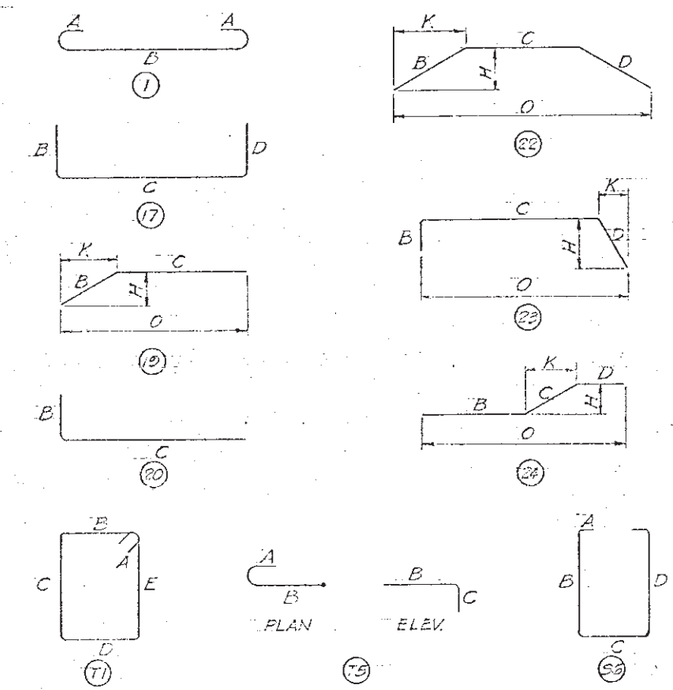

All dimensions are cut to out of bar.
Figures in circles show types.

ESTIMATED QUANTITIES

ITEM		UNIT	QUANTITIES	
Class "A" Concrete		Cu.Yd.	1625.6	
Reinforcing Steel		Lb.	258,250	
Driving Steel Bearing Piles 14 BP102	Actual Length	Lin.Ft.	6496.25 - 8000	Lengths plus 2@8.25=33.5
	Test Pile	Each	*One	
	Pile Splices	Each	*128	144-Splices
Structure Excavation		Cu.Yd.	480	

*See Sheet No.51

ORIGINAL CONSTRUCTION PLANS

DETAILS OF PIER NO. 13

FOR

5058'-6" BRIDGE OVER OAHE RESERVOIR

26'-0" ROADWAY

STA. 268+01.75 TO 318+60.25 WAR 180(1)

ON U S HWY. NO. 12 CORSON-WALWORTH COUNTIES

SOUTH DAKOTA H20-44

DEPARTMENT OF HIGHWAYS

AUG. 1957 (32) OF (40)

DESIGNED BY	DRAWN BY	CHECKED BY	APPROVED
	A.S.C. 7-24-57	E.K.	BRIDGE ENGINEER

STATE OF	PROJECT	SHEET NO.	TOTAL SHEETS
S.D.	NH 0012(152)187	E35	E92

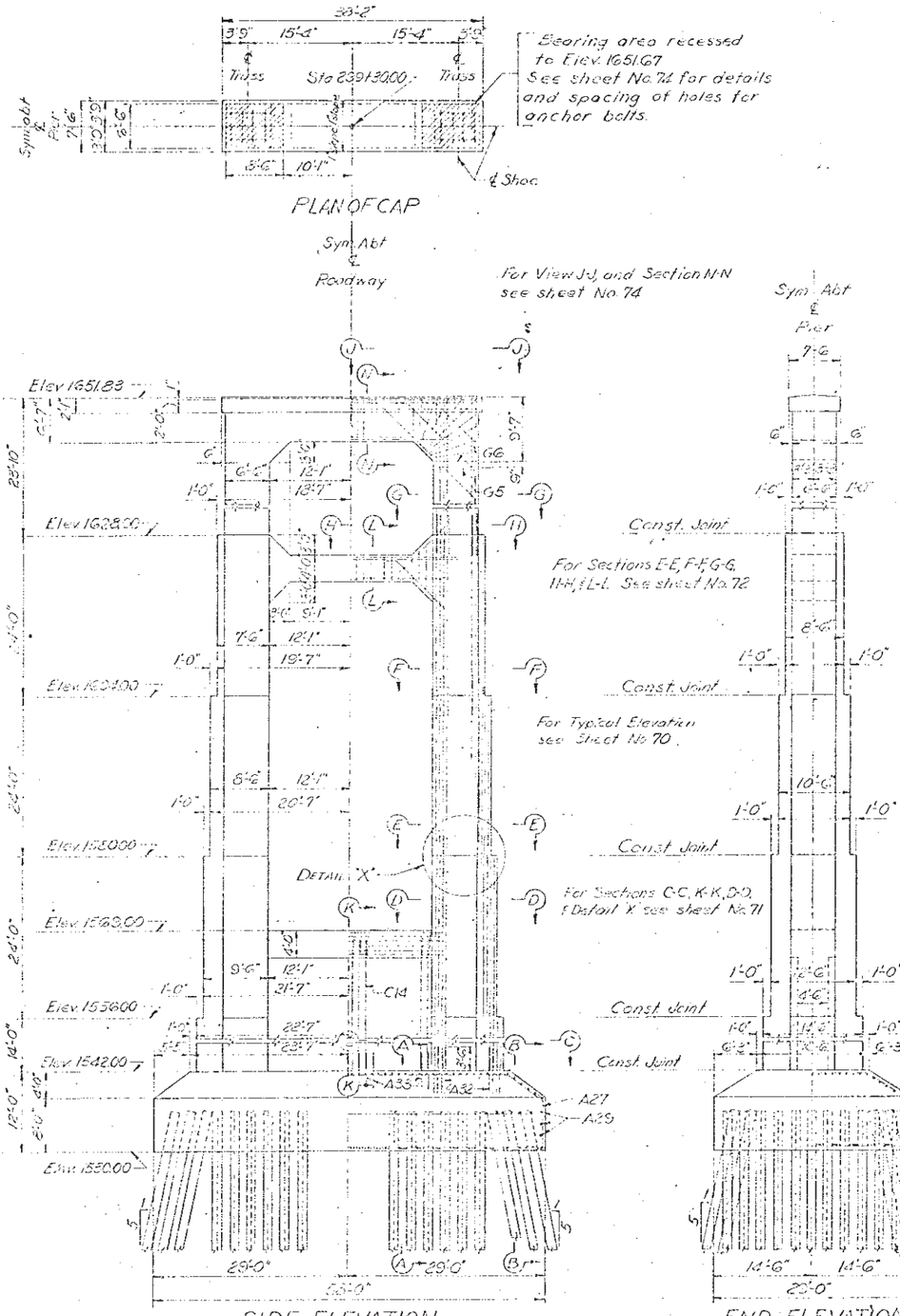

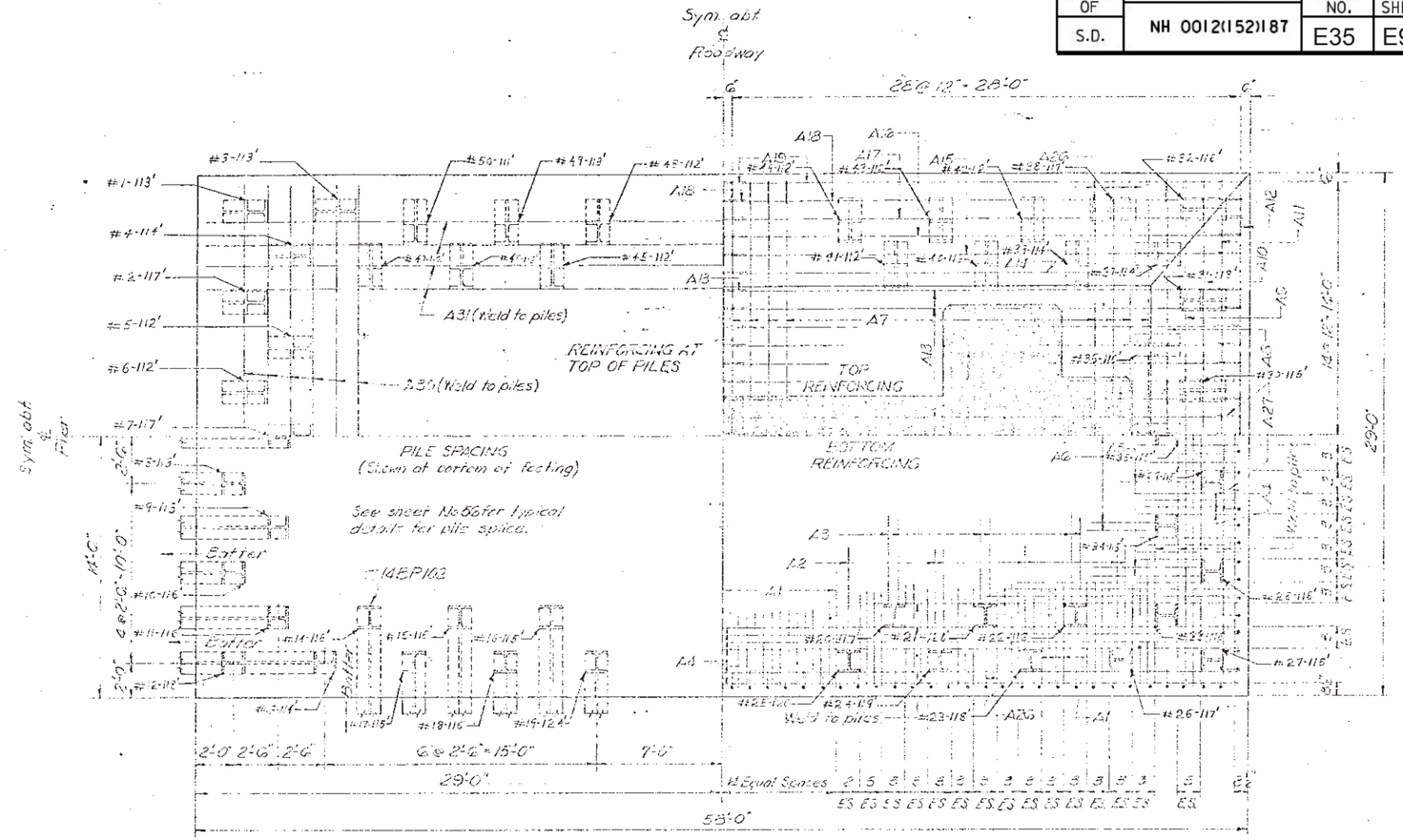

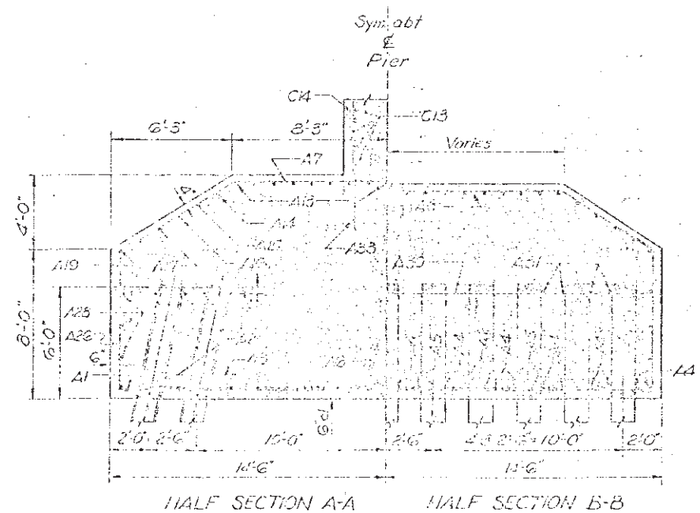

ORIGINAL CONSTRUCTION PLANS

DETAILS OF PIER NO. 14

FOR

5058'-6" BRIDGE OVER OAHE RESERVOIR

26'-0" ROADWAY

STA. 268+01.75 TO 318+60.25 WAR 180(1)

ON US HWY. NO. 12 CORSON-WALWORTH COUNTIES

SOUTH DAKOTA H20-44

DEPARTMENT OF HIGHWAYS

AUG. 1957 (33) OF (40)

DESIGNED BY	DRAWN BY	CHECKED BY	APPROVED
	R.C.W.	A.S.F.	R. R. Beum BRIDGE ENGINEER

STATE OF	PROJECT	SHEET NO.	TOTAL SHEETS
S.D.	NH 0012(152)187	E36	E92

REINFORCING SCHEDULE

Mark	No.	Size	Length	Type	A	B	C	D	E	H	K	O
A1	97	10	28'-0"	Str.								
A2	14		25'-6"	1	1'-3"	23'-0"						
A3	12		20'-6"	1	1'-3"	18'-0"						
A4	44		57'-0"	Str.								
A5	6		54'-6"	1	1'-3"	52'-0"						
A6	5	10	49'-6"	1	1'-3"	47'-0"						
A7	48	8	30'-9"	22		7'-4"	16'-1"	7'-4"		3'-11"	6'-2"	28'-5"
A8	2		30'-3"	22		6'-0"	18'-3"	6'-0"		3'-3"	5'-1"	28'-5"
A9	2		30'-0"	22		4'-8"	20'-8"	4'-8"		2'-6"	3'-11"	28'-6"
A10	2		29'-6"	22		3'-3"	23'-0"	3'-3"		1'-9"	2'-9"	28'-6"
A11	2		29'-0"	22		1'-11"	25'-2"	1'-11"		1'-0"	1'-8"	28'-6"
A12	2		28'-6"	22		0'-7"	27'-4"	0'-7"		0'-3"	0'-6"	28'-4"
A13	34		31'-9"	19		6'-7"	25'-2"			3'-11"	5'-3"	30'-5"
A14	4		31'-6"			5'-8"	25'-10"			3'-4"	4'-7"	30'-5"
A15	4		31'-3"			4'-7"	26'-8"			2'-9"	3'-8"	30'-4"
A16	4		31'-0"			3'-6"	27'-6"			2'-1"	2'-10"	30'-4"
A17	4		30'-9"			2'-5"	28'-4"			1'-5"	1'-11"	30'-3"
A18	4		30'-6"			1'-4"	29'-2"			0'-10"	1'-1"	30'-3"
A19	4	8	30'-6"	19		0'-4"	30'-2"			0'-2"	0'-3"	30'-5"
A26	112	6	9'-3"	23		1'-0"	7'-2"	1'-3"		1'-0½"	0'-8"	7'-10"
A27	54	6	9'-3"	23		1'-0"	7'-2"	1'-3"		1'-0"	0'-9"	7'-11"
A28	6	5	57'-0"	Str.								
A29	6	5	28'-0"	Str.								
A30	12	8	27'-0"	Str.								
A31	8	8	56'-0"	Str.								
A32	280	10	7'-0"	Str.								
A33	48	9	6'-0"	Str.								
C1	146	10	17'-0"	Str.								
C2	134	10	13'-9"	Str.								
C3	98	10	6'-6"	24		3'-6"	2'-0"	1'-0"		1'-0"	1'-9"	6'-3"
C4	4	10	6'-0"	Str.								
C5	14	5	41'-0"	T1	0'-5"	6'-0½"	14'-0½"	6'-0½"	14'-0½"			
C6	16	5	33'-0"	T1	0'-5"	6'-0½"	10'-0½"	6'-0½"	10'-0½"			
C7	32	5	36'-9"	T1	0'-5"	4'-6½"	13'-4½"	4'-6½"	13'-4½"			
C8	14	4	13'-3"	T1	0'-4½"	0'-10½"	5'-4½"	0'-10½"	5'-4½"			
C9	256	4	2'-3"	T5	0'-6"	1'-3"	0'-6"					
C10	128	4	5'-3"	T5	0'-6"	4'-3"	0'-6"					
C11	64	4	5'-6"	T5	0'-6"	4'-6"	0'-6"					
C12	96	4	2'-3"	T5	0'-6"	1'-3"	0'-6"					
C13	46	6	28'-0"	Str.								
C14	48	9	26'-0"	Str.								
C15	18	11	30'-0"	Str.								
C16	48	6	16'-6"	T1	0'-6"	2'-3"	5'-6"	2'-3"	5'-6"			
D1	106	10	27'-0"	Str.								
D2	134	10	23'-9"	Str.								
D3	98	10	6'-6"	24		3'-6"	2'-0"	1'-0"		1'-0"	1'-9"	6'-3"
D4	4	10	6'-0"	Str.								
D5	28	5	37'-0"	T1	0'-5"	6'-0½"	12'-0½"	6'-0½"	12'-0½"			
D6	28	5	31'-0"	T1	0'-5"	6'-0½"	9'-0½"	6'-0½"	9'-0½"			
D7	56	5	32'-9"	T1	0'-5"	4'-6½"	11'-4½"	4'-6½"	11'-4½"			
D8	28	4	13'-3"	T1	0'-4½"	0'-10½"	5'-4½"	0'-10½"	5'-4½"			
D9	312		2'-3"	T5	0'-6"	1'-3"	0'-6"					
D10	208		4'-3"	T5	0'-6"	3'-3"	0'-6"					
D11	104		4'-6"	T5	0'-6"	3'-6"	0'-6"					
D12	104	4	2'-3"	T5	0'-6"	1'-3"	0'-6"					

Mark	No.	Size	Length	Type	A	B	C	D	E	H	K	O
E1	66	10	27'-0"	Str.								
E2	134	10	23'-9"	Str.								
E3	98	10	6'-6"	24		3'-6"	2'-0"	1'-0"		1'-0"	1'-9"	6'-3"
E4	4	10	6'-0"	Str.								
E5	28	5	33'-0"	T1	0'-5"	6'-0½"	10'-0½"	6'-0½"	10'-0½"			
E6	28	5	29'-0"	T1	0'-5"	6'-0½"	8'-0½"	6'-0½"	8'-0½"			
E7	56	5	28'-9"	T1	0'-5"	4'-6½"	9'-4½"	4'-6½"	9'-4½"			
E8	28	4	13'-3"	T1	0'-4½"	0'-10½"	5'-4½"	0'-10½"	5'-4½"			
E9	208		2'-3"	T5	0'-6"	1'-3"	0'-6"					
E10	208		3'-3"	T5	0'-6"	2'-3"	0'-6"					
E11	104		3'-6"	T5	0'-6"	2'-6"	0'-6"					
E12	52	4	2'-3"	T5	0'-6"	1'-3"	0'-6"					
F1	26	10	27'-0"	Str.								
F2	134	10	23'-9"	Str.								
F3	98	10	6'-6"	24		3'-6"	2'-0"	1'-0"		1'-0"	1'-9"	6'-3"
F5	28	5	29'-0"	T1	0'-5"	6'-0½"	8'-0½"	6'-0½"	8'-0½"			
F6	28	5	27'-0"	T1	0'-5"	6'-0½"	7'-0½"	6'-0½"	7'-0½"			
F7	56	5	24'-9"	T1	0'-5"	4'-6½"	7'-4½"	4'-6½"	7'-4½"			
F8	28	4	13'-3"	T1	0'-4½"	0'-10½"	5'-4½"	0'-10½"	5'-4½"			
F9	104	4	2'-3"	T5	0'-6"	1'-3"	0'-6"					
F10	208	4	2'-3"	T5	0'-6"	1'-3"	0'-6"					
F11	104	4	2'-6"	T5	0'-6"	1'-6"	0'-6"					
F13	40	10	30'-0"	Str.								
F14	4	8	30'-0"	Str.								
F15	32	8	12'-0"	19		1'-0"	11'-0"			0'-9"	0'-9"	11'-9"
F16	20	5	6'-0"	Str.								
F17	38	6	16'-0"	T1	0'-6"	3'-10"	3'-8"	3'-10"	3'-8"			
F18	4	6	19'-6"	T1	0'-6"	3'-10"	5'-5"	3'-10"	5'-5"			
F19	4	6	23'-6"	T1	0'-6"	3'-10"	7'-5"	3'-10"	7'-5"			
G1	16	10	29'-3"	20		6'-0"	23'-6"					
G2	88	10	23'-3"	Str.								
G5	36	5	20'-9"	T1	0'-5"	4'-6½"	5'-4½"	4'-6½"	5'-4½"			
G6	36	5	22'-9"	T1	0'-5"	4'-10½"	6'-0½"	4'-10½"	6'-0½"			
G9	64	4	2'-3"	T5	0'-6"	1'-3"	0'-6"					
G10	128	4	2'-3"	T5	0'-6"	1'-3"	0'-6"					
G11	10	10	48'-0"	17		6'-0"	36'-6"	6'-0"				
G12	10	10	40'-0"	17		2'-4"	35'-10"	2'-4"				
G13	20	10	30'-0"	Str.								
G14	4	6	37'-6"	Str.								
G15	4	8	30'-0"	Str.								
G16	24	5	6'-0"	Str.								
G17	38		17'-6"	56	0'-9"	6'-1"	3'-10"	6'-1"				
G18	8		18'-9"			6'-7"	4'-0"	6'-7"				
G19	8		20'-0"			7'-3"	4'-0"	7'-3"				
G20	8		22'-0"			8'-3"	4'-0"	8'-3"				
G21	8		24'-6"			9'-6"	4'-0"	9'-6"				
G22	4		27'-0"			10'-9"	4'-0"	10'-9"				
G23	29		11'-9"	56	0'-9"	1'-7"	7'-1"	1'-7"				
G24	8	5	8'-0"	17		1'-0"	6'-1"	1'-0"				
G25	12	8	24'-0"	22		1'-9"	20'-6"	1'-9"		1'-3"	1'-3"	23'-0"
G26	12	6	18'-0"	22		1'-9"	14'-6"	1'-9"		1'-3"	1'-3"	17'-0"
G27	12	6	12'-0"	22		1'-9"	8'-6"	1'-9"		1'-3"	1'-3"	11'-0"

Bar Bends

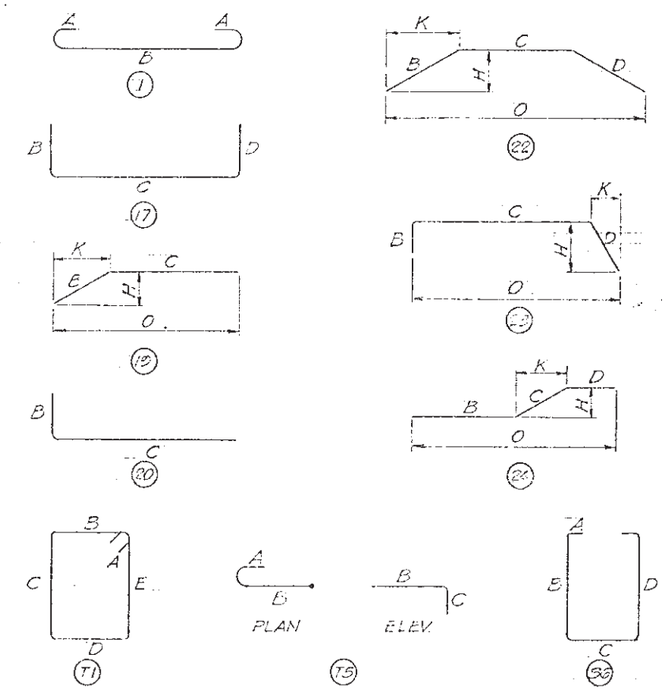

All dimensions are cut to out of bar.
Figures in circles show types.

ESTIMATED QUANTITIES

Item		Unit	Quantities
Class "A" Concrete		Cu. Yd.	1495.2
Reinforcing Steel		Lb.	204,700
Driving Steel	Actual Length	Lin. Ft.	506 115'-5750
Bearing Piles	Test Pile	Each	One
14 BP102	Pile Splices	Each	100
Structure Excavation		Cu. Yd.	None

1st in place
5th 5th 7th 11th

51-Splices

*See Sheet No. 51

ORIGINAL CONSTRUCTION PLANS

DETAILS OF PIER NO. 14

FOR

506'-6" BRIDGE OVER OAHE RESERVOIR

26'-0" ROADWAY

STA. 268+01.75 TO 318+60.25 WAR 180(1)

ON U S HWY. NO. 12 CORSON-WALWORTH COUNTIES

SOUTH DAKOTA H20-44

DEPARTMENT OF HIGHWAYS

AUG. 1957 (34) OF (40)

DESIGNED BY	DRAWN BY	CHECKED BY	APPROVED
	A.S.T. R.S.K.C.W.	E.K.	K. R. Dean BRIDGE ENGINEER

STATE OF	PROJECT	SHEET NO.	TOTAL SHEETS
S.D.	NH 0012(152)187	E37	E92

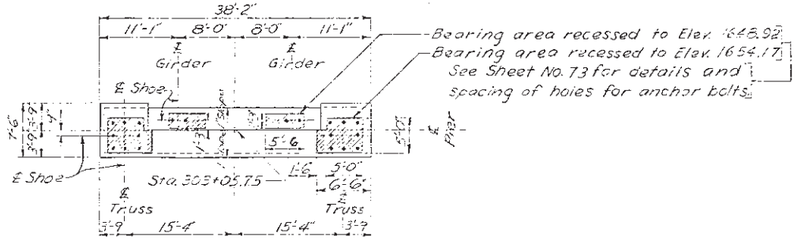

PLAN OF PIER CAP

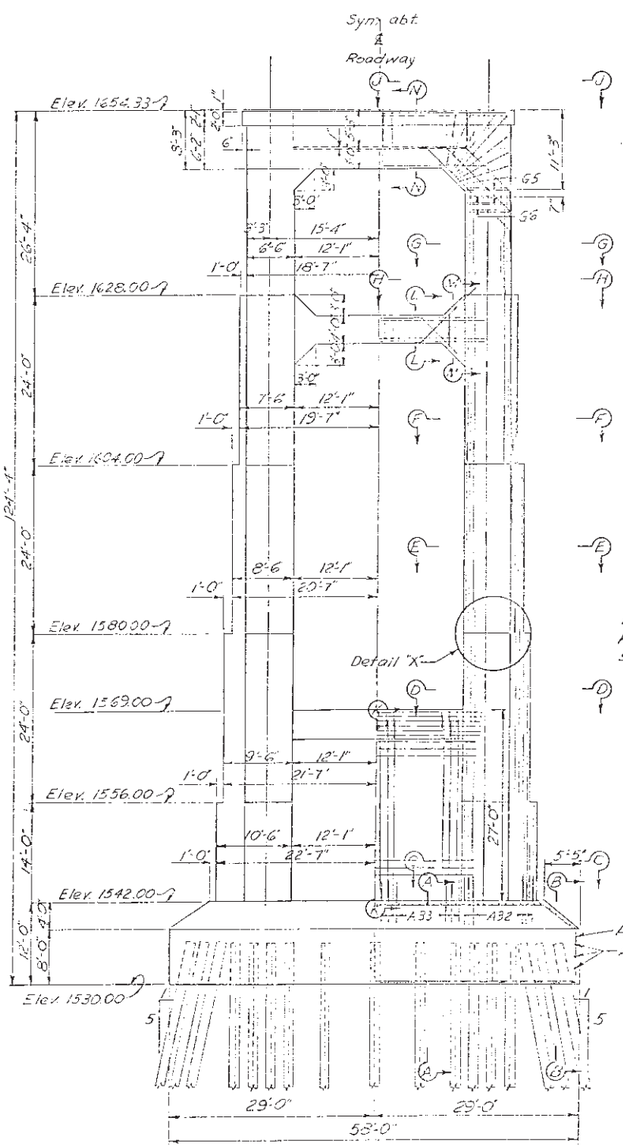

SIDE ELEVATION

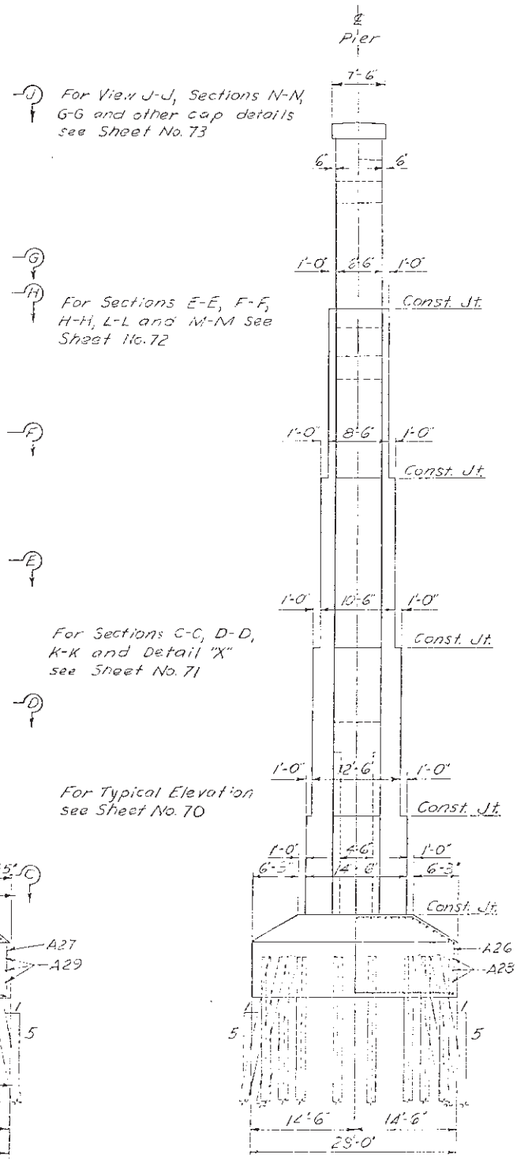

END ELEVATION

For View J-J, Sections N-N, G-G and other cap details see Sheet No. 73

For Sections E-E, F-F, H-H, L-L and M-M see Sheet No. 72

For Sections C-C, D-D, K-K and Detail "X" see Sheet No. 71

For Typical Elevation see Sheet No. 70

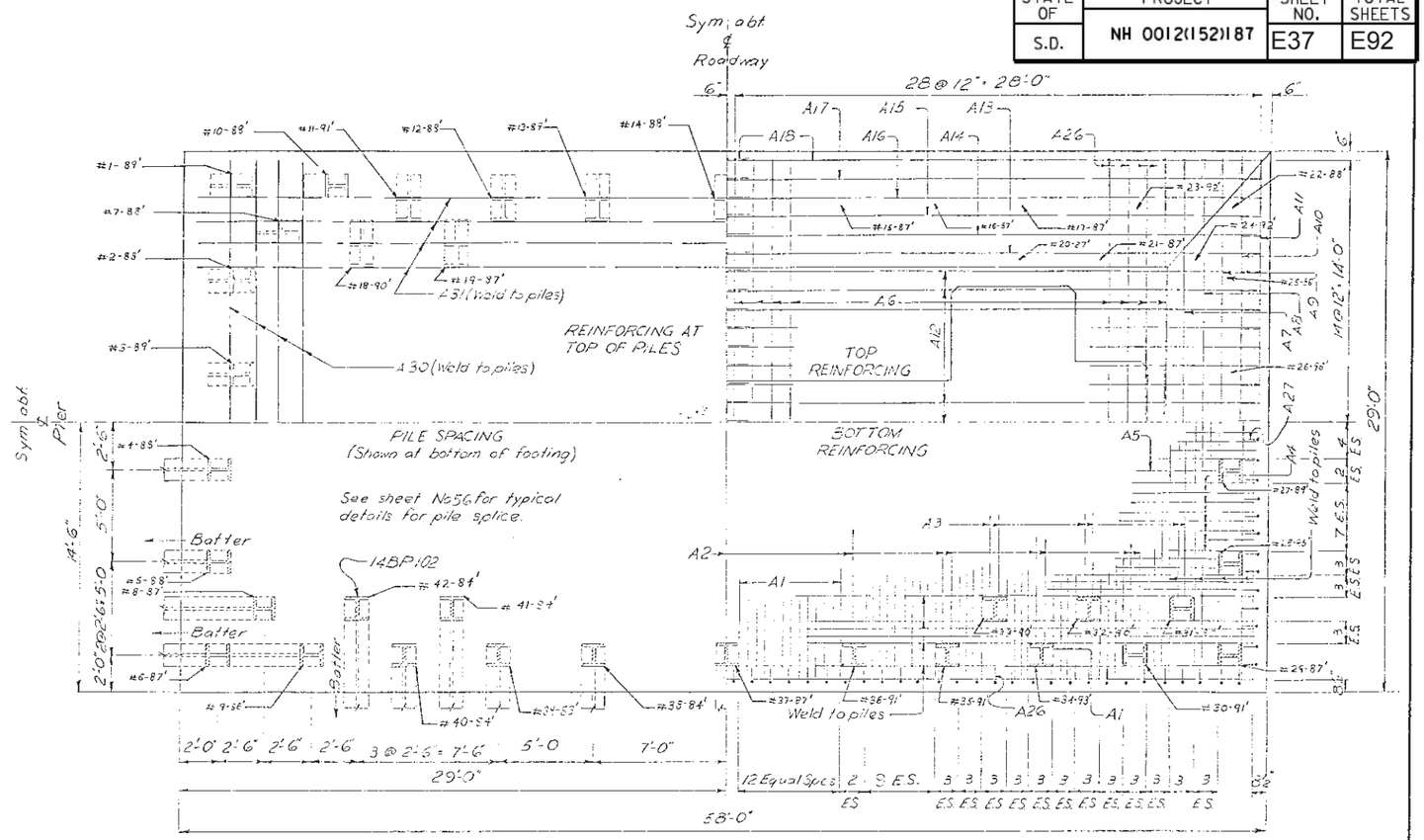

PLAN OF FOOTING

See sheet No. 56 for typical details for welding of rebars to piles

Note: E.S. denotes equal spaces.

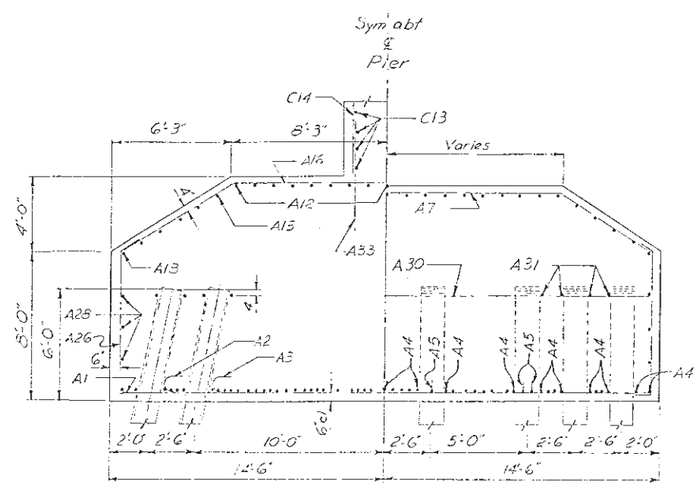

HALF SECTION A-A HALF SECTION B-B

ORIGINAL CONSTRUCTION PLANS

DETAILS OF PIER NO. 15

FOR

5058'-6" BRIDGE OVER OAHE RESERVOIR

26'-0" ROADWAY

STA. 268+01.75 TO 318+60.25 WAR 180(1)

ON US HWY. NO. 12 CORSON-WALWORTH COUNTIES

SOUTH DAKOTA H20-44

DEPARTMENT OF HIGHWAYS

AUG. 1957 35 OF 40

DESIGNED BY	DRAWN BY	CHECKED BY	APPROVED
	KTP	ASF	BRIDGE ENGINEER

STATE OF	PROJECT	SHEET NO.	TOTAL SHEETS
S.D.	NH 0012(152)187	E38	E92

REINFORCING SCHEDULE

MARK	NO.	SIZE	LENGTH	TYPE	A	B	C	D	E	H	K	O
A1	98	9	28'-0"	Str.								
A2	15	9	25'-3"	1	1'-1"	23'-1"						
A3	12	9	20'-3"	1	1'-1"	18'-1"						
A4	45	9	57'-0"	Str.								
A5	6	9	54'-3"	1	1'-1"	52'-1"						
A6	48	7	30'-9"	22		7'-3"	16'-3"	7'-3"		3'-11"	6'-1"	28'-5"
A7	2		30'-3"			6'-0"	18'-3"	6'-0"		3'-3"	5'-1"	28'-5"
A8	2		30'-0"			4'-8"	20'-8"	4'-8"		2'-6"	3'-11"	28'-6"
A9	2		29'-6"			3'-3"	23'-0"	3'-3"		1'-9"	2'-9"	28'-6"
A10	2		29'-0"			1'-11"	25'-2"	1'-11"		1'-0"	1'-7"	28'-4"
A11	2		28'-6"	22		0'-6"	27'-6"	0'-6"		0'-3"	0'-5"	28'-4"
A12	34		31'-9"	19		6'-7"	25'-2"			3'-11"	5'-3"	30'-5"
A13	4		31'-6"			5'-9"	25'-9"			3'-5"	4'-7"	30'-4"
A14	4		31'-3"			4'-8"	26'-7"			2'-9"	3'-9"	30'-4"
A15	4		31'-0"			3'-6"	27'-6"			2'-1"	2'-10"	30'-4"
A16	4		30'-9"			2'-6"	28'-3"			1'-6"	2'-0"	30'-3"
A17	4		30'-6"			1'-5"	29'-1"			0'-10"	1'-2"	30'-3"
A18	4	7	30'-6"	19		0'-4"	30'-2"			0'-2"	0'-3"	30'-5"
A26	112	5	9'-3"	23		1'-0"	7'-2"	1'-3"		1'-0½"	0'-8"	7'-10"
A27	54	5	9'-3"	23		1'-0"	7'-2"	1'-3"		1'-0"	0'-9"	7'-11"
A28	6	5	57'-0"	Str.								
A29	6	5	28'-0"	1								
A30	8	8	27'-0"									
A31	8	8	56'-0"									
A32	280	10	7'-0"									
A33	48	9	6'-0"									
C1	146	10	17'-0"	1								
C2	134	10	13'-9"	Str.								
C3	98	10	6'-6"	24		3'-6"	2'-0"	1'-0"		1'-0"	1'-9"	6'-3"
C4	4	10	6'-0"	Str.								
C5	14	5	41'-0"	T1	0'-5"	14'-0½"	6'-0½"	14'-0½"	6'-0½"			
C6	16	5	33'-0"	T1	0'-5"	10'-0½"	6'-0½"	10'-0½"	6'-0½"			
C7	32	5	36'-9"	T1	0'-5"	13'-4½"	4'-6½"	13'-4½"	4'-6½"			
C8	14	4	13'-3"	T1	0'-4½"	5'-4½"	0'-10½	5'-4½"	0'-10½"			
C9	256	4	2'-3"	T5	0'-6"	1'-3"	0'-6"					
C10	128	4	5'-3"	T5	0'-6"	4'-3"	0'-6"					
C11	64	4	5'-6"	T5	0'-6"	4'-6"	0'-6"					
C12	96	4	2'-3"	T5	0'-6"	1'-3"	0'-6"					
C13	46	6	28'-0"	Str.								
C14	48	9	26'-0"	Str.								
C15	18	10	30'-0"	Str.								
C16	48	6	16'-6"	T1	0'-6"	5'-6"	2'-3"	5'-6"	2'-3"			
D1	106	10	27'-0"	Str.								
D2	134	10	23'-9"	Str.								
D3	98	10	6'-6"	24		3'-6'	2'-0"	1'-0"		1'-0"	1'-9"	6'-3"
D4	4	10	6'-0"	Str.								
D5	28	5	37'-0"	T1	0'-5	12'-0½"	6'-0½"	12'-0½"	6'-0½"			
D6	28	5	31'-0"	T1	0'-5"	9'-0½"	6'-0½"	9'-0½"	6'-0½"			
D7	56	5	32'-9"	T1	0'-5	11'-4½"	4'-6½"	11'-4½"	4'-6½"			
D8	28	4	13'-3"	T1	0'-4½"	5'-4½"	0'-10½"	5'-4½"	0'-10½"			
D9	312	4	2'-3"	T5	0'-6"	1'-3"	0'-6"					
D10	208	4	4'-3"	T5	0'-6"	3'-3"	0'-6"					
D11	104	4	4'-6"	T5	0'-6"	3'-6"	0'-6"					
D12	104	4	2'-3"	T5	0'-6"	1'-3"	0'-6"					

MARK	NO.	SIZE	LENGTH	TYPE	A	B	C	D	E	H	K	O
E1	66	10	27'-0"	Str.								
E2	134	10	23'-9"	Str.								
E3	98	10	6'-6"	24		3'-6"	2'-0"	1'-0"		1'-0"	1'-9"	6'-3"
E4	4	10	6'-0"	Str.								
E5	28	5	33'-0"	T1	0'-5"	10'-0½"	6'-0½"	10'-0½"	6'-0½"			
E6	28	5	29'-0"	T1	0'-5"	8'-0½"	6'-0½"	8'-0½"	6'-0½"			
E7	56	5	28'-9"	T1	0'-5"	9'-4½"	4'-6½"	9'-4½"	4'-6½"			
E8	28	4	13'-3"	T1	0'-4½"	5'-4½"	0'-10½"	5'-4½"	0'-10½"			
E9	208	4	2'-3"	T5	0'-6"	1'-3"	0'-6"					
E10	208	4	3'-3"	T5	0'-6"	2'-3"	0'-6"					
E11	104	4	3'-6"	T5	0'-6"	2'-6"	0'-6"					
E12	52	4	2'-3"	T5	0'-6"	1'-3"	0'-6"					
F1	26	10	27'-0"	Str.								
F2	134	10	23'-9"	Str.								
F3	98	10	6'-6"	24		3'-6"	2'-0"	1'-0"		1'-0"	1'-9"	6'-3"
F5	28	5	29'-0"	T1	0'-5"	8'-0½"	6'-0½"	8'-0½"	6'-0½"			
F6	28	5	27'-0"	T1	0'-5"	7'-0½"	6'-0½"	7'-0½"	6'-0½"			
F7	56	5	24'-9"	T1	0'-5"	7'-4½"	4'-6½"	7'-4½"	4'-6½"			
F8	28	4	13'-3"	T1	0'-4½"	5'-4½"	0'-10½"	5'-4½"	0'-10½"			
F9	104	4	2'-3"	T5	0'-6"	1'-3"	0'-6"					
F10	208	4	2'-3"	T5	0'-6"	1'-3"	0'-6"					
F11	104	4	2'-6"	T5	0'-6"	1'-6"	0'-6"					
F13	40	10	30'-0"	Str.								
F14	4	8	30'-0"	Str.								
F15	32	8	12'-0"	19		1'-0"	11'-0"			0'-9"	0'-9"	11'-9"
F16	20	5	6'-0"	Str.								
F17	38	6	16'-0"	T1	0'-6"	3'-10"	3'-8"	3'-10"	3'-8"			
F18	4	6	19'-6"	T1	0'-6"	3'-10"	5'-5"	3'-10"	5'-5"			
F19	4	6	23'-6"	T1	0'-6"	3'-10"	7'-5"	3'-10"	7'-5"			
G1	14	10	31'-9"	20		6'-1"	25'-11"					
G2	90	10	25'-9"	Str.								
G5	40	5	20'-6"	T1	0'-5"	5'-4½"	4'-6½"	5'-4½"	4'-6½"			
G6	36	5	22'-6"	T1	0'-5"	6'-0½	4'-10½"	6'-0½"	4'-10½"			
G9	72	4	2'-3"	T5	0'-6"	1'-3"	0'-6"					
G10	128	4	2'-3"	T5	0'-6"	1'-3"	0'-6"					
G11	7	10	48'-0"	17		6'-0"	36'-6"	6'-0"				
G12	7	10	40'-0"	17		2'-4"	35'-10"	2'-4"				
G13	8	10	40'-0"	17		2'-0"	36'-6"	2'-0"				
G14	14	10	30'-0"	Str.								
G15	9	8	28'-0"	1								
G16	3	6	37'-6"									
G17	4	6	6'-6"									
G18	14	5	3'-0"	Str.								
G19	24	1	9'-0"	56	0'-6"	2'-5"	3'-6"	2'-5"				
G20	1		14'-3"	56	0'-6"	2'-5"	3'-6"	7'-9"				
G21			19'-0"	56	0'-5"	7'-9"	3'-0"	7'-9"				
G22			7'-0"	56	0'-5"	1'-7"	3'-4"	1'-7"				
G23	24		7'-9"	17		0'-10"	6'-3"	0'-10"				
G24	8		11'-3"	56	0'-8"	1'-7"	7'-1"	1'-7"				
G25	8		8'-3"	17		1'-1"	6'-3"	1'-1"				
G26	2		20'-6"	56	0'-9"	8'-2"	3'-0"	8'-2"				
G27	2		22'-0"		0'-10"	8'-10"	3'-0"	8'-10"				
G28	4		25'-6"		0'-8"	10'-0"	4'-6"	10'-0"				
G29			27'-0"			10'-9"		10'-9"				
G30			29'-0"			11'-9"		11'-9"				
G31			25'-0"			9'-9"		9'-9"				
G32			22'-0"		0'-8"	8'-3"		8'-3"				
G33			20'-0"		0'-9	7'-2"		7'-2"				
G34	4	5	18'-6"	56	0'-9"	6'-5"	4'-6"	6'-5"				
G35	12	10	19'-6"	22		1'-9"	16'-0"	1'-9"		1'-3"	1'-3"	18'-6"
G36	12	6	15'-6"	22		1'-9"	12'-0"	1'-9"		1'-3"	1'-3"	14'-6"
G37	12	6	11'-6"	22		1'-9"	8'-0"	1'-9"		1'-3"	1'-3"	10'-6"

BAR BENDS

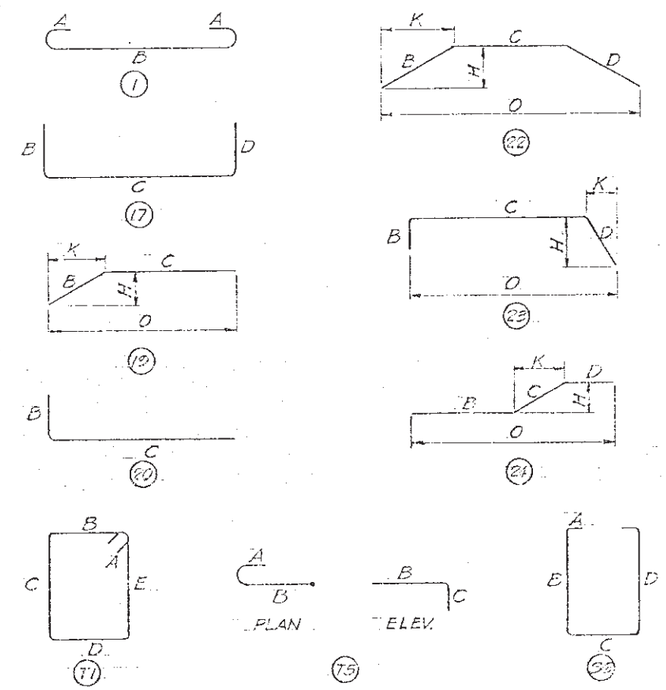

All dimensions are out to out of bar.
Figures in circles show types.

ESTIMATED QUANTITIES

ITEM		UNIT	QUANTITIES
Class "A" Concrete		Cu Yd	1496.5
Reinforcing Steel		Lb	196,100
Driving Steel	Actual Length	Lin Ft	42 @ 80'-3720
Bearing Piles	Test Pile	Each	One
14 BP102	Pile Splices	Each	42
Structure Excavation		Cu Yd	None

Lgth in place 42@3700=8340

50 Splices

*See Sheet No. 51

ORIGINAL CONSTRUCTION PLANS

DETAILS OF PIER NO. 15

FOR

5058'-6" BRIDGE OVER OAHE RESERVOIR

26'-0" ROADWAY

STA. 268+01.75 TO 318+60.25 WAR 180(1)

ON U S HWY. NO. 12 CORSON-WALWORTH COUNTIES

SOUTH DAKOTA H20-44

DEPARTMENT OF HIGHWAYS

AUG. 1957 36 OF 40

DESIGNED BY	DRAWN BY	CHECKED BY	APPROVED
	ASP T.Z. P.K.	E.K.	BRIDGE ENGINEER

STATE OF	PROJECT	SHEET NO.	TOTAL SHEETS
S.D.	NH 0012(152)187	E39	E92

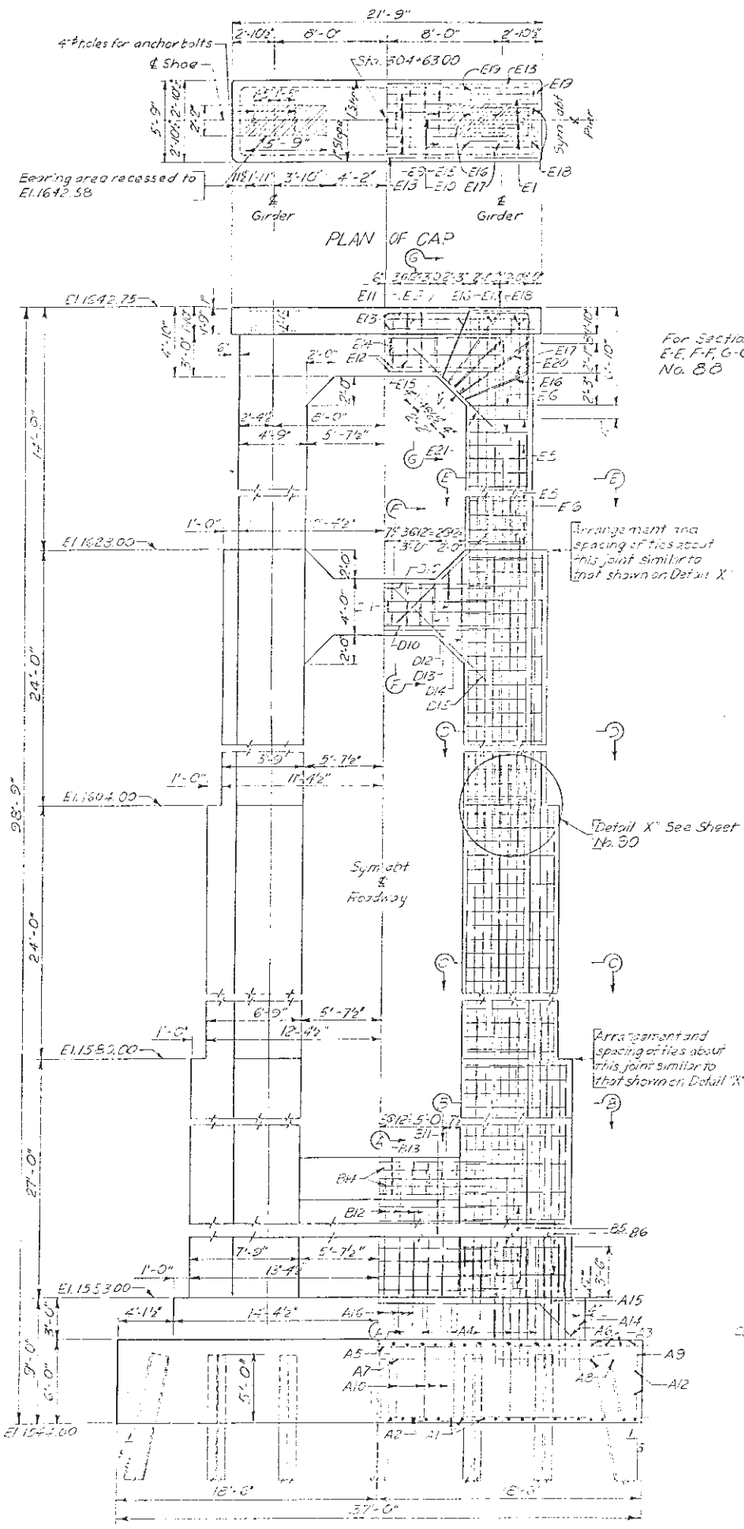

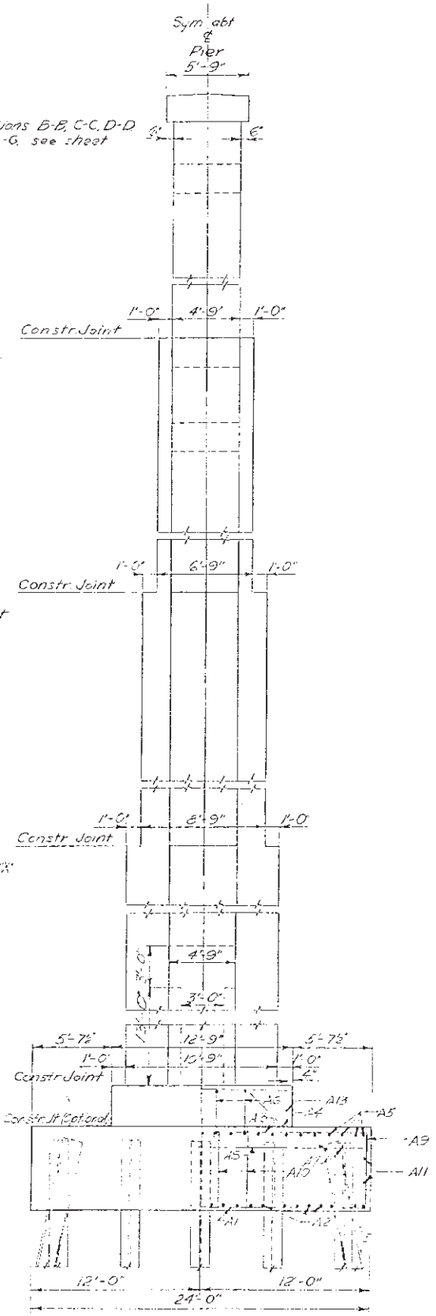

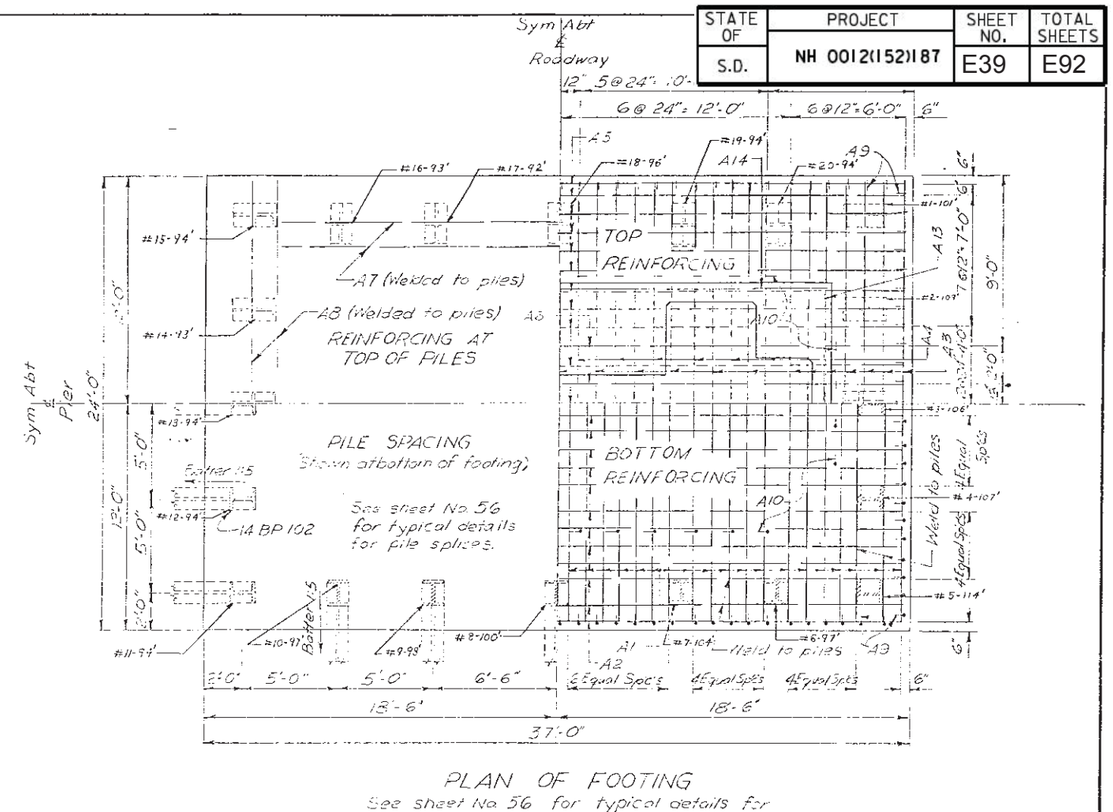

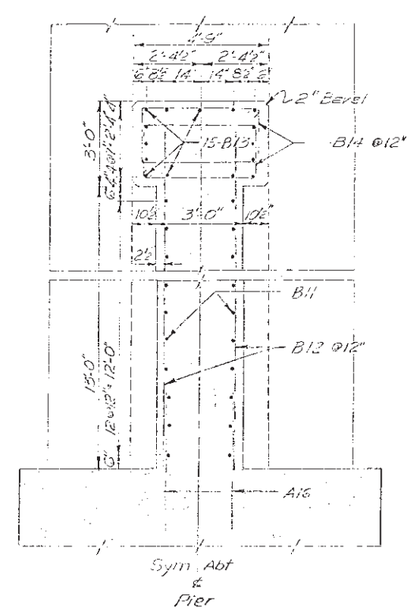

ORIGINAL CONSTRUCTION PLANS

DETAILS OF PIER NO. 16

FOR

5058'-6" BRIDGE OVER OAHE RESERVOIR

26'-0" ROADWAY

STA. 268+01.75 TO 318+60.25 WAR 180(1)

ON US HWY. NO. 12 CORSON-WALWORTH COUNTIES

SOUTH DAKOTA H20-44

DEPARTMENT OF HIGHWAYS

AUG. 1957 (37) OF (40)

DESIGNED BY	DRAWN BY	CHECKED BY	APPROVED
		E.K.	BRIDGE ENGINEER

STATE OF	PROJECT	SHEET NO.	TOTAL SHEETS
S.D.	NH 0012(152)187	E40	E92

Ties B5 alternate with B6 at 1'-0" ctrs.
Ties B8 & B10 in plane with B6 at 2'-0" ctrs.
Ties B7 & B9 in plane with B5 at 2'-0" ctrs

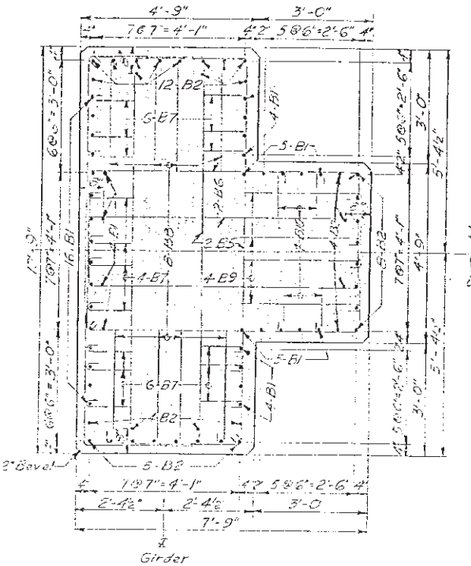

SEC. B-B

Ties C5 alternate with C6 at 1'-0" ctrs.
Ties C8 & C10 in plane with C6 at 2'-0" ctrs.
Girder Ties C7 & C9 in plane with C5 at 2'-0" ctrs.

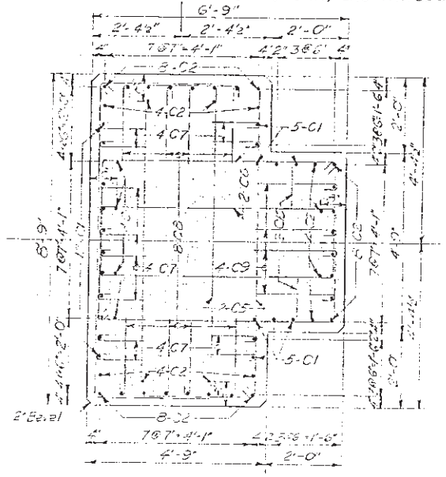

SEC. C-C

Ties D5 alternate with D6 at 1'-0" ctrs.
Ties D8 in plane with D6 at 2'-0" ctrs
Ties D7 & D9 in plane with D5 at 2'-0" ctrs

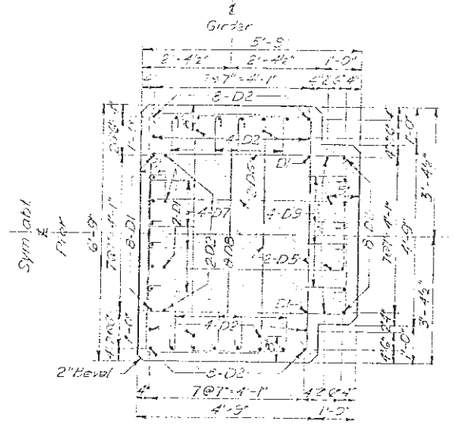

SEC. D-D

Ties E5 alternate with E6 at 1'-0" ctrs.
Ties E8 in plane with E6 at 2'-0" ctrs.
Ties E7 in plane with E5 at 2'-0" ctrs.

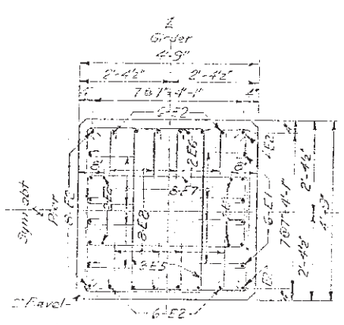

SEC. E-E

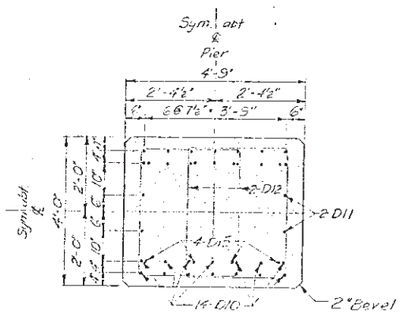

SEC. F-F

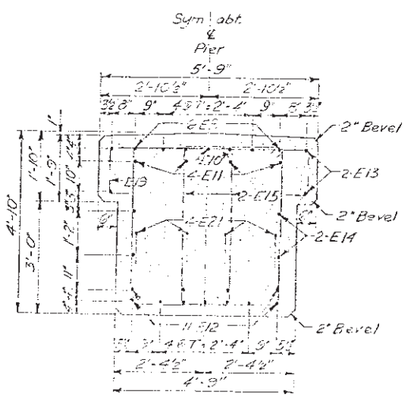

SEC. G-G

* For Pier Nos. 17, 18, 20 & 21 use a E9 instead of a E10

REINFORCING SCHEDULE

Mark	No	Size	Length	Type	A	B	C	D	E	F	H	K	O
A1	38	11	23'-3	Str.									
A2	24	11	36'-3"	Str.									
A3	25	6	23'-6"	Str.									
A4	12	6	26'-0"	3A		5'-6"	4'-4½"	6'-3"	4'-4½"	5'-6"	3'-1"		23'-5
A5	21	6	36'-6"	Str.									
A6	4	6	39'-0"	3A		3'-11"	4'-4½"	22'-5"	4'-4½"	3'-11"	3'-1"		36'-5
A7	4	8	29'-6"	Str.									
A8	4	8	23'-6"	Str.									
A9	116	6	6'-6"	S10		0'-6"	5'-6"	0'-6"					
A10	32	5	6'-9"	18A	0'-7"	5'-6"	0'-8"						
A11	4	6	36'-6"	Str.									
A12	4	6	23'-6"	Str.									
A13	2	5	20'-0"	17		4'-0"	12'-2"	4'-0"					
A14	2	5	36'-0"	17		4'-0"	28'-2"	4'-0"					
A15	148	11	8'-6"	Str.									
A16	24	8	5'-0"	Str.									
B1	76	11	30'-0"	Str.									
B2	72	11	26'-9"	Str.									
B3	48	11	6'-6"	24		3'-6"	2'-0"	1'-0"			1'-0"	1'-9"	6'-3"
B5	56	6	28'-0"	T1	0'-6"	3'-2"	10'-4"	3'-2"	10'-4"				
B6	56	6	22'-0"	T1	0'-6"	3'-2"	7'-4"	3'-2"	7'-4"				
B7	448	4	2'-3"	T5	0'-6"	1'-4"	0'-5"						
B8	224	4	4'-3"	T5	0'-6"	3'-2"	0'-7"						
B9	112	4	4'-3"	T5	0'-6"	3'-2"	0'-7"						
B10	112	4	2'-3"	T5	0'-6"	1'-4"	0'-5"						
B11	26	6	15'-0"	Str.									
B12	22	8	15'-0"	Str.									
B13	15	11	17'-0"	Str.									
B14	22	6	13'-0"	T1	0'-6"	4'-0"	2'-0"	4'-0"	2'-0"				
C1	52	11	27'-0"	Str.									
C2	72	11	23'-9"	Str.									
C3	48	11	6'-6"	24		3'-6"	2'-0"	1'-0"			1'-0"	1'-9"	6'-3"
C5	56	6	24'-0"	T1	0'-6"	3'-2"	8'-4"	3'-2"	8'-4"				
C6	56	6	20'-0"	T1	0'-6"	3'-2"	6'-4"	3'-2"	6'-4"				
C7	312	4	2'-3"	T5	0'-6"	1'-4"	0'-5"						
C8	208	4	3'-3"	T5	0'-6"	2'-2"	0'-7"						
C9	104	4	3'-3"	T5	0'-6"	2'-2"	0'-7"						
C10	52	4	2'-3"	T5	0'-6"	1'-4"	0'-5"						

Mark	No	Size	Length	Type	A	B	C	D	E	F	H	K	O
D1	28	11	27'-0"	Str.									
D2	72	11	23'-9"	Str.									
D3	40	11	6'-6"	24		3'-6"	2'-0"	1'-0"			1'-0"	1'-9"	6'-3"
D5	56	6	20'-0"	T1	0'-6"	3'-2"	6'-4"	3'-2"	6'-4"				
D6	56	6	18'-0"	T1	0'-6"	3'-2"	5'-4"	3'-2"	5'-4"				
D7	104	4	2'-3"	T5	0'-6"	1'-4"	0'-5"						
D8	208	4	2'-3"	T5	0'-6"	1'-2"	0'-7"						
D9	104	4	2'-3"	T5	0'-6"	1'-2"	0'-7"						
D10	28	11	15'-0"	Str.									
D11	4	8	15'-0"	Str.									
D12	16	5	13'-6"	T1	0'-5"	2'-9"	3'-7"	2'-9"	3'-7"				
D13	4	5	17'-6"	T1	0'-5"	2'-9"	5'-7"	2'-9"	5'-7"				
D14	4	5	21'-6"	T1	0'-5"	2'-9"	7'-7"	2'-9"	7'-7"				
D15	16	8	9'-9"	19		0'-7"	9'-2"				6'-6"	6'-6"	7'-1"
E1	12	11	20'-9"	20		6'-8"	14'-4"						
E2	52	11	14'-3"	Str.									
E5	24	6	16'-0"	T1	0'-6"	3'-2"	4'-4"	3'-2"	4'-4"				
E6	24	6	16'-0"	T1	0'-6"	3'-2"	4'-4"	3'-2"	4'-4"				
E7	80	4	2'-3"	T5	0'-6"	1'-4"	0'-5"						
E8	80	4	2'-3"	T5	0'-6"	1'-4"	0'-5"						
E9	6	11	32'-6"	17		6'-5"	20'-2"	6'-5"					
E10	1	11	12'-3"	Str.									
E11	4	11	24'-6"	17		2'-9"	19'-6"	2'-9"					
E12	11	11	16'-0"	Str.									
E13	4	6	21'-3"	Str.									
E14	4	8	16'-0"	Str.									
E15	16	6	12'-6"	S6	0'-6"	4'-4"	2'-9"	4'-4"					
E16	8	6	13'-9"	S6	0'-6"	4'-11"	2'-11"	4'-11"					
E17	8	6	16'-0"	S6	0'-6"	6'-1"	2'-11"	6'-1"					
E18	4	6	18'-9"	S6	0'-6"	7'-5"	2'-11"	7'-5"					
E19	14	5	9'-0"	S6	0'-6"	1'-4"	5'-4"	1'-4"					
E20	4	5	6'-0"	S10		0'-10"	4'-4"	0'-10"					
E21	8	11	8'-0"	Str.									

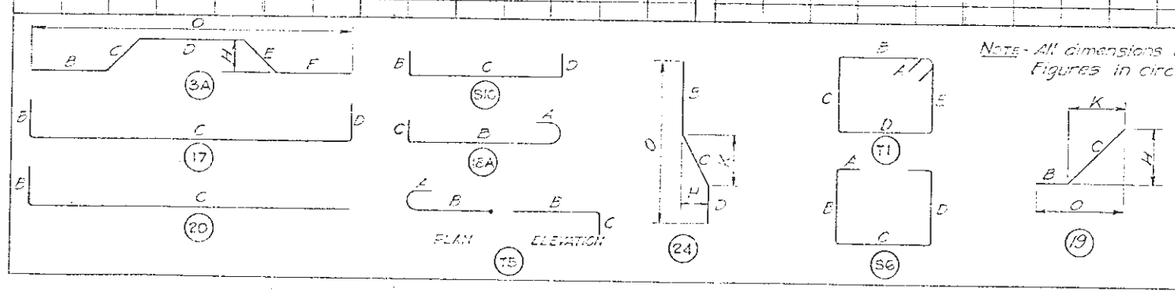

Note - All dimensions are out to out of bar. Figures in circles show types.

ESTIMATED QUANTITIES

ITEM	UNIT	QUANTITIES
Class "A" Concrete	Cu. Yd.	592.3
Reinforcing Steel	Lb.	110,120
Driving Steel Bearing Piles 14 BP 102	Actual Length For Test Pile	20@100'= 2000
	For All Splices	Each *None
	Each	30
Structure Excavation	Cu. Yd.	140

20@1971 = 98.55' Lgth. in place

30 Splices.

* See Sheet No. 51

ORIGINAL CONSTRUCTION PLANS

DETAILS OF PIER NO. 16
FOR
5058'-6" BRIDGE OVER OAHE RESERVOIR
26'-0" ROADWAY

STA. 268+01.75 TO 318+60.25 WAR 180(1)
ON US HWY. NO. 12 CORSON-WALWORTH COUNTIES
SOUTH DAKOTA H20-44
DEPARTMENT OF HIGHWAYS
AUG. 1957 (38) OF (40)

DESIGNED BY	DRAWN BY	CHECKED BY	APPROVED
	K.J. & E.K.	E.K. & A.S.F.	BRIDGE ENGINEER

STATE OF	PROJECT	SHEET NO.	TOTAL SHEETS
S.D.	NH 0012(152)187	E41	E92

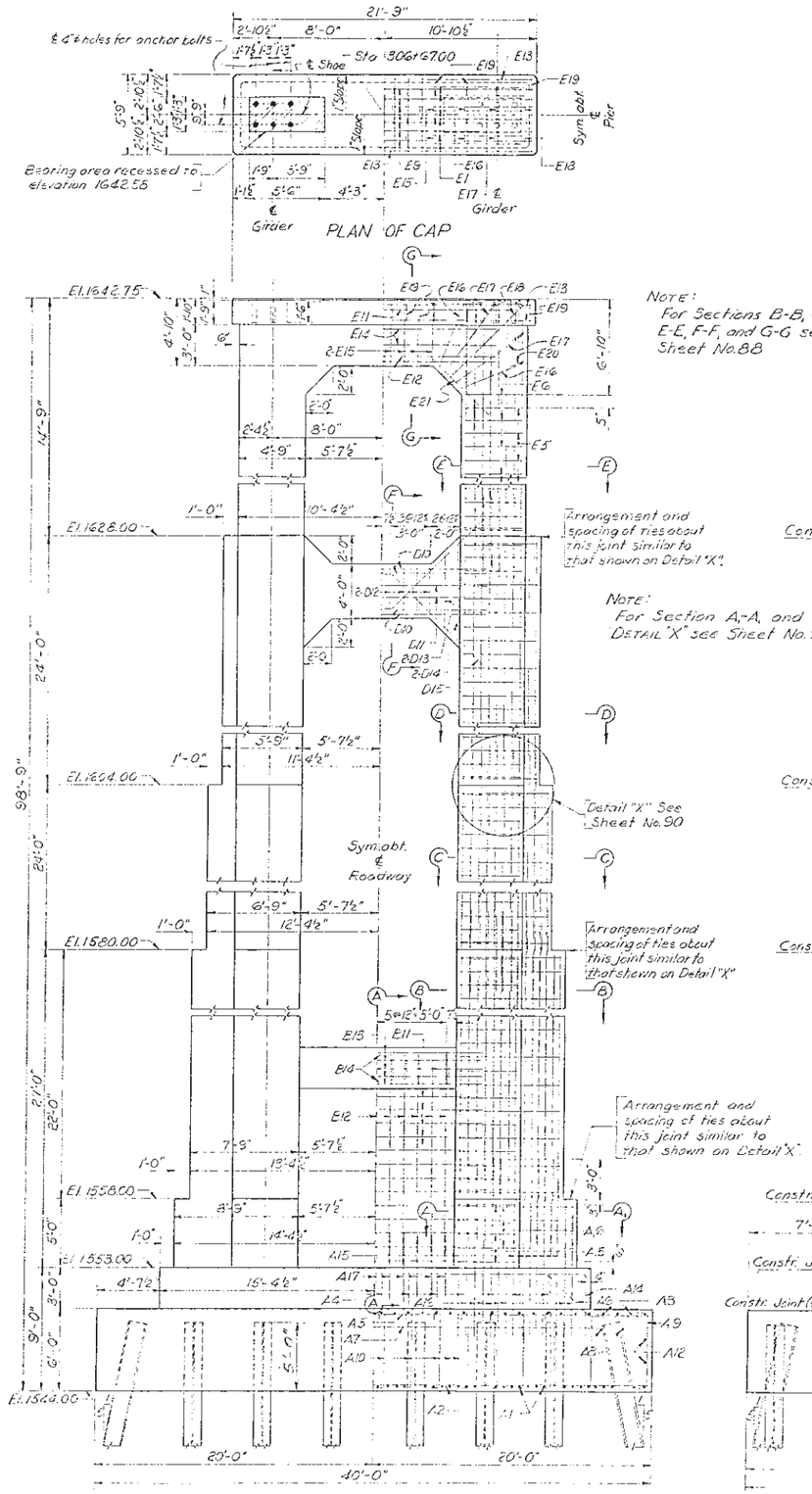

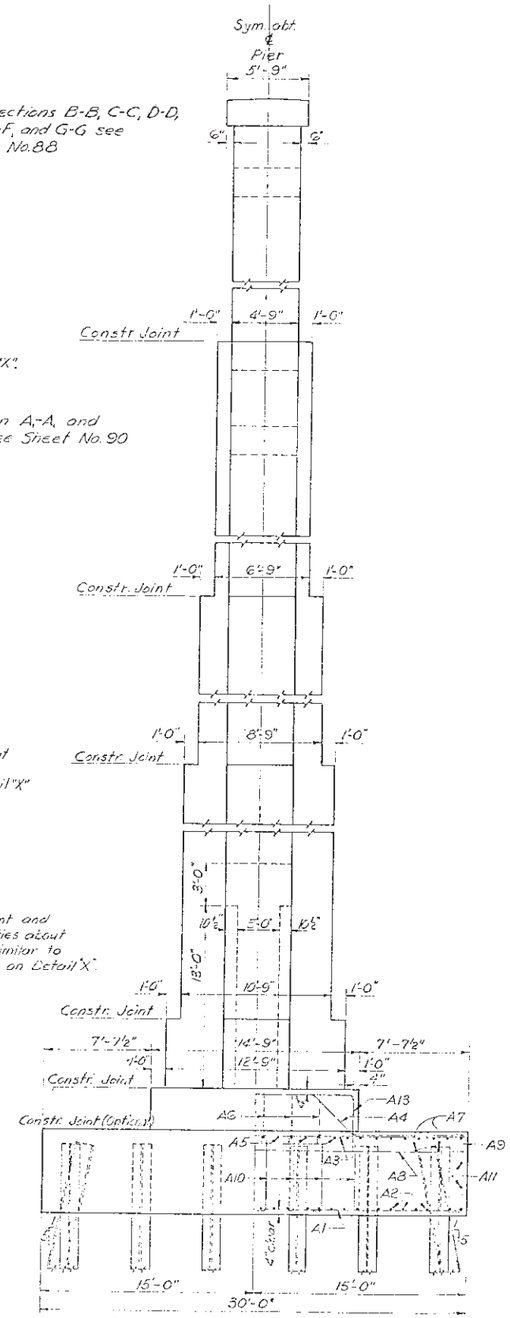

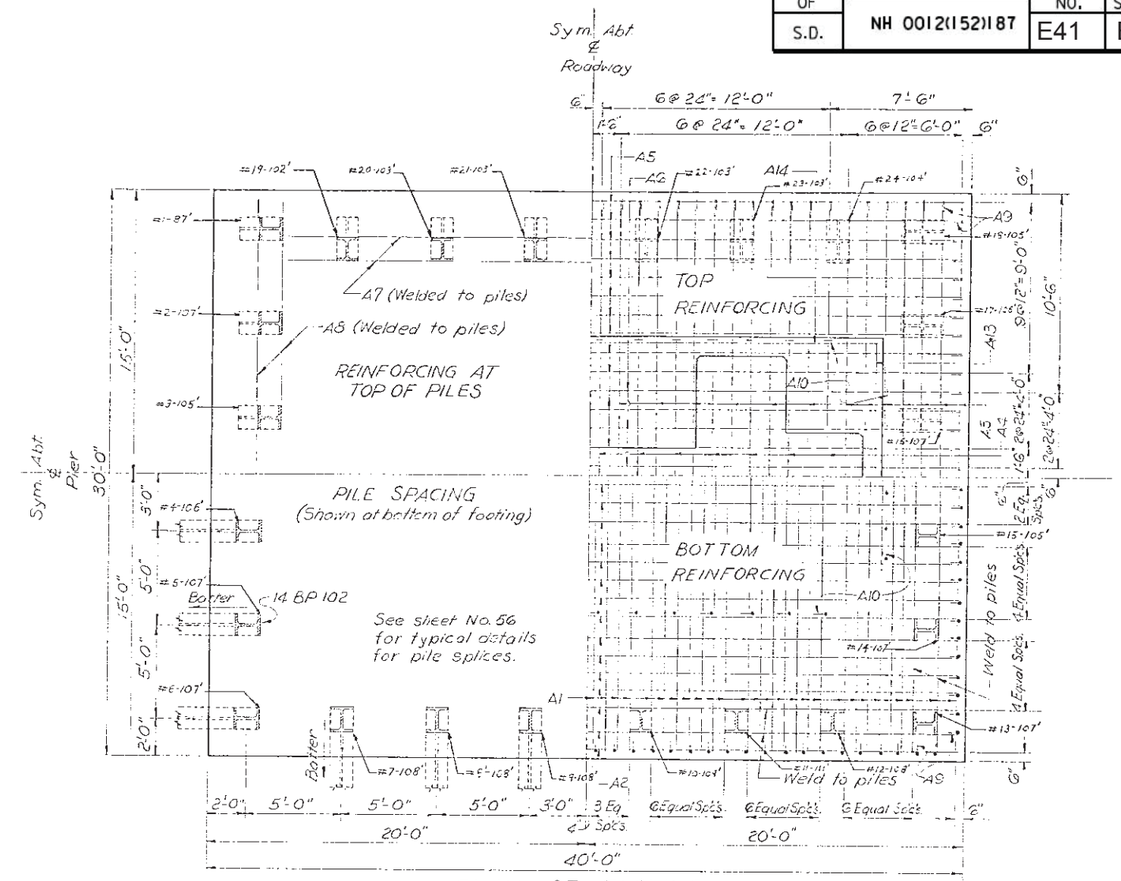

PLAN OF FOOTING

See sheet No. 56 for typical details for welding of re-bars to piles.

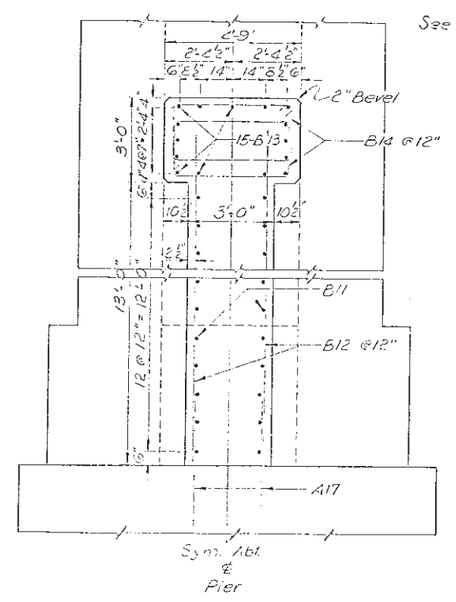

SECTION A-A

(Footing re-steel not shown)

ORIGINAL CONSTRUCTION PLANS

DETAILS OF PIER NO. 17

FOR

5058'-6" BRIDGE OVER OAHE RESERVOIR

26'-0" ROADWAY

STA. 268+01.75 TO 318+60.25 WAR 180 (1)

ON US HWY. NO. 12 CORSON-WALWORTH COUNTIES

SOUTH DAKOTA H20-44

DEPARTMENT OF HIGHWAYS

AUG. 1957 39 OF 40

DESIGNED BY	DRAWN BY	CHECKED BY	APPROVED
	K.C.W.	E.K.	BRIDGE ENGINEER

STATE OF	PROJECT	SHEET NO.	TOTAL SHEETS
S.D.	NH 0012(152)187	E42	E92

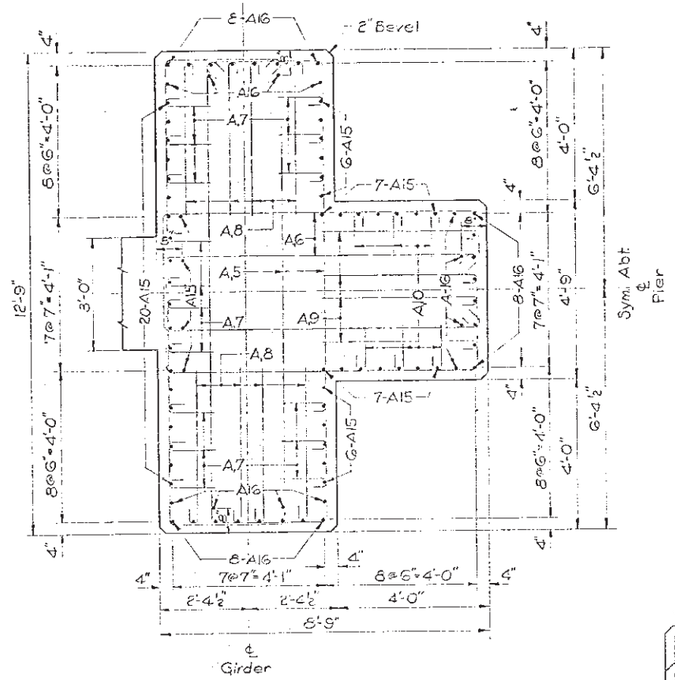

SECTION A,~A,

Ties A,5 alternate with A,6 at 1'-0" ctrs.
Ties A,7 & A,9 in plane with A,5 at 2'-0" ctrs.
Ties A,8 & A,10 in plane with A,6 at 2'-0" ctrs.

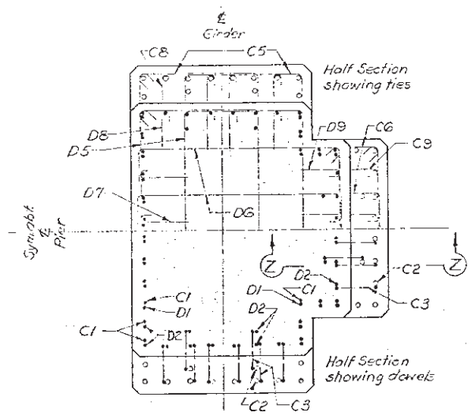

SEC. "Y-Y"

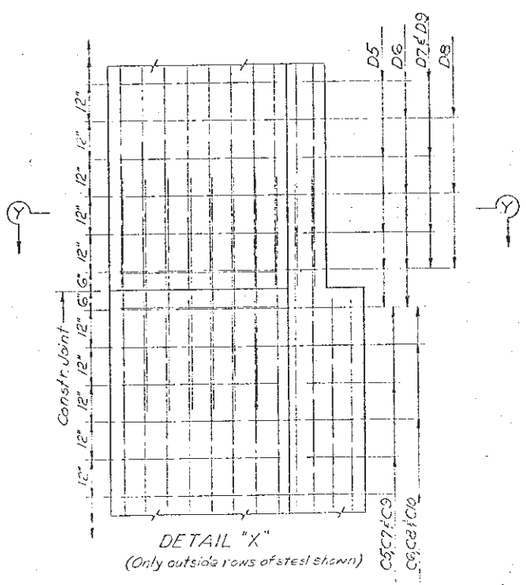

DETAIL "X"
(Only outside rows of steel shown)

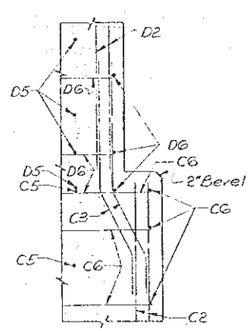

SEC. "Z-Z"

REINFORCING SCHEDULE

Mark	No	Size	Length	Type	A	B	C	D	E	F	H	K	O
A1	54	11	29'-3"	Str.									
A2	30	11	39'-3"	Str.									
A3	26	6	29'-6"	Str.									
A4	14	6	32'-0"	3A		7'-6"	4'-4½"	8'-3"	4'-4½"	7'-6"			29'-5"
A5	24	6	39'-6"	Str.									
A6	6	6	42'-0"	3A		4'-5"	4'-4½"	24'-5"	4'-4½"	4'-5"			39'-5"
A7	4	8	32'-6"	Str.									
A8	4	8	29'-6"	Str.									
A9	132	6	6'-6"	S10		0'-6"	5'-6"	0'-6"					
A10	40	5	6'-9"	18A	0'-7"	5'-6"	0'-8"						
A11	4	6	39'-6"	Str.									
A12	4	6	29'-6"	Str.									
A13	2	5	22'-0"	17		4'-0"	14'-2"	4'-0"					
A14	2	5	38'-0"	17		4'-0"	30'-2"	4'-0"					
A15	100	11	13'-0"	Str.									
A16	72	11	9'-9"	Str.									
A17	24	8	5'-0"	Str.									
A,5	12	6	32'-0"	T1	0'-6"	3'-2"	12'-4"	3'-2"	12'-4"				
A,6	12	6	24'-0"	T1	0'-6"	3'-2"	8'-4"	3'-2"	8'-4"				
A,7	96	4	2'-3"	T5	0'-6"	1'-4"	0'-5"						
A,8	48	4	5'-3"	T5	0'-6"	4'-2"	0'-7"						
A,9	24	4	5'-3"	T5	0'-6"	4'-2"	0'-7"						
A,10	36	4	2'-3"	T5	0'-6"	1'-4"	0'-5"						
B1	76	11	25'-0"	Str.									
B2	72	11	21'-9"	Str.									
B3	48	11	6'-6"	24		3'-6"	2'-0"	1'-0"			1'-0"	1'-9"	6'-3"
B5	52	6	28'-0"	T1	0'-6"	3'-2"	10'-4"	3'-2"	10'-4"				
B6	52	6	22'-0"	T1	0'-6"	3'-2"	7'-4"	3'-2"	7'-4"				
B7	384	4	2'-3"	T5	0'-6"	1'-4"	0'-5"						
B8	192	4	4'-3"	T5	0'-6"	3'-2"	0'-7"						
B9	96	4	4'-3"	T5	0'-6"	3'-2"	0'-7"						
B10	96	4	2'-3"	T5	0'-6"	1'-4"	0'-5"						
B11	26	6	15'-0"	Str.									
B12	22	8	15'-0"	Str.									
B13	15	11	17'-0"	Str.									
B14	22	6	13'-0"	T1	0'-6"	4'-0"	2'-0"	4'-0"	2'-0"				
C1	52	11	27'-0"	Str.									
C2	72	11	23'-9"	Str.									
C3	48	11	6'-6"	24		3'-6"	2'-0"	1'-0"			1'-0"	1'-9"	6'-3"
C5	56	6	24'-0"	T1	0'-6"	3'-2"	8'-4"	3'-2"	8'-4"				

Mark	No	Size	Length	Type	A	B	C	D	E	F	H	K	O
C6	56	6	20'-0"	T1	0'-6"	3'-2"	6'-4"	3'-2"	6'-4"				
C7	312	4	2'-3"	T5	0'-6"	1'-4"	0'-5"						
C8	208	4	3'-3"	T5	0'-6"	2'-2"	0'-7"						
C9	104	4	3'-3"	T5	0'-6"	2'-2"	0'-7"						
C10	52	4	2'-3"	T5	0'-6"	1'-4"	0'-5"						
D1	28	11	27'-0"	Str.									
D2	72	11	23'-9"	Str.									
D3	40	11	6'-6"	24		3'-6"	2'-0"	1'-0"			1'-0"	1'-9"	6'-3"
D5	56	6	20'-0"	T1	0'-6"	3'-2"	6'-4"	3'-2"	6'-4"				
D6	56	6	18'-0"	T1	0'-6"	3'-2"	5'-4"	3'-2"	5'-4"				
D7	104	4	2'-3"	T5	0'-6"	1'-4"	0'-5"						
D8	208	4	2'-3"	T5	0'-6"	1'-2"	0'-7"						
D9	104	4	2'-3"	T5	0'-6"	1'-2"	0'-7"						
D10	28	11	15'-0"	Str.									
D11	4	8	15'-0"	Str.									
D12	16	5	13'-6"	T1	0'-5"	2'-9"	3'-7"	2'-9"	3'-7"				
D13	4	5	17'-6"	T1	0'-5"	2'-9"	5'-7"	2'-9"	5'-7"				
D14	4	5	21'-6"	T1	0'-5"	2'-9"	7'-7"	2'-9"	7'-7"				
D15	16	8	9'-9"	19		0'-7"	9'-2"				6'-6"	6'-6"	7'-1"
E1	12	11	20'-9"	20		6'-8"	14'-4"						
E2	52	11	14'-3"	Str.									
E5	24	6	16'-0"	T1	0'-6"	3'-2"	4'-4"	3'-2"	4'-4"				
E6	24	6	16'-0"	T1	0'-6"	3'-2"	4'-4"	3'-2"	4'-4"				
E7	80	4	2'-3"	T5	0'-6"	1'-4"	0'-5"						
E8	80	4	2'-3"	T5	0'-6"	1'-4"	0'-5"						
E9	7	11	32'-6"	17		6'-5"	20'-2"	6'-5"					
E11	4	11	24'-6"	17		2'-9"	19'-6"	2'-9"					
E12	11	11	16'-0"	Str.									
E13	4	6	21'-3"	Str.									
E14	4	8	16'-0"	Str.									
E15	16	6	12'-6"	S6	0'-6"	4'-4"	2'-9"	4'-4"					
E16	8	6	13'-9"	S6	0'-6"	4'-11"	2'-11"	4'-11"					
E17	8	6	16'-0"	S6	0'-6"	6'-1"	2'-11"	6'-1"					
E18	4	6	18'-9"	S6	0'-6"	7'-5"	2'-11"	7'-5"					
E19	14	5	9'-0"	S6	0'-6"	1'-4"	5'-4"	1'-4"					
E20	4	5	6'-0"	S10		0'-10"	4'-4"	0'-10"					
E21	8	11	8'-0"	Str.									

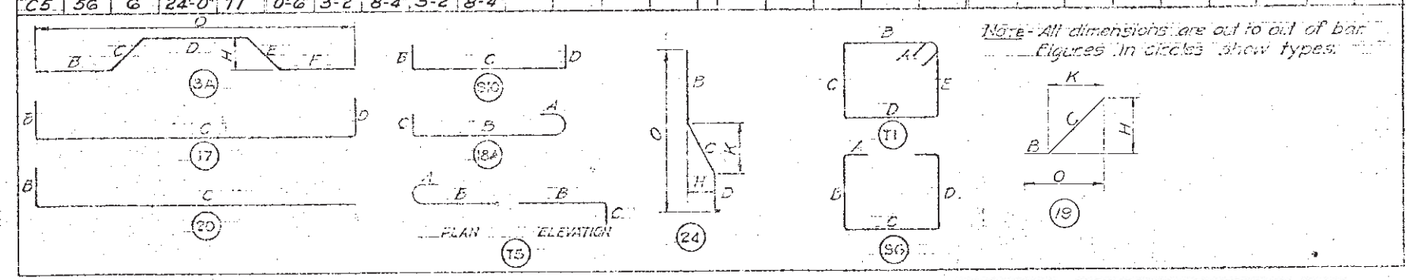

Note - All dimensions are out to out of bar.
Figures in circles show types.

ESTIMATED QUANTITIES

ITEM		UNIT	QUANTITIES
Class "A" Concrete		Cu.Yd.	676.6
Reinforcing Steel		Lb.	117,750
Bearing Piles	Actual Length	Lin. Ft.	24@100=2400
Bearing Piles	For Test Pile	Each	None
14 BP 102	Pile Splices	Each	26
Structure Excavation		Cu.Yd.	380

24@526=10526' Lg. in place

26 Splices

*See Sheet No. 51

ORIGINAL CONSTRUCTION PLANS

DETAILS OF PIER NO. 17
FOR
505'-6" BRIDGE OVER OAHE RESERVOIR
26'-0" ROADWAY
STA. 268+01.75 TO 313+00.25 WAR 180(1)
ON US HWY. NO. 12 CORSON-WALWORTH COUNTIES
SOUTH DAKOTA H20-44
DEPARTMENT OF HIGHWAYS
AUG. 1957 (40) OF (40)

DESIGNED BY	DRAWN BY	CHECKED BY	APPROVED
	K.C.H.E.R. 7-57 K.C.H.	E.K.E.A.C.	K. Dunn BRIDGE ENGINEER

STATE OF	PROJECT	SHEET NO.	TOTAL SHEETS
S.D.	P 1806(06)365	E43	E92

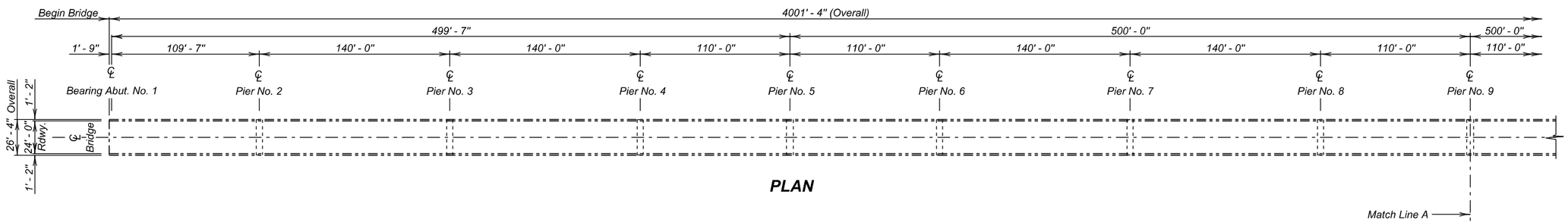

PLAN

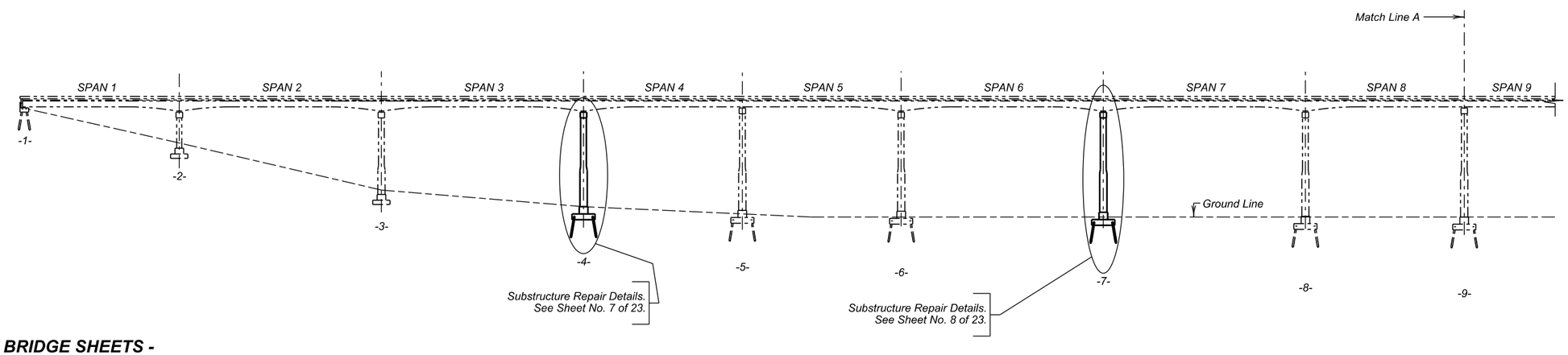

ELEVATION

INDEX OF BRIDGE SHEETS -

Sheet No. 1 - Layout for Upgrading
Sheet No. 2 - Layout for Upgrading (Continued)
Sheet No. 3 - Layout for Upgrading (Continued)
Sheet No. 4 - Layout for Upgrading (Continued)
Sheet No. 5 - Estimate of Structure Quantities and Notes
Sheet No. 6 - Notes (Continued)
Sheet No. 7 - Substructure Repair Details - Pier No. 4
Sheet No. 8 - Substructure Repair Details - Pier No. 7
Sheet No. 9 - Substructure Repair Details - Pier No. 19
Sheet No. 10 - Substructure Repair Details - Pier No. 28
Sheet No. 11 - Substructure Repair Details - Pier No. 29
Sheet No. 12 - Substructure Repair Details - Pier No. 32
Sheet No. 13 thru 23 - Original Construction Plans

LAYOUT FOR UPGRADING

FOR

4001' - 4" PLATE GIRDER BRIDGE

24' - 0" ROADWAY — 0° SKEW
OVER GRAND RIVER — SEC. 25-T19N-R29E
STR. NO. 16-737-253 — P 1806(06)365
PCN 02A7

CORSON COUNTY

S. D. DEPT. OF TRANSPORTATION

MARCH 2016

1 OF 23

PLANS BY :
OFFICE OF BRIDGE DESIGN, SOUTH DAKOTA DEPARTMENT OF TRANSPORTATION

DESIGNED BY	CK. DES. BY	DRAFTED BY	
BWS	MM	KR	Kevin N. Goeden
CORS02A7	02A7RA01		BRIDGE ENGINEER

STATE OF	PROJECT	SHEET NO.	TOTAL SHEETS
S.D.	P 1806(06)365	E44	E92

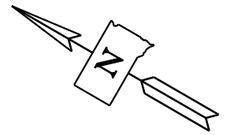

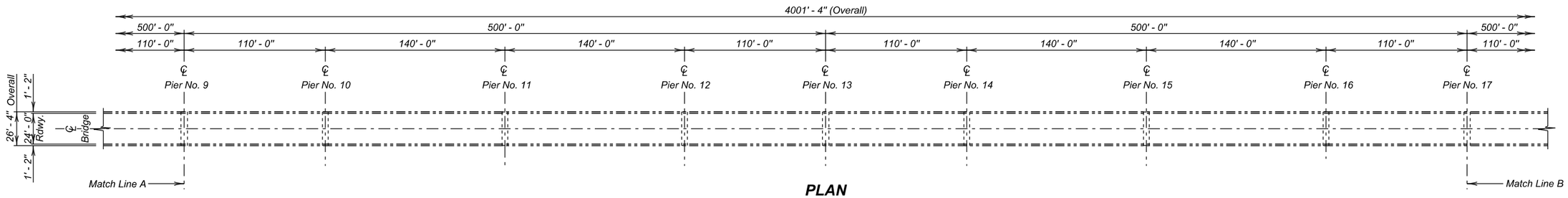

PLAN

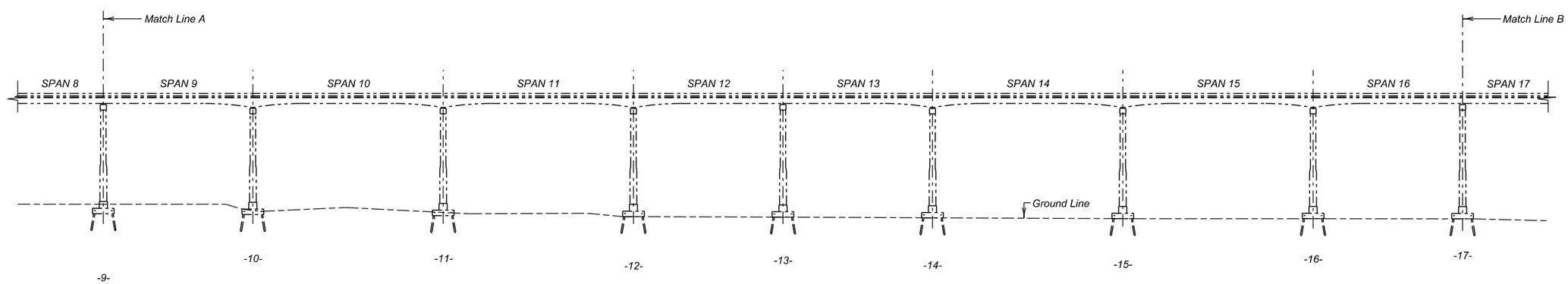

ELEVATION

LAYOUT FOR UPGRADING (CONTINUED)

FOR

4001' - 4" PLATE GIRDER BRIDGE

24' - 0" ROADWAY — 0° SKEW
OVER GRAND RIVER — SEC. 25-T19N-R29E
STR. NO. 16-737-253 — P 1806(06)365

CORSON COUNTY

S. D. DEPT. OF TRANSPORTATION

MARCH 2016

2 OF 23

DESIGNED BY	CK. DES. BY	DRAFTED BY	
BWS	MM	KR	Kevin N. Goeden
CORS02A7	02A7RA02		BRIDGE ENGINEER

STATE OF	PROJECT	SHEET NO.	TOTAL SHEETS
S.D.	P 1806(06)365	E45	E92

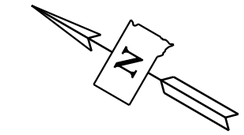

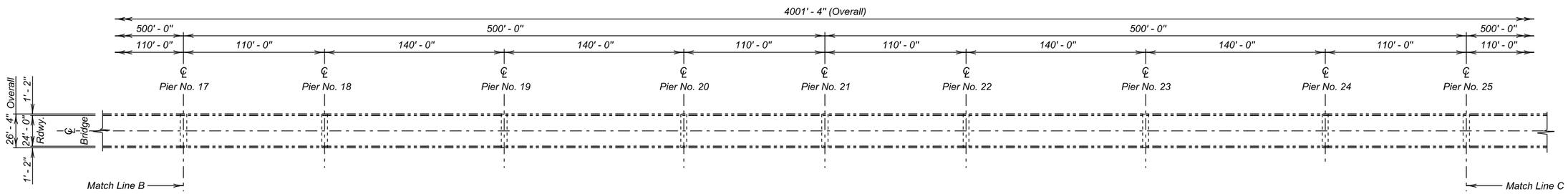

PLAN

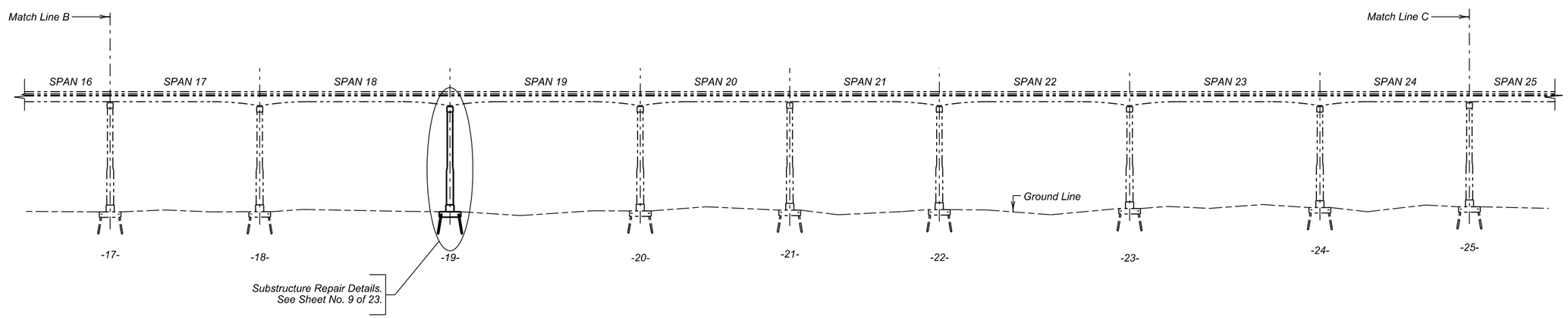

ELEVATION

LAYOUT FOR UPGRADING (CONTINUED)

FOR

4001' - 4" PLATE GIRDER BRIDGE

24' - 0" ROADWAY — 0° SKEW
OVER GRAND RIVER — SEC. 25-T19N-R29E
STR. NO. 16-737-253 — P 1806(06)365

CORSON COUNTY

S. D. DEPT. OF TRANSPORTATION

MARCH 2016

3 OF 23

DESIGNED BY	CK. DES. BY	DRAFTED BY	
BWS	MM	KR	Kevin N. Goeden
CORS02A7	02A7RA03		BRIDGE ENGINEER

STATE OF	PROJECT	SHEET NO.	TOTAL SHEETS
S.D.	P 1806(06)365	E46	E92

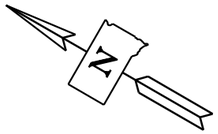

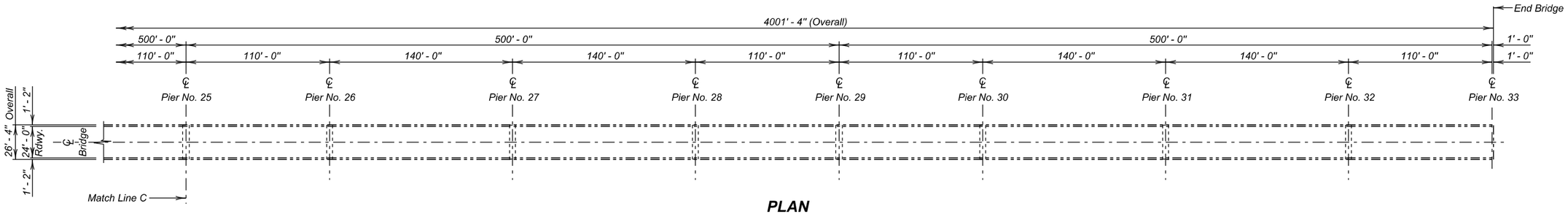

PLAN

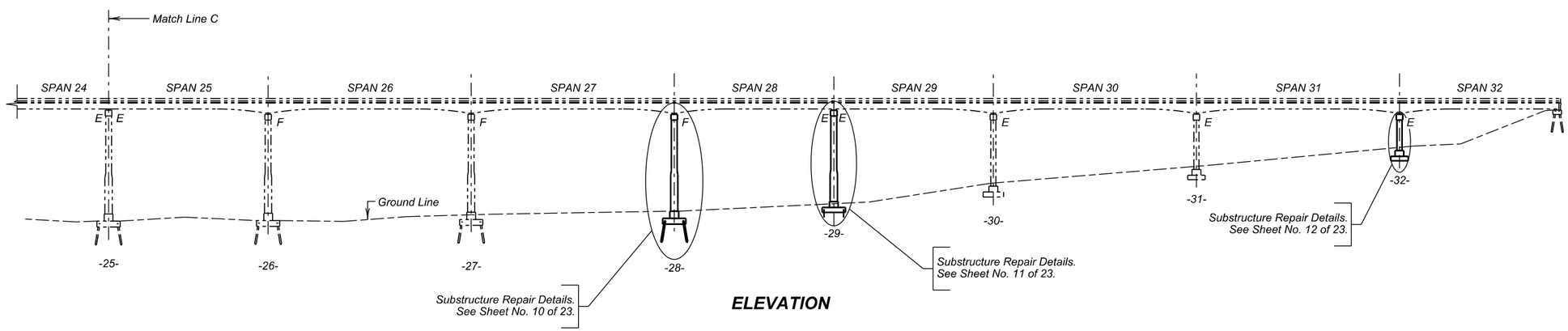

ELEVATION

LAYOUT FOR UPGRADING (CONTINUED)

FOR

4001' - 4" PLATE GIRDER BRIDGE

24' - 0" ROADWAY — 0° SKEW
OVER GRAND RIVER — SEC. 25-T19N-R29E
STR. NO. 16-737-253 — P 1806(06)365

CORSON COUNTY

S. D. DEPT. OF TRANSPORTATION

MARCH 2016

DESIGNED BY	CK. DES. BY	DRAFTED BY	
BWS	MM	KR	Kevin N. Goeden
CORS02A7	02A7RA04		BRIDGE ENGINEER

ESTIMATE OF STRUCTURE QUANTITIES

ITEM NO.	DESCRIPTION	QUANTITY	UNIT
460E0174	Concrete Patching Material, Miscellaneous	36.6	CuFt
460E0300	Breakout Structural Concrete	1.4	CuYd
480E5000	Galvanic Anode	27	Each

SPECIFICATIONS

1. Design Specifications: AASHTO Standard Specifications for Highway Bridges 2002 17th Edition with 2003 Interim using Working Stress Design.

2. Construction Specifications: South Dakota Standard Specifications for Roads and Bridges, 2015 Edition and Required Provisions, Supplemental Specifications and Special Provisions as included in the Proposal.

DETAILS AND DIMENSIONS OF EXISTING BRIDGE

All details and dimensions of the existing bridge contained in these plans are based on the original construction plans and shop plans and are provided as information only. It is the Contractor's responsibility to inspect and verify the actual field conditions and any necessary as-built dimensions affecting the satisfactory completion of the work required for this project.

SCOPE OF BRIDGE WORK & SEQUENCE OF OPERATIONS

All work on this structure shall be accomplished with the traffic control shown in the plans. Alternate sequence of operations may be submitted by the Contractor for approval by the Engineer two weeks prior to the pre-construction meeting.

1. Breakout areas of pier caps and columns to the limits shown in the plans.

2. Install galvanic anodes and repair areas with concrete patching materials.

GENERAL CONSTRUCTION – BRIDGE

1. Use 2" clear cover on all reinforcing steel except as shown otherwise.

2. All exposed concrete corners and edges shall be chamfered 3/4" unless noted otherwise in the plans.

CONCRETE BREAKOUT

1. The existing pier cap and columns shall be broken out to the limits shown on the plans. Breakout limits shall be defined with a 3/4" deep sawcut (unless specified otherwise in these plans), where practical, as approved by the Engineer. Reinforcing steel that is exposed and is scheduled for use in the new construction shall be cleaned and straightened to the satisfaction of the Engineer. Care shall be taken not to damage the existing reinforcing steel that is to be reused in the new construction during concrete breakout. Any reinforcing steel that is damaged during concrete breakout shall be replaced or repaired, as approved by the Engineer, by the Contractor at no cost to the Department.

2. All broken out concrete shall be disposed of by the Contractor. Any disposal of discarded material shall be in accordance with the Environmental Commitment notes.

3. During concrete removal operations, no broken out concrete shall be allowed to fall into the Grand River/Lake Oahe.

4. Work on the repair areas shall only be accomplished when those areas are completely out of the water and shall remain out of the water for the length of cure period for the concrete patching material. If the repair areas in the plans are under the water, those areas may be removed from the plans at the direction of the engineer. The water level is controlled by the Corp of Engineers. The following links, which show the historic water levels as well as estimated future levels by the Corp of Engineers, are provided as a scheduling tool:

   http://www.nwd-mr.usace.army.mil/rcc/projdata/oahe.pdf

   http://www.nwd-mr.usace.army.mil/rcc/reports/resfcast.pdf

5. The contract unit price per cubic yard for "Breakout Structural Concrete" shall include breaking out concrete, cleaning, straightening existing reinforcing steel, and disposal of all broken out material.

PIER REPAIR

1. After all delaminated concrete has been removed, the area shall be abrasive blasted and blown clean with clean, dry, oil-free compressed air at 90 psi.

2. The concrete patching material used in the bent cap patching applications shall be supplied as the following or an equivalent as approved by the Office of Bridge Design:

   Vertical Patch
   Symons
   2400 Arthur Avenue
   Elk Grove Village, IL 60007
   Phone: (847) 298-3200
   Web site: www.symons.com

   Meadow-Patch 20
   W. R. Meadows, Inc.
   P.O. Box 338
   Hampshire, IL 60140-0338
   Phone: (847) 214-2100
   Web site: www.wrmeadows.com

   Speed Crete Red Line
   The Euclid Chemical Company
   19218 Redwood Rd.
   Cleveland, OH 44110
   Phone: (800) 321-7628
   Web site: www.euclidchemical.com

   The concrete patching material shall be extended with aggregate of the quality, size and gradation specified in the manufacturer's technical literature.

3. The pier shall be rebuilt to the dimensions of the original construction plans unless otherwise shown on the plans. When used, cap forms may be removed when the concrete attains a compressive strength of 2000 psi.

4. All costs associated with accessing, furnishing, placing and finishing the concrete patching material including all equipment, labor and incidentals shall be incidental to the contract unit price per cubic foot for "Concrete Patching Material, Miscellaneous".

ESTIMATE OF STRUCTURE QUANTITIES AND NOTES
FOR
4001' - 4" PLATE GIRDER BRIDGE

STR. NO. 16-737-253
MARCH 2016

DESIGNED BY	CK. DES. BY	DRAFTED BY	
BWS	MM	BWS	Kevin N. Goeden
POTT02A8	02A8RA05		BRIDGE ENGINEER

GALVANIC ANODE

1. The Contractor shall furnish and place Galvanic anodes in the concrete repair areas specified in this plan set.

2. The galvanic anodes shall be supplied as one of the following:

   a. Galvashield XP2
      Vector Corrosion Technologies
      13312 N 56th St, Suite 102
      Tampa, FL 33617
      Phone: (813) 830-7566
      Website: www.vector-corrosion.com

   b. Sentinel Silver
      Euclid Chemical Company
      19218 Redwood Road
      Cleveland, OH 44110
      Phone: (800) 321-7628
      Website: www.euclidchemical.com

   c. Sika Galvashield XP+
      Sika Corporation US
      201 Polito Avenue
      Lyndhurst, NJ 07071
      Phone: (800) 933-7452
      Website: http://usa.sika.com

3. The anodes shall be placed in accordance with manufacturer's recommendations and as approved by the Engineer. The anodes have not been shown on the drawings. The Contractor shall provide shop drawings of the galvanic anode installation including locations of the individual anodes to the Office of Bridge Design.

4. The anodes shall be placed with a minimum ¾" cover and shall be set in Embedding Mortar per the manufacturer's recommendations. The anodes shall be fully encased in the concrete repair material. Where adequate cover does not exist, a concrete pocket shall be chipped out behind the anode to provide sufficient cover. The Contractor may need to chip around the reinforcing bar locally at the anode installation to make the electrical connection. The reinforcing steel at the connection location shall be cleaned per the manufacturer's recommendations to provide sufficient electrical connection and mechanical bond.

5. The electrical continuity of the electrical connections and reinforcing steel shall be confirmed per the manufacturer's recommendations.

6. The Contractor shall provide manufacturer's product literature and installation instructions to the Engineer 10 days prior to installation.

7. All costs associated with placing anodes including labor, equipment, materials and incidentals shall be included in the contract unit price per each for "Galvanic Anode".

NOTES (CONTINUED)
FOR
4001' - 4" PLATE GIRDER BRIDGE

STR. NO. 16-737-253
MARCH 2016

STATE OF	PROJECT	SHEET NO.	TOTAL SHEETS
S.D.	P 1806(06)365	E49	E92

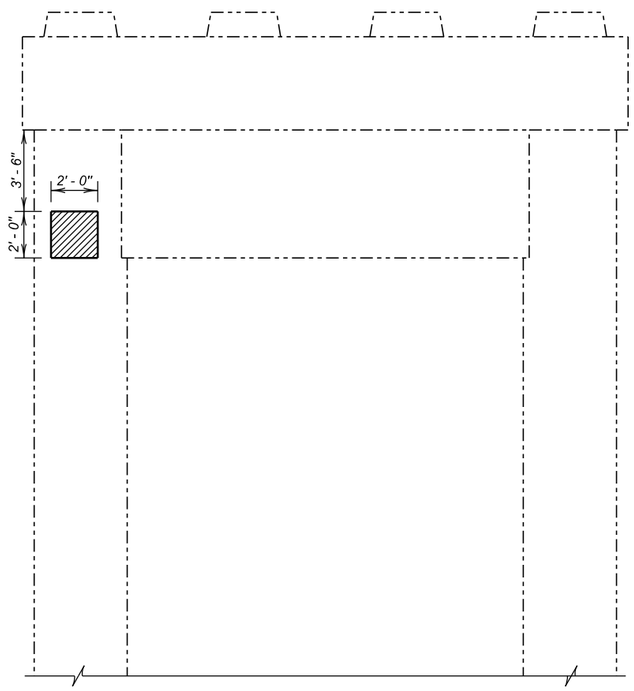

ELEVATION
(South Face)

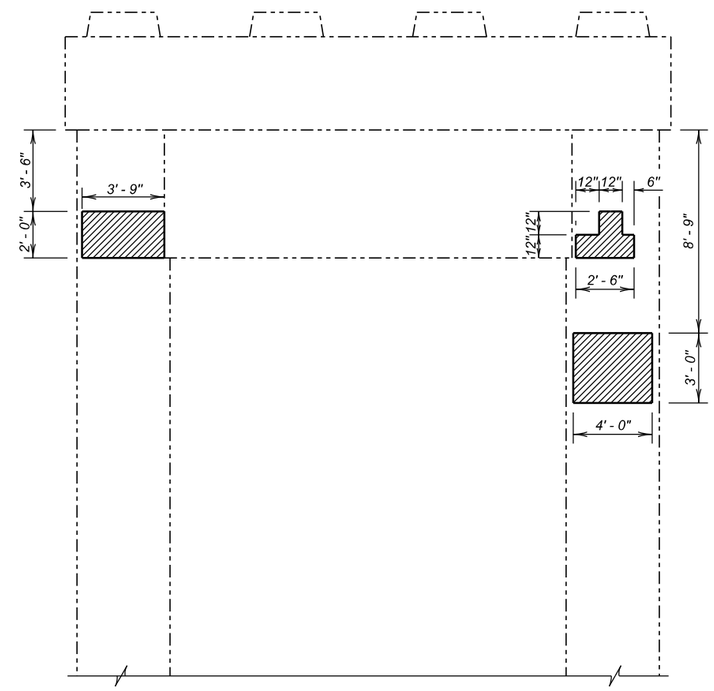

ELEVATION
(North Face)

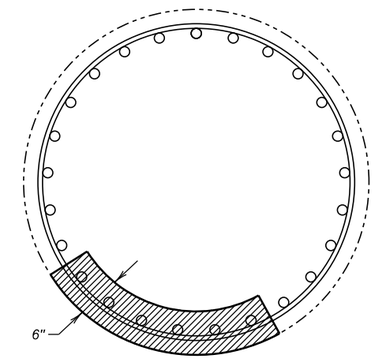

TYPICAL SECTION

✳ *All dimensions Measure along outer perimeter of column.*

LEGEND:

Shaded areas indicate limits of Concrete Patching.

SUBSTRUCTURE REPAIR DETAILS (PIER NO. 4)

FOR

4001' - 4" PLATE GIRDER BRIDGE

24' - 0" ROADWAY
OVER GRAND RIVER
STR. NO. 16-737-253

0° SKEW
SEC. 25-T19N-R29E
P 1806(06)365

CORSON COUNTY

S. D. DEPT. OF TRANSPORTATION

MARCH 2016

DESIGNED BY	CK. DES. BY	DRAFTED BY	
BWS	MM	KR	Kevin N. Goeden
CORS02A7	02A7RA07		BRIDGE ENGINEER

STATE OF	PROJECT	SHEET NO.	TOTAL SHEETS
S.D.	P 1806(06)365	E50	E92

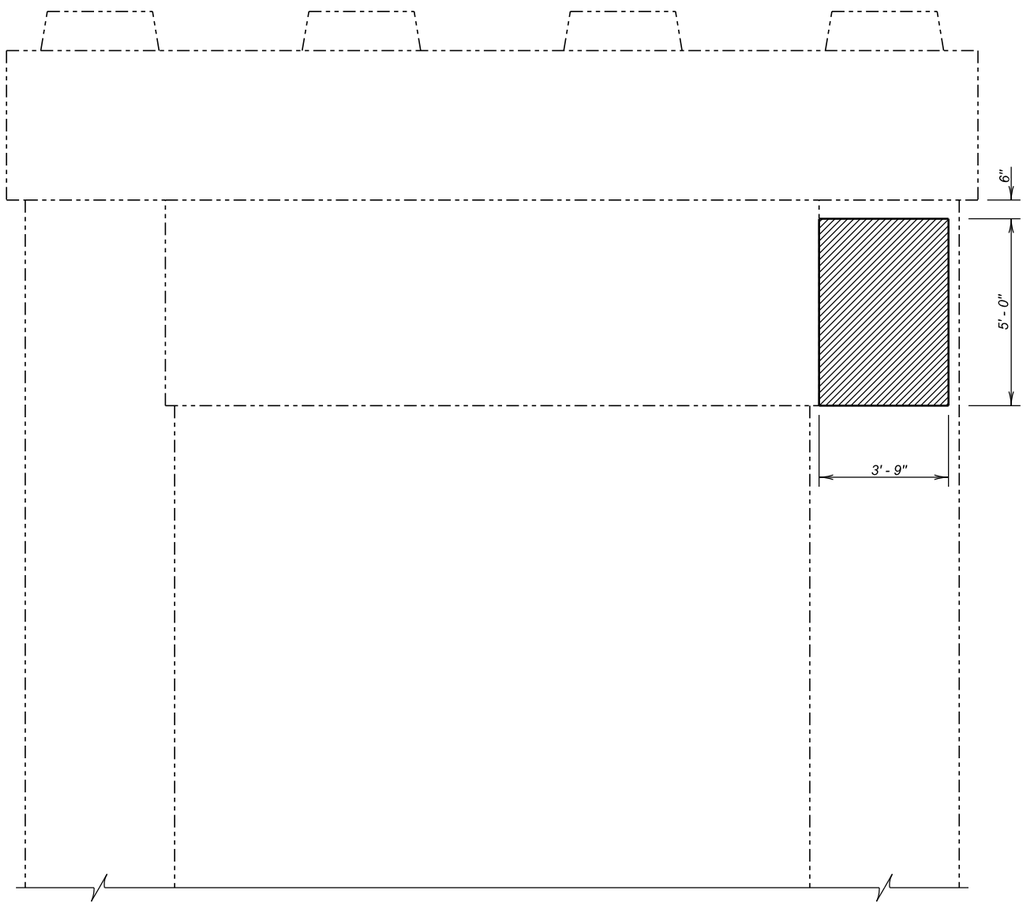

ELEVATION
(North Face)

✳ *All dimensions Measure along outer perimeter of column.*

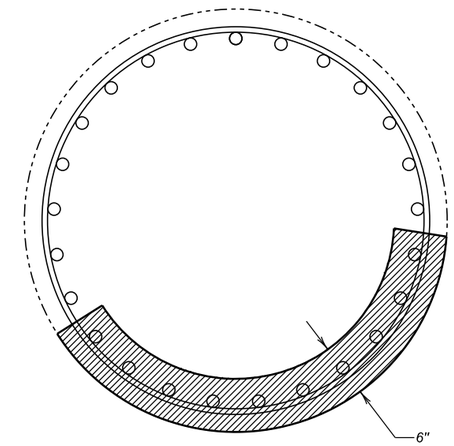

TYPICAL SECTION

LEGEND:

Shaded areas indicate limits of Concrete Patching.

SUBSTRUCTURE REPAIR DETAILS (PIER NO. 7)

FOR

4001' - 4" PLATE GIRDER BRIDGE

24' - 0" ROADWAY — 0° SKEW
OVER GRAND RIVER — SEC. 25-T19N-R29E
STR. NO. 16-737-253 — P 1806(06)365

CORSON COUNTY

S. D. DEPT. OF TRANSPORTATION

MARCH 2016

DESIGNED BY	CK. DES. BY	DRAFTED BY	
BWS	MM	KR	Kevin N. Goeden
CORS02A7	02A7RA08		BRIDGE ENGINEER

STATE OF	PROJECT	SHEET NO.	TOTAL SHEETS
S.D.	P 1806(06)365	E51	E92

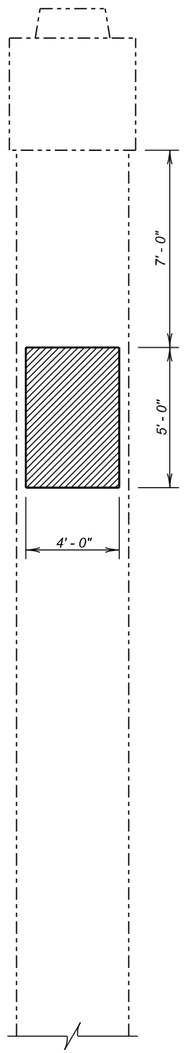

VIEW A - A

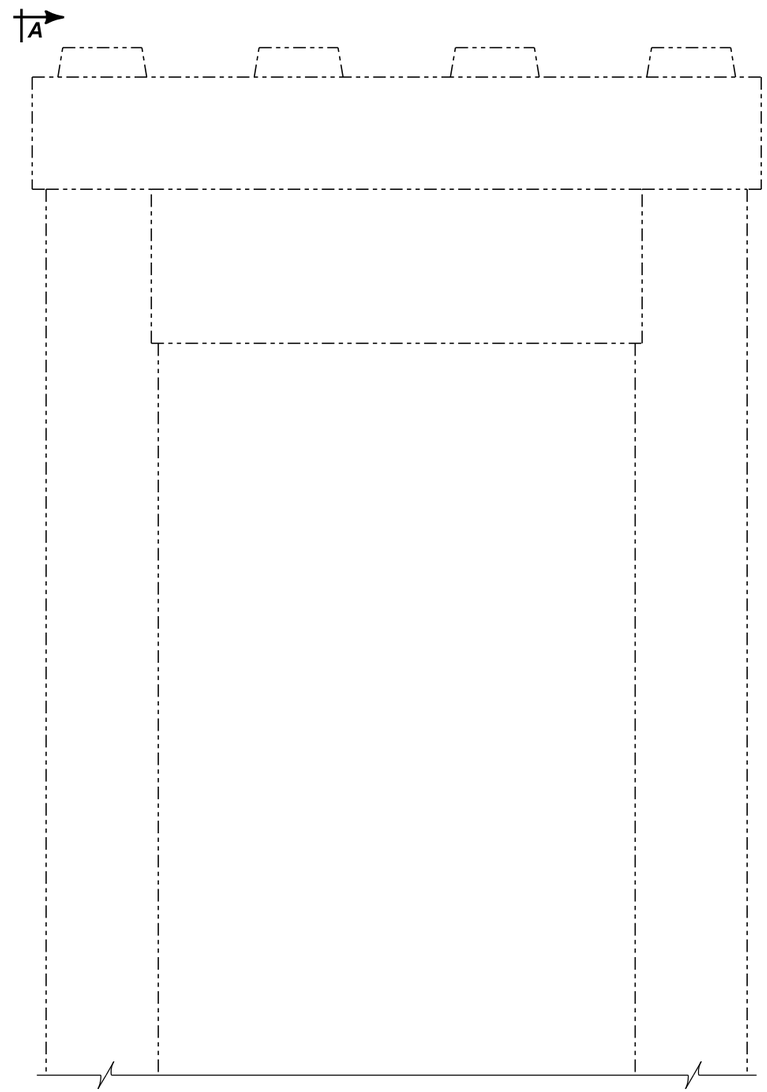

ELEVATION
(South Face)

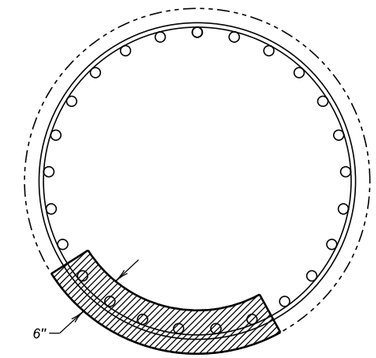

TYPICAL SECTION

LEGEND:

Shaded areas indicate limits of Concrete Patching.

✳ *All dimensions Measure along outer perimeter of column.*

SUBSTRUCTURE REPAIR DETAILS (PIER NO. 19)

FOR

4001' - 4" PLATE GIRDER BRIDGE

24' - 0" ROADWAY — 0° SKEW
OVER GRAND RIVER — SEC. 25-T19N-R29E
STR. NO. 16-737-253 — P 1806(06)365

CORSON COUNTY

S. D. DEPT. OF TRANSPORTATION

MARCH 2016

DESIGNED BY	CK. DES. BY	DRAFTED BY	
BWS	MM	KR	Kevin N. Boeden
CORS02A7	02A7RA09		BRIDGE ENGINEER

STATE OF	PROJECT	SHEET NO.	TOTAL SHEETS
S.D.	P 1806(06)365	E52	E92

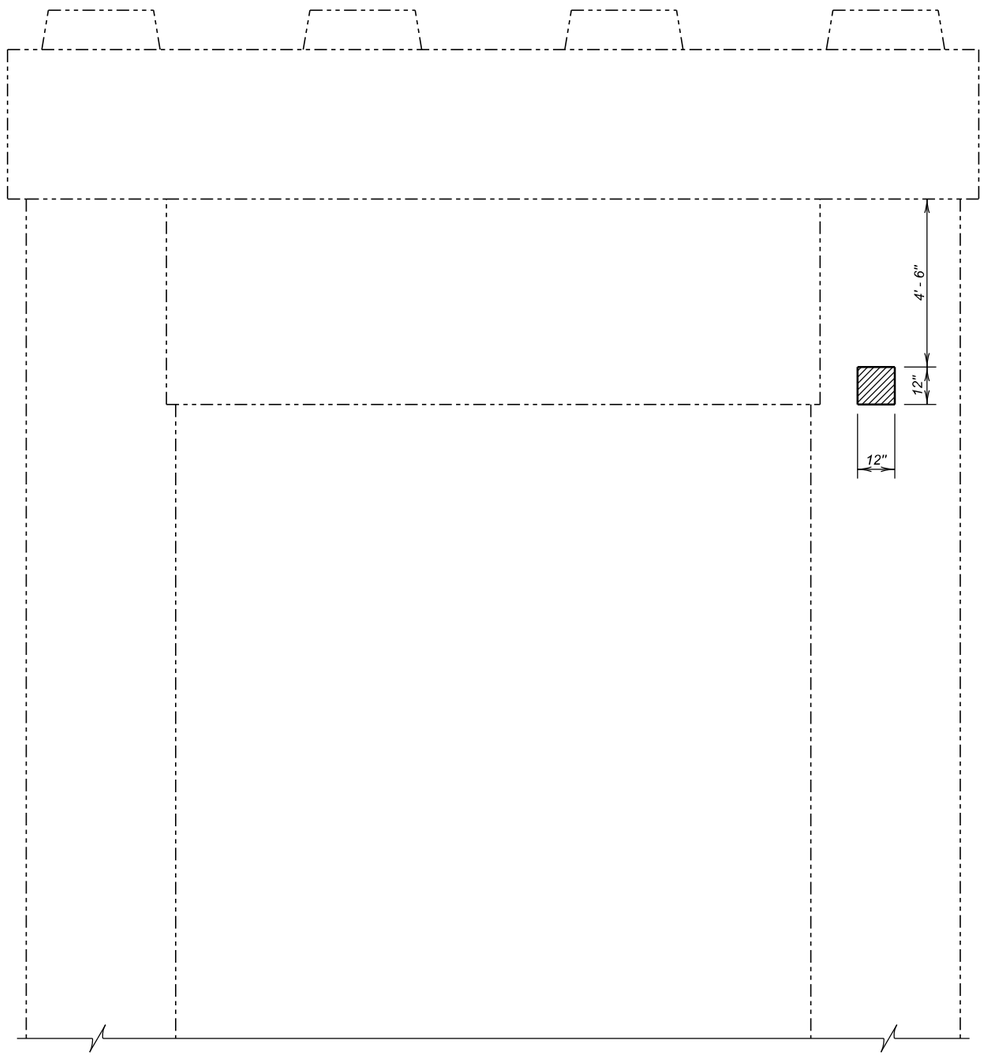

ELEVATION
(North Face)

✳ *All dimensions Measure along outer perimeter of column.*

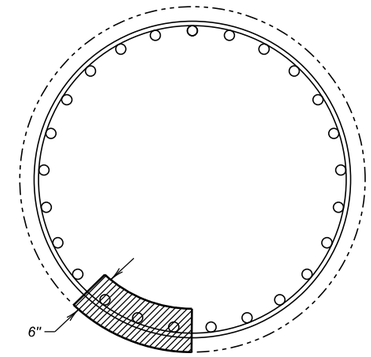

TYPICAL SECTION

LEGEND:

Shaded areas indicate limits of Concrete Patching.

SUBSTRUCTURE REPAIR DETAILS (PIER NO. 28)

FOR

4001' - 4" PLATE GIRDER BRIDGE

24' - 0" ROADWAY — 0° SKEW
OVER GRAND RIVER — SEC. 25-T19N-R29E
STR. NO. 16-737-253 — P 1806(06)365

CORSON COUNTY

S. D. DEPT. OF TRANSPORTATION

MARCH 2016

10 OF 23

DESIGNED BY	CK. DES. BY	DRAFTED BY	
BWS	MM	KR	Kevin N. Goeden
CORS02A7	02A7RA10		BRIDGE ENGINEER

STATE OF	PROJECT	SHEET NO.	TOTAL SHEETS
S.D.	P 1806(06)365	E53	E92

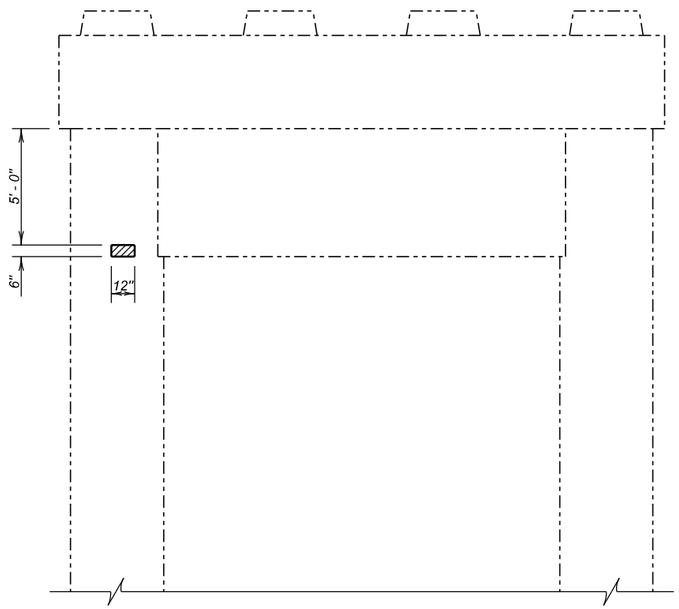

ELEVATION
(North Face)

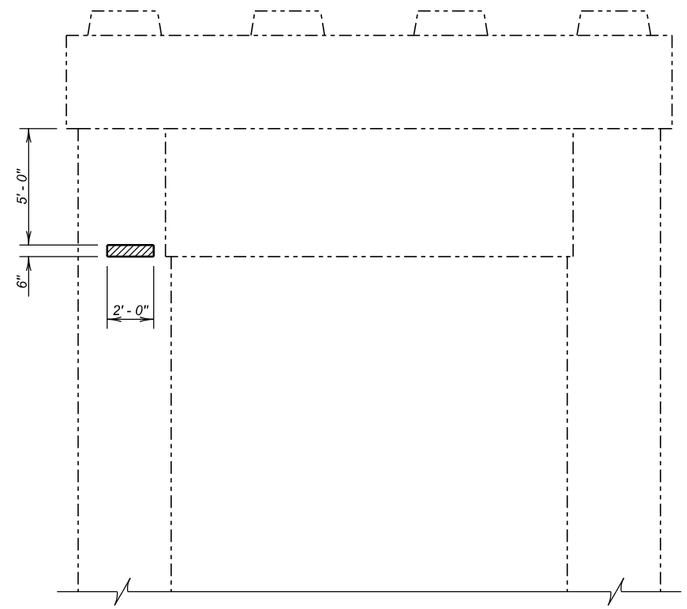

ELEVATION
(South Face)

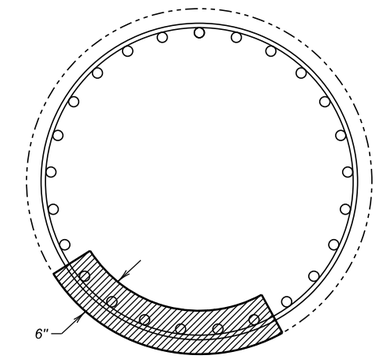

TYPICAL SECTION

LEGEND:

Shaded areas indicate limits of Concrete Patching.

✳ *All dimensions Measure along outer perimeter of column.*

SUBSTRUCTURE REPAIR DETAILS (PIER NO. 29)

FOR

4001' - 4" PLATE GIRDER BRIDGE

24' - 0" ROADWAY — 0° SKEW
OVER GRAND RIVER — SEC. 25-T19N-R29E
STR. NO. 16-737-253 — P 1806(06)365

CORSON COUNTY

S. D. DEPT. OF TRANSPORTATION

MARCH 2016

DESIGNED BY	CK. DES. BY	DRAFTED BY	
BWS	MM	KR	Kevin N. Goeden
CORS02A7	02A7RA11		BRIDGE ENGINEER

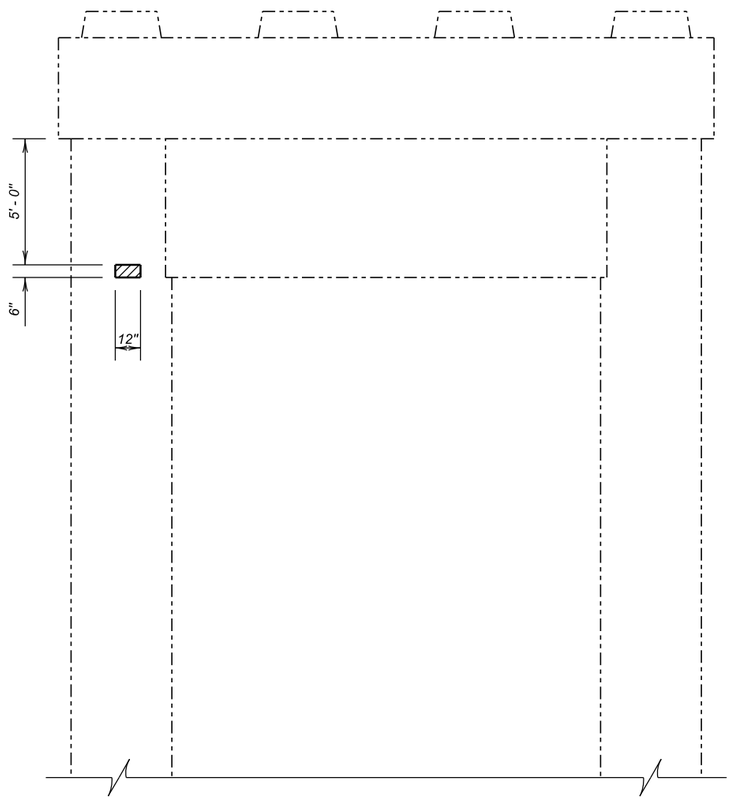

ELEVATION
(North Face)

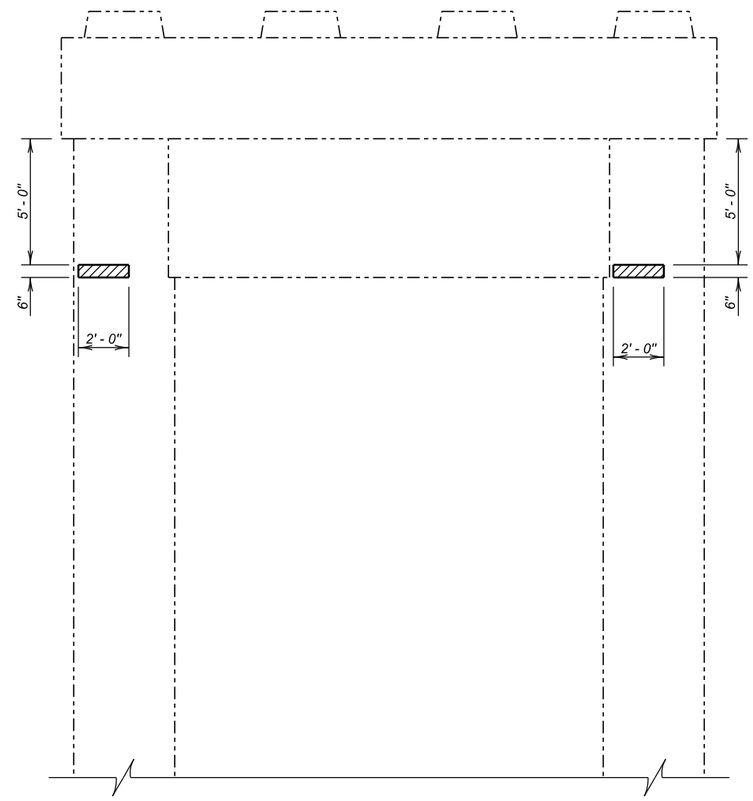

ELEVATION
(South Face)

✳ *All dimensions Measure along outer perimeter of column.*

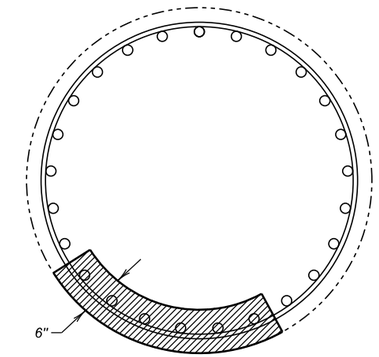

TYPICAL SECTION

LEGEND:

Shaded areas indicate limits of Concrete Patching.

ESTIMATED QUANTITIES		
ITEM	***UNIT***	***QUANTITY***
Breakout Structural Concrete	*Cu. Yd.*	*1.4*
Galvanic Anode	*Each*	*27*
Concrete Patching Material, Miscellaneous	*Cu. Ft.*	*36.6*

SUBSTRUCTURE REPAIR DETAILS (PIER NO. 32)

FOR

4001' - 4" PLATE GIRDER BRIDGE

24' - 0" ROADWAY — 0° SKEW
OVER GRAND RIVER — SEC. 25-T19N-R29E
STR. NO. 16-737-253 — P 1806(06)365

CORSON COUNTY

S. D. DEPT. OF TRANSPORTATION

MARCH 2016

DESIGNED BY	CK. DES. BY	DRAFTED BY	
BWS	MM	KR	Kevin N. Boeden
CORS02A7	02A7RA12		BRIDGE ENGINEER

STATE OF	PROJECT	SHEET NO.	TOTAL SHEETS
S.D.	P 1806(06)365	E55	E92

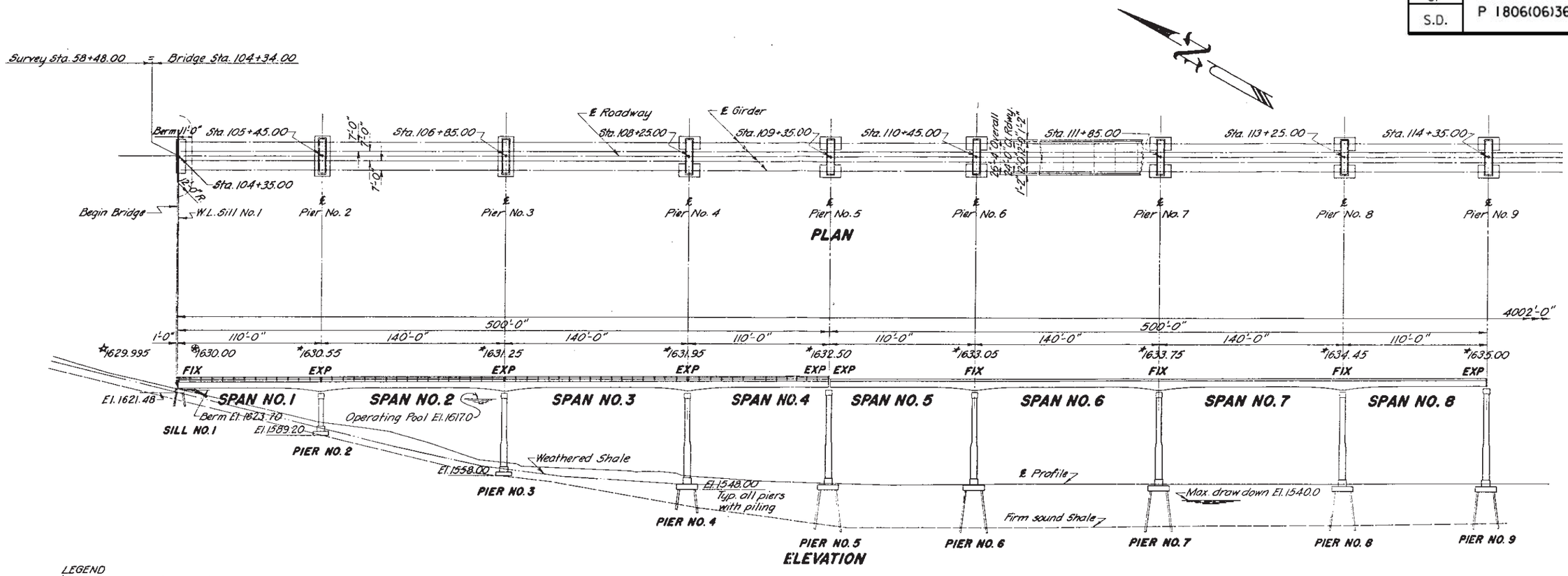

LEGEND
* Top of Slab at center line of roadway elevation at begining of bridge.
⊛ Top of Slab at center line of roadway elevation at working line of sill.
* Top of Slab at center line of roadway elevation at center line of pier.

SPECIFICATION NOTE—

Use Standard Specifications for Roads and Bridges issued April 1957 and Revisions and Supplements to Standard Specifications for Roads and Bridges dated March 1961 and Supplemental Specifications as included in the proposal.

GENERAL NOTES—

1. Design Loading H20-S16-44
2. Longitudinal elements of the slab shall conform to the vertical curve.
3. All rail posts shall be built vertical.
4. Concrete Stresses; fc=1600
   f'c=4000
5. Re-Steel Stress; fs-20,000 p.s.i. (Intermediate Grade)
6. All reinforcing steel shall conform to A.S.T.M. Specifications A305 (T-current) and A15 (T-current) Intermediate Grade.
7. All exposed concrete edges shall be chamfered ¾" unless otherwise noted.

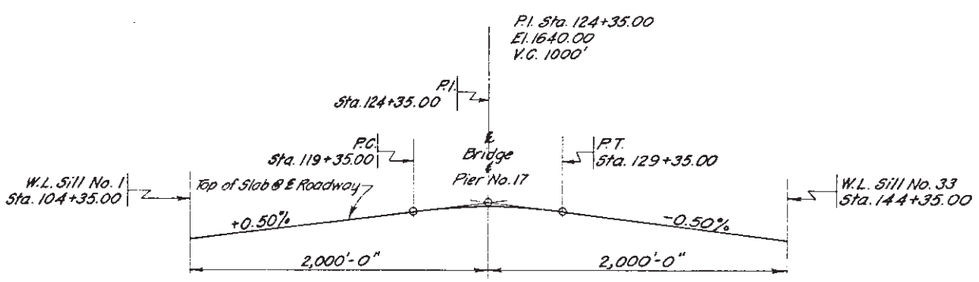

GRADE DATA

NOTE—

For horizontal and vertical control See Special Provisions.

INDEX OF SHEETS

Sheet Nos. 1 to 4 (incl) - General Drawing
Sheet No. 5 - Estimated Quantities

SUBSTRUCTURE DRAWINGS

Sheet No. 6 - Subsurface Investigation
Sheet No. 7 - Details of sills No. 1 and No. 33
Sheet No. 8 - Details of piers No. 2 and No. 32
Sheet No. 9 - Details of pier No. 3
Sheet No. 10 - Details of pier No. 4
Sheet No. 11 - Details of pier No. 5
Sheet No. 12 - Details of piers No. 6 and No. 28
Sheet No. 13 - Details of piers No. 7 and No. 27
Sheet No. 14 - Details of piers No. 8 and No. 26
Sheet No. 15 - Details of piers No. 9 and No. 25
Sheet No. 16 - Details of piers No. 10 and No. 24
Sheet No. 17 - Details of piers No. 11 and No. 23
Sheet No. 18 - Details of piers No. 12 and No. 22
Sheet No. 19 - Details of piers No. 13 and No. 21
Sheet No. 20 - Details of piers No. 14 and No. 20
Sheet No. 21 - Details of piers No. 15 and No. 19
Sheet No. 22 - Details of piers No. 16 and No. 18
Sheet No. 23 - Details of pier No. 17
Sheet No. 24 - Footing details of piers No. 4 thru No. 28
Sheet No. 25 - Pile splice details
Sheet No. 26 - Details of pier No. 29
Sheet No. 27 - Details of pier No. 30
Sheet No. 28 - Details of pier No. 31

SUPERSTRUCTURE DRAWINGS

Sheet Nos. 29 and 30 - Details of superstructure
Sheet No. 31 - Framing diagram
Sheet No. 32 - Details of expansion devices and fixed bearings
Sheet No. 33 - Details of controlled expansion bearings
Sheet No. 34 - Erection data and deflection diagram
Sheet No. 35 - Type Plant steel railing, drain and curb details

ORIGINAL CONSTRUCTION PLANS

GENERAL DRAWING
FOR
4002'-0" PLATE GIRDER BRIDGE
24'-0" ROADWAY

OVER GRAND RIVER **SEC. 25-T19N-R29E**
STA. 104+34.00 TO 144+36.00 WAR 7210
CORSON COUNTY
SOUTH DAKOTA **H20-S16-44**
DEPARTMENT OF HIGHWAYS
MAY 1962

13 OF 23

CONSULTING BRIDGE ENGINEER

STATE OF	PROJECT	SHEET NO.	TOTAL SHEETS
S.D.	P 1806(06)365	E56	E92

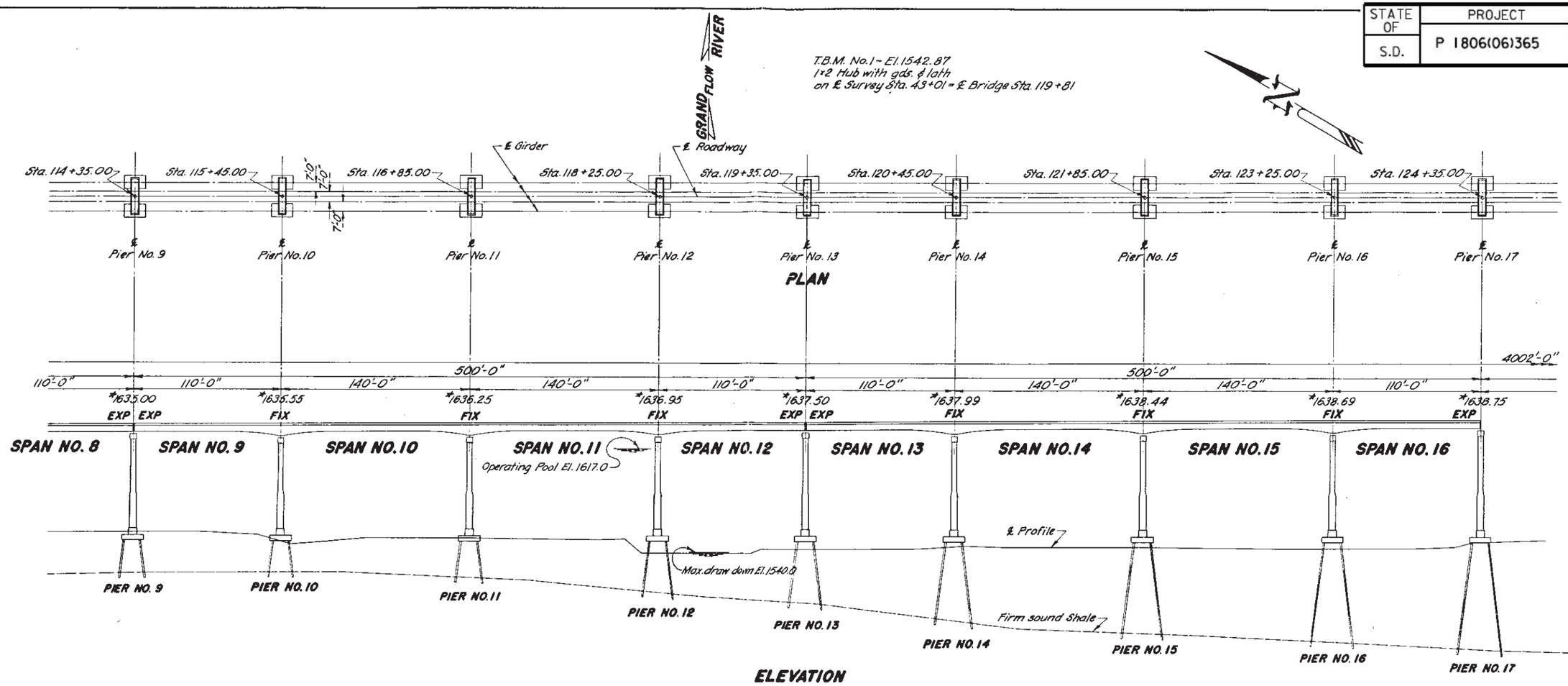

ORIGINAL CONSTRUCTION PLANS

GENERAL DRAWING
FOR
4002'-0" PLATE GIRDER BRIDGE
24'-0" ROADWAY
OVER GRAND RIVER SEC. 25-T19N-R29E
STA. 104+34.00 TO 144+36.00 WAR 7210
CORSON COUNTY
SOUTH DAKOTA H20-S16-44
DEPARTMENT OF HIGHWAYS
MAY 1962 (14) OF (23)

STATE OF	PROJECT	SHEET NO.	TOTAL SHEETS
S.D.	P 1806(06)365	E57	E92

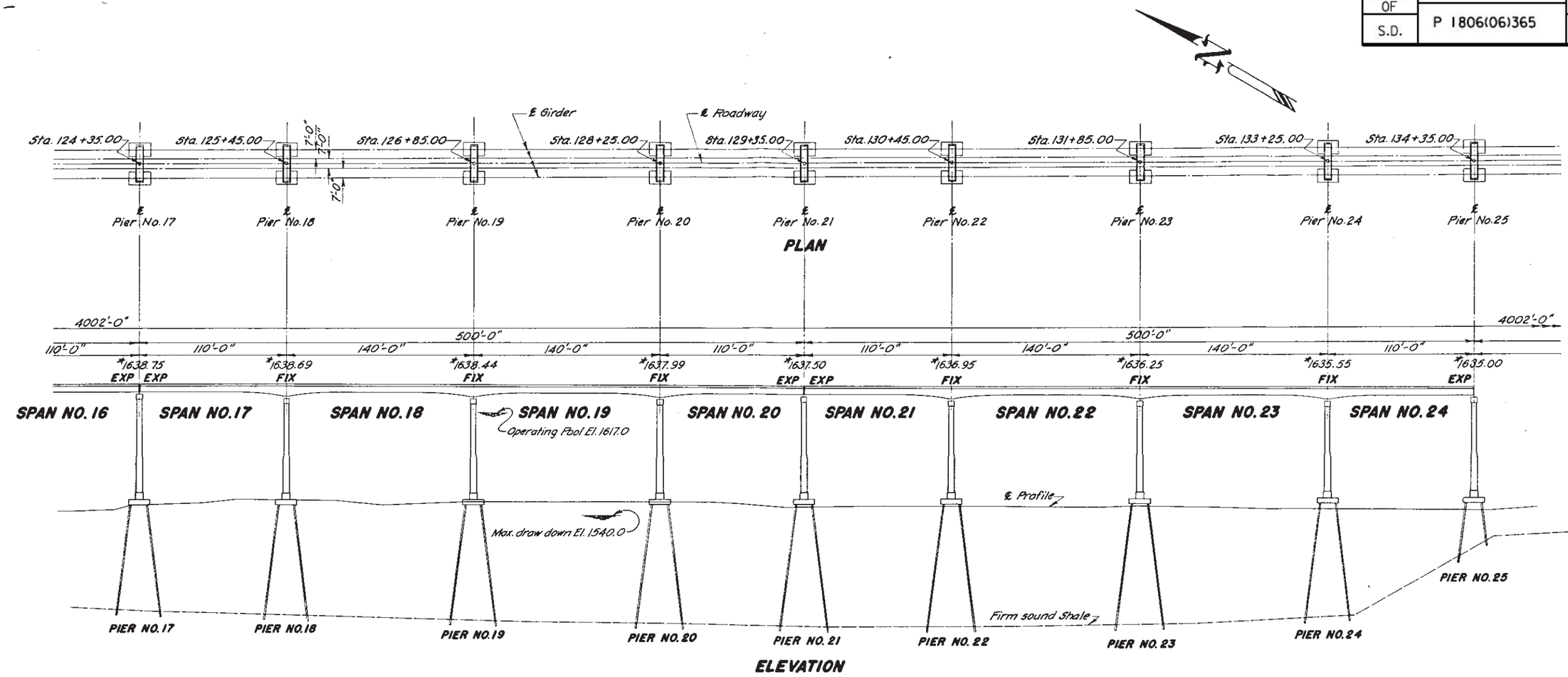

ORIGINAL CONSTRUCTION PLANS

GENERAL DRAWING
FOR
4002'-0" PLATE GIRDER BRIDGE
24'-0" ROADWAY
OVER GRAND RIVER **SEC. 25-T19N-R29E**
STA. 104+34.00 TO 144+36.00 WAR 7210
CORSON COUNTY
SOUTH DAKOTA **H20-S16-44**
DEPARTMENT OF HIGHWAYS
MAY 1962

CONSULTING BRIDGE ENGINEER

STATE OF	PROJECT	SHEET NO.	TOTAL SHEETS
S.D.	P 1806(06)365	E58	E92

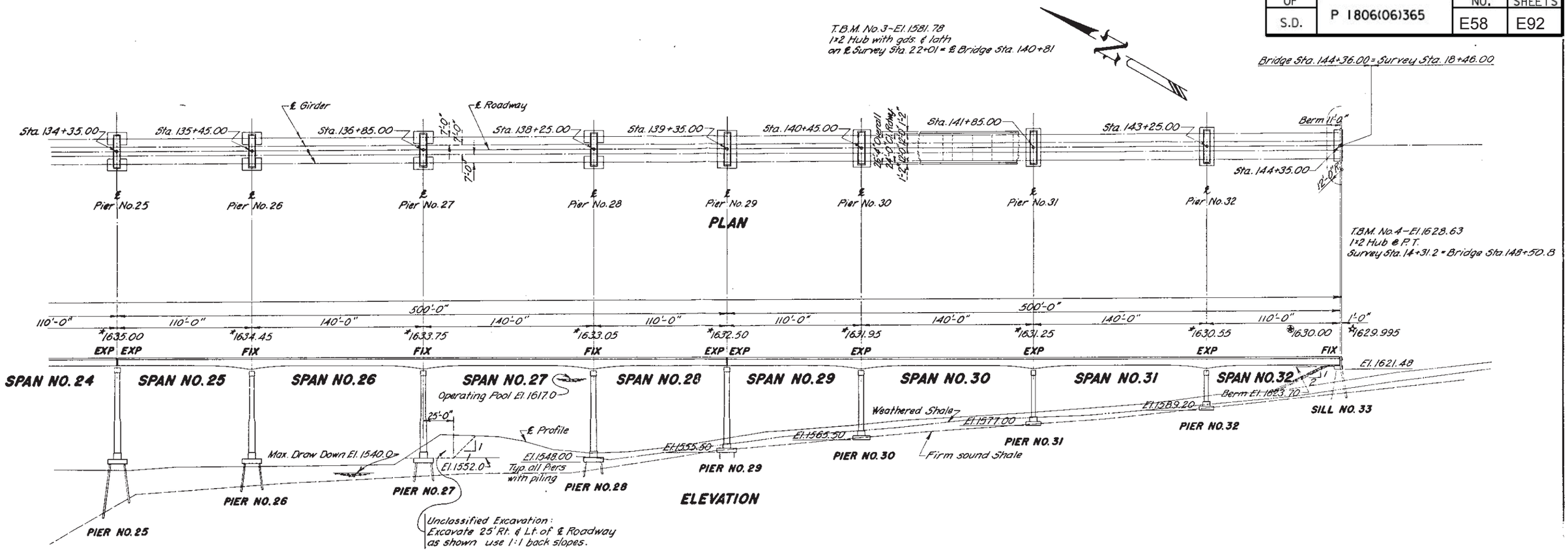

ORIGINAL CONSTRUCTION PLANS

GENERAL DRAWING
FOR
4002'-0" PLATE GIRDER BRIDGE
24'-0" ROADWAY

OVER GRAND RIVER **SEC. 25-T19N-R29E**
STA. 104+34.00 TO 144+36.00 WAR 7210
CORSON COUNTY
SOUTH DAKOTA **H20-S16-44**
DEPARTMENT OF HIGHWAYS
MAY 1962

16 OF 23

CONSULTING BRIDGE ENGINEER

STATE OF	PROJECT	SHEET NO.	TOTAL SHEETS
S.D.	P 1806(06)365	E59	E92

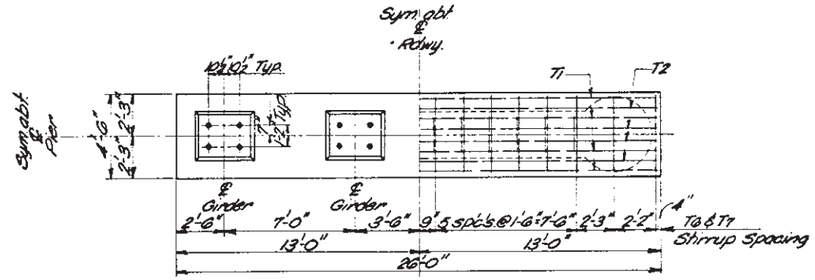

PLAN OF CAP

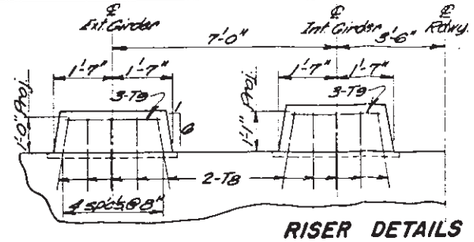

RISER DETAILS

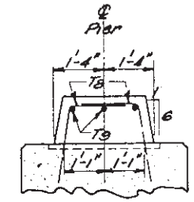

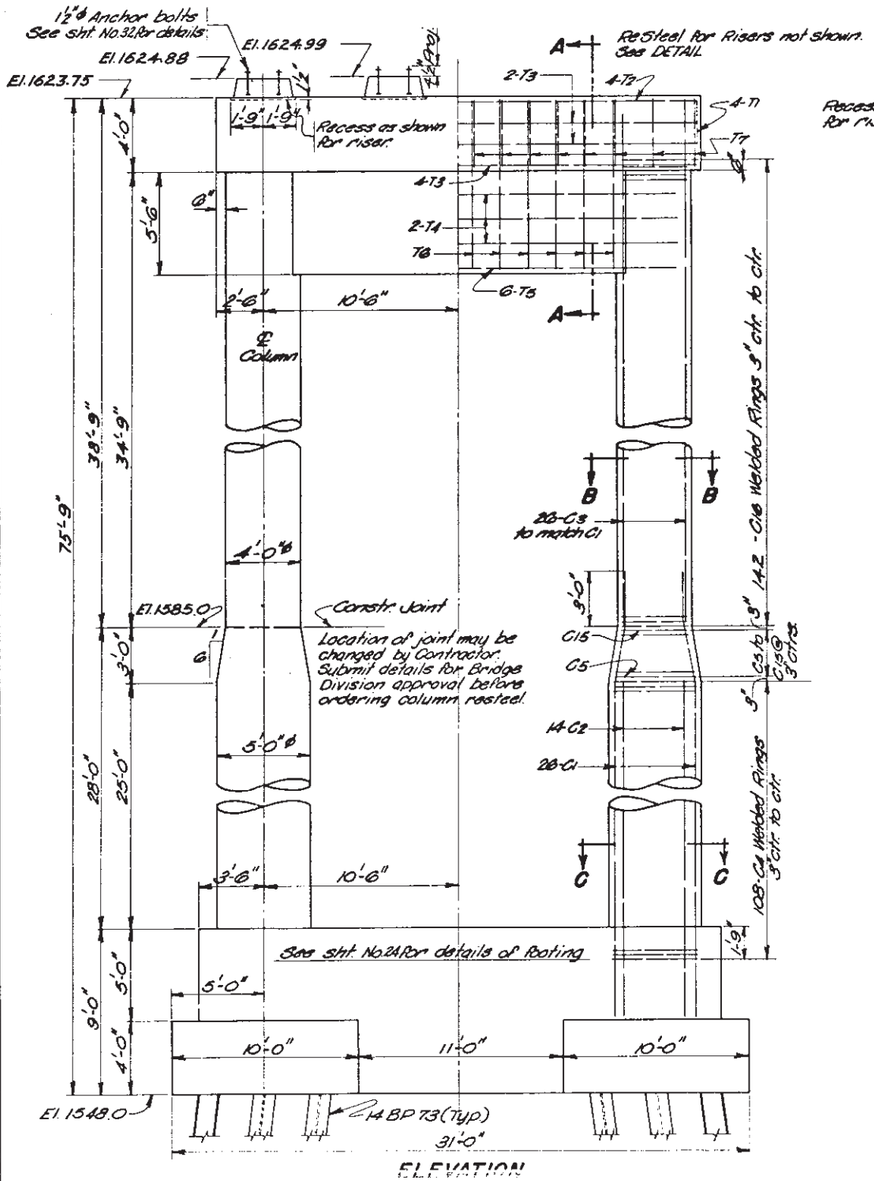

ELEVATION

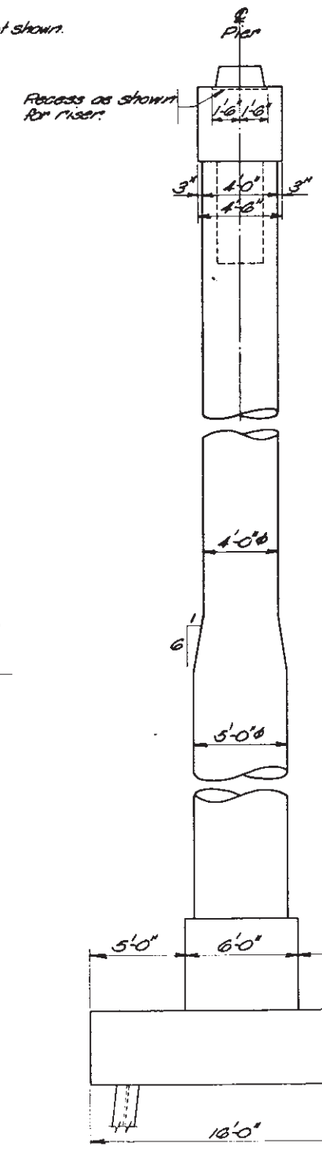

END VIEW

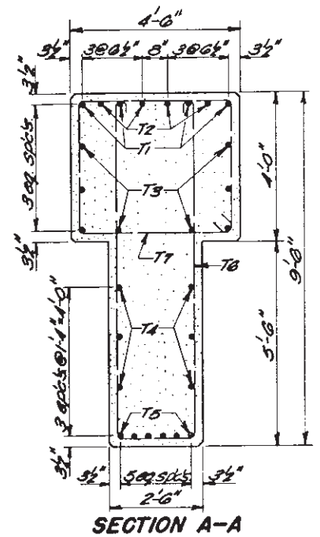

SECTION A–A

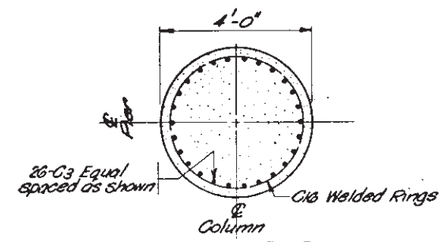

SECTION B–B

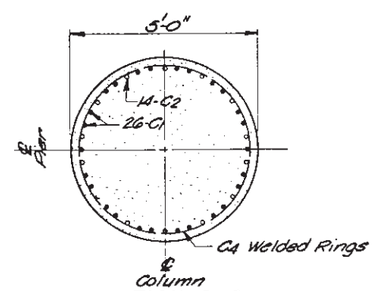

SECTION C–C

REINFORCING STEEL SCHEDULE

	Mark	No.	Size	Length	Type	Bar Bends
CAP	T1	4	8	25'-6"	2	
	T2	4	8	25'-6"	Str.	
	T3	8	6	25'-6"	Str.	
	T4	6	6	23'-6"	Str.	
	T5	6	11	23'-6"	Str.	
	T6	12	5	2'-8"	59	
	T7	16	5	15'-9"	51	
	T8	40	5	4'-0"	22	
	T9	12	5	2'-6"	Str.	
COLUMN	C1	52	11	36'-0"	19	
	C2	28	11	30'-0"	Str.	
	C3	52	11	37'-9"	Str.	
	C4	216	5	14'-10"	*Ring	
	C5 to C15	2 (each) 22	5	14'-8" max. 12'-0" min. 13'-4" Av.	*Ring	
	C16	284	5	11'-9"	*Ring	
PEDESTAL	P1	80	11	6'-0"	Str.	
	P2	10	11	27'-8"	Str.	
	P3	6	6	27'-6"	Str.	
	P4	44	5	25'-9"	51	
	P5	12	5	15'-8"	*Ring	
FOOTING	F1	24	11	15'-6"	Str.	
	F2	10	11	30'-6"	Str.	
	F3	40	6	9'-6"	Str.	
	F4	24	8	15'-6"	Str.	
	F5	80	5	5'-0"	2	
	F6	4	6	30'-6"	Str.	
	F7	8	6	14'-0"	Str.	
	F8	8	6	9'-0"	Str.	

All dimensions are out to out of bars.
Figures in circles show types.

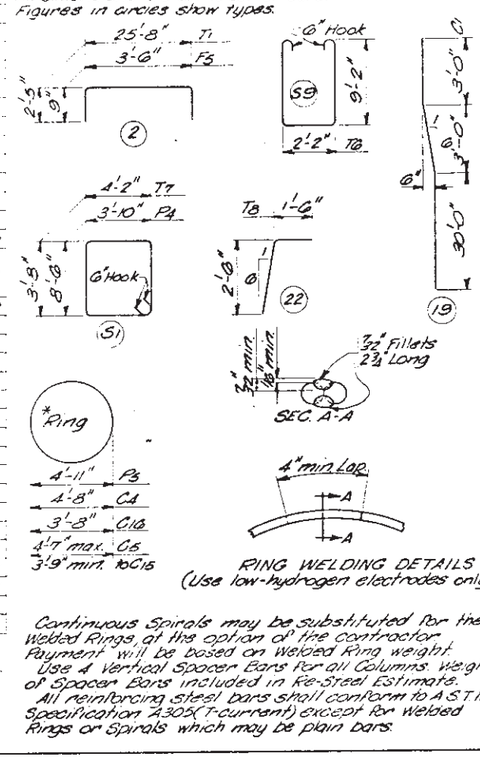

RING WELDING DETAILS
(Use low-hydrogen electrodes only)

Continuous Spirals may be substituted for the Welded Rings, at the option of the contractor. Payment will be based on Welded Ring weight.

Use 4 Vertical Spacer Bars for all Columns. Weight of Spacer Bars included in Re-Steel Estimate.

All reinforcing steel bars shall conform to A.S.T.M. Specification A305 (Current) except for Welded Rings or Spirals which may be plain bars.

ORIGINAL CONSTRUCTION PLANS

DETAILS FOR PIERS NO. 6 AND NO. 28
FOR
4002'-0" PLATE GIRDER BRIDGE
24'-0" ROADWAY
OVER GRAND RIVER SEC. 25-T19N-R29E
STA. 104+34.00 TO 144+36.00 WAR 7210
CORSON COUNTY
SOUTH DAKOTA H20-S16-44
DEPARTMENT OF HIGHWAYS
MAY 1962

STATE OF	PROJECT	SHEET NO.	TOTAL SHEETS
S.D.	P 1806(06)365	E60	E92

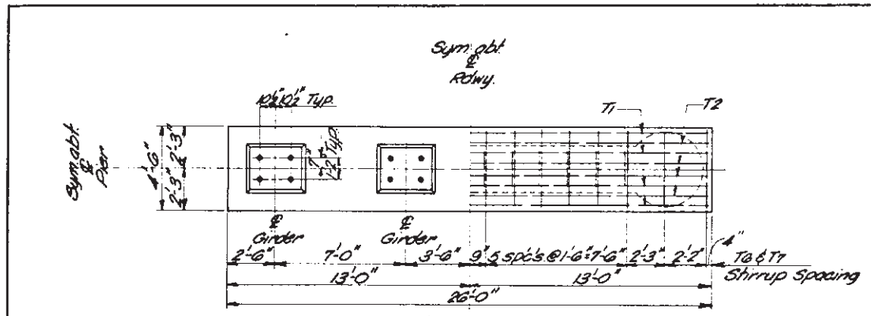

PLAN OF CAP

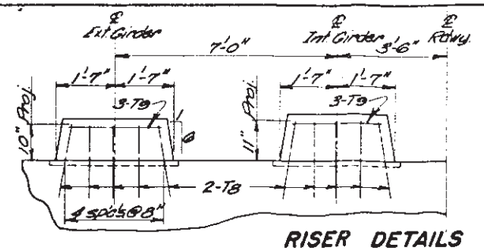

RISER DETAILS

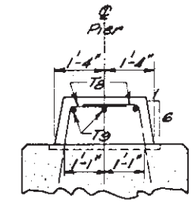

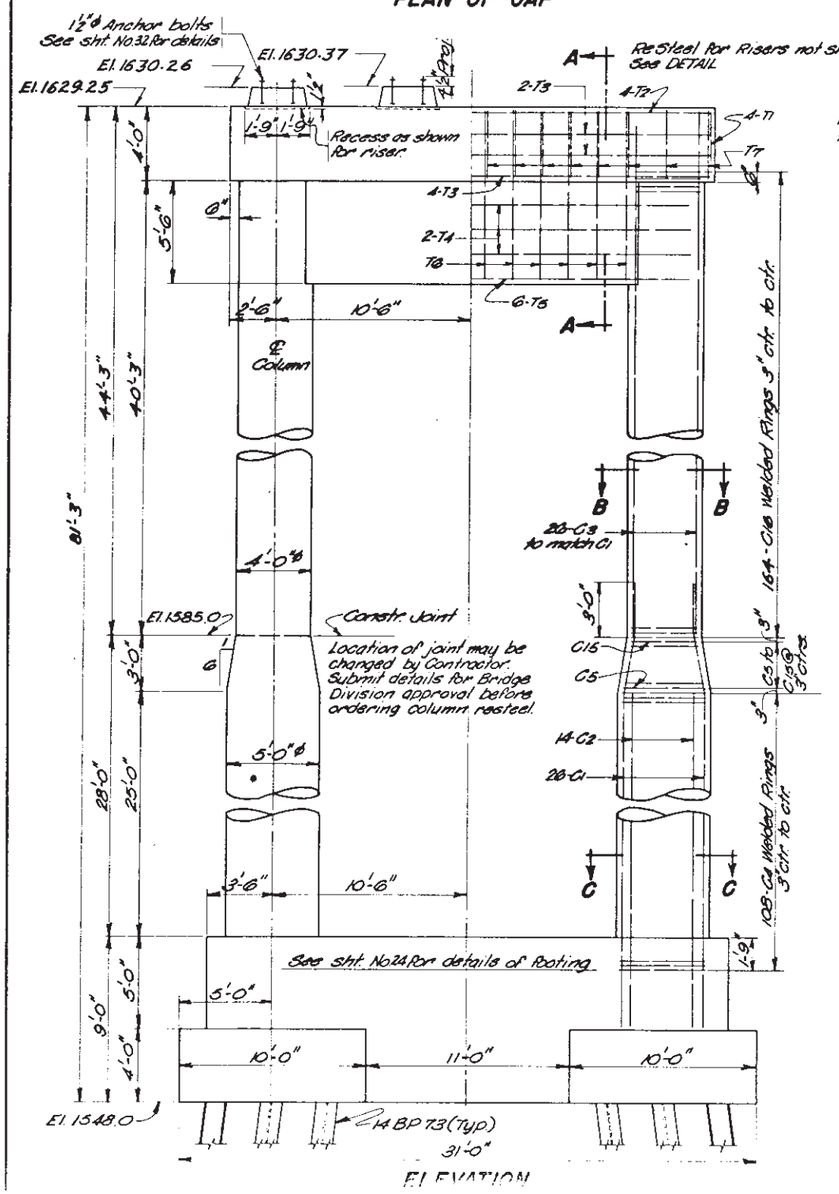

ELEVATION

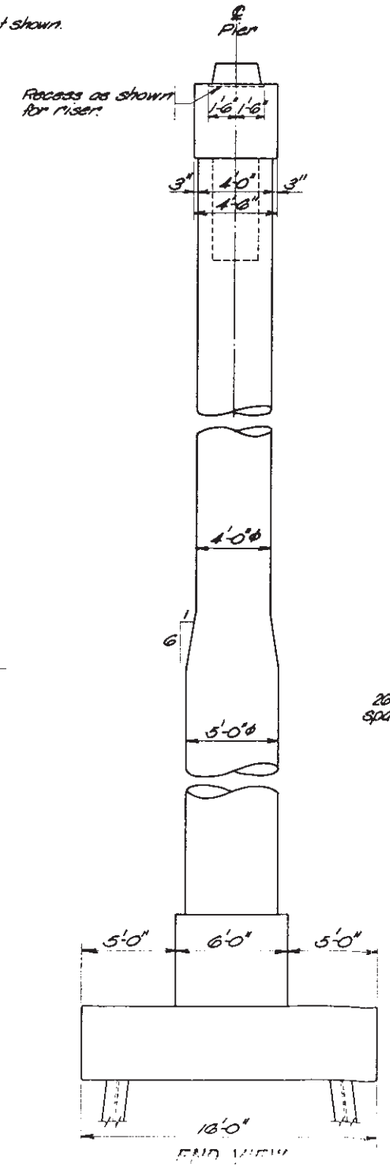

END VIEW

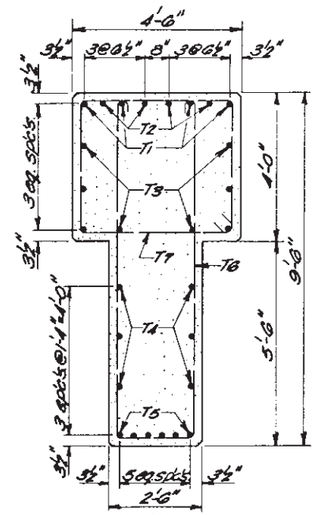

SECTION A-A

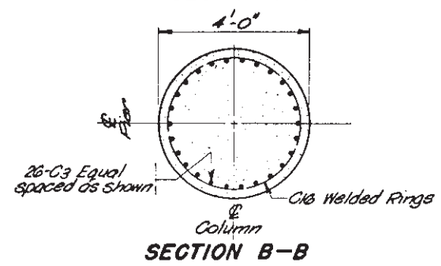

SECTION B-B

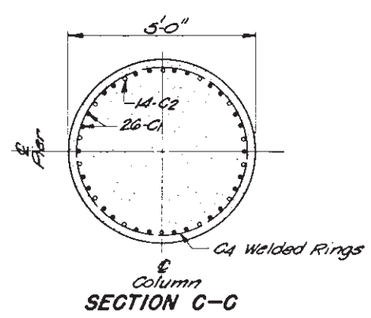

SECTION C-C

REINFORCING SCHEDULE (One Pier)

	Mark	No.	Size	Length	Type
CAP	T1	4	8	30'-6"	2
	T2	4	8	25'-6"	Str.
	T3	8	6	25'-6"	Str.
	T4	6	6	23'-6"	Str.
	T5	6	11	23'-6"	Str.
	T6	12	5	21'-6"	S9
	T7	16	5	16'-9"	S1
	T8	40	5	4'-0"	22
	T9	12	5	2'-6"	Str.
COLUMN	C1	52	11	36'-0"	19
	C2	28	11	30'-0"	Str.
	C3	52	11	43'-3"	Str.
	C4	216	5	14'-10"	*Ring
	C5 to C15	2 (each) 22	5	14'-8" max. 12'-0" min. 13'-4" Av.	*Ring
	C16	328	5	11'-9"	*Ring
PEDESTAL	P1	80	11	6'-0"	Str.
	P2	10	11	27'-6"	Str.
	P3	6	6	27'-6"	Str.
	P4	44	5	25'-9"	S1
	P5	12	5	15'-3"	*Ring
FOOTING	F1	24	11	15'-6"	Str.
	F2	10	11	30'-6"	Str.
	F3	40	6	9'-6"	Str.
	F4	24	8	15'-6"	Str.
	F5	80	5	5'-0"	2
	F6	4	6	30'-6"	Str.
	F7	8	6	14'-0"	Str.
	F8	8	6	9'-0"	Str.

All dimensions are out to out of bars.
Figures in circles show types.

Bar Bends

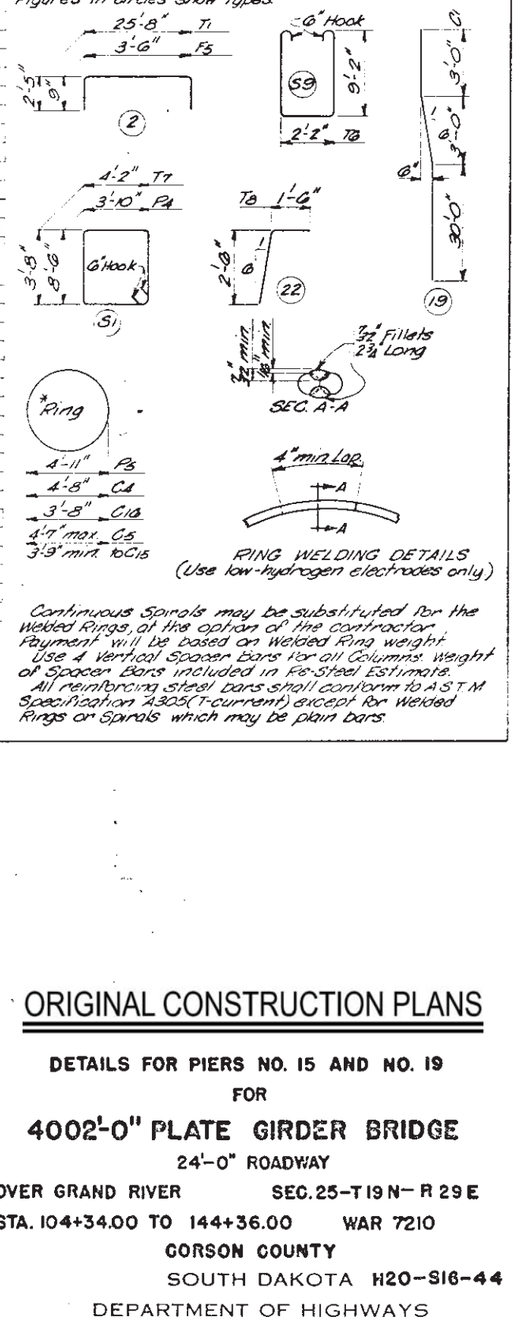

Continuous Spirals may be substituted for the Welded Rings, at the option of the contractor. Payment will be based on Welded Ring weight.
Use 4 Vertical Spacer Bars for all Columns. Weight of Spacer Bars included in Re-Steel Estimate.
All reinforcing steel bars shall conform to A.S.T.M. Specification A305 (Current) except for Welded Rings or Spirals which may be plain bars.

ORIGINAL CONSTRUCTION PLANS

DETAILS FOR PIERS NO. 15 AND NO. 19
FOR
4002'-0" PLATE GIRDER BRIDGE
24'-0" ROADWAY
OVER GRAND RIVER **SEC. 25-T19N-R29E**
STA. 104+34.00 TO 144+36.00 **WAR 7210**
GORSON COUNTY
SOUTH DAKOTA **H20-S16-44**
DEPARTMENT OF HIGHWAYS
MAY 1962

STATE OF	PROJECT	SHEET NO.	TOTAL SHEETS
S.D.	P 1806(06)365	E61	E92

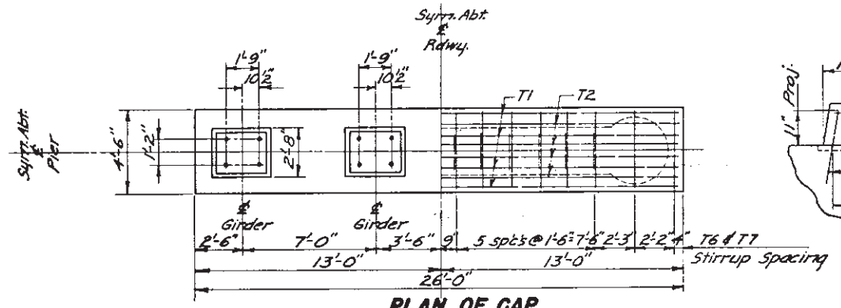

PLAN OF CAP

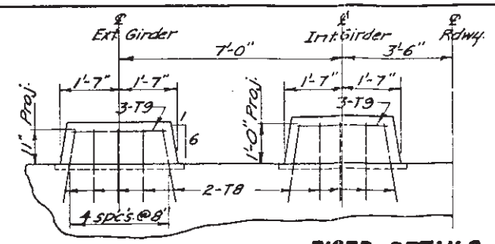

RISER DETAILS

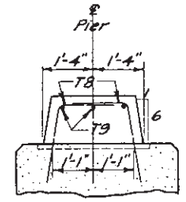

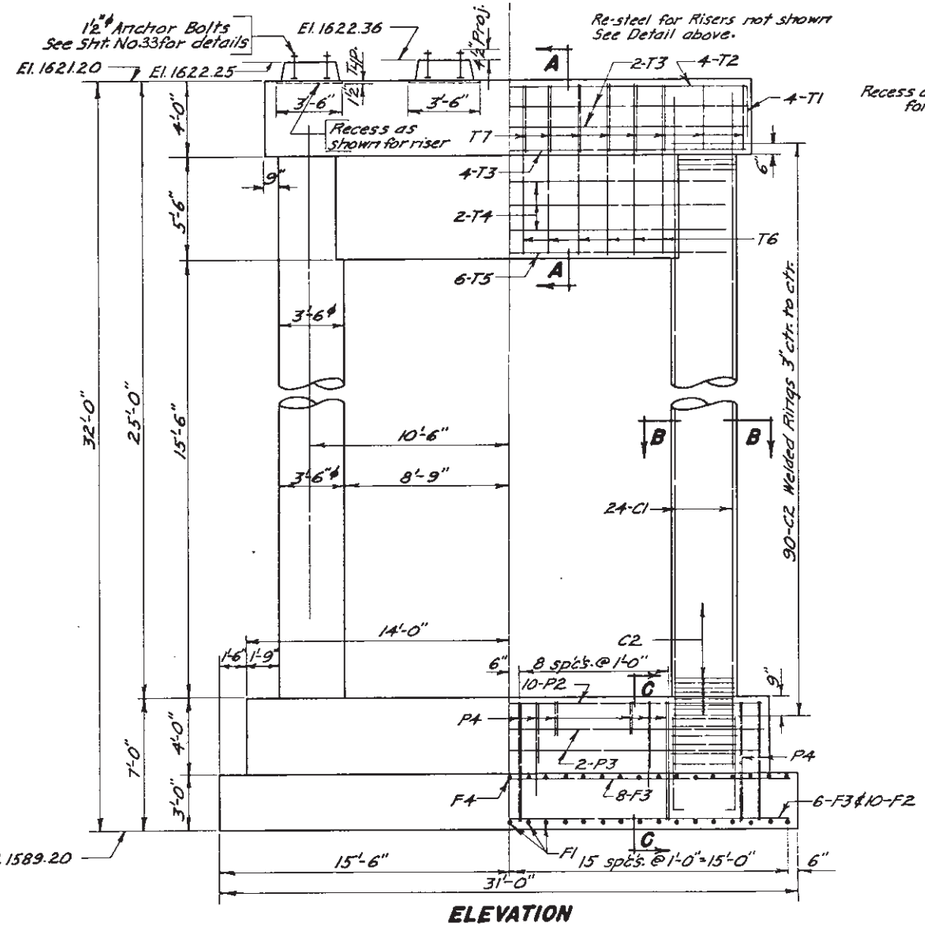

ELEVATION

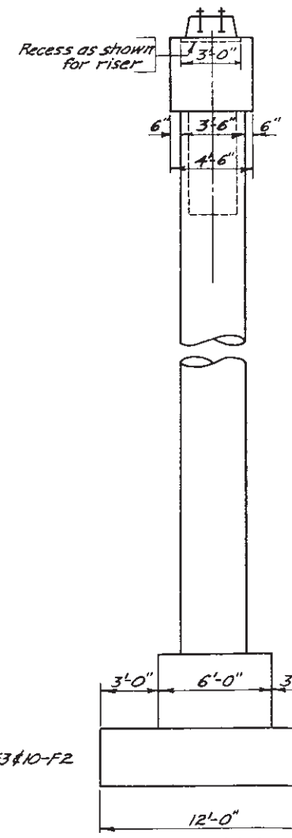

END VIEW

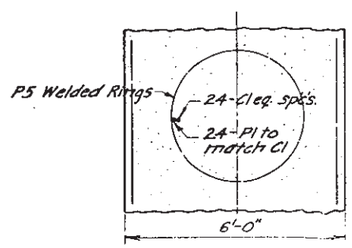

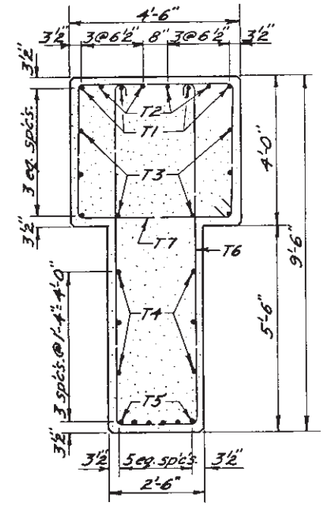

SECTION A-A

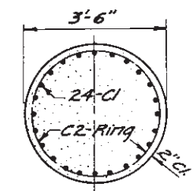

SECTION B-B

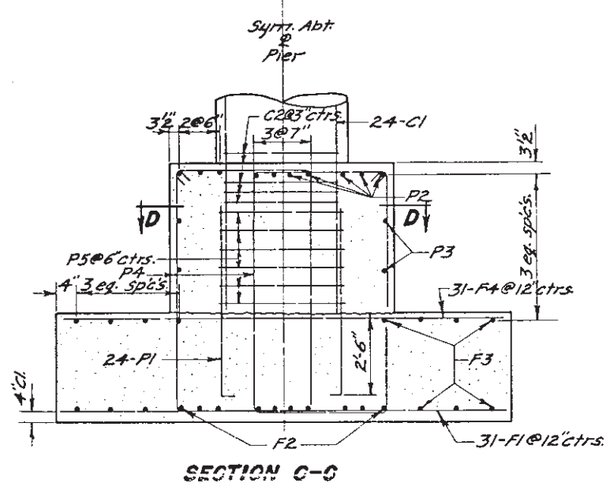

SECTION C-C

REINFORCING SCHEDULE

	Mark	No.	Size	Length	Type: Bar Bends
CAP	T1	4	8	30'-6"	2
	T2	4	8	25'-6"	Str.
	T3	8	6	25'-6"	Str.
	T4	6	6	23'-6"	Str.
	T5	6	11	23'-6"	Str.
	T6	12	5	21'-6"	59
	T7	16	5	16'-9"	51
	T8	40	5	4'-0"	22
	T9	12	5	2'-6"	Str.
COL.	C1	48	11	28'-0"	Str.
	C2	180	5	10'-2"	*Ring
PEDESTAL	P1	48	11	6'-3"	20
	P2	10	10	27'-6"	Str.
	P3	4	6	27'-6"	Str.
	P4	44	5	21'-9"	51
	P5	12	5	11'-0"	Ring
FOOTING	F1	31	8	11'-6"	Str.
	F2	10	8	30'-6"	Str.
	F3	14	5	30'-6"	Str.
	F4	31	5	11'-6"	Str.

All dimensions are out to out of bars.
Figures in circles show types.

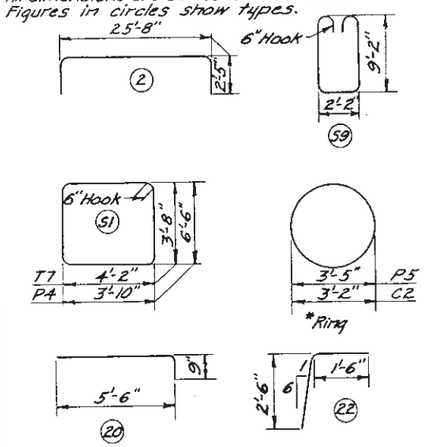

Continuous Spirals may be substituted for the Welded Rings, at the option of the contractor. Payment will be based on Welded Ring Weight.
Use 4 Vertical Spacer Bars for all Columns. Weight of Spacer Bars included in Re-Steel Estimate.
All reinforcing steel bars shall conform to A.S.T.M. Specification A305 (T-current) except for Welded Rings or Spirals which may be plain bars.

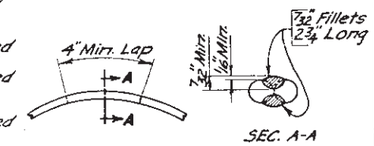

RING WELDING DETAILS
(Use low-hydrogen electrodes)

GENERAL NOTES— (Typical for all Piers)

1. Use 2" clear cover on all reinforcing steel except as shown.
2. Use class "A" Concrete for risers. Risers shall not be poured until Girders have been field measured.
3. See Sht. No's. 1 & 5 for additional notes.

ORIGINAL CONSTRUCTION PLANS

DETAILS OF PIERS NO. 2 AND NO. 32
FOR
4002'-0" PLATE GIRDER BRIDGE
24'-0" ROADWAY
OVER GRAND RIVER SEC. 25-T19N-R29E
STA. 104+34.00 TO 144+36.00 WAR 7210
CORSON COUNTY
SOUTH DAKOTA H20-S16-44
DEPARTMENT OF HIGHWAYS
MAY 1992

CONSULTING BRIDGE ENGINEER

STATE OF	PROJECT	SHEET NO.	TOTAL SHEETS
S.D.	P 1806(06)365	E62	E92

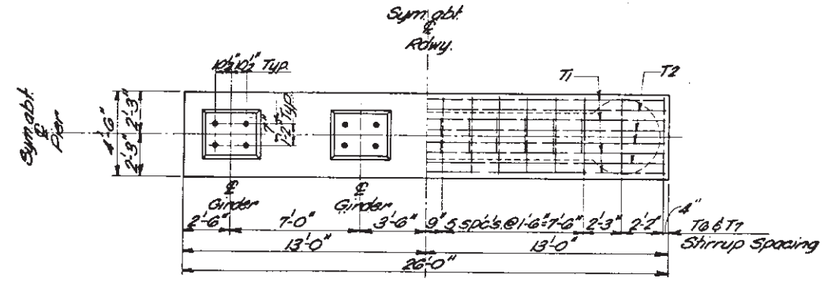

PLAN OF CAP

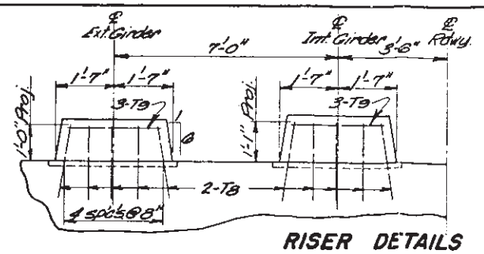

RISER DETAILS

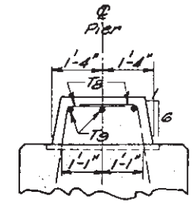

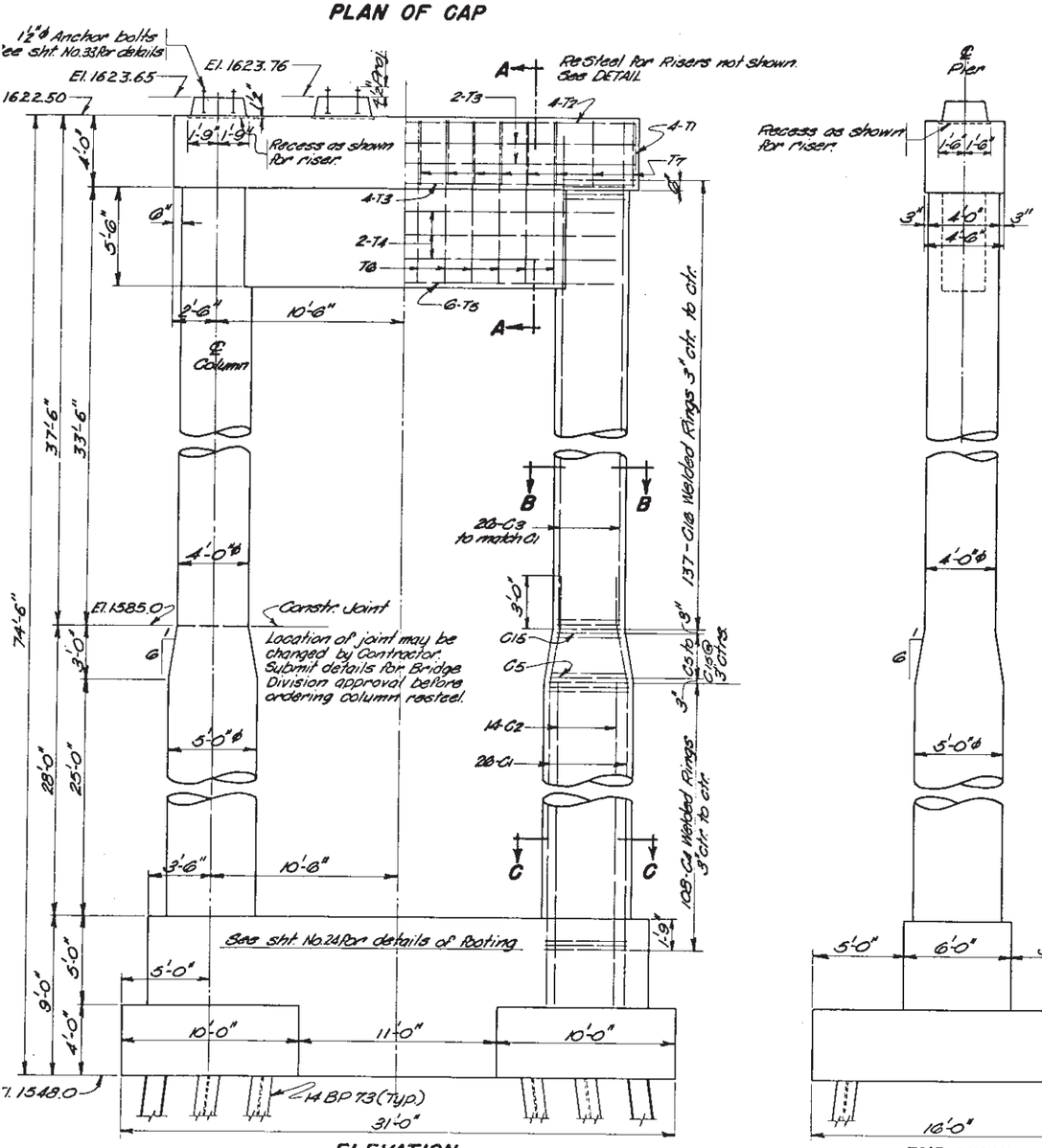

ELEVATION

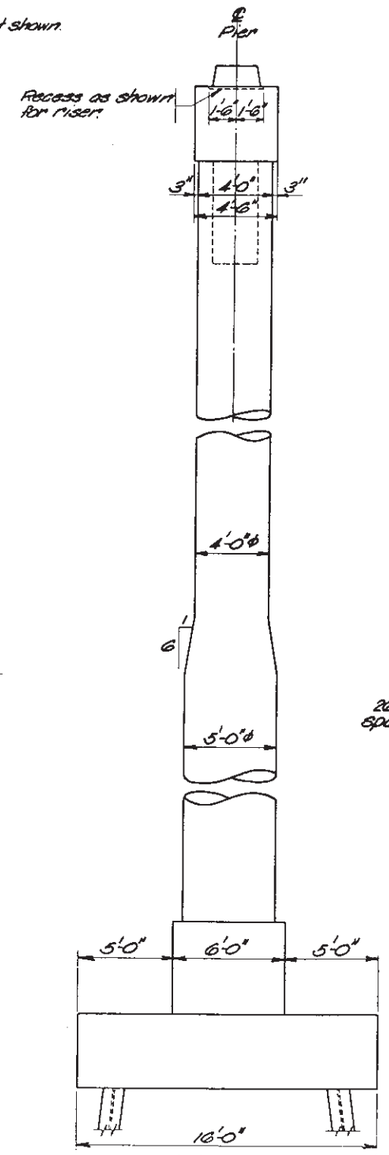

END VIEW

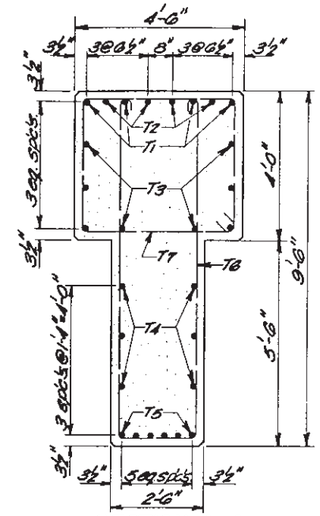

SECTION A-A

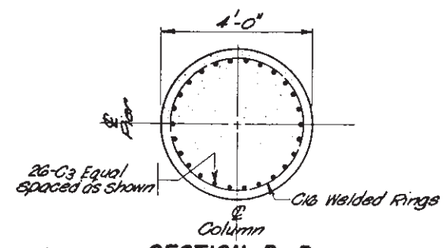

SECTION B-B

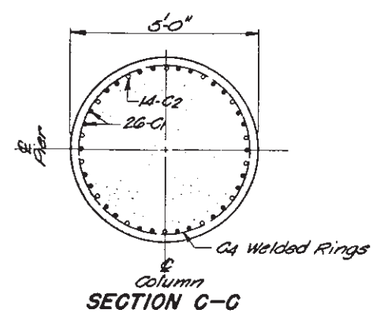

SECTION C-C

REINFORCING STEEL SCHEDULE (Sub Total)

	Mark	No.	Size	Length	Type
CAP	T1	4	8	30'-6"	2
	T2	4	8	25'-6"	Str.
	T3	8	6	25'-6"	Str.
	T4	6	6	23'-6	Str.
	T5	6	11	23'-6"	Str.
	T6	12	5	21'-6"	S9
	T7	16	5	16'-9"	S1
	T8	40	5	4'-0"	22
	T9	12	5	2'-6"	Str.
COLUMN	C1	52	11	36'-0"	19
	C2	28	11	30'-0"	Str.
	C3	52	11	36'-6"	Str.
	C4	216	5	14'-10"	*Ring
	C5 to C15	2 (each) 22	5	14'-8" max. 12'-0" min 13'-4" Av.	*Ring
	C16	274	5	11'-9"	*Ring
PEDESTAL	P1	80	11	6'-0"	Str.
	P2	10	11	27'-6"	Str.
	P3	6	6	27'-6"	Str.
	P4	44	5	25'-9"	S1
	P5	12	5	15'-8"	*Ring
FOOTING	F1	24	11	15'-6"	Str.
	F2	10	11	30'-6"	Str.
	F3	40	6	9'-6"	Str.
	F4	24	8	15'-6"	Str.
	F5	80	5	5'-0"	2
	F6	4	6	30'-6"	Str.
	F7	8	6	14'-0"	Str.
	F8	8	6	9'-0"	Str.

Bar Bends

All dimensions are out to out of bars. Figures in circles show types.

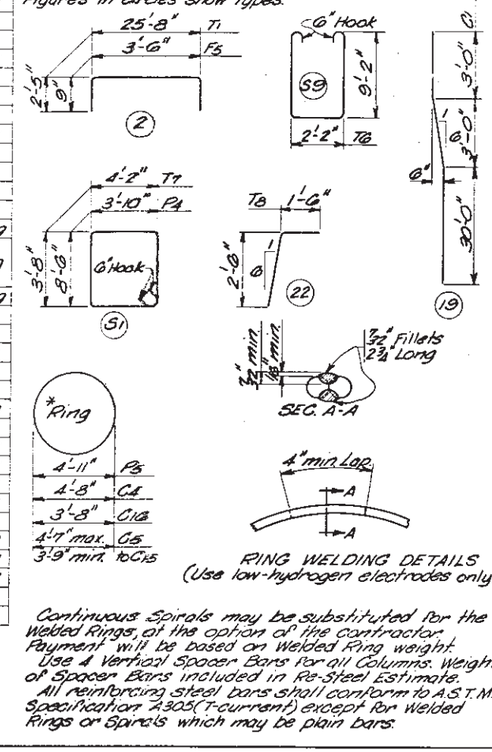

RING WELDING DETAILS
(Use low-hydrogen electrodes only.)

Continuous Spirals may be substituted for the Welded Rings, at the option of the contractor. Payment will be based on Welded Ring weight.

Use 4 Vertical Spacer Bars for all Columns. Weight of Spacer Bars included in Re-Steel Estimate.

All reinforcing steel bars shall conform to A.S.T.M. Specification A305 (T-current) except for Welded Rings or Spirals which may be plain bars.

ORIGINAL CONSTRUCTION PLANS

STATE OF	PROJECT	SHEET NO.	TOTAL SHEETS
S.D.	P 1806(06)365	E63	E92

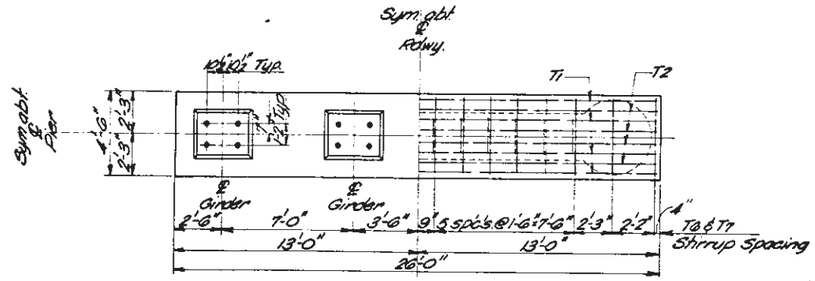

PLAN OF CAP

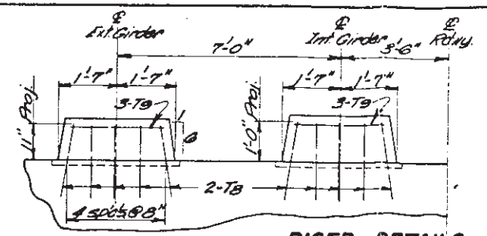

RISER DETAILS

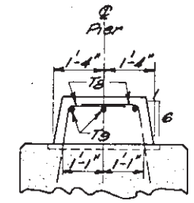

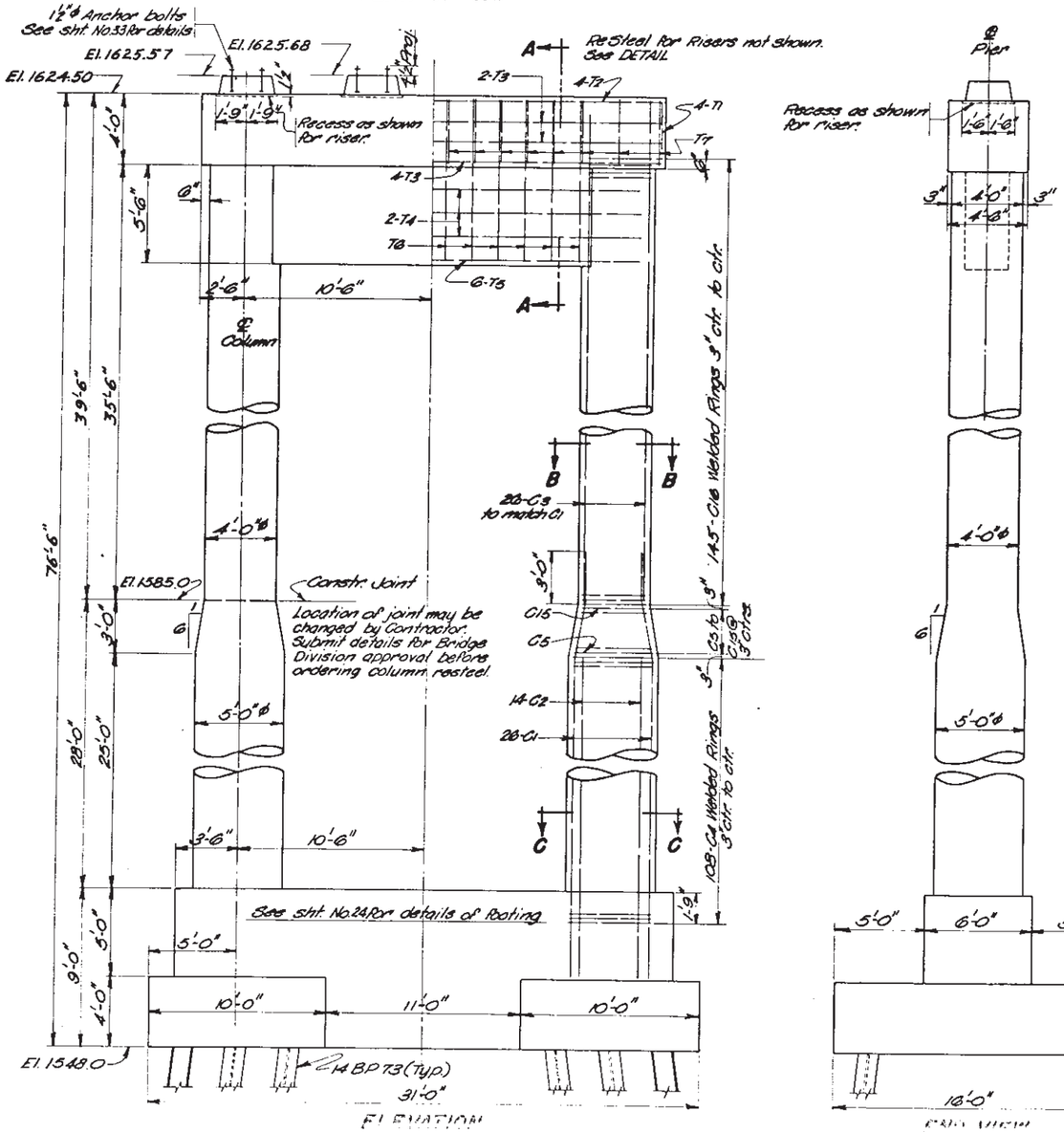

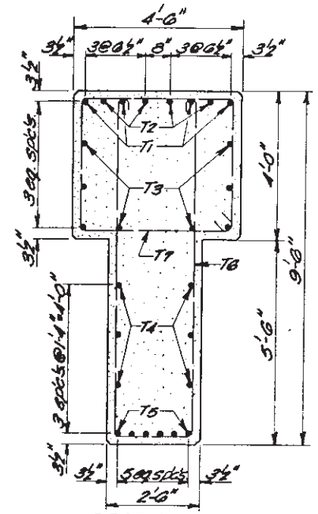

SECTION A-A

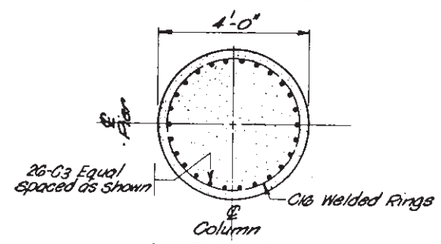

SECTION B-B

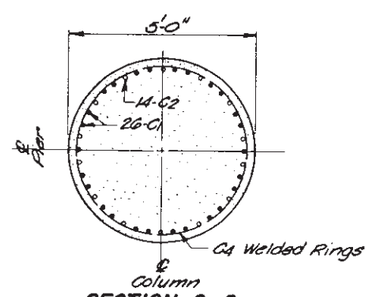

SECTION C-C

REINFORCING SCHEDULE (One Pier)

	Mark	No.	Size	Length	Type
CAP	T1	4	8	36'-6"	2
	T2	4	8	25'-6"	Str.
	T3	8	6	25'-6"	Str.
	T4	6	6	23'-6"	Str.
	T5	6	11	23'-6"	Str.
	T6	12	5	21'-6"	S9
	T7	16	5	16'-9"	S1
	T8	40	5	4'-0"	22
	T9	12	5	2'-6"	Str.
COLUMN	C1	52	11	36'-0"	19
	C2	28	11	30'-0"	Str.
	C3	52	11	38'-6"	Str.
	C4	216	5	14'-10"	*Ring
	C5 to C15	2 (each) 22	5	14'-8" max. 12'-0" min. 13'-4" Av.	*Ring
	C16	290	5	11'-9"	*Ring
PEDESTAL	P1	80	11	6'-0"	Str.
	P2	10	11	27'-6"	Str.
	P3	6	6	27'-6"	Str.
	P4	44	5	25'-9"	S1
	P5	12	5	15'-8"	*Ring
FOOTING	F1	24	11	15'-6"	Str.
	F2	10	11	30'-6"	Str.
	F3	40	6	9'-6"	Str.
	F4	24	8	15'-6"	Str.
	F5	80	5	5'-0"	2
	F6	4	6	30'-6"	Str.
	F7	8	6	14'-0"	Str.
	F8	8	6	9'-0"	Str.

Bar Bends

All dimensions are out to out of bars.
Figures in circles show types.

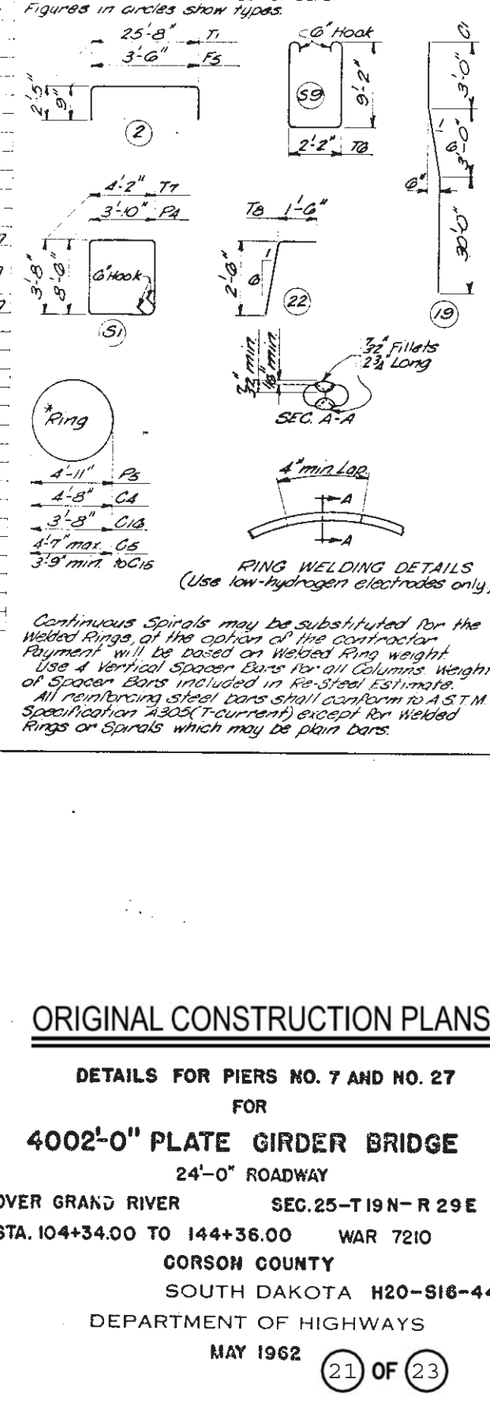

Continuous Spirals may be substituted for the Welded Rings, at the option of the contractor. Payment will be based on Welded Ring weight. Use 4 Vertical Spacer Bars for all Columns. Weight of Spacer Bars included in Re-Steel Estimate. All reinforcing steel bars shall conform to A.S.T.M. Specification A305 (T-current) except for Welded Rings or Spirals which may be plain bars.

ORIGINAL CONSTRUCTION PLANS

DETAILS FOR PIERS NO. 7 AND NO. 27
FOR
400 2'-0" PLATE GIRDER BRIDGE
24'-0" ROADWAY
OVER GRAND RIVER SEC. 25-T19N-R29E
STA. 104+34.00 TO 144+36.00 WAR 7210
CORSON COUNTY
SOUTH DAKOTA H20-S16-44
DEPARTMENT OF HIGHWAYS
MAY 1962

STATE OF	PROJECT	SHEET NO.	TOTAL SHEETS
S.D.	P 1806(06)365	E64	E92

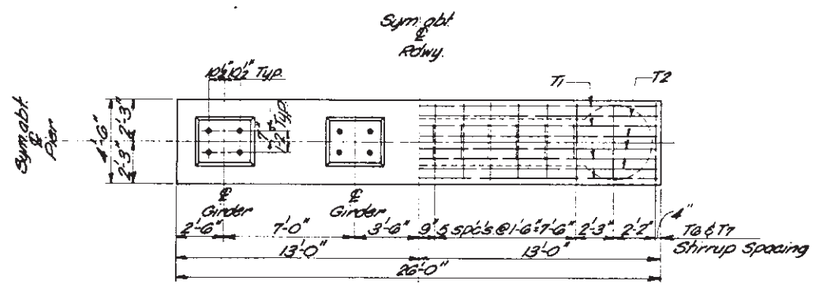

PLAN OF CAP

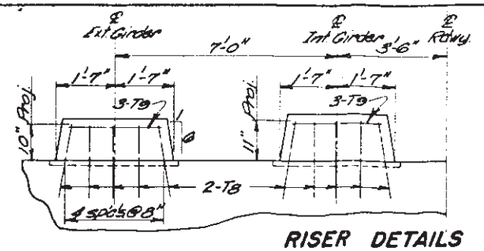

RISER DETAILS

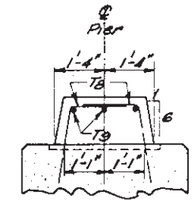

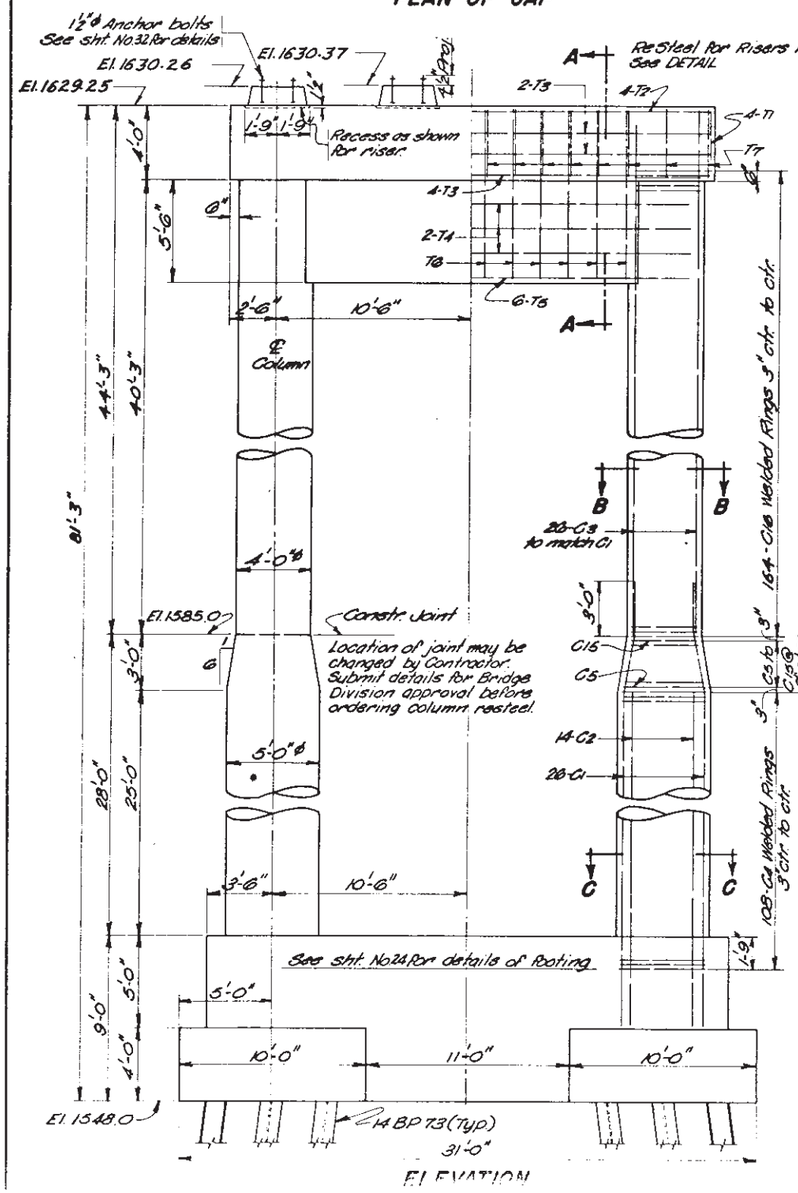

ELEVATION

END VIEW

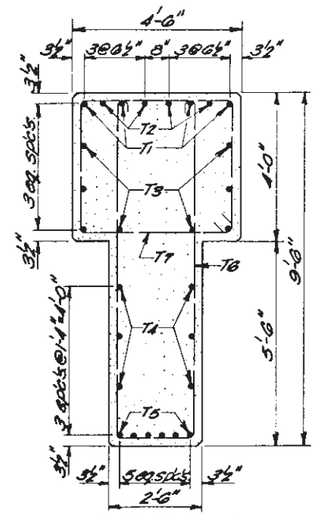

SECTION A-A

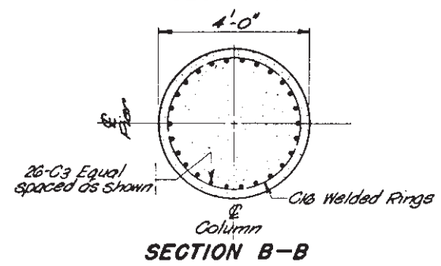

SECTION B-B

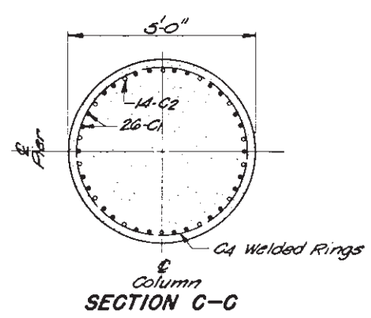

SECTION C-C

REINFORCING SCHEDULE (One Pier)

	Mark	No	Size	Length	Type
CAP	T1	4	8	30'-6"	2
	T2	4	8	25'-6"	Str
	T3	8	6	25'-6"	Str
	T4	6	6	23'-6"	Str
	T5	6	11	23'-6"	Str
	T6	12	5	21'-6"	S9
	T7	16	5	16'-9"	S1
	T8	40	5	4'-0"	22
	T9	12	5	2'-6"	Str
COLUMN	C1	52	11	36'-0"	19
	C2	28	11	30'-0"	Str
	C3	52	11	43'-3"	Str
	C4	216	5	14'-10"	*Ring
	C5 to C15	2 (each) 22	5	14'-8" max 12'-0" min 13'-4" Av	*Ring
	C16	328	5	11'-9"	*Ring
PEDESTAL	P1	80	11	6'-0"	Str
	P2	10	11	27'-6"	Str
	P3	6	6	27'-6"	Str
	P4	44	5	25'-9"	S1
	P5	12	5	15'-3"	*Ring
FOOTING	F1	24	11	15'-6"	Str
	F2	10	11	30'-6"	Str
	F3	40	6	9'-6"	Str
	F4	24	8	15'-6"	Str
	F5	80	5	5'-0"	2
	F6	4	6	30'-6"	Str
	F7	8	6	14'-0"	Str
	F8	8	6	9'-0"	Str

All dimensions are out to out of bars.
Figures in circles show types.

Bar Bends

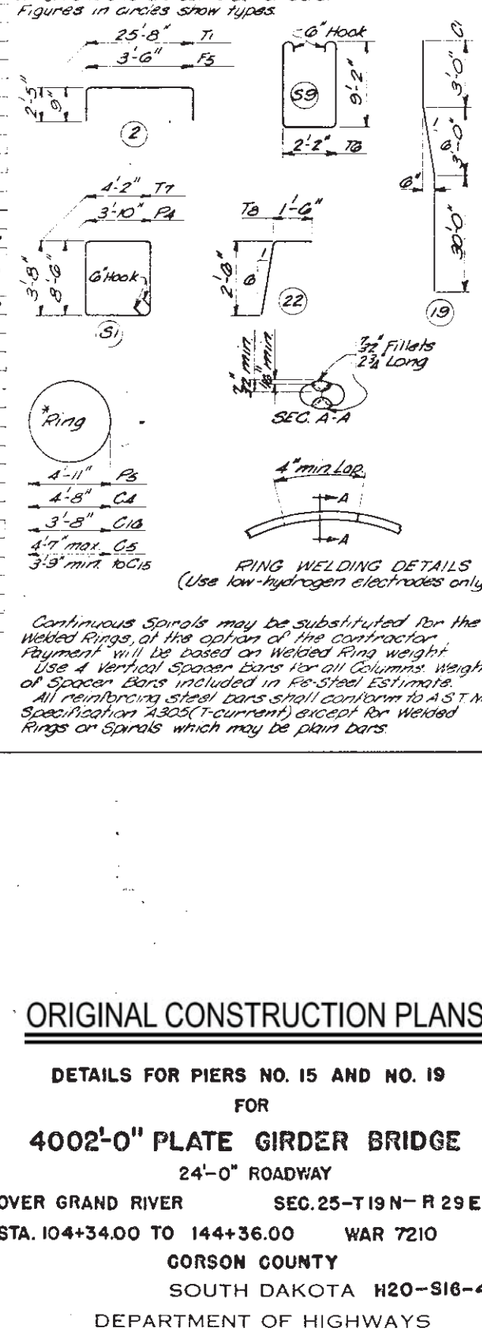

Continuous Spirals may be substituted for the Welded Rings, at the option of the contractor. Payment will be based on Welded Ring weight.
Use 4 Vertical Spacer Bars for all Columns. Weight of Spacer Bars included in Re-Steel Estimate.
All reinforcing steel bars shall conform to A.S.T.M. Specification A305 (Current) except for Welded Rings or Spirals which may be plain bars.

ORIGINAL CONSTRUCTION PLANS

DETAILS FOR PIERS NO. 15 AND NO. 19
FOR
4002'-0" PLATE GIRDER BRIDGE
24'-0" ROADWAY

OVER GRAND RIVER **SEC. 25-T19N-R29E**
STA. 104+34.00 TO 144+36.00 **WAR 7210**
GORSON COUNTY
SOUTH DAKOTA **H20-S16-44**
DEPARTMENT OF HIGHWAYS
MAY 1962

STATE OF	PROJECT	SHEET NO.	TOTAL SHEETS
S.D.	P 1806(06)365	E65	E92

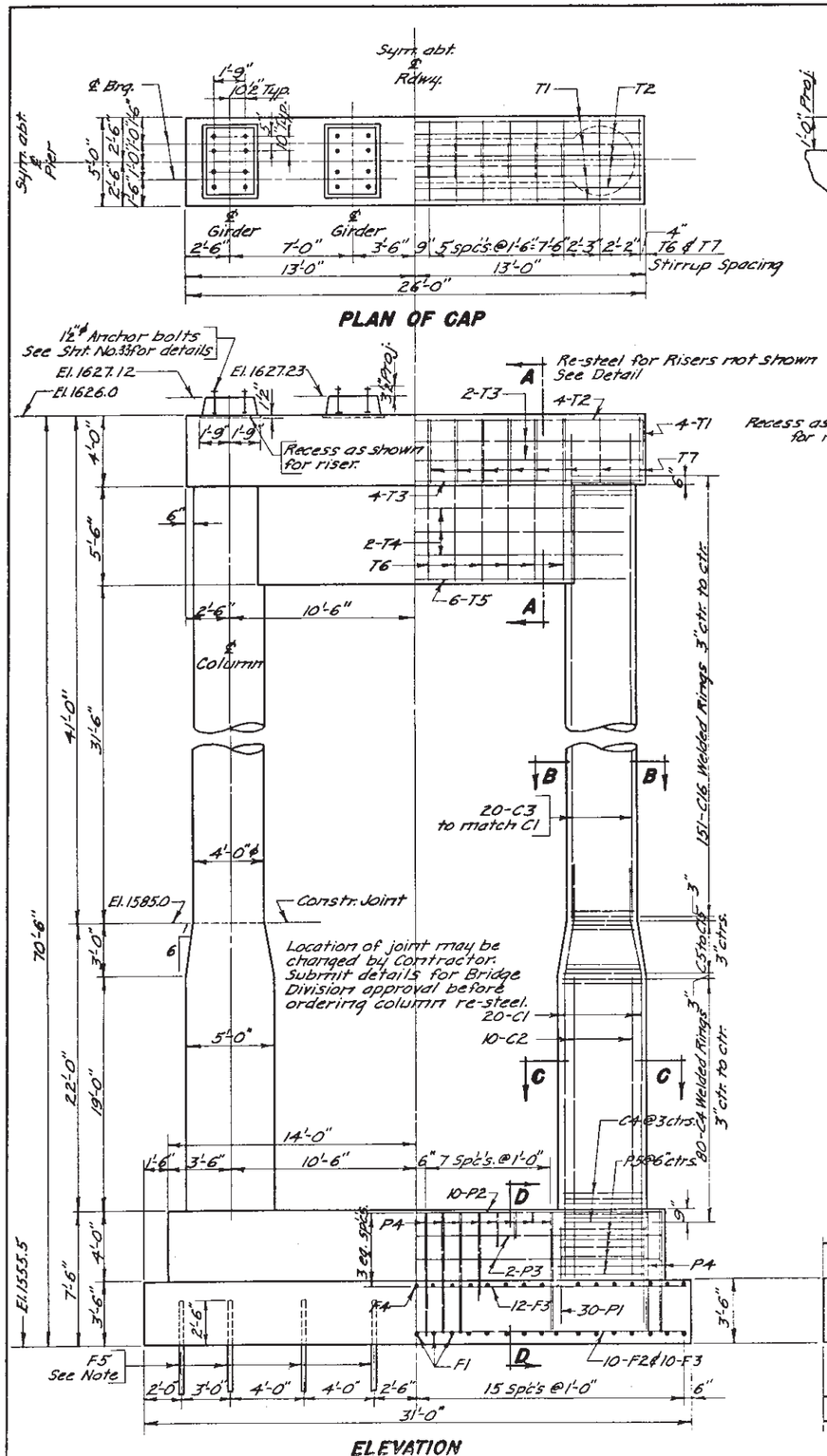

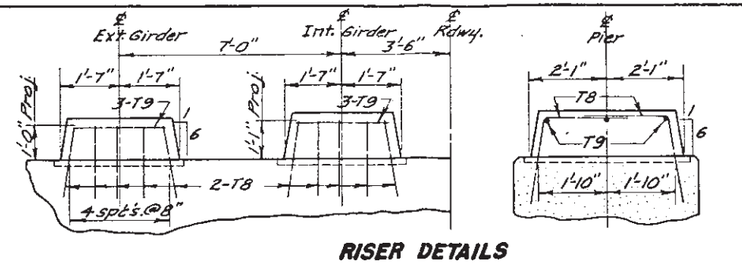

RISER DETAILS

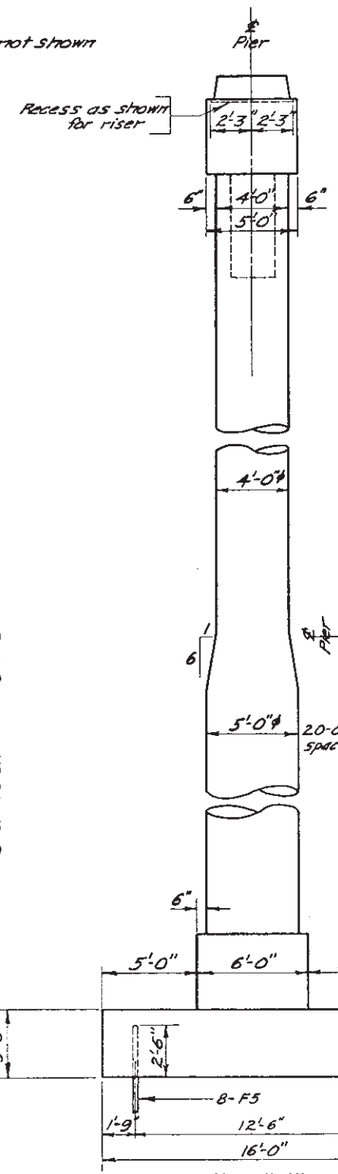

END VIEW

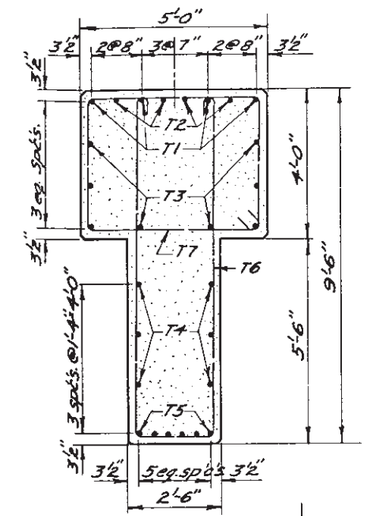

SEC. A-A

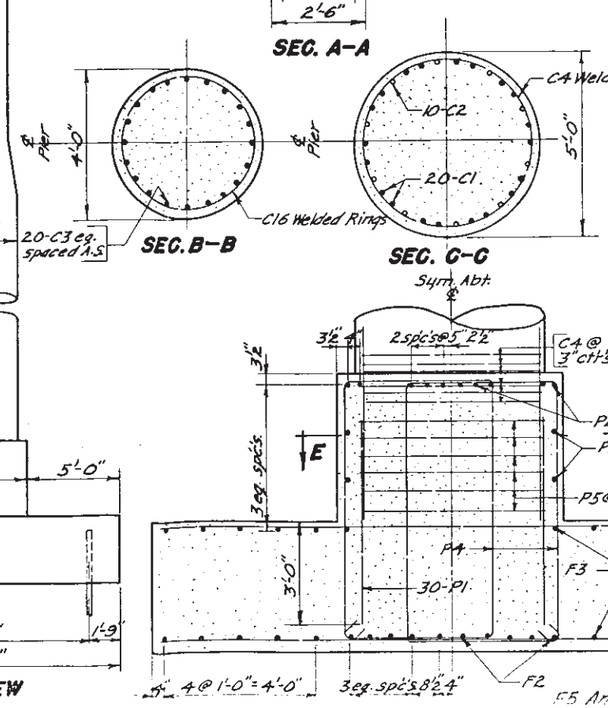

SEC. B-B

SEC. C-C

SEC. E-E

REINFORCING SCHEDULE

	Mark	No.	Size	Length	Type
CAP	T1	4	7	30'-6"	2
	T2	4	8	25'-6"	Str.
	T3	8	6	25'-6"	Str.
	T4	6	6	23'-6"	Str.
	T5	6	10	23'-6"	Str.
	T6	12	5	21'-6"	S9
	T7	16	5	17'-9"	S1
	T8	40	5	4'-9"	22
	T9	12	5	2'-6"	Str.
COLUMN	C1	40	11	29'-0"	19
	C2	20	11	23'-0"	Str.
	C3	40	11	40'-0"	Str.
	C4	160	5	14'-10"	*Ring
	C5 to C15	(2 each) 22	5	14'-8" max. 12'-0" min. 13'-4" Av.	*Ring
	C16	302	5	11'-9"	*Ring
PEDESTAL	P1	60	11	6'-0"	Str.
	P2	10	10	27'-6"	Str.
	P3	4	6	27'-6"	Str.
	P4	40	5	23'-0"	S1
	P5	12	5	15'-8"	*Ring
FOOTING	F1	31	11	15'-6"	Str.
	F2	10	8	30'-6"	Str.
	F3	22	5	30'-6"	Str.
	F4	31	5	15'-6"	Str.
	F5	16	4 I 7.7	7'-6"	Anchor

Bar Bends

All dimensions are out to out of bars. Figures in circles show types.

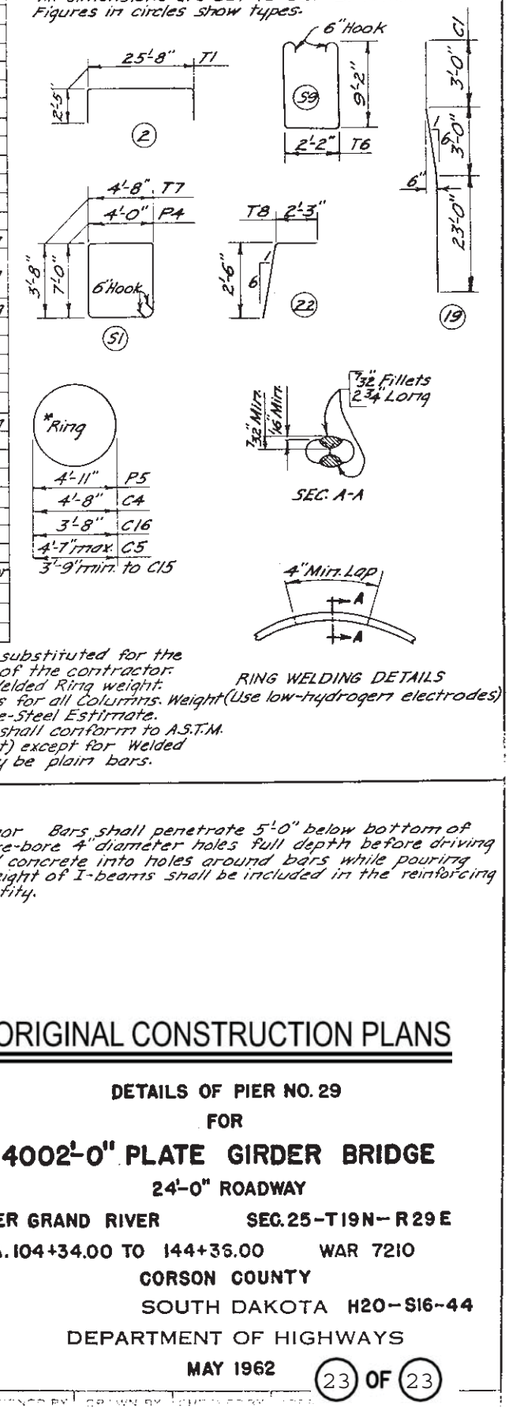

RING WELDING DETAILS (Use low-hydrogen electrodes)

Continuous Spirals may be substituted for the Welded Rings, at the option of the contractor. Payment will be based on Welded Ring weight.

Use 4 Vertical Spacer Bars for all Columns. Weight of Spacer Bars included in Re-Steel Estimate.

All reinforcing steel bars shall conform to A.S.T.M. Specification A 305 (T-current) except for Welded Rings or Spirals which may be plain bars.

NOTE—

F5 Anchor Bars shall penetrate 5'-0" below bottom of footing. Pre-bore 4" diameter holes full depth before driving bars. Rod concrete into holes around bars while pouring footing. Weight of I-beams shall be included in the reinforcing steel quantity.

ORIGINAL CONSTRUCTION PLANS

DETAILS OF PIER NO. 29

FOR

4002'-0" PLATE GIRDER BRIDGE

24'-0" ROADWAY

OVER GRAND RIVER SEC. 25-T19N-R29E

STA. 104+34.00 TO 144+36.00 WAR 7210

CORSON COUNTY

SOUTH DAKOTA H20-S16-44

DEPARTMENT OF HIGHWAYS

MAY 1962

STATE OF	PROJECT	SHEET NO.	TOTAL SHEETS
S.D.	NH 0212(149)208	E66	E92

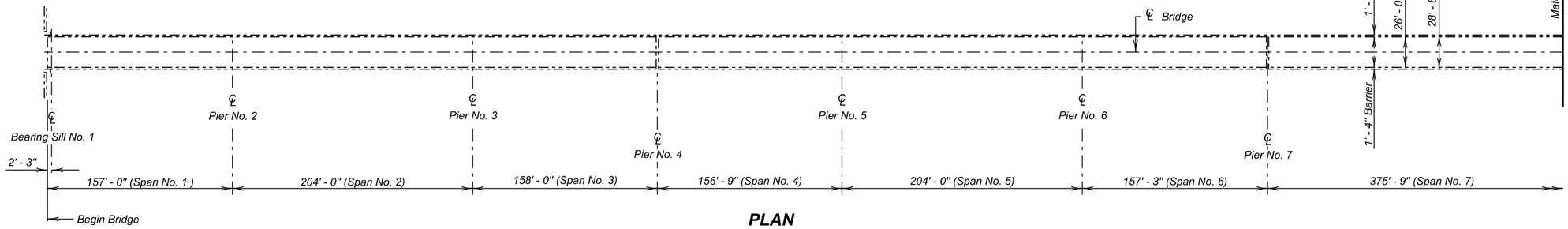

PLAN

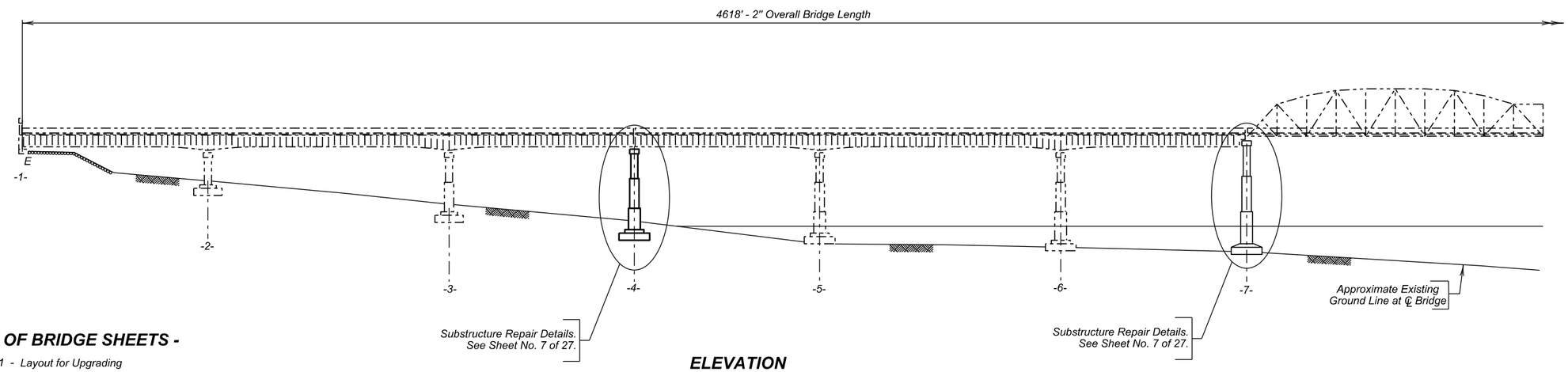

ELEVATION

INDEX OF BRIDGE SHEETS -

Sheet No. 1 - Layout for Upgrading
Sheet No. 2 - Layout for Upgrading (Continued)
Sheet No. 3 - Layout for Upgrading (Continued)
Sheet No. 4 - Layout for Upgrading (Continued)
Sheet No. 5 - Estimate of Structure Quantities and Notes
Sheet No. 6 - Notes (Continued)
Sheet No. 7 - Substructure Repair Details - Pier Nos. 4, 7, & 8
Sheet No. 8 - Substructure Repair Details - Pier No. 12
Sheet No. 9 - Substructure Repair Details - Pier No. 13
Sheet No. 10 - Substructure Repair Details - Pier No. 14
Sheet No. 11 thru 27 - Original Construction Plans

LAYOUT FOR UPGRADING

FOR

4618' - 2" OVER OAHE RESERVIOR

26' - 0" ROADWAY — 0° SKEW
ON US HWY. NO. 212 — SEC. 30-T118N-R78W
STR. NO. 54-056-158 — NH 0212(149)208
PCN 02A8

POTTER COUNTY

S. D. DEPT. OF TRANSPORTATION

MARCH 2016

PLANS BY :
OFFICE OF BRIDGE DESIGN, SOUTH DAKOTA DEPARTMENT OF TRANSPORTATION

DESIGNED BY	CK. DES. BY	DRAFTED BY	
BWS	MM	KR	Kevin N. Goeden
POTT02A8	02A8RA01		BRIDGE ENGINEER

STATE OF	PROJECT	SHEET NO.	TOTAL SHEETS
S.D.	NH 0212(149)208	E67	E92

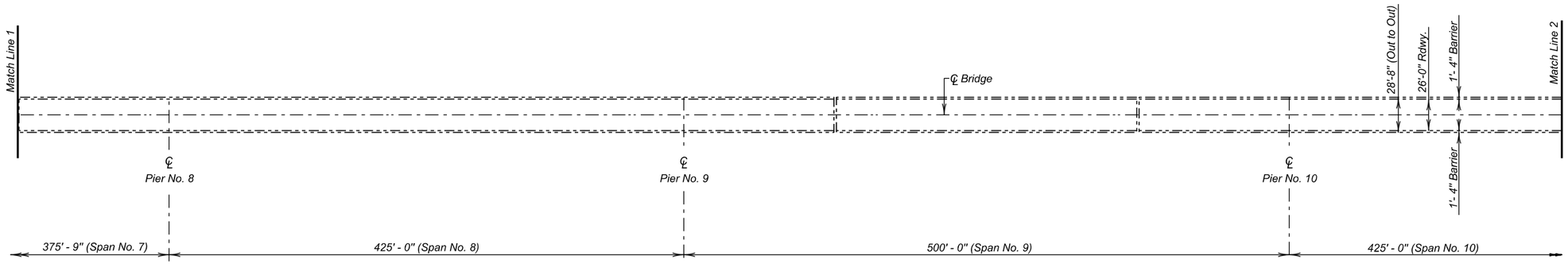

PLAN

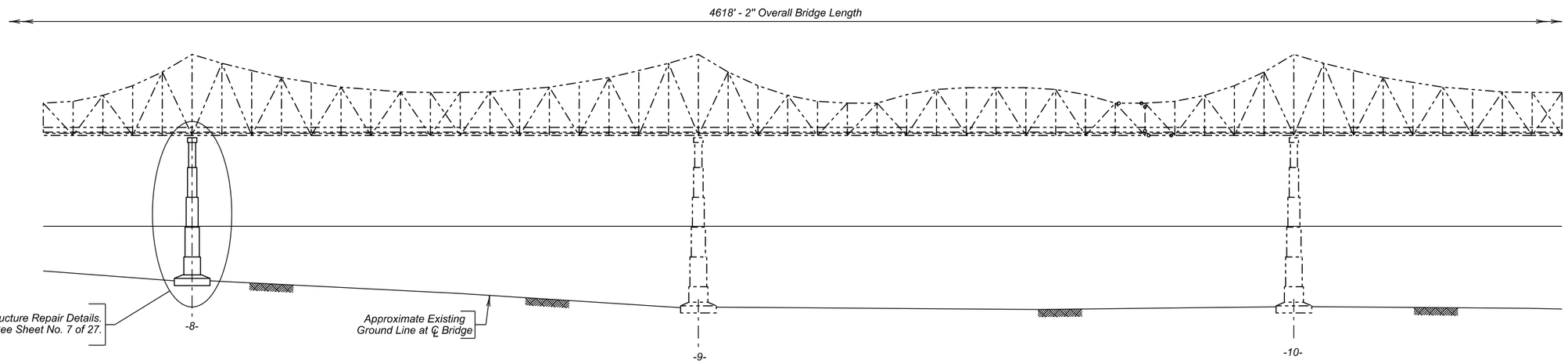

ELEVATION

LAYOUT FOR UPGRADING (CONTINUED)

FOR

4618' - 2" OVER OAHE RESERVIOR

26' - 0" ROADWAY — 0° SKEW
ON US HWY. NO. 212 — SEC. 30-T118N-R78W
STR. NO. 54-056-158 — NH 0212(149)208

POTTER COUNTY

S. D. DEPT. OF TRANSPORTATION

MARCH 2016

DESIGNED BY	CK. DES. BY	DRAFTED BY	
BWS	MM	KR	Kevin N. Goeden
POTT02A8	02A8RA02		BRIDGE ENGINEER

STATE OF	PROJECT	SHEET NO.	TOTAL SHEETS
S.D.	NH 0212(149)208	E68	E92

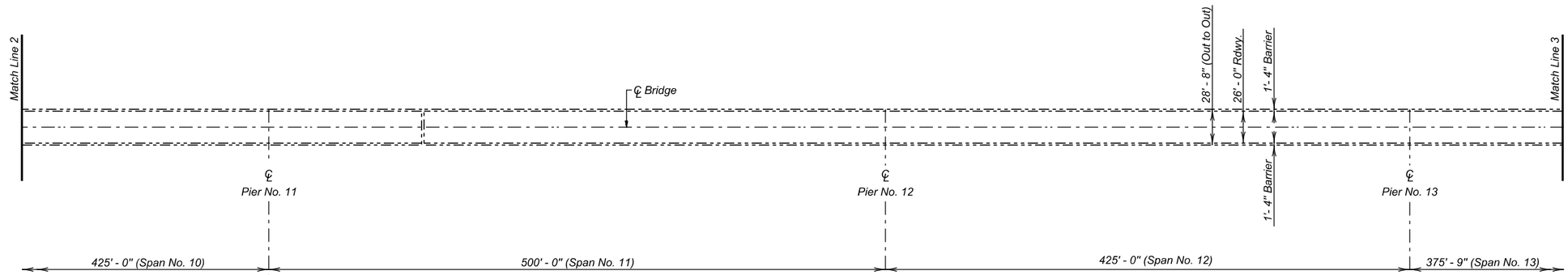

PLAN

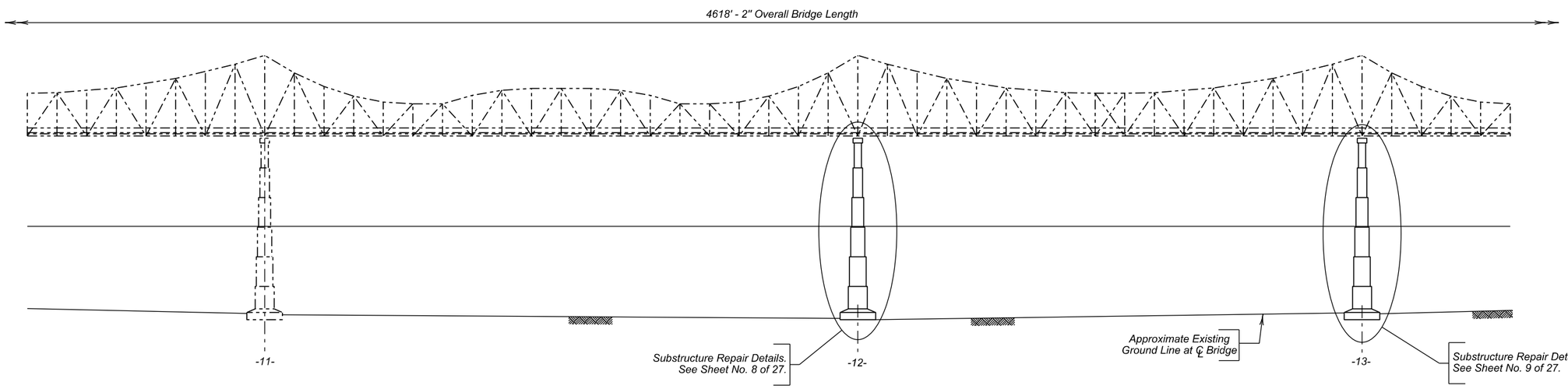

ELEVATION

LAYOUT FOR UPGRADING (CONTINUED)

FOR

4618' - 2" OVER OAHE RESERVIOR

26' - 0" ROADWAY — 0° SKEW
ON US HWY. NO. 212 — SEC. 30-T118N-R78W
STR. NO. 54-056-158 — NH 0212(149)208

POTTER COUNTY

S. D. DEPT. OF TRANSPORTATION

MARCH 2016

DESIGNED BY	CK. DES. BY	DRAFTED BY	
BWS	MM	KR	Kevin N. Goeden
POTT02A8	02A8RA03		BRIDGE ENGINEER

STATE OF	PROJECT	SHEET NO.	TOTAL SHEETS
S.D.	NH 0212(149)208	E69	E92

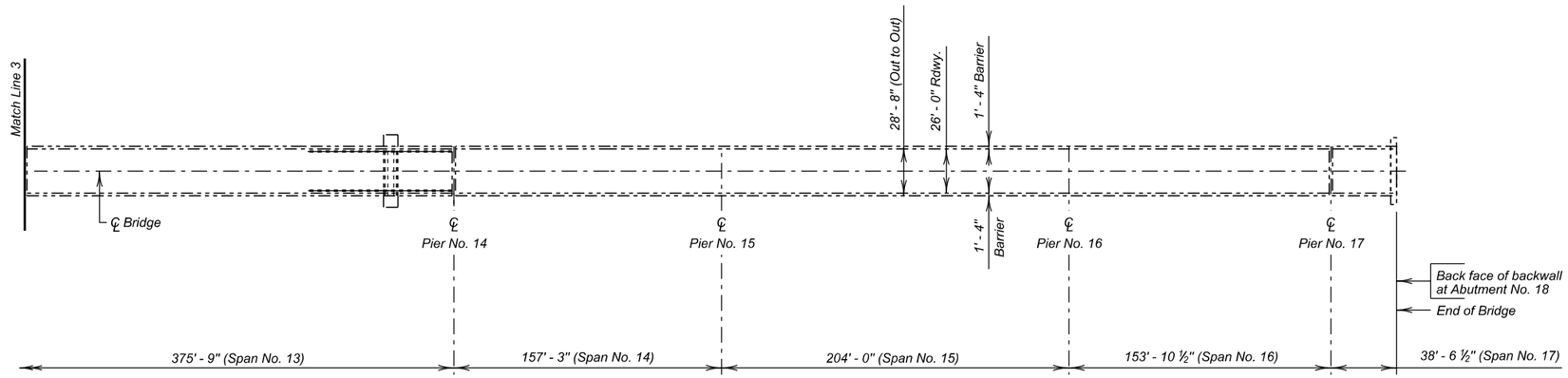

PLAN

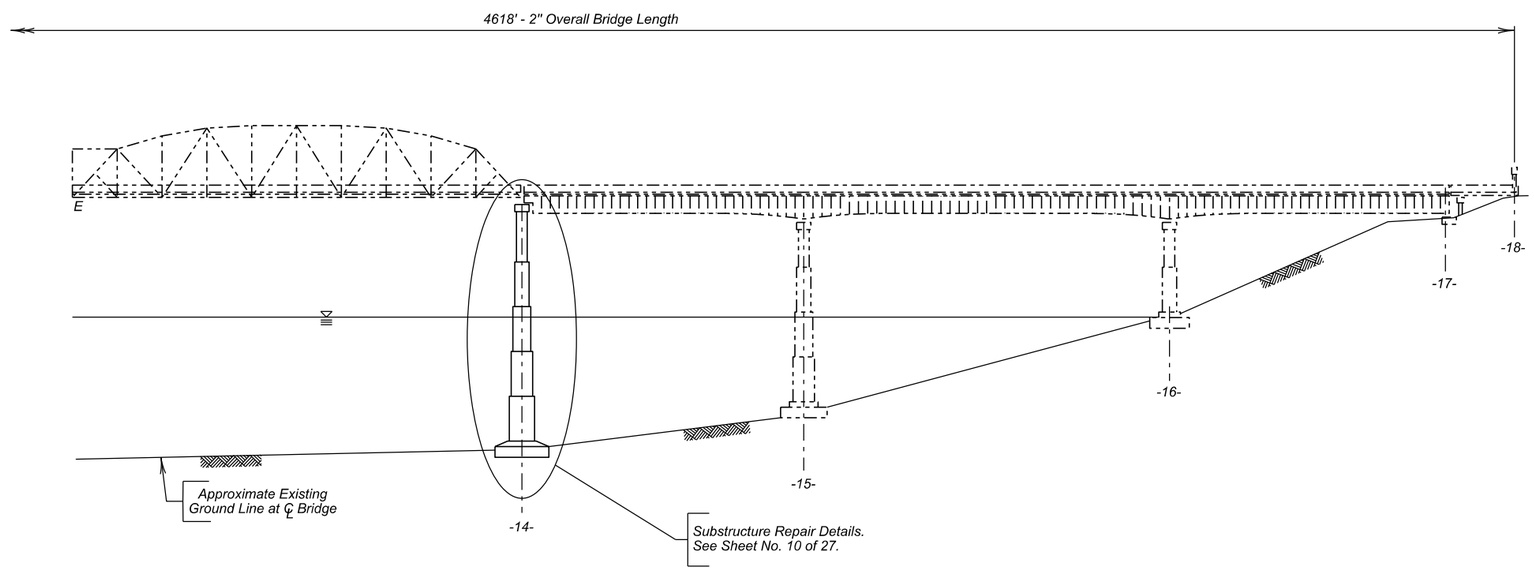

ELEVATION

LAYOUT FOR UPGRADING (CONTINUED)

FOR

4618' - 2" OVER OAHE RESERVIOR

26' - 0" ROADWAY — 0° SKEW
ON US HWY. NO. 212 — SEC. 30-T118N-R78W
STR. NO. 54-056-158 — NH 0212(149)208

POTTER COUNTY

S. D. DEPT. OF TRANSPORTATION

MARCH 2016

DESIGNED BY	CK. DES. BY	DRAFTED BY	
BWS	MM	KR	Kevin N. Goeden
POTT02A8	02A8RA04		BRIDGE ENGINEER

ESTIMATE OF STRUCTURE QUANTITIES

ITEM NO.	DESCRIPTION	QUANTITY	UNIT
460E0174	Concrete Patching Material, Miscellaneous	34.3	CuFt
460E0190	Concrete Crack Injection/Sealing	168	In
460E0300	Breakout Structural Concrete	1.3	CuYd
480E5000	Galvanic Anode	27	Each

SPECIFICATIONS

1. Design Specifications: AASHTO Standard Specifications for Highway Bridges 2002 17th Edition with 2003 Interim using Working Stress Design.

2. Construction Specifications: South Dakota Standard Specifications for Roads and Bridges, 2015 Edition and Required Provisions, Supplemental Specifications and Special Provisions as included in the Proposal.

DETAILS AND DIMENSIONS OF EXISTING BRIDGE

All details and dimensions of the existing bridge contained in these plans are based on the original construction plans and shop plans and are provided as information only. It is the Contractor's responsibility to inspect and verify the actual field conditions and any necessary as-built dimensions affecting the satisfactory completion of the work required for this project.

SCOPE OF BRIDGE WORK & SEQUENCE OF OPERATIONS

All work on this structure shall be accomplished with the traffic control shown in the plans. Alternate sequence of operations may be submitted by the Contractor for approval by the Engineer two weeks prior to the pre-construction meeting.

1. Breakout areas of pier caps and columns to the limits shown in the plans.

2. Epoxy inject cracks in pier cap as shown in the plans.

3. Install galvanic anodes and repair areas with concrete patching materials.

GENERAL CONSTRUCTION – BRIDGE

1. Use 2" clear cover on all reinforcing steel except as shown otherwise.

2. All exposed concrete corners and edges shall be chamfered 3/4" unless noted otherwise in the plans.

CONCRETE BREAKOUT

1. The existing pier cap and columns shall be broken out to the limits shown on the plans. Breakout limits shall be defined with a 3/4" deep sawcut (unless specified otherwise in these plans), where practical, as approved by the Engineer. Reinforcing steel that is exposed and is scheduled for use in the new construction shall be cleaned and straightened to the satisfaction of the Engineer. Care shall be taken not to damage the existing reinforcing steel that is to be reused in the new construction during concrete breakout. Any reinforcing steel that is damaged during concrete breakout shall be replaced or repaired, as approved by the Engineer, by the Contractor at no cost to the Department.

2. The railing on the pier caps may need to be removed and reattached in order to complete any concrete breakout and patching. The railing shall be reattached using 5/8" Dia. Bolts. All costs associated with railing removal and reattachment shall be incidental to the contract unit price for "Breakout Structural Concrete".

3. All broken out concrete shall be disposed of by the Contractor. Any disposal of discarded material shall be in accordance with the environmental commitment notes.

4. During concrete removal operations, no broken out concrete shall be allowed to fall into Lake Oahe.

5. Work on the repair areas shall only be accomplished when those areas are completely out of the water and shall remain out of the water for the length of cure period for the concrete patching material. If the repair areas in the plans are under the water, those areas may be removed from the plans at the direction of the engineer. The water level is controlled by the Corp of Engineers. The following links, which show the historic water levels as well as estimated future levels by the Corp of Engineers, is provided as a scheduling tool:

   http://www.nwd-mr.usace.army.mil/rcc/projdata/oahe.pdf

   http://www.nwd-mr.usace.army.mil/rcc/reports/resfcast.pdf

6. The contract unit price per cubic yard for "Breakout Structural Concrete" shall include breaking out concrete, cleaning, straightening existing reinforcing steel, and disposal of all broken out material.

CONCRETE CRACK INJECTION/SEALING

1. This work shall consist of cleaning the concrete surfaces adjacent to the cracks, installing epoxy injection ports or tees, sealing the surface of the cracks, and epoxy injecting the cracks.

2. Concrete surfaces adjacent to the cracks shall be cleaned to the extent necessary to achieve adequate bond for the surface sealant. The preparation shall not cause dust or other contaminants to penetrate the crack. The crack shall be cleaned of dust and debris using clean, oil free compressed air. The use of solvents or thinners shall not be permitted.

3. The cracks to be injected shall have injection ports or tees installed in them. The ports or tees shall be spaced between 6 to 12 inches, or as specified by the manufacturer, beginning at the lower most point of the crack. The ports or tees shall be placed in dust free holes made with either vacuum drills or chipping hammers.

4. The surface cracks between the ports shall be sealed using an epoxy paste or as specified by the manufacturer. The application of the surface crack sealer shall be limited to clean dry surfaces at a temperature of not less than 45°F.

5. Epoxy injection shall begin at the bottom of the crack and proceed upward using a process that will ensure complete penetration of the crack. The epoxy shall be injected at a low enough pressure to ensure that no further damage will be done to the member being repaired.

6. The injection epoxy shall conform to ASTM C881, Type IV, Grade 1.

7. After the epoxy has cured a minimum of 48 hours, the injection ports or tees shall be removed flush with the concrete surfaces and the surface crack sealer shall be ground smooth. Care shall be taken to ensure none of the debris falls into Lake Oahe.

8. The Contractor shall submit a Concrete Crack Injection/Sealing procedure in writing, for approval of the engineer, thirty days prior to performing the crack injection and notify the Department of the Contractor's schedule seven days prior to performing the crack injection.

ESTIMATE OF STRUCTURE QUANTITIES AND NOTES

FOR

4618' - 2" OVER OAHE RESERVIOR

STR. NO. 54-056-158

MARCH 2016

DESIGNED BY	CK. DES. BY	DRAFTED BY	
BWS	MM	BWS	Kevin N. Goeden
POTT02A8	02A8RA01		BRIDGE ENGINEER

CONCRETE CRACK INJECTION/SEALING (CONTINUED)

9. The cracks to be injected will be measured in inches to the nearest inch. Measurement will be made of the overall crack length.

10. All costs of cleaning the concrete adjacent to the cracks to be sealed, installing the ports or tees, sealing and injecting the cracks, and removal and grinding of the ports and sealant including labor, equipment, and incidentals necessary to complete the work shall be incidental to the contract unit price per inch for "Concrete Crack Injection/Sealing".

PIER REPAIR

1. After all delaminated concrete has been removed, the area shall be abrasive blasted and blown clean with clean, dry, oil-free compressed air at 90 psi.

2. The concrete patching material used in the bent cap patching applications shall be supplied as the following or an equivalent as approved by the Office of Bridge Design:

   Vertical Patch
   Symons
   2400 Arthur Avenue
   Elk Grove Village, IL 60007
   Phone: (847) 298-3200
   Web site: www.symons.com

   Meadow-Patch 20
   W. R. Meadows, Inc.
   P.O. Box 338
   Hampshire, IL 60140-0338
   Phone: (847) 214-2100
   Web site: www.wrmeadows.com

   Speed Crete Red Line
   The Euclid Chemical Company
   19218 Redwood Rd.
   Cleveland, OH 44110
   Phone: (800) 321-7628
   Web site: www.euclidchemical.com

3. The concrete patching material shall be extended with aggregate of the quality, size and gradation specified in the manufacturer's technical literature.

4. The pier shall be rebuilt to the dimensions of the original construction plans unless otherwise shown on the plans. When used, cap forms may be removed when the concrete attains a compressive strength of 2000 psi.

6. All costs associated with accessing, furnishing, placing and finishing the concrete patching material including all equipment, labor and incidentals shall be incidental to the contract unit price per cubic foot for "Concrete Patching Material, Miscellaneous".

GROUT PAD REPAIR

1. Voids in the grout pads shall be repaired at locations noted in plans.

2. Voids shall be abrasive blasted and blown clean with clean, dry, oil-free compressed air at 90 psi.

3. Voids shall be filled with a grout as specified in Section 460.2 K of the Construction Manual.

4. All costs associated with accessing, furnishing, placing and finishing the concrete patching material including all equipment, labor and incidentals shall be incidental to the contract unit price per cubic foot for "Concrete Patching Material, Miscellaneous".

GALVANIC ANODE

1. The Contractor shall furnish and place Galvanic anodes in the concrete repair areas specified in this plan set.

2. The galvanic anodes shall be supplied as one of the following:

   a. Galvashield XP2
      Vector Corrosion Technologies
      13312 N 56th St, Suite 102
      Tampa, FL 33617
      Phone: (813) 830-7566
      Website: www.vector-corrosion.com

   b. Sentinel Silver
      Euclid Chemical Company
      19218 Redwood Road
      Cleveland, OH 44110
      Phone: (800) 321-7628
      Website: www.euclidchemical.com

   c. Sika Galvashield XP+
      Sika Corporation US
      201 Polito Avenue
      Lyndhurst, NJ 07071
      Phone: (800) 933-7452
      Website: http://usa.sika.com

3. The anodes shall be placed in accordance with manufacturer's recommendations and as approved by the Engineer. The anodes have not been shown on the drawings. The Contractor shall provide shop drawings of the galvanic anode installation including locations of the individual anodes to the Office of Bridge Design.

4. The anodes shall be placed with a minimum ¾" cover and shall be set in Embedding Mortar per the manufacturer's recommendations. The anodes shall be fully encased in the concrete repair material. Where adequate cover does not exist, a concrete pocket shall be chipped out behind the anode to provide sufficient cover. The Contractor may need to chip around the reinforcing bar locally at the anode installation to make the electrical connection. The reinforcing steel at the connection location shall be cleaned per the manufacturer's recommendations to provide sufficient electrical connection and mechanical bond.

5. The electrical continuity of the electrical connections and reinforcing steel shall be confirmed per the manufacturer's recommendations.

6. The Contractor shall provide manufacturer's product literature and installation instructions to the Engineer 10 days prior to installation.

7. All costs associated with placing anodes including labor, equipment, materials and incidentals shall be included in the contract unit price per each for "Galvanic Anode".

NOTES (CONTINUED)
FOR
4618' - 2" OVER OAHE RESERVIOR

STR. NO. 54-056-158
MARCH 2016

DESIGNED BY	CK. DES. BY	DRAFTED BY	
BWS	MM	BWS	Kevin N. Goeden
POTT02A8	02A8RA06		BRIDGE ENGINEER

STATE OF	PROJECT	SHEET NO.	TOTAL SHEETS
S.D.	NH 0212(149)208	E72	E92

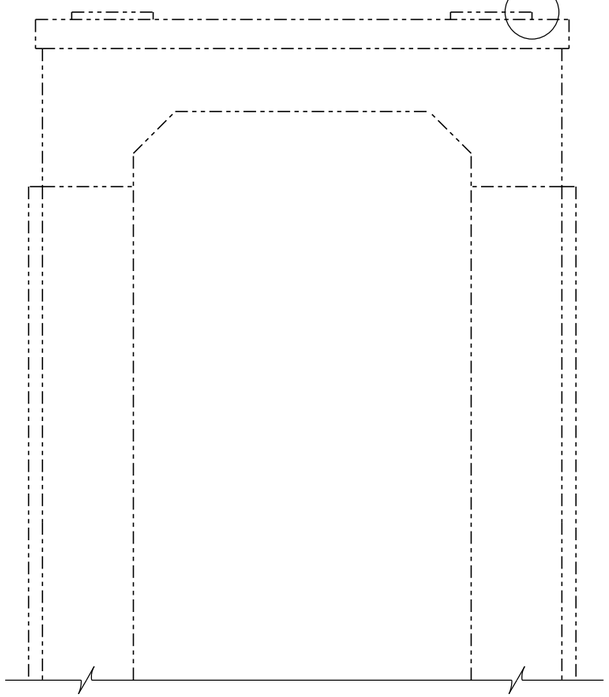

PIER 4
(North Face)

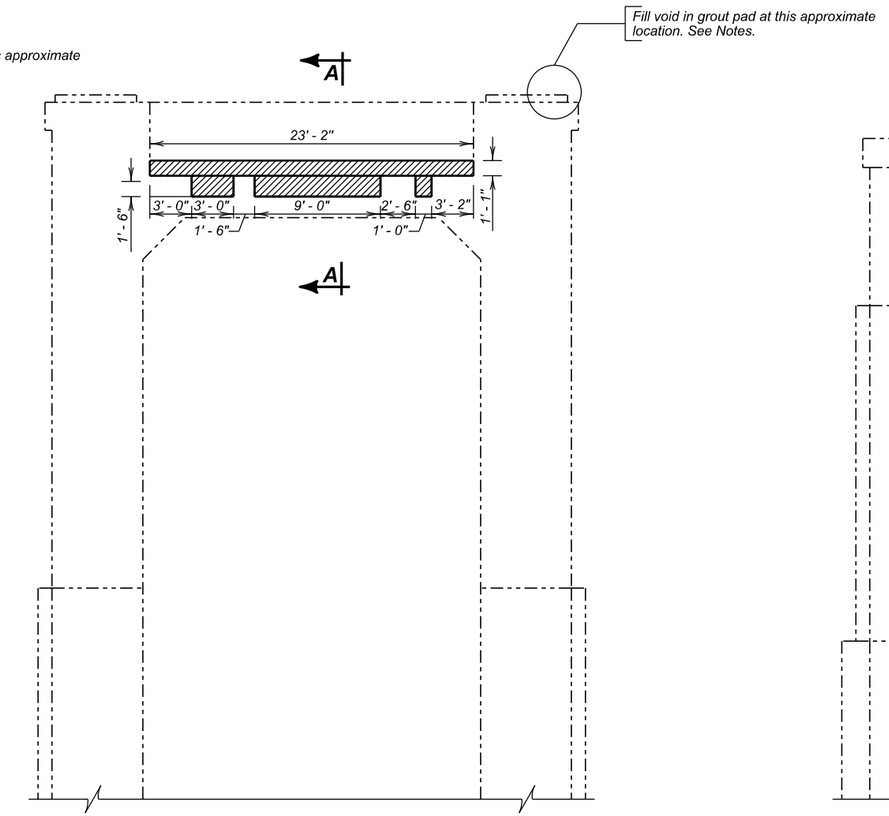

PIER 7
(North Face)

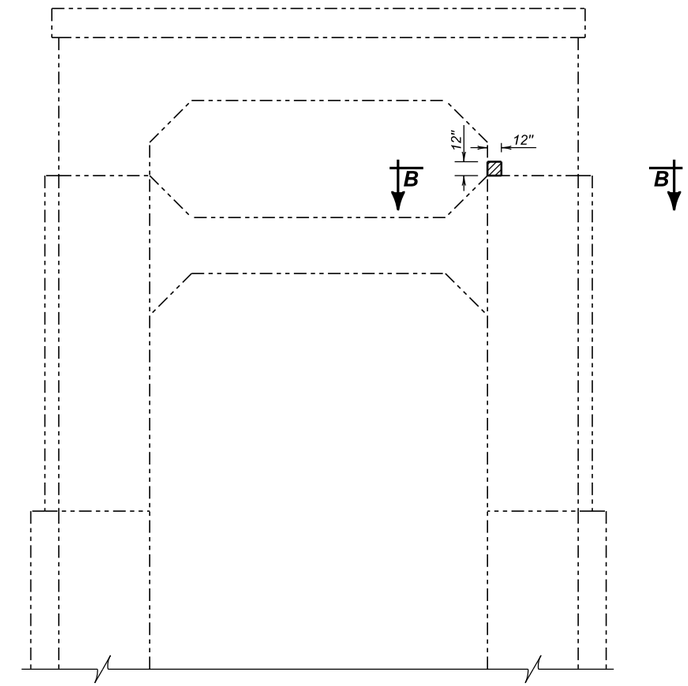

PIER 8
(South Face)

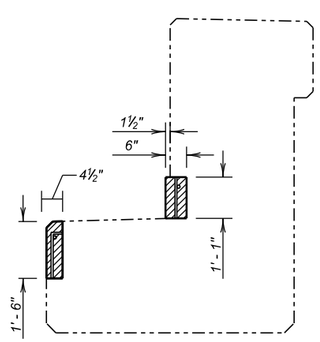

SECTION A - A

LEGEND:

Shaded areas indicate limits of Concrete Patching.

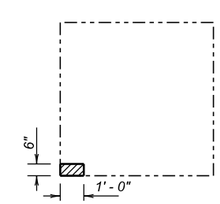

SECTION B - B

SUBSTRUCTURE REPAIR DETAILS (PIER NOS. 4, 7, & 8)

FOR

4618' - 2" OVER OAHE RESERVIOR

26' - 0" ROADWAY — 0° SKEW
ON US HWY. NO. 212 — SEC. 30-T118N-R78W
STR. NO. 54-056-158 — NH 0212(149)208

POTTER COUNTY

S. D. DEPT. OF TRANSPORTATION

MARCH 2016

DESIGNED BY	CK. DES. BY	DRAFTED BY	
BWS	MM	KR	Kevin N. Boeden
POTT02A8	02A8RA07		BRIDGE ENGINEER

STATE OF	PROJECT	SHEET NO.	TOTAL SHEETS
S.D.	NH 0212(149)208	E73	E92

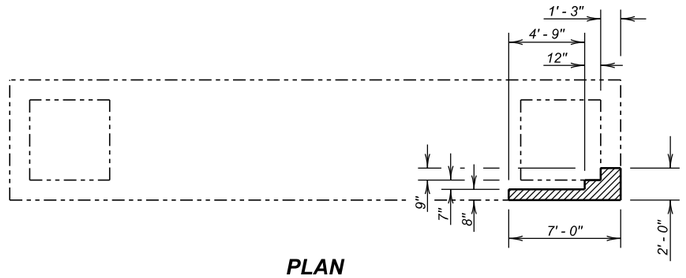

PLAN

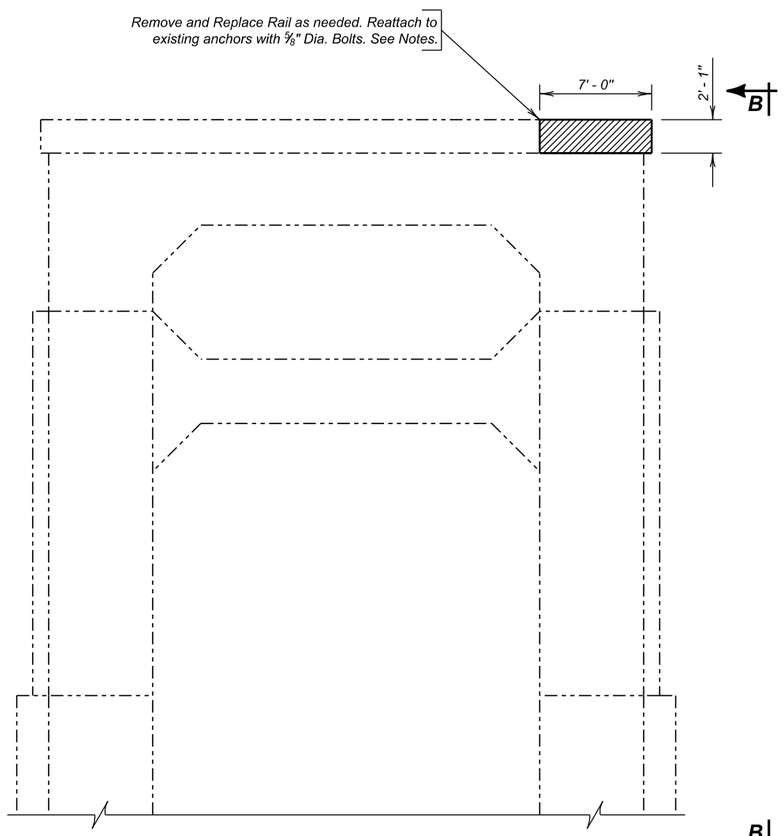

ELEVATION
(North Face)

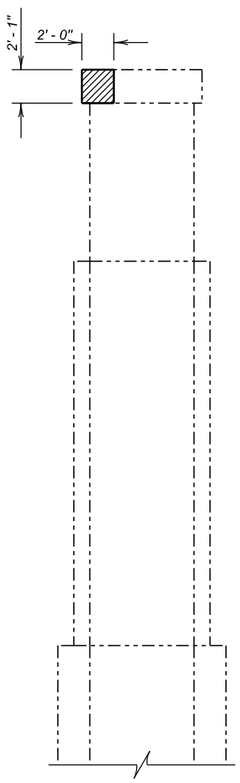

VIEW B - B

LEGEND:

Shaded areas indicate limits of Concrete Patching.

ESTIMATED QUANTITIES		
ITEM	UNIT	QUANTITY
Breakout Structural Concrete	Cu. Yd.	1.3
Galvanic Anode	Each	27
Concrete Patching Material, Miscellaneous	Cu. Ft.	34.3

SUBSTRUCTURE REPAIR DETAILS (PIER NO. 12)

FOR

4618' - 2" OVER OAHE RESERVIOR

26' - 0" ROADWAY — 0° SKEW
ON US HWY. NO. 212 — SEC. 30-T118N-R78W
STR. NO. 54-056-158 — NH 0212(149)208

POTTER COUNTY

S. D. DEPT. OF TRANSPORTATION

MARCH 2016

DESIGNED BY	CK. DES. BY	DRAFTED BY	
BWS	MM	KR	Kevin N. Goeden
POTT02A8	02A8RA08		BRIDGE ENGINEER

STATE OF	PROJECT	SHEET NO.	TOTAL SHEETS
S.D.	NH 0212(149)208	E74	E92

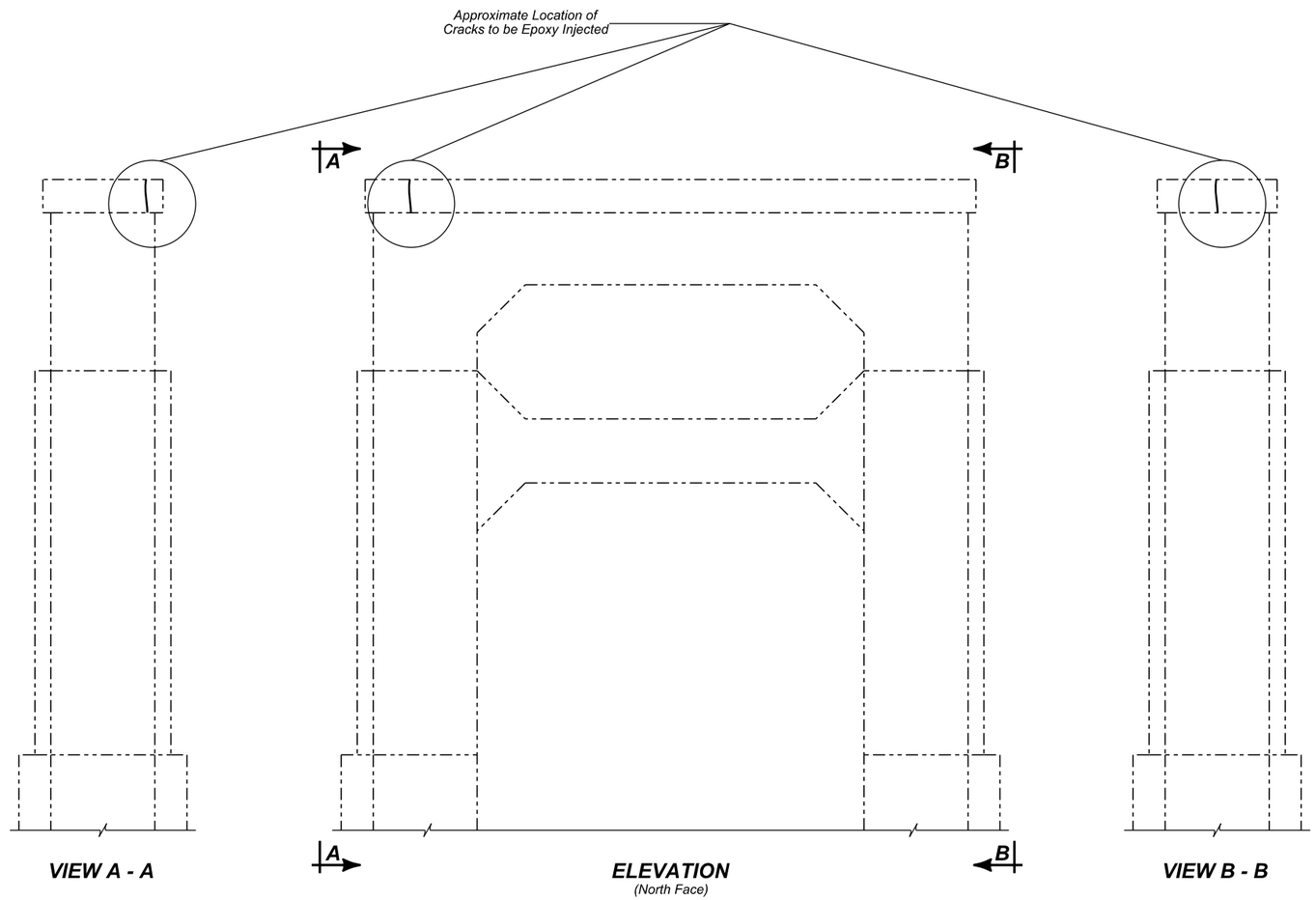

SUBSTRUCTURE REPAIR DETAILS (PIER NO. 13)

FOR

4618' - 2" OVER OAHE RESERVIOR

26' - 0" ROADWAY — 0° SKEW
ON US HWY. NO. 212 — SEC. 30-T118N-R78W
STR. NO. 54-056-158 — NH 0212(149)208

POTTER COUNTY

S. D. DEPT. OF TRANSPORTATION

MARCH 2016

DESIGNED BY	CK. DES. BY	DRAFTED BY	
BWS	MM	KR	Kevin N. Goeden
POTT02A8	02A8RA09		BRIDGE ENGINEER

STATE OF	PROJECT	SHEET NO.	TOTAL SHEETS
S.D.	NH 0212(149)208	E75	E92

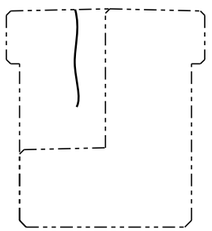

SECTION B - B

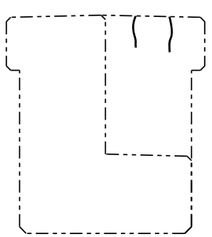

SECTION C - C

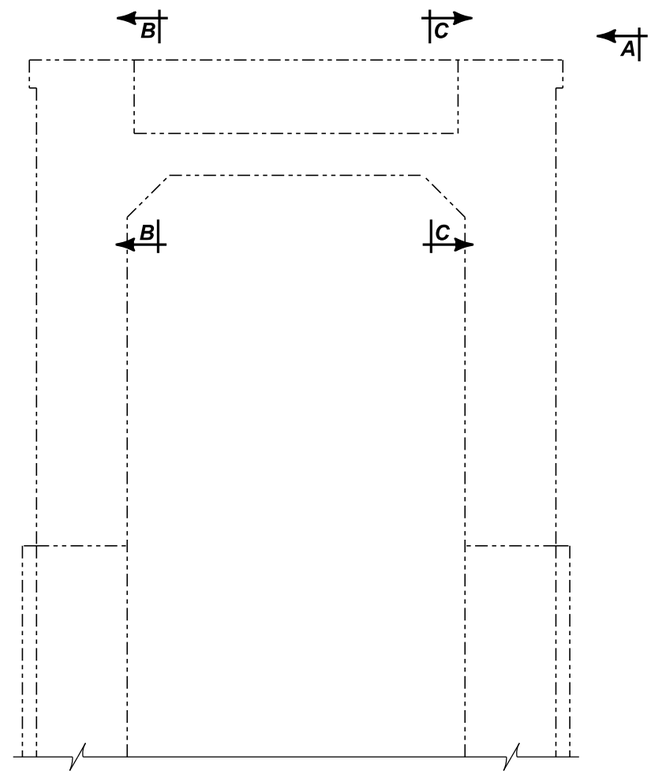

ELEVATION
(North Face)

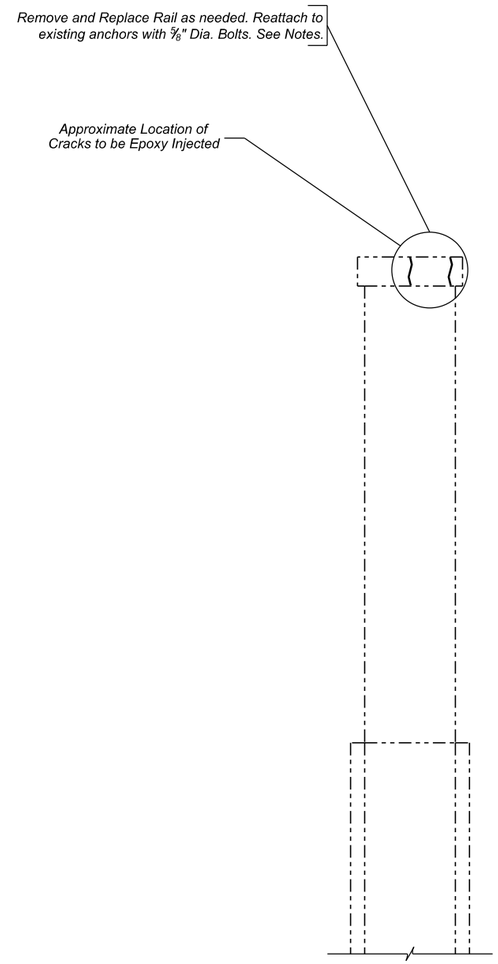

VIEW A - A

ESTIMATED QUANTITIES

ITEM	UNIT	QUANTITY
Concrete Crack Injection/Sealing	In.	168

SUBSTRUCTURE REPAIR DETAILS (PIER NO. 14)

FOR

4618' - 2" OVER OAHE RESERVIOR

26' - 0" ROADWAY — 0° SKEW
ON US HWY. NO. 212 — SEC. 30-T118N-R78W
STR. NO. 54-056-158 — NH 0212(149)208

POTTER COUNTY

S. D. DEPT. OF TRANSPORTATION

MARCH 2016

DESIGNED BY	CK. DES. BY	DRAFTED BY	
BWS	MM	KR	Kevin N. Goeden
POTT02A8	02A8RA10		BRIDGE ENGINEER

STATE OF	PROJECT	SHEET NO.	TOTAL SHEETS
S.D.	NH 0212(149)208	E76	E92

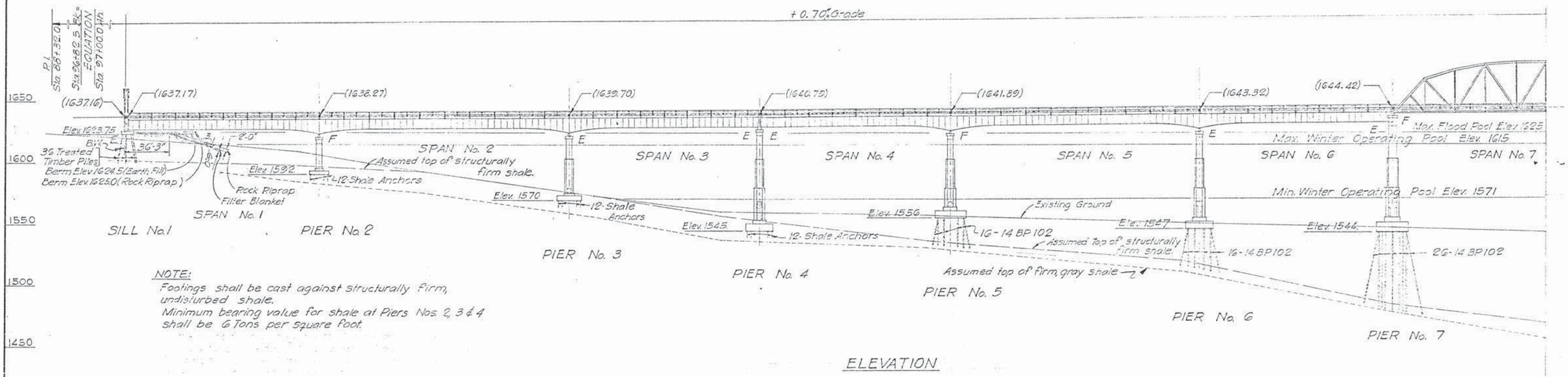

NOTE:
Footings shall be cast against structurally firm, undisturbed shale.
Minimum bearing value for shale at Piers Nos. 2, 3 & 4 shall be 6 Tons per square foot.

ELEVATION

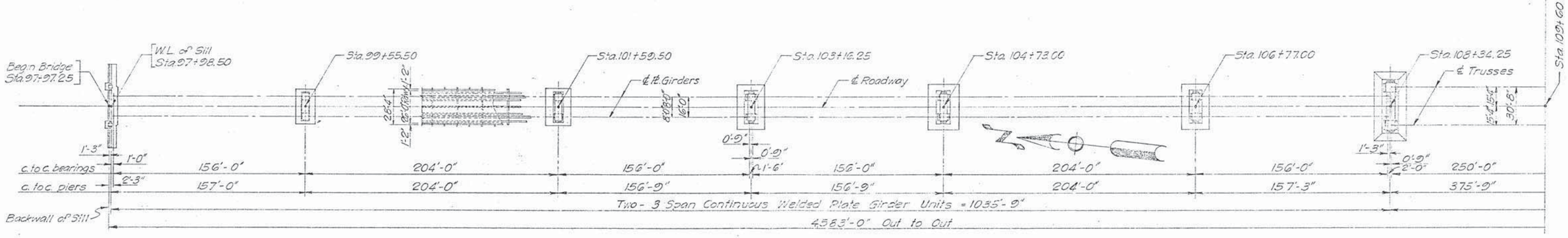

PLAN

LEGEND

(1637.17) - Elev. Top of Slab at Curb
E - Expansion Bearing
F - Fixed Bearing
W. L. - Working Line
B. W. - Back Wall

B.M. #12 - Elev. 1622.08
Iron Pin and Gds.
125' Rt. Sta. 96+00

B.M. #12A - Elev. 1592.43
Iron Pin and Gds.
125' Rt. Sta. 100+17

B.M. #13 - Elev. 1555.84
Iron Pin and Gds.
125' Lt. Sta. 104+17

ORIGINAL CONSTRUCTION PLANS

GENERAL DRAWING
FOR
4583'-0" BRIDGE OVER OAHE RESERVOIR
26'-0" ROADWAY
STA. 97 + 97.25 TO 143 + 80.25 WAR 161-2
ON US HWY. NO. 212 DEWEY-POTTER COUNTIES
STR. NO. 54-056-158 SOUTH DAKOTA H20-44
DEPARTMENT OF HIGH
MAY 1956

DESIGNED BY	DRAWN BY	CHECKED BY	APPROVED
			BRIDGE ENGINEER

STATE OF	PROJECT	SHEET NO.	TOTAL SHEETS
S.D.	NH 0212(149)208	E77	E92

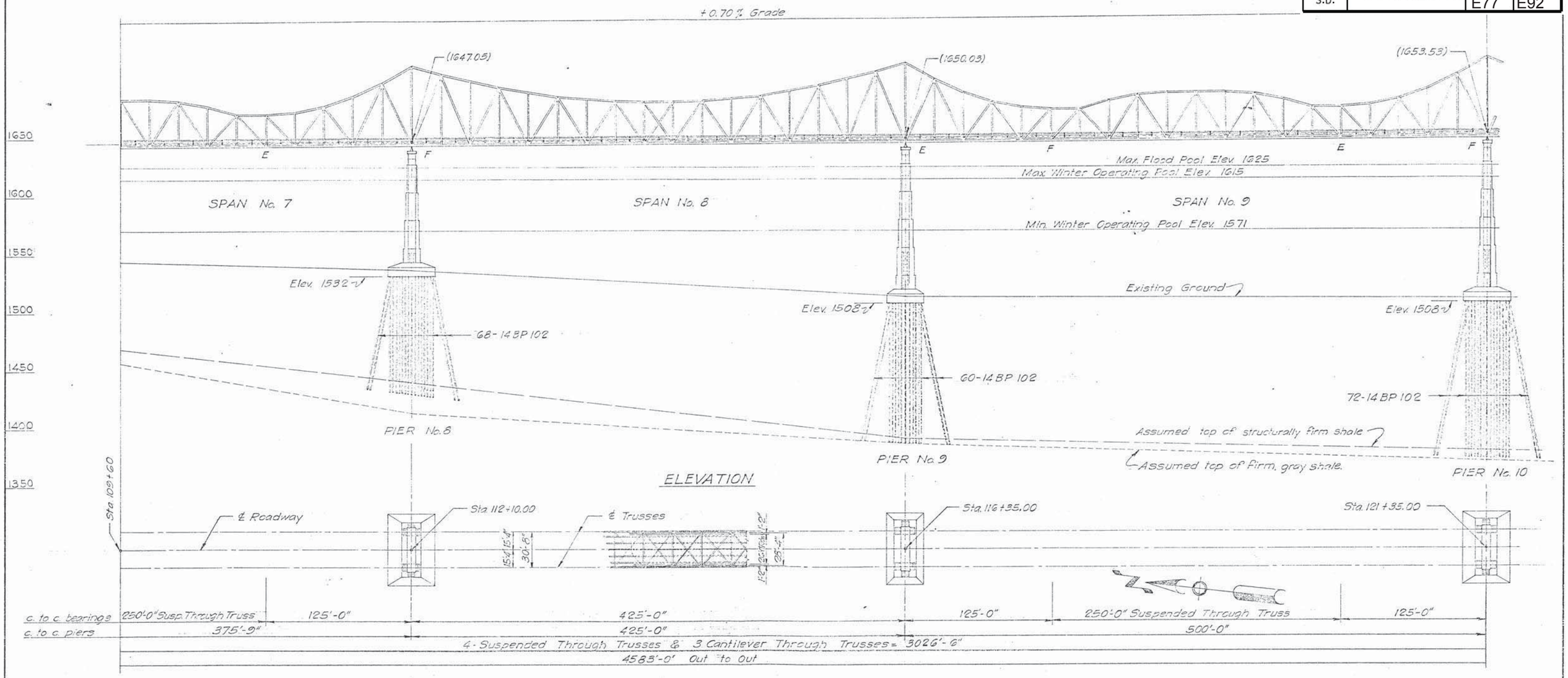

LEGEND

(1647.05) - Elev. Top of Slab at Curb
E - Expansion Bearing
F - Fixed Bearing

B.M.# 14 - Elev. 1537.69
Iron Pin and Gds.
100' Rt. Sta. 113+17

B.M.# 15 - Elev. 1513.80
Iron Pin and Gds.
100' Lt. Sta. 121+67

ORIGINAL CONSTRUCTION PLANS

GENERAL DRAWING
FOR
4583'-0" BRIDGE OVER OAHE RESERVOIR
26'-0" ROADWAY
STA. 97 + 97.25 TO 143 + 80.25 WAR 181-2
ON US HWY. NO. 212 DEWEY-POTTER COUNTIES
STR. NO. 54-056-158 SOUTH DAKOTA H20-44
DEPARTMENT OF HIGHWAYS
MAY 1956

12 OF 27

DESIGNED BY	DRAWN BY	CHECKED BY	APPROVED
	A.S.F.	E.K.	R.R. Scurr BRIDGE ENGINEER

STATE OF	PROJECT	SHEET NO.	TOTAL SHEETS
S.D.	NH 0212(149)208	E78	E92

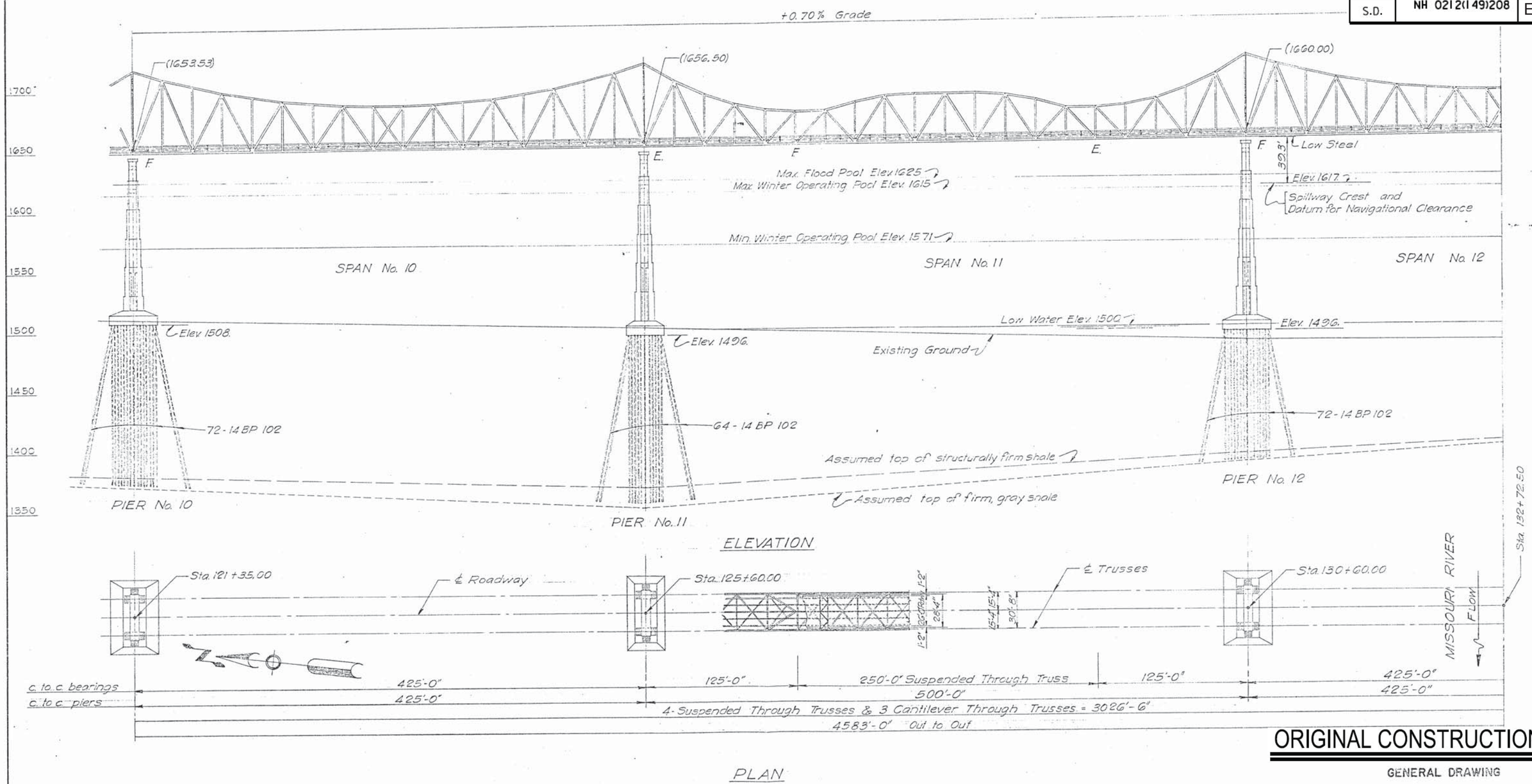

LEGEND

(1653.53) - Elev. Top of Slab at Curb
E. - Expansion Bearing.
F. - Fixed Bearing.

B.M. # 15A - Elev. 1501.76
Iron Pin and Gds.
150' Lt. Sta. 125+17

ORIGINAL CONSTRUCTION PLANS

GENERAL DRAWING
FOR
4583'-0" BRIDGE OVER OAHE RESERVOIR
26'-0" ROADWAY
STA. 97 + 97.25 TO 143 + 80.25 WAR 181-2
ON US HWY. NO. 212 DEWEY-POTTER COUNTIES
STR. NO. 54-056-158 SOUTH DAKOTA H20-44
DEPARTMENT OF HIGHWAYS
MAY 1956

13 OF 27

DESIGNED BY	DRAWN BY	CHECKED BY	APPROVED
	AC	E.K.	R.K. Lowe BRIDGE ENGINEER

STATE OF	PROJECT	SHEET NO.	TOTAL SHEETS
S.D.	NH 0212(149)208	E79	E92

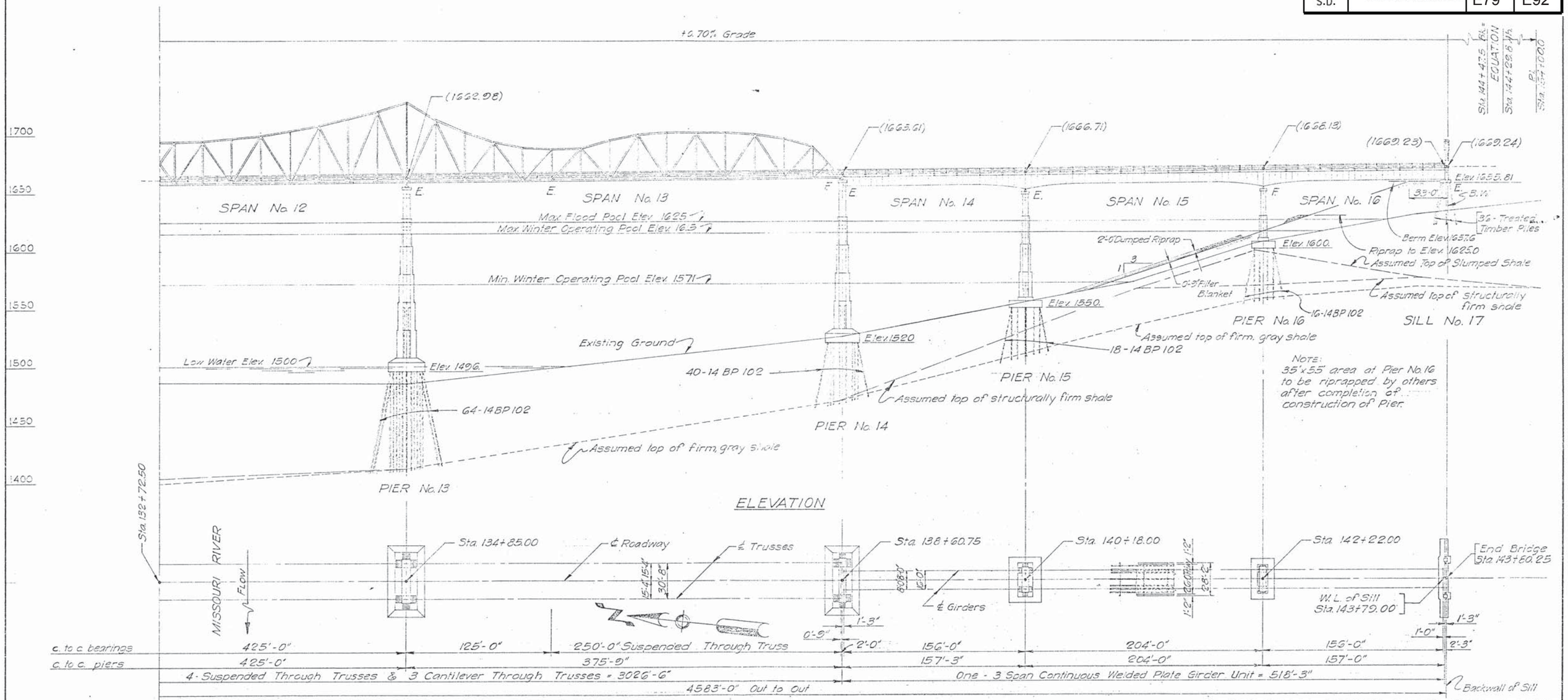

ELEVATION

PLAN

LEGEND
(1662.98) - Elev. Top of Slab at Curb
E. - Expansion Bearing
F. - Fixed Bearing.
W.L. - Working Line.
B.W. - Back Wall

B.M.# 16 - Elev. 1524.17
Iron Pin and Gds.
100' Lt. Sta. 138+17

B.M.# 16A - Elev. 1596.95
Iron Pin and Gds.
100' Lt. Sta. 142+17

B.M.# 17 - Elev. 1638.05
Iron Pin and Gds.
110' Lt. Sta. 144+30

ORIGINAL CONSTRUCTION PLANS

GENERAL DRAWING
FOR
4583'-0" BRIDGE OVER OAHE RESERVOIR
26'-0" ROADWAY

STA. 97 + 97.25 TO 143 + 80.25 WAR 181-2
ON US HWY. NO. 212 DEWEY-POTTER COUNTIES
STR. NO. 54-056-158 SOUTH DAKOTA H20-44
DEPARTMENT OF HIGHWAYS
MAY 1956

DESIGNED BY	DRAWN BY	CHECKED BY	APPROVED
	ASP	E.K.	BRIDGE ENGINEER

STATE OF	PROJECT	SHEET NO.	TOTAL SHEETS
S.D.	NH 0212(149)208	E80	E92

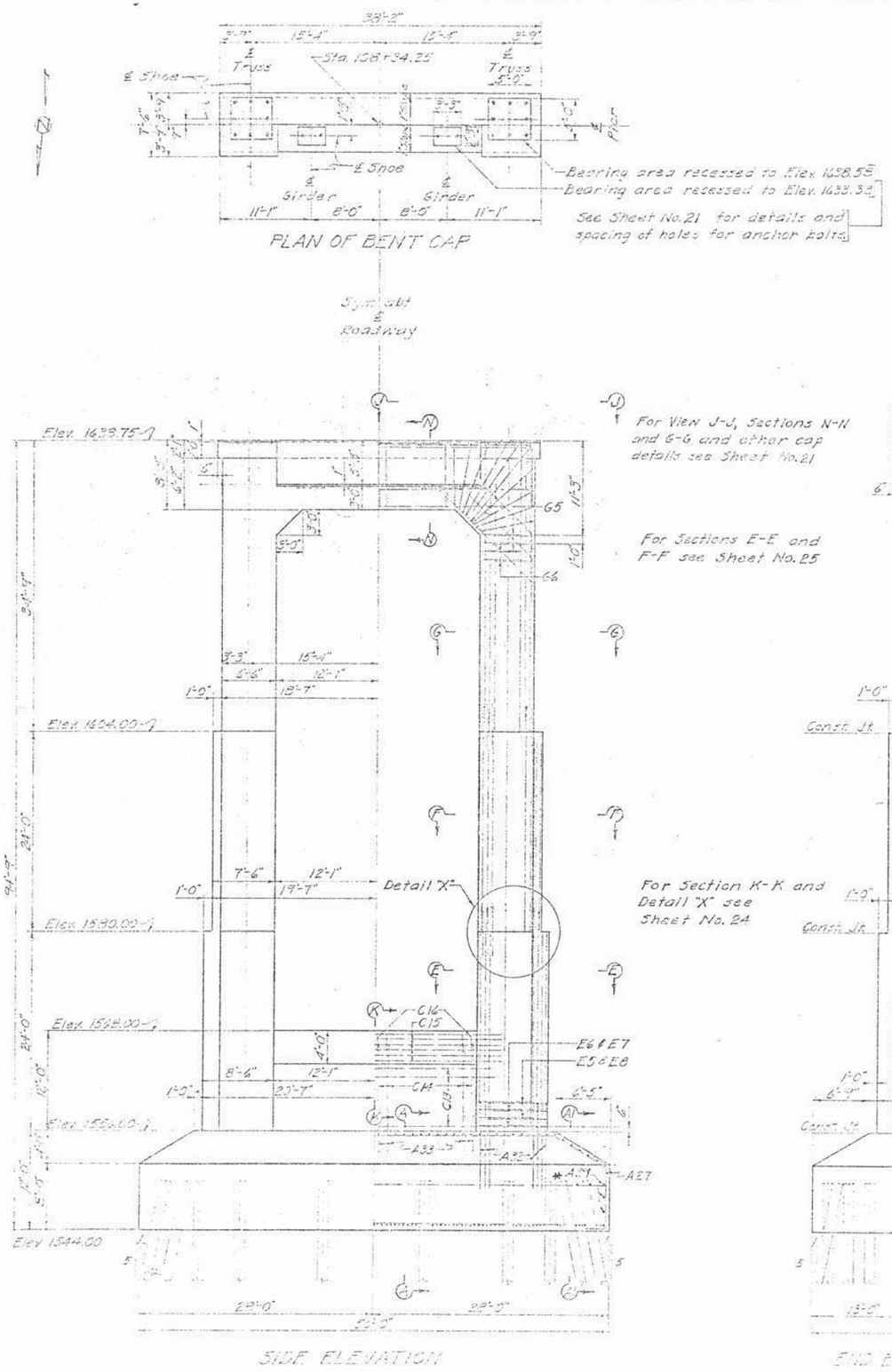

NOTE

Figures shown in plan view indicates pile number, total feet in place and number of splices.

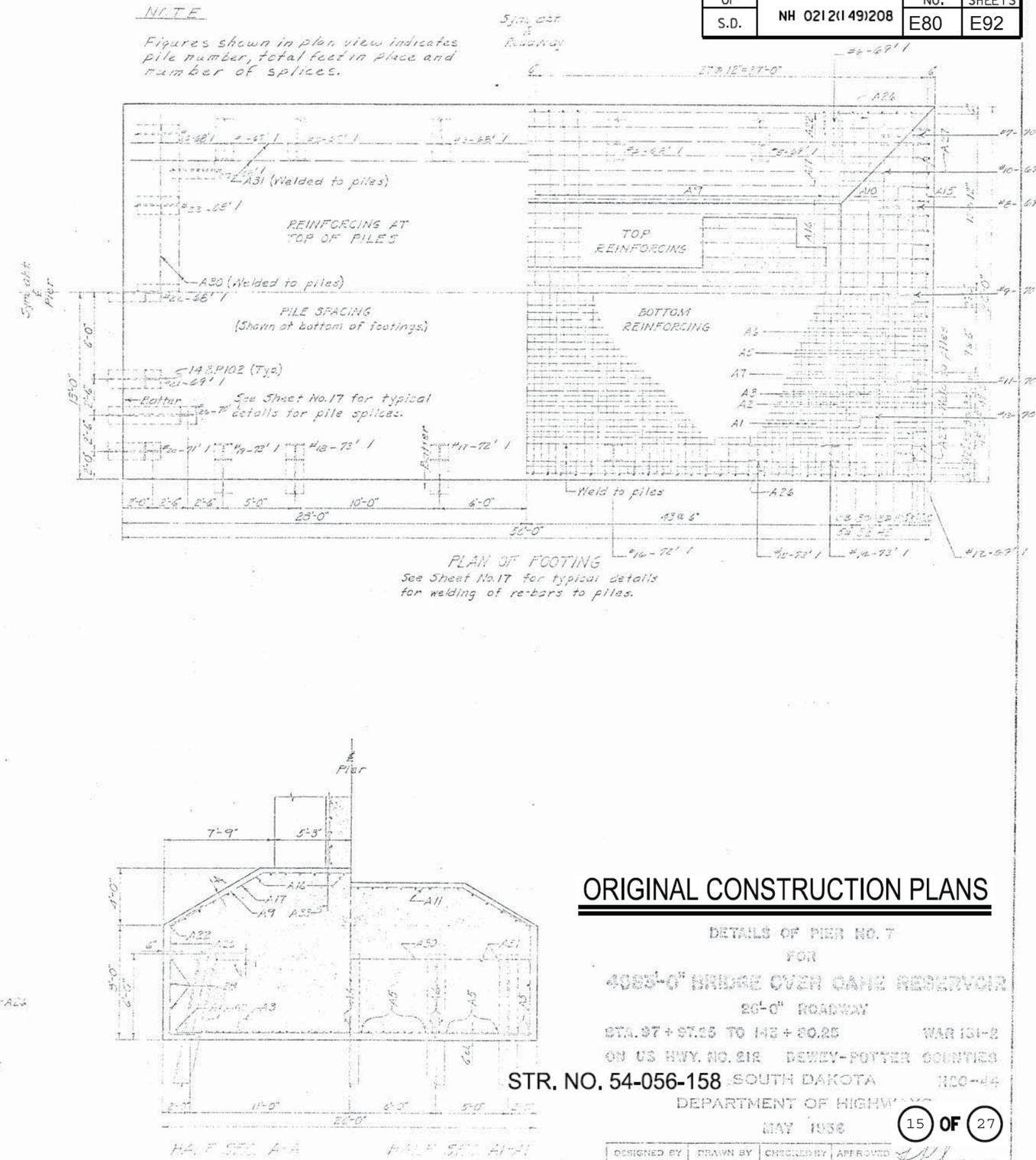

*Rev. 5-1-57

ORIGINAL CONSTRUCTION PLANS

DETAILS OF PIER NO. 7
FOR
4085'-0" BRIDGE OVER OAHE RESERVOIR
26'-0" ROADWAY
STA. 97 + 57.25 TO 145 + 80.25 WAR 151-2
ON US HWY. NO. 212 DEWEY-POTTER COUNTIES
SOUTH DAKOTA 1150-44
DEPARTMENT OF HIGHWAYS
MAY 1956

STR. NO. 54-056-158

DESIGNED BY	DRAWN BY	CHECKED BY	APPROVED

STATE OF	PROJECT	SHEET NO.	TOTAL SHEETS
S.D.	NH 0212(149)208	E81	E92

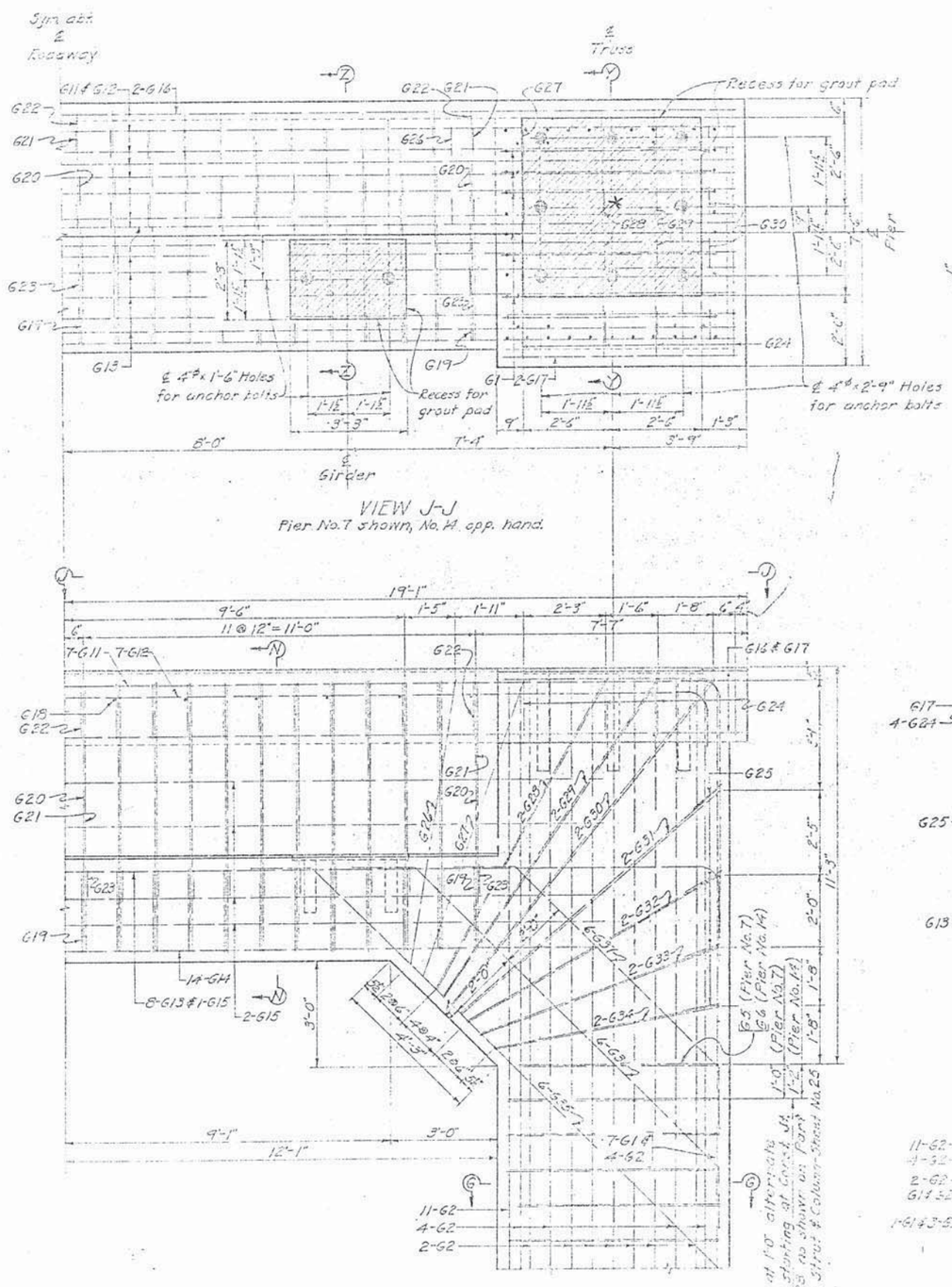

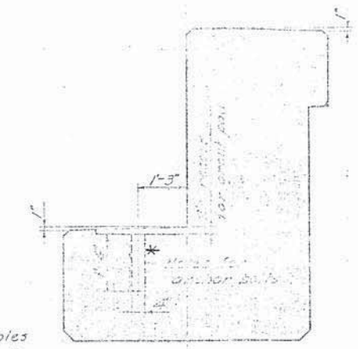

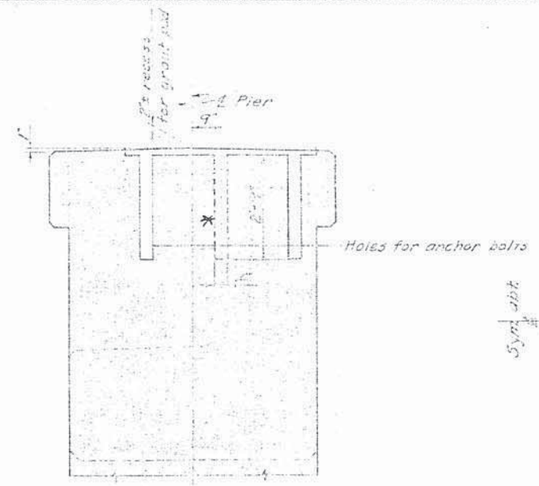

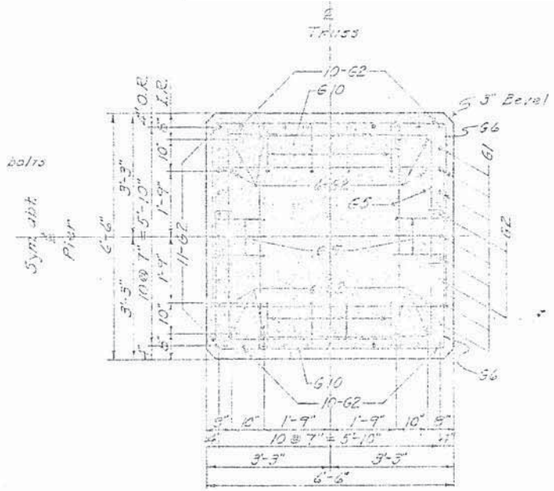

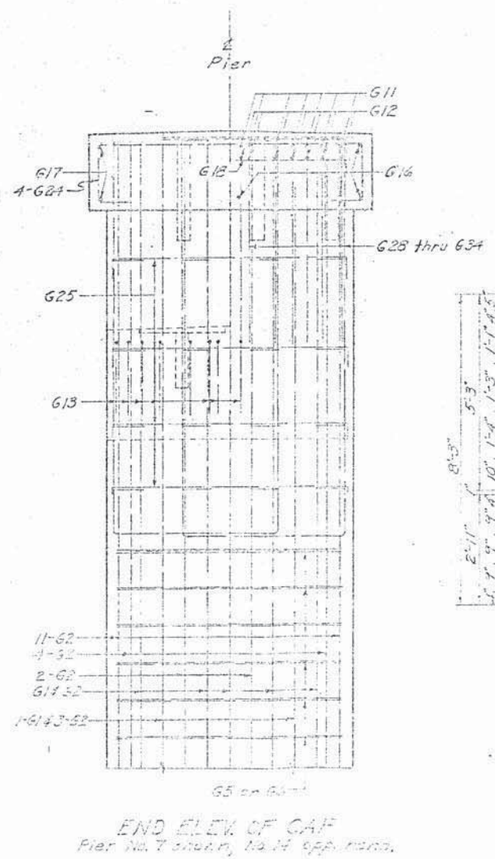

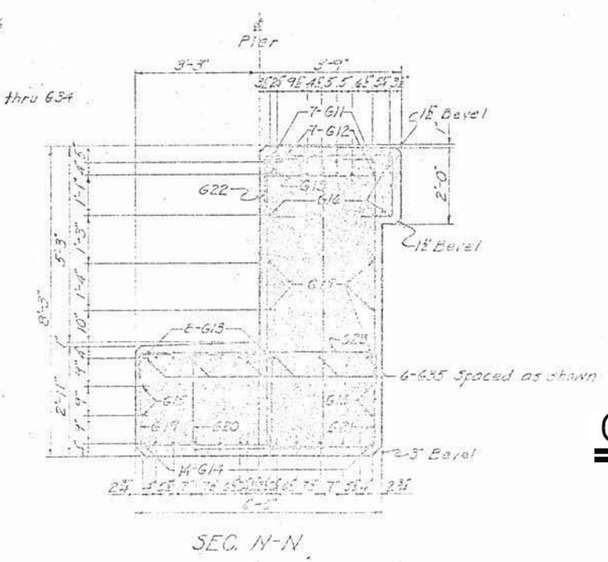

ORIGINAL CONSTRUCTION PLANS

DETAILS OF PIER NO. 7
FOR
4583'-0" BRIDGE OVER OAHE RESERVOIR
28'-0" ROADWAY
STA. 97 + 97.25 TO 143 + 80.25 WAR 101-2
ON US HWY. NO. 212 DEWEY-POTTER COUNTIES
STR. NO. 54-056-158 SOUTH DAKOTA H20-61
DEPARTMENT OF HIGHWAYS
MAY 1958

DESIGNED BY	DRAWN BY	CHECKED BY	APPROVED
			BRIDGE ENGINEER

* Rev. 5-1-57

STATE OF	PROJECT	SHEET NO.	TOTAL SHEETS
S.D.	NH 0212(149)208	E82	E92

Mark	No.	Size	Length	Type	A	B	C	D	E	H	K	O
A1	89	9	25'-0"	St.								
A2	13	1	22'-3"	1	1'-1"	20'-1"						
A3	4		17'-3"	1	1'-1"	15'-1"						
A5	42		55'-0"	St.								
A6	5	1	52'-3"	1	1'-1"	50'-1"						
A7	4	9	47'-3"	1	1'-1"	45'-1"						
A9	44	7	28'-0"	22		7'-9"	12'-6"	7'-9"		3'-11"	6'-8"	25'-10"
A10	2	1	27'-3"	1		6'-3"	14'-5"	6'-3"		3'-3"	5'-6"	25'-5"
A11	1		27'-0"			5'-3"	16'-6"	5'-3"		2'-8"	4'-6"	25'-6"
A12			26'-9"			4'-0"	18'-9"	4'-0"		2'-0"	3'-5"	25'-7"
A13			26'-3"			2'-9"	20'-9"	2'-9"		1'-3"	2'-5"	25'-7"
A14	1		26'-0"	22		1'-7"	22'-10"	1'-7"		0'-10"	1'-4"	25'-6"
A15	2		25'-6"	St.								
A16	14		57'-9"	22		7'-5"	42'-11"	7'-5"		3'-11"	6'-3"	55'-5"
A17	2		57'-3"	1		5'-10½"	45'-6"	5'-10½"		3'-1"	5'-0"	55'-6"
A18	1		57'-0"			4'-9"	47'-6"	4'-9"		2'-6"	4'-0"	55'-6"
A19			56'-6"			3'-7"	49'-5"	3'-7"		1'-11"	3'-0"	55'-5"
A20			56'-3"			2'-6"	51'-5"	2'-6"		1'-4"	2'-1"	55'-5"
A21	1	1	56'-0"	22		1'-5"	53'-2"	1'-5"		0'-9"	1'-2"	55'-6"
A22	2	7	55'-6"	St.								
A26	108	5	9'-3"	23		1'-0"	7'-2"	1'-3"		1'-1	0'-7½"	7'-9½"
A27	48	1	9'-3"	23		1'-0"	7'-2"	1'-3"		1'-0½"	0'-6"	7'-10"
A28	6	1	55'-6"	St.								
A29	6	5	25'-6"	1								
A30	4	8	25'-0"									
A31	4	8	55'-0"									
A32	200	10	7'-0"	1								
A33	48	8	6'-0"	St.								
C13	13	6	28'-0"	St.								
C14	48	8	10'-6"	St.								
C15	18	11	30'-0"	St.								
C16	48	6	14'-6"	T1	0'-6"	5'-6"	2'-3"	5'-6"	2'-3"			
E1	66	10	27'-0"	St.								
E2	134	1	23'-9"	St.								
E3	98	1	6'-6"	24		3'-6"	2'-0"	1'-0"		1'-0"	1'-9"	6'-3"
E4	4	10	6'-0"	St.								
E5	24	5	33'-0"	T1	0'-5"	10'-0½"	6'-0½"	10'-0½"	6'-0½"			
E6	26	5	29'-0"	1	0'-5"	8'-0½"	6'-0½"	8'-0½"	6'-0½"			
E7	52	5	28'-6"	1	0'-5"	9'-4½"	4'-6½"	9'-4½"	4'-6½"			
E8	24	4	13'-9"	T1	0'-4½"	5'-4½"	0'-10½"	5'-4½"	0'-10½"			
E9	208	1	2'-3"	T5	0'-6"	1'-3"	0'-6"					
E10	208	1	3'-3"	1	0'-6"	2'-3"	0'-6"					
E11	104	1	3'-6"	1	0'-6"	2'-6"	0'-6"					
E12	52	4	2'-3"	T5	0'-6"	1'-3"	0'-6"					
F1	26	10	27'-0"	St.								
F2	134	10	23'-9"	St.								
F3	98	10	6'-6"	24		3'-6"	2'-0"	1'-0"		1'-0"	1'-9"	6'-3"
F5	28	5	29'-0"	T1	0'-5"	8'-0½"	6'-0½"	8'-0½"	6'-0½"			
F6	28	5	27'-0"	1	0'-5"	7'-0½"	6'-0½"	7'-0½"	6'-0½"			
F7	56	5	24'-6"	1	0'-5"	7'-4½"	4'-6½"	7'-4½"	4'-6½"			
F8	28	4	13'-9"	T1	0'-4½"	5'-4½"	0'-10½"	5'-4½"	0'-10½"			
F9	104	1	2'-3"	T5	0'-6"	1'-3"	0'-6"					
F10	208	1	2'-3"	T5	0'-6"	1'-3"	0'-6"					
F11	104	4	2'-6"	T5	0'-6"	1'-6"	0'-6"					

Mark	No.	Size	Length	Type	A	B	C	D	E	H	K	O
G1	14	10	40'-3"	20		6'-1"	34'-5"					
G2	90	10	34'-3"	St.								
G5	56	5	20'-6"	T1	0'-5"	5'-4½"	4'-6½"	5'-4½"	4'-6½"			
G6	52	5	22'-6"	T1	0'-5"	6'-0½"	4'-10½"	6'-0½"	4'-10½"			
G9	104	4	2'-3"	T5	0'-6"	1'-3"	0'-6"					
G10	192	4	2'-3"	T5	0'-6"	1'-3"	0'-6"					
G11	7	10	48'-0"	17		6'-0"	36'-6"	6'-0"				
G12	7	1	40'-3"	17		2'-4"	35'-10"	2'-4"				
G13	8	1	40'-0"	17		2'-0"	36'-6"	2'-0"				
G14	14	10	30'-0"	St.								
G15	9	8	28'-0"	1								
G16	3	6	37'-6"	1								
G17	4	6	6'-6"	1								
G18	14	5	3'-0"	St.								
G19	24	1	9'-0"	56	0'-6"	2'-5"	3'-6"	2'-5"				
G20	1		14'-3"	1	0'-6"	2'-6"	5'-6"	7'-9"				
G21			19'-0"	1	0'-5"	7'-9"	3'-0"	7'-9"				
G22	1		7'-0"	56	0'-9"	1'-7"	3'-3"	1'-7"				
G23	24		7'-9"	17		6'-10"	6'-3"	0'-10"				
G24	* 8		11'-3"	56	0'-6"	1'-7"	7'-1"	1'-7"				
G25	8		8'-3"	17		1'-0"	6'-3"	1'-0"				
G26	2		20'-6"	56	0'-9"	8'-2"	3'-0"	8'-2"				
G27	2		22'-0"	1	0'-10"	8'-10"	3'-0"	8'-10"				
G28	4		25'-6"		0'-8"	10'-0"	4'-6"	10'-0"				
G29	1		27'-0"		0'-8"	10'-9"	4'-6"	10'-9"				
G30			29'-0"		0'-8"	11'-9"	4'-6"	11'-9"				
G31			25'-0"		0'-8"	9'-9"	4'-6"	9'-9"				
G32			22'-0"		0'-8"	8'-3"	4'-6"	8'-3"				
G33	1	1	20'-0"	1	0'-9"	7'-2"	4'-6"	7'-2"				
G34	4	5	18'-6"	56	0'-9"	6'-5"	4'-6"	6'-5"				
G35	12	11	19'-6"	22		1'-9"	16'-0"	1'-9"		1'-3"	1'-3"	18'-6"
G36	12	6	15'-6"	22		1'-9"	12'-0"	1'-9"		1'-3"	1'-3"	14'-3"
G37	12	6	11'-6"	22		1'-9"	8'-0"	1'-9"		1'-3"	1'-3"	10'-6"

BAR BENDS

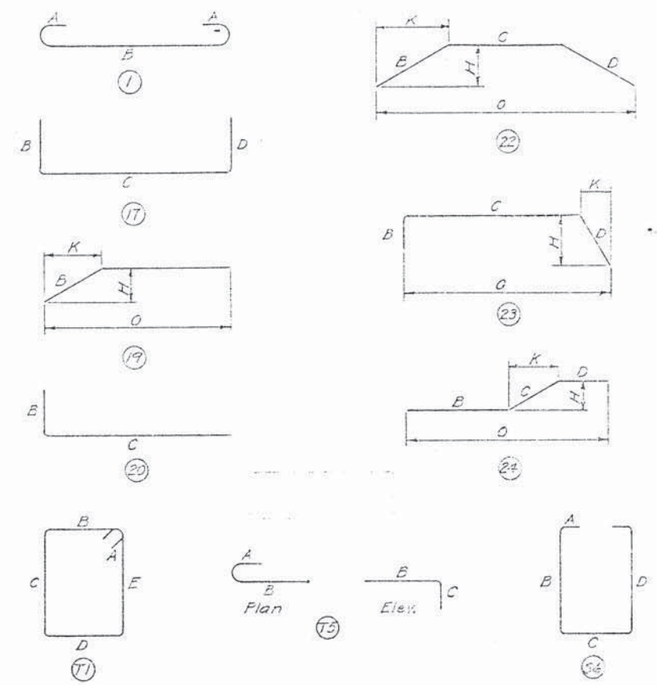

All dimensions are out to out of bar.
Figures in circles show types.

ESTIMATED QUANTITIES

ITEM	UNIT	QUANTITIES
Class "A" Concrete	C.Y.	1062.9
Reinforcing Steel	Lb.	154,930
Driving Steel Test Pile	Lin. Ft.	1,690
Driving Pile Test Pile	Each	2
14" P.P. Piles	Each	* None
Structure Excavation	C.Y.	139

* See Sheet No. 8

ORIGINAL CONSTRUCTION PLANS

DETAILS OF PIER NO. 7
FOR
4083'-0" BRIDGE OVER OAHE RESERVOIR
26'-0" ROADWAY

STA. 97 + 97.25 TO 143 + 80.25 WAR 191-2
ON US HWY. NO. 212 DEWEY-POTTER COUNTIES
STR. NO. 54-056-158 SOUTH DAKOTA H20-44
DEPARTMENT OF HIGHWAYS
MAY 1956

* Rev. 5-1-57

DESIGNED BY	DRAWN BY	CHECKED BY	APPROVED
[illegible]	[illegible]	[illegible]	[illegible] ENGINEER

STATE OF	PROJECT	SHEET NO.	TOTAL SHEETS
S.D.	NH 0212(149)208	E83	E92

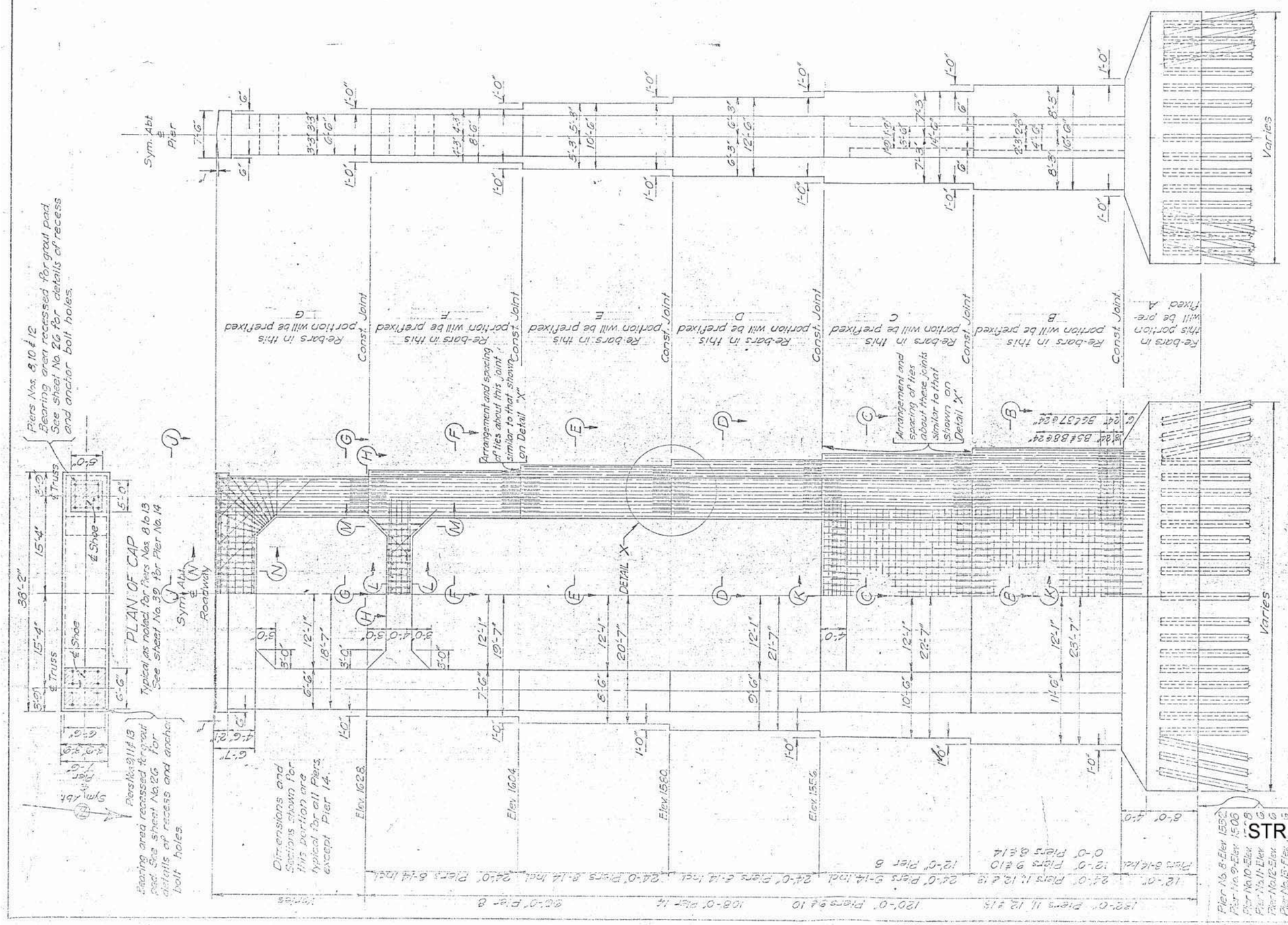

ORIGINAL CONSTRUCTION PLANS

STANDARD DETAILS OF PIERS NOS. 8-14

FOR

4583'-0" BRIDGE OVER OAHE RESERVOIR

26'-0" ROADWAY

STA. 97 + 97.25 TO 143 + 80.25 WAR 101-2

ON US HWY. NO. 212 DEWEY-POTTER COUNTIES

STR. NO. 54-056-158 SOUTH DAKOTA H20-44

DEPARTMENT OF HIGHWAYS

MAY 1963

18 OF 27

DESIGNED BY	DRAWN BY	CHECKED BY	APPROVED
E.K.	A.S.P.	E.K.	BRIDGE ENGINEER

STATE OF	PROJECT	SHEET NO.	TOTAL SHEETS
S.D.	NH 0212(149)208	E84	E92

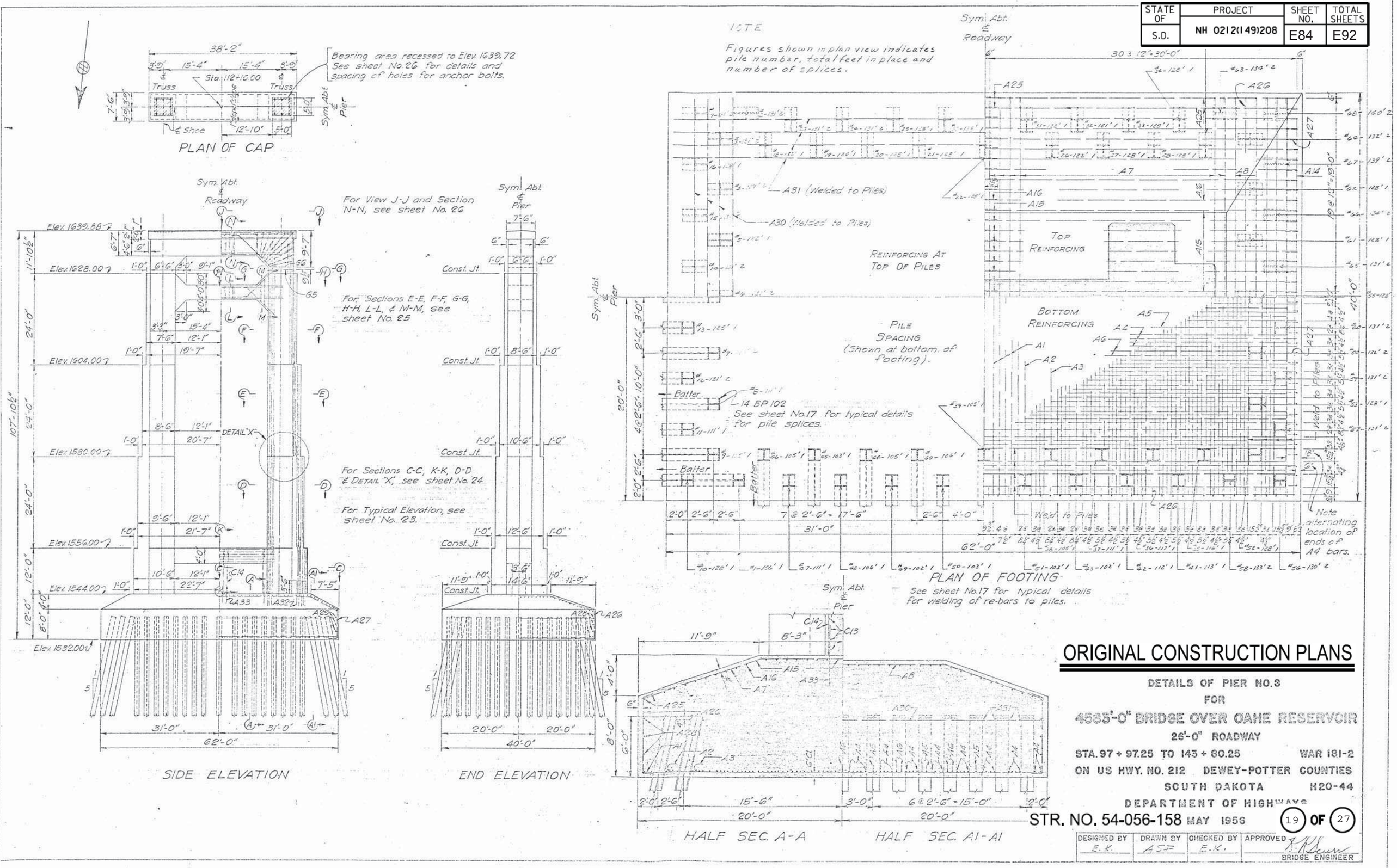

ORIGINAL CONSTRUCTION PLANS

DETAILS OF PIER NO. 8

FOR

4583'-0" BRIDGE OVER OAHE RESERVOIR

26'-0" ROADWAY

STA. 97 + 97.25 TO 143 + 60.25 WAR 181-2

ON US HWY. NO. 212 DEWEY-POTTER COUNTIES

SOUTH DAKOTA H20-44

DEPARTMENT OF HIGHWAYS

STR. NO. 54-056-158 MAY 1956

DESIGNED BY	DRAWN BY	CHECKED BY	APPROVED
E.K.	ASF	E.K.	BRIDGE ENGINEER

STATE OF	PROJECT	SHEET NO.	TOTAL SHEETS
S.D.	NH 0212(149)208	E85	E92

MARK	NO.	SIZE	LENGTH	TYPE	A	B	C	D	E	H	K	O
A1	94	11	39'-0"	Str.								
A2	16	1	36'-9"	1	1'-5"	33'-11"						
A3	15		31'-9"	1	1'-5"	28'-11"						
A4	62		60'-0"	Str.								
A5	8	1	56'-9"	1	1'-5"	55'-11"						
A6	9	11	53'-9"	1	1'-5"	50'-11"						
A7	46	9	41'-0"	22		12'-3"	16'-6"	12'-3"		4'-0"	11'-7"	39'-8"
A8	2	1	40'-9"	1		10'-8"	19'-5"	10'-8"		3'-6"	10'-1"	39'-7"
A9	2		40'-6"			8'-11½"	22'-7"	8'-11½"		3'-0"	8'-5"	39'-5"
A10	2		40'-3"			7'-3"	25'-9"	7'-3"		2'-5"	6'-10"	39'-5"
A11	2		40'-3"			5'-8"	28'-11"	5'-8"		1'-11"	5'-4"	39'-7"
A12	2		40'-0"	1		3'-11½"	32'-1"	3'-11½"		1'-4"	3'-8½"	39'-6"
A13	2		40'-0"	22		2'-3"	35'-2"	2'-5"		0'-10"	2'-3½"	39'-8"
A14	2		39'-6"	Str.								
A15	36		33'-0"	19		8'-2"	24'-10"			4'-0"	7'-2"	32'-0"
A16	4		33'-0"	1		7'-3"	25'-9"			3'-7"	6'-4"	32'-1"
A17	4		32'-9"	1		6'-7"	26'-2"			3'-3"	5'-9"	31'-11"
A18	4		32'-9"	1		5'-10"	26'-11"			2'-11"	5'-1"	32'-0"
A19	4		32'-9"	1		5'-2"	27'-7"			2'-7"	4'-6"	32'-1"
A20	4		32'-6"	1		4'-5"	28'-1"			2'-3"	3'-10"	31'-11"
A21	4		32'-6"	1		3'-8"	28'-10"			1'-11"	3'-2"	32'-0"
A22	4		32'-6"	1		2'-0"	29'-8"			1'-6"	2'-5"	32'-1"
A23	4		32'-3"	1		2'-3"	30'-0"			1'-2"	1'-11"	31'-11"
A24	4	1	32'-3"	19		1'-6"	30'-9"			0'-9"	1'-3"	32'-0"
A25	8	9	32'-0"	Str.								
A26	120	6	9'-3"	23		1'-0"	7'-2"	1'-3"		1'-2½"	0'-4"	7'-6"
A27	76	6	9'-3"	23		1'-0"	7'-2"	1'-3"		1'-2"	0'-6"	7'-8"
A28	12	5	31'-6"	Str.								
A29	6	5	39'-0"	1								
A30	8	8	38'-0"	1								
A31	8	8	60'-0"	1								
A32	260	11	7'-0"	1								
A33	48	8	5'-0"	Str.								
			-									
C1	146	11	15'-0"	Str.								
C2	134	11	11'-9"	Str.								
C3	98	11	6'-6"	24		3'-6"	2'-0"	1'-0"		1'-0"	1'-9"	6'-3"
C4	4	11	6'-0"	Str.								
C5	12	6	41'-3"	T1	0'-6"	6'-1"	14'-1"	6'-1"	14'-1"			
C6	14	6	35'-3"	1	0'-6"	6'-1"	10'-1"	6'-1"	10'-1"			
C7	26	5	36'-9"	1	0'-5"	4'-7"	13'-5"	4'-7"	13'-5"			
C8	12	4	13'-3"	T1	0'-4½"	0'-11"	5'-5"	0'-11"	5'-5"			
C9	222	1	2'-5"	T5	0'-6"	1'-3"	0'-6"					
C10	112	1	5'-3"	1	0'-6"	4'-3"	0'-6"					
C11	56	1	5'-6"	1	0'-6"	4'-6"	0'-6"					
C12	84	4	2'-3"	T5	0'-6"	1'-3"	0'-6"					
C13	16	6	28'-0"	Str.								
C14	48	8	10'-6"	Str.								
C15	18	11	30'-0"	Str.								
C16	48	6	16'-6"	T1	0'-6"	2'-3"	5'-6"	2'-3"	5'-6"			
			-									
D1	106	11	27'-0"	Str.								
D2	134	11	23'-9"	Str.								
D3	98	11	6'-6"	24		3'-6"	2'-0"	1'-0"		1'-0"	1'-9"	6'-3"
D4	4	11	6'-0"	Str.								
D5	28	6	37'-3"	T1	0'-6"	6'-1"	12'-1"	6'-1"	12'-1"			
D6	28	6	31'-3"	1	0'-6"	6'-1"	9'-1"	6'-1"	9'-1"			
D7	56	5	32'-9"	1	0'-5"	4'-7"	11'-5"	4'-7"	11'-5"			
D8	98	4	13'-3"	T1	0'-4½"	0'-11"	5'-5"	0'-11"	5'-5"			
D9	312	1	2'-3"	T5	0'-6"	1'-3"	0'-6"					
D10	208	1	4'-3"	1	0'-6"	3'-3"	0'-6"					
D11	104	1	4'-6"	1	0'-6"	3'-6"	0'-6"					
D12	104	4	2'-3"	T5	0'-6"	1'-3"	0'-6"					

MARK	NO.	SIZE	LENGTH	TYPE	A	B	C	D	E	H	K	O
E1	66	11	27'-0"	Str.								
E2	134	1	23'-9"	Str.								
E3	98	1	6'-6"	24		3'-6"	2'-0"	1'-0"		1'-0"	1'-9"	6'-3"
E4	4	11	6'-0"	Str.								
E5	28	6	33'-3"	T1	0'-6"	6'-1"	10'-1"	6'-1"	10'-1"			
E6	28	6	29'-3"	1	0'-6"	6'-1"	8'-1"	6'-1"	8'-1"			
E7	56	5	28'-9"	1	0'-5"	4'-7"	9'-5"	4'-7"	9'-5"			
E8	28	4	13'-3"	T1	0'-4½"	0'-11"	5'-5"	0'-11"	5'-5"			
E9	208	1	2'-3"	T5	0'-6"	1'-3"	0'-6"					
E10	208	1	3'-3"	1	0'-6"	2'-3"	0'-6"					
E11	104	1	3'-6"	1	0'-6"	2'-6"	0'-6"					
E12	52	4	2'-3"	T5	0'-6"	1'-3"	0'-6"					
F1	26	11	27'-0"	Str.								
F2	134	11	23'-9"	Str.								
F3	98	11	6'-6"	24	3'-6"	2'-0"	1'-0"			1'-0"	1'-9"	6'-3"
F5	28	6	29'-3"	T1	0'-6"	6'-1"	8'-1"	6'-1"	8'-1"			
F6	28	6	27'-3"	1	0'-6"	6'-1"	7'-1"	6'-1"	7'-1"			
F7	56	5	24'-9"	1	0'-5"	4'-7"	7'-5"	4'-7"	7'-5"			
F8	28	4	13'-3"	T1	0'-4½"	0'-11"	5'-5"	0'-11"	5'-5"			
F9	104	1	2'-3"	T5	0'-6"	1'-3"	0'-6"					
F10	208	1	2'-3"	T5	0'-6"	1'-3"	0'-6"					
F11	104	4	2'-6"	T5	0'-6"	1'-6"	0'-6"					
F13	40	10	30'-0"	Str.								
F14	4	8	30'-0"	Str.								
F15	32	8	12'-0"	19		1'-0"	11'-0"			0'-9"	0'-9"	11'-9"
F16	20	5	6'-0"	Str.								
F17	38	6	16'-0"	T1	0'-6"	3'-10"	3'-8"	3'-10"	3'-8"			
F18	4	6	15'-6"	T1	0'-6"	3'-10"	5'-5"	3'-10"	5'-5"			
F19	4	6	23'-6"	T1	0'-6"	3'-10"	7'-5"	3'-10"	7'-5"			
G1	16	11	17'-3"	20		6'-0"	11'-6"					
G2	108	11	11'-3"	Str.								
G5	12	6	21'-0"	T1	0'-6"	4'-7"	5'-5"	4'-7"	5'-5"			
G6	12	6	23'-0"	T1	0'-6"	4'-11"	6'-1"	4'-11"	6'-1"			
G9	16	4	2'-3"	T5	0'-6"	1'-3"	0'-6"					
G10	32	4	2'-3"	T5	0'-6"	1'-3"	0'-6"					
G11	10	10	48'-0"	17		6'-0"	36'-6"	6'-0"				
G12	10	10	40'-0"	17		2'-4"	35'-10"	2'-4"				
G13	20	10	30'-0"	Str.								
G14	4	6	37'-6"	Str.								
G15	4	8	30'-0"	Str.								
G16	24	5	6'-0"	Str.								
G17	38	1	17'-6"	S6	0'-9"	6'-1"	3'-10"	6'-1"				
G18	8		18'-9"	1	0'-9"	6'-7"	4'-6"	6'-7"				
G19	8		20'-0"		0'-9"	7'-3"	4'-6"	7'-3"				
G20	8		22'-0"		0'-9"	8'-3"	4'-0"	8'-3"				
G21	8		24'-6"		0'-9"	9'-6"	4'-0"	9'-6"				
G22	4		27'-0"	1	0'-9"	10'-9"	4'-0"	10'-9"				
G23	29	1	11'-9"	S6	0'-9"	1'-7"	7'-1"	1'-7"				
G24	8	5	8'-0"	17		1'-0"	6'-1"	1'-0"				
G25	12	6	17'-0"	19		1'-9"	15'-3"			1'-3"	1'-3"	16'-6"

BAR BENDS

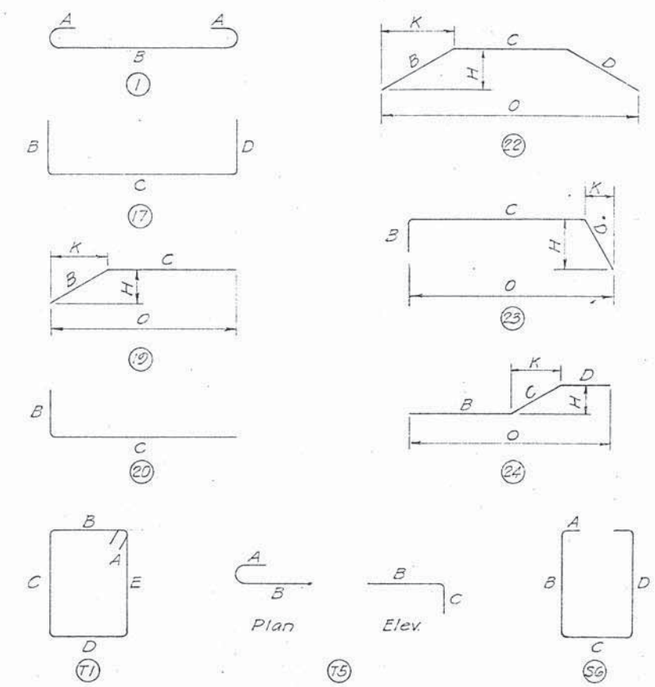

All dimensions are out to out of bar
Figures in circles show types.

ESTIMATED QUANTITIES			
ITEM		UNIT	QUANTITIES
Class "A" Concrete		C.Y.	1659.7
Reinforcing Steel		Lb.	249,600
Driving Piles	Actual Length	Lin. Ft.	6,120
Bearing Piles	Test Pile	Each	*
14 BP 102	Pile Points	Each	136
Structure Excavation		C.Y.	600

* See Sheet No. 8

ORIGINAL CONSTRUCTION PLANS

DETAILS OF PIER NO. 8

FOR

4583'-0" BRIDGE OVER OAHE RESERVOIR

26'-0" ROADWAY

STA. 97 + 97.25 TO 143 + 80.25 WAR 181-2

ON US HWY. NO. 212 DEWEY-POTTER COUNTIES

STR. NO. 54-056-158 SOUTH DAKOTA H20-44

DEPARTMENT OF HIGHWAYS

MAY 1956

DESIGNED BY	DRAWN BY	CHECKED BY	APPROVED
E.K.	ASF	E.K.	BRIDGE ENGINEER

STATE OF	PROJECT	SHEET NO.	TOTAL SHEETS
S.D.	NH 0212(149)208	E86	E92

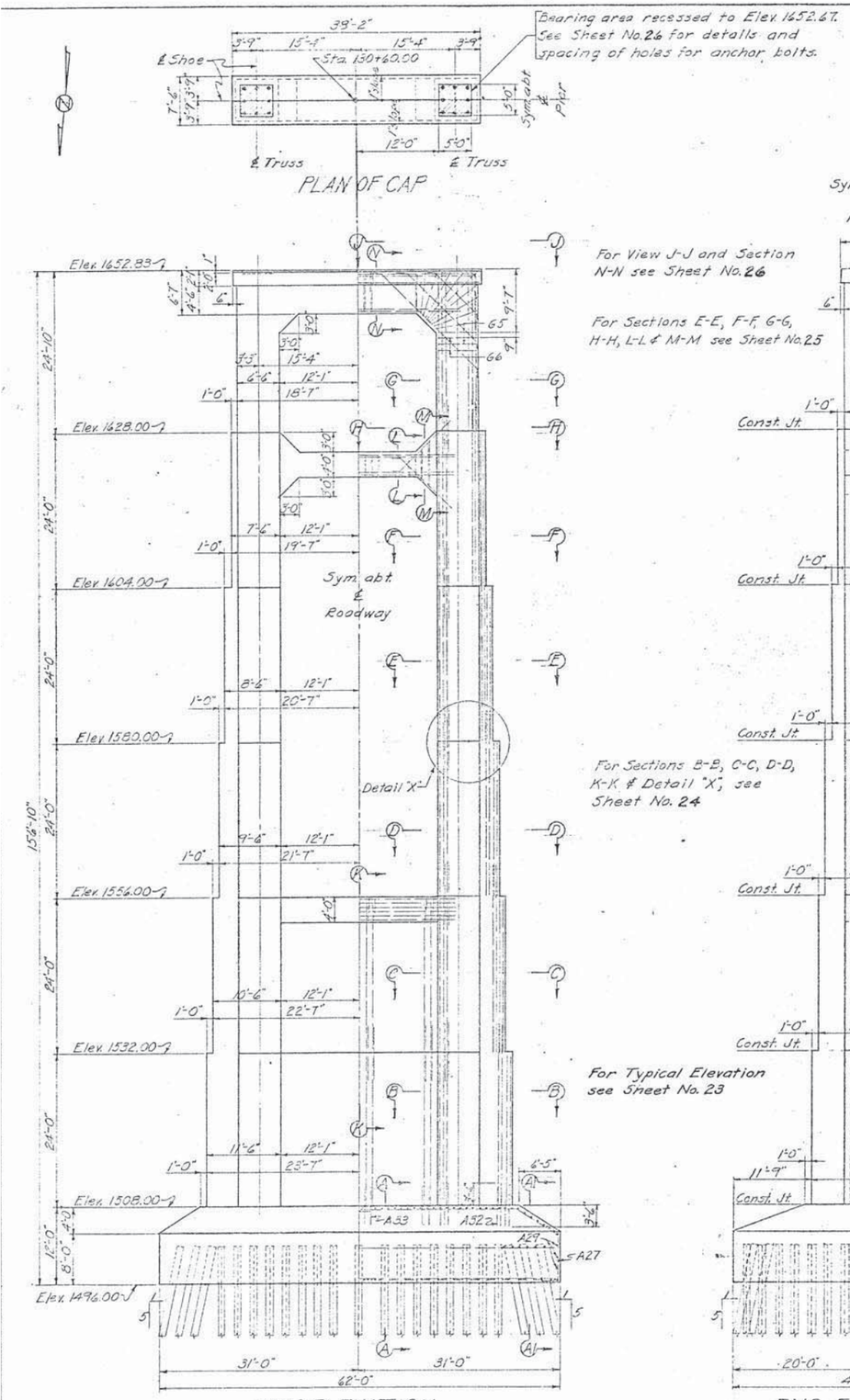

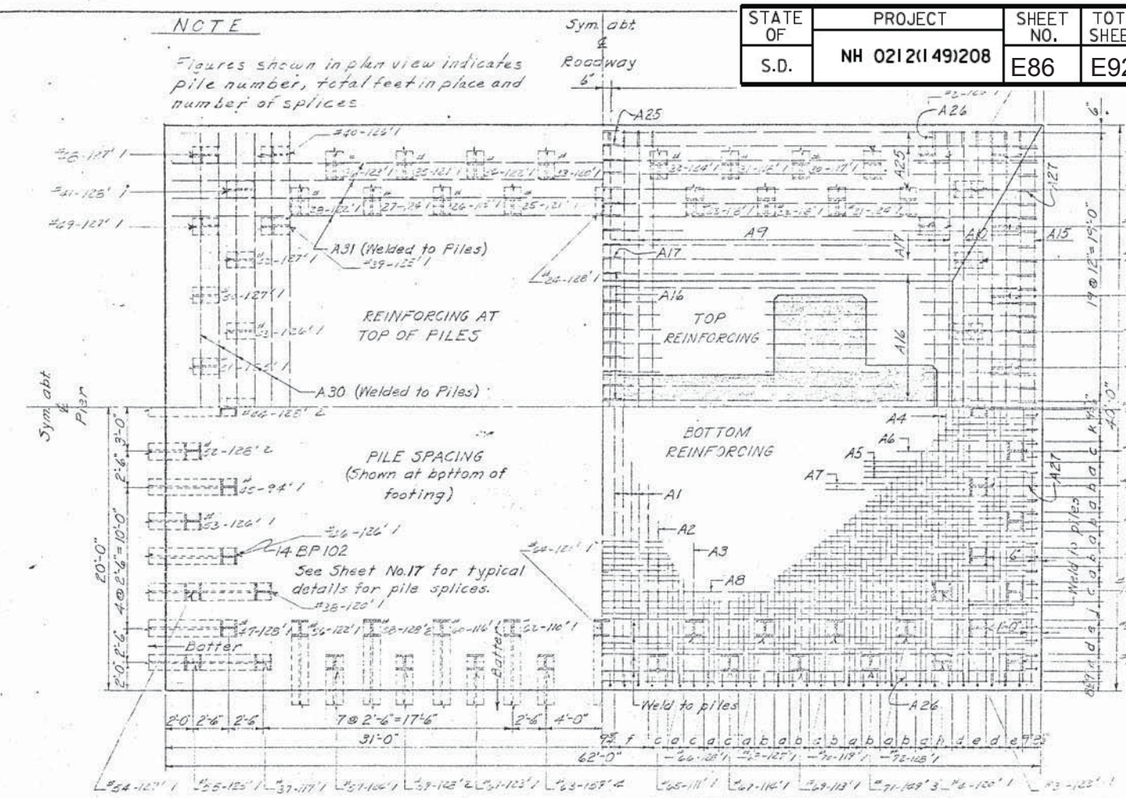

LEGEND	
a = 3 sp @ 4½"	f = 4 sp @ 7½"
b = 3 sp @ 5½"	g = 3 sp @ 4½"
c = 2 sp @ 8½"	h = 3 sp @ 5¼"
d = 3 sp @ 4¾"	j = 3 sp @ 4½"
e = 1 sp @ 15¾"	k = 4 sp @ 4½"

ESTIMATED QUANTITIES			
ITEM		UNIT	QUANTITIES
Class "A" Concrete		Cu. Yd.	221.3
Reinforcing Steel		Lb.	35,510
Driving Steel Actual Length		Lin. Ft.	76 @ 15' 1220
Bearing Piles	Test Pile	Each	*1
14 BP 102	Pile Splices	Each	*16
Structure Excavation		Cu. Yd.	None

*See Sheet No. 8

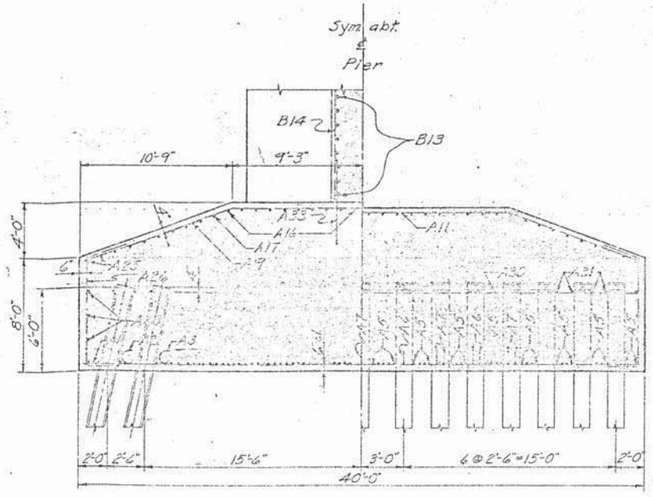

ORIGINAL CONSTRUCTION PLANS

DETAILS OF PIER NO. 12

FOR

4583'-0" BRIDGE OVER OAHE RESERVOIR

26'-0" ROADWAY

STA. 97 + 97.25 TO 143 + 80.25 WAR 181-2

ON US HWY. NO. 212 DEWEY-POTTER COUNTIES

STR. NO. 54-056-158 SOUTH DAKOTA H20-44

DEPARTMENT OF HIGHWAYS

MAY 1956

DESIGNED BY	DRAWN BY	CHECKED BY	APPROVED
E.K.	D.S.P.	E.K.	BRIDGE ENGINEER

STATE OF	PROJECT	SHEET NO.	TOTAL SHEETS
S.D.	NH 0212(149)208	E87	E92

Mk.	No.	Size	Length	Type	A	B	C	D	E	H	K	O
	96	11	27'-0"	St.								
	12	1	26'-9"	1	1'-5"	25'-11"						
	15		31'-9"	1	1'-5"	29'-11"						
	4		26'-9"	1	1'-5"	23'-11"						
	62		60'-0"	St.								
	3		57'-9"	1	1'-5"	55'-11"						
	2		52'-9"	1	1'-5"	50'-11"						
	2	11	42'-9"	1	1'-5"	25'-5"						
	30	9	41'-0"	22		11'-3"	8'-6"	11'-5"		3'-11"	10'-6"	39'-6"
	2	1	40'-7"	1		9'-7"	21'-7"	9'-7"		3'-4"	9'-0"	39'-7"
	1		40'-5"			7'-9½"	24'-11"	7'-9½"		2'-9"	7'-4"	39'-7"
			40'-3"			6'-0"	25'-5"	6'-0"		2'-1"	5'-7"	39'-5"
			40'-0"	1		4'-3"	31'-6"	4'-3"		1'-6"	4'-0"	39'-6"
	1		39'-9"	22		2'-5"	35'-0"	2'-5"		0'-10"	2'-3"	39'-5"
	2		34'-6"	St.								
	10		33'-5"	19		7'-4"	25'-11"			3'-11"	6'-3"	32'-2"
	4		33'-3"	1		6'-5"	26'-12"			3'-5"	5'-5"	32'-3"
			33'-0"			5'-8"	27'-4"			3'-0"	4'-10"	32'-2"
			32'-0"			5'-0"	28'-3"			2'-8"	4'-3"	32'-3"
			35'-0"			4'-4"	25'-8"			2'-3"	3'-8"	32'-4"
			32'-9"			3'-7"	29'-2"			1'-11"	3'-0"	32'-2"
			32'-9"			2'-10"	29'-11"			1'-6"	2'-5"	32'-1"
	1		32'-9"	1		2'-2"	30'-7"			1'-2"	1'-10"	32'-5"
	4	1	32'-6"	19		1'-6"	31'-0"			0'-10"	1'-3"	32'-3"
	6	9	32'-6"	St.								
	100	6	9'-9"	23		1'-0"	7'-2"	1'-3"		1'-7"	0'-5"	8'-4"
	16	6	9'-3"	23		1'-0"	7'-2"	1'-3"		1'-1"	0'-5"	8'-3"
	12	5	31'-6"	St.								
	6	5	39'-0"	1								
	12	6	38'-0"									
	9	8	60'-0"									
	300	11	7'-0"	1								
	44	10	6'-0"	St.								
	186	11	27'-0"	St.								
	134	1	23'-9"	St.								
	98	1	6'-6"	24		3'-6"	2'-0"	1'-0"		1'-0"	1'-9"	6'-5"
	4	11	6'-0"	St.								
	24	6	45'-3"	T1	0'-6"	16'-1"	6'-1"	16'-1"	6'-1"			
	16	6	35'-3"	1	0'-6"	11'-1"	6'-1"	11'-1"	6'-1"			
	32	5	40'-9"	1	0'-5"	15'-5"	4'-7"	15'-5"	4'-7"			
	24	4	13'-3"	T1	0'-4½"	5'-5"	0'-11"	5'-5"	0'-11"			
	520	1	2'-3"	T5	0'-6"	1'-3"	0'-6"					
	208		6'-3"	1	0'-6"	5'-3"	0'-6"					
	104		6'-6"	1	0'-6"	5'-6"	0'-6"					
	208	4	2'-3"	T5	0'-6"	1'-3"	0'-6"					
	48	8	28'-0"	St.								
	48	10	25'-1"	St.								
	48	8	6'-3"	24		3'-2"	2'-0"	1'-1"		0'-6"	1'-5"	5'-8"
	146	11	27'-0"	St.								
	134	1	23'-9"	St.								
	98	1	6'-6"	24		3'-6"	2'-0"	1'-0"		1'-0"	1'-9"	6'-3"
	4	11	6'-0"	St.								
	28	6	41'-8"	T1	0'-6"	6'-1"	14'-1"	6'-1"	14'-1"			
	28	6	33'-3"	1	0'-6"	6'-1"	10'-1"	6'-1"	10'-1"			
	56	5	36'-9"	1	0'-5"	4'-7"	13'-5"	4'-7"	13'-5"			
	28	4	13'-3"	T1	0'-4½"	5'-5"	0'-11"	5'-5"	0'-11"			
	416	1	2'-3"	T5	0'-6"	1'-3"	0'-6"					
	208		6'-3"	1	0'-6"	4'-3"	0'-6"					
	104		5'-6"	1	0'-6"	4'-6"	0'-6"					
	156	4	2'-3"	T5	0'-6"	1'-3"	0'-6"					
	40	6	29'-9"	St.								
	48	8	22'-6"	St.								
	18	11	53'-0"	St.								
	48	6	16'-6"	T1	0'-6"	5'-6"	2'-3"	5'-6"	2'-3"			
	106	11	27'-0"	St.								
	134	1	23'-9"	St.								
	98	1	6'-6"	24		3'-6"	2'-0"	1'-0"		1'-0"	1'-9"	6'-3"
	4	11	6'-0"	St.								

Mk.	No.	Size	Length	Type	A	B	C	D	E	H	K	O
D5	53	6	37'-3"	T1	0'-6"	10'-1"	3'-1"	12'-1"	3'-1"			
D6	28	6	31'-3"	1	0'-6"	9'-1"	3'-1"	9'-1"	6'-1"			
D7	56	5	32'-6"	1	0'-5"	11'-5"	4'-7"	11'-5"	4'-7"			
*D8	28	4	13'-3"	T1	0'-4½"	5'-5"	0'-11"	5'-5"	0'-11"			
D9	312	1	2'-3"	T5	0'-6"	1'-3"	0'-6"					
D10	208		4'-3"	1	0'-6"	3'-3"	0'-6"					
D11	104	1	4'-6"	1	0'-6"	3'-6"	0'-6"					
D12	104	4	2'-3"	T5	0'-6"	1'-3"	0'-6"					
E1	66	11	27'-0"	St.								
E2	134	1	23'-9"	St.								
E3	98	1	6'-6"	24	3'-6"	2'-0"	1'-0"			1'-0"	1'-9"	6'-3"
E4	4	11	6'-0"	St.								
E5	28	6	33'-3"	T1	0'-6"	10'-1"	6'-1"	10'-1"	6'-1"			
E6	28	6	27'-3"	1	0'-6"	8'-1"	6'-1"	8'-1"	6'-1"			
E7	56	5	28'-9"	1	0'-5"	9'-5"	4'-7"	9'-5"	4'-7"			
*E8	28	4	13'-3"	T1	0'-4½"	5'-5"	0'-11"	5'-5"	0'-11"			
E9	208	1	2'-3"	T5	0'-6"	1'-3"	0'-6"					
E10	200		3'-5"	1	0'-6"	2'-3"	0'-6"					
E11	104	1	3'-6"	1	0'-6"	2'-6"	0'-6"					
E12	52	4	2'-3"	T5	0'-6"	1'-3"	0'-6"					
F1	26	11	27'-0"	St.								
F2	134	11	23'-9"	St.								
F3	98	11	6'-6"	24		3'-6"	2'-0"	1'-0"		1'-0"	1'-9"	6'-3"
F5	28	6	29'-3"	T1	0'-6"	8'-1"	6'-1"	8'-1"	6'-1"			
F6	28	6	27'-3"	1	0'-6"	7'-1"	6'-1"	7'-1"	6'-1"			
F7	56	5	24'-9"	1	0'-5"	7'-5"	4'-7"	7'-5"	4'-7"			
*F8	28	4	13'-3"	T1	0'-4½"	5'-5"	0'-11"	5'-5"	0'-11"			
F9	104	1	2'-3"	T5	0'-6"	1'-3"	0'-6"					
F10	208	1	2'-3"	T5	0'-6"	1'-3"	0'-6"					
F11	104	4	2'-6"	T5	0'-6"	1'-6"	0'-6"					
F13	40	10	30'-0"	St.								
F14	4	8	30'-0"	St.								
F15	32	8	12'-0"	19	1'-0"	11'-0"				0'-9"	0'-9"	11'-9"
F16	20	5	6'-0"	St.								
F17	39	6	14'-0"	T1	0'-6"	3'-10"	3'-8"	3'-10"	3'-8"			
F18	4	6	19'-3"	T1	0'-6"	3'-10"	5'-5"	3'-10"	5'-5"			
F19	4	6	23'-3"	T1	0'-6"	3'-10"	7'-5"	3'-10"	7'-5"			
G1	16	11	30'-6"	20	6'-0"	24'-6"						
G2	108	11	24'-3"	St.								
G5	40	6	20'-9"	T1	0'-6"	5'-5"	4'-7"	5'-5"	4'-7"			
G6	54	6	22'-9"	T1	0'-6"	6'-1"	4'-11"	6'-1"	4'-11"			
G9	72	4	2'-3"	T5	0'-6"	1'-3"	0'-6"					
G10	128	4	2'-3"	T5	0'-6"	1'-3"	0'-6"					
G11	10	10	48'-0"	17		6'-0"	36'-6"	6'-0"				
G12	10	10	40'-0"	17		2'-4"	35'-10"	2'-4"				
G13	20	10	30'-0"	St.								
G14	4	6	37'-6"	1								
G15	4	8	30'-0"	1								
G16	24	5	6'-0"	St.								
G17	38	1	17'-3"	56	0'-9"	6'-1"	3'-10"	6'-1"				
G18	6		18'-6"	1	0'-9"	6'-7"	4'-0"	6'-7"				
G19	8		19'-9"		0'-9"	7'-3"	4'-0"	7'-3"				
G20	8		21'-9"		0'-9"	8'-3"	4'-0"	8'-3"				
G21	8		24'-3"		0'-9"	9'-6"	4'-0"	9'-6"				
G22	4		26'-9"	1	0'-9"	10'-9"	4'-0"	10'-9"				
G23	29	1	11'-6"	56	0'-9"	1'-7"	7'-1"	1'-7"				
G24	8	5	8'-0"	17		1'-0"	6'-1"	1'-0"				
G25	12	11	24'-0"	22		1'-9"	20'-6"	1'-9"		1'-3"	1'-3"	22'-0"
G26	12	6	18'-0"	22		1'-9"	14'-6"	1'-9"		1'-3"	1'-3"	17'-0"
G27	12	6	12'-0"	22		1'-9"	8'-6"	1'-9"		1'-3"	1'-3"	11'-0"

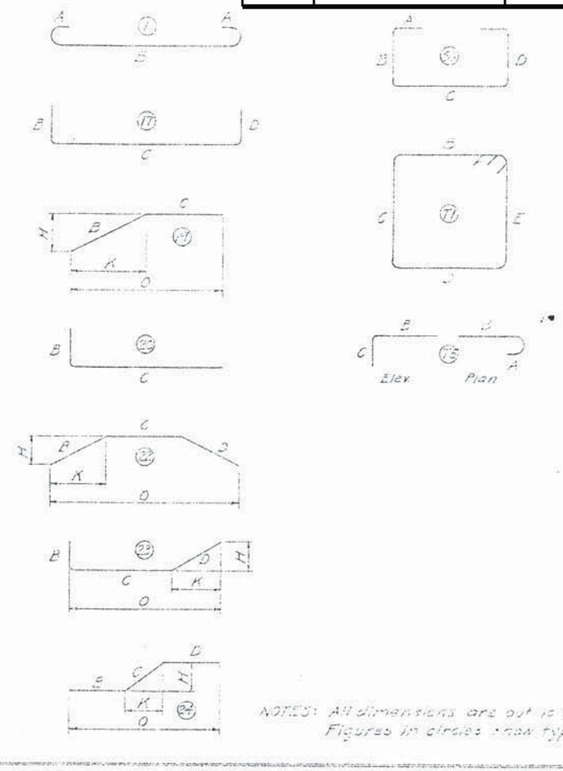

NOTES: All dimensions are out to out of bar.
Figures in circles show type.

ORIGINAL CONSTRUCTION PLANS

DETAILS OF PIER NO.12

FOR

4583'-0" BRIDGE OVER OAHE RESERVOIR

26'-0" ROADWAY

STA. 97 + 97.25 TO 143 + 20.25 WAR 181-2

ON US HWY. NO. 212 DEWEY-POTTER COUNTIES

STR. NO. 54-056-158 SOUTH DAKOTA H20-44

DEPARTMENT OF HIGHWAYS

MAY 1958

22 OF 27

*Rev 5-1-57

DESIGNED BY	DRAWN BY	CHECKED BY	APPROVED

STATE OF	PROJECT	SHEET NO.	TOTAL SHEETS
S.D.	NH 0212(149)208	E88	E92

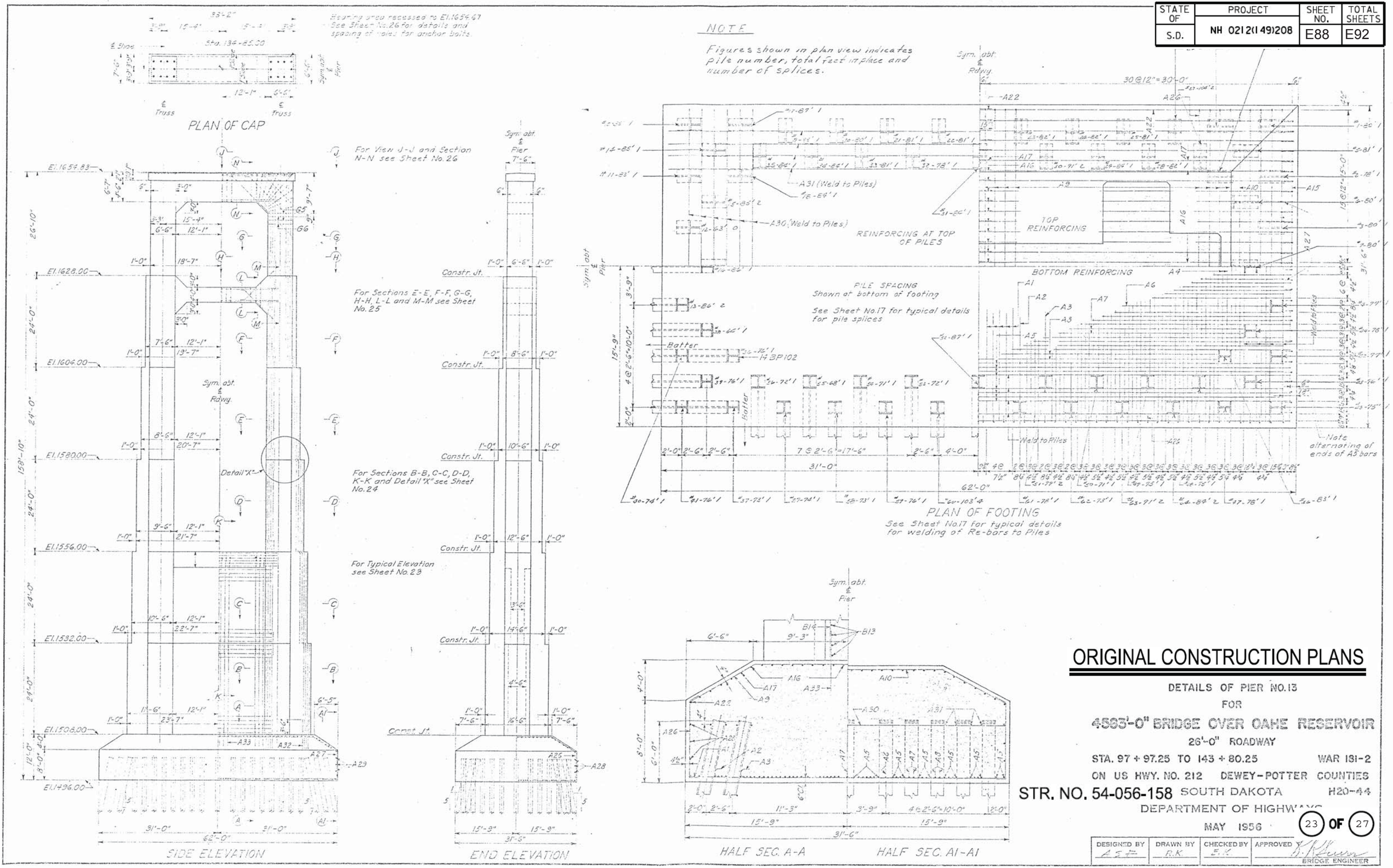

ORIGINAL CONSTRUCTION PLANS

DETAILS OF PIER NO.13

FOR

4583'-0" BRIDGE OVER OAHE RESERVOIR

26'-0" ROADWAY

STA. 97 + 97.25 TO 143 + 80.25 WAR 131-2

ON US HWY. NO. 212 DEWEY-POTTER COUNTIES

STR. NO. 54-056-158 SOUTH DAKOTA H20-44

DEPARTMENT OF HIGHWAYS

MAY 1956

23 OF 27

DESIGNED BY	DRAWN BY	CHECKED BY	APPROVED
A.S.F.	R.K.	E.K.	R. Kuehn BRIDGE ENGINEER

STATE OF	PROJECT	SHEET NO.	TOTAL SHEETS
S.D.	NH 0212(149)208	E89	E92

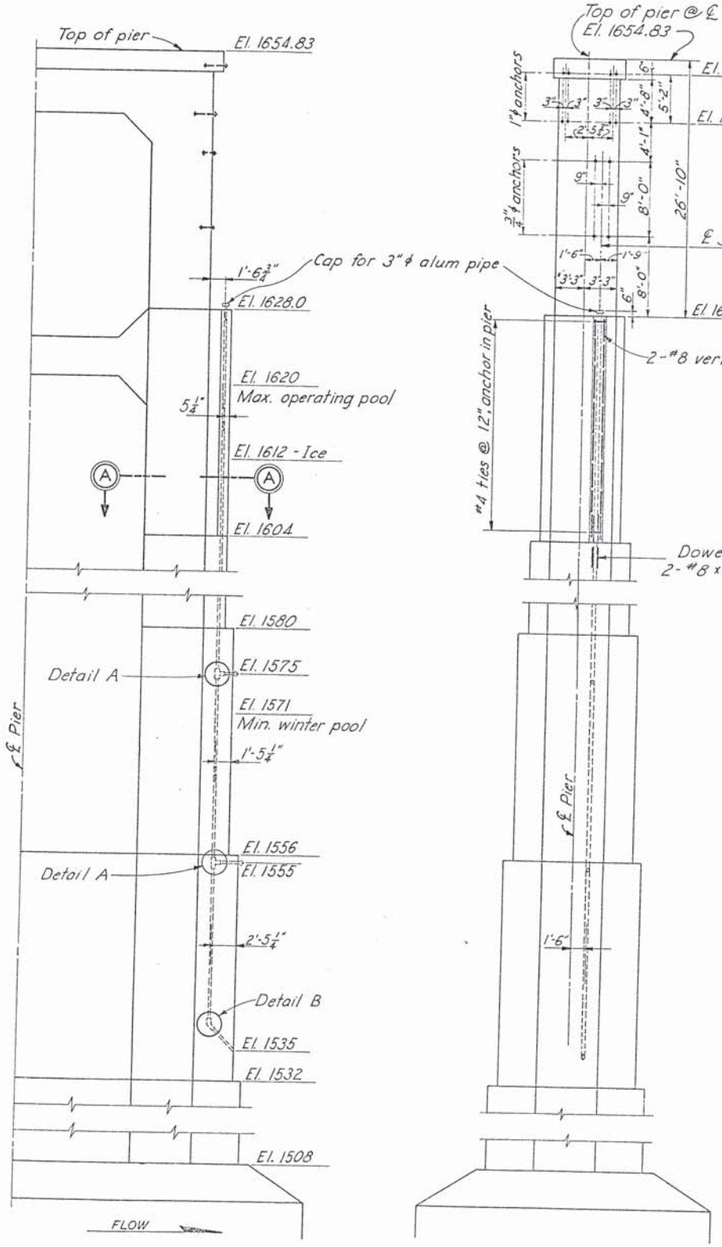

ELEVATION

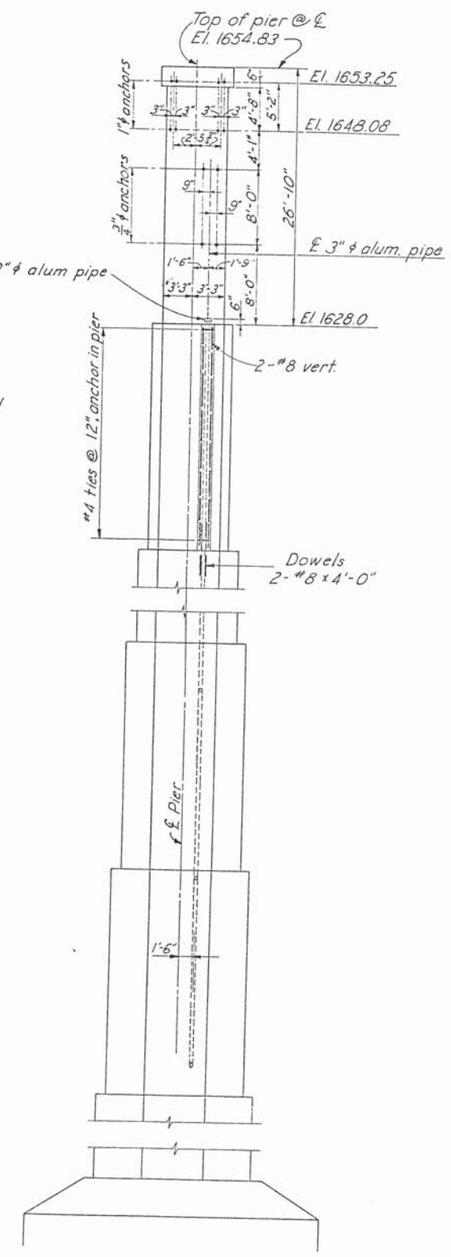

END VIEW

PIER 13

SCALE: 1/8 INCH = 1 FOOT

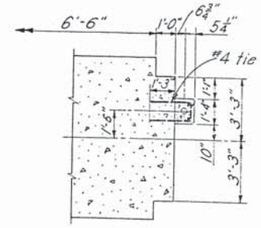

SECTION A-A

SCALE: 1/4 INCH = 1 FOOT

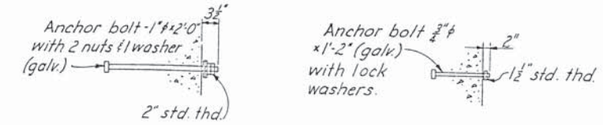

PLATFORM SUPPORT ANCHOR
8 REQ'D

PIPE SUPPORT ANCHOR
4 REQ'D

ANCHOR BOLT DETAILS

SCALE: 3/4 INCH = 1 FOOT

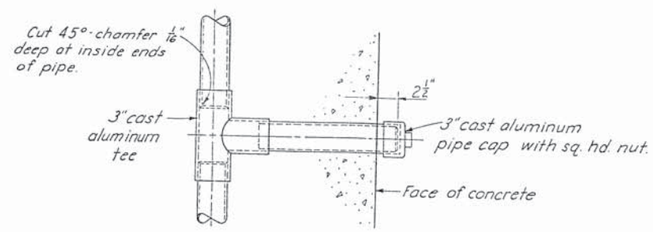

DETAIL A

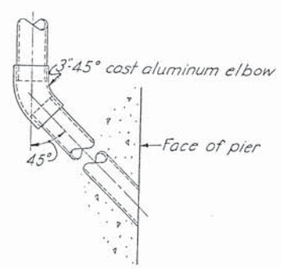

DETAIL B

GENERAL NOTES:

1. Gage well to be 3" ϕ I.P.S. (I.D. 3.068, O.D. 3.500") Alcoa Aluminum, designation 6063-T6, or equal with standard cast aluminum pipe fittings, with standard pipe thread.
2. The outside of aluminum pipe embedded in concrete is to be solvent clean, and painted with 3 coats of cold applied coal tar paint conforming to Military Specifications, Mil.-C-18480 (docks). Total thickness of 3 coats to be 1/32 inch.
3. The pipe shall be maintained plumb at all times.
4. The top end of the 3" pipe must be plugged at all times to prevent material entering the pipe.
5. All pipe connections and plugs to be airtight.
6. A suitable thread compound should be used in making up threaded joints in aluminum pipe. Spec. Jan-A-669, such as "Whiz" compound Anti-seize made by R.M. Hollingshead Corp. Camden N.J. or equal.
7. Specifications for cast aluminum fittings Mil.-F-20672.
8. Specifications for aluminum pipe A.S.T.M. designation B 241-55T.

ORIGINAL CONSTRUCTION PLANS

MODIFICATION DETAILS OF PIER NO. 13
FOR
458'-0" BRIDGE OVER OAHE RESERVOIR
26'-0" ROADWAY
STA. 97 + 97.25 TO 143 + 80.25 WAR 131-2
ON US HWY. NO. 212 DEWEY—POTTER COUNTIES
STR. NO. 54-056-158 SOUTH DAKOTA H20-44
DEPARTMENT OF HIGHWAYS
OCT. 1956

DESIGNED BY	DRAWN BY	CHECKED BY	APPROVED BY
			BRIDGE ENGINEER

MARK	NO.	SIZE	LENGTH	TYPE	A	B	C	D	E	H	K	O
A1	94	10	30'-6"	Str.								
A2	12		28'-0"	1	1'-3"	25'-6"						
A3	15		23'-0"	1	1'-3"	20'-6"						
A4	4		18'-0"	1	1'-3"	15'-6"						
A5	50		60'-0"	Str.								
A6	2		58'-6"	1	1'-3"	56'-0"						
A7	5		53'-6"	1	1'-3"	51'-0"						
A8	4	10	48'-6"	1	1'-3"	46'-0"						
A9	50	8	33'-3"	22		7'-5"	18'-5"	7'-5"		4'-0"	6'-3"	30'-11"
A10	2		33'-0"			6'-4"	20'-4"	6'-4"		3'-5"	5'-4"	31'-0"
A11	2		32'-9"			5'-1"	22'-7"	5'-1"		2'-10"	4'-3"	31'-1"
A12	2		32'-3"			3'-11"	24'-5"	3'-11"		2'-2"	3'-3"	30'-11"
A13	2		32'-0"			2'-9"	26'-6"	2'-9"		1'-7"	2'-3"	31'-0"
A14	2		31'-6"	22		1'-6"	28'-6"	1'-6"		0'-11"	1'-3"	31'-0"
A15	2		31'-0"	Str.								
A16	40		33'-3"	19		7'-4"	25'-11"			4'-0"	6'-2"	32'-1"
A17	4		33'-0"			6'-1"	26'-11"			3'-4"	5'-1"	32'-0"
A18	4		32'-9"			4'-11"	27'-10"			2'-8"	4'-1"	31'-11"
A19	4		32'-9"			3'-9"	29'-0"			2'-1"	3'-1"	32'-1"
A20	4		32'-6"			2'-7"	29'-11"			1'-6"	2'-1"	32'-0"
A21	4		32'-3"	19		1'-4"	30'-11"			0'-10"	1'-1"	32'-0"
A22	4	8	32'-0"	Str.								
A26	120	6	9'-3"	23		1'-0"	7'-2"	1'-3"		1'-1"	0'-7½"	7'-9½"
A27	60	6	9'-3"	23		1'-0"	7'-2"	1'-3"		1'-0½"	0'-8"	7'-10"
A28	12	5	31'-6"	Str.								
A29	6	5	30'-6"									
A30	12	8	30'-0"									
A31	8	8	60'-0"									
A32	320	10	7'-0"									
A33	48	10	6'-0"	Str.								
B1	186	10	27'-0"	Str.								
B2	134	10	23'-9"	Str.								
B3	98	10	6'-6"	24		3'-6"	2'-0"	1'-0"		1'-0"	1'-9"	6'-3"
B4	4	10	6'-0"	Str.								
B5	24	5	45'-0"	T1	0'-5"	6'-0½"	16'-0½"	6'-0½"	16'-0½"			
B6	26	5	35'-0"	T1	0'-5"	6'-0½"	11'-0½"	6'-0½"	11'-0½"			
B7	52	5	40'-9"	T1	0'-5"	4'-6½"	15'-4½"	4'-6½"	15'-4½"			
B8	24	4	13'-3"	T1	0'-4½"	0'-10½"	5'-4½"	0'-10½"	5'-4½"			
B9	520	4	2'-3"	T5	0'-6"	1'-3"	0'-6"					
B10	208	4	6'-3"	T5	0'-6"	5'-3"	0'-6"					
B11	104	4	6'-6"	T5	0'-6"	5'-6"	0'-6"					
B12	208	4	2'-3"	T5	0'-6"	1'-3"	0'-6"					
B13	48	8	28'-0"	Str.								
B14	48	10	23'-9"	Str.								
B15	48	8	6'-5"	24		3'-2"	2'-0"	1'-1"		0'-6"	1'-5"	5'-8"
C1	146	10	27'-0"	Str.								
C2	134	10	23'-9"	Str.								
C3	98	10	6'-6"	24		3'-6"	2'-0"	1'-0"		1'-0"	1'-9"	6'-3"
C4	4	10	6'-0"	Str.								
C5	28	5	41'-0"	T1	0'-5"	6'-0½"	14'-0½"	6'-0½"	14'-0½"			
C6	28	5	33'-0"	T1	0'-5"	6'-0½"	10'-0½"	6'-0½"	10'-0½"			
C7	56	5	36'-9"	T1	0'-5"	4'-6½"	13'-4½"	4'-6½"	13'-4½"			
C8	28	4	13'-3"	T1	0'-4½"	0'-10½"	5'-4½"	0'-10½"	5'-4½"			
C9	416	4	2'-3"	T5	0'-6"	1'-3"	0'-6"					
C10	208	4	5'-3"	T5	0'-6"	4'-3"	0'-6"					
C11	104	4	5'-6"	T5	0'-6"	4'-6"	0'-6"					
C12	156	4	2'-3"	T5	0'-6"	1'-3"	0'-6"					
C13	40	6	28'-0"	Str.								
C14	48	8	22'-6"	Str.								
C15	18	11	30'-0"	Str.								
C16	48	6	16'-0"	T1	0'-6"	2'-3"	5'-6"	2'-3"	5'-6"			

MARK	NO.	SIZE	LENGTH	TYPE	A	B	C	D	E	H	K	O
D1	106	10	27'-0"	Str.								
D2	134	10	23'-9"	Str.								
D3	98	10	6'-6"	24		3'-6"	2'-0"	1'-0"		1'-0"	1'-9"	6'-3"
D4	4	10	6'-0"	Str.								
D5	28	5	37'-0"	T1	0'-5"	6'-0½"	12'-0½"	6'-0½"	12'-0½"			
D6	28	5	31'-0"	T1	0'-5"	6'-0½"	9'-0½"	6'-0½"	9'-0½"			
D7	56	5	32'-9"	T1	0'-5"	4'-6½"	11'-4½"	4'-6½"	11'-4½"			
D8	28	4	13'-3"	T1	0'-4½"	0'-10½"	5'-4½"	0'-10½"	5'-4½"			
D9	312	4	2'-3"	T5	0'-6"	1'-3"	0'-6"					
D10	208	4	4'-3"	T5	0'-6"	3'-3"	0'-6"					
D11	104	4	4'-6"	T5	0'-6"	3'-6"	0'-6"					
D12	104	4	2'-3"	T5	0'-6"	1'-3"	0'-6"					
E1	66	10	27'-0"	Str.								
E2	134	10	23'-9"	Str.								
E3	98	10	6'-6"	24		3'-6"	2'-0"	1'-0"		1'-0"	1'-9"	6'-3"
E4	4	10	6'-0"	Str.								
E5	28	5	33'-0"	T1	0'-5"	6'-0½"	10'-0½"	6'-0½"	10'-0½"			
E6	28	5	29'-0"	T1	0'-5"	6'-0½"	8'-0½"	6'-0½"	8'-0½"			
E7	56	5	28'-9"	T1	0'-5"	4'-6½"	9'-4½"	4'-6½"	9'-4½"			
E8	28	4	13'-3"	T1	0'-4½"	0'-10½"	5'-4½"	0'-10½"	5'-4½"			
E9	208	4	2'-3"	T5	0'-6"	1'-3"	0'-6"					
E10	208	4	3'-3"	T5	0'-6"	2'-3"	0'-6"					
E11	104	4	3'-6"	T5	0'-6"	2'-6"	0'-6"					
E12	52	4	2'-3"	T5	0'-6"	1'-3"	0'-6"					
F1	26	10	27'-0"	Str.								
F2	134	10	23'-9"	Str.								
F3	98	10	6'-6"	24		3'-6"	2'-0"	1'-0"		1'-0"	1'-9"	6'-3"
F5	28	5	29'-0"	T1	0'-5"	6'-0½"	8'-0½"	6'-0½"	8'-0½"			
F6	28	5	27'-0"	T1	0'-5"	6'-0½"	7'-0½"	6'-0½"	7'-0½"			
F7	56	5	24'-9"	T1	0'-5"	4'-6½"	7'-4½"	4'-6½"	7'-4½"			
F8	28	4	13'-3"	T1	0'-4½"	0'-10½"	5'-4½"	0'-10½"	5'-4½"			
F9	104	4	2'-3"	T5	0'-6"	1'-3"	0'-6"					
F10	208	4	2'-3"	T5	0'-6"	1'-3"	0'-6"					
F11	104	4	2'-6"	T5	0'-6"	1'-6"	0'-6"					
F13	40	10	30'-0"	Str.								
F14	4	8	30'-0"	Str.								
F15	32	8	12'-0"	19		1'-0"	11'-0"			0'-9"	0'-9"	11'-9"
F16	20	5	6'-0"	Str.								
F17	38	6	16'-0"	T1	0'-6"	3'-10"	3'-8"	3'-10"	3'-8"			
F18	4	6	19'-5"	T1	0'-6"	3'-10"	5'-5"	3'-10"	5'-5"			
F19	4	6	23'-6"	T1	0'-6"	3'-10"	7'-5"	3'-10"	7'-5"			
G1	16	10	32'-3"	20		6'-0"	26'-6"					
G2	28	10	26'-3"	Str.								
G5	44	5	20'-9"	T1	0'-5"	4'-6½"	5'-4½"	4'-6½"	5'-4½"			
G6	40	5	22'-9"	T1	0'-5"	4'-10½"	6'-0½"	4'-10½"	6'-0½"			
G9	80	4	2'-3"	T5	0'-6"	1'-3"	0'-6"					
G10	144	4	2'-3"	T5	0'-6"	1'-3"	0'-6"					
G11	10	11	48'-0"	17		6'-0"	36'-6"	6'-0"				
G12	10	11	40'-0"	17		2'-4"	35'-10"	2'-4"				
G13	20	11	30'-0"	Str.								
G14	4	6	37'-6"	Str.								
G15	4	8	30'-0"	Str.								
G16	24	5	6'-0"	Str.								
G17	38		17'-6"	S6	0'-9"	6'-1"	3'-10"	6'-1"				
G18	8		18'-9"	S6	0'-9"	6'-7"	4'-0"	6'-7"				
G19	8		20'-0"	S6	0'-9"	7'-3"	4'-0"	7'-3"				
G20	8		22'-0"	S6	0'-9"	8'-3"	4'-0"	8'-3"				
G21	8		24'-6"	S6	0'-9"	9'-6"	4'-0"	9'-6"				
G22	4		27'-0"	S6	0'-9"	10'-9"	4'-0"	10'-9"				
G23	29		11'-9"	S6	0'-9"	1'-7"	7'-1"	1'-7"				
G24	8	5	8'-0"	17		1'-0"	6'-1"	1'-0"				
G25	12	11	24'-0"	22		1'-9"	20'-6"	1'-9"		1'-3"	1'-3"	23'-0"
G26	12	6	18'-0"	22		1'-9"	14'-6"	1'-9"		1'-3"	1'-3"	17'-0"
G27	12	6	12'-0"	22		1'-9"	8'-6"	1'-9"		1'-3"	1'-3"	11'-0"

BAR BENDS

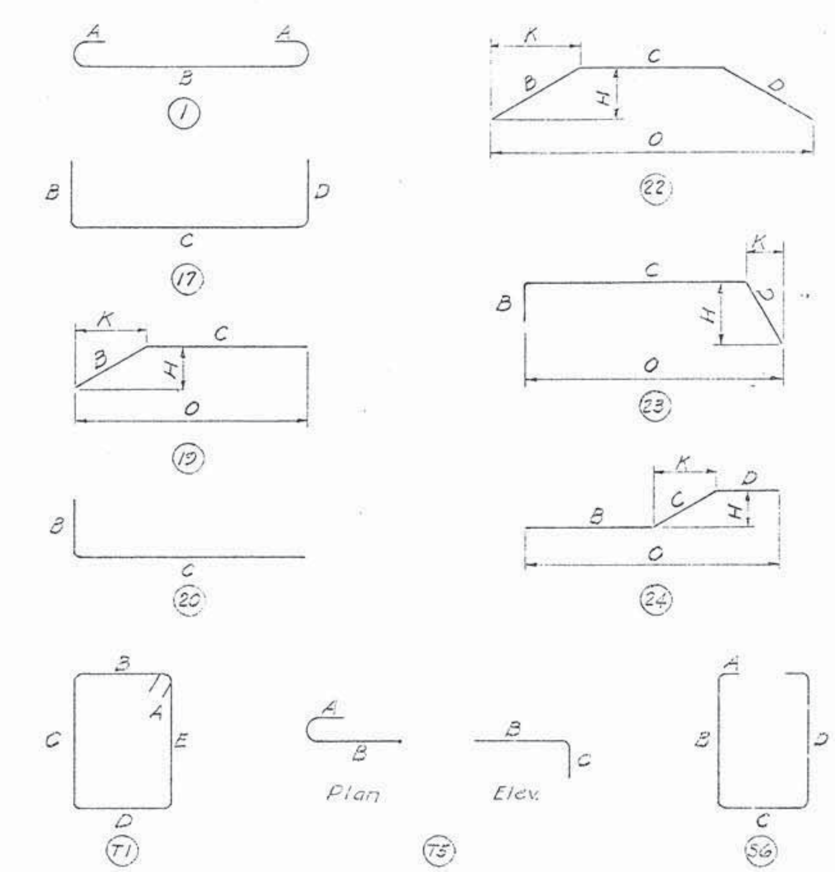

All dimensions are out to out of bar
Figures in circles show types.

ESTIMATED QUANTITIES			
ITEM		UNIT	QUANTITIES
Class "A" Concrete		Cu.Yd.	2,016.9
Reinforcing Steel		Lb.	283,020
Driving Steel Bearing Piles 14 BP 102	Actual Length	Lin.Ft.	64 @ 90' = 5,760'
	Test Pile	Each	1
	Pile Splices	Each	*64
Structure Excavation		Cu.Yd.	None

ORIGINAL CONSTRUCTION PLANS

DETAILS OF PIER NO.13

FOR

4583'-0" BRIDGE OVER OAHE RESERVOIR

26'-0" ROADWAY

STA. 97 + 97.25 TO 143 + 80.25 WAR 181-2

ON US HWY. NO. 212 DEWEY-POTTER COUNTIES

STR. NO. 54-056-158 SOUTH DAKOTA H20-44

DEPARTMENT OF HIGHWAYS

MAY 1956

25 OF 27

DESIGNED BY	DRAWN BY	CHECKED BY	APPROVED
A.S.F.	C.L.	A.S.F.	BRIDGE ENGINEER

Pier #13

STATE OF	PROJECT	SHEET NO.	TOTAL SHEETS
S.D.	NH 0212(149)208	E91	E92

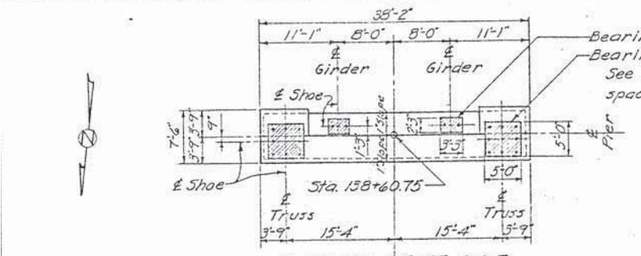

PLAN OF BENT CAP

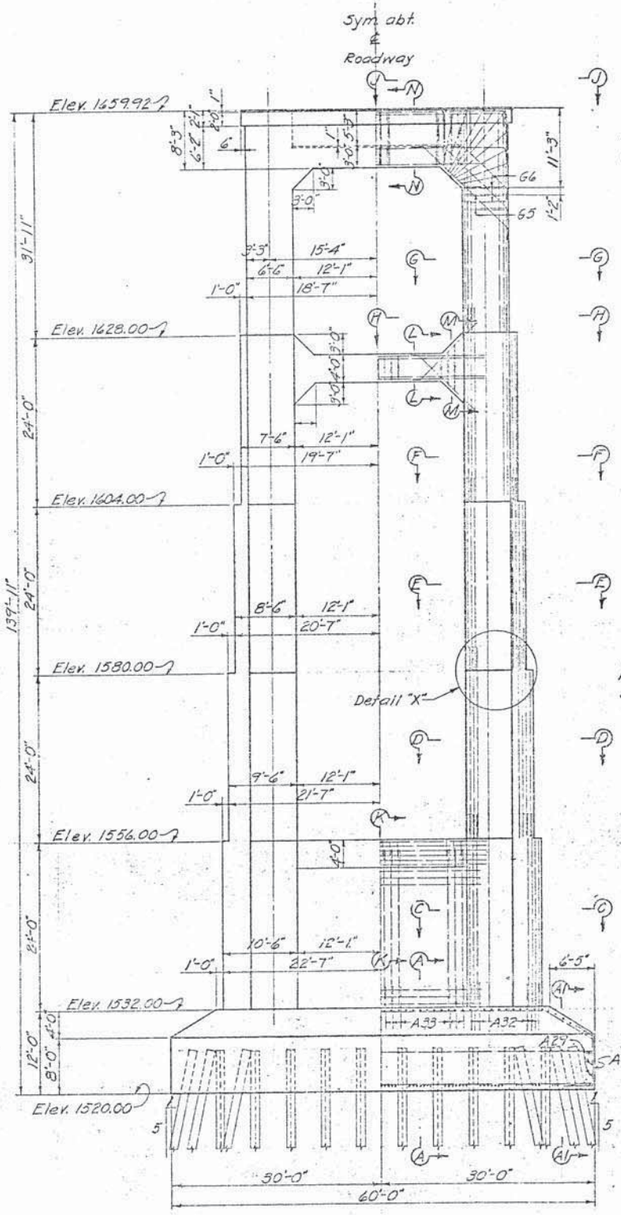

SIDE ELEVATION

For View J-J, Sections N-N, G-G and other cap details see Sheet No.21.

For Sections E-E, F-F, H-H, L-L and M-M see Sheet No.25.

For Sections C-C, D-D, K-K and Detail "X" see Sheet No.24

For Typical Elevation see Sheet No.23.

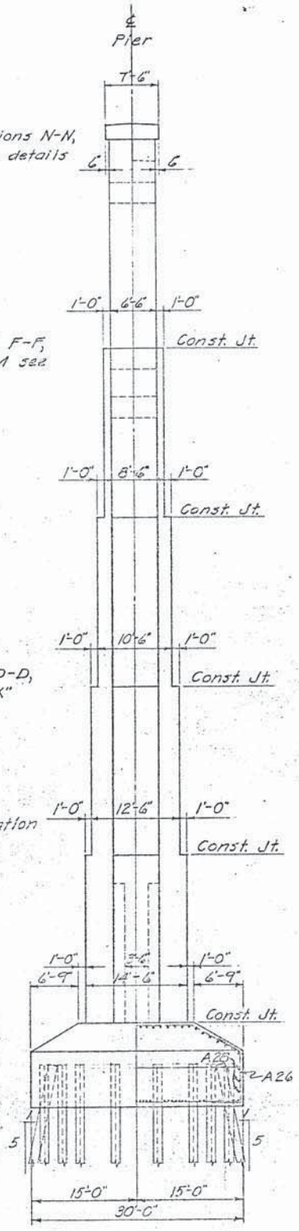

END ELEVATION

NOTE

Figures shown in plan view indicates pile number, total feet in place and number of splices.

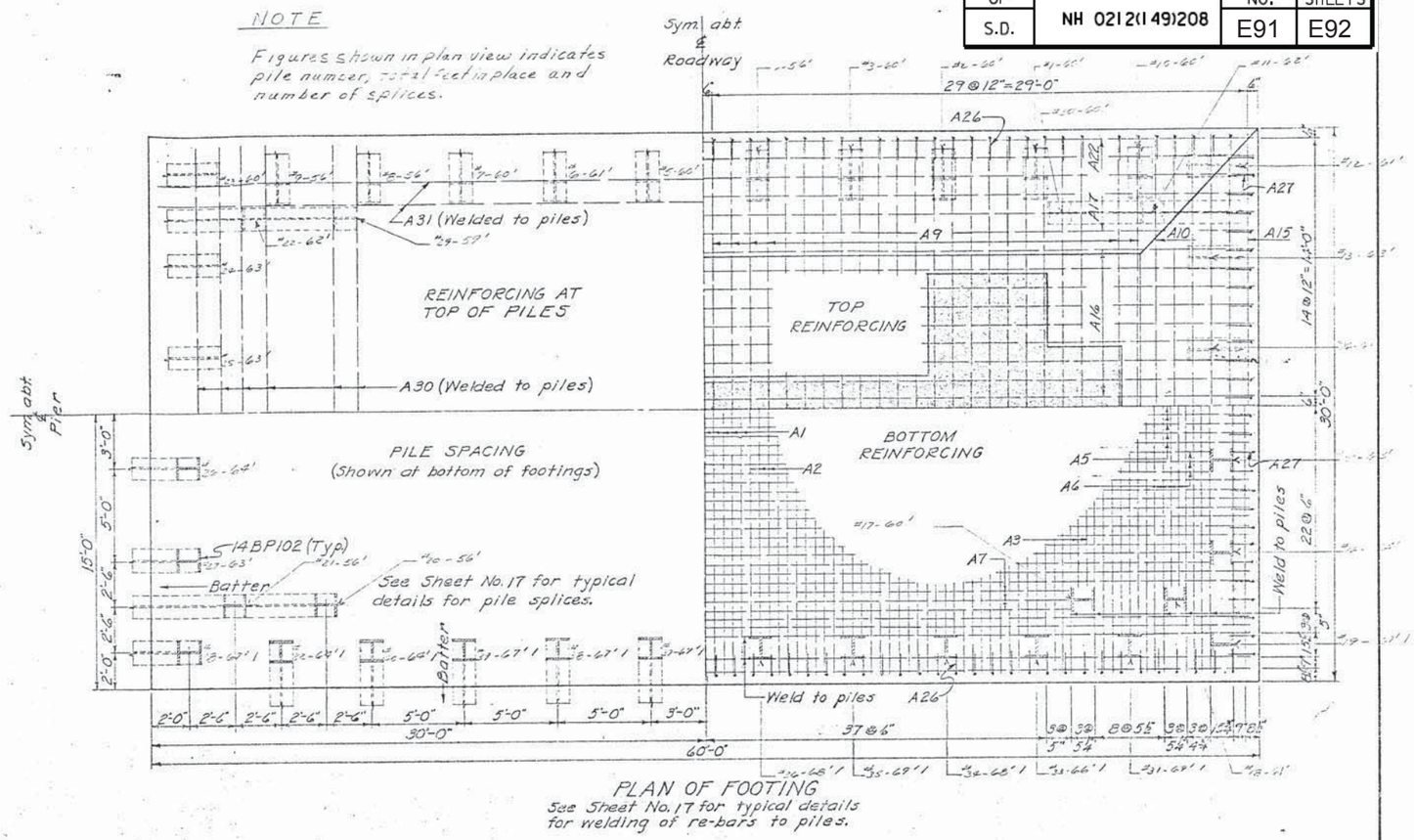

PLAN OF FOOTING

See Sheet No.17 for typical details for welding of re-bars to piles.

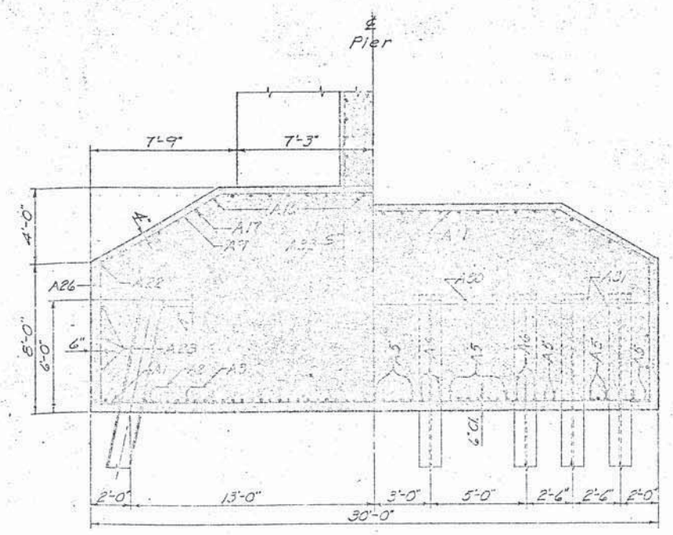

HALF SEC. A-A HALF SEC. A1-A1

ORIGINAL CONSTRUCTION PLANS

DETAILS OF PIER NO.14

FOR

4583'-0" BRIDGE OVER OAHE RESERVOIR

26'-0" ROADWAY

STA. 97 + 97.25 TO 143 + 80.25 WAR 181-2

ON US HWY. NO. 212 DEWEY-POTTER COUNTIES

STR. NO. 54-056-158 SOUTH DAKOTA H20-44

DEPARTMENT OF HIGHWAYS

MAY 1956

26 OF 27

DESIGNED BY	DRAWN BY	CHECKED BY	APPROVED
HCF	SBL	F.K.	BRIDGE ENGINEER

STATE OF	PROJECT	SHEET NO.	TOTAL SHEETS
S.D.	NH 0212(149)208	E92	E92

MARK	NO.	SIZE	LENGTH	TYPE	A	B	C	D	E	H	K	O
A1	81	9	29'-0"	St.								
A2	30	↓	26'-3"	1	1'-1"	24'-1"						
A3	8		21'-3"	1	1'-1"	19'-1"						
A5	37		59'-0"	St.								
A6	12	↓	56'-6"	1	1'-1"	54'-4"						
A7	6	9	41'-6"	1	1'-1"	39'-4"						
A9	48	7	31'-6"	22		7'-7"	16'-4"	7'-7"		3'-10"	6'-6"	29'-4"
A10	2	↓	31'-3"	↓		6'-5"	18'-5"	6'-5"		3'-3"	5'-6"	29'-5"
A11	↓		31'-0"			5'-3"	20'-6	5'-3"		2'-8"	4'-6	29'-6"
A12			30'-6"			3'-11"	22'-8"	3'-11"		2'-10"	3'-4"	29'-4"
A13			30'-3"	↓		2'-9"	24'-9"	2'-9"		1'-5"	2'-4"	29'-5"
A14	↓		30'-0"	22		1'-7"	26'-10"	1'-7"		0'-10"	1'-4"	29'-6"
A15	2		29'-6"	St.								
A16	36		32'-9"	19		7'-1"	25'-8"			3'-9"	6'-0"	31'-8"
A17	4		32'-6"	↓		5'-10"	26'-8"			3'-1"	5'-0"	31'-8"
A18	↓		32'-3"			4'-9"	27'-6"			2'-6"	4'-1"	31'-7"
A19			32'-0"			3'-7"	28'-5"			1'-11"	3'-1"	31'-6"
A20			32'-0"	↓		2'-6"	29'-6			1'-4"	2'-2"	31'-8"
A21	↓	↓	31'-9"	19		1'-5"	30'-4"			0'-9"	1'-2"	31'-6"
A22	4	7	31'-6"	St.								
A26	116	5	9'-6"	23		1'-0"	7'-4"	1'-3"		1'-1"	0'-8"	8'-0"
A27	56	↓	9'-6"	23		1'-0"	7'-4"	1'-3"		1'-1"	0'-8"	8'-0"
A28	6	↓	59'-0"	St.								
A29	6	5	29'-0"	↓								
A30	12	8	29'-0"									
A31	4	8	59'-0"									
A32	280	10	6'-0"	↓								
A33	48	8	6'-0"	St.								
C1	146	10	27'-0"	St.								
C2	134	↓	23'-9"	St.								
C3	98	↓	6'-6"	24		3'-6"	2'-0"	1'-0"		1'-0"	1'-9"	6'-3"
C4	4	10	6'-0"	St.								
C5	24	5	41'-0"	T1	0'-5"	14'-0E"	6'-0E"	14'-0E"	6'-0E"			
C6	26	5	33'-0"	↓	0'-5"	10'-0E"	6'-0E"	10'-0E"	6'-0E"			
C7	52	5	36'-9"	↓	0'-5"	13'-4E"	4'-6E"	13'-4E"	4'-6E"			
C8	24	4	15'-3"	T1	0'-4E"	5'-4E"	0'-10E"	5'-4E"	0'-10E"			
C9	416	↓	2'-3"	T5	0'-6"	1'-3"	0'-6"					
C10	208	↓	5'-3"	↓	0'-6"	4'-3"	0'-6"					
C11	104	↓	5'-6"	↓	0'-6"	4'-6"	0'-6"					
C12	156	4	2'-3"	T5	0'-6"	1'-3"	0'-6"					
C13	40	6	28'-0"	St.								
C14	48	8	22'-6"	St.								
C15	19	11	30'-0"	St.								
C16	48	6	16'-0"	T1	0'-6"	5'-6"	2'-3"	5'-6"	2'-3"			
D1	106	10	27'-0"	St.								
D2	134	↓	23'-9"	St.								
D3	98	↓	6'-6"	24		3'-6"	2'-0"	1'-0"		1'-0"	1'-9"	6'-3"
D4	4	10	6'-0"	St.								
D5	28	5	37'-0"	T1	0'-5"	12'-0E"	6'-0E"	12'-0E"	6'-0E"			
D6	28	5	31'-0"	↓	0'-5"	9'-0E"	6'-0E"	9'-0E"	6'-0E"			
D7	56	5	32'-9"	↓	0'-5"	11'-4E"	4'-6E"	11'-4E"	4'-6E"			
D8	28	4	13'-3"	T1	0'-4E"	5'-4E"	0'-10E"	5'-4E"	0'-10E"			
D9	312	↓	2'-3"	T5	0'-6"	1'-3"	0'-6"					
D10	208		4'-3"	↓	0'-6"	3'-3"	0'-6"					
D11	104	↓	4'-6"	↓	0'-6"	3'-6"	0'-6"					
D12	104	4	2'-3"	T5	0'-6"	1'-3"	0'-6"					

MARK	NO.	SIZE	LENGTH	TYPE	A	B	C	D	E	H	K	O
E1	66	10	27'-0"	St.								
E2	134	↓	23'-9"	St.								
E3	98	↓	6'-6"	24		3'-6"	2'-0"	1'-0"		1'-0"	1'-9"	6'-3"
E4	4	10	6'-0"	St.								
E5	28	5	33'-0"	T1	0'-5"	10'-0E"	6'-0E"	10'-0E"	6'-0E"			
E6	28	5	29'-0"	↓	0'-5"	8'-0E"	6'-0E"	8'-0E"	6'-0E"			
E7	56	5	28'-6"	↓	0'-5"	9'-4E"	4'-6E"	9'-4E"	4'-6E"			
E8	28	4	13'-3"	T1	0'-4E"	5'-4E"	0'-10E"	5'-4E"	0'-10E"			
E9	208	↓	2'-3"	T5	0'-6"	1'-3"	0'-6"					
E10	208	↓	3'-3"	↓	0'-6"	2'-3"	0'-6"					
E11	104	↓	3'-6"	↓	0'-6"	2'-6"	0'-6"					
E12	52	4	2'-3"	T5	0'-6"	1'-3"	0'-6"					
F1	26	10	27'-0"	St.								
F2	134	10	23'-9"	St.								
F3	98	10	6'-6"	24		3'-6"	2'-0"	1'-0"		1'-0"	1'-9"	6'-3"
F5	28	5	29'-0"	T1	0'-5"	8'-0E"	6'-0E"	8'-0E"	6'-0E"			
F6	28	5	27'-0"	↓	0'-5"	7'-0E"	6'-0E"	7'-0E"	6'-0E"			
F7	56	5	24'-6"	↓	0'-5"	7'-4E"	4'-6E"	7'-4E"	4'-6E"			
F8	28	4	13'-3"	T1	0'-4E"	5'-4E"	0'-10E"	5'-4E"	0'-10E"			
F9	104	↓	2'-3"	T5	0'-6"	1'-3"	0'-6"					
F10	208	↓	2'-3"	T5	0'-6"	1'-3"	0'-6"					
F11	104	4	2'-6"	T5	0'-6"	1'-6"	0'-6"					
F13	40	10	30'-0"	St.								
F14	4	8	30'-0"	St.								
F15	32	8	12'-0"	19		1'-0"	11'-0"			0'-9"	0'-9"	11'-9"
F16	20	5	6'-0"	St.								
F17	38	6	16'-0"	T1	0'-6"	3'-10"	5'-8"	3'-10"	5'-8"			
F18	4	6	19'-6"	T1	0'-6"	3'-10"	5'-5"	3'-10"	5'-5"			
F19	4	6	23'-6"	T1	0'-6"	3'-10"	7'-5"	3'-10"	7'-5"			
G1	14	10	37'-5"	20		6'-1"	31'-5"					
G2	90	10	31'-6"	St.								
G5	48	5	20'-6"	T1	0'-5"	5'-4E"	4'-6E"	5'-4E"	4'-6E"			
G6	48	5	22'-6"	T1	0'-5"	6'-0E"	4'-10E"	6'-0E"	4'-10E"			
G9	88	4	2'-3"	T5	0'-6"	1'-3"	0'-6"					
G10	176	4	2'-3"	T5	0'-6"	1'-3"	0'-6"					
G11	7	10	43'-0"	17		6'-0"	36'-6"	6'-0"				
G12	7	↓	40'-0"	17		2'-4"	35'-10"	2'-4"				
G13	8	↓	40'-0"	17		2'-0"	36'-6"	2'-0"				
G14	14	10	30'-0"	St.								
G15	9	8	28'-0"	↓								
G16	3	6	37'-6"	↓								
G17	4	6	6'-6"	↓								
G18	14	5	3'-0"	St.								
G19	24	↓	9'-0"	56	0'-6"	2'-5"	3'-6"	2'-5"				
G20	↓		14'-3"	↓	0'-6"	2'-5"	3'-6"	7'-9"				
G21			19'-0"	↓	0'-5"	7'-9"	3'-0"	7'-9"				
G22	↓		7'-0"	56	0'-5"	1'-7"	3'-4"	1'-7"				
G23	24		7'-9"	17		0'-10"	6'-5"	0'-10"				
G24	8		11'-3"	56	0'-8"	1'-7"	7'-1"	1'-7"				
G25	8		8'-5"	17		1'-1"	6'-5"	1'-1"				
G26	2		20'-6"	56	0'-9"	3'-2"	5'-0"	8'-2"				
G27	2		22'-0"	↓	0'-10"	8'-10"	3'-0"	8'-10"				
G28	4		25'-6"	↓	0'-8"	10'-0"	4'-6"	10'-0"				
G29	↓		27'-0"	↓	0'-8"	10'-9"	4'-6"	10'-9"				
G30			29'-0"	↓	0'-8"	11'-9"	4'-6"	11'-9"				
G31			25'-0"	↓	0'-8"	9'-9"	4'-6"	9'-9"				
G32			22'-0"	↓	0'-8"	8'-9"	4'-6"	8'-9"				
G33	↓	↓	20'-0"	↓	0'-9"	7'-2"	4'-6"	7'-2"				
G34	4	5	18'-6"	56	0'-9"	6'-5"	4'-6"	6'-5"				
G35	12	11	19'-6"	22		1'-9"	16'-0"	1'-9"		1'-3"	1'-3"	18'-6"
G36	12	6	15'-6"	22		1'-9"	12'-0"	1'-9"		1'-3"	1'-3"	14'-6"
G37	12	6	11'-6"	22		1'-9"	8'-0"	1'-9"		1'-3"	1'-5"	10'-6"

BAR BENDS

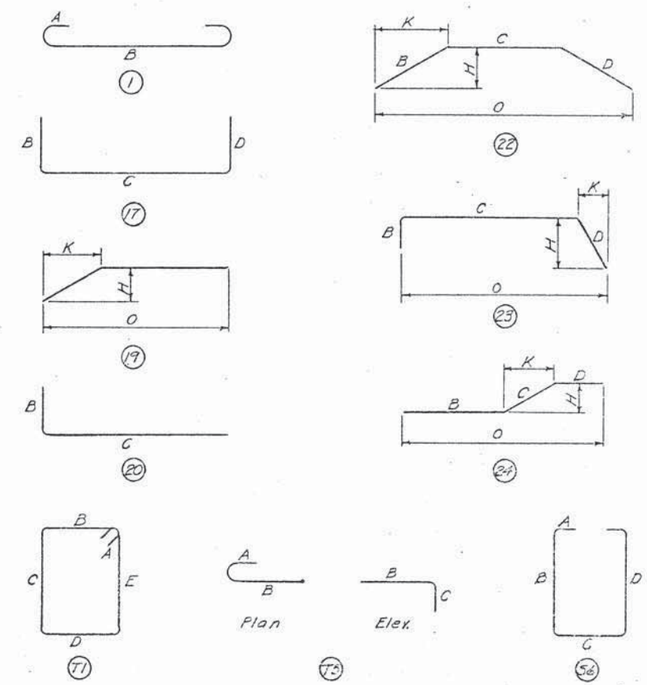

All dimensions are out to out of bar.
Figures in circles show types.

ESTIMATED QUANTITIES			
ITEM		UNIT	QUANTITIES
Class "A" Concrete		Cu.Yd.	1614.9
Reinforcing Steel		Lb.	212,250
Driving Steel	Actual Length	Lin.Ft.	408 Est. = 9400
Bearing Piles	Test Pile	Each	None
14 BP 102	Pile Splices	Each	* None
Structure Excavation		Cu.Yd.	400

* See Sheet No. 8

ORIGINAL CONSTRUCTION PLANS

DETAILS OF PIER NO. 14
FOR
4583'-0" BRIDGE OVER OAHE RESERVOIR
26'-0" ROADWAY
STA. 97 + 97.25 TO 143 + 80.25 WAR 161-2
ON US HWY. NO. 212 DEWEY-POTTER COUNTIES
STR. NO. 54-056-158 SOUTH DAKOTA H20-44
DEPARTMENT OF HIGHWAYS
MAY 1956

DESIGNED BY	DRAWN BY	CHECKED BY	APPROVED
ASF	BZR	F.K.	R. K. Sewer BRIDGE ENGINEER