Section F: Surfacing Plans

STATE OF SOUTH DAKOTA	PROJECT	SHEET	TOTAL SHEETS
	P 0034(143)44	F1	F13

Plotting Date: 11/20/2013

INDEX OF SHEETS

F1	General Layout W/Index
F2 to F4	Estimate With General Notes & Tables
F5 to F7	Typical Sections
F8 to F9	Guardrail Surfacing Layouts
F10 to F11	Structure Profiles
F12 to F13	Standard Plates

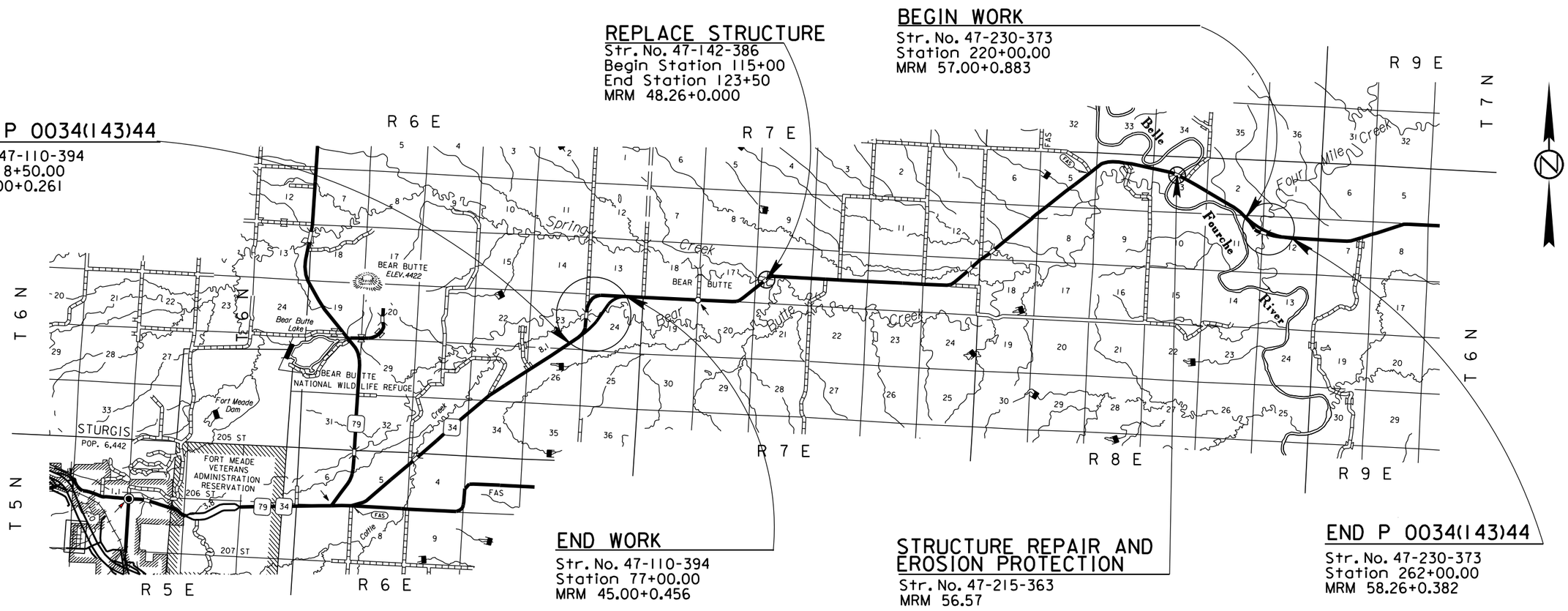

PLOT SCALE - 1:200

PLOT NAME - 1

FILE - ...\PRJ\MEAD02AB\02AB_TITLEF.DGN

PLOTTED FROM - TRPR15123

SECTION F – ESTIMATE OF QUANTITIES

Bid Item Number	Item	Quantity	Unit
120E6200	Water for Granular Material	405.2	MGal
260E1010	Base Course	16,696.4	Ton
260E1030	Base Course, Salvaged	17,262.8	Ton
330E0010	MC-70 Asphalt for Prime	22.6	Ton
330E0100	SS-1h or CSS-1h Asphalt for Tack	27.5	Ton
330E0210	SS-1h or CSS-1h Asphalt for Flush Seal	10.6	Ton
330E1000	Blotting Sand for Prime	53.1	Ton
330E2000	Sand for Flush Seal	114.4	Ton
332E0010	Cold Milling Asphalt Concrete	808	SqYd
360E0020	AE150S Asphalt for Surface Treatment	5.2	Ton
360E1050	Type 3 Cover Aggregate	69.3	Ton

Alternate A

Bid Item Number	Item	Quantity	Unit
320E0007	PG 64-28 Asphalt Binder	947.8	Ton
320E1050	Class E Asphalt Concrete	16,335.5	Ton

Alternate B

Bid Item Number	Item	Quantity	Unit
320E0007	PG 64-28 Asphalt Binder	838.9	Ton
320E1050	Class E Asphalt Concrete	16,775.5	Ton

SURFACING THICKNESS DIMENSIONS

Plans quantity will be applied though the thickness may vary from that shown on the plans.

At those locations where material must be placed to achieve a required elevation, plans quantity may be varied to achieve the required elevation.

SAWING IN EXISTING SURFACING

Where new Portland Cement Concrete Pavement (PCCP) or new asphalt concrete is placed adjacent to existing asphalt concrete or PCCP, the existing pavement shall be sawed full depth to a true line with a vertical face. No separate payment shall be made for sawing.

SALVAGED MATERIAL

The quantities of salvaged asphalt mix and granular base material and cold milled material may vary from the plans. The Contractor will be required to use all the salvaged material on this project by decreasing or increasing the quantity of Base Course, as necessary, or as directed by the Engineer.

No adjustment in the contract prices bid will be allowed as a result of a variation in quantities of Base Course, Salvaged or Base Course.

BASE COURSE, SALVAGED

The Base Course, Salvaged shall be obtained from the stockpiles provided by the Contractor from the asphalt mix and granular base material and cold milled material salvaged on this project and may be used without further testing after all requirements of Salvage and Stockpile Asphalt Mix and Granular Material have been met.

Base Course, Salvaged taken from stockpile sites shall be run over a 1 1/2 inch screen prior to placement.

MILLING TO CENTERLINE PROFILE

The Contractor shall set a string line to control the asphalt concrete cold milling. Before the milling work may begin, a string line shall be set to positively control the profile grade, superelevation, and the depth of milling. The Contractor shall develop and set the string line using milling hubs prior to beginning cold milling operations. The hubs shall be placed outside the edge of roadway at an offset distance that will be determined by the Contractor. The hubs shall be graded to the bottom of the new asphalt concrete surfacing at centerline. Any additional staking that the Contractor needs shall be set by the Contractor at no cost to the Department. The existing asphalt concrete shall be milled to within ± 0.04 foot of the elevation needed in order that the final surfacing profile matches the approved centerline profile. The grade to which the existing asphalt concrete shall be milled may extend into the granular material beneath the existing asphalt concrete.

An estimated 75.3 tons (39.8 Cubic Yards) of asphalt mix and granular base material shall be salvaged from the existing highway section from Sta.200+48 to Sta. 201+30 and from Sta. 205+60.8 to Sta. 206+80.8 at Structure #47-215-363. The milling quantities for the project are based on the vertical profile provided in these plans.

TABLE OF COLD MILLING ASPHALT CONCRETE

Location	Area
	SqYd
Structure # 47-215-363	
Sta. 200+48 to 201+30	328
Sta. 205+60.8 to 206+80.8	480
Total:	808

CLASS E ASPHALT CONCRETE

Mineral Aggregate for Class E Asphalt Concrete – Alternate A shall conform to the requirements for Class E, Type 1.

Mineral Aggregate for Class E Asphalt Concrete – Alternate B shall consist of a minimum of 80 percent crushed limestone ledgerock and shall conform to the requirements for Class E, Type 1.

All other requirements for Class E shall apply.

RATES OF MATERIALS

The Estimate of Surfacing Quantities is based on the following quantities of materials per station.

SD 34
Sta. 8+50 to 28+00
Sta. 69+00 to 77+00
*Sta. 117+00 to 120+75
*Sta. 220+00 to 231+00
*Sta. 247+00 to 262+00

* MC-70 Asphalt for Prime and Blotting Sand for Prime will not be applied to these locations.

BASE COURSE, SALVAGED

Salvaged Material 268.33 tons.

Water for Granular Material at the rate of 3.22 M. Gallons.

MC-70 Asphalt for Prime at the Rate of 0.58 ton applied 44 feet wide (Rate = 0.30 gallon per square yard).

Blotting Sand for Prime at the rate of 1.33 tons applied 24 feet wide (Rate = 10 lbs. per square yard).

CLASS E ASPHALT CONCRETE – 1st Lift

	Alternate A	Alternate B
Crushed Aggregate	47.64 Tons	49.34 Tons
PG 64-28 Asphalt Binder	2.93 Tons	2.60 Tons
Total Mix	50.57 Tons	51.94 Tons

The exact proportions of this material will be determined on construction.

SS-1h or CSS-1h Asphalt for Tack at the rate of 0.10 tons applied 43 feet wide (Rate = 0.05 gallon per square yard).

CLASS E ASPHALT CONCRETE – 2nd Lift

	Alternate A	Alternate B
Crushed Aggregate	45.31 Tons	46.93 Tons
PG 64-28 Asphalt Binder	2.79 Tons	2.47 Tons
Total Mix	48.10 Tons	49.40 Tons

The exact proportions of this material will be determined on construction.

SS-1h or CSS-1h Asphalt for Tack at the rate of 0.10 tons applied 41 feet wide (Rate = 0.05 gallon per square yard).

CLASS E ASPHALT CONCRETE – 3rd Lift

	Alternate A	Alternate B
Crushed Aggregate	42.99 Tons	44.52 Tons
PG 64-28 Asphalt Binder	2.65 Tons	2.34 Tons
Total Mix	45.64 Tons	46.86 Tons

The exact proportions of this material will be determined on construction.

SS-1h or CSS-1h Asphalt for Tack at the rate of 0.09 tons applied 39 feet wide (Rate = 0.05 gallon per square yard).

SS-1h or CSS-1h Asphalt for Flush Seal at the rate of 0.09 ton applied 38 feet wide (Rate = 0.05 gallon per square yard).

Sand for Flush Seal at the rate of 0.98 ton applied 22 feet wide (Rate = 8.0 lbs. per square yard).

SD 34
Sta. 28+00 to 69+00
Sta. 231+00 to 247+00

BASE COURSE

Crushed Aggregate 268.33 tons.

Water for Granular Material at the rate of 3.22 M. Gallons.

CLASS E ASPHALT CONCRETE – 1st Lift

	Alternate A	Alternate B
Crushed Aggregate	47.64 Tons	49.34 Tons
PG 64-28 Asphalt Binder	2.93 Tons	2.60 Tons
Total Mix	50.57 Tons	51.94 Tons

The exact proportions of this material will be determined on construction.

CLASS E ASPHALT CONCRETE – 2nd Lift

	Alternate A	Alternate B
Crushed Aggregate	45.31 Tons	46.93 Tons
PG 64-28 Asphalt Binder	2.79 Tons	2.47 Tons
Total Mix	48.10 Tons	49.40 Tons

The exact proportions of this material will be determined on construction.

SS-1h or CSS-1h Asphalt for Tack at the rate of 0.10 tons applied 41 feet wide (Rate = 0.05 gallon per square yard).

CLASS E ASPHALT CONCRETE – 3rd Lift

	Alternate A	Alternate B
Crushed Aggregate	42.99 Tons	44.52 Tons
PG 64-28 Asphalt Binder	2.65 Tons	2.34 Tons
Total Mix	45.64 Tons	46.86 Tons

The exact proportions of this material will be determined on construction.

SS-1h or CSS-1h Asphalt for Tack at the rate of 0.09 tons applied 39 feet wide (Rate = 0.05 gallon per square yard).

SS-1h or CSS-1h Asphalt for Flush Seal at the rate of 0.09 ton applied 38 feet wide (Rate = 0.05 gallon per square yard).

Sand for Flush Seal at the rate of 0.98 ton applied 22 feet wide (Rate = 8.0 lbs. per square yard).

Traffic Diversion
MRM 48.26 – Sta. 0+00 to 12+99.71

BASE COURSE

Crushed Aggregate 60.67 tons.

Water for Granular Material at the rate of 0.73 M. Gallons.

MC-70 Asphalt for Prime at the Rate of 0.34 ton applied 26 feet wide (Rate = 0.30 gallon per square yard).

Blotting Sand for Prime at the rate of 1.33 tons applied 24 feet wide (Rate = 10 lbs. per square yard).

ASPHALT SURFACE TREATMENT

Asphalt for Surface Treatment AE 150S at the rate of 0.40 tons applied 24 feet wide (Rate = 0.35 gallon per square yard).

Cover Aggregate at the rate of 5.33 tons applied 24 feet wide (Rate = 40 lbs. per square yard).

TABLE OF ADDITIONAL QUANTITIES

Location-Description	Water for Granular Material	Base Course	Base Course, Salvaged	CLASS E Asphalt Concrete (1st / 2nd Lift) ALTERNATE A	PG 64-28 Asphalt Binder (1st / 2nd / 3rd Lift) ALTERNATE A	CLASS E Asphalt Concrete (1st / 2nd Lift) ALTERNATE B	PG 64-28 Asphalt Binder (1st / 2nd / 3rd Lift) ALTERNATE B	MC-70 Asphalt for Prime	SS-1h or CSS-1h Asphalt for Tack (2nd / 3rd Lift)	SS-1h or CSS-1h Asphalt for Flush Seal	Sand for Flush Seal
	Mgal		Ton	Ton	Ton	Ton	Ton	Ton	Ton	Ton	Ton
Intersecting Roads											
MRM 44.85 at 24+85 R	2.7		234.5								
MRM 44.85 at 46+50 L	21.6	1,326.8	525.0	138.5 / 122.5	8.0 / 7.1	142.3 / 125.8	7.1 / 6.3		0.3 / 0.3	0.3	3.7
Entrance											
MRM 44.85 at 33+17 L	2.7		233.1								
Field Entrances – 11	5.5		495.0								
Mailbox turnout	0.1		6.7	1.4 / 1.4 / 1.4	0.1 / 0.1 / 0.1	1.4 / 1.4 / 1.4	0.1 / 0.1 / 0.1				
Structure #47-215-363											
Sta. 200+48 to 201+30				43.9	2.5	45.0	2.2				1.4
Sta. 205+60.8 to 206+80.8				47.2	2.9	48.2	2.5				1.8
Guardrail											
MRM 44.85 Str. # 47-110-394	4.4		368.5	64.9	3.8	66.7	3.3	0.7	0.1	0.1	
MRM 48.26 Str. # 47-142-386	3.1		259.6	45.7	2.7	47.0	2.4	0.5	0.1	0.1	
MRM 56.57 Str. # 47-215-363	3.6		302.0	45.6	2.7	46.8	2.3	0.5	0.1	0.1	
TOTAL	43.7	1,326.8	2,424.4	512.5	30.0	526.0	26.4	1.7	0.9	0.6	6.9

SUMMARY OF CLASS E ASPHALT CONCRETE COMPACTION

Location	With Specified Compaction (1st / 2nd / 3rd Lift) ALTERNATE A	Without Specified Compaction ALTERNATE A	With Specified Compaction (1st / 2nd Lift) ALTERNATE B	Without Specified Compaction ALTERNATE B
	Ton	Ton	Ton	Ton
Mainline – SD 34				
Sta. 8+50 to Sta. 77+00 (36' mainline)	3,329.6 / 3,167.0 / 3,004.9	-- / -- / --	3,419.7 / 3,252.5 / 3,085.3	-- / -- / --
Sta. 117+00 to Sta. 120+75	91.3 / 86.8 / 82.4	-- / -- / --	93.8 / 89.2 / 84.6	-- / -- / --
Sta. 220+00 to Sta. 262+00	2,124.0/ 2,020.2 / 1,916.8	-- / -- / --	2,181.4 / 2,074.8 / 1,968.2	-- / -- / --
MRM 44.85 Intersecting Rd at 46+50 L	-- / --	138.5 / 122.5	-- / --	142.3 / 125.8
Mailbox turnout	-- / -- / --	1.4 / 1.4 / 1.4	-- / -- / --	1.4 / 1.4 / 1.4
Guardrail surface widening	--	156.2	--	160.5
Structure #47-215-363	--	91.1	--	93.2
TOTAL	15,823.0	512.5	16,249.5	526.0

TYPICAL INPLACE SURFACING SECTIONS

STATE OF SOUTH DAKOTA	PROJECT	SHEET	TOTAL SHEETS
	P 0034(143)44	F5	F13

Plotting Date: 11/20/2013

Salvage & Stockpile Asphalt Mix and Granuler Base Material

Sta. 8+50 to Sta. 77+00

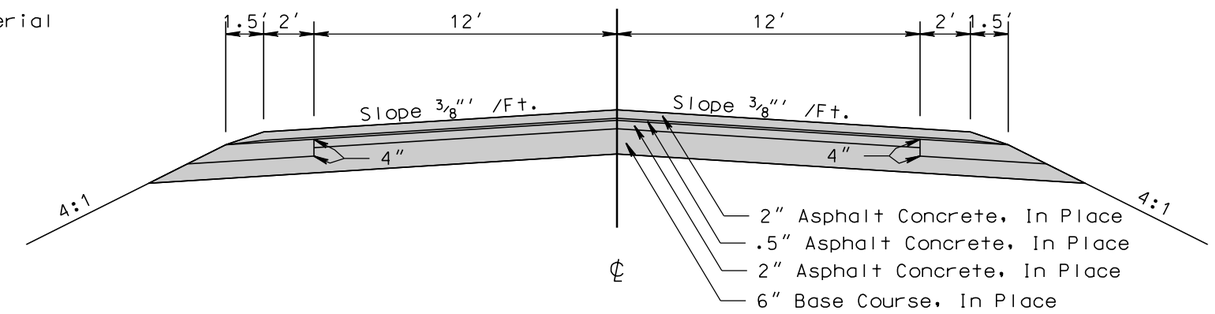

Sta. 117+00 to Sta. 120+75

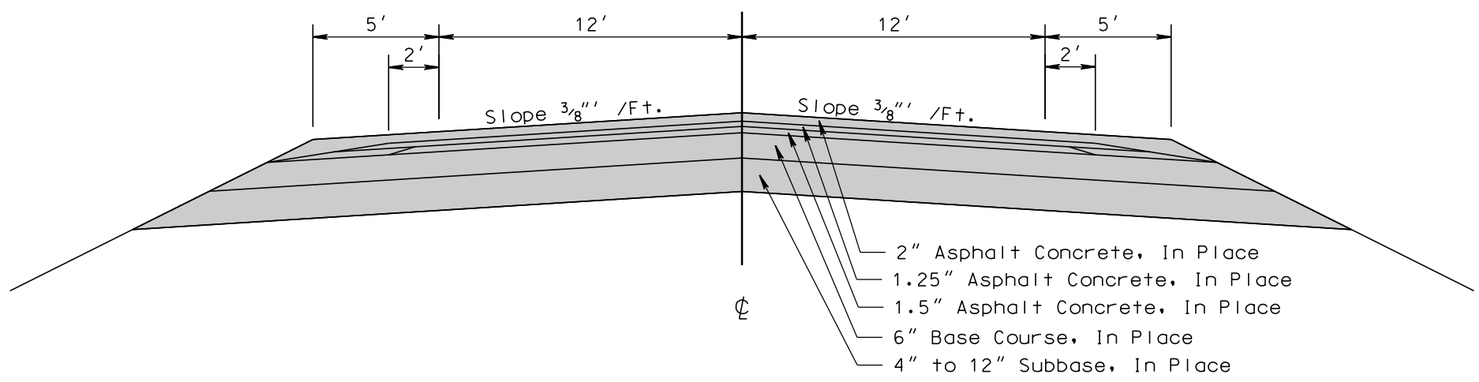

Sta. 220+00 to Sta. 262+00

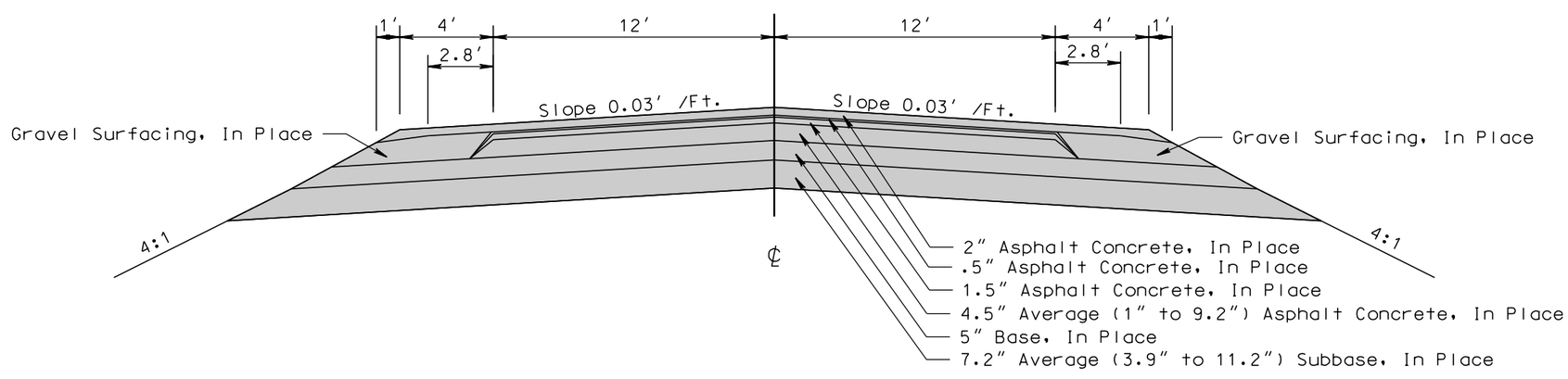

PLOT SCALE - 1:6

PLOTTED FROM - TRPR15123

PLOT NAME - 2

FILE - ...\WEAD02AB\TYPICAL SECTION.DGN

TYPICAL SURFACING SECTIONS

SD34

Sta. 8+50 to Sta. 28+00
Sta. 69+00 to Sta. 77+00
Sta. 117+00 to Sta. 120+75
Sta. 220+00 to Sta. 231+00
Sta. 247+00 to Sta. 262+00

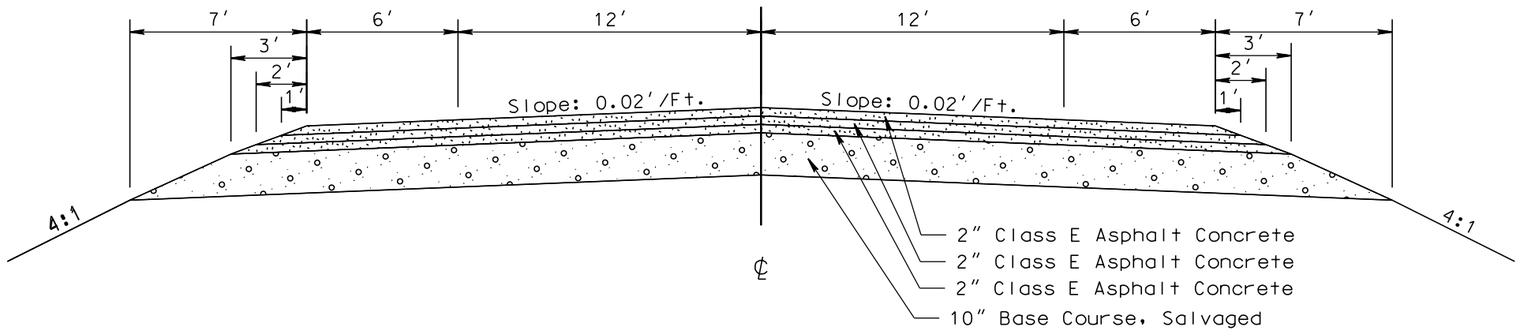

SD34

Sta. 28+00 to Sta. 69+00
Sta. 231+00 to Sta. 247+00

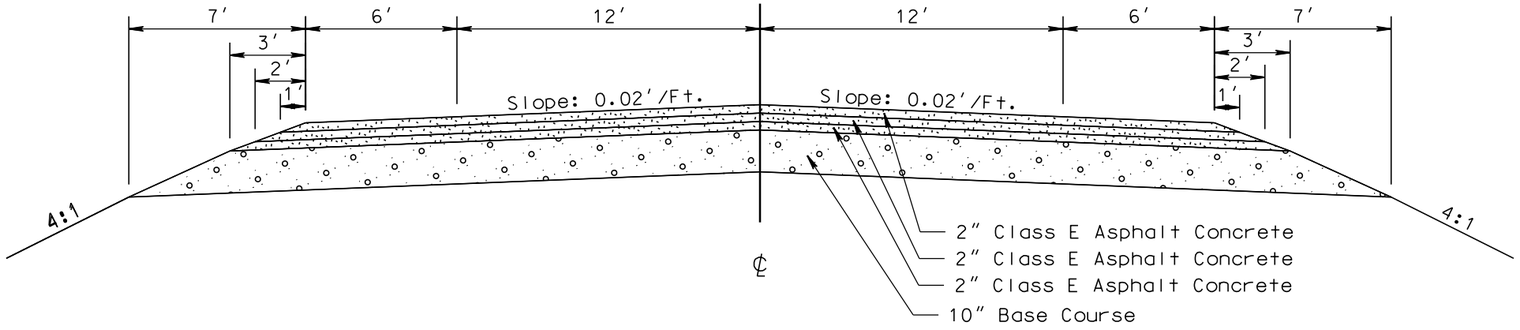

Intersecting Roads

MRM 44.85 : Intersecting Road at Sta. 46+50 Lt.
Sta. 0+18 to Sta. 4+00

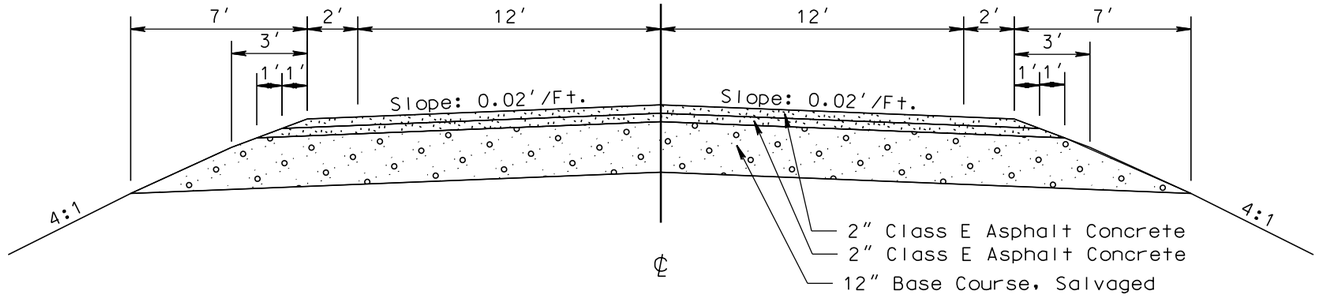

PLOT SCALE - 1:6
PLOT NAME - 3
FILE - ...\MEAD02AB\TYPICAL SECTION.DGN
PLOTTED FROM - TRPR15123

TYPICAL SURFACING SECTIONS

Intersecting Roads

MRM 44.85 : Intersecting Road at Sta. 24+85 Rt.
Sta. 0+18 to Sta. 3+53

MRM 44.85 : Intersecting Road at Sta. 46+50 Lt.
Sta. 4+50 to Sta. 16+50

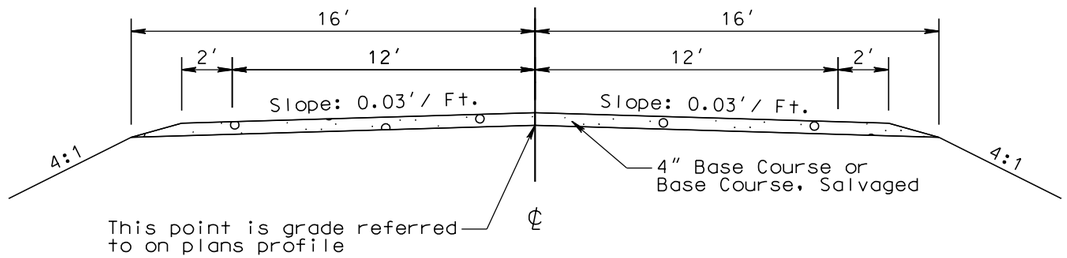

Intersecting Roads

MRM 44.85 : Entrance at Sta. 33+17 Lt.
Sta. 0+18 to Sta. 4+02

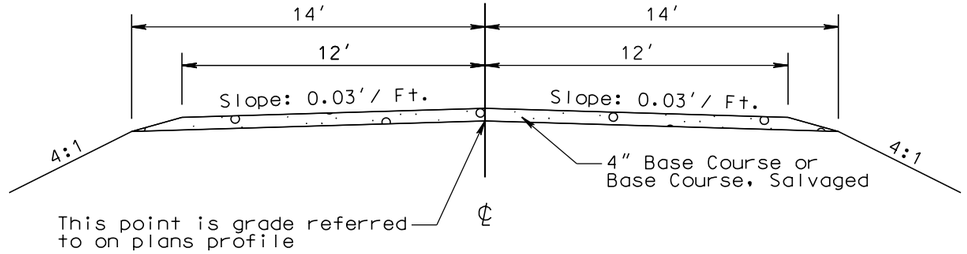

Traffic Diversions

MRM 48.26 : Sta. 0+00 to Sta.12+99.71 Diversion
(Sta. 113+22.85 to Sta. 125+28.65 Mainline)

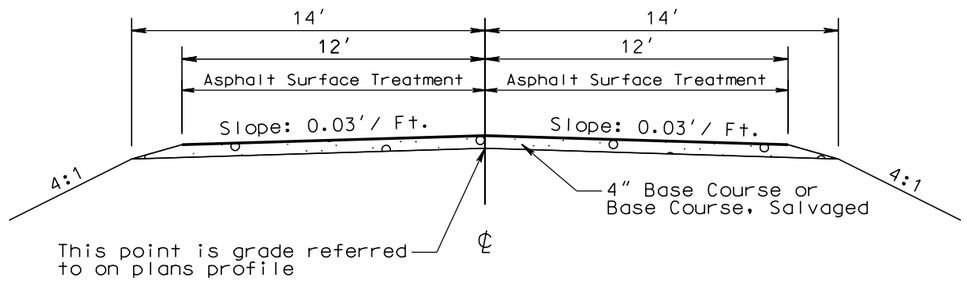

PLOT SCALE - 1:6
PLOTTED FROM - TRPR15123
PLOT NAME - 4
FILE - ...\MEAD02AB\TYPICAL SECTION.DGN

STATE OF SOUTH DAKOTA	PROJECT	SHEET	TOTAL SHEETS
	P 0034(143)44	F8	F13

Plotting Date: 11/20/2013

SURFACING LAYOUT

MRM 44.85

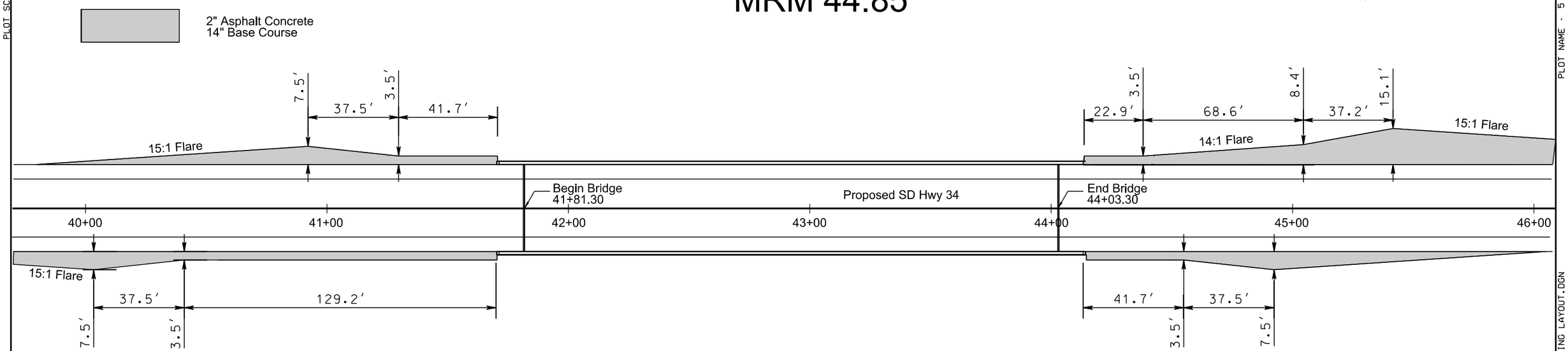

MRM 48.26

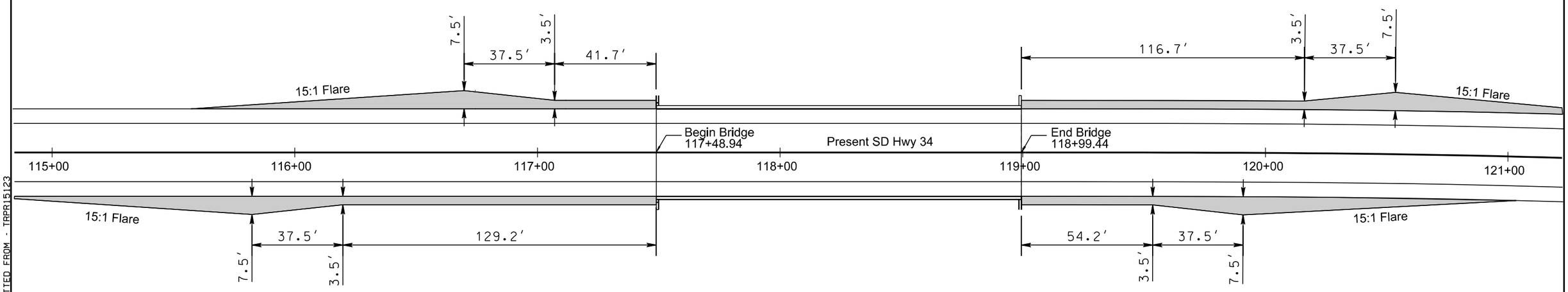

PLOT SCALE - 1:40

PLOT NAME - 5

FILE - ...\WEAD02AB\SURFACING LAYOUT.DGN

PLOTTED FROM - TRPR15123

STATE OF SOUTH DAKOTA	PROJECT	SHEET	TOTAL SHEETS
	P 0034(143)44	F9	F13

Plotting Date: 11/20/2013

SURFACING LAYOUT

MRM 56.57

2" Asphalt Concrete
14" Base Course

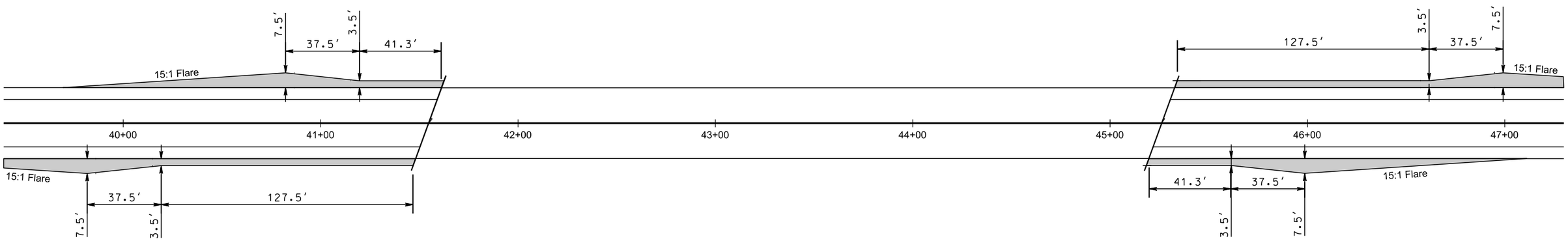

PLOT SCALE - 1:50

PLOT NAME - 6

FILE - ...\MEAD02AB\SURFACING LAYOUT.DGN

PLOTTED FROM - TRPR15123

STATE OF SOUTH DAKOTA	PROJECT	SHEET	TOTAL SHEETS
	P 0034(143)44	F10	F13

Plotting Date: 11/20/2013

Structure # 47-215-363 Profiles

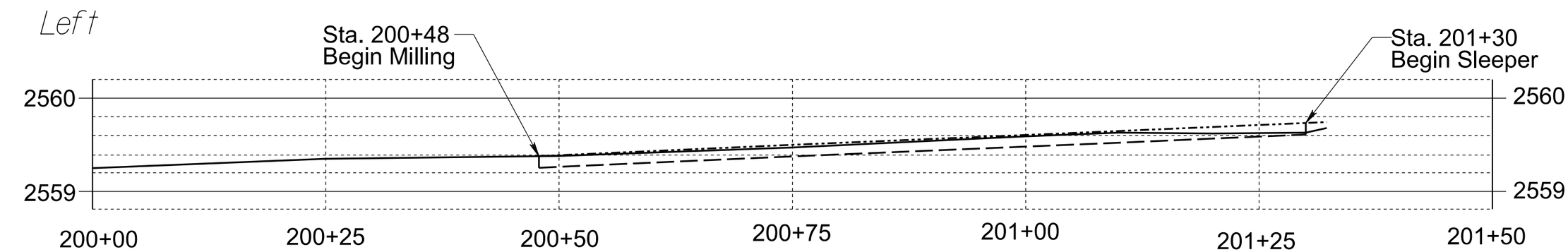

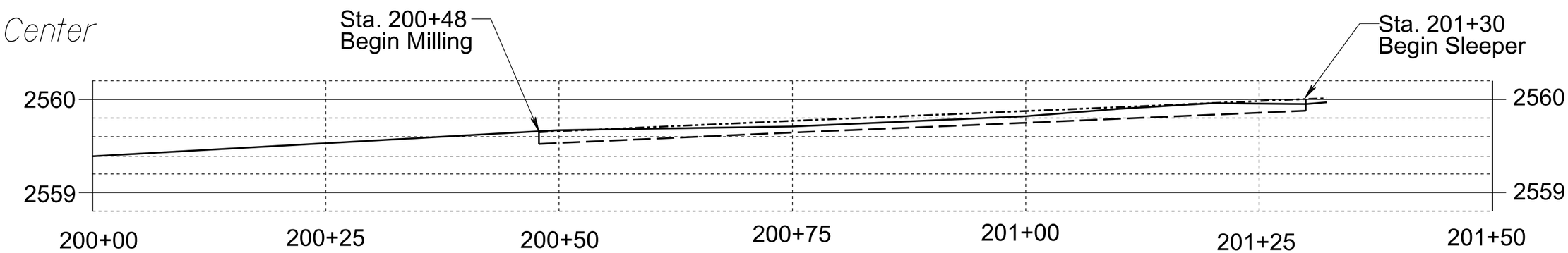

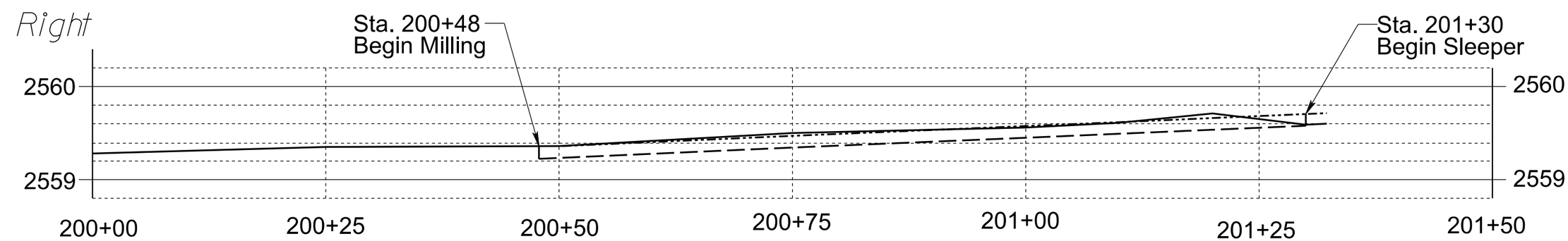

Existing Profile
Mill to Profile
Finished Profile

PLOT SCALE - 1:11.4583
PLOT NAME - 7
FILE - ...\STR 47-215-363\SURFACE2.DGN
PLOTTED FROM - TRPR15123

STATE OF SOUTH DAKOTA	PROJECT	SHEET	TOTAL SHEETS
	P 0034(143)44	F11	F13

Plotting Date: 11/20/2013

Structure # 47-215-363 Profiles

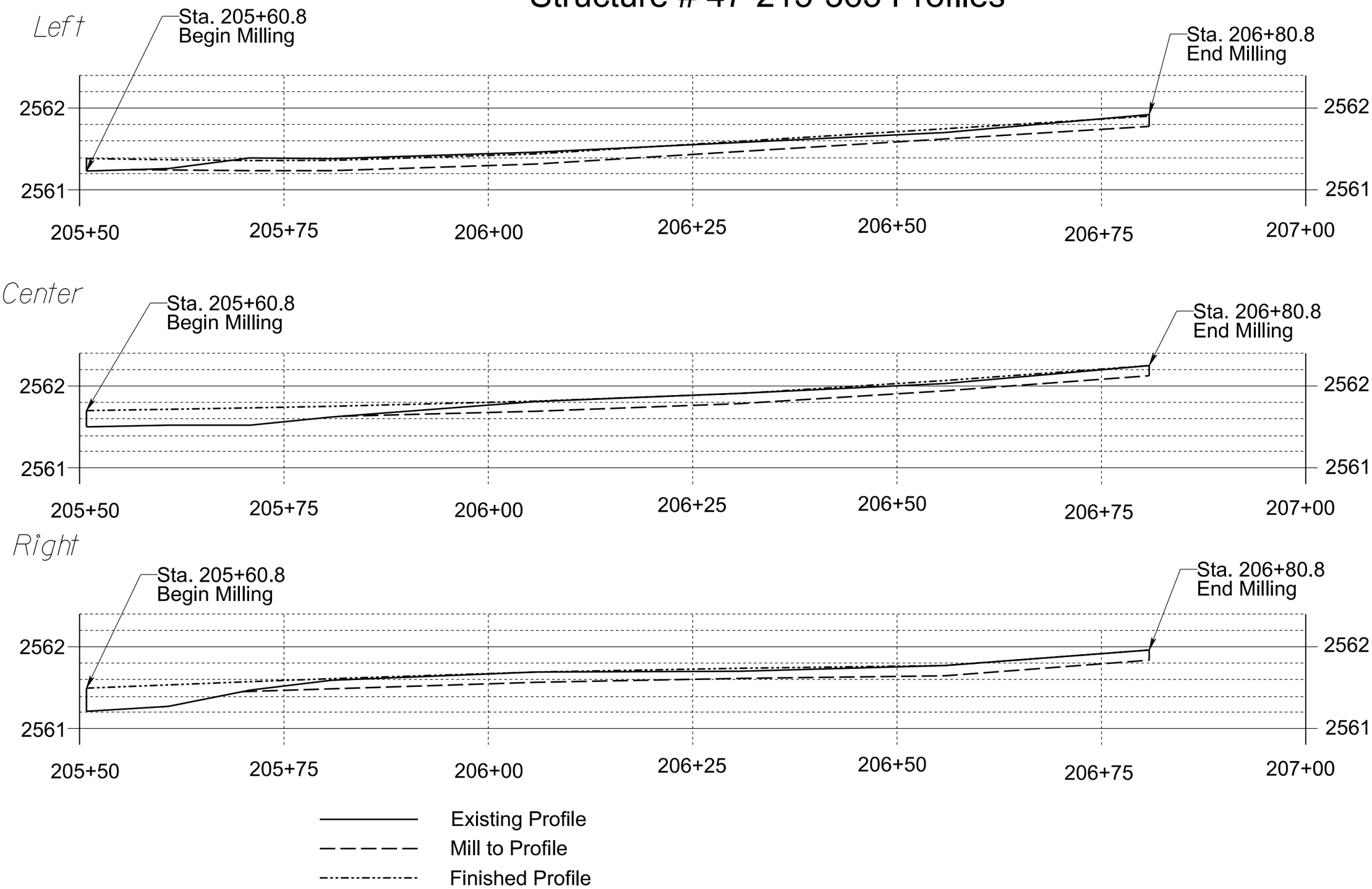

PLOT SCALE - 1:11.4583

PLOTTED FROM - TRPR15123

PLOT NAME - 8

FILE - ...\STR 47-215-363\SURFACE2.DGN

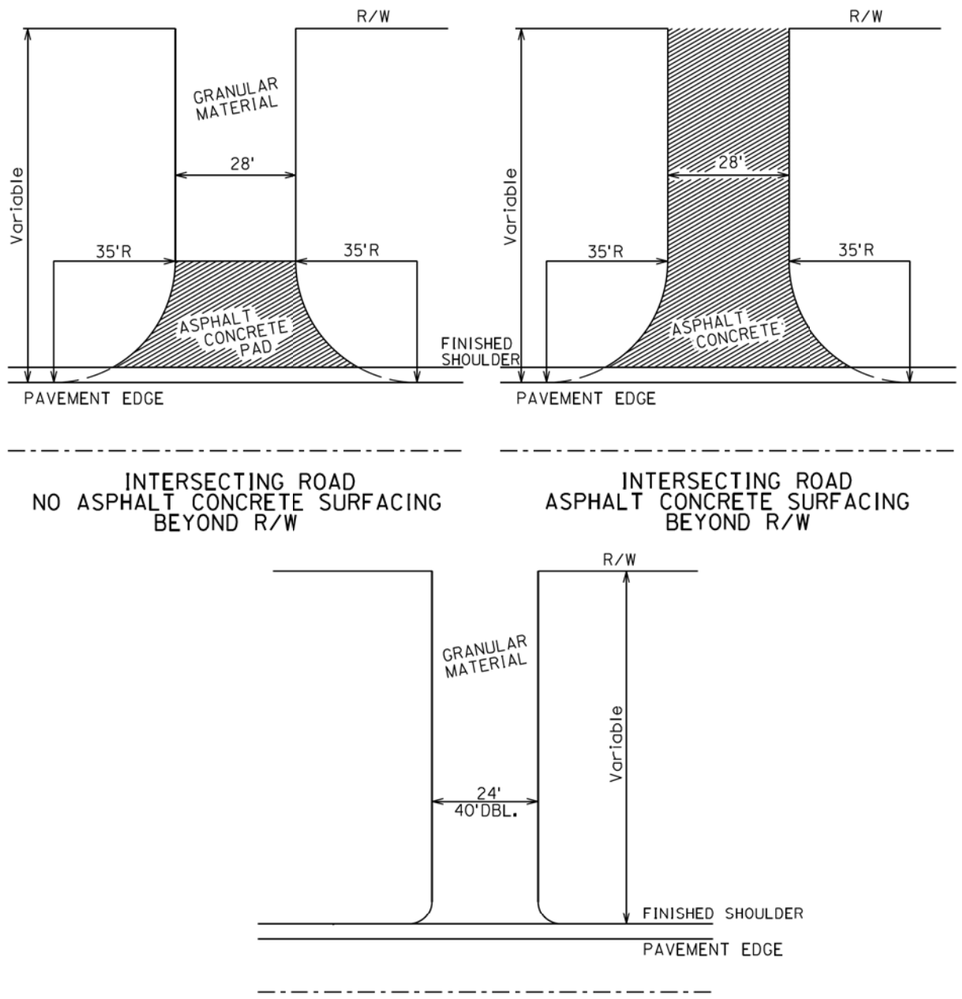

INTERSECTING ROAD
NO ASPHALT CONCRETE SURFACING
BEYOND R/W

INTERSECTING ROAD
ASPHALT CONCRETE SURFACING
BEYOND R/W

ENTRANCE

The surfacing details shown on this sheet are provided as a guide for surfacing these facilities. The precise construction limits for situations other than the standards shown will be determined by the Engineer, at the time of construction.

ROADWAY WITH SHOULDER

March 31, 2000

Published Date: 4th Qtr. 2013	SDDOT	SURFACING OF INTERSECTING ROADS AND ENTRANCES	PLATE NUMBER 320.04
			Sheet 1 of 1

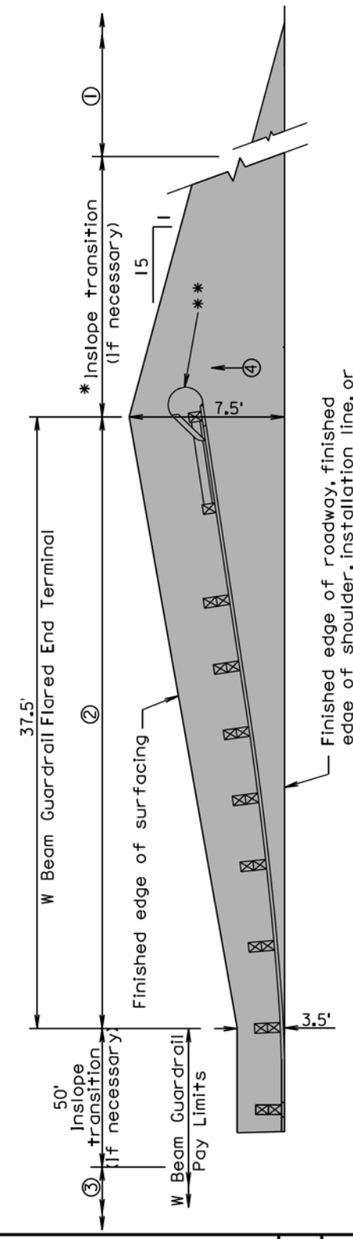

PLAN

2" Asphalt concrete surfacing with variable thickness granular material

① Same inslope as mainline inslope
② 4:1 inslope
③ 2:1 inslope or flatter, or inslope as specified in plans
④ Same slope as roadway cross slope

* The length of inslope transition varies with the amount of change between inslopes. The length of the transition shall change 100' for every whole number change in the inslope. For Example: If the inslope changes from a 5:1 to a 4:1 the length of the inslope transition would be 100'. If the inslope changes from a 6:1 to a 4:1 the length of the inslope transition would be 200'.

GENERAL NOTES:

The W beam guardrail flared end terminal shall be installed according to the manufacturer's installation instructions.

** An adhesive object marker shall be placed on the end section buffer or extruder after placement of the end section buffer or extruder. The adhesive object marker dimensions may be 16" x 16" or other variation due to the shape of the end section buffer or extruder. A minimum of 256 square inches of object marker reflective sheeting area is required. The reflective sheeting shall be fluorescent yellow super or very high intensity. All costs for furnishing and installing the adhesive object marker shall be incidental to various contract items.

Asphalt concrete shall be the same type used elsewhere on the project or shall be as specified in the plans. If asphalt concrete is not specified in the plans, the asphalt concrete shall conform to the SD Standard Specifications for "Asphalt Concrete Composite."

Granular material shall be the same type used elsewhere on the project or shall be as specified in the plans. If granular material type is not specified in the plans, the material shall conform to the SD Standard Specifications for "Base Course". The granular material shall be placed the same thickness as the mainline surfacing or as specified in the plans.

September 6, 2009

Published Date: 4th Qtr. 2013	SDDOT	EMBANKMENT AND SURFACING FOR W BEAM GUARDRAIL FLARED END TERMINAL	PLATE NUMBER 630.45
			Sheet 1 of 1

Plot Scale - 1:200
Plotted From - trpr15123
File - ...\s32004_s63045.dgn

STATE OF SOUTH DAKOTA	PROJECT	SHEET	TOTAL SHEETS
	P 0034(143)44	F13	F13

Plotting Date: 11/20/2013

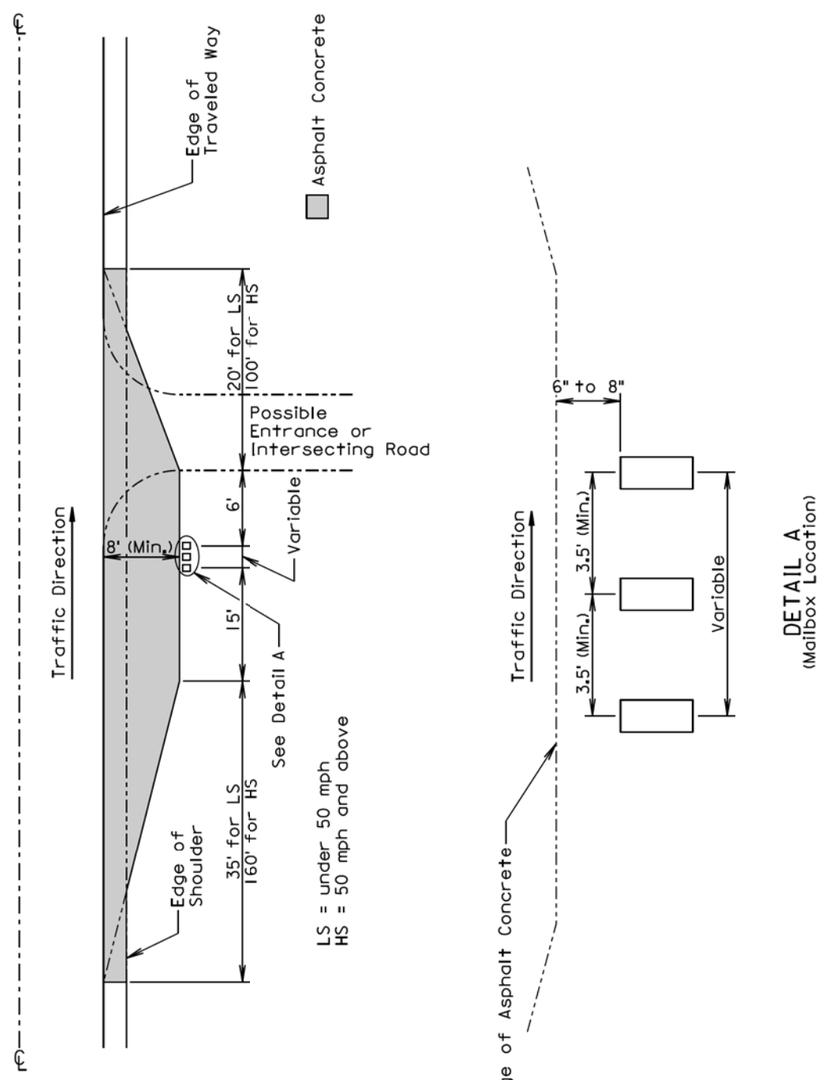

August 31, 2013

Published Date: 4th Qtr. 2013	SDDOT	MAILBOX TURNOUT	PLATE NUMBER 900.01
			Sheet 1 of 1

Plot Scale - 1:200

- Plotted From - trpr15123

File - ...\Standard Plates\ss90001.dgn