STATE OF SOUTH DAKOTA	PROJECT	SHEET NO.	TOTAL SHEETS
	BRO 8048(03)	1	76

FOR BIDDING PURPOSES ONLY

STATE OF SOUTH DAKOTA
DEPARTMENT OF TRANSPORTATION

PLANS FOR PROPOSED

PROJECT BRO 8048(03)
MELLETTE COUNTY

STRUCTURE AND APPROACH GRADING
STR. 48-102-010
PCN 02DY

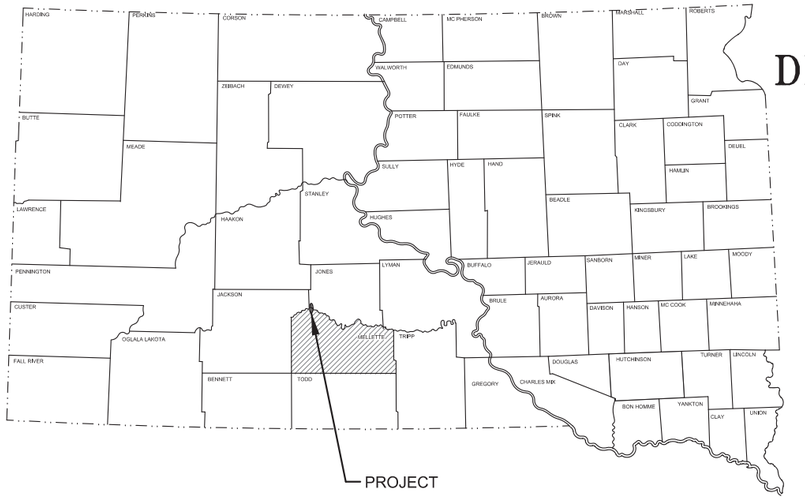

INDEX OF SHEETS

Sheet	1	TITLE SHEET AND LAYOUT MAP
Sheets	2-4	QUANTITIES & ENVIRONMENTAL COMMITMENTS
Sheets	5-7	GENERAL NOTES
Sheets	8-10	STORM WATER POLLUTION PREVENTION PLAN
Sheet	11	TYPICAL SECTIONS
Sheet	12	TRAFFIC CONTROL PLAN
Sheets	13-14	EROSION AND SEDIMENT CONTROL PLAN
Sheet	15	HORIZONTAL & VERTICAL CONTROL DATA
Sheets	16-20	PLAN & PROFILE SHEETS
Sheet	21	WHITE RIVER CHANNEL CLEANOUT AND SHAPING
Sheets	22-23	SPUR DIKE PLAN AND DETAILS
Sheets	24-31	STANDARD PLATES
Sheets	32-63	DETAILS FOR 321'-10 1/8" PRESTRESSED GIRDER BRIDGE
Sheets	64-70	CROSS SECTION SHEETS (EAST REDFISH/STAMFORD ROAD)
Sheet	71	CROSS SECTION SHEETS (WEST REDFISH ROAD)
Sheets	72-74	CROSS SECTION SHEETS (WHITE RIVER CHANNEL SHAPING)
Sheets	75-76	PIPE SECTIONS

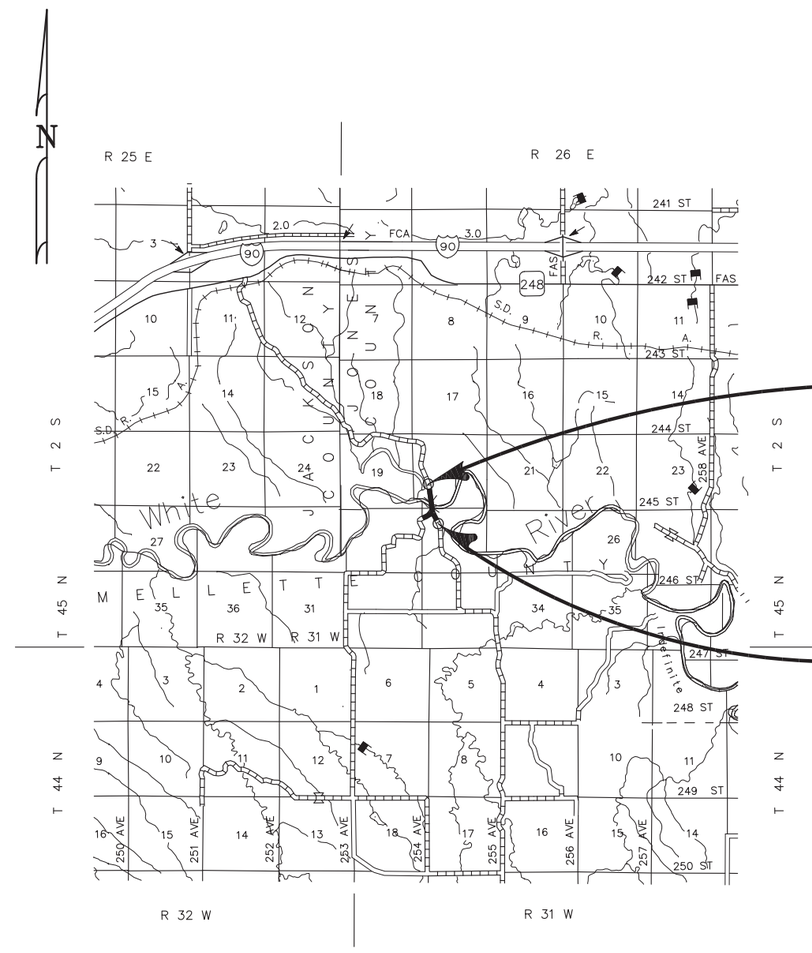

END PROJECT BRO 8048(03)
STAMFORD ROAD, JONES COUNTY STA. 33+50.00 ON PROJECT BRO 8048(03) N. 51549.36 E. 49854.09

BEGIN PROJECT BRO 8048(03)
EAST REDFISH ROAD, MELLETTE COUNTY STA. 17+00.00 ON PROJECT BRO 8048(08) N. 49932.96 E. 50133.34

REGISTERED PROFESSIONAL ENGINEER REG. NO. 8610 DANIEL K. JOHNSON SOUTH DAKOTA 1-13-2016

REGISTERED PROFESSIONAL ENGINEER REG. NO. 5152 GREGORY S. SLOWEY SOUTH DAKOTA 1/13/16

REGISTERED PROFESSIONAL ENGINEER REG. NO. 9061 LUCAS A. JOHNSON SOUTH DAKOTA 1-13-16

REGISTERED PROFESSIONAL ENGINEER REG. NO. 3935 STEVE WEILAND SOUTH DAKOTA 1/13/16

JOHNSON ENGINEERING COMPANY
CIVIL ENGINEERS | LAND SURVEYORS
Est. 1956

DESIGN DESIGNATION

ADT (2011)	85
ADT (2031)	115
DHV	16
d	50%
T DHV	5.1%
T*ADT	11.1%
DESIGN SPEED	40 MPH

STORM WATER PERMIT DATA

LATITUDE ———— 43° 51' 03" N
LONGITUDE ———— 101° 02' 22" W
PROJECT AREA ——— 8.92 ACRES
ACRES DISTURBED ——— 7.72 ACRES
MAJOR STREAM OR LAKE —- WHITE RIVER

GROSS LENGTH	1650.00	FEET	0.313	MILES
LENGTH OF EXCEPTIONS	NONE	FEET	NONE	MILES
NET LENGTH	1650.00	FEET	0.313	MILES

1

Rev. 2/17/2016 LAJ

ESTIMATE OF QUANTITIES

GRADING

BID ITEM NUMBER	ITEM	QUANTITY	UNIT
009E0010	Mobilization	Lump Sum	LS
009E3230	Grade Staking	0.313	Mile
009E3250	Miscellaneous Staking	0.313	Mile
009E3280	Slope Staking	0.313	Mile
009E3290	Structure Staking	1	Each
009E3300	Three Man Survey Crew	40	Hours
100E0100	Clearing	Lump Sum	LS
110E1693	Remove Erosion Control Wattle	35	Ft
110E1700	Remove Silt Fence	275	Ft
120E0010	Unclassified Excavation	7,844	CuYd
120E0600	Contractor Furnished Borrow	18,994	CuYd
120E2000	Undercutting	1,207	CuYd
120E3000	Placing Embankment	2,756	CuYd
120E6100	Water for Embankment	253.6	MGal
230E0010	Placing Topsoil	1,479	CuYd
250E0020	Incidental Work, Grading	Lump Sum	LS
450E0122	18” RCP Class 2, Furnish	82	Ft
450E0130	18” RCP, Install	82	Ft
450E0142	24” RCP Class 2, Furnish	158	Ft
450E0150	24” RCP, Install	158	Ft
450E2304	18” RCP Safety End, Furnish	2	Each
450E2307	18” RCP Safety End, Install	2	Each
450E2308	24” RCP Safety End, Furnish	4	Each
450E2311	24” RCP Safety End, Install	4	Each
450E4757	18” CMP 12 Gauge, Furnish	88	Ft
450E4760	18” CMP, Install	88	Ft
450E5406	18” CMP Safety End, Furnish	4	Each
450E5407	18” CMP Safety End, Install	4	Each
600E0200	Type II Field Laboratory	1	Each
610E1000	Reset Cattle Guard	1	Each
634E0110	Traffic Control Signs	165	SqFt
634E0120	Traffic Control, Miscellaneous	Lump Sum	LS
634E0280	Type 3 Barricade, 8’ Single Sided	9	Each
634E0285	Type 3 Barricade, 8’ Double Sided	3	Each
700E0310	Class C Riprap	4,014.6	Ton
720E1015	Bank and Channel Protection Gabion	13.5	CuYd
730E0200	Type A Permanent Seed Mixture	52	Lb
732E0100	Mulching	6	Ton
734E0102	Type 2 Erosion Control Blanket	1,946	SqYd
734E0154	12” Diameter Erosion Control Wattle	140	Ft
734E0510	Shaping for Erosion Control Blanket	680	Ft
734E0604	High Flow Silt Fence	1,087	Ft
734E0610	Mucking Silt Fence	75	CuYd
734E0620	Repair Silt Fence	275	Ft
734E0630	Floating Silt Curtain	540	Ft
831E0110	Type B Drainage Fabric	3,797	SqYd

STRUCTURE NO. 48-102-010

BID ITEM NUMBER	ITEM	QUANTITY	UNIT
250E0030	Incidental Work, Structure	Lump Sum	LS
260E3010	Gravel Surfacing	204	Ton
410E0030	Structural Steel, Miscellaneous	Lump Sum	LS
410E0700	Abutment Joint Drain	2	Each
410E1110	Laminated Elastomeric Bearing Pad	8	Each
410E2100	Finger Type Expansion Joint Assembly	2	Each
420E0100	Structure Excavation, Bridge	128	CuYd
430E0300	Granular Bridge End Backfill	1,089	CuYd
430E0400	Bridge End Backfill Underdrain Pipe	210	Ft
430E0500	Bridge End Backfill Excavation	10	CuYd
460E0030	Class A45 Concrete, Bridge Deck	331.2	CuYd
460E0050	Class A45 Concrete, Bridge	466.2	CuYd
465E0100	Class A45 Concrete, Drilled Shaft	254.0	CuYd
465E0200	Drilled Shaft Excavation	250.3	CuYd
465E0400	Crosshole Sonic Log (CSL) Test	2	Each
465E1110	110” Permanent Casing	34	Ft
470E0420	Type T101 Bridge Railing	675.7	Ft
480E0100	Reinforcing Steel	227,589	Lb
480E0518	No. 18 Rebar Splice	48	Each
510E0100	Extract Pile	16	Each
510E3361	HP 10x42 Steel Test Pile, Furnish and Drive	105	Ft
510E3365	HP 10x42 Steel Bearing Pile, Furnish and Drive	1,995	Ft
560E8054	54” Minnesota Shape Prestressed Concrete Beam	1,245	Ft
680E2500	Porous Backfill	65	Ton
700E0210	Class B Riprap	4,150.1	Ton
831E0110	Type B Drainage Fabric	4,774	SqYd

SPECIFICATIONS

Standard Specifications for Roads and Bridges 2015 Edition and Required Provisions, Supplemental Specifications, and/or Special Provisions as included in the Proposal.

ENVIRONMENTAL COMMITMENTS

An Environmental Commitment is a measure that SDDOT commits to implement in order to avoid, minimize, and/or mitigate a real or potential environmental impact. Environmental commitments to various agencies and the public have been made to secure approval of this project. An agency mentioned below with permitting authority can influence a project if perceived environmental impacts have not been adequately addressed. Unless otherwise designated, the Contractor’s primary contact regarding matters associated with these commitments will be the Project Engineer. These environmental commitments are not subject to change without prior written approval from the SDDOT Environmental Office. The environmental commitments associated with this project are as follows:

COMMITMENT B: FEDERALLY THREATENED, ENDANGERED, AND PROTECTED SPECIES

COMMITMENT B2: WHOOPING CRANE

The Whooping Crane is a spring and fall migratory bird in South Dakota that is about 5 feet tall and typically stops on wetlands, rivers, and agricultural lands along their migration route. An adult Whooping Crane is white with a red crown and a long, dark, pointed bill. Immature Whooping Cranes are cinnamon brown. While in flight, their long necks are kept straight and their long dark legs trail behind. Adult Whooping Cranes' black wing tips are visible during flight.

Action Taken/Required:

Harassment or other measures to cause the Whooping Crane to leave the site is a violation of the Endangered Species Act. If a Whooping Crane is sighted roosting in the vicinity of the project, borrow pit, or staging site associated with the project, cease construction activities in the affected area until the Whooping Crane departs and contact the Project Engineer. The Project Engineer will contact the Environmental Office so that the sighting can be reported to USFWS.

COMMITMENT C: WATER SOURCE

The Contractor shall not withdraw water with equipment previously used outside the State of South Dakota without prior approval from the SDDOT Environmental Office. Thoroughly wash all construction equipment before entering South Dakota to reduce the risk of invasive species introduction into the project vicinity.

The Contractor shall not withdraw water directly from streams of the James, Big Sioux, and Vermillion watersheds without prior approval from the SDDOT Environmental Office.

Action Taken/Required:

The Contractor shall obtain the necessary permits from the regulatory agencies such as the Department of Environment and Natural Resources (DENR) and the United States Army Corps of Engineers (COE) prior to executing water extraction activities.

REGISTERED PROFESSIONAL ENGINEER
REG. NO.
9061
LUCAS A.
JOHNSON
SOUTH DAKOTA
Lucas A Johnson
2-17-16

FOR BIDDING PURPOSES ONLY

COMMITMENT D: WATER QUALITY STANDARDS

COMMITMENT D1: SURFACE WATER QUALITY

White River is classified as a warm water semi-permanent fishery. Due to this classification special construction measures may have to be taken to ensure that the total suspended solids standard of 24,300 mg/L is not violated.

Action Taken/Required:

The Contractor is advised the South Dakota Surface Water Quality Standards, administered by the Department of Environment and Natural Resources (DENR), apply to this project. Special construction measures shall be taken to ensure the above standard(s) of the surface waters are maintained and protected.

COMMITMENT D2: SURFACE WATER DISCHARGE

White River is classified as a warm water semi-permanent fishery. Due to this classification special construction measures may have to be taken to ensure that the total suspended solids standard of 24,300 mg/L is not violated.

Action Taken/Required:

If construction dewatering is required, the Contractor shall obtain a Temporary Discharge Permit from the DENR and provide a copy to the Project Engineer. Contact the DENR Surface Water Program at 605-773-3351 to apply for a permit.

COMMITMENT E: STORM WATER

Construction activities constitute 1 acre or more of earth disturbance.

Action Taken/Required:

The DENR and the US Environmental Protection Agency (EPA) have issued separate general permits for the discharge of storm water runoff. The DENR permit applies to discharges on state land and the EPA permit applies to discharges on federal or reservation land. The Contractor is advised this project is regulated under the Phase II Storm Water Regulations and must receive coverage under the General Permit for Construction Activities. A Notice of Intent (NOI) will be submitted to DENR a minimum of 15 days prior to project start by the DOT Environmental Office. A letter must be received from DENR that acknowledges project coverage under this general permit before project start. The Contractor is advised that permit coverage may also be required by off-site activities, such as borrow and staging areas, which are the responsibility of the Contractor.

The Contractor shall adhere to the “Special Provision Regarding Storm Water Discharge to Waters of the United States within Indian Reservations”.

A major component of the storm water construction permits is development and implementation of a Storm Water Pollution Prevention Plan (SWPPP), which is a joint effort and responsibility of the SDDOT and the Contractor. Erosion control measures and best management practices will be implemented in accordance with the SWPPP. The SWPPP is a dynamic document and is to be available on-site at all times.

Information on storm water permits and SWPPPs are available on the following websites:

SDDOT:
http://sddot.com/transportation/highways/environmental/stormwater/Default.aspx

DENR: http://www.denr.sd.gov/des/sw/stormwater.aspx

EPA: http://cfpub.epa.gov/npdes/home.cfm?program_id=6

Contractor Certification Form:

The “Department of Environmental and Natural Resources – Contractor Certification Form” (SD EForm – 2110LDV1-ContractorCertification.pdf) shall be completed by the Contractor or their certified Erosion Control Supervisor after the award of the contract. Work may not begin on the project until this form is signed.

The form certifies under penalty of law that the Contractor understands and will comply with the terms and conditions of the Surface Water Discharge General Permit for Storm Water Discharges Associated with Construction Activities for the Project.

The online form can be found at:
http://denr.sd.gov/des/sw/eforms/E2110LDV1-ContractorCertification.pdf

COMMITMENT H: WASTE DISPOSAL SITE

The Contractor shall furnish a site(s) for the disposal of construction and/or demolition debris generated by this project.

Action Taken/Required:

Construction and/or demolition debris may not be disposed of within the State ROW.

The waste disposal site(s) shall be managed and reclaimed in accordance with the following from the General Permit for Highway, Road, and Railway Construction/Demolition Debris Disposal Under the South Dakota Waste Management Program issued by the Department of Environment and Natural Resources.

The waste disposal site(s) shall not be located in a wetland, within 200 feet of surface water, or in an area that adversely affects wildlife, recreation, aesthetic value of an area, or any threatened or endangered species, as approved by the Project Engineer.

If the waste disposal site(s) is located such that it is within view of any ROW, the following additional requirements shall apply:

1. Construction and/or demolition debris consisting of concrete, asphalt concrete, or other similar materials shall be buried in a trench completely separate from wood debris. The final cover over the construction and/or demolition debris shall consist of a minimum of 1 foot of soil capable of supporting vegetation. Waste disposal sites provided outside of the State ROW shall be seeded in accordance with Natural Resources Conservation Service recommendations. The seeding recommendations may be obtained through the appropriate County NRCS Office. The Contractor shall control the access to waste disposal sites not within the State ROW through the use of fences, gates, and placement of a sign or signs at the entrance to the site stating “No Dumping Allowed”.

2. Concrete and asphalt concrete debris may be stockpiled within view of the ROW for a period of time not to exceed the duration of the project. Prior to project completion, the waste shall be removed from view of the ROW or buried and the waste disposal site reclaimed as noted above.

The above requirements will not apply to waste disposal sites that are covered by an individual solid waste permit as specified in SDCL 34A-6-58, SDCL 34A-6-1.13, and ARSD 74:27:10:06.

Failure to comply with the requirements stated above may result in civil penalties in accordance with South Dakota Solid Waste Law, SDCL 34A-6-1.31.

All costs associated with furnishing waste disposal site(s), disposing of waste, maintaining control of access (fence, gates, and signs), and reclamation of the waste disposal site(s) shall be incidental to the various contract items.

FOR BIDDING PURPOSES ONLY

COMMITMENT I: HISTORICAL PRESERVATION OFFICE CLEARANCES

The SDDOT has obtained concurrence with the State Historical Preservation Office (SHPO or THPO) for all work included within the project limits and all designated option borrow sites provided within the plans.

Action Taken/Required:

All earth disturbing activities not designated within the plans require review of cultural resources impacts. This work includes, but is not limited to: staging areas, borrow sites, waste disposal sites, and all material processing sites.

The Contractor shall arrange and pay for a cultural resource survey and/or records search. The Contractor has the option to contact the state Archaeological Research Center (ARC) at 605-394-1936 or another qualified archaeologist, to obtain either a records search or a cultural resources survey. A record search might be sufficient for review; however, a cultural resources survey may need to be conducted by a qualified archaeologist.

The Contractor shall provide ARC with the following: a topographical map or aerial view on which the site is clearly outlined, site dimensions, project number, and PCN. If applicable, provide evidence that the site has been previously disturbed by farming, mining, or construction activities with a landowner statement that artifacts have not been found on the site.

The Contractor shall submit the records search or cultural resources survey report and if the location of the site is within the current geographical or historic boundaries of any South Dakota reservation to SDDOT Environmental Engineer, 700 East Broadway Avenue, Pierre, SD 57501-2586 (605-773-3180). SDDOT will submit the information to the appropriate SHPO/THPO. Allow **30 Days** from the date this information is submitted to the Environmental Engineer for SHPO/THPO review.

If evidence for cultural resources is uncovered during project construction activities, then such activities shall cease and the Project Engineer shall be immediately notified. The Project Engineer will contact the SDDOT Environmental Engineer in order to determine an appropriate course of action.

SHPO/THPO review does not relieve the Contractor of the responsibility for obtaining any additional permits and clearances for staging areas, borrow sites, waste disposal sites, or material processing sites that affect wetlands, threatened and endangered species, or waterways. The Contractor shall provide the required permits and clearances to the Project Engineer at the preconstruction meeting.

COMMITMENT J: CONSTRUCTION PRACTICES FOR TEMPORARY WORKS IN WATERWAYS OF THE U.S.

The Contractor is advised that special construction measures have to be taken to ensure that the waterways of the U.S. are not impacted.

Action Taken/Required:

No excavation shall be made below the ordinary high water elevation in waterways outside of caissons, cribs, cofferdams, steel piling, or sheeting; and the natural streambed shall not be disturbed unless specified by the plans and under the observation of the Project Engineer. Refer to the Table of U.S. Waterways to Protect for ordinary high water elevations.

All dredged or excavated materials shall be placed at a site above the ordinary high water elevation in a confined area (not classified as a wetland) that is a minimum of 50 feet away from concentrated flows of storm water, drainage courses, and inlets to prevent return of such material to the waterway.

The construction of temporary work platforms, crossings, or berms below the ordinary high water elevation will be allowed provided that all material placed below the ordinary high water elevation consists of Class B or larger riprap.

All temporary caissons, cribs, cofferdams, steel piling, sheeting, work platforms, crossings, and berms shall be removed with minimal disturbance to the streambed. Proper construction practices shall be used to minimize increases in suspended solids and turbidity in the waterway.

Bridge berms, wing dams, traffic diversions, channel reconstruction, grading, etc. shall be constructed in close conformity with the plans to ensure that the hydraulic capacity of the waterway is not changed.

Temporary waterway crossings required for the Contractors construction operations shall be constructed with an adequate drainage structure size and minimum fill height to reduce the potential for upstream flooding. The Contractor will be responsible for sizing the temporary drainage structure for these crossings.

If an on-site traffic diversion or construction crossing is used at Sta. 23+55, the temporary crossing will need to be designed so it will not increase the Q_{100} water surface elevation. The Contractor shall submit the proposed temporary crossing geometric layout and structure size at Sta. 23+55 to the Project Engineer during the project preconstruction meeting. This information shall be forwarded to the SDDOT Hydraulics Office for review. Construction of the temporary crossing is not allowed until approval of the proposal is obtained from the Hydraulics Office.

Table of U.S. Waterways to Protect

Station	Waterway	Ordinary High Water Elevation
23+55	White River	1941.4

COMMITMENT N: SECTION 404 PERMIT

The SDDOT has obtained a Section 404 Permit from the US Army Corps of Engineers for the permanent actions associated with this project.

Action Taken/Required:

The Contractor shall comply with all requirements contained in the Section 404 permit.

The Contractor shall also be responsible for obtaining a Section 404 permit for any dredge, excavation, or fill activities associated with staging areas, borrow sites, waste disposal sites, or material processing sites that affect wetlands or waters of the United States.

REGISTERED PROFESSIONAL ENGINEER
REG. NO.
9061
LUCAS A. JOHNSON
SOUTH DAKOTA
1-13-16

FOR BIDDING PURPOSES ONLY

Rev. 2/17/2016 LAJ

SEQUENCE OF OPERATIONS

The following sequence of operations will be followed unless an alternate sequence is submitted in writing to, and approved by, the Engineer at least two weeks prior to the requested change.

No construction activity may take place on landowner's property north of the White River prior to May 10th due to livestock activity.

The Contractor will be required to hold a public meeting two weeks prior to the start of any work on the project. The contractor will also contact and invite the Murdo Postal Master, Sherriff, and EMS of Jones and Mellette Counties. This meeting is to inform the public of the Contractors work schedule for the project and also to hear any concerns the public may have during construction. The Contractor will be responsible for scheduling, advertising and finding a location to hold the public meeting. The location, time and date of the meeting must be approved by the Engineer prior to scheduling of the public meeting.

1. Contractor shall give the County and State two weeks' notice before starting work.
2. Install construction signing as shown on plans and close roadway.
3. Install initial erosion control measures.
4. Remove and dispose of existing structure.
5. Install new bridge, riprap, grade roadway.
6. Install final erosion control measures.
7. Remove construction signing and open roadway.

UTILITIES

All Utilities within the limits of the proposed construction are to be adjusted by the owners unless otherwise indicated in the plans.

Mellette County will make arrangements with the Utility Companies and be responsible for the relocation or adjustment of utilities without Federal Participation.

The Contractor shall be aware that the existing utilities shown in the plans were surveyed prior to the design of this project and might have been relocated or replaced by a new utility facility prior to construction of this project, might be relocated or replaced by a new utility facility during the construction of this project, or might not require adjustment and may remain in its current location. The Contractor shall contact each utility owner and confirm the status of all existing and new utility facilities. The utility contact information is provided elsewhere in the plans or bidding documents.

UTILITIES OWNERSHIP

Sta. 17+00 to 33+50 – Rt.
"Underground Telephone Cable"
Golden West Telecommunications, (605) 279-2727

GENERAL MAINTENANCE OF TRAFFIC

Removing, relocating, covering, salvaging and resetting of existing traffic control devices, including delineation, shall be the responsibility of the Contractor. The Contractor shall coordinate with the County to determine which signs will be reset and to verify reset locations. Cost for this work shall be incidental to the contract unit prices for the various items unless otherwise specified in the plans. Any delineators and signs damaged or lost shall be replaced by the Contractor at no cost to the State or County.

Any damage to the vegetation, surfacing, embankment, delineators and existing signs resulting from such indiscriminate use shall be repaired and/or restored by the Contractor, at no expense to the State, and to the satisfaction of the Engineer.

The bottom of signs on portable or temporary supports shall not be less than seven feet above the pavement in urban areas and one foot above the pavement in rural areas. Portable sign supports may be used as long as the duration is less than 3 days. If the duration is more than 3 days the signs shall be on fixed location, ground mounted, breakaway supports.

MELLETTE COUNTY RESPONSIBILITIES

Mellette County Highway Superintendent – (605) 259-3291.
Mellette County will be responsible for the following items without Federal Participation:

1. Obtain all right-of-way, temporary and permanent easements.
2. Remove existing fence, provide temporary fence as necessary, and replace fence upon completion of the project.
3. Furnish and install permanent signing in accordance with these plans and the Manual on Uniform Traffic Control Devices.
4. Furnish and install gravel surfacing outside limits of bridge end backfill.
5. Arrange for utility relocation and adjustment, if necessary.
6. Remove silt fence and erosion control wattles in permanently seeded areas when vegetation has been established.

CLEARING

Before clearing activity begins, the Contractor shall contact the Engineer to determine limits of clearing for the project. The Engineer shall contact the landowner, Mike Perault at 308-862-1464, to verify clearing activity. If the trees that are supposed to remain within the limits of work are damaged or destroyed by the Contractor, the Contractor shall replace them with the same type at the Contractor's expense.

SALVAGE RIPRAP

An estimated quantity of 4,865 Tons of Class IV riprap was placed on the south bridge berm and bank and 1,445 Tons of Class IV riprap was placed on the north bridge berm and bank in the early 1990s as part of Project BRO 8048(2).

It will be necessary to excavate some of this riprap to shape the berms and banks as shown on the cross section sheets. Excavated riprap will be paid for at the contract unit price per cubic yard for Unclassified Excavation. Excavated riprap may be used in place of the Class B Riprap on the berms or Class C Riprap on the spur dikes after cleaning and weighing and as approved by the Engineer as meeting the requirements of the Standard Specifications. Payment for this riprap will be made at the contract unit price per ton for either Class B Riprap or Class C Riprap in accordance with the location it is placed.

REFLECTORIZED SHEETING REQUIREMENTS FOR TEMPORARY TRAFFIC CONTROL DEVICES

Delete the first paragraph of Section 984.1 and replace with the following:

Temporary traffic control devices, including signs, drums, cones, tubular markers, barricades, vertical panels, and direction indicator barricades shall be reflectorized with sheeting applied to a satisfactory backing. Flat surfaced temporary traffic control devices including, but not limited to; signs, barricades, vertical panels, and direction indicator barricades shall be reflectorized with super/very high intensity reflectorized sheeting meeting the standards of Type XI as defined by AASHTO M 268 (ASTM D4956). Round surfaced temporary traffic control devices including, but not limited to; drums, cones, and tubular markers shall be reflectorized with high intensity reflectorized sheeting meeting the standards of Type IV as defined by AASHTO M 268 (ASTM D4956). All orange colored material shall be fluorescent.

TYPE II FIELD LABORATORY

Substitution of a cellular telephone for the hard-wired touch-tone telephone is not allowed, as state personnel need the ability to download information over direct phone lines. The phone is intended for state personnel usage only. Contractor personnel are prohibited from using this phone unless pre-approved by the Project Engineer. The Contractor shall submit a copy of each monthly bill for calls charged to this phone at the end of each month. The Engineer will then audit the bills to ensure all calls are legitimate and then initiate a Construction Change Order (CCO) to reimburse the Contractor for the actual phone calls made, including local and long distance calls. Reimbursement will not be made for fees associated with the purchase, installation, disconnection, monthly line charges, and incidentals involved in the installation, maintenance, and disconnection of the phone (including attachments). These items shall be incidental to the contract unit price per each for "Type II Field Laboratory".

PLACING TOPSOIL

The thickness will be approximately 3 inches within the right-of-way and temporary easements..

The estimated amount of topsoil to be placed is as follows:

Location		Topsoil (CuYd)
0+00 to 1+75	West Redfish Road	140
17+00 to 33+50	East Redfish/Stamford Road	1,208
	White River Reshaping	131
	Total:	1,479

GRADING OPERATIONS

Reconstruction of the bridge berm shall be accomplished after the White River has been diverted away from the toe area. Fill will not be placed through standing water. The foundation area will be dry and stable prior to berm construction. Methods of accomplishing this could include any combination of the following; excavating temporary diversion channels, installing water barriers, bladders, sheet piles, or work berms. Other methods will also be considered but will need to be approved.

Water for Embankment is estimated at the rate of 10 gallons of water per cubic yard of Embankment minus Waste.

The estimated cubic yards of excavation and/or embankment required to construct outlet ditches, ditch blocks, and approaches are included in the earthwork balance note on the profile sheets.

Special ditch grades and other sections of the roadway different than the typical sections shall be constructed to the limits shown on the cross sections. If significant changes to the cross sections are necessary during construction, the Engineer shall contact the Designer for the proposed change.

Generally, all shallow inlet and outlet ditches as noted on the plan sheets shall be cut with a 10-foot wide bottom with 5:1 backslopes. However, the Engineer may direct the Contractor to adjust the ditch width for proper alignment with the drainage structure.

The inslopes shall be warped for a distance of 75 ft adjacent to the bridge to conform with the structure.

REGISTERED PROFESSIONAL ENGINEER
REG. NO. 9001
LUCAS A. JOHNSON
SOUTH DAKOTA
Lucas A. Johnson
2-17-16

UNDERCUTTING

In all cut sections the earthen subgrade shall be undercut 1.5 feet below the earthen subgrade surface. The undercut material or other suitable material, as directed by the Engineer, shall then be replaced and compacted to the density specified for the section being constructed.

The plan shown quantity will be the basis of payment. However, if there are additional areas of undercut other than what is shown in the plans, the Engineer shall direct removal of these areas and the additional areas will be measured according to the Engineer.

TABLE OF UNDERCUTTING

Station to	Station		Quantity (CuYd)
0+00	2+21.49	West Redfish Road	194
17+00	33+50	East Redfish/Stamford Road	1,013
		Total:	1,207

UNCLASSIFIED EXCAVATION

The total "Unclassified Excavation" quantity is 7,844 cubic yards. Payment will be made on a plans quantity basis in accordance with Section 120.4 of the Standard Specifications. No separate measurement or payment will be made unless additional excavation is ordered by the Engineer.

SHRINKAGE FACTOR: Embankment +35%

TABLE OF UNCLASSIFIED EXCAVATION - WEST REDFISH ROAD

	Quantity (CuYd)
Excavation	12
Undercut	194
Topsoil	140
Totals:	346

TABLE OF UNCLASSIFIED EXCAVATION - EAST REDFISH/STAMFORD ROAD

	Quantity (CuYd)
Excavation	2,345
Undercut	1,013
Topsoil	1,208
Totals:	4,566

TABLE OF UNCLASSIFIED EXCAVATION - WHITE RIVER SHAPING

	Quantity (CuYd)
Excavation	2,801
Undercut	-
Topsoil	131
Totals:	2,932

TABLE OF UNCLASSIFIED EXCAVATION – TOTAL

	Quantity (CuYd)
Excavation	5,158
Undercut	1,207
Topsoil	1,479
Total Unclassified Excavation:	7,844

CONTRACTOR FURNISHED BORROW

The Contractor shall provide a suitable site for Contractor furnished borrow material. The Contractor is responsible for obtaining all required permits and clearances for the borrow site. The borrow material shall be approved by the Engineer. The plans quantity for "Contractor Furnished Borrow" as shown in the Estimate of Quantities will be the basis of payment for this item.

Restoration of the Contractor furnished borrow site shall be the responsibility of the Contractor.

SALVAGED ITEMS

All salvable materials indicated for salvage in the table below shall be taken out intact and stockpiled within the right-of-way to the satisfaction of the Engineer. The Contractor shall perform salvage operations in a manner that will prevent damage to the salvable materials. Salvable materials will be picked up by the County for future highway maintenance. Contractor shall contact Mellette County Highway Superintendent at (605) 259-3291 for pick-up of salvable materials.

INCIDENTAL WORK, GRADING

Station	Remarks
19+15 - 24' Rt.	Remove (1) Weight Limit Sign
19+21 - 57' Rt.	Salvage (1) Street Sign
19+25 - 65' Lt.	Remove Cattle Guard for Reset
19+36 - 162' Lt.	Salvage (1) Min. Maint. Road Sign
19+38 - 39' Lt.	Salvage 24" x 76' RCP & (2) Safety Ends
20+98 - 38' Rt.	Salvage 18" x 56' RCP & (2) Safety Ends

All costs associated with the foregoing work shall be incidental to the contract lump sum price for "Incidental Work, Grading".

MYCORRHIZAL INOCULUM

Mycorrhizal inoculum shall consist of mycorrhizal fungi spores and mycorrhizal fungi-infected root fragments in a solid carrier. The carrier may include organic materials, calcinated clay, or other materials consistent with application and good plant growth. The supplier shall provide certification of the fungal species claimed and the live propagule count. The inoculum shall include the following fungal species:

Glomus intraradices	25%
Glomus aggregatu	25%
Glomus mosseae	25%
Glomus etunicatum	25%

All seed shall be inoculated by the seed supplier with a minimum of 100,000 live propagules of mycorrhizal fungi per acre. All costs of inoculating the seed shall be incidental to the contract unit price per pound for the corresponding permanent seed mixture.

The mycorrhizal inoculum shall be as shown below or an approved equal:

Product	Manufacturer
MycoApply	Mycorrhizal Applications, Inc. Grants Pass, OR Phone: 1-866-476-7800 http://www.mycorrhizae.com/

FERTILIZING

Application of fertilizer will not be required on this project.

PERMANENT SEEDING

The areas to be seeded consist of all newly graded areas within the project limits except for the top of roadways and temporary easements under cultivation.

Type A Permanent Seed Mixture shall consist of the following:

Grass Species	Variety	Pure Live Seed (PLS) (Pounds/Acre)
Western Wheatgrass	Arriba, Flintlock, Rodan, Rosana	7
Green Needlegrass	Lodorm	4
Sideoats Grama	Butte, Killdeer, Pierre, Trailway	3
Blue Grama	Bad River, Willis	2
Canada Wildrye	Mandan	2
	Total:	18

MULCHING

Mulch shall consist of grass hay or straw and shall be blown on and punched in at the rate of 2 tons per acre on all newly seeded areas.

EROSION CONTROL WATTLE

Erosion control wattles for restraining the flow of runoff and sediment shall be installed at locations noted in the table and at locations determined by the Engineer during construction. Refer to Standard Plate 734.06 for details.

The Contractor shall provide certification that the erosion control wattles do not contain noxious weed seeds.

Erosion control wattles shall remain on the project until vegetation has been established.

An additional quantity of 100 feet of 12" Diameter Erosion Control Wattles has been added to the Estimate of Quantities for temporary erosion and sediment control in highway ditch channels and as an alternative to low flow or high flow silt fence at wetland areas adjacent to the highway.

The erosion control wattle provided shall be from the approved product list. The approved product list for erosion control wattle may be viewed at the following internet site:

http://sddot.com/business/certification/products/Default.aspx

REGISTERED PROFESSIONAL ENGINEER
9061
LUCAS A. JOHNSON
SOUTH DAKOTA
1-13-16

FOR BIDDING PURPOSES ONLY

TABLE OF EROSION CONTROL WATTLE

Station	Lt./Rt.	Diameter (Inch)	Location	Quantity (Ft)
29+00	Rt.	12	Across Ditch Bottom	20
29+00	Lt.	12	Across Ditch Bottom	20
			Additional Quantity:	100
			Total:	140

REMOVE EROSION CONTROL WATTLE

Erosion control wattles shall be removed when vegetation is established. Some or all of the erosion control wattles may be left on the project until vegetation is established.

HIGH FLOW SILT FENCE

The high flow silt fence fabric provided shall be from the approved product list. The approved product list for high flow silt fence may be viewed at the following internet site:

http://sddot.com/business/certification/products/Default.aspx

High flow silt fence shall be placed at the locations noted in the table and at locations that will minimize siltation of adjacent streams, lakes, dams, or drainage areas as determined by the Engineer during construction. Refer to Standard Plate 734.05 for details.

An additional 300 feet of high flow silt fence has been added to the Estimate of Quantities for temporary sediment control.

TABLE OF HIGH FLOW SILT FENCE

Station	Lt./Rt.	Location	Quantity (Ft)
19+19	Lt.	Inlet End of Pipe	18
19+88 to 21+48	Rt.	Perimeter Control	179
21+06	Rt.	Inlet End of Pipe	18
21+72	Lt.	Inlet End of Pipe	18
25+00 to 28+01	Rt.	Perimeter Control	306
25+64 to 27+75	Lt.	Perimeter Control	212
30+91	Lt.	Inlet End of Pipe	18
30+91	Rt.	Inlet End of Pipe	18
		Additional Quantity:	300
		Total:	1,087

FLOATING SILT CURTAIN

Floating silt curtains shall be installed at locations noted in the table and at locations determined by the Engineer during construction.

The Contractor shall determine the water depth and other waterway characteristics such as stream flow velocity and seek technical advice from the manufacturer before ordering the floating silt curtain so that the floating silt curtain installed is the correct type for the individual sites.

The Contractor shall install the floating silt curtain according to the manufacturer's installation instructions or as directed by the Engineer.

The Contractor shall maintain the floating silt curtains for the duration of the project to ensure continuous protection of the waterway.

A list of known manufacturers of floating silt curtain is shown below for informational purpose. Contractors may also use Engineer approved floating silt curtain from manufacturers that are not included in the list.

An additional 200 feet of floating silt curtain has been added to the Estimate of Quantities to be used as directed by the Engineer.

ABASCO, LLC
Houston, TX
Phone: 1-800-242-7745
www.abasco.net

Aer-Flo, Inc.
Bradenton, FL
Phone: 1-800-823-7356
www.aerflo.com

American Boom and Barrier Corp.
Cape Canaveral, FL
Phone: 1-800-843-2110
www.abbcoboom.com

ENVIRO-USA, LLC
Cocoa, FL
Phone: 1-321-222-9551
www.enviro-usa.com

Elastec/American Marine, Inc.
Carmi, IL
Phone: 1-618-382-2525
www.turbiditycurtains.com

Geo-Synthetics, LLC (GSI)
Waukesha, WI
Phone: 1-800-444-5523
www.geosynthetics.com

Parker Systems, Inc.
Chesapeake, VA
Phone: 1-866-472-7537
www.parkersystemsinc.com

TABLE OF FLOATING SILT CURTAIN

Station	Location	Quantity (Ft)
22+07 Rt. to 23+27 Lt.	Along Channel Toe	175
23+88 Rt. to 25+01 Lt.	Along Channel Toe	165
	Additional Quantity:	200
	Total:	540

EROSION CONTROL BLANKET

Erosion control blanket shall be installed 16 feet wide at the locations noted in the table and at locations determined by the Engineer during construction.

The erosion control blanket provided shall be from the approved product list. The approved product list for erosion control blanket may be viewed at the following internet site:

http://sddot.com/business/certification/products/Default.aspx

The Contractor shall install erosion control blanket according to the manufacturer's installation instructions.

An additional quantity of Type 200 SqYd Type 2 Erosion Control Blanket has been added to the Estimate of Quantities for temporary erosion control.

TABLE OF EROSION CONTROL BLANKET

Station to Station	Lt./Rt.	Location	Type	Quantity (SqYd)
17+00 to 18+74	Lt.	Along Ditch Bottom	2	323
17+00 to 20+54	Rt.	Along Ditch Bottom	2	604
19+60 to 21+12	Lt.	Along Ditch Bottom	2	279
22+88-126' Rt. to 23+50-119' Rt.	Rt.	Along Channel Bank	2	224
23+86-134' Lt. to 24+79-185' Lt.	Lt.	Along Channel Bank	2	316
		Additional Quantity:	2	200
		Total Type 2 Erosion Control Blanket:		1,946

SHAPING FOR EROSION CONTROL BLANKET

The ditches shall be shaped for the erosion control blanket as specified on Standard Plate 734.01.

TABLE OF BANK AND CHANNEL PROTECTION GABIONS

Station	Lt./Rt.	Location	Quantity (CuYd)
19+60	Lt.	Outlet End of Pipe	4.5
21+52	Rt.	Outlet End of Pipe	4.5
22+28	Lt.	Outlet End of Pipe	4.5
		Total:	13.5

TABLE OF CONSTRUCTION STAKING

(See Special Provision for Contractor Staking)

Roadway and Description	Begin Station	End Station	Number of Lanes	Length (Ft)	Grade Staking: Length (Mile)	Grade Staking: Lane Factor	Grade Staking: *Sets of Stakes	Grade Staking: **Grade Staking Quantity (Mile)	Miscellaneous Staking Quantity (Mile)	Slope Staking Quantity (Mile)	Structure Staking Quantity (Each)
Stamford Road -County Rd. (2 Lanes Gravel Surfaing)	17+00	33+50	2	1650	0.313	1	1	0.313	0.313	0.313	
Stamford Road County Rd. (321'-10 1/8" Prestr. Girder Bridge))	22+06	25+97									1
							Totals:	0.313	0.313	0.313	1

REGISTERED PROFESSIONAL ENGINEER
REG. NO.
9061
LUCAS A. JOHNSON
SOUTH DAKOTA
1-13-16

FOR BIDDING PURPOSES ONLY

STORM WATER POLLUTION PREVENTION PLAN CHECKLIST

*(The numbers right of the title headings are **reference numbers** to the GENERAL PERMIT FOR STORM WATER DISCHARGES ASSOCIATED WITH CONSTRUCTION ACTIVITIES*

❖ **SITE DESCRIPTION (4.2 1)**

- **Project Limits: See Title Sheet (4.2 1.b)**
- **Project Description: See Title Sheet (4.2 1.a.)**
- **Site Map(s): See Title Sheet and Plans (4.2 1.f. (1)-(6))**
- **Major Soil Disturbing Activities** (check all that apply)
  - ☒ Clearing and grubbing
  - ☒ Excavation/borrow
  - ☒ Grading and shaping
  - ☒ Filling
  - ☒ Cutting and filling
  - ☐ Other (describe):
- **Total Project Area** 8.92 Ac **(4.2 1.b.)**
- **Total Area To Be Disturbed** 7.72 Ac **(4.2 1.b.)**
- **Existing Vegetative Cover 96 (%)**
- **Soil Properties:** AASHTO Classification A-2-4, A-2-6, A-7-6 **(4.2 1. d.)**
- **Name of Receiving Water Body/Bodies: White River (4.2 1.e.)**

❖ **ORDER OF CONSTRUCTION ACTIVITIES (4.2 1.c.)**

(Stabilization measures shall be initiated as soon as possible, but in no case later than 14 days after the construction activity in that portion of the site has temporarily or permanently ceased. Initiation of final or temporary stabilization may exceed the 14-day limit if earth disturbing activities will be resumed within 21 days.)

- **Special sequencing requirements** (see sheet).
- **Install stabilized construction entrance(s).**
- **Install perimeter protection where runoff sheets from the site.**
- **Install channel and ditch bottom protection.**
- **Clearing and grubbing.**
- **Remove and store topsoil.**
- **Stabilize disturbed areas.**
- **Install utilities.**
- **Complete final grading.**
- **Complete traffic control installation and protection devices.**
- **Reseed areas disturbed by removal activities**.

❖ **EROSION AND SEDIMENT CONTROLS (4.2 2.a.(1)(a)-(f))**

(Check all that apply)

- **Stabilization Practices (See Detail Plan Sheets)**
  - ☐ Temporary Seeding (Cover Crop Seeding)
  - ☒ Permanent Seeding
  - ☐ Sodding
  - ☐ Planting (Woody Vegetation for Soil Stabilization)
  - ☒ Mulching (Grass Hay or Straw)
  - ☐ Hydraulic Mulch (Wood Fiber Mulch)
  - ☐ Soil Stabilizer
  - ☐ Bonded Fiber Matrix
  - ☒ Erosion Control Blankets or Mats
  - ☒ Vegetation Buffer Strips
  - ☐ Roughened Surface (e.g. tracking)
  - ☐ Dust Control
  - ☐ Other:
- **Structural Temporary Erosion and Sediment Controls**
  - ☒ Silt Fence
  - ☒ Floating Silt Curtain
  - ☐ Straw Bale Check
  - ☐ Temporary Berm
  - ☐ Temporary Slope Drain
  - ☒ Straw Wattles or Rolls
  - ☐ Turf Reinforcement Mat
  - ☒ Rip Rap
  - ☐ Gabions
  - ☐ Rock Check Dams
  - ☐ Sediment Traps/Basins
  - ☐ Inlet Protection
  - ☐ Outlet Protection
  - ☐ Surface Inlet Protection (Area Drain)
  - ☐ Curb Inlet Protection
  - ☐ Stabilized Construction Entrances
  - ☐ Entrance/Exit Equipment Tire Wash
  - ☐ Interceptor Ditch
  - ☐ Concrete Washout Area
  - ☐ Temporary Diversion Channel
  - ☐ Work Platform
  - ☐ Temporary Water Barrier
  - ☐ Temporary Water Crossing
  - ☐ Other:
- **Wetland Avoidance**

  Will construction and/or erosion and sediment controls impinge on regulated wetlands? Yes ☐ No ☒ If yes, the structural and erosion and sediment controls have been included in the total project wetland impacts and have been included in the 404 permit process with the USACE.
- **Storm Water Management (4.2 2.b., (1) and (2))**

  Storm water management will be handled by temporary controls outlined in "EROSION AND SEDIMENT CONTROLS" above, and any permanent controls needed to meet permanent storm water management needs in the post construction period. Permanent controls will be shown on the plans and noted as permanent.
- **Other Storm Water Controls (4.2 2.c., (1) and (2))**
  - **Waste Disposal**

    All liquid waste materials will be collected and stored in sealed metal containers approved by the project engineer. All trash and construction debris from the site will be deposited in the approved containers. Containers will be serviced as necessary, and the trash will be hauled to an approved disposal site or licensed landfill. All onsite personnel will be instructed in the proper procedures for waste disposal, and notices stating proper practices will be posted in the field office. The general contractor's representative responsible for the conduct of work on the site will be responsible for seeing waste disposal procedures are followed.
  - **Hazardous Waste**

    All hazardous waste materials will be disposed of in a manner specified by local or state regulations or by the manufacturer. Site personnel will be instructed in these practices, and the individual designated as the contractor's on-site representative will be responsible for seeing that these practices are followed.
  - **Sanitary Waste**

    Portable sanitary facilities will be provided on all construction sites. Sanitary waste will be collected from the portable units in a timely manner by a licensed waste management contractor or as required by any local regulations.

❖ **Maintenance and Inspection (4.2 3. and 4.2 4.)**

- **Maintenance and Inspection Practices**
  - Inspections will be conducted at least one time per week and after a storm event of 0.50 inches or greater.
  - All controls will be maintained in good working order. Necessary repairs will be initiated within 24 hours of the site inspection report.
  - Silt fence will be inspected for depth of sediment and for tears in order to ensure the fabric is securely attached to the posts and that the posts are well anchored. Sediment buildup will be removed from the silt fence when it reaches $^{1}/_{3}$ of the height of the silt fence.
  - Sediment basins and traps will be checked. Sediment will be removed when depth reaches approximately 50 percent of the structure's capacity, and at the conclusion of the construction.
  - Check dams will be inspected for stability. Sediment will be removed when depth reaches ½ the height of the dam.
  - All seeded areas will be checked for bare spots, washouts, and vigorous growth free of significant weed infestations.
  - Inspection and maintenance reports will be prepared on form DOT 298 for each site inspection, this form will also be used to document changes to the SWPPP. A copy of the completed inspection form will be filed with the SWPPP documents.
  - The SDDOT Project Engineer and contractor's site superintendent are responsible for inspections. Maintenance, repair activities are the responsibility of the contractor. The SDDOT Project Engineer will complete the inspection and maintenance reports and distribute copies per the distribution instructions on DOT 298.

❖ **Non-Storm Water Discharges (3.0)**

The following non-storm water discharges are anticipated during the course of this project (check all that apply).

- ☐ Discharges from water line flushing.
- ☐ Pavement wash-water, where no spills or leaks of toxic or hazardous materials have occurred.
- ☐ Uncontaminated ground water associated with dewatering activities.

❖ **Materials Inventory (4.2. 2.c.(2))**

The following materials or substances are expected to be present on the site during the construction period. These materials will be handled as noted under the headings "EROSION AND SEDIMENT CONTROLS" and "SPILL PREVENTION" (check all that apply).

- ☒ Concrete and Portland Cement
- ☐ Detergents
- ☐ Paints
- ☒ Metals
- ☐ Bituminous Materials
- ☐ Petroleum Based Products
- ☐ Cleaning Solvents
- ☐ Wood
- ☐ Cure
- ☐ Texture
- ☐ Chemical Fertilizers
- ☐ Other:

REGISTERED PROFESSIONAL ENGINEER
REG. NO.
9061
LUCAS A. JOHNSON
SOUTH DAKOTA
1-13-16

FOR BIDDING PURPOSES ONLY

❖ **Spill Prevention (4.2 2.c.(2))**

➢ **Material Management**

- Housekeeping
  - Only needed products will be stored on-site by the contractor.
  - Except for bulk materials the contractor will store all materials under cover and in appropriate containers.
  - Products must be stored in original containers and labeled.
  - Material mixing will be conducted in accordance with the manufacturer's recommendations.
  - When possible, all products will be completely used before properly disposing of the container off site.
  - The manufacturer's directions for disposal of materials and containers will be followed.
  - The contractor's site superintendent will inspect materials storage areas regularly to ensure proper use and disposal.
  - Dust generated will be controlled in an environmentally safe manner.
  - Vegetation areas not essential to the construction project will be preserved and maintained as noted on the plans.

- Hazardous Materials
  - Products will be kept in original containers unless the container is not resealable.
  - Original labels and material safety data sheets will be retained in a safe place to relay important product information.
  - If surplus product must be disposed of, manufacturer's label directions for disposal will be followed.
  - Maintenance and repair of all equipment and vehicles involving oil changes, hydraulic system drain down, de-greasing operations, fuel tank drain down and removal, and other activities which may result in the accidental release of contaminants will be conducted on an impervious surface and under cover during wet weather to prevent the release of contaminants onto the ground.
  - Wheel wash water will be collected and allowed to settle out suspended solids prior to discharge. Wheel wash water will not be discharged directly into any storm water system or storm water treatment system.
  - Potential pH-modifying materials such as: bulk cement, cement kiln dust, fly ash, new concrete washings, concrete pumping, residuals from concrete saw cutting (either wet or dry), and mixer washout waters will be collected on site and managed to prevent contamination of storm water runoff.

➢ **Product Specific Practices (6.8)**

- Petroleum Products
  All on-site vehicles will be monitored for leaks and receive regular preventive maintenance to reduce the chance of leakage. Petroleum products will be stored in tightly sealed containers which are clearly labeled.
- Fertilizers
  Fertilizers will be applied only in the amounts specified by the SDDOT. Once applied, fertilizers will be worked into the soil to limit the exposure to storm water. Fertilizers will be stored in an enclosed area. The contents of partially used fertilizer bags will be transferred to sealable containers to avoid spills.
- Paints
  All containers will be tightly sealed and stored when not required for use. The excess will be disposed of according to the manufacturer's instructions and any applicable state and local regulations.
- Concrete Trucks
  Contractors will provide designated truck washout areas on the site. These areas must be self contained and not connected to any storm water outlet of the site. Upon completion of construction washout areas will be properly stabilized.

➢ **Spill Control Practices (4.2 2 c.(2))**

In addition to the previous housekeeping and management practices, the following practices will be followed for spill prevention and cleanup if needed.

- For all hazardous materials stored on site, the manufacturer's recommended methods for spill clean up will be clearly posted. Site personnel will be made aware of the procedures and the locations of the information and cleanup supplies.
- Appropriate cleanup materials and equipment will be maintained by the contractor in the materials storage area on-site. As appropriate, equipment and materials may include items such as brooms, dust pans, mops, rags, gloves, goggles, kitty litter, sand, sawdust, and plastic and metal trash containers specifically for clean up purposes.
- All spills will be cleaned immediately after discovery and the materials disposed of properly.
- The spill area will be kept well ventilated and personnel will wear appropriate protective clothing to prevent injury from contact with a hazardous substance.
- After a spill a report will be prepared describing the spill, what caused it, and the cleanup measures taken. The spill prevention plan will be adjusted to include measures to prevent this type of spill from reoccurring, as well as clean up instructions in the event of reoccurrences.
- The contractor's site superintendent, responsible for day-to-day operations, will be the spill prevention and cleanup coordinator. The contractor is responsible for ensuring that the site superintendent has had appropriate training for hazardous materials handling, spill management, and cleanup.

➢ **Spill Response (4.2 2 c.(2))**

The primary objective in responding to a spill is to quickly contain the material(s) and prevent or minimize migration into storm water runoff and conveyance systems. If the release has impacted on-site storm water, it is critical to contain the released materials on-site and prevent their release into receiving waters. If a spill of pollutants threatens storm water or surface water at the site, the spill response procedures outlined below must be implemented in a timely manner to prevent the release of pollutants.

- The contractor's site superintendent will be notified immediately when a spill or the threat of a spill is observed. The superintendent will assess the situation and determine the appropriate response.
- If spills represent an imminent threat of escaping erosion and sediment controls and entering receiving waters, personnel will be directed to respond immediately to contain the release and notify the superintendent after the situation has been stabilized.
- Spill kits containing appropriate materials and equipment for spill response and cleanup will be maintained by the contractor at the site.
- If oil sheen is observed on surface water (e.g. settling ponds, detention ponds, swales), action will be taken immediately to remove the material causing the sheen. The contractor will use appropriate materials to contain and absorb the spill. The source of the oil sheen will also be identified and removed or repaired as necessary to prevent further releases.
- If a spill occurs the superintendent or the superintendent's designee will be responsible for completing the spill reporting form and for reporting the spill to SD DENR.
- Personnel with primary responsibility for spill response and clean up will receive training by the contractor's site superintendent or designee. The training must include identifying the location of the spill kits and other spill response equipment and the use of spill response materials.
- Spill response equipment will be inspected and maintained as necessary to replace any materials used in spill response activities.

❖ **Spill Notification**

In the event of a spill, the contractor's site superintendent will make the appropriate notification(s), consistent with the following procedures:

➢ A release or spill of a regulated substance (includes petroleum and petroleum products) must be reported to DENR immediately **if any one of the following** conditions exists:
- The discharge threatens or is in a position to threaten the waters of the state (surface water or ground water).
- The discharge causes an immediate danger to human health or safety.
- The discharge exceeds 25 gallons.
- The discharge causes a sheen on surface water.
- The discharge of any substance that exceeds the ground water quality standards of ARSD (Administrative Rules of South Dakota) chapter 74:51:01.
- The discharge of any substance that exceeds the surface water quality standards of ARSD chapter 74:51:01.
- The discharge of any substance that harms or threatens to harm wildlife or aquatic life.
- The discharge of crude oil in field activities under SDCL (South Dakota Codified Laws) chapter 45-9 is greater than 1 barrel (42 gallons).

To report a release or spill, call DENR at 605-773-3296 during regular office hours (8 a.m. to 5 p.m. Central time). To report the release after hours, on weekends or holidays, call State Radio Communications at 605-773-3231. Reporting the release to DENR does not meet any obligation for reporting to other state, local, or federal agencies. Therefore, the responsible person must also contact local authorities to determine the local reporting requirements for releases. DENR recommends that spills also be reported to the National Response Center at (800) 424-8802.

❖ **Construction Changes (4.4)**

When changes are made to the construction project that will require alterations in the temporary erosion controls of the site, the Storm Water Pollution Prevention Plan (SWPPP) will be amended to provide appropriate protection to disturbed areas, all storm water structures, and adjacent waters. The SDDOT Project Engineer will modify the SWPPP plan (DOT 298) and drawings to reflect the needed changes. Copies of changes will be routed per DOT 298. Copies of forms and the SWPPP will be retained in a designated place for review over the course of the project.

REGISTERED PROFESSIONAL ENGINEER
LUCAS A. JOHNSON
SOUTH DAKOTA
1-13-16

FOR BIDDING PURPOSES ONLY

❖ CERTIFICATIONS

➢ **Certification of Compliance with Federal, State, and Local Regulations**

The Storm Water Pollution Prevention Plan (SWPPP) for this project reflects the requirements of all local municipal jurisdictions for storm water management and sediment and erosion control as established by ordinance, as well as other state and federal requirements for sediment and erosion control plans, permits, notices or documentation as appropriate.

➢ **South Dakota Department of Transportation**

I certify under penalty of law that this document and all attachments were prepared under my direction or supervision in accordance with a system designed to assure that qualified personnel properly gather and evaluate the information submitted. Based on my inquiry of the person or persons who manage the system, or those persons directly responsible for gathering the information, the information submitted is, to the best of my knowledge and belief, true, accurate, and complete. I am aware that there are significant penalties for submitting false information, including the possibility of fine and imprisonment for knowing violations.

Authorized Signature (See the General Permit, Section 6.7.1.C.)

➢ **Prime Contractor**

This section is to be executed by the General Contractor after the award of the contract. This section may be executed any time there is a change in the Prime Contractor of the project.

I certify under penalty of law that this document and all attachments will be revised or maintained under my direction or supervision in accordance with a system designed to assure that qualified personnel properly gather and evaluate the information submitted. Based on my inquiry of the person or persons who manage the system, or those persons directly responsible for gathering the information, the information submitted is, to the best of my knowledge and belief, true, accurate, and complete. I am aware that there are significant penalties for submitting false information, including the possibility of fine and imprisonment for knowing violations.

Authorized Signature

❖ CONTACT INFORMATION

➢ **Contractor Information**:
- Prime Contractor Name:
- Contractor Contact Name:
- Address:
- Address:
- City: State: Zip:
- Office Phone: Field:
- Cell Phone: Fax:

➢ **Erosion Control Supervisor**
- Name:
- Address:
- Address:
- City: State: Zip:
- Office Phone: Field:
- Cell Phone: Fax:

➢ **SDDOT Project Engineer**
- Name:
- Business Address:
- Job Office Location:
- City: State: Zip:
- Office Phone: Field:
- Cell Phone: Fax:

➢ **SD DENR Contact Spill Reporting**
- Business Hours Monday-Friday (605) 773-3296
- Nights and Weekends (605) 773-3231

➢ **SD DENR Contact for Hazardous Materials.**
- (605) 773-3153

➢ **National Response Center Hotline**
- (800)424-8802

REGISTERED PROFESSIONAL ENGINEER
REG. NO.
9061
LUCAS A. JOHNSON
SOUTH DAKOTA
1-13-16

STATE OF SOUTH DAKOTA	PROJECT	SHEET NO.	TOTAL SHEETS
	BRO 8048(03)	11	76

TYPICAL SECTIONS

FOR BIDDING PURPOSES ONLY

TYPICAL GRADING SECTION

STATION
0+00 TO 2+00 (WEST REDFISH ROAD)
17+50 TO 20+50 (EAST REDFISH ROAD)
27+50 TO 33+00 (EAST REDFISH ROAD)

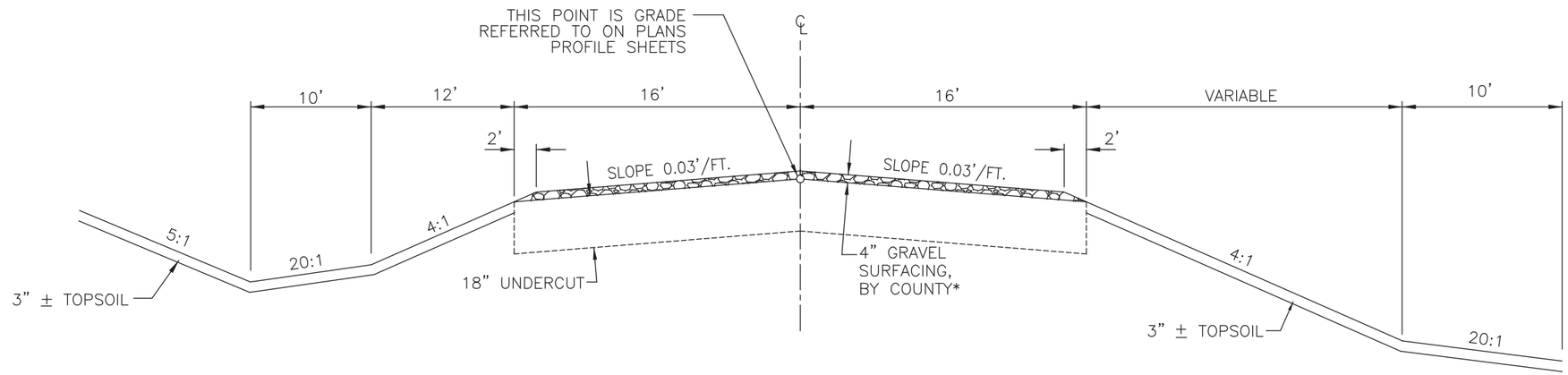

LARGE FILL SECTION

STATION
20+50 TO 22+06.60 (EAST REDFISH ROAD)
25+27.40 TO 27+50 (STAMFORD ROAD)

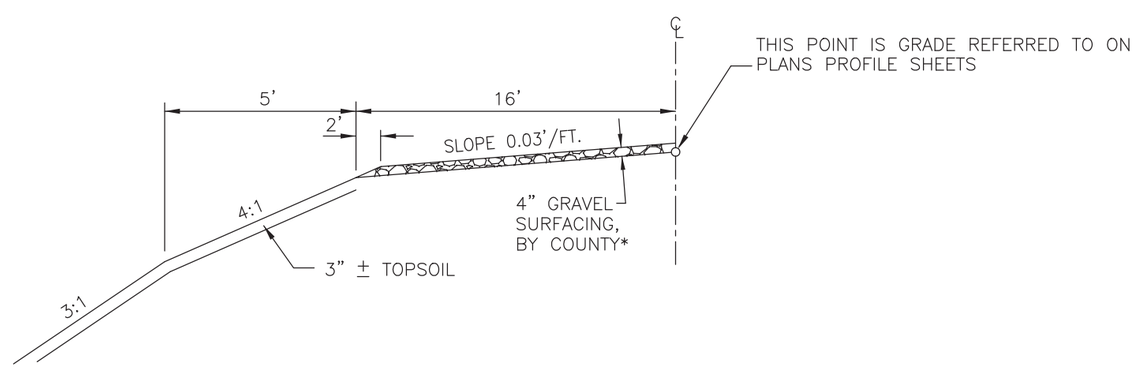

REGISTERED PROFESSIONAL ENGINEER
REG. NO.
9061
LUCAS A. JOHNSON
SOUTH DAKOTA
1-13-15

NOTES:

SEE CROSS SECTIONS FOR LOCATIONS WHERE BERM OR TOE SLOPES ARE TO BE USED.

*MELLETTE COUNTY WILL FURNISH AND INSTALL GRAVEL SURFACING WITHOUT FEDERAL PARTICIPATION EXCEPT WITHIN THE LIMITS OF THE BRIDGE END BACKFILL.

TRAFFIC CONTROL
ROAD CLOSED

FOR BIDDING PURPOSES ONLY

STATE OF SOUTH DAKOTA	PROJECT	SHEET NO.	TOTAL SHEETS
	BRO 8048(03)	12	76

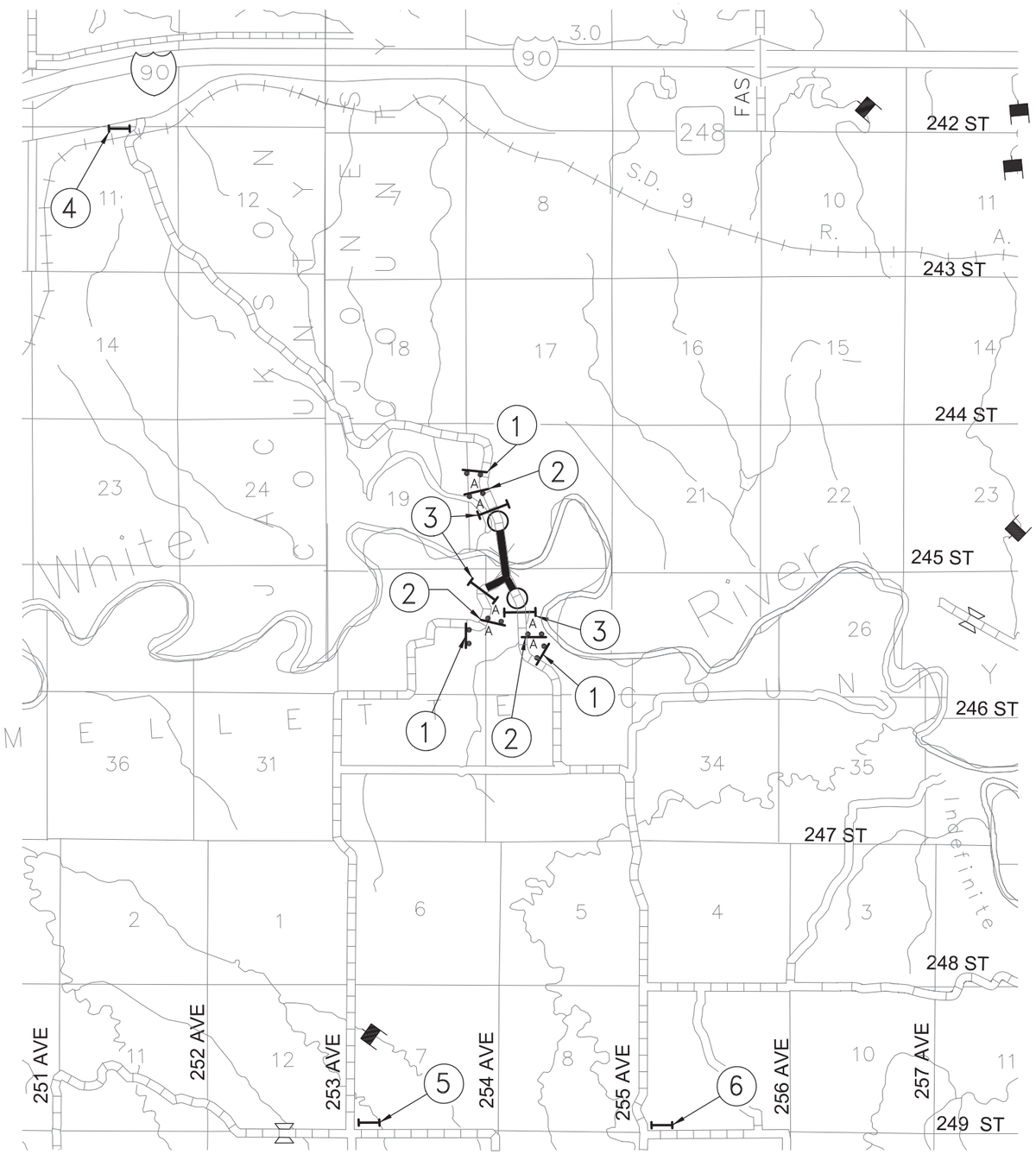

N

ITEMIZED LIST FOR TRAFFIC CONTROL SIGNS

SIGN CODE	SIGN DESCRIPTION	CONVENTIONAL ROAD NUMBER	SIGN SIZE	SQFT PER SIGN	SQFT
R11-2	ROAD CLOSED	3	48" x 30"	10	30
R11-3a	ROAD CLOSED __ MILES AHEAD LOCAL TRAFFIC ONLY	3	60" x 30"	13	39
W20-3	ROAD CLOSED AHEAD	6	48" x 48"	16	96
		CONVENTIONAL ROAD TRAFFIC CONTROL SIGNS SQFT			165

TYPE 3 BARRICADES

ITEM DESCRIPTION	QUANTITY
Type 3 Barricade, 8' Single Sided	9 Each
Type 3 Barricade, 8' Double Sided	3 Each

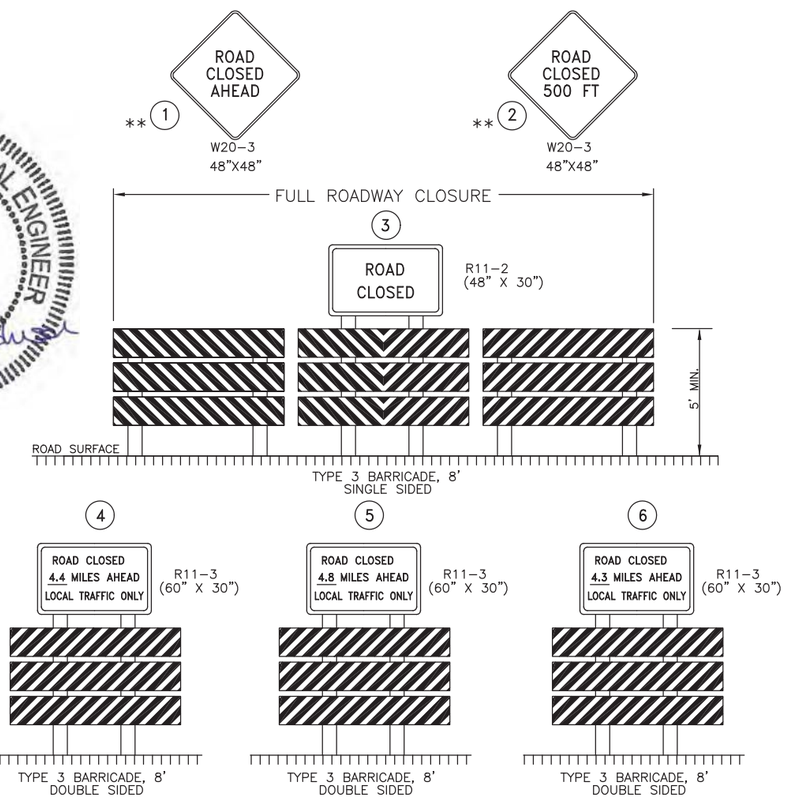

NOTES:

ALL FIXED LOCATION SIGNS SHALL REMAIN IN PLACE UNTIL PROJECT IS COMPLETED.

TYPE 3 BARRICADES ARE MEASURED FOR PAYMENT ON ONE SIDE ONLY

** – MOUNT ON FIXED LOCATION (GROUND MOUNTED) SUPPORTS

Road Type	Distance between signs (feet) A	B	C
Urban (low speed*)	100	100	100
Urban (high speed*)	350	350	350
Rural	500	500	500
Expressway/Freeway	1000	1500	2640

* Speed category to be determined by highway agency.

EROSION AND SEDIMENT CONTROL PLAN

FOR BIDDING PURPOSES ONLY

STATE OF SOUTH DAKOTA	PROJECT	SHEET NO.	TOTAL SHEETS
	BRO 8048(03)	13	76

LEGEND

- HIGH FLOW SILT FENCE
- EROSION CONTROL WATTLE
- FLOATING SILT CURTAIN
- TYPE 2 EROSION CONTROL BLANKET
- EXISTING RIPRAP

SCALE:
1" = 100'

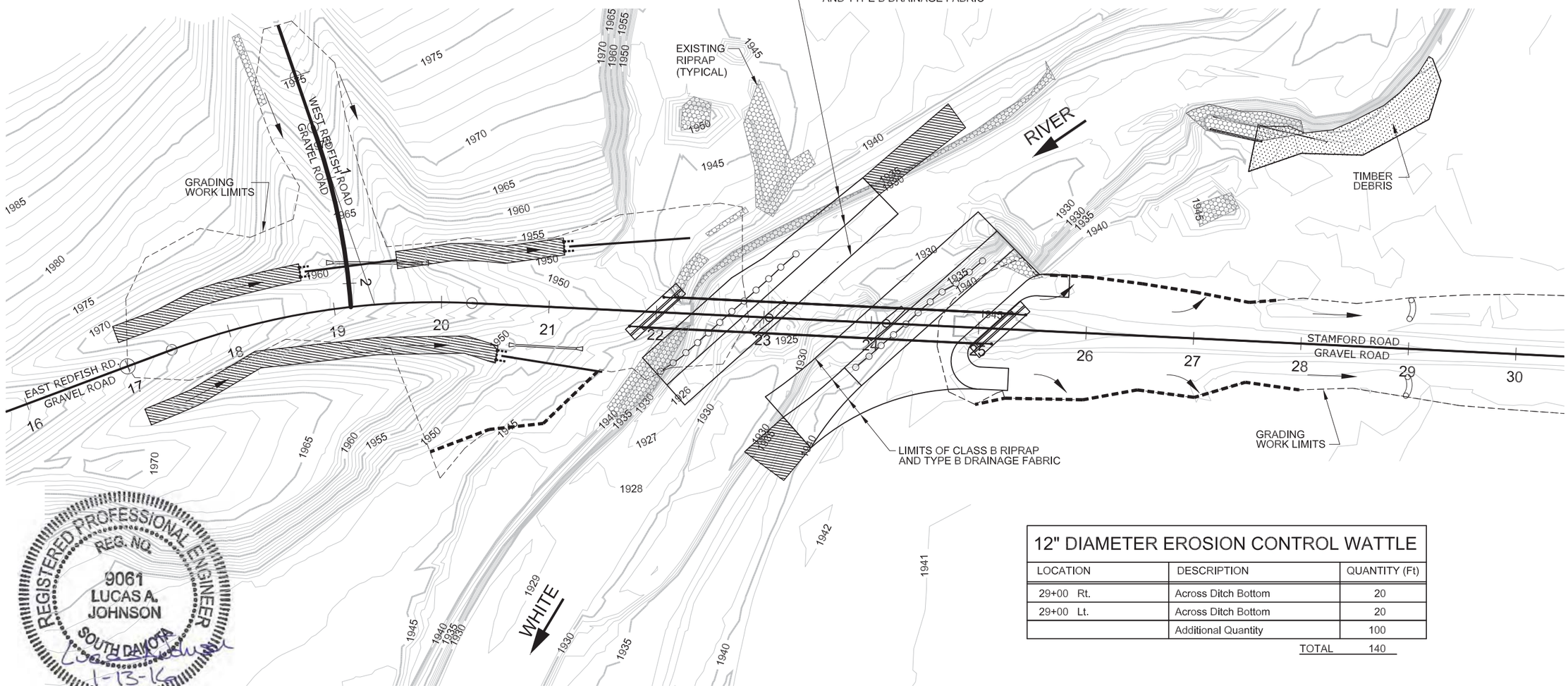

REGISTERED PROFESSIONAL ENGINEER
REG. NO.
9061
LUCAS A. JOHNSON
SOUTH DAKOTA
1-13-16

12" DIAMETER EROSION CONTROL WATTLE

LOCATION	DESCRIPTION	QUANTITY (Ft)
29+00 Rt.	Across Ditch Bottom	20
29+00 Lt.	Across Ditch Bottom	20
	Additional Quantity	100
	TOTAL	140

HIGH FLOW SILT FENCE

LOCATION	DESCRIPTION	QUANTITY (Ft)
19+19 Lt.	Inlet End of Pipe	18
19+88 to 21+48 Rt.	Perimeter Control	179
21+06 Rt.	Inlet End of Pipe	18
21+72 Lt.	Inlet End of Pipe	18
25+00 to 28+01 Rt.	Perimeter Control	306
25+64 to 27+75 Lt.	Perimeter Control	212
	Additional Quantity	200
	Total:	951

FLOATING SILT CURTAIN

LOCATION	DESCRIPTION	QUANTITY (Ft)
22+07 Rt. to 23+27 Lt.	Along Channel Toe	175
23+88 Rt. to 25+01 Lt.	Along Channel Toe	165
	Additional Quantity	200
	Total:	540

TYPE 2 EROSION CONTROL BLANKET

LOCATION	DESCRIPTION	QUANTITY (SqYd)
17+00 to 18+74 Lt.	Along Ditch Bottom	323
17+00 to 20+54 Rt.	Along Ditch Bottom	604
19+60 to 21+12 Lt.	Along Ditch Bottom	279
22+88-126' Rt. to 23+50-119' Rt.	Along Channel Bank	224
23+86-134' Lt. to 24+79-185' Lt.	Along Channel Bank	316
	Additional Quantity	200
	Total:	1946

EROSION AND SEDIMENT CONTROL PLAN

FOR BIDDING PURPOSES ONLY

STATE OF SOUTH DAKOTA	PROJECT	SHEET NO.	TOTAL SHEETS
	BRO 8048(03)	14	76

LEGEND

HIGH FLOW SILT FENCE

EROSION CONTROL WATTLE

SCALE:
1" = 100'

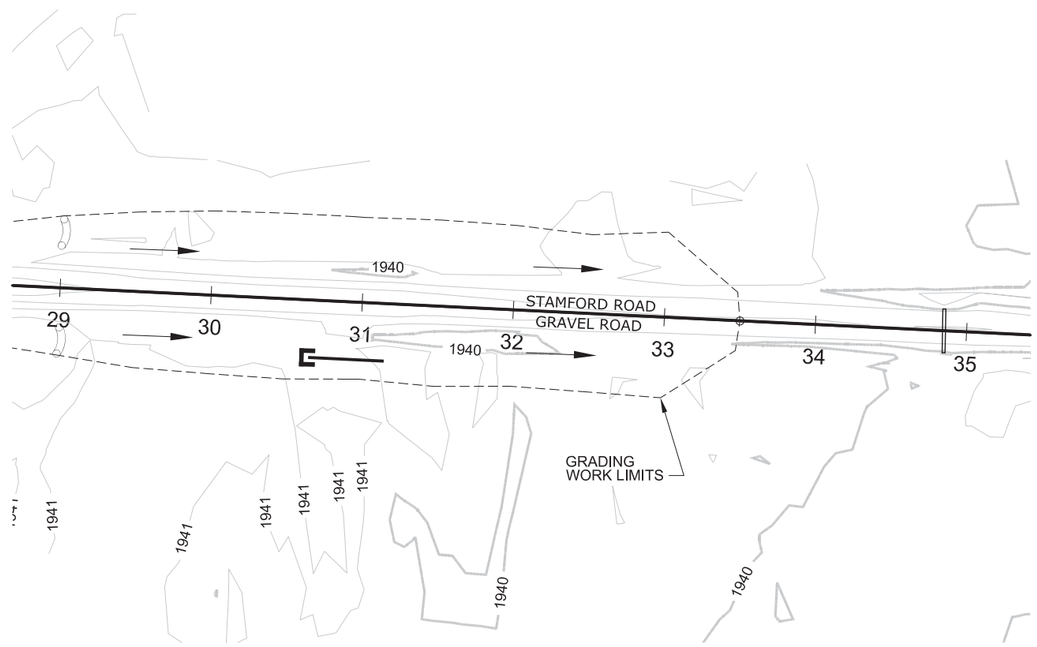

HIGH FLOW SILT FENCE		
LOCATION	DESCRIPTION	QUANTITY (Ft)
30+91 Rt.	Inlet End of Pipe	18
	Additional Quantity	100
	Total:	118

REGISTERED PROFESSIONAL ENGINEER
REG. NO.
9061
LUCAS A.
JOHNSON
SOUTH DAKOTA
1-13-16

FOR BIDDING PURPOSES ONLY

CONTROL DATA

CONTROL POINT	STATION	OFFSET	DESCRIPTION	NORTHING	EASTING	ELEVATION
CP 2	18+16.71	85.14' Lt.	5/8" Rebar & Guards	50000.00	50000.00	1974.17
CP 3	21+48.87	71.13' Lt.	5/8" Rebar & Guards	50348.80	49934.15	1953.19
CP 3A	22+32.53	8.31' Rt.	Chiseled "X" in SE Wingwall	50441.76	50002.46	1949.97
CP 4	24+22.01	276.78' Rt.	5/8" Rebar & Guards	50663.40	50245.06	1941.50
CP 5	26+98.40	533.01' Lt.	5/8" Rebar & Guards	50836.07	49407.01	1942.62
CP 6	25+67.85	39.57' Lt.	5/8" Rebar & Guards	50768.43	49912.92	1942.42
CP 7	31+77.63	29.69' Rt.	5/8" Rebar & Guards	51382.08	49905.16	1941.27

HORIZONTAL ALIGNMENT DATA

(CONSTRUCTION CENTERLINE
EAST REDFISH ROAD & STAMFORD ROAD)

TYPE	STATION			NORTHING	EASTING
POB	17+00.00			49932.96	50133.34
		TL=43.91'	N 30°29'00" W		
PC	17+43.91			49970.79	50111.06
PI	18+88.10	R=700.00'	Delta = 23°16'46" Rt.	50095.06	50037.91
PT	20+28.32			50238.12	50019.83
		TL=1271.68'	N 7°12'14" W		
POE	33+00.00			51499.76	49860.36

(CONSTRUCTION CENTERLINE
WEST REDFISH ROAD)

TYPE	STATION			NORTHING	EASTING
POB	-0+50.00			50015.71	49796.85
		TL=100.00'	N 61°01'26" E		
PC	0+50.00			50064.15	49884.33
PI	1+36.28	R=630.50'	Delta = 15°35'01" Rt.	50106.84	49959.31
PT/POE	2+21.49			50127.82	50043.00

(CONSTRUCTION CENTERLINE
WHITE RIVER)

TYPE	STATION			NORTHING	EASTING
POB	0+00.00			50386.24	50204.22
		TL=257.62'	N 57°59'38" W		
PC	2+57.62			50522.78	49985.77
PI	3+48.59	R=500.00'	Delta = 20°37'27" Rt.	50571.00	49908.62
PT	4+37.60			50643.30	49853.40
		TL=80.36'	N 37°22'11" W		
PC	5+17.96			50707.17	49804.62
PI	5+79.82	R=1000.00'	Delta = 7°04'44" Rt.	50756.32	49767.08
PT	6+41.51			50809.73	49735.88
		TL=92.33'	N 30°17'27" W		
PC	7+33.84			50889.46	49689.31
PI	8+40.71	R=200.00'	Delta = 56°14'04" Lt.	50981.74	49635.41
PT	9+30.14			50988.21	49528.74
		TL=109.99'	N 86°31'30" W		
POE	10+40.13			50994.88	49418.95

REGISTERED PROFESSIONAL ENGINEER
REG. NO.
9061
LUCAS A.
JOHNSON
SOUTH DAKOTA
1-13-16

NOTES:
The coordinate values shown on this sheet are assumed datum.
The elevations shown in these plans are based on the National Geodetic Survey (NGS) North American Vertical Datum of 1988 (NAVD88).
Equation: Sta. 2+21.49 West Redfish Road = Sta. 19+15.49 East Redfish Road.
Equation: Sta. 2+60.07 White River Centerline = Sta. 23+16.57 East Redfish/Stamford Road.

STATE OF SOUTH DAKOTA	PROJECT	SHEET NO.	TOTAL SHEETS
	BRO 8048(03)	16	76

FOR BIDDING PURPOSES ONLY

BEGIN PROJECT BRO 8048(03)

EAST REDFISH ROAD, MELLETTE COUNTY
STA. 17+00.00 ON PROJECT BRO 8048(03)
N. 49932.96 E. 50133.34

19+15.49 - 38' LT.
INSTALL 24" x 66' RCP
& (2) 24" RCP SAFETY ENDS

19+15 - 61' LT.
RESET CATTLE GAURD

20+98 - 58' RT.
INSTALL 18" x 82' RCP
& (2) 18" RCP SAFETY ENDS

21+61 - 55' LT.
INSTALL 24" x 92' RCP
& (2) 24" RCP SAFETY ENDS

22+32.08 TO 24+77.28
REMOVE 245.2' 3-SPAN PONY TRUSS BRIDGE WITH CONCRETE BACK WALLS, WING WALLS, PARAPET WALLS AND BENTS. TIMBER STRINGERS AND TIMBER PLANK DECK WITH STEEL DIAMOND PLATE IN WHEEL LINES ACROSS THE STRUCTURE(16.0' ROADWAY WIDTH) INCIDENTAL WORK, STRUCTURE

22+06.08 TO 25+27.92 (45° SKEW LHF)
DRAINAGE AREA = 5,932 SqMi
INSTALL 321'-10 1/8" 3-SPAN PRESTRESSED GIRDER BRIDGE WITH 28'-0" CLEAR ROADWAY
(SEE BRIDGE PLANS)

1+50 RT. (WEST REDFISH ROAD)
MELLETTE COUNTY TO INSTALL
(1) R1-1 STOP SIGN

15+00 RT.
MELLETTE COUNTY TO INSTALL
(1) R2-1 SPEED LIMIT SIGN (40 MPH)

16+00 RT.
MELLETTE COUNTY TO INSTALL
(1) W1-2 RIGHT CURVE SIGN

15+19 TO 18+94 LT.
MELLETTE COUNTY TO INSTALL
(6) DELINEATORS, TYPE 1 WHITE
(BACK TO BACK)

19+66 TO 27+68 LT. & RT.
MELLETTE COUNTY TO INSTALL
(16) DELINEATORS, TYPE 1 WHITE
(BACK TO BACK)

SCALE:
1" = 100'

21+90.8 RT., 22+21.3 LT., 25+12.7 RT., & 25+43.2 LT. MELLETTE COUNTY TO INSTALL (4) OBJECT MARKERS, TYPE 3

21+90 LT.
MELLETTE COUNTY TO INSTALL
(1) W1-2 LEFT CURVE SIGN

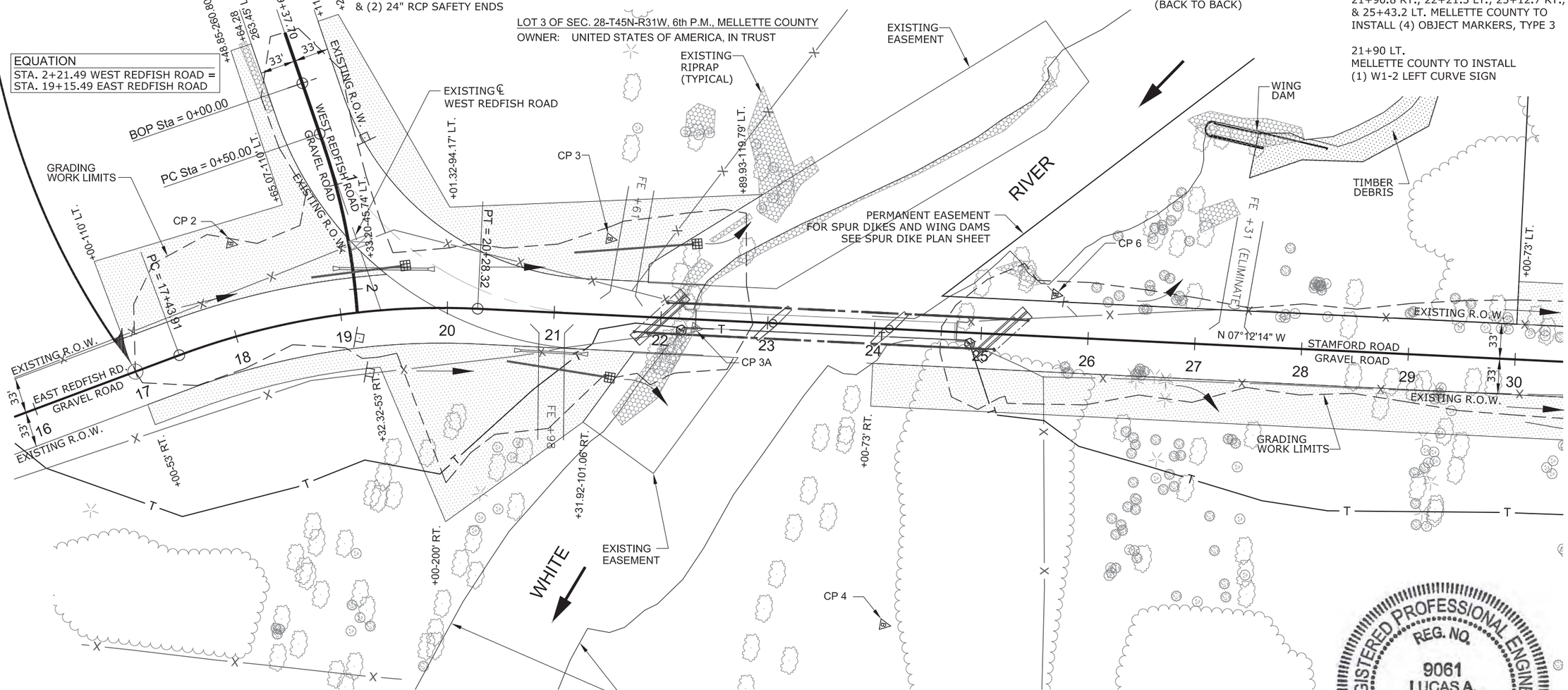

LOT 3 OF SEC. 28-T45N-R31W, 6th P.M., MELLETTE COUNTY
OWNER: UNITED STATES OF AMERICA, IN TRUST

19+15 - 24' RT.
REMOVE WEIGHT LIMIT SIGN
INCIDENTAL WORK, GRADING

19+21 - 57' RT.
SALVAGE STREET SIGN
INCIDENTAL WORK, GRADING

19+25 - 65' LT.
REMOVE CATTLE GAURD FOR RESET
INCIDENTAL WORK, GRADING

19+36 - 162' LT.
SALVAGE MIN. MAINT. SIGN
INCIDENTAL WORK, GRADING

22+20 - 11' RT.
IN PLACE TEL. TERM. POST

24+90 - 10' RT.
IN PLACE TEL. TERM. POST

19+36 - 162' LT.
SALVAGE "MIN. MAINT. ROAD" SIGN
INCIDENTAL WORK, GRADING

19+38 - LT.
SALVAGE 24" x 76' RCP
& (2) SAFETY ENDS
INCIDENTAL WORK, GRADING

20+98 - RT.
SALVAGE 18" x 56' RCP
& (2) SAFETY ENDS
INCIDENTAL WORK, GRADING

19+60 - LT.
INSTALL BANK AND CHANNEL PROTECTION
GABIONS AT OUTLET END OF PIPE
(4.5 CuYd)

21+52 - RT.
INSTALL BANK AND CHANNEL PROTECTION
GABIONS AT OUTLET END OF PIPE
(4.5 CuYd)

22+28 - LT.
INSTALL BANK AND CHANNEL PROTECTION
GABIONS AT OUTLET END OF PIPE
(4.5 CuYd)

21+89.2 RT. TO 24+19.9 LT. ON CHANNEL BANK
INSTALL 1,597.6 TON OF CLASS B RIPRAP
RIPRAP SHALL BE A MINIMUM OF 24" THICK
INSTALL 1,853 SqYd OF TYPE B DRAINAGE FABRIC
(SEE BRIDGE PLANS)

23+05.1 RT. TO 25+82.2 LT. ON CHANNEL BANK AND INSLOPE
INSTALL 2,552.5 TON OF CLASS B RIPRAP
RIPRAP SHALL BE A MINIMUM OF 24" THICK
INSTALL 2,921 SqYd OF TYPE B DRAINAGE FABRIC
(SEE BRIDGE PLANS)

CURVE DATA

Δ = 23°16'46" RT.	
Da = 08°11'06"	
T = 144.20'	
R = 700.00'	PI 18+88.10
L = 284.41'	N. 50095.06
E = 14.70'	E. 50037.91

17+00 TO 19+33.20 - LT.
TEMPORARY EASEMENT FOR CUTSLOPES
AND FILLSLOPES, 0.5 AC.

19+11.25 TO 22+89.93 - LT.
TEMPORARY EASEMENT FOR CUTSLOPES
AND FILLSLOPES, 0.5 AC.

17+00 TO 21+31.92 - RT.
TEMPORARY EASEMENT FOR CUTSLOPES
AND FILLSLOPES, 0.7 AC.

24+00 TO 33+50 - RT.
TEMPORARY EASEMENT FOR CUTSLOPES
AND FILLSLOPES, 0.9 AC.

REGISTERED PROFESSIONAL ENGINEER
REG. NO.
9061
LUCAS A.
JOHNSON
SOUTH DAKOTA
1-13-16

STATE OF SOUTH DAKOTA	PROJECT	SHEET NO.	TOTAL SHEETS
	BRO 8048(03)	17	76

FOR BIDDING PURPOSES ONLY

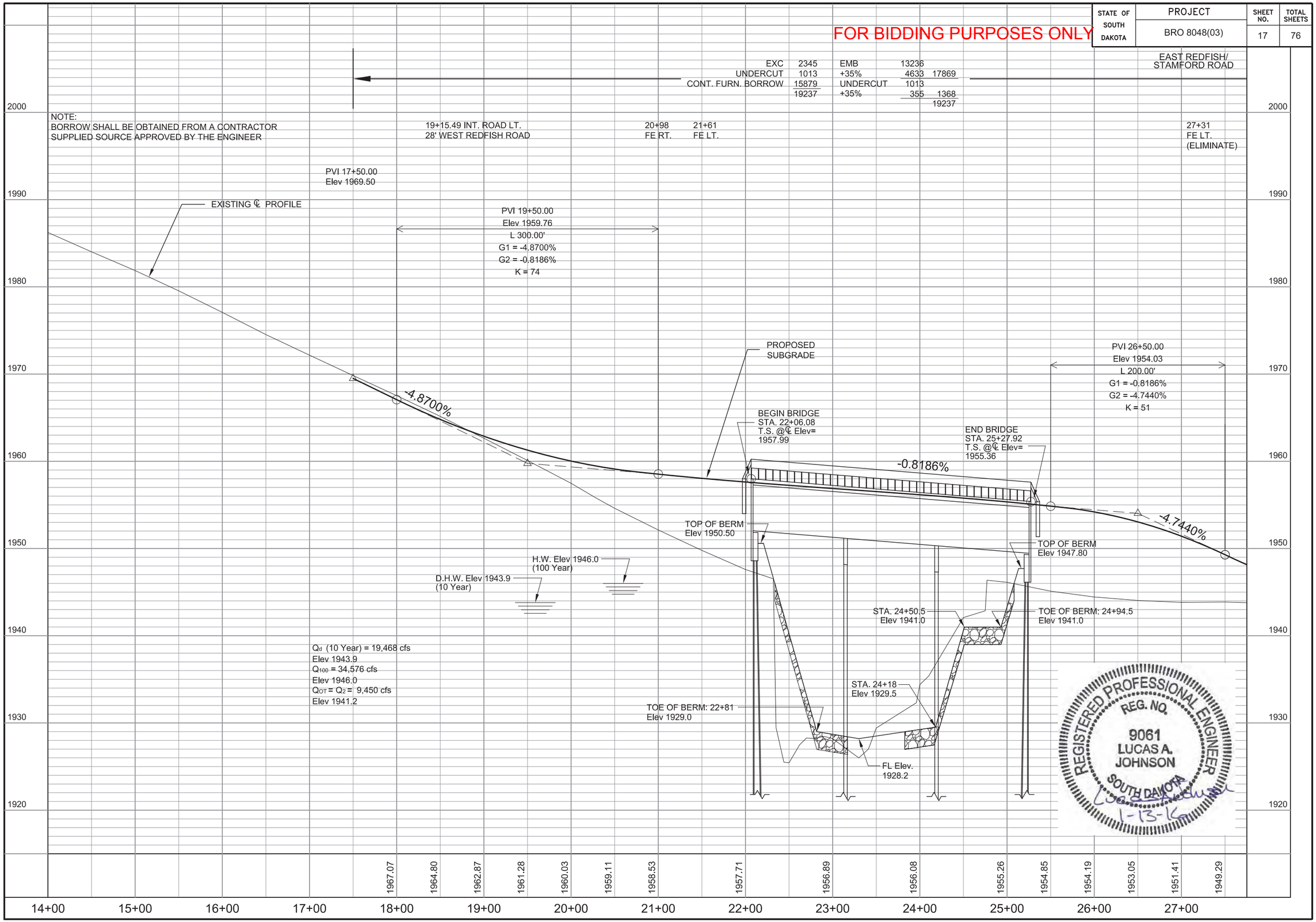

FOR BIDDING PURPOSES ONLY

30+91 - 38' RT.
INSTALL 18" x 42' CMP
& (2) 18" CMP SAFETY ENDS

32+00 LT.
MELLETTE COUNTY TO INSTALL
(1) R2-1 SPEED LIMIT SIGN (40 MPH)

SCALE:
1" = 100'

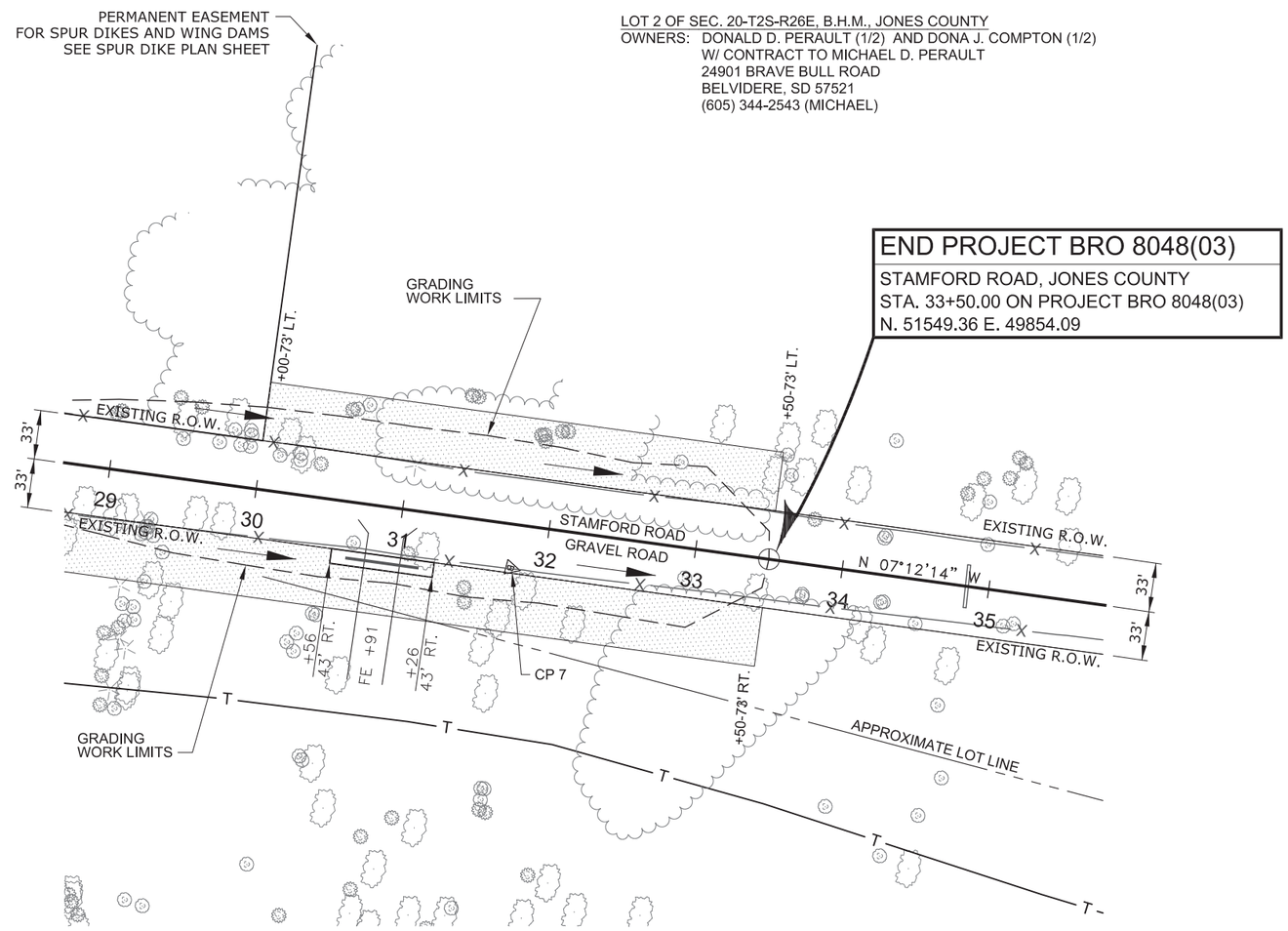

LOT 3 OF SEC. 20-T2S-R26E, B.H.M., JONES COUNTY
OWNERS: DONALD D. PERAULT (1/2) AND DONA J. COMPTON (1/2)
W/ CONTRACT TO MICHAEL D. PERAULT
24901 BRAVE BULL ROAD
BELVIDERE, SD 57521
(605) 344-2543 (MICHAEL)

34+85 - ℄
IN PLACE 18" x 29' CMP

30+00 TO 33+50 - LT.
TEMPORARY EASEMENT FOR CUTSLOPES
AND FILLSLOPES, 0.3 AC.

30+56 TO 31+26 - RT.
PERMANENT EASEMENT FOR
MAINTENANCE PURPOSES, 0.02 AC.

REGISTERED PROFESSIONAL ENGINEER
REG. NO.
9061
LUCAS A.
JOHNSON
SOUTH DAKOTA
1-13-16

STATE OF SOUTH DAKOTA	PROJECT	SHEET NO.	TOTAL SHEETS
	BRO 8048(03)	19	76

FOR BIDDING PURPOSES ONLY

EAST REDFISH/
STAMFORD ROAD

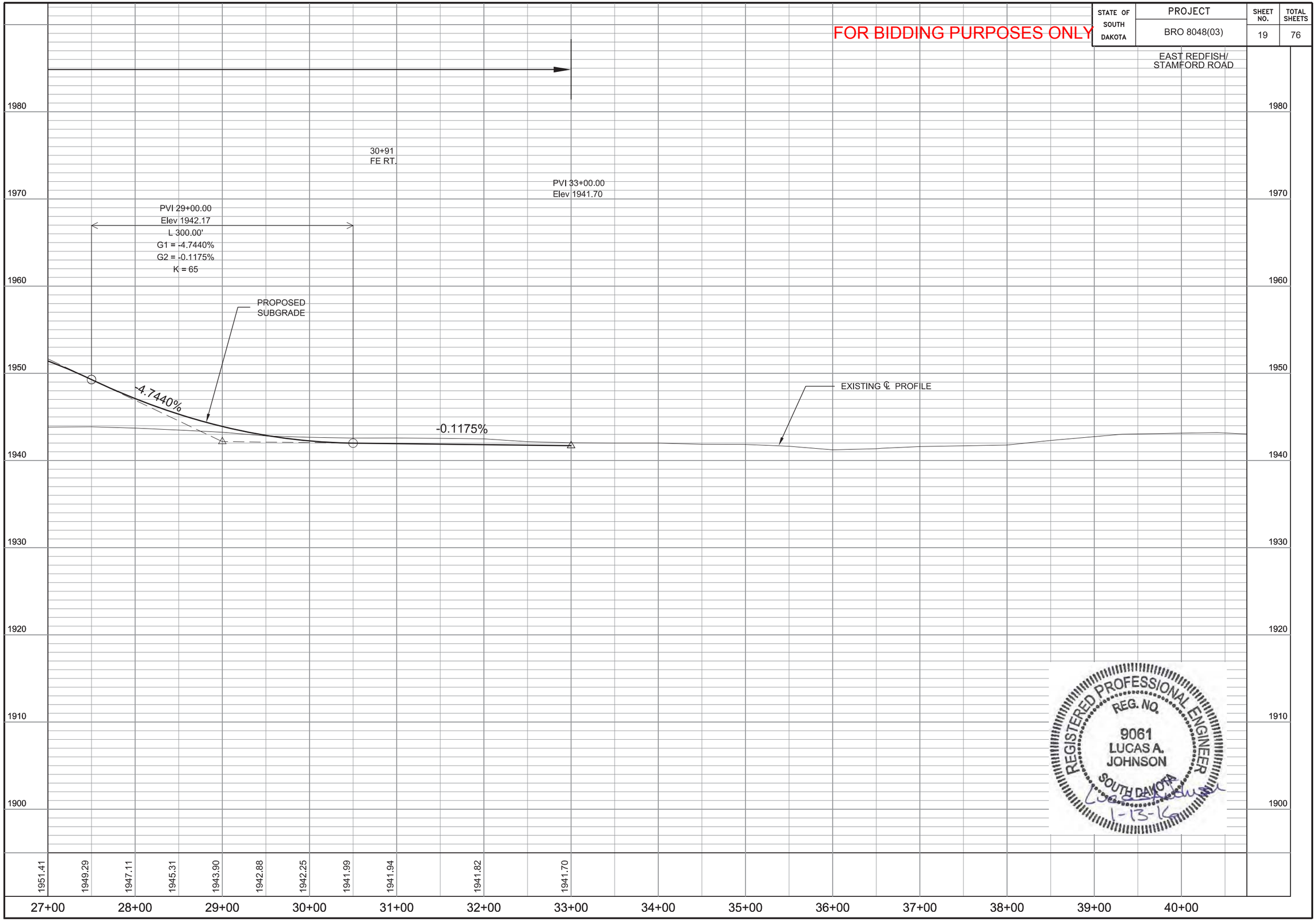

REGISTERED PROFESSIONAL ENGINEER
REG. NO.
9061
LUCAS A.
JOHNSON
SOUTH DAKOTA
1-13-16

STATE OF SOUTH DAKOTA	PROJECT	SHEET NO.	TOTAL SHEETS
	BRO 8048(03)	20	76

FOR BIDDING PURPOSES ONLY

WEST REDFISH ROAD

EXC	12	EMB +35%	244
UNDERCUT	194		85
CONT. FURN. BORROW	385	UNDERCUT	329
	591	+35%	194
			68
			262
			591

NOTE:
BORROW SHALL BE OBTAINED FROM A CONTRACTOR SUPPLIED SOURCE APPROVED BY THE ENGINEER

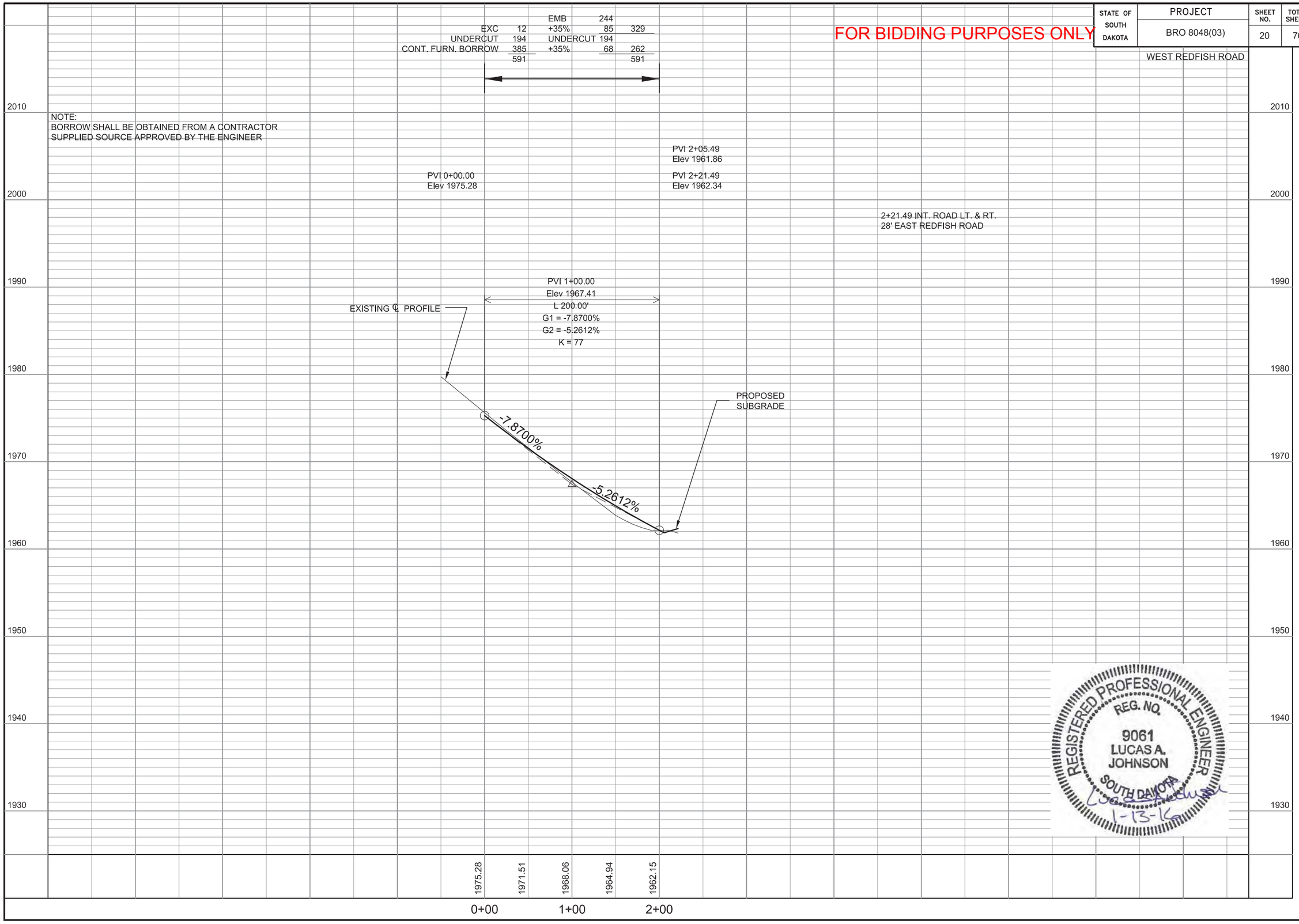

REGISTERED PROFESSIONAL ENGINEER
REG. NO.
9061
LUCAS A. JOHNSON
SOUTH DAKOTA
1-13-16

WHITE RIVER CHANNEL CLEANOUT & SHAPING

FOR BIDDING PURPOSES ONLY

STATE OF SOUTH DAKOTA	PROJECT	SHEET NO.	TOTAL SHEETS
	BRO 8048(03)	21	76

LEGEND
EXISTING CONTOURS
EXISTING INDEX CONTOURS
PROPOSED CONTOURS
PROPOSED INDEX CONTOURS

EQUATION
STA. 2+60.07 WHITE RIVER CENTERLINE = STA. 23+16.57 EAST REDFISH/STAMFORD ROAD

SCALE:
1" = 60'

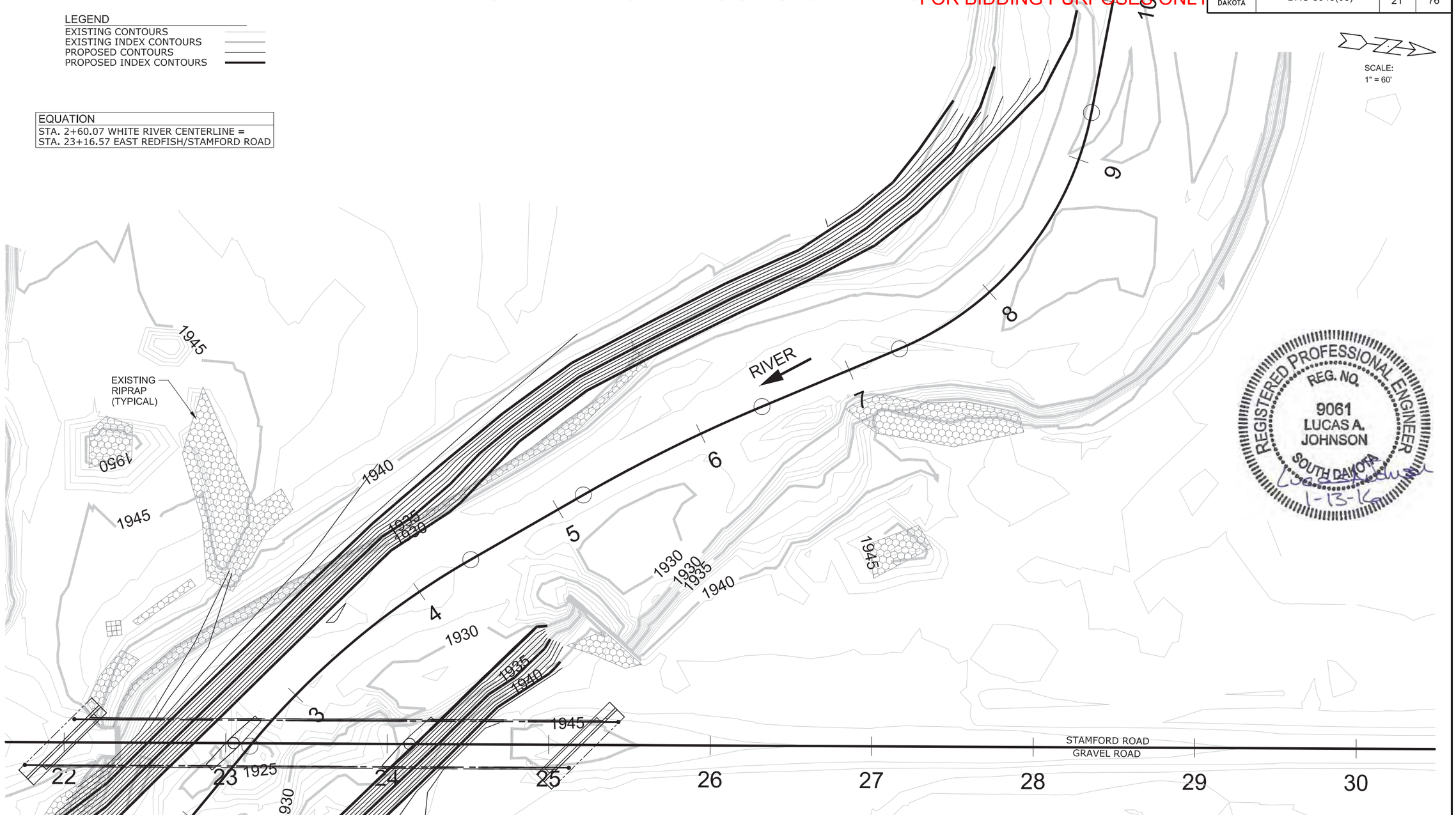

REGISTERED PROFESSIONAL ENGINEER
REG. NO.
9061
LUCAS A. JOHNSON
SOUTH DAKOTA
1-13-16

WHITE RIVER CURVE DATA	WHITE RIVER CURVE DATA	WHITE RIVER CURVE DATA
△ = 20°37'27" RT.	△ = 7°04'44" RT.	△ = 56°14'04" LT.
Da = 11°27'33"	Da = 5°43'46"	Da = 28°38'52"
T = 90.97'	T = 61.85'	T = 106.87'
R = 500.00'	R = 1000.00'	R = 200.00'
L = 179.98'	L = 123.55'	L = 196.29'
E = 8.21'	E = 1.91'	E = 26.76'
PI 3+48.59	PI 5+79.82	PI 8+40.71
N. 50571.00	N. 50756.32	N. 50981.74
E. 49908.62	E. 49767.08	E. 49635.41

CHANNEL CLEANOUT EARTHWORK QUANTITES

	EXC	2,801	EMB	4,097
CONT. FURNISHED BORROW		2,730	+35%	1,434
		5,531 CuYd		5,531 CuYd

SPUR DIKE PLAN

FOR BIDDING PURPOSES ONLY

STATE OF SOUTH DAKOTA	PROJECT	SHEET NO.	TOTAL SHEETS
	BRO 8048(03)	22	76

SPUR DIKE	LOCATION POINT	NORTHING	EASTING	ELEV.	QUANTITIES CLASS C RIPRAP (Ton)	TYPE B DRAINAGE FABRIC (SqYd)	PLACING EMBANKMENT (CuYd)
1	A B	51065.95 51053.99	49319.11 49350.06	1941.4 1940.1	549.0	517	365
2	A B	51106.51 51065.61	49390.28 49441.80	1941.4 1938.4	859.3	818	622
3	A B	51123.37 51047.18	49494.92 49539.59	1941.4 1937.4	1,092.5	1,033	736
4	A B	51109.54 50993.41	49598.55 49650.49	1942.0 1236.1	1,513.8	1,429	1,033
				Total:	4,014.6	3,797	2,756

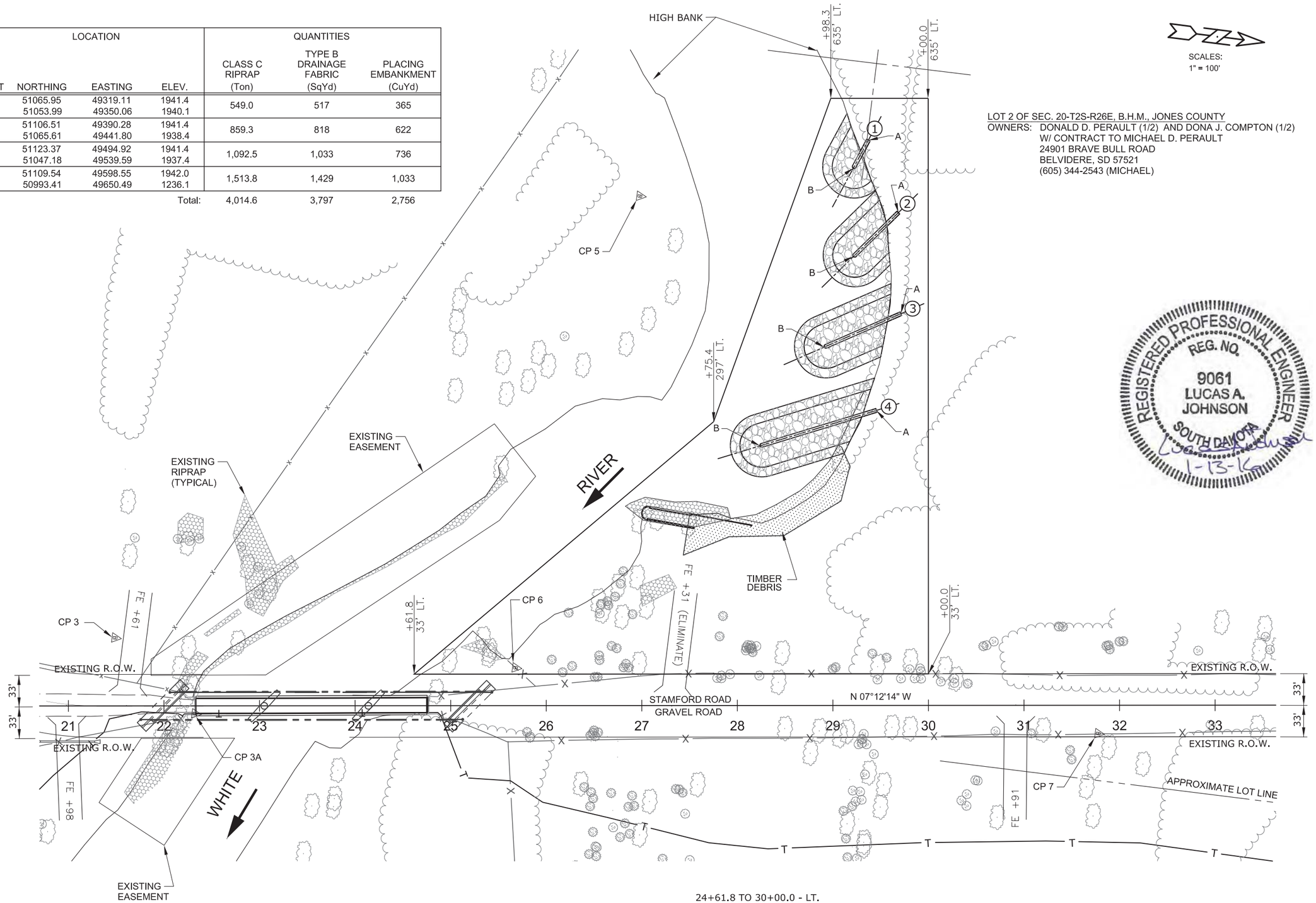

24+61.8 TO 30+00.0 - LT.
PERMANENT EASEMENT FOR
MAINTENANCE PURPOSES, 3.58 AC.

SPUR DIKE DETAILS

FOR BIDDING PURPOSES ONLY

STATE OF SOUTH DAKOTA	PROJECT	SHEET NO.	TOTAL SHEETS
	BRO 8048(03)	23	76

Rev. 2/17/2016 LAJ

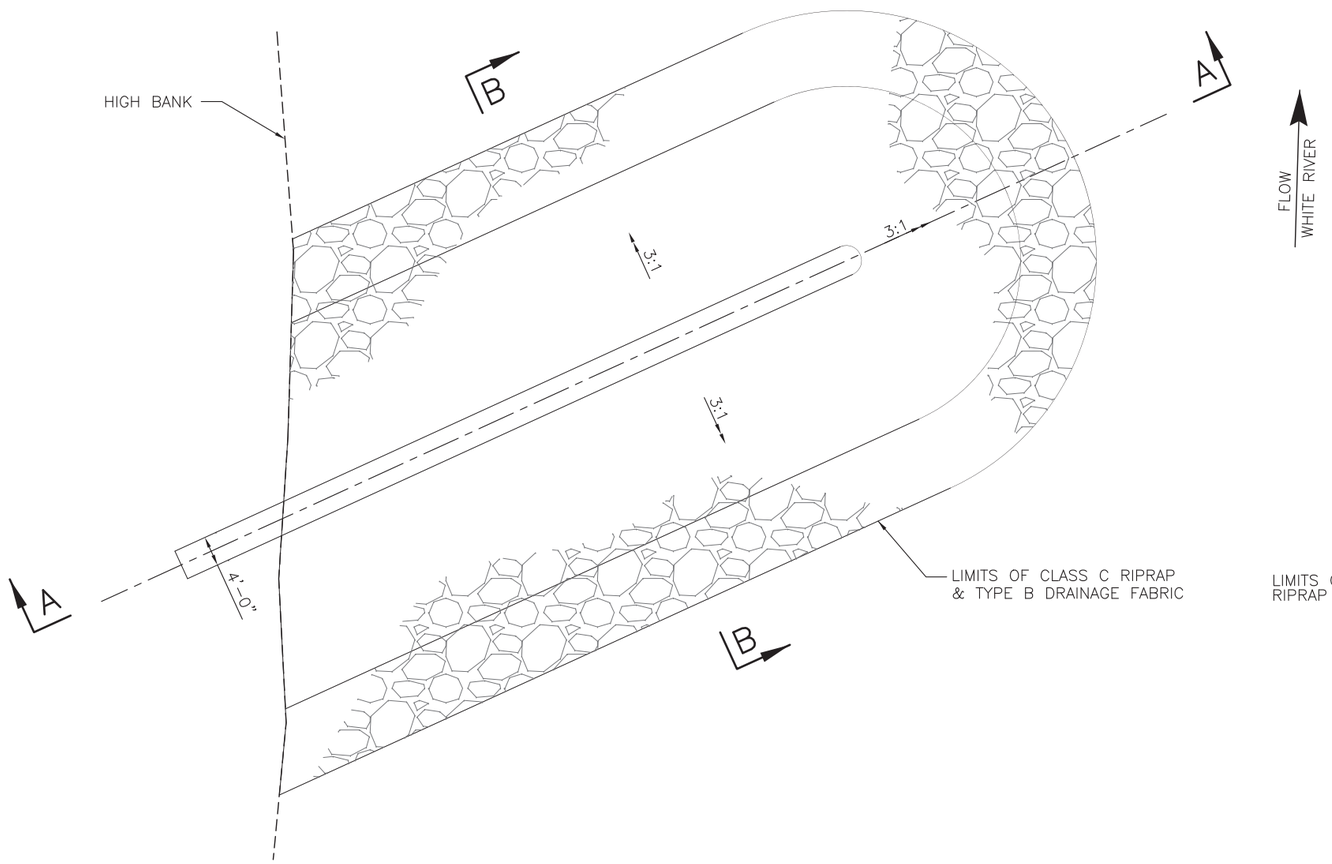

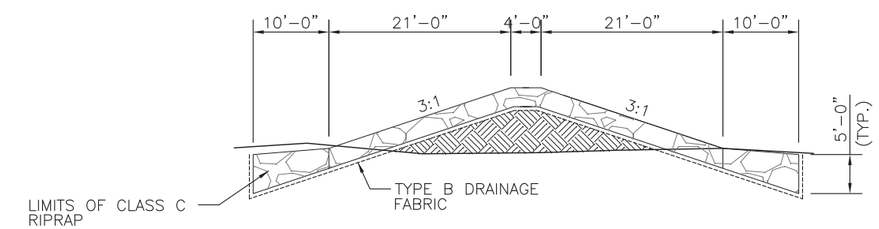

SECTION B–B

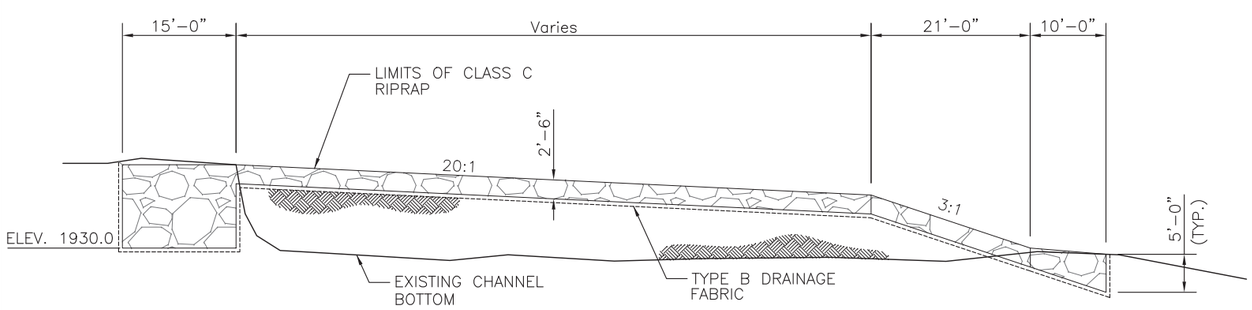

SECTION A–A

It is estimated that 2,756 CuYd of earth material will be required to construct the earthen portion of the spur dikes to the bottom of riprap elevation. Material shall be obtained from a Contractor furnished source and is subject to the approval of the Engineer. Fill material shall be placed as per Section 120.3.B.3.b, Ordinary Compaction Method.

Construction of the embankment for the spur dikes shall be accomplished after the White River has been diverted away from the spur dike area. Fill will not be placed through standing water. The foundation area will be dry and stable prior to embankment construction. Methods of accomplishing this could include any combination of the following; excavating temporary diversion channels, installing water barriers, bladders, sheet piles, or work berms. Other methods will also be considered but will need to be approved.

Payment for diverting the White River and preparing a foundation for construction of the spur dikes shall be incidental to the contract unit price per CuYd for Placing Embankment.

ESTIMATED QUANTITIES

ITEM	UNIT	QUANTITY
△ Class C Riprap	Ton	4,014.6
Type B Drainage Fabric	SqYd	3,797
Placing Embankment	CuYd	2,756

△ For estimating purposes only a factor of 1.4 Tons/CuYd was used to convert CuYd to Tons.

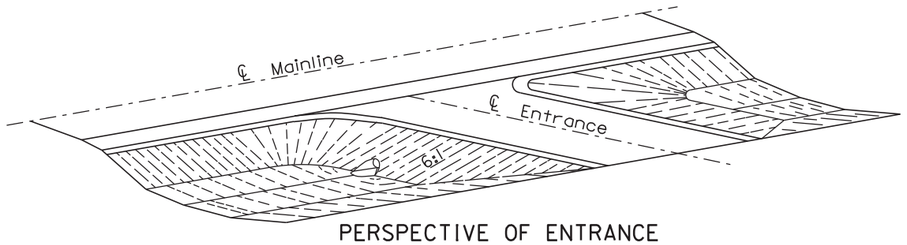

PERSPECTIVE OF ENTRANCE

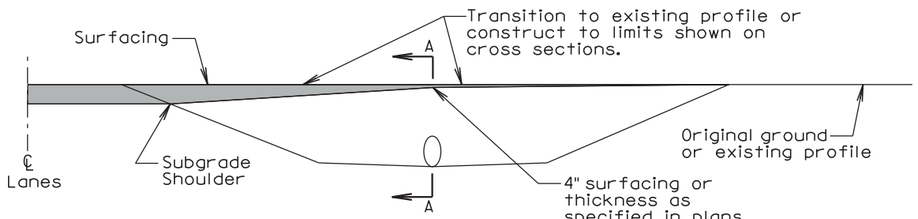

ELEVATION VIEW (ENTRANCE)

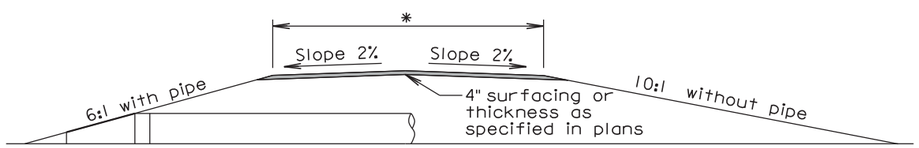

SECTION A-A (ENTRANCE)

*The finished surfacing width is stated elsewhere in the plans. The subgrade width is 4' wider than the finished surfacing width unless stated otherwise in the plans.

GENERAL NOTES:

The ditch section shown above in the perspective and elevation view is only for illustrative purposes.

A 6:1 inslope shall be constructed for an entrance when a pipe is required. A 10:1 inslope shall be constructed when a pipe is not required.

Pipe lengths shall be adjusted if necessary during construction to obtain the 6:1 slopes. For grading projects, the pipe lengths are estimated typically using a 4" thickness of surfacing directly over the subgrade above the pipe.

The transition area between the mainline inslope and the approach inslope for entrances shall be rounded to eliminate an abrupt transition.

The turning radii shall be 35' for intersecting roads and entrances unless stated otherwise in the plans.

September 6, 2013

Published Date: 4th Qtr. 2015	SDDOT	INTERSECTING ROADS AND ENTRANCES	PLATE NUMBER 120.01
			Sheet 1 of 2

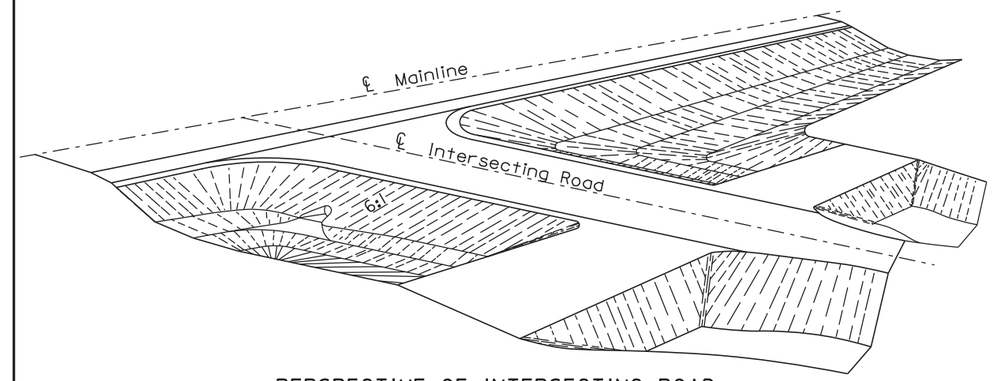

PERSPECTIVE OF INTERSECTING ROAD

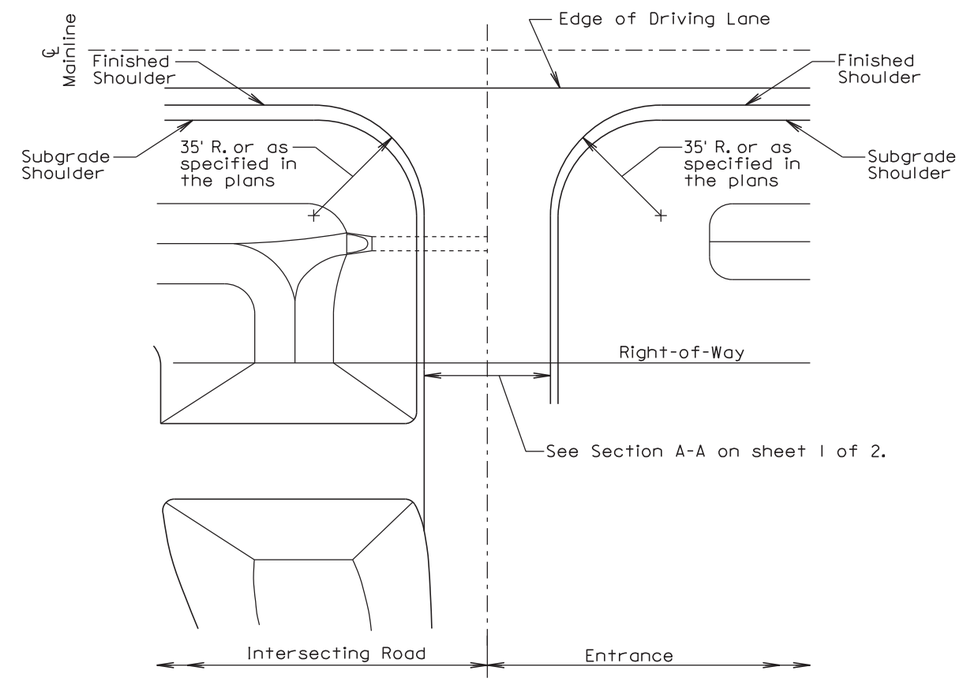

PLAN VIEW

September 6, 2013

Published Date: 4th Qtr. 2015	SDDOT	INTERSECTING ROADS AND ENTRANCES	PLATE NUMBER 120.01
			Sheet 2 of 2

TOLERANCES IN DIMENSIONS

Diameter: ±1.5% for 24" Dia. or less and ±1% or 3/8" whichever is more for 27" Dia. or greater.
Diameters at joints: ± 3/16" for 30" Dia. or less and ± 1/4" for 36" or greater.
Length of joint (j): ± 1/4".
Wall thickness (T): not less than design T by more than 5% or 3/16", whichever is greater.
Laying length: shall not underrun by more than 1/2".

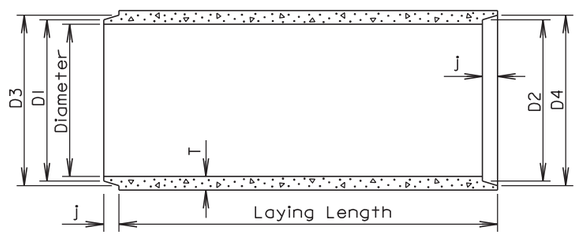

LONGITUDINAL SECTION

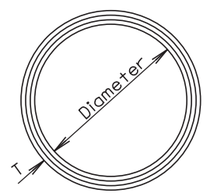

END VIEW

GENERAL NOTES:

Construction of R. C. P. shall conform to the requirements of Section 990 of the Specifications.

Not more than 2 four-foot sections shall be permitted near the ends of any culvert. Four-foot lengths shall be used only to secure the required length of culvert.

Diam. (in.)	Approx. Wt. /Ft. (lb.)	T (in.)	J (in.)	D1 (in.)	D2 (in.)	D3 (in.)	D4 (in.)
12	92	2	1 3/4	13 1/4	13 5/8	13 7/8	14 1/4
15	127	2 1/4	2	16 1/2	16 7/8	17 1/4	17 5/8
18	168	2 1/2	2 1/4	19 5/8	20	20 3/8	20 3/4
21	214	2 3/4	2 1/2	22 7/8	23 1/4	23 3/4	24 1/8
24	265	3	2 3/4	26	26 3/8	27	27 3/8
27	322	3 1/4	3	29 1/4	29 5/8	30 1/4	30 5/8
30	384	3 1/2	3 1/4	32 3/8	32 3/4	33 1/2	33 7/8
36	524	4	3 3/4	38 3/4	39 1/4	40	40 1/2
42	685	4 1/2	4	45 1/8	45 5/8	46 1/2	47
48	867	5	4 1/2	51 1/2	52	53	53 1/2
54	1070	5 1/2	4 1/2	57 7/8	58 3/8	59 3/8	59 7/8
60	1296	6	5	64 1/4	64 3/4	66	66 1/2
66	1542	6 1/2	5 1/2	70 5/8	71 1/8	72 1/2	73
72	1810	7	6	77	77 1/2	79	79 1/2
78	2098	7 1/2	6 1/2	83 3/8	83 7/8	85 5/8	86 1/8
84	2410	8	7	89 3/4	90 1/4	92 1/8	92 5/8
90	2740	8 1/2	7	95 3/4	96 1/4	98 1/8	98 5/8
96	2950	9	7	102 1/8	102 5/8	104 1/2	105
102	3075	9 1/2	7 1/2	109	109 1/2	111 1/2	112
108	3870	10	7 1/2	115 1/2	116	118	118 1/2

June 26, 2015

Published Date: 4th Qtr. 2015

SDDOT

REINFORCED CONCRETE PIPE

PLATE NUMBER 450.01

Sheet 1 of 1

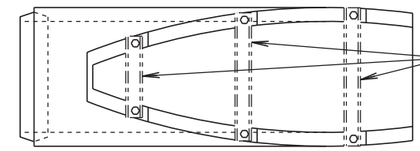

If bars are specified in the plans then provide HSS 2.5X2.5X.1875 Structural Steel Tubing in conformance with ASTM A500, Grade B or 3" Diameter Schedule 40 Pipe in conformance with ASTM A53, Grade B.

TOP VIEW

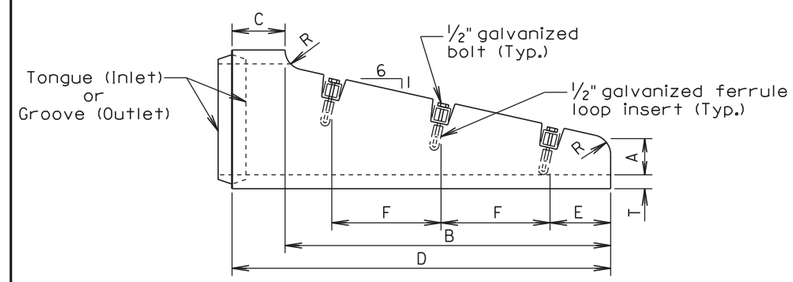

SIDE VIEW

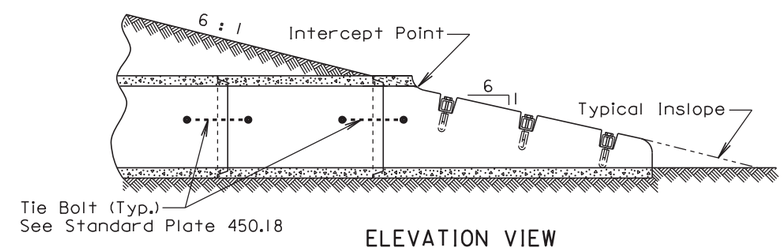

ELEVATION VIEW

Dia. (in.)	T (in.)	R (in.)	A (in.)	B (in.)	C (in.)	D (in.)	E (in.)	F (in.)	No. Sections	No. Bars
FOR CIRCULAR PIPE										
15	2 1/4	3	6	48	9	57	6	18	1	3
18	2 1/2	3	6	69	9	78	9	24	1	3
*24	3	3	6	111	9	120	6	24	1 or 2	5
FOR ARCH PIPE										
**18	2 1/2	1	6	39	33	72	6	24	1	2

*The use of 2 sections must be an approved design.
**Equivalent Diameter of Circular R. C. P.

GENERAL NOTES:

The length of concrete pipe shown on the plans is between safety ends.

Safety ends without bars are acceptable with or without the bar notches.

Bars shall be galvanized after fabrication in accordance with ASTM A123.

August 31, 2013

Published Date: 4th Qtr. 2015

SDDOT

R. C. P. SAFETY ENDS WITH OR WITHOUT BARS

PLATE NUMBER 450.12

Sheet 1 of 1

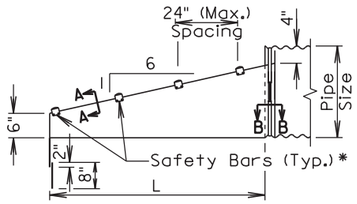

ELEVATION VIEW

*Number of bars required will vary depending on the length of the end section.

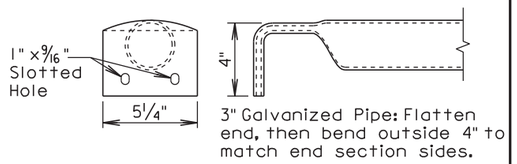

DETAIL OF SAFETY BARS

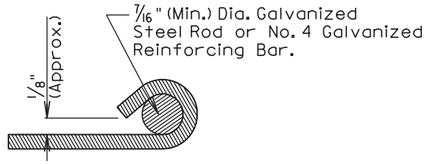

SECTION A-A

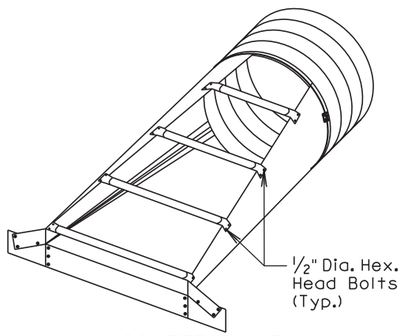

ISOMETRIC VIEW

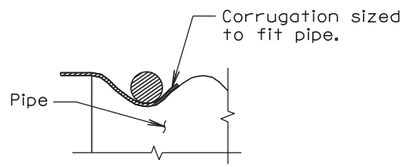

SECTION B-B

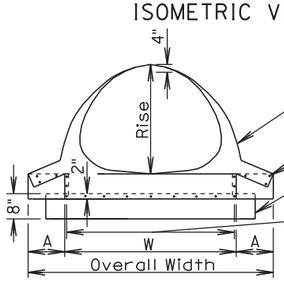

FRONT VIEW

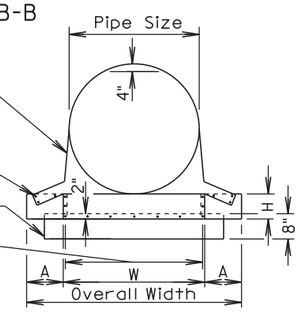

FRONT VIEW

Reinforced Edge Full Length of End Section (See Section A-A)

Bolts to hold the Surfaces tightly together

Optional Toe Plate Extension (Same Gage as End Section)

Holes spaced at 12" (Max.)

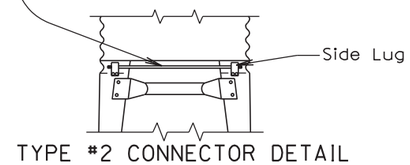

TYPE #2 CONNECTOR DETAIL
(For 30" and Larger)
(For 21" X 15" and Larger)

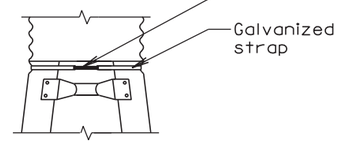

TYPE #1 CONNECTOR DETAIL
(For 15" Through 24")

June 26, 2015

Published Date: 4th Qtr. 2015	SDDOT	C. M. P. SAFETY ENDS	PLATE NUMBER 450.38
			Sheet 1 of 2

ARCH C.M.P. SAFETY ENDS

Equv. Dia. (Inch)	(Inches)		Min. Thick.		Dimensions (Inches)				L Dimensions	
	Span	Rise	Inch	Gage	A	H	W	Overall Width	Slope	Length (Inch)
18	21	15	.064	16	8	6	27	43	6:1	30
21	24	18	.064	16	8	6	30	46	6:1	48
24	28	20	.064	16	8	6	34	50	6:1	60
30	35	24	.079	14	12	9	41	65	6:1	84
36	42	29	.109	12	12	9	48	72	6:1	114
42	49	33	.109	12	16	12	55	87	6:1	138
48	57	38	.109	12	16	12	63	95	6:1	168
54	64	43	.109	12	16	12	70	102	6:1	198
60	71	47	.109	12	16	12	77	109	6:1	222
72	83	57	.109	12	16	12	89	121	6:1	282

CIRCULAR C.M.P. SAFETY ENDS

Pipe Dia. (Inch)	Min. Thick.		Dimensions (Inches)				L Dimensions	
	Inch	Gage	A	H	W	Overall Width	Slope	Length (Inch)
15	.064	16	8	6	21	37	6:1	30
18	.064	16	8	6	24	40	6:1	48
21	.064	16	8	6	27	43	6:1	66
24	.064	16	8	6	30	46	6:1	84
30	.109	12	12	9	36	60	6:1	120
36	.109	12	12	9	42	66	6:1	156
42	.109	12	16	12	48	80	6:1	192
48	.109	12	16	12	54	86	6:1	228
54	.109	12	16	12	60	92	6:1	264
60	.109	12	16	12	66	98	6:1	300

GENERAL NOTES:

Safety ends shall be fabricated from galvanized steel conforming to the requirements of the Specifications.

Safety bars shall be fabricated from steel schedule 40 pipe in conformance with ASTM A53, grade B or HSS 3.5X.216 in conformance with ASTM A500, grade B.

Slotted holes for safety bar attachment shall be provided for all end sections.

Attachment to circular pipes 15" through 24" diameter shall be made with Type #1 straps. All other sizes shall be attached with Type #2 rods and lugs.

When stated in the plans, optional toe plate extension shall be punched and bolted to end section apron lip with 3/8" diameter galvanized bolts. Steel for toe plate extension shall be same gauge as end section. Dimensions shall be overall width less 6" by 8" high.

Installation shall be performed in accordance with the Specifications.

Cost of all work and materials required for fabrication and installation of safety ends shall be incidental to the bid items for the various sizes of safety ends.

June 26, 2015

Published Date: 4th Qtr. 2015	SDDOT	C. M. P. SAFETY ENDS	PLATE NUMBER 450.38
			Sheet 2 of 2

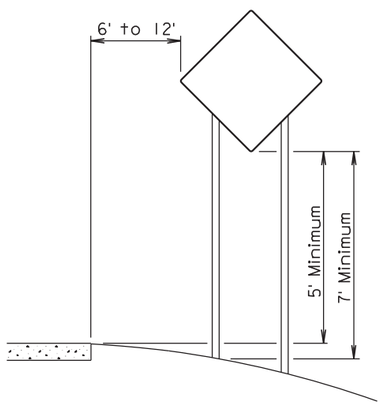

RURAL DISTRICT

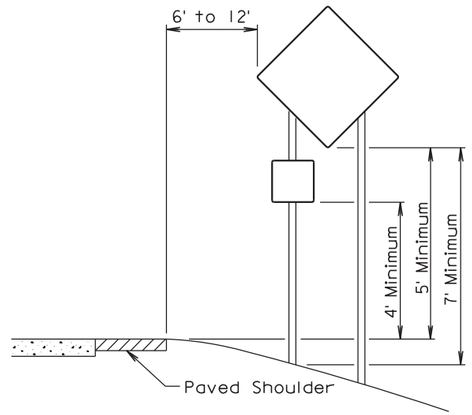

RURAL DISTRICT WITH SUPPLEMENTAL PLATE

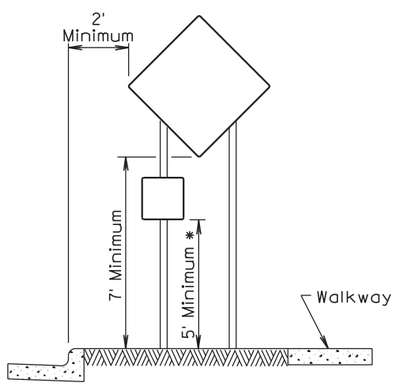

URBAN DISTRICT

* If the bottom of supplemental plate is mounted lower than 7 feet above a pedestrian walkway, the supplemental plate should not project more than 4" into the pedestrian facility.

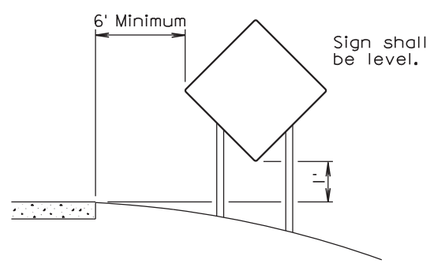

RURAL DISTRICT
3 DAY MAXIMUM
(Not applicable to regulatory signs)

September 22, 2014

Published Date: 4th Qtr. 2015	SDDOT	CRASHWORTHY SIGN SUPPORTS (Typical Construction Signing)	PLATE NUMBER 634.85 Sheet 1 of 1

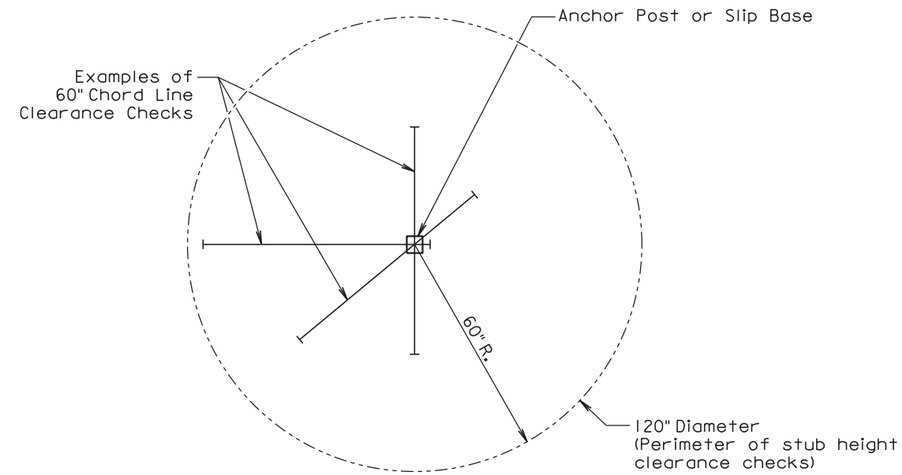

PLAN VIEW
(Examples of stub height clearance checks)

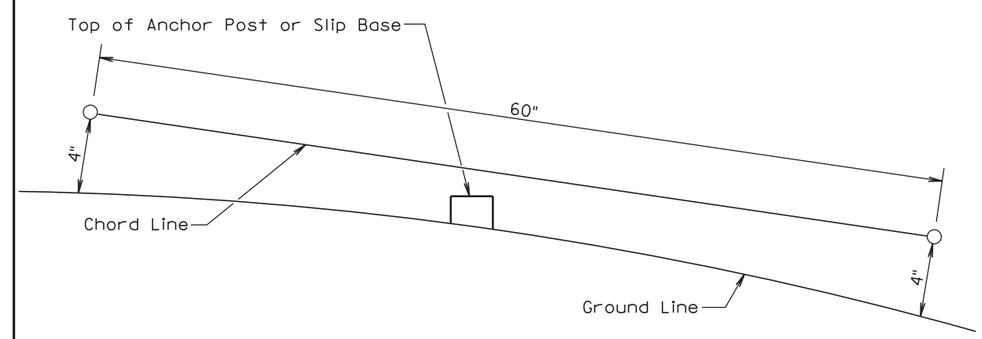

ELEVATION VIEW

GENERAL NOTES:

The top of anchor posts and slip bases SHALL NOT extend above a 60" chord line within a 120" diameter circle around the post with ends 4" above the ground.

At locations where there is curb and gutter adjacent to the breakaway sign support, the stub height shall be a maximum of 4" above the ground line at the localized area adjacent to the breakaway support stub.

The 4" stub height clearance is not necessary for U-channel lap splices where the support is designed to yield (bend) at the base.

July 1, 2005

Published Date: 4th Qtr. 2015	SDDOT	BREAKAWAY SUPPORT STUB CLEARANCE	PLATE NUMBER 634.99 Sheet 1 of 1

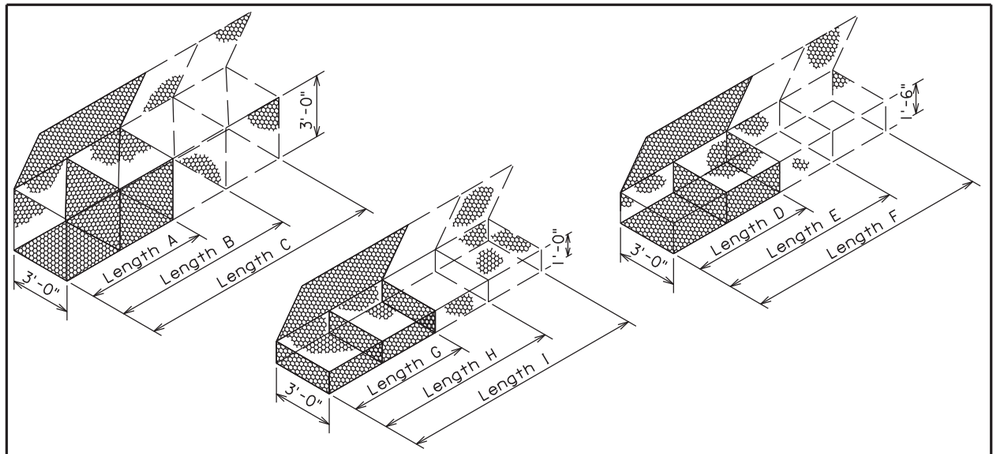

GABION DETAILS

STANDARD SIZES

SIZE	LENGTH	WIDTH	HEIGHT	NUMBER OF CELLS	CAPACITY, Cu. Yd.
A	6'-0"	3'-0"	3'-0"	2	2.0
B	9'-0"	3'-0"	3'-0"	3	3.0
C	12'-0"	3'-0"	3'-0"	4	4.0
D	6'-0"	3'-0"	1'-6"	2	1.0
E	9'-0"	3'-0"	1'-6"	3	1.5
F	12'-0"	3'-0"	1'-6"	4	2.0
G	6'-0"	3'-0"	1'-0"	2	0.7
H	9'-0"	3'-0"	1'-0"	3	1.0
I	12'-0"	3'-0"	1'-0"	4	1.3

Above Dimensions subject to mill tolerances.

GENERAL NOTES:

Lacing and internal connecting wire shall be 0.0866 inch diameter steel wire ASTM A641 Class 3 soft temper measured after galvanizing and for PVC coated gabions shall be 0.0866 inch diameter steel wire measured after galvanizing but before PVC coating.

The lacing procedure is as follows:

1. Cut a length of lacing wire approximately 1 ½ times the distance to be laced but not exceeding 5 feet.
2. Secure the wire terminal at the corner by looping and twisting.
3. Proceed lacing with alternating single and double loops at a spacing not to exceed 6 inches.
4. Securely fasten the other lacing wire terminal.

Wire lacing or interlocking type fasteners shall be used for gabion assembly and final construction of gabion structures. Interlocking fasteners for galvanized gabions shall be high tensile 0.120 inch diameter galvanized steel wire measured after galvanizing. The galvanizing shall conform to ASTM A641-92 Class 3 coating. Fasteners shall also be in accordance with ASTM A764, Class II, Type III.

Interlocking fasteners for PVC coated gabions shall be high tensile 0.120 inch diameter stainless steel wire conforming to ASTM A313, Type 302, Class I. The spacing of the interlocking fasteners during all phases of assembly and construction shall not exceed 6 inches.
All fasteners shall be placed where the mesh weaves around the selvage wire at the vertical and horizontal joints.

June 26, 2001

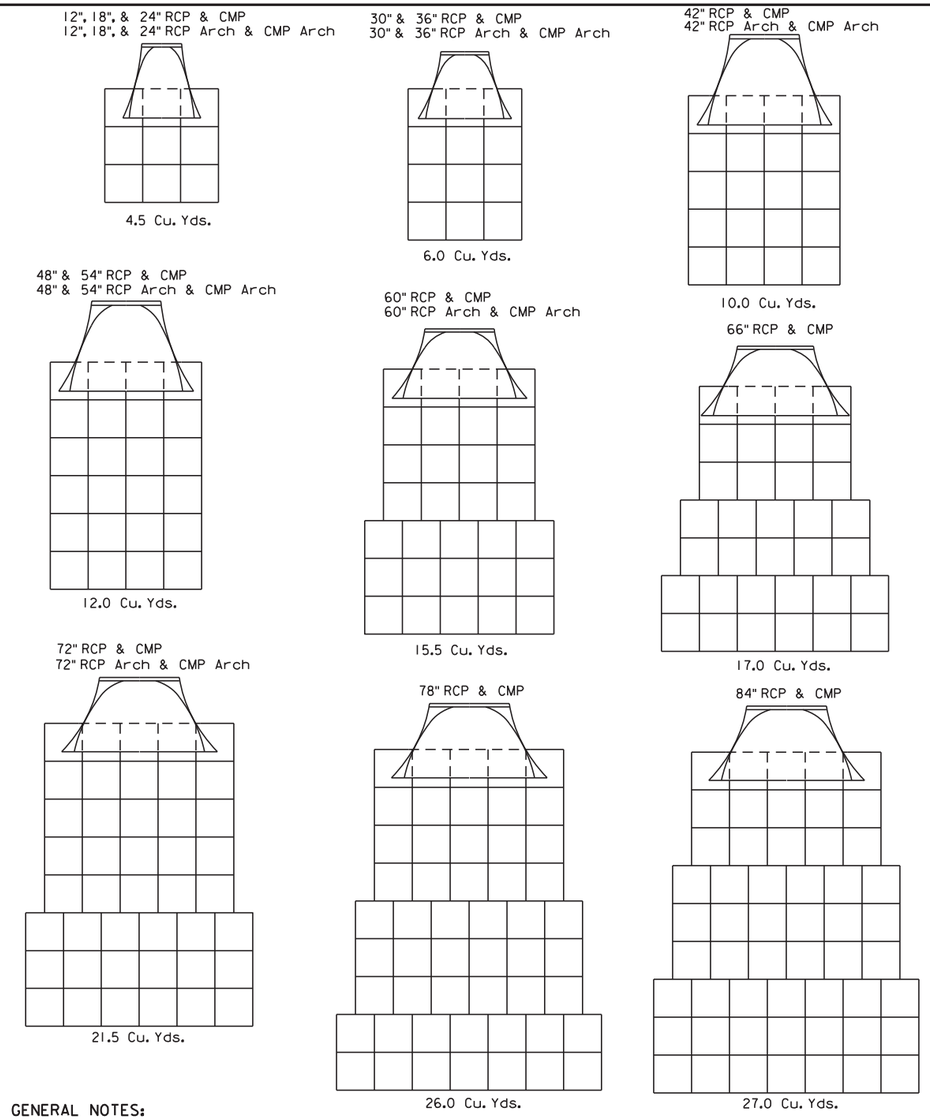

GENERAL NOTES:

Gabions at outlets of C. M. pipe and R. C. pipe shall be placed under the end section a distance of 2' from the outlet end of the section. For C. M. pipe end section installations, the upper fabric of the gabions shall be modified to accommodate the metal end section in a manner approved by the Engineer.

Quantities shown on this standard plate are based on standard gabion sizes D, E, and F (See Standard Plate 720.01).

June 26, 2001

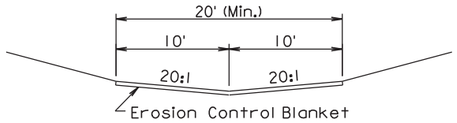

STANDARD DITCH SECTION

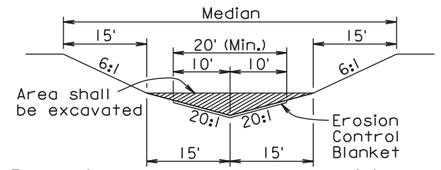

The median shall be shaped to the limits shown in this detail where the erosion control blanket will be placed.

MEDIAN SECTION

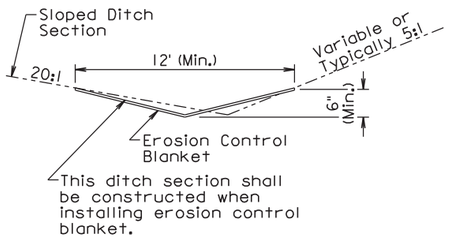

SLOPED DITCH SECTION

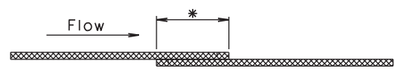

* Use a 4" (Min.) overlap wherever two widths of erosion control blanket are applied side by side.

* Use a 6" (Min.) overlap wherever one roll of erosion control blanket ends and another begins.

OVERLAP DETAIL

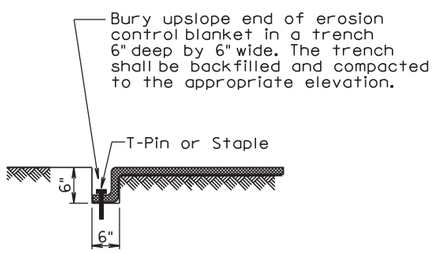

TRENCH DETAIL

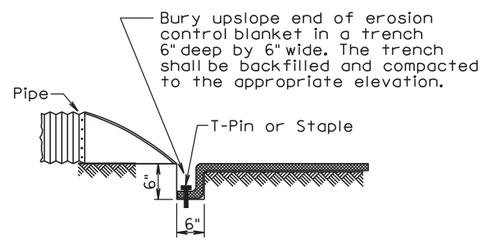

PIPE END DETAIL

GENERAL NOTES:

Prior to placement of the erosion control blanket, the areas shall be properly prepared, shaped, seeded, and fertilized.

Erosion control blanket shall be unrolled in the direction of the flow of water when placed in ditches and on slopes. The upslope end of the erosion control blanket shall be buried in a trench 6" wide by 6" deep. There shall be at least a 6" overlap wherever one roll of erosion control blanket ends and another begins, with the upslope erosion control blanket placed on top of the downslope erosion control blanket.

The erosion control blanket shall be pinned to the ground according to the manufacturer's installation recommendations.

After the placement of the erosion control blanket, the Contractor shall fine grade along all edges of the blanket to maintain a uniform slope adjacent to the blanket and level any low spots which might prevent uniform and unrestricted flow of side drainage directly onto the erosion control blanket.

All ditch sections shall be shaped when installing the erosion control blanket. All costs for shaping the ditches shall be incidental to the contract unit price per foot for "Shaping for Erosion Control Blanket".

December 23, 2004

Published Date: 4th Qtr. 2015	SDDOT	***EROSION CONTROL BLANKET***	***PLATE NUMBER*** *734.01*
			Sheet 1 of 1

MANUAL HIGH FLOW SILT FENCE INSTALLATION

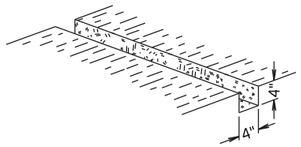

1 EXCAVATE TRENCH

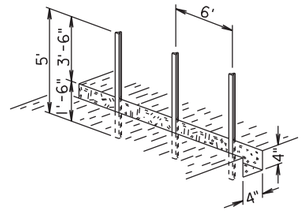

2 DRIVE STEEL T FENCE POSTS

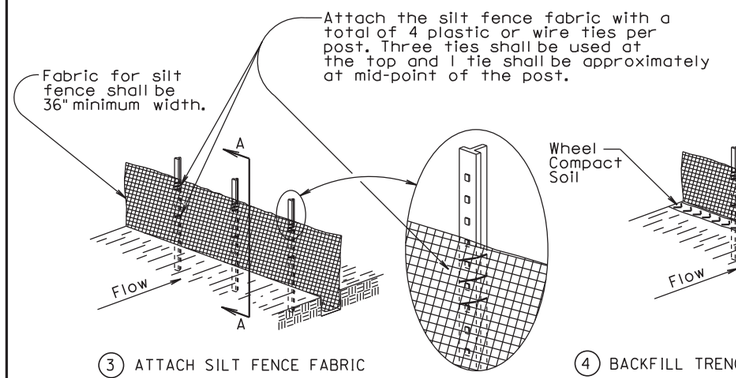

3 ATTACH SILT FENCE FABRIC

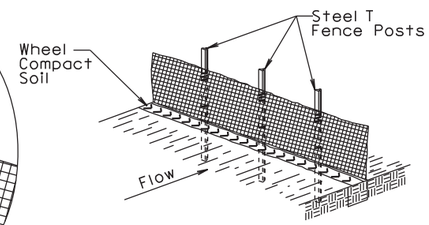

4 BACKFILL TRENCH AND WHEEL COMPACT SOIL

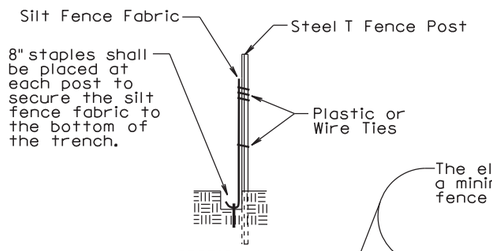

SECTION A-A

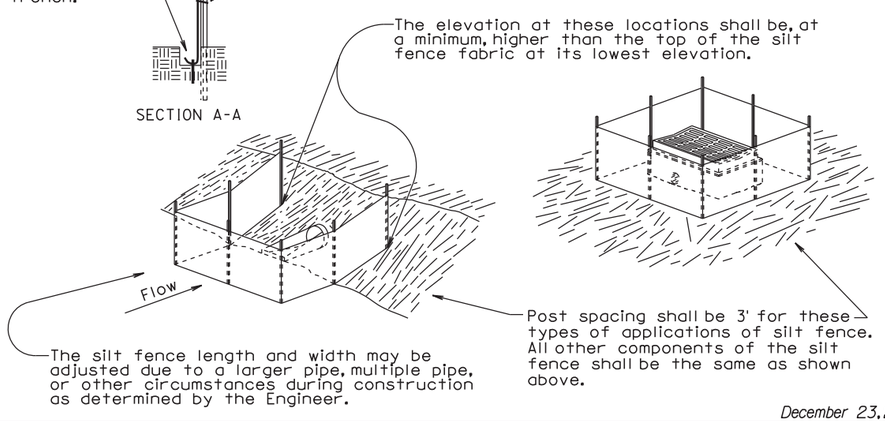

December 23, 2003

Published Date: 4th Qtr. 2015	SDDOT	HIGH FLOW SILT FENCE	PLATE NUMBER 734.05
			Sheet 1 of 2

MACHINE SLICED HIGH FLOW SILT FENCE INSTALLATION

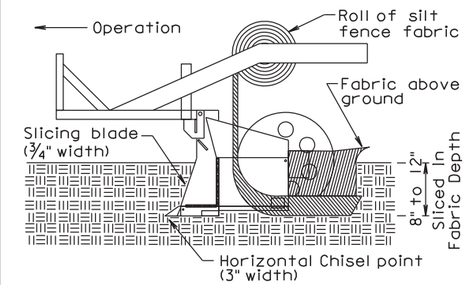

1 INSTALL SILT FENCE FABRIC BY MACHINE SLICING METHOD.

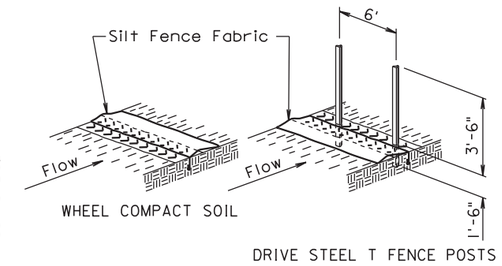

2 WHEEL COMPACT SOIL ABOVE SLICED IN PORTION OF FABRIC AND THEN DRIVE STEEL T FENCE POSTS.

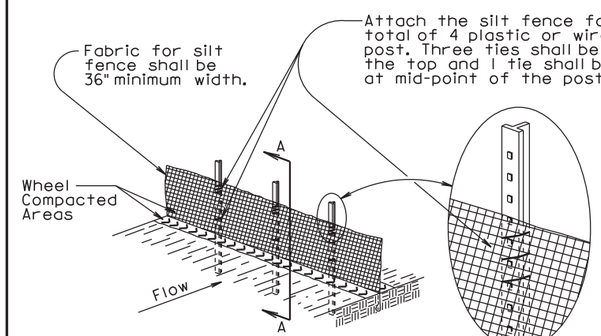

3 ATTACH SILT FENCE FABRIC

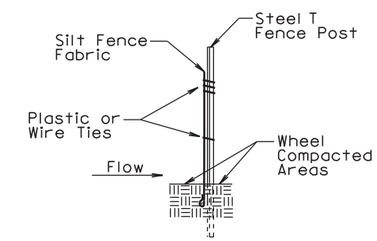

SECTION A-A

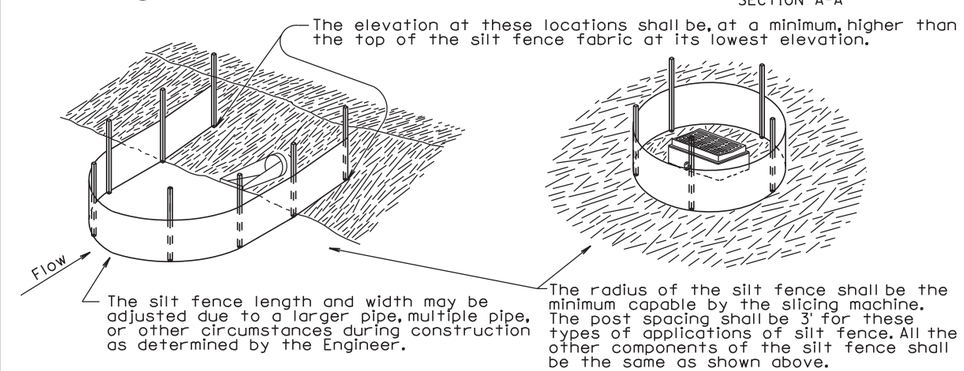

GENERAL NOTE:

If a trench can not be dug or the silt fence fabric can not be sliced in due to the type of earthen material (such as rock), then a row of 30 to 40 pound sandbags butted end to end shall be provided on top of the extra length of silt fence fabric to prevent underflow.

December 23, 2003

Published Date: 4th Qtr. 2015	SDDOT	HIGH FLOW SILT FENCE	PLATE NUMBER 734.05
			Sheet 2 of 2

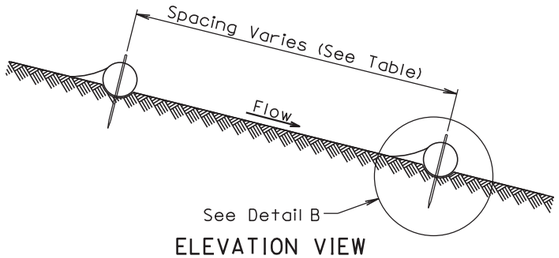

ELEVATION VIEW
CUT OR FILL SLOPE INSTALLATION

CUT OR FILL SLOPE INSTALLATION	
Slope	Spacing (Ft)
1:1	10
2:1	20
3:1	30
4:1	40

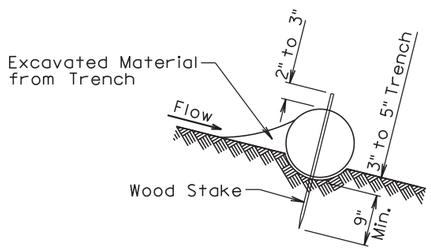

DETAIL B
(TYPICAL OF ALL INSTALLATIONS)

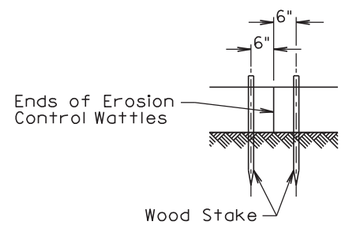

DETAIL C

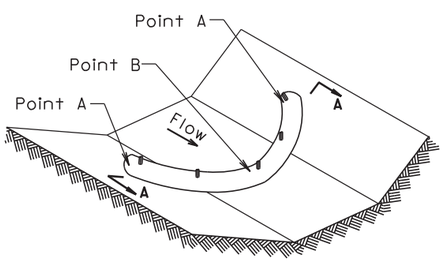

ISOMETRIC VIEW
DITCH INSTALLATION

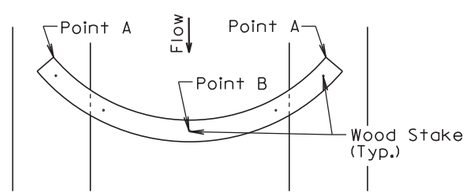

PLAN VIEW
DITCH INSTALLATION

DITCH INSTALLATION	
Grade	Spacing (Ft)
2%	150
3%	100
4%	75
5%	50

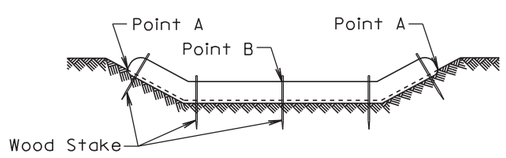

SECTION A-A

December 23, 2004

Published Date: 4th Qtr. 2015	SDDOT	EROSION CONTROL WATTLE	PLATE NUMBER 734.06
			Sheet 1 of 2

GENERAL NOTES:

At cut or fill slope installations, wattles shall be installed along the contour and perpendicular to the water flow.

At ditch installations, point A must be higher than point B to ensure that water flows over the wattle and not around the ends.

The Contractor shall dig a 3" to 5" trench, install the wattle tightly in the trench so that daylight can not be seen under the wattle, and then compact the soil excavated from the trench against the wattle on the uphill side. See Detail B.

The stakes shall be 1"x2" or 2"x2" wood stakes, however, other types of stakes such as rebar may be used only if approved by the Engineer. The stakes shall be placed 6" from the ends of the wattles and the spacing of the stakes along the wattles shall be 3' to 4'.

Where installing running lengths of wattles, the Contractor shall butt the second wattle tightly against the first and shall not overlap the ends. See Detail C.

The Contractor and Engineer shall inspect the erosion control wattles once every week and within 24 hours after every rainfall event greater than ½". The Contractor shall remove, dispose, or reshape the accumulated sediment when necessary as determined by the Engineer.

Sediment removal, disposal, or necessary shaping shall be as directed by the Engineer. All costs for removing accumulated sediment, disposal of sediment, and necessary shaping shall be incidental to the contract unit price per cubic yard for "Remove Sediment".

All costs for furnishing and installing the erosion control wattles including labor, equipment, and materials shall be incidental to the contract unit price per foot for the corresponding erosion control wattle bid item.

All costs for removing the erosion control wattle from the project including labor, equipment, and materials shall be incidental to the contract unit price per foot for "Remove Erosion Control Wattle".

December 23, 2004

Published Date: 4th Qtr. 2015	SDDOT	EROSION CONTROL WATTLE	PLATE NUMBER 734.06
			Sheet 2 of 2

CP NO. 3 EL. 1953.19
5/8" REBAR & GD.
STA. 21+48.87 – 71.13' LT.

THE ELEVATIONS SHOWN IN THESE PLANS ARE BASED ON THE NATIONAL GEODETIC SURVEY (NGS) NORTH AMERICAN VERTICAL DATUM OF 1988 (NAVD88)

CP NO. 4 EL. 1941.50
5/8" REBAR & GD.
STA. 24+84.05 – 86.78' RT.

FOR BIDDING PURPOSES ONLY

STATE OF SOUTH DAKOTA	PROJECT	SHEET NO.	TOTAL SHEETS
	BRO 8048(03)	32	76

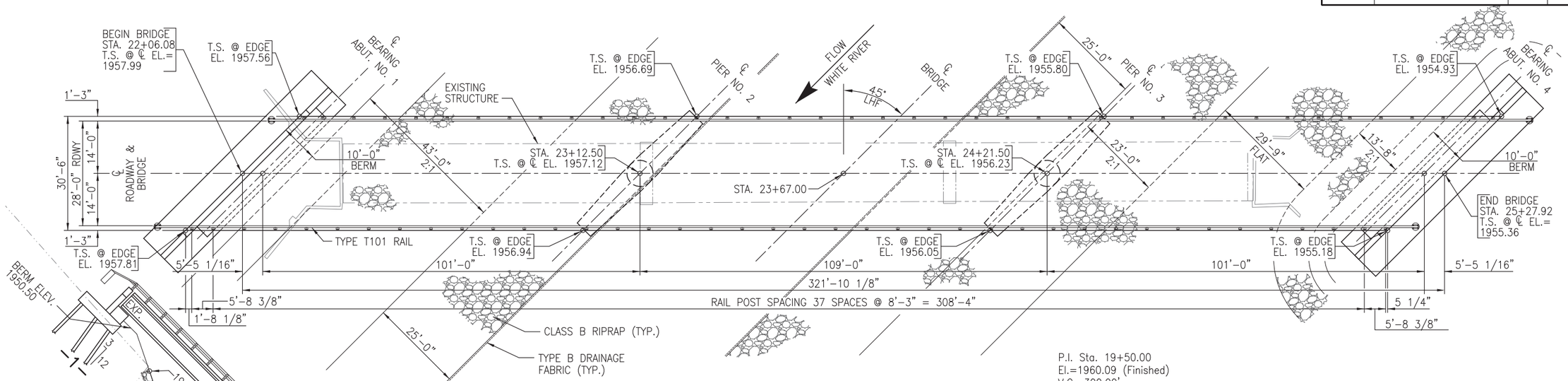

PLAN

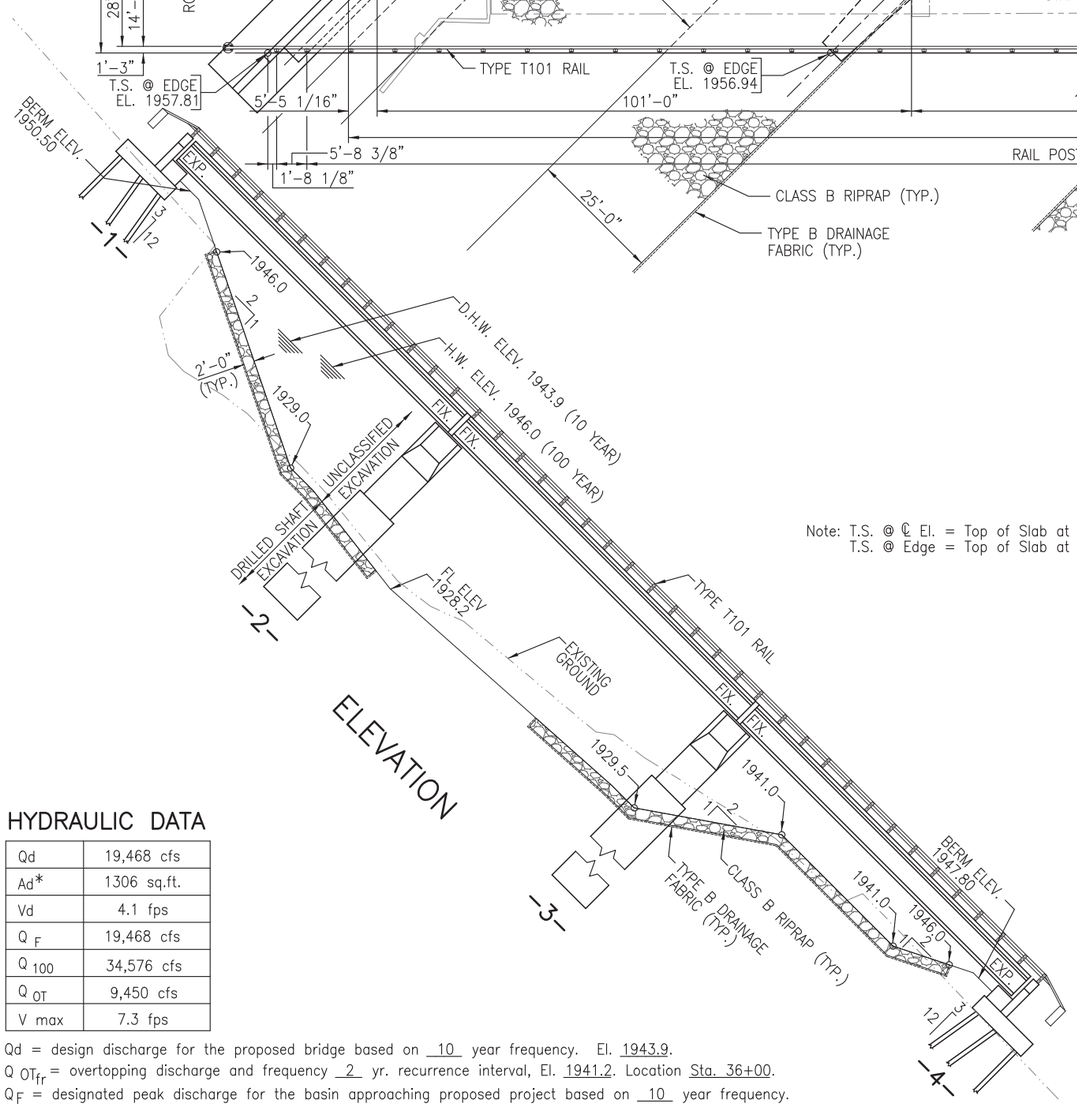

ELEVATION

Note: T.S. @ ℄ El. = Top of Slab at Centerline Elevation.
T.S. @ Edge = Top of Slab at Edge of Deck.

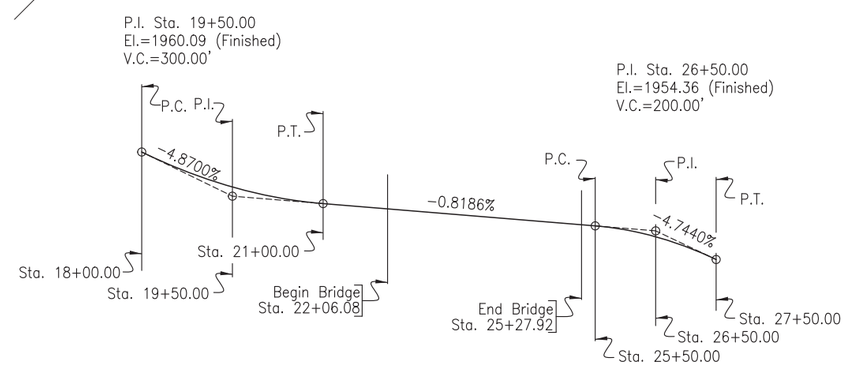

VERTICAL CURVE AND GRADELINE DATA

HYDRAULIC DATA

Qd	19,468 cfs
Ad*	1306 sq.ft.
Vd	4.1 fps
Q_F	19,468 cfs
Q_{100}	34,576 cfs
Q_{OT}	9,450 cfs
V max	7.3 fps

Qd = design discharge for the proposed bridge based on 10 year frequency. El. 1943.9.
$Q_{OT_{fr}}$ = overtopping discharge and frequency 2 yr. recurrence interval, El. 1941.2. Location Sta. 36+00.
Q_F = designated peak discharge for the basin approaching proposed project based on 10 year frequency.
Q_{100} = computed discharge for the basin approaching proposed project based on 100 year frequency, El. 1946.0.
V_{max} = maximum computed outlet velocity for the proposed bridge, based on a 2 year frequency.
*Waterway area taken at the point of overtopping.
The hydraulic data contained in these plans is valid only if the overflow section is maintained. Alteration of the overflow section will require re-analysis of the hydraulics at this site to determine its effect on public safety.

–X081–
INDEX OF BRIDGE SHEETS–

Sheet No.	1	General Drawing
Sheet No.	2	Estimate of Structure Quantities & Notes
Sheet No.	3	Notes (Continued)
Sheet No.	4	Notes (Continued)
Sheet No.	5	Notes (Continued)
Sheet No.	6	Subsurface Investigation, Piling & Drilled Shaft Layout
Sheet No.	7	Piling Layout (Continued)
Sheet No.	8	Abutment No. 1 Details
Sheet No.	9	Abutment No. 4 Details
Sheet No.	10	Abutment Details (Continued)
Sheet No.	11	Pier Details
Sheet No.	12	Pier Details (Continued)
Sheet No.	13	Superstructure Details
Sheet No.	14	Superstructure Details (Continued)
Sheet No.	15	Superstructure Details (Continued)
Sheet No.	16	Girder Details (101'–6")
Sheet No.	17	Girder Details (108'–3")
Sheet No.	18	Girder & Diaphragm Layout
Sheet No.	19	Erection Data & Camber Diagram
Sheet No.	20	Diaphragm Details
Sheet No.	21	Expansion Bearing Details at Abutments
Sheet No.	22	Sole Plate Details (For Abutment End of Beams)
Sheet No.	23	Finger Expansion Joint Details
Sheet No.	24	Finger Expansion Joint Details (Continued)
Sheet No.	25	Abutment Joint Drain Details
Sheet No.	26	Abutment Joint Drain Details (Continued)
Sheet No.	27	Abutment Joint Drain Details (Continued)
Sheet No.	28	Type T101 Bridge Railing Details
Sheet No.	29	Type T101 Bridge Railing Details (Continued)
Sheet No.	30	Bridge End Backfill
Sheet No.	31	Riprap Layout
Sheet No.	32	Details of Standard Plate No. 460.02 & 510.40

GENERAL DRAWING FOR 321'–10 1/8" PRESTR. GIRDER BRIDGE

28'–0" ROADWAY
OVER WHITE RIVER
STA. 22+06.08 TO 25+27.92
STRUCTURE NO. 48–102–010

45° SKEW LHF
SEC. 28–T45N–R31W 6th P.M.
SEC. 20–T2S–R26E B.H.M.
BRO 8048(03)
PCN 02DY

MELLETTE COUNTY
SOUTH DAKOTA

PREPARED BY:
JOHNSON ENGINEERING CO.
YANKTON, SOUTH DAKOTA

HL93

–X081–

SEPTEMBER 2014

SHEET 1 OF 32

DESIGNED BY	DRAWN BY	CHECKED BY
GSS/SMW	LAJ	GSS

ESTIMATE OF STRUCTURE QUANTITIES

ITEM	QUANTITY	UNIT
Incidental Work, Structure	Lump Sum	LS
Gravel Surfacing	204	Ton
Structural Steel, Miscellaneous	Lump Sum	LS
Abutment Joint Drain	2	Each
Laminated Elastomeric Bearing Pad	8	Each
Finger Type Expansion Joint Assembly	2	Each
Structure Excavation, Bridge	128	CuYd
Granular Bridge End Backfill	1,089	CuYd
Bridge End Backfill Underdrain Pipe	210	Ft
Bridge End Backfill Excavation	10	CuYd
Class A45 Concrete, Bridge Deck	331.2	CuYd
Class A45 Concrete, Bridge	466.2	CuYd
Class A45 Concrete, Drilled Shaft	254.0	CuYd
Drilled Shaft Excavation	250.3	CuYd
Crosshole Sonic Log (CSL) Test	2	Each
110” Permanent Casing	34	Ft
Type T101 Bridge Railing	675.7	Ft
Reinforcing Steel	227,589	Lb
No. 18 Rebar Splice	48	Each
Extract Pile	16	Each
HP 10x42 Steel Test Pile, Furnish and Drive	105	Ft
HP 10x42 Steel Bearing Pile, Furnish and Drive	1,995	Ft
54” Minnesota Shape Prestressed Concrete Beam	1,245	Ft
Porous Backfill	65	Ton
Class B Riprap	4,150.1	Ton
Type B Drainage Fabric	4,774	SqYd

REGISTERED PROFESSIONAL ENGINEER REG. NO. 8610 DANIEL K. JOHNSON SOUTH DAKOTA

REGISTERED PROFESSIONAL ENGINEER REG. NO. 5152 GREGORY S. SLOWEY SOUTH DAKOTA 10/13/16

SPECIFICATIONS FOR BRIDGE

1. Design Specifications: AASHTO LRFD Bridge Design Specifications, 2012 Edition with 2013 interims.

2. Construction Specifications: South Dakota Standard Specifications for Roads and Bridges, 2015 Edition and required provisions, supplemental specifications, and special provisions as included in the proposal.

BRIDGE DESIGN LOADING

1. AASHTO HL-93.

2. Dead Load includes 22 psf for future wearing surface on the roadway.

DESIGN MATERIAL STRENGTHS*

Concrete	f’c = 4,500 psi
Reinforcing Steel	fy = 60,000 psi
Piling (ASTM A572 Grade 50)	fy = 50,000 psi

*For prestressed beams, see notes regarding Prestressed Girders.

GENERAL CONSTRUCTION

1. All mild reinforcing steel shall conform to ASTM A615, Grade 60.

2. All exposed concrete corners and edges shall be chamfered 3/4” unless noted otherwise.

3. Use 2” clear cover on all reinforcing steel except as shown.

4. Contractor shall imprint on the structure the date of new construction as specified and detailed on Standard Plate No. 460.02.

5. Request for construction joints or resteel splices at points other than those shown, must be submitted to the Engineer for prior approval. If additional splices are approved, no payment will be allowed for the added quantity of resteel.

6. The elevation of the bridge deck is 4” above subgrade elevation.

INCIDENTAL WORK, STRUCTURE

1. In place centerline Sta. 22+32.08 to centerline Sta. 24+77.28 is a 245.2’ 3 span Pony Truss bridge with a 16’-0” clear roadway. The steel truss supports timber stringers carrying a timber plank deck with steel checkered wearing plates in wheel lines across the bridge. The superstructure is supported by reinforced concrete piers and reinforced concrete vertical abutments with swept back wings.

2. Break down and remove the existing bridge to 1 foot below finished groundline, or as required to construct the new structure in accordance with Section 110 of the Specifications. All portions of the existing bridge shall be removed and disposed of by the Contractor on a site obtained by the Contractor and approved by the Engineer in accordance with the WASTE DISPOSAL SITE note found in these plans.

3. The foregoing is a general description of the in-place bridge and should not be construed to be complete in all details. Before preparing the bid it shall be the responsibility of the Contractor to make a visual inspection of the structure to verify the extent of the work and materials involved.

NOTICE - LEAD BASED PAINT

Be advised that the paint on the steel surfaces of the existing structure contains lead. The Contractor should plan his/her operations accordingly, and inform his/her employees of the hazards of lead exposure.

DESIGN MIX OF CONCRETE

1. All structural concrete shall be Class A45 unless otherwise indicated.

2. Type II cement is required, except Type III may be used for the prestressed beams.

3. Coarse aggregate to be used in concrete shall consist of either crushed quartzite or other crushed ledge rock. If crushed ledge rock other than quartzite is to be used, it shall be from a source approved by the Engineer.

4. Grout design mix shall be as specified in Section 460.2K of the Specifications. A compressive strength of 2000 psi shall be attained by the grout prior to erection of any beams. Chamfer edges of grout pads ¾”. The quantity of grout is included in and shall be paid for at the contract unit price per cubic yard for Class A45 Concrete, Bridge.

ABUTMENTS

1. The HP 10 x 42 Piling were designed using a factored bearing resistance of 77 tons per pile. Piling shall develop a field verified nominal bearing resistance of 192 tons per pile.

2. One test pile shall be driven at each abutment and will become part of the pile group.

3. The contractor shall have sufficient pile splice material on hand before pile driving is started. See Standard Plate No. 510.40.

4. Piles shall not be driven out of position by more than two inches in the direction normal to the abutment centerline. A pile-driving template shall be used to insure this accuracy.

NOTES (CONTINUED)
FOR
321’-10 1/8” PRESTR. GIRDER BRIDGE

Str. No. 48-102-010

SEPTEMBER 2014 2 32

DESIGNED BY:	DRAWN BY:	CHECKED BY:	
GSS/DKJ	AMK	GSS/LAJ	
MELL020DY	PCNXNOTE		BRIDGE ENGINEER

PILE DRIVING

1. A drivability analysis was performed using the wave equations analysis program (GRLWEAP). The pile hammers listed below were evaluated and found to produce acceptable driving stresses.

   Delmag D19-32 MVE M-19 APE D19-42
   Delmag D19-42 MKT DE 42/35

2. Pile hammers not listed will require evaluation and approval prior to use from the Geotechnical Engineering Activity.

PILE EXTRACTION

1. All of the existing piling at the locations of Abutment No. 1 and Pier No. 2 shall be removed.

2. Extract existing piling prior to driving new steel piling. Plans shown quantity is an estimate only.

3. All costs involved in extracting piling, including equipment and labor, shall be included in the contract unit price per each for Extract Pile. Adjustments to the quantity of pile extracted will be on a per each basis.

ACCESS TUBES

1. Access tubes shall be furnished and installed in each of the drilled shafts in accordance with Section 465 of the Specifications.

2. These access tubes are to be used for crosshole sonic log testing of the drilled shaft. No subsequent work above the construction joint will be allowed until authorized by the Engineer. Upon authorization by the Engineer and prior to any subsequent concrete placement above the construction joint, the Contractor shall remove the water from the access tubes, cut the access tubes off flush with the top of the drilled shaft and completely fill the access tubes with grout.

PIERS

1. Pier columns are to be 7'-0" diameter reinforced concrete columns on 9'-0" drilled shafts.

2. The design of the drilled shafts is based upon encountering competent Pierre Shale at elevation 1912.0. If competent Pierre Shale is not encountered at or above this elevation, contact the Office of Bridge Design, through proper channels, before proceeding with the drilled shaft construction. Geotechnical Engineering Activity personnel shall be present during the drilling operations to confirm these elevations and to observe placement of the drilled shafts. The Geotechnical Engineering Activity shall be notified a minimum of two weeks prior to the start of excavation for the drilled shafts.

3. The drilled shafts shall be constructed using the permanent casing method in conformance with Section 465 of the Specifications. A construction joint shall be placed at the top of the permanent casing and the permanent casing shall extend a minimum of 1'-0" above the groundline, waterline, or construction platform elevation, whichever is higher.

4. The construction joint locations and quantities provided on the plans are based upon the estimated existing groundline and/or waterline elevations. It is the responsibility of the Contractor to verify the existing elevations and have a drilled shaft installation plan submitted and approved prior to ordering the casing. If the Contractor intends to use construction platforms, etc. that would require any of the construction joints to be at a location other than the location shown in the plans, the Contractor shall include these proposed changes in the drilled shaft installation plan for approval by the Office of Bridge Design.

5. The quantities for Drilled Shaft Excavation; 110" Permanent Casing; Class A45 Concrete, Drilled Shaft; and Class A45 Concrete, Bridge are based upon the construction joint locations as shown in the plans. Payment for these items shall be at the contract unit price for the plans shown quantities regardless of any approved changes in the location of the construction joints as requested by the Contractor due to the construction of work platforms, etc. Measurement and payment will be made at the contract unit prices for any changes due to variations in the competent foundation soil or in the locations of the existing groundline and/or waterline elevations as ordered by the Engineer.

ELASTOMERIC EXPANSION BEARINGS

1. The elastomeric bearing pads shall conform to the requirements set forth in AASHTO M251-06 with the following criteria:
   a. The elastomer shall be 100% virgin natural polyisoprene (natural rubber) low temperature grade 3.
   b. The elastomer shall be 60 durometer hardness.
   c. Allowable Design load = 870 p.s.i.
   d. The elastomeric pads shall be tested for level 1 and the optional cold weather requirements
2. The elastomeric steel plate reinforcement shall conform to ASTM A1011 Grade 36.

3. The elastomeric bearing pads shall conform to the tolerances set forth in AASHTO M251-06.

4. The bearings shall be furnished as a complete unit from one manufacturing source. The Contractor shall furnish to the Engineer written certification by the Manufacturer that the bearing to be furnished an installed conform to the requirements of the plans.

5. The Contractor shall provide the Office of Bridge Design, through proper channels, 30 days notification prior to the start of bearing fabrication to allow arrangement for fabrication inspection.

6. All steel for the bearings excluding the pintles, sole plates, guide angles and swedge bolts shall conform to ASTM A1011/A1011M, Grade 36, Type 2.

7. The pintles shall be fabricated from a cold finished, Carbon and Alloy steel conforming to ASTM A108. They shall have a minimum yield strength of 75,000 psi and a minimum ultimate strength of 95,000 psi with a minimum elongation of 10 percent in 2 inches.

8. The guide angles shall conform to ASTM A709 Grade 36.

9. The swedge bolts shall be 1" diameter x 2'-6" and shall conform to ASTM A307. Each bolt shall be furnished with one heavy hex nut and one cut washer. A minimum of 20% of the embedded bolt surface shall be covered with deformations whose radial dimensions are 15% to 20% of the bolt diameter. The bolts, nuts and washers shall be galvanized in accordance with ASTM A153.

10. Galvanize the sole plate, rocker plate, bearing plate, pintles and angles in accordance with AASHTO M111 (ASTM A123).

11. Care shall be taken during bearing installation and deck pour to ensure that bearing surfaces remain parallel.

12. Payment for furnishing and installing the bearings and all incidentals shall be included in the contract unit price per each for "Laminated Elastomeric Bearing Pad".

BEARING TOLERANCES

1. The following tolerances shall be followed in the fabrication of the components of the bearings.
   a. Laminated Elastomeric Bearing – As set forth in AASHTO M251-06
   b. Sole Plate – Flatness as set forth in AASHTO M251-06.
   c. Rocker Plate –
      Convex Radius Dimension +0.000"; -0.010"
      Surface Finish, Machined Surfaces 125 RMS or better
      Surface Finish, Other Surfaces 250 RMS or better
   d. Pintle – Diameter +0.0018" to + 0.0024"
      Length +/- 1/64"
      Radius +/- 0.005"
   e. Pintle Hole Diameter – -0.000" to +0.001"
      Hole Depth +/- 1/64"
2. The following tolerances shall be followed in the installation of the bearings.
   a. All bearing components shall be installed level and parallel with $^{1}/_{32}$" per foot, including guide angles.
   b. The anchor bolts shall be installed such that the gap between the guide angles and the expansion bearing plates is uniformly held at ⅛". Care shall be taken when installing the anchor bolts to insure this uniform gap.

REGISTERED PROFESSIONAL ENGINEER REG. NO. 8610 DANIEL K. JOHNSON SOUTH DAKOTA 12-2-2016

REGISTERED PROFESSIONAL ENGINEER REG. NO. 5152 GREGORY S. SLOWEY SOUTH DAKOTA 12/13/16

NOTES (CONTINUED)
FOR
321'-10 1/8" PRESTR. GIRDER BRIDGE

Str. No. 48-102-010

SEPTEMBER 2014 3 32

DESIGNED BY:	DRAWN BY:	CHECKED BY:	
GSS/DKJ	AMK	GSS/LAJ	
MELL020DY	PCNXNOTE		BRIDGE ENGINEER

Rev. 2/17/2016 LAJ

PRESTRESSED GIRDERS

1. Minimum concrete compressive strength f'c = **7,000** psi at 28 days for all girders, f'ci = **6,000** psi for all Girders.
2. All mild reinforcing steel shall be deformed bars conforming to ASTM A615, Grade 60.
3. Individual tendons in all pretensioned sections shall consist of seven wire uncoated Type 270K Strands having a nominal diameter of 0.6" and a minimum ultimate strength of 58600 lbs. per cable. An initial tensile force of 43500 lbs. shall be applied to all 0.6" cables in all girders. All prestressing steel shall conform to AASHTO M203. (low lax strands).
4. The sole plate for the bearing assembly that is placed in the prestressed girder shall conform to ASTM A709 Grade 36. The sole plate assembly shall be hot dip galvanized in accordance with ASTM A123. The pintle holes shall be free of zinc build up from the galvanizing process. Payment for the sole plates including the galvanizing shall be incidental to the contract unit price per foot for "54" Minnesota Shape Prestressed Concrete Beam".
5. All prestressed girders within a span shall be cast within an 8 day period. The newest girder shall be at least 13 weeks old before the deck slab is poured. The girders shall be poured in all steel forms.
6. Prestressed concrete girders shall always be lifted by the devices provided in the top flanges near the ends of the girders. Types of lifting devices other than those shown on the plans may be used provided they are approved by the Office of Bridge Design. The design of the lifting devices shall be the responsibility of the Fabricator.
7. Each beam shall be marked showing structure number, casting date, and beam number. Marking shall be on the face of the beam near the end and so located that they will be exposed after the diaphragms have been cast. Facia beams shall be marked on an inside face. All markings shall be stenciled and clearly legible. For beam designations and locations, see superstructure layout plan and Erection Data sheet.
8. The physical properties of the elastomeric bearing pads at the piers shall conform to the requirements of Section 18.2 of the AASHTO LFRD Bridge Construction Specification and the AASHTO Materials Specification M251. The elastomeric bearing pads shall conform to Grade 70 (durometer). The cost of the pads shall be incidental to the contract unit price per cubic yard for Class A45 Concrete, Bridge. Certification that pads are 70 durometer and meet the requirements of AASHTO LFRD Bridge Construction Specification Section 18.2 and AASHTO Materials Specification M251 shall be furnished to the Engineer with the shop drawings. No laminated bearing pads will be allowed.
9. All exposed corners shall be chamfered 3/4" or rounded to 3/4" radius.
10. Dead Load of girder taken as effective at transfer. Cut strands, except those extended and bent, flush with end of girder and coat end of strands with mortar.
11. The Contractor shall be responsible for ensuring that transportation stresses, handling and erection do not cause damage to the girders.
12. Furnish and Install Inserts for T7 Rebar and Finger Expansion Joints as shown in the plans. All costs involved shall be incidental to the contract unit price per foot for "54" Minnesota Shape Prestressed Concrete Beam".

SUPERSTRUCTURE

1. Girder lifting hooks shall be cut off before placement of concrete deck slab.
2. The diaphragms at the piers shall be poured integrally with the deck slab. Placement of diaphragms at the piers shall not slow down the rate of deck concrete placement and finishing. The Contractor shall place the concrete for the specified diaphragms ahead of the deck concrete in such a manner that advancement of the deck concrete reaches the diaphragm just as placement of concrete in the diaphragm is complete.
3. The deck-finishing machine shall be adjusted and operated in such a manner that the roller screed or screeds are parallel with the centerline of the bridge and the finish machine is parallel to the skew of the bridge. Concrete placement in front of the finish machine shall be kept parallel to the machine.
4. The bridge deck must be placed and finished continuously at a minimum rate of **53** ft. of deck per hour measured along Centerline Roadway. This rate is exclusive of concrete placed in the diaphragms. (See note 2 above.) If concrete cannot be placed and finished at this rate, the Engineer shall order a header installed and operations stopped. Notify the Bridge Construction Engineer if deck pour operations are stopped. Operations may resume only when the Engineer is satisfied that a rate of **53** ft. of deck per hour can be achieved and the concrete in the previous pour has attained a minimum compressive strength of 2000 psi.

CLASS A45 CONCRETE, BRIDGE DECK

Concrete used in the bridge deck slab and pier diaphragms shall be in accordance with the requirements for bridge deck concrete as specified in Section 460.3 A of the Specifications. In addition, the concrete used in the bridge deck shall have Class F Modified Fly Ash substituted for a portion of the cement in accordance with Section 605 of the Specifications. The amount of cement to be replaced shall be 20 percent by weight. The ratio of substitution of fly ash to cement shall be 1:1 by weight.

FINGER EXPANSION JOINT

1. Components of the finger expansion joint assembly will include all plates shown in Section A-A of Finger Expansion Joint Details. This will include the top finger plates, angle irons and all other plates attached to and supporting the top finger plate. This section does not include the drainage plates to be bolted to the finger joint.
2. All steel components, steel plates, bars and structural shapes shall be galvanized after shop welding in accordance with ASTM A123.
3. All new structural steel shall conform to ASTM A709 Gr. 50. Material less than 1/4 inch thick may be ASTM A1011, Grade 36. The 5/8" inch diameter end welded deformed bar anchors shall be a commercially available Fluxed Deformed Bar Anchor Stud, automatically end welded, with material conforming to ASTM A496.
4. Plan dimensions are based on installation at a girder temperature of 70° F. The expansion gap and other dimensions shall be increased or decreased for each 10° fall or rise in temperature of girders at installation.
5. No splicing of finger plate or finger plate assembly will be allowed after fingers are cut. The expansion device shall be fabricated and installed to the crown and grade of the roadway.
6. The finger joint shall be adjusted as necessary to match the roadway slope. The finger joint assembly shall be bolted to the girders using ¾" diameter A449 heavy hex bolts. It will be the responsibility of the contractor to ensure proper alignment of the fingers.
7. The new concrete surfaces of the bridge deck in the area of the finger joint placement shall be finished in accordance with Section 460.3 L.4 of the Specifications.
8. All costs associated with the furnishing and installation of the finger joint will be incidental to the contract unit price per each for "Finger Type Expansion Joint Assembly". This will include all structural steel associated with finger joint assemblies.

REGISTERED PROFESSIONAL ENGINEER REG. NO. 8610 DANIEL K. JOHNSON SOUTH DAKOTA 2/17/2016

REGISTERED PROFESSIONAL ENGINEER REG. NO. 5152 GREGORY S. SLOWEY SOUTH DAKOTA 2/17/16

NOTES (CONTINUED)
FOR
321'-10 1/8" PRESTR. GIRDER BRIDGE

Str. No. 48-102-010

SEPTEMBER 2014 4 32

DESIGNED BY:	DRAWN BY:	CHECKED BY:	
GSS/DKJ	AMK	GSS/LAJ	
MELL020DY	PCNXNOTE		BRIDGE ENGINEER

ABUTMENT JOINT DRAIN

1. Drainage assembly consists of plates “U”, “V”, and “T”, neoprene sheet, drainage trough, gutter brackets, gutter, and riprap. This includes any plates, bolts, swedge bolts, U-bolts, and steel support posts required for installation.

2. All steel components, steel plates, bars and structural shapes shall be galvanized after shop welding in accordance with ASTM A123 except as stated in the following notes.

3. All new structural steel plates and bars shall conform to ASTM A709, Grade 36, and shall be galvanized in accordance with ASTM A153. Material less than 1/4 inch thick may be ASTM A1011, Grade 36 except as specified in notes below.

4. Plates “V” shall be bolted to the Finger Expansion Joint assembly using 3/8” diameter bolts. Plates U1 and U2 shall be bolted to the assembly using 3/4” diameter bolts at girder support points and 3/8” bolts elsewhere. Each 3/8” bolt shall include a standard washer and one standard nut. Each 3/4” diameter bolt shall include 2 square plate washers. The bolts, nuts and washers shall conform to ASTM A307 and be either hot-dipped galvanized according to ASTM A153 or made of corrosion resistant material.

5. The gutter drains shall be fabricated from hot-rolled carbon steel conforming to ASTM A1011. The material shall have a 12 gage minimum thickness. They shall be galvanized in accordance with ASTM A653.

6. Provide a 12 gage minimum metal cap at the upper end of the metal gutter with attachment details to be provided on the submitted shop drawings.

7. The neoprene sheet shall be EPDM Cloth Inserted Rubber. The material shall have the following physical properties:

Durometer:	70 A Nominal
Tensile Strength:	1500 psi
Temperature Range:	-40° F to 245° F
Elongation:	100%
UV Rating:	Excellent

8. Material for the 3/8” diameter x 2 3/4” commercially available steel wedge-type anchor bolts, nuts and washers shall be at the option of the contractor. The bolts, nuts and washers shall be either hot-dipped galvanized according to ASTM A153 or made of corrosion resistant material. The wedge type anchors shall be installed in accordance with the manufacturer’s recommendations.

9. Welding of joint drainage plates at centerline will not be required if the contractor fully seals the gap between the two plates with a silicon sealer approved by the Bridge Construction Engineer. If the drainage plates are welded, the galvanizing shall be repaired by the zinc-based solder method in conformance with ASTM A780.

10. The placement of the drainage channel on the backwall is necessary to drain the water from the finger joint and diaper system away from the bridge. Should it be necessary, it shall be at the Engineer’s option to adjust the gutter from the plans location to meet this requirement.

11. After the drain length and slope are determined for each location, and approved by the Engineer, sketches of same shall be sent to the Office of Bridge Design and to the Fabricator.

12. All costs associated with furnishing and installing the Abutment Joint Drain including all labor, riprap, materials, equipment, and incidentals necessary to complete the work shall be incidental to the contract unit price per each for “Abutment Joint Drain”.

BOLT TESTING

The certified mill test reports for all bolts used on the project shall include the test results for all of the testing specified in Section 972.2.D of the Specifications. Some of these tests are supplemental tests that must be requested at the time the bolts are ordered. It is the responsibility of the Contractor to notify the bolt supplier of these requirements.

SHOP PLANS

The fabricator shall submit shop plans in accordance with the Specifications. Send shop plan submittals to Johnson Engineering Co., 1800 Broadway Avenue, Suite 3, Yankton, SD 57078. After review, corrections (if necessary), and approval by Johnson Engineering Co., the Office of Bridge Design will review the submittals, authorize fabrication, arrange for fabrication inspection, and distribute the shop drawings.

FALL PROTECTION

1. The Contractor shall install a Fall Protection System conforming to OSHA Regulations. When working on the girders prior to decking installation, a Horizontal Lifeline – or other OSHA approved system shall be installed. The Contractor shall have one Personal Fall Arrest System (PFAS) available for use by a Department Inspector. The PFAS shall be compatible with the installed Fall Protection System.

2. Modifications to any bridge components used to accommodate the Fall Protection System shall be shown on the Falsework Plans and/or the appropriate Shop Plans. Field welding to bridge components will not be allowed. Field placed concrete inserts or drilled-in anchor bolts will be allowed if approved by the Engineer. All costs associated with providing the Fall Protection System shall be incidental to the other contract items.

REGISTERED PROFESSIONAL ENGINEER REG. NO. 8610 DANIEL K. JOHNSON SOUTH DAKOTA

REGISTERED PROFESSIONAL ENGINEER REG. NO. 5152 GREGORY S. SLOWEY SOUTH DAKOTA

NOTES (CONTINUED)
FOR
321’-10 1/8” PRESTR. GIRDER BRIDGE

Str. No. 48-102-010

SEPTEMBER 2014 5 32

DESIGNED BY:	DRAWN BY:	CHECKED BY:	
GSS/DKJ	AMK	GSS/LAJ	
MELL020DY	PCNXNOTE		BRIDGE ENGINEER

STATE OF	PROJECT	SHEET NO.	TOTAL SHEETS
S.D.	BRO 8048(03)	37	76

Plotting Date: 1/12/2016

FOR BIDDING PURPOSES ONLY

Hole Number	T2	
Station	21+93	
Depth	9.0	ft
Soil Color	Brown	
Classification	Sand-Clay	
Strength (Q_u)	655.3	psf
Dry Density	83.6	pcf
Wet Density	95.6	pcf
Moisture	14.8	%
Pass No. 10	84.4	%
Pass No. 40	76.2	%
Pass No. 200	61.9	%
Sand Content	22.6	%
Silt Content	23.0	%
Clay Content	38.8	%

Hole Number	T3	
Station	25+22	
Depth	9.7	ft
Soil Color	Brown	
Classification	Silt	
Strength (Q_u)	-----	psf
Dry Density	81.7	pcf
Wet Density	91.8	pcf
Moisture	12.3	%
Pass No. 10	99.9	%
Pass No. 40	97.1	%
Pass No. 200	55.1	%
Sand Content	44.8	%
Silt Content	45.1	%
Clay Content	10.0	%

Hole Number	T3	
Station	25+22	
Depth	17.0	ft
Soil Color	Brown	
Classification	Sand	
Strength (Q_u)	-----	psf
Dry Density	97.8	pcf
Wet Density	107.0	pcf
Moisture	9.4	%
Pass No. 10	96.2	%
Pass No. 40	74.9	%
Pass No. 200	9.9	%
Sand Content	86.3	%
Silt Content	9.9	%
Clay Content	0.0	%

Hole Number	T11	
Station	21+87	
Depth	23.8	ft
Soil Color	Gray	
Classification	Clay	
Strength (Q_u)	33.490	psf
Dry Density	116.9	pcf
Wet Density	136.6	pcf
Moisture	16.9	%
Pass No. 10	99.8	%
Pass No. 40	99.7	%
Pass No. 200	96.9	%
Sand Content	2.8	%
Silt Content	41.1	%
Clay Content	55.9	%

Hole Number	T12	
Station	25+29	
Depth	37.8	ft
Soil Color	Gray	
Classification	Clay	
Strength (Q_u)	40.240	psf
Dry Density	112.5	pcf
Wet Density	133.3	pcf
Moisture	18.5	%
Pass No. 10	99.8	%
Pass No. 40	99.8	%
Pass No. 200	99.5	%
Sand Content	0.3	%
Silt Content	39.6	%
Clay Content	59.9	%

Pierre Shale is a marine shale with a textural classification that varies from silt-clay to clay-silt. Color varies from buff gray to black. The formation may contain concretion zones that are normally thin but occasionally are massive. These zones may be considered hard and dense. Thin zones may be present that are cemented resulting in claystone or siltstone seams. Bentonite zones may be encountered but are normally less than one half inch thick. Nonweathered Pierre Shale is considered to be "Soft Rock".

The Geotechnical Engineering Activity has on file all of the boring logs for this project. These logs and additional results of laboratory test, if any, are available for review at the Central Office in Pierre.

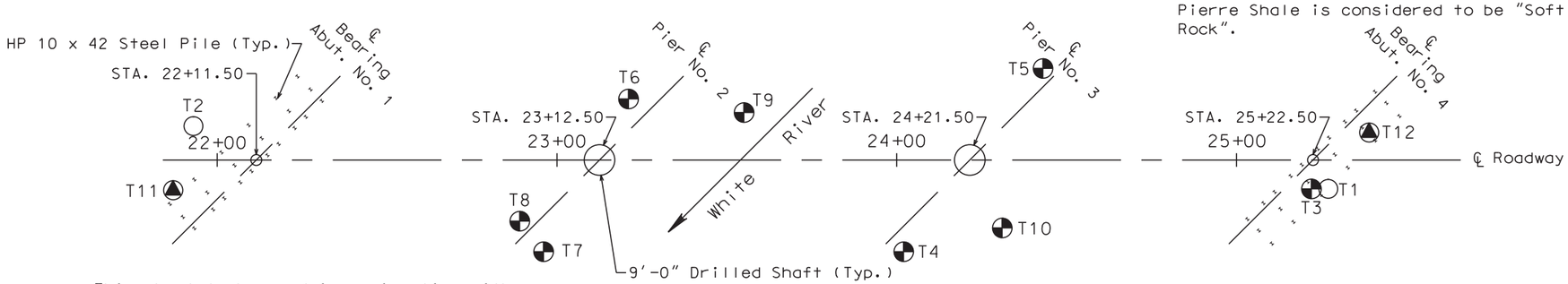

This sheet to be used in conjunction with Piling Layout (Continued)

Penetration tests are conducted by dropping a 140 pound hammer 30 inches to obtain 2 inch nominal diameter samples and to measure the resistance to penetration of the soil.

LEGEND

- Auger Test
- Drive Test
- Water
- Caved
- Penetration Test
- Sample Zone

Drive test are conducted by dropping a 490 pound hammer 30 inches to drive a $2\frac{7}{8}$ inch drill stem with attached retractable plug sampler for taking samples and to measure the resistance to penetration of the soil.

Auger holes are drilled with a $4\frac{1}{2}$ inch diameter continuous flight auger. Penetration and Push Test holes are drilled with a $6\frac{5}{8}$ inch diameter hollow stem auger. Push core samples are obtained by hydraulically ramming a 2 foot long lined split spoon sampler into the soil to obtain 2 inch nominal diameter soil samples.

* Values represent uncorrected "N" values from Penetration Test.

Sample Zone ▮ 48 Blows Per Foot

Bore holes on profile are moved slightly for clarity

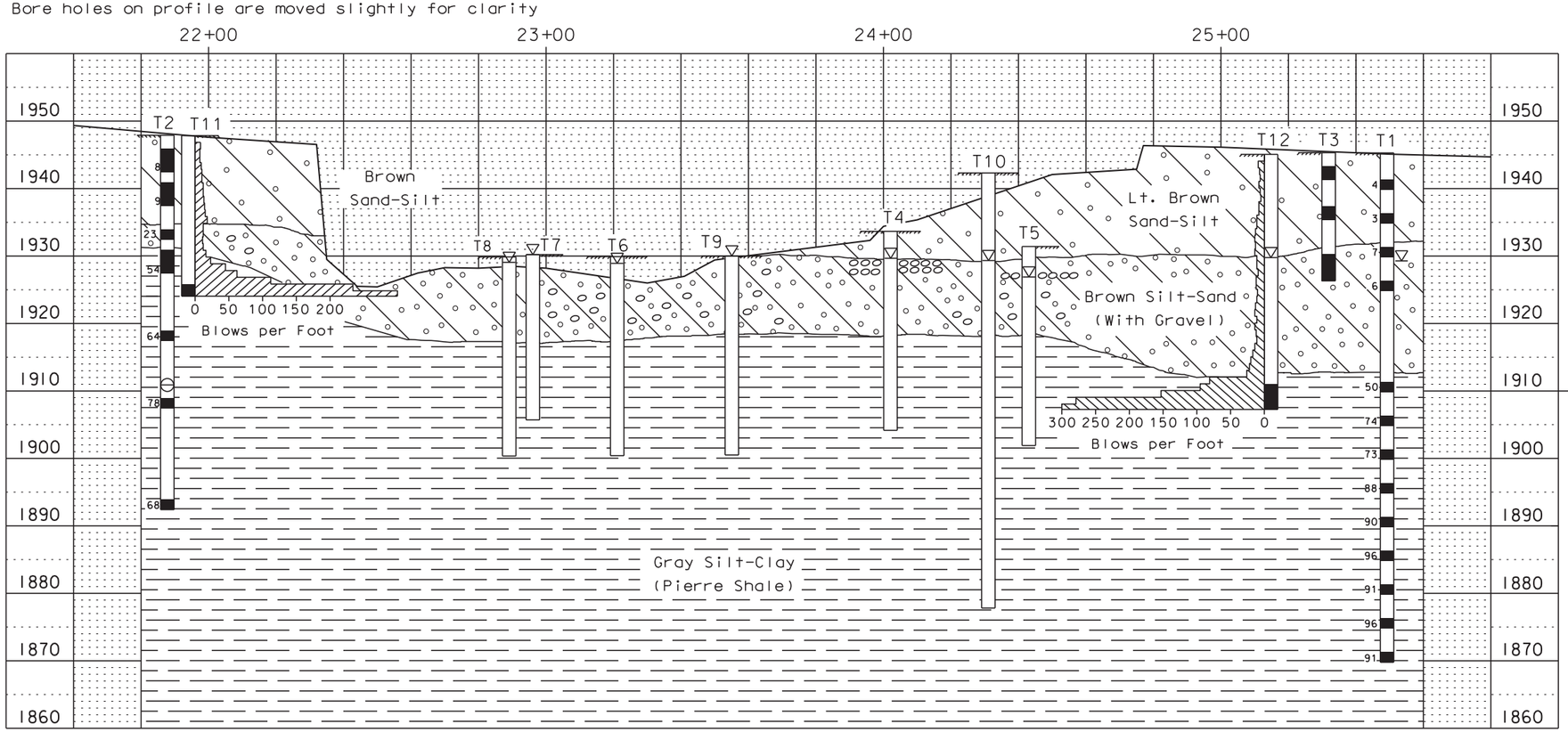

GROUND WATER ELEVATIONS

as of December 2012

T1	(Caved) 1931.3
T2	(Caved) 1910.9
T3	Dry
T4	1929.7
T5	1926.9
T6	1928.9
T7	1930.2
T8	1929.1
T9	1930.0
T10	1929.3
T11	Dry
T12	1929.8

MEASURED SKIN FRICTION

	Elev	psf
T11	1924.0	2.193
T12	1907.3	1.214

SUBSURFACE INVESTIGATION, PILING & DRILLED SHAFT LAYOUT FOR 321'-10 1/8" PRESTR. GIRDER BRIDGE

28'-0" ROADWAY
OVER WHITE RIVER
STA. 22+06.08 TO 25+27.92
STRUCTURE NO. 48-102-010

45° SKEW LHF
SEC. 28-T45N-R31W 6TH P. M.
SEC. 20-T2S-R26E B. H. M.
BR 8048(03)
PCN 02DY

MELLETTE COUNTY
SOUTH DAKOTA

PREPARED BY:
JOHNSON ENGINEERING CO.
YANKTON, SD

HL93

SEPTEMBER 2014

SHEET 6 OF 32

DESIGNED BY	DRAWN BY	CHECKED BY	APPROVED
	NN	DV	BRIDGE ENGINEER

FOR BIDDING PURPOSES ONLY

STATE OF SOUTH DAKOTA	PROJECT	SHEET NO.	TOTAL SHEETS
	BRO 8048(03)	38	76

REGISTERED PROFESSIONAL ENGINEER
REG. NO. 8610
DANIEL K. JOHNSON
SOUTH DAKOTA
1-13-2016

REGISTERED PROFESSIONAL ENGINEER
REG. NO. 5152
GREGORY S. SLOWEY
SOUTH DAKOTA
1/13/16

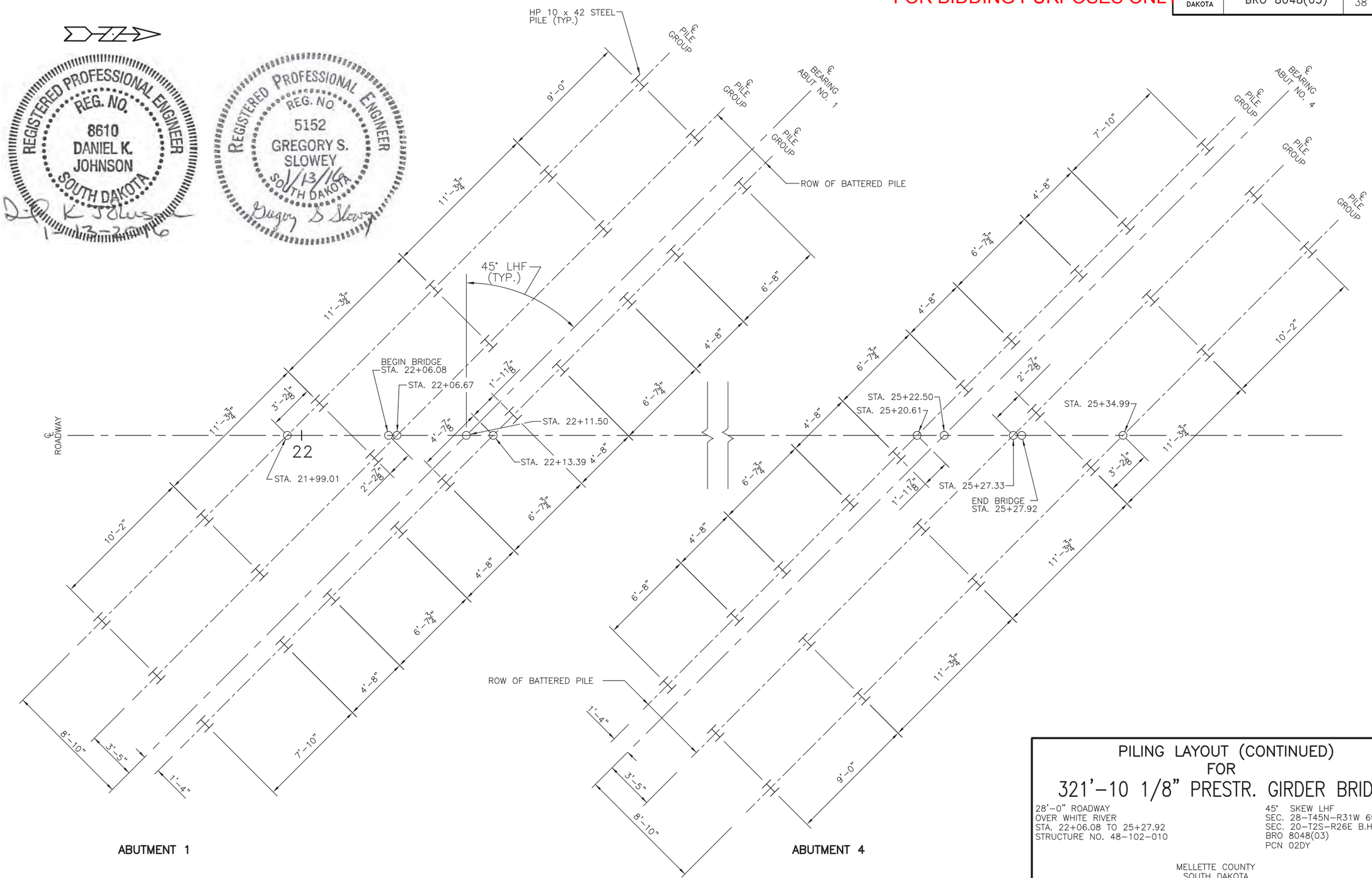

PLAN

(PILE SPACING SHOWN AT BOTTOM OF PILE CAP)

PILING LAYOUT (CONTINUED) FOR 321'-10 1/8" PRESTR. GIRDER BRIDGE

28'-0" ROADWAY
OVER WHITE RIVER
STA. 22+06.08 TO 25+27.92
STRUCTURE NO. 48-102-010

45° SKEW LHF
SEC. 28-T45N-R31W 6th P.M.
SEC. 20-T2S-R26E B.H.M.
BRO 8048(03)
PCN 02DY

MELLETTE COUNTY
SOUTH DAKOTA

PREPARED BY:
JOHNSON ENGINEERING CO.
YANKTON, SOUTH DAKOTA

HL93

SEPTEMBER 2014

SHEET 7 OF 32

DESIGNED BY	DRAWN BY	CHECKED BY
GSS/DKJ	LAJ	GSS/LAJ

STATE OF SOUTH DAKOTA	PROJECT	SHEET NO.	TOTAL SHEETS
	BRO 8048(03)	39	76

FOR BIDDING PURPOSES ONLY

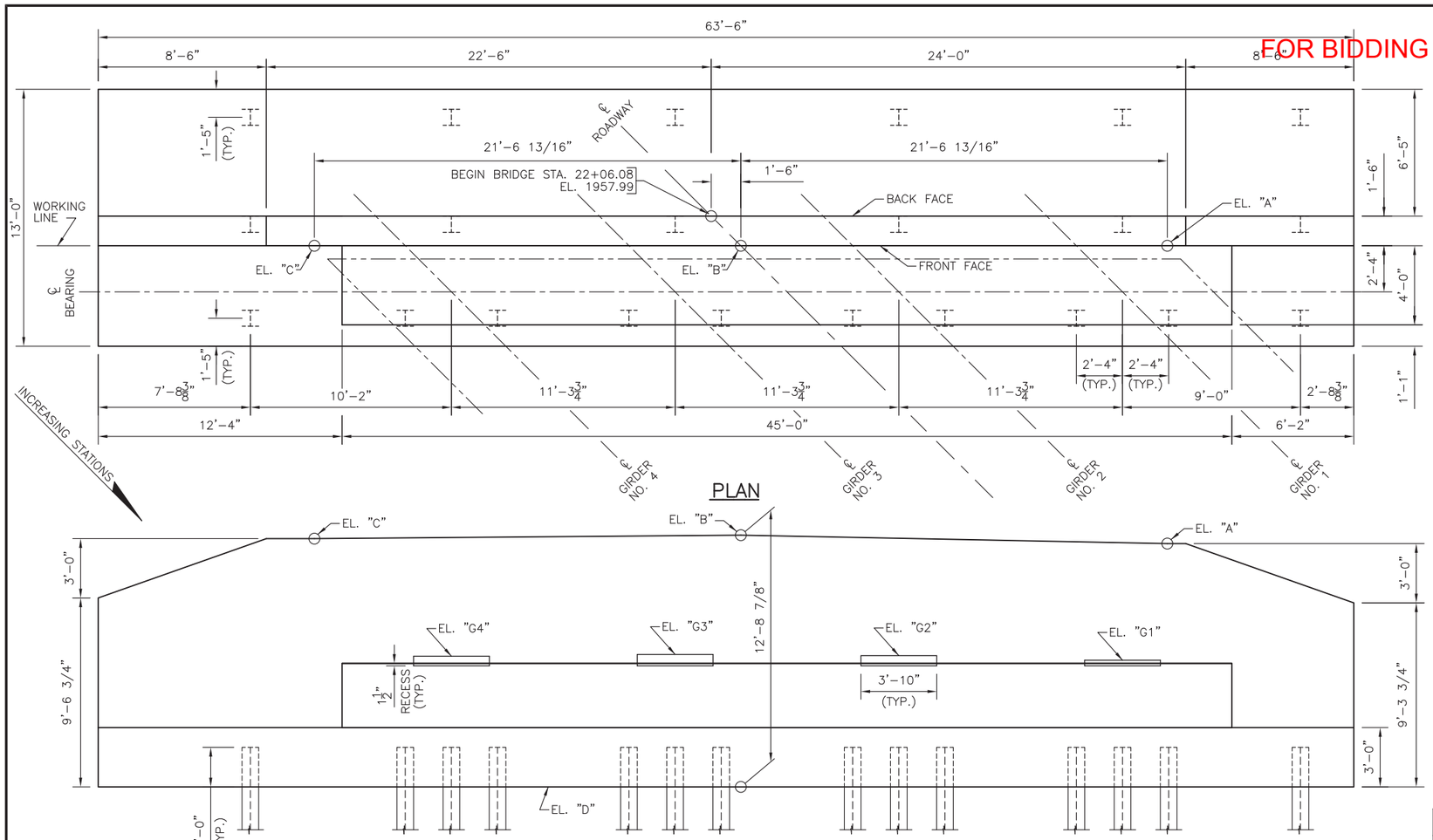

PLAN

ELEVATION

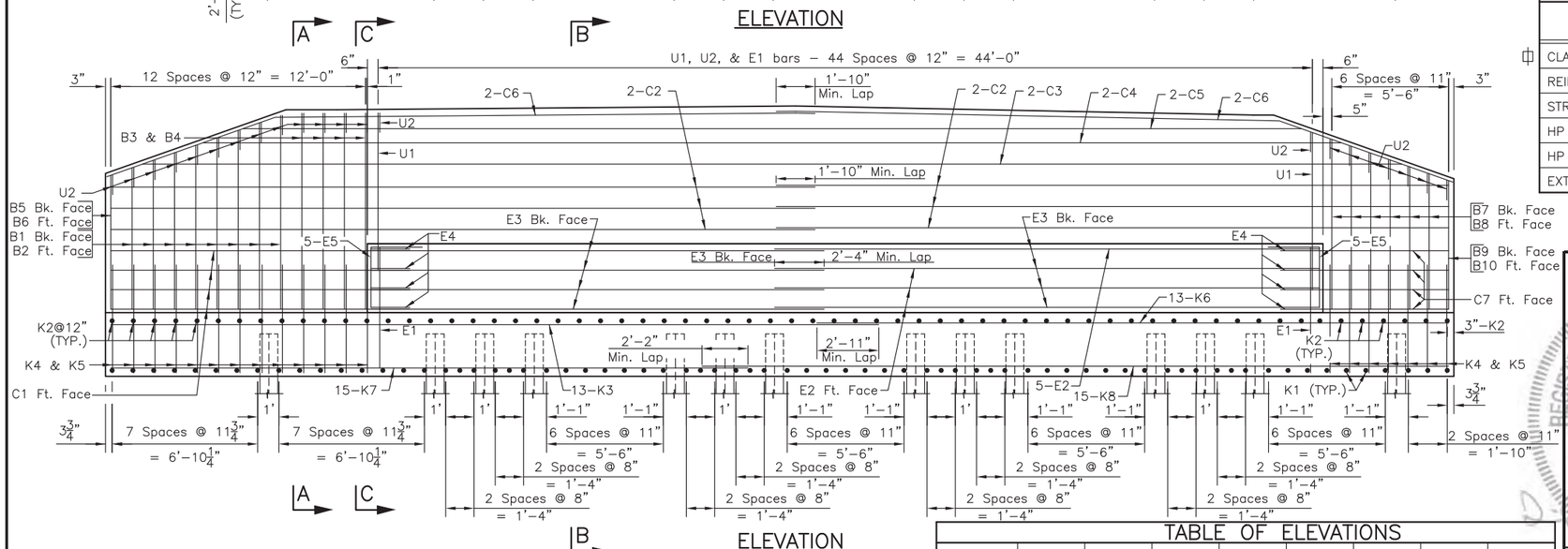

ELEVATION

NOTE: Ft. Face = Front Face
Bk. Face = Back Face

* Top of Grout Pad shall be level and smooth.

TABLE OF ELEVATIONS

ABUTMENT	EL. "A"	EL. "B"	EL. "C"	EL. "D"	*EL. "G1"	*EL. "G2"	*EL. "G3"	*EL. "G4"
NO. 1	1957.55	1957.98	1957.80	1945.24	1951.65	1951.88	1951.94	1951.85

REINFORCING SCHEDULE
(For One Abutment)

	Mk.	No.	Size	Length	Type
△	B1	4	6	15'-11"	STR.
△	B2	4	5	15'-11"	STR.
	B3	4	6	9'-5"	STR.
	B4	4	5	9'-6"	STR.
	B5	1	6	6'-5"	STR.
	B6	1	5	6'-5"	STR.
△	B7	3	6	14'-8"	STR.
△	B8	3	5	14'-8"	STR.
	B9	1	6	6'-2"	STR.
	B10	1	5	6'-2"	STR.
	C1	4	4	13'-9"	STR.
	C2	12	4	32'-7"	STR.
	C3	2	4	59'-4"	STR.
	C4	2	4	53'-7"	STR.
	C5	2	4	49'-9"	STR.
	C6	4	4	33'-1"	19B
	C7	4	4	7'-6"	STR.
	E1	45	6	16'-9"	17
	E2	8	5	44'-8"	STR.
	E3	8	5	33'-2"	STR.
	E4	8	5	10'-7"	17
	E5	10	5	5'-3"	2
	K1	71	7	14'-6"	1A
	K2	64	6	12'-8"	STR.
	K3	13	6	36'-2"	STR.
	K4	20	6	5'-11"	2
	K5	20	5	5'-5"	2
	K6	13	6	30'-1"	STR.
	K7	15	6	30'-2"	STR.
	K8	15	6	35'-4"	STR.
	U1	45	6	17'-8"	17
	U2	65	5	5'-6"	17

Bending Details

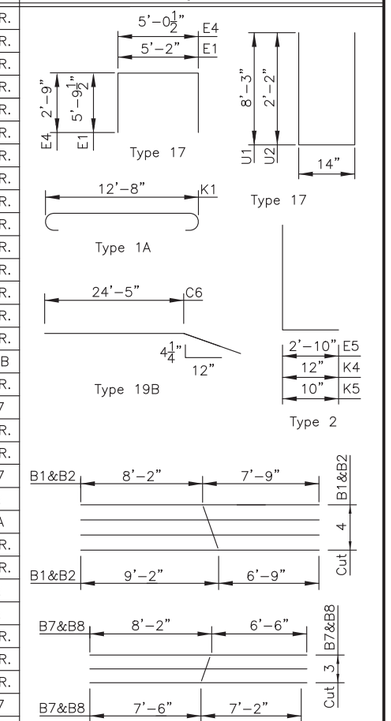

NOTE: All dimensions are out to out of bars.
△ See Cutting Diagram.

ESTIMATED QUANTITIES

ITEM	UNIT	QUANTITY
CLASS A45 CONCRETE, BRIDGE	CuYd	146.3
REINFORCING STEEL	Lb	10,900
STRUCTURE EXCAVATION, BRIDGE	CuYd	52.3
HP 10X42 STEEL TEST PILE, FURNISH & DRIVE	Ft	1 @ 45'=45'
HP 10X42 STEEL BEARING PILE, FURNISH & DRIVE	Ft	21 @ 40'=840'
EXTRACT PILE	Each	8

NOTE: USE THIS SHEET IN CONJUNCTION WITH ABUTMENT DETAILS (CONTINUED)
⌑ INCLUDES 1.2 CuYd FOR GROUT PADS

ABUTMENT NO. 1 DETAILS FOR 321'-10 1/8" PRESTR. GIRDER BRIDGE

28'-0" ROADWAY
OVER WHITE RIVER
STA. 22+06.08 TO 25+27.92
STRUCTURE NO. 48-102-010

45° SKEW LHF
SEC. 28-T45N-R31W 6th P.M.
SEC. 20-T2S-R26E B.H.M.
BRO 8048(03)
PCN 02DY

MELLETTE COUNTY
SOUTH DAKOTA

PREPARED BY:
JOHNSON ENGINEERING CO.
YANKTON, SOUTH DAKOTA

REGISTERED PROFESSIONAL ENGINEER DANIEL K. JOHNSON SOUTH DAKOTA

REGISTERED PROFESSIONAL ENGINEER GREGORY S. SLOWEY 9/13/14 SOUTH DAKOTA

HL93

SEPTEMBER 2014

SHEET 8 OF 32

DESIGNED BY	DRAWN BY	CHECKED BY
GSS/DKJ	LAJ	GSS/DKJ

STATE OF SOUTH DAKOTA	PROJECT	SHEET NO.	TOTAL SHEETS
	BRO 8048(03)	40	76

FOR BIDDING PURPOSES ONLY

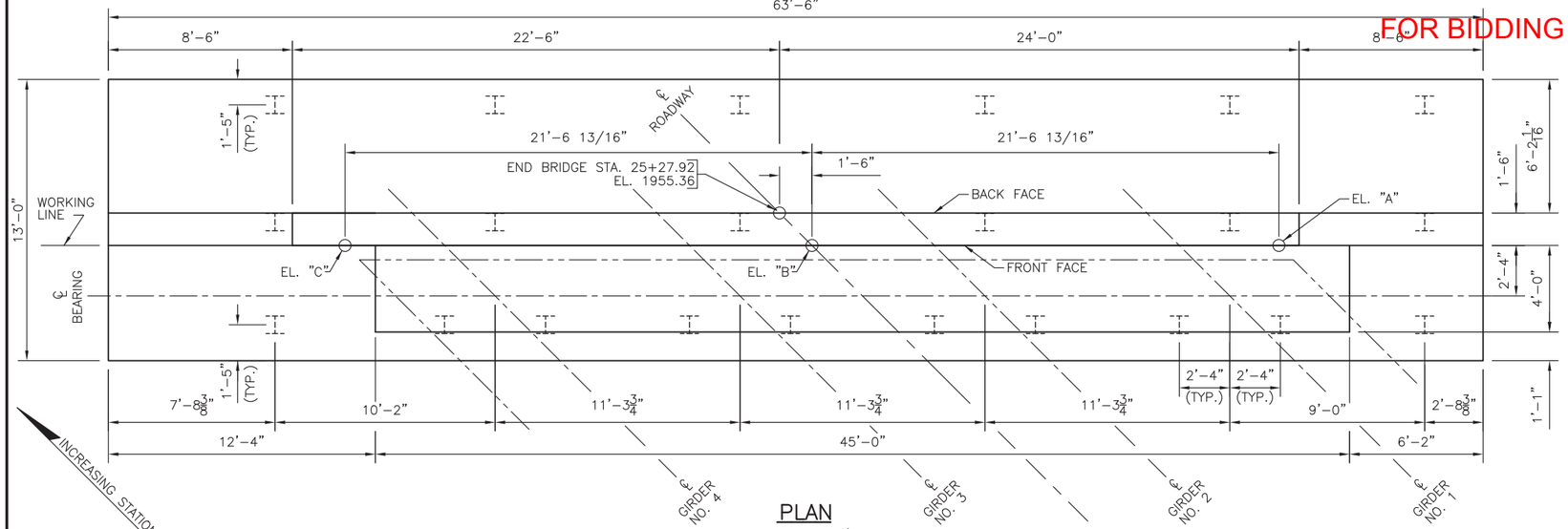

PLAN

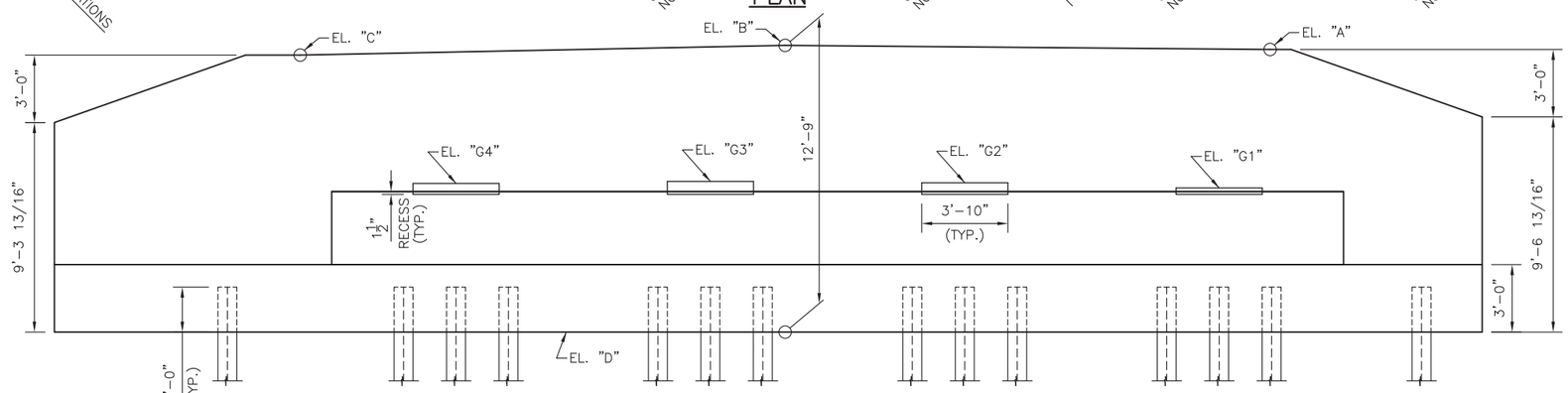

ELEVATION

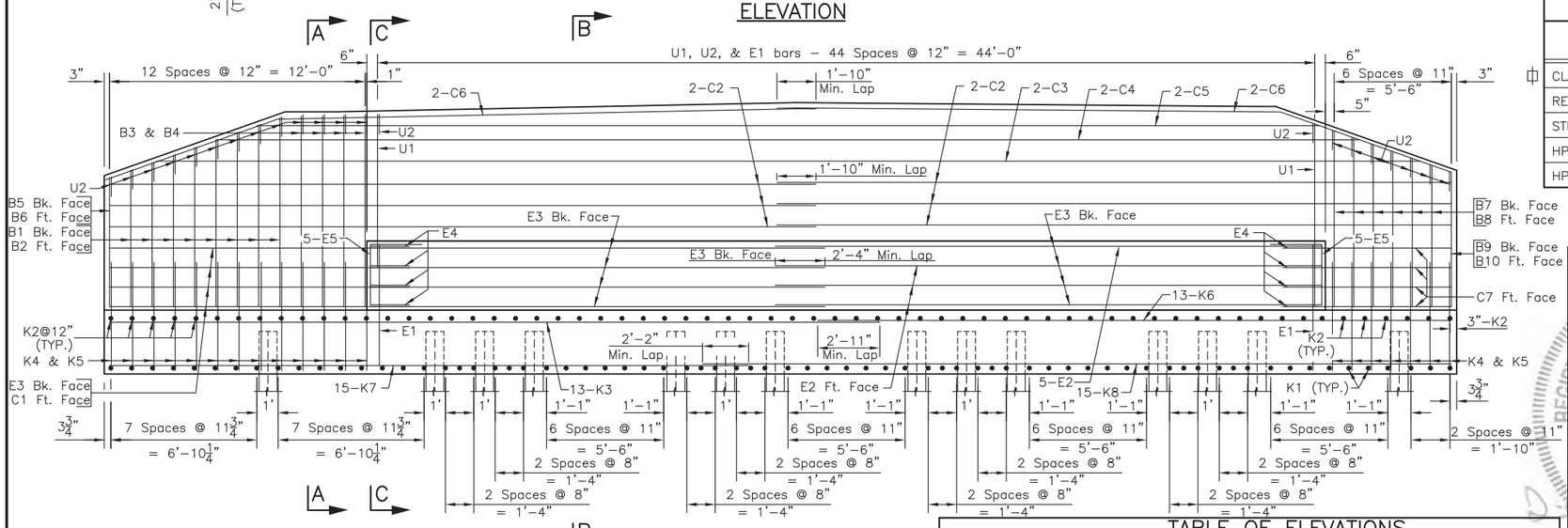

ELEVATION

NOTE: Ft. Face = Front Face
Bk. Face = Back Face

* Top of Grout Pad shall be level and smooth.

REINFORCING SCHEDULE
(For One Abutment)

	Mk.	No.	Size	Length	Type
△	B1	4	6	15'-5"	STR.
△	B2	4	5	15'-5"	STR.
	B3	4	6	9'-1"	STR.
	B4	4	5	9'-1"	STR.
	B5	1	6	6'-2"	STR.
	B6	1	5	6'-2"	STR.
△	B7	3	6	15'-2"	STR.
△	B8	3	5	15'-2"	STR.
	B9	1	6	6'-5"	STR.
	B10	1	5	6'-5"	STR.
	C1	4	4	13'-9"	STR.
	C2	12	4	32'-7"	STR.
	C3	2	4	59'-2"	STR.
	C4	2	4	53'-8"	STR.
	C5	2	4	49'-10"	STR.
	C6	4	4	33'-1"	19B
	C7	4	4	7'-6"	STR.
	E1	45	6	16'-9"	17
	E2	8	5	44'-8"	STR.
	E3	8	5	33'-2"	STR.
	E4	8	5	10'-7"	17
	E5	10	5	5'-3"	2
	K1	71	7	14'-6"	1A
	K2	64	6	12'-8"	STR.
	K3	13	6	36'-2"	STR.
	K4	20	6	5'-11"	2
	K5	20	5	5'-5"	2
	K6	13	6	30'-1"	STR.
	K7	15	6	30'-2"	STR.
	K8	15	6	35'-4"	STR.
	U1	45	6	17'-8"	17
	U2	65	5	6'-6"	17

Bending Details

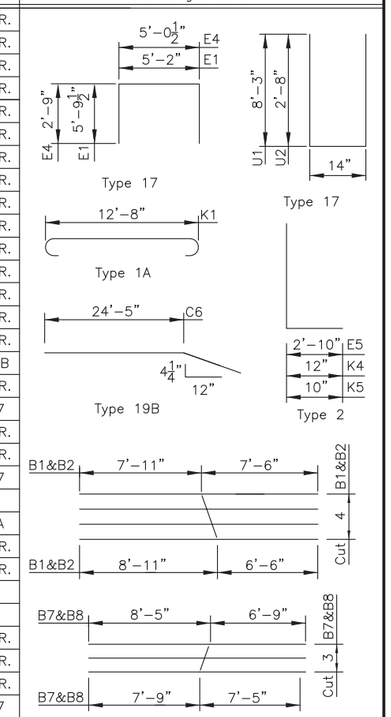

NOTE: All dimensions are out to out of bars.
△ See Cutting Diagram.

ESTIMATED QUANTITIES

ITEM	UNIT	QUANTITY
CLASS A45 CONCRETE, BRIDGE	CuYd	146.8
REINFORCING STEEL	Lb	10,963
STRUCTURE EXCAVATION, BRIDGE	CuYd	75.8
HP 10X42 STEEL TEST PILE, FURNISH & DRIVE	Ft	1 @ 60'=60'
HP 10X42 STEEL BEARING PILE, FURNISH & DRIVE	Ft	21 @ 55'=1,155'

NOTE: USE THIS SHEET IN CONJUNCTION WITH ABUTMENT DETAILS (CONTINUED)
⊕ INCLUDES 1.2 CuYd FOR GROUT PADS

TABLE OF ELEVATIONS

ABUTMENT	EL. "A"	EL. "B"	EL. "C"	EL. "D"	*EL. "G1"	*EL. "G2"	*EL. "G3"	*EL. "G4"
NO. 4	1955.20	1955.38	1954.95	1942.63	1949.11	1949.33	1949.40	1949.30

ABUTMENT NO. 4 DETAILS FOR 321'-10 1/8" PRESTR. GIRDER BRIDGE

28'-0" ROADWAY
OVER WHITE RIVER
STA. 22+06.08 TO 25+27.92
STRUCTURE NO. 48-102-010

45° SKEW LHF
SEC. 28-T45N-R31W, 6th P.M.
SEC. 20-T2S-R26E B.H.M.
BRO 8048(03)
PCN 02DY

MELLETTE COUNTY
SOUTH DAKOTA

PREPARED BY:
JOHNSON ENGINEERING CO.
YANKTON, SOUTH DAKOTA

REGISTERED PROFESSIONAL ENGINEER NO. DANIEL K. JOHNSON SOUTH DAKOTA

REGISTERED PROFESSIONAL ENGINEER NO. GREGORY S. SLOWEY SOUTH DAKOTA

HL93

SEPTEMBER 2014

SHEET 9 OF 32

DESIGNED BY	DRAWN BY	CHECKED BY
GSS/DKJ	LAJ	GSS/DKJ

FOR BIDDING PURPOSES ONLY

STATE OF SOUTH DAKOTA	PROJECT	SHEET NO.	TOTAL SHEETS
	BRO 8048(03)	41	76

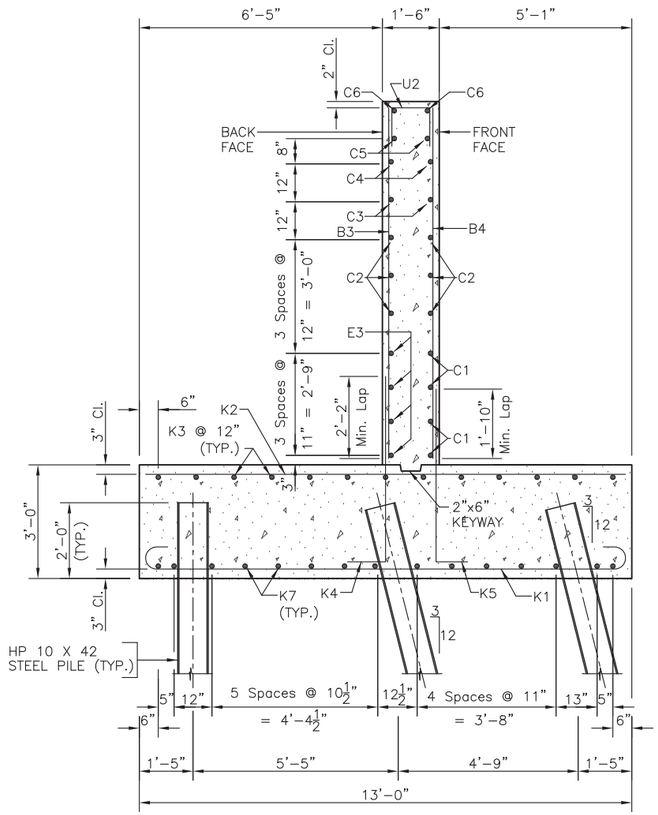

SECTION A–A

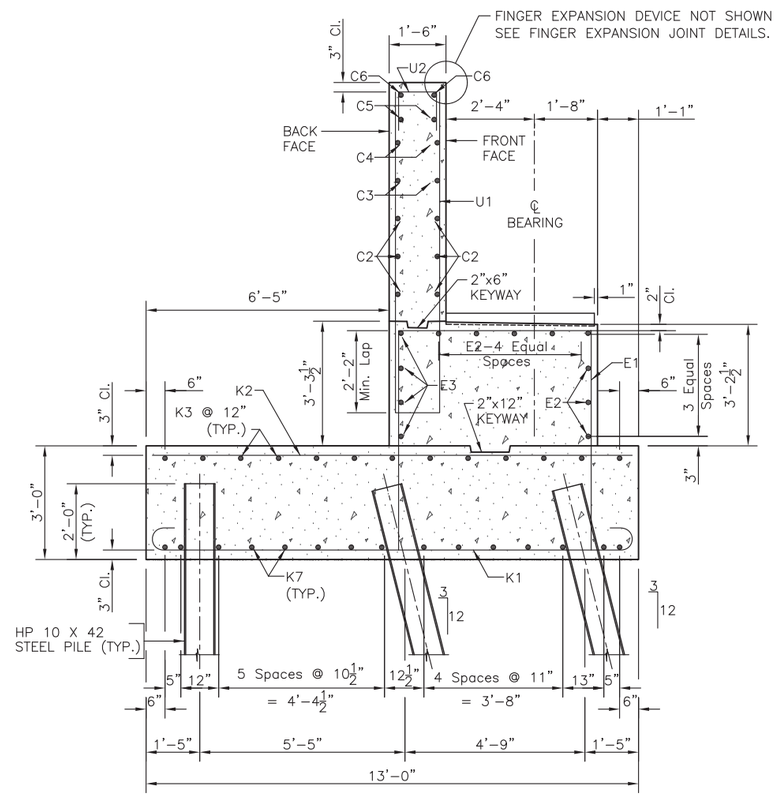

SECTION B–B

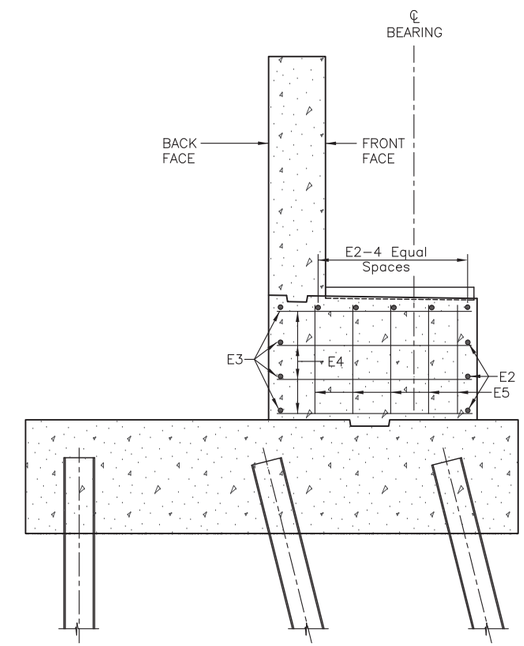

SECTION C–C
(SHOWING SILL END STEEL)

REGISTERED PROFESSIONAL ENGINEER
REG. NO. 8610
DANIEL K. JOHNSON
SOUTH DAKOTA
D. K. Johnson
1-13-2016

REGISTERED PROFESSIONAL ENGINEER
REG. NO. 5152
GREGORY S. SLOWEY
SOUTH DAKOTA
1/13/16
Gregory S. Slowey

NOTE: USE THIS SHEET IN CONJUNCTION WITH ABUTMENT NO. 1 DETAILS & ABUTMENT NO. 4 DETAILS

ABUTMENT DETAILS (CONTINUED) FOR 321'-10 1/8" PRESTR. GIRDER BRIDGE

28'-0" ROADWAY
OVER WHITE RIVER
STA. 22+06.08 TO 25+27.92
STRUCTURE NO. 48-102-010

45° SKEW LHF
SEC. 28-T45N-R31W 6th P.M.
SEC. 20-T2S-R26E B.H.M.
BRO 8048(03)
PCN 02DY

MELLETTE COUNTY
SOUTH DAKOTA

PREPARED BY:
JOHNSON ENGINEERING CO.
YANKTON, SOUTH DAKOTA

HL93

SEPTEMBER 2014

SHEET 10 OF 32

DESIGNED BY	DRAWN BY	CHECKED BY
GSS/DKJ	LAJ	GSS/DKJ

NOTE: Use this sheet in conjunction with Pier Details (Continued).

FOR BIDDING PURPOSES ONLY

STATE OF SOUTH DAKOTA	PROJECT	SHEET NO.	TOTAL SHEETS
	BRO 8048(03)	42	76

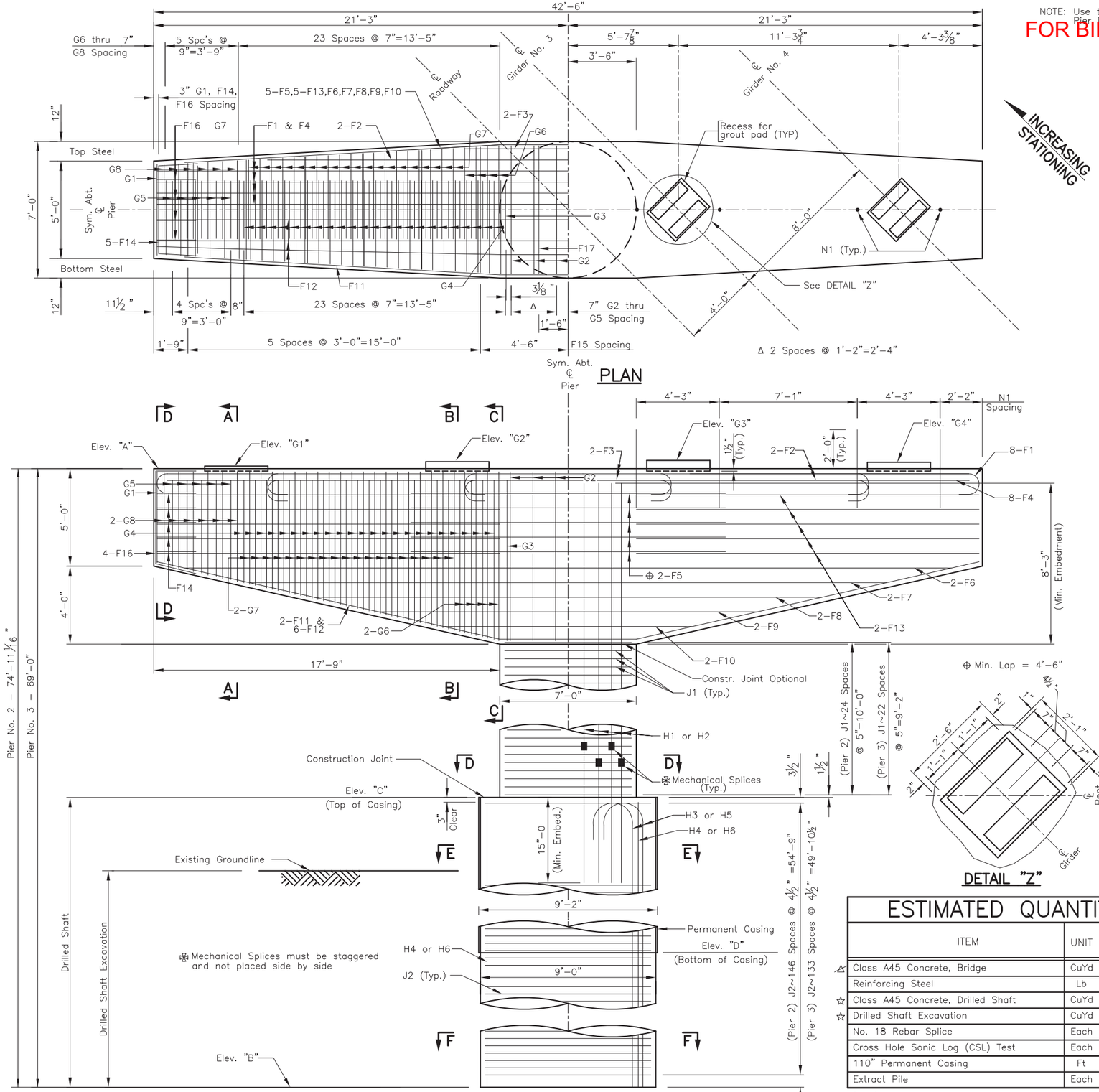

REINFORCING SCHEDULE

(For one Pier)

	MK.	NO.	SIZE	LENGTH	TYPE
	F1	8	10	45'-4"	1
	F2	4	10	34'-0"	1
	F3	4	10	13'-9"	1
	F4	8	10	41'-2"	STR.
	F5	10	8	16'-2"	19A
	F6	2	8	39'-6"	19A
	F7	2	8	32'-8"	19A
	F8	2	8	26'-0"	19A
	F9	2	8	19'-4"	19A
	F10	2	8	12'-8"	19A
	F11	2	7	43'-2"	19A
	F12	6	7	43'-0"	19A
	F13	20	8	17'-7"	STR.
	F14	10	5	8'-6"	19A
ø	F15	6	4	11'-5"	STR.
	F16	8	5	8'-8"	17A
	F17	2	5	6'-8"	STR.
	G1	2	5	19'-8"	T2
	G2	6	5	31'-8"	T2
	G3	2	5	24'-2"	T2
*	G4	46	5	21'-3"	T2
*	G5	10	5	17'-4"	T2
*	G6	16	5	18'-2"	17
*	G7	76	5	16'-6"	17
*	G8	24	5	13'-5"	17
	N1	8	8	4'-0"	STR.
Pier 2	H1	24	18	33'-6"	STR.
Pier 2	H3	24	18	58'-7"	1A
Pier 2	H4	24	18	55'-4"	STR.
Pier 2	J1	25	5	23'-5"	T3
Pier 2	J2	147	5	29'-9"	T3
Pier 3	H2	24	18	32'-8"	STR.
Pier 3	H5	24	18	53'-7"	1A
Pier 3	H6	24	18	50'-4"	STR.
Pier 3	J1	23	5	23'-5"	T3
Pier 3	J2	134	5	29'-9"	T3

BENDING DETAILS

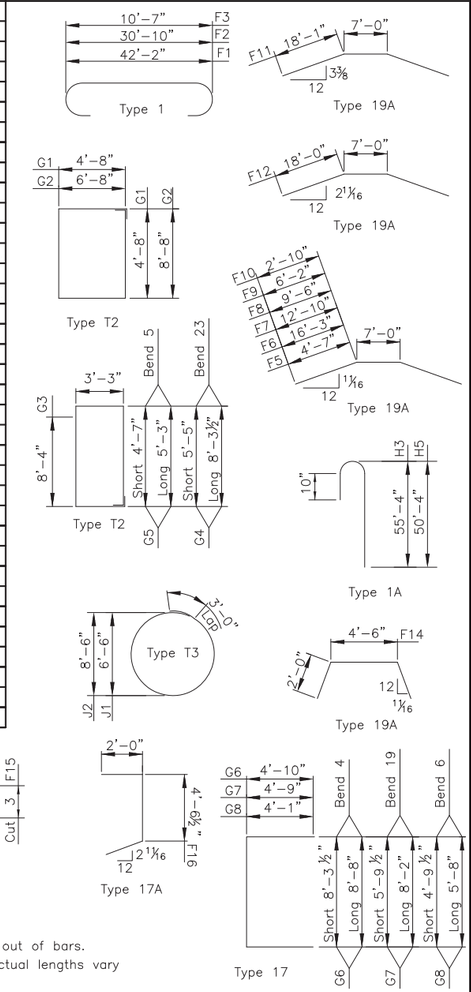

NOTE: All dimensions are out to out of bars.

* Length shown is an average. Actual lengths vary according to bend diagram

ø See cutting diagram.

ESTIMATED QUANTITIES

	ITEM	UNIT	QUANTITY PIER No. 2	QUANTITY PIER No. 3
⚠	Class A45 Concrete, Bridge	CuYd	87.2	85.9
	Reinforcing Steel	Lb	63,601	59,613
☆	Class A45 Concrete, Drilled Shaft	CuYd	132.9	121.1
☆	Drilled Shaft Excavation	CuYd	115.8	134.5
	No. 18 Rebar Splice	Each	24	24
	Cross Hole Sonic Log (CSL) Test	Each	1	1
	110" Permanent Casing	Ft	17	17
	Extract Pile	Each	8	–

☆ 9'-0" ø shaft equals 2.356 CuYds/Ft and 9'-2" shaft equals 2.444 CuYds/Ft

⚠ Includes 0.3 CuYds for Grout Pads

PIER DETAILS FOR 321'-10 1/8" PRESTR. GIRDER BRIDGE

28'-0" ROADWAY
OVER WHITE RIVER
STA. 22+06.08 TO 25+27.92
STRUCTURE NO. 48-102-010

45° SKEW LHF
SEC. 28-T45N-R31W 6th P.M.
SEC. 20-T2S-R26E B.H.M.
BRO 8048(03)
PCN 02DY

MELLETTE COUNTY
SOUTH DAKOTA

HL93

PREPARED BY:
JOHNSON ENGINEERING CO.
YANKTON, SOUTH DAKOTA

SEPTEMBER 2014

SHEET 11 OF 32

DESIGNED BY	DRAWN BY	CHECKED BY
GSS/CJK	CJK	GSS/DKJ

FOR BIDDING PURPOSES ONLY

STATE OF SOUTH DAKOTA	PROJECT	SHEET NO.	TOTAL SHEETS
	BRO 8048(03)	43	76

TABLE OF ELEVATIONS

Pier No.	Elev. "A"	Elev. "B"	Elev. "C"	Elev. "D"	Elev. "G1"	Elev. "G2"	Elev. "G3"	Elev. "G4"
2	1951.13	1876.21	1932.00	1915.00	1951.26	1951.49	1951.55	1951.46
3	1950.24	1881.24	1932.00	1915.00	1950.37	1950.60	1950.66	1950.57

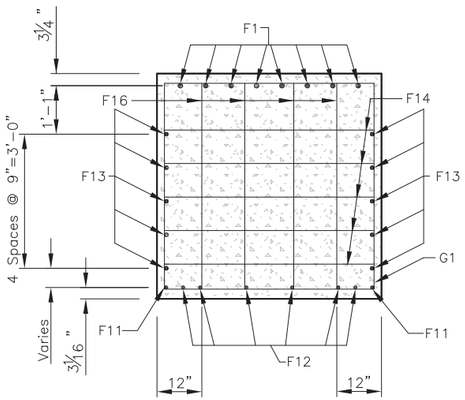

SECTION D–D

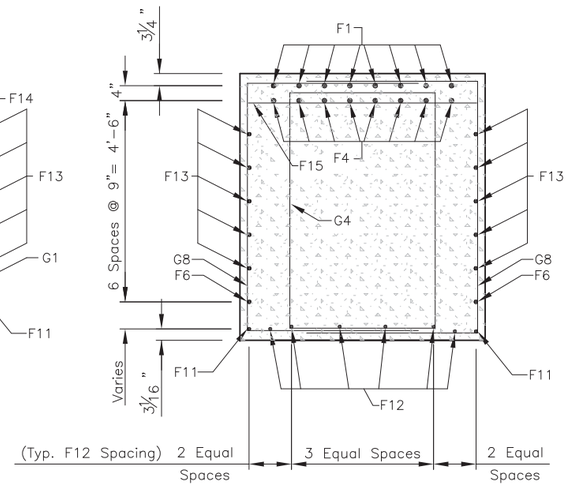

SECTION A–A

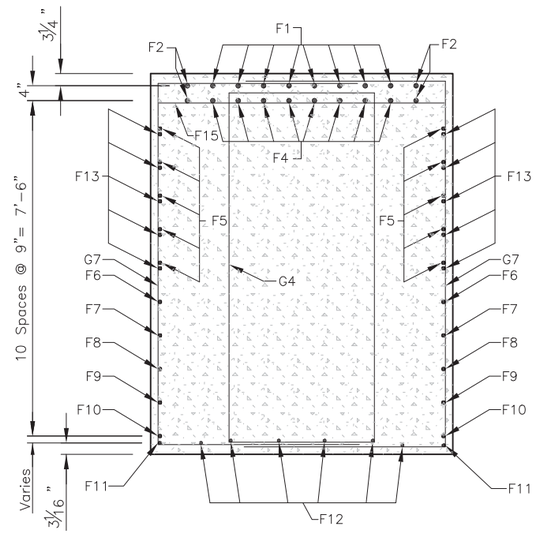

SECTION B–B

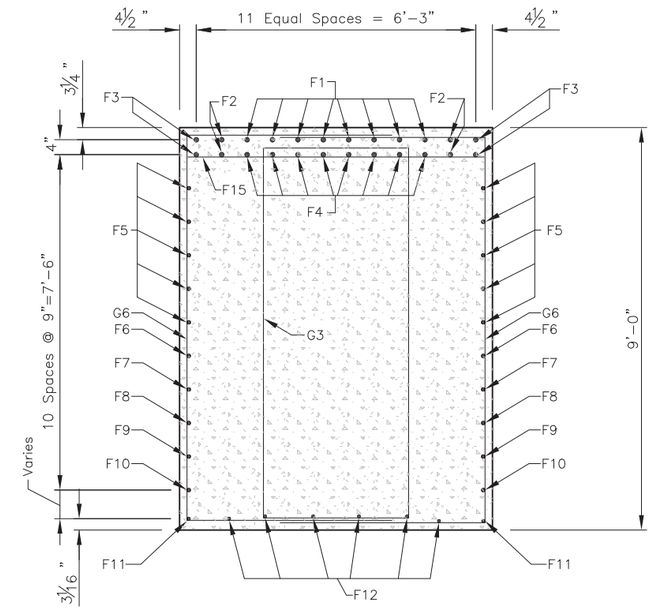

SECTION C–C

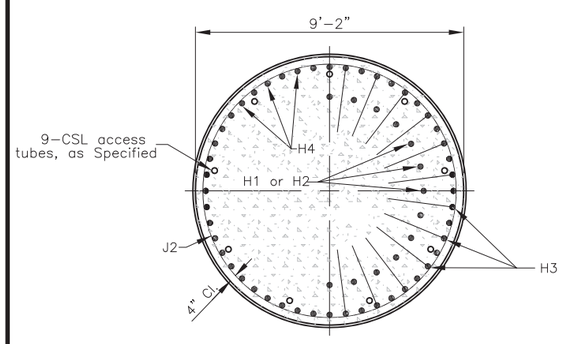

SECTION E–E

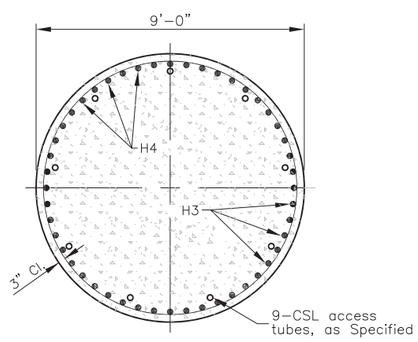

SECTION F–F

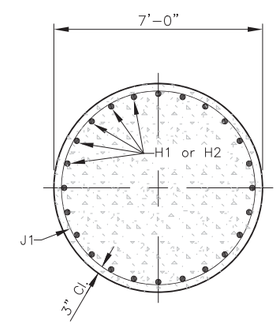

SECTION D–D

NOTE: Use this sheet in conjunction with Pier Details.

PIER DETAILS (CONTINUED) FOR 321'-10 1/8" PRESTR. GIRDER BRIDGE

28'-0" ROADWAY
OVER WHITE RIVER
STA. 22+06.08 TO 25+27.92
STRUCTURE NO. 48-102-010

45° SKEW LHF
SEC. 28-T45N-R31W 6th P.M.
SEC. 20-T2S-R26E B.H.M.
BRO 8048(03)
PCN 02DY

MELLETTE COUNTY
SOUTH DAKOTA

PREPARED BY:
JOHNSON ENGINEERING CO.
YANKTON, SOUTH DAKOTA

HL93

SEPTEMBER 2014

SHEET 12 OF 32

DESIGNED BY	DRAWN BY	CHECKED BY
GSS/CJK	CJK	GSS/CJK

STATE OF SOUTH DAKOTA	PROJECT	SHEET NO.	TOTAL SHEETS
	BRO 8048(03)	44	76

FOR BIDDING PURPOSES ONLY

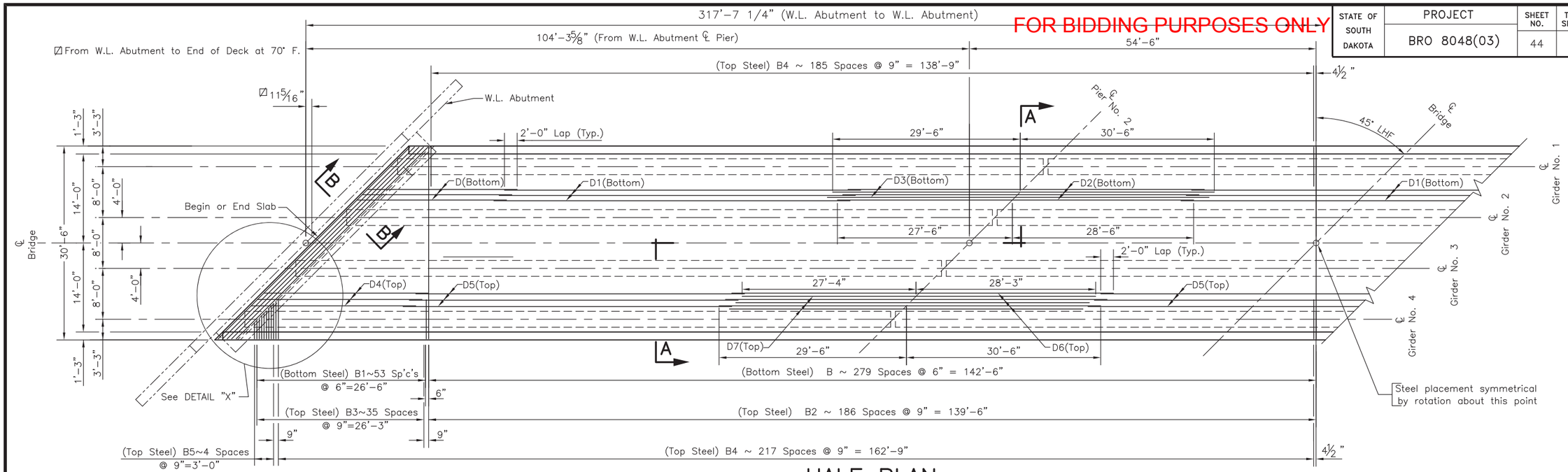

HALF PLAN

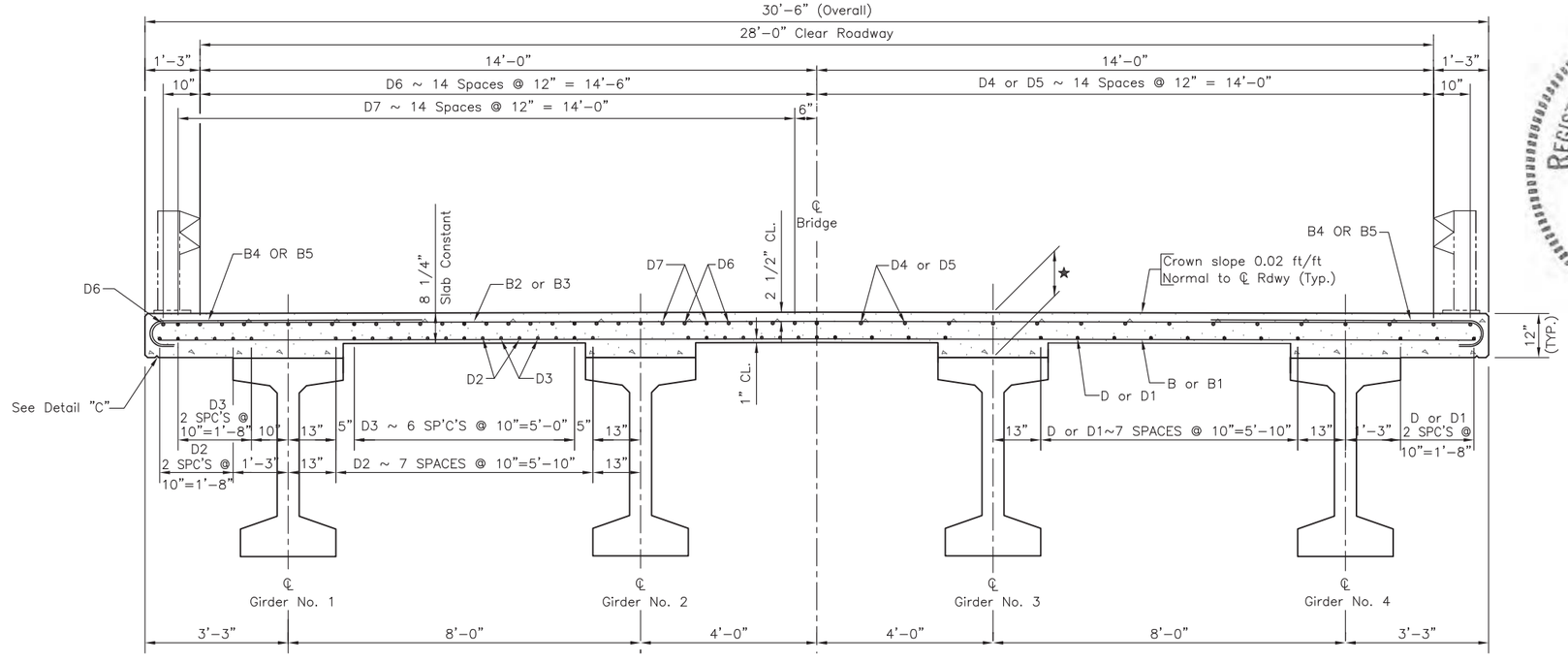

SEC. A–A

★ 11 1/2" @ ℄ BEARING OF ABUTMENTS & PIERS

NOTE:
Use this sheet in conjunction with Superstructure Details (Continued).

REGISTERED PROFESSIONAL ENGINEER
REG. NO. 5152
GREGORY S. SLOWEY
SOUTH DAKOTA
9/13/14
Gregory S. Slowey

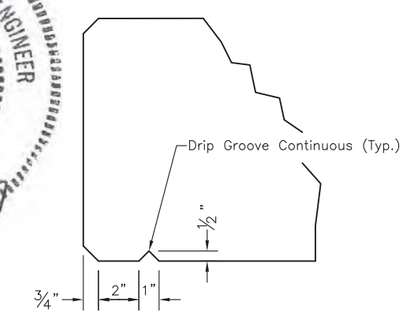

DETAIL "C"

SUPERSTRUCTURE DETAILS FOR 321'-10 1/8" PRESTR. GIRDER BRIDGE

28'-0" ROADWAY
OVER WHITE RIVER
STA. 22+06.08 TO 25+27.92
STRUCTURE NO. 48-102-010

45° SKEW LHF
SEC. 28-T45N-R31W 6th P.M.
SEC. 20-T2S-R26E B.H.M.
BRO 8048(03)
PCN 02DY

MELLETTE COUNTY
SOUTH DAKOTA

PREPARED BY:
JOHNSON ENGINEERING CO.
YANKTON, SOUTH DAKOTA

HL93

SEPTEMBER 2014

SHEET 13 OF 32

DESIGNED BY	DRAWN BY	CHECKED BY
GSS/CJK	CJK	SMW/CJK

STATE OF SOUTH DAKOTA	PROJECT	SHEET NO.	TOTAL SHEETS
	BRO 8048(03)	45	76

FOR BIDDING PURPOSES ONLY

NOTE:
Use this sheet in conjunction with Finger Expansion Joint Details.

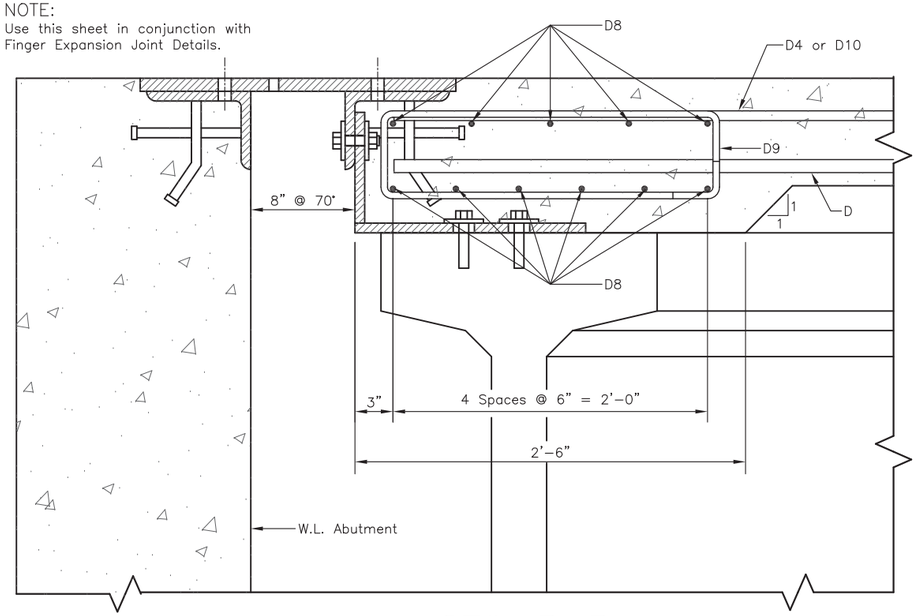

SEC. B-B

(Reinforcing Steel not shown in Abutment)

ESTIMATED QUANTITIES

	ITEM	UNIT	QUANTITY
ø	Class A45 Concrete, Bridge Deck	CuYd	331.2
⊠	Reinforcing Steel	Lb	82,512
	54" Minnesota Shape Prestressed Concrete Beam	Ft	1245

⊠ Includes quantities for Pier Diaphragms and Slab.

ø Includes quantities for Pier Diaphragms, Slab and Haunch. (Average depth of 3 1/4" used for haunch quantity).

NOTE:
Use this sheet in conjunction with Superstructure Details.

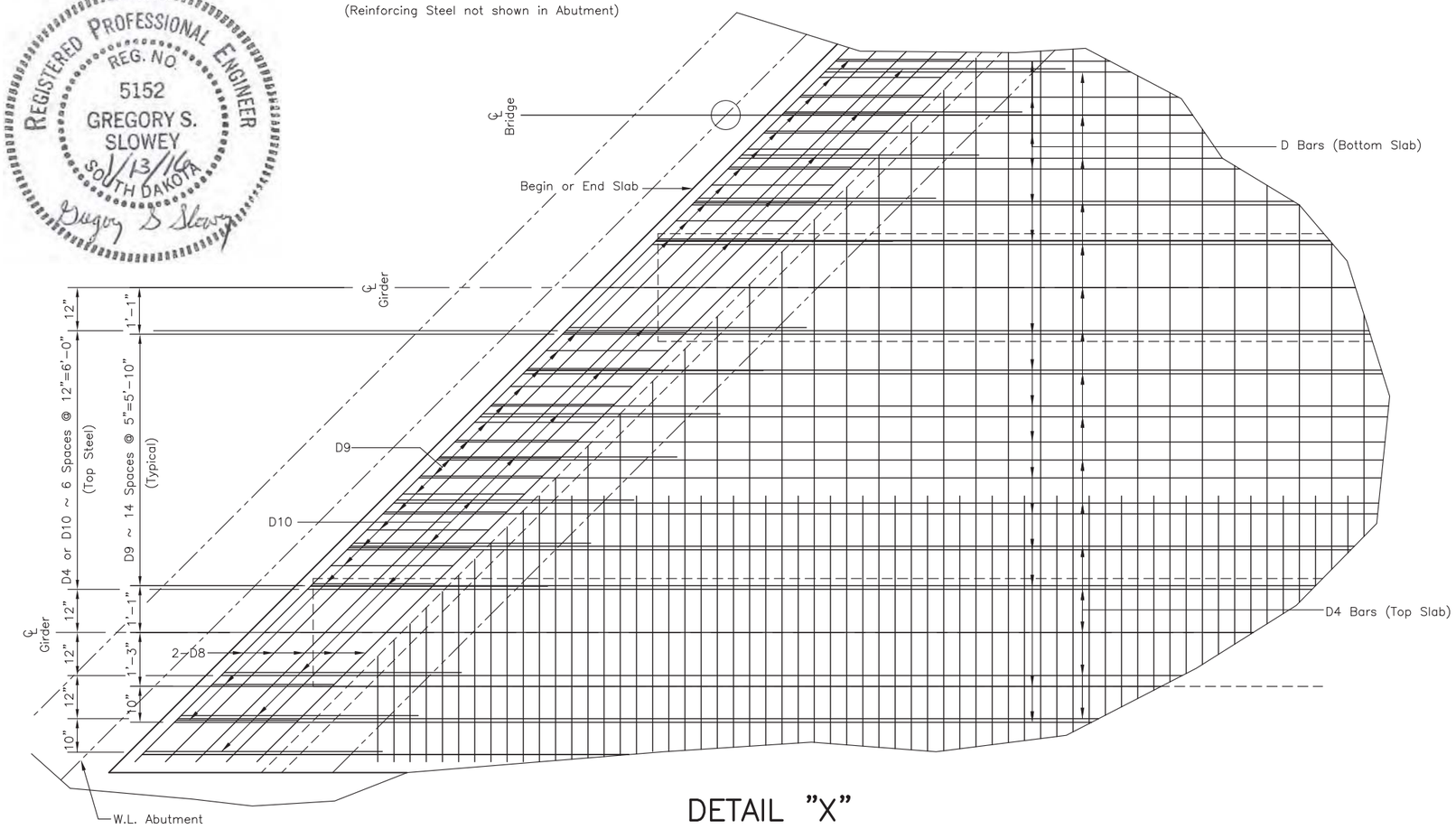

DETAIL "X"

REINFORCING SCHEDULE

	MK.	NO.	SIZE	LENGTH	TYPE
	B	559	4	30'-2"	Str.
*	B1	54	4	32'-4"	Str.
	B2	373	6	31'-6"	1A
*	B3	36	6	33'-5"	1
	B4	808	6	6'-10"	1
*	B5	5	6	9'-4"	1
	D	60	5	23'-6"	Str.
	D1	90	5	56'-0"	Str.
	D2	60	6	56'-0"	Str.
	D3	54	6	60'-0"	Str.
	D4	62	5	25'-10"	Str.
	D5	93	5	51'-8"	Str.
	D6	62	7	60'-0"	Str.
	D7	60	7	55'-7"	Str.
	D8	22	6	42'-8"	Str.
	D9	98	4	8'-0"	T1
	D10	54	5	5'-6"	Str.
	DIAPHRAGM BARS				
	T1	24	6	7'-3"	Str.
	T2	36	5	10'-3"	Str.
	T3	6	6	38'-6"	Str.
	T4	8	5	6'-3"	19C
	T5	20	5	5'-3"	17B
	T6	20	5	8'-3"	17C
	T7	24	6	2'-6"	Str.
	T8	8	5	5'-1"	Str.
	U1	24	4	15'-10"	S4
	U2	16	6	16'-4"	S4
	U3	48	4	5'-4"	17

BENDING DETAILS

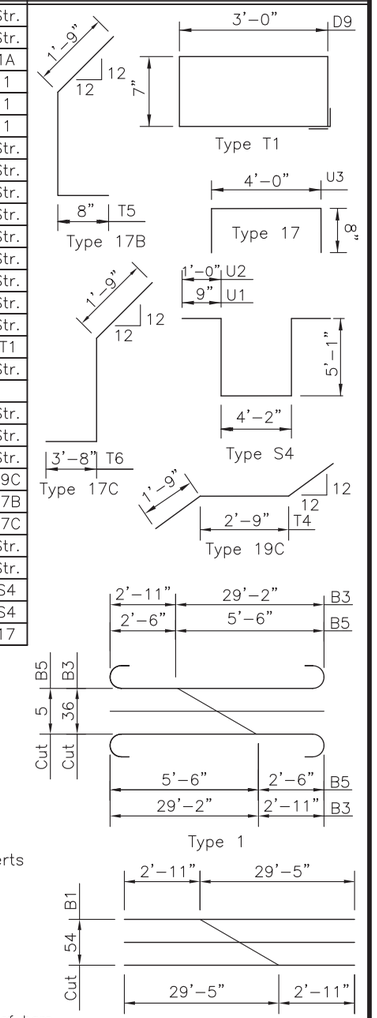

NOTES:
All dimensions are out to out of bars.
* See Cutting Diagram.

SUPERSTRUCTURE DETAILS (CONTINUED) FOR 321'-10 1/8" PRESTR. GIRDER BRIDGE

28'-0" ROADWAY
OVER WHITE RIVER
STA. 22+06.08 TO 25+27.92
STRUCTURE NO. 48-102-010

45° SKEW LHF
SEC. 28-T45N-R31W 6th P.M.
SEC. 20-T2S-R26E B.H.M.
BRO 8048(03)
PCN 02DY

MELLETTE COUNTY
SOUTH DAKOTA

PREPARED BY:
JOHNSON ENGINEERING CO.
YANKTON, SOUTH DAKOTA

HL93

SEPTEMBER 2014

SHEET 14 OF 32

DESIGNED BY	DRAWN BY	CHECKED BY
GSS/CJK	SMW	SMW/CJK

REGISTERED PROFESSIONAL ENGINEER
REG. NO. 5152
GREGORY S. SLOWEY
SOUTH DAKOTA
9/13/14
Gregory S. Slowey

FOR BIDDING PURPOSES ONLY

REGISTERED PROFESSIONAL ENGINEER
REG. NO. 5152
GREGORY S. SLOWEY
SOUTH DAKOTA
1/13/16
Gregory S. Slowey

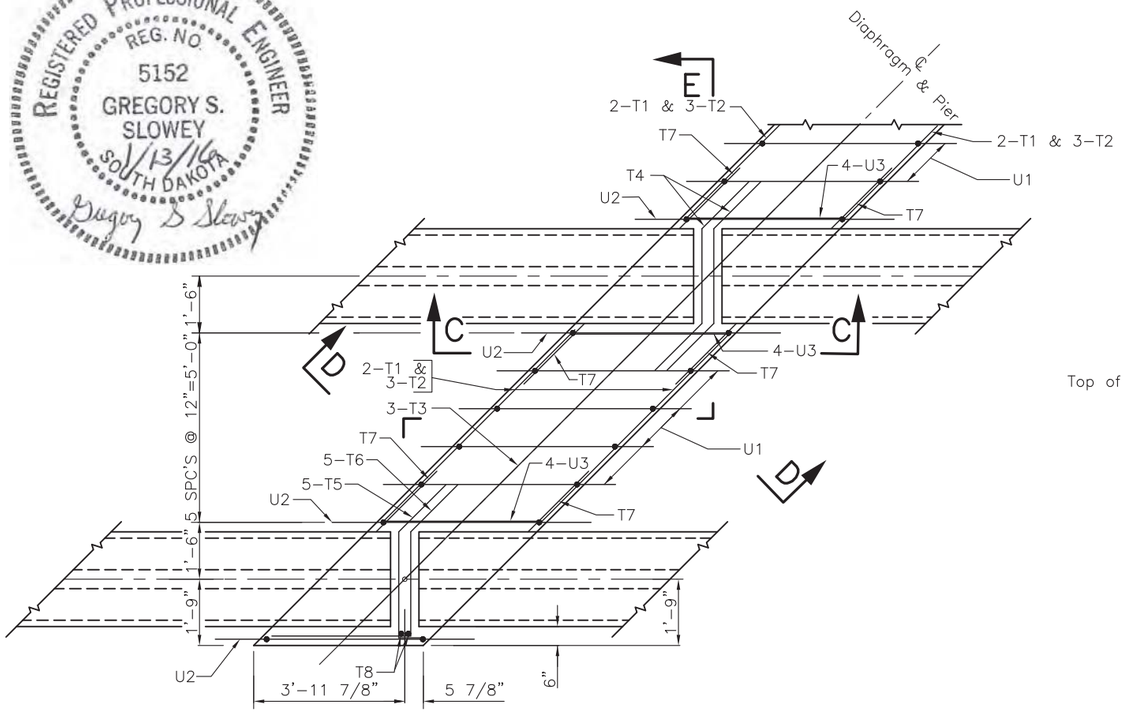

PIER DIAPHRAGMS

(Slab Not Shown On This View)

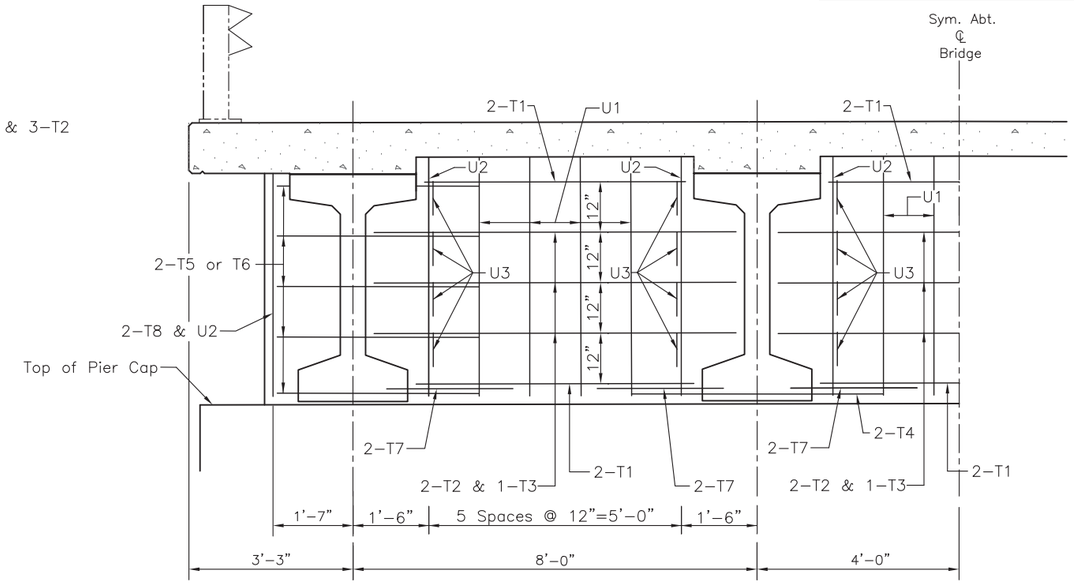

SEC. E–E

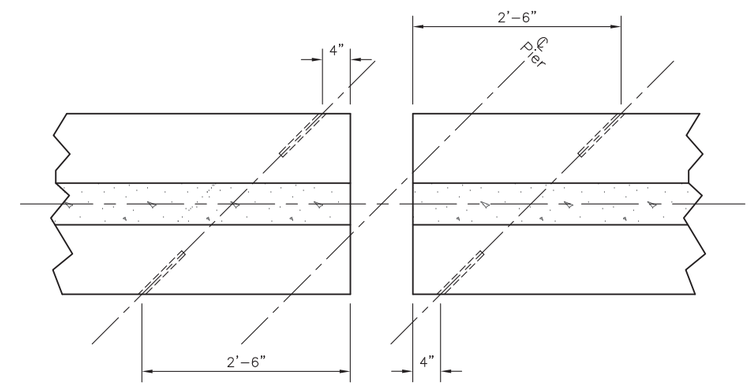

LAYOUT FOR INSERTS AT BEAM ENDS

(Pier Only)

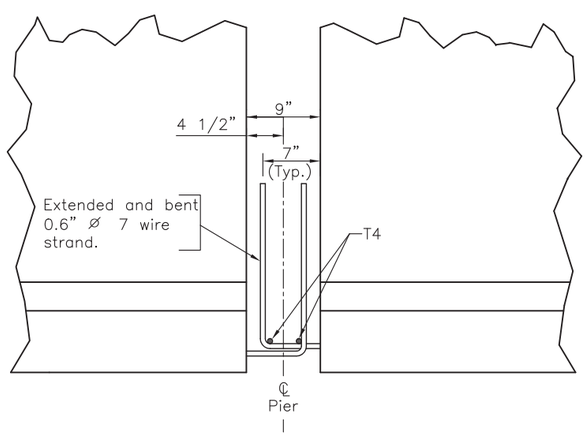

SEC. C–C

(Showing extended and bent strand detail and T4 bar placement at Pier, T5 & T6 similar at exterior girder.)

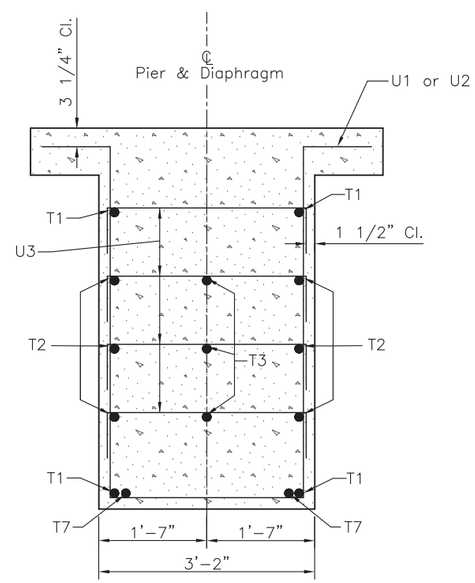

SEC. D–D

(Girders Not Shown)

NOTE–

Concrete shall be placed in the space under the beams at Piers 2 & 3 (within the diaphragm width) during the diaphragm pour. If upon form removal the space is not completely filled and consolidated, the contractor shall grout in the remaining voids.

SUPERSTRUCTURE DETAILS (CONTINUED) FOR 321'–10 1/8" PRESTR. GIRDER BRIDGE

28'–0" ROADWAY
OVER WHITE RIVER
STA. 22+06.08 TO 25+27.92
STRUCTURE NO. 48–102–010

45° SKEW LHF
SEC. 28–T45N–R31W 6th P.M.
SEC. 20–T2S–R26E B.H.M.
BRO 8048(03)
PCN 02DY

MELLETTE COUNTY
SOUTH DAKOTA

PREPARED BY:
JOHNSON ENGINEERING CO.
YANKTON, SOUTH DAKOTA

HL93

SEPTEMBER 2014

SHEET 15 OF 32

DESIGNED BY	DRAWN BY	CHECKED BY
GSS/CJK	SMW	SMW/CJK

STATE OF SOUTH DAKOTA	PROJECT	SHEET NO.	TOTAL SHEETS
	BRO 8048(03)	47	76

FOR BIDDING PURPOSES ONLY

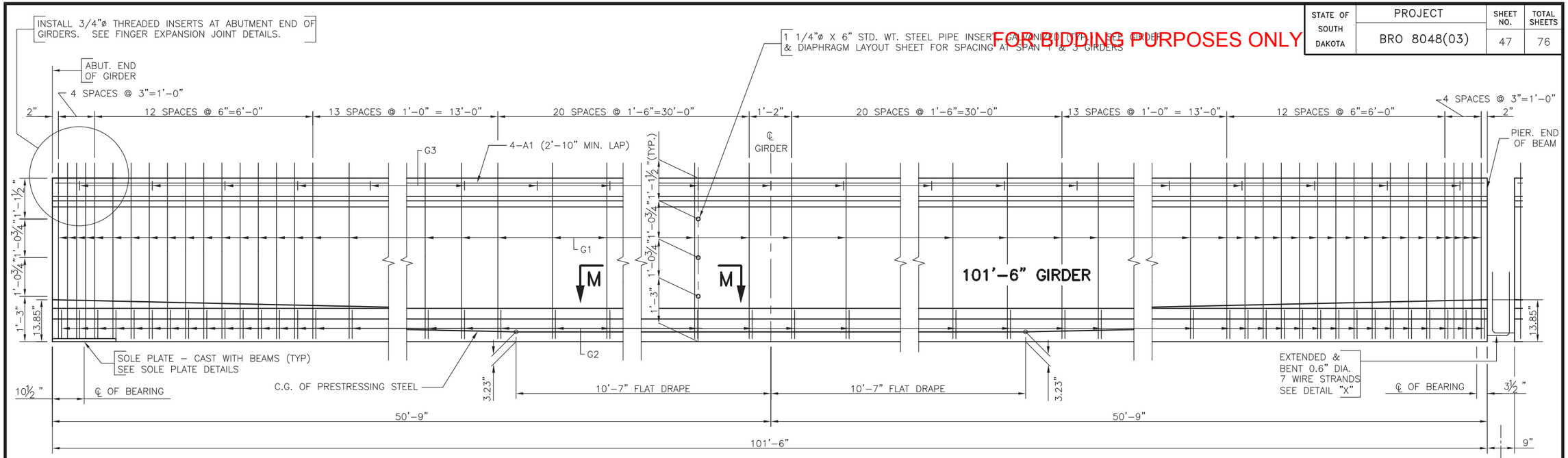

ELEVATION
(SPAN NO.1 & NO.3)

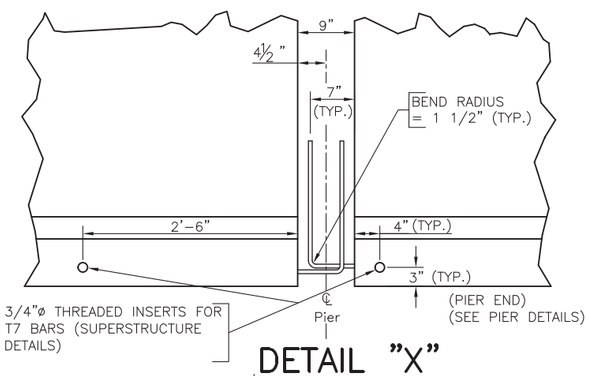

DETAIL "X"

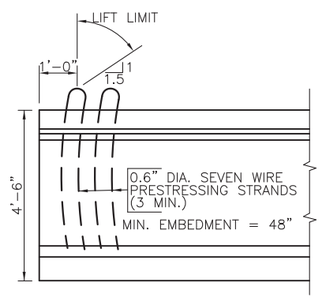

TYPICAL LIFTING DEVICE

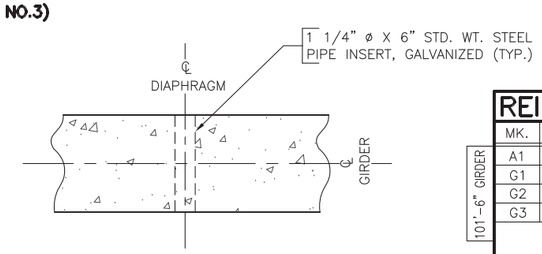

SEC. M-M

REINFORCING SCHEDULE (PER GIRDER)

101'-6" GIRDER

MK.	NO.	SIZE	LENGTH	TYPE	BENDING DETAILS
A1	8	7	52'-0"	Str.	
G1	100	5	9'-10"	S11	
G2	100	5	4'-10"	S3A	
G3	51	5	2'-10"	17	

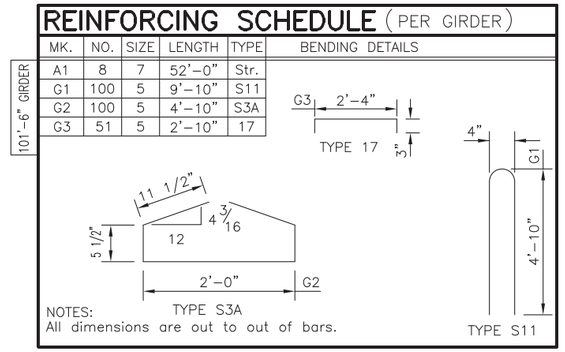

NOTES:
All dimensions are out to out of bars.

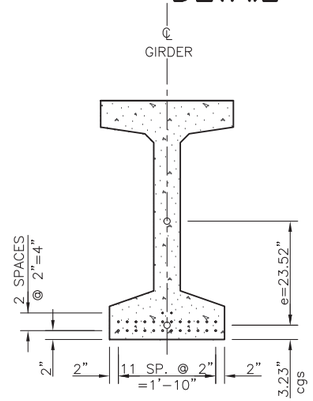

℄ SECTION

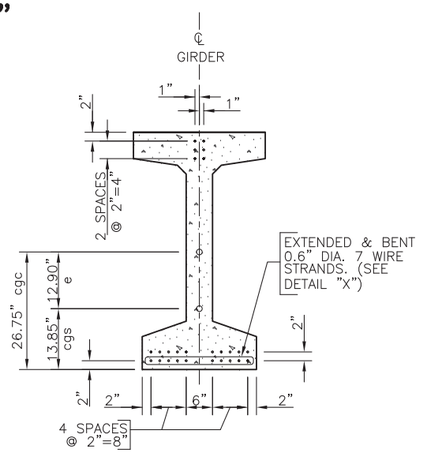

END VIEW

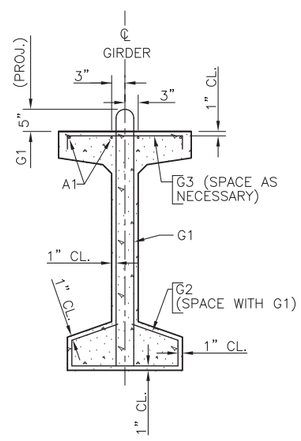

STIRRUP DETAILS

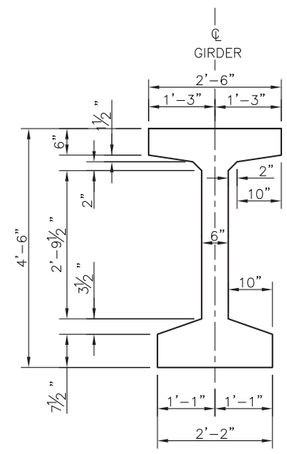

TYPE 54 GIRDER

101'-6" GIRDERS
(26-0.6" DIA. TYPE 270K LOW-RELAXATION STRANDS)

GIRDER DETAILS (101'-6")
FOR
321'-10 1/8" PRESTR. GIRDER BRIDGE

28'-0" ROADWAY
OVER WHITE RIVER
STA. 22+06.08 TO 25+27.92
STRUCTURE NO. 48-102-040

45° SKEW LHF
SEC. 28-T45N-R31W 6th P.M.
SEC. 20-T2S-R26E B.H.M.
BRO 8048(03)
PCN 02DY

MELLETTE COUNTY
SOUTH DAKOTA

REGISTERED PROFESSIONAL ENGINEER
REG. NO. 5152
GREGORY S. SLOWEY
SOUTH DAKOTA
9/17/14

PREPARED BY:
JOHNSON ENGINEERING CO.
YANKTON, SOUTH DAKOTA

HL93

SEPTEMBER 2014

SHEET 16 OF 32

DESIGNED BY	DRAWN BY	CHECKED BY
GSS/CJK	CJK	SMW/CJK

STATE OF SOUTH DAKOTA	PROJECT	SHEET NO.	TOTAL SHEETS
	BRO 8048(03)	48	76

FOR BIDDING PURPOSES ONLY

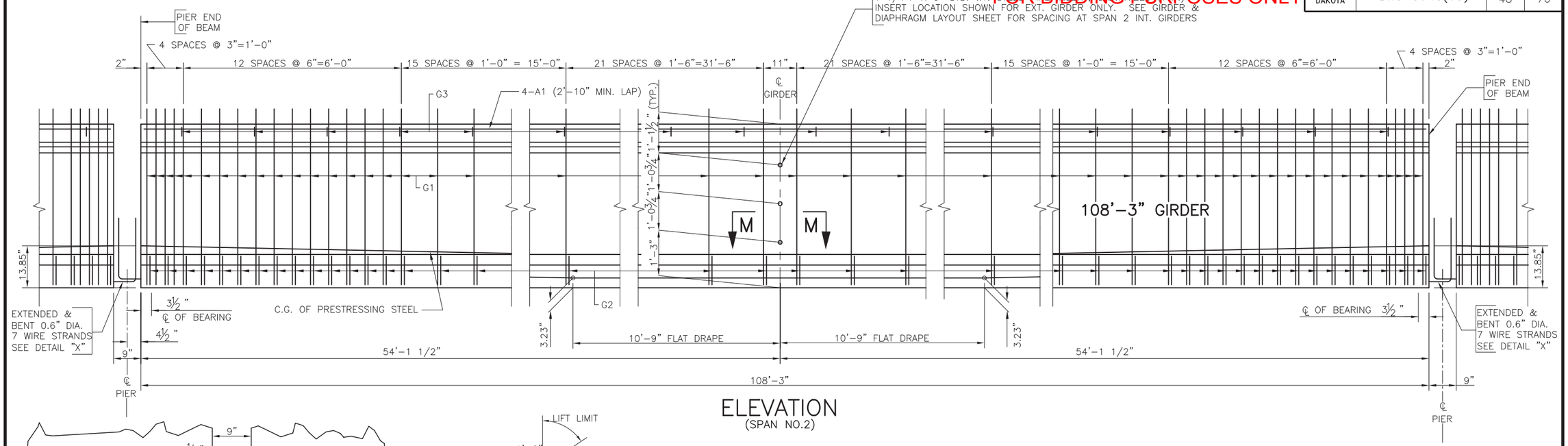

ELEVATION
(SPAN NO.2)

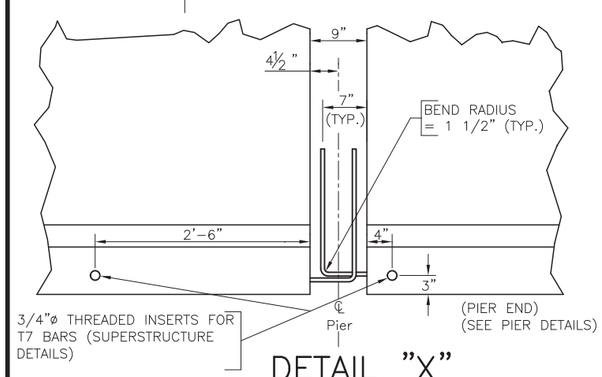

DETAIL "X"

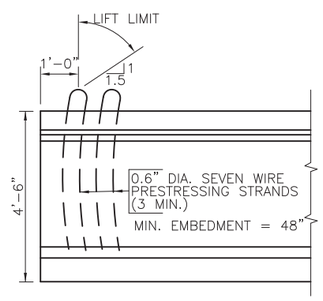

TYPICAL LIFTING DEVICE

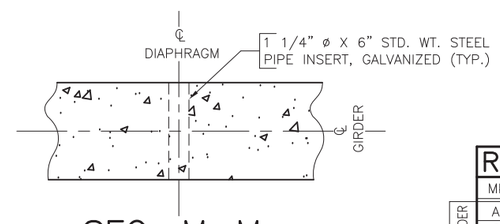

SEC. M-M

REINFORCING SCHEDULE (PER GIRDER)

108'-3" GIRDER

MK.	NO.	SIZE	LENGTH	TYPE	BENDING DETAILS
A1	8	7	55'-4"	Str.	
G1	106	5	9'-10"	S11	
G2	106	5	4'-10"	S3A	
G3	54	5	2'-10"	17	

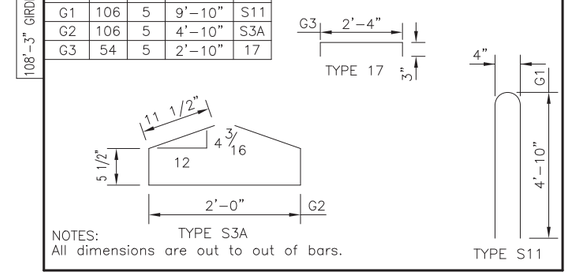

NOTES:
All dimensions are out to out of bars.

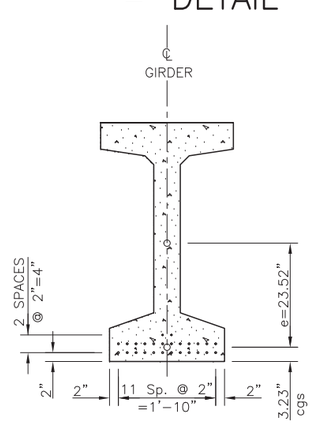

℄ SECTION

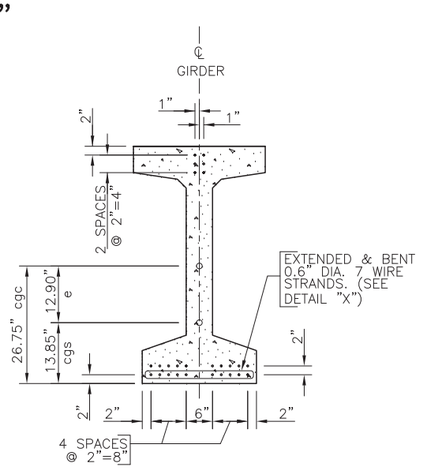

END VIEW

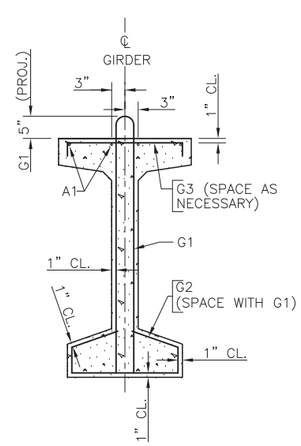

STIRRUP DETAILS

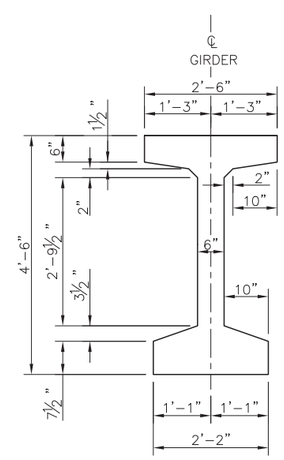

TYPE 54 GIRDER

108'-3" GIRDERS
(26-0.6" DIA. TYPE 270K LOW-RELAXATION STRANDS)

GIRDER DETAILS (108'-3")
FOR
321'-10 1/8" PRESTR. GIRDER BRIDGE

28'-0" ROADWAY
OVER WHITE RIVER
STA. 22+06.08 TO 25+27.92
STRUCTURE NO. 48-102-010

45° SKEW LHF
SEC. 28-T45N-R31W 6th P.M.
SEC. 20-T2S-R26E B.H.M.
BRO 8048(03)
PCN 02DY

MELLETTE COUNTY
SOUTH DAKOTA

PREPARED BY:
JOHNSON ENGINEERING CO.
YANKTON, SOUTH DAKOTA

HL93

SEPTEMBER 2014

SHEET 17 OF 32

REGISTERED PROFESSIONAL ENGINEER REG. NO. 5152 GREGORY S. SLOWEY SOUTH DAKOTA

DESIGNED BY	DRAWN BY	CHECKED BY
GSS/CJK	CJK	SMW/CJK

STATE OF SOUTH DAKOTA	PROJECT	SHEET NO.	TOTAL SHEETS
	BRO 8048(03)	49	76

FOR BIDDING PURPOSES ONLY

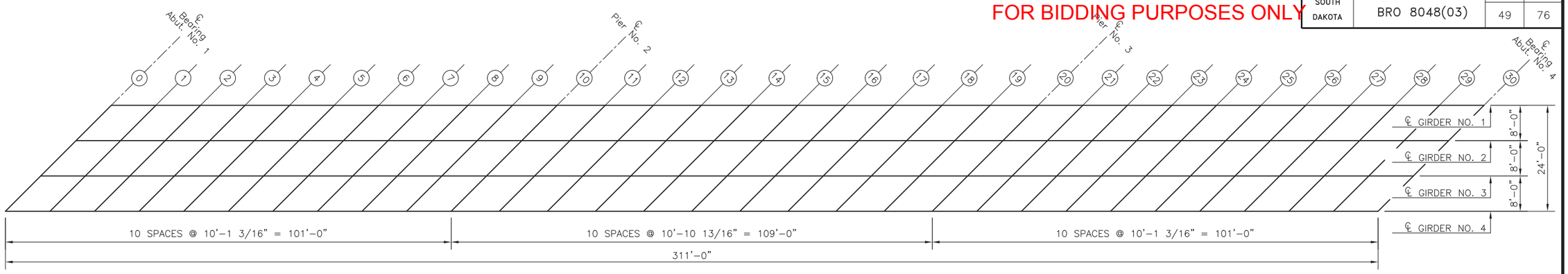

GIRDER LAYOUT

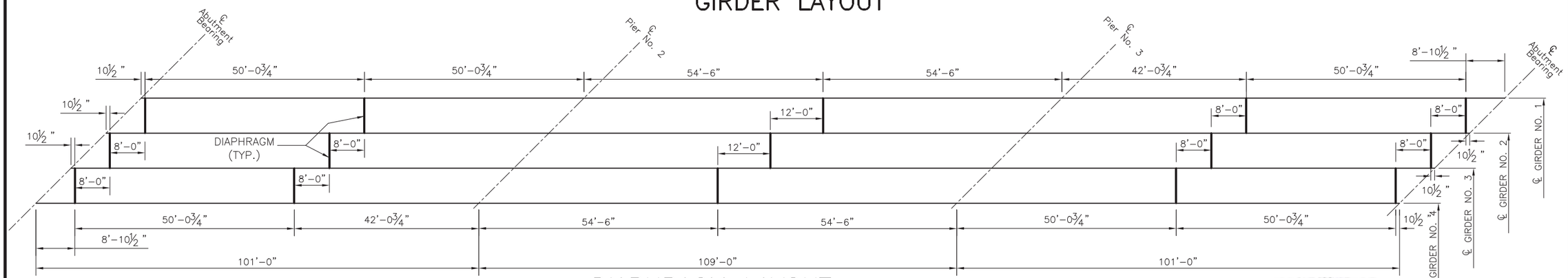

DIAPHRAGM LAYOUT

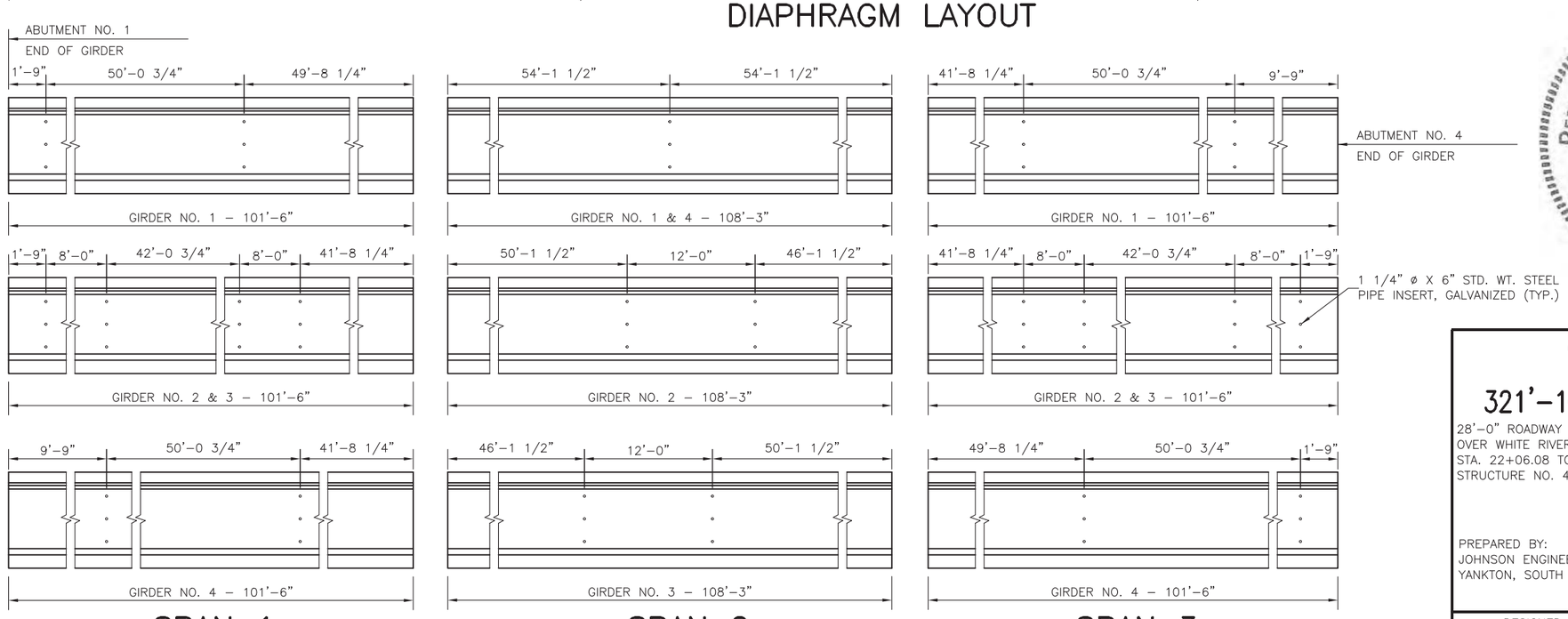

SPAN 1
(PIPE INSERT SPACING)

SPAN 2
(PIPE INSERT SPACING)

SPAN 3
(PIPE INSERT SPACING)

NOTE:
Use this Sheet in conjunction with the Erection Data & Camber Diagram Sheet.

GIRDER & DIAPHRAGM LAYOUT FOR 321'-10 1/8" PRESTR. GIRDER BRIDGE

28'-0" ROADWAY
OVER WHITE RIVER
STA. 22+06.08 TO 25+27.92
STRUCTURE NO. 48-102-010

45° SKEW LHF
SEC. 28-T45N-R31W 6th P.M.
SEC. 20-T2S-R26E B.H.M.
BRO 8048(03)
PCN 02DY

MELLETTE COUNTY
SOUTH DAKOTA

PREPARED BY:
JOHNSON ENGINEERING CO.
YANKTON, SOUTH DAKOTA

HL93

SEPTEMBER 2014

SHEET 18 OF 32

DESIGNED BY	DRAWN BY	CHECKED BY
GSS/CJK	SMW	SMW/CJK

STATE OF SOUTH DAKOTA	PROJECT	SHEET NO.	TOTAL SHEETS
	BRO 8048(03)	50	76

FOR BIDDING PURPOSES ONLY

TABLE OF SLAB FORM ELEVATIONS AND CALCULATIONS

		0	1	2	3	4	5	6	7	8	9	10	11	12	13	14	15	16	17	18	19	20	21	22
GIRDER NO. 1	Elev. "M"	1957.611	1957.579	1957.536	1957.481	1957.415	1957.338	1957.250	1957.150	1957.040	1956.918	1956.784	1956.761	1956.724	1956.672	1956.604	1956.522	1956.426	1956.315	1956.189	1956.047	1955.892	1955.860	1955.817
	(−) Elev. "N"																							
	(=) d																							
	(−) 0.687'																							
	(=) h																							
GIRDER NO. 2	Elev. "M"	1957.837	1957.805	1957.761	1957.707	1957.641	1957.563	1957.476	1957.376	1957.265	1957.144	1957.010	1956.987	1956.949	1956.897	1956.830	1956.748	1956.651	1956.540	1956.414	1956.273	1956.118	1956.086	1956.042
	(−) Elev. "N"																							
	(=) d																							
	(−) 0.687'																							
	(=) h																							
GIRDER NO. 3	Elev. "M"	1957.902	1957.870	1957.827	1957.772	1957.706	1957.629	1957.541	1957.441	1957.331	1957.209	1957.075	1957.052	1957.015	1956.963	1956.895	1956.813	1956.717	1956.606	1956.479	1956.338	1956.183	1956.151	1956.108
	(−) Elev. "N"																							
	(=) d																							
	(−) 0.687'																							
	(=) h																							
GIRDER NO. 4	Elev. "M"	1957.808	1957.776	1957.732	1957.678	1957.612	1957.534	1957.447	1957.347	1957.236	1957.114	1956.981	1956.958	1956.920	1956.868	1956.801	1956.719	1956.622	1956.511	1956.385	1956.244	1956.089	1956.057	1956.013
	(−) Elev. "N"																							
	(=) d																							
	(−) 0.687'																							
	(=) h																							

TABLE OF SLAB FORM ELEVATIONS AND CALCULATIONS

		23	24	25	26	27	28	29	30
GIRDER NO. 1	Elev. "M"	1955.762	1955.696	1955.619	1955.531	1955.431	1955.321	1955.199	1955.065
	(−) Elev. "N"								
	(=) d								
	(−) 0.687'								
	(=) h								
GIRDER NO. 2	Elev. "M"	1955.988	1955.922	1955.844	1955.756	1955.657	1955.546	1955.424	1955.291
	(−) Elev. "N"								
	(=) d								
	(−) 0.687'								
	(=) h								
GIRDER NO. 3	Elev. "M"	1956.053	1955.987	1955.910	1955.822	1955.722	1955.612	1955.490	1955.356
	(−) Elev. "N"								
	(=) d								
	(−) 0.687'								
	(=) h								
GIRDER NO. 4	Elev. "M"	1955.958	1955.893	1955.815	1955.727	1955.628	1955.517	1955.395	1955.262
	(−) Elev. "N"								
	(=) d								
	(−) 0.687'								
	(=) h								

NOTE:
The table contains the information necessary to determine the depth of concrete over the girders at points shown. Calculations may be carried in the spaces provided. Elev. "M" is the design elevation of the top of slab before any concrete has been poured. This elevation includes correction for camber and dead load deflection. Elev. "N" is a field measured elevation taken on top of girders at the points shown with the girders in their positions. This elevation must be taken after erection is completed, but prior to placing any of the concrete. Girders shall not be supported between bearings when elevations are taken.

NOTE:
Based on a "d" of 11 1/2" at the center line of bearings at abutments and piers (see Superstructure Details), it is anticipated that the midspan haunch dimension "h" over the center line of the girder will be 1 3/4". If when computing the dimensions in the table it is found that any dimension "h" is less than zero or greater than 3 1/2", the Contractor shall notify the Office of Bridge Design immediately. After the "Table of Slab Form Elevations and Calculations" has been completely filled out and approved for deck forming, a copy must be forwarded to the Office of Bridge Design for review and analysis for the purpose of securing information relative to camber growth in the beams. This information is necessary for preparing plans for future structures of this type.

The Contractor shall immediately upon completion of table forward a copy to Johnson Engineering Co.

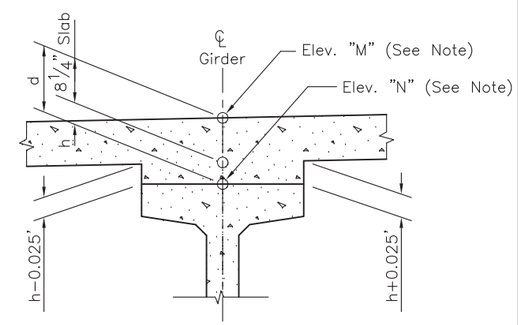

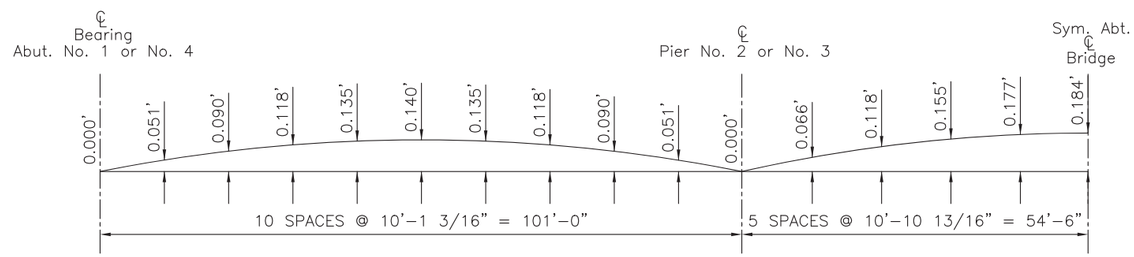

CAMBER DIAGRAM

The Camber shown above is the amount which has been added to the theoretical slab elevations to get slab elevations shown in the Table of Slab Form Elevations and Calculations above. Camber shown is for D.L. of slab, diaphragms and camber growth, but does not include D.L. of beams.

ERECTION DATA & CAMBER DIAGRAM FOR 321'−10 1/8" PRESTR. GIRDER BRIDGE

28'−0" ROADWAY
OVER WHITE RIVER
STA. 22+06.08 TO 25+27.92
STRUCTURE NO. 48−102−010

45° SKEW LHF
SEC. 28−T45N−R31W 6th P.M.
SEC. 20−T2S−R26E B.H.M.
BRO 8048(03)
PCN 02DY

MELLETTE COUNTY
SOUTH DAKOTA

PREPARED BY:
JOHNSON ENGINEERING CO.
YANKTON, SOUTH DAKOTA

HL93

SEPTEMBER 2014

SHEET 19 OF 32

DESIGNED BY	DRAWN BY	CHECKED BY
GSS/CJK	SMW	SMW/CJK

FOR BIDDING PURPOSES ONLY

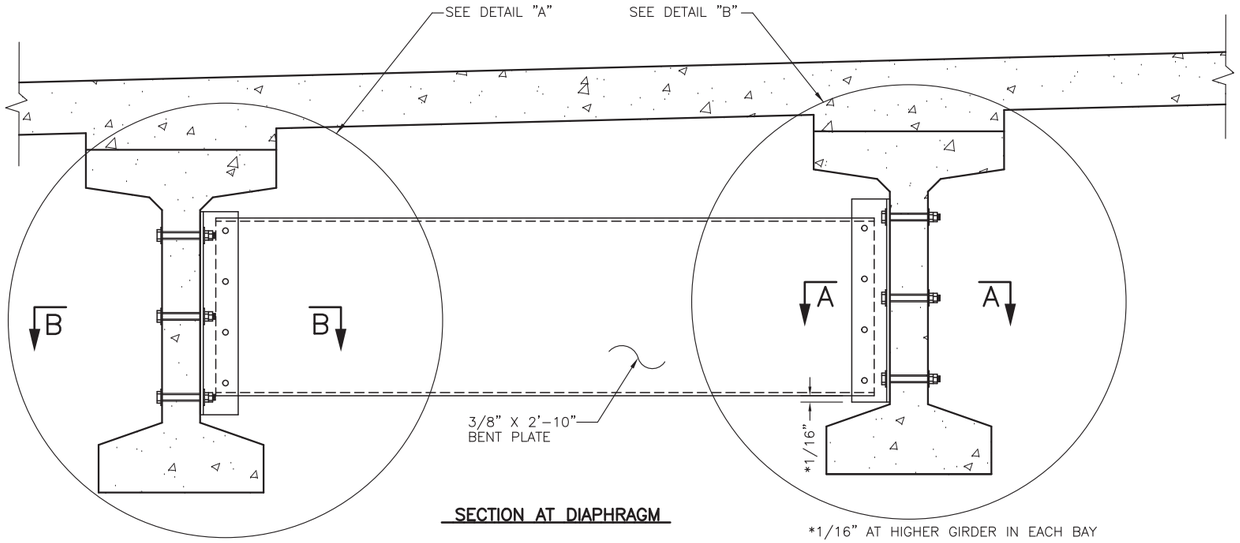

SECTION AT DIAPHRAGM

*1/16" AT HIGHER GIRDER IN EACH BAY

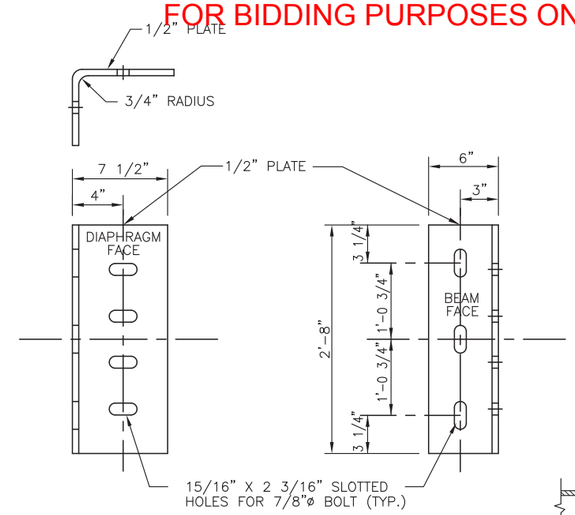

DIAPHRAGM SUPPORT PLATE

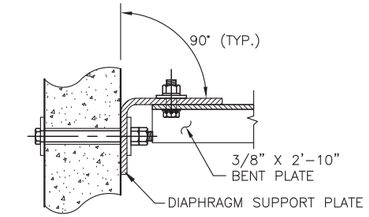

SEC. B-B

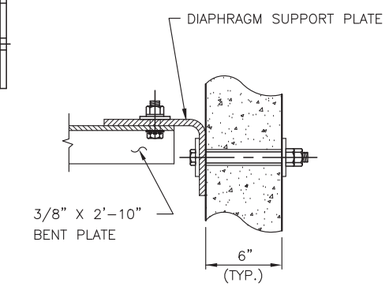

SEC. A-A

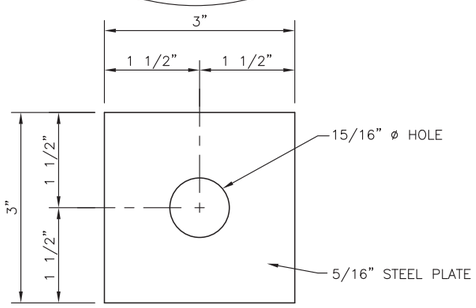

PLATE WASHER DETAIL

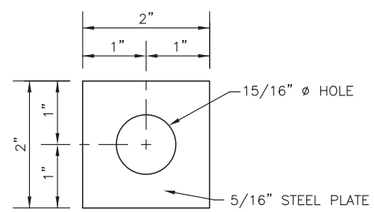

PLATE WASHER DETAIL

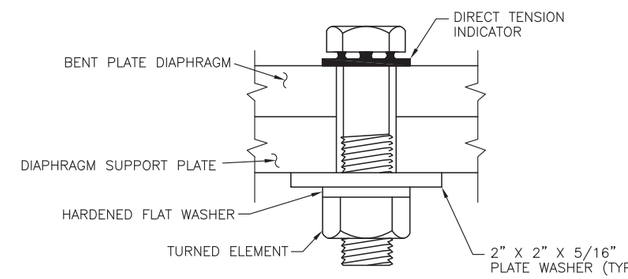

DIRECT TENSION INDICATOR DETAIL

NOTES:

1. ALL STEEL FOR THE DIAPHRAGMS INCLUDING PLATE WASHERS SHALL CONFORM TO ASTM A36 AND SHALL BE GALVANIZED IN ACCORDANCE WITH ASTM A123. BOLTS, NUTS AND WASHERS SHALL BE GALVANIZED IN ACCORDANCE WITH ASTM A153.
2. THE STEEL DIAPHRAGMS BETWEEN ADJACENT GIRDERS SHALL BE INSTALLED AS SOON AS POSSIBLE AND IN CONJUNCTION WITH GIRDER ERECTION.
3. ALL COSTS ASSOCIATED WITH FURNISHING, FABRICATING, ASSEMBLY AND INSTALLATION OF DIAPHRAGMS SHALL BE INCIDENTAL TO THE CONTRACT LUMP SUM PRICE FOR STRUCTURAL STEEL, MISCELLANEOUS.

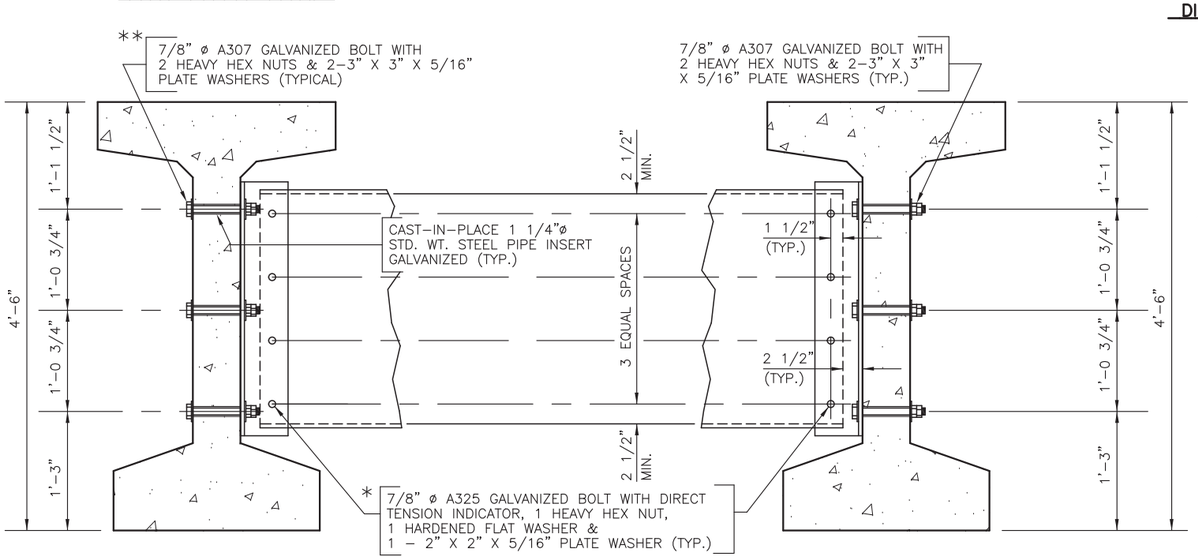

DETAIL "A"
(TYP. EXTERIOR GIRDER)

* BOLT HEAD & DIRECT TENSION INDICATOR SHALL BE ADJACENT TO 15/16" ø HOLES IN BENT PLATE DIAPHRAGM.

** BOLT HEAD SHALL BE ADJACENT TO THE EXTERIOR FACE OF THE EXTERIOR GIRDER

DETAIL "B"
(TYP. INTERIOR GIRDER)

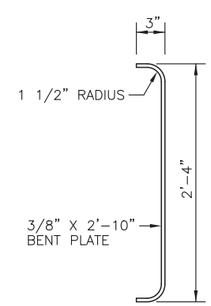

END VIEW

REGISTERED PROFESSIONAL ENGINEER
REG. NO. 5152
GREGORY S. SLOWEY
SOUTH DAKOTA
5/13/16
Gregory S. Slowey

ESTIMATED QUANTITIES

ITEM	UNIT	QUANTITY
** Structural Steel, Miscellaneous	LS	Lump Sum

** FOR INFORMATIONAL PURPOSES ONLY, THE ESTIMATED WEIGHT OF STRUCTURAL STEEL IS 6,633 LBS.

DIAPHRAGM DETAILS FOR 321'-10 1/8" PRESTR. GIRDER BRIDGE

28'-0" ROADWAY
OVER WHITE RIVER
STA. 22+06.08 TO 25+27.92
STRUCTURE NO. 48-102-010

45° SKEW LHF
SEC. 28-T45N-R31W 6th P.M.
SEC. 20-T2S-R26E B.H.M.
BRO 8048(03)
PCN 02DY

MELLETTE COUNTY
SOUTH DAKOTA

PREPARED BY:
JOHNSON ENGINEERING CO.
YANKTON, SOUTH DAKOTA

HL93

SEPTEMBER 2014

SHEET 20 OF 32

DESIGNED BY	DRAWN BY	CHECKED BY
GSS/CJK	CJK	SMW/CJK

FOR BIDDING PURPOSES ONLY

STATE OF SOUTH DAKOTA	PROJECT	SHEET NO.	TOTAL SHEETS
	BRO 8048(03)	52	76

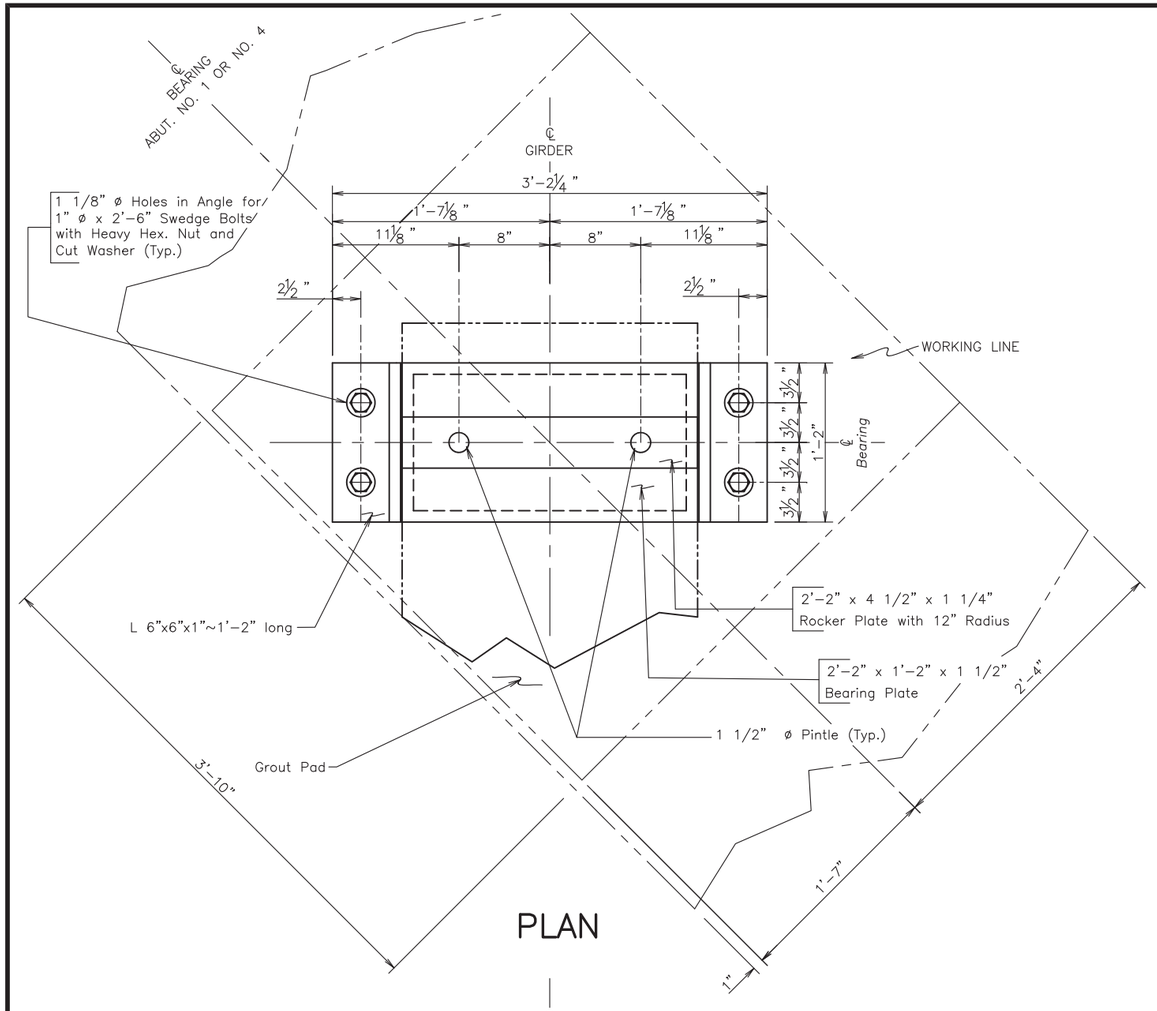

PLAN

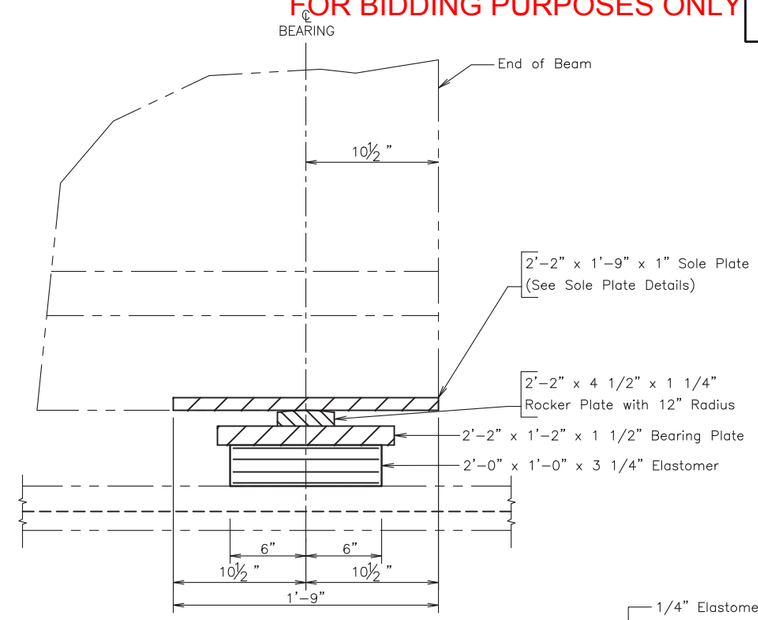

VIEW A–A

(Bolts not shown in this view)

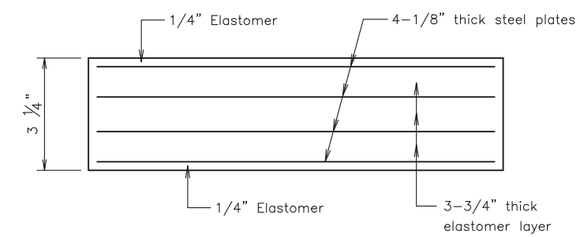

ELASTOMER BEARING PAD DETAIL

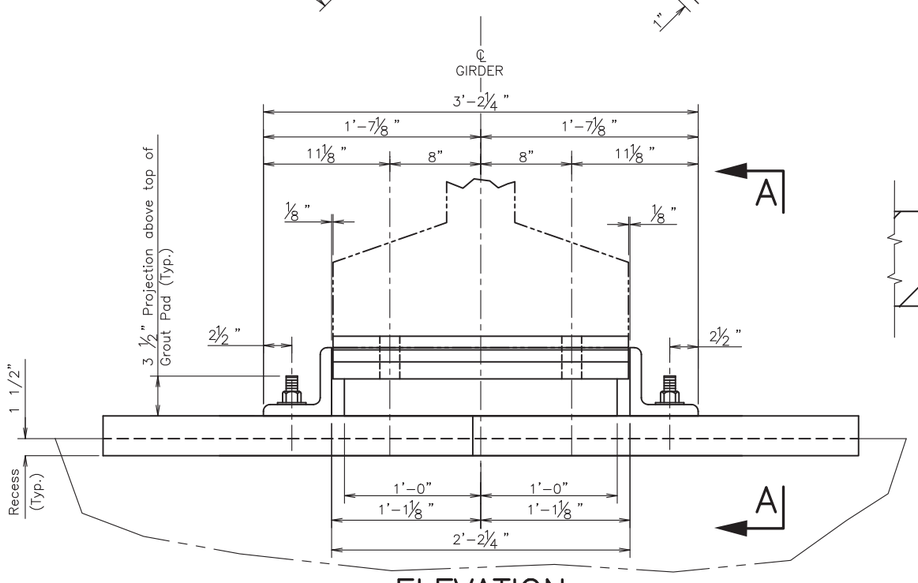

ELEVATION

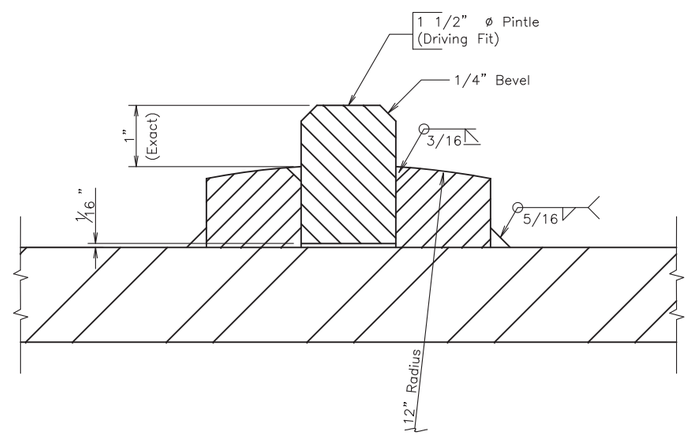

PINTLE DETAIL

ESTIMATED QUANTITIES

ITEM	UNIT	QUANTITY
Laminated Elastomeric Bearing Pad	EACH	8
★ Structural Steel (Misc.)	Lump Sum	Lump Sum

★ For informational purposes, the wt. of structural steel is 3,811 Lbs.

REGISTERED PROFESSIONAL ENGINEER REG. NO. 5152 GREGORY S. SLOWEY SOUTH DAKOTA 1/13/16 Gregory S. Slowey

EXP. BEARING DETAILS AT ABUTMENTS FOR 321'-10 1/8" PRESTR. GIRDER BRIDGE

28'-0" ROADWAY
OVER WHITE RIVER
STA. 22+06.08 TO 25+27.92
STRUCTURE NO. 48-102-010

45° SKEW LHF
SEC. 28-T45N-R31W 6th P.M.
SEC. 20-T2S-R26E B.H.M.
BRO 8048(03)
PCN 02DY

MELLETTE COUNTY
SOUTH DAKOTA

PREPARED BY:
JOHNSON ENGINEERING CO.
YANKTON, SOUTH DAKOTA

HL93

SEPTEMBER 2014

SHEET 21 OF 32

DESIGNED BY	DRAWN BY	CHECKED BY
GSS/CJK	CJK	SMW/CJK

STATE OF SOUTH DAKOTA	PROJECT	SHEET NO.	TOTAL SHEETS
	BRO 8048(03)	53	76

FOR BIDDING PURPOSES ONLY

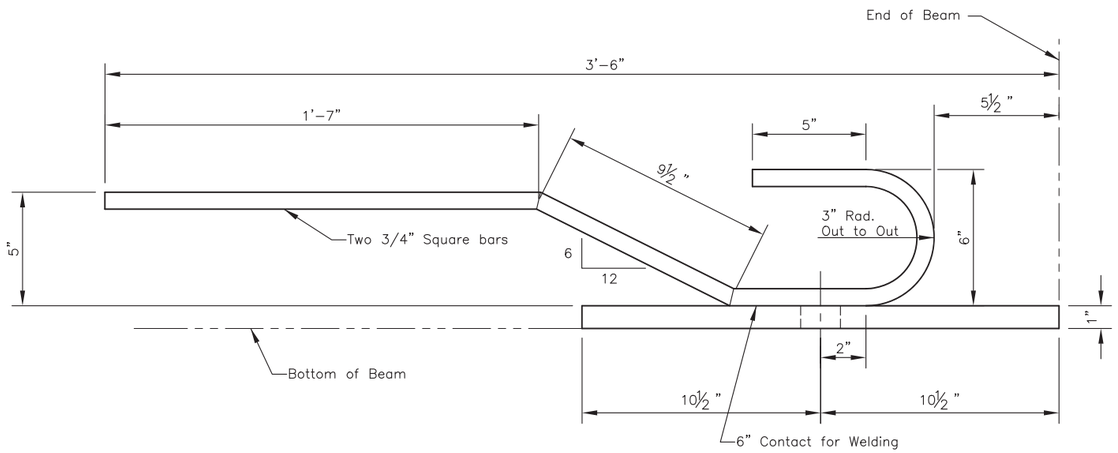

SIDE VIEW

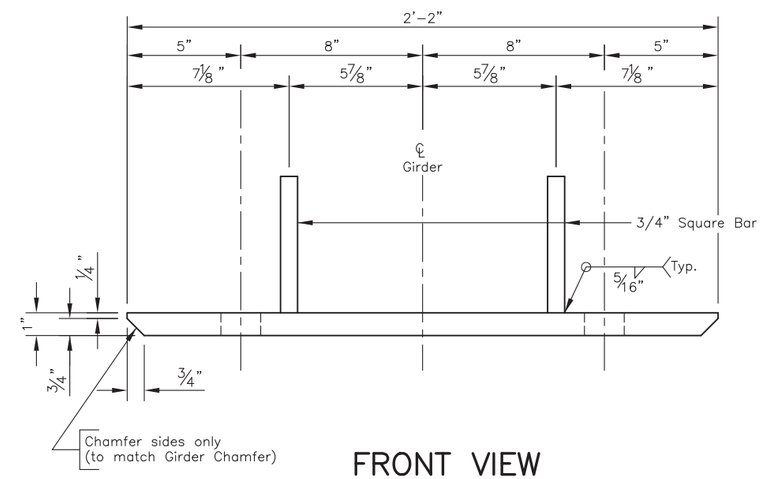

FRONT VIEW

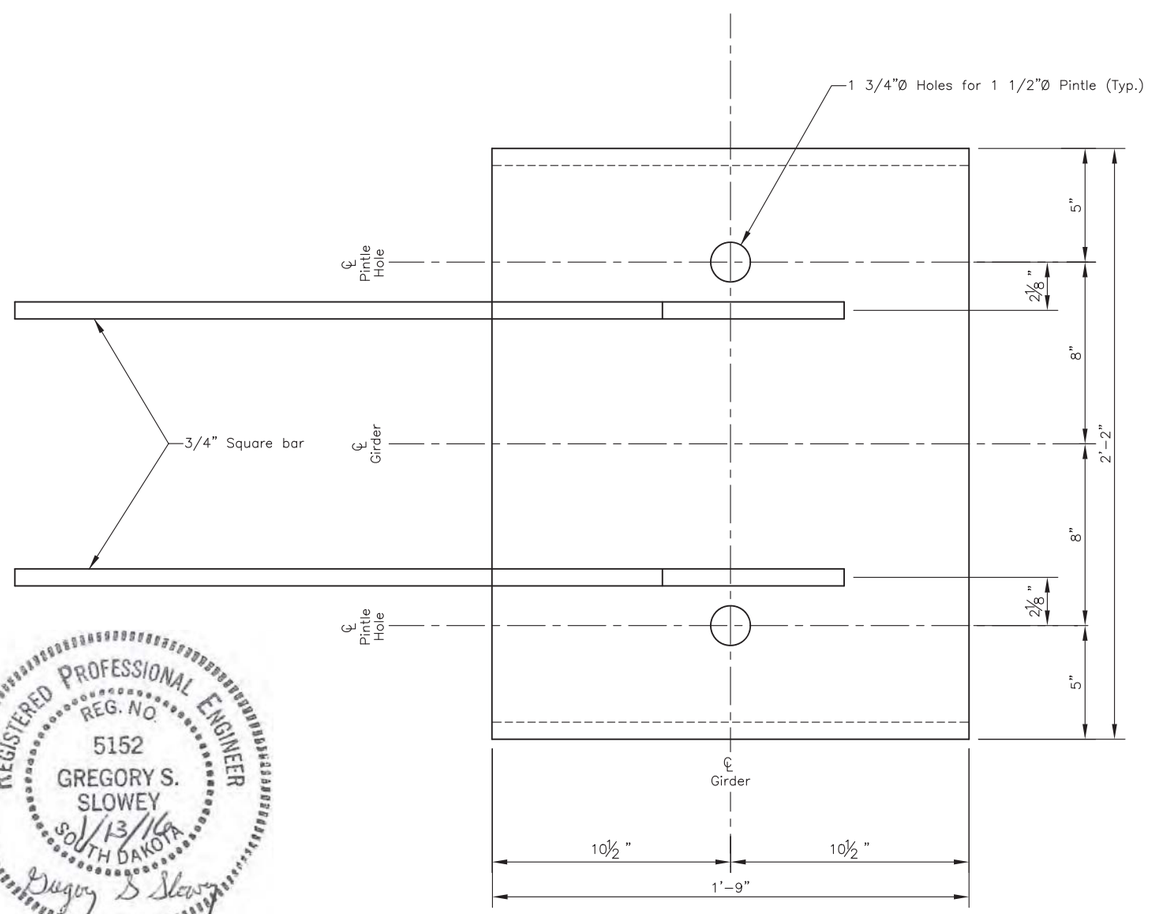

TOP VIEW

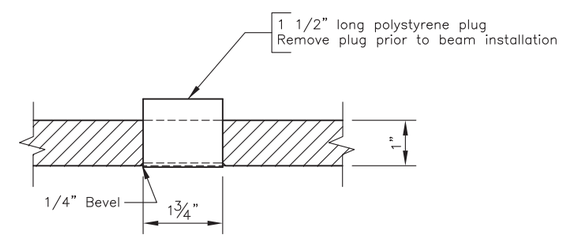

PINTLE HOLE DETAIL

Note:
Use this sheet in conjuction with Girder Details.

SOLE PLATE DETAILS(FOR ABUT. END OF BEAMS) FOR 321'-10 1/8" PRESTR. GIRDER BRIDGE

28'-0" ROADWAY
OVER WHITE RIVER
STA. 22+06.08 TO 25+27.92
STRUCTURE NO. 48-102-010

45° SKEW LHF
SEC. 28-T45N-R31W 6th P.M.
SEC. 20-T2S-R26E B.H.M.
BRO 8048(03)
PCN 02DY

MELLETTE COUNTY
SOUTH DAKOTA

PREPARED BY:
JOHNSON ENGINEERING CO.
YANKTON, SOUTH DAKOTA

HL93

SEPTEMBER 2014

SHEET 22 OF 32

DESIGNED BY	DRAWN BY	CHECKED BY
GSS/CJK	SMW	CJK/SMW

FOR BIDDING PURPOSES ONLY

STATE OF SOUTH DAKOTA	PROJECT	SHEET NO.	TOTAL SHEETS
	BRO 8048(03)	54	76

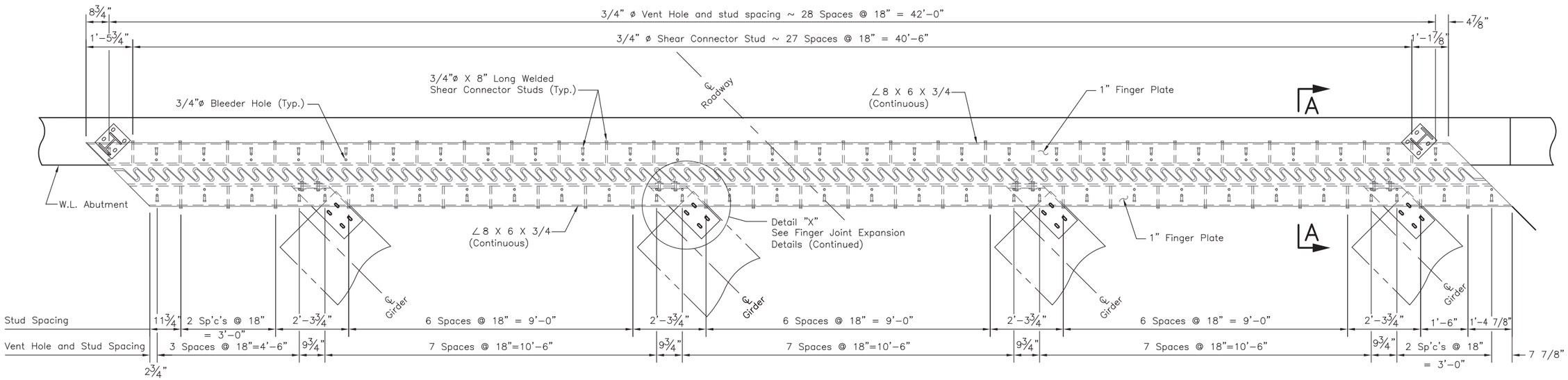

PLAN

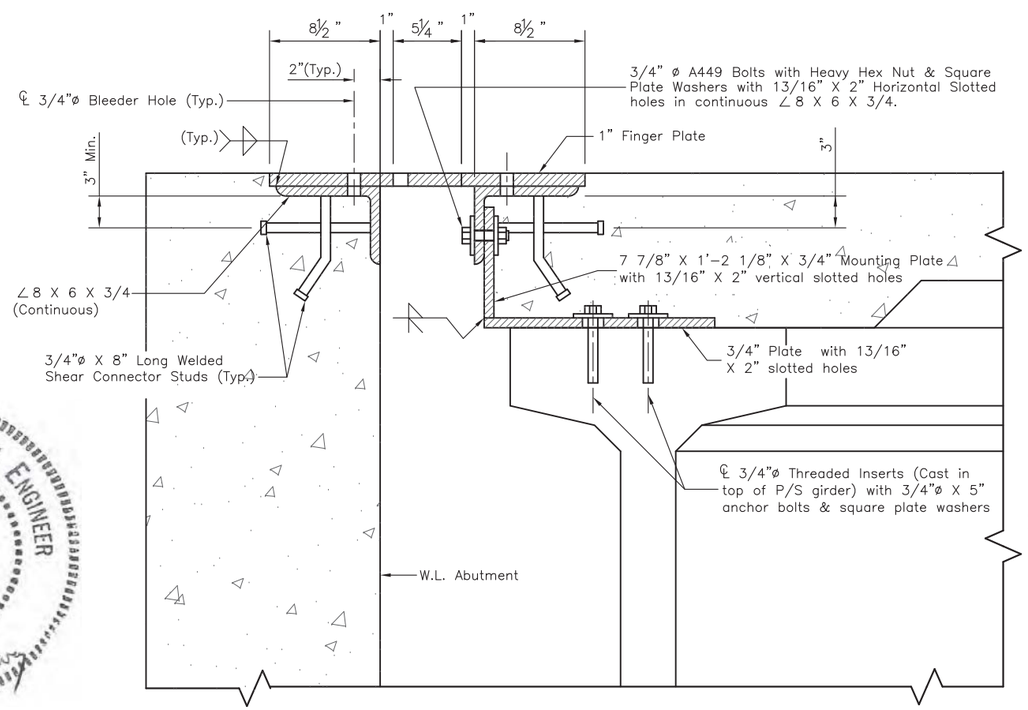

SEC. A-A
(Abut. Joint Drain Not Shown)

NOTE:
Concrete shall be forced under and around finger plate supporting hardware, anchors, angles and bars. Proper consolidation shall be achieved by localized internal vibration.

REGISTERED PROFESSIONAL ENGINEER REG. NO. 5152 GREGORY S. SLOWEY SOUTH DAKOTA 1/13/16

REGISTERED PROFESSIONAL ENGINEER REG. NO. 3935 STEVE WEILAND SOUTH DAKOTA 1/13/16

NOTE:
Use this sheet in conjunction with Finger Expansion Joint Details (Continued).

ESTIMATED QUANTITIES

ITEM	UNIT	QUANTITY
Finger Type Expansion Joint Assembly	Each	2

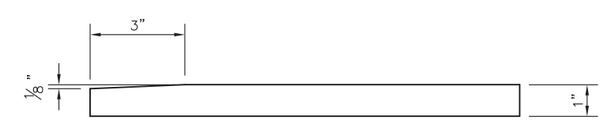

FINGER DETAIL

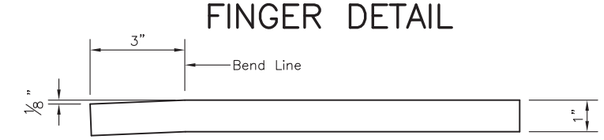

OPTIONAL FINGER DETAIL

FINGER EXPANSION JOINT DETAILS FOR 321'-10 1/8" PRESTR. GIRDER BRIDGE

28'-0" ROADWAY
OVER WHITE RIVER
STA. 22+06.08 TO 25+27.92
STRUCTURE NO. 48-102-010

45° SKEW LHF
SEC. 28-T45N-R31W 6th P.M.
SEC. 20-T2S-R26E B.H.M.
BRO 8048(03)
PCN 02DY

MELLETTE COUNTY
SOUTH DAKOTA

PREPARED BY:
JOHNSON ENGINEERING CO.
YANKTON, SOUTH DAKOTA

HL93

SEPTEMBER 2014

SHEET 23 OF 32

DESIGNED BY	DRAWN BY	CHECKED BY
SMW/GSS	SMW	GSS/SMW

FOR BIDDING PURPOSES ONLY

STATE OF SOUTH DAKOTA	PROJECT	SHEET NO.	TOTAL SHEETS
	BRO 8048(03)	55	76

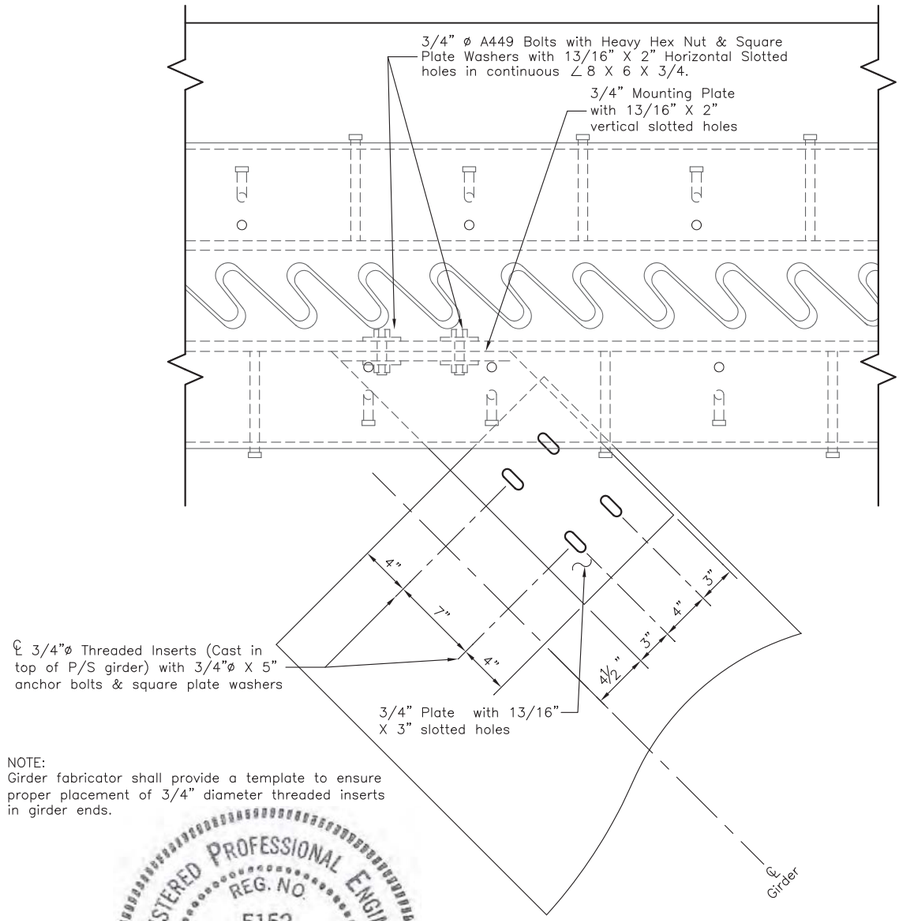

NOTE:
Girder fabricator shall provide a template to ensure proper placement of 3/4" diameter threaded inserts in girder ends.

DETAIL "X"

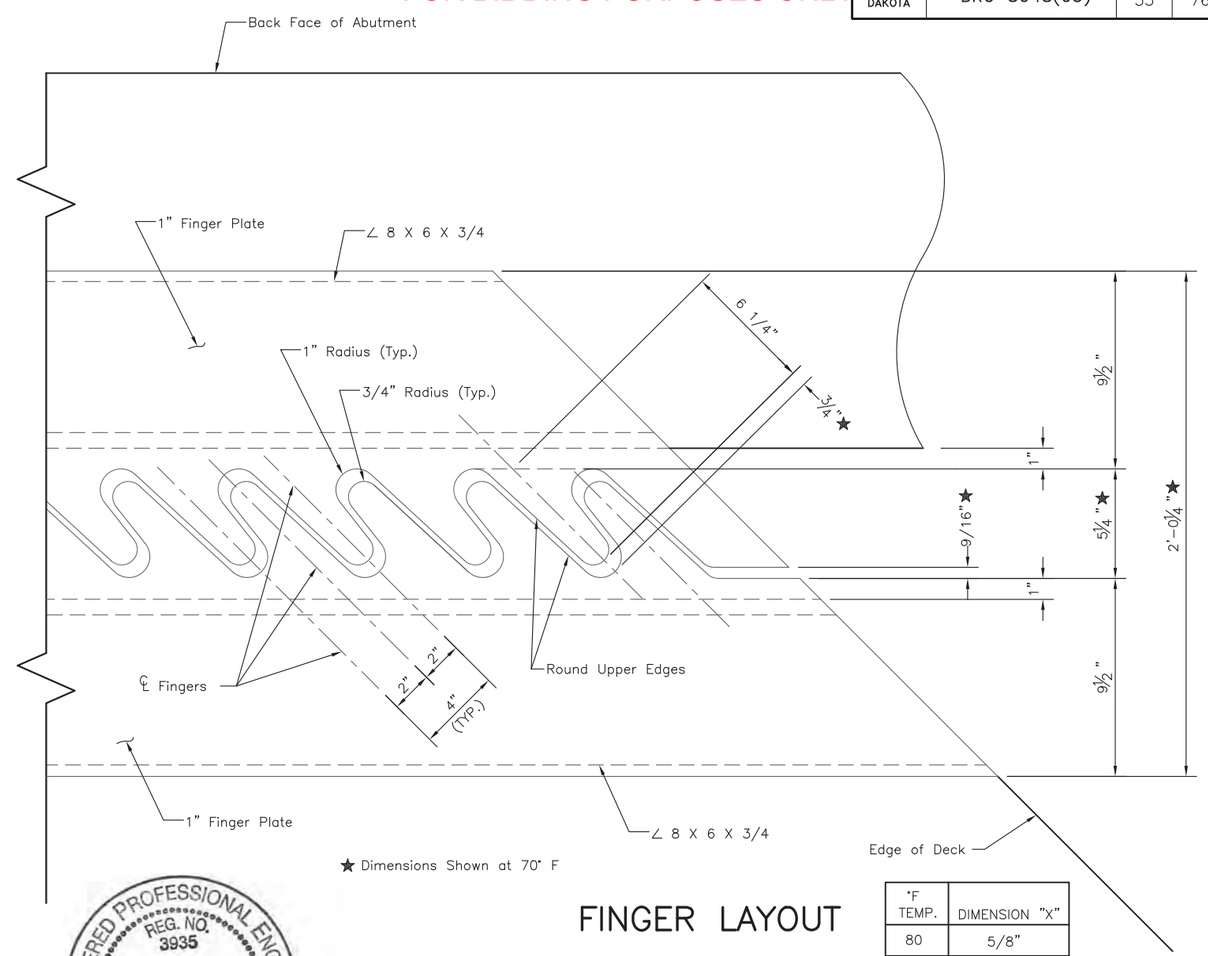

★ Dimensions Shown at 70° F

FINGER LAYOUT

°F TEMP.	DIMENSION "X"
80	5/8"
70	3/4"
60	7/8"
50	1"
40	1 1/16"

NOTE:
Temperature in above table corresponds to girder temperature.

REGISTERED PROFESSIONAL ENGINEER REG. NO. 5152 GREGORY S. SLOWEY SOUTH DAKOTA 1/13/16 Gregory S. Slowey

REGISTERED PROFESSIONAL ENGINEER REG. NO. 3935 STEVE WEILAND SOUTH DAKOTA 1/13/16

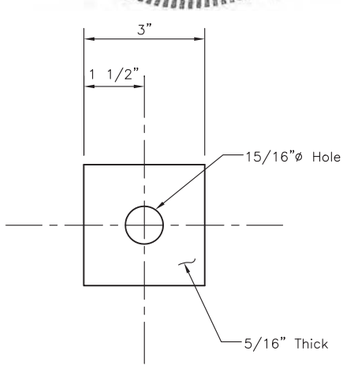

SQUARE PLATE WASHER

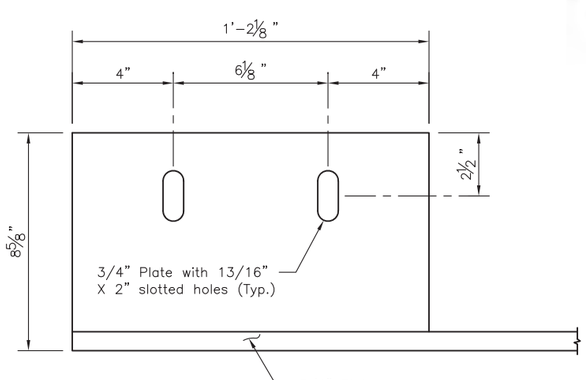

MOUNTING PLATE
(FACING ABUTMENT)

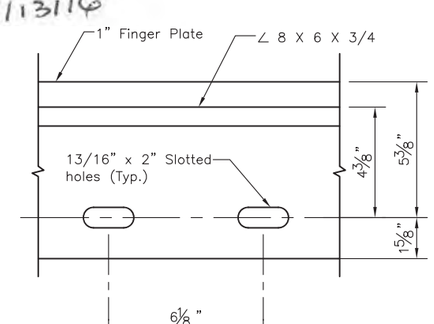

SLOTTED HOLES IN ANGLES

FINGER EXPANSION JOINT DETAILS (CONTINUED) FOR 321'-10 1/8" PRESTR. GIRDER BRIDGE

28'-0" ROADWAY
OVER WHITE RIVER
STA. 22+06.08 TO 25+27.92
STRUCTURE NO. 48-102-010

45° SKEW LHF
SEC. 28-T45N-R31W 6th P.M.
SEC. 20-T2S-R26E B.H.M.
BRO 8048(03)
PCN 02DY

MELLETTE COUNTY
SOUTH DAKOTA

PREPARED BY:
JOHNSON ENGINEERING CO.
YANKTON, SOUTH DAKOTA

HL93

SEPTEMBER 2014

SHEET 24 OF 32

DESIGNED BY	DRAWN BY	CHECKED BY
SMW/GSS	SMW	GSS/SMW

FOR BIDDING PURPOSES ONLY

STATE OF SOUTH DAKOTA	PROJECT	SHEET NO.	TOTAL SHEETS
	BRO 8048(03)	56	76

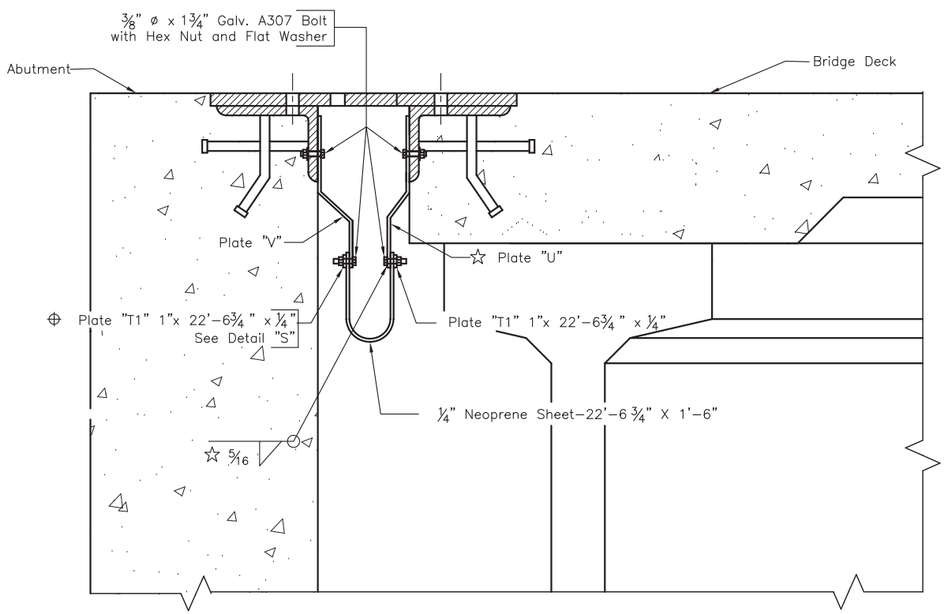

SECTION N–N

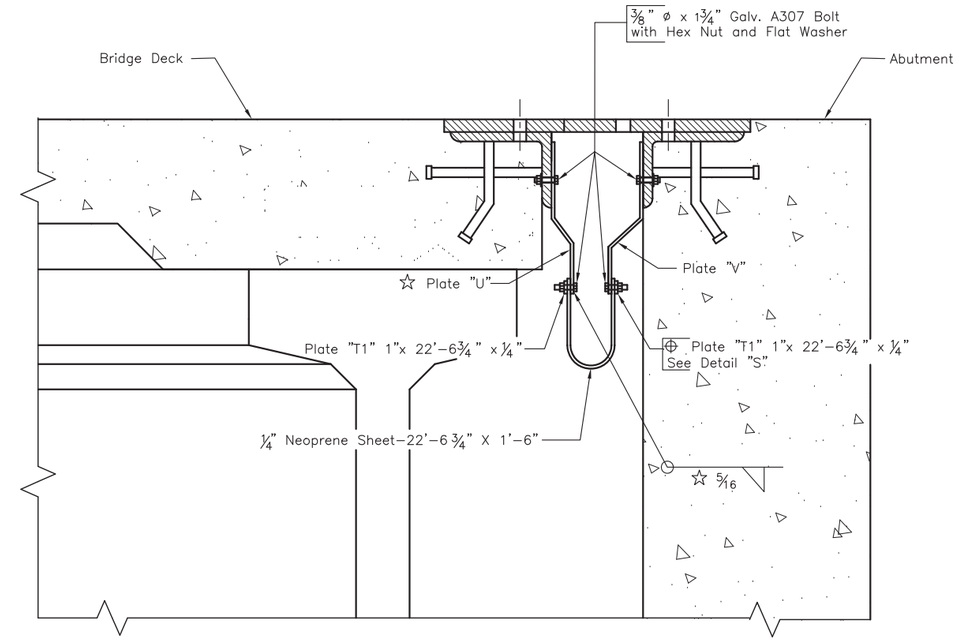

SECTION M–M

☆ Bolts shall be welded to Plate "U" as shown.

⊕ Nuts shall be welded to Plate "T" as shown on Abutment side only

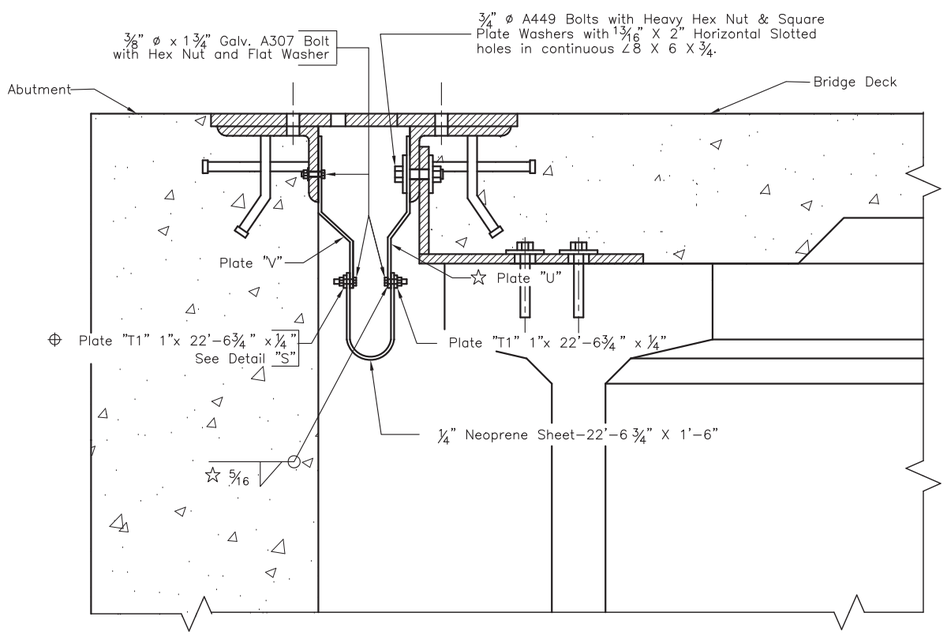

SECTION O–O

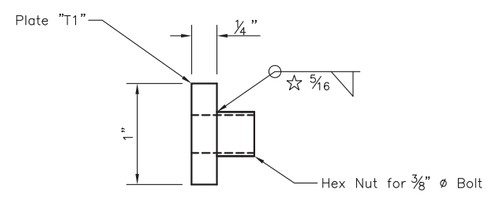

DETAIL "S"

REGISTERED PROFESSIONAL ENGINEER
REG. NO. 5152
GREGORY S. SLOWEY
SOUTH DAKOTA
1/13/16
Gregory S. Slowey

NOTE:

Joint Drain System is to be installed following the procedure below

1. Install plates "V" and "U" using Bolts as shown before the concrete is placed.
2. Install Neoprene Sheet and Plate "T" (with welded hardware) by inserting bolts through Plate "V" and threading bolts into nuts welded to plate "T" as shown above.
3. Place Neoprene Sheet and Plate "T" on bolts welded to Plates "U" and tighten nuts as shown above.

ABUTMENT JOINT DRAIN DETAILS FOR 321'-10 1/8" PRESTR. GIRDER BRIDGE

28'-0" ROADWAY
OVER WHITE RIVER
STA. 22+06.08 TO 25+27.92
STRUCTURE NO. 48-102-010

45° SKEW LHF
SEC. 28-T45N-R31W 6th P.M.
SEC. 20-T2S-R26E B.H.M.
BRO 8048(03)
PCN 02DY

MELLETTE COUNTY
SOUTH DAKOTA

PREPARED BY:
JOHNSON ENGINEERING CO.
YANKTON, SOUTH DAKOTA

HL93

SEPTEMBER 2014

SHEET 25 OF 32

DESIGNED BY	DRAWN BY	CHECKED BY
GSS/CJK	CJK	GSS/CJK

FOR BIDDING PURPOSES ONLY

STATE OF SOUTH DAKOTA	PROJECT	SHEET NO.	TOTAL SHEETS
	BRO 8048(03)	57	76

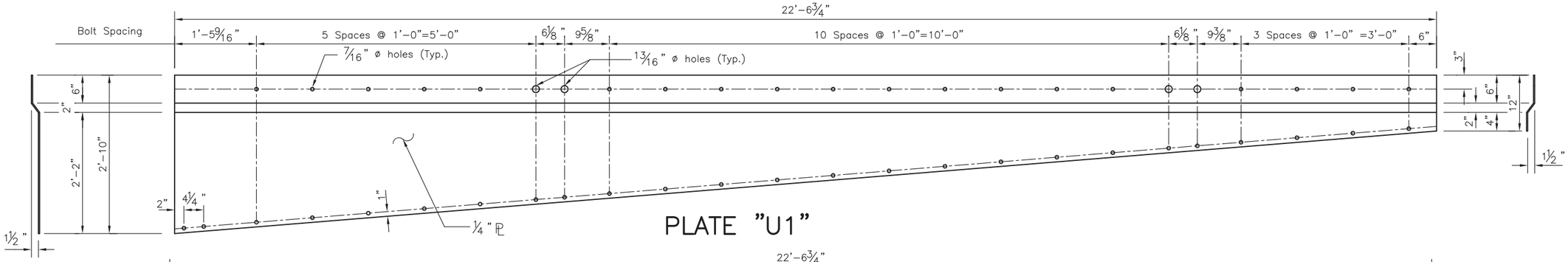

PLATE "U1"

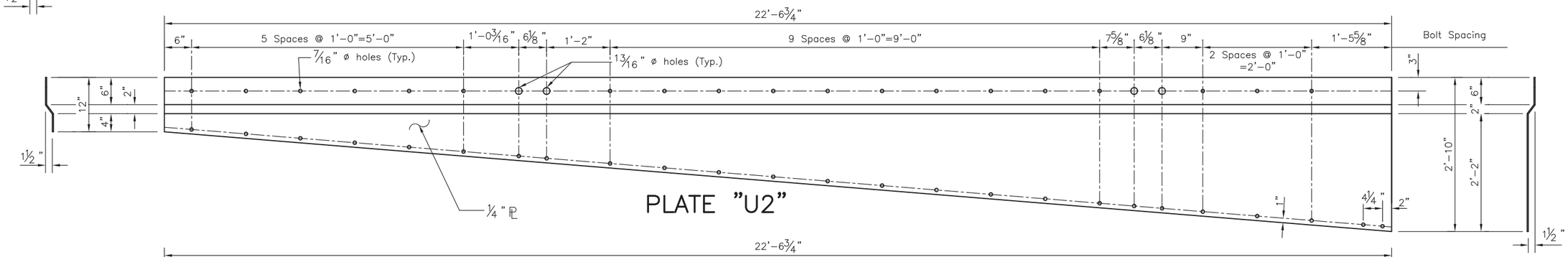

PLATE "U2"

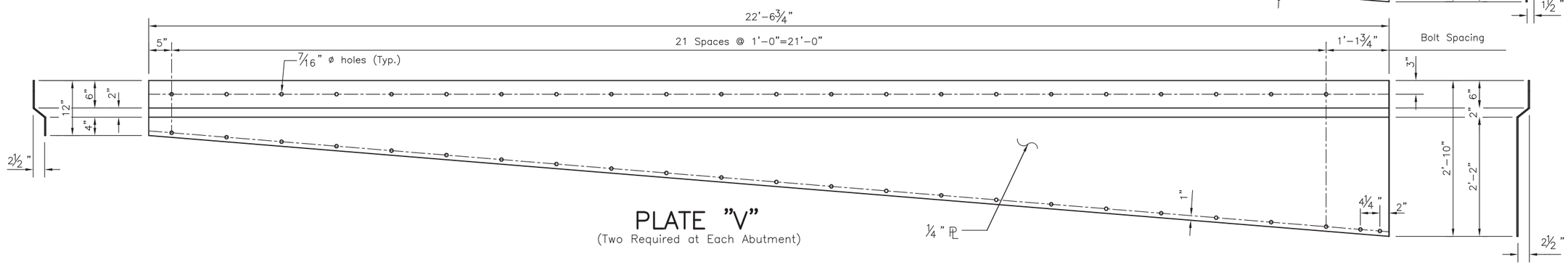

PLATE "V"
(Two Required at Each Abutment)

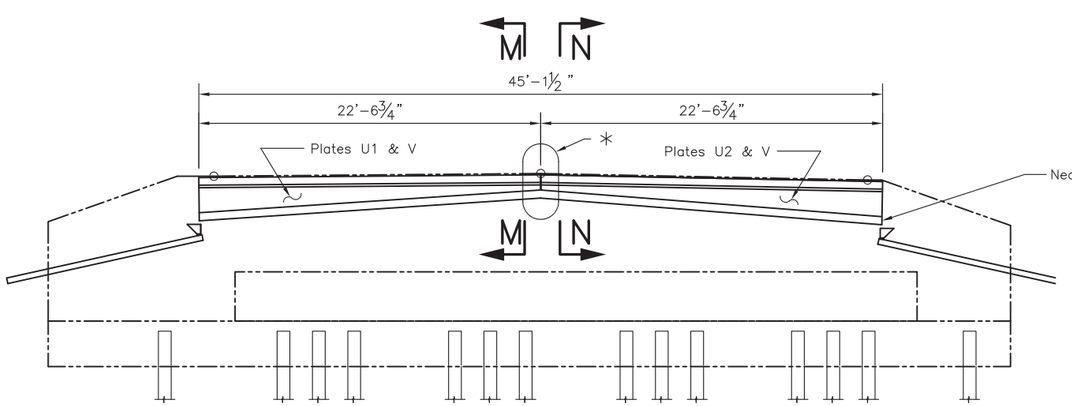

JOINT DRAIN LAYOUT
(Facing Front Face of Abutment)

*The drain plates shall meet in the field at the location shown. Entire interface shall be sealed with silicone sealer as approved by the Engineer or plates shall be welded together with galvanizing repaired.

REGISTERED PROFESSIONAL ENGINEER
REG. NO. 5152
GREGORY S. SLOWEY
SOUTH DAKOTA
9/13/14
Gregory S. Slowey

ABUTMENT JOINT DRAIN DETAILS (CONTINUED) FOR 321'-10 1/8" PRESTR. GIRDER BRIDGE

28'-0" ROADWAY
OVER WHITE RIVER
STA. 22+06.08 TO 25+27.92
STRUCTURE NO. 48-102-010

45° SKEW LHF
SEC. 28-T45N-R31W 6th P.M.
SEC. 20-T2S-R26E B.H.M.
BRO 8048(03)
PCN 02DY

MELLETTE COUNTY
SOUTH DAKOTA

PREPARED BY:
JOHNSON ENGINEERING CO.
YANKTON, SOUTH DAKOTA

HL93

SEPTEMBER 2014

SHEET 26 OF 32

DESIGNED BY	DRAWN BY	CHECKED BY
GSS/CJK	CJK	GSS/CJK

STATE OF SOUTH DAKOTA	PROJECT	SHEET NO.	TOTAL SHEETS
	BRO 8048(03)	58	76

FOR BIDDING PURPOSES ONLY

REGISTERED PROFESSIONAL ENGINEER REG. NO. 5152 GREGORY S. SLOWEY SOUTH DAKOTA 1/13/16 Gregory S. Slowey

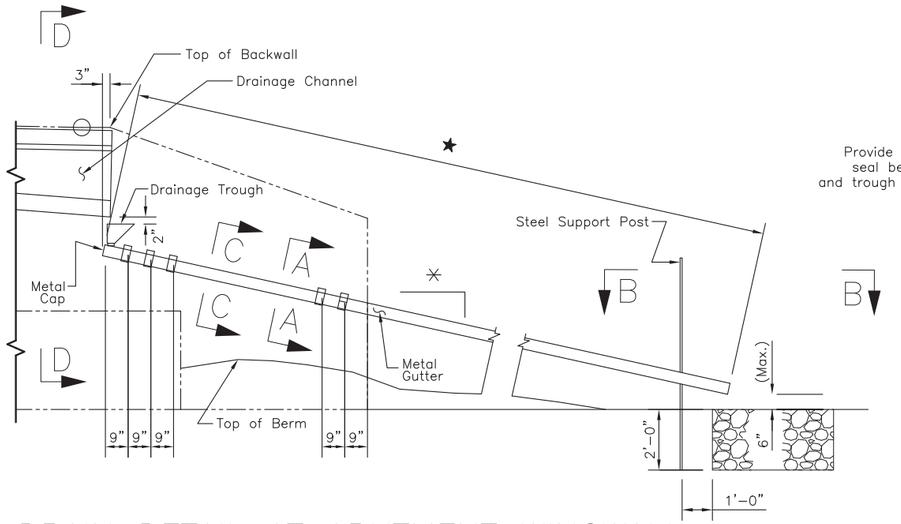

DRAIN DETAIL AT ABUTMENT WINGWALL

★ The length of metal gutter will need to be determined in the field for each location individually prior to fabrication.

✳ Slope will be set in the field prior to fabrication to clear the berm spill cone.

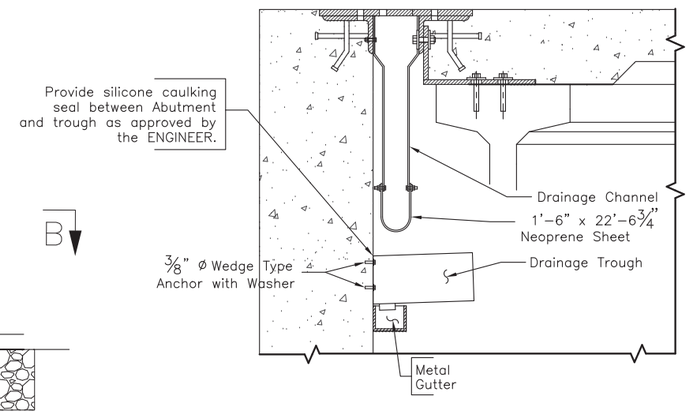

SECTION D–D

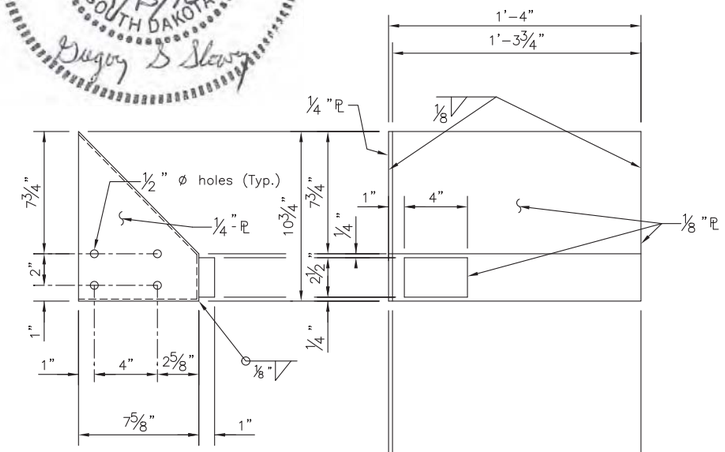

DRAINAGE TROUGH DETAILS

(2 built as shown, 2 built opposite hand)

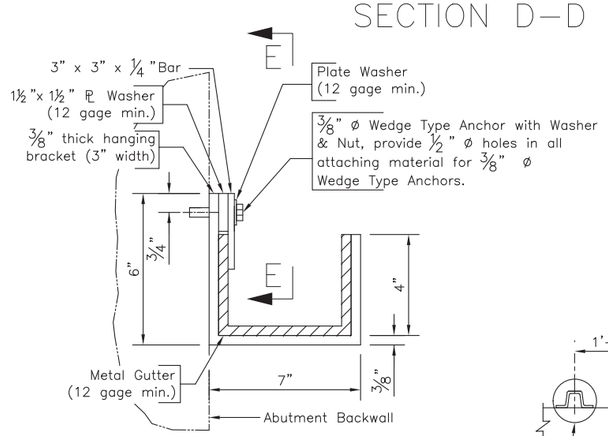

SECTION A–A

(Typical Gutter Section at Bracket)

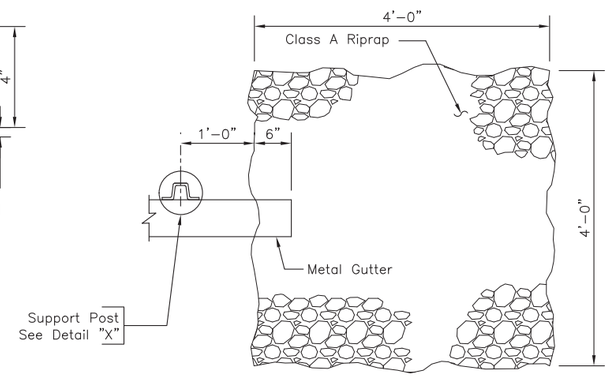

VIEW B–B

(Detail of Rockpile)

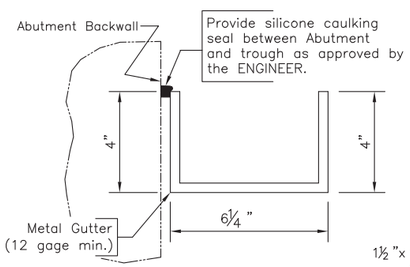

SECTION C–C

(Typical Gutter Section)

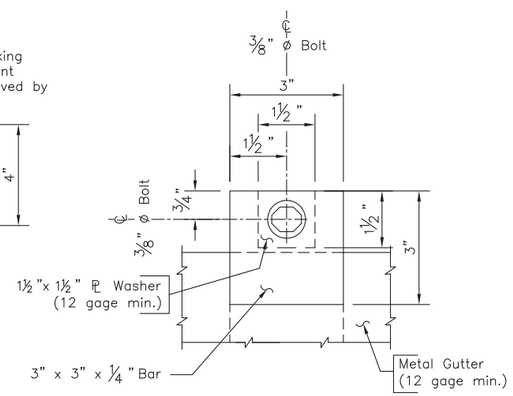

VIEW E–E

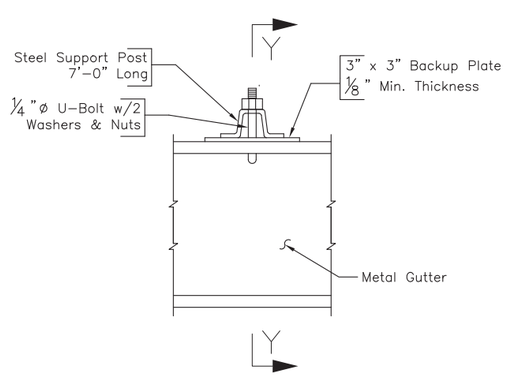

DETAIL "X"

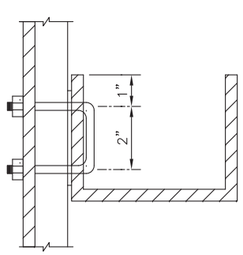

SEC. Y–Y

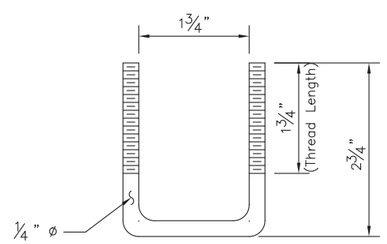

U–BOLT

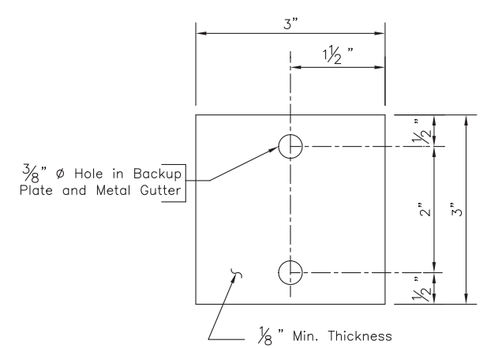

BACKUP PLATE

ESTIMATED QUANTITIES

ITEM	UNIT	QUANTITY
Abutment Joint Drain	Each	2

Items 1 through 3 are approximate quantities contained in the above bid item and are for information only.

1. Structural Steel for U1, U2, & V — 3,657 lbs
2. Neoprene Sheet — 135.4 SqFt
3. Class A Riprap — 6.6 Tons

ABUTMENT JOINT DRAIN DETAILS (CONTINUED) FOR 321'-10 1/8" PRESTR. GIRDER BRIDGE

28'-0" ROADWAY
OVER WHITE RIVER
STA. 22+06.08 TO 25+27.92
STRUCTURE NO. 48-102-010

45° SKEW LHF
SEC. 28-T45N-R31W 6th P.M.
SEC. 20-T2S-R26E B.H.M.
BRO 8048(03)
PCN 02DY

MELLETTE COUNTY
SOUTH DAKOTA

PREPARED BY:
JOHNSON ENGINEERING CO.
YANKTON, SOUTH DAKOTA

HL93

SEPTEMBER 2014

SHEET 27 OF 32

DESIGNED BY	DRAWN BY	CHECKED BY
GSS/CJK	CJK	GSS/CJK

FOR BIDDING PURPOSES ONLY

STATE OF SOUTH DAKOTA	PROJECT	SHEET NO.	TOTAL SHEETS
	BRO 8048(03)	59	76

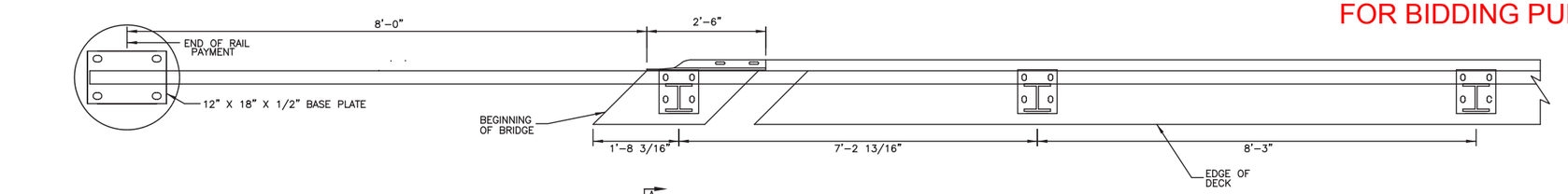

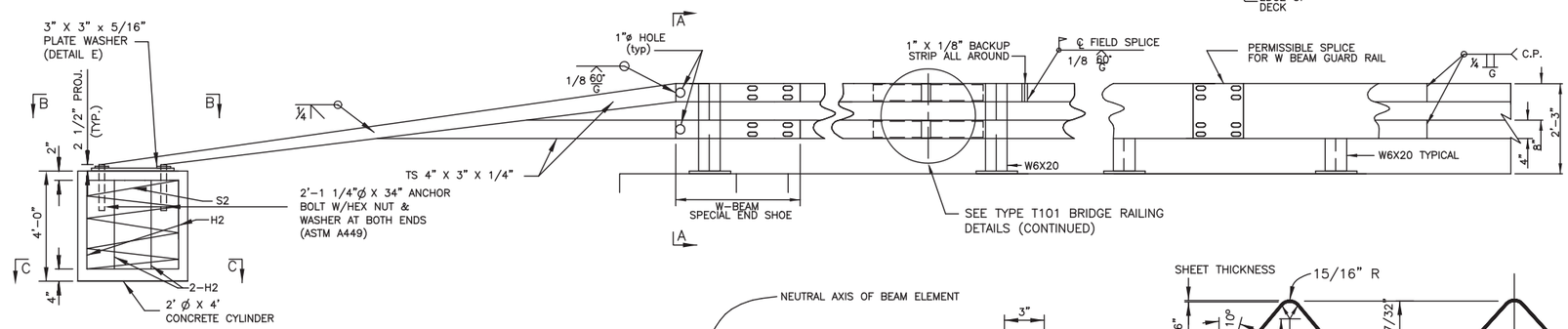

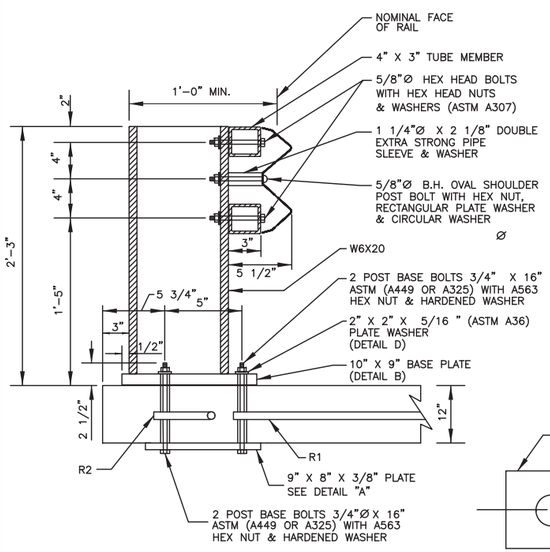

SECTION A-A

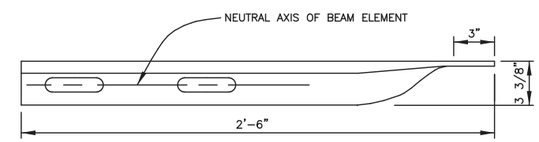

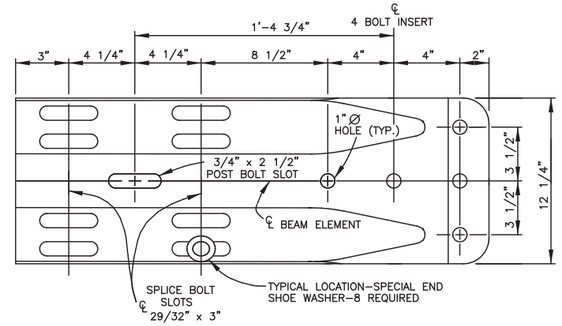

W BEAM SPECIAL END SHOE

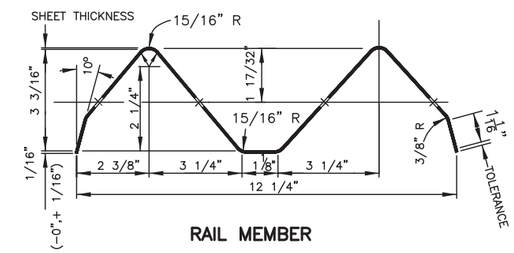

RAIL MEMBER

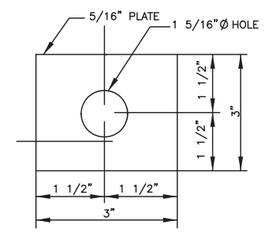

DETAIL E

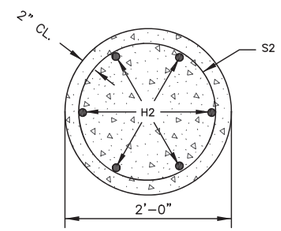

SECTION C-C

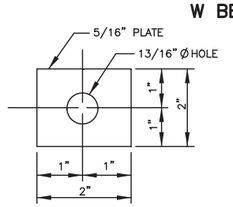

DETAIL D

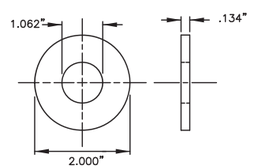

SPECIAL END SHOE WASHER

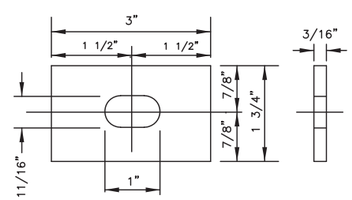

RECTANGULAR PLATE WASHER

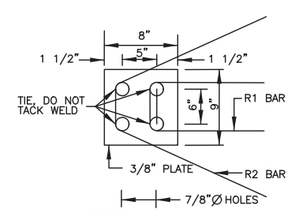

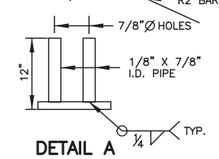

DETAIL A

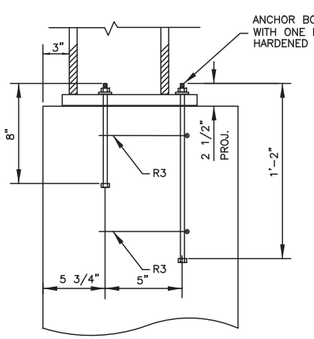

ON ABUTMENT BACKWALL

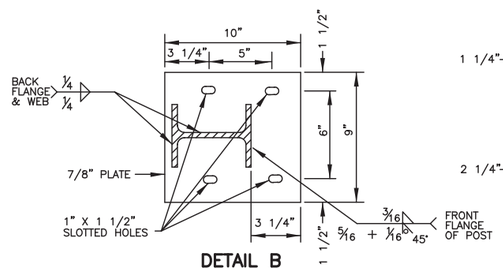

DETAIL B

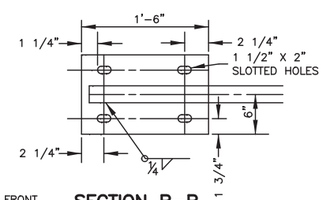

SECTION B-B

GENERAL NOTES:

1. RAIL DESIGN SHALL BE ACCORDING TO AASHTO LRFD BRIDGE DESIGN SPECIFICATIONS, 2012 EDITION WITH 2013 INTERIMS.
2. RAIL FABRICATOR SHALL BE CERTIFIED IN THE AISC QUALITY CERTIFICATION PROGRAM "SIMPLE STEEL BRIDGE STRUCTURES".
3. RAIL POSTS SHALL BE PERPENDICULAR TO CENTERLINE OF ROADWAY.
4. W-BEAM GUARD RAIL, PIPE SLEEVES, NUTS, BOLTS, WASHERS, AND PLATE WASHERS THAT GO WITH THESE SHALL BE GALVANIZED. BOLTS, NUTS, AND WASHERS SHALL BE GALVANIZED ACCORDING TO ASTM A153. PIPE SLEEVES SHALL BE GALVANIZED ACCORDING TO ASTM R3.
5. POST BASE BOLTS SHALL BE 3/4" DIAMETER A325 OR A449. EACH BOLT SHALL HAVE ONE HARDENED AND ONE 2" X 2" X 5/16" ASTM A36 PLATE WASHER. NUTS SHALL BE A563.
6. STEEL W BEAM GUARD RAIL SHALL BE CLASS A, TYPE 1, CONFORMING TO AASHTO M180 AND SHALL BE FABRICATED FROM STANDARD 12.5' OR 25' NOMINAL W-BEAM SECTIONS.
7. THE RAIL POSTS, 4" X 3" TUBE MEMBERS, AND BASE PLATES SHALL BE SATISFACTORILY PAINTED IN ACCORDANCE WITH SECTION 411. THE COLOR OF THE FINISHED COAT SHALL BE AN APPROVED GREEN, FEDERAL STANDARD NO. 24108. THE NUTS, BOLTS, AND WASHERS SHALL BE GALVANIZED IN ACCORDANCE WITH ASTM A153. THE RAIL POSTS AND TUBE MEMBERS MAY BE GALVANIZED IN ACCORDANCE WITH ASTM A123 IN SUBSTITUTION FOR PAINTING. IF GALVANIZING IS SELECTED, NO PAINT WILL BE APPLIED OVER GALVANIZED SURFACES. MIXING OF PAINTED AND GALVANIZED POSTS OR PAINTED AND GALVANIZED TUBE MEMBERS WILL NOT BE PERMITTED.
8. ALL STRUCTURAL STEEL PARTS FOR THE TYPE T101 STEEL RAILING SHALL CONFORM TO ASTM A709 GR. 36. TUBES SHALL CONFORM TO ASTM A500 GR. B.
9. PROVIDE 1 1/2" DRAIN HOLES IN THE TUBES NEAR ENDS OF RAIL AND NEAR SPLICES.
10. AT EXPANSION SLOTS IN W-BEAM RAIL, TIGHTEN BOLTS SNUGLY.
11. ALL CONCRETE SHALL BE CLASS M6 AS SPECIFIED IN SECTION 462 OF THE SD STANDARD SPECIFICATIONS.
12. ALL REINFORCING STEEL SHALL CONFORM TO ASTM A615, GR 60.
13. ALL BOLTS, NUTS, WASHERS, POSTS, PLATES, PIPE SLEEVES, STEEL W BEAM GUARD RAIL, WELDING, PAINTING OR GALVANIZING, AND ALL COSTS OF INSTALLING FOUR RAIL ANCHORS INCLUDING CONCRETE, EXCAVATION, FORMING, REINFORCING STEEL, AND ANCHOR BOLTS SHALL BE INCLUDED IN THE CONTRACT UNIT PRICE PER FOOT FOR TYPE T101 BRIDGE RAILING.
14. MEASURMENT FOR PAYMENT SHALL BE FROM CENTER OF ANCHOR TO CENTER OF ANCHOR FOR EACH SIDE OF THE BRIDGE.

REINFORCING SCHEDULE

MK.	NO.	SIZE	LENGTH	TYPE	BENDING DETAIL
S2	4	3	51'-7"	SPIRAL	
H2	24	5	3'-6"	STR.	
R1	20	5	3'-9"	17	
R2	20	5	4'-9"	17A	
R3	8	4	2'-8"	17	

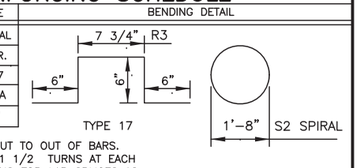

NOTE: ALL DIMENSIONS ARE OUT TO OUT OF BARS. SPIRAL-6" PITCH AND 1 1/2 TURNS AT EACH END. USE 1 1/2 TURNS FOR LAP SPLICES AS REQUIRED.
USE 2 VERTICAL SPACE BARS.

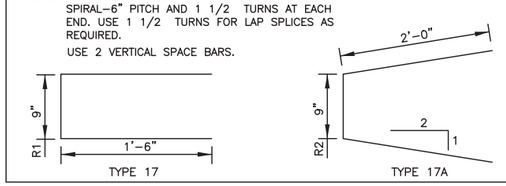

ESTIMATED QUANTITIES

ITEM	UNIT	QUANTITY
Type T101 Bridge Railing	Ft	675.7

TYPE 101 BRIDGE RAILING DETAILS FOR 321'-10 1/8" PRESTR. GIRDER BRIDGE

28'-0" ROADWAY
OVER WHITE RIVER
STA. 22+06.08 TO 25+27.92
STRUCTURE NO. 48-102-010

45° SKEW LHF
SEC. 28-T45N-R31W 6th P.M.
SEC. 20-T2S-R26E B.H.M.
BRO 8048(03)
PCN 02DY

MELLETTE COUNTY
SOUTH DAKOTA

PREPARED BY:
JOHNSON ENGINEERING CO.
YANKTON, SOUTH DAKOTA

HL93

SEPTEMBER 2014

SHEET 28 OF 32

DESIGNED BY	DRAWN BY	CHECKED BY
	LAJ/CJK	SMW/CJK

FOR BIDDING PURPOSES ONLY

STATE OF SOUTH DAKOTA	PROJECT	SHEET NO.	TOTAL SHEETS
	BRO 8048(03)	60	76

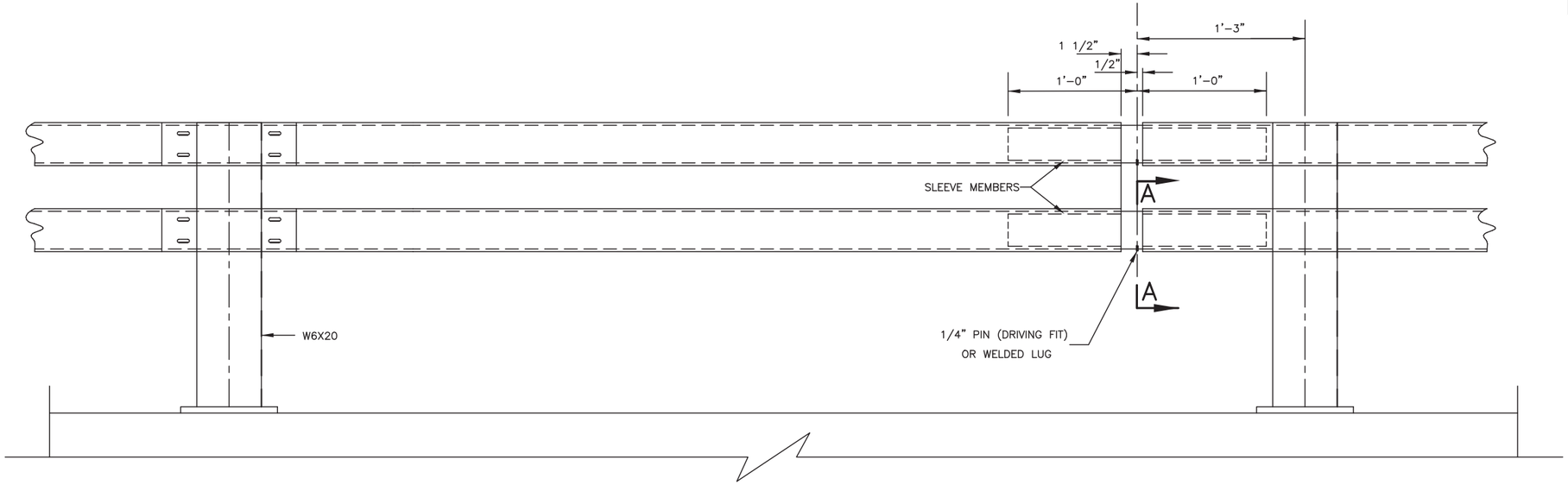

EXPANSION DETAIL

Note: The difference between the outside dimensions of the sleeve and the inside dimensions of the rail shall be approximately 1/8" (not to exceed 3/16") along either axis to permit clearance for inside weld flash.

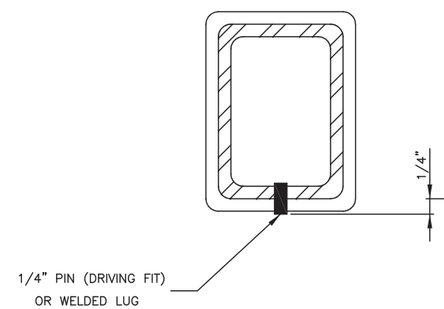

SECTION A–A

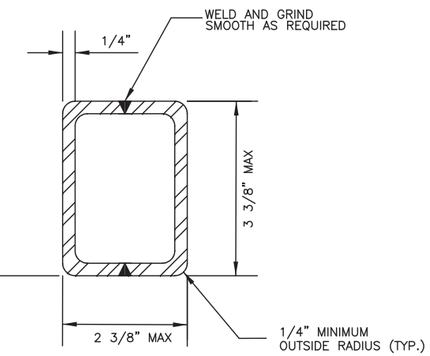

SLEEVE FABRICATION OPTION

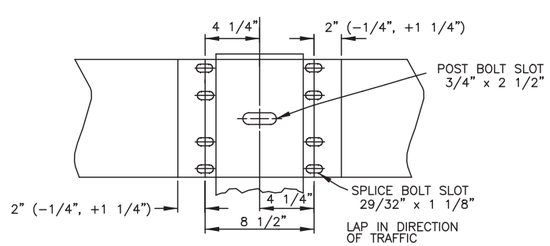

RAIL SPLICE

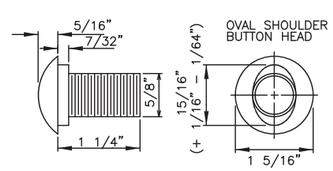

SPLICE BOLT

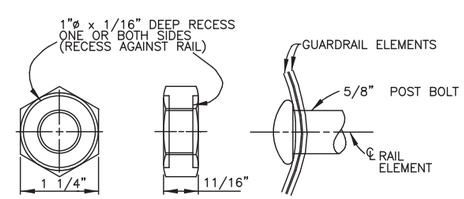

POST BOLT – SIMILAR

TYPE 101 BRIDGE RAILING DETAILS (CONTINUED)
FOR
321'-10 1/8" PRESTR. GIRDER BRIDGE

28'-0" ROADWAY
OVER WHITE RIVER
STA. 22+06.08 TO 25+27.92
STRUCTURE NO. 48-102-010

45° SKEW LHF
SEC. 28-T45N-R31W 6th P.M.
SEC. 20-T2S-R26E B.H.M.
BRO 8048(03)
PCN 02DY

MELLETTE COUNTY
SOUTH DAKOTA

PREPARED BY:
JOHNSON ENGINEERING CO.
YANKTON, SOUTH DAKOTA

HL93

NOVEMBER, 2013

SHEET 29 OF 32

DESIGNED BY	DRAWN BY	CHECKED BY
	CJK	SMW

FOR BIDDING PURPOSES ONLY

STATE OF SOUTH DAKOTA	PROJECT	SHEET NO.	TOTAL SHEETS
	BRO 8048(03)	61	76

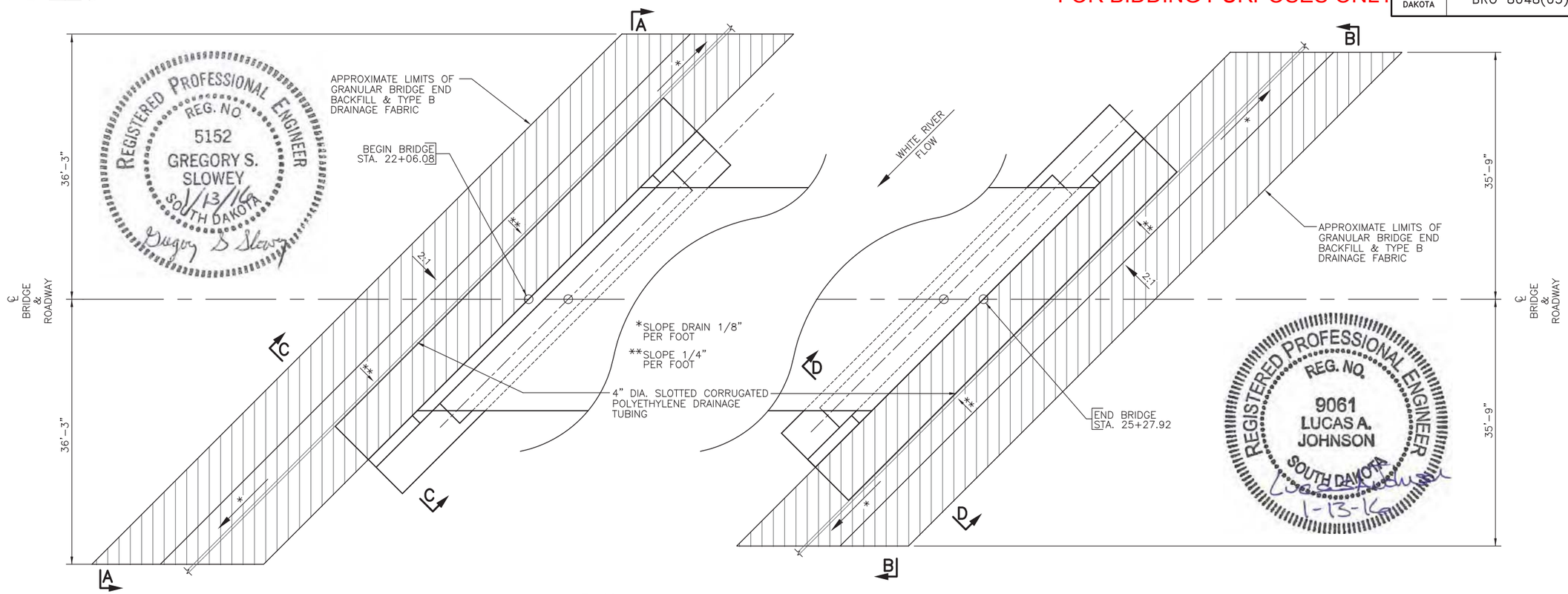

PLAN

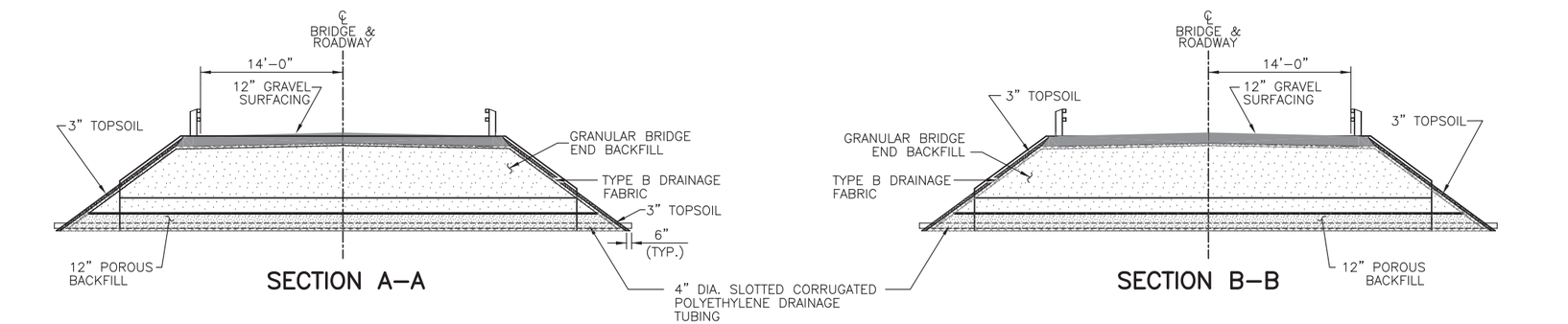

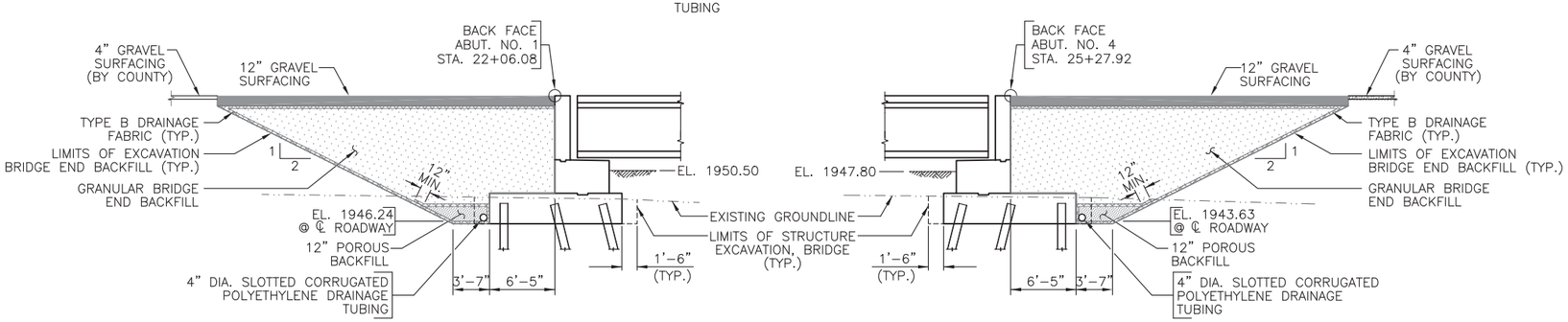

ESTIMATED QUANTITIES
(FOR 2 ABUTMENTS)

	ITEM	UNIT	QUANTITY
	GRANULAR BRIDGE END BACKFILL	CuYd	1089
⊛	POROUS BACKFILL	Ton	65
	BRIDGE END BACKFILL UNDERDRAIN PIPE	Ft	210
	BRIDGE END BACKFILL EXCAVATION	CuYd	10
	GRAVEL SURFACING	Ton	204

1. 210 Ft. 4" Dia. Slotted Corrugated Polyethylene Tubing
2. 1,505 SqYd Type B Drainage Fabric

Item 1 is an approximate quantity contained in the Bridge End Backfill Underdrain Pipe bid item.

Item 2 is an approximate quantity paid for under Granular Bridge End Backfill.

⊛ For estimating purposes only, a factor of 1.89 Tons/CuYd was used to convert CuYd to Tons.

BRIDGE END BACKFILL DETAILS FOR 321'-10 1/8" PRESTR. GIRDER BRIDGE

28'-0" ROADWAY
OVER WHITE RIVER
STA. 22+06.08 TO 25+27.92
STRUCTURE NO. 48-102-010

45° SKEW LHF
SEC. 28-T45N-R31W 6th P.M.
SEC. 20-T2S-R26E B.H.M.
BRO 8048(03)
PCN 02DY

MELLETTE COUNTY
SOUTH DAKOTA

PREPARED BY:
JOHNSON ENGINEERING CO.
YANKTON, SOUTH DAKOTA

HL93

SEPTEMBER 2014

SHEET 30 OF 32

DESIGNED BY	DRAWN BY	CHECKED BY
GSS/LAJ	MJG	GSS/LAJ

STATE OF SOUTH DAKOTA	PROJECT	SHEET NO.	TOTAL SHEETS
	BRO 8048(03)	62	76

FOR BIDDING PURPOSES ONLY

REGISTERED PROFESSIONAL ENGINEER
REG. NO.
9061
LUCAS A. JOHNSON
SOUTH DAKOTA
1-13-15

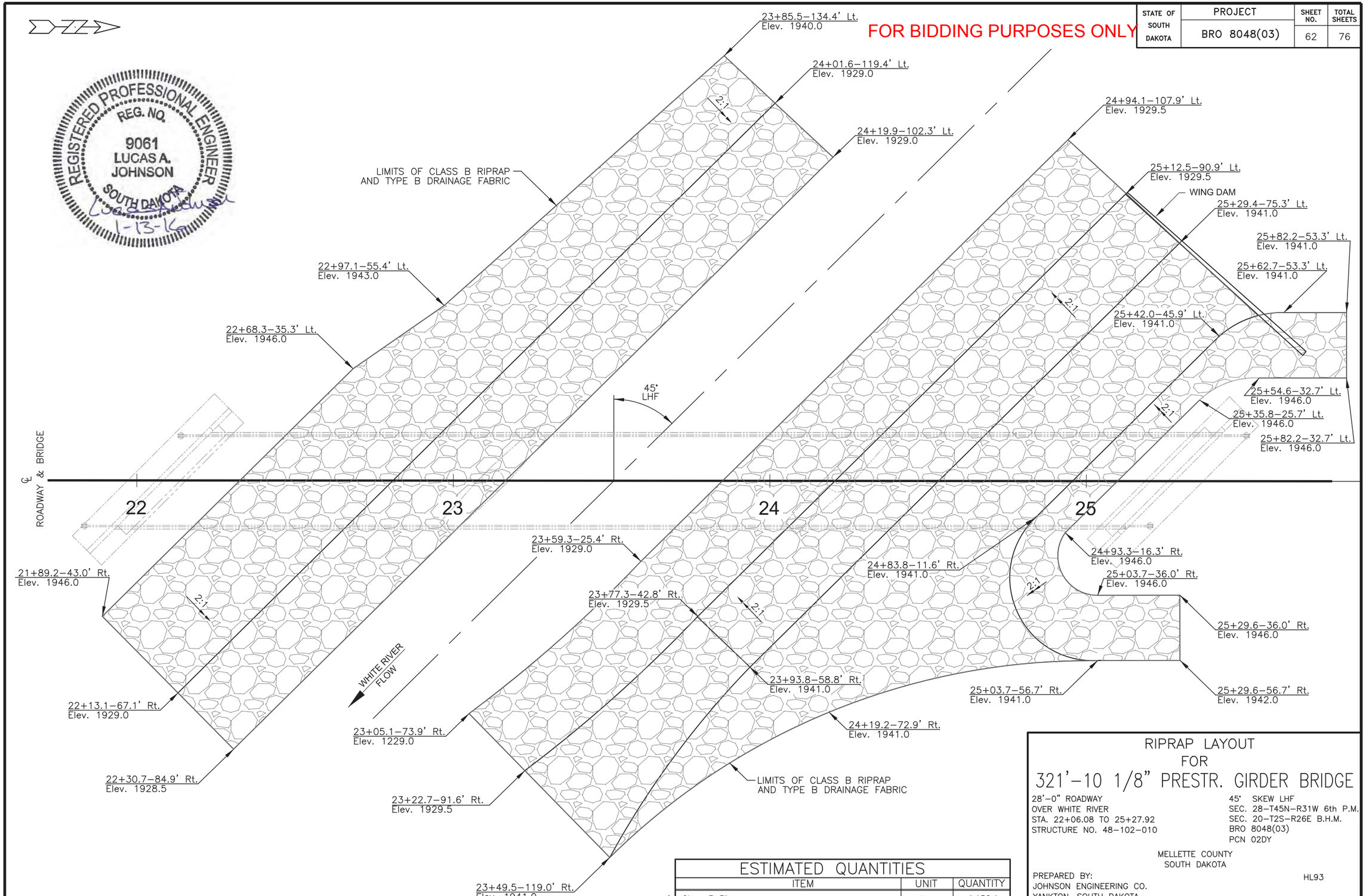

ESTIMATED QUANTITIES

ITEM	UNIT	QUANTITY
△ Class B Riprap	Ton	4,150.1
Type B Drainage Fabric	SqYd	4,774

△ For estimating purposes only, a factor of 1.4 Tons/CuYd was used to convert CuYd to Tons.

RIPRAP LAYOUT FOR 321'–10 1/8" PRESTR. GIRDER BRIDGE

28'–0" ROADWAY
OVER WHITE RIVER
STA. 22+06.08 TO 25+27.92
STRUCTURE NO. 48–102–010

45° SKEW LHF
SEC. 28–T45N–R31W 6th P.M.
SEC. 20–T2S–R26E B.H.M.
BRO 8048(03)
PCN 02DY

MELLETTE COUNTY
SOUTH DAKOTA

PREPARED BY:
JOHNSON ENGINEERING CO.
YANKTON, SOUTH DAKOTA

HL93

SEPTEMBER 2014

SHEET 31 OF 32

DESIGNED BY	DRAWN BY	CHECKED BY
LAJ	LAJ	GSS

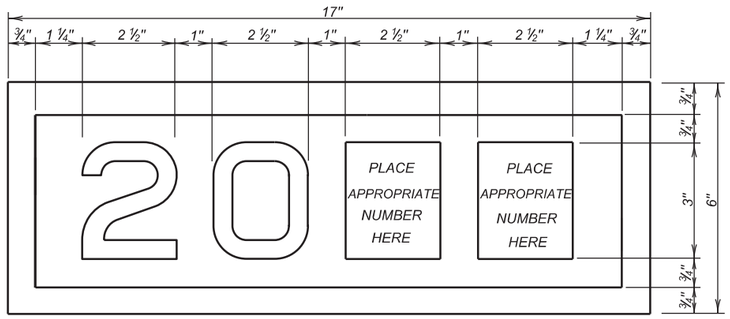

YEAR PLATE DETAILS

GENERAL NOTES:

1. Year plates of the general dimensions shown shall be constructed on all box culverts and bridges. The year plates shall be constructed in reverse and attached to the forms in such a manner that the finished imprint in the concrete does not exceed one-half (½) inch in depth.

2. Year plates shall be located on structure (s) as follows:

   a. On cast-in-place box culverts the year plates shall be four and one - half (4 ½) inches below the top of the upstream parapet wall and centered laterally on the upstream face. On precast box culverts the year plate shall be centered laterally on the upstream face of the top slab. Where an extended interior wall interferes with this location, the year plate shall be centered in an adjacent barrel.

   b. On bridges with six (6) inch curbs or "Jersey" shaped barriers with no endblocks, the year plate shall be centered vertically on the curb face approximately six (6) inches from the end of the bridge, or as designated by the Engineer. On bridges with "Jersey" shaped barrier endblocks, the year plate shall be centered on the upper sloped portion of the barrier approximately 5'- 6" from the end of the bridge, or as designated by the Engineer. There shall be one year plate at each end of the bridge on opposite sides.

   c. When the plans specify that both the original date of construction and the date of reconstruction are to be shown, one date shall be placed as listed above and the other located adjacent to it. Both year plates shall be shown at each end of the bridge on opposite sides.

3. There will be no separate measurement or payment made for year plates on box culverts and bridges. All costs for this work shall be incidental to other contract items.

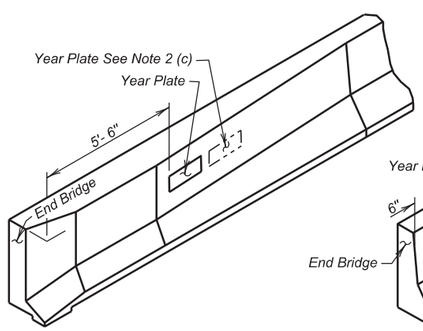

JERSEY BARRIER
(With Endblock)

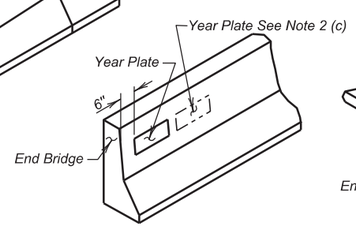

JERSEY BARRIER

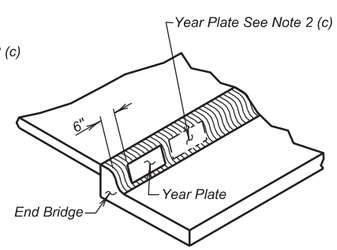

TYPE B CURB

June 26, 2012

Published Date: 4th Qtr. 2015	SDDOT	YEAR PLATE DETAILS	PLATE NUMBER 460.02
			Sheet 1 Of 1

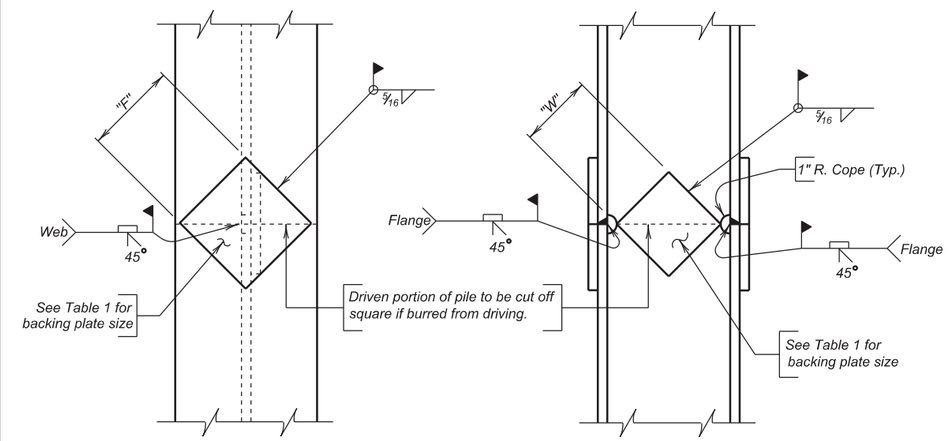

NOTE:

Prepare joint surfaces lower end of upper section on the ground and weld on backing plates; then place upper section on lower section and weld.

COMPLETE JOINT PENETRATION WELD DETAIL

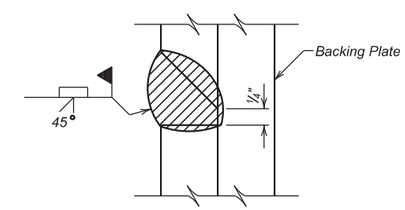

GENERAL NOTES:

1. Steel for backing plates shall conform to ASTM A709 Grade 50.
2. Welding and weld inspection shall be in conformance with AWS D1.5 (Current Year) Bridge Welding Code - Steel.
3. Welder must be certified and registered with the SDDOT.
4. Backing plate shall at a minimum be as thick as the web of the pile being spliced.
5. Web must be coped with 1 inch radius.
6. Submit Welding Procedure Specification (WPS) to Bridge Construction Engineer for approval prior to pile driving.

TABLE 1
(BACKING PLATES)

PILE	10"	12"	14"
"F" FLANGE	6 ½"	8"	10"
"W" WEB	4 ¾"	6 ¼"	7 ½"

December 23, 2012

Published Date: 4th Qtr. 2015	SDDOT	STEEL PILE SPLICE DETAILS	PLATE NUMBER 510.40
			Sheet 1 of 1

STATE OF SOUTH DAKOTA	PROJECT	SHEET NO.	TOTAL SHEETS
	BRO 8048(03)	64	76

FOR BIDDING PURPOSES ONLY

EAST REDFISH ROAD

REGISTERED PROFESSIONAL ENGINEER
REG. NO.
9061
LUCAS A.
JOHNSON
SOUTH DAKOTA
1-13-16

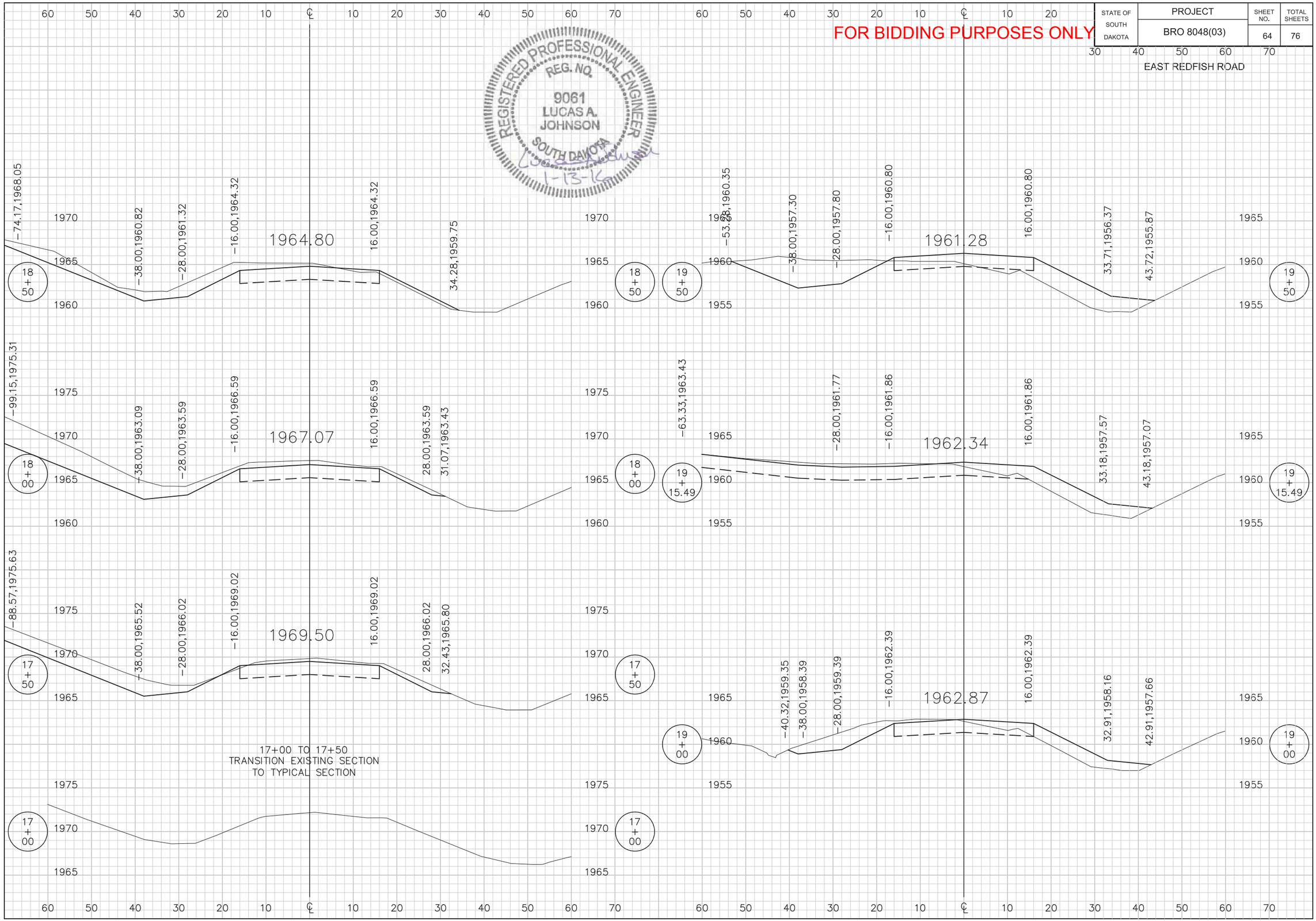

STATE OF SOUTH DAKOTA	PROJECT	SHEET NO.	TOTAL SHEETS
	BRO 8048(03)	65	76

FOR BIDDING PURPOSES ONLY

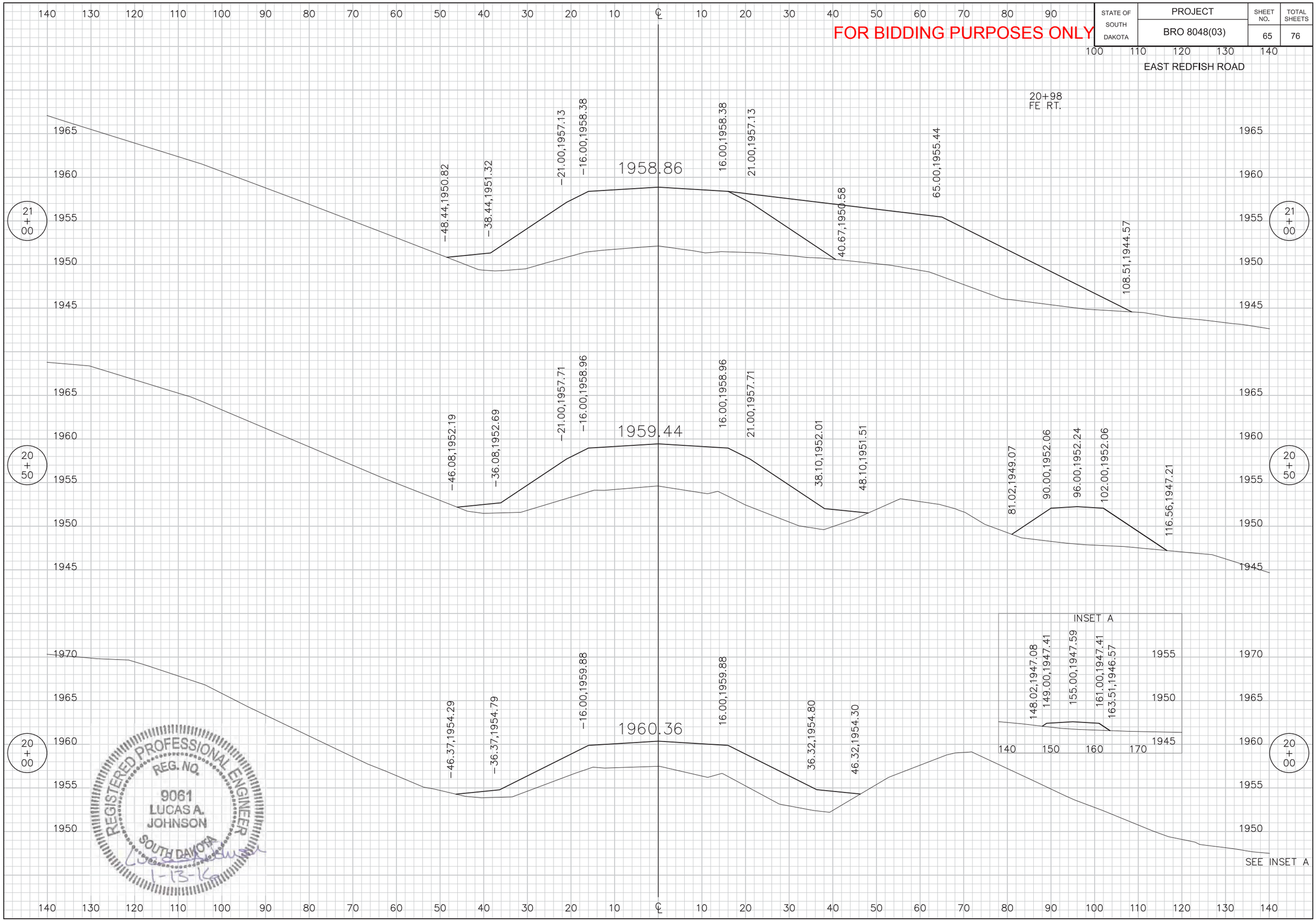

REGISTERED PROFESSIONAL ENGINEER
REG. NO.
9061
LUCAS A. JOHNSON
SOUTH DAKOTA
1-13-16

STATE OF SOUTH DAKOTA	PROJECT	SHEET NO.	TOTAL SHEETS
	BRO 8048(03)	66	76

FOR BIDDING PURPOSES ONLY

EAST REDFISH ROAD

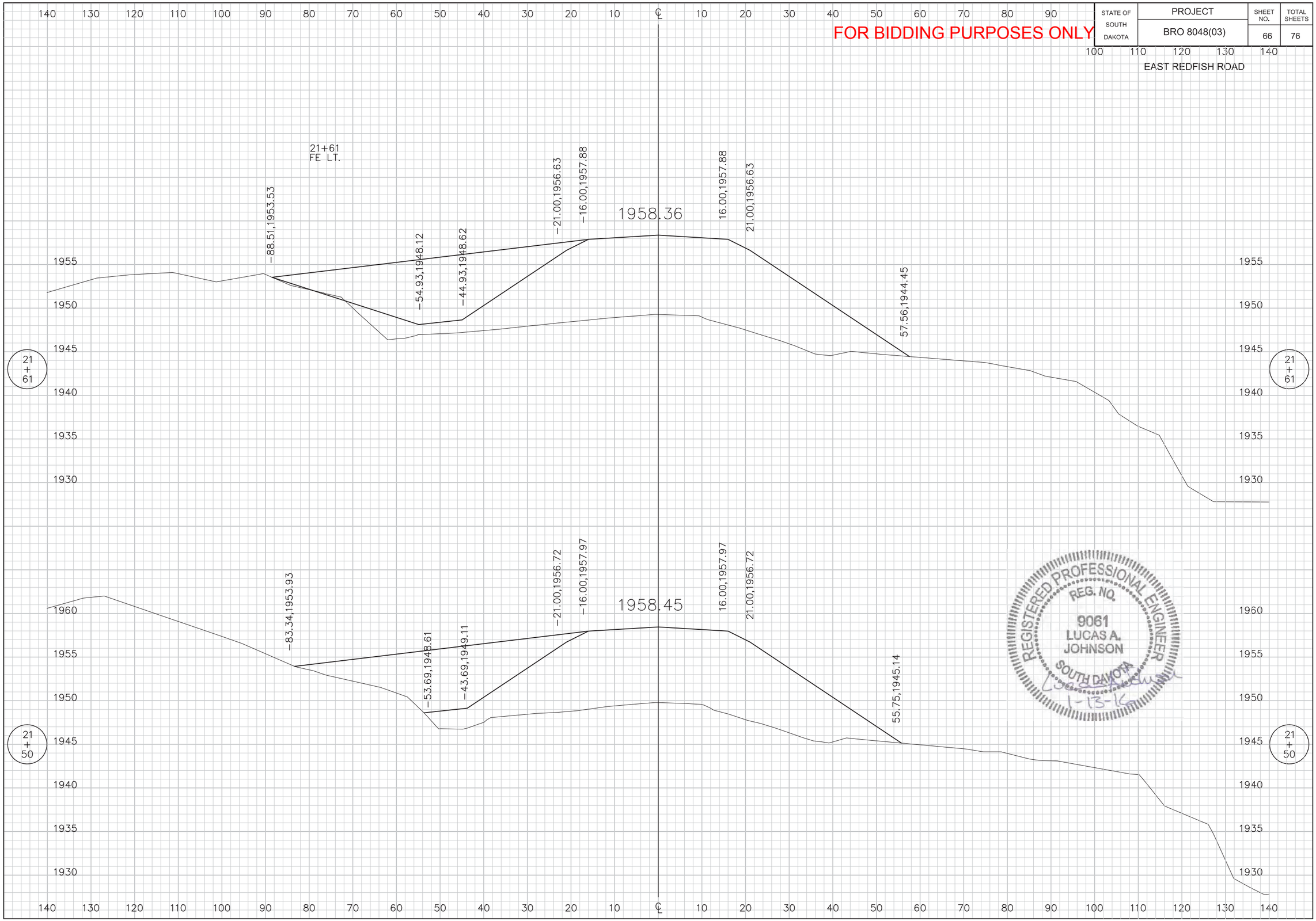

STATE OF SOUTH DAKOTA	PROJECT	SHEET NO.	TOTAL SHEETS
	BRO 8048(03)	67	76

FOR BIDDING PURPOSES ONLY

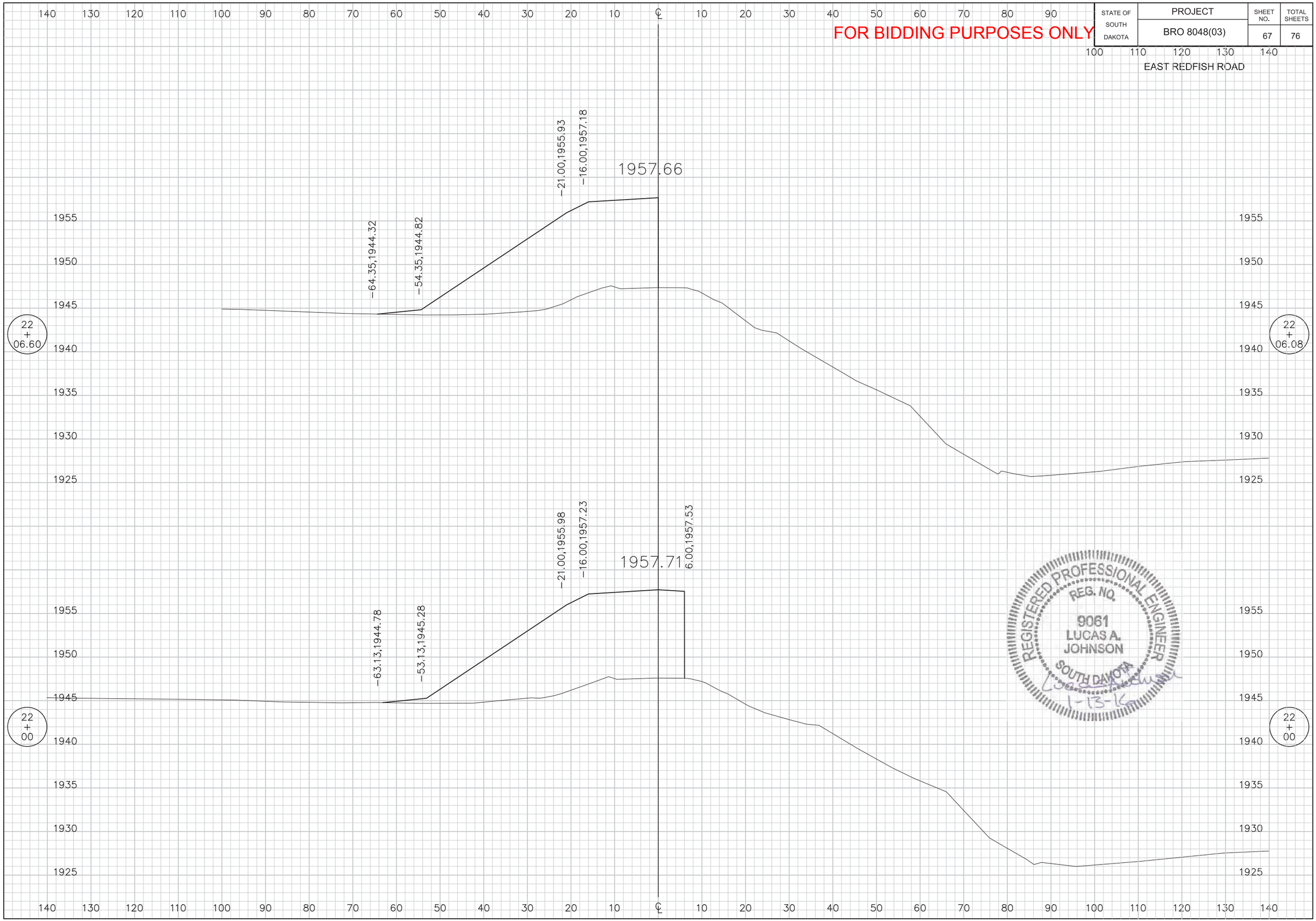

STATE OF SOUTH DAKOTA	PROJECT	SHEET NO.	TOTAL SHEETS
	BRO 8048(03)	68	76

FOR BIDDING PURPOSES ONLY

STAMFORD ROAD

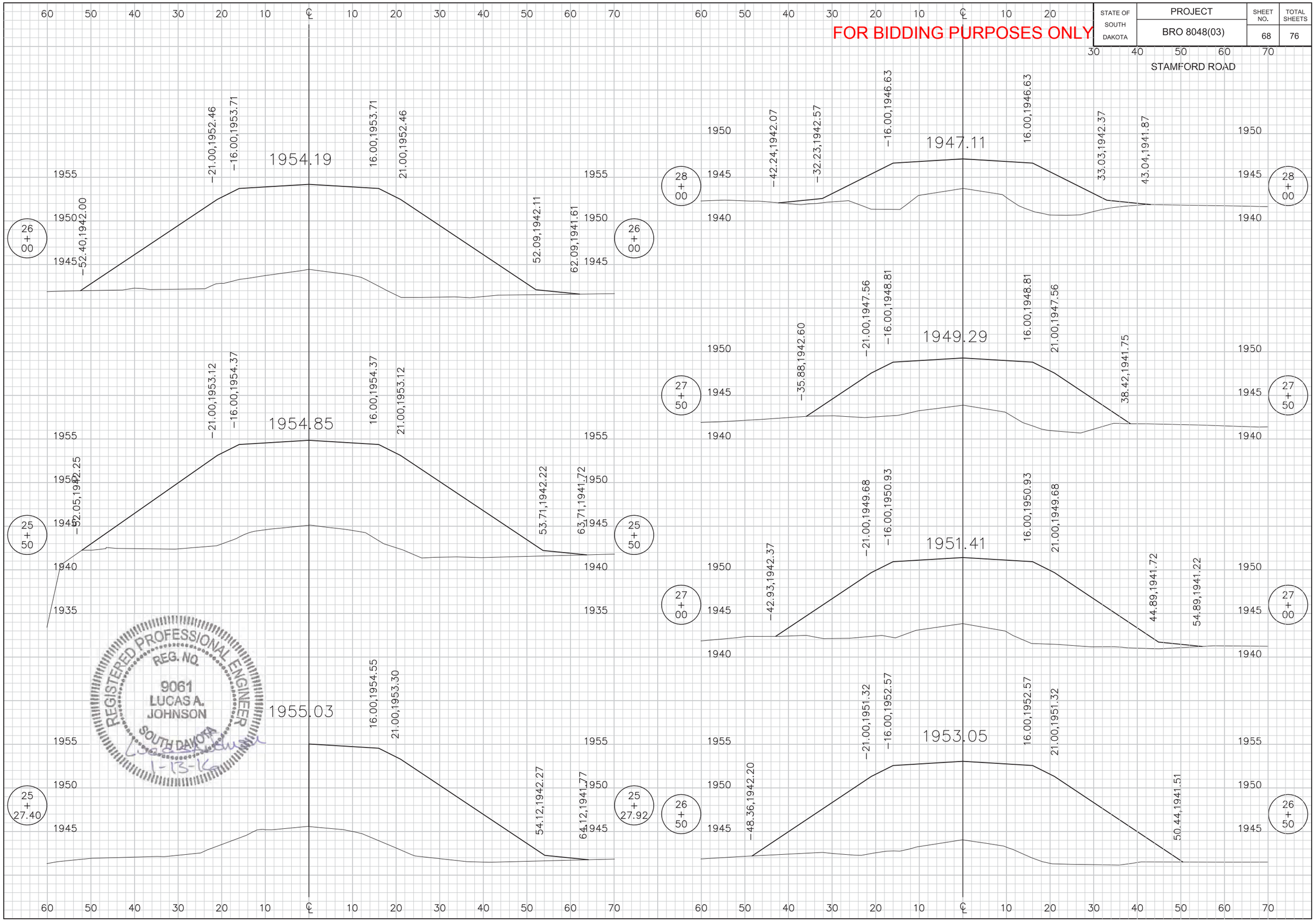

STATE OF SOUTH DAKOTA	PROJECT	SHEET NO.	TOTAL SHEETS
	BRO 8048(03)	69	76

FOR BIDDING PURPOSES ONLY

STAMFORD ROAD

REGISTERED PROFESSIONAL ENGINEER
REG. NO.
9061
LUCAS A.
JOHNSON
SOUTH DAKOTA
1-13-16

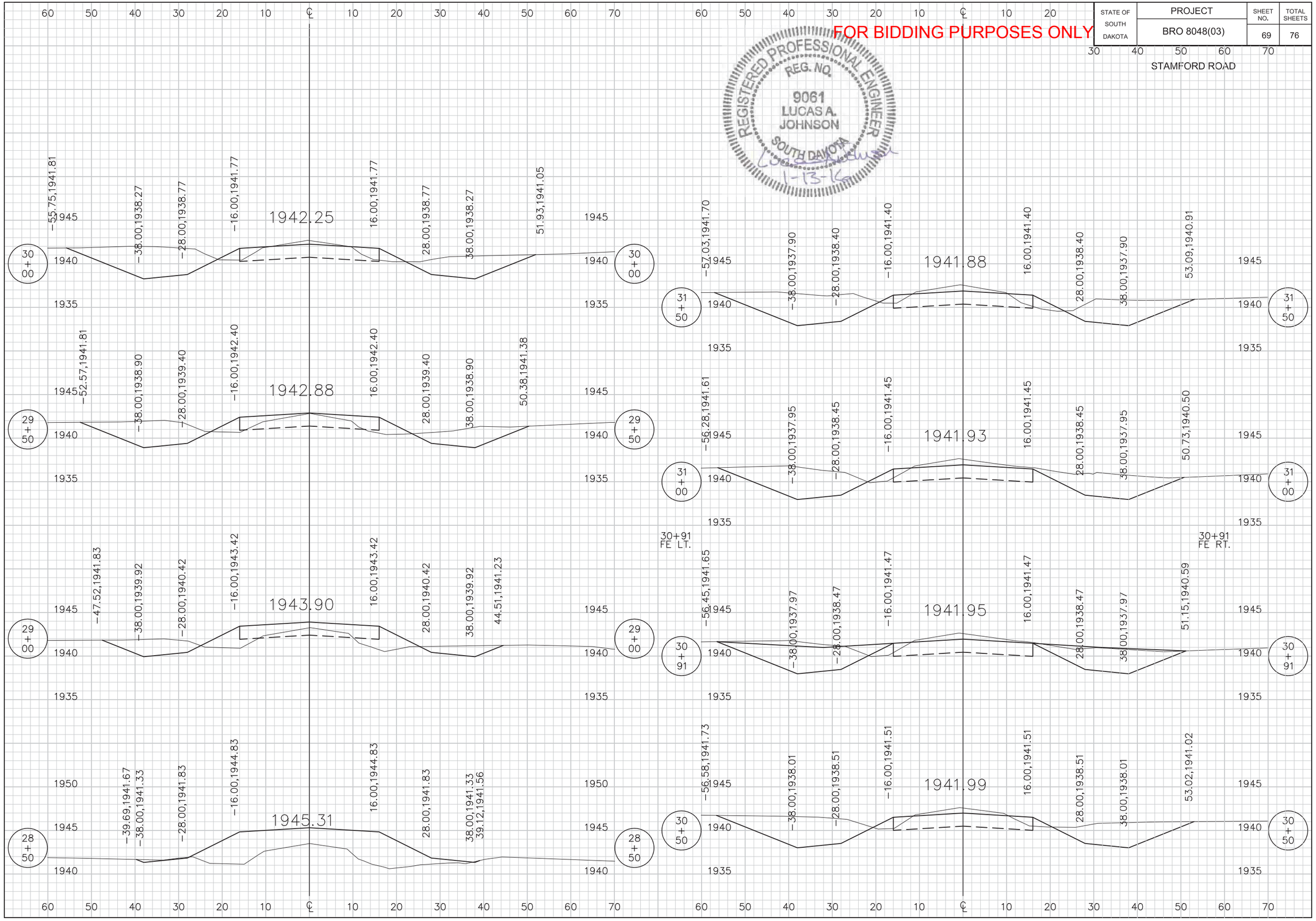

STATE OF SOUTH DAKOTA	PROJECT	SHEET NO.	TOTAL SHEETS
	BRO 8048(03)	70	76

FOR BIDDING PURPOSES ONLY

STAMFORD ROAD

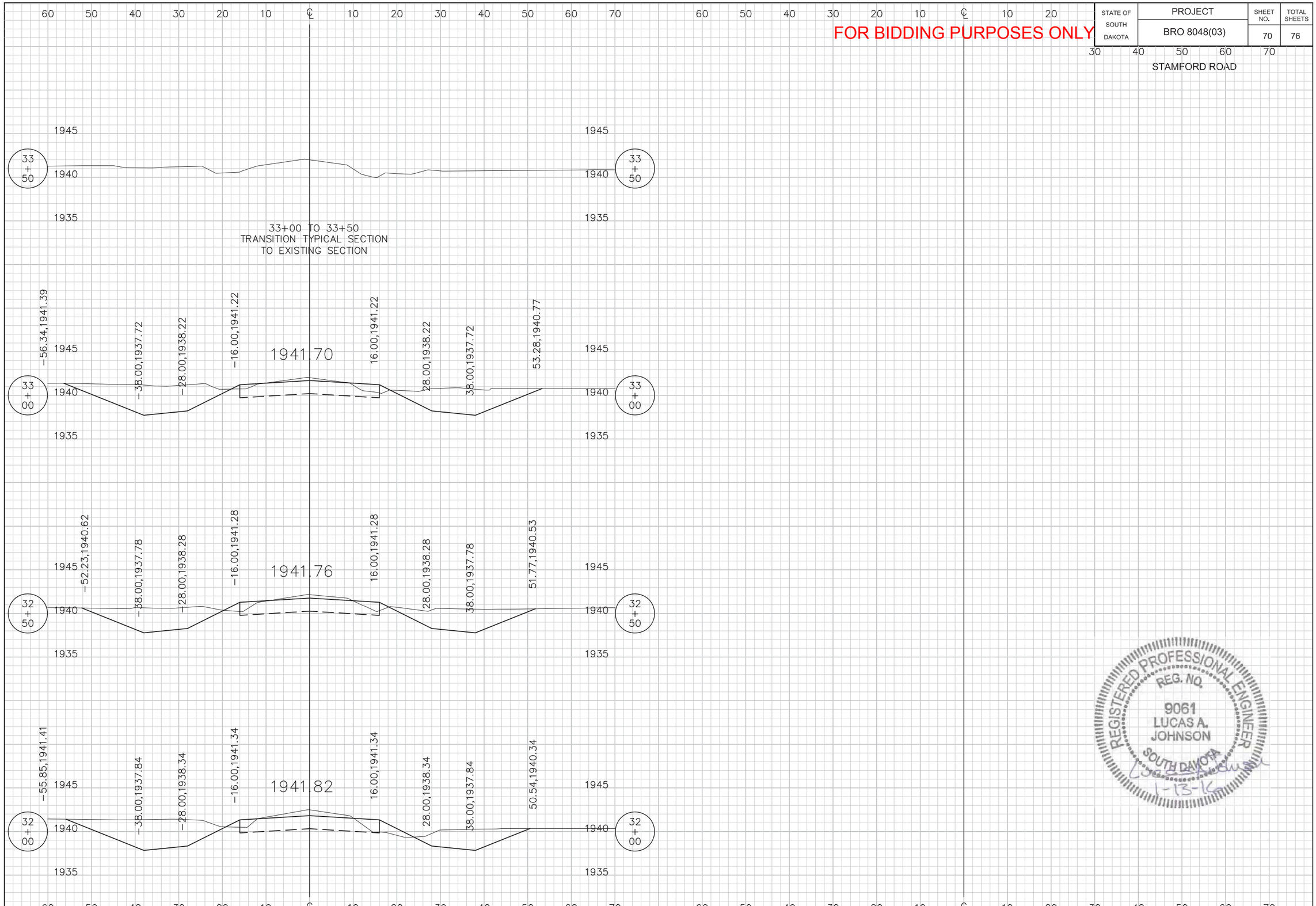

REGISTERED PROFESSIONAL ENGINEER
REG. NO.
9061
LUCAS A. JOHNSON
SOUTH DAKOTA
1-13-16

STATE OF SOUTH DAKOTA	PROJECT	SHEET NO.	TOTAL SHEETS
	BRO 8048(03)	71	76

FOR BIDDING PURPOSES ONLY

REGISTERED PROFESSIONAL ENGINEER
REG. NO.
9061
LUCAS A.
JOHNSON
SOUTH DAKOTA
1-13-16

WEST REDFISH ROAD

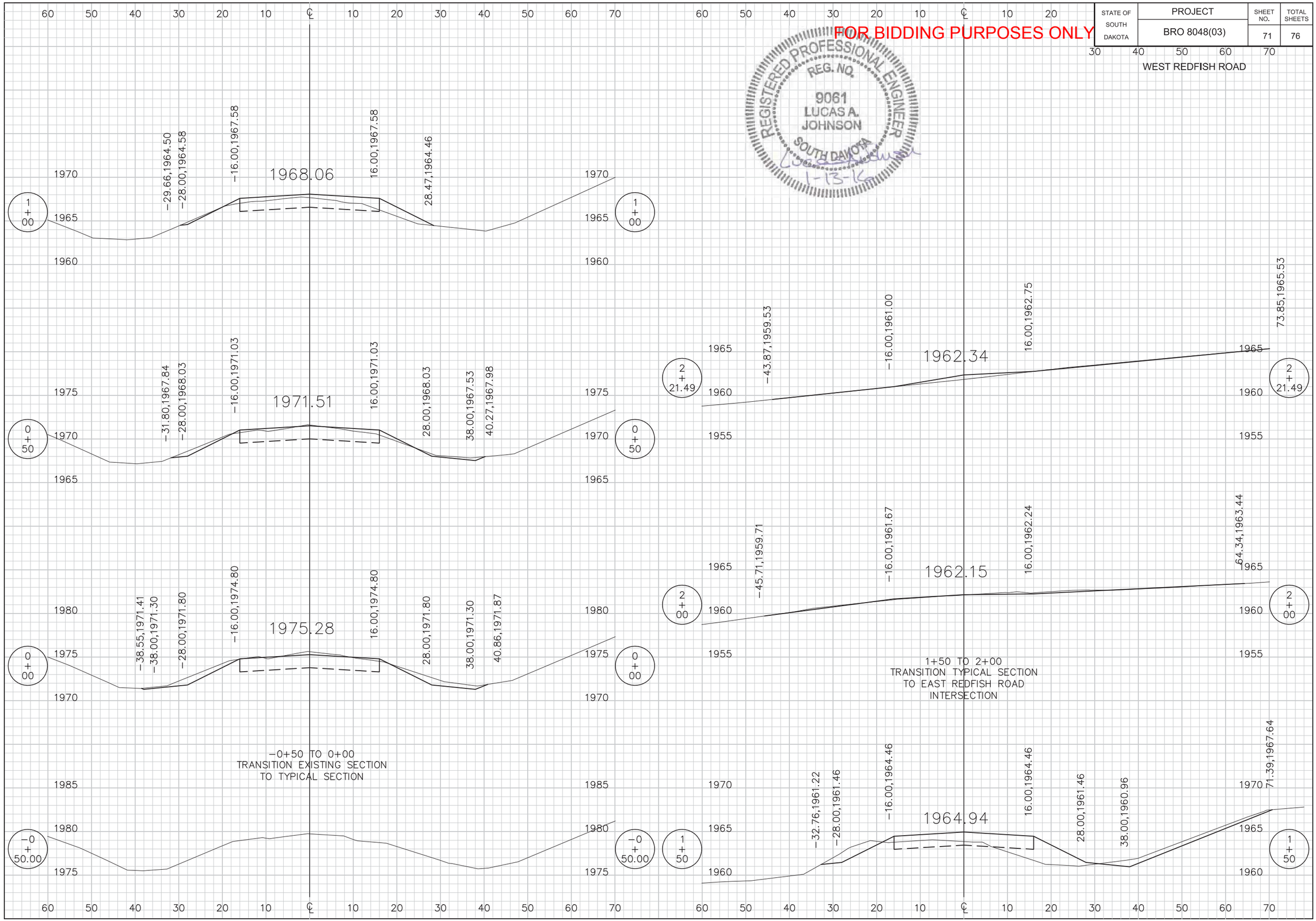

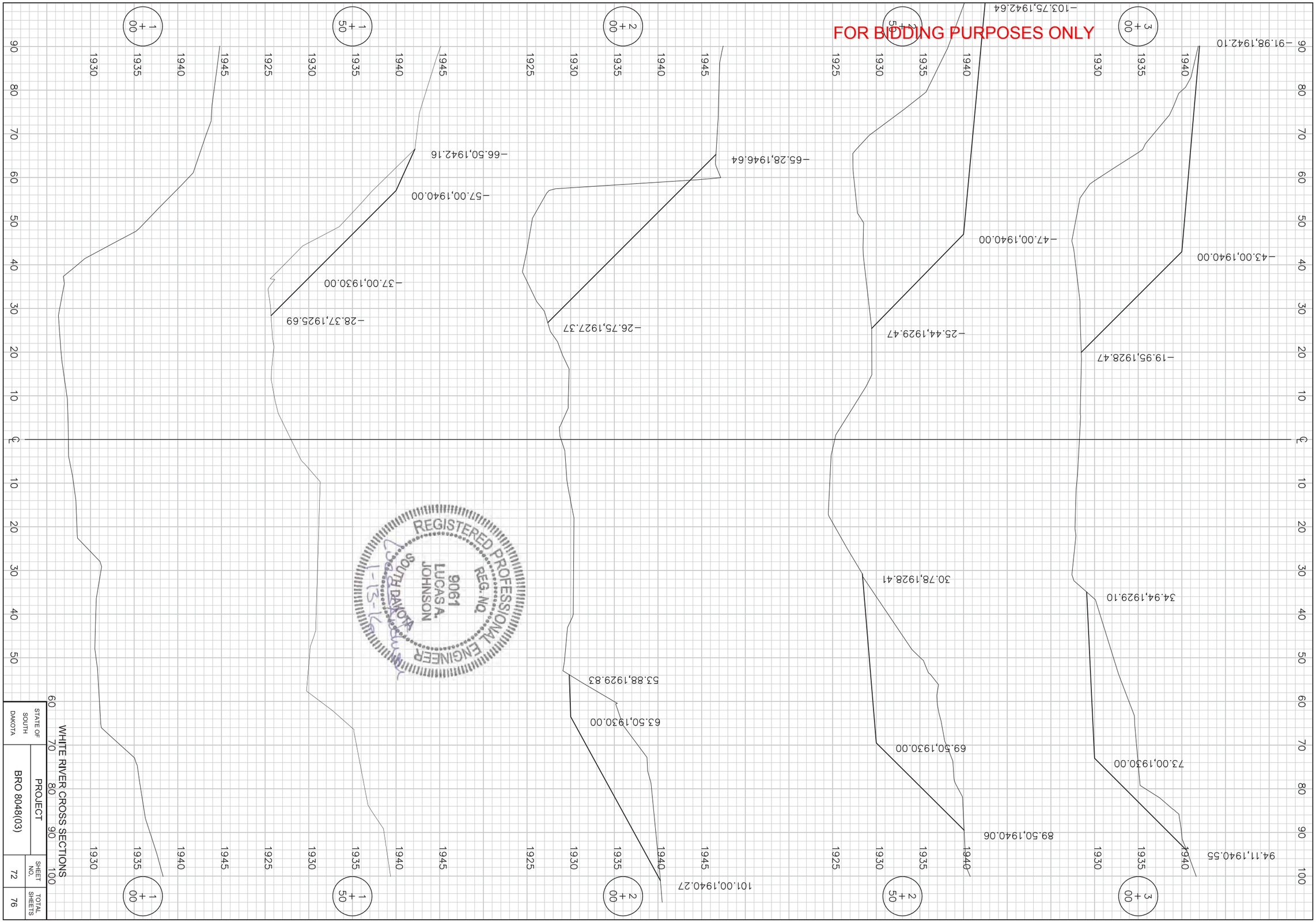
1 + 00
1 + 50
2 + 00
2 + 50
3 + 00
1930
1935
1940
1945
1925
90
80
70
60
50
40
30
20
10
℄
10
20
30
40
50
60
70
80
90
100
-91.98,1942.10
-43.00,1940.00
-19.95,1928.47
94.11,1940.55
73.00,1930.00
34.94,1929.10
-103.75,1942.64
-47.00,1940.00
-25.44,1929.47
89.50,1940.06
69.50,1930.00
30.78,1928.41
-65.28,1946.64
-26.75,1927.37
101.00,1940.27
63.50,1930.00
53.88,1929.83
-66.50,1942.16
-57.00,1940.00
-37.00,1930.00
-28.37,1925.69
WHITE RIVER CROSS SECTIONS
STATE OF SOUTH DAKOTA
PROJECT
BRO 8048(03)
SHEET NO.
72
TOTAL SHEETS
76
FOR BIDDING PURPOSES ONLY
REGISTERED PROFESSIONAL ENGINEER
REG. NO.
9061
LUCAS A. JOHNSON
SOUTH DAKOTA

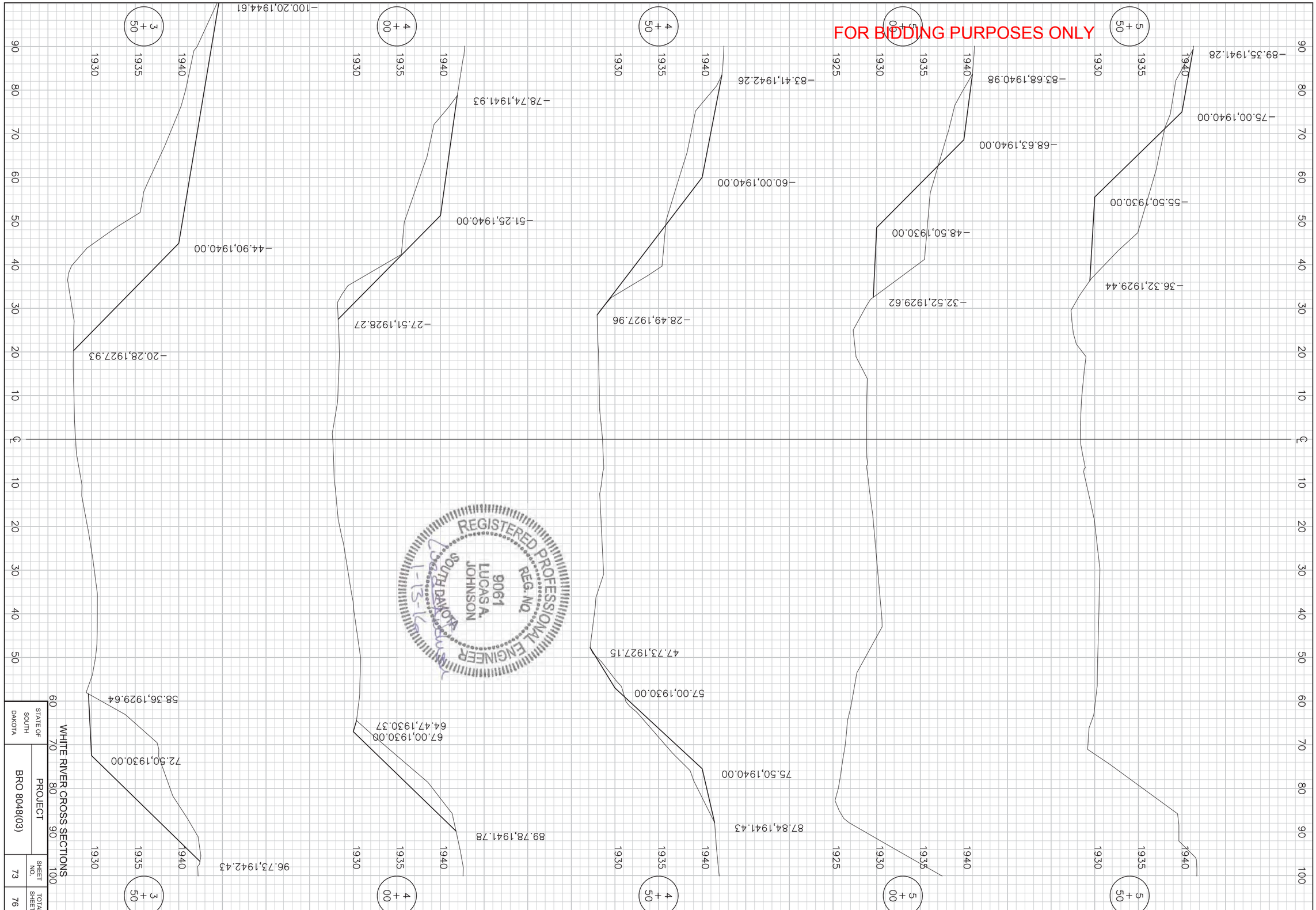
FOR BIDDING PURPOSES ONLY
REGISTERED PROFESSIONAL ENGINEER
REG. NO. 9061
LUCAS A. JOHNSON
SOUTH DAKOTA
1-13-16
3+50
-20.28,1927.93
-44.90,1940.00
-58.36,1929.64
-72.50,1930.00
-96.73,1942.43
4+00
-27.51,1928.27
-51.25,1940.00
-64.47,1930.37
-67.00,1930.00
-78.74,1941.93
-89.78,1941.78
-100.20,1944.61
4+50
-28.49,1927.96
-47.73,1927.15
-57.00,1930.00
-60.00,1940.00
-75.50,1940.00
-83.41,1942.26
-87.84,1941.43
5+00
-32.52,1929.62
-48.50,1930.00
-68.63,1940.00
-83.68,1940.98
5+50
-36.32,1929.44
-55.50,1930.00
-75.00,1940.00
-89.35,1941.28
WHITE RIVER CROSS SECTIONS
STATE OF SOUTH DAKOTA
PROJECT
BRO 8048(03)
SHEET NO.
73
TOTAL SHEETS
76

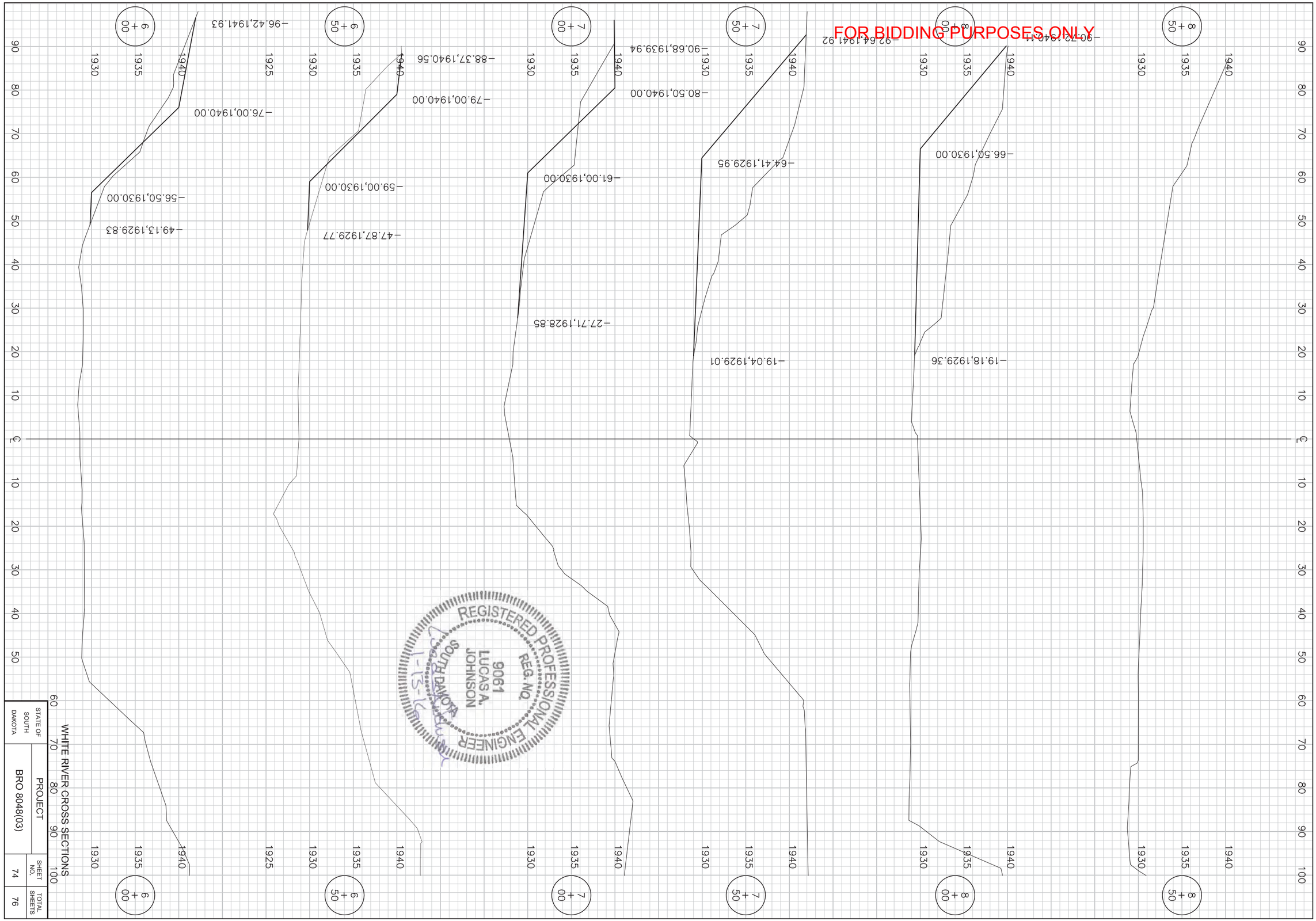

FOR BIDDING PURPOSES ONLY

REGISTERED PROFESSIONAL ENGINEER
REG. NO. 9061
LUCAS A. JOHNSON
SOUTH DAKOTA
1-13-16

WHITE RIVER CROSS SECTIONS

PROJECT	SHEET NO.	TOTAL SHEETS
BRO 8048(03)	74	76

STATE OF SOUTH DAKOTA

FOR BIDDING PURPOSES ONLY

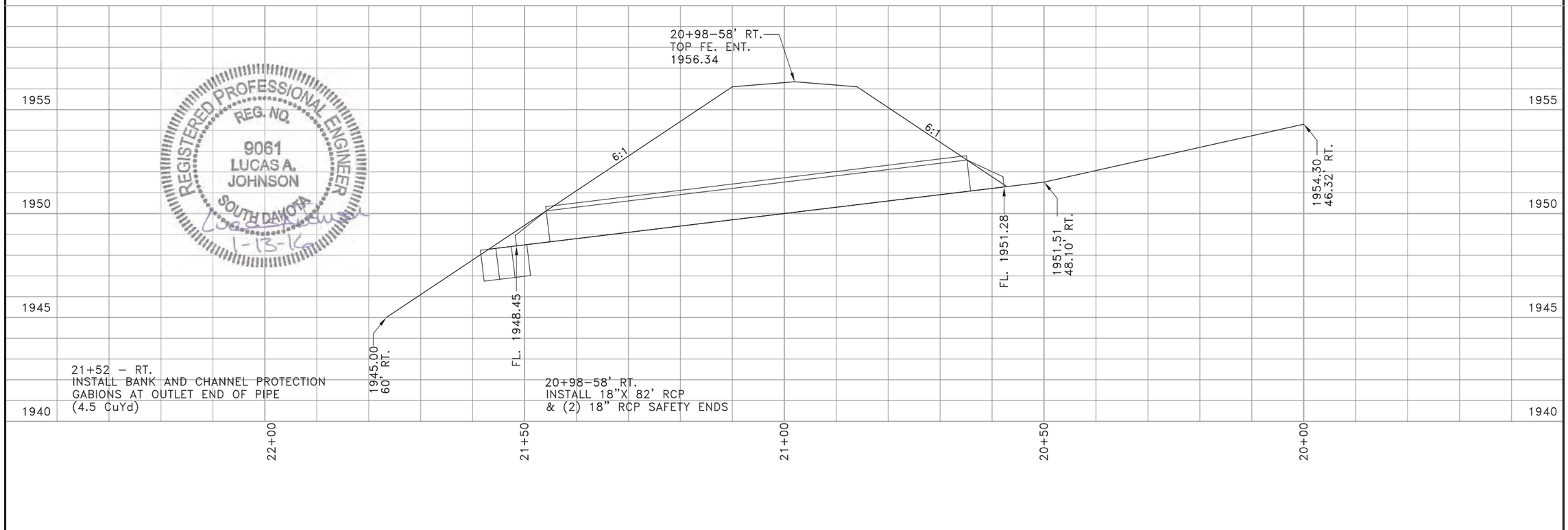

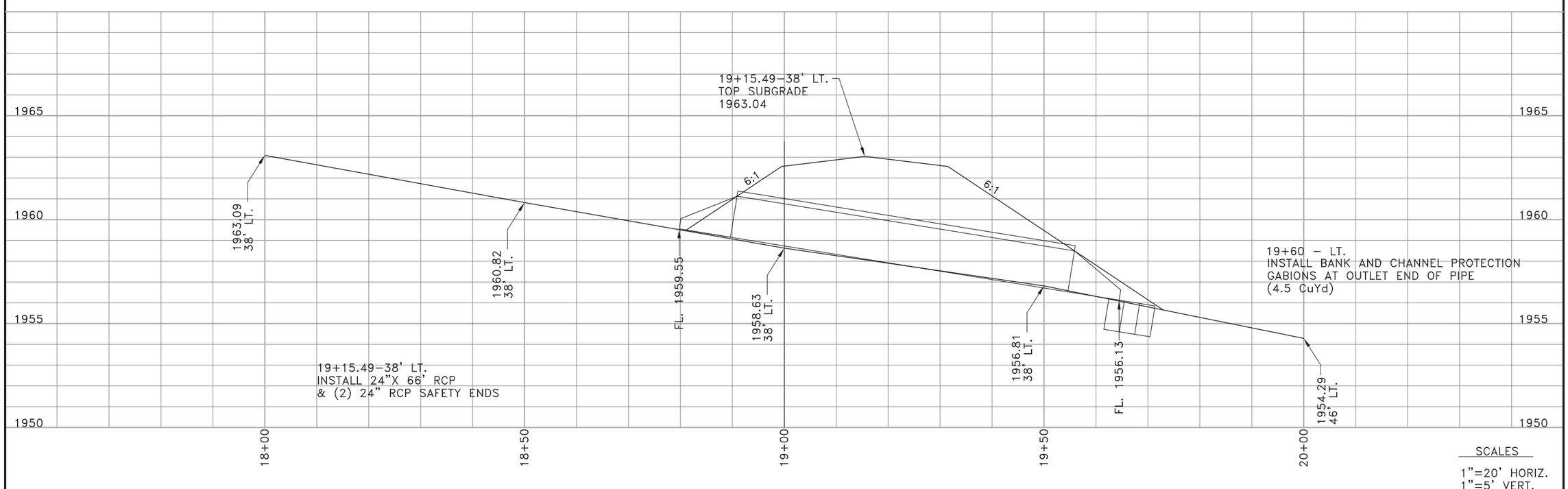

SCALES

1"=20' HORIZ.
1"=5' VERT.

FOR BIDDING PURPOSES ONLY

STATE OF SOUTH DAKOTA	PROJECT	SHEET NO.	TOTAL SHEETS
	BRO 8048(03)	76	76

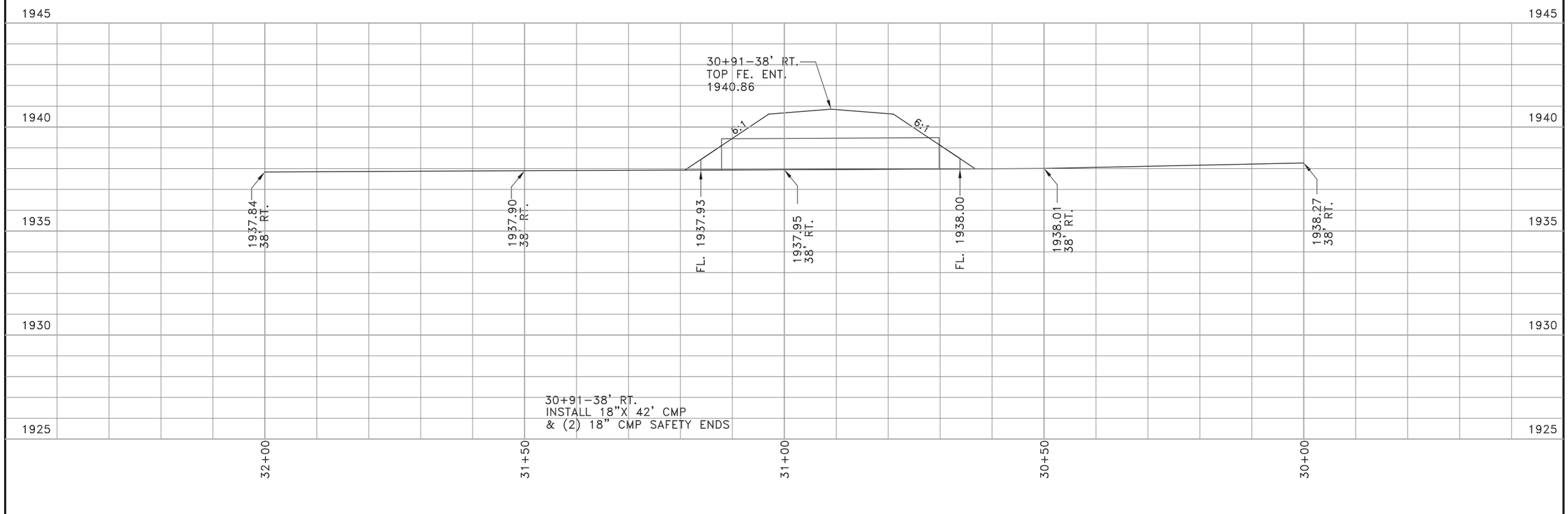

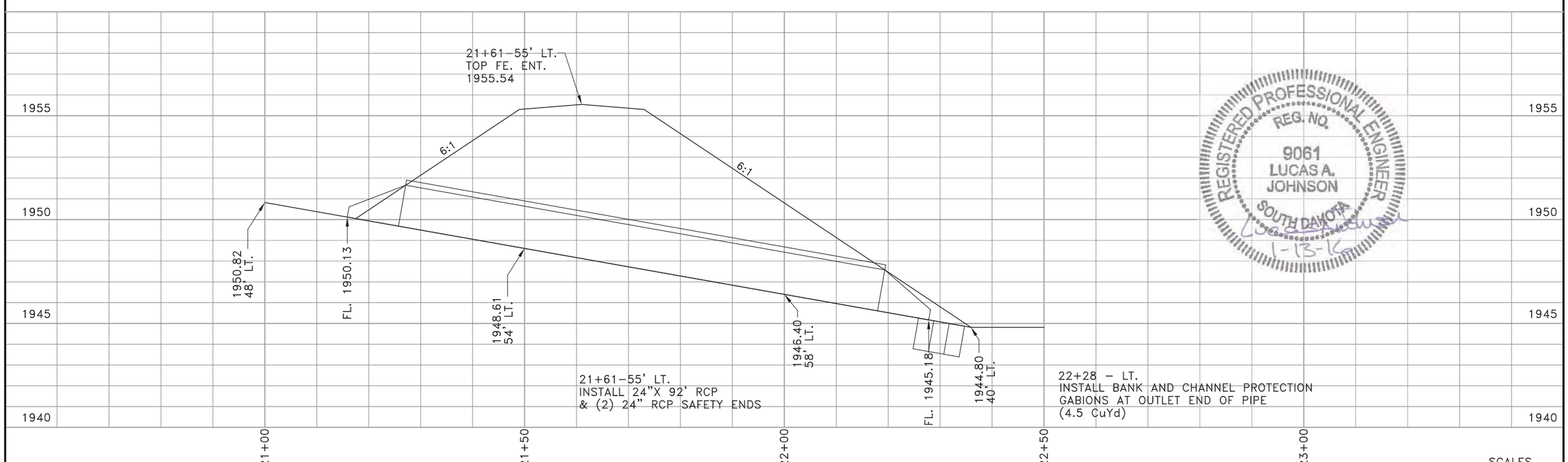

REGISTERED PROFESSIONAL ENGINEER
REG. NO.
9061
LUCAS A.
JOHNSON
SOUTH DAKOTA
1-13-15

SCALES

1"=20' HORIZ.
1"=5' VERT.