| STATE OF SOUTH DAKOTA | PROJECT | SHEET | TOTAL SHEETS |
|---|---|---|---|
| | IM-PH 0291(122)0 | 1 | 284 |

Plotting Date: 07/06/2016

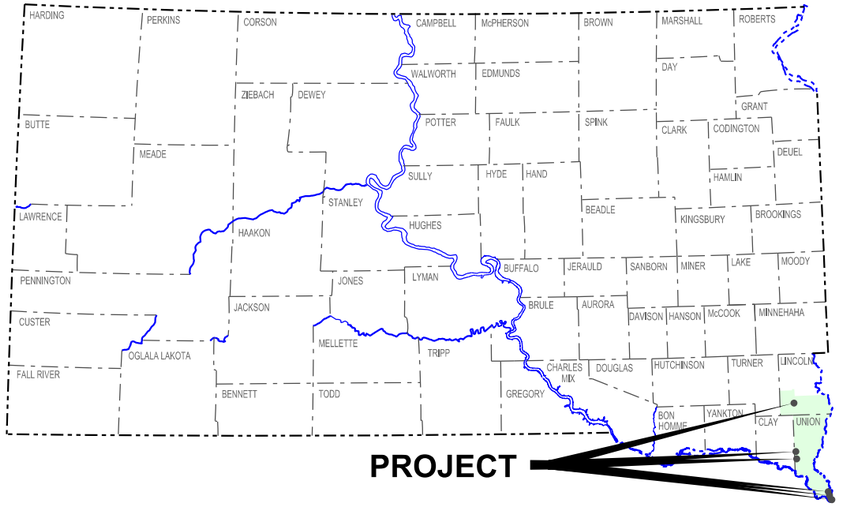


# STATE OF SOUTH DAKOTA
# DEPARTMENT OF TRANSPORTATION

## PLANS FOR PROPOSED

# PROJECT IM–PH 0291(122)0
# INTERSTATE 29
# UNION & LINCOLN COUNTIES

UPGRADE STRUCTURES -
DECK OVERLAY, BRIDGE DECK HIGH FRICTION SURFACE TREATMENT
POLYMER CHIP SEAL, APPROACH SLABS, APPROACH PCC PAVEMENT,
JOINT MODIFICATION & REPLACEMENT,
CONCRETE BARRIER END BLOCK MODIFICATION, BRIDGE END BACKFILL,
ABUTMENT REPAIR, COLUMN REPAIR, CURB & GUTTER REPLACEMENT,
PAVEMENT MARKING & GUARDRAIL

## INDEX OF SHEETS


| | |
|---|---|
| Sheet 1 | Layout Map & Index of Sheets |
| Sheets 2-4 | Estimate of Quantities |
| Sheets 5-6 | Environmental Commitments |
| Sheet 7 | Table for Guardrail |
| Sheet 8 | Table of Guardrail Delineators & Object Markers |
| Sheets 9-15 | Plan Notes & SWPPP |
| Sheets 16-17 | Pavement Marking |
| Sheets 18-34 | Traffic Control |
| Sheets 35-72 | Details for Str. No. 64-164-405 |
| Sheets 73-105 | Details for Str. No. 64-165-405 |
| Sheets 106-129 | Details for Str. No. 64-154-385 |
| Sheets 130-153 | Details for Str. No. 64-155-385 |
| Sheets 154-174 | Details for Str. No. 64-149-367 |
| Sheets 175-194 | Details for Str. No. 64-008-205 |
| Sheets 195-210 | Details for Str. No. 42-065-230 |
| Sheets 211-225 | Details for Str. No. 64-006-164 |
| Sheets 226-240 | Details for Str. No. 64-005-164 |
| Sheets 241-250 | Surfacing Details |
| Sheets 251-253 | Pavement Profiles |
| Sheets 254-257 | Details for Drop Inlets |
| Sheets 258-264 | Layouts for Installation of Guardrail |
| Sheets 265-284 | Standard Plates |


**STORM WATER PERMIT**
Receiving Waters: Big Sioux River
& Tributary to Big Sioux River
Area Disturbed: 2.1 Acres
Total Project Area: 100 Acres
Str. Nos. 64-164/165-405:
Latitude: 42.4952 (Google Maps)
Longitude: -96.4772 (Google Maps)
Str. Nos. 64-154/155-385
Latitude: 42.5246 (Google Maps)
Longitude: -96.4994 (Google Maps)
Str. No. 64-149-367
Latitude: 42.5501 (Google Maps)
Longitude: -96.5088 (Google Maps)
Str. No. 64-008-205
Latitude: 42.7862 (Google Maps)
Longitude: -96.7910 (Google Maps)
Str. Nos. 64-005/006-164
Latitude: 42.8464 (Google Maps)
Longitude: -96.7960 (Google Maps)
Str. No. 42-065-230
Latitude: 43.1707 (Google Maps)
Longitude: -96.7956 (Google Maps)

**ADT ON STRUCTURES (2015)**

| LOCATION | ADT |
|---|---|
| NORTHSHORE DRIVE | 1,905 |
| SD50 | 3,225 |
| 291ST STREET | 366 |

**DESIGN DESIGNATION (I29 N or S)**

| LOCATION | S UNION CO | CENTRAL UNION CO | S LINCOLN CO |
|---|---|---|---|
| ADT(2014) | 9,043 | 5,919 | 7,537 |
| ADT(2034) | 11,892 | 8,529 | 13,867 |
| DHV | 1,344 | 964 | 1,567 |
| D | 50% | 50% | 50% |
| T DHV | 7.9% | 10.6% | 10.2% |
| T ADT | 17.3% | 23.3% | 22.5% |
| V | 65 MPH | 80 MPH | 80 MPH |

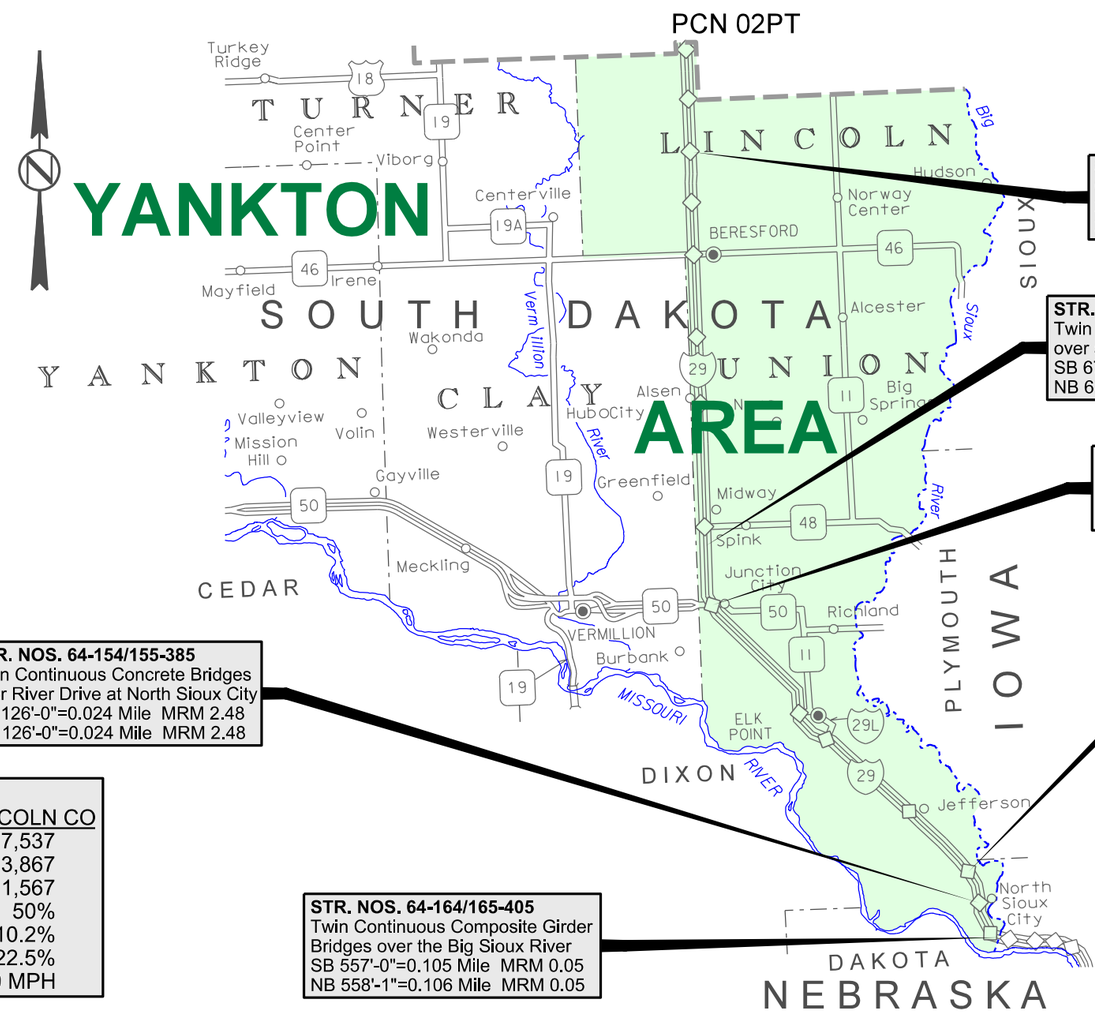


**STR. NO. 42-065-230**
Cont. Composite Girder Bridge
291st Street over I29
254'-0"=0.048 Mile MRM 53.32

**STR. NOS. 64-005/006-164**
Twin Continuous Concrete Bridges
over a creek
SB 67'-3¾"=0.013 Mile MRM 30.92
NB 67'-3¾"=0.013 Mile MRM 30.92

**STR. NO. 64-008-205**
Concrete Box Girder Bridge
SD50 over I29
293'-3"=0.056 Mile MRM 26.71

**STR. NO. 64-149-367**
Concrete Box Girder Bridge
Northshore Drive over I29
293'-3"=0.056 Mile MRM 4.35

**STR. NOS. 64-154/155-385**
Twin Continuous Concrete Bridges
over River Drive at North Sioux City
SB 126'-0"=0.024 Mile MRM 2.48
NB 126'-0"=0.024 Mile MRM 2.48

**STR. NOS. 64-164/165-405**
Twin Continuous Composite Girder
Bridges over the Big Sioux River
SB 557'-0"=0.105 Mile MRM 0.05
NB 558'-1"=0.106 Mile MRM 0.05



PLOT SCALE - 1146666.7
PLOT NAME - 1
FILE - ...\PRJ2016\UNIN02PT\TITL02PT.DGN
PLOTTED FROM - TRM111118

# ESTIMATE OF QUANTITIES

| STATE OF SOUTH DAKOTA | PROJECT | SHEET | TOTAL SHEETS |
|---|---|---|---|
| | IM-PH 0291(122)0 | 2 | 284 |

Rev. 7/27/2016 GAW

## IM 0291(122)0 – PCN 02PT

| BID ITEM NUMBER | ITEM | QUANTITY | UNIT |
|---|---|---|---|
| 009E0010 | Mobilization | Lump Sum | LS |
| 110E0700 | Remove 3 Cable Guardrail | 2,226 | Ft |
| 110E0730 | Remove Beam Guardrail | 962.5 | Ft |
| 110E0740 | Remove 3 Cable Guardrail Anchor Assembly | 12 | Each |
| 110E0745 | Remove 3 Cable Guardrail Slip Base Anchor Assembly | 6 | Each |
| 110E0770 | Remove W Beam Guardrail Breakaway Cable Terminal | 9 | Each |
| 110E1010 | Remove Asphalt Concrete Pavement | 844.0 | SqYd |
| 110E1100 | Remove Concrete Pavement | 1,385.0 | SqYd |
| 110E7510 | Remove Pipe End Section for Reset | 2 | Each |
| 110E7700 | Remove Drop Inlet Frame and Grate Assembly for Reset | 12 | Each |
| 120E0010 | Unclassified Excavation | 145 | CuYd |
| 120E0600 | Contractor Furnished Borrow Excavation | 2,620 | CuYd |
| 260E1010 | Base Course | 276.0 | Ton |
| 320E1200 | Asphalt Concrete Composite | 144.0 | Ton |
| 380E0110 | 11" Nonreinforced PCC Pavement | 888.0 | SqYd |
| 380E0120 | 11.5" Nonreinforced PCC Pavement | 862.0 | SqYd |
| 380E6000 | Dowel Bar | 252 | Each |
| 380E6110 | Insert Steel Bar in PCC Pavement | 180 | Each |
| 380E6302 | Reseal PCC Pavement Joint - Hot Pour | 132 | Ft |
| 450E4759 | 18" CMP 16 Gauge, Furnish | 46 | Ft |
| 450E4760 | 18" CMP, Install | 46 | Ft |
| 450E9001 | Reset Pipe End Section | 2 | Each |
| 628E1100 | Movable F Shape Concrete Barrier, Interior Section | 250 | Each |
| 629E0100 | 3 Cable Guardrail | 3,718 | Ft |
| 629E0300 | 3 Cable Guardrail Slip Base Anchor Assembly | 10 | Each |
| 629E0400 | 3 Cable Guardrail Anchor Assembly | 10 | Each |
| 630E0110 | Straight Double Class A Thrie Beam Guardrail with Wood Posts | 125.0 | Ft |
| 630E1010 | Straight Class A W Beam Guardrail with Wood Posts | 625.0 | Ft |
| 630E2000 | W Beam to Thrie Beam Guardrail Transition | 10 | Each |
| 630E2030 | W Beam Guardrail Breakaway Cable Terminal | 10 | Each |
| 630E2110 | Beam Guardrail Post and Block | 8 | Each |
| 632E2220 | Guardrail Delineator | 83 | Each |
| 632E2520 | Type 2 Object Marker | 10 | Each |
| 633E3000 | Durable Pavement Marking, 4" White | 11,133 | Ft |
| 633E3005 | Durable Pavement Marking, 4" Yellow | 9,579 | Ft |
| 633E3035 | Durable Pavement Marking, 24" Yellow | 72 | Ft |
| 633E3040 | Durable Pavement Marking, Area | 43 | SqFt |
| 633E3045 | Durable Pavement Marking, Arrow | 4 | Each |
| 633E5050 | Surface Preparation for Pavement Marking | 17,330 | Ft |
| 633E5051 | Surface Preparation for Pavement Marking | 43 | SqFt |
| 633E5052 | Surface Preparation for Pavement Marking | 4 | Each |
| 634E0010 | Flagging | 200.0 | Hour |
| 634E0110 | Traffic Control Signs | 3,016.2 | SqFt |

## IM 0291(122)0 – PCN 02PT (CONTINUED)

| BID ITEM NUMBER | ITEM | QUANTITY | UNIT |
|---|---|---|---|
| 634E0120 | Traffic Control, Miscellaneous | Lump Sum | LS |
| 634E0285 | Type 3 Barricade, 8' Double Sided | 38 | Each |
| 634E0330 | Temporary Raised Pavement Markers | 26,304 | Ft |
| 634E0420 | Type C Advance Warning Arrow Board | 8 | Each |
| 634E0525 | Linear Delineation System Panel, Barrier Mounted | 500 | Each |
| 634E0600 | 4" Temporary Pavement Marking Tape Type I | 7,632 | Ft |
| 634E0700 | Traffic Control Movable Concrete Barrier | 250 | Each |
| 634E0705 | Remove and Reset Traffic Control Movable Concrete Barrier | 118 | Each |
| 634E0750 | Temporary Concrete Barrier End Protection | 2 | Each |
| 634E0755 | Remove and Reset Temporary Concrete Barrier End Protection | 4 | Each |
| 634E0760 | Temporary Concrete Barrier End Protection Module Set or Repair Kit | 1 | Each |
| 634E0900 | Portable Temporary Traffic Control Signal | 5 | Unit |
| 634E1002 | Detour Signing | 109.2 | SqFt |
| 634E1215 | Contractor Furnished Portable Changeable Message Sign | 2 | Each |
| 670E7000 | Reset Drop Inlet Frame and Grate Assembly | 12 | Each |
| 734E0010 | Erosion Control | Lump Sum | LS |

## Structure 64-164-405

| BID ITEM NUMBER | ITEM | QUANTITY | UNIT |
|---|---|---|---|
| 009E3310 | Bridge Elevation Survey | Lump Sum | LS |
| 110E0010 | Remove Concrete Bridge Approach Slab | 210.2 | SqYd |
| 410E0700 | Abutment Joint Drain | 2 | Each |
| 410E2100 | Finger Type Expansion Joint Assembly | 2 | Each |
| 410E2600 | Membrane Sealant Expansion Joint | 83.8 | Ft |
| 412E0100 | Bridge Repainting, Class I | Lump Sum | LS |
| 430E0300 | Granular Bridge End Backfill | 8.0 | CuYd |
| 460E0150 | Concrete Approach Slab for Bridge | 197.8 | SqYd |
| 460E0160 | Concrete Approach Sleeper Slab for Bridge | 23.2 | SqYd |
| 480E0504 | No. 4 Rebar Splice | 28 | Each |
| 480E0505 | No. 5 Rebar Splice | 14 | Each |
| 480E0506 | No. 6 Rebar Splice | 48 | Each |
| 550E0010 | Low Slump Dense Concrete Bridge Deck Overlay | 181 | CuYd |
| 550E0100 | Concrete Removal Type 1A | 2,454.6 | SqYd |
| 550E0110 | Concrete Removal Type 1B | 245.5 | SqYd |
| 550E0120 | Concrete Removal Type 1C | 122.7 | SqYd |
| 550E0130 | Concrete Removal Type 1D | 122.7 | SqYd |
| 550E0140 | Concrete Removal Type B | 20.0 | Ft |
| 550E0200 | Class A45 Concrete Fill | 27.3 | CuYd |
| 550E0500 | Finishing and Curing | 2,455.2 | SqYd |

**SPECIFICATIONS**

Standard Specifications for Roads and Bridges, 2015 Edition and Required Provisions, Supplemental Specifications and Special Provisions as included in the Proposal.

# ESTIMATE OF QUANTITIES (CONTINUED)



Rev. 7/27/2016 GAW

## Structure 64-165-405

| BID ITEM NUMBER | ITEM | QUANTITY | UNIT |
|---|---|---|---|
| 110E0040 | Remove Concrete Bridge Slab | 96.5 | SqYd |
| 410E0700 | Abutment Joint Drain | 2 | Each |
| 410E2100 | Finger Type Expansion Joint Assembly | 2 | Each |
| 410E2600 | Membrane Sealant Expansion Joint | 31.8 | Ft |
| 430E0300 | Granular Bridge End Backfill | 4.7 | CuYd |
| 460E0150 | Concrete Approach Slab for Bridge | 79.6 | SqYd |
| 460E0160 | Concrete Approach Sleeper Slab for Bridge | 17.8 | SqYd |
| 460E0172 | Concrete Patching Material, Bridge Deck | 43.7 | CuFt |
| 460E0174 | Concrete Patching Material, Miscellaneous | 10.5 | CuFt |
| 460E0300 | Breakout Structural Concrete | 0.4 | CuYd |
| 460E0380 | Install Dowel in Concrete | 60 | Each |
| 480E0504 | No. 4 Rebar Splice | 15 | Each |
| 480E0505 | No. 5 Rebar Splice | 24 | Each |
| 480E0506 | No. 6 Rebar Splice | 26 | Each |
| 480E5000 | Galvanic Anode | 27 | Each |
| 491E0007 | Two Coat Bridge Deck Polymer High Friction Chip Seal | 1,837.4 | SqYd |
| 491E0110 | Abrasive Blasting of Bridge Deck | 1,837.4 | SqYd |
| 491E0120 | Bridge Deck Grinding | 1,837.4 | SqYd |
| 491E0130 | Concrete Removal, Class A | 6.7 | SqYd |
| 491E0140 | Concrete Removal, Class B | 6.7 | SqYd |

## Structure 64-149-367

| BID ITEM NUMBER | ITEM | QUANTITY | UNIT |
|---|---|---|---|
| 110E0300 | Remove Concrete Curb and Gutter | 148 | Ft |
| 410E0030 | Structural Steel, Miscellaneous | Lump Sum | LS |
| 410E2220 | Replace Expansion Device | 2 | Each |
| 460E0070 | Class A45 Concrete, Bridge Repair | 8.8 | CuYd |
| 460E0174 | Concrete Patching Material, Miscellaneous | 151.6 | CuFt |
| 460E0300 | Breakout Structural Concrete | 5.6 | CuYd |
| 460E0380 | Install Dowel in Concrete | 28 | Each |
| 460E8050 | Composite Fabric Wrap, Concrete Repair | 979 | SqFt |
| 480E0200 | Epoxy Coated Reinforcing Steel | 1,126 | Lb |
| 480E5000 | Galvanic Anode | 59 | Each |

## Structure 64-154-385

| BID ITEM NUMBER | ITEM | QUANTITY | UNIT |
|---|---|---|---|
| 009E3310 | Bridge Elevation Survey | Lump Sum | LS |
| 110E0010 | Remove Concrete Bridge Approach Slab | 234.6 | SqYd |
| 410E2600 | Membrane Sealant Expansion Joint | 167.6 | Ft |
| 430E0300 | Granular Bridge End Backfill | 16.7 | CuYd |
| 460E0070 | Class A45 Concrete, Bridge Repair | 5.2 | CuYd |
| 460E0150 | Concrete Approach Slab for Bridge | 190.4 | SqYd |
| 460E0160 | Concrete Approach Sleeper Slab for Bridge | 67.4 | SqYd |
| 460E0300 | Breakout Structural Concrete | 5.2 | CuYd |
| 460E0380 | Install Dowel in Concrete | 26 | Each |
| 480E0200 | Epoxy Coated Reinforcing Steel | 522 | Lb |
| 480E0504 | No. 4 Rebar Splice | 28 | Each |
| 480E0505 | No. 5 Rebar Splice | 48 | Each |
| 480E0506 | No. 6 Rebar Splice | 44 | Each |
| 480E5000 | Galvanic Anode | 56 | Each |
| 550E0010 | Low Slump Dense Concrete Bridge Deck Overlay | 42 | CuYd |
| 550E0100 | Concrete Removal Type 1A | 555.6 | SqYd |
| 550E0110 | Concrete Removal Type 1B | 55.6 | SqYd |
| 550E0120 | Concrete Removal Type 1C | 27.8 | SqYd |
| 550E0130 | Concrete Removal Type 1D | 27.8 | SqYd |
| 550E0140 | Concrete Removal Type B | 20.0 | Ft |
| 550E0200 | Class A45 Concrete Fill | 11.4 | CuYd |
| 550E0500 | Finishing and Curing | 555.6 | SqYd |

## Structure 64-155-385

| BID ITEM NUMBER | ITEM | QUANTITY | UNIT |
|---|---|---|---|
| 009E3310 | Bridge Elevation Survey | Lump Sum | LS |
| 110E0010 | Remove Concrete Bridge Approach Slab | 234.6 | SqYd |
| 410E2600 | Membrane Sealant Expansion Joint | 167.6 | Ft |
| 430E0300 | Granular Bridge End Backfill | 16.7 | CuYd |
| 460E0070 | Class A45 Concrete, Bridge Repair | 5.2 | CuYd |
| 460E0150 | Concrete Approach Slab for Bridge | 190.4 | SqYd |
| 460E0160 | Concrete Approach Sleeper Slab for Bridge | 67.4 | SqYd |
| 460E0300 | Breakout Structural Concrete | 5.2 | CuYd |
| 460E0380 | Install Dowel in Concrete | 26 | Each |
| 480E0200 | Epoxy Coated Reinforcing Steel | 522 | Lb |
| 480E0504 | No. 4 Rebar Splice | 28 | Each |
| 480E0505 | No. 5 Rebar Splice | 48 | Each |
| 480E0506 | No. 6 Rebar Splice | 44 | Each |
| 480E5000 | Galvanic Anode | 56 | Each |
| 550E0010 | Low Slump Dense Concrete Bridge Deck Overlay | 40 | CuYd |
| 550E0100 | Concrete Removal Type 1A | 555.6 | SqYd |
| 550E0110 | Concrete Removal Type 1B | 55.6 | SqYd |
| 550E0120 | Concrete Removal Type 1C | 27.8 | SqYd |
| 550E0130 | Concrete Removal Type 1D | 27.8 | SqYd |
| 550E0140 | Concrete Removal Type B | 20.0 | Ft |
| 550E0200 | Class A45 Concrete Fill | 11.4 | CuYd |
| 550E0500 | Finishing and Curing | 555.6 | SqYd |

# ESTIMATE OF QUANTITIES (CONTINUED)

## Structure 64-008-205

| BID ITEM NUMBER | ITEM | QUANTITY | UNIT |
|---|---|---|---|
| 009E3310 | Bridge Elevation Survey | Lump Sum | LS |
| 410E0030 | Structural Steel, Miscellaneous | Lump Sum | LS |
| 410E0570 | Bridge End Support | Lump Sum | LS |
| 460E0174 | Concrete Patching Material, Miscellaneous | 128.1 | CuFt |
| 460E0300 | Breakout Structural Concrete | 4.4 | CuYd |
| 460E0380 | Install Dowel in Concrete | 16 | Each |
| 480E0200 | Epoxy Coated Reinforcing Steel | 68 | Lb |
| 480E5000 | Galvanic Anode | 160 | Each |
| 550E0010 | Low Slump Dense Concrete Bridge Deck Overlay | 72 | CuYd |
| 550E0100 | Concrete Removal Type 1A | 967.3 | SqYd |
| 550E0105 | Concrete Removal Type 2A | 241.3 | SqYd |
| 550E0110 | Concrete Removal Type 1B | 96.7 | SqYd |
| 550E0120 | Concrete Removal Type 1C | 48.4 | SqYd |
| 550E0130 | Concrete Removal Type 1D | 48.4 | SqYd |
| 550E0140 | Concrete Removal Type B | 20.0 | Ft |
| 550E0200 | Class A45 Concrete Fill | 7.7 | CuYd |
| 550E0500 | Finishing and Curing | 967.4 | SqYd |

## Structure 64-005-164

| BID ITEM NUMBER | ITEM | QUANTITY | UNIT |
|---|---|---|---|
| 110E0010 | Remove Concrete Bridge Approach Slab | 301.4 | SqYd |
| 410E2600 | Membrane Sealant Expansion Joint | 167.6 | Ft |
| 430E0300 | Granular Bridge End Backfill | 14.6 | CuYd |
| 460E0150 | Concrete Approach Slab for Bridge | 257.1 | SqYd |
| 460E0160 | Concrete Approach Sleeper Slab for Bridge | 67.5 | SqYd |
| 460E0380 | Install Dowel in Concrete | 14 | Each |
| 480E0504 | No. 4 Rebar Splice | 34 | Each |
| 480E0505 | No. 5 Rebar Splice | 48 | Each |
| 480E0506 | No. 6 Rebar Splice | 54 | Each |

## Structure 64-006-164

| BID ITEM NUMBER | ITEM | QUANTITY | UNIT |
|---|---|---|---|
| 110E0010 | Remove Concrete Bridge Approach Slab | 301.4 | SqYd |
| 410E2600 | Membrane Sealant Expansion Joint | 167.6 | Ft |
| 430E0300 | Granular Bridge End Backfill | 14.6 | CuYd |
| 460E0150 | Concrete Approach Slab for Bridge | 257.1 | SqYd |
| 460E0160 | Concrete Approach Sleeper Slab for Bridge | 67.5 | SqYd |
| 460E0380 | Install Dowel in Concrete | 14 | Each |
| 480E0504 | No. 4 Rebar Splice | 34 | Each |
| 480E0505 | No. 5 Rebar Splice | 48 | Each |
| 480E0506 | No. 6 Rebar Splice | 54 | Each |

## Structure 42-065-230

| BID ITEM NUMBER | ITEM | QUANTITY | UNIT |
|---|---|---|---|
| 410E0550 | Jack Superstructure, Steel Girder Bridge | Lump Sum | LS |
| 410E2220 | Replace Expansion Device | 2 | Each |
| 460E0174 | Concrete Patching Material, Miscellaneous | 16.2 | CuFt |
| 460E0300 | Breakout Structural Concrete | 0.6 | CuYd |
| 460E0310 | Breakout and Replace Grout Pad | 1 | Each |
| 480E5000 | Galvanic Anode | 10 | Each |

# ENVIRONMENTAL COMMITMENTS

**ENVIRONMENTAL COMMITMENTS**

An Environmental Commitment is a measure that SDDOT commits to implement in order to avoid, minimize, and/or mitigate a real or potential environmental impact. Environmental commitments to various agencies and the public have been made to secure approval of this project. An agency mentioned below with permitting authority can influence a project if perceived environmental impacts have not been adequately addressed. Unless otherwise designated, the Contractor's primary contact regarding matters associated with these commitments will be the Project Engineer. These environmental commitments are not subject to change without prior written approval from the SDDOT Environmental Office. The environmental commitments associated with this project are as follows:

**COMMITMENT B: FEDERALLY THREATENED, ENDANGERED, AND PROTECTED SPECIES**

**COMMITMENT B4: BALD EAGLE**

Bald eagles are known to occur in this area.

**Action Taken/Required:**

If a nest is observed within one mile of the project site, notify the Project Engineer immediately so that he/she can consult with the Environmental Office for an appropriate course of action.

**COMMITMENT C: WATER SOURCE**

The Contractor shall not withdraw water with equipment previously used outside the State of South Dakota without prior approval from the SDDOT Environmental Office. Thoroughly wash all construction equipment before entering South Dakota to reduce the risk of invasive species introduction into the project vicinity.

The Contractor shall not withdraw water directly from streams of the James, Big Sioux, and Vermillion watersheds without prior approval from the SDDOT Environmental Office.

**Action Taken/Required:**

The Contractor shall obtain the necessary permits from the regulatory agencies such as the Department of Environment and Natural Resources (DENR) and the United States Army Corps of Engineers (COE) prior to executing water extraction activities.

**COMMITMENT E: STORM WATER**

Construction activities constitute 1 acre or more of earth disturbance.

**Action Taken/Required:**

The DENR and the US Environmental Protection Agency (EPA) have issued separate general permits for the discharge of storm water runoff. The DENR permit applies to discharges on state land and the EPA permit applies to discharges on federal or reservation land. The Contractor is advised this project is regulated under the Phase II Storm Water Regulations and must receive coverage under the General Permit for Construction Activities. A Notice of Intent (NOI) will be submitted to DENR a minimum of 15 days prior to project start by the DOT Environmental Office. A letter must be received from DENR that acknowledges project coverage under this general permit before project start. The Contractor is advised that permit coverage may also be required by off-site activities, such as borrow and staging areas, which are the responsibility of the Contractor.

The Contractor shall adhere to the "Special Provision Regarding Storm Water Discharges to Waters of the State".

A major component of the storm water construction permits is development and implementation of a Storm Water Pollution Prevention Plan (SWPPP), which is a joint effort and responsibility of the SDDOT and the Contractor. Erosion control measures and best management practices will be implemented in accordance with the SWPPP. The SWPPP is a dynamic document and is to be available on-site at all times.

Information on storm water permits and SWPPPs are available on the following websites:

SDDOT:
http://www.sddot.com/business/environmental/stormwater/Default.aspx

DENR: http://www.denr.sd.gov/des/sw/stormwater.aspx

EPA: http://cfpub.epa.gov/npdes/home.cfm?program_id=6

**Contractor Certification Form:**

The "Department of Environmental and Natural Resources – Contractor Certification Form" (SD EForm – 2110LDV1-ContractorCertification.pdf) shall be completed by the Contractor or their certified Erosion Control Supervisor after the award of the contract. Work may not begin on the project until this form is signed.

The form certifies under penalty of law that the Contractor understands and will comply with the terms and conditions of the Surface Water Discharge General Permit for Storm Water Discharges Associated with Construction Activities for the Project.

The online form can be found at:
http://denr.sd.gov/des/sw/eforms/E2110LDV1-ContractorCertification.pdf

**COMMITMENT H: WASTE DISPOSAL SITE**

The Contractor shall furnish a site(s) for the disposal of construction and/or demolition debris generated by this project.

**Action Taken/Required:**

Construction and/or demolition debris may not be disposed of within the State ROW.

The waste disposal site(s) shall be managed and reclaimed in accordance with the following from the General Permit for Highway, Road, and Railway Construction/Demolition Debris Disposal Under the South Dakota Waste Management Program issued by the Department of Environment and Natural Resources.

The waste disposal site(s) shall not be located in a wetland, within 200 feet of surface water, or in an area that adversely affects wildlife, recreation, aesthetic value of an area, or any threatened or endangered species, as approved by the Project Engineer.

If the waste disposal site(s) is located such that it is within view of any ROW, the following additional requirements shall apply:

1. Construction and/or demolition debris consisting of concrete, asphalt concrete, or other similar materials shall be buried in a trench completely separate from wood debris. The final cover over the construction and/or demolition debris shall consist of a minimum of 1 foot of soil capable of supporting vegetation. Waste disposal sites provided outside of the State ROW shall be seeded in accordance with Natural Resources Conservation Service recommendations. The seeding recommendations may be obtained through the appropriate County NRCS Office. The Contractor shall control the access to waste disposal sites not within the State ROW through the use of fences, gates, and placement of a sign or signs at the entrance to the site stating "No Dumping Allowed".

2. Concrete and asphalt concrete debris may be stockpiled within view of the ROW for a period of time not to exceed the duration of the project. Prior to project completion, the waste shall be removed from view of the ROW or buried and the waste disposal site reclaimed as noted above.

The above requirements will not apply to waste disposal sites that are covered by an individual solid waste permit as specified in SDCL 34A-6-58, SDCL 34A-6-1.13, and ARSD 74:27:10:06.

Failure to comply with the requirements stated above may result in civil penalties in accordance with South Dakota Solid Waste Law, SDCL 34A-6-1.31.

All costs associated with furnishing waste disposal site(s), disposing of waste, maintaining control of access (fence, gates, and signs), and reclamation of the waste disposal site(s) shall be incidental to the various contract items.

# ENVIRONMENTAL COMMITMENTS

**COMMITMENT I: HISTORICAL PRESERVATION OFFICE CLEARANCES**

The SDDOT has obtained concurrence with the State Historical Preservation Office (SHPO or THPO) for all work included within the project limits and all department designated sources and designated option material sources, stockpile sites, storage areas, and waste sites provided within the plans.

**Action Taken/Required:**

All earth disturbing activities not designated within the plans require review of cultural resources impacts. This work includes, but is not limited to: Contractor furnished material sources, material processing sites, stockpile sites, storage areas, plant sites, and waste areas.

The Contractor shall arrange and pay for a cultural resource survey and/or records search. The Contractor has the option to contact the state Archaeological Research Center (ARC) at 605-394-1936 or another qualified archaeologist, to obtain either a records search or a cultural resources survey. A record search might be sufficient for review; however, a cultural resources survey may need to be conducted by a qualified archaeologist.

The Contractor shall provide ARC with the following: a topographical map or aerial view on which the site is clearly outlined, site dimensions, project number, and PCN. If applicable, provide evidence that the site has been previously disturbed by farming, mining, or construction activities with a landowner statement that artifacts have not been found on the site.

The Contractor shall submit the records search or cultural resources survey report and if the location of the site is within the current geographical or historic boundaries of any South Dakota reservation to SDDOT Environmental Engineer, 700 East Broadway Avenue, Pierre, SD 57501-2586 (605-773-3180). SDDOT will submit the information to the appropriate SHPO/THPO. Allow **30 Days** from the date this information is submitted to the Environmental Engineer for SHPO/THPO review.

If evidence for cultural resources is uncovered during project construction activities, then such activities shall cease and the Project Engineer shall be immediately notified. The Project Engineer will contact the SDDOT Environmental Engineer in order to determine an appropriate course of action.

SHPO/THPO review does not relieve the Contractor of the responsibility for obtaining any additional permits and clearances for Contractor furnished material sources, material processing sites, stockpile sites, storage areas, plant sites, and waste areas that affect wetlands, threatened and endangered species, or waterways. The Contractor shall provide the required permits and clearances to the Project Engineer at the preconstruction meeting.

# TABLE FOR REMOVAL AND INSTALLATION OF GUARDRAIL AND RELATED ITEMS

| LOCATION | | | REMOVE 3 CABLE GUARDRAIL | REMOVE BEAM GUARDRAIL | REMOVE 3 CABLE GUARDRAIL ANCHOR ASSEMBLY | REMOVE 3 CABLE GUARDRAIL SLIP BASE ANCHOR ASSEMBLY | REMOVE W BEAM GUARDRAIL BREAKAWAY CABLE TERMINAL | CONTRACTOR FURNISHED BORROW EXCAVATION | BASE COURSE | ASPHALT CONCRETE COMPOSITE | 3 CABLE GUARDRAIL | 3 CABLE GUARDRAIL SLIP BASE ANCHOR ASSEMBLY | 3 CABLE GUARDRAIL ANCHOR ASSEMBLY | STRAIGHT DOUBLE CLASS A THRIE BEAM GUARDRAIL WITH WOOD POSTS | STRAIGHT CLASS A W BEAM GUARDRAIL WITH WOOD POSTS | W BEAM TO THRIE BEAM GUARDRAIL TRANSITION | W BEAM GUARDRAIL BREAKAWAY CABLE TERMINAL | W BEAM GUARDRAIL POST AND BLOCK |
|---|---|---|---|---|---|---|---|---|---|---|---|---|---|---|---|---|---|---|
| BRIDGE CORNER | LANE-SHOULDER | | | | | | | | | | | | | | | | | |
| | | | Ft | Ft | Each | Each | Each | CuYd | Ton | Ton | Ft | Each | Each | Ft | Ft | Each | Each | Each |
| **STR.NO. 64-164-405** | | | | | | | | | | | | | | | | | | |
| **MRM 0.05** | | | | | | | | | | | | | | | | | | |
| Northwest Corner | SBL | Median | - | 256.25 | - | - | - | 50 | 30 | 8 | 327 | 1 | 1 | 12.5 | 62.5 | 1 | 1 | - |
| Southwest Corner | SBL | Outside | 286 | 81.25 | 2 | - | 1 | 1700 | 20 | 22 | 455 | 1 | 1 | 12.5 | 62.5 | 1 | 1 | - |
| **STR.NO. 64-154-385** | | | | | | | | | | | | | | | | | | |
| **MRM 2.48** | | | | | | | | | | | | | | | | | | |
| Northeast Corner | SBL | Median | 247 | 75 | 1 | 1 | 1 | 35 | 55 | 8 | 375 | 1 | 1 | 12.5 | 62.5 | 1 | 1 | - |
| Northwest Corner | SBL | Outside | 254 | 75 | 1 | 1 | 1 | 25 | 5 | 21 | 439 | 1 | 1 | 12.5 | 62.5 | 1 | 1 | - |
| **STR.NO. 64-155-385** | | | | | | | | | | | | | | | | | | |
| **MRM 2.48** | | | | | | | | | | | | | | | | | | |
| Southeast Corner | NBL | Outside | 254 | 75 | 1 | 1 | 1 | 660 | 20 | 21 | 439 | 1 | 1 | 12.5 | 62.5 | 1 | 1 | - |
| Southwest Corner | NBL | Median | 231 | 75 | 1 | 1 | 1 | 60 | 40 | 8 | 375 | 1 | 1 | 12.5 | 62.5 | 1 | 1 | - |
| **STR.NO. 64-149-367** | | | | | | | | | | | | | | | | | | |
| **MRM 4.35** | | | | | | | | | | | | | | | | | | |
| Northwest Corner | | | - | - | - | - | - | - | - | - | - | - | - | - | - | - | - | 1 |
| Southwest Corner | | | - | - | - | - | - | - | - | - | - | - | - | - | - | - | - | 1 |
| Northeast Corner | | | - | - | - | - | - | - | - | - | - | - | - | - | - | - | - | 1 |
| Southeast Corner | | | - | - | - | - | - | - | - | - | - | - | - | - | - | - | - | 1 |
| **STR.NO. 64-008-205** | | | | | | | | | | | | | | | | | | |
| **MRM 26.71** | | | | | | | | | | | | | | | | | | |
| Northwest Corner | | | - | - | - | - | - | - | - | - | - | - | - | - | - | - | - | 1 |
| Southwest Corner | | | - | - | - | - | - | - | - | - | - | - | - | - | - | - | - | 1 |
| Northeast Corner | | | - | - | - | - | - | - | - | - | - | - | - | - | - | - | - | 1 |
| Southeast Corner | | | - | - | - | - | - | - | - | - | - | - | - | - | - | - | - | 1 |
| **STR.NO. 64-005-164** | | | | | | | | | | | | | | | | | | |
| **MRM 30.92** | | | | | | | | | | | | | | | | | | |
| Northeast Corner | SBL | Median | 199 | 81.25 | 1 | 1 | 1 | 10 | 5 | 8 | 359 | 1 | 1 | 12.5 | 62.5 | 1 | 1 | - |
| Northwest Corner | SBL | Outside | 286 | 81.25 | 2 | - | 1 | - | - | 20 | 247 | 1 | 1 | 12.5 | 62.5 | 1 | 1 | - |
| **STR.NO. 64-006-164** | | | | | | | | | | | | | | | | | | |
| **MRM 30.92** | | | | | | | | | | | | | | | | | | |
| Southeast Corner | NBL | Outside | 286 | 81.25 | 2 | - | 1 | 10 | 11 | 18 | 359 | 1 | 1 | 12.5 | 62.5 | 1 | 1 | - |
| Southwest Corner | NBL | Median | 183 | 81.25 | 1 | 1 | 1 | 70 | 90 | 10 | 343 | 1 | 1 | 12.5 | 62.5 | 1 | 1 | - |
| | | **TOTALS:** | **2226** | **962.5** | **12** | **6** | **9** | **2620** | **276** | **144** | **3718** | **10** | **10** | **125** | **625** | **10** | **10** | **8** |

## TABLE OF GUARDRAIL DELINEATORS & OBJECT MARKERS

| LOCATION | | TYPE 2 OBJECT MARKER BACK TO BACK | TYPE 2 OBJECT MARKER | GUARDRAIL TERMINAL END OBJECT MARKER (ADHESIVE) | GUARDRAIL DELINEATOR | | | |
|---|---|---|---|---|---|---|---|---|
| | | | | N.A.B.I. | BEAM | | CABLE | |
| | | M # | M # | E # | B # | | C # | |
| BRIDGE CORNER | LANE-SHOULDER | | | | Yellow | White | Yellow | White |
| **STR.NO. 64-164-405** | | | | | | | | |
| **MRM 0.05** | | | | | | | | |
| Northwest Corner | SBL Median | | 1 | 1 | 2 | | 5 | |
| Southwest Corner | SBL Outside | | 1 | 1 | | 2 | | 8 |
| **STR.NO. 64-154-385** | | | | | | | | |
| **MRM 2.48** | | | | | | | | |
| Northeast Corner | SBL Median | | 1 | 1 | 2 | | 6 | |
| Northwest Corner | SBL Outside | | 1 | 1 | | 2 | | 8 |
| **STR.NO. 64-155-385** | | | | | | | | |
| **MRM 2.48** | | | | | | | | |
| Southeast Corner | NBL Outside | | 1 | 1 | | 2 | | 8 |
| Southwest Corner | NBL Median | | 1 | 1 | 2 | | 6 | |
| **STR.NO. 64-005-164** | | | | | | | | |
| **MRM 30.92** | | | | | | | | |
| Northeast Corner | SBL Median | | 1 | 1 | 2 | | 6 | |
| Northwest Corner | SBL Outside | | 1 | 1 | | 2 | | 4 |
| **STR.NO. 64-006-164** | | | | | | | | |
| **MRM 30.92** | | | | | | | | |
| Southeast Corner | NBL Outside | | 1 | 1 | | 2 | | 6 |
| Southwest Corner | NBL Median | | 1 | 1 | 2 | | 6 | |
| | **TOTALS** | **-** | **10** | **10** | **10** | **10** | **29** | **34** |
| | | | | | **83** | | | |

# - For **KEY**, Refer to Standard Plate 632.40 - Sheet 1 of 4.

**N.A.B.I.** = Not A Bid Item - Cost is incidental to the contract unit prices for the various items.

## UTILITIES

The Contractor shall contact the involved utility companies through South Dakota One Call (1-800-781-7474) prior to starting work. It shall be the responsibility of the Contractor to coordinate work with the utility owners to avoid damage to existing facilities.

Utilities are not planned to be affected on this project. If utilities are identified near the improvement area, the Contractor shall contact the Project Engineer to determine modifications that will be necessary to avoid utility impacts.

## SURFACING THICKNESS DIMENSIONS

Plans tonnage will be applied even though the thickness may vary from that shown on the plans.

At those locations where material must be placed to achieve a required elevation, plans tonnage may be varied to achieve the required elevation.

## EXISTING NRC PAVEMENT

**At Str. No. 64-164-405:**

The existing pavement is 11” x 24’ Nonreinforced PCC Pavement.

Existing contraction joints are spaced at approximately 20’. Longitudinal joints are reinforced with No. 5 x 30” deformed tie bars spaced 48” center to center. Transverse joints are reinforced with 1¼” x 18” plain round dowel bars spaced 12” center to center.

The aggregate in the existing NRC Pavement is quartzite.

**At Str. No. 64-165-405:**

The existing pavement is 11” x 24’ Nonreinforced PCC Pavement.

Existing contraction joints are spaced at approximately 15’. Longitudinal joints are reinforced with No. 5 x 30” deformed tie bars spaced 48” center to center. Transverse joints are reinforced with 1¼” x 18” plain round dowel bars spaced 12” center to center.

The aggregate in the existing NRC Pavement is quartzite.

**At Str. Nos. 64-154-385 & 64-155-385:**

The existing pavement is 11½” x 26’ Nonreinforced PCC Pavement.

Existing contraction joints are spaced at approximately 20’. Longitudinal joints are reinforced with No. 5 x 30” deformed tie bars spaced 48” center to center. Transverse joints are reinforced with 1¼” x 18” plain round dowel bars spaced 12” center to center.

The aggregate in the existing NRC Pavement is quartzite.

**At Str. Nos. 64-005-164 & 64-006-164:**

The 40’ of existing pavement between the approach slab and the Continuously Reinforced to Nonreinforced PCC Pavement Terminal is 11” x 26’ Nonreinforced PCC Pavement.

Existing contraction joints are spaced at approximately 20’. Longitudinal joints are reinforced with No. 5 x 30” deformed tie bars spaced 48” center to center. Transverse joints are reinforced with 1¼” x 18” plain round dowel bars spaced 12” center to center.

The aggregate in the existing NRC Pavement is quartzite.

## RESTORATION OF GRAVEL CUSHION

An inspection of the gravel cushion subgrade shall be made after removing concrete from each pavement replacement area. Areas of excess moisture shall be dried to the satisfaction of the Engineer. Loose material shall be removed. Each replacement area shall be leveled and compacted to the satisfaction of the Engineer.

If additional gravel cushion material is required, the Contractor shall furnish, place and compact gravel cushion to the satisfaction of the Engineer at no additional cost to the State.

Cost for this work shall be incidental to the contract unit price per square yard for the corresponding bid item for Nonreinforced PCC Pavement.

## GRAVEL CUSHION

If quarried ledge rock is used in the Gravel Cushion, a maximum blend of 40% quarried ledge rock will be allowed.

## NONREINFORCED PCC PAVEMENT

The aggregate may require screening as determined by the Engineer.

Fine aggregate shall conform to Section 800.2 D Alkali Silica Reactivity (ASR) Requirements of the Specifications.

The concrete mix shall be A45 according to section 460.

In lieu of an automatic subgrader operating from a preset line, a motor grader or other suitable equipment may be used to trim the gravel cushion to final grade prior to placement of concrete. There will be no direct payment for trimming of the gravel cushion for PCC pavement. The trimming will be considered incidental to the related items required for PCC Pavement.

Automatic dowel bar inserters will not be allowed on this project.

A construction joint will be sawed whenever new concrete pavement is placed adjacent to existing concrete pavement.

The transverse contraction joints shall be perpendicular to the centerline as detailed in the standard plates 380.01 and 380.08. In multilane areas the transverse contraction joints shall be perpendicular to the centerline and be in a straight line across the width of the pavement. In special situations the Engineer may pre-approve transverse contraction joints that do not meet these requirements. All nonconforming transverse contraction joints that are not pre-approved shall be removed at the Contractor’s expense. Any method of placement that cannot produce these requirements shall not be allowed to continue.

In addition to traditional field inspection of reinforcement, a Ground Penetrating Radar (GPR) unit may be used to verify reinforcement locations in the hardened concrete. The GPR may be used anytime prior to the Acceptance of Field Work being issued. All costs related to corrective measures, including but not limited to concrete removal or cutting of reinforcement, price deducts, and delays to the project schedule shall be the responsibility of the Contractor.

The surface of the mainline paving shall be longitudinally tined. All other areas shall be tined as directed by the Engineer. The surface of the mainline paving shall be tined to within 2 or 3 feet of the face of the curb. A self-propelled mechanical tiner will not be required.

## TIE BARS AND LONGITUDINAL JOINTS

The use of automatic tie bar inserters will only be allowed on the vertical edge of longitudinal construction joints. The use of automatic tie bar inserters will not be allowed on sawed longitudinal joints.

Tie bars shall be held in the specified position parallel to the slab surface and perpendicular to the centerline by a supporting device. Tie bars or tie bar baskets shall be securely staked to the roadbed and shall hold the bar at the correct spacing, alignment, and elevation.

Tie bars will not require supports if inserted into the side of the pavement during slip form paving of the longitudinal construction joint operation. Failure to acquire the correct tie bar locations or position in the construction joint shall require the bars to be corrected and a change made to the operation which may include drilling and epoxy bars or other methods as approved by the engineer.

The final position of each tie bar shall be within the following tolerances:

- Vertical Placement: ± T/6 for any part of the tie bar (T = slab thickness)
- Transverse Placement (side shift): ± 3 inches when measured perpendicular to the longitudinal joint line

If the tie bar does not meet the requirements and tolerances specified, corrective action shall be performed at the Contractor’s expense to the satisfaction of the engineer.

## STEEL BAR INSERTION

Locations and quantities of concrete replacement are subject to change in the field at the discretion of the Engineer. The Contractor will be responsible for ordering the actual quantity of steel bars necessary to complete the work.

The Contractor shall insert the steel bars (1½” x 18” epoxy coated plain round dowel bars and No. 11 x 18” epoxy coated deformed tie bars for transverse joints and No. 5 x 24” epoxy coated deformed tie bars for longitudinal joints) into drilled holes in the existing concrete pavement. An epoxy resin adhesive must be used to anchor the steel bar in the drilled hole.

Plain round dowel bars shall be cut to the specified length by sawing and shall be free from burring or other deformations. Shearing will not be permitted.

Steel bars shall be inserted in the transverse joint on 18" centers. The first steel bar in the transverse joint shall be placed 9" from the edge of the slab closest to centerline. Steel bars shall be inserted in the longitudinal joint on 30" centers and shall be a minimum of 15" from either transverse joint. A typical one-lane patch 12' wide and 6’ long will require 18 steel bars (8 in each transverse joint and 2 in the longitudinal joint). It will be necessary to laterally adjust the location of some of the inserted steel bars when the dimensions above interfere with existing steel bar locations.

A rigid frame or mechanical device will be required to guide the drill to ensure proper horizontal and vertical alignment of the steel bars in the drilled holes.

The epoxy used to hold the steel bars in the drilled holes shall start to gel before placing fresh concrete or as per manufacturer’s recommendations.

Cost for the epoxy resin adhesive, steel bars, drilling of holes, inserting the steel bars into the drilled holes and all other items incidental to the insertion of the steel bars shall be included in the contract unit price per each for Insert Steel Bar in PCC Pavement.

## SAW AND SEAL JOINTS

All longitudinal and transverse joints at concrete replacement areas shall be sawed and sealed.

Joints shall not be sealed unless they are thoroughly clean and dry. Cleaning shall be accomplished by sand blasting and other tools as necessary. Just prior to sealing, each joint shall be blown out using a jet of compressed air to remove all traces of dust.

Longitudinal and Transverse joints may be sealed with either Hot Poured Elastic Joint Sealer or Low Modulus Silicone Sealant.

Acceptance of the Low Modulus Silicone Sealant and Hot Poured Elastic Joint Sealer will be based on visual inspection by the Engineer.

Cost for sawing and sealing of the longitudinal construction joint and transverse joints shall be incidental to the contract unit price per square yard for the corresponding bid item for Nonreinforced PCC Pavement.

## REMOVE ASPHALT CONCRETE PAVEMENT

The Contractor shall remove 2" of the existing guardrail surfacing so that new guardrail surfacing can be placed. Refer to the following table for Remove Asphalt Concrete Pavement quantities.

| STRUCTURE | REMOVE ASPHALT CONCRETE PAVEMENT SQYD |
|---|---|
| **64-164-405** | |
| Southwest Corner | 68 |
| **64-154-385** | |
| Northeast Corner | 89 |
| Northwest Corner | 74 |
| **64-155-385** | |
| Southeast Corner | 64 |
| Southwest Corner | 82 |
| **64-005-164** | |
| Northeast Corner | 110 |
| Northwest Corner | 156 |
| **64-006-164** | |
| Southeast Corner | 75 |
| Southwest Corner | 126 |
| **TOTAL:** | **844** |

## RESEAL PCC PAVEMENT JOINT AT CONTINUOUSLY REINFORCED TO NONREINFORCED PCC PAVEMENT TERMINALS

Existing expansion joints for the Continuously Reinforced to Nonreinforced PCC Pavement Terminals near the structures 64-005/006-164 shall be cleaned and resealed with Hot Poured Elastic Joint Sealer.

Joints shall not be sealed unless they are thoroughly clean and dry. Cleaning shall be accomplished by sandblasting and other tools as necessary. Sand blasting of both sides of the vessel shall be accomplished simultaneously with a mechanical device approved by the Engineer. Just prior to sealing, each joint shall be blown out using a jet of compressed air to remove all traces of dust.

It is not essential that all of the sealant be removed. Remaining sealant adhering to the sides may remain in place if the Engineer determines that it is not detrimental to the joint.

Cost for cleaning and resealing longitudinal joints shall be included in the contract unit price per foot for Reseal PCC Pavement Joint – Hot Pour.

## RESET DROP INLET FRAME & GRATE

The Contractor shall reset drop inlet frame and grates on drop inlets that are in place at structures shown in the table below.

The elevations of the frame and grate shall be flush with the top of the finished approach slab.

| STR.NO. LOCATION | LANE-SHOULDER | CLASS M6 CONCRETE CU.YDS. | REMOVE & RESET FRAME & GRATE EACH |
|---|---|---|---|
| **64-164-405 – MRM 0.05** | | | |
| West End | SBL-Median | 0.03 | 1 |
| West End | SBL-Outside | 0.03 | 1 |
| East End | SBL-Median | 0.01 | 1 |
| East End | SBL-Outside | 0.01 | 1 |
| **64-154-385 – MRM 2.48** | | | |
| South End | SBL-Median | 0.03 | 1 |
| South End | SBL-Outside | 0.03 | 1 |
| North End | SBL-Median | 0.02 | 1 |
| North End | SBL-Outside | 0.02 | 1 |
| **64-155-385 – MRM 2.48** | | | |
| South End | NBL-Median | 0.02 | 1 |
| South End | NBL-Outside | 0.02 | 1 |
| North End | NBL-Median | 0.01 | 1 |
| North End | NBL-Outside | 0.01 | 1 |
| **TOTALS:** | | **0.24*** | **12** |

*The quantity of Class M6 Concrete shall be incidental to the contract unit price per each for Reset Drop Inlet Frame and Grate Assembly.

## CONTRACTOR FURNISHED BORROW EXCAVATION

The Contractor shall provide a suitable site for Contractor furnished borrow excavation material. The Contractor is responsible for obtaining all required permits and clearances for the borrow site. The borrow material shall be approved by the Engineer. The plans quantity for Contractor Furnished Borrow Excavation as shown in the Estimate of Quantities will be the basis of payment for this item.

Prior to placement or removal of fill material, the Contractor will be required to remove four inches of topsoil and replace it following the placement of the new fill material. Removing and replacing topsoil will not be measured for payment but shall be incidental to the contract unit price per cubic yard for Contractor Furnished Borrow Excavation.

The Contractor will be allowed to place topsoil in lieu of fill material if the fill depth is one foot or less. By doing this the Contractor will not be required to remove and replace the four inches of in place topsoil.

Compaction of the fill material shall be to the satisfaction of the Engineer.

It is not anticipated that water for compaction will be required; however, if in the opinion of the Engineer the fill material is extremely dry, water may be ordered and placed to the satisfaction of the Engineer. Cost for water shall be incidental to the contract unit price per cubic yard for Contractor Furnished Borrow Excavation.

Restoration of the Contractor furnished borrow excavation site shall be the responsibility of the Contractor.

## WATER FOR COMPACTION

Cost for water for compaction of the Base Course shall be incidental to the contract unit prices for the various contract items. The moisture required at the time of compaction will be 6%± unless otherwise directed by the Engineer.

## CORRUGATED METAL PIPE

Corrugated metal pipes shall have 2 ⅔-inch X ½-inch corrugations for 42-inch and smaller round pipe and 48-inch and smaller arch pipe unless otherwise stated in the plans. Corrugated metal pipes shall have 3-inch X 1-inch or 5-inch X 1-inch corrugations for 48-inch and larger round pipe and 54-inch and larger arch pipe unless otherwise stated in the plans.

## PERMANENT SEEDING AND MULCHING

The areas to be seeded and mulched include all disturbed areas within the right-of-way resulting from the work required by this contract.

Type C Permanent Seed Mixture shall consist of the following:

| Grass Species | Variety | Pure Live Seed (PLS) (Pounds/Acre) |
|---|---|---|
| Western Wheatgrass | Arriba, Flintlock, Rodan, Rosana | 16 |
| Canada Wildrye | Mandan | 2 |
| | Total: | 18 |

The areas to be seeded and mulched are estimated at 2.1 acres.

Cost for seeding and mulching shall be incidental to the contract lump sum price for Erosion Control.

## MYCORRHIZAL INOCULUM

Mycorrhizal inoculum shall consist of mycorrhizal fungi spores and mycorrhizal fungi-infected root fragments in a solid carrier. The carrier may include organic materials, calcinated clay, or other materials consistent with application and good plant growth. The supplier shall provide certification of the fungal species claimed and the live propagule count. The inoculum shall include the following fungal species:

*Glomus intraradices* 25%
*Glomus aggregatu* 25%
*Glomus mosseae* 25%
*Glomus etunicatum* 25%

All seed shall be inoculated by the seed supplier with a minimum of 100,000 live propagules of mycorrhizal fungi per acre. All costs of inoculating the seed shall be incidental to the contract lump sum price for Erosion Control.

The mycorrhizal inoculum shall be as shown below or an approved equal:

| Product | Manufacturer |
|---|---|
| MycoApply | Mycorrhizal Applications, Inc.<br>Grants Pass, OR<br>Phone: 1-866-476-7800<br>http://www.mycorrhizae.com/ |

## SEQUENCE OF OPERATIONS

Work on the twin continuous composite girder structures over the Big Sioux River at MRM 0.05, Str. Nos. 64-164/165-405 will not be allowed to concur with work on the twin continuous concrete structures over River Drive at N. Sioux City, MRM 2.48, Str. Nos. 64-154/155-385. Work on all other structures may concur with the work on either of Big Sioux River at MRM 0.05, Str. Nos. 64-164/165-405 or River Drive at N. Sioux City, MRM 2.48, Str. Nos. 64-154/155-385.

Exit 53 crossroad (structure number 42-065-230) traffic shall be controlled with stop control per *Plate Number 634.25*.

The following Sequence of Operations is to be followed unless an alternative is submitted a minimum of two weeks prior to the preconstruction meeting and approved.

1. Install Traffic Control devices per the details in these plans.
2. Complete bridge work.
3. Install either temporary or permanent pavement marking per the direction of the Engineer on closed lanes prior to opening to traffic.
4. Remove and relocate traffic control to complete bridge work at another site.
5. Repeat sequence for other site.

## MAINTENANCE OF TRAFFIC

Sufficient traffic control devices have been included in these plans for four interstate mainline structure lane closures; four interstate mainline non-structure lane closures; two crossroad lane closures using traffic signals, one at structure number 64-149-367 Northshore Drive and one at structure number 64-008-205 SD 50 over Interstate 29; and one two way stop crossroad closure at structure number 42-065-230.

In tangent sections of interstate crossroad lane closures, Channelizing device spacing shall be reduced from 2G to G. During periods of no work on interchange crossroads, eight foot double-sided Type 3 Barricades shall be placed at 50 foot spacing in the work area.

Mobile work traffic control shall be only used for continuously moving work operations such as grooving or applying pavement marking for temporary or permanent pavement marking.

## TRAFFIC CONTROL MOVABLE CONCRETE BARRIER

The work at the structure numbers 64-164/165-405 at the Big Sioux River, MRM 0.05; 64-154/155-385 at River Drive, North Sioux City, MRM 2.48; and at 64-005/006-164 over a creek, MRM 30.92 will all require traffic control movable concrete barrier to be used during closure of a lane on Interstate 29. Lane closure at structures numbered 64-164/165-405 at the Big Sioux River will require 188 traffic control movable concrete barrier, lane closures at structures numbered 64-154/155-385 at River Drive, North Sioux City will require 118 traffic control movable concrete barrier. Lane closures at structures numbered 64-005/006-164 at I-29, MRM 30.92 will require 110 traffic control movable concrete barrier.

218 traffic control movable concrete barrier shall be obtained from the State South Maintenance Yard, located west of Solberg Avenue south of Interstate 229 at Sioux Falls, hauled, used on the project, and 218 traffic control movable concrete barrier returned to the Sioux Falls State maintenance yard upon completion of the project.

## TRAFFIC CONTROL BARRIER (CONTINUED)

80 traffic control movable concrete barrier shall be obtained from the State DOT Junction City Maintenance shop located just east of I-29 Exit 26, hauled, used on the project, and 80 traffic control movable concrete barrier returned to the SDDOT Junction City maintenance yard at the completion of the project.

The number of traffic control movable concrete barrier used shall be approved by the Engineer.

The cost to pick up the traffic control movable concrete barrier from the Sioux Falls DOT South Maintenance Yard or the Junction City DOT Maintenance Yard, place it for traffic control, and return the traffic control movable barrier to the yard shall be paid for at the contract unit price per each for Traffic Control Movable Concrete Barrier.

## REMOVE AND RESET TRAFFIC CONTROL MOVABLE CONCRETE BARRIER

118 traffic control movable concrete barrier are anticipated to be relocated and reset to another work site within the project.

Cost for relocating and resetting the traffic control movable concrete barrier for a different traffic control phase shall be paid for at the contract unit price per each for Remove and Reset Traffic Control Movable Concrete Barrier.

## TEMPORARY CONCRETE BARRIER END PROTECTION MODULE SET OR REPAIR KIT

The Contractor shall furnish crash tested and approved end protection on movable concrete barrier installed on this project. End protection shall be installed parallel to the roadway and a minimum of two traffic control movable concrete barrier shall be installed in line with and behind the end protection. The end protection shall be attached to the traffic control movable concrete barrier as specified by the manufacturer.

Costs for furnishing, installing, maintaining, and removing the end protection will be paid for at the contract unit price per each for Temporary Concrete Barrier End Protection. The concrete Barrier End Protection shall meet the requirements of TL3 for NCHRP 350 or MASH.

The Contractor will be required to have immediately available replacement parts for the end protection. The Contractor will be expected to repair the end protection within 24 hours after impact or damage.

Costs for replacement modules shall be paid for at the contract unit price per each for Temporary Concrete Barrier End Protection Module Set or Repair Kit.

## REMOVE AND RESET TEMPORARY CONCRETE BARRIER END PROTECTION

Cost to move and reset the concrete barrier end protection shall be included in the contract unit price per each for Remove and Reset Temporary Concrete Barrier End Protection.

## LINEAR DELINEATION SYSTEM PANEL, BARRIER MOUNTED

A linear delineation system panel shall be attached to each side of the barrier section. The color shall be the same as the nearest pavement marking, white along outside edge lines or yellow for the left side on one way traffic sections. The linear delineation system shall be 34 inches long and 6 inches in height and be constructed of aluminum formed into a shape to provide retroreflective properties across a wide range of angles. It shall be sheeted with ASTM D4956 Type XI sheeting. The panel shall be installed at the center of the barrier when measured along the length, with the top of the panel 4 inches below the top of the barrier. Installation shall be as per the manufacturer's recommendation using stainless steel inserts and bolts. This will allow for easy removal for replacement of damaged panels or to replace with an alternate color.

Replacement of damaged linear delineation system panels shall be furnished and replaced by the Contractor. All costs associated with furnishing, installing, and maintaining the linear delineation system shall be included in the contract unit price per each for Linear Delineation System Panel, Barrier Mounted.

## 4" TEMPORARY PAVEMENT MARKING TAPE TYPE I

The quantity for white 24" stop lines is estimated at 4" equivalent {432 feet}.

Quantity for yellow four inch no passing zone marking at stop conditions is estimated to be 7200 feet.

## INCIDENTS

An incident is an emergency road user occurrence, a natural disaster, or other unplanned event that affects or impedes the normal flow of traffic such as an accident, hazardous materials spill, or similar event.

The Contractor shall set up a meeting prior to start of work to plan and coordinate responses to an incident. The Contractor shall invite the Department of Transportation, the South Dakota Highway Patrol, the City of North Sioux City, the City of Sioux City, City of Vermillion, Clay County, and other local emergency response and law enforcement entities as deemed necessary to the meeting. The Engineer shall conduct the meeting.

The Contractor will assist in maintaining traffic as required by these plan notes and as agreed to at the meeting.

The Contractor will be required to modify messages on portable changeable message signs or relocate portable changeable message signs. The Contractor may be asked to provide flaggers to direct or detour of traffic. The Contractor should be prepared to relocate advance warning signs if determined to be necessary for a major traffic incident lasting for more than two hours. Ground mounted advance warning signs may be covered and additional portable warning signs provided.

No additional payment will be made for the modification of portable changeable message sign messages or the relocation of portable changeable message signs. Cost for flagging shall be paid at the contract unit price per Hour for Flagging. Cost for the relocation of an advanced warning sign due to an incident shall be 50% of the designated sign rate as per Section 634.5 Basis of Payment in the Standard Specifications. Cost for additional signs shall be paid at the contract unit bid price per square foot for Traffic Control Signs.

REV. 07/20/16 dw

## PORTABLE CHANGEABLE MESSAGE SIGNS

Portable changeable message signs shall be used to supplement other traffic control warning signs or notify motorists of crashes and stopped traffic due to crashes. These signs are to assist when the queue of stopped traffic extends past fixed location ground mounted warning signs. Messages used during incidents on these signs may be:

CRASH AHEAD
BE PREPARED TO STOP

or

CRASH AHEAD
STOPPED TRAFFIC AHEAD

Two portable changeable message signs shall be ready for immediate use for incident management for crash response or other emergency. The above messages shall be preprogrammed and ready for activation. These signs shall be equipped with cell phone activation. The cell phone number shall be provided only to responsible individuals in charge of the project.

If Interstate 29 is closed due to an incident and traffic must be detoured, messages may be displayed to warn of the closure and the detour.

## IOWA WIDTH RESTRICTION

The Contractor shall complete the following:

1. Obtain all permits required of the Contractor for city/county roads prior to detouring over-width vehicles.
2. Install signs in Iowa per the details in these plans.
3. Ensure signs are spaced per the Iowa spacing requirements on all roads in Iowa.
4. Follow the Iowa one call utility locate process and locate all underground utilities.
5. Obtain Iowa DOT work on right of way permit(s) necessary install and maintain signs on Interstate 29 and Iowa Highway 12. The contact person is Kelly Mulvihill, EOT (712.202.0821).
6. Provide the State of Iowa 511 notification 10-days in advance of the installation of traffic control devices that restrict the roadway width.

## TEMPORARY TRAFFIC SIGNALS

Microwave detection shall be provided for two-way single lane interchange crossroad traffic. In addition, microwave detection shall be provided for traffic at the top of the I-29 northbound off ramp at STR. No. 64-008-205.

It is anticipated the portable temporary traffic control signals at Northshore Drive, Str. No. 64-149-367 will be operated with 2 phases. The portable temporary traffic control signals at SD 50, Str. No. 64-008-205 will be operated with up to 3 phases.

Microwave detection shall be provided. Detection shall be provided for the traffic at the top of the I-29 northbound off ramp at
Str. No. 64-008-205.

The traffic signals at SD50 Structure 64-008-205 shall operate ΦB only, ΦC only, or Φ B then Φ C as traffic demand and volume dictates.

## REDUCED SPEED LIMITS

The R2-1 Speed Limit 65 and 45 signs and W3-5 Speed Reduction (45 and 65 MPH) signs are to be continuously used 24 hours per day 7 days per week for lane closures at structure locations.

The R2-1 Speed Limit 65 and 45 signs and W3-5 Speed Reduction (45 and 65 MPH) signs are to be used for lane closures on mainline locations where off roadway structure work is being completed. The R2-1 Speed Limit 45 signs and the W3-5 Speed Reduction 45 shall be covered or removed when the work space is not manned at the non-structure mainline locations. The signs shall be installed in accordance with Standard Plate 634.63
Sheet 1of 2 and Sheet 2 of 2.

## TEMPORARY RAISED PAVEMENT MARKERS

Temporary Raised Pavement Markers shall be used on closure tapers and temporary edgelines.

Cost for furnishing, installing, maintaining (including cleaning and replacing, as necessary), and removal shall be included in the contract unit price per foot (4" equivalent) for Temporary Raised Pavement Markers.

## SIGNAL PHASINGS

Structure 64-149-367 -- Northshore Drive over Interstate 29

**PHASING AND SEQUENCING**

| SIGNAL HEADS / INTERVAL | 1 | 2 | 3 | 4 | 5 | 6 | FLASH DISPLAY |
|---|---|---|---|---|---|---|---|
| FACING EAST (WB Northshore Drive) | G | Y | R | R | R | R | R |
| FACING WEST (EB Northshore Drive) | R | R | R | G | Y | R | R |
| | | | | | | | |
| | | | | | | | |
| | | | | | | | |
| CYCLE / TIME / CYCLE LENGTH | TIMINGS BASED ON MAXIMUM 323 FT* DISTANCE BETWEEN OPPOSING STOP | | | | | | FLASH TIME |
| 1 / 24 HOURS/DAY / 76 | | | | | | | |
| PHASES | ϕ A | | | ϕ B | | | |
| MOVEMENTS | → | | | ← | | | FAILURE OR EMERGENCY ONLY |
| MINIMUM INITIAL | | | | | | | |
| PASSAGE | | | | | | | |
| MAXIMUM | 24 | | | 24 | | | |
| VEHICLE CLEARANCES | | 4 | 10 | | 4 | 10 | |

## SIGNAL PHASINGS

Structure 64-008-205 -- SD50 over Interstate 29

**PHASING AND SEQUENCING**

| SIGNAL HEADS / INTERVAL | 1 | 2 | 3 | 4 | 5 | 6 | 7 | 8 | 9 | FLASH DISPLAY |
|---|---|---|---|---|---|---|---|---|---|---|
| FACING EAST (WB SD 50) | G | Y | R | R | R | R | R | R | R | R |
| FACING WEST (EB SD 50) | R | R | R | G | Y | R | R | R | R | R |
| FACING SOUTH(NB OFF RAMP) | R | R | R | R | R | R | G | Y | R | R |
| | | | | | | | | | | |
| | | | | | | | | | | |
| CYCLE / TIME / CYCLE LENGTH | TIMINGS BASED ON MAXIMUM 1020 FT* DISTANCE BETWEEN OPPOSING STOP | | | | | | | | | FLASH TIME |
| 1 / 24 HOURS/DAY / 195 | | | | | | | | | | |
| PHASES | ϕ A | | | ϕ B | | | ϕ C | | | |
| MOVEMENTS | → | | | ← | | | ↰ | | | FAILURE OR EMERGENCY ONLY |
| MINIMUM INITIAL | | | | | | | | | | |
| PASSAGE | | | | | | | | | | |
| MAXIMUM | 33 | | | 33 | | | 32 | | | |
| VEHICLE CLEARANCES | | 4 | 28 | | 4 | 28 | | 4 | 29 | |

**STORM WATER POLLUTION PREVENTION PLAN CHECKLIST**
*(The numbers right of the title headings are **reference numbers** to the GENERAL PERMIT FOR STORM WATER DISCHARGES ASSOCIATED WITH CONSTRUCTION ACTIVITIES*

**SITE DESCRIPTION (4.2 1)**

- **Project Limits: See Title Sheet (4.2 1.b)**
- **Project Description: See Title Sheet (4.2 1.a.)**
- **Site Map(s): See Title Sheet and Plans (4.2 1.f. (1)-(6))**
- **Major Soil Disturbing Activities** (check all that apply)
  - ☐ Clearing and grubbing
  - ☒ Excavation/borrow
  - ☐ Grading and shaping
  - ☒ Filling
  - ☐ Cutting and filling
  - ☐ Other (describe):
- **Total Project Area** 100 Acres **(4.2 1.b.)**
- **Total Area To Be Disturbed** 2.1 Acres **(4.2 1.b.)**
- **Existing Vegetative Cover (%)**
- **Soil Properties:** AASHTO Soil or USDA-NRCS Soil Series Classification **(4.2 1. d.)**
- **Name of Receiving Water Body/Bodies** Big Sioux River & Tributary to Big Sioux River, **(4.2 1.e.)**

**ORDER OF CONSTRUCTION ACTIVITIES (4.2 1.c.)**

(Stabilization measures shall be initiated as soon as possible, but in no case later than 14 days after the construction activity in that portion of the site has temporarily or permanently ceased. Initiation of final or temporary stabilization may exceed the 14-day limit if earth disturbing activities will be resumed within 21 days.)

- **Remove and store topsoil.**
- **Place fill, Base Course and Asphalt Concrete at Guardrail install locations.**
- **Install Guardrail.**
- **Restore topsoil.**
- **Reseed areas disturbed by removal activities**.

**EROSION AND SEDIMENT CONTROLS (4.2 2.a.(1)(a)-(f))**

(Check all that apply)

- **Stabilization Practices (See Detail Plan Sheets)**
  - ☐ Temporary Seeding (Cover Crop Seeding)
  - ☒ Permanent Seeding
  - ☐ Sodding
  - ☐ Planting (Woody Vegetation for Soil Stabilization)
  - ☒ Mulching (Grass Hay or Straw)
  - ☐ Hydraulic Mulch (Wood Fiber Mulch)
  - ☐ Soil Stabilizer
  - ☐ Bonded Fiber Matrix
  - ☐ Erosion Control Blankets or Mats
  - ☐ Vegetation Buffer Strips
  - ☐ Roughened Surface (e.g. tracking)
  - ☐ Dust Control
  - ☐ Other:
- **Structural Temporary Erosion and Sediment Controls**
  - ☐ Silt Fence
  - ☐ Floating Silt Curtain
  - ☐ Straw Bale Check
  - ☐ Temporary Berm
  - ☐ Temporary Slope Drain
  - ☐ Straw Wattles or Rolls
  - ☐ Turf Reinforcement Mat
  - ☐ Rip Rap
  - ☐ Gabions
  - ☐ Rock Check Dams
  - ☐ Sediment Traps/Basins
  - ☐ Inlet Protection
  - ☐ Outlet Protection
  - ☐ Surface Inlet Protection (Area Drain)
  - ☐ Curb Inlet Protection
  - ☐ Stabilized Construction Entrances
  - ☐ Entrance/Exit Equipment Tire Wash
  - ☐ Interceptor Ditch
  - ☐ Concrete Washout Area
  - ☐ Temporary Diversion Channel
  - ☐ Work Platform
  - ☐ Temporary Water Barrier
  - ☐ Temporary Water Crossing
  - ☐ Other:
- **Wetland Avoidance**
  Will construction and/or erosion and sediment controls impinge on regulated wetlands? Yes ☐ No ☒ If yes, the structural and erosion and sediment controls have been included in the total project wetland impacts and have been included in the 404 permit process with the USACE.
- **Storm Water Management (4.2 2.b., (1) and (2))**
  Storm water management will be handled by temporary controls outlined in "EROSION AND SEDIMENT CONTROLS" above, and any permanent controls needed to meet permanent storm water management needs in the post construction period. Permanent controls will be shown on the plans and noted as permanent.
- **Other Storm Water Controls (4.2 2.c., (1) and (2))**
  - **Waste Disposal**
    All liquid waste materials will be collected and stored in sealed metal containers approved by the project engineer. All trash and construction debris from the site will be deposited in the approved containers. Containers will be serviced as necessary, and the trash will be hauled to an approved disposal site or licensed landfill. All onsite personnel will be instructed in the proper procedures for waste disposal, and notices stating proper practices will be posted in the field office. The general contractor's representative responsible for the conduct of work on the site will be responsible for seeing waste disposal procedures are followed.
  - **Hazardous Waste**
    All hazardous waste materials will be disposed of in a manner specified by local or state regulations or by the manufacturer. Site personnel will be instructed in these practices, and the individual designated as the contractor's on-site representative will be responsible for seeing that these practices are followed.
  - **Sanitary Waste**
    Portable sanitary facilities will be provided on all construction sites. Sanitary waste will be collected from the portable units in a timely manner by a licensed waste management contractor or as required by any local regulations.

**MAINTENANCE AND INSPECTION (4.2 3. and 4.2 4.)**

- **Maintenance and Inspection Practices**
  - Inspections will be conducted at least one time per week and after a storm event of 0.50 inches or greater.
  - All controls will be maintained in good working order. Necessary repairs will be initiated within 24 hours of the site inspection report.
  - Silt fence will be inspected for depth of sediment and for tears in order to ensure the fabric is securely attached to the posts and that the posts are well anchored. Sediment buildup will be removed from the silt fence when it reaches $^{1}/_{3}$ of the height of the silt fence.
  - Sediment basins and traps will be checked. Sediment will be removed when depth reaches approximately 50 percent of the structure's capacity, and at the conclusion of the construction.
  - Check dams will be inspected for stability. Sediment will be removed when depth reaches ½ the height of the dam.
  - All seeded areas will be checked for bare spots, washouts, and vigorous growth free of significant weed infestations.
  - Inspection and maintenance reports will be prepared on form DOT 298 for each site inspection, this form will also be used to document changes to the SWPPP. A copy of the completed inspection form will be filed with the SWPPP documents.
  - The SDDOT Project Engineer and contractor's site superintendent are responsible for inspections. Maintenance, repair activities are the responsibility of the contractor. The SDDOT Project Engineer will complete the inspection and maintenance reports and distribute copies per the distribution instructions on DOT 298.

**NON-STORM WATER DISCHARGES (3.0)**

The following non-storm water discharges are anticipated during the course of this project (check all that apply).

- ☐ Discharges from water line flushing.
- ☒ Pavement wash-water, where no spills or leaks of toxic or hazardous materials have occurred.
- ☐ Uncontaminated ground water associated with dewatering activities.

**MATERIALS INVENTORY (4.2. 2.c.(2))**

The following materials or substances are expected to be present on the site during the construction period. These materials will be handled as noted under the headings "EROSION AND SEDIMENT CONTROLS" and "SPILL PREVENTION" (check all that apply).

- ☒ Concrete and Portland Cement
- ☒ Detergents
- ☐ Paints
- ☒ Metals
- ☒ Bituminous Materials
- ☒ Petroleum Based Products
- ☒ Cleaning Solvents
- ☒ Wood
- ☒ Cure
- ☐ Texture
- ☐ Chemical Fertilizers
- ☐ Other:

**SPILL PREVENTION (4.2 2.c.(2))**

- **Material Management**
  - Housekeeping
    - Only needed products will be stored on-site by the contractor.
    - Except for bulk materials the contractor will store all materials under cover and in appropriate containers.
    - Products must be stored in original containers and labeled.
    - Material mixing will be conducted in accordance with the manufacturer's recommendations.
    - When possible, all products will be completely used before properly disposing of the container off site.
    - The manufacturer's directions for disposal of materials and containers will be followed.
    - The contractor's site superintendent will inspect materials storage areas regularly to ensure proper use and disposal.
    - Dust generated will be controlled in an environmentally safe manner.
    - Vegetation areas not essential to the construction project will be preserved and maintained as noted on the plans.
  - Hazardous Materials
    - Products will be kept in original containers unless the container is not resealable.
    - Original labels and material safety data sheets will be retained in a safe place to relay important product information.
    - If surplus product must be disposed of, manufacturer's label directions for disposal will be followed.
    - Maintenance and repair of all equipment and vehicles involving oil changes, hydraulic system drain down, de-greasing operations, fuel tank drain down and removal, and other activities which may result in the accidental release of contaminants will be conducted on an impervious surface and under cover during wet weather to prevent the release of contaminants onto the ground.
    - Wheel wash water will be collected and allowed to settle out suspended solids prior to discharge. Wheel wash water will not be discharged directly into any storm water system or storm water treatment system.
    - Potential pH-modifying materials such as: bulk cement, cement kiln dust, fly ash, new concrete washings, concrete pumping, residuals from concrete saw cutting (either wet or dry), and mixer washout waters will be collected on site and managed to prevent contamination of storm water runoff.
- **Product Specific Practices (6.8)**
  - Petroleum Products
    All on-site vehicles will be monitored for leaks and receive regular preventive maintenance to reduce the chance of leakage. Petroleum products will be stored in tightly sealed containers which are clearly labeled.
  - Fertilizers
    Fertilizers will be applied only in the amounts specified by the SDDOT. Once applied, fertilizers will be worked into the soil to limit the exposure to storm water. Fertilizers will be stored in an enclosed area. The contents of partially used fertilizer bags will be transferred to sealable containers to avoid spills.
  - Paints
    All containers will be tightly sealed and stored when not required for use. The excess will be disposed of according to the manufacturer's instructions and any applicable state and local regulations.
  - Concrete Trucks
    Contractors will provide designated truck washout areas on the site. These areas must be self contained and not connected to any storm water outlet of the site. Upon completion of construction washout areas will be properly stabilized.
- **Spill Control Practices (4.2 2 c.(2))**
  In addition to the previous housekeeping and management practices, the following practices will be followed for spill prevention and cleanup if needed.
  - For all hazardous materials stored on site, the manufacturer's recommended methods for spill clean up will be clearly posted. Site personnel will be made aware of the procedures and the locations of the information and cleanup supplies.
  - Appropriate cleanup materials and equipment will be maintained by the contractor in the materials storage area on-site. As appropriate, equipment and materials may include items such as brooms, dust pans, mops, rags, gloves, goggles, kitty litter, sand, sawdust, and plastic and metal trash containers specifically for clean up purposes.
  - All spills will be cleaned immediately after discovery and the materials disposed of properly.
  - The spill area will be kept well ventilated and personnel will wear appropriate protective clothing to prevent injury from contact with a hazardous substance.
  - After a spill a report will be prepared describing the spill, what caused it, and the cleanup measures taken. The spill prevention plan will be adjusted to include measures to prevent this type of spill from reoccurring, as well as clean up instructions in the event of reoccurrences.
  - The contractor's site superintendent, responsible for day-to-day operations, will be the spill prevention and cleanup coordinator. The contractor is responsible for ensuring that the site superintendent has had appropriate training for hazardous materials handling, spill management, and cleanup.
- **Spill Response (4.2 2 c.(2))**
  The primary objective in responding to a spill is to quickly contain the material(s) and prevent or minimize migration into storm water runoff and conveyance systems. If the release has impacted on-site storm water, it is critical to contain the released materials on-site and prevent their release into receiving waters. If a spill of pollutants threatens storm water or surface water at the site, the spill response procedures outlined below must be implemented in a timely manner to prevent the release of pollutants.
  - The contractor's site superintendent will be notified immediately when a spill or the threat of a spill is observed. The superintendent will assess the situation and determine the appropriate response.
  - If spills represent an imminent threat of escaping erosion and sediment controls and entering receiving waters, personnel will be directed to respond immediately to contain the release and notify the superintendent after the situation has been stabilized.
  - Spill kits containing appropriate materials and equipment for spill response and cleanup will be maintained by the contractor at the site.
  - If oil sheen is observed on surface water (e.g. settling ponds, detention ponds, swales), action will be taken immediately to remove the material causing the sheen. The contractor will use appropriate materials to contain and absorb the spill. The source of the oil sheen will also be identified and removed or repaired as necessary to prevent further releases.
  - If a spill occurs the superintendent or the superintendent's designee will be responsible for completing the spill reporting form and for reporting the spill to SD DENR.
  - Personnel with primary responsibility for spill response and clean up will receive training by the contractor's site superintendent or designee. The training must include identifying the location of the spill kits and other spill response equipment and the use of spill response materials.
  - Spill response equipment will be inspected and maintained as necessary to replace any materials used in spill response activities.

**SPILL NOTIFICATION**

In the event of a spill, the contractor's site superintendent will make the appropriate notification(s), consistent with the following procedures:

- A release or spill of a regulated substance (includes petroleum and petroleum products) must be reported to DENR immediately **if any one of the following** conditions exists:
  - The discharge threatens or is in a position to threaten the waters of the state (surface water or ground water).
  - The discharge causes an immediate danger to human health or safety.
  - The discharge exceeds 25 gallons.
  - The discharge causes a sheen on surface water.
  - The discharge of any substance that exceeds the ground water quality standards of ARSD (Administrative Rules of South Dakota) chapter 74:51:01.
  - The discharge of any substance that exceeds the surface water quality standards of ARSD chapter 74:51:01.
  - The discharge of any substance that harms or threatens to harm wildlife or aquatic life.
  - The discharge of crude oil in field activities under SDCL (South Dakota Codified Laws) chapter 45-9 is greater than 1 barrel (42 gallons).

To report a release or spill, call DENR at 605-773-3296 during regular office hours (8 a.m. to 5 p.m. Central time). To report the release after hours, on weekends or holidays, call State Radio Communications at 605-773-3231. Reporting the release to DENR does not meet any obligation for reporting to other state, local, or federal agencies. Therefore, the responsible person must also contact local authorities to determine the local reporting requirements for releases. DENR recommends that spills also be reported to the National Response Center at (800) 424-8802.

**CONSTRUCTION CHANGES (4.4)**

When changes are made to the construction project that will require alterations in the temporary erosion controls of the site, the Storm Water Pollution Prevention Plan (SWPPP) will be amended to provide appropriate protection to disturbed areas, all storm water structures, and adjacent waters. The SDDOT Project Engineer will modify the SWPPP plan (DOT 298) and drawings to reflect the needed changes. Copies of changes will be routed per DOT 298. Copies of forms and the SWPPP will be retained in a designated place for review over the course of the project.

## CERTIFICATIONS

- **Certification of Compliance with Federal, State, and Local Regulations**

The Storm Water Pollution Prevention Plan (SWPPP) for this project reflects the requirements of all local municipal jurisdictions for storm water management and sediment and erosion control as established by ordinance, as well as other state and federal requirements for sediment and erosion control plans, permits, notices or documentation as appropriate.

- **South Dakota Department of Transportation**

I certify under penalty of law that this document and all attachments were prepared under my direction or supervision in accordance with a system designed to assure that qualified personnel properly gather and evaluate the information submitted. Based on my inquiry of the person or persons who manage the system, or those persons directly responsible for gathering the information, the information submitted is, to the best of my knowledge and belief, true, accurate, and complete. I am aware that there are significant penalties for submitting false information, including the possibility of fine and imprisonment for knowing violations.

Authorized Signature (See the General Permit, Section 6.7.1.C.)

- **Prime Contractor**

This section is to be executed by the General Contractor after the award of the contract. This section may be executed any time there is a change in the Prime Contractor of the project.

I certify under penalty of law that this document and all attachments will be revised or maintained under my direction or supervision in accordance with a system designed to assure that qualified personnel properly gather and evaluate the information submitted. Based on my inquiry of the person or persons who manage the system, or those persons directly responsible for gathering the information, the information submitted is, to the best of my knowledge and belief, true, accurate, and complete. I am aware that there are significant penalties for submitting false information, including the possibility of fine and imprisonment for knowing violations.

_____

Authorized Signature

## CONTACT INFORMATION

- **Contractor Information**:
  - Prime Contractor Name: _____
  - Contractor Contact Name: _____
  - Address: _____
  - _____
  - City: _____State: _____Zip: _____
  - Office Phone: _____Field: _____
  - Cell Phone: _____Fax: _____
- **Erosion Control Supervisor**
  - Name: _____
  - Address: _____
  - _____
  - City: _____State: _____Zip: _____
  - Office Phone: _____Field: _____
  - Cell Phone: _____Fax: _____
- **SDDOT Project Engineer**
  - Name: _____
  - Business Address: _____
  - Job Office Location: _____
  - City: _____State: _____Zip: _____
  - Office Phone: _____Field: _____
  - Cell Phone: _____Fax: _____
- **SD DENR Contact Spill Reporting**
  - Business Hours Monday-Friday (605) 773-3296
  - Nights and Weekends (605) 773-3231
- **SD DENR Contact for Hazardous Materials.**
  - (605) 773-3153
- **National Response Center Hotline**
  - (800) 424-8802.

## PERMANENT PAVEMENT MARKING

Application of permanent pavement marking shall be completed within 14 days following completion of the bridge work and final surfacing.

Pavement markings shall be in place prior to opening closed lanes to traffic unless temporary pavement markings are provided. Temporary pavement markings may be used for a length of time as approved by the Engineer.

Adequate durable pavement marking quantities are included for **one** application at each mainline bridge worksite and at Exit 26. The State shall apply permanent paint pavement markings at the Exit 4 and Exit 53 crossroads.

The pavement markings shall be surface applied on the structures. No surface preparation or grooving shall be done.

At the I-29 mainline structure numbers 64-164/165-405 at the Big Sioux River, MRM 0.05; 64-154/155-385 at River Drive, North Sioux City, MRM 2.48; and at 64-005/006-164 over a creek, MRM 30.92 pavement marking work shall include surface preparation and durable pavement markings at the locations of the yellow edgeline, white edgeline, and white centerline skip pavement markings for a length of 500' beyond the end of the structures. Surface Preparation for Pavement Marking quantities included for one surface preparation.

Surface preparation and durable pavement markings shall be completed as detailed at Exit 26.

**DIVIDED ROADWAY**
**(ONE DIRECTION SHOWN)**

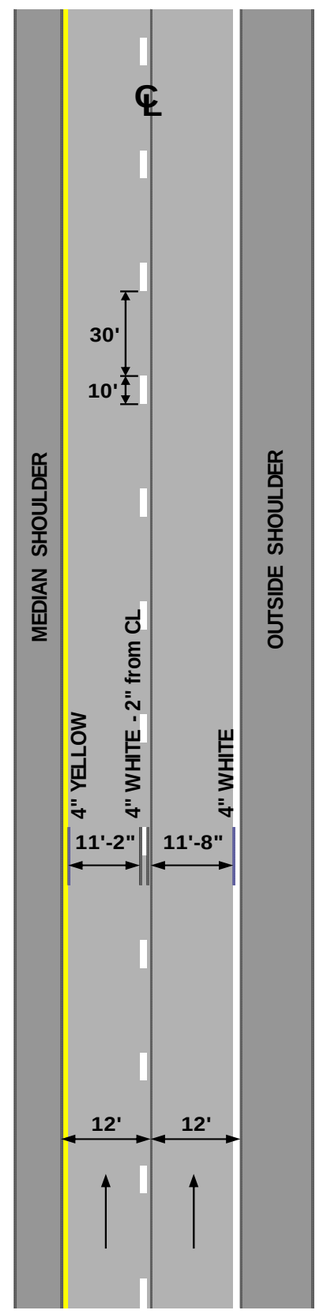


**UNDIVIDED ROADWAY**

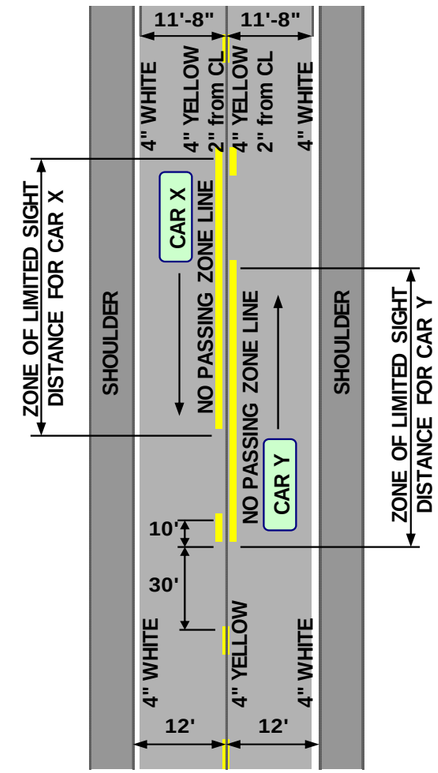


Typical pavement marking as shown on this sheet shall be applied throughout the entire length of undivided roadway.

Traffic Control shall be incidental to the cost of application. The striper and advance or trailing warning vehicle shall be equipped with flashing amber lights and advance warning arrow panel.

**NOTE:** All pavement marking dimensions are based on 12' driving lanes.

| STATE OF SOUTH DAKOTA | PROJECT | SHEET | TOTAL SHEETS |
|---|---|---|---|
| | IM-PH 0291(122)0 | 17 | 284 |

Plotting Date: 07/18/2016 REV. 07/18/16 dw

# PAVEMENT MARKING LAYOUT

## SD 50 OVER INTERSTATE 29 at EXIT 26

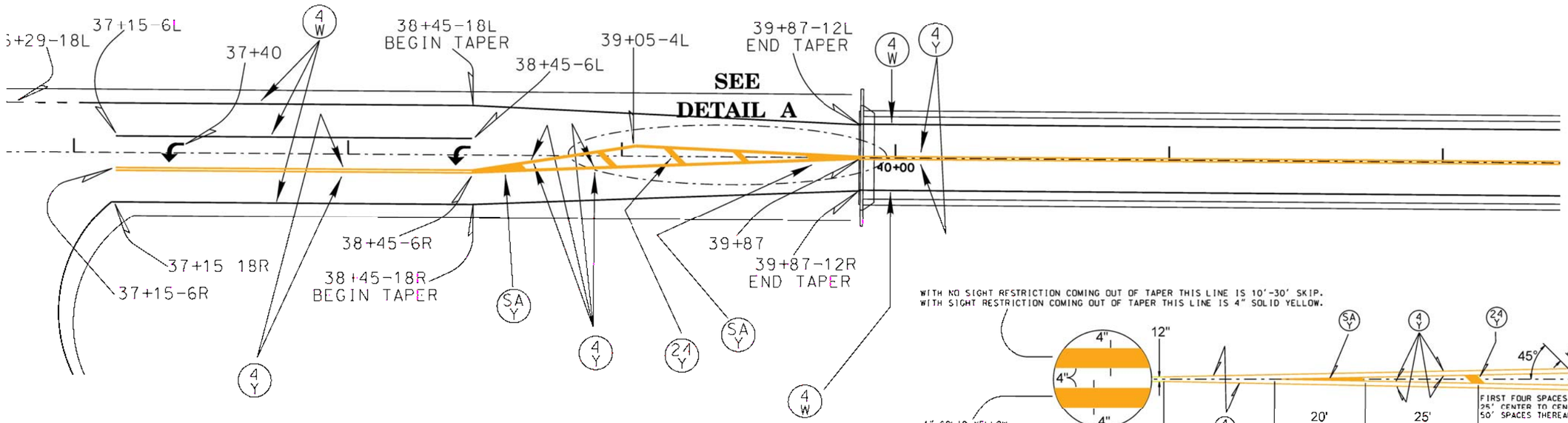


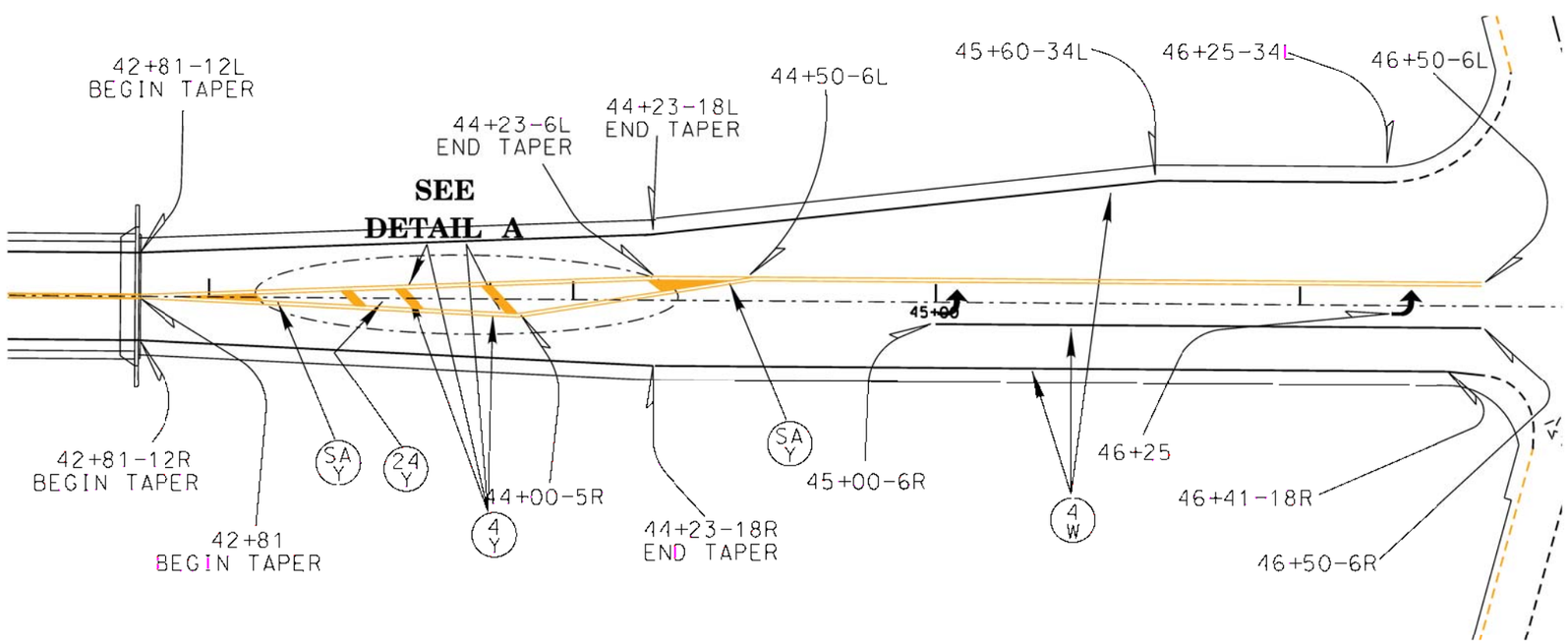


## KEY:

- 4 W -4" WHITE PAVEMENT MARKING
- 4 Y -4" YELLOW PAVEMENT MARKING
- 24 Y -24" YELLOW PAVEMENT MARKING
- SA Y -SOLID AREA-YELLOW
- -PAVEMENT MARKING ARROW

**NOTE:** All markings shall be surface prepped *except* on bridge decks.

PLOT SCALE - 1:65.5525

PLOTTED FROM - TRMLINI7

PLOT NAME - 19

FILE - ...\TC\02PT TC CONTAINER.DGN

| STATE OF SOUTH DAKOTA | PROJECT | SHEET | TOTAL SHEETS |
|---|---|---|---|
| | IM-PH 0291(122)0 | 18 | 284 |

Plotting Date: 12/21/2015

# TRAFFIC CONTROL

## IOWA STANDARDS WIDTH RESTRICTION SIGNING

NO SCALE

NOTES:

REFER TO IDOT TC-81 FOR RESTRICTED WIDTH SIGN LOCATIONS.
REFER TO IDOT SI-882 FOR RESTRICTED WIDTH SIGN DETAILS.
WIDTH RESTRICTION SIGNS SHALL NOT OBSCURE EXISTING SIGNS.
WIDTH RESTRICTION SIGNS SHALL BE SPACED 100'-150' FROM OTHER SIGNS.
ROUTE MARKER ASSEMBLIES SHALL BE 50'-100' IN ADVANCE OF THE INTERSECTION.
ADVANCE ROUTE MARKER ASSEMBLIES SHALL BE NOT LESS THAN 400' IN ADVANCE OF THE INTERSECTION.

**KEY:** - DETOUR ROUTE
- RESTRICTION LOCATION

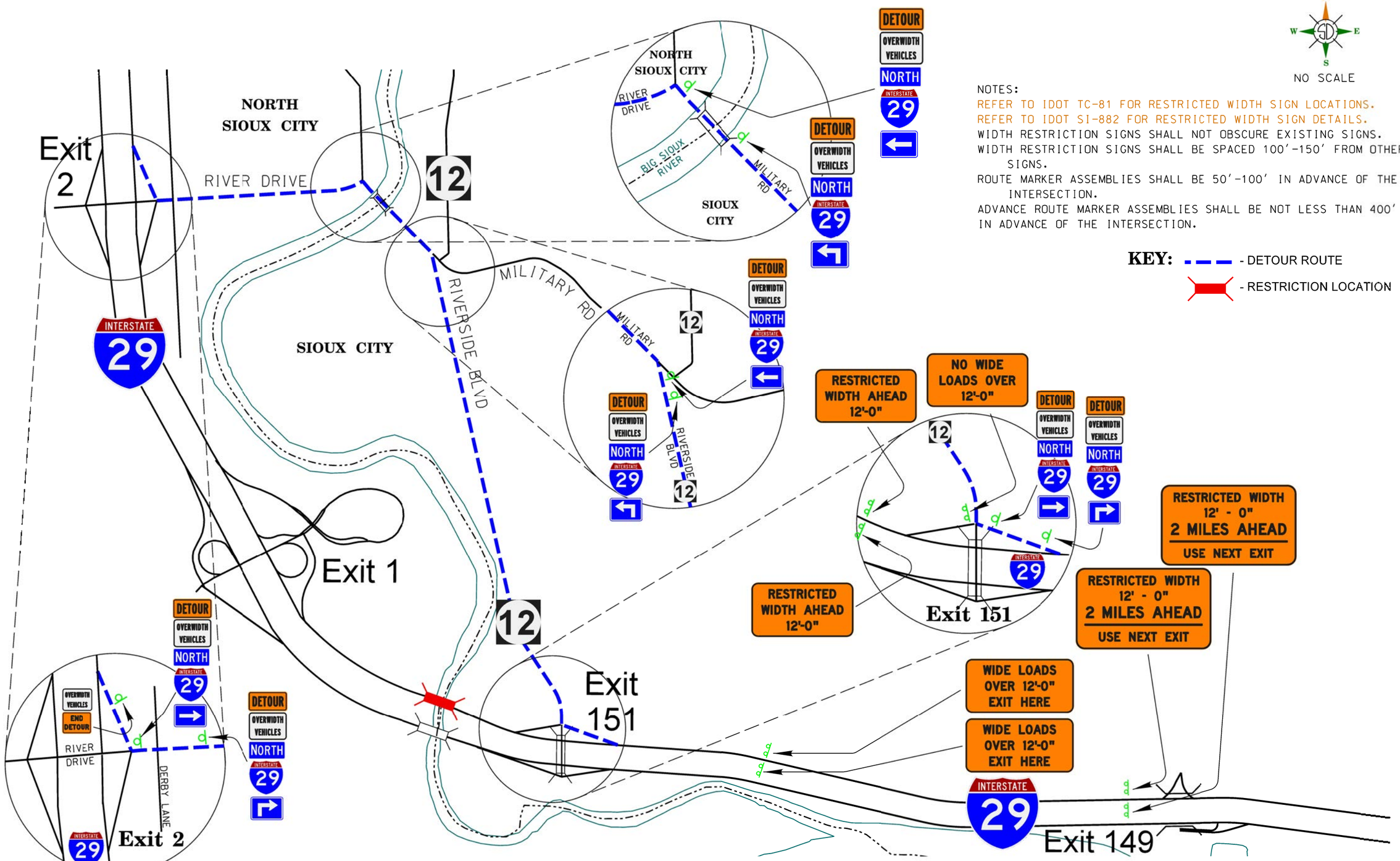


PLOT SCALE - 1:1858.06
PLOTTED FROM - TRM1INT17
PLOT NAME - 1
FILE - ...\TC\02PT TC CONTAINER.DGN

Plotting Date: 12/21/2015

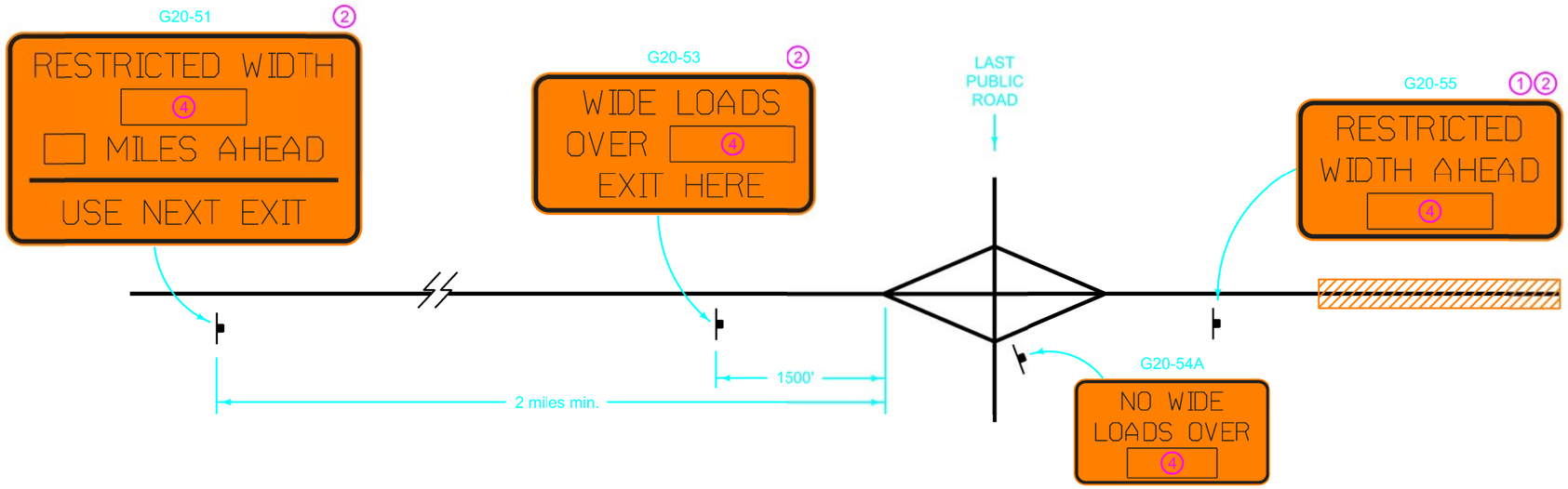


**WHERE AN INTERCHANGE IS LOCATED AT THE LAST PUBLIC ROAD PRIOR TO AREA OF RESTRICTED WIDTH**

Coordinate signing in conjunction with other traffic control in the area.

Exact sign locations will be as approved by the Engineer.

For multi-lane divided roadways, use larger sign sizes. For two-lane highways, use small sign sizes.

See SI-882 for sign details.

1. Place after ROAD WORK AHEAD sign.
2. For divided highways, two signs shall be installed at each location: One each on right and left shoulders.
3. When this paved road intersection has an interchange, the distance shall be measured from the beginning of the exit ramp taper.
4. Dimension on G20-58/58A panel equals 1 foot less than narrowest measurement.

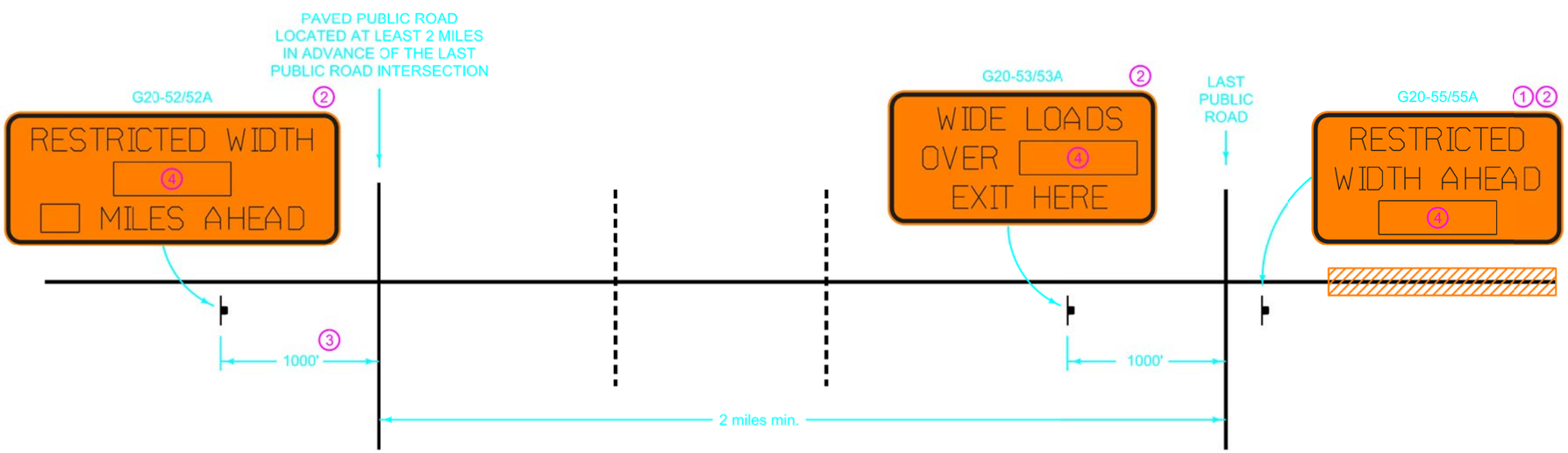


**WHERE AN AT-GRADE INTERSECTION IS LOCATED AT THE LAST PUBLIC ROAD PRIOR TO AREA OF RESTRICTED WIDTH**

LEGEND

- Area of Restricted Width
- Traffic Sign

| REVISION | |
|---|---|
| 1 | 04-20-10 |

# STANDARD ROAD PLAN

**TC-81**

SHEET 1 of 1

REVISIONS: Updated references to renamed standards. Updated signs. Added circle note 4.

APPROVED BY DESIGN METHODS ENGINEER

**RESTRICTED WIDTH SIGNING (LESS THAN 14.5 FEET)**


PLOT SCALE - 1:197.505
PLOT NAME - 2
FILE - ...\TC\02PT TC CONTAINER.DGN
PLOTTED FROM - TRM1INT17

G20-51

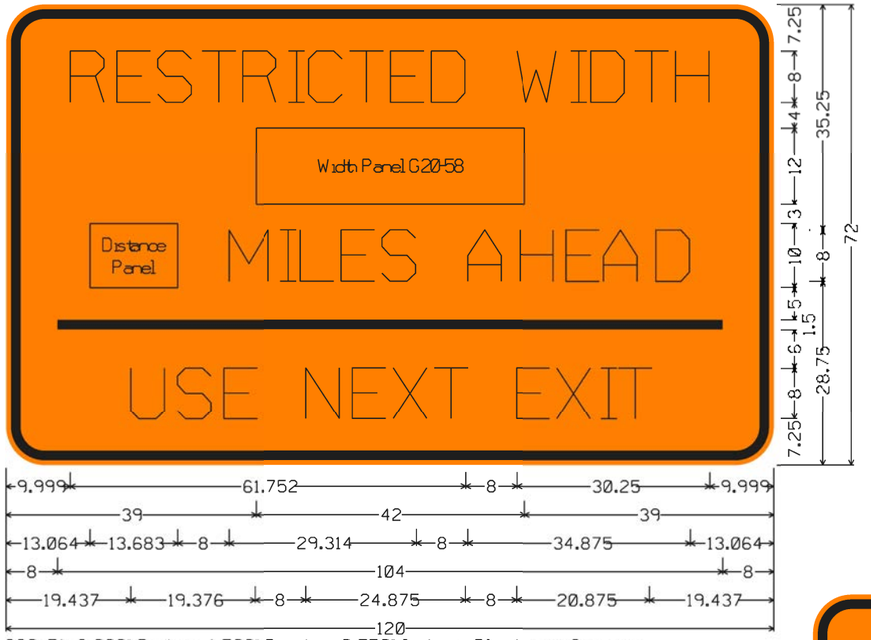


G20-51; 6.000" Radius, 1.500" Border, 0.750" Indent, Black on Orange;
[RESTRICTED WIDTH] D; Rectangle Orange;
Rectangle Orange;
[MILES AHEAD] D; [USE NEXT EXIT] D;

G20-52

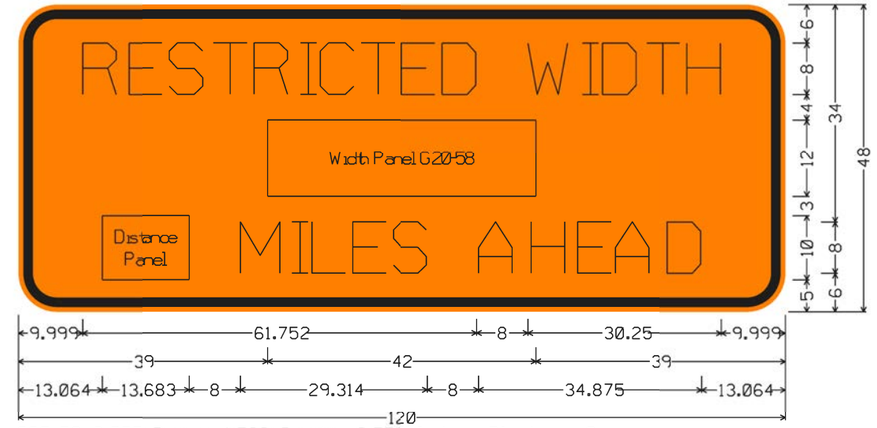


G20-52; 6.000" Radius, 1.500" Border, 0.750" Indent, Black on Orange;
[RESTRICTED WIDTH] D; Rectangle Orange;
Rectangle Orange;
[MILES AHEAD] D;

G20-53

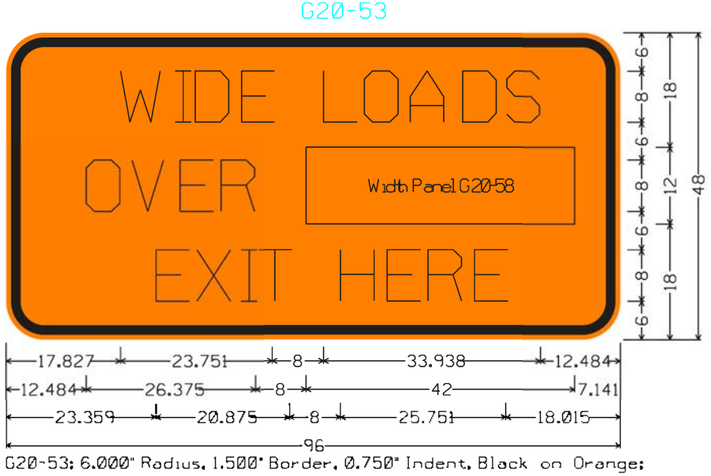


G20-53; 6.000" Radius, 1.500" Border, 0.750" Indent, Black on Orange;
[WIDE LOADS] D; [OVER] D; Rectangle Orange;
[EXIT HERE] D;

G20-54

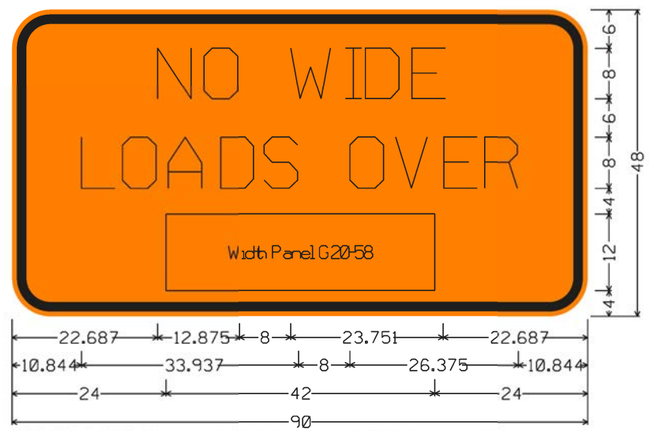


G20-54; 6.000" Radius, 1.500" Border, 0.750" Indent, Black on Orange;
[NO WIDE] D; [LOADS OVER] D; Rectangle Orange;

G20-55

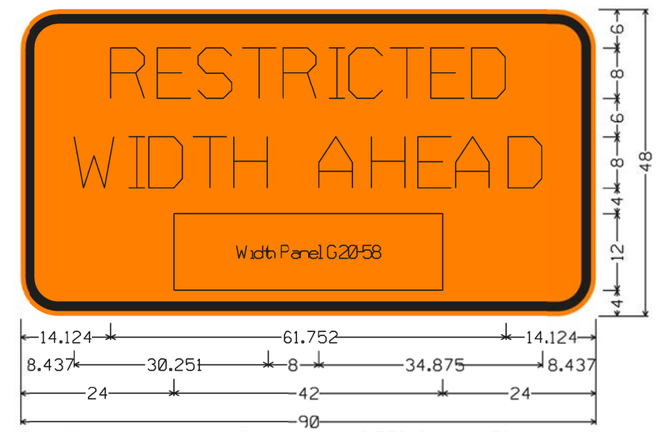


G20-55; 6.000" Radius, 1.500" Border, 0.750" Indent, Black on Orange;
[RESTRICTED] D; [WIDTH AHEAD] D; Rectangle Orange;

(1) See TC-81 for requirement of restricted width dimension.

G20-58 (1)

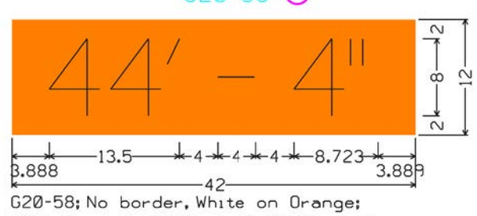


G20-58; No border, White on Orange;
[44′] Black D; [-] Black D; [4"] Black D;

G20-59

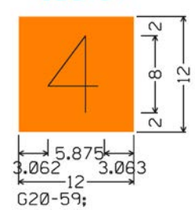


G20-59;
No border, White on Orange;
[4] Black D;

| REVISION | |
|---|---|
| New | 04-20-10 |

# STANDARD ROAD PLAN

SI-882

SHEET 1 of 2

REVISIONS: New. Replaces RD-63 and RD-64.

APPROVED BY DESIGN METHODS ENGINEER

## SPECIAL SIGNS FOR RESTRICTED WIDTH TRAFFIC CONTROL ZONES


PLOT SCALE - 1:197.505
PLOTTED FROM - TRM11NT17
PLOT NAME - 3
FILE - ...\TC\02PT TC CONTAINER.DGN

| STATE OF SOUTH DAKOTA | PROJECT | SHEET | TOTAL SHEETS |
|---|---|---|---|
| | IM-PH 0291(122)0 | 21 | 284 |

Plotting Date: 12/21/2015

# TYPICAL TRAFFIC CONTROL
# EXIT 26 CROSSROAD SOUTH DAKOTA HWY 50

NO SCALE

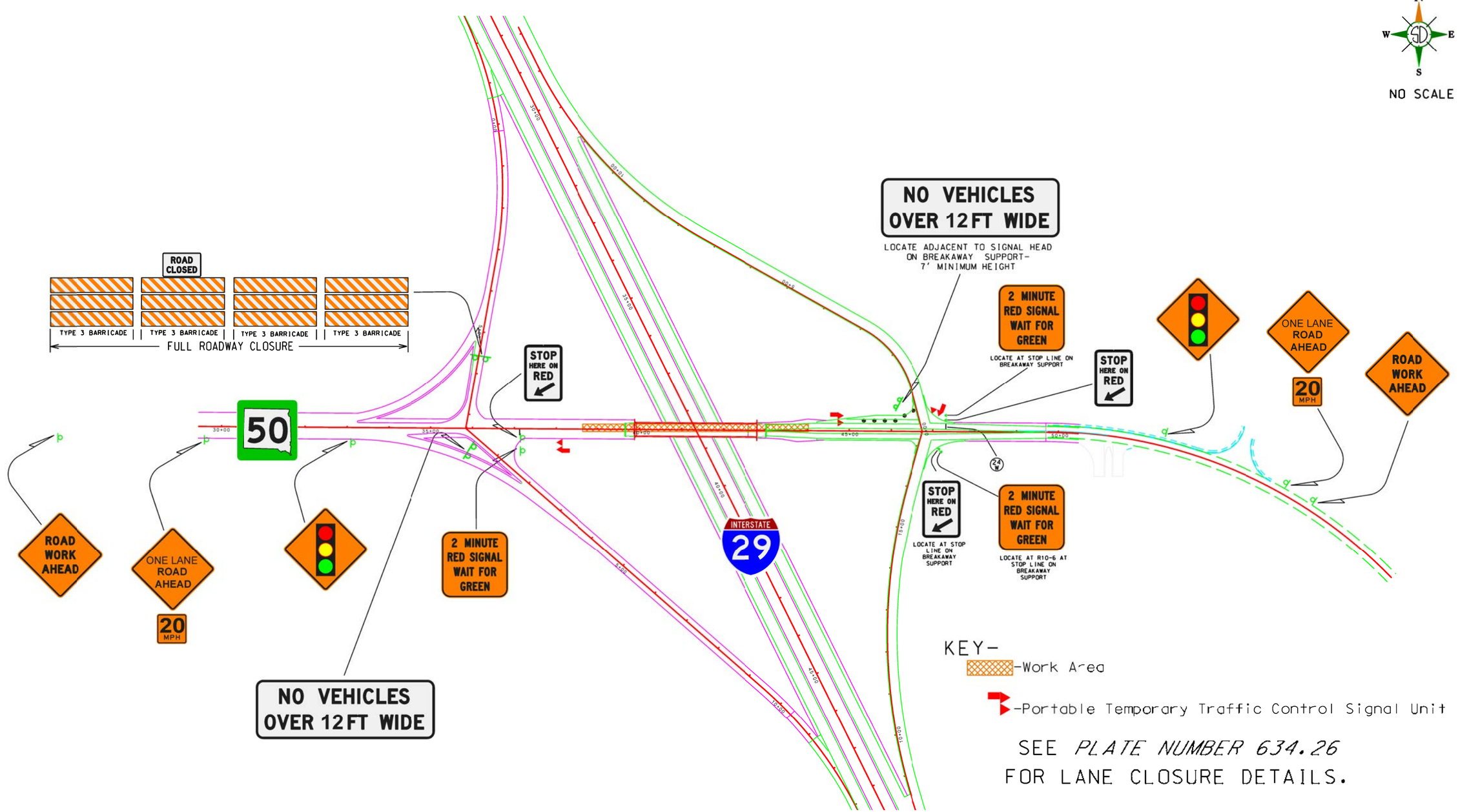


KEY-

-Work Area

-Portable Temporary Traffic Control Signal Unit

SEE *PLATE NUMBER 634.26* FOR LANE CLOSURE DETAILS.

NOTES:

WIDTH RESTRICTION SIGNING SHALL NOT OBSCURE EXISTING SIGNING.
WIDTH RESTRICTION SIGNS SHALL BE SPACED 100'-150' FROM OTHER SIGNS.

PLOT SCALE - 1:233.728

PLOTTED FROM - TRAILINT17

PLOT NAME - 4

FILE -...\TCV02PT TC CONTAINER.DGN

# TRAFFIC CONTROL
## WIDTH RESTRICTION SIGNING
## EXIT 26 CROSSROAD {SD 50}

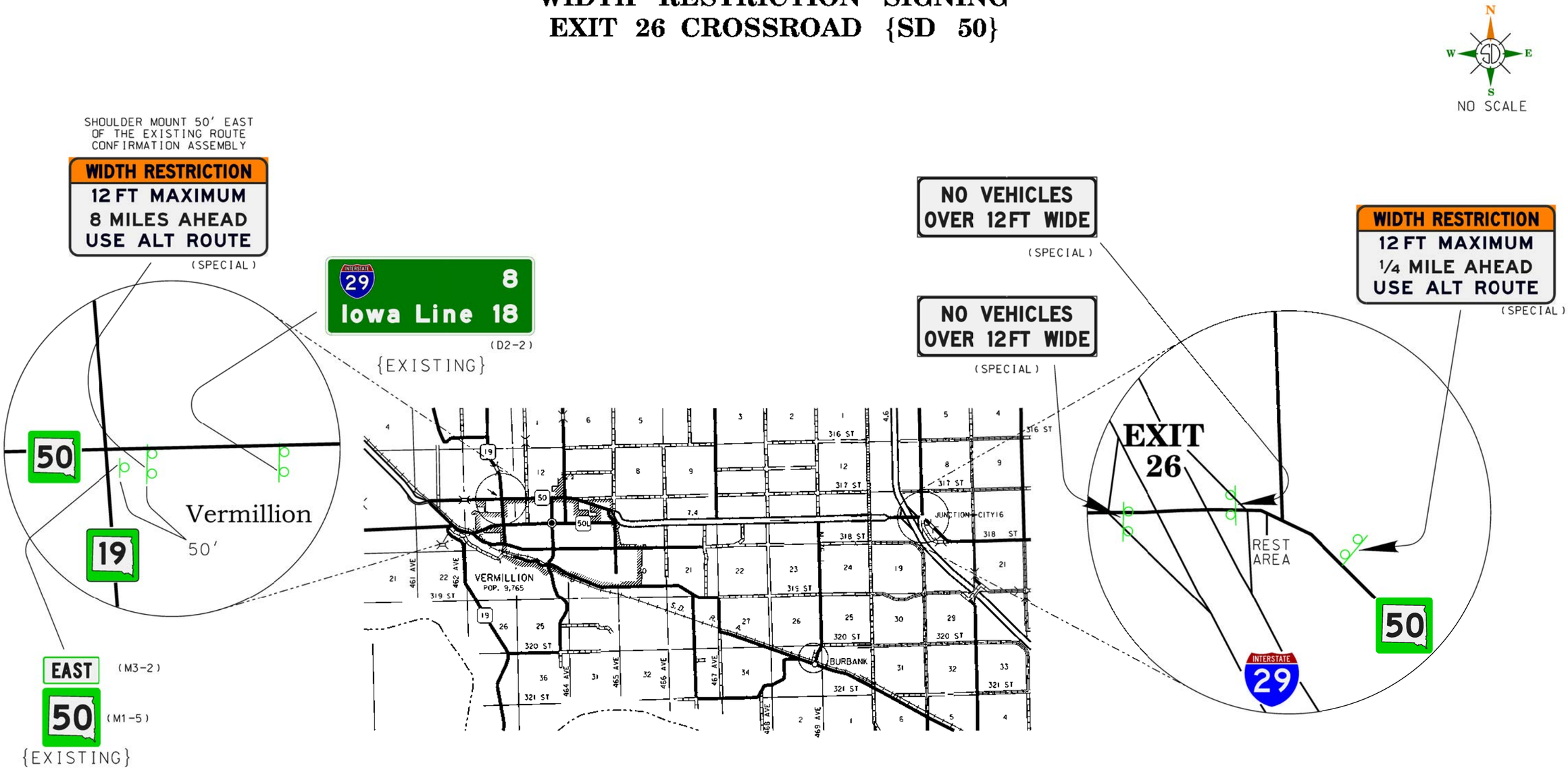


NOTES:

WIDTH RESTRICTION SIGNING SHALL NOT OBSCURE EXISTING SIGNING.
WIDTH RESTRICTION SIGNS SHALL BE SPACED 100'-150' FROM OTHER SIGNS.


PLOT SCALE - 1:30000
PLOTTED FROM - TRMIINT17
PLOT NAME - 5
FILE - ...\TC\02PT TC CONTAINER.DGN

# TYPICAL TRAFFIC CONTROL
# WIDTH RESTRICTION SIGNING
# EXIT 53 CROSSROAD {291st STREET}

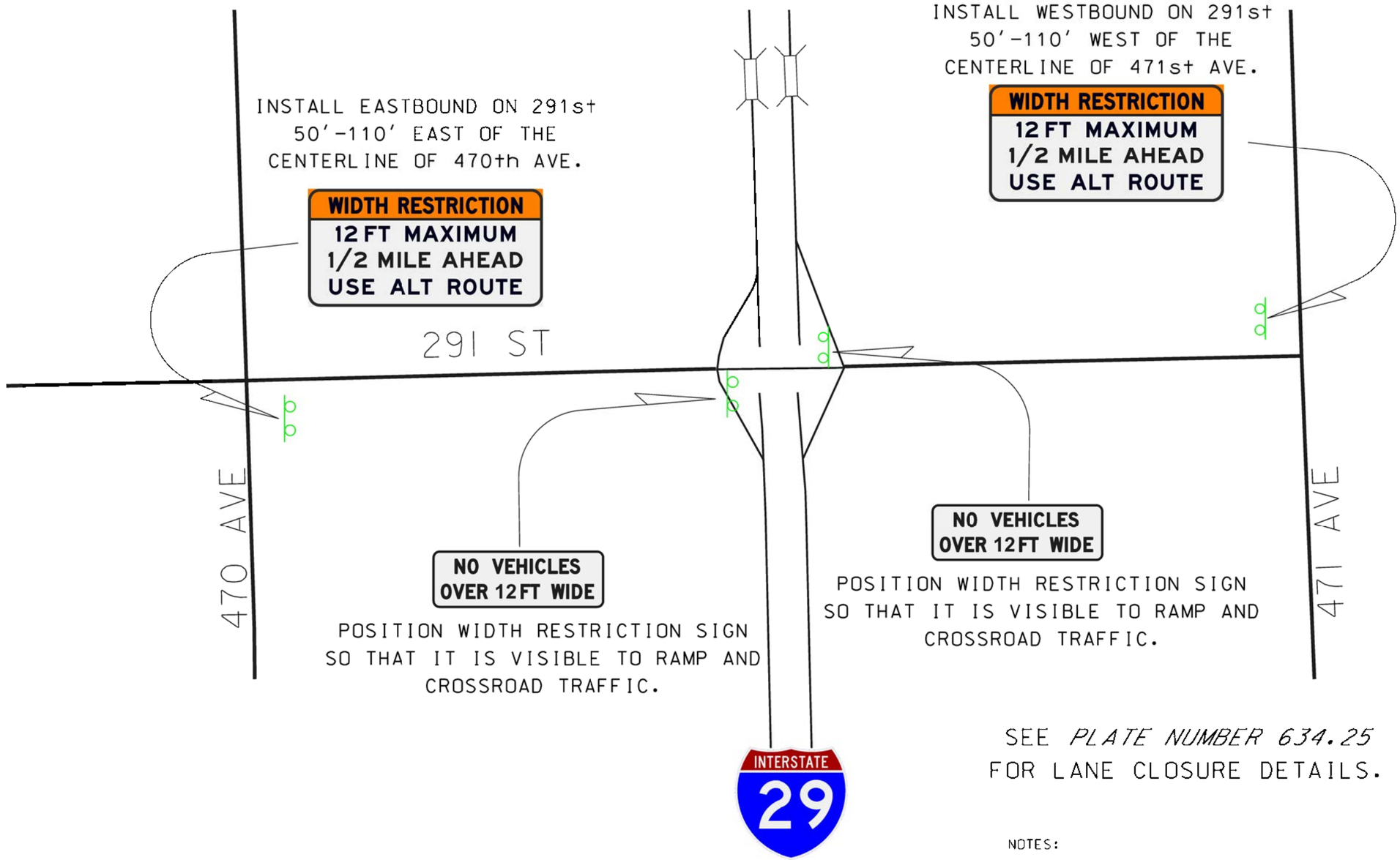


SEE *PLATE NUMBER 634.25*
FOR LANE CLOSURE DETAILS.

NOTES:

WIDTH RESTRICTION SIGNING SHALL NOT OBSCURE EXISTING SIGNING.
WIDTH RESTRICTION SIGNS SHALL BE SPACED 100'-150' FROM OTHER SIGNS.


PLOT SCALE - 1:1651.61
PLOTTED FROM - TRM11NT17
PLOT NAME - 6
FILE - ...\TC\02PT TC CONTAINER.DGN

# SPECIAL SIGN DETAILS

OPAQUE BLACK BORDER/LEGEND
ON WHITE TYPE IV SHEETING
1/2" BORDER - 1 1/2" CORNER RADII

OPAQUE BLACK BORDER/LEGEND
ON WHITE TYPE IV SHEETING
3/4" BORDER - 3" CORNER RADII

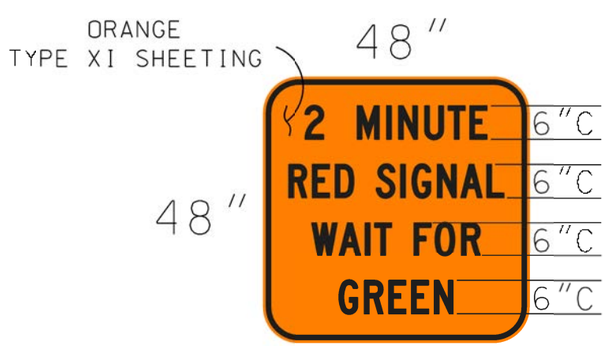


OPAQUE BLACK BORDER/LEGEND
1" BORDER - 1/2" INSET
3" CORNER RADII

OPAQUE BLACK BORDER/LEGEND
1 1/2 " BORDER - 6" CORNER RADII

ILLUSTRATION IS TYPICAL-

2 SIGNS WITH 1/2 MILE REQUIRED
1 SIGN WITH 1/4 MILE REQUIRED
1 SIGN WITH 8 MILES REQUIRED


PLOT SCALE - 1:2.27362
PLOTTED FROM - TRMINTI7
DGN FILE - \TRANSDT TF MAINTENANCE\
DGN NAME - 7

# TRAFFIC CONTROL MOVABLE CONCRETE BARRIER

## Approach Slab-Approach Pavement Repair or Replacement

### CLOSED DRIVING LANE & OUTSIDE SHOULDER (TYPICAL)

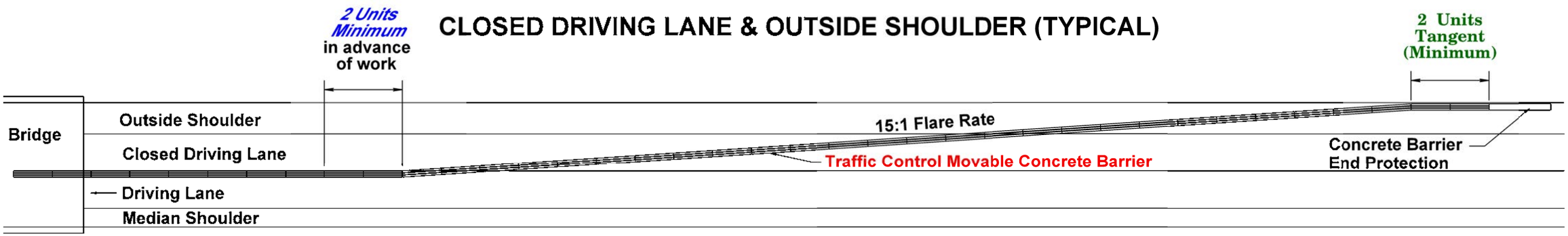


### CLOSED DRIVING LANE & MEDIAN SHOULDER (TYPICAL)

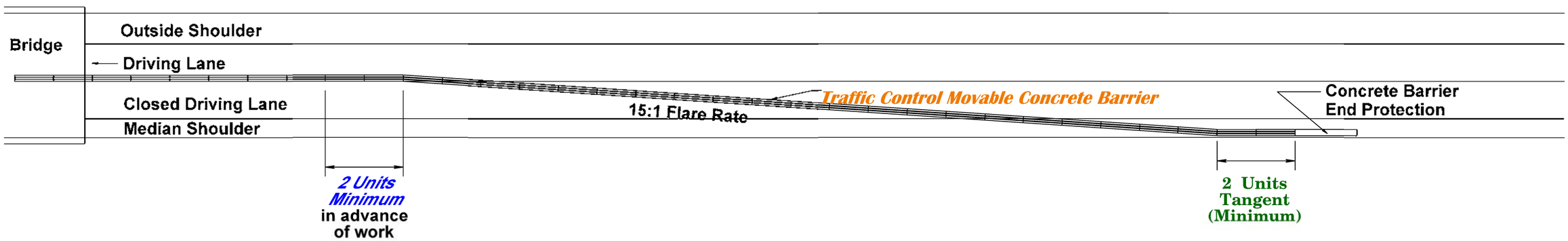


| Structure Number | Structure Length | Barrier on Structure | Work Space Length at Each End of Structure | Barrier for Work Space | Taper Length Outside Lane | Barrier in Taper (Mainline and 10' Shoulder) | Tangent Barrier on Shoulder | Total Number of Barrier Per Structure/Right Lane Closure |
|---|---|---|---|---|---|---|---|---|
| 64-164-405 Big Sioux River | 558 | 45 | 125 | 20 | 330 | 27 | 2 | 94 |
| 64-165-405 Big Sioux River | 558 | 45 | 125 | 20 | 330 | 27 | 2 | 94 |
| | | | | | | | SUBTOTAL: | 188 |
| 64-154-385 River Dr. N. Sioux City | 126 | 10 | 125 | 20 | 330 | 27 | 2 | 59 |
| 64-155-385 River Dr. N. Sioux City | 126 | 10 | 125 | 20 | 330 | 27 | 2 | 59 |
| | | | | | | | SUBTOTAL: | 118 |
| 64-005-164 MRM 30.92 | 67 | 6 | 125 | 20 | 330 | 27 | 2 | 55 |
| 64-006-164 MRM 30.92 | 67 | 6 | 125 | 20 | 330 | 27 | 2 | 55 |
| | | | | | | | SUBTOTAL: | 110 |


PLOT SCALE - 1:33.0323
PLOT NAME - 8
FILE - ...\TC\02PT TC CONTAINER.DGN
PLOTTED FROM - TRMLINT17

# PAVEMENT MARKING

# MOBILE OPERATION ON MULTI-LANE ROAD

## (TYPICAL)

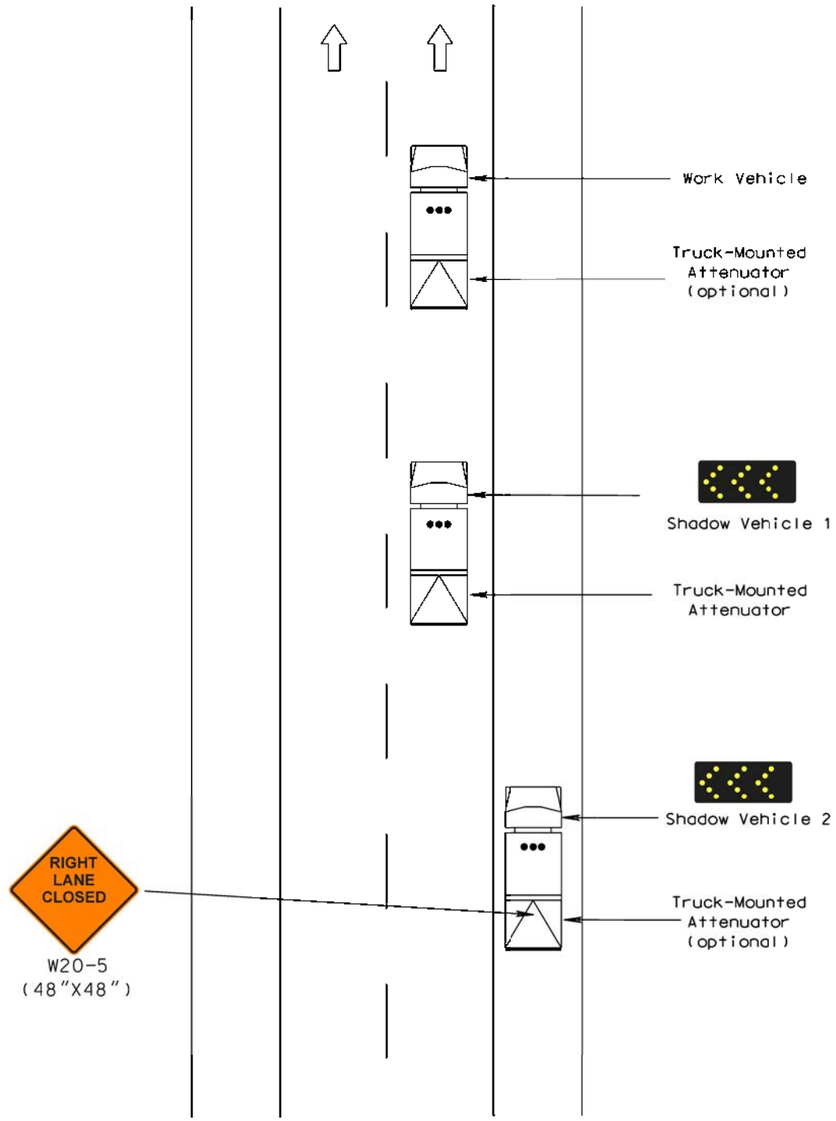


Notes for Mobile Operation on Multi-lane Road (Typical)

Standard:

1. Arrow panels shall, as a minimum, be Type B, with a size of 1500 x 750 mm (60 x 30 in).

Guidance:

2. Vehicles used for these operations should be made highly visible with appropriate equipment, such as: high-intensity rotating, flashing, oscillating, or strobe lights, signs, and arrow panels.
3. Shadow Vehicle 1 shall be equipped with an arrow panel and truck-mounted attenuator.
4. Shadow Vehicle 2 shall be equipped with an arrow panel. An appropriate lane closure sign should be placed on Shadow Vehicle 2 so as not to obscure the arrow panel.
5. Shadow Vehicle 2 should travel at a varying distance from the work operation so as to provide adequate sight distance for vehicular traffic approaching from the rear.
6. The spacing between the work vehicles and the shadow vehicles, and between each shadow vehicle should be minimized to deter road users from driving in between.
7. Work should normally be accomplished during off-peak hours.
8. The advanced warning sign shall read LEFT LANE CLOSED and the chevron direction shall be changed when working within the left passing lane.

Option:

9. A truck-mounted attenuator may be used on Shadow Vehicle 2.
10. On high-speed roadways, a third shadow vehicle (not shown) may be used with Shadow Vehicle 1 in the closed lane. Shadow Vehicle 2 straddling the edge line, and Shadow Vehicle 3 on the shoulder.
11. Where adequate shoulder width is not available, Shadow Vehicle 3 may drive partially in the lane.


PLOT SCALE - 1:160
PLOTTED FROM - TRMI1NT17
PLOT NAME - 9
FILE - ...\TCV02PT TC CONTAINER.DGN

# PAVEMENT MARKING
# MOBILE OPERATIONS ON TWO-LANE ROAD
## (TYPICAL)

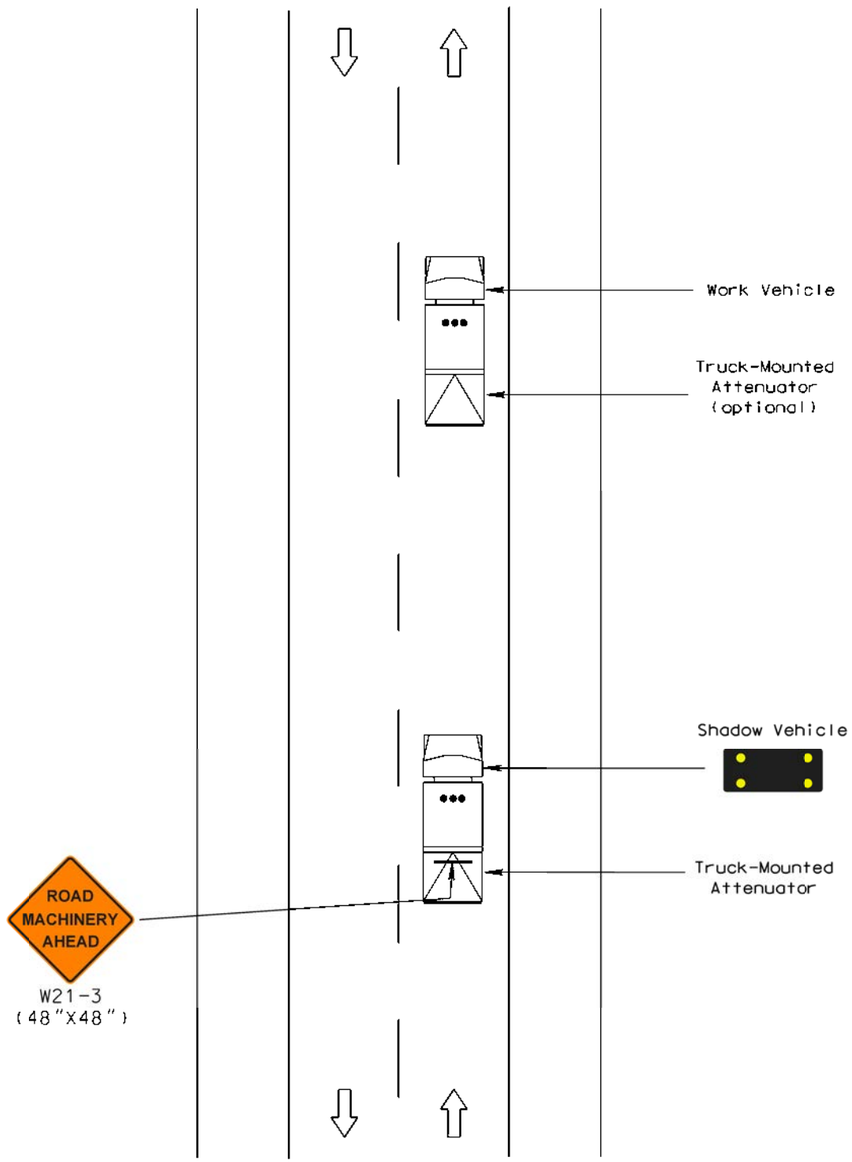


Notes for Mobile Operations on Two-lane Road (Typical)

Standard:

1. Vehicle-mounted signs shall be mounted in a manner such that they are not obscured by equipment or supplies. Sign legends on vehicle-mounted signs shall be covered or turned from view when work is not in progress.
2. Shadow and work vehicles shall display high-intensity rotating, flashing, oscillating, or strobe lights.
3. If an arrow board is used, it shall be used in the caution mode.

Guidance:

4. Where practical and when needed, the work and shadow vehicles should pull over periodically to allow vehicular traffic to pass.
5. Whenever adequate stopping sight distance exists to the rear, the shadow vehicle should maintain the minimum distance from the work vehicle and proceed at the same speed. The shadow vehicle should slow down in advance of vertical or horizontal curves that restrict sight distance.
6. The shadow vehicles should also be equipped with two high-intensity flashing lights mounted on the rear, adjacent to the sign.

Option:

7. The distance between the work and shadow vehicles may vary according to terrain, paint drying time, and other factors.
8. Additional shadow vehicles to warn and reduce the speed of oncoming or opposing vehicular traffic may be used. Law enforcement vehicles may be used for this purpose.
9. A truck-mounted attenuator may be used on the shadow vehicle or on the work vehicle.
10. If the work and shadow vehicles cannot pull over to allow vehicular traffic to pass frequently, a DO NOT PASS sign may be placed on the rear of the vehicle blocking the lane.

Support:

11. Shadow vehicles are used to warn motor vehicle traffic of the operation ahead.

Standard:

12. Vehicle hazard warning signals shall not be used instead of the vehicle's high-intensity rotating, flashing, oscillating, or strobe lights.


PLOT SCALE - 1:154.839
PLOTTED FROM - TRM11NT17
PLOT NAME - 10
FILE - ...\TC\02PT TC CONTAINER.DGN

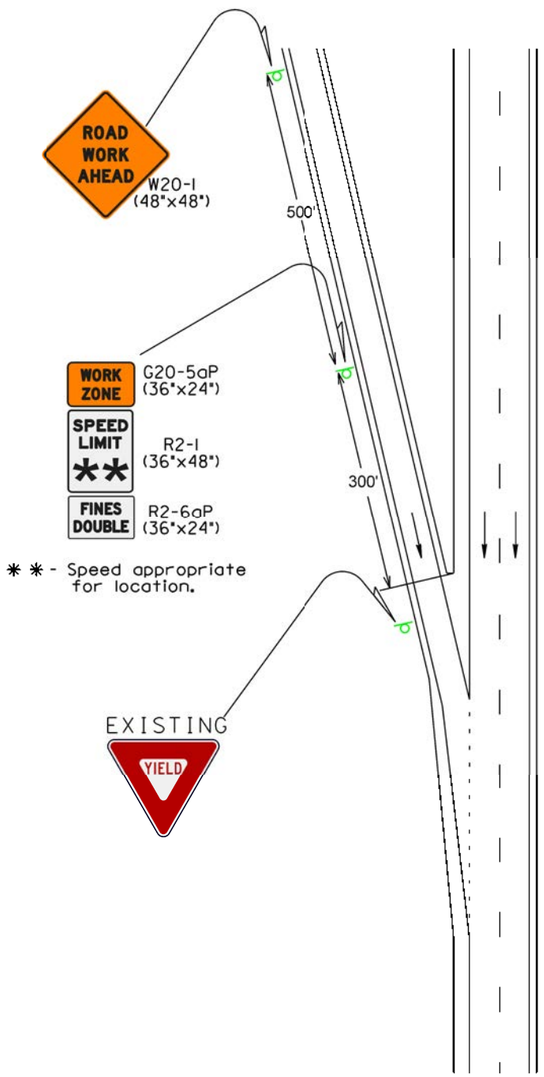


*TYPICAL SUPPLEMENTAL SIGNING WITH ENTRANCE RAMP IN REDUCED SPEED ZONE*


PLOT SCALE - 1:200.64
PLOTTED FROM - TRMIINT17
PLOT NAME - 11
FILE - ...\TC\02PT TC CONTAINER.DGN

# ITEMIZED SIGN LISTS

## ITEMIZED LIST FOR TRAFFIC CONTROL SIGNS

| SIGN CODE | SIGN DESCRIPTION | CONVENTIONAL ROAD NUMBER | CONVENTIONAL ROAD SIGN SIZE | CONVENTIONAL ROAD SQFT PER SIGN | CONVENTIONAL ROAD SQFT | EXPRESSWAY / INTERSTATE NUMBER | EXPRESSWAY / INTERSTATE SIGN SIZE | EXPRESSWAY / INTERSTATE SQFT PER SIGN | EXPRESSWAY / INTERSTATE SQFT |
|---|---|---|---|---|---|---|---|---|---|
| R1-1 | STOP | 2 | 30" | 5.2 | 10.4 | | 36" | 7.5 | |
| R2-1 | SPEED LIMIT __ | | 24" x 30" | 5.0 | | 41 | 36" x 48" | 12.0 | 492.0 |
| R2-6aP | FINES DOUBLE (plaque) | | 24" x 18" | 3.0 | | 9 | 36" x 24" | 6.0 | 54.0 |
| R10-6 | STOP HERE ON RED | 4 | 24" x 36" | 6.0 | 24.0 | | | | |
| R11-2 | ROAD CLOSED | 1 | 48" x 30" | 10.0 | 10.0 | | 48" x 30" | 10.0 | |
| W1-1 | LEFT or RIGHT TURN ARROW | 3 | 48" x 48" | 16.0 | 48.0 | | 48" x 48" | 16.0 | |
| W3-1 | STOP AHEAD (symbol) | 2 | 48" x 48" | 16.0 | 32.0 | | 48" x 48" | 16.0 | |
| W3-3 | SIGNAL AHEAD (symbol) | 4 | 48" x 48" | 16.0 | 64.0 | | 48" x 48" | 16.0 | |
| W3-5 | SPEED REDUCTION AHEAD (__ MPH) | | 48" x 48" | 16.0 | | 24 | 48" x 48" | 16.0 | 384.0 |
| W4-2 | LEFT or RIGHT LANE ENDS (symbol) | 2 | 48" x 48" | 16.0 | 32.0 | 16 | 48" x 48" | 16.0 | 256.0 |
| SPECIAL | RESTRICTED WIDTH AHEAD 12'-0" | | 48" x 48" | 16.0 | | 2 | 90" x 48" | 30.0 | 60.0 |
| SPECIAL | NO LOADS OVER 12'-0" | | 36" x 30" | 7.5 | | 1 | 90" x 48" | 30.0 | 30.0 |
| SPECIAL | WIDE LOADS OVER 12'-0" EXIT HERE | | 48" x 48" | 16.0 | | 2 | 96" x 48" | 32.0 | 64.0 |
| SPECIAL | RESTRICTED WIDTH 12'-0" 2 MILES AHEAD USE NEXT EXIT | | 48" x 48" | 16.0 | | 2 | 120" x 48" | 40.0 | 80.0 |
| W13-1P | ADVISORY SPEED (plaque) | 6 | 30" x 30" | 6.3 | 37.8 | | 30" x 30" | 6.3 | |
| W20-1 | ROAD WORK AHEAD | 6 | 48" x 48" | 16.0 | 96.0 | 17 | 48" x 48" | 16.0 | 272.0 |
| W20-4 | ONE LANE ROAD AHEAD | 6 | 48" x 48" | 16.0 | 96.0 | | 48" x 48" | 16.0 | |
| W20-5 | LEFT or RIGHT LANE CLOSED AHEAD | 4 | 48" x 48" | 16.0 | 64.0 | 16 | 48" x 48" | 16.0 | 256.0 |
| W20-7 | FLAGGER (symbol) | 2 | 48" x 48" | 16.0 | 32.0 | 4 | 48" x 48" | 16.0 | 64.0 |
| SPECIAL | WIDTH RESTRICTION 12 FT WIDE 1/4 MILE AHEAD USE ALT ROUTE | 1 | 48" x 48" | 16.0 | 16.0 | | 48" x 48" | 16.0 | |
| SPECIAL | WIDTH RESTRICTION 12 FT WIDE 1/2 MILE AHEAD USE ALT ROUTE | 2 | 48" x 48" | 16.0 | 32.0 | | 48" x 48" | 16.0 | |
| SPECIAL | OVERWIDTH VEHICLES | 6 | 48" x 48" | 16.0 | 96.0 | 3 | 24" x 18" | 3.0 | 9.0 |
| SPECIAL | WIDTH RESTRICTION 12 FT WIDE 8 MILES AHEAD USE ALT ROUTE | 1 | 132" x 60" | 55.0 | 55.0 | | 48" x 48" | 16.0 | |
| SPECIAL | NO VEHICLES OVER __ FT WIDE | 2 | 72" x 24" | 12.0 | 24.0 | | 72" x 24" | 12.0 | |
| SPECIAL | VEHICLES OVER __ FT WIDE EXIT HERE | | 48" x 48" | 16.0 | | 1 | 120" x 48" | 40.0 | 40.0 |
| G20-1 | ROAD WORK NEXT __ MILES | 4 | 36" x 18" | 4.5 | 18.0 | | 48" x 24" | 8.0 | |
| G20-2 | END ROAD WORK | 4 | 36" x 18" | 4.5 | 18.0 | 8 | 48" x 24" | 8.0 | 64.0 |
| G20-5aP | WORK ZONE (plaque) | | 24" x 18" | 3.0 | | 1 | 36" x 24" | 6.0 | 6.0 |
| SPECIAL | 2 MINUTE RED SIGNAL WAIT FOR GREEN | 5 | 48" x 48" | 16.0 | 80.0 | | 12" x 36" | 3.0 | |
| | | CONVENTIONAL ROAD TRAFFIC CONTROL SIGNS SQFT | | | 885.2 | EXPRESSWAY / INTERSTATE TRAFFIC CONTROL SIGNS SQFT | | | 2131.0 |

## ITEMIZED LIST FOR DETOUR SIGNING

| SIGN CODE | SIGN DESCRIPTION | CONVENTIONAL ROAD NUMBER | CONVENTIONAL ROAD SIGN SIZE | CONVENTIONAL ROAD SQFT PER SIGN | CONVENTIONAL ROAD SQFT | EXPRESSWAY / INTERSTATE NUMBER | EXPRESSWAY / INTERSTATE SIGN SIZE | EXPRESSWAY / INTERSTATE SQFT PER SIGN | EXPRESSWAY / INTERSTATE SQFT |
|---|---|---|---|---|---|---|---|---|---|
| M1-1 | INTERSTATE ROUTE MARKER (2 digits) | 6 | 24" x 24" | 4.0 | 24.0 | 2 | 36" x 36" | 9.0 | 18.0 |
| M3-1 | DIRECTION MARKER - NORTH | 6 | 24" x 12" | 2.0 | 12.0 | 2 | 36" x 18" | 4.5 | 9.0 |
| M4-8 | DETOUR | 6 | 24" x 12" | 2.0 | 12.0 | 2 | 30" x 15" | 3.1 | 6.2 |
| M4-8a | END DETOUR | | 24" x 18" | 3.0 | | 1 | 36" x 24" | 6.0 | 6.0 |
| M5-1 | ADVANCE TURN ARROW 90° (L or R) | 3 | 21" x 15" | 2.2 | 6.6 | 1 | 30" x 21" | 4.4 | 4.4 |
| M6-1 | DIRECTION ARROW - Horizontal Single Head (L or R) | 3 | 21" x 15" | 2.2 | 6.6 | 1 | 30" x 21" | 4.4 | 4.4 |
| | | CONVENTIONAL ROAD DETOUR SIGNING SQFT | | | 61.2 | EXPRESSWAY / INTERSTATE DETOUR SIGNING SQFT | | | 48.0 |

### TYPE 3 BARRICADES

| ITEM DESCRIPTION | QUANTITY |
|---|---|
| Type 3 Barricade, 8' Double Sided | 38 Each |

### ARROW BOARDS

| ITEM DESCRIPTION | QUANTITY |
|---|---|
| Type C Advance Warning Arrow Board | 8 Each |


PLOT SCALE - 1:3.92258
PLOTTED FROM - TRM11NT17
PLOT NAME - 12
FILE - ...\TC\02PT TC CONTAINER.DGN

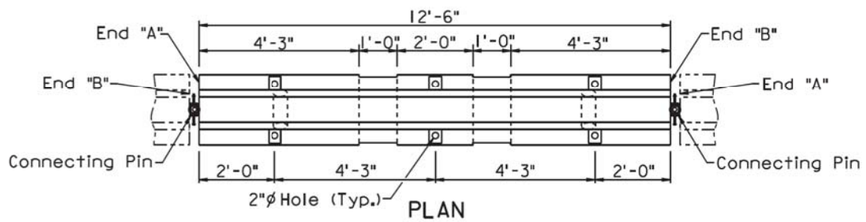


PLAN

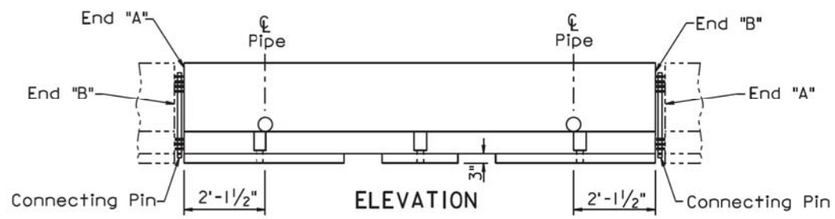


ELEVATION

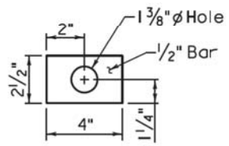


PLATE A

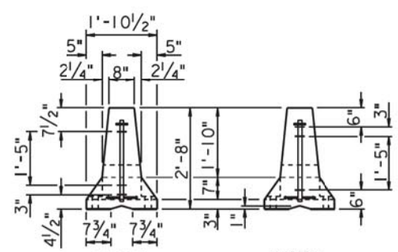


VIEW END A

VIEW END B

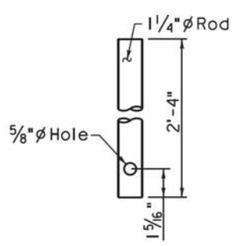


CONNECTING PIN DETAIL

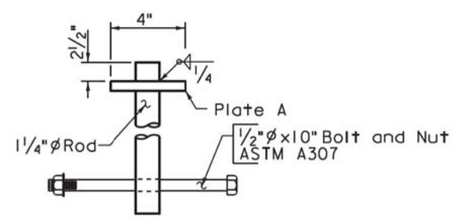


ASSEMBLED CONNECTING PIN

June 26, 2009

| Published Date: 2nd Qtr. 2016 | SDDOT | TRAFFIC CONTROL MOVABLE CONCRETE BARRIERS (F SHAPE INTERIOR SECTION) | PLATE NUMBER 628.01 Sheet 1 of 2 |
|---|---|---|---|

**GENERAL NOTES:**

The detailed drawings are for illustrative purpose and depicts the current version of the F shape concrete barrier. If new movable concrete barriers are requested on a project, they shall be constructed according to the F shape movable concrete barrier details on standard plate 628.10.

Each movable concrete barrier section weighs 5030 ± pounds.

Each movable concrete barrier section is detailed to provide end "A" to end "B" connection by insertion of a pin through steel loops.

The Jersey shape or any version of the F shape traffic control movable concrete barriers may be used on a project, however, only the same type or version shall be used for each run of barriers.

Movable concrete barrier sections shall be placed to provide uniform bearing of the sections with the paved surface as approved by the Engineer.

Movable concrete barrier sections shall never be moved or lifted using the end loops.

Movable concrete barrier sections that have been damaged shall not be used. Barrier sections are considered damaged if the loops are end welded onto existing damaged loops, loops are fractured, or there is exposed rebar from fractured concrete.

All cost for transporting the barriers from the specified location to the project site, installing, and returning the barriers to the specified location shall be incidental to the contract unit price per each for "Traffic Control Movable Concrete Barrier".

If the concrete barriers need to be moved and reset on the project, requiring the barriers to be transported by truck, all cost for removing, transporting, and resetting the barriers shall be incidental to the contract unit price per each for "Remove and Reset Traffic Control Movable Concrete Barrier". All cost for small shifts in alignment of the barriers, not requiring the barriers to be transported by truck, shall be incidental to various contract items.

June 26, 2009

| Published Date: 2nd Qtr. 2016 | SDDOT | TRAFFIC CONTROL MOVABLE CONCRETE BARRIERS (F SHAPE INTERIOR SECTION) | PLATE NUMBER 628.01 Sheet 2 of 2 |
|---|---|---|---|


PLOT SCALE - 1:200.64
PLOT NAME - 13
FILE - ...\TC\02PT TC CONTAINER.DGN
PLOTTED FROM - TRMIINT17

| Posted Speed Prior to Work (M.P.H.) | Spacing of Advance Warning Signs (Feet) (A) | Spacing of Channelizing Devices (Feet) (G) |
|---|---|---|
| 0 - 30 | 200 | 25 |
| 35 - 40 | 350 | 25 |
| 45 - 50 | 500 | 50 |
| 55 | 750 | 50 |
| 60 - 65 | 1000 | 50 |

Flagger

Channelizing Device

For low-volume traffic situations with short work zones on straight roadways where the flagger is visible to road users approaching from both directions, a single flagger may be used.

The ROAD WORK AHEAD and the END ROAD WORK signs may be omitted for short duration operations (1 hour or less).

For tack and/or flush seal operations, when flaggers are not being used, the FRESH OIL sign (W21-2) shall be displayed in advance of the liquid asphalt areas.

Flashing warning lights and/or flags may be used to call attention to the advance warning signs.

The channelizing devices shall be drums or 42" cones.

Channelizing devices are not required along the centerline adjacent to work area when pilot cars are utilized for escorting traffic through the work area.

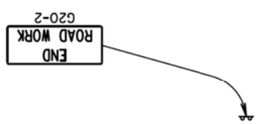


Channelizing devices and flaggers shall be used at intersecting roads to control intersecting road traffic as required.

The buffer space should be extended so that the two-way traffic taper is placed before a horizontal or vertical curve to provide adequate sight distance for the flagger and queue of stopped vehicles.

The length of A may be adjusted to fit field conditions.

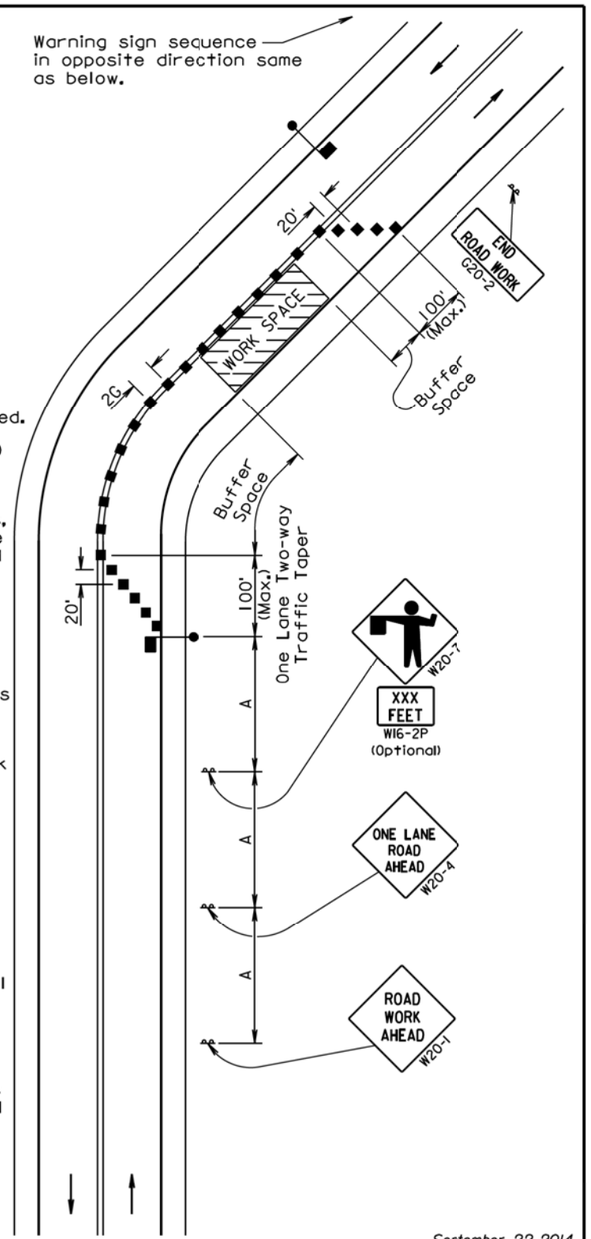


September 22, 2014

| Published Date: 4th Qtr. 2015 | SDDOT | GUIDES FOR TRAFFIC CONTROL DEVICES LANE CLOSURE WITH FLAGGER PROVIDED | PLATE NUMBER 634.23 |
|---|---|---|---|
| | | | Sheet 1 of 1 |

| Posted Speed Prior to Work (M.P.H.) | Spacing of Advance Warning Signs (Feet) (A) | Taper Length (Feet) (L) | Spacing of Channelizing Devices (Feet) (G) |
|---|---|---|---|
| 0 - 30 | 200 | 180 | 25 |
| 35 - 40 | 350 | 320 | 25 |
| 45 - 50 | 500 | 600 | 50 |
| 55 | 750 | 660 | 50 |
| 60 - 65 | 1000 | 780 | 50 |

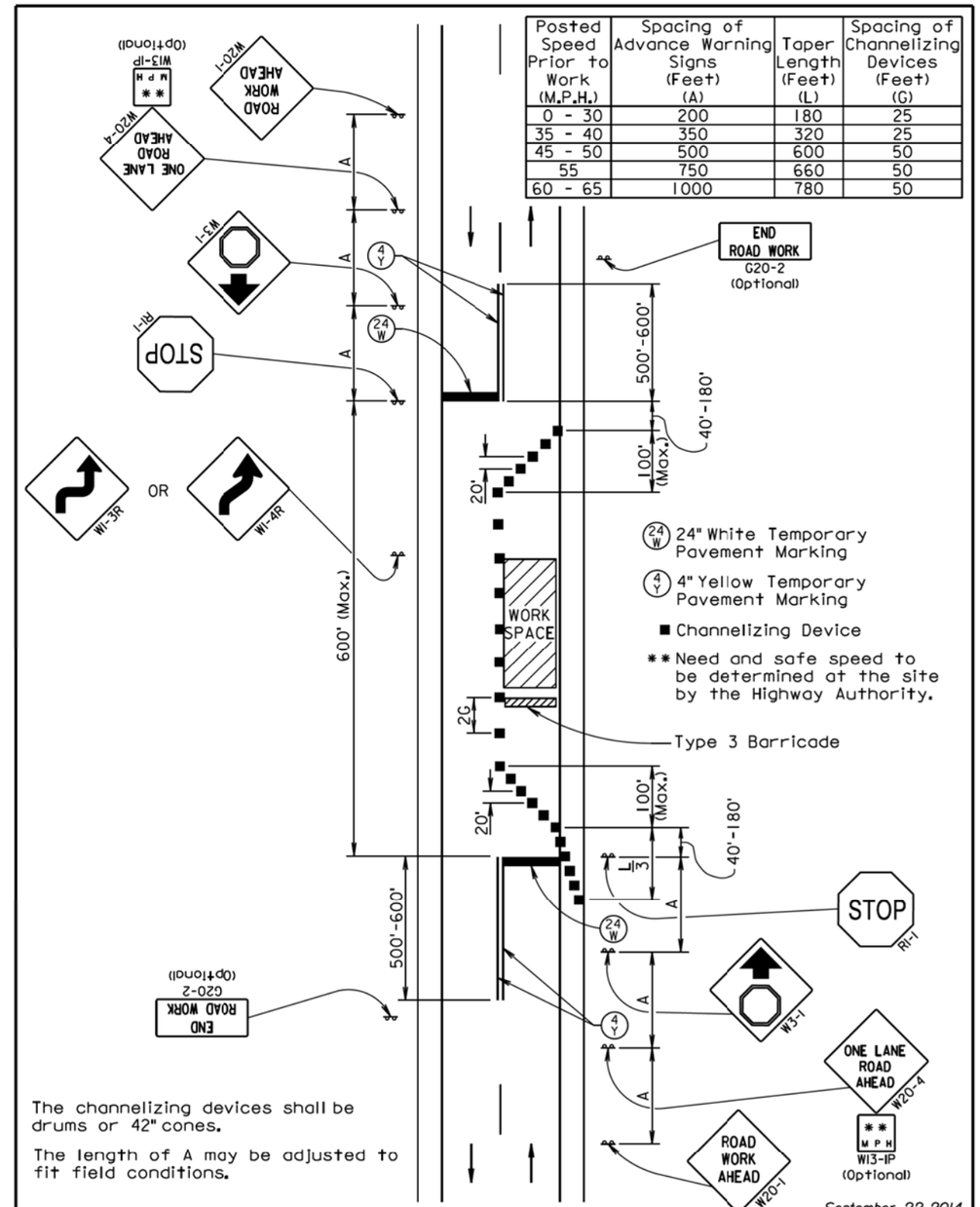


The channelizing devices shall be drums or 42" cones.

The length of A may be adjusted to fit field conditions.

September 22, 2014

| Published Date: 4th Qtr. 2015 | SDDOT | GUIDES FOR TRAFFIC CONTROL DEVICES LANE CLOSURE USING STOP SIGNS | PLATE NUMBER 634.25 |
|---|---|---|---|
| | | | Sheet 1 of 1 |


PLOT SCALE - 1:200.64
PLOTTED FROM - TRMI1NT17
PLOT NAME - 14
FILE - ...\TC\02PT TC CONTAINER.DGN

| Posted Speed Prior to Work (M.P.H.) | Spacing of Advance Warning Signs (Feet) (A) | Spacing of Channelizing Devices (Feet) (G) |
|---|---|---|
| 0 - 30 | 200 | 25 |
| 35 - 40 | 350 | 25 |
| 45 - 50 | 500 | 50 |
| 55 | 750 | 50 |
| 60 - 65 | 1000 | 50 |

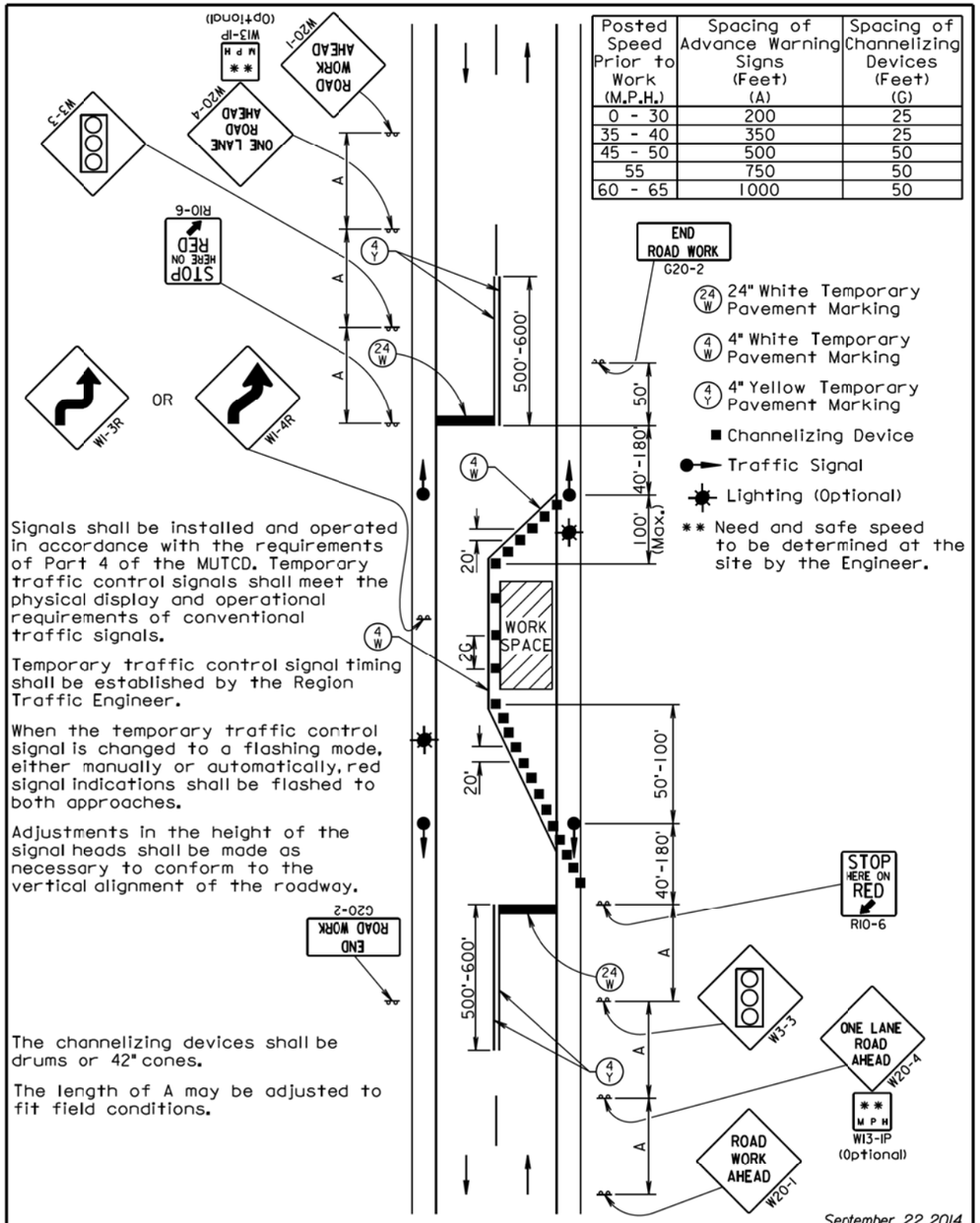


Signals shall be installed and operated in accordance with the requirements of Part 4 of the MUTCD. Temporary traffic control signals shall meet the physical display and operational requirements of conventional traffic signals.

Temporary traffic control signal timing shall be established by the Region Traffic Engineer.

When the temporary traffic control signal is changed to a flashing mode, either manually or automatically, red signal indications shall be flashed to both approaches.

Adjustments in the height of the signal heads shall be made as necessary to conform to the vertical alignment of the roadway.

The channelizing devices shall be drums or 42" cones.

The length of A may be adjusted to fit field conditions.

September 22, 2014

Published Date: 4th Qtr. 2015

SDDOT

**GUIDES FOR TRAFFIC CONTROL DEVICES LANE CLOSURE USING TRAFFIC SIGNALS**

PLATE NUMBER 634.26

Sheet 1 of 1

| Posted Speed Prior to Work (M.P.H.) | Spacing of Advance Warning Signs (Feet) (A) (B) (C) |
|---|---|
| 0 - 30 | 200 |
| 35 - 40 | 350 |
| 45 - 50 | 500 |
| 55 | 750 |
| 60 - 65 | 1000 |
| | |
| | (A) (B) (C) |
| 70 - 80 | 1000 1500 2640 |

** Speed appropriate for location.

◉ Reflectorized Drum

▪ Channelizing Device

ROAD WORK AHEAD sign is only required in advance of the first lane closure.

High speed is defined as having a posted speed limit greater than 45 mph.

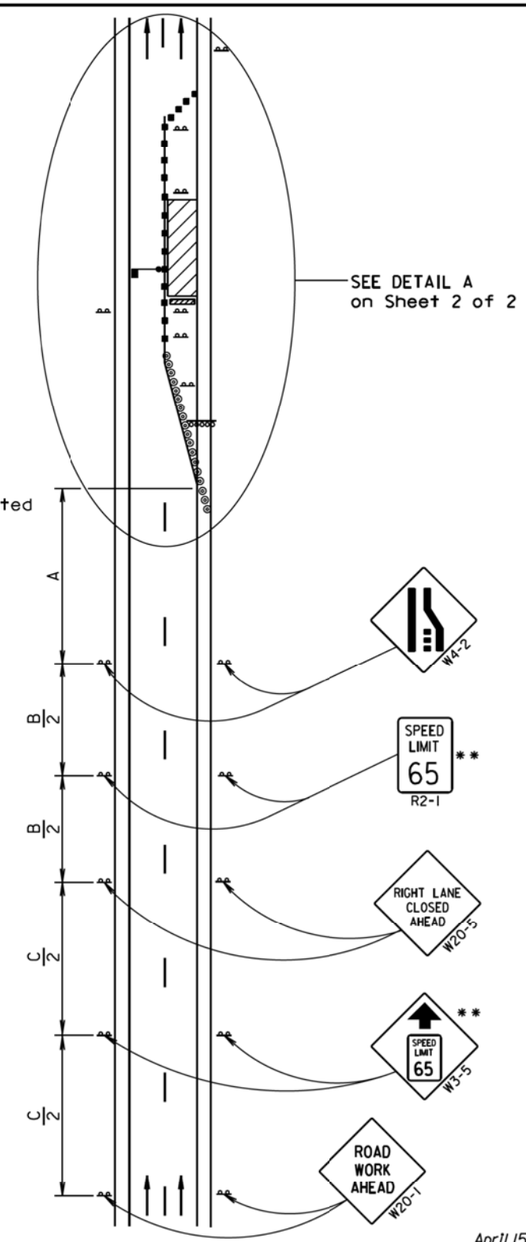


April 15, 2015

Published Date: 4th Qtr. 2015

SDDOT

**WORK ZONE SPEED REDUCTION FOR INTERSTATE AND HIGH SPEED MULTI-LANE HIGHWAYS**

PLATE NUMBER 634.63

Sheet 1 of 2


PLOT SCALE - 1:200.64

PLOTTED FROM - TRMIINT17

PLOT NAME - 15

FILE - ...\TC\02PT TC CONTAINER.DGN

| Posted Speed Prior to Work (M.P.H.) | Spacing of Channelizing Devices (Feet) (G) | Taper Length (Feet) (L) |
|---|---|---|
| 0 - 30 | 25 | 180 |
| 35 - 40 | 25 | 320 |
| 45 - 50 | 50 * | 600 |
| 55 | 50 * | 660 |
| 60 - 65 | 50 * | 780 |
| 70 - 80 | 50 * | 960 |

* Spacing is 40' for 42" cones.

**Speed appropriate for location.

***Use speed limit designated for the condition when workers are present in the work space. Signs shall be covered or removed when workers are not present.

Flagger (As Necessary)

◎ Reflectorized Drum

■ Channelizing Device

# The Work Space shall be a minimum of 500' from the end of the taper.

The FLAGGER sign shall be used whenever there is a Flagger present.

The channelizing devices shall be 42" cones or drums.

42" cones may be used in place of the drums shown in the taper if setup will not be used during night time hours.

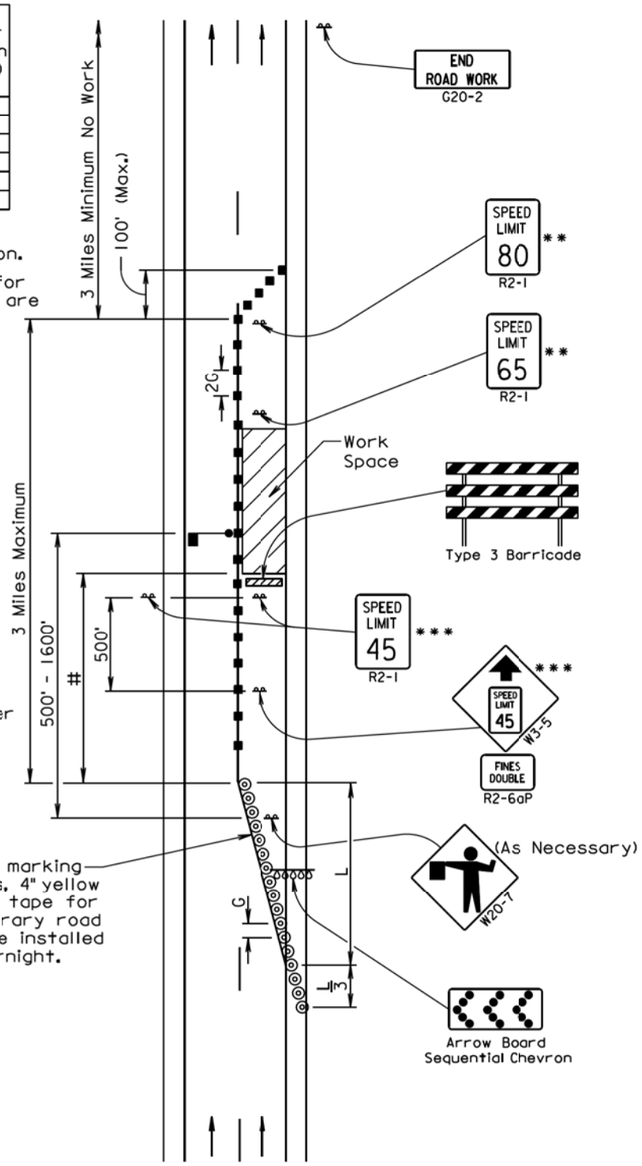


4" white temporary pavement marking tape for right lane closures, 4" yellow temporary pavement marking tape for left lane closures, or temporary road markers at 5' spacing shall be installed when the lane is closed overnight.

DETAIL A

April 15, 2015

| Published Date: 4th Qtr. 2015 | SDDOT | WORK ZONE SPEED REDUCTION FOR INTERSTATE AND HIGH SPEED MULTI-LANE HIGHWAYS | PLATE NUMBER 634.63 Sheet 2 of 2 |
|---|---|---|---|

| Posted Speed Prior to Work (M.P.H.) | Spacing of Advance Warning Signs (Feet) (A) (B) (C) | Taper Length (Feet) (L) |
|---|---|---|
| 0 - 30 | 200 | 180 |
| 35 - 40 | 350 | 320 |
| 45 - 50 | 500 | 600 |
| 55 | 750 | 660 |
| 60 - 65 | 1000 | 780 |
| | | |
| | (A) (B) (C) | |
| 70 - 80 | 1000 1500 2640 | 960 |

◎ Reflectorized Drum

■ Channelizing Device

(4W) 4" White Temporary Pavement Marking

The movable concrete barrier layout is shown elsewhere in the plans.

The moveable concrete barrier shall not be placed along the merging taper. The lane shall first be closed using channelizing devices and pavement markings.

The channelizing devices shall be 42" cones or drums.

42" cones may be used in place of the drums shown in the taper if setup will not be used during night time hours.

| Posted Speed Prior to Work (M.P.H.) | Spacing of Channelizing Devices (Feet) (G) |
|---|---|
| 0 - 30 | 25 |
| 35 - 40 | 25 |
| 45 - 50 | 50 * |
| 55 | 50 * |
| 60 - 65 | 50 * |
| 70 - 80 | 50 * |

* Spacing is 40' for 42" cones.

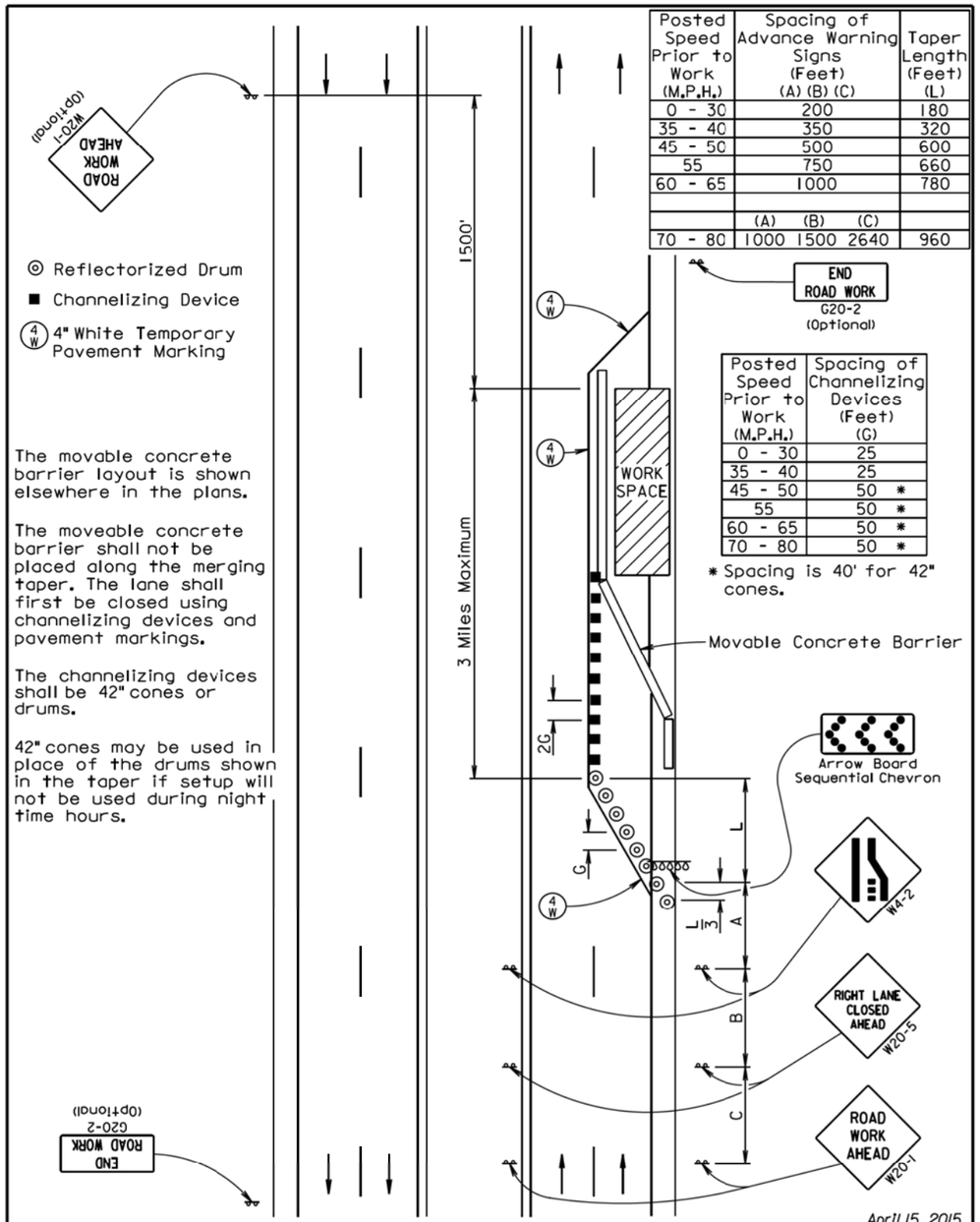


April 15, 2015

| Published Date: 4th Qtr. 2015 | SDDOT | GUIDES FOR TRAFFIC CONTROL DEVICES LANE CLOSURE WITH BARRIER | PLATE NUMBER 634.65 Sheet 1 of 1 |
|---|---|---|---|


PLOT SCALE - 1:200.64
PLOTTED FROM - TRMIINT17
PLOT NAME - 16
FILE - ...\TC\02PT TC CONTAINER.DGN

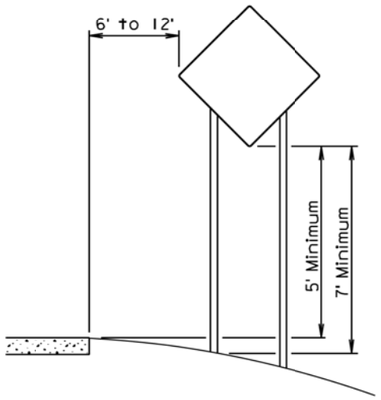


RURAL DISTRICT

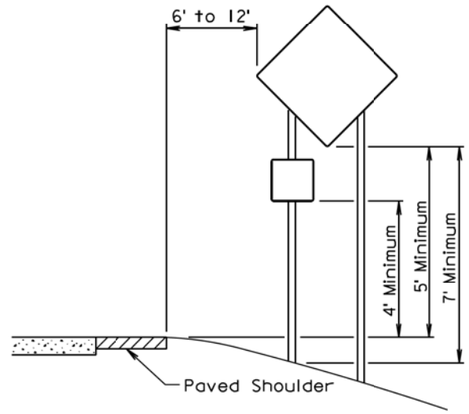


RURAL DISTRICT WITH SUPPLEMENTAL PLATE

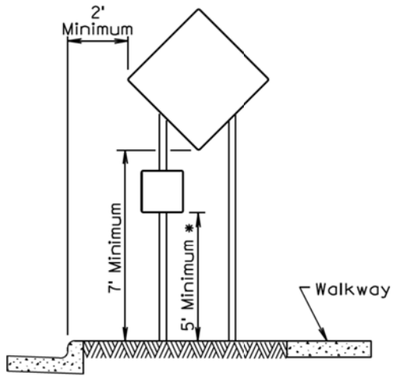


URBAN DISTRICT

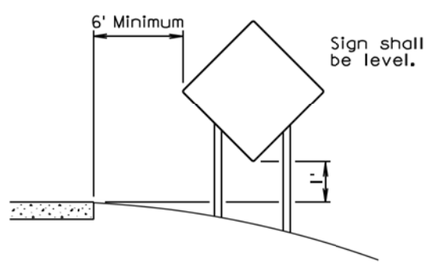


RURAL DISTRICT
3 DAY MAXIMUM
(Not applicable to regulatory signs)

* If the bottom of supplemental plate is mounted lower than 7 feet above a pedestrian walkway, the supplemental plate should not project more than 4" into the pedestrian facility.

September 22, 2014

| Published Date: 4th Qtr. 2015 | SDDOT | CRASHWORTHY SIGN SUPPORTS (Typical Construction Signing) | PLATE NUMBER 634.85 Sheet 1 of 1 |
|---|---|---|---|

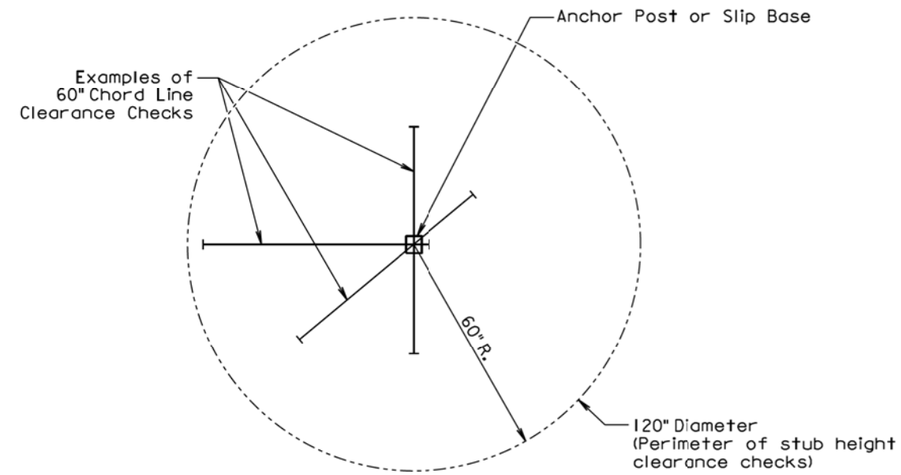


PLAN VIEW
(Examples of stub height clearance checks)

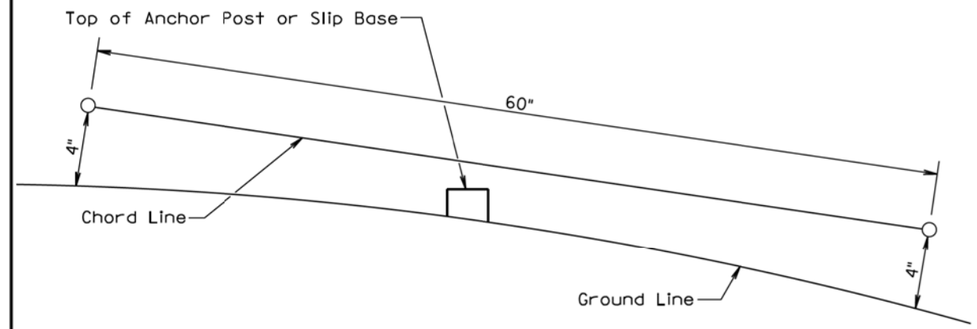


ELEVATION VIEW

**GENERAL NOTES:**

The top of anchor posts and slip bases SHALL NOT extend above a 60" chord line within a 120" diameter circle around the post with ends 4" above the ground.

At locations where there is curb and gutter adjacent to the breakaway sign support, the stub height shall be a maximum of 4" above the ground line at the localized area adjacent to the breakaway support stub.

The 4" stub height clearance is not necessary for U-channel lap splices where the support is designed to yield (bend) at the base.

July 1, 2005

| Published Date: 4th Qtr. 2015 | SDDOT | BREAKAWAY SUPPORT STUB CLEARANCE | PLATE NUMBER 634.99 Sheet 1 of 1 |
|---|---|---|---|


PLOT SCALE - 1:200.64
PLOT NAME - 17
FILE - ...\TC\02PT TC CONTAINER.DGN
PLOTTED FROM - TRM1INT17

| STATE OF | PROJECT | SHEET NO. | TOTAL SHEETS |
|---|---|---|---|
| S.D. | IM-PH 0291(122)0 | 35 | 284 |

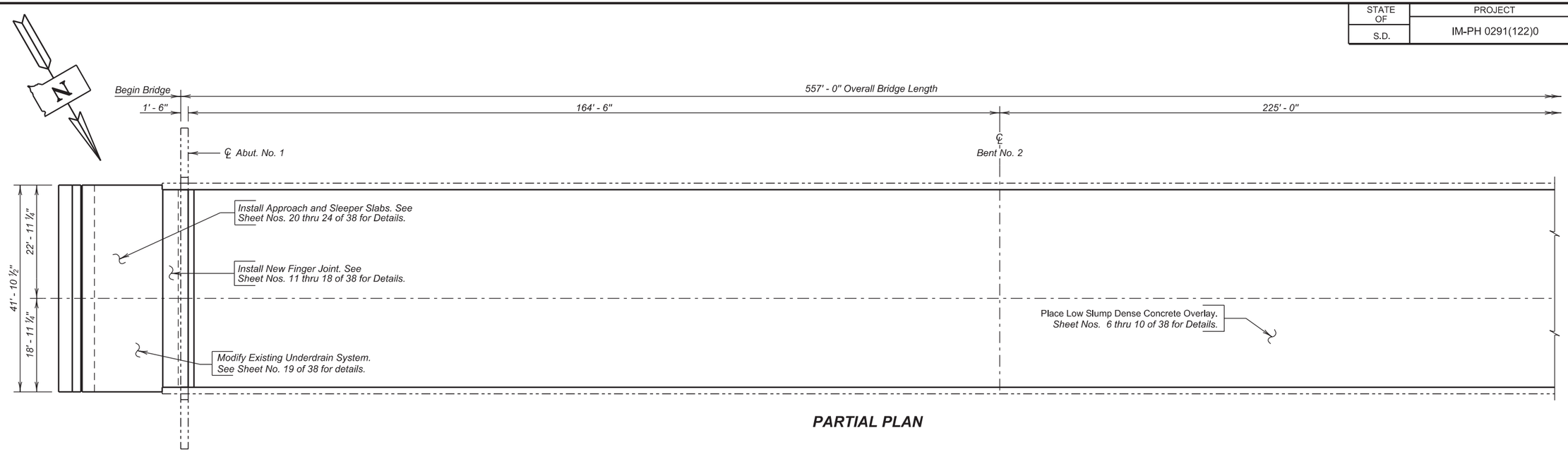


**PARTIAL PLAN**

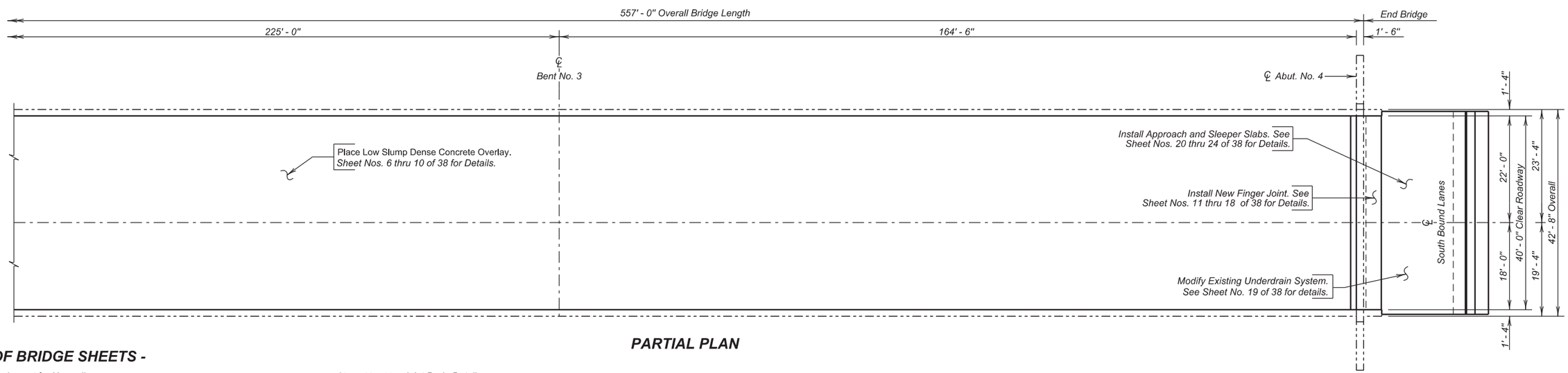


**PARTIAL PLAN**

## INDEX OF BRIDGE SHEETS -


Sheet No. 1 - Layout for Upgrading
Sheet No. 2 - Estimate of Structure Quantities and Notes
Sheet No. 3 - Notes (Continued)
Sheet No. 4 - Notes (Continued)
Sheet No. 5 - Notes (Continued)
Sheet No. 6 - Deck Delamination Details
Sheet No. 7 - Deck Profiles for Low Slump Dense Concrete Overlay
Sheet No. 8 - Deck Profiles for Low Slump Dense Concrete Overlay (Continued)
Sheet No. 9 - Deck Profiles for Low Slump Dense Concrete Overlay (Continued)
Sheet No. 10 - Deck Profiles for Low Slump Dense Concrete Overlay (Continued)
Sheet No. 11 - Finger Expansion Joint Breakout Details
Sheet No. 12 - Finger Expansion Joint Layout (Abutment No. 1)
Sheet No. 13 - Finger Expansion Joint Layout (Abutment No. 4)
Sheet No. 14 - Finger Expansion Joint Details
Sheet No. 15 - Joint Drain Layout
Sheet No. 16 - Joint Drain Details
Sheet No. 17 - Joint Drain Details (Continued)
Sheet No. 18 - Joint Drain Details (Continued)
Sheet No. 19 - Approach Slab Underdrain System Modification
Sheet No. 20 - Approach Slab Layout
Sheet No. 21 - Approach Slab Details (Abut. No. 1)
Sheet No. 22 - Approach Slab Details (Abut. No. 4)
Sheet No. 23 - Approach Slab Details (Continued)
Sheet No. 24 - Approach Slab Joint
Sheet No. 25 - As Built Elevation Survey
Sheet No. 26 - As Built Elevation Survey (Continued)
Sheet No. 27 - As Built Elevation Survey (Continued)
Sheet No. 28 - As Built Elevation Survey (Continued)
Sheet No. 29 - 38 - Original Construction Plans


**(SOUTH BOUND LANES)**
**LAYOUT FOR UPGRADE**

FOR

# 557' - 0" CONT. COMP. GIRDER BRIDGE

40' - 0" ROADWAY — 0° SKEW
OVER BIG SIOUX RIVER — SEC. 26-T89N-R48W
STR. NO. 64-164-405 — IM-PH 0291(122)0
PCN 02PT

UNION COUNTY

S. D. DEPT. OF TRANSPORTATION

OCTOBER 2015



PLANS BY :
OFFICE OF BRIDGE DESIGN, SOUTH DAKOTA DEPARTMENT OF TRANSPORTATION

| DESIGNED BY | CK. DES. BY | DRAFTED BY | |
|---|---|---|---|
| KSK | BD | KR | Kevin N. Goeden |
| UNIN02PT | 02PTRA01 | | BRIDGE ENGINEER |

# ESTIMATE OF STRUCTURE QUANTITIES

| ITEM NO. | DESCRIPTION | QUANTITY | UNIT |
|---|---|---|---|
| 009E3310 | Bridge Elevation Survey | LumpSum | LS |
| 110E0010 | Remove Concrete Bridge Approach Slab | 210.2 | SqYd |
| 410E0700 | Abutment Joint Drain | 2 | Each |
| 410E2100 | Finger Type Expansion Joint Assembly | 2 | Each |
| 410E2600 | Membrane Sealant Expansion Joint | 83.8 | Ft |
| 412E0100 | Bridge Repainting, Class I | LumpSum | LS |
| 430E0300 | Granular Bridge End Backfill | 8.0 | CuYd |
| 460E0150 | Concrete Approach Slab for Bridge | 197.8 | SqYd |
| 460E0160 | Concrete Approach Sleeper Slab for Bridge | 23.2 | SqYd |
| 480E0504 | No. 4 Rebar Splice | 28 | Each |
| 480E0505 | No. 5 Rebar Splice | 14 | Each |
| 480E0506 | No. 6 Rebar Splice | 48 | Each |
| 550E0010 | Low Slump Dense Concrete Bridge Deck Overlay | 181.4 | CuYd |
| 550E0100 | Concrete Removal Type 1A | 2454.6 | SqYd |
| 550E0110 | Concrete Removal Type 1B | 245.5 | SqYd |
| 550E0120 | Concrete Removal Type 1C | 122.7 | SqYd |
| 550E0130 | Concrete Removal Type 1D | 122.7 | SqYd |
| 550E0140 | Concrete Removal Type B | 20.0 | Ft |
| 550E0200 | Class A45 Concrete Fill | 27.3 | CuYd |
| 550E0500 | Finishing and Curing | 2455.2 | SqYd |

## SPECIFICATIONS

1. Design Specifications: AASHTO Standard Specifications for Highway Bridges 17th Edition using Working Stress Design.

2. Construction Specifications: South Dakota Standard Specifications for Roads and Bridges, 2015 Edition and Required Provisions, Supplemental Specifications and Special Provisions as included in the Proposal.

3. All Welding and Welding Inspection shall be in conformance with the AASHTO/AWS Bridge Welding Code D1.5M/D1.5:2010 unless otherwise noted in this plan set.

## DETAILS AND DIMENSIONS OF EXISTING BRIDGE

All details and dimensions of the existing bridge, contained in these plans, are based on the original construction plans and shop plans and are provided as information only. It is the Contractor's responsibility to inspect and verify the actual field conditions and any necessary as-built dimensions affecting the satisfactory completion of the work required for this project.

## SHOP PLANS

Shop plans shall be required as specified by Section 410.3.A of the Construction Specification.

## SCOPE OF BRIDGE WORK & SEQUENCE OF OPERATIONS

All work on this structure shall be accomplished with the traffic control shown in the plans. Alternate sequence of operations may be submitted by the Contractor for approval by the Engineer a minimum of two weeks prior to the pre-construction meeting.

1. Accomplish all Concrete Removal Type 1A, 1B, 1C, 1D, and B and place Class A45 Concrete Fill to the satisfaction of the Engineer for the first phase of construction.

2. Place a Low Slump Dense Concrete Bridge Deck Overlay to the elevations shown in the plans on the bridge deck for the first phase of construction.

3. Remove the existing approach slabs for the first phase of construction.

4. Breakout the existing bridge joints on both ends of the structure for the first phase of construction.

5. Fill low spots in the bridge end backfill for the first phase of construction.

6. Install the new Finger Expansion Devices for the first phase of construction.

7. Install the Sleeper Slab and Approach Slabs for the first phase of construction.

8. Switch traffic and repeat steps 1 through 7 for the second phase of construction.

## GENERAL CONSTRUCTION - BRIDGE

1. All mild reinforcing steel shall conform to ASTM A615, Grade 60.

2. All exposed concrete corners and edges shall be chamfered 3/4" unless noted otherwise in the plans. Match existing chamfer if the existing chamfer differs.

3. Use 2" clear cover on all reinforcing steel except as shown otherwise.

4. Request for construction joints or resteel splices at points other than those shown, must be submitted to the Engineer for prior approval. If additional splices are approved, no payment will be allowed for the added quantity of reinforcing steel.

5. Surfaces of fresh concrete at construction joints shall be rough floated sufficiently to consolidate the surface. All construction joints shall be cleaned of surface laitance, curing compounds and other foreign materials prior to placing fresh concrete against the joint.

6. The type of vibratory screed shall be approved by the Engineer.

## DESIGN MIX OF CONCRETE

1. Class A45 Concrete shall be used for the bid items Concrete Approach Slab for Bridge and Concrete Approach Sleeper Slab.

2. The Type of cement, concrete strength requirements, aggregate requirements, slump and air requirements for the contract items Concrete Approach Sleeper Slab for Bridge, Concrete Approach Slab for Bridge, and Class A45 Concrete, Bridge Repair shall conform to the requirements of Section 460 of the Construction Specifications.

## REMOVAL OF CONCRETE BRIDGE APPROACH SLAB

1. The existing concrete approach and sleeper slab adjacent to the structure shall be completely removed by the Contractor.

2. The crushed concrete and reinforcing steel from the removal shall be disposed of by the Contractor at an approved site. An appropriate site will be as described in the Environmental Commitment notes in this set of plans.

3. All labor, tools, equipment and any incidentals necessary for removal and disposal of the existing approach and sleeper slabs shall be incidental to the contract unit price per square yard for "Remove Concrete Bridge Approach Slab".

## MODIFY EXISTING BRIDGE END BACKFILL

1. This work consists of bringing the existing bridge end backfill material up to the required elevation and repairing any damage to the in-place bridge end backfill material as approved by the Engineer.

2. Granular bridge end backfill shall conform to Section 882 of the Construction Specification. Granular material shall be placed and compacted using a smooth face vibratory roller or vibratory plate compactor according to Section 430.3 B of the Construction Specification.

3. The Reinforcement Fabric (MSE) shall conform to section 831 of the Construction Specification.

4. The polyethylene sheeting shall be a minimum thickness of 6 mils and shall be sufficiently durable such that it will not puncture or tear when installed as intended.

**ESTIMATE OF STRUCTURE QUANTITIES AND NOTES**
FOR
557' - 0" CONT. COMP. GIRDER BRIDGE

STR. NO. 64-164-405
OCTOBER 2015



| DESIGNED BY | CK. DES. BY | DRAFTED BY | |
|---|---|---|---|
| KSK | MM | KSK | Kevin N. Boeden BRIDGE ENGINEER |
| UNIN02PT | 02PTRA02 | | |

**MODIFY EXISTING BRIDGE END BACKFILL (CONTINUED)**

5. The existing polyethylene sheeting under the existing approach slab and sleeper slab shall be removed and disposed of in accordance with the Environmental Commitments.

6. The surfaces on which the reinforcement fabric is to be placed shall be smooth and free of obstructions. The reinforcement fabric may be oriented in any direction.

7. Any equipment used to install the granular bridge end backfill over the reinforcement fabric shall be operated in such a manner that the reinforcement fabric is not damaged. To avoid damage to the reinforcement fabrci, the equipment used to place, spread, and compact material over the drainage fabric shall be limited to handheld equipment.

8. Any reinforcement fabric that is torn or punctured shall be repaired or replaced by the Contractor at no additional cost to the Department. The repair shall consist of a patch of the same type of reinforcement fabric being placed over the ruptured area such that it overlaps the damaged area a minimum of 3 feet measured from any damaged edge.

9. Seams shall be constructed by overlapping the fabric a minimum of 2 feet. All seams shall be inspected by the Engineer and any deficient seams repaired by the Contractor prior to placement of the bridge end backfill material.

10. The granular bridge end backfill shall be compacted to a minimum of 97 percent of maximum dry density as determined by SD 104 (AASHTO T99). The moisture content of the backfill material prior to and during compaction shall be adequate to provide satisfactory results. Maximum dry density and optimum moisture shall be determined by SD 104 (AASHTO T99).

11. The quantity specified in the plans for granular bridge end backfill was estimated. Actual amount installed may vary slightly due to changes in the field condition. Regardless of these limitations, the plan shown quantity will be the basis of payment. Field measurement for Granular Bridge End Backfill will not be made. Payment will be full compensation for all labor, equipment, materials, water, and all other items incidental to furnishing and installing the reinforcement fabric (MSE), the polyethylene sheeting and for furnishing and installing, including any hauling or stockpiling, of the granular bridge end backfill material.

**APPROACH SLABS**

1. Excavation for placement of new approach slabs and sleeper slabs shall be done with minimal disturbance to the underlying material.

2. The top of approach slab elevations shall be established during construction and shall be subject to the approval of the Engineer. Care shall be taken to provide a smooth transition from the bridge deck elevations to the new pavement elevations established in the field so as to prevent any dips or bumps in the areas of the bridge ends or ends of the new approach slabs. The maximum rate of grade transition through the approach slab shall be 1/8 inch per 10 feet.

3. Sleeper slab riser shall be cast with or later than the Approach Slab. Care shall be taken to ensure the correct grade is maintained across the joint.

4. The use of a vibratory screed will be required during placement of Class A45 Concrete for the approach slabs. Concrete placement in front of the screed shall be kept parallel to the screed.

5. The concrete in the approach slab shall be tined parallel with the skew of the bridge.

6. The new approach slabs and sleeper slabs shall have a surface finish as stipulated in Section 460.3 L.4 of the Construction Specifications.

7. The Concrete Approach Slabs Adjacent to Bridge shall be cured in accordance with Section 460.3 M of the Construction Specifications. The minimum 7 day cure time requirement shall be waived. The approach slabs shall be cured until a minimum compressive strength of 4,000 psi is reached.

8. Concrete Approach Sleeper Slab for Bridge will be paid for at the contract unit price per square yard. This payment shall be full compensation for all excavation, furnishing, hauling, and placing all materials including concrete, concrete anchors, and reinforcing steel; for disposal of all excavated material and surplus materials; and for labor, tools, equipment and any incidentals necessary to complete this item of work.

9. Concrete Approach Slab for Bridge will be paid for at the contract unit price per square yard. This payment shall be full compensation for all excavation, furnishing, hauling and placing all materials including concrete, asphalt paint or 4 mil polyethylene sheeting, elastic joint sealer and reinforcing steel; for disposal of all excavated material and surplus materials and for labor, tools, equipment and any incidentals necessary to complete this item of work.

**MECHANICAL REBAR SPLICES**

Mechanical splice devices will be required for the transverse approach slab and sleeper slab reinforcing steel. The mechanical rebar splices shall be in accordance with Section 480 of the Construction Specifications.

**MEMBRANE SEALANT EXPANSION JOINT**

1. The Membrane Sealant shall be on the approved product list for Membrane Sealant Expansion Joint.

2. The manufacturer shall supply the membrane sealant in packaging that precompresses the membrane sealant. The precompressed dimension shall be as recommended by the sealant manufacturer, however, in no case shall the precompressed dimension exceed 75% of the joint opening width. The foam sealant shall be slowly self expanding to permit workers ample time to install the membrane sealant before the membrane sealant exceeds the joint opening width.

3. The membrane sealant shall provide a water tight seal throughout a joint movement range of +25% (minimum) from the specified joint opening dimension.

4. The membrane sealant shall be supplied in pieces a minimum of 5 feet in length. The foam sealant shall be ultra-violet and ozone resistant.

5. The bonding adhesive used to attach the membrane sealant to the adjacent concrete shall be approved by the membrane sealant manufacturer.

6. Adhesive used to join adjacent pieces to of the membrane sealant shall be as recommended by the manufacturer.

7. If Styrofoam filler material is used in the construction, it shall be closed cell and water-tight as approved by the Engineer.

8. The minimum ambient air temperature at the time of joint installation and adhesive curing shall be 40°F.

9. A technical representative of the membrane sealant shall be present at the jobsite during installation. The technical representative shall be knowledgeable in the correct procedures for the preparation and installation of the joint material to ensure the Contractor installs the joint to the manufacturers' recommendations.

10. Surfaces that will be in contact with the membrane sealant shall be thoroughly cleaned by abrasive blasting to remove all laitance and contaminants (such as oil, curing compounds, etc.) from the surface. At a minimum two passes of the abrasive blasting with the nozzle held at an angle to within 1 to 2 inches of the surface will be required. Cleaning of the surfaces with solvents, wire brushing, or grinding shall not be permitted.

11. After abrasive blasting, but immediately prior to membrane joint installation, the entire joint contact surface shall be air blasted. The air compressor used for joint cleaning shall be equipped with trap devices capable of providing moisture-free and oil-free air at a recommended pressure of 90 psi. To obtain complete bonding with the adhesive, the adjacent surfaces must be dry and clean. The contact surfaces for the joint shall be visually inspected by the Engineer immediately prior to joint installation to verify the surface is dry and clean.

12. Individual spliced sections shall be installed as per the manufacturers' recommendations. The membrane joint sealant manufacturer shall submit a detailed installation procedure to the Engineer at least 5 days prior to joint installation for his review.

**NOTES (CONTINUED)**
FOR
557' - 0" CONT. COMP. GIRDER BRIDGE

STR. NO. 64-164-405
OCTOBER 2015



| DESIGNED BY | CK. DES. BY | DRAFTED BY | |
|---|---|---|---|
| KSK | MM | KSK | Kevin N. Boeden |
| UNIN02PT | 02PTRA03 | | BRIDGE ENGINEER |

**MEMBRANE SEALANT EXPANSION JOINT (CONTINUED)**

13. Traffic shall not be allowed on the joint until the bonding adhesive has had time to cure, as recommended by the manufacturer.

14. Use plywood or other material to protect concrete adjacent to the joint from spalling before any equipment is moved across the joint. Any spall areas will be repaired at the Contractor's expense by breaking out and replacing adjacent concrete, as approved by the Engineer.

15. The Membrane Sealant Expansion Joint will be measured in feet to the nearest one-tenth foot, complete in place. Measurement will be made of the overall horizontal length. The Membrane Sealant Expansion Joint will be paid for at the contract unit price per foot complete in place. Payment for this item shall be full compensation for furnishing all the required materials in place, including labor, equipment and incidentals necessary to complete the work in accordance with the plans and the foregoing specifications.

**FINGER EXPANSION JOINT**

1. Components of the Finger expansion joint assembly will include all plates shown on sheet 14 of 38. This will include the top finger plates and all other plates attached to the top finger plate.

2. All steel components, steel plates, bars and structural shapes shall be galvanized after shop welding in accordance with ASTM A123.

3. All new structural steel shall conform to ASTM A709 Gr. 50. Material less than ¼ inch thick may be ASTM A1011, Grade 36. The 5/8 inch diameter end welded deformed bar anchors shall be a commercially available Fluxed Deformed Bar Anchor Stud, automatically end welded, with material conforming to ASTM A496.

4. The finger expansion joint and drain system under the fingers will be installed one-half roadway width at a time while allowing for one-way traffic at all times.

5. Due to work on one-half of the deck at a time, splices in the joint will be required at the centerline of the roadway. Welded field splice details, the procedures for preparing the surfaces of the entire fabricated joint for welding and the procedures for repairing the galvanizing after welding shall be included in the shop plans. Repair of the galvanizing shall be by the zinc-based solder method in conformance with ASTM A780.

6. Welding of drainage plates at centerline will not be required if the contractor fully seals the gap between the two end plates with a silicon sealer approved by the Bridge Construction Engineer.

7. The phase limits for construction prevent sufficient room for a lap splice at centerline. Therefore, the transverse reinforcing steel shall be spliced with mechanical splice devices. The mechanical rebar splices shall be in accordance with Section 480 of the Construction Specifications.

8. The finger joint bolt shall be shimmed as necessary, with shims detailed in the plans, to match the roadway slope. The finger joint shall be bolted to the girders using ¾ inch diameter A449 heavy hex bolts.

9. Each finger joint bolt shall include one 5/16" plate washer detailed in this plan set, one standard washer, and one heavy hex nut.

10. The two halves of the finger expansion joint shall be placed parallel to each other and shall be set at correct grade and crown. The top surfaces of the two sides of the finger expansion joint shall be level with one another. The gap between the fingers shall be set using the joint Installation Table shown on the plan sheet. Strict adherence to the these opening at the specified installation temperatures is required for the joint to function properly.

11. The new concrete surfaces of the bridge deck in the area of the finger joint placement shall be finished in accordance with Sections 460.3 L.4 b of the Construction Specifications. The portion of the approach slab in the location of the finger joint shall be finished in accordance with Sections 460.3 L.4.b and 460.3 L.4.c of the Construction Specifications.

12. All costs associated with the removal and replacement of the existing finger joint will be incidental to the contract unit price per each for Finger Type Expansion Joint Assembly. This will include concrete breakout, cleaning and straightening of reinforcement, new reinforcement, mechanical splices, new A45 concrete, all structural steel associated with finger joint and sliding plate assemblies.

**ABUTMENT JOINT DRAIN**

1. The existing abutment joint drain will need to be removed prior to installation of the new abutment joint drain.

2. Drainage assembly consists of plates U1, U2, V1, V2, T1, T2, T3 and T4, and also the neoprene sheet, drainage trough and riprap. This includes any plates bolted to the finger joint or attached to the abutment backwall/seat.

3. All steel components, steel plates, bars and structural shapes shall be galvanized after shop welding in accordance with ASTM A 123 except as stated in the following notes.

4. The threads of all nuts and bolts to be galvanized shall be protected to ensure that a bolt or nut can still be fully threaded after the galvanizing process.

5. All new structural steel plates and bars shall conform to ASTM A709,Grade 36. Material less than 1/4 inch thick may be ASTM A1011, Grade 36, except as specified in the notes below.

6. Plates U1, U2, V1 and V2 shall be bolted to the Finger Expansion Joint using 3/8 inch diameter bolts. Each bolt shall include two standard washers, and one standard nut. The bolts, nuts and washers shall be either hot-dipped galvanized according to ASTM F2329 or made of corrosion resistant material.

7. The Neoprene sheet shall be EPDM Cloth Inserted Rubber. The material shall have the following physical properties:

| | |
|---|---|
| Durometer: | 70 A Nominal |
| Tensile Strength: | 1500 psi |
| Temperature Range: | -40° F to 245° F |
| Elongation: | 100% |
| UV Rating: | Excellent |

8. Class A riprap shall conform to the Specifications. The cost for furnishing and installing the riprap shall be incidental to the contract unit price per each for Abutment Joint Drain.

9. The Type B Drainage Fabric shall conform to section 831 of the Construction Specification.

10. Material for the 3/8 inch diameter x 2 3/4 inch commercially available steel wedge-type anchor bolts, nuts and washers shall be at the option of the Contractor. The bolts, nuts and washers shall be either hot-dipped galvanized according to ASTM F2329 or made of corrosion resistant material. The wedge type anchors shall be installed in accordance with the manufacturer's recommendations.

11. The 3/8 inch diameter bolts, nuts and washer shall conform to ASTM A307 and be galvanized in accordance with ASTM F2329 or made of the same other corrosion resistant material.

12. The existing joint drain shall be completely removed and disposed of in accordance with the Environmental Commitments. Any holes left in the abutment backwall shall be filled with a material approved by the Engineer.

13. The placement of the drainage channel is necessary to drain the water from the finger joint and diaper system away from the bridge. Should it be necessary, it shall be at the Engineer's option to adjust the gutter from the plans location to meet this requirement.

14. After the drain length and slope are determined for each location, and approved by the Engineer, sketches of same shall be sent to the Office of Bridge Design and to the fabricator.

15. All costs associated with removal of the existing joint drain, furnishing and installing the new Abutment Joint Drain will be included in the contract unit price per each for Abutment Joint Drain.

**NOTES (CONTINUED)**
FOR
**557' - 0" CONT. COMP. GIRDER BRIDGE**

STR. NO. 64-164-405
OCTOBER 2015



| DESIGNED BY | CK. DES. BY | DRAFTED BY | |
|---|---|---|---|
| KSK | MM | KSK | Kevin N. Goeden |
| UNIN02PT | 02PTRA04 | | BRIDGE ENGINEER |

## BRIDGE DECK OVERLAY

1. The preparation for resurfacing consists of Concrete Removal Type 1A on the entire bridge deck and Type 1B, Type 1C, Type 1D and Type B over the deck surface as detailed on the plan sheets. Such removal shall be in conformance with these plans and Section 550 of the Construction Specifications. Extreme care shall be taken during the Concrete Removal 1A to assure that the existing resteel is not damaged. In the event that resteel damage inadvertently occurs, the Bridge Construction Engineer shall be immediately notified. Any damaged resteel shall be repaired by the Contractor, as approved by the Engineer, at no additional cost to the Department.

2. Concrete Removal Type 1C, Concrete Removal Type 1D, Concrete Removal Type B and Class A45 Concrete Fill may not be encountered and may be omitted from the project as determined by the Engineer.

3. Concrete Removal Type 1C, Concrete Removal Type 1D and Class A45 Concrete Fill is not anticipated to exceed the plan shown quantities. If the Engineer determines that Concrete Removal Type 1C, Concrete Removal Type 1D and/or Class A45 Concrete Fill in excess of the plan shown quantity is necessary, payment for the additional quantity shall be in conformance with Section 550.5 of the Construction Specifications.

4. A minimum thickness of 2" of Low Slump Dense Concrete shall be maintained on the bridge deck.

5. It will be necessary for the Contractor to shape the surface of the Low Slump Dense Concrete Bridge Deck Overlay within one foot of the curb as detailed in the plans to insure that water drains to the deck drains or off the ends of the bridge.

6. Concrete for final deck overlay shall be as specified for the Low Slump Dense Concrete in Section 550 of the Construction Specifications.

7. No traffic will be allowed to operate on the scarified portion of the bridge deck. If it appears that the entire Low Slump Dense Concrete Overlay can not be completed prior to winter, the Type 1A, 1B, 1C, 1D and Type B Removal shall not be done until work resumes in the spring. In the event that scarification has been started and due to unforeseen circumstances it becomes impossible to complete the placement of the Low Slump Dense Concrete Overlay on the entire surface of the structure prior to winter, the Office of Bridge Design shall be notified. Recommendations for handling winter traffic will then be made. These recommendations may include, but are not limited to, filling extra depth removal areas with Class A45 Concrete, placing an asphalt overlay on the uncompleted area so that the entire roadway width may be opened to traffic, removal of the asphalt overlay when work is resumed and scarifying an additional ¼" of depth on the bridge deck. The cost of this work, including asphalt overlay, scarification, Class A45 Concrete, extra Low Slump Dense Concrete, and all other items incidental to this work, shall be at the expense of the Contractor.

8. In order to match the elevations of the pavement at the end of the approach slab on the south end of the bridge and maintain the required overlay thickness, extra depth removal of the existing deck surface will be required in areas at the end of the bridge. It is not anticipated that the reinforcing steel will be encountered with milling depths less than 1 ½". The Contractor shall be restricted only to the use of hand operated impact type breakout equipment in areas where the milling depth is greater than 1 ½", as shown in the plans. The hand operated impact type breakout equipment shall be no larger than a 15 pound jack hammer and shall be subject to the approval of the Engineer. The use of scarification equipment will not be allowed in this area. Care shall be taken not to damage the reinforcing steel in the deck slab in the extra depth removal areas. Any damage inflicted, during concrete removal, to the reinforcing steel or any other structural items to be reused, shall be made known to the Office of Bridge Design. Damaged reinforcing steel or any other structural items to be reused shall be repaired or replaced by the Contractor as recommended by the Office of Bridge Design at the Contractor's expense. The cost for extra depth removal near the end of the bridge shall be included in the contract unit price per square yard for "Concrete Removal Type 1C".

9. During placement of the Low Slump Dense Concrete Overlay all vehicular traffic on lane open for travel shall be stopped by flaggers before entering onto the bridge and then allowed to proceed at a maximum of 5 MPH. To safely slow traffic to cross the bridge during the deck overlay period two advance flaggers shall be used.

## GIRDER END MODIFICATION AT ABUTMENTS

1. This work shall consist of the removal of a section of the girder ends at the abutments.

2. The girder removal method shall be oxyacetylene cutting. Any other method shall meet the approval of the Bridge Construction Engineer.

3. All costs for labor and any incidentals necessary to modify the girder end shall be incidental to the contract unit price per each for "Abutment Joint Drain".

4. Removal of work affected paint and repainting the work affected areas will be incidental to the contract lump sum price for Bridge Repainting, Class I.

## BRIDGE REPAINTING, CLASS I

1. The work affected areas for the girder trimming shall be painted in accordance with Section 412 of the Standard Specifications and in accordance with SSPC Standard PA1.

2. For informational purposes, 15 square feet of the structural steel will require painting. The quantity shown includes the following:

   The steel surfaces to be painted are the flanges and webs of the work affected areas for the trimmed girders. The quantity shown is for an area four inches on all sides of the cut edges.

3. Paint Color

   Top Coat – The paint color shall be an approved green color. Prior to ordering the paint, a paint chip of the green color shall be submitted to the Department for color approval.

   Primer Coat – The color shall sharply contrast with the top coat.

## AS - BUILT ELEVATION SURVEY

The Contractor shall be responsible for recording the As-built deck elevations at the locations shown by the Table of As-Built Elevations shown in the plans. The elevations to be recorded in these tables shall be based on the National Geodetic Survey (NGS) North American Vertical Datum of 1988 (NAVD88). The Engineer shall provide the Contractor with a description, elevation and location of the nearest benchmark that has a NAVD88 established elevation for the Contractor's use. The benchmark shown in the plans has not been tied to the NAVD88. The Contractor shall be responsible for establishing a NAVD88 elevation for the benchmark provided in the plans. All costs associated with obtaining the NAVD88 elevations at the locations shown in the table and for the benchmark shown in the plans, including all equipment, labor and any incidentals required shall be incidental to the contract lump sum price for Bridge Elevation Survey.

| STATE OF | PROJECT | SHEET NO. | TOTAL SHEETS |
|---|---|---|---|
| S.D. | IM-PH 0291(122)0 | 40 | 284 |

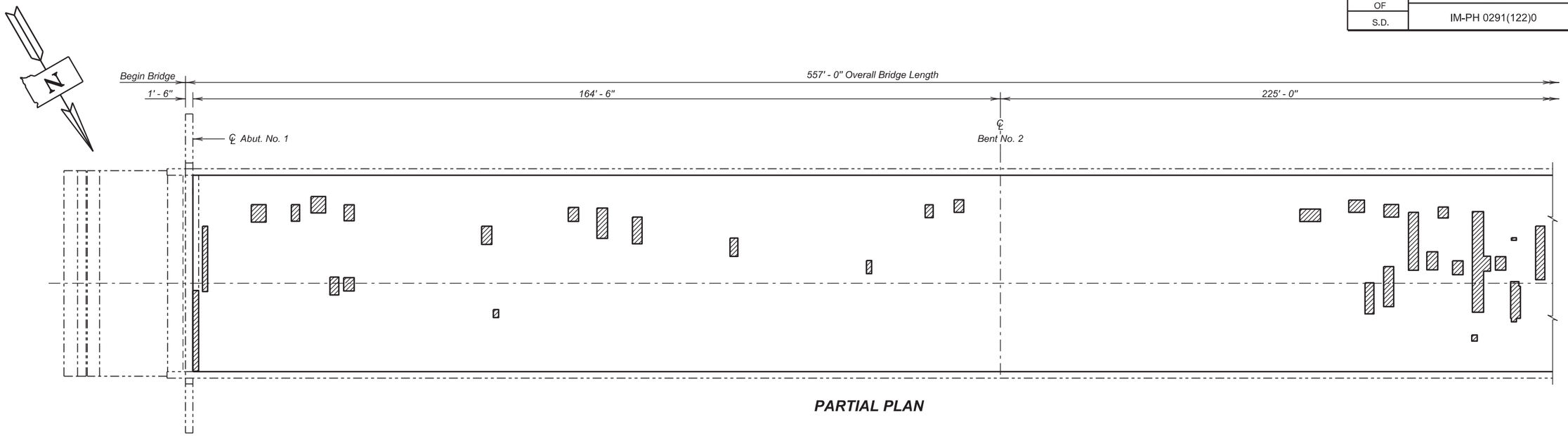


**PARTIAL PLAN**

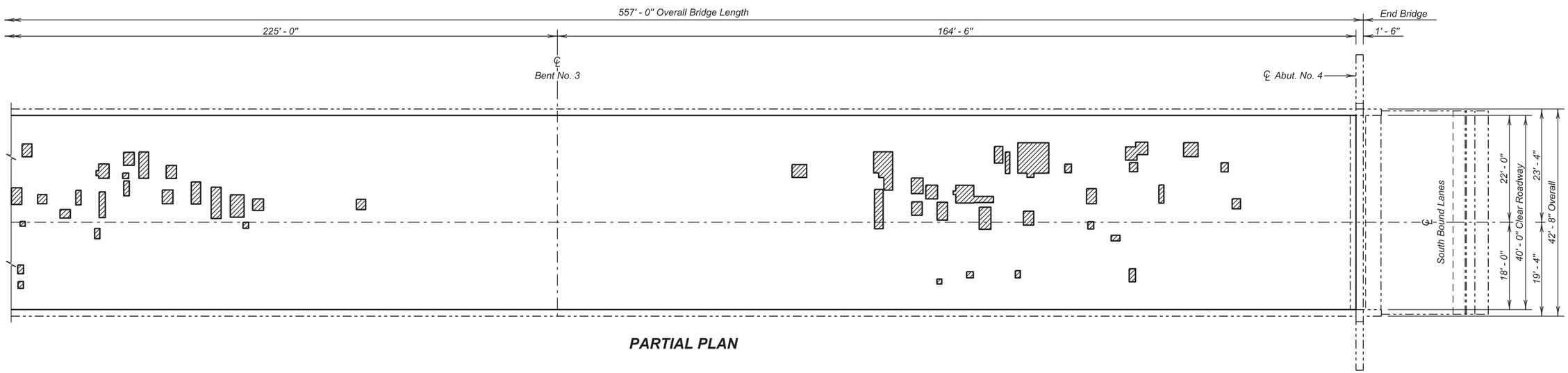


**PARTIAL PLAN**

LEGEND:

Shaded areas indicate approximate location of unsound concrete requiring Concrete Removal, Type 1B

**(SOUTH BOUND LANES)**
**DECK DELAMINATION DETAILS**

FOR

557' - 0" CONT. COMP. GIRDER BRIDGE

40' - 0" ROADWAY — 0° SKEW
OVER BIG SIOUX RIVER — SEC. 26-T89N-R48W
STR. NO. 64-164-405 — IM-PH 0291(122)0

UNION COUNTY

S. D. DEPT. OF TRANSPORTATION

OCTOBER 2015



| DESIGNED BY | CK. DES. BY | DRAFTED BY | |
|---|---|---|---|
| KSK | BD | KR | Kevin N. Goeden |
| UNIN02PT | 02PTRA06 | | BRIDGE ENGINEER |

| STATE OF | PROJECT | SHEET NO. | TOTAL SHEETS |
|---|---|---|---|
| S.D. | IM-PH 0291(122)0 | 41 | 284 |

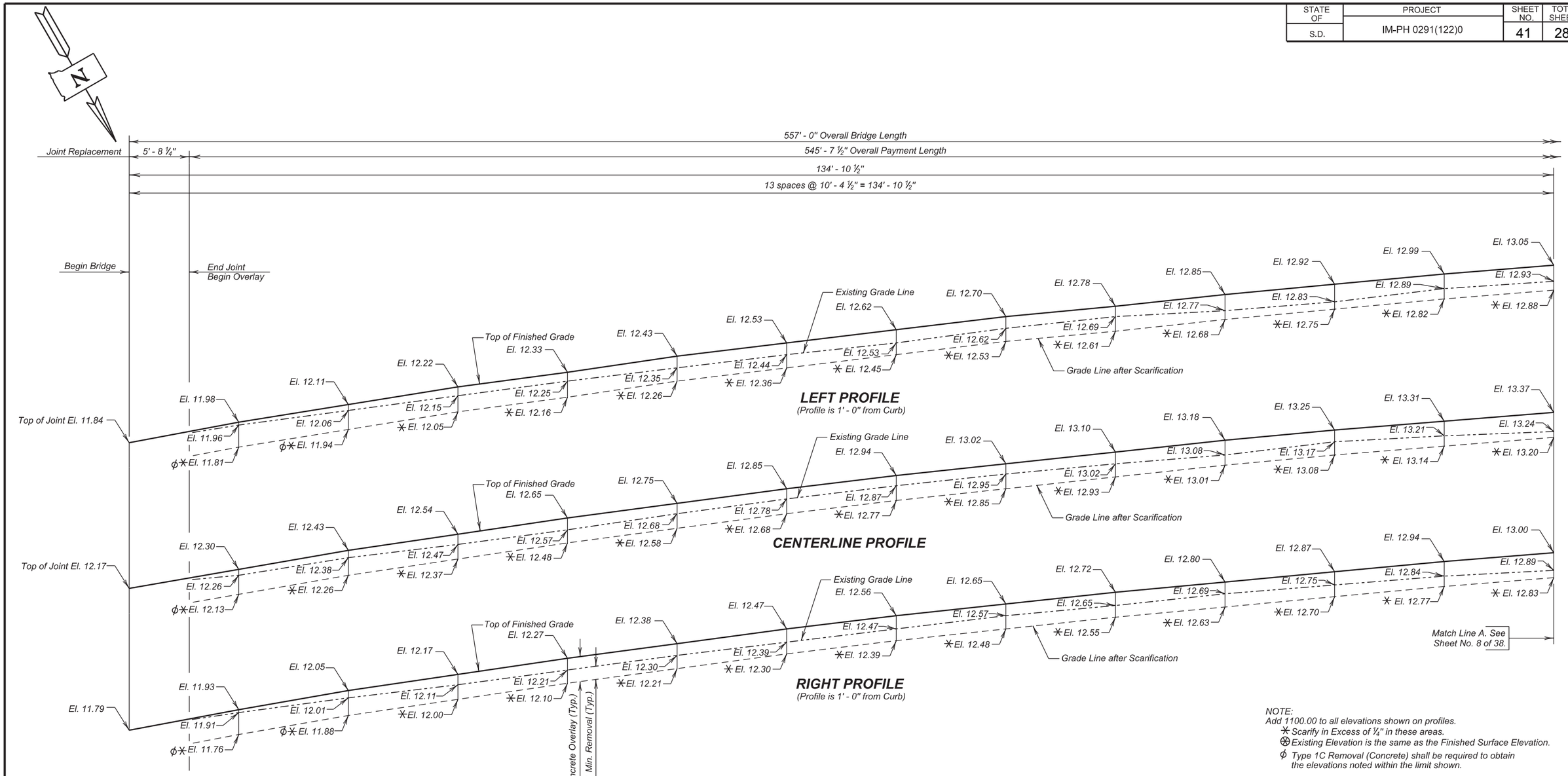


NOTE:
Add 1100.00 to all elevations shown on profiles.
✳ Scarify in Excess of ¼" in these areas.
⊛ Existing Elevation is the same as the Finished Surface Elevation.
ϕ Type 1C Removal (Concrete) shall be required to obtain the elevations noted within the limit shown.

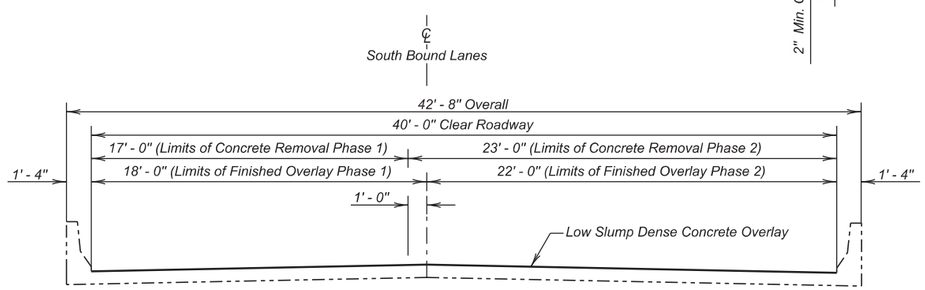


TYPICAL SECTION

## Benchmark Description:

B.M. # CP100 (Nail in Concrete North Crossover)
N - 83437.383
E - 3007379.772
Elevation 1104.562

B.M. # CP102 (Nail in Asphalt Header NB I29 Close Lane)
N - 83084.890
E - 3008518.857
Elevation 1112.184

B.M. # CP101A Medal Spike (NW Wingwall on I29 NB)
Elevation 1112.184

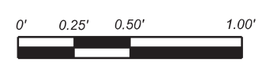


VERTICAL SCALE

**(SOUTH BOUND LANES)**
**DECK PROFILES FOR LOW SLUMP DENSE CONCRETE OVERLAY**
FOR
557' - 0" CONT. COMP. GIRDER BRIDGE

40' - 0" ROADWAY — 0° SKEW
OVER BIG SIOUX RIVER — SEC. 26-T89N-R48W
STR. NO. 64-164-405 — IM-PH 0291(122)0

UNION COUNTY
S. D. DEPT. OF TRANSPORTATION
OCTOBER 2015



| DESIGNED BY | CK. DES. BY | DRAFTED BY | |
|---|---|---|---|
| KSK | BD | KR | Kevin N. Coeden |
| UNIN02PT | 02PTRA07 | | BRIDGE ENGINEER |

| STATE OF | PROJECT | SHEET NO. | TOTAL SHEETS |
|---|---|---|---|
| S.D. | IM-PH 0291(122)0 | 42 | 284 |

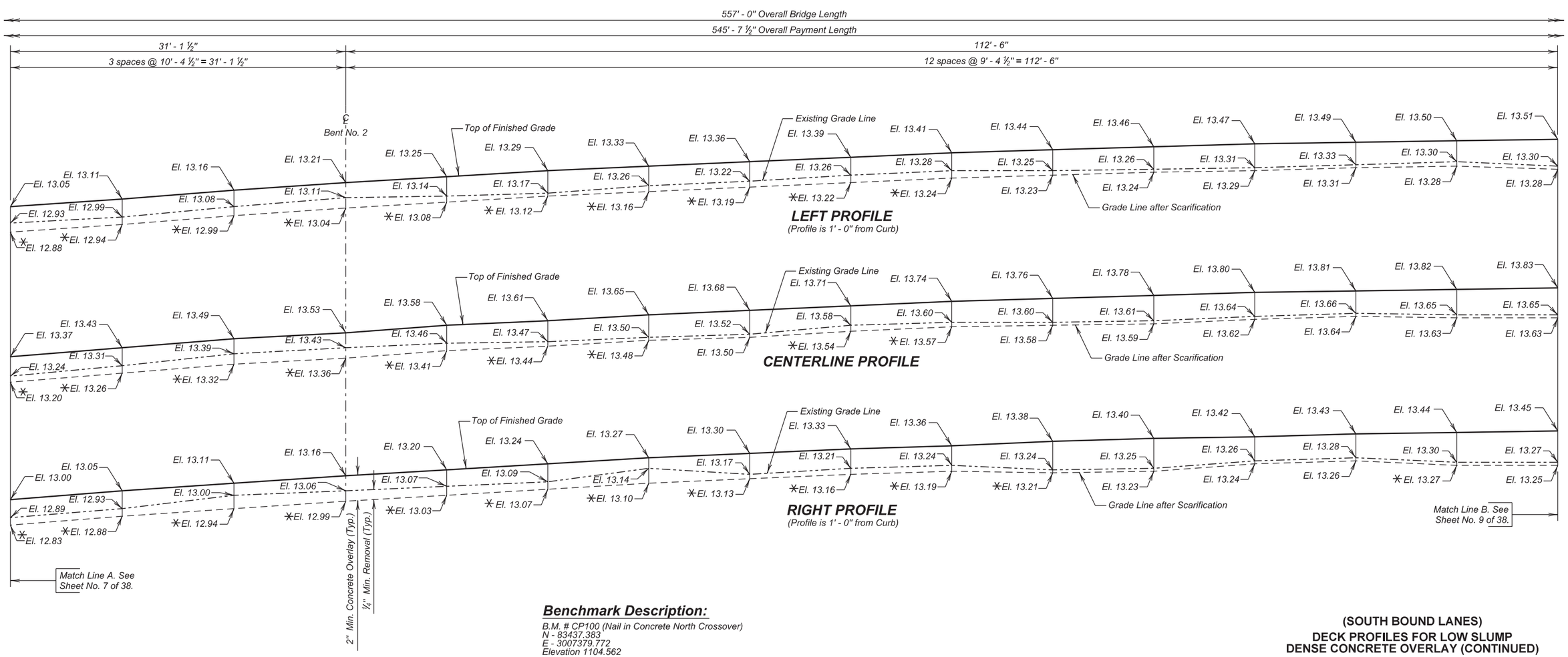


## Benchmark Description:

B.M. # CP100 (Nail in Concrete North Crossover)
N - 83437.383
E - 3007379.772
Elevation 1104.562

B.M. # CP102 (Nail in Asphalt Header NB I29 Close Lane)
N - 83084.890
E - 3008518.857
Elevation 1112.184

B.M. # CP101A Medal Spike (NW Wingwall on I29 NB)
Elevation 1112.184

NOTE:
Add 1100.00 to all elevations shown on profiles.
✳ Scarify in Excess of ¼" in these areas.
⊗ Existing Elevation is the same as the Finished Surface Elevation.
⊕ Existing Elevation is higher than the Finished Surface Elevation.

ϕ Type 1C Removal (Concrete) shall be required to obtain the elevations noted within the limit shown.

0' 0.25' 0.50' 1.00'
VERTICAL SCALE

**(SOUTH BOUND LANES)**
**DECK PROFILES FOR LOW SLUMP DENSE CONCRETE OVERLAY (CONTINUED)**
FOR
557' - 0" CONT. COMP. GIRDER BRIDGE

40' - 0" ROADWAY — 0° SKEW
OVER BIG SIOUX RIVER — SEC. 26-T89N-R48W
STR. NO. 64-164-405 — IM-PH 0291(122)0

UNION COUNTY
S. D. DEPT. OF TRANSPORTATION
OCTOBER 2015



| DESIGNED BY | CK. DES. BY | DRAFTED BY | |
|---|---|---|---|
| KSK | BD | KR | Kevin N. Boeden BRIDGE ENGINEER |
| UNIN02PT | 02PTRA08 | | |

| STATE OF | PROJECT | SHEET NO. | TOTAL SHEETS |
|---|---|---|---|
| S.D. | IM-PH 0291(122)0 | 43 | 284 |

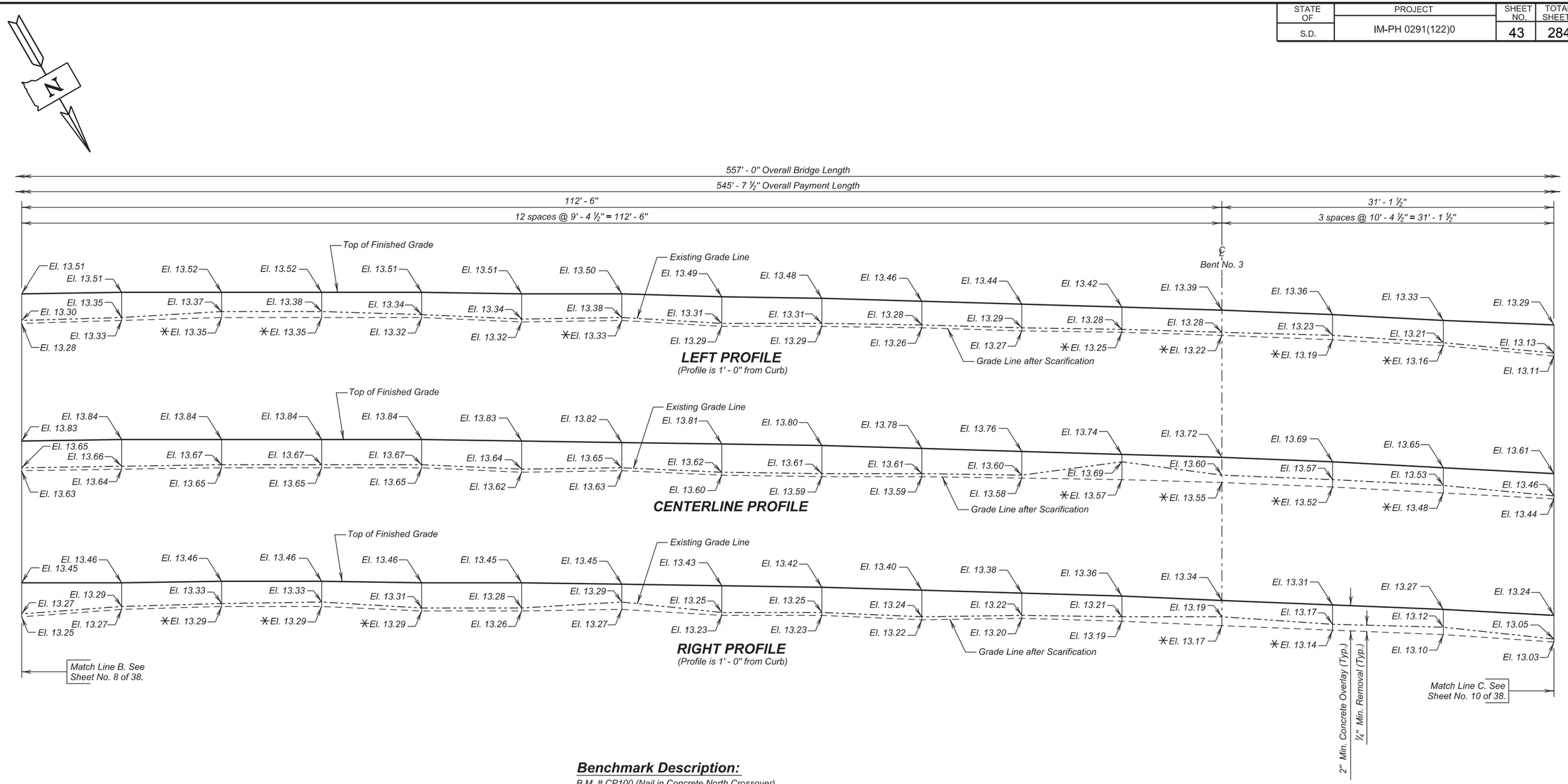


## Benchmark Description:

B.M. # CP100 (Nail in Concrete North Crossover)
N - 83437.383
E - 3007379.772
Elevation 1104.562

B.M. # CP102 (Nail in Asphalt Header NB I29 Close Lane)
N - 83084.890
E - 3008518.857
Elevation 1112.184

B.M. # CP101A Medal Spike (NW Wingwall on I29 NB)
Elevation 1112.184

NOTE:
Add 1100.00 to all elevations shown on profiles.
✳ Scarify in Excess of ¼" in these areas.
⊗ Existing Elevation is the same as the Finished Surface Elevation.
⊕ Existing Elevation is higher than the Finished Surface Elevation.

ϕ Type 1C Removal (Concrete) shall be required to obtain the elevations noted within the limit shown.

0' 0.25' 0.50' 1.00'
VERTICAL SCALE

**(SOUTH BOUND LANES)**
**DECK PROFILES FOR LOW SLUMP DENSE CONCRETE OVERLAY (CONTINUED)**
FOR
557' - 0" CONT. COMP. GIRDER BRIDGE

40' - 0" ROADWAY — 0° SKEW
OVER BIG SIOUX RIVER — SEC. 26-T89N-R48W
STR. NO. 64-164-405 — IM-PH 0291(122)0

UNION COUNTY
S. D. DEPT. OF TRANSPORTATION
OCTOBER 2015



| DESIGNED BY | CK. DES. BY | DRAFTED BY | |
|---|---|---|---|
| KSK | BD | KR | Kevin N. Goeden |
| UNIN02PT | 02PTRA09 | | BRIDGE ENGINEER |

| STATE OF | PROJECT | SHEET NO. | TOTAL SHEETS |
|---|---|---|---|
| S.D. | IM-PH 0291(122)0 | 44 | 284 |

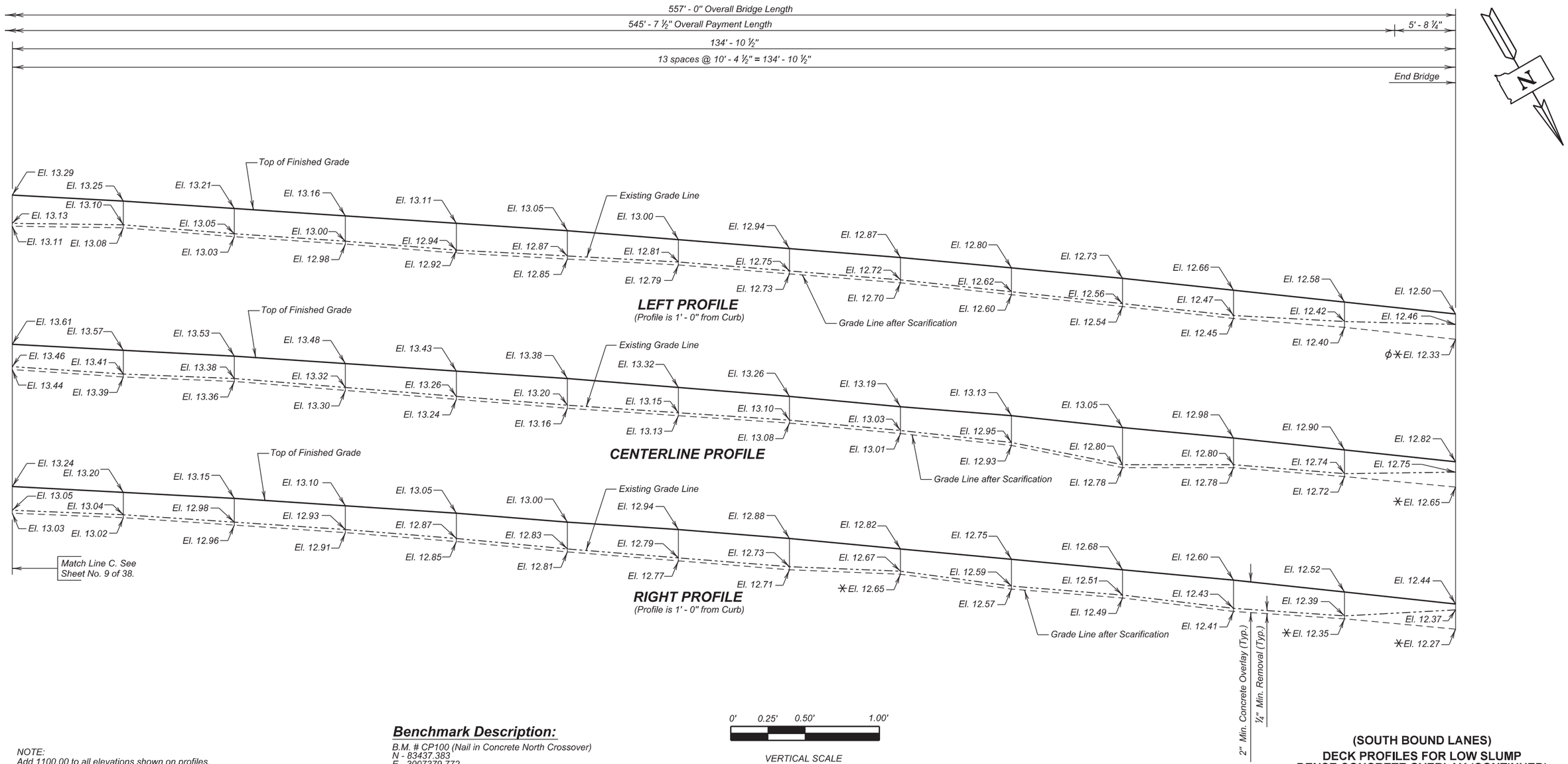


NOTE:
Add 1100.00 to all elevations shown on profiles.
✳ Scarify in Excess of ¼" in these areas.
⊗ Existing Elevation is the same as the Finished Surface Elevation.
⊕ Existing Elevation is higher than the Finished Surface Elevation.

ϕ Type 1C Removal (Concrete) shall be required to obtain the elevations noted within the limit shown.

## Benchmark Description:

B.M. # CP100 (Nail in Concrete North Crossover)
N - 83437.383
E - 3007379.772
Elevation 1104.562

B.M. # CP102 (Nail in Asphalt Header NB I29 Close Lane)
N - 83084.890
E - 3008518.857
Elevation 1112.184

B.M. # CP101A Medal Spike (NW Wingwall on I29 NB)
Elevation 1112.184

0' 0.25' 0.50' 1.00'

VERTICAL SCALE

## ESTIMATED QUANTITIES

| ITEM | UNIT | QUANTITY | |
|---|---|---|---|
| | | Phase I | Phase 2 |
| Low Slump Dense Concrete Deck Overlay | Cu. Yd. | 81.9 | 99.5 |
| Concrete Removal Type 1A | Sq. Yd. | 1165.9 | 1288.7 |
| Concrete Removal Type 1B | Sq. Yd. | 116.6 | 128.9 |
| Concrete Removal Type 1C | Sq. Yd. | 58.3 | 64.4 |
| Concrete Removal Type 1D | Sq. Yd. | 58.3 | 64.4 |
| Concrete Removal Type B | Ft. | 10.0 | 10.0 |
| Finishing and Curing | Cu. Yd. | 1104.6 | 1350.6 |
| Class A45 Concrete Fill | Sq. Yd. | 13.0 | 14.3 |

**(SOUTH BOUND LANES)**
**DECK PROFILES FOR LOW SLUMP DENSE CONCRETE OVERLAY (CONTINUED)**
FOR
557' - 0" CONT. COMP. GIRDER BRIDGE

40' - 0" ROADWAY — 0° SKEW
OVER BIG SIOUX RIVER — SEC. 26-T89N-R48W
STR. NO. 64-164-405 — IM-PH 0291(122)0

UNION COUNTY
S. D. DEPT. OF TRANSPORTATION
OCTOBER 2015



| DESIGNED BY | CK. DES. BY | DRAFTED BY | |
|---|---|---|---|
| KSK | BD | KR | Kevin N. Goeden |
| UNIN02PT | 02PTRA10 | | BRIDGE ENGINEER |

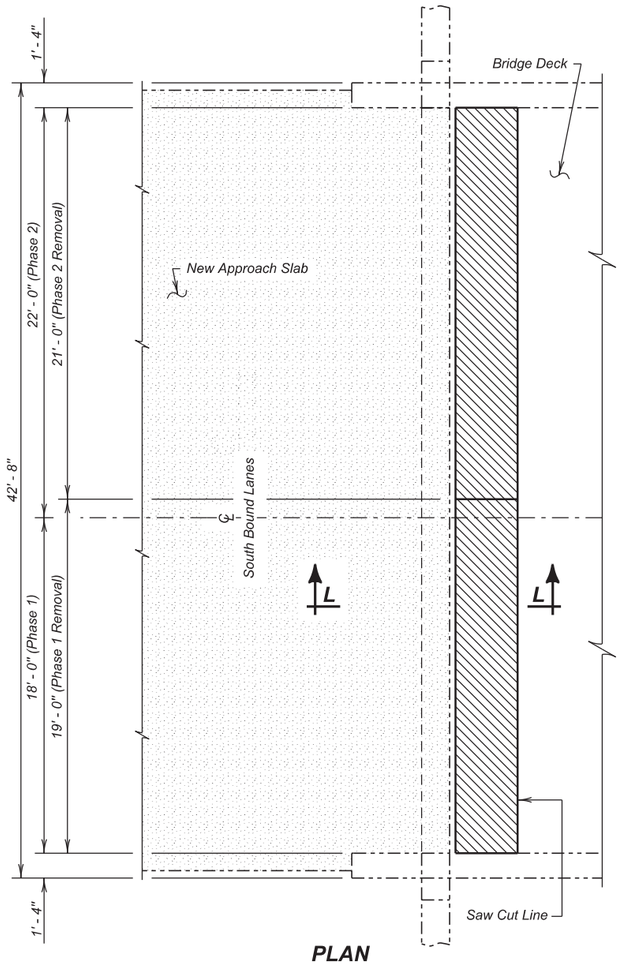


**PLAN**
(Abut. No. 1)

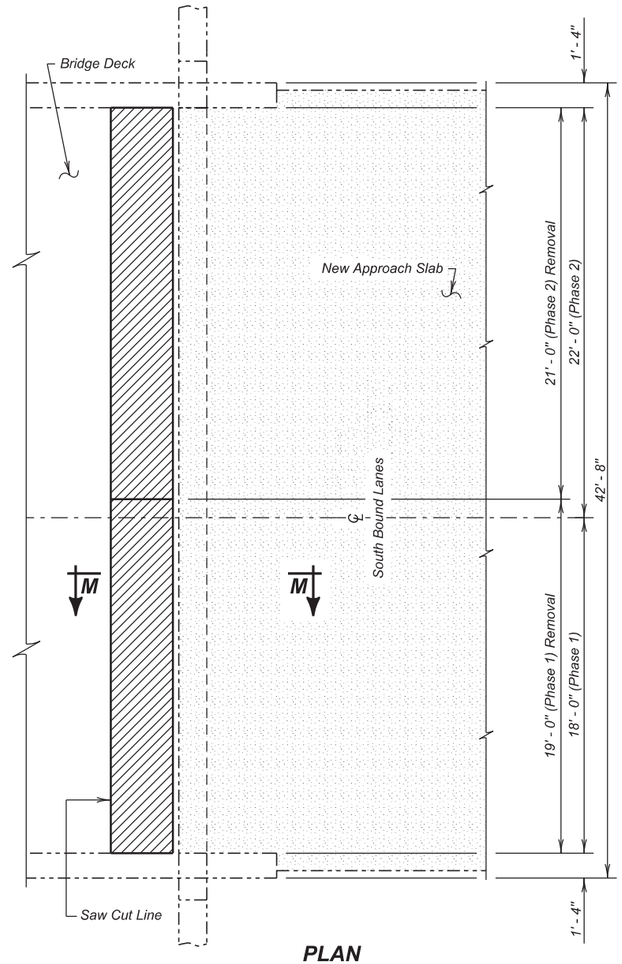


**PLAN**
(Abut. No. 4)

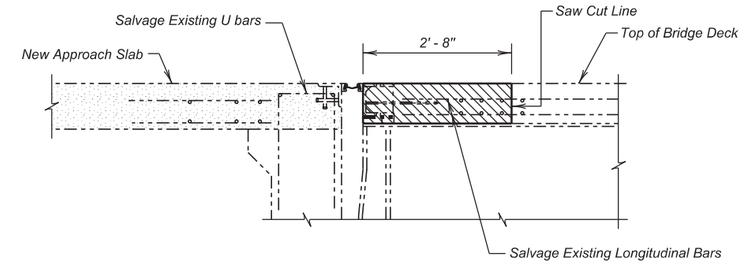


**SECTION L - L**

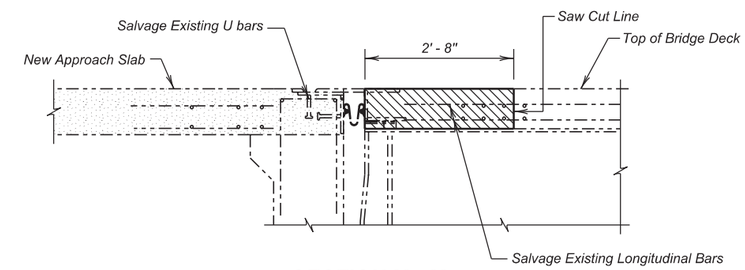


**SECTION M - M**

Limits of concrete removal incidental to New Finger Type Expansion Joint Assembly

Limits of concrete removal incidental to Remove Concrete Bridge Approach Slab

**(SOUTH BOUND LANES)**
**FINGER EXPANSION JOINT BREAKOUT DETAILS**
FOR
557' - 0" CONT. COMP. GIRDER BRIDGE

40' - 0" ROADWAY — 0° SKEW
OVER BIG SIOUX RIVER — SEC. 26-T89N-R48W
STR. NO. 64-164-405 — IM-PH 0291(122)0

UNION COUNTY
S. D. DEPT. OF TRANSPORTATION
OCTOBER 2015



| DESIGNED BY | CK. DES. BY | DRAFTED BY | |
|---|---|---|---|
| KSK | MM | KR | Kevin N. Goeden |
| UNIN02PT | 02PTRA11 | | BRIDGE ENGINEER |

| STATE OF | PROJECT | SHEET NO. | TOTAL SHEETS |
|---|---|---|---|
| S.D. | IM-PH 0291(122)0 | 46 | 284 |

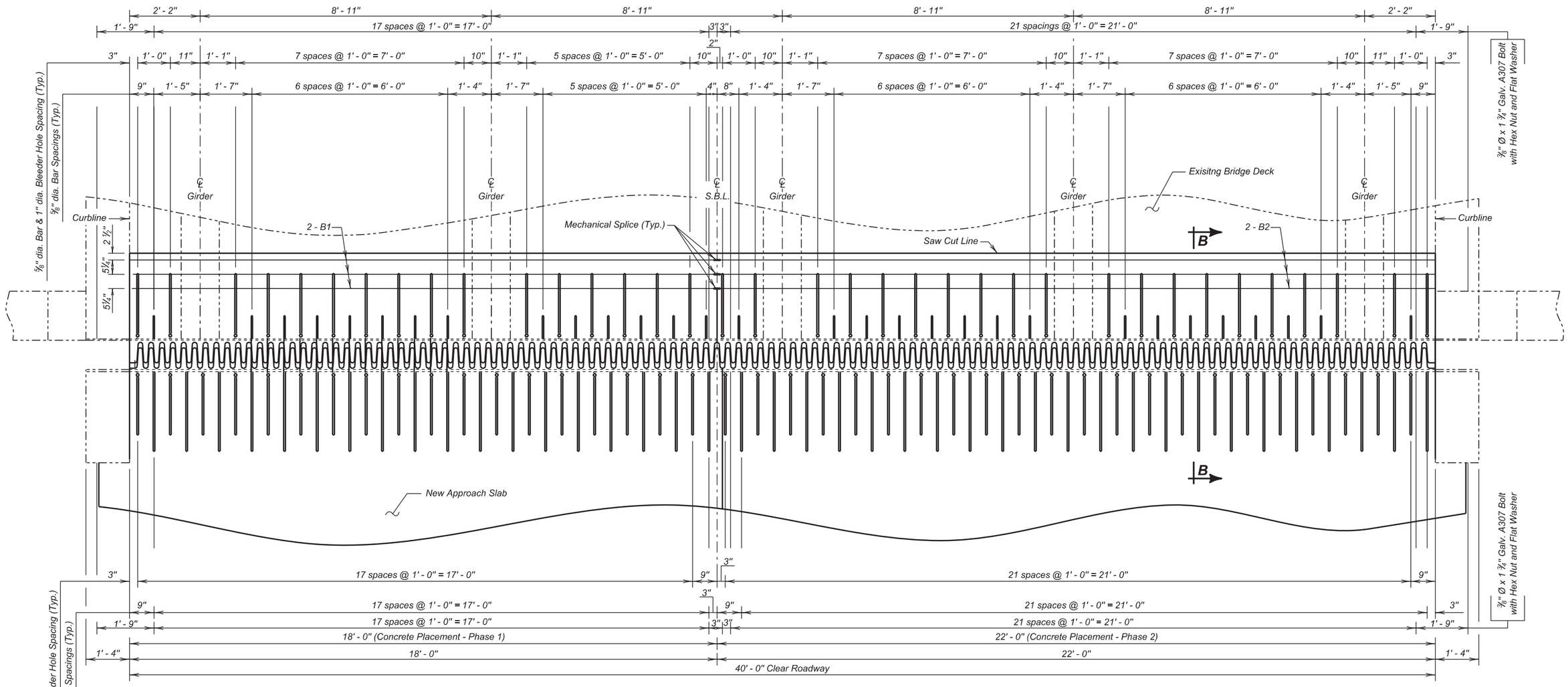


**PLAN**
(Abut. No. 1 Shown)

**(SOUTH BOUND LANES)**
**FINGER EXPANSION JOINT LAYOUT (ABUTMENT NO. 1)**
FOR
557' - 0" CONT. COMP. GIRDER BRIDGE

40' - 0" ROADWAY — 0° SKEW
OVER BIG SIOUX RIVER — SEC. 26-T89N-R48W
STR. NO. 64-164-405 — IM-PH 0291(122)0

UNION COUNTY
S. D. DEPT. OF TRANSPORTATION
OCTOBER 2015

Use in conjunction with Sheet No. 14 of 38.



| DESIGNED BY | CK. DES. BY | DRAFTED BY | |
|---|---|---|---|
| KSK | MM | KR | Kevin N. Goeden |
| UNIN02PT | 02PTRA12 | | BRIDGE ENGINEER |

| STATE OF | PROJECT | SHEET NO. | TOTAL SHEETS |
|---|---|---|---|
| S.D. | IM-PH 0291(122)0 | 47 | 284 |

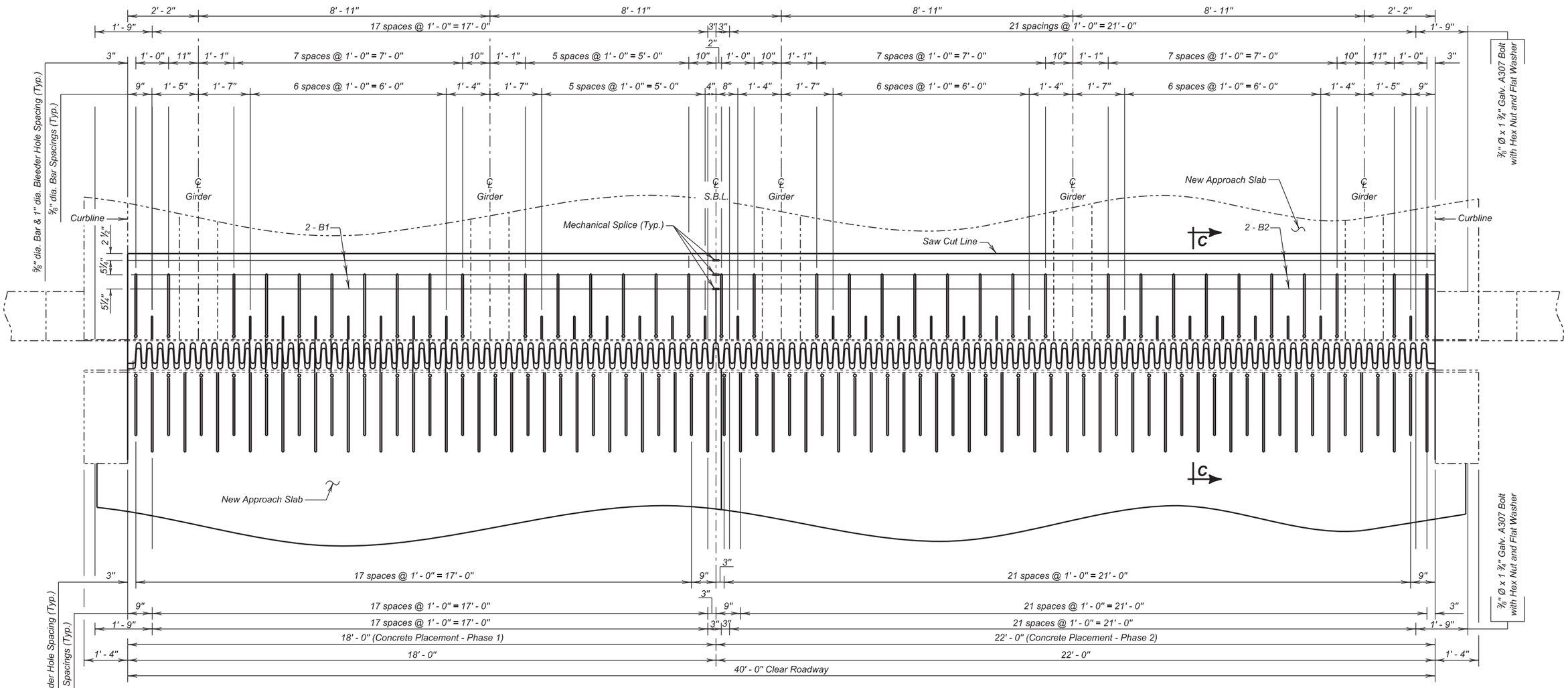


**PLAN**
(Abut. No. 4 Shown)

**(SOUTH BOUND LANES)**
**FINGER EXPANSION JOINT LAYOUT (ABUTMENT NO. 4)**
FOR
557' - 0" CONT. COMP. GIRDER BRIDGE

40' - 0" ROADWAY — 0° SKEW
OVER BIG SIOUX RIVER — SEC. 26-T89N-R48W
STR. NO. 64-164-405 — IM-PH 0291(122)0

UNION COUNTY
S. D. DEPT. OF TRANSPORTATION
OCTOBER 2015

*Use in conjunction with Sheet No. 14 of 38.*



| DESIGNED BY | CK. DES. BY | DRAFTED BY | |
|---|---|---|---|
| KSK | MM | KR | Kevin N. Goeden |
| UNIN02PT | 02PTRA13 | | BRIDGE ENGINEER |

| STATE OF | PROJECT | SHEET NO. | TOTAL SHEETS |
|---|---|---|---|
| S.D. | IM-PH 0291(122)0 | 48 | 284 |

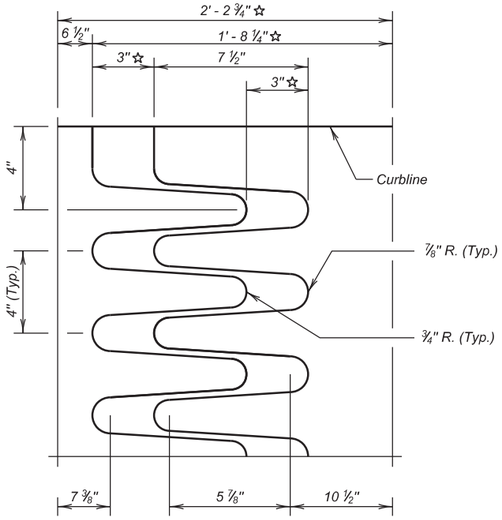


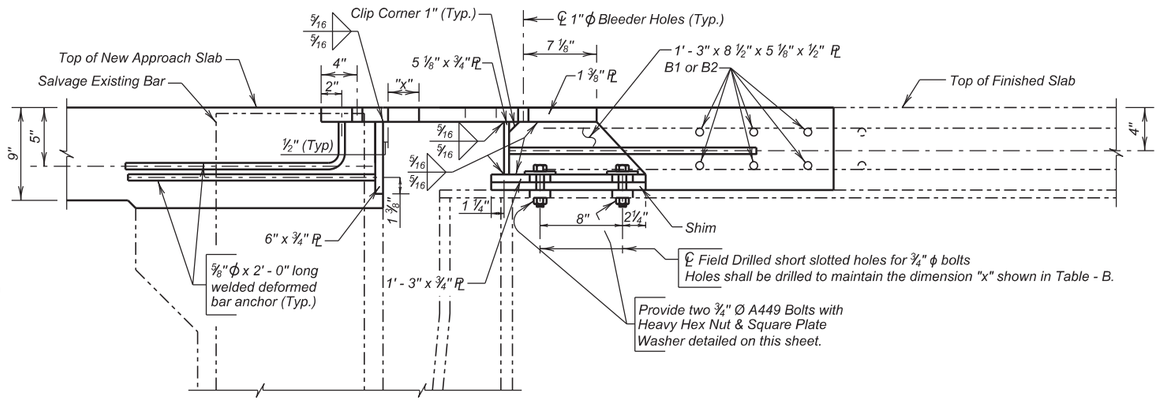


## SECTION B - B
(Abutment No. 1)

## REINFORCING SCHEDULE
(For Both Joint Modifications)

| Mk. | No. | Size | Length | Type | Bending Details |
|---|---|---|---|---|---|
| B1 | 12 | 6 | 17' - 8" | Str. | PHASE 1 |
| B2 | 12 | 6 | 21' - 8" | Str. | PHASE 2 |

NOTES --
All dimensions are out to out of bars.
All reinforcing steel is to be epoxy coated.

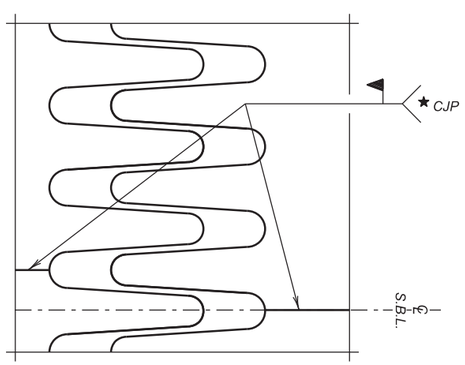


## FINGER LAYOUT

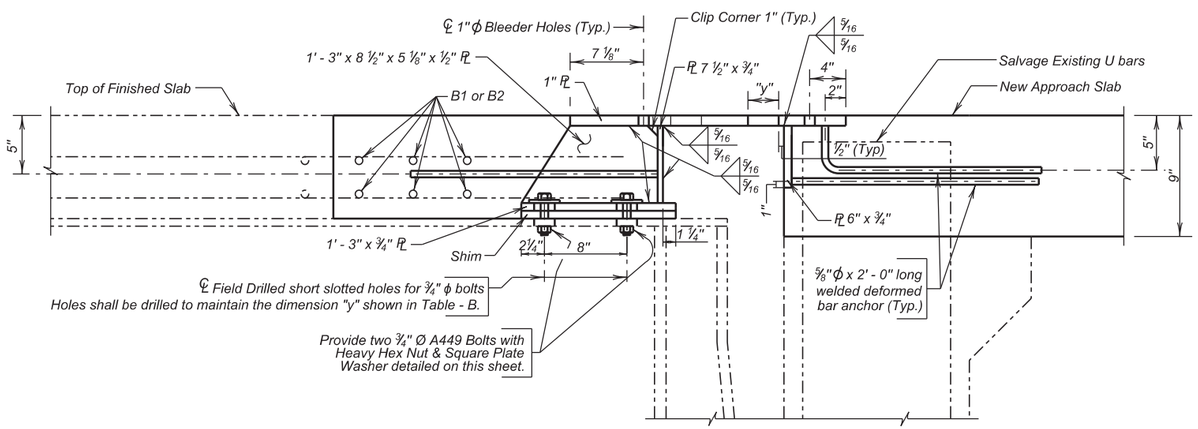


## SECTION C - C
(Abutment No. 4)

## ESTIMATED QUANTITIES

| ITEM | UNIT | QUANTITY |
|---|---|---|
| Finger Type Expansion Joint Assembly | Each | 2 |

Items 1 thru 5 are approximate quantities contained in the above bid item for Abutment No. 1 and are for information only.

| | PHASE 1 | PHASE 2 |
|---|---|---|
| 1. Class A45 Concrete | 1.1 Cu.Yd. | 1.3 Cu.Yd. |
| ✳2. Structural Steel | 3967 Lb. | 4844 Lb. |
| 3. Concrete Breakout | 1.3 Cu.Yd. | 1.4 Cu.Yd. |
| 4. No. 6 Rebar Splice | 6 Ea. | - |
| 5. Epoxy Coated Reinforcing Steel | 159 Lb. | 195 Lb. |

Items 1 thru 7 are approximate quantities contained in the above bid item for Abutment No. 7 and are for information only.

| | PHASE 1 | PHASE 2 |
|---|---|---|
| 1. Class A45 Concrete | 1.3 Cu.Yd. | 1.6 Cu.Yd. |
| ✳2. Structural Steel | 3564 Lb. | 4184 Lb. |
| 3. Concrete Breakout | 1.5 Cu.Yd. | 1.8 Cu.Yd. |
| 4. No. 6 Rebar Splice | 6 Ea. | - |
| 5. Epoxy Coated Reinforcing Steel | 159 Lb. | 195 Lb. |

✳ Structural Steel Informational quantity includes all finger expansion plates, anchor bars, and fasteners.

☆ Dimensions shown at 70° F
★ Complete Joint Penetration, Butt splice at crown point to be shown on shop plans for approval.

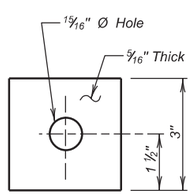


## SQUARE PLATE WASHER

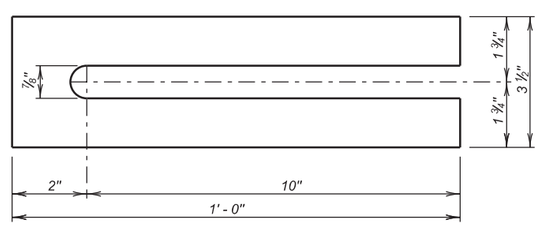


## SHIM DETAIL

Provide : ½" = 8
¼" = 12
⅛" = 16
1/16" = 32

| TABLE - B | | |
|---|---|---|
| Temp. | Dimension | |
| | "X" | "Y" |
| 30° | 4 3/16" | 3 ½" |
| 40° | 3 15/16" | 3 ⅜" |
| 50° | 3 5/8" | 3 ¼" |
| 60° | 3 5/16" | 3 ⅛" |
| 70° | 3" | 3" |
| 80° | 2 11/16" | 2 ⅞" |
| 90° | 2 3/8" | 2 ¾" |
| 100° | 2 1/16" | 2 5/8" |

Note: Temperature in above Table Corresponds to Interior Girder Temperature.

**(SOUTH BOUND LANES)**
**FINGER EXPANSION JOINT DETAILS**
FOR
557' - 0" CONT. COMP. GIRDER BRIDGE

40' - 0" ROADWAY — 0° SKEW
OVER BIG SIOUX RIVER — SEC. 26-T89N-R48W
STR. NO. 64-164-405 — IM-PH 0291(122)0

UNION COUNTY
S. D. DEPT. OF TRANSPORTATION
OCTOBER 2015



| DESIGNED BY | CK. DES. BY | DRAFTED BY | |
|---|---|---|---|
| KSK | MM | KR | Kevin N. Boeden |
| UNIN02PT | 02PTRA14 | | BRIDGE ENGINEER |

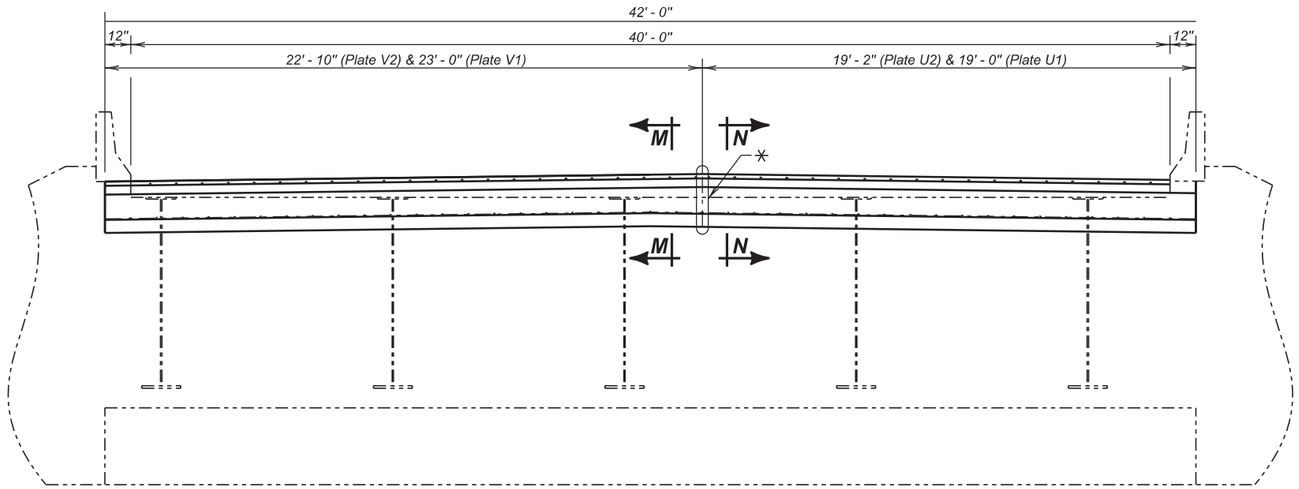


**JOINT DRAIN LAYOUT**

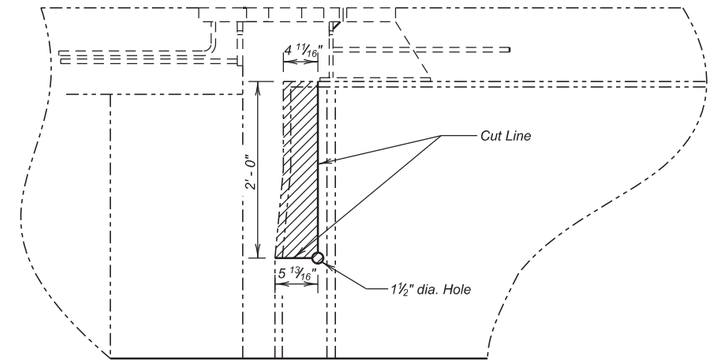


**GIRDER TRIMMING DETAIL**

⊠ Bolts shall be welded to Plate "U2" and Plate "V2" as shown on Deck side only

⊕ Nuts shall be welded to ¼" Plate as shown on Approach Slab side only

✳ Due to phased construction, the steel drain plates shall meet in the field @ the location shown. The entire interface shall be sealed with silicone sealer as approved by the Engineer.

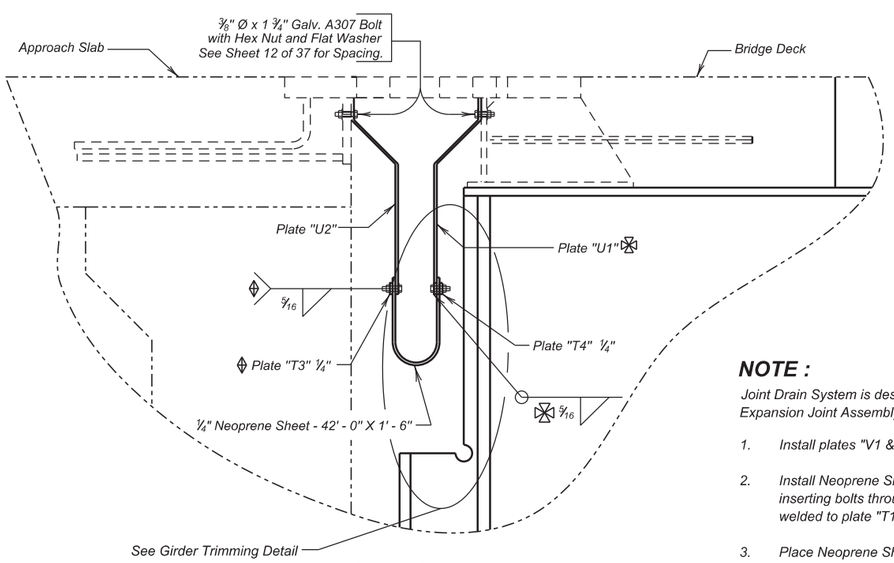


**SECTION N - N**

**NOTE :**

Joint Drain System is designed to be installed independent of Finger Type Expansion Joint Assembly following the procedure below

1. Install plates "V1 & V2" and "U1 & U2" using bolts as shown.
2. Install Neoprene Sheet and Plate "T1 & T2" (with welded hardware) by, inserting bolts through Plate "U1 & U2" or "V1 & V2" and threading bolts into nuts welded to plate "T1 & T2" as shown.
3. Place Neoprene Sheet and Plate "T1 & T2" on bolts welded to Plates "U1 & U2" or "V1 & V2" and tighten nuts as shown.

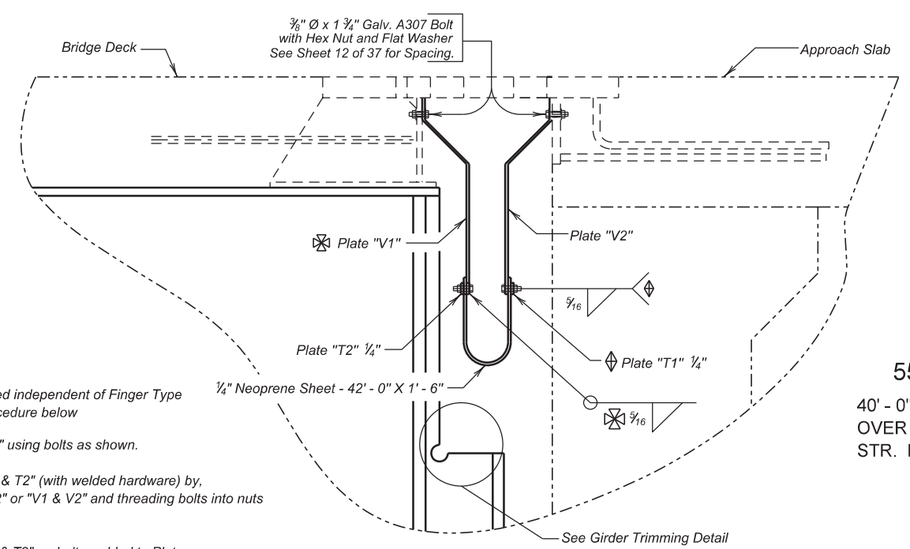


**SECTION M - M**

*Use this sheet in conjunction with sheet nos. 16 thru 18 of 38.*

**(SOUTH BOUND LANES)**
**JOINT DRAIN LAYOUT**

FOR

## 557' - 0" CONT. COMP. GIRDER BRIDGE

40' - 0" ROADWAY — 0° SKEW
OVER BIG SIOUX RIVER — SEC. 26-T89N-R48W
STR. NO. 64-164-405 — IM-PH 0291(122)0

UNION COUNTY
S. D. DEPT. OF TRANSPORTATION
OCTOBER 2015



| DESIGNED BY | CK. DES. BY | DRAFTED BY | |
|---|---|---|---|
| KSK | MM | KR | Kevin N. Goeden BRIDGE ENGINEER |
| UNIN02PT | 02PTRA15 | | |

| STATE OF | PROJECT | SHEET NO. | TOTAL SHEETS |
|---|---|---|---|
| S.D. | IM-PH 0291(122)0 | 50 | 284 |

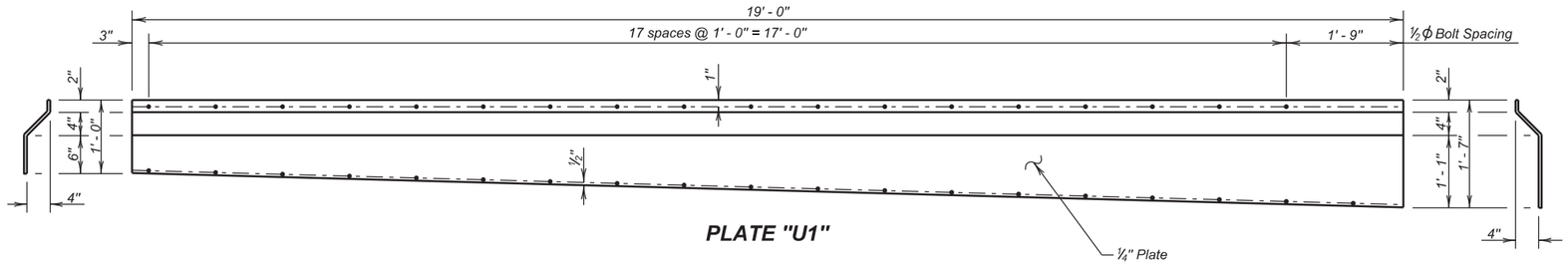


**PLATE "U1"**

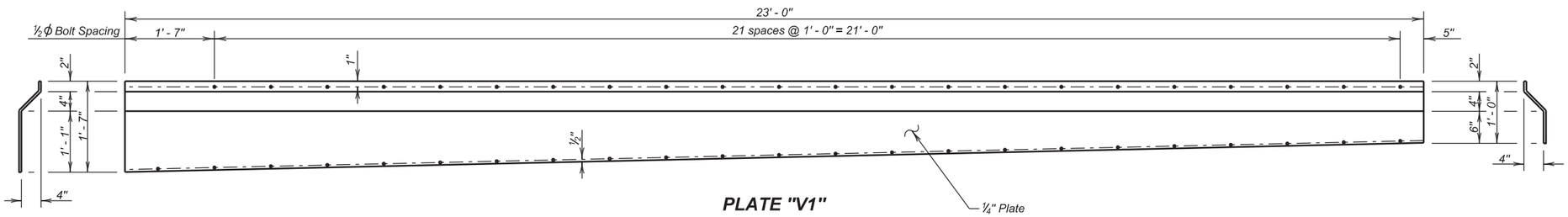


**PLATE "V1"**

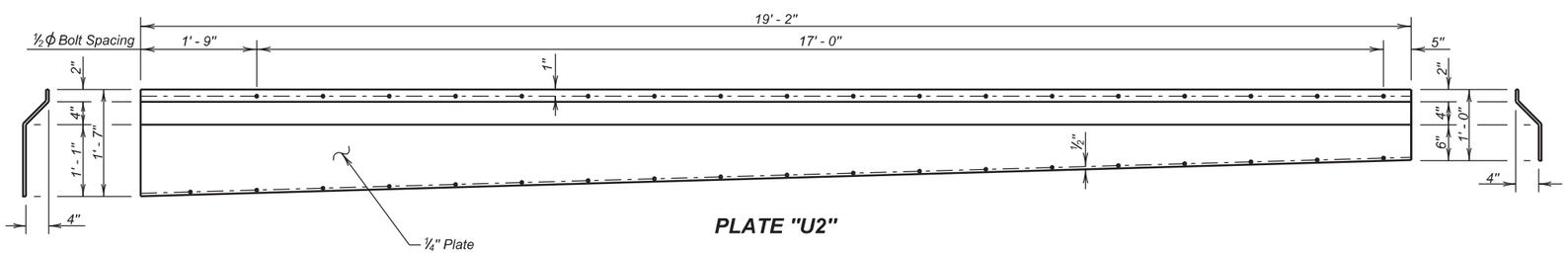


**PLATE "U2"**

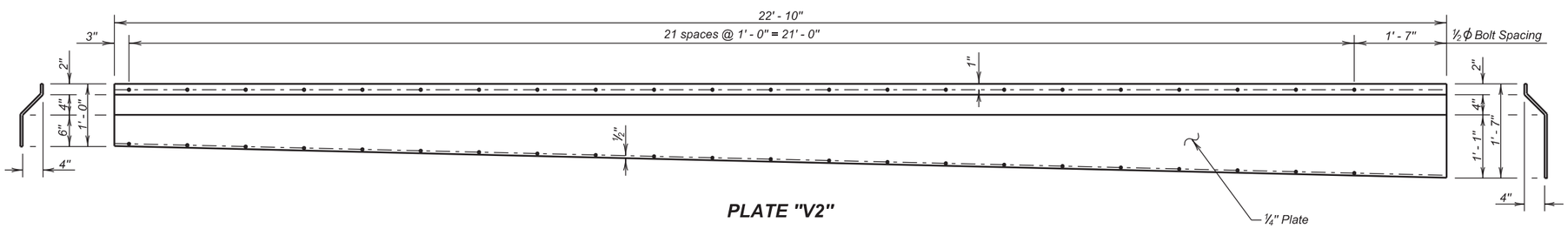


**PLATE "V2"**

✳ *Due to phased construction, the steel sliding drain plates shall meet in the field at the location shown above. Entire interface shall be sealed with silicone sealer as approved by the Engineer.*

*Use this sheet in conjuntion with sheet nos. 15, 17 and 18 of 38.*

**(SOUTH BOUND LANES)**
**JOINT DRAIN DETAILS (CONTINUED)**

FOR

557' - 0" CONT. COMP. GIRDER BRIDGE

40' - 0" ROADWAY — 0° SKEW
OVER BIG SIOUX RIVER — SEC. 26-T89N-R48W
STR. NO. 64-164-405 — IM-PH 0291(122)0

UNION COUNTY
S. D. DEPT. OF TRANSPORTATION
OCTOBER 2015



| DESIGNED BY | CK. DES. BY | DRAFTED BY | |
|---|---|---|---|
| KSK | MM | KR | Kevin N. Goeden |
| UNIN02PT | 02PTRA16 | | BRIDGE ENGINEER |

| STATE OF | PROJECT | SHEET NO. | TOTAL SHEETS |
|---|---|---|---|
| S.D. | IM-PH 0291(122)0 | 51 | 284 |

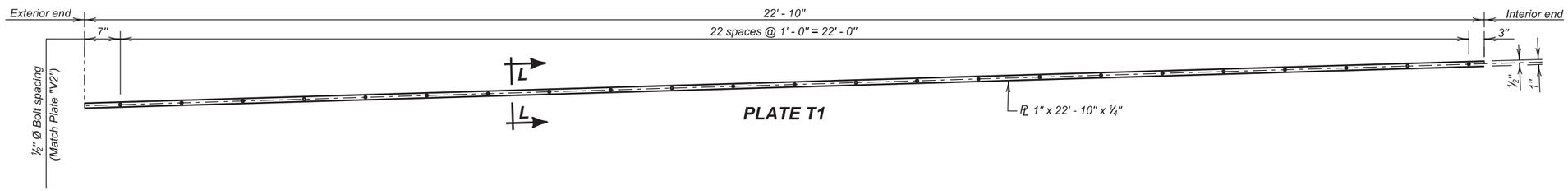


**PLATE T1**

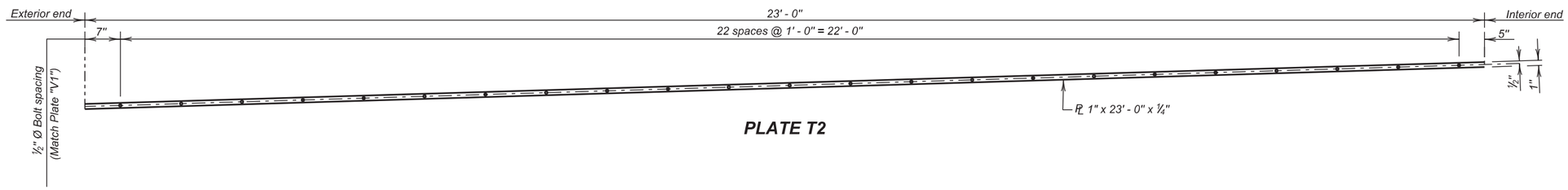


**PLATE T2**

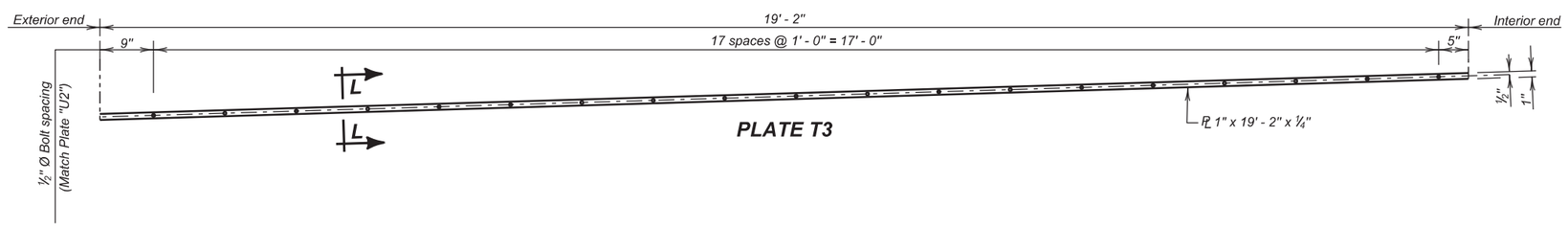


**PLATE T3**

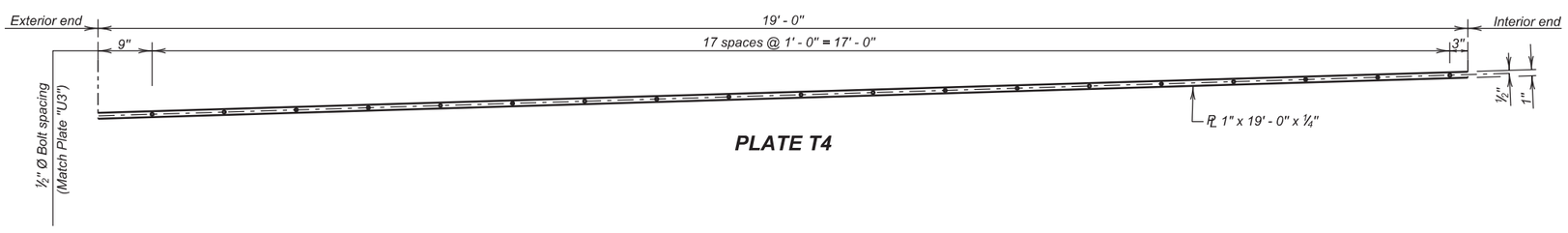


**PLATE T4**

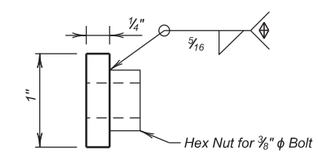


**SECTION L - L**

⟐ Nuts shall be welded to ¼" Plate as shown on Abutment side only.

*Use this sheet in conjuntion with sheet nos. 15, 16 and 18 of 38.*

**(SOUTH BOUND LANES)**
**JOINT DRAIN DETAILS (CONTINUED)**

FOR

557' - 0" CONT. COMP. GIRDER BRIDGE

40' - 0" ROADWAY — 0° SKEW
OVER BIG SIOUX RIVER — SEC. 26-T89N-R48W
STR. NO. 64-164-405 — IM-PH 0291(122)0

UNION COUNTY

S. D. DEPT. OF TRANSPORTATION

OCTOBER 2015



| DESIGNED BY | CK. DES. BY | DRAFTED BY | |
|---|---|---|---|
| KSK | MM | KR | Kevin N. Goeden |
| UNIN02PT | 02PTRA17 | | BRIDGE ENGINEER |

| STATE OF | PROJECT | SHEET NO. | TOTAL SHEETS |
|---|---|---|---|
| S.D. | IM-PH 0291(122)0 | 52 | 284 |

★ The length of metal gutter will need to be determined in the field for each location individually prior to fabrication.

✳ Slope will be set in the field prior to fabrication to clear the existing berm spill cone.

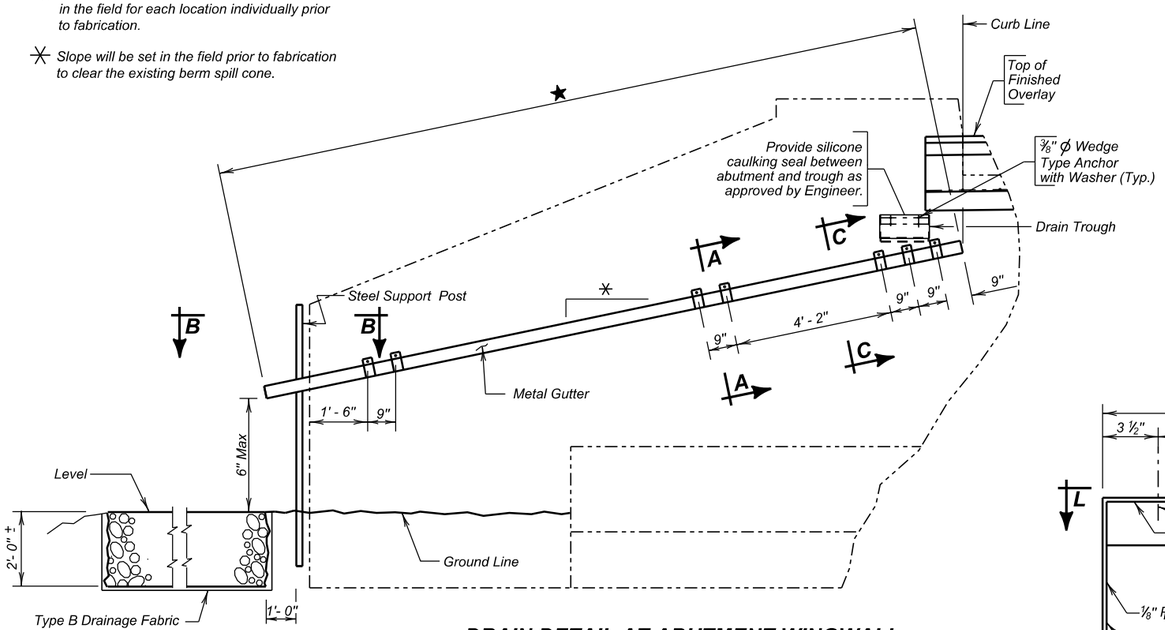


## DRAIN DETAIL AT ABUTMENT WINGWALL

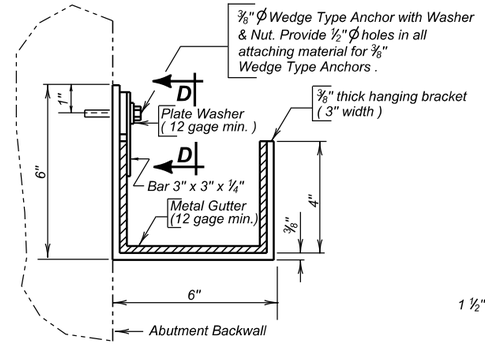


## SECTION A - A

( Typical Gutter Section at Bracket )

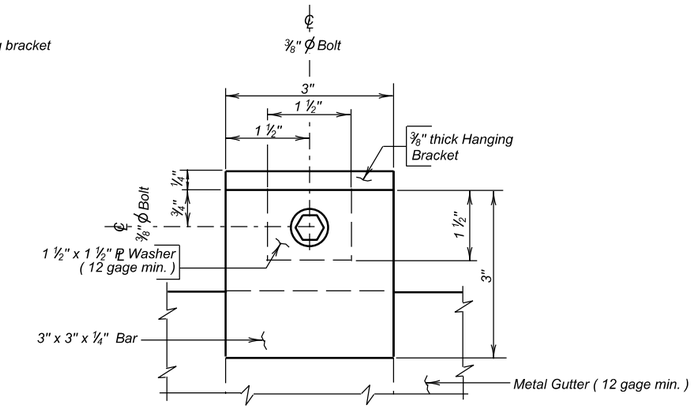


## VIEW D - D

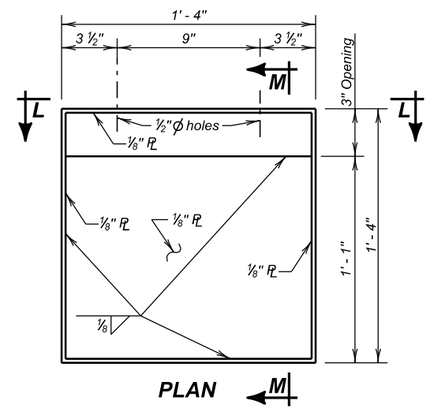


## PLAN

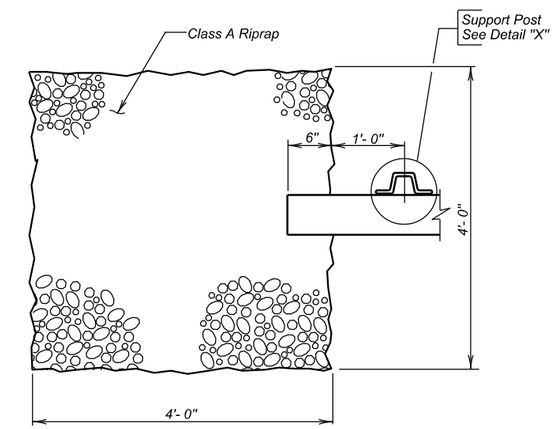


## VIEW B - B

( Detail of Rockpile )

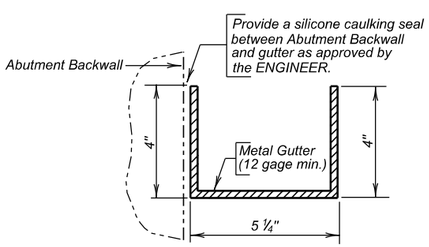


## SECTION C - C

( Typical Gutter Section )

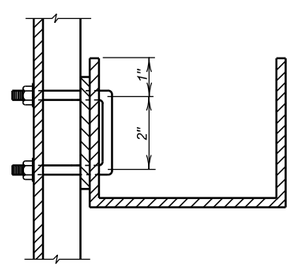


## SECTION Y - Y

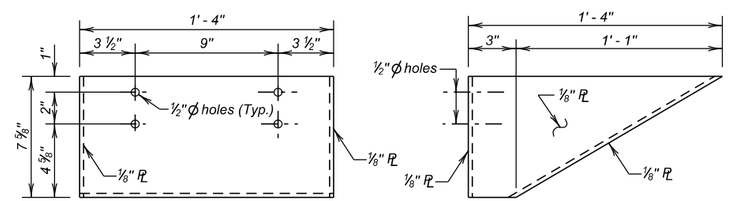


## SECTION L - L

## SECTION M - M

## DRAINAGE TROUGH DETAILS

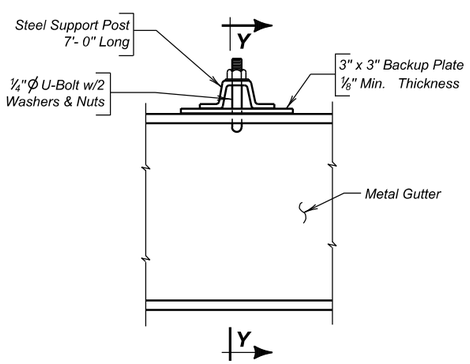


## DETAIL "X"

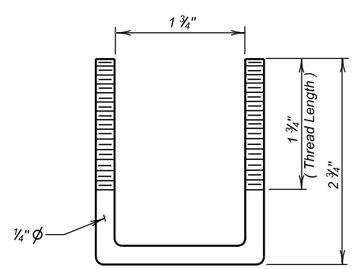


## U - BOLT

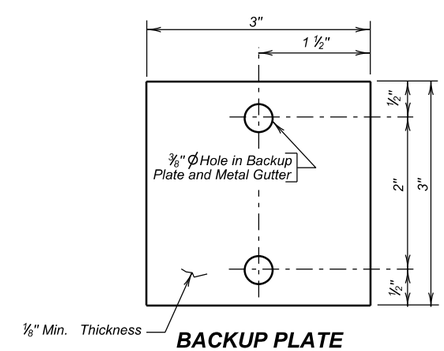


## BACKUP PLATE

## ESTIMATED QUANTITIES

| ITEM | UNIT | QUANTITY |
|---|---|---|
| Abutment Joint Drain | Each | 2 |
| | | |

Use this sheet in conjunction with Sheet Nos. 11 thru 13 of 33.

**(NORTH BOUND LANES)**
**JOINT DRAIN (CONTINUED)**

FOR

558' - 1 ¾" COMP. GIRDER BRIDGE

40' - 0" ROADWAY — 0° SKEW
OVER BIG SIOUX RIVER — SEC. 26-T89N-R48W
STR. NO. 64-164-405 — IM-PH 0291(122)0

UNION COUNTY
S. D. DEPT. OF TRANSPORTATION
OCTOBER 2015



| DESIGNED BY | CK. DES. BY | DRAFTED BY | |
|---|---|---|---|
| KSK | MM | KR | Kevin N. Goeden |
| UNIN02PT | 02PTRA14 | | BRIDGE ENGINEER |

| STATE OF | PROJECT | SHEET NO. | TOTAL SHEETS |
|---|---|---|---|
| S.D. | IM-PH 0291(122)0 | 53 | 284 |

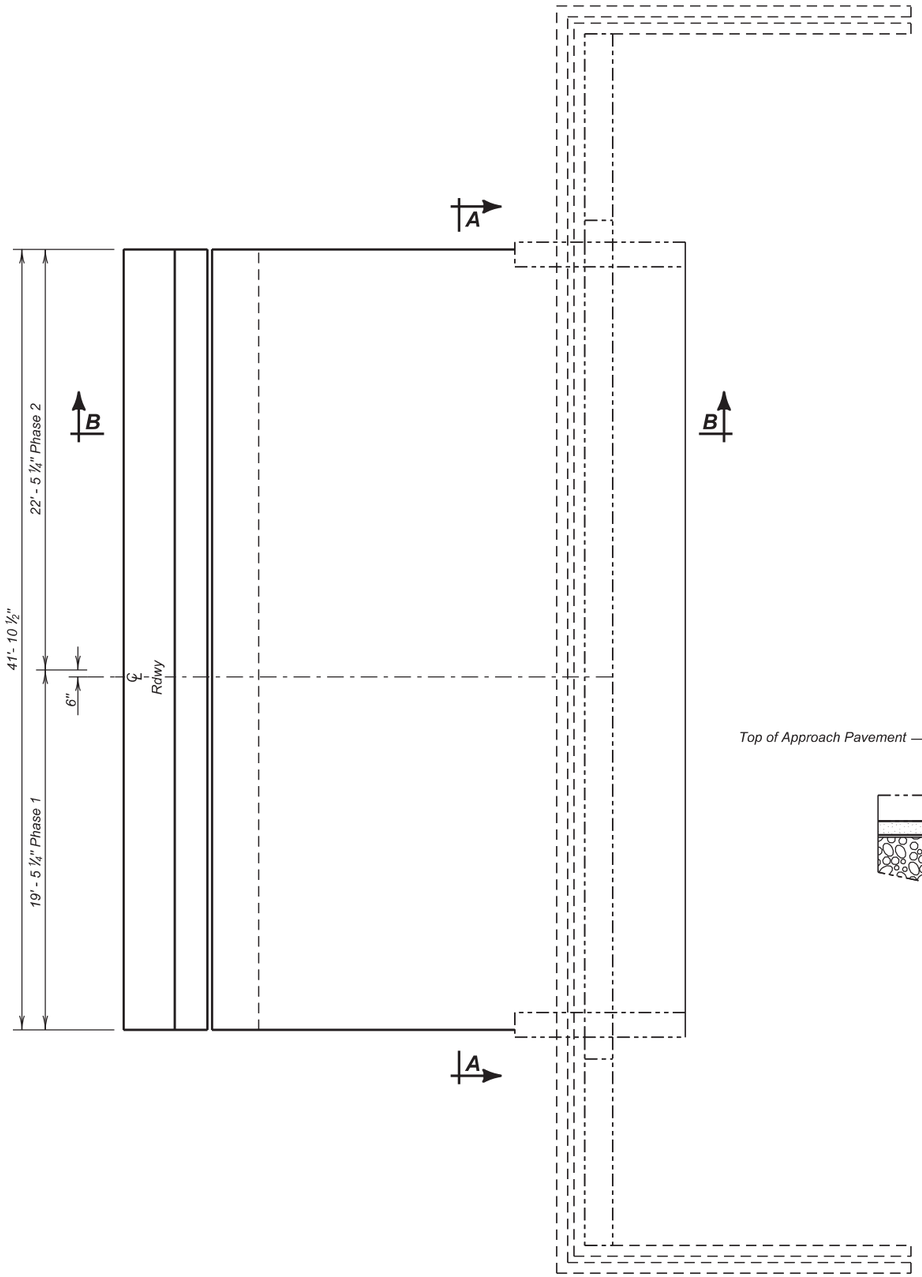


**PLAN**

(Abut. No. 1 Shown, Abut. No. 4 Similar by Rotation)

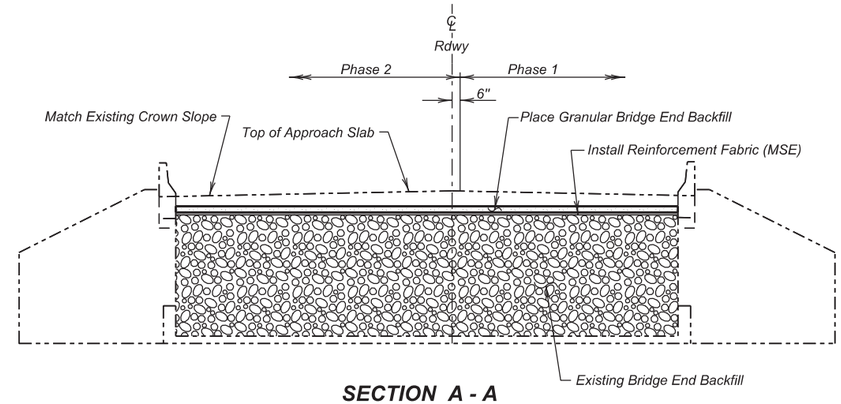


**SECTION A - A**

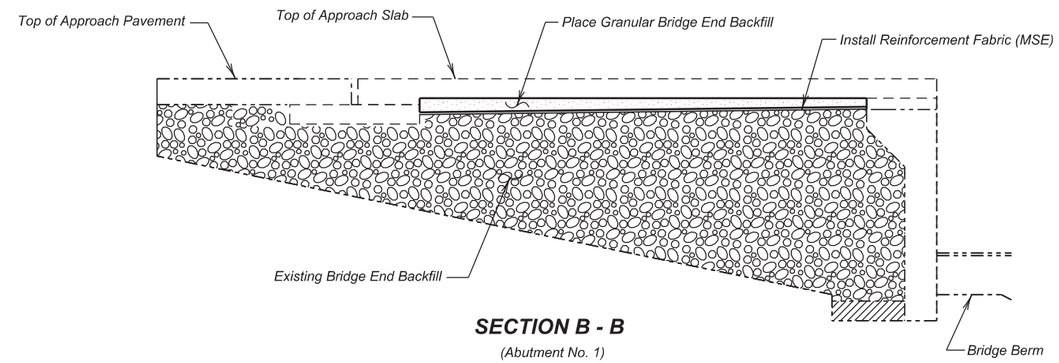


**SECTION B - B**

(Abutment No. 1)

(at ℄ Roadway)

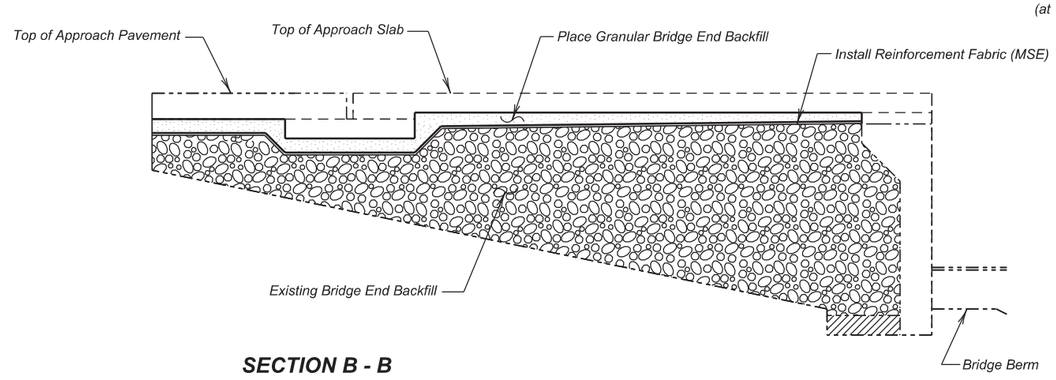


**SECTION B - B**

(Abutment No. 4)

(at ℄ Roadway)

**ESTIMATED QUANTITIES**

| | ITEM | UNIT | QUANTITY Phase I | QUANTITY Phase 2 |
|---|---|---|---|---|
| ⌀ | Granular Bridge End Backfill | CuYd | 3.6 | 4.4 |

⌀ Item 1 is an approximate quantity contained in the above bid item and is for information only.

| | PHASE 1 | PHASE 2 |
|---|---|---|
| 1. Reinforcement Fabric (MSE) | 92.0 Sq.Yd. | 112.4 Sq.Yd. |

**(SOUTH BOUND LANES)**

**BRIDGE END BACKFILL MODIFICATION**

FOR

557' - 0" CONT. COMP. GIRDER BRIDGE

40' - 0" ROADWAY — 0° SKEW

OVER BIG SIOUX RIVER — SEC. 26-T89N-R48W

STR. NO. 64-164-405 — IM-PH 0291(122)0

UNION COUNTY

S. D. DEPT. OF TRANSPORTATION

OCTOBER 2015



| DESIGNED BY | CK. DES. BY | DRAFTED BY | |
|---|---|---|---|
| KSK | BD | KR | Kevin N. Goeden |
| UNIN02PT | 02PTRA19 | | BRIDGE ENGINEER |

| STATE OF | PROJECT | SHEET NO. | TOTAL SHEETS |
|---|---|---|---|
| S.D. | IM-PH 0291(122)0 | 54 | 284 |

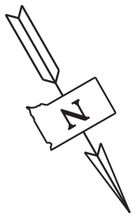


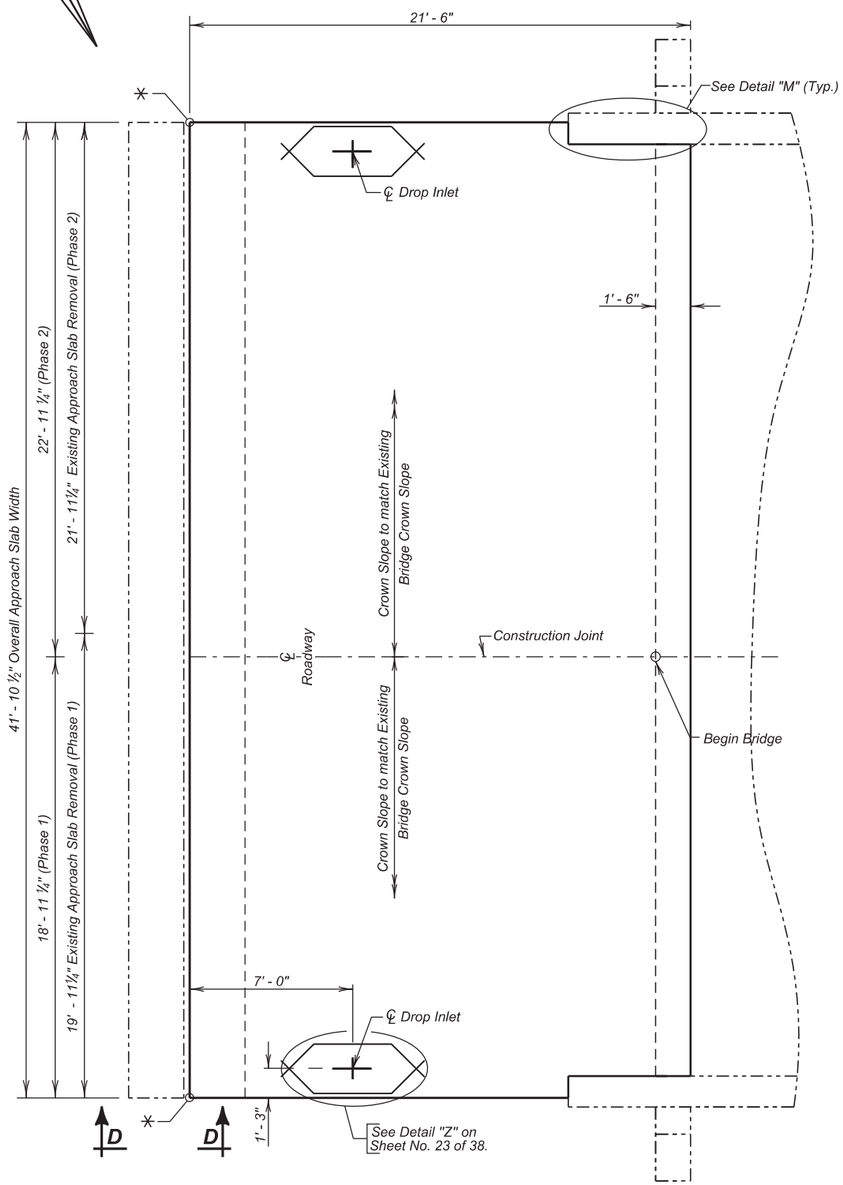


**PLAN**
(Abutment No. 1)

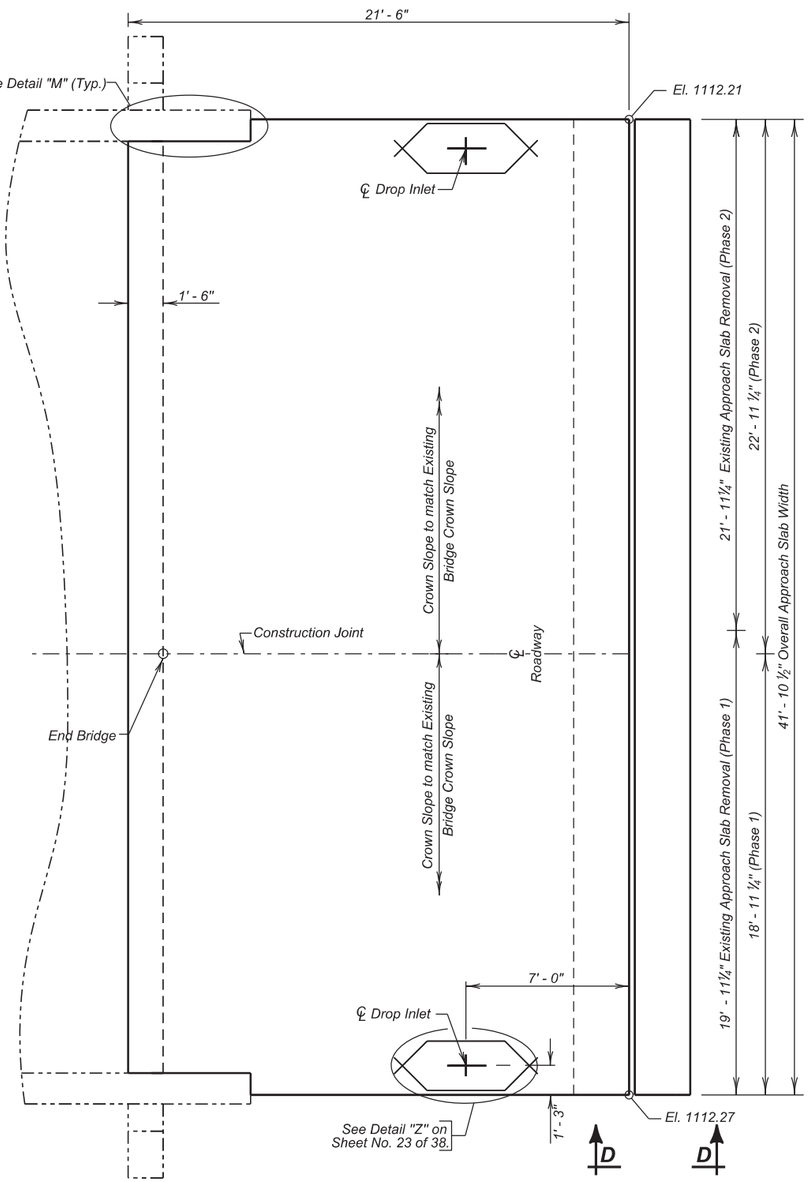


**PLAN**
(Abutment No. 4)

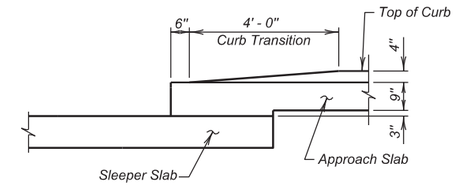


**VIEW D - D**

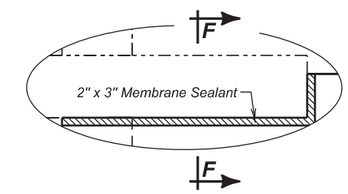


**DETAIL "M"**

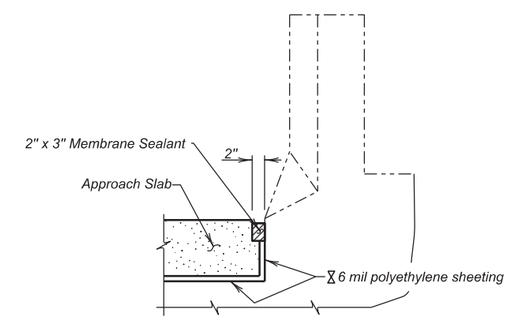


**SEC. F - F**

6 mil polyetylene sheeting shall not interfere with the bond between the Membrane Sealant and the approach slab.

✳ Elevation is Top of Slab back of Curb at this point. See Approach Slab Notes.

Use this sheet in conjunction with sheet nos. 21 thru 24 of 38.

**(SOUTH BOUND LANES)**
**APPROACH SLAB LAYOUT (ABUT. NO. 4 ONLY)**
FOR
557' - 0" CONT. COMP. GIRDER BRIDGE

40' - 0" ROADWAY — 0° SKEW
OVER BIG SIOUX RIVER — SEC. 26-T89N-R48W
STR. NO. 64-164-405 — IM-PH 0291(122)0

UNION COUNTY
S. D. DEPT. OF TRANSPORTATION
OCTOBER 2015



| DESIGNED BY | CK. DES. BY | DRAFTED BY | |
|---|---|---|---|
| KSK | BD | KR | Kevin N. Boeden |
| UNIN02PT | 02PTRA20 | | BRIDGE ENGINEER |

| STATE OF | PROJECT | SHEET NO. | TOTAL SHEETS |
|---|---|---|---|
| S.D. | IM-PH 0291(122)0 | 55 | 284 |

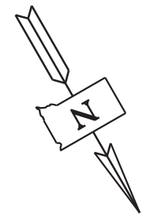


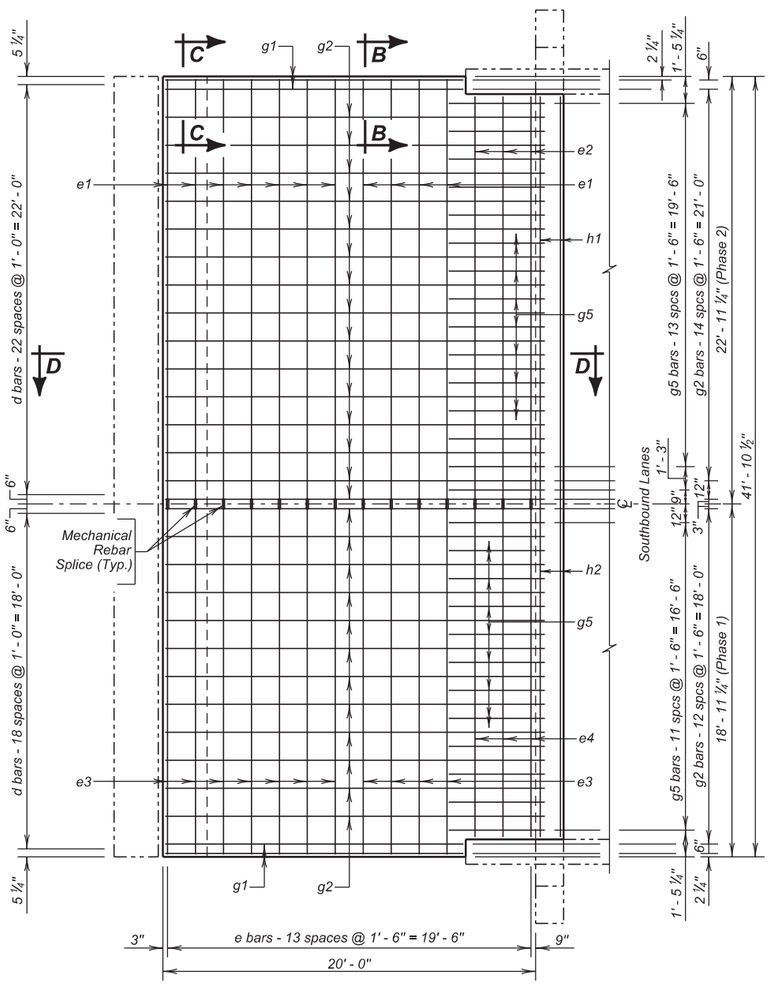


**PLAN**
(Top Steel)
(Abutment No. 1)

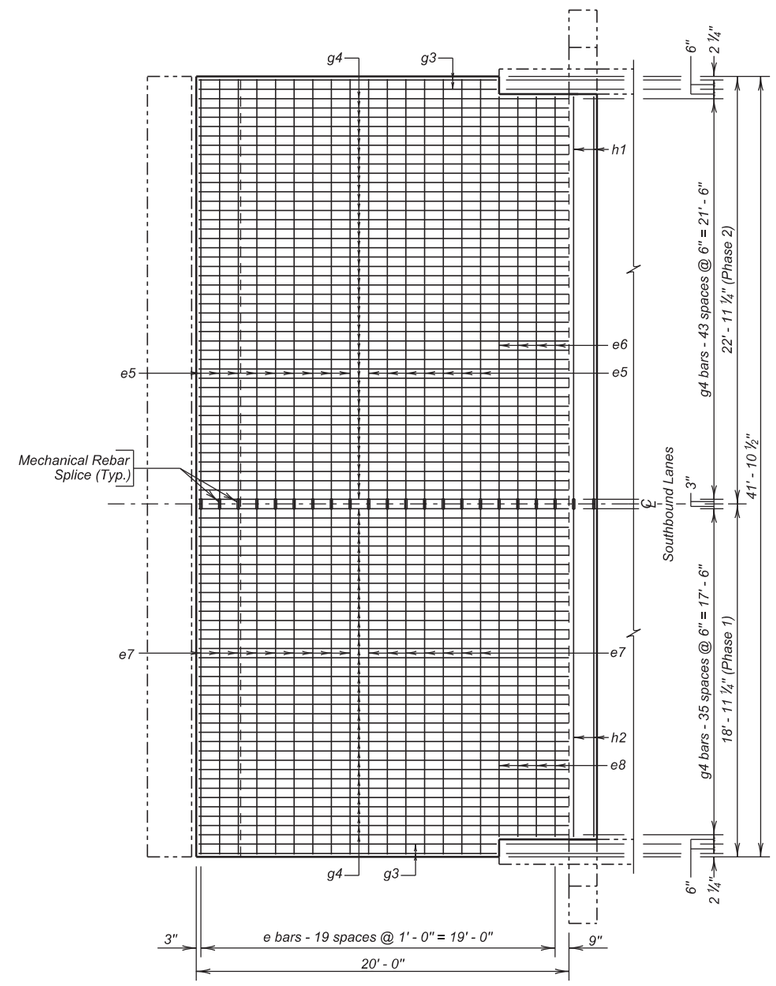


**PLAN**
(Bottom Steel)
(Abutment No. 1)

## REINFORCING SCHEDULE
(For One Approach and One Sleeper Slab)

PHASE 1

| | Mk. | No. | Size | Length | Type |
|---|---|---|---|---|---|
| | a3 | 4 | 4 | 7' - 3" | 19B |
| ⌀ | e3 | 11 | 4 | 18' - 9" | Str. |
| ⌀ | e4 | 3 | 4 | 17' - 10" | Str. |
| ⌀ | e7 | 16 | 6 | 18' - 9" | Str. |
| ⌀ | e8 | 4 | 6 | 17' - 10" | Str. |
| | g1 | 2 | 4 | 15' - 11" | Str. |
| | g2 | 12 | 4 | 21' - 2" | Str. |
| | g3 | 2 | 8 | 15' - 11" | Str. |
| | g4 | 36 | 8 | 21' - 2" | Str. |
| | g5 | 12 | 4 | 7' - 4" | Str. |
| ⌀ | h2 | 4 | 6 | 17' - 10" | Str. |

Bending Details

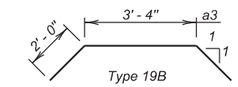


PHASE 2

| Mk. | No. | Size | Length | Type |
|---|---|---|---|---|
| a3 | 4 | 4 | 7' - 3" | 19B |
| e1 | 11 | 4 | 22' - 9" | Str. |
| e2 | 3 | 4 | 21' - 10" | Str. |
| e5 | 16 | 6 | 22' - 9" | Str. |
| e6 | 4 | 6 | 21' - 10" | Str. |
| g1 | 2 | 4 | 15' - 11" | Str. |
| g2 | 15 | 4 | 21' - 2" | Str. |
| g3 | 2 | 8 | 15' - 11" | Str. |
| g4 | 36 | 8 | 21' - 2" | Str. |
| g5 | 15 | 4 | 7' - 4" | Str. |
| h1 | 4 | 6 | 22' - 9" | Str. |

Note -
All Dimensions are out to out of bars.
All Bars to be Epoxy Coated.

⌀ Splice (Mechanically Spliced)

## ESTIMATED QUANTITIES
(For One Approach and One Sleeper Slab)

| ITEM | UNIT | QUANTITY Phase I | QUANTITY Phase 2 |
|---|---|---|---|
| Remove Concrete Bridge Approach Slab | Sq Yd | 47.1 | 51.9 |
| Concrete Approach Slab for Bridge | Sq Yd | 44.7 | 54.2 |
| No. 4 Rebar Splice | Each | 14 | — |
| No. 6 Rebar Splice | Each | 24 | — |

| | PHASE I | PHASE 2 |
|---|---|---|
| 1. Concrete in Approach Slabs. | 10.8 Cu. Yd. | 13.1 Cu. Yd. |
| 2. Epoxy Coated Re-Steel in Approach Slabs. | 3227 lbs. | 3466 lbs. |

Items 1 thru 2 are approximate quantities contained in the above bid item and are for information only.

Use this sheet in conjunction with Sheet Nos. 20, 23, and 24 of 38.

**(SOUTH BOUND LANES)**
**APPROACH SLAB DETAILS (ABUT. NO. 1)**
FOR
557' - 0" CONT. COMP. GIRDER BRIDGE

40' - 0" ROADWAY — 0° SKEW
OVER BIG SIOUX RIVER — SEC. 26-T89N-R48W
STR. NO. 64-164-405 — IM-PH 0291(122)0

UNION COUNTY
S. D. DEPT. OF TRANSPORTATION
OCTOBER 2015



| DESIGNED BY | CK. DES. BY | DRAFTED BY | |
|---|---|---|---|
| KSK | BD | KR | Kevin N. Boeden |
| UNIN02PT | 02PTRA21 | | BRIDGE ENGINEER |

| STATE OF | PROJECT | SHEET NO. | TOTAL SHEETS |
|---|---|---|---|
| S.D. | IM-PH 0291(122)0 | 56 | 284 |

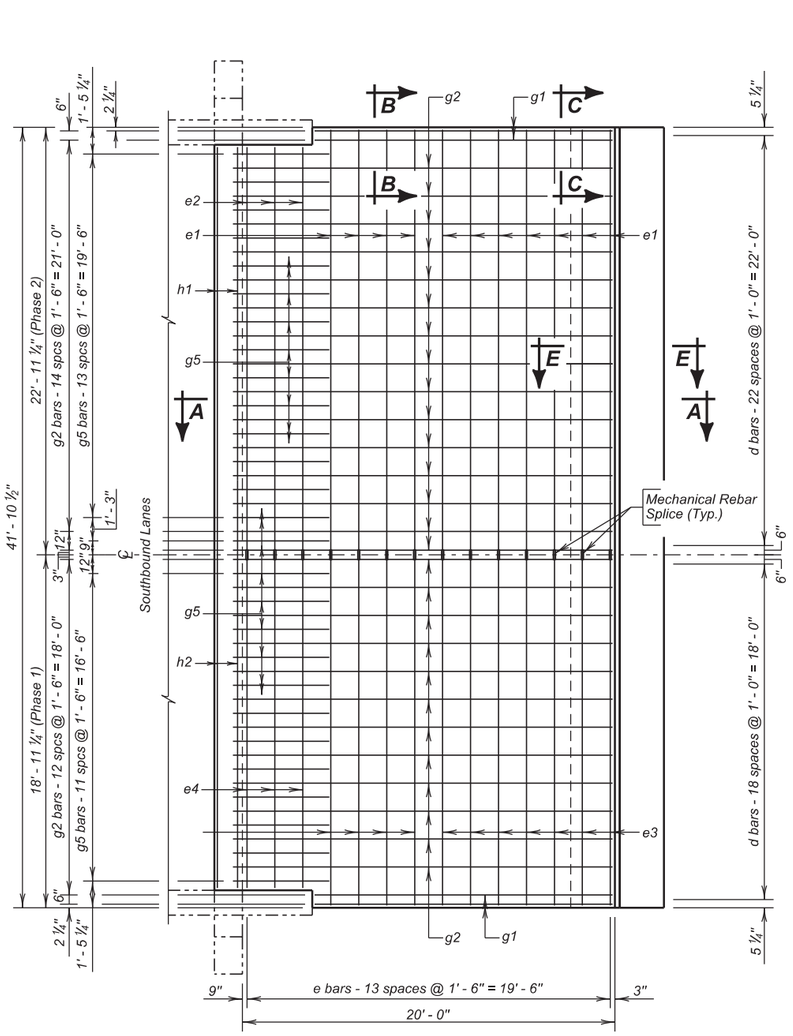


**PLAN**
(Top Steel)
(Abutment No. 4)

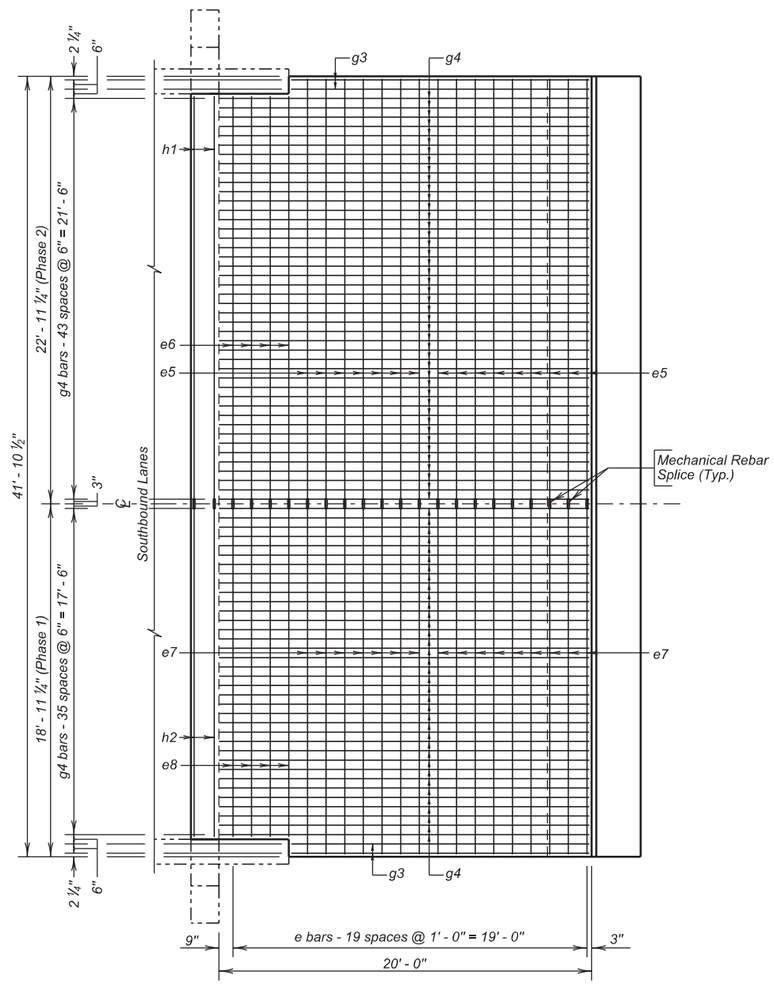


**PLAN**
(Bottom Steel)
(Abutment No. 4)

## REINFORCING SCHEDULE
( For One Approach and Sleeper Slabs )

PHASE 1

| Mk. | No. | Size | Length | Type |
|---|---|---|---|---|
| a3 | 4 | 4 | 7' - 3" | 19B |
| c1 | 14 | 5 | 18' - 9" | Str. |
| d1 | 38 | 4 | 5' - 5" | 2 |
| d2 | 19 | 4 | 5' - 1" | T2 |
| ⌀ e3 | 11 | 4 | 18' - 9" | Str. |
| ⌀ e4 | 3 | 4 | 17' - 10" | Str. |
| ⌀ e7 | 16 | 6 | 18' - 9" | Str. |
| ⌀ e8 | 4 | 6 | 17' - 10" | Str. |
| g1 | 2 | 4 | 15' - 11" | Str. |
| g2 | 12 | 4 | 21' -2" | Str. |
| g3 | 2 | 8 | 15' - 11" | Str. |
| g4 | 36 | 8 | 21' - 2" | Str. |
| g5 | 12 | 4 | 7' - 4" | Str. |
| ⌀ h2 | 4 | 6 | 17' - 10" | Str. |

PHASE 2

| Mk. | No. | Size | Length | Type |
|---|---|---|---|---|
| a3 | 4 | 4 | 7' - 3" | 19B |
| c2 | 14 | 5 | 22' - 9" | Str. |
| d1 | 46 | 4 | 5' - 6" | 2 |
| d2 | 23 | 4 | 5' - 1" | T2 |
| e1 | 11 | 4 | 22' - 9" | Str. |
| e2 | 3 | 4 | 21' - 10" | Str. |
| e7 | 16 | 6 | 22' - 9" | Str. |
| e8 | 4 | 6 | 21' - 10" | Str. |
| g1 | 2 | 4 | 15' - 11" | Str. |
| g2 | 15 | 4 | 21' - 2" | Str. |
| g3 | 2 | 8 | 15' - 11" | Str. |
| g4 | 36 | 8 | 21' - 2" | Str. |
| g5 | 15 | 4 | 7' - 4" | Str. |
| h1 | 4 | 6 | 21' - 10" | Str. |

Bending Details

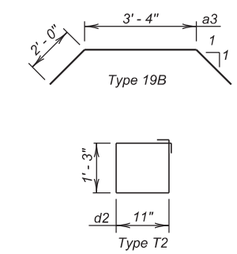


Note -
All Dimensions are out to out of bars.
All Bars to be Epoxy Coated.

⌀ Splice (Mechanically Spliced)

## ESTIMATED QUANTITIES
(For One Approach and One Sleeper Slab)

| ITEM | UNIT | QUANTITY Phase I | QUANTITY Phase 2 |
|---|---|---|---|
| Remove Concrete Bridge Approach Slab | Sq Yd | 52.9 | 58.3 |
| Concrete Approach Slab for Bridge | Sq Yd | 44.7 | 54.2 |
| Concrete Approach Sleeper Slab for Bridge | Sq Yd | 10.5 | 12.7 |
| No. 4 Rebar Splice | Each | 14 | — |
| No. 5 Rebar Splice | Each | 14 | — |
| No. 6 Rebar Splice | Each | 24 | — |
| | | | |

| | PHASE I | PHASE 2 |
|---|---|---|
| 1. Concrete in Approach Slab | 10.8 Cu. Yd. | 13.1 Cu. Yd. |
| 2. Epoxy Coated Re-steel in Approach Slab | 3227 Lb. | 3466 Lb. |
| 3. Concrete in Sleeper Slab | 2.6 Cu. Yd. | 3.2 Cu. Yd. |
| 4. Epoxy Coated Re-steel in Sleeper Slab | 473 Lb. | 579 Lb. |

Items 1 thru 4 are approximate quantities contained in the above bid item and are for information only.

**(SOUTH BOUND LANES)**
**APPROACH SLAB DETAILS (ABUT. NO. 4)**
FOR
557' - 0" CONT. COMP. GIRDER BRIDGE

40' - 0" ROADWAY — 0° SKEW
OVER BIG SIOUX RIVER — SEC. 26-T89N-R48W
STR. NO. 64-164-405 — IM-PH 0291(122)0

UNION COUNTY
S. D. DEPT. OF TRANSPORTATION
OCTOBER 2015



Use this sheet in conjunction with Sheet Nos. 20, 23 and 24 of 38.

| DESIGNED BY | CK. DES. BY | DRAFTED BY | |
|---|---|---|---|
| KSK | BD | KR | Kevin N. Goeden |
| UNIN02PT | 02PTRA22 | | BRIDGE ENGINEER |

| STATE OF | PROJECT | SHEET NO. | TOTAL SHEETS |
|---|---|---|---|
| S.D. | IM-PH 0291(122)0 | 57 | 284 |

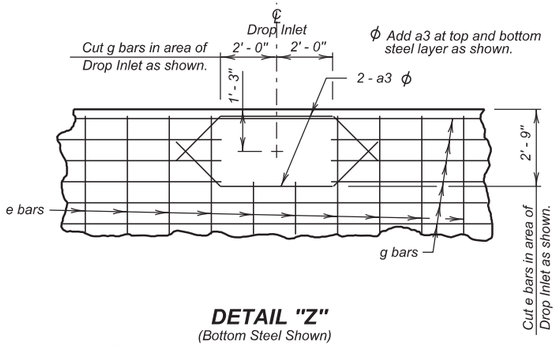


**DETAIL "Z"**
(Bottom Steel Shown)
See Sheet No. 5 of 11 for location on Approach Slab .

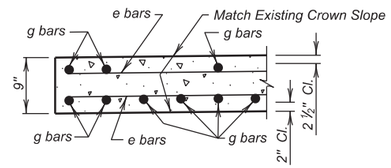


**SEC. C - C**

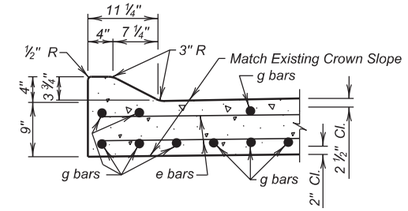


**SEC. B - B**

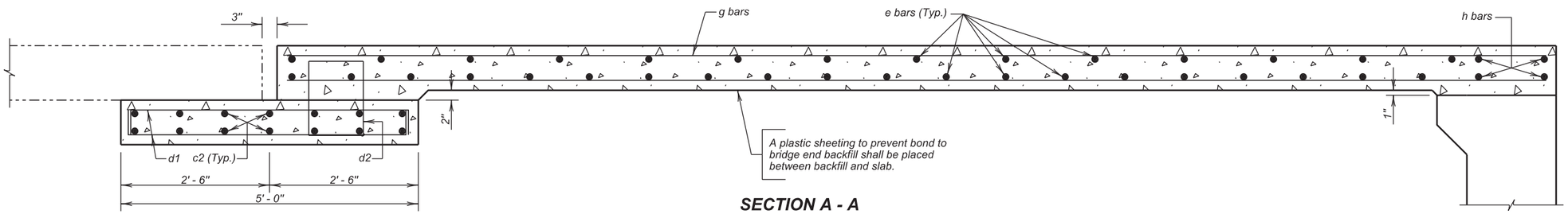


**SECTION A - A**

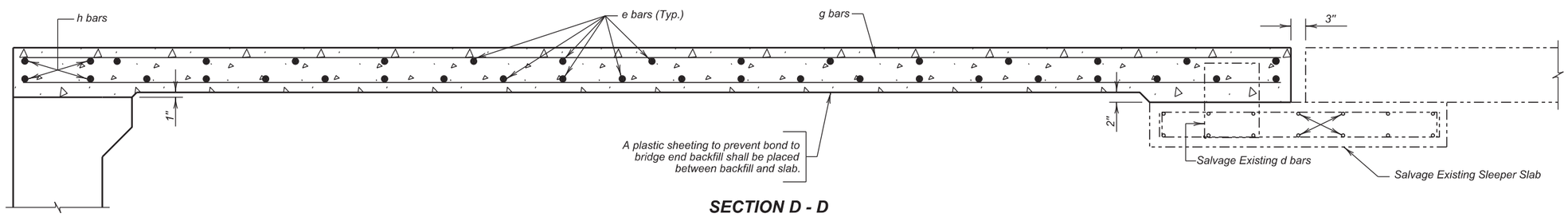


**SECTION D - D**

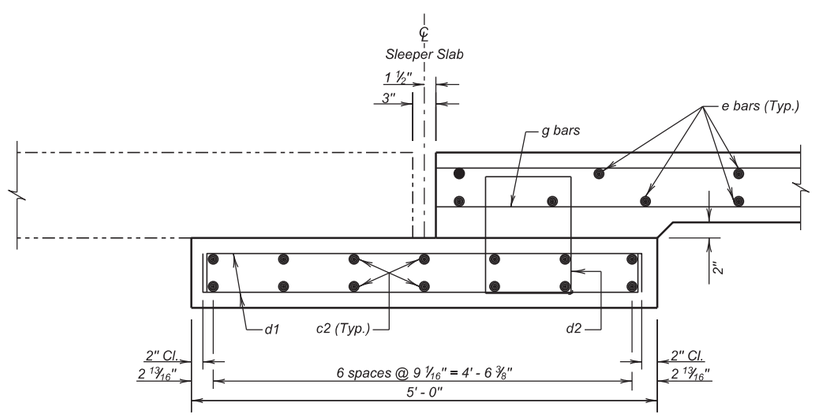


**SECTION E - E**

Use this sheet in conjunction with Sheet Nos. 19, 20, 21, 22 and 24 of 38.

**(SOUTH BOUND LANES)**

**APPROACH SLAB DETAILS (CONTINUED)**

FOR

## 557' - 0" CONT. COMP. GIRDER BRIDGE

40' - 0" ROADWAY — 0° SKEW
OVER BIG SIOUX RIVER — SEC. 26-T89N-R48W
STR. NO. 64-164-405 — IM-PH 0291(122)0

UNION COUNTY
S. D. DEPT. OF TRANSPORTATION
OCTOBER 2015



| DESIGNED BY | CK. DES. BY | DRAFTED BY | |
|---|---|---|---|
| KSK | BD | KR | Kevin N. Goeden |
| UNIN02PT | 02PTRA23 | | BRIDGE ENGINEER |

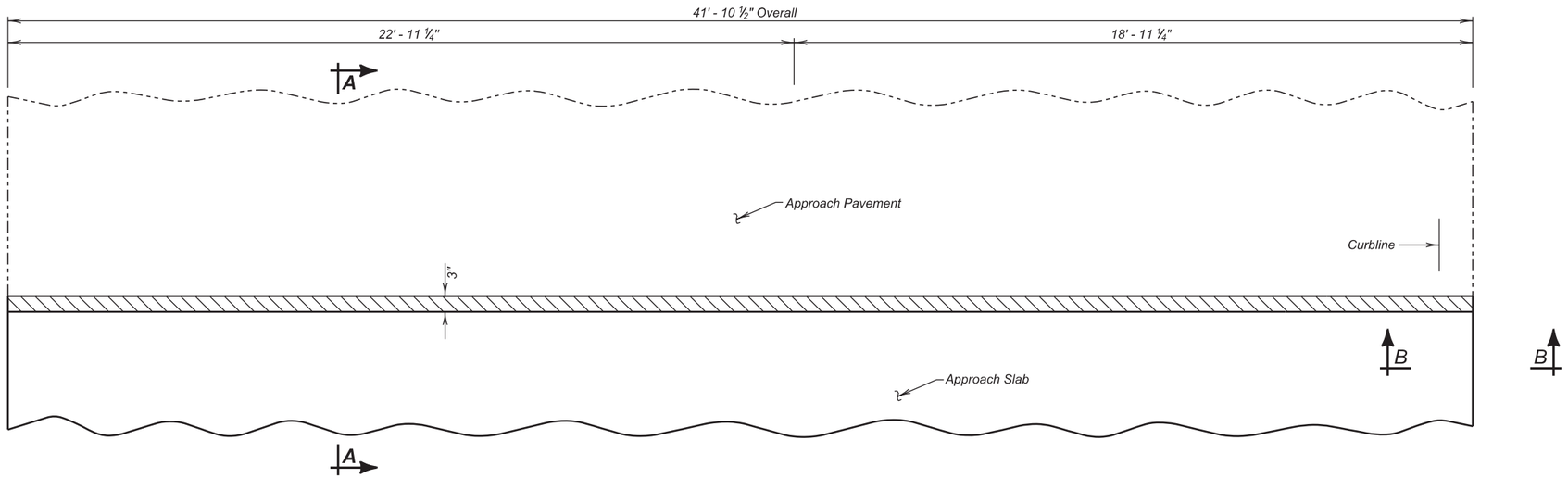


**PLAN**

| ESTIMATED QUANTITIES | | | |
|---|---|---|---|
| ITEM | UNIT | QUANTITY | |
| | | Phase I | Phase 2 |
| Membrane Sealant Expansion Joint | Ft | 37.9 | 45.9 |
| | | | |

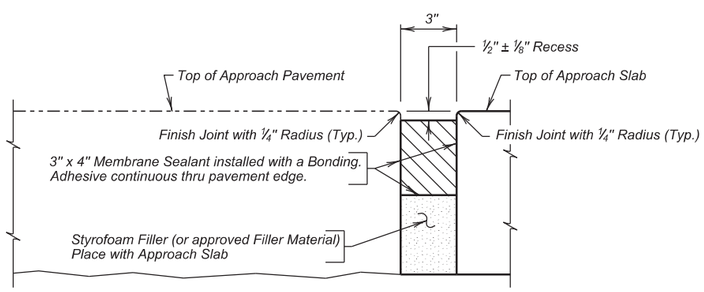


**SECTION A - A**

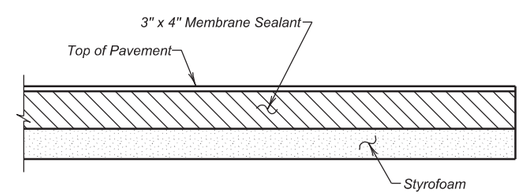


**SECTION B - B**

*Use this sheet in conjunction with Sheet Nos. 20 thru 23 of 38.*

**(SOUTH BOUND LANES)**
**APPROACH SLAB JOINT**
FOR
557' - 0" CONT. COMP. GIRDER BRIDGE

40' - 0" ROADWAY — 0° SKEW
OVER BIG SIOUX RIVER — SEC. 26-T89N-R48W
STR. NO. 64-164-405 — IM-PH 0291(122)0

UNION COUNTY
S. D. DEPT. OF TRANSPORTATION
OCTOBER 2015



| DESIGNED BY | CK. DES. BY | DRAFTED BY | |
|---|---|---|---|
| KSK | BD | KR | Kevin N. Goeden |
| UNIN02PT | 02PTRA24 | | BRIDGE ENGINEER |

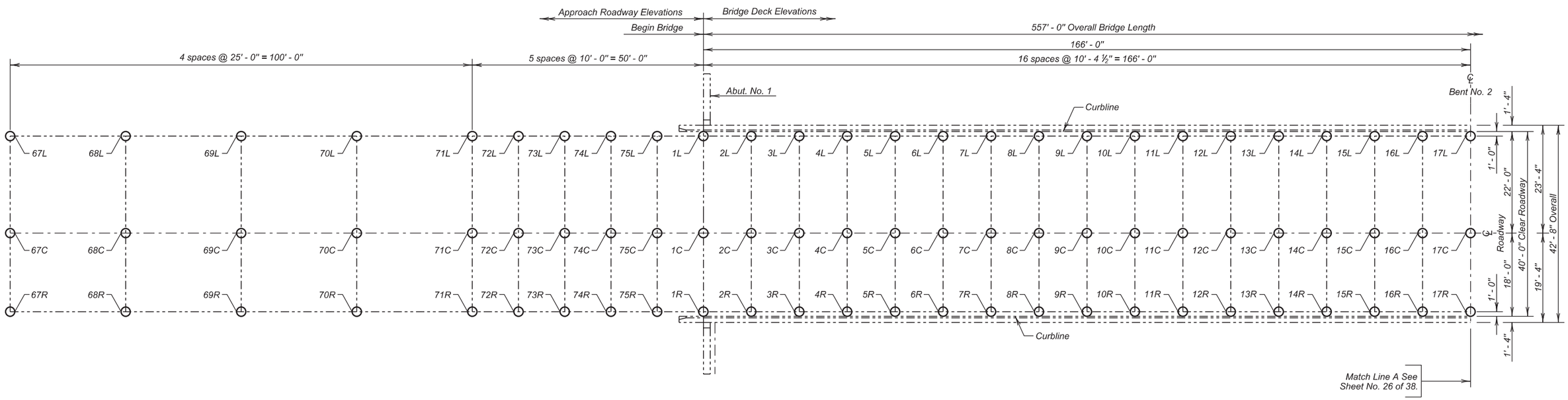


**PARTIAL PLAN**

## Benchmark Description:

B.M. # CP100 (Nail in Concrete North Crossover)
N - 83437.383
E - 3007379.772
Elevation 1104.562

B.M. # CP102 (Nail in Asphalt Header NB I29 Close Lane)
N - 83084.890
E - 3008518.857
Elevation 1112.184

B.M. # CP101A Medal Spike (NW Wingwall on I29 NB)
Elevation 1112.184

NOTE :
The Contractor shall be responsible for producing the As - Built Elevation Survey soon after construction is complete and before the bridge is completely opened to traffic. ***The As - Built Elevations of the overlay shall be based on the National Geodetic Survey North American Vertical Datum of 1988*** and shall be taken and recorded at the locations shown by the table on this sheet. The completed table shall be given to the Engineer who will forward a copy to the Bridge Maintenance Engineer in the Office of Bridge Design and the Region Bridge Maintenance Engineer.

**AS BUILT ELEVATION SURVEY**

FOR

557' - 0" CONT. COMP. GIRDER BRIDGE

40' - 0" ROADWAY — 0° SKEW
OVER BIG SIOUX RIVER — SEC. 26-T89N-R48W
STR. NO. 64-164-405 — IM-PH 0291(122)0

UNION COUNTY

S. D. DEPT. OF TRANSPORTATION

OCTOBER 2015



| DESIGNED BY | CK. DES. BY | DRAFTED BY | |
|---|---|---|---|
| KSK | BD | KR | Kevin N. Goeden |
| UNION02PT | 02PTRA25 | | BRIDGE ENGINEER |

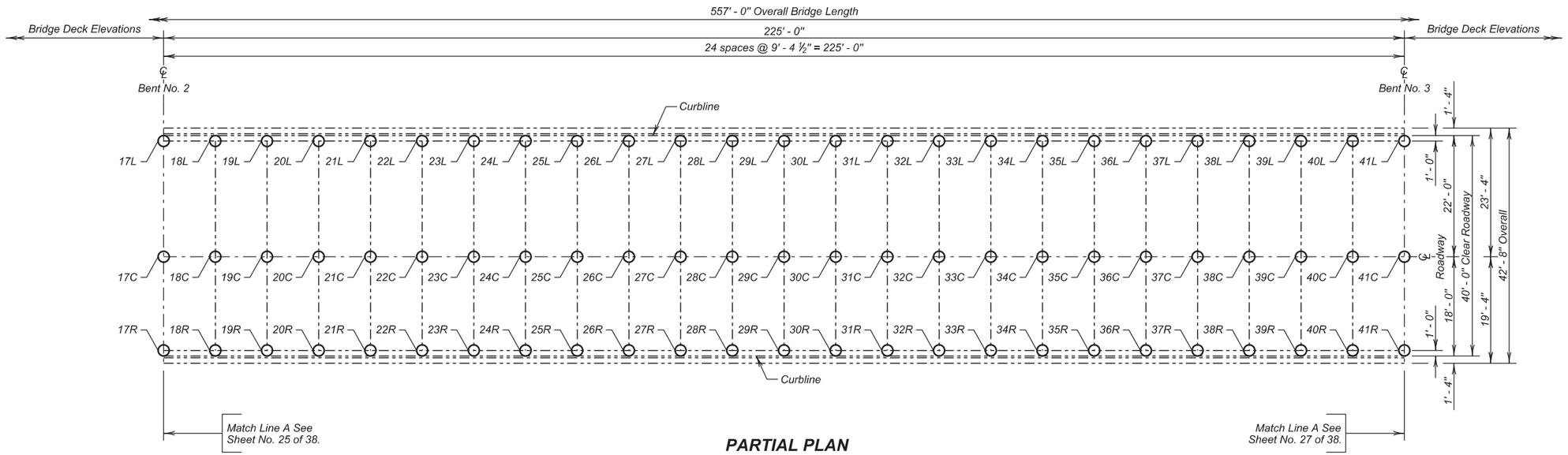


**PARTIAL PLAN**

## Benchmark Description:

B.M. # CP100 (Nail in Concrete North Crossover)
N - 83437.383
E - 3007379.772
Elevation 1104.562

B.M. # CP102 (Nail in Asphalt Header NB I29 Close Lane)
N - 83084.890
E - 3008518.857
Elevation 1112.184

B.M. # CP101A Medal Spike (NW Wingwall on I29 NB)
Elevation 1112.184

NOTE :
The Contractor shall be responsible for producing the As - Built Elevation Survey soon after construction is complete and before the bridge is completely opened to traffic.
**The As - Built Elevations of the overlay shall be based on the National Geodetic Survey North American Vertical Datum of 1988** and shall be taken and recorded at the locations shown by the table on this sheet. The completed table shall be given to the Engineer who will forward a copy to the Bridge Maintenance Engineer in the Office of Bridge Design and the Region Bridge Maintenance Engineer.

**ELEVATION SURVEY REQUEST (CONTINUED)**

FOR

557' - 0" CONT. COMP. GIRDER BRIDGE

40' - 0" ROADWAY — 0° SKEW
OVER BIG SIOUX RIVER — SEC. 26-T89N-R48W
STR. NO. 64-164-405 — IM-PH 0291(122)0

UNION COUNTY
S. D. DEPT. OF TRANSPORTATION
OCTOBER 2015



| DESIGNED BY | CK. DES. BY | DRAFTED BY | |
|---|---|---|---|
| KSK | BD | KR | Kevin N. Goeden |
| UNION02PT | 02PTRA26 | | BRIDGE ENGINEER |

| STATE OF | PROJECT | SHEET NO. | TOTAL SHEETS |
|---|---|---|---|
| S.D. | IM-PH 0291(122)0 | 61 | 284 |

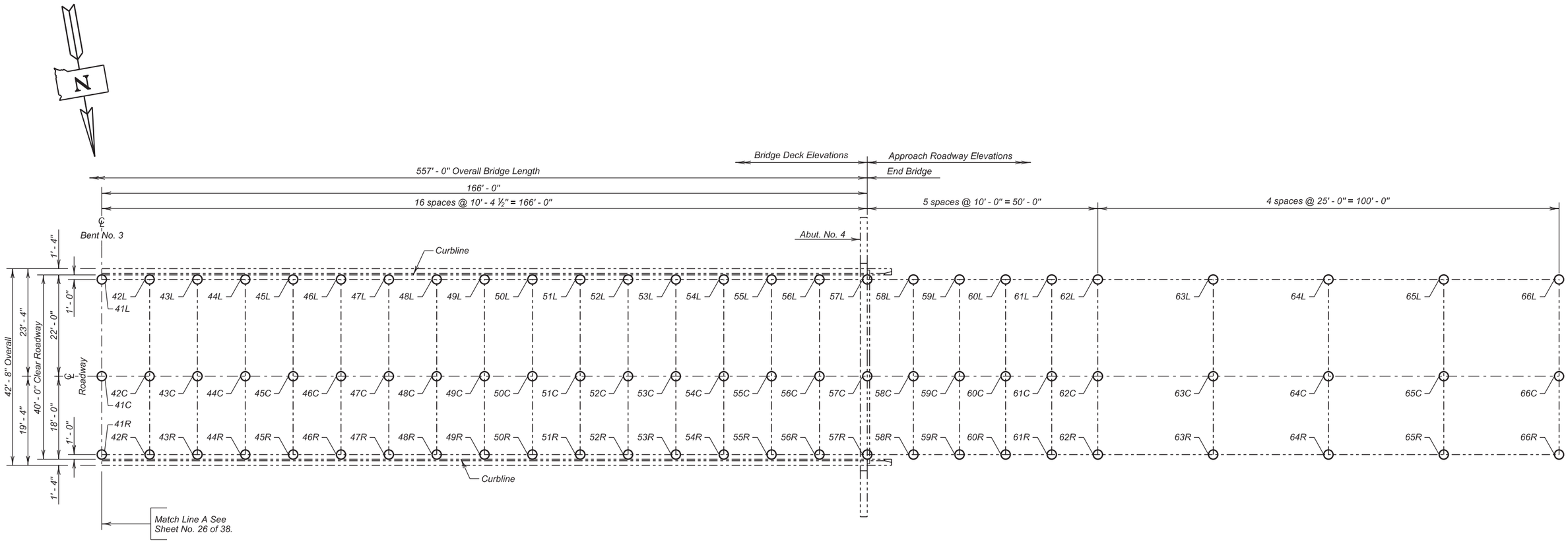


**PARTIAL PLAN**

## Benchmark Description:

B.M. # CP100 (Nail in Concrete North Crossover)
N - 83437.383
E - 3007379.772
Elevation 1104.562

B.M. # CP102 (Nail in Asphalt Header NB I29 Close Lane)
N - 83084.890
E - 3008518.857
Elevation 1112.184

B.M. # CP101A Medal Spike (NW Wingwall on I29 NB)
Elevation 1112.184

NOTE :
The Contractor shall be responsible for producing the As - Built Elevation Survey soon after construction is complete and before the bridge is completely opened to traffic. **The As - Built Elevations of the overlay shall be based on the National Geodetic Survey North American Vertical Datum of 1988** and shall be taken and recorded at the locations shown by the table on this sheet. The completed table shall be given to the Engineer who will forward a copy to the Bridge Maintenance Engineer in the Office of Bridge Design and the Region Bridge Maintenance Engineer.

**ELEVATION SURVEY REQUEST (CONTINUED)**

FOR

557' - 0" CONT. COMP. GIRDER BRIDGE

40' - 0" ROADWAY — 0° SKEW
OVER BIG SIOUX RIVER — SEC. 26-T89N-R48W
STR. NO. 64-164-405 — IM-PH 0291(122)0

UNION COUNTY

S. D. DEPT. OF TRANSPORTATION

OCTOBER 2015



| DESIGNED BY | CK. DES. BY | DRAFTED BY | |
|---|---|---|---|
| KSK | BD | KR | Kevin N. Boeden |
| UNION02PT | 02PTRA27 | | BRIDGE ENGINEER |

### Table of Elevations - Bridge Deck

| Location | Rod Reading | Elevation | Location | Rod Reading | Elevation | Location | Rod Reading | Elevation |
|---|---|---|---|---|---|---|---|---|
| 1L | | | 1C | | | 1R | | |
| 2L | | | 2C | | | 2R | | |
| 3L | | | 3C | | | 3R | | |
| 4L | | | 4C | | | 4R | | |
| 5L | | | 5C | | | 5R | | |
| 6L | | | 6C | | | 6R | | |
| 7L | | | 7C | | | 7R | | |
| 8L | | | 8C | | | 8R | | |
| 9L | | | 9C | | | 9R | | |
| 10L | | | 10C | | | 10R | | |
| 11L | | | 11C | | | 11R | | |
| 12L | | | 12C | | | 12R | | |
| 13L | | | 13C | | | 13R | | |
| 14L | | | 14C | | | 14R | | |
| 15L | | | 15C | | | 15R | | |
| 16L | | | 16C | | | 16R | | |
| 17L | | | 17C | | | 17R | | |
| 18L | | | 18C | | | 18R | | |
| 19L | | | 19C | | | 19R | | |
| 20L | | | 20C | | | 20R | | |
| 21L | | | 21C | | | 21R | | |
| 22L | | | 22C | | | 22R | | |
| 23L | | | 23C | | | 23R | | |
| 24L | | | 24C | | | 24R | | |
| 25L | | | 25C | | | 25R | | |
| 26L | | | 26C | | | 26R | | |
| 27L | | | 27C | | | 27R | | |
| 28L | | | 28C | | | 28R | | |
| 29L | | | 29C | | | 29R | | |
| 30L | | | 30C | | | 30R | | |
| 31L | | | 31C | | | 31R | | |
| 32L | | | 32C | | | 32R | | |
| 33L | | | 33C | | | 33R | | |
| 34L | | | 34C | | | 34R | | |
| 35L | | | 35C | | | 35R | | |
| 36L | | | 36C | | | 36R | | |
| 37L | | | 37C | | | 37R | | |
| 38L | | | 38C | | | 38R | | |
| 39L | | | 39C | | | 39R | | |
| 40L | | | 40C | | | 40R | | |
| 41L | | | 41C | | | 41R | | |
| 42L | | | 42C | | | 42R | | |
| 43L | | | 43C | | | 43R | | |

### Table of Elevations - Bridge Deck

| Location | Rod Reading | Elevation | Location | Rod Reading | Elevation | Location | Rod Reading | Elevation |
|---|---|---|---|---|---|---|---|---|
| 44L | | | 44C | | | 44R | | |
| 45L | | | 45C | | | 45R | | |
| 46L | | | 46C | | | 46R | | |
| 47L | | | 47C | | | 47R | | |
| 48L | | | 48C | | | 48R | | |
| 49L | | | 49C | | | 49R | | |
| 50L | | | 50C | | | 50R | | |
| 51L | | | 51C | | | 51R | | |
| 52L | | | 52C | | | 52R | | |
| 53L | | | 53C | | | 53R | | |
| 54L | | | 54C | | | 54R | | |
| 55L | | | 55C | | | 55R | | |
| 56L | | | 56C | | | 56R | | |
| 57L | | | 57C | | | 57R | | |

### Table of Elevations - Approach Roadway

| Location | Rod Reading | Elevation | Location | Rod Reading | Elevation | Location | Rod Reading | Elevation |
|---|---|---|---|---|---|---|---|---|
| 58L | | | 58C | | | 58R | | |
| 59L | | | 59C | | | 59R | | |
| 60L | | | 60C | | | 60R | | |
| 61L | | | 61C | | | 61R | | |
| 62L | | | 62C | | | 62R | | |
| 63L | | | 63C | | | 63R | | |
| 64L | | | 64C | | | 64R | | |
| 65L | | | 65C | | | 65R | | |
| 66L | | | 66C | | | 66R | | |
| 67L | | | 67C | | | 67R | | |
| 68L | | | 68C | | | 68R | | |
| 69L | | | 69C | | | 69R | | |
| 70L | | | 70C | | | 70R | | |
| 71L | | | 71C | | | 71R | | |
| 72L | | | 72C | | | 72R | | |
| 73L | | | 73C | | | 73R | | |
| 74L | | | 74C | | | 74R | | |
| 75L | | | 75C | | | 75R | | |

**ELEVATION SURVEY REQUEST (CONTINUED)**
FOR
557' - 0" CONT. COMP. GIRDER BRIDGE

40' - 0" ROADWAY — 0° SKEW
OVER BIG SIOUX RIVER — SEC. 26-T89N-R48W
STR. NO. 64-164-405 — IM-PH 0291(122)0

UNION COUNTY
S. D. DEPT. OF TRANSPORTATION
OCTOBER 2015



| DESIGNED BY | CK. DES. BY | DRAFTED BY | |
|---|---|---|---|
| KSK | BD | KR | Kevin N. Goeden |
| UNION02PT | 02PTRA28 | | BRIDGE ENGINEER |

| STATE OF | PROJECT | SHEET NO. | TOTAL SHEETS |
|---|---|---|---|
| S.D. | IM-PH 029(112)10 | 63 | 284 |

Revised 07/08/16

B.M. Elev. 1113.18
Brass Disk Southwest (Rt.) Wingwall
Northbound Lane I-29 Bridge over Big Sioux River

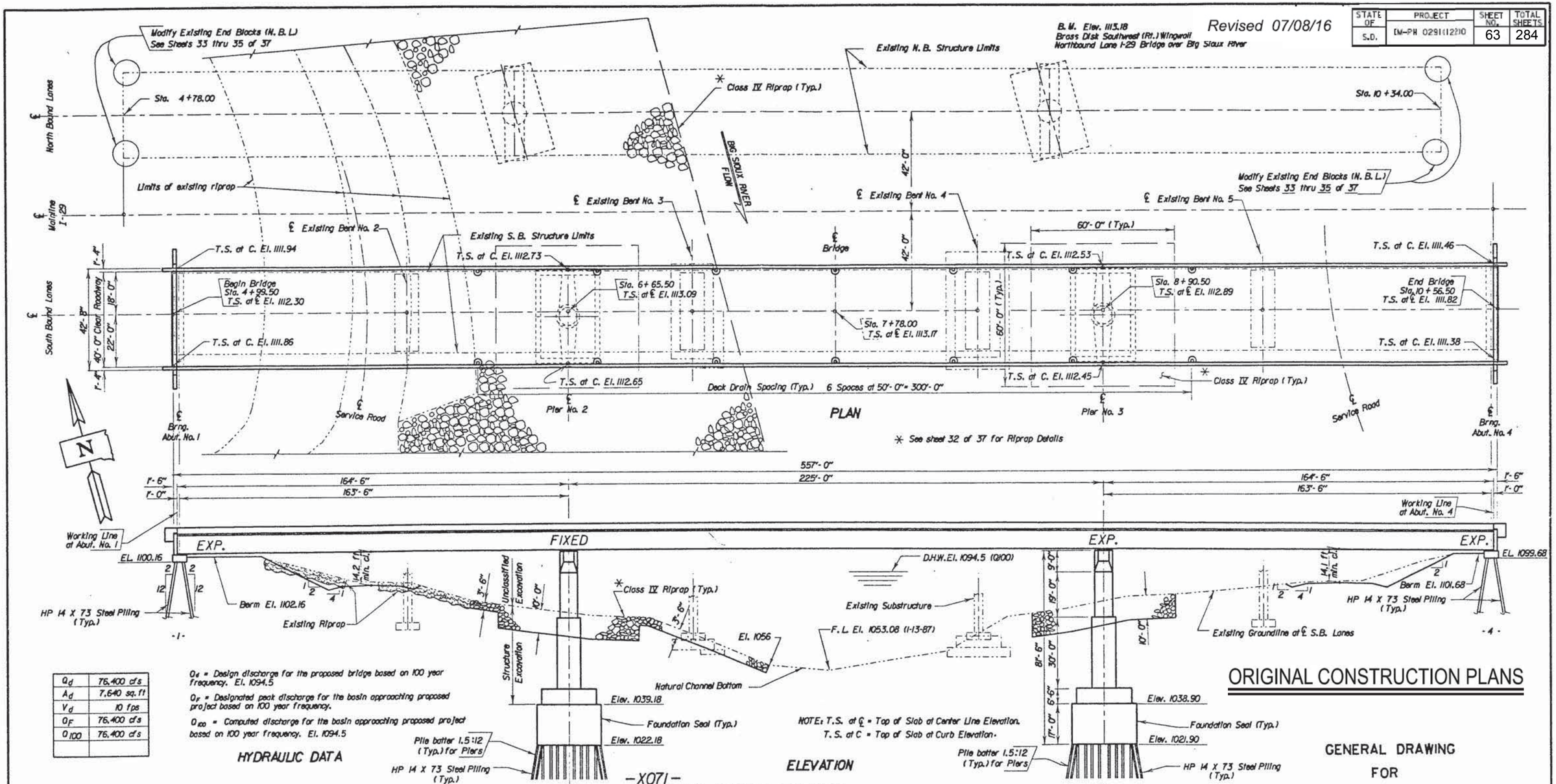


NOTE: T.S. at ℄ = Top of Slab at Center Line Elevation.
T.S. at C = Top of Slab at Curb Elevation.

ELEVATION

| | |
|---|---|
| $Q_d$ | 76,400 cfs |
| $A_d$ | 7,640 sq. ft |
| $V_d$ | 10 fps |
| $Q_F$ | 76,400 cfs |
| $Q_{100}$ | 76,400 cfs |

$Q_d$ = Design discharge for the proposed bridge based on 100 year frequency. El. 1094.5

$Q_F$ = Designated peak discharge for the basin approaching proposed project based on 100 year frequency.

$Q_{100}$ = Computed discharge for the basin approaching proposed project based on 100 year frequency. El. 1094.5

HYDRAULIC DATA

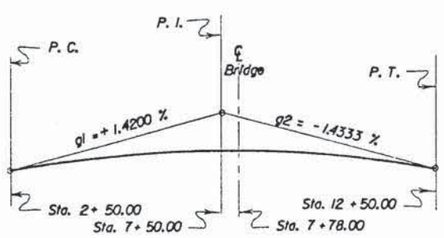


V.C. DATA
P.I. Sta. 7+50.00
El. = 1116.75 Finished
V.C. = 1000'

VERTICAL CURVE DATA

## -X071- INDEX OF BRIDGE SHEETS


Sheet No. 1 General Drawing
Sheet No. 2 Estimate of Structure Quantities and Notes
Sheet No. 3 Notes (Cont.)
Sheet No. 4 Notes (Cont.)
Sheet No. 5 Notes (Cont.)
Sheet No. 6 Subsurface Investigation and Piling Layout
Sheet No. 7 Details of Abutment No. 1
Sheet No. 8 Details of Abutment No. 4
Sheet No. 9 End Block Details
Sheet No. 10 Details of Sill Tie Backs
Sheet No. 11 Details of Sill Tie Backs
Sheet No. 12 Pier Details
Sheet No. 13 Pier Details
Sheet No. 14 Slab Details
Sheet No. 15 Barrier Curb and Drain Details
Sheet No. 16 Diaphragm and Lateral Bracing Details
Sheet No. 17 Diaphragm and Lateral Bracing Details
Sheet No. 18 Girder Layout and Details
Sheet No. 19 Framing Diagram and Erection Details
Sheet No. 20 Slab Form Elevations
Sheet No. 21 Details of Bolted Field Splice
Sheet No. 22 Bearing Details
Sheet No. 23 Bumper Details
Sheet No. 24 Details of Expansion Device at Abut. No. 1
Sheet No. 25 Details of Expansion Device at Abut. No. 4
Sheet No. 26 Details of Expansion Device at Abut. No. 4
Sheet No. 27 Details of Barrier Expansion Device
Sheet No. 28 Details of Barrier Expansion Device
Sheet No. 29 Abutment Joint Drain Details
Sheet No. 30 Details of Bridge End Backfill
Sheet No. 31 Details of Approach Slab Adjacent to Bridge
Sheet No. 32 Riprap Details
Sheet No. 33 Limits of Concrete Breakout for End Block Modification (N.B.L.)
Sheet No. 34 End Block Details (N.B.L.)
Sheet No. 35 End Block Details (N.B.L.)
Sheet No. 36 Details of Standard Plate No. 302 and No. 305
Sheet No. 37 5-Bolt Insert Assembly and Standard Plate No. 308


PLANS BY: OFFICE OF BRIDGE DESIGN, SOUTH DAKOTA DEPARTMENT OF TRANSPORTATION

ORIGINAL CONSTRUCTION PLANS

GENERAL DRAWING
FOR
557'-0" CONT. COMP. GIRDER BRIDGE

40'-0" ROADWAY — 0° SKEW
OVER BIG SIOUX RIVER — SEC. 26-T89N-R48W
STA. 4+99.50 TO 10+56.50 — IR 29 - (54)10
STR. NO. 64-164-405 — HS 20-44 (& ALT.)
PCEMS NO. 1183
UNION CO. S.D. AND WOODBURY CO. IA.
S.D. DEPT. OF TRANSPORTATION

-X071- OCT 1988 29 OF 38

| DESIGNED BY | DRAWN BY | CHECKED BY | APPROVED |
|---|---|---|---|
| S.J./K.G. | L.M. | S.J./K.G. | BRIDGE ENGINEER |

| STATE OF | PROJECT | SHEET NO. | TOTAL SHEETS |
|---|---|---|---|
| S.D. | BM-PH 029(112)210 | 64 | 284 |

Revised 07/08/16

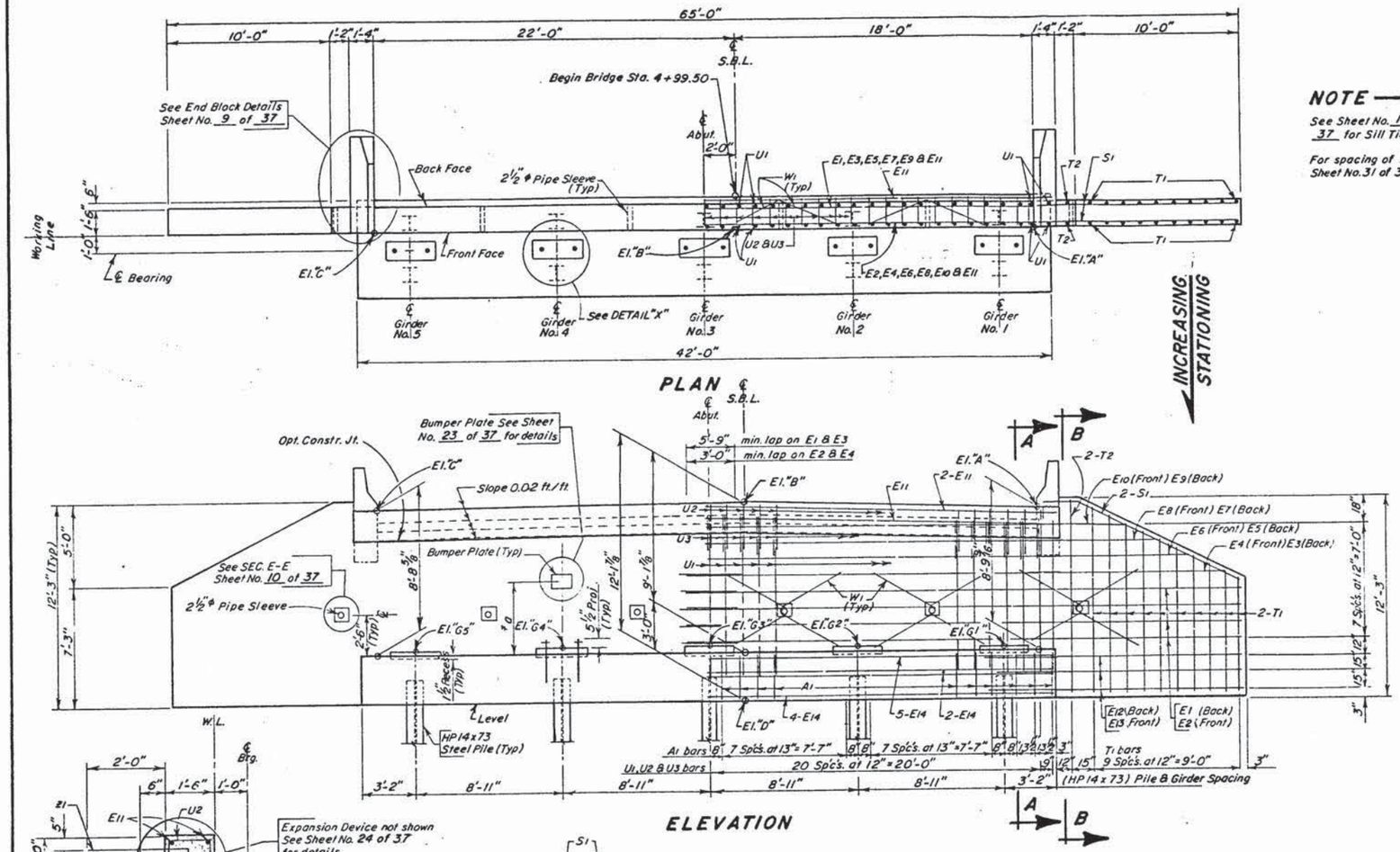


## NOTE —

See Sheet No. 10 and 11 of 37 for Sill Tieback Details.

For spacing of Z1 bars see Sheet No. 31 of 37.

## REINFORCING SCHEDULE
(For One Abutment)

| MK | No. | Size | Length | Type |
|---|---|---|---|---|
| A1 | 38 | 5 | 17'-6" | T1 |
| △B29 | 10 | 5 | 2'-4" | Str. |
| △B30 | 10 | 6 | 4'-4" | Str. |
| B31 | 4 | 6 | 2'-10" | Str. |
| △C20 | 10 | 6 | 11'-2" | T2A |
| △C21 | 10 | 5 | 7'-0" | T1 |
| D7 | 16 | 5 | 5'-9 | 17A |
| △D8 | 10 | 5 | 4'-11" | Str. |
| △D9 | 10 | 5 | 5'-0" | 19B |
| △D10 | 2 | 5 | 5'-0" | 19B |
| E1 | 8 | 9 | 35'-3" | Str. |
| E2 | 8 | 6 | 34'-0" | Str. |
| E3 | 2 | 9 | 34'-0" | Str. |
| E4 | 2 | 6 | 32'-8" | Str. |
| E5 | 1 | 9 | 58'-3" | Str. |
| E6 | 1 | 6 | 58'-3" | Str. |
| E7 | 1 | 9 | 54'-3" | Str. |
| E8 | 1 | 6 | 54'-3" | Str. |
| E9 | 1 | 9 | 50'-3" | Str. |
| E10 | 1 | 6 | 50'-3" | Str. |
| △E11 | 3 | 5 | 42'-0" | Str. |
| E12 | 6 | 9 | 14'-9" | Str. |
| E13 | 6 | 6 | 13'-0" | Str. |
| E14 | 13 | 5 | 41'-9" | Str. |
| △S1 | 4 | 6 | 14'-3" | 19A |
| ΦT1 | 20 | 5 | 18'-6" | Str. |
| T2 | 4 | 5 | 12'-0" | Str. |
| U1 | 43 | 9 | 19'-8" | S10 |
| △U2 | 41 | 5 | 6'-2" | S10 |
| △U3 | 41 | 4 | 4'-3" | 16A |
| W1 | 12 | 8 | 8'-7" | 13A |
| △Z1 | 53 | 7 | 4'-0" | 17A |

Bending Details

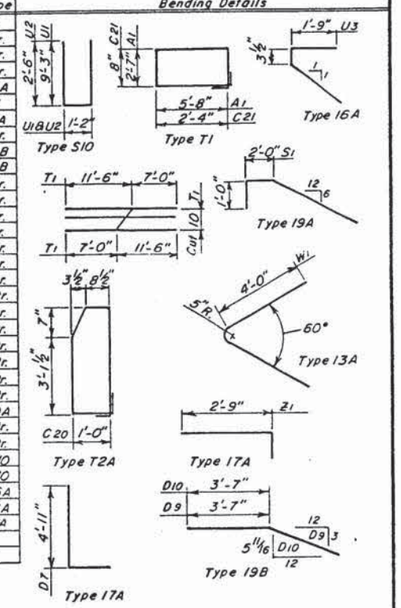


Φ See Cutting Diagram.
△ Bars to be Epoxy Coated.
All dimensions are out to out of bars.

## BUMPER PLATE MOUNTING HEIGHT

| Location | | "G1" | "G2" | "G3" | "G4" | "G5" |
|---|---|---|---|---|---|---|
| *a | Abut. No. 1 | 4'-4 1/16" | 4'-6 3/16" | 4'-7 3/8" | 4'-5 1/4" | 4'-3 1/8" |

* Distance above top of seat at Working Line of Abutment.

## ESTIMATED QUANTITIES

| ITEM | UNIT | QUANTITY Abut. No. 1 |
|---|---|---|
| * Class A45 Concrete, Bridge | Cu. Yd. | 64.5 |
| Reinforcement for Concrete Masonry | Lb. | 7,871 |
| Epoxy Coated Paint for Concrete Masonry | Lb. | 1473 |
| Structure Excavation, Bridge | Cu. Yd. | 18.8 |
| Furnish Steel Test Pile (HP 14 x 73) | Lin. Ft. | 1 at 152' = 152' |
| Drive Steel Test Pile (HP 14 x 73) | Lin. Ft. | 1 at 152' = 152' |
| Furnish Steel Piles (HP 14 x 73) | Lin. Ft. | 9 at 147' = 1323' |
| Drive Steel Piles (HP 14 x 73) | Lin. Ft. | 9 at 147' = 1323' |
| 1/4" HP T10 Reinforcement | Each | 10 |

* Includes 0.3 cubic yard for Grout Pads.

## TABLE OF ELEVATIONS

| Abut. No. | El. "A" | El. "B" | El. "C" | El. "D" | *a El. "G1" | *a El. "G2" | *a El. "G3" | *a El. "G4" | *a El. "G5" |
|---|---|---|---|---|---|---|---|---|---|
| 1 | 1111.96 | 1112.32 | 1111.88 | 1100.16 | 1103.36 | 1103.54 | 1103.64 | 1103.46 | 1103.28 |
| | | | | | | | | | |

* Top of Grout Pad must be level and smooth

ORIGINAL CONSTRUCTION PLANS

# DETAILS OF ABUTMENT NO. 1
FOR
# 557'-0" CONT. COMP. GIRDER BRIDGE

40'-0" ROADWAY — 0° SKEW
OVER BIG SIOUX RIVER — SEC. 26-T89N-R48W
STA. 4+99.50 TO 10+56.50 — IR 29-1(54)0
STR. NO. 64-164-405 — HS 20-44 (8 ALT.)

UNION CO. S. D. AND WOODBURY CO. IA.
S. D. DEPT. OF TRANSPORTATION
DEC. 1988

30 OF 38

| DESIGNED BY | DRAWN BY | CHECKED BY | APPROVED |
|---|---|---|---|
| S.J. / K.G. | f.a.k. | S.J. / K.G. | BRIDGE ENGINEER |

Revised 07/08/16

| STATE OF | PROJECT | SHEET NO. | TOTAL SHEETS |
|---|---|---|---|
| S.D. | BM-PH 0291(12)210 | 65 | 284 |

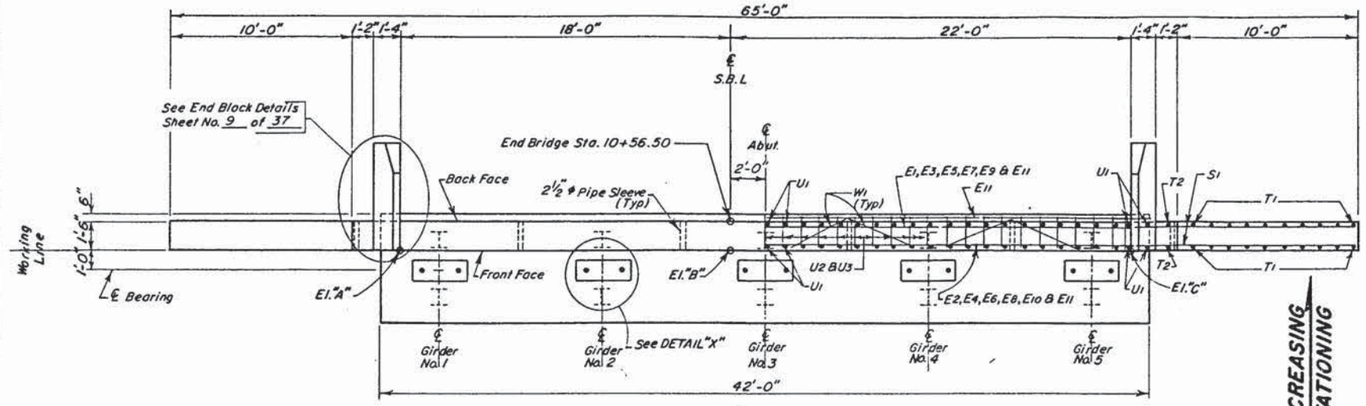


PLAN

INCREASING STATIONING

**NOTE —**

See Sheet No. 10 and 11 of 37 for Sill Tieback Details.

For spacing of Z1 bars see Sheet No. 31 of 37.

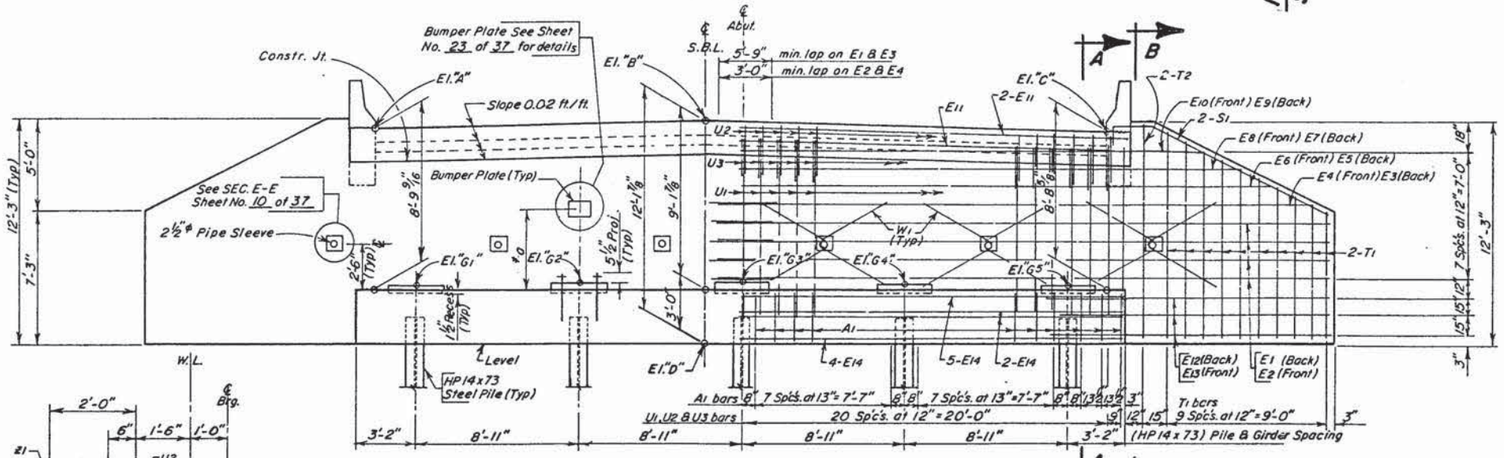


ELEVATION

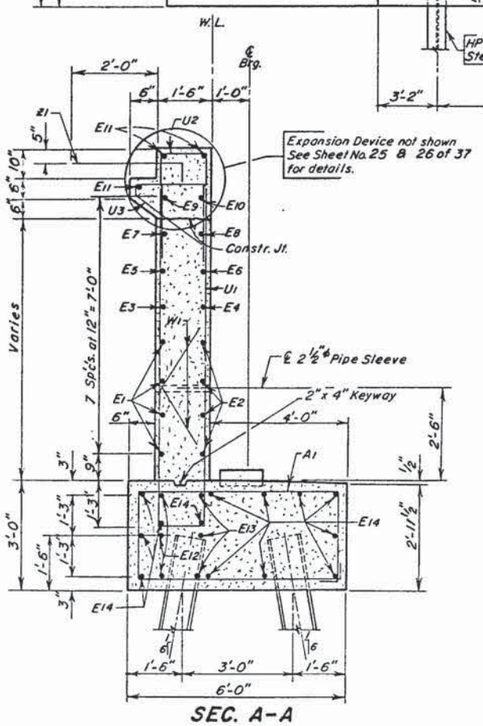


SEC. A-A

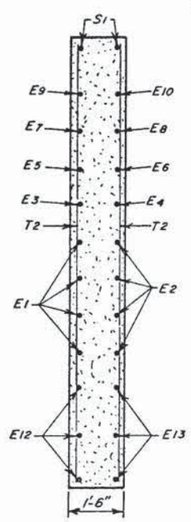


SEC. B-B

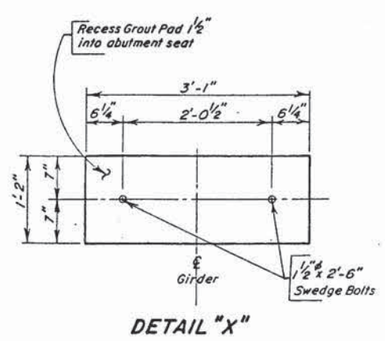


DETAIL "X"

## REINFORCING SCHEDULE
(For One Abutment)

| MK | No. | Size | Length | Type |
|---|---|---|---|---|
| A1 | 38 | 5 | 17'-6" | T1 |
| △B29 | 10 | 5 | 2'-4" | Str. |
| △B30 | 10 | 6 | 4'-4" | Str. |
| B31 | 4 | 6 | 2'-10" | Str. |
| △C20 | 10 | 6 | 11'-2" | T2A |
| △C21 | 10 | 5 | 7'-0" | T1 |
| D7 | 16 | 5 | 5'-9 | 17A |
| △D8 | 10 | 5 | 4'-11" | Str. |
| △D9 | 10 | 5 | 5'-0" | 19B |
| △D10 | 2 | 5 | 5'-0" | 19B |
| E1 | 8 | 9 | 35'-3" | Str. |
| E2 | 8 | 6 | 34'-0" | Str. |
| E3 | 2 | 9 | 34'-0" | Str. |
| E4 | 2 | 6 | 32'-8" | Str. |
| E5 | 1 | 9 | 58'-3" | Str. |
| E6 | 1 | 6 | 58'-3" | Str. |
| E7 | 1 | 9 | 54'-3" | Str. |
| E8 | 1 | 6 | 54'-3" | Str. |
| E9 | 1 | 9 | 50'-3" | Str. |
| E10 | 1 | 6 | 50'-3" | Str. |
| △E11 | 3 | 5 | 42'-0" | Str. |
| E12 | 6 | 9 | 14'-9" | Str. |
| E13 | 6 | 6 | 13'-0" | Str. |
| E14 | 13 | 5 | 4'-9" | Str. |
| △S1 | 4 | 6 | 14'-3" | 19A |
| ϕT1 | 20 | 5 | 18'-6" | Str. |
| T2 | 4 | 5 | 12'-0" | Str. |
| U1 | 43 | 9 | 19'-8" | S10 |
| △U2 | 41 | 5 | 6'-2" | S10 |
| △U3 | 41 | 4 | 4'-3" | 16A |
| W1 | 12 | 8 | 8'-7" | 13A |
| △Z1 | 53 | 7 | 4'-0" | 17A |

Bending Details

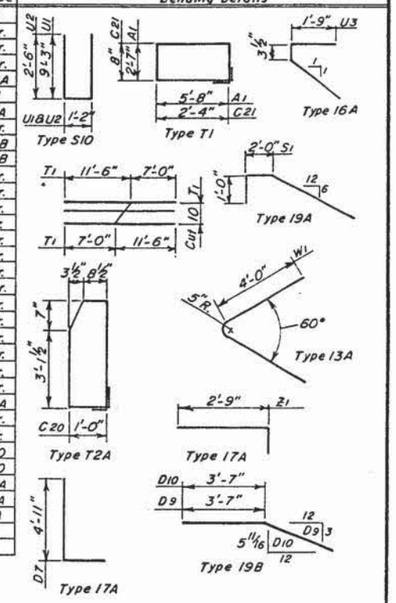


ϕ See Cutting Diagram.
△ Bars to be Epoxy Coated.
All dimensions are out to out of bars.

## BUMPER PLATE MOUNTING HEIGHT

| Location | | "G1" | "G2" | "G3" | "G4" | "G5" |
|---|---|---|---|---|---|---|
| *a | Abut. No. 4 | 4'-4 1/16" | 4'-6 3/16" | 4'-7 3/8" | 4'-5¼" | 4'-3⅛" |

* Distance above top of seat at Working Line of Abutment.

## ESTIMATED QUANTITIES

| ITEM | UNIT | QUANTITY Abut. No. 4 |
|---|---|---|
| * Class A45 Concrete, Bridge | Cu. Yd. | 64.5 |
| Reinforcement for Concrete Masonry | Lb. | 7,871 |
| Epoxy Coated Reinf. for Concrete Masonry | Lb. | 1,475 |
| Structure Excavation, Bridge | Cu. Yd. | 18.8 |
| Furnish Steel Test Pile (HP14x73) | Lin. Ft. | 1 at 151' = 151' |
| Drive Steel Test Pile (HP14x73) | Lin. Ft. | 1 at 151' = 151' |
| Furnish Steel Piles (HP14x73) | Lin. Ft. | 8 at 163' = 1,304' |
| Drive Steel Piles (HP14x73) | Lin. Ft. | 9 at 145' = 1,305' |
| 1/4" HP Tip Reinforcement | Each | 10 |

* Includes 0.3 cubic yard for Grout Pads.

## TABLE OF ELEVATIONS

| Abut. No. | El."A" | El."B" | El."C" | El."D" | *a El."G1" | *a El."G2" | *a El."G3" | *a El."G4" | *a El."G5" |
|---|---|---|---|---|---|---|---|---|---|
| 4 | 1111.48 | 1111.84 | 1111.40 | 1099.68 | 1102.88 | 1103.06 | 1103.16 | 1102.98 | 1102.80 |
| | | | | | | | | | |

*a Top of Grout Pad must be level and smooth

ORIGINAL CONSTRUCTION PLANS

**DETAILS OF ABUTMENT NO. 4**

**FOR**

**557'-0" CONT. COMP. GIRDER BRIDGE**

40'-0" ROADWAY — 0° SKEW
OVER BIG SIOUX RIVER — SEC. 26-T89N-R48W
STA. 4+99.50 TO 10+56.50 — IR 29-1(54)0
STR. NO. 64-164-405 — HS 20-44 (& ALT.)

UNION CO. S. D. AND WOODBURY CO. IA.
S. D. DEPT. OF TRANSPORTATION
DEC. 1988



| DESIGNED BY | DRAWN BY | CHECKED BY | APPROVED |
|---|---|---|---|
| S.J. / K.G. | f.a.k. | S.J. / K.G. | BRIDGE ENGINEER |

Revised 07/08/16

| STATE OF | PROJECT | SHEET NO. | TOTAL SHEETS |
|---|---|---|---|
| S.D. | IM-PH 029(112)10 | 66 | 284 |

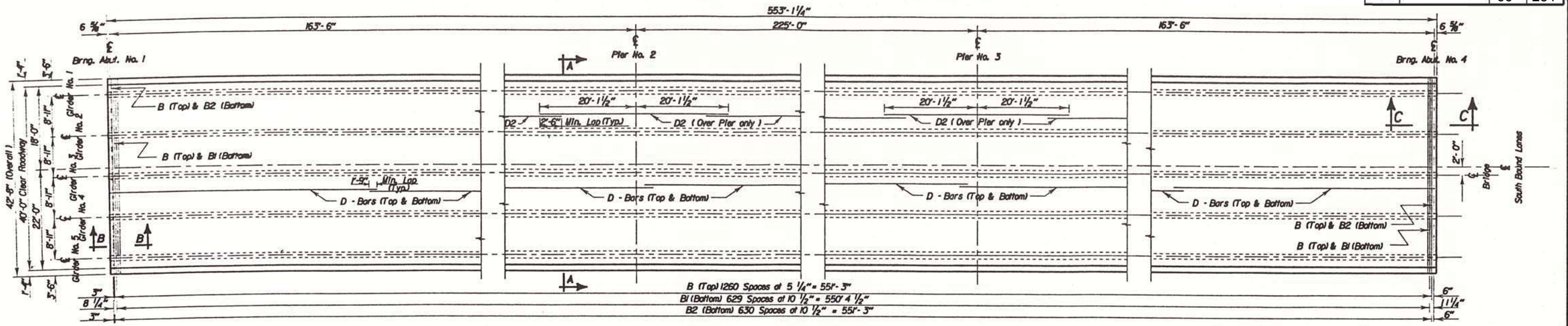


PLAN

℄ Dimensions are at ℄ bearing; at other points along the girders this dimension shall be computed as shown on the Slab Form Elevations Sheet.

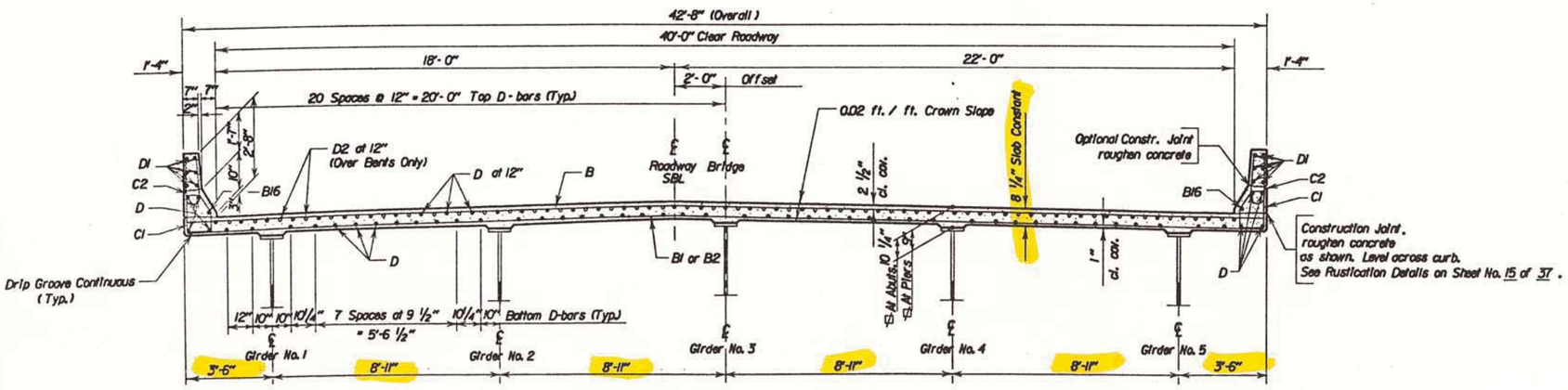


SEC. A - A

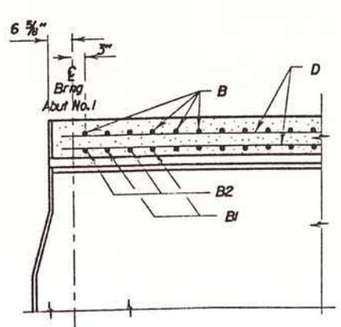


SEC. B - B

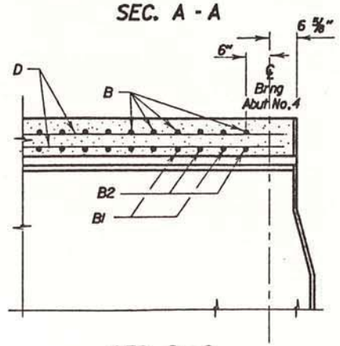


SEC. C - C

## REINFORCING SCHEDULE

| Mk. | No. | Size | Length | Type | Bending Details |
|---|---|---|---|---|---|
| B | 1261 | 5 | 42'-4" | Str. | |
| B1 | 630 | 5 | 36'-10" | Str. | |
| B2 | 631 | 4 | 42'-4" | Str. | |
| B15 | 12 | 5 | 11'-3" | Str. | |
| B16 | 20 | 4 | 56'-9" | Str. | |
| B17 | 12 | 8 | 10'-0" | 19C | |
| C1 | 1070 | 5 | 5'-10" | T2A | |
| C2 | 1070 | 5 | 5'-1" | S11 | |
| C3 | 4 | 5 | 6'-4" | T1 | |
| C4 | 4 | 5 | 6'-5" | T1 | |
| C5 | 4 | 5 | 6'-7" | T1 | |
| C6 | 4 | 5 | 6'-8" | T1 | |
| C7 | 4 | 5 | 6'-9" | T1 | |
| C8 | 4 | 5 | 6'-11" | T1 | |
| C9 | 4 | 5 | 7'-0" | T1 | |
| C10 | 12 | 5 | 5'-8" | T2A | |
| C11 | 12 | 5 | 6'-9" | T1 | |
| D | 930 | 5 | 57'-0" | Str. | |
| D1 | 120 | 5 | 55'-10" | Str. | |
| D2 | 240 | 6 | 40'-6" | Str. | |

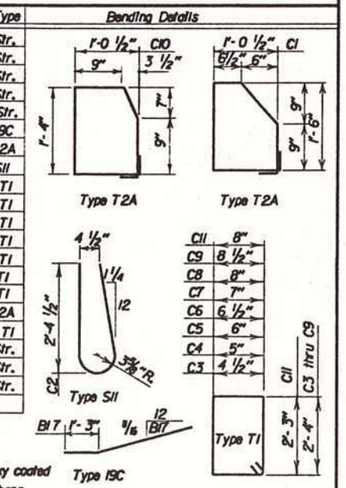


NOTES—
All reinforcing steel shall be epoxy coated
All dimensions are out to out of bars.

ORIGINAL CONSTRUCTION PLANS

## ESTIMATED QUANTITIES

| ITEM | UNIT | QUANTITY |
|---|---|---|
| Class A45 Concrete / Bridge Deck | Cu. Yd. | 711.5 |
| Epoxy Coated Reinforcing Steel | Lb. | 188,354 |
| Structural Steel | Lump Sum | Lump Sum |
| Deck Drains, Girder Bridge | Each | 14 |

For informational purposes only the estimated weight of the structural steel is 1,142,000 pounds.

NOTE: Barrier Curb Details Shown on Sheet No. 15 of 37.

SLAB DETAILS
FOR
557'- 0" CONT. COMP. GIRDER BRIDGE

40'- 0" ROADWAY — 0° SKEW
OVER BIG SIOUX RIVER — SEC. 26-T89N-R48W
STA. 4+99.50 TO 10+56.50 — IR 29 - 1(54)0
STR. NO. 64-164-405 — HS 20-44 (& ALT.)
UNION CO. S. D. AND WOODBURY CO. IA.
S. D. DEPT. OF TRANSPORTATION
DEC 1988



| DESIGNED BY | DRAWN BY | CHECKED BY | APPROVED |
|---|---|---|---|
| S. J. / K. G. | L. M. | S. J. / K. G. | BRIDGE ENGINEER |

Revised 07/08/16

| STATE OF | PROJECT | SHEET NO. | TOTAL SHEETS |
|---|---|---|---|
| S.D. | IM-PH 029(112)210 | 67 | 284 |

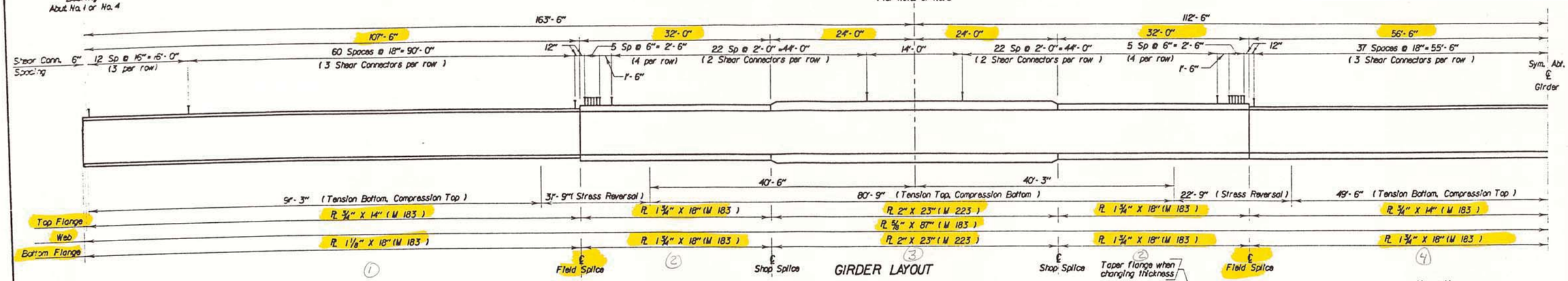


GIRDER LAYOUT

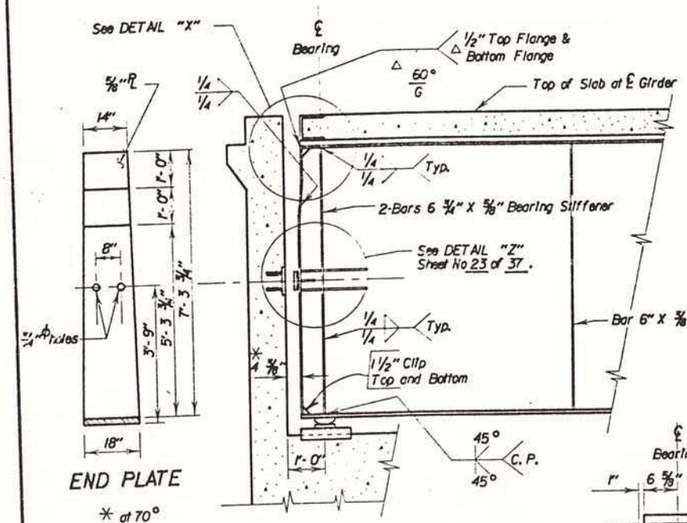


END PLATE

* at 70°

TYPICAL SECTION AT ABUTMENTS

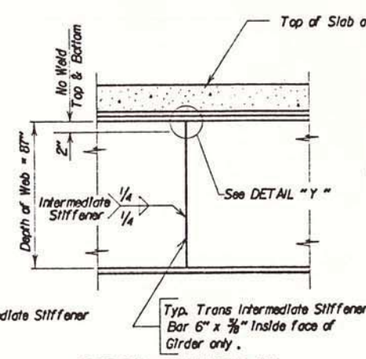


TYPICAL SECTION AT INTERMEDIATE STIFFENERS

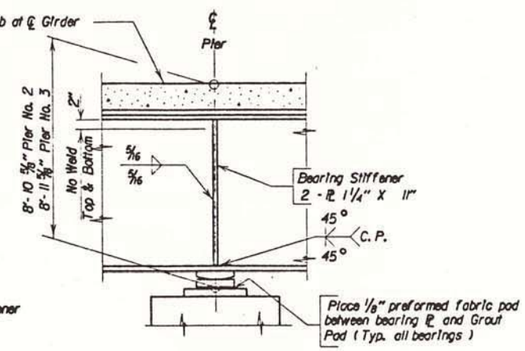


TYPICAL SECTION AT PIERS

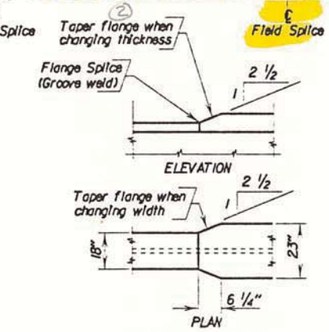


TYPICAL SECTION AT SHOP SPLICE

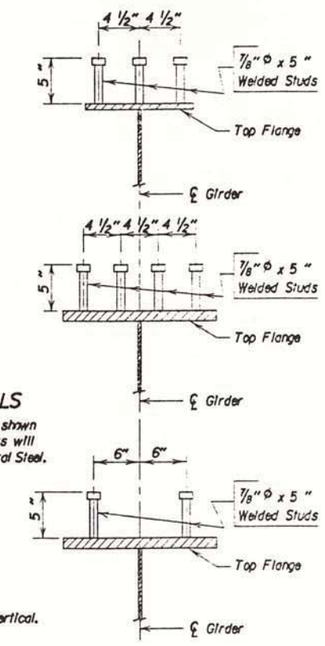


SHEAR CONNECTOR DETAILS

Welded Stud Shear Connectors are spaced as shown on Girder Layout. Payment for Shear Connectors will be included in the Lump Sum bid for Structural Steel.

943 Shear Connectors per Girder.

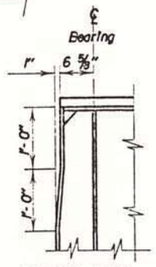


DETAIL "X"

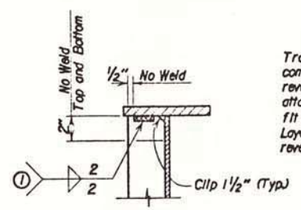


DETAIL "Y"

Transverse Intermediate Stiffeners shall be welded to the compression flange as shown in Detail "Y". In zones of stress reversal the Transverse Intermediate Stiffener shall not be attached to either flange. Ends of Stiffeners not welded shall fit tight enough to exclude water after being painted. See Girder Layout above for location of tension flange and zones of stress reversal.

(1) Weld Size to be as indicated in the table of Flange to Web Welds.

NOTES:

1. See Sheet No. 16 & 17 of 37 for Diaphragm & Diaphragm Stiffener Details.
2. See Sheet No. 19 of 37 for spacing of Diaphragms and Stiffeners.
3. All dimensions shown are horizontal or vertical.
4. All Stiffeners and Girder Ends shall be made normal to flanges, except bearing stiffeners at abutments and bents and abutment girder ends shall be vertical.
5. Stiffeners to have tight fit top and bottom.
6. 5/8" thick material (M183) may be substituted for the intermediate and intermediate diaphragm stiffeners at no additional cost to the state.

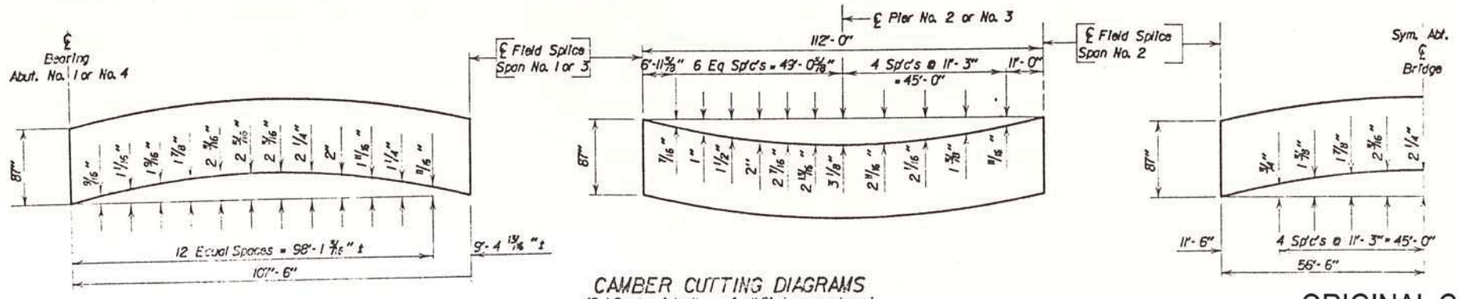


CAMBER CUTTING DIAGRAMS

(Cut Camber into Webs of all Girders as shown)

| FLANGE TO WEB WELDS | |
|---|---|
| Flange Thickness | Fillet Welds |
| 3/4" | 1/4" |
| 1 1/8" | 5/16" |
| 1 3/4" | 3/8" |
| 2" | 7/16" |

GIRDER LAYOUT & DETAILS

FOR

557'- 0" CONT. COMP. GIRDER BRIDGE

40'- 0" ROADWAY — 0° SKEW

OVER BIG SIOUX RIVER — SEC. 26-T89N-R48W

STA. 4+99.50 TO 10+56.50 — IR 29 - 1(54)0

STR. NO. 64-164-405 — HS 20-44 (& ALT.)

UNION CO. S.D. AND WOODBURY CO. IA.

S.D. DEPT. OF TRANSPORTATION

DEC 1988



| DESIGNED BY | DRAWN BY | CHECKED BY | APPROVED |
|---|---|---|---|
| S.J./K.G. | L.M. | S.J./K.G. | BRIDGE ENGINEER |

ORIGINAL CONSTRUCTION PLANS

Revised 07/08/16

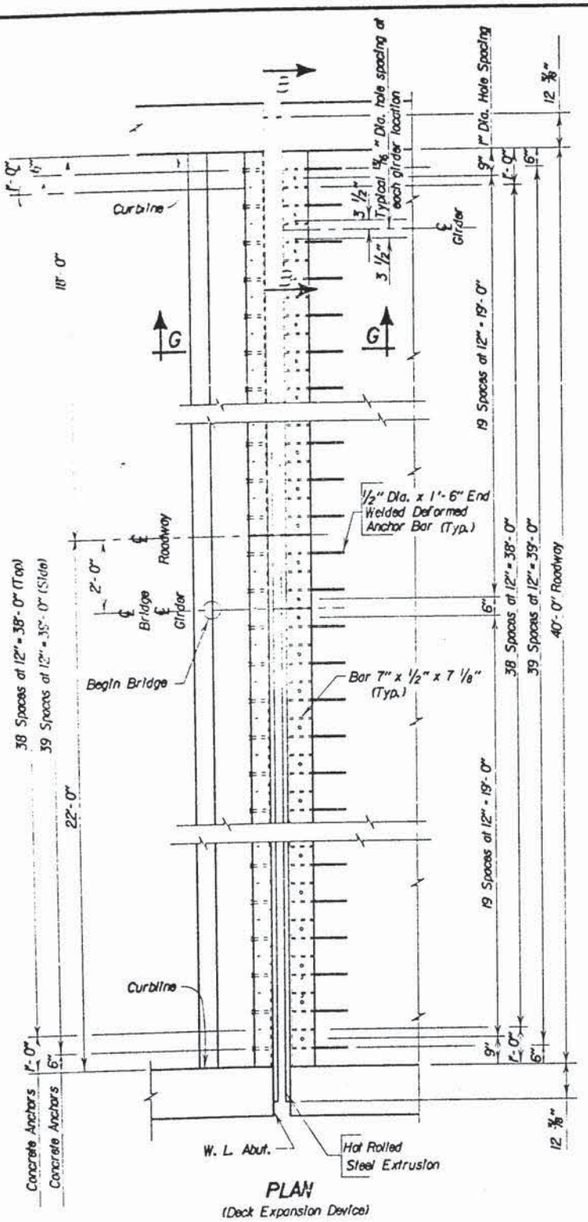


PLAN
(Deck Expansion Device)

| Temp. | Dimension "X" |
|---|---|
| 30° | 2 7/8" |
| 40° | 2 3/4" |
| 50° | 2 5/8" |
| 60° | 2 1/2" |
| 70° | 2 3/8" |
| 80° | 2 1/4" |
| 90° | 2 1/8" |

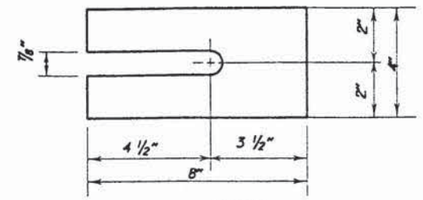


SHIMS

Provide at Abutment No. 1
10 - 1" thick
10 - 1/2" thick
10 - 1/4" thick
15 - 1/8" thick
30 - 1/16" thick

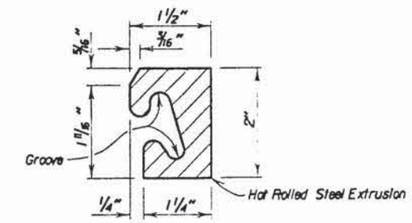


HOT ROLLED STEEL EXTRUSION
DETAIL "B"

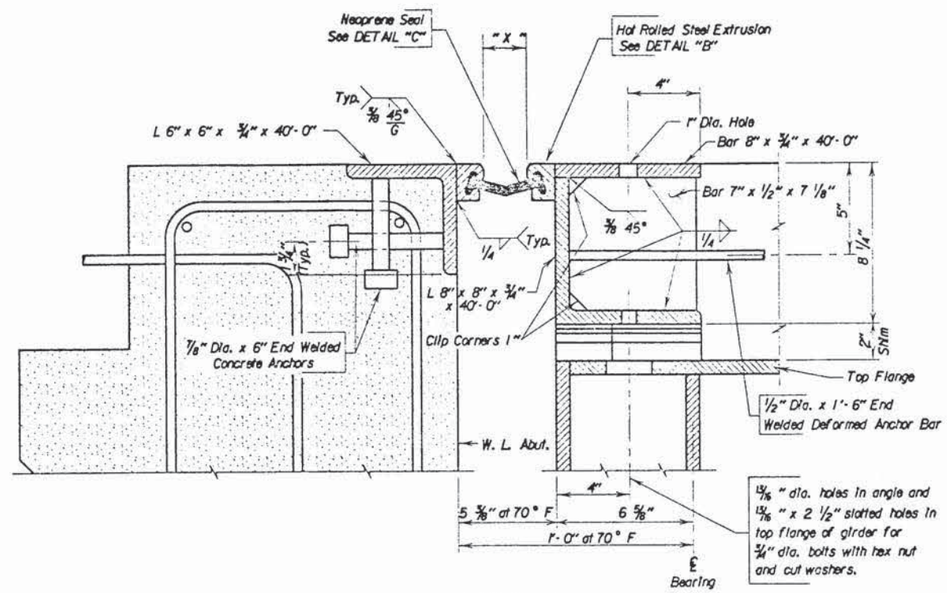


SEC. G - G

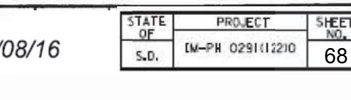


DETAIL "C"
PREFORMED NEOPRENE SEAL

NOTE:
Neoprene Seal shall have a 4" Movement Capacity

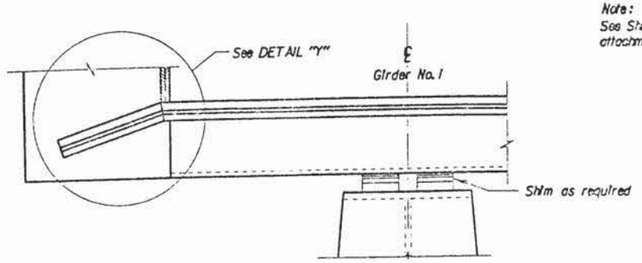


VIEW B - B
(Detail at Girder No. 1 Typ. at all girders)

Note:
See Sheet No. 27 of 37 for details extrusion attachment to barrier end plate.

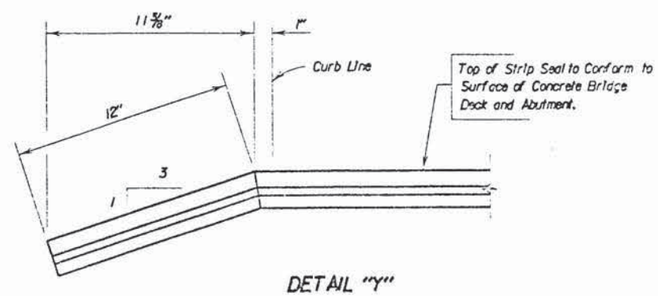


DETAIL "Y"

## ORIGINAL CONSTRUCTION PLANS

DETAILS OF EXPANSION DEVICE AT ABUTMENT NO. 1
FOR
557'- 0" CONT. COMP. GIRDER BRIDGE

40'- 0" ROADWAY — 0° SKEW
OVER BIG SIOUX RIVER — SEC. 26-T89N-R48W
STA. 4+99.50 TO 10+56.50 — IR29-1(54)0
STR. NO. 64-164-405 — HS 20-44 (2 ALT.)

UNION CO. S. D. AND WOODBURY CO. IA.
S. D. DEPT. OF TRANSPORTATION
DEC. 1988



| DESIGNED BY | DRAWN BY | CHECKED BY | APPROVED |
|---|---|---|---|
| S.J./K.G. | LAK | S.J./K.G. | BRIDGE ENGINEER |

| STATE OF | PROJECT | SHEET NO. | TOTAL SHEETS |
|---|---|---|---|
| S.D. | IM-PH 029(112)210 | 69 | 284 |

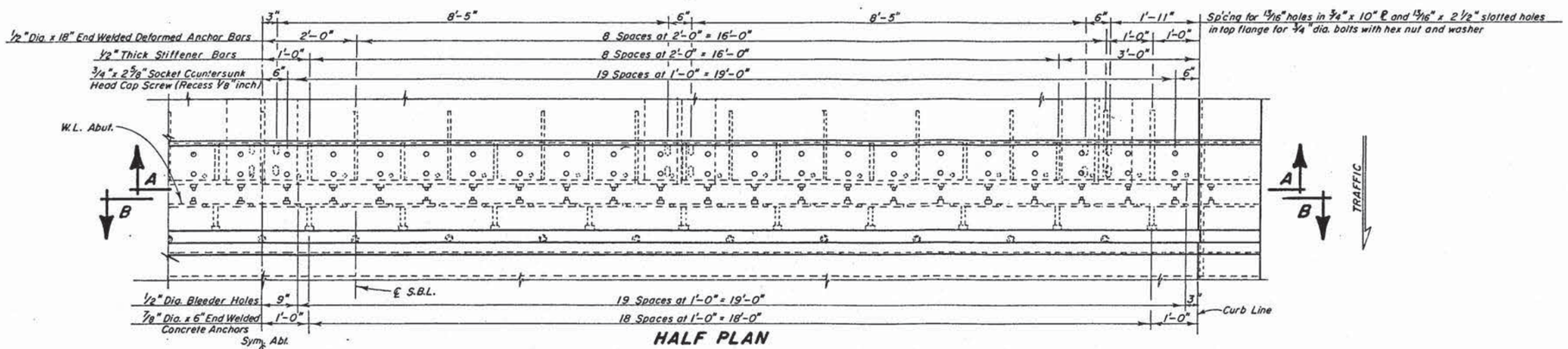


HALF PLAN

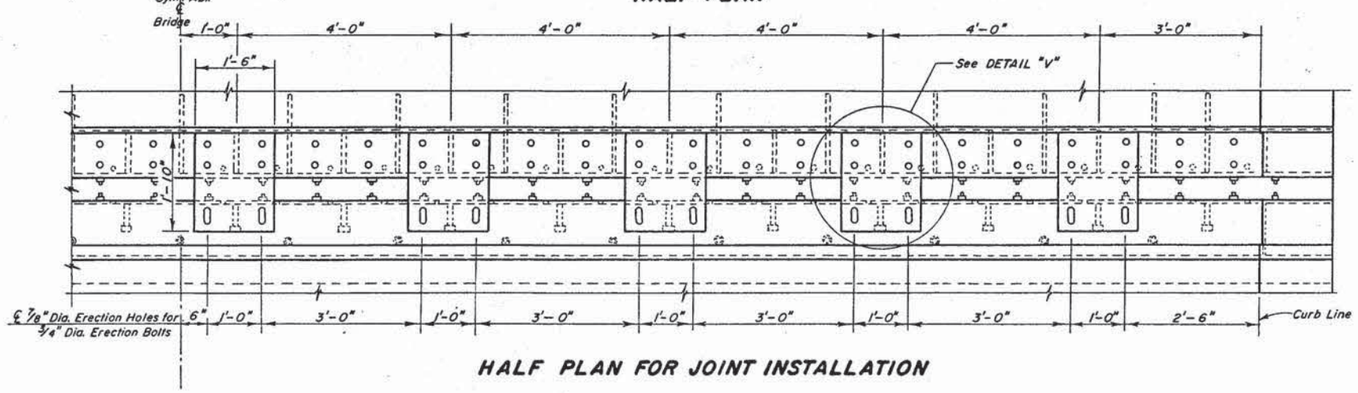


HALF PLAN FOR JOINT INSTALLATION

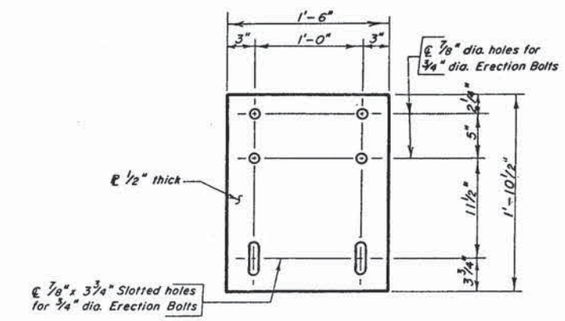


DETAIL "V"

(Temporary plate used for joint installation)

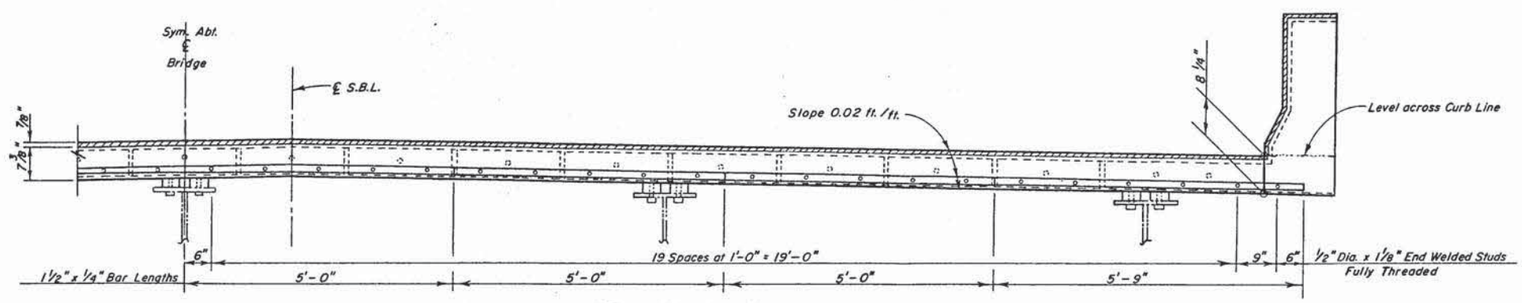


SECTION A - A

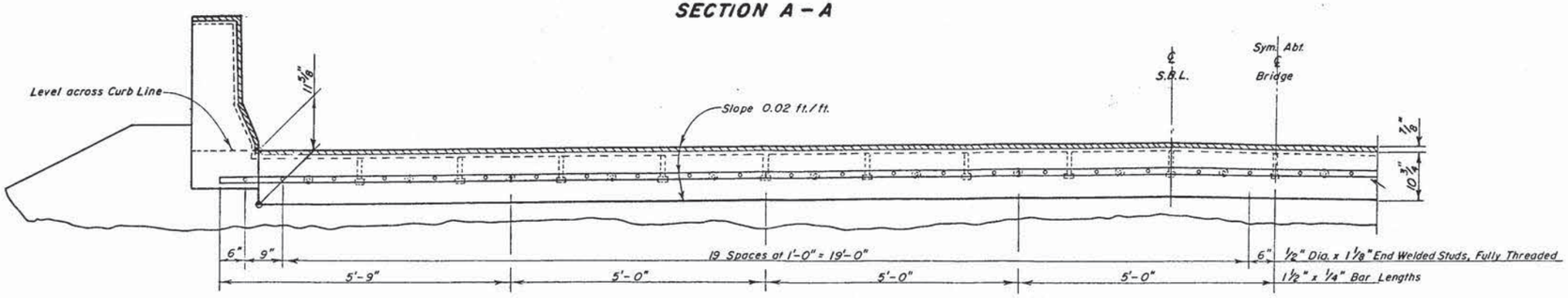


SECTION B - B

## ORIGINAL CONSTRUCTION PLANS

**DETAILS OF EXPANSION DEVICE AT ABUTMENT NO. 4**
**FOR**
**557'-0" CONT. COMP. GIRDER BRIDGE**

40'-0" ROADWAY — 0° SKEW
OVER BIG SIOUX RIVER — SEC. 26-T89N-R48W
STA. 4+99.50 TO 10+56.50 — IR 29-1(54)0
STR. NO. 64-164-405 — HS 20-44 (& ALT.)
UNION CO. S. D. AND WOODBURY CO. IA.

S. D. DEPT. OF TRANSPORTATION
JAN. 1989



| DESIGNED BY | DRAWN BY | CHECKED BY | APPRO |
|---|---|---|---|
| SJ/KG | LAK | SJ/KG | BRIDGE ENGINEER |

Revised 07/08/16

| STATE OF | PROJECT | SHEET NO. | TOTAL SHEETS |
|---|---|---|---|
| S.D. | EW-PH 0291(122)0 | 70 | 284 |

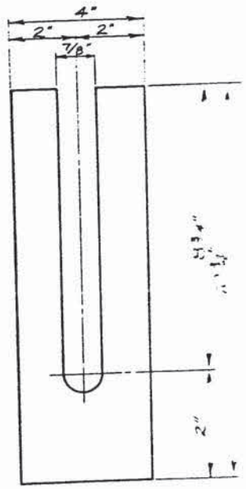


DETAIL "Y"

Provide:
10 - 1" Shims
10 - 1/2" Shims
10 - 1/4" Shims
15 - 1/8" Shims
30 - 1/16" Shims

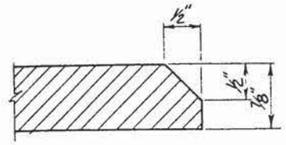


DETAIL "Z"

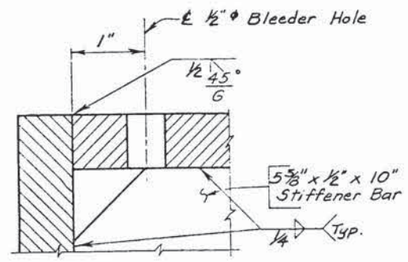


DETAIL "W"

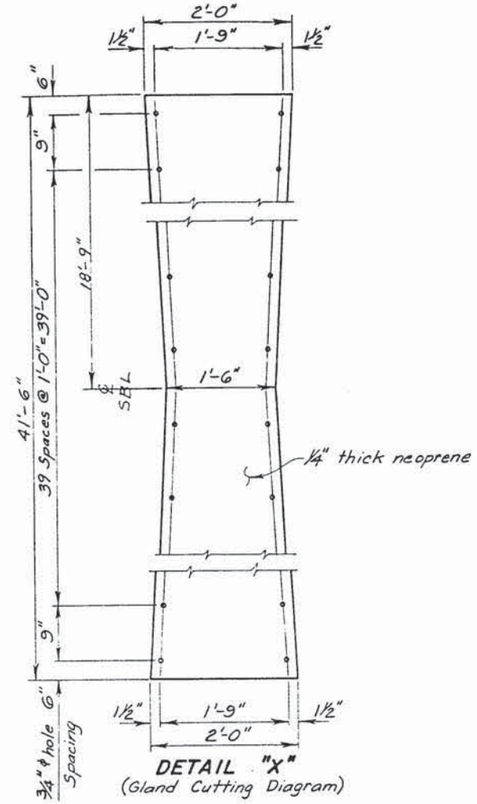


DETAIL "X"
(Gland Cutting Diagram)

| Temp. F° | Dimension ℄ |
|---|---|
| 30° | 4 1/4" |
| 40° | 3 15/16" |
| 50° | 3 5/8" |
| 60° | 3 5/16" |
| 70° | 3" |
| 80° | 2 11/16" |
| 90° | 2 7/16" |

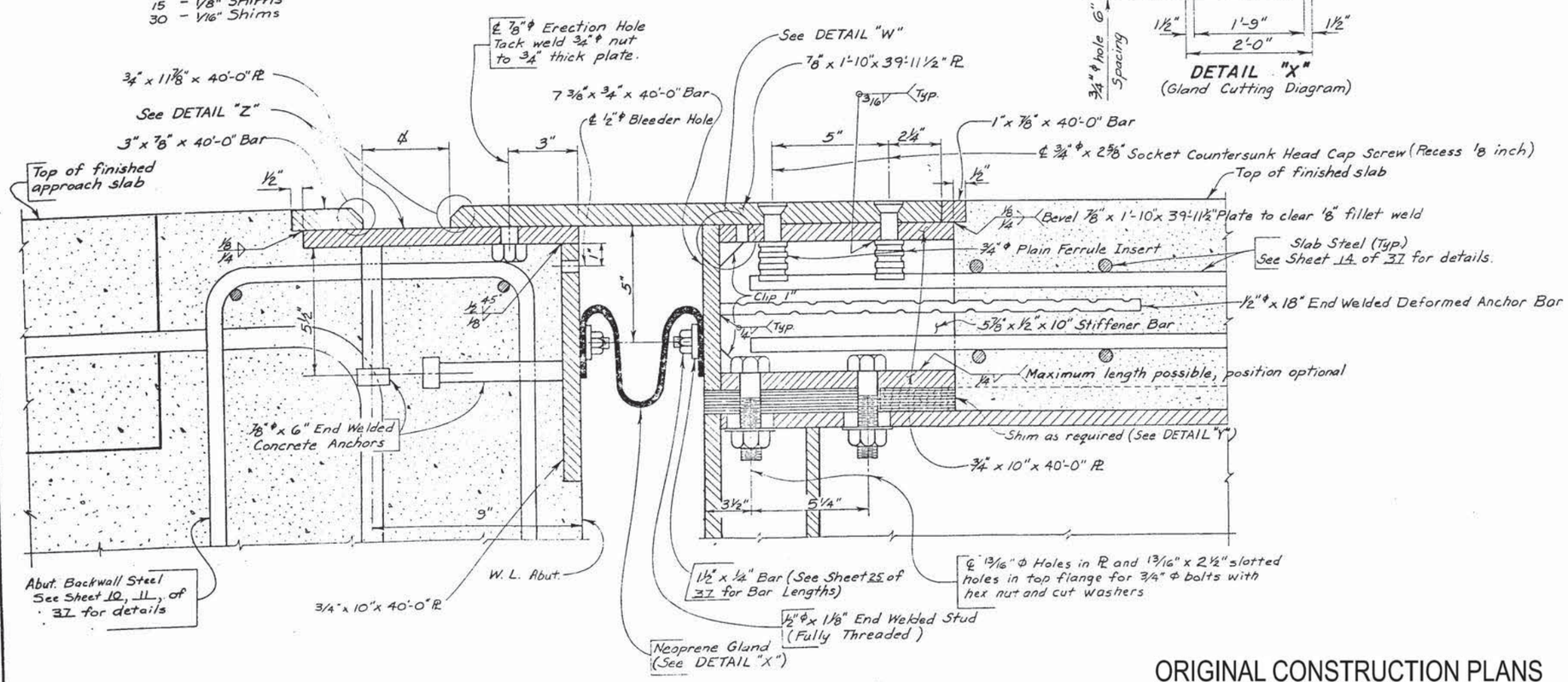


TYPICAL SECTION AT EXPANSION DEVICE

DETAILS OF EXPANSION DEVICE AT ABUTMENT NO. 4
FOR
557'-0" CONT. COMP. GIRDER BRIDGE

40'-0" ROADWAY
OVER BIG SIOUX RIVER
STR. NO. 64-164-405
STA. 4+99.50 TO 10+56.50

SEC. 26-T89N-R48W
0° SKEW
IR 29-1(54)0
HS 20-44
(& ALT.)

UNION CO. S.D. AND WOODBURY CO. IA.

S. D. DEPT. OF TRANSPORTATION
DEC. 1988



ORIGINAL CONSTRUCTION PLANS

| DESIGNED BY | DRAWN BY | CHECKED BY | APPROVED |
|---|---|---|---|
| KG/SJ | CD & LAK | KG/SJ | BRIDGE ENGINEER |

| STATE OF | PROJECT | SHEET NO. | TOTAL SHEETS |
|---|---|---|---|
| S.D. | IM-PH 0291(122)0 | 71 | 284 |

Revised 07/08/16

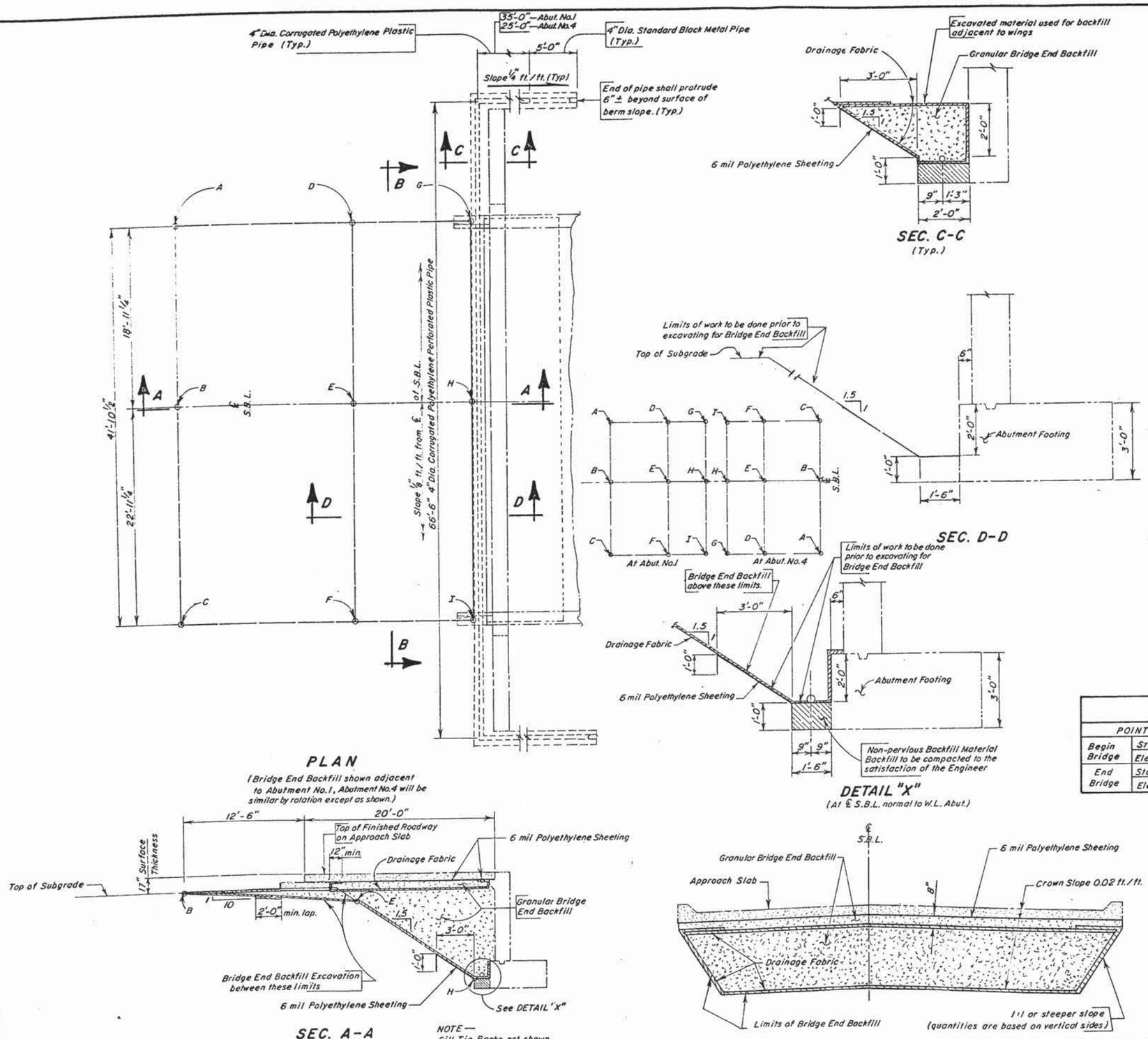


## NOTES REGARDING BRIDGE END BACKFILL —

1- For informational purposes only, the total length of 4" Dia. Corrugated Polyethylene Perforated Plastic Pipe or Tubing for Two Abutments is 133 feet.

2- For informational purposes only, the total length of 4" Dia. Corrugated Polyethylene Plastic Pipe or Tubing for Two Abutments is 120 feet.

3- For informational purposes only, the total estimated length of 4" Dia. Standard Black Steel Pipe for Two Abutments is 20 feet.

4- The total length of Bridge End Backfill Underdrain Pipe for Two Abutments is 273 feet, including 4" Dia. Corrugated Polyethylene Plastic Pipe or Tubing, Perforated or Non-perforated and 4" Dia. Standard Black Steel Pipe.

5- Bridge End Backfill Excavation will not be measured. Plans quantity payment will be full compensation for this item. The estimated quantity for Two Abutments is 54 cu.yds. This quantity is based on a vertical sided excavation full width of the approach slab

6- The total estimated theoretical volume of Granular Bridge End Backfill for Two Abutments is 474 cu.yds. This quantity is based on a vertical sided excavation full width of the approach slab (See SEC. B-B). The quantity has been adjusted by a "Shrinkage" factor of 1.3 to convert final compacted volume to loose volume.

7- Granular Bridge End Backfill shall be placed to, but not exceed, the full width of the approach slab as shown in SEC. B-B.

8- All costs involved in furnishing and placing drainage fabric and polyethylene sheeting shall be included in the Price Bid for Granular Bridge End Backfill.

9- Excavated material not used for backfill of abutments shall be used to build the spill cones around the ends of the wingwalls as directed by the Engineer.

10- The Drainage Fabric shall envelop the Granular Bridge End Backfill as shown on this sheet and shall meet the requirements of Section 831 of the Standard Specifications. All joints in the fabric shall be lapped a minimum of two feet. On slopes, the upper piece of fabric shall be lapped over the lower one (See SEC. A-A).

11- Polyethylene Sheeting shall be placed as detailed on this sheet and each layer shall be a minimum of 6 mils in thickness. Care shall be taken so as not to puncture the Polyethylene Sheeting during backfill operations.

12- For informational purposes only, the total quantity of Polyethylene Sheeting required is 2,511 sq. ft., not including laps. (For Two Abutments)

13- The total quantity of Drainage Fabric required is 742 square yards not including laps. (For Two Abutments)

## TABLE OF STATIONS AND ELEVATIONS

| POINT | | A | B | C | D | E | F | G | H | I |
|---|---|---|---|---|---|---|---|---|---|---|
| Begin Bridge | Station | 4+67.00 | 4+67.00 | 4+67.00 | 4+86.82 | 4+86.15 | 4+86.97 | 4+97.50 | 4+97.50 | 4+97.50 |
| | Elevation | 1110.26 | 1110.64 | 1110.18 | 1108.28 | 1108.72 | 1108.18 | 1101.16 | 1101.16 | 1101.16 |
| End Bridge | Station | 10+89.00 | 10+89.00 | 10+89.00 | 10+68.95 | 10+69.74 | 10+69.09 | 10+58.50 | 10+58.50 | 10+58.50 |
| | Elevation | 1109.65 | 1110.10 | 1109.73 | 1107.64 | 1108.17 | 1107.74 | 1100.68 | 1100.68 | 1100.68 |

DETAILS OF BRIDGE END BACKFILL

FOR

# 557'-0" CONT. COMP. GIRDER BRIDGE

40'-0" ROADWAY — 0° SKEW

OVER BIG SIOUX RIVER — SEC. 26-T89N-R48W

STA. 4+99.50 TO 10+56.50 — IR 29-1 (54) 0

STR. NO. 64-164-405 — HS 20-44 (& ALT.)

UNION CO. S. D. AND WOODBURY CO. IA.

S. D. DEPT. OF TRANSPORTATION

DEC. 1988



ORIGINAL CONSTRUCTION PLANS

| DESIGNED BY | DRAWN BY | CHECKED BY | APPROVED |
|---|---|---|---|
| S.J./K.G. | f.a.k. | S.J./K.G. | BRIDGE ENGINEER |

| STATE OF | PROJECT | SHEET NO. | TOTAL SHEETS |
|---|---|---|---|
| S.D. | IM-PH 029(112)10 | 72 | 284 |

Revised 07/08/16

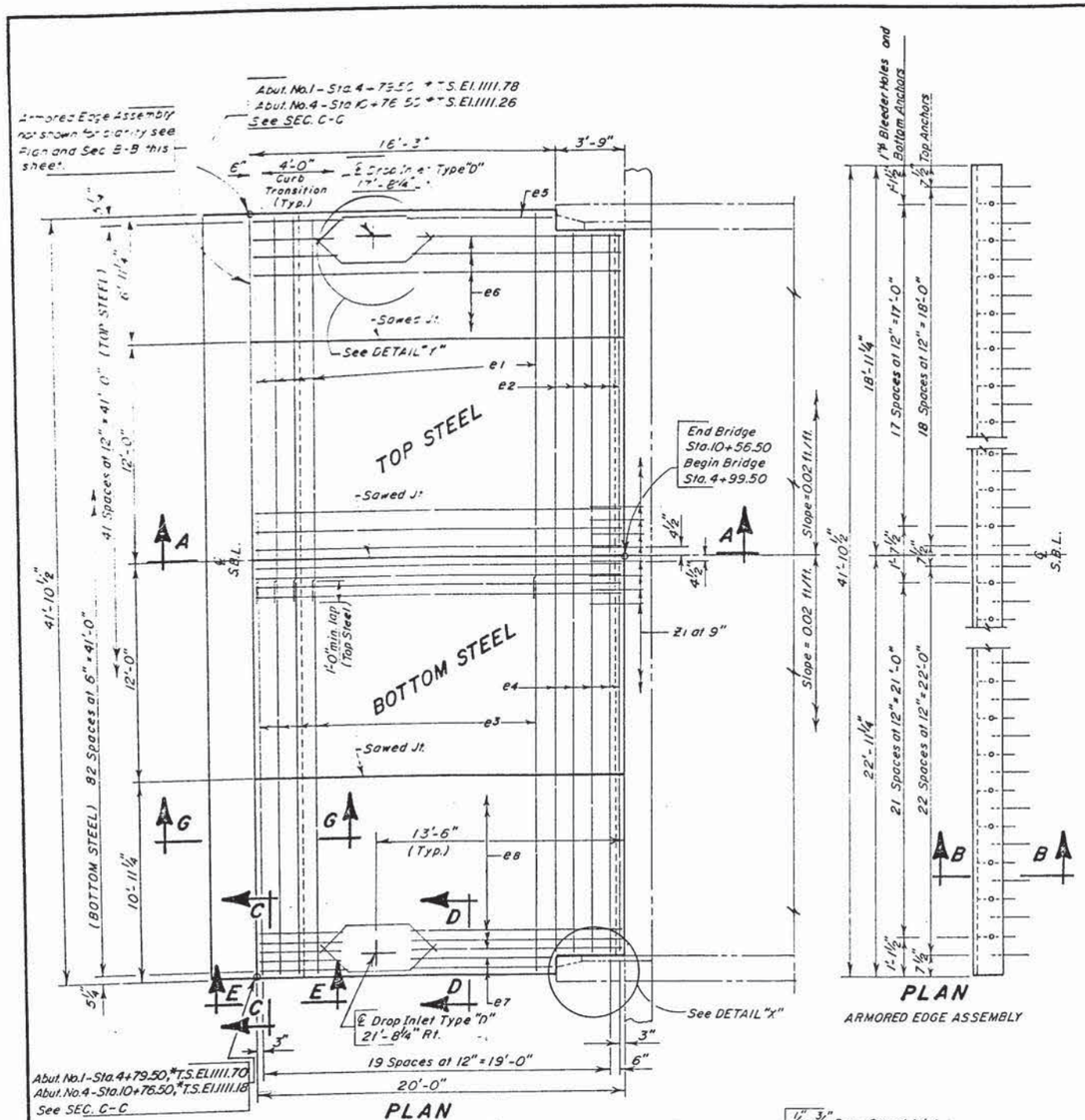


PLAN

(Approach Slab for S.B.L. at Abut. No.1, Abutment No.4 will be similar by mirror image except as noted.)




PLAN

ARMORED EDGE ASSEMBLY

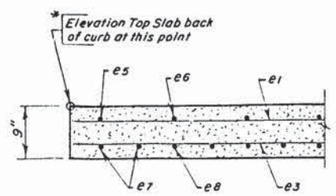


SEC. C-C

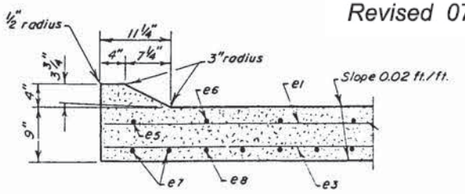


SEC. D-D

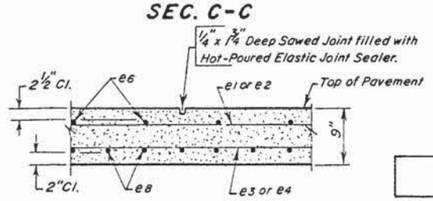


SAWED LONGITUDINAL JOINT

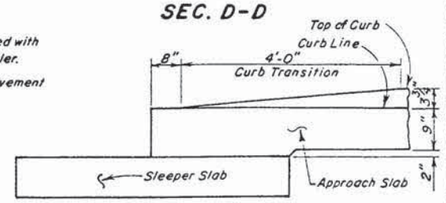


VIEW E-E

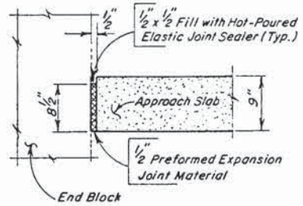


SEC. F-F

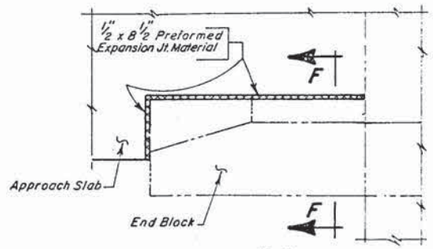


DETAIL "X"

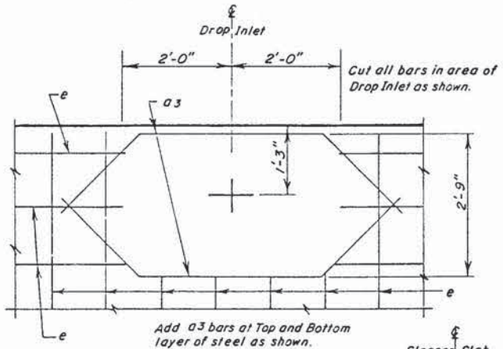


DETAIL "Y"

(Typical plan for steel revision when drop inlet is used.)

## REINFORCING SCHEDULE

(For Two Approach Slabs)

| Mk. | No. | Size | Length | Type | Bending Details |
|---|---|---|---|---|---|
| ▷a3 | 16 | 3 | 7'-4" | 19A | |
| c2 | 28 | 5 | 41'-6" | Str. | |
| d1 | 168 | 4 | 5'-6" | 2 | |
| ▷a2 | 84 | 4 | 5'-1" | T1 | |
| ▷e1 | 64 | 3 | 21'-3" | Str. | |
| ▷e2 | 10 | 3 | 39'-6" | Str. | |
| e3 | 32 | 6 | 41'-6" | Str. | |
| e4 | 10 | 6 | 39'-6" | Str. | |
| ▷e5 | 4 | 3 | 16'-0" | Str. | |
| ▷e6 | 80 | 3 | 19'-9" | Str. | |
| e7 | 8 | 8 | 16'-0" | Str. | |
| e8 | 158 | 8 | 19'-9" | Str. | |

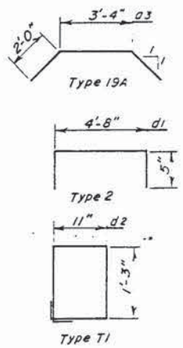


21 bars are listed and included in abutment quantities

▷ Bars are to be Epoxy Coated

All dimensions are out to out of bars

## ESTIMATED QUANTITIES

(For Two Approach Slabs)

| ITEM | UNIT | QUANTITY |
|---|---|---|
| Concrete Approach Slab Adjacent to Bridge | Cu. Yd. | 184.5 |
| Bridge Approach Sleeper Slab | Cu. Yd. | 46.6 |

1 - 47.5 Cu. Yds. Concrete in Approach Slab.
2 - 11,261 Lbs. Re-steel in Approach Slab.
3 - 1,372 Lbs. Epoxy Coated Re-steel in Approach Slab.
4 - 11.6 Cu. Yds. Concrete in Sleeper Slab.
5 - 1,879 Lbs. Re-steel in Sleeper Slab.
6 - 285 Lbs. Epoxy Coated Re-steel in Sleeper Slab.
7 - 3,367 Lbs. Structural Steel in Armored Edge Assembly.

Items 1 thru 7 are approximate quantities for Two approach slabs contained in the above bid items and are for information only.

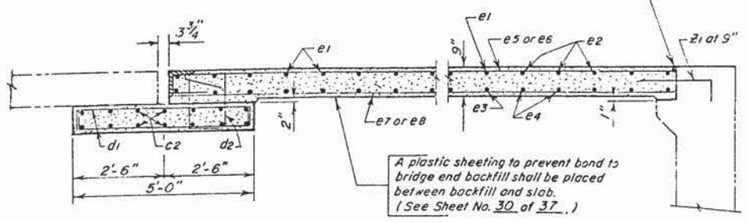


SEC. A-A

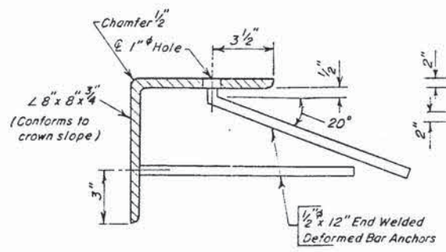


SEC. B-B

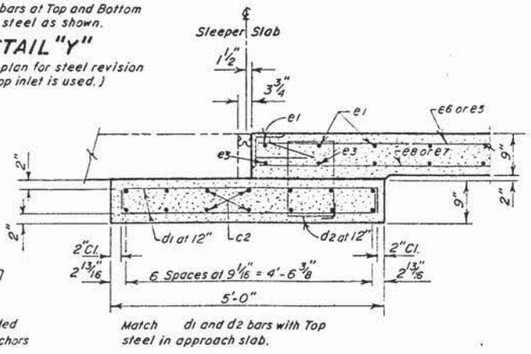


SEC. G-G

# ORIGINAL CONSTRUCTION PLANS

DETAILS OF APPROACH SLAB ADJACENT TO BRIDGE

FOR

## 557'-0" CONT. COMP. GIRDER BRIDGE

40'-0" ROADWAY — 0° SKEW

OVER BIG SIOUX RIVER — SEC. 26-T89N-R48W

STA. 4+99.50 TO 10+56.50 — IR29-1(54)0

STR. NO. 64-164-405 — HS 20-44 (8 ALT.)

UNION CO. S.D. AND WOODBURY CO. IA.

S.D. DEPT. OF TRANSPORTATION

DEC. 1988

38 OF 38

| DESIGNED BY | DRAWN BY | CHECKED BY | APPROVED |
|---|---|---|---|
| S.J. / K.G. | f.a.k. | S.J. / K.G. | BRIDGE ENGINEER |

| STATE OF | PROJECT | SHEET NO. | TOTAL SHEETS |
|---|---|---|---|
| S.D. | IM-PH 0291(122)0 | 73 | 284 |

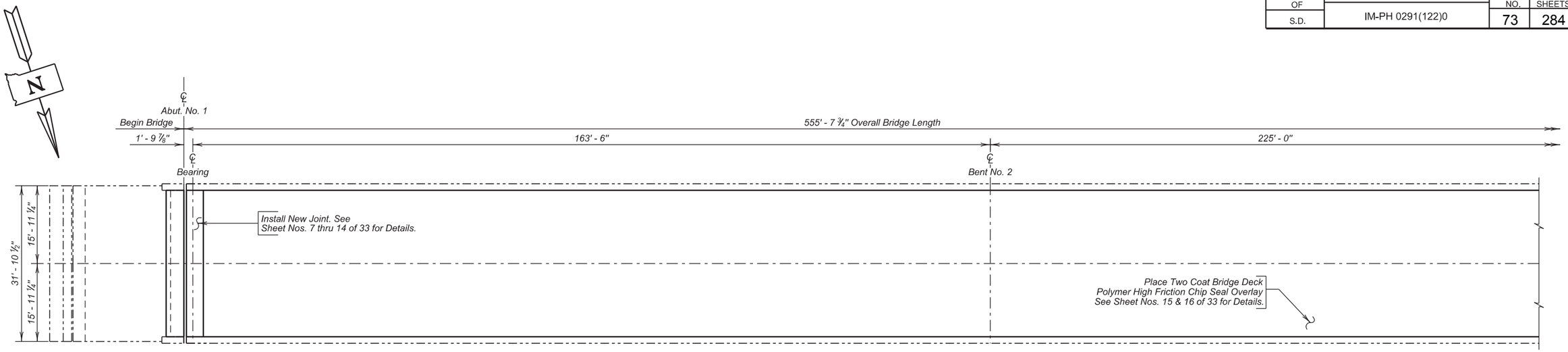


## PARTIAL PLAN

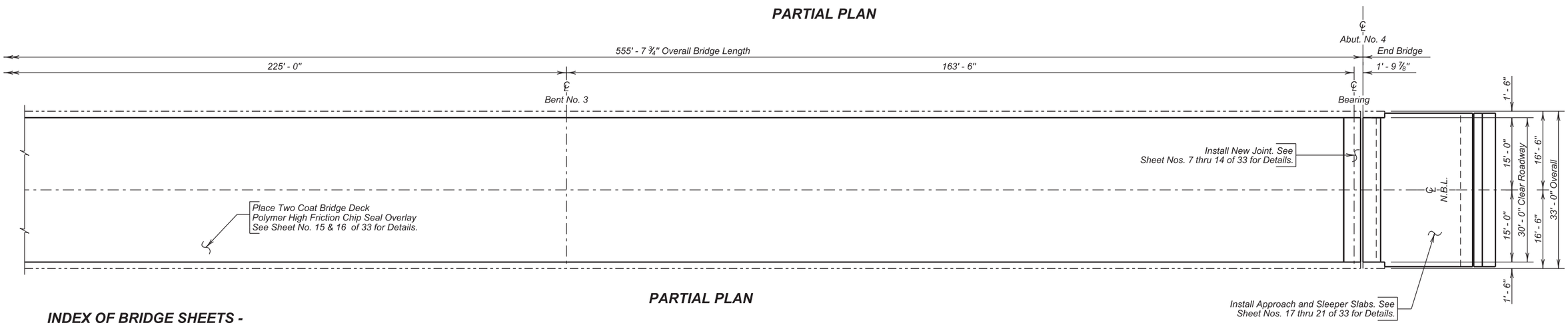


## PARTIAL PLAN

## INDEX OF BRIDGE SHEETS -


Sheet No. 1 - Layout for Upgrading
Sheet No. 2 - Estimate of Structure Quantities and Notes
Sheet No. 3 - Notes (Continued)
Sheet No. 4 - Notes (Continued)
Sheet No. 5 - Notes (Continued)
Sheet No. 6 - Notes (Continued)
Sheet No. 7 - Finger Expansion Joint Breakout Details
Sheet No. 8 - Finger Expansion Joint Layout (East Abut. No. 1)
Sheet No. 9 - Finger Expansion Joint Layout (West Abut. No. 4)
Sheet No. 10 - Finger Expansion Joint Details
Sheet No. 11 - Abut. No. 1 & 4 Joint Drain
Sheet No. 12 - Abut. No. 1 & 4 Joint Drain (Continued)
Sheet No. 13 - Abut. No. 1 & 4 Joint Drain (Continued)
Sheet No. 14 - Abut. No. 1 & 4 Joint Drain (Continued)
Sheet No. 15 - Deck Delamination Details
Sheet No. 16 - Two Coat Bridge Deck Polymer High Friction Chip Seal Details
Sheet No. 17 - Approach Slab Underdrain Modification
Sheet No. 18 - Approach Slab Layout (Abut. No. 4)
Sheet No. 19 - Approach Slab Details (Abut. No. 4)
Sheet No. 20 - Approach Slab Details (Continued)
Sheet No. 21 - Approach Slab Joint Details
Sheet No. 22 - Soffit Repair Details
Sheet NoS. 23 - 33 - Original Construction Plans


**(NORTH BOUND LANES)**
**LAYOUT FOR UPGRADE**

FOR

558' - 1 ¾" COMP. GIRDER BRIDGE

30' - 0" ROADWAY — 0° SKEW
OVER BIG SIOUX RIVER — SEC. 26-T89N-R48W
STR. NO. 64-165-405 — IM-PH 0291(122)0
PCN 02PT

UNION COUNTY

S. D. DEPT. OF TRANSPORTATION

OCTOBER 2015

1 OF 33

PLANS BY :
OFFICE OF BRIDGE DESIGN, SOUTH DAKOTA DEPARTMENT OF TRANSPORTATION

| DESIGNED BY | CK. DES. BY | DRAFTED BY | |
|---|---|---|---|
| KSK | MM | KR | Kevin N. Cooden |
| UNIN02PT | 02PTRB01 | | BRIDGE ENGINEER |

# ESTIMATE OF STRUCTURE QUANTITIES

| ITEM NO. | DESCRIPTION | QUANTITY | UNIT |
|---|---|---|---|
| 110E0040 | Remove Concrete Bridge Approach Slab | 96.5 | SqYd |
| 410E0700 | Abutment Joint Drain | 2 | Each |
| 410E2100 | Finger Type Expansion Joint Assembly | 2 | Each |
| 410E2600 | Membrane Sealant Expansion Joint | 31.8 | Ft |
| 430E0300 | Granular Bridge End Backfill | 4.7 | CuYd |
| 460E0150 | Concrete Approach Slab for Bridge | 79.6 | SqYd |
| 460E0160 | Concrete Approach Sleeper Slab for Bridge | 17.8 | SqYd |
| 460E0172 | Concrete Patching Material, Bridge Deck | 43.7 | CuFt |
| 460E0174 | Concrete Patching Material, Miscellaneous | 10.5 | CuFt |
| 460E0300 | Breakout Structural Concrete | 0.4 | CuYd |
| 460E0380 | Install Dowel in Concrete | 60 | Each |
| 480E0504 | No. 4 Rebar Splice | 15 | Each |
| 480E0505 | No. 5 Rebar Splice | 24 | Each |
| 480E0506 | No. 6 Rebar Splice | 26 | Each |
| 480E5000 | Galvanic Anode | 27 | Each |
| 491E0007 | Two Coat Bridge Deck Polymer High Friction Chip Seal | 1837.4 | SqYd |
| 491E0110 | Abrasive Blasting of Bridge Deck | 1837.4 | SqYd |
| 491E0120 | Bridge Deck Grinding | 1837.4 | SqYd |
| 491E0130 | Concrete Removal, Class A | 6.7 | SqYd |
| 491E0140 | Concrete Removal, Class B | 6.7 | SqYd |
| | | | |

## SPECIFICATIONS

1. Design Specifications: AASHTO Standard Specifications for Highway Bridges 17th Edition using Working Stress Design.

2. Construction Specifications: South Dakota Standard Specifications for Roads and Bridges, 2015 Edition and Required Provisions, Supplemental Specifications and Special Provisions as included in the Proposal.

3. All Welding and Welding Inspection shall be in conformance with AASHTO/AWS Bridge Welding Code D1.5M/D1.5:2010 unless otherwise noted in this plan set.

## DETAILS AND DIMENSIONS OF EXISTING BRIDGE

All details and dimensions of the existing bridge, contained in these plans, are based on the original construction plans and shop plans and are provided as information only. It is the Contractor's responsibility to inspect and verify the actual field conditions and any necessary as-built dimensions affecting the satisfactory completion of the work required for this project.

## SHOP PLANS

Shop plans shall be required as specified by Section 410.3.A of the Construction Specifications.

## SCOPE OF BRIDGE WORK & SEQUENCE OF OPERATIONS

All work on this structure shall be accomplished with the traffic control shown in the plans. Alternate sequence of operations may be submitted by the Contractor for approval by the Engineer a minimum of two weeks prior to the pre-construction meeting.

1. Breakout the Existing Expansion Joints on both ends of the bridge for the first phase of construction.

2. Breakout the Approach Slab on the North End of the bridge for the first phase of construction.

3. Perform bridge deck grinding and repair the bridge deck by removing all loose and delaminated concrete from the bridge deck surface for the first phase of construction.

4. Install the new Finger Expansion Devices at both ends of the bridge for the first phase of construction.

5. Clean the deck surface with abrasive blasting for the first phase of construction.

6. Place the Two Coat Polymer Bridge High Friction Deck Chip Seal for the first phase of construction.

7. Fill the low spots of the bridge end backfill for the first phase of construction.

8. Install the sleeper slab and approach slab on the north end of the bridge for the first phase of construction.

9. Repair the spalled areas of bridge deck soffit for the first phase of construction.

10. Switch traffic and repeat steps 1 through 9 for the second phase of construction.

## GENERAL CONSTRUCTION - BRIDGE

1. All mild reinforcing steel shall conform to ASTM A615, Grade 60.

2. All exposed concrete corners and edges shall be chamfered 3/4" unless noted otherwise in the plans. Match existing chamfer if the existing chamfer differs.

3. Use 2" clear cover on all reinforcing steel except as shown otherwise.

4. Request for construction joints or resteel splices at points other than those shown, must be submitted to the Engineer for prior approval. If additional splices are approved, no payment will be allowed for the added quantity of reinforcing steel.

5. Surfaces of fresh concrete at construction joints shall be rough floated sufficiently to consolidate the surface. All construction joints shall be cleaned of surface laitance, curing compounds and other foreign materials prior to placing fresh concrete against the joint.

6. The type of vibratory screed shall be approved by the Engineer.

## DESIGN MIX OF CONCRETE

1. Class A45 Concrete shall be used for the bid items Concrete Approach Slab for Bridge and Concrete Approach Sleeper Slab for Bridge.

2. The Type of cement, concrete strength requirements, aggregate requirements, slump and air requirements for the contract items Concrete Approach Slab for Bridge and Concrete Approach Sleeper Slab for Bridge shall conform to the requirements of Section 460 of the Construction Specifications.

## REMOVAL OF CONCRETE BRIDGE APPROACH SLAB

1. The existing concrete approach and sleeper slab adjacent Abutment No. 4 shall be completely removed by the Contractor.

2. The crushed concrete and reinforcing steel from the removal shall be disposed of by the Contractor at an approved site. An appropriate site will be as described in the Environmental Commitment notes in this set of plans.

3. All labor, tools, equipment and any incidentals necessary for removal and disposal of the existing approach and sleeper slabs shall be incidental to the contract unit price per square yard for "Remove Concrete Bridge Approach Slab".

## MODIFY EXISTING BRIDGE END BACKFILL

1. This work consists of bringing the existing bridge end backfill material up to the required elevation and repairing any damage to the in-place bridge end backfill material as approved by the Engineer.

2. Granular bridge end backfill shall conform to Section 882 of the Construction Specification. Granular material shall be placed and compacted using a smooth face vibratory roller or vibratory plate compactor according to Section 430.3 B of the Construction Specification.

**ESTIMATE OF STRUCTURE QUANTITIES AND NOTES**
FOR
558' - 1¾" COMP. GIRDER BRIDGE

STR. NO. 64-165-405
OCTOBER 2015



| DESIGNED BY | CK. DES. BY | DRAFTED BY | |
|---|---|---|---|
| KSK | MM | KSK | Kevin N. Goeden |
| UNIN02PT | 02PTR502 | | BRIDGE ENGINEER |

**MODIFY EXISTING BRIDGE END BACKFILL**

3. The Reinforcement Fabric (MSE) shall conform to section 831 of the Construction Specification.

4. The polyethylene sheeting shall be a minimum thickness of 6 mils and shall be sufficiently durable such that it will not puncture or tear when installed as intended.

5. The existing polyethylene sheeting under the existing approach slab and sleeper slab shall be removed and disposed of in accordance with the Environmental Commitments.

6. The surfaces on which the reinforcement fabric is to be placed shall be smooth and free of obstructions. The reinforcement fabric may be oriented in any direction.

7. Any equipment used to install the granular bridge end backfill over the reinforcement fabric shall be operated in such a manner that the reinforcement fabric is not damaged. To avoid damage to the reinforcement fabric, the equipment used to place, spread, and compact material over the drainage fabric shall be limited to handheld equipment.

8. Any reinforcment fabric that is torn or punctured shall be repaired or replaced by the Contractor at no additional cost to the Department. The repair shall consist of a patch of the same type of reinforcment fabric being placed over the ruptured area such that it overlaps the damaged area a minimum of 3 feet measured from any damaged edge.

9. Seams shall be constructed by overlapping the fabric a minimum of 2 feet. All seams shall be inspected by the Engineer and any deficient seams repaired by the Contractor prior to placement of the bridge end backfill material.

10. The granular bridge end backfill shall be compacted to a minimum of 97 percent of maximum dry density as determined by SD 104 (AASHTO T99). The moisture content of the backfill material prior to and during compaction shall be adequate to provide satisfactory results. Maximum dry density and optimum moisture shall be determined by SD 104 (AASHTO T99).

11. The quantity specified in the plans for granular bridge end backfill was estimated. Actual amount installed may vary slightly due to changes in the field condition. Regardless of these limitations, the plan shown quantity will be the basis of payment. Field measurement for Granular Bridge End Backfill will not be made. Payment will be full compensation for all labor, equipment, materials, water, and all other items incidental to furnishing and installing the reinforcement fabric (MSE), the polyethylene sheeting and for furnishing and installing, including any hauling or stockpiling, of the granular bridge end backfill material.

**APPROACH SLABS**

1. Excavation for placement of new approach slab and sleeper slab shall be done with minimal disturbance to the underlying material.

2. The top of approach slab elevations shall be established during construction and shall be subject to the approval of the Engineer. Care shall be taken to provide a smooth transition from the bridge deck elevations to the new pavement elevations established in the field so as to prevent any dips or bumps in the areas of the bridge ends or ends of the new approach slabs. The maximum rate of grade transition through the approach slab shall be 1/8 inch per 10 feet.

3. Sleeper slab riser shall be cast with or later than the Approach Slab. Care shall be taken to ensure the correct grade is maintained across the joint.

4. The use of a vibratory screed will be required during placement of Class A45 Concrete for the approach slabs. Concrete placement in front of the screed shall be kept parallel to the screed.

5. The concrete in the approach slab shall be tined parallel with the skew of the bridge.

6. The new approach slabs and sleeper slabs shall have a surface finish as stipulated in Section 460.3 L.4 of the Construction Specifications.

7. The Concrete Approach Slabs Adjacent to Bridge shall be cured in accordance with Section 460.3 M of the Construction Specifications. The minimum 7 day cure time requirement shall be waived. The approach slabs shall be cured until a minimum compressive strength of 4,000 psi is reached.

8. Concrete Approach Sleeper Slab for Bridge will be paid for at the contract unit price per square yard. This payment shall be full compensation for all excavation, furnishing, hauling, and placing all materials including concrete, concrete anchors, and reinforcing steel; for disposal of all excavated material and surplus materials; and for labor, tools, equipment and any incidentals necessary to complete this item of work.

9. Concrete Approach Slab for Bridge will be paid for at the contract unit price per square yard. This payment shall be full compensation for all excavation, furnishing, hauling and placing all materials including concrete, asphalt paint or 4 mil polyethylene sheeting, elastic joint sealer and reinforcing steel; for disposal of all excavated material and surplus materials and for labor, tools, equipment and any incidentals necessary to complete this item of work.

**MECHANICAL REBAR SPLICES**

Mechanical splice devices will be required for the transverse approach slab and sleeper slab reinforcing steel. The mechanical rebar splices shall be in accordance with Section 480 of the Construction Specifications.

**MEMBRANE SEALANT EXPANSION JOINT**

1. The Membrane Sealant shall be on the approved product list for Membrane Sealant Expansion Joint.

2. The manufacturer shall supply the membrane sealant in packaging that precompresses the membrane sealant. The precompressed dimension shall be as recommended by the sealant manufacturer, however, in no case shall the precompressed dimension exceed 75% of the joint opening width. The foam sealant shall be slowly self expanding to permit workers ample time to install the membrane sealant before the membrane sealant exceeds the joint opening width.

3. The membrane sealant shall provide a water tight seal throughout a joint movement range of +25% (minimum) from the specified joint opening dimension.

4. The membrane sealant shall be supplied in pieces a minimum of 5 feet in length. The foam sealant shall be ultra-violet and ozone resistant.

5. The bonding adhesive used to attach the membrane sealant to the adjacent concrete shall be approved by the membrane sealant manufacturer.

6. Adhesive used to join adjacent pieces to of the membrane sealant shall be as recommended by the manufacturer.

7. If Styrofoam filler material is used in the construction, it shall be closed cell and water-tight as approved by the Engineer.

8. The minimum ambient air temperature at the time of joint installation and adhesive curing shall be 40°F.

9. A technical representative of the membrane sealant shall be present at the jobsite during installation. The technical representative shall be knowledgeable in the correct procedures for the preparation and installation of the joint material to ensure the Contractor installs the joint to the manufacturers' recommendations.

10. Surfaces that will be in contact with the membrane sealant shall be thoroughly cleaned by abrasive blasting to remove all laitance and contaminants (such as oil, curing compounds, etc.) from the surface. At a minimum two passes of the abrasive blasting with the nozzle held at an angle to within 1 to 2 inches of the surface will be required. Cleaning of the surfaces with solvents, wire brushing, or grinding shall not be permitted.

**NOTES (CONTINUED)**
FOR
558' - 1¾" COMP. GIRDER BRIDGE

STR. NO. 64-165-405
OCTOBER 2015



| DESIGNED BY | CK. DES. BY | DRAFTED BY | |
|---|---|---|---|
| KSK | MM | KSK | Kevin N. Boeden |
| UNIN02PT | 02PTRB03 | | BRIDGE ENGINEER |

**MEMBRANE SEALANT EXPANSION JOINT (CONTINUED)**

11. After abrasive blasting, but immediately prior to membrane joint installation, the entire joint contact surface shall be air blasted. The air compressor used for joint cleaning shall be equipped with trap devices capable of providing moisture-free and oil-free air at a recommended pressure of 90 psi. To obtain complete bonding with the adhesive, the adjacent surfaces must be dry and clean. The contact surfaces for the joint shall be visually inspected by the Engineer immediately prior to joint installation to verify the surface is dry and clean.

12. Individual spliced sections shall be installed as per the manufacturers' recommendations. The membrane joint sealant manufacturer shall submit a detailed installation procedure to the Engineer at least 5 days prior to joint installation for his review.

13. Traffic shall not be allowed on the joint until the bonding adhesive has had time to cure, as recommended by the manufacturer.

14. Use plywood or other material to protect concrete adjacent to the joint from spalling before any equipment is moved across the joint. Any spall areas will be repaired at the Contractor's expense by breaking out and replacing adjacent concrete, as approved by the Engineer.

15. The Membrane Sealant Expansion Joint will be measured in feet to the nearest one-tenth foot, complete in place. Measurement will be made of the overall horizontal length. The Membrane Sealant Expansion Joint will be paid for at the contract unit price per foot complete in place. Payment for this item shall be full compensation for furnishing all the required materials in place, including labor, equipment and incidentals necessary to complete the work in accordance with the plans and the foregoing specifications.

**FINGER EXPANSION JOINT**

1. Components of the Finger expansion joint assembly will include all plates shown on sheet no. 9 of 32. This will include the top finger plates and all other plates attached to the top finger plate.

2. All steel components, steel plates, bars and structural shapes shall be galvanized after shop welding in accordance with ASTM A123.

3. All new structural steel shall conform to ASTM A709 Gr. 50. Material less than ¼ inch thick may be ASTM A1011, Grade 36. The 5/8 inch diameter end welded deformed bar anchors shall be a commercially available Fluxed Deformed Bar Anchor Stud, automatically end welded, with material conforming to ASTM A496.

4. Due to work on one-half of the deck at a time, splices in the joint will be required at the centerline of the roadway. Welded field splice details, the procedures for preparing the surfaces of the entire fabricated joint for welding and the procedures for repairing the galvanizing after welding shall be included in the shop plans. Repair of the galvanizing shall be by the zinc-based solder method in conformance with ASTM A780.

5. Welding of drainage plates at centerline will not be required if the contractor fully seals the gap between the two end plates with a silicon sealer approved by the Bridge Construction Engineer.

6. The phase limits for construction prevent sufficient room for a lap splice at centerline. Therefore, the transverse reinforcing steel shall be spliced with mechanical splice devices. The mechanical rebar splices shall be in accordance with Section 480 of the Construction Specifications.

7. Each finger joint bolt shall include one 5/16" plate washer detailed in this plan set, one standard washer, and one heavy hex nut.

8. The two halves of the finger expansion joint shall be placed parallel to each other and shall be set at correct grade and crown. The top surfaces of the two sides of the finger expansion joint shall be level with one another. The gap between the fingers shall be set using the joint Installation Table shown on the plan sheet. Strict adherence to the these opening at the specified installation temperatures is required for the joint to function properly.

9. The new concrete surfaces of the bridge deck in the area of the finger joint placement shall be finished in accordance with Sections 460.3 L of the Construction Specifications. The portion of the approach slab in the location of the finger joint shall be finished in accordance with Sections 460.3 L of the Construction Specifications.

10. All costs associated with the removal and replacement of the existing finger joint will be incidental to the contract unit price per each for Finger Type Expansion Joint Assembly. This will include concrete breakout, cleaning and straightening of reinforcement, new reinforcement, mechanical splices, new A45 concrete, all structural steel associated with finger joint and sliding plate assemblies.

**ABUTMENT JOINT DRAIN**

1. The existing abutment joint drain will need to be removed prior to installation of the new abutment joint drain.

2. Drainage assembly consists of plates U1, U2, V1, V2 and T1, T2, T3 and also the neoprene sheet, drainage trough and riprap. This includes any plates bolted to the finger joint or attached to the abutment backwall/seat.

3. All steel components, steel plates, bars and structural shapes shall be galvanized after shop welding in accordance with ASTM A 123 except as stated in the following notes.

4. The threads of all nuts and bolts to be galvanized shall be protected to ensure that a bolt or nut can still be fully threaded after the galvanizing process.

5. All new structural steel plates and bars shall conform to ASTM A709,Grade 36. Material less than 1/4 inch thick may be ASTM A1011, Grade 36, except as specified in the notes below.

6. Plates U1, U2, V1 and V2 shall be bolted to the Finger Expansion Joint using 3/8 inch diameter bolts. Each bolt shall include two standard washers, and one standard nut. The bolts, nuts and washers shall be either hot-dipped galvanized according to ASTM F2329 or made of corrosion resistant material.

7. The Neoprene sheet shall be EPDM Cloth Inserted Rubber. The material shall have the following physical properties:

| | |
|---|---|
| Durometer: | 70 A Nominal |
| Tensile Strength: | 1500 psi |
| Temperature Range: | -40° F to 245° F |
| Elongation: | 100% |
| UV Rating: | Excellent |

8. The Type B Drainage Fabric shall conform to Section 831 of the Construction Specifications.

9. Class A riprap shall conform to the Specifications. The cost for furnishing and installing the riprap shall be incidental to the contract unit price per each for Abutment Joint Drain.

10. Material for the 3/8 inch diameter x 2 3/4 inch commercially available steel wedge-type anchor bolts, nuts and washers shall be at the option of the Contractor. The bolts, nuts and washers shall be either hot-dipped galvanized according to ASTM F2329 or made of corrosion resistant material. The wedge type anchors shall be installed in accordance with the manufacturer's recommendations.

11. The 3/8 inch diameter bolts, nuts and washer shall conform to ASTM A307 and be galvanized in accordance with ASTM F2329 or made of the same other corrosion resistant material.

12. The existing joint drain shall be completely removed and disposed of in accordance with the Environmental Commitments. The existing anchor bolts protruding from the concrete shall be cut off and ground flush with the concrete surface as approved by the Engineer. The exposed ends shall be coated with a zinc-rich galvanizing paint in conformance with ASTM A780.

13. The placement of the drainage channel is necessary to drain the water from the finger joint and diaper system away from the bridge. Should it be necessary, it shall be at the Engineer's option to adjust the gutter from the plans location to meet this requirement.

**NOTES (CONTINUED)**
FOR
558' - 1¾" COMP. GIRDER BRIDGE

STR. NO. 64-165-405
OCTOBER 2015



| DESIGNED BY | CK. DES. BY | DRAFTED BY | |
|---|---|---|---|
| KSK | MM | KSK | Kevin N. Goeden |
| UNIN02PT | 02PTR503 | | BRIDGE ENGINEER |

## ABUTMENT JOINT DRAIN (CONTINUED)

14. After the drain length and slope are determined for each location, and approved by the Engineer, sketches of same shall be sent to the Office of Bridge Design and to the fabricator.

15. All costs associated with removing the existing Abutment Joint Drain, furnishing and installing the new Abutment Joint Drain will be included in the contract unit price per each for Abutment Joint Drain.

## TWO COAT BRIDGE DECK POLYMER HIGH FRICTION CHIP SEAL

1. The Two Coat Bridge Deck Polymer High Friction Chip Seal shall be furnished and installed in accordance with Section 491 of the Construction Specification except as modified by these notes.

2. The calcined bauxite aggregate shall be used in lieu of the aggregate specified in Section 491. Properties of the calcined bauxite aggregate are listed in the High Friction Surface Aggregate notes.

3. Measurement will not be made for the Two Coat Bridge Deck Polymer High Friction Chip Seal. The plans quantity will be the basis of payment.

4. The two coat bridge deck polymer high friction chip seal will be paid for at the contract unit price per square yard. Payment will be full compensation for all labor, equipment material and all incidental work required to furnish and install the two coat bridge deck polymer high friction chip seal and to remove and dispose of the excess cover aggregate. Payment will also be full compensation for all manufacturer approved representative expenses.

## HIGH FRICTION SURFACE AGGREGATE

1. The material shall be clean, dry, and free from foreign matter. The Contractor shall deliver the calcined bauxite aggregate to the construction site in clearly labeled containers. The calcined bauxite aggregate shall be certified to meet the requirements of Table 1.

2. The Contractor shall ensure the coverage rate of the retained calcined bauxite aggregate is a minimum of 13 lbs/yd$^2$.

**TABLE 1**

| Calcined Bauxite Aggregate Requirements | | |
|---|---|---|
| Property | Requirements | Test Method |
| Mohs Hardness | 7.0 Minimum | Mohs |
| Polish Stone Value | 65 Minimum | ASTM E660 |
| Gradation | 100.0% Passing No. 4<br>95.0% - 100.0% Passing No. 6<br>0.0% - 5.0% Passing No. 16 | AASHTO T 27 |
| Moisture Content | 0.2% Maximum | AASHTO T 255 |
| Aluminum Oxide | 87% Minimum | ASTM C25 |
| Apparent Specific Gravity | 3.1 Minimum | AASHTO T 84 |
| Sodium Sulfate Soundness | 12% Maximum | AASHTO T 104 |
| LA Abrasion Test | 30% Maximum.<br>Test sample gradation differs from gradation requirements. | AASHTO T 96 (C grading) |

## CONCRETE BREAKOUT

1. The existing bridge deck and bridge deck soffit shall be broken out to the limits shown on the plans. Breakout limits shall be defined with a 3/4 inch deep sawcut (unless specified otherwise in these plans), where practical, as approved by the Engineer. Care shall be taken not to damage the existing reinforcing steel that is to be reused in the new construction during concrete breakout. Any reinforcing steel that is damaged during concrete breakout shall be replaced or repaired, as approved by the Engineer, by the Contractor at no cost to the Department.

2. All broken out concrete, discarded reinforcing bars and expansion devices shall be disposed of by the Contractor. Any disposal of discarded material shall be in accordance with the Environmental Commitments.

3. During concrete removal operations, no broken out concrete shall be allowed to fall into the Big Sioux River.

4. The contract unit price per cubic yard for "Breakout Structural Concrete" shall include breakout on concrete, cleaning, straightening reinforcing steel, removal of the existing armored device, and disposal of all broken out material.

5. Reinforcing steel that is exposed and is scheduled to use in the new construction shall be cleaned of all adhering concrete and rust (if present) with a wire brush and straightened to the satisfaction of the Engineer. Any reinforcing steel that is damaged during concrete breakout shall be replaced or repaired, as approved by the Engineer, by the Contractor at no cost to the Department.

## INSTALL DOWELS IN CONCRETE

1. Holes drill in the existing concrete shall be true and normal as shown in the plans. Drilling holes using a core drill shall not be allowed. Care shall be taken not to damage the existing reinforcing steel. It is likely that some of the existing steel shown in the original construction plans may have been placed out of position during original construction. Therefore, prior to the start of drilling any holes in the concrete an effort will be made by Department forces to mark on the concrete surface where practical any locations of the in-place reinforcing steel. In spite of this precaution, the Contractor can expect to encounter and have to drill through reinforcing steel or shift the dowel spacing as approved by the Engineer to miss the existing reinforcing steel. If the Contractor shifts the dowel spacing, the unused drill holes shall be completely filled with the epoxy resin specified in note number 2.

2. The epoxy resin mixture shall be of a type for bonding steel to hardened concrete and shall conform to AASHTO M235 Type IV (Equivalent to ASTM C881, Type IV). Grade 1, 2 or 3 may be used for vertical dowels.

3. The diameter of the drilled holes shall not be less than 1/8 inch greater, nor more than 3/8 inch greater than the diameter of the dowels or as per the Manufacturer's recommendations. The drilled holes shall be blown out with compressed air using a device that will reach the back of the hole to ensure that all debris or loose material has been removed prior to epoxy injection.

**NOTES (CONTINUED)**
FOR
558' - 1¾" COMP. GIRDER BRIDGE

STR. NO. 64-165-405
OCTOBER 2015



| DESIGNED BY | CK. DES. BY | DRAFTED BY | |
|---|---|---|---|
| KSK | MM | KSK | Kevin N. Boeden |
| UNIN02PT | 02PTR503 | | BRIDGE ENGINEER |

**INSTALL DOWELS IN CONCRETE (CONTINUED)**

4. Mix epoxy resin as recommended by the Manufacturer and apply by an injection method as approved by the Engineer. Beginning at the back of the drilled holes, fill the holes 1/3 to 1/2 full of epoxy, or as recommended by the Manufacturer, prior to insertion of the steel bar. Rotate the steel bar during installation to eliminate voids and ensure complete bonding of the bar. Insertion of the bars by the dipping or painting method will not be allowed.

5. No loads shall be applied to the epoxy grouted dowel bars until the epoxy resin has had sufficient time to cure as specified by the epoxy resin manufacturer.

6. Dowel bars shall be deformed bars conforming to ASTM A615 Grade 60.

7. The cost of epoxy resin, dowels, installation and other incidental items shall be incidental to the contract unit price per each for "Install Dowel in Concrete".

**BRIDGE DECK SOFFIT REPAIR**

1. The deteriorated area of the bridge deck soffit will be broken out to the depths shown on the plans or to sound concrete as approved by the Engineer.

2. Galvanic anodes shall be placed in the removal areas of the bridge deck soffit. See "Galvanic Anode" notes for instructions on placement.

3. The concrete patching material used for repair of the bridge deck soffit shall consist of one of the following products, or equal as approved by the Office of Bridge Design:

   HD 25 VO
   Dayton Superior
   1125 Byers Road
   Miamisburg, OH 45342
   Phone: (800)745-3700
   Website: www.daytonsuperior.com

   MasterEmaco N 400 RS
   BASF Building Systems
   800 Valley Park Drive
   Shakopee, MN 55379
   Phone: (800)433-9517
   Website: www.buildingsystems.basf.com

   Speed Crete Red Line
   The Euclid Chemical Company
   19218 Redwood Road
   Cleveland, OH 44110
   Phone: (800)321-7628
   Website: www.euclidchemical.com

   Meadow-Patch 210
   W. R. Meadows, Inc.
   P.O. Box 338
   Hampshire, IL 60140-0338
   Phone: (847)214-2100
   Website: www.wrmeadows.com

   The concrete patch material shall be applied and cured as recommended by the manufacturer and as approved by the Engineer.

4. Concrete Patching Material, Miscellaneous will be measured to the nearest 0.1 cubic feet as determined from the theoretical yield per bag of concrete patching material.

5. Concrete Patching Material, Miscellaneous will be paid for at the contract unit price per cubic foot. Payment will be full compensation for all labor, equipment, materials and all incidental work required to abrasive blast clean the removal areas, and furnish, place and cure the concrete patching material within the removal areas.

**GALVANIC ANODE**

1. The Contractor shall furnish and place Galvanic anodes in the concrete repair areas specified in this plan set.

2. The galvanic anodes shall be supplied as one of the following:

   Galvashield XP2
   Vector Corrosion Technologies
   13312 N 56th St, Suite 102
   Tampa, FL 33617
   Phone: (813) 830-7566
   Website: www.vector-corrosion.com

   Sentinel Silver
   Euclid Chemical Company
   19218 Redwood Road
   Cleveland, OH 44110
   Phone: (800) 321-7628
   Website: www.euclidchemical.com

   Sika Galvashield XP+
   Sika Corporation US
   201 Polito Avenue
   Lyndhurst, NJ 07071
   Phone: (800) 933-7452
   Website: http://usa.sika.com

3. The anodes shall be placed in accordance with manufacturer's recommendations and as approved by the Engineer. The anodes have not been shown on the drawings. The Contractor shall provide shop drawings of the galvanic anode installation including locations of the individual anodes to the Office of Bridge Design.

4. The anodes shall be placed with a minimum ¾" cover and shall be set in Embedding Mortar per the manufacturer's recommendations. The anodes shall be fully encased in the concrete repair material. Where adequate cover does not exist, a concrete pocket shall be chipped out behind the anode to provide sufficient cover. The Contractor may need to chip around the reinforcing bar locally at the anode installation to make the electrical connection. The reinforcing steel at the connection location shall be cleaned per the manufacturer's recommendations to provide sufficient electrical connection and mechanical bond.

5. The electrical continuity of the electrical connections and reinforcing steel shall be confirmed per the manufacturer's recommendations.

6. The Contractor shall provide manufacturer's product literature and installation instructions to the Engineer 10 days prior to installation.

7. All costs associated with placing anodes including labor, equipment, materials and incidentals shall be included in the contract unit price per each for "Galvanic Anode".

**NOTES (CONTINUED)**
FOR
558' - 1¾" COMP. GIRDER BRIDGE

STR. NO. 64-165-405
OCTOBER 2015



| DESIGNED BY | CK. DES. BY | DRAFTED BY | |
|---|---|---|---|
| KSK | MM | KSK | Kevin N. Goeden BRIDGE ENGINEER |
| UNIN02PT | 02PTR506 | | |

| STATE OF | PROJECT | SHEET NO. | TOTAL SHEETS |
|---|---|---|---|
| S.D. | IM-PH 0291(122)0 | 79 | 284 |

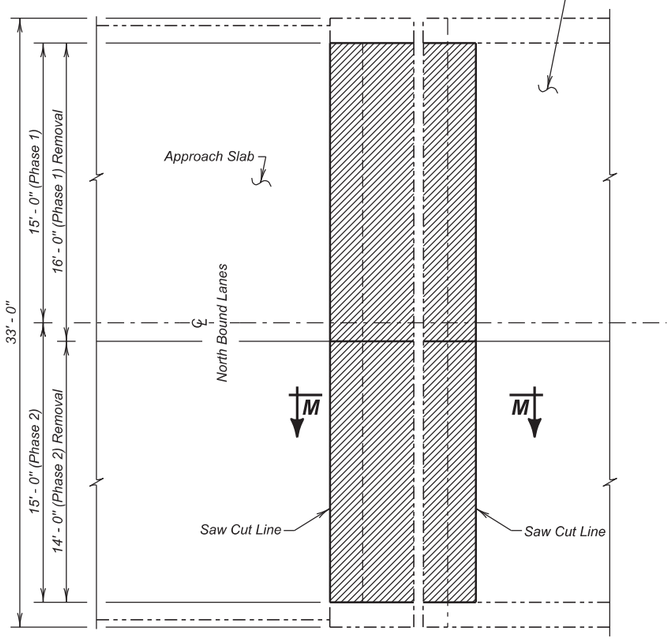


**PLAN**
(Abut. No. 1)

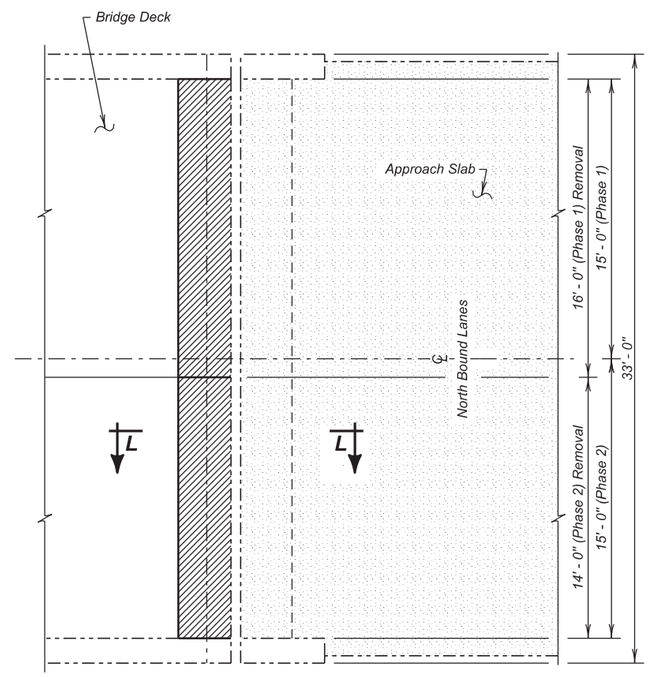


**PLAN**
(Abut. No. 4)

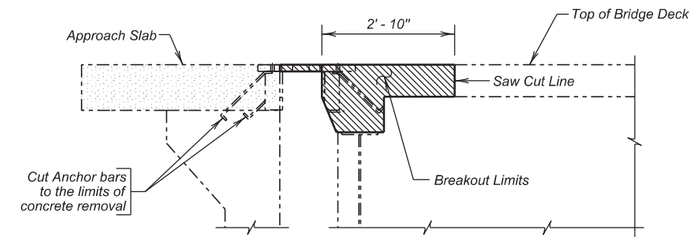


**SECTION L - L**

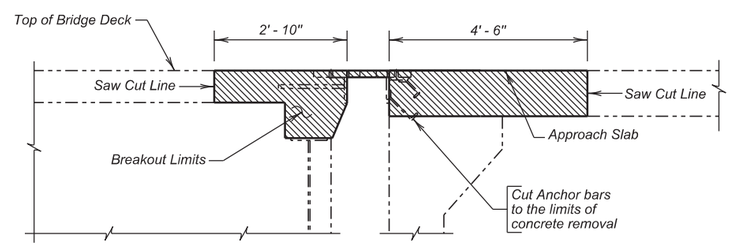


**SECTION M - M**

Limits of concrete removal incidental to Finger Type Expansion Joint Assembly

Limits of concrete removal incidental to Remove Concrete Bridge Approach Slab

*Use this sheet in conjunction with Sheet Nos. 8 thru 10 of 33*

**(NORTH BOUND LANES)**
**FINGER EXPANSION JOINT BREAKOUT DETAILS**
FOR
558' - 1 3/4" COMP. GIRDER BRIDGE

30' - 0" ROADWAY — 0° SKEW
OVER BIG SIOUX RIVER — SEC. 26-T89N-R48W
STR. NO. 64-165-405 — IM-PH 0291(122)0

UNION COUNTY
S. D. DEPT. OF TRANSPORTATION
OCTOBER 2015



| DESIGNED BY | CK. DES. BY | DRAFTED BY | |
|---|---|---|---|
| KSK | MM | KR | Kevin N. Goeden |
| UNIN02PT | 02PTRB07 | | BRIDGE ENGINEER |

| STATE OF | PROJECT | SHEET NO. | TOTAL SHEETS |
|---|---|---|---|
| S.D. | IM-PH 0291(122)0 | 80 | 284 |

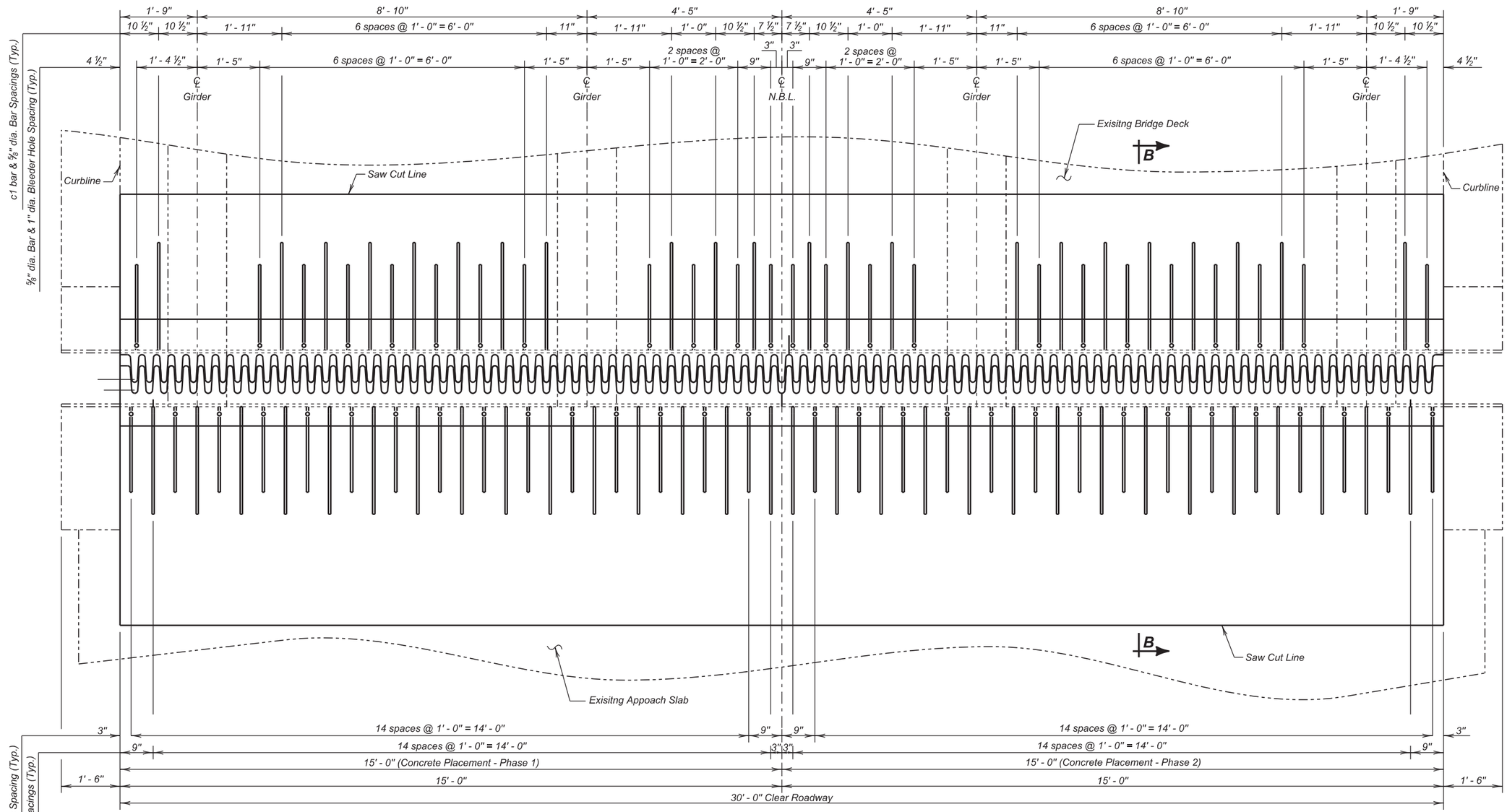


**PLAN**
(Reinforcing Steel Not Shown for Clarity)

**(NORTH BOUND LANES)**
**FINGER EXPANSION JOINT LAYOUT (EAST ABUT. NO. 1)**

FOR

558' - 1 ¾" COMP. GIRDER BRIDGE

30' - 0" ROADWAY — 0° SKEW
OVER BIG SIOUX RIVER — SEC. 26-T89N-R48W
STR. NO. 64-165-405 — IM-PH 0291(122)0

UNION COUNTY
S. D. DEPT. OF TRANSPORTATION
OCTOBER 2015

8 OF 33

*Use this sheet in conjuntion with Sheet Nos. 7 and 10 of 33.*

| DESIGNED BY | CK. DES. BY | DRAFTED BY | |
|---|---|---|---|
| KSK | MM | KR | Kevin N. Boeden |
| UNIN02PT | 02PTRB08 | | BRIDGE ENGINEER |

| STATE OF | PROJECT | SHEET NO. | TOTAL SHEETS |
|---|---|---|---|
| S.D. | IM-PH 0291(122)0 | 81 | 284 |

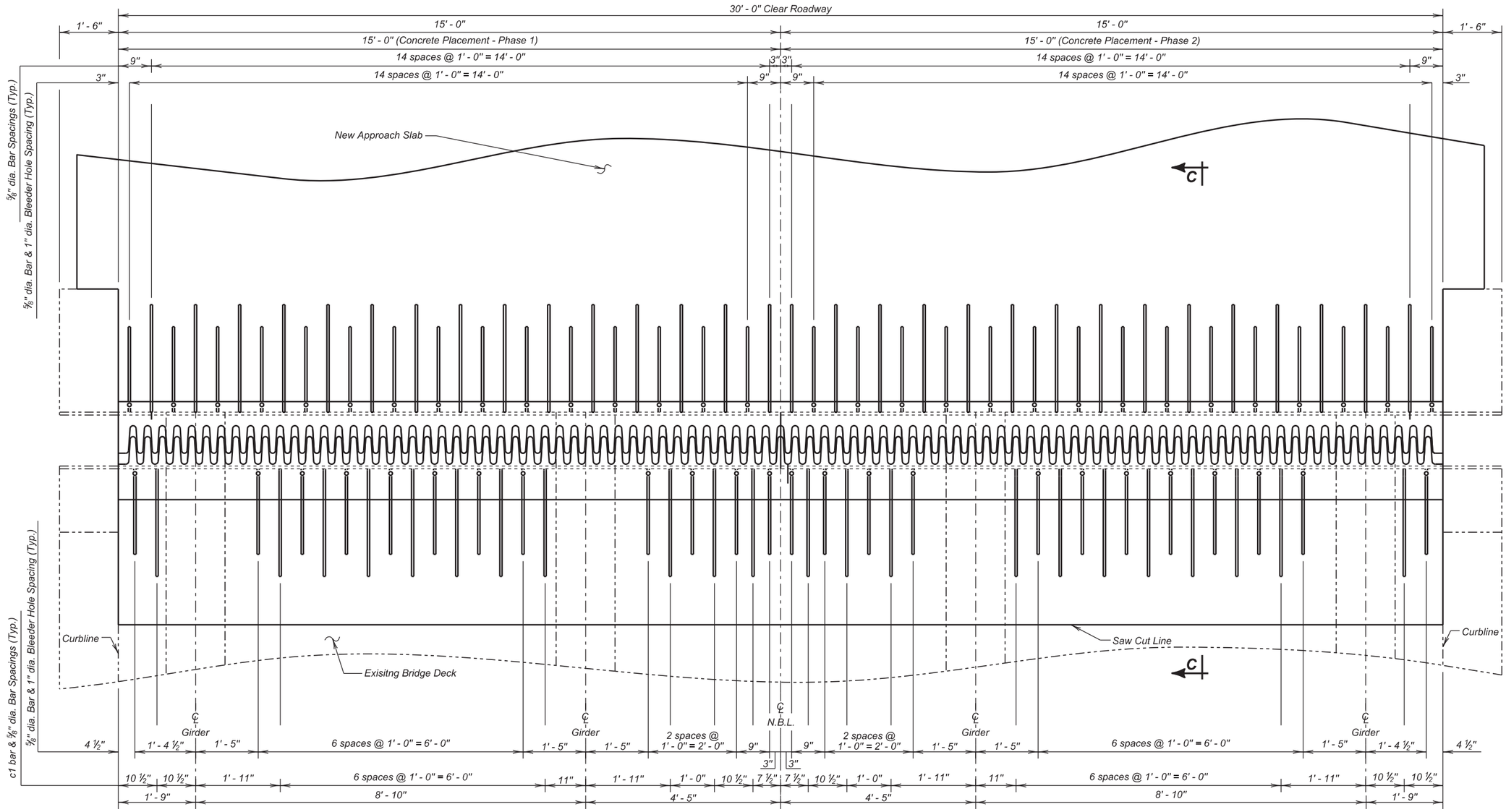


**PLAN**
(Reinforcing Steel Not Shown for Clarity)

**(NORTH BOUND LANES)**
**FINGER EXPANSION JOINT LAYOUT (WEST ABUT. NO. 4)**
FOR
558' - 1 ¾" COMP. GIRDER BRIDGE

30' - 0" ROADWAY — 0° SKEW
OVER BIG SIOUX RIVER — SEC. 26-T89N-R48W
STR. NO. 64-165-405 — IM-PH 0291(122)0

UNION COUNTY
S. D. DEPT. OF TRANSPORTATION
OCTOBER 2015

9 OF 33

*Use this sheet in conjunction with Sheet Nos. 7 and 10 of 33.*

| DESIGNED BY | CK. DES. BY | DRAFTED BY | |
|---|---|---|---|
| KSK | MM | KR | Kevin N. Goeden |
| UNIN02PT | 02PTRB09 | | BRIDGE ENGINEER |

| STATE OF | PROJECT | SHEET NO. | TOTAL SHEETS |
|---|---|---|---|
| S.D. | IM-PH 0291(122)0 | 82 | 284 |

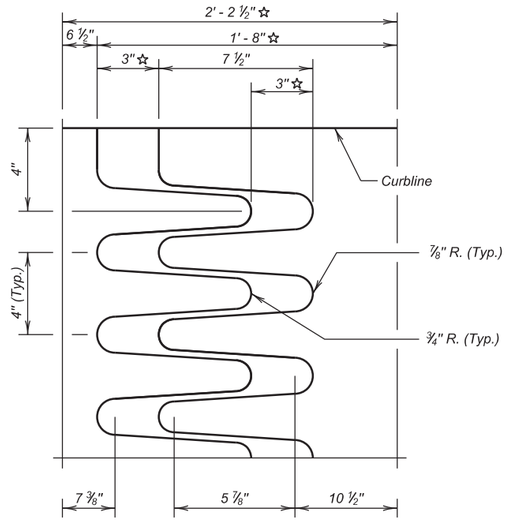


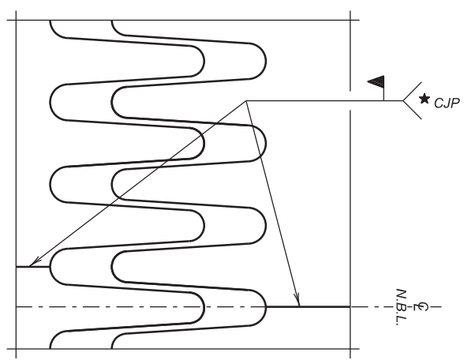


## FINGER LAYOUT

☆ Dimensions shown at 70° F

★ Complete Joint Penetration, Butt splice at crown point to be shown on shop plans for approval.

| TABLE - B | | |
|---|---|---|
| Temp. | Dimension "X" | Dimension "X" |
| 30° | 4 3/16" | 3 ½" |
| 40° | 3 15/16" | 3 ⅜" |
| 50° | 3 5/8" | 3 ¼" |
| 60° | 3 5/16" | 3 ⅛" |
| 70° | 3" | 3" |
| 80° | 2 11/16" | 2 ⅞" |
| 90° | 2 3/8" | 2 ¾" |
| 100° | 2 1/16" | 2 5/8" |

Note: Temperature in above Table Corresponds to Interior Girder Temperature.

Note: Temperature in above Table Corresponds to Interior Girder Temperature.

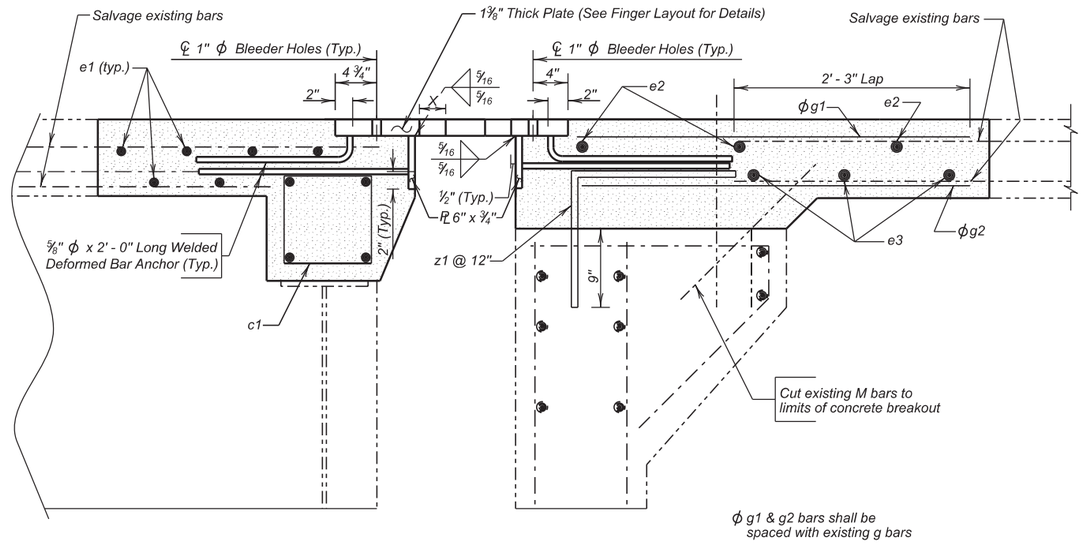


## SECTION B - B

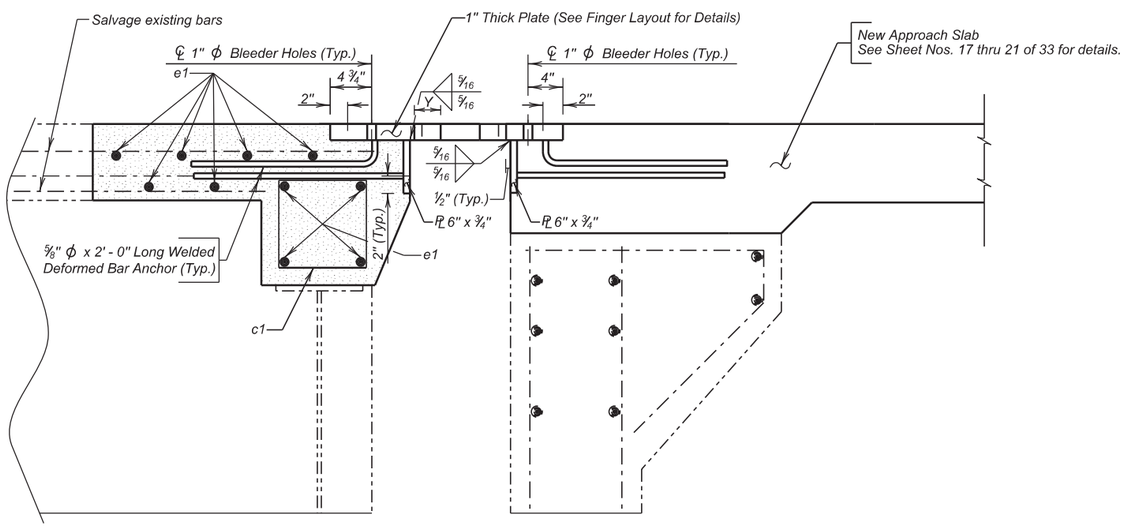


## SECTION C - C

(z bar in abutment backwall not shown. See Approach Slab details on sheet no. 19 of 32)

## REINFORCING SCHEDULE

(For Both Joint Modifications)

| | Mk. | No. | Size | Length | Type |
|---|---|---|---|---|---|
| PHASE 1 | c1 | 22 | 4 | 4' - 1" | T2 |
| | e1 | 20 | 7 | 14' - 10" | Str. |
| | e2 | 3 | 4 | 14' - 10" | Str. |
| | e3 | 3 | 6 | 14' - 10" | Str. |
| | g1 | 10 | 4 | 3' - 9" | Str. |
| | g2 | 30 | 8 | 3' - 9" | Str. |
| | △ z1 | 15 | 6 | 3' - 1" | 17A |
| PHASE 2 | c1 | 22 | 4 | 4' - 1" | T2 |
| | e1 | 20 | 7 | 14' - 10" | Str. |
| | e2 | 3 | 4 | 14' - 10" | Str. |
| | e3 | 3 | 6 | 14' - 10" | Str. |
| | g1 | 10 | 4 | 3' - 9" | Str. |
| | g2 | 30 | 8 | 3' - 9" | Str. |
| | △ z1 | 15 | 6 | 3' - 1" | 17A |

Bending Details

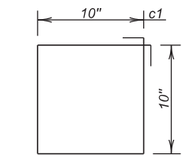


Type T2

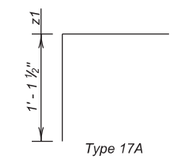


Type 17A

NOTES --
All dimensions are out to out of bars.
All reinforcing steel is to be epoxy coated.
△ Dowels

## ESTIMATED QUANTITIES

| ITEM | UNIT | QUANTITY |
|---|---|---|
| Finger Type Expansion Joint Assembly | Each | 2 |
| ⊕ Install Dowel in Concrete | Each | 30 |

Items 1 thru 6 are approximate quantities contained in the above bid item for Abutment No. 1 and are for information only.

| | PHASE 1 | PHASE 2 |
|---|---|---|
| 1. Class A45 Concrete | 4.3 Cu.Yd. | 4.3 Cu.Yd. |
| ✳ 2. Structural Steel | 3558 Lb. | 3558 Lb. |
| 3. Concrete Breakout | 5.1 Cu.Yd. | 4.2 Cu.Yd. |
| 4. No. 4 Rebar Splice | 3 Ea. | |
| 5. No. 6 Rebar Splice | 3 Ea. | |
| 6. No. 7 Rebar Splice | 10 Ea. | |
| 7. Epoxy Coated Reinforcing Steel | 755 Lb. | 755 Lb. |

Items 1 thru 5 are approximate quantities contained in the above bid item for Abutment No. 4 and are for information only.

| | PHASE 1 | PHASE 2 |
|---|---|---|
| 1. Class A45 Concrete | 1.7 Cu.Yd. | 1.7 Cu.Yd. |
| ✳ 2. Structural Steel | 3558 Lb. | 3558 Lb. |
| 3. Concrete Breakout | 1.8 Cu.Yd. | 1.6 Cu.Yd. |
| 6. No. 6 Rebar Splice | 3 Ea. | |
| 7. Epoxy Coated Reinforcing Steel | 333 Lb. | 333 Lb. |

✳ Structural Steel Informational quantity includes all finger expansion plates, anchor bars, and end block expansion plates.

⊕ Does not include the following quantities for z1 bars as these are included in the "Install Dowel in Concrete" quantity

| PHASE 1 | PHASE 2 |
|---|---|
| 70 Lb. | 70 Lb. |

**(NORTH BOUND LANES)**
**FINGER EXPANSION JOINT DETAILS**
FOR
558' - 1 ¾" COMP. GIRDER BRIDGE

30' - 0" ROADWAY — 0° SKEW
OVER BIG SIOUX RIVER — SEC. 26-T89N-R48W
STR. NO. 64-165-405 — IM-PH 0291(122)0

UNION COUNTY
S. D. DEPT. OF TRANSPORTATION
OCTOBER 2015



Use this sheet in conjuntion with Sheet Nos. 7 thru 9 of 33.

| DESIGNED BY | CK. DES. BY | DRAFTED BY | |
|---|---|---|---|
| KSK | MM | KR | Kevin N. Goeden |
| UNIN02PT | 02PTRB10 | | BRIDGE ENGINEER |

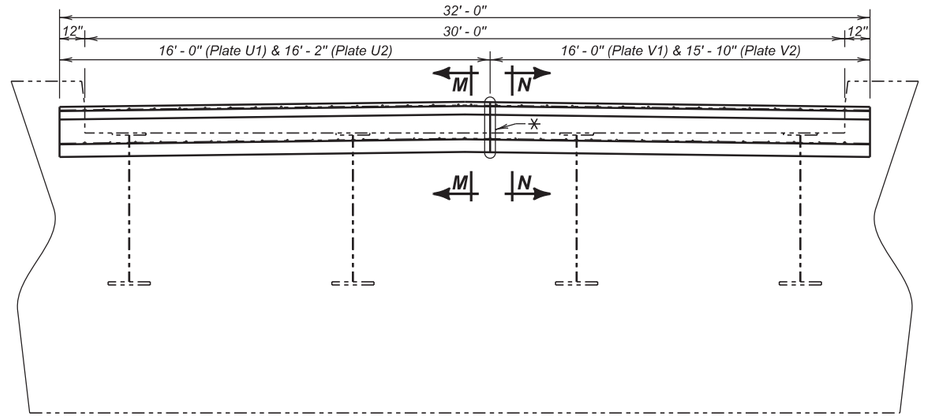


## JOINT DRAIN LAYOUT

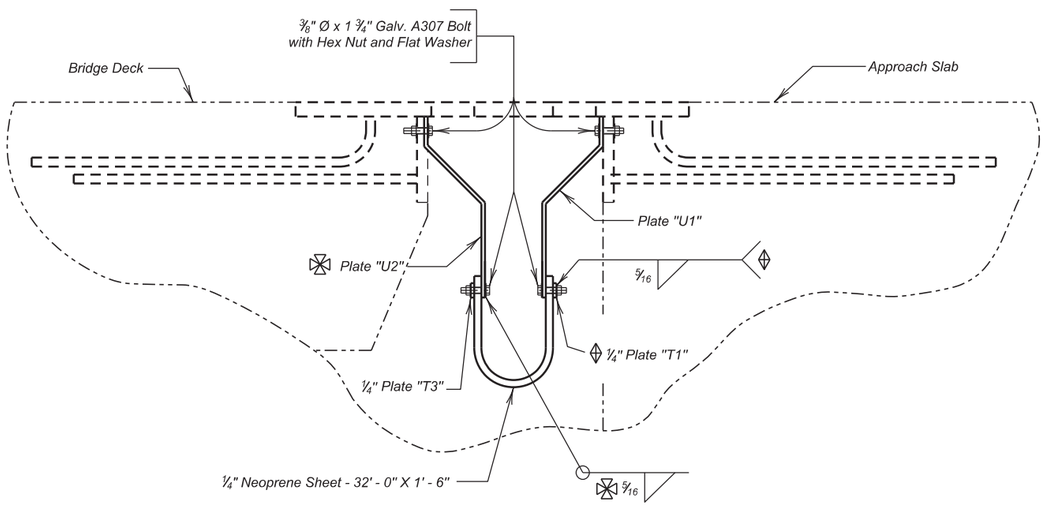


## SECTION M - M

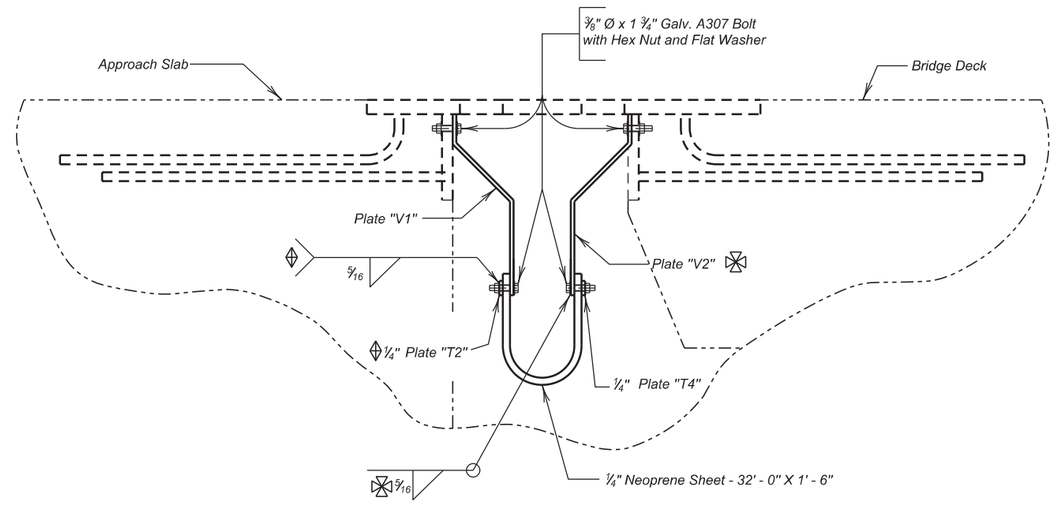


## SECTION N - N

Bolts shall be welded to Plate "U2" and Plate "V2" as shown on Deck side only

Nuts shall be welded to ¼" Plate as shown on Approach Slab side only

✳ Due to phased construction, the steel sliding drain plates shall meet in the field at the location shown above. Entire interface shall be sealed with silicone sealer as approved by the Engineer.

## NOTE :

Joint Drain System is designed to be installed independent of Finger Type Expansion Joint Assembly following the procedure below

1. Install plates "V1 & V2" and "U1 & U2" using bolts as shown.
2. Install Neoprene Sheet and Plate "T1", "T2", "T3" & "T4" (with welded hardware) by, inserting bolts through Plate "U1" & "U2" or "V1" & "V2" and threading bolts into nuts welded to plate "T1", "T2", "T3" & "T4" as shown below.
3. Place Neoprene Sheet and Plate "T1", "T2", "T3" & "T4" on bolts welded to Plates "U1" & "U2" or "V1" & "V2" and tighten nuts as shown below

**(NORTH BOUND LANES)**
**ABUT. NO. 1 & 4 JOINT DRAIN (CONTINUED)**

FOR

558' - 1 ¾" COMP. GIRDER BRIDGE

30' - 0" ROADWAY — 0° SKEW
OVER BIG SIOUX RIVER — SEC. 26-T89N-R48W
STR. NO. 64-165-405 — IM-PH 0291(122)0

UNION COUNTY

S. D. DEPT. OF TRANSPORTATION

OCTOBER 2015

Use this sheet in conjunction with Sheet Nos. 12 thru 14 of 33.



| DESIGNED BY | CK. DES. BY | DRAFTED BY | |
|---|---|---|---|
| KSK | MM | KR | Kevin N. Goeden |
| UNIN02PT | 02PTRB11 | | BRIDGE ENGINEER |

| STATE OF | PROJECT | SHEET NO. | TOTAL SHEETS |
|---|---|---|---|
| S.D. | IM-PH 0291(122)0 | 84 | 284 |

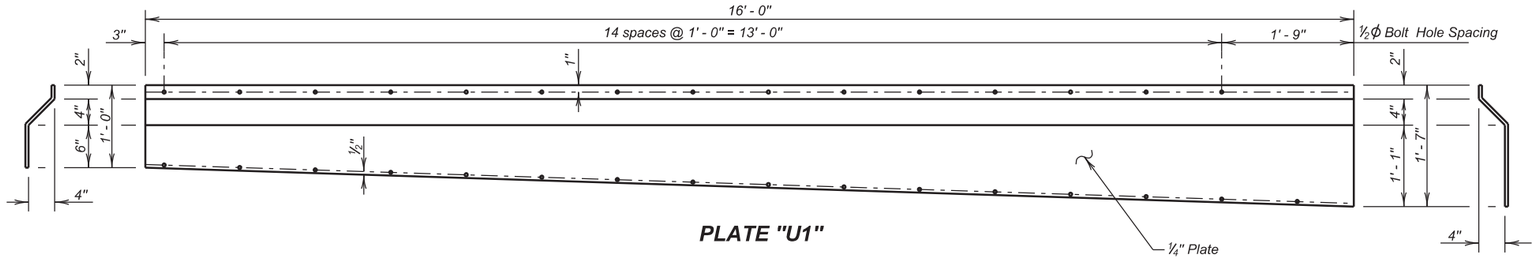


**PLATE "U1"**

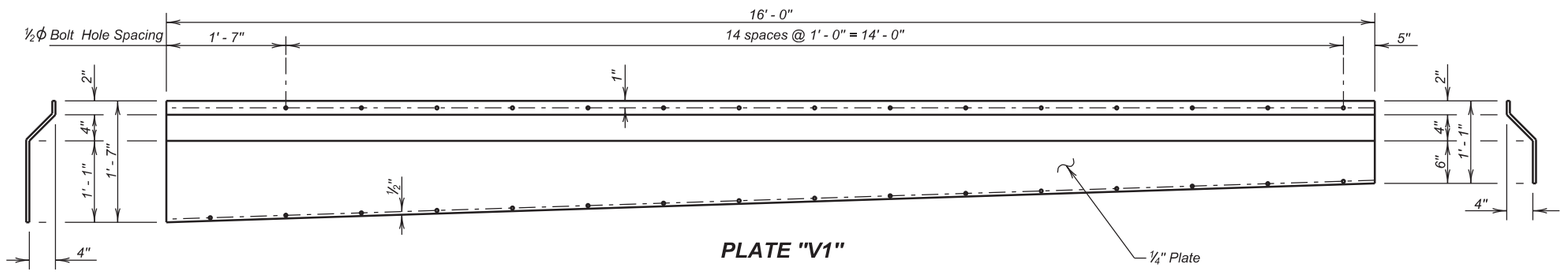


**PLATE "V1"**

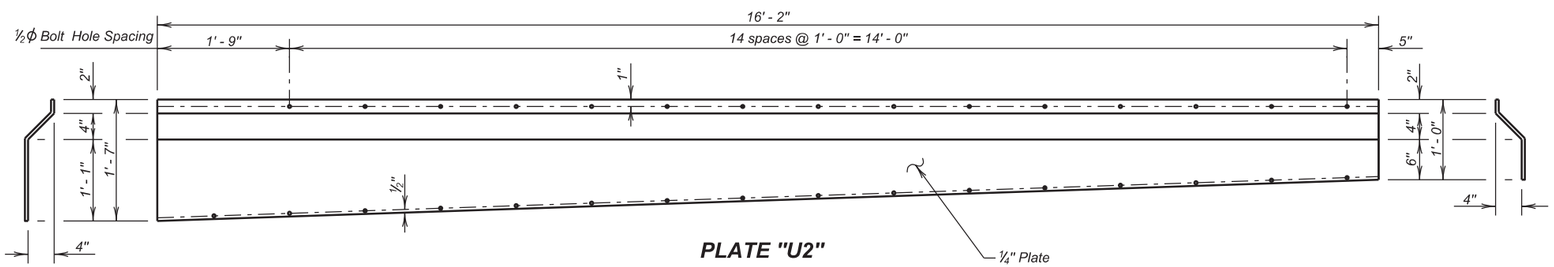


**PLATE "U2"**

✳ *Due to phased construction, the steel sliding drain plates shall meet in the field at the location shown above. Entire interface shall be sealed with silicone sealer as approved by the Engineer.*

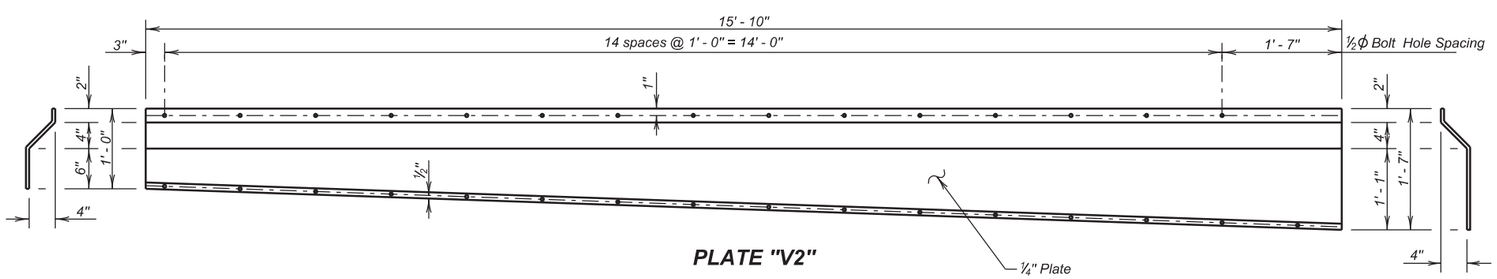


**PLATE "V2"**

*Use this sheet in conjunction with Sheet Nos. 11, 13 and 14 of 33.*

**(NORTH BOUND LANES)**
**ABUT. NO. 1 & 4 JOINT DRAIN**

FOR

558' - 1 ¾" COMP. GIRDER BRIDGE

30' - 0" ROADWAY — 0° SKEW
OVER BIG SIOUX RIVER — SEC. 26-T89N-R48W
STR. NO. 64-165-405 — IM-PH 0291(122)0

UNION COUNTY

S. D. DEPT. OF TRANSPORTATION

OCTOBER 2015

12 OF 33

| DESIGNED BY | CK. DES. BY | DRAFTED BY | |
|---|---|---|---|
| KSK | MM | KR | Kevin N. Goeden |
| UNIN02PT | 02PTRB12 | | BRIDGE ENGINEER |

| STATE OF | PROJECT | SHEET NO. | TOTAL SHEETS |
|---|---|---|---|
| S.D. | IM-PH 0291(122)0 | 85 | 284 |

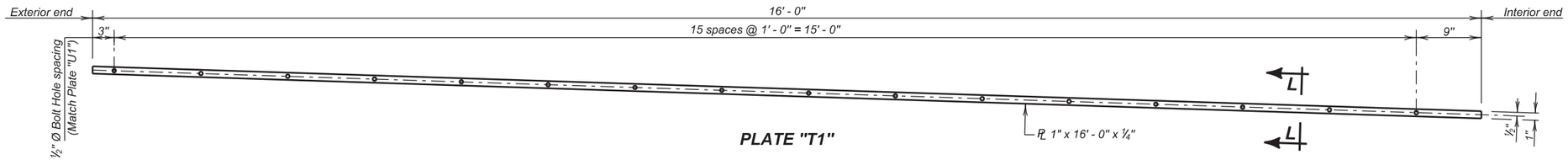


**PLATE "T1"**

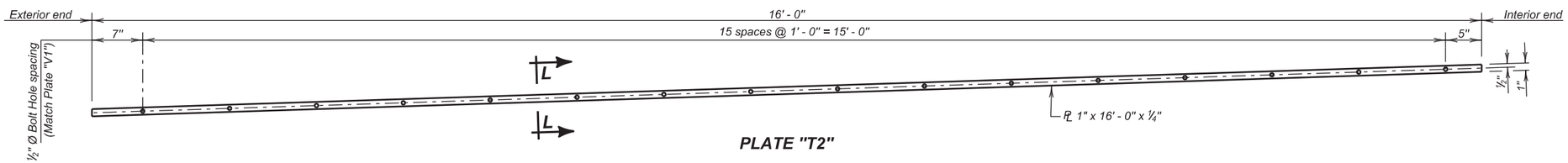


**PLATE "T2"**

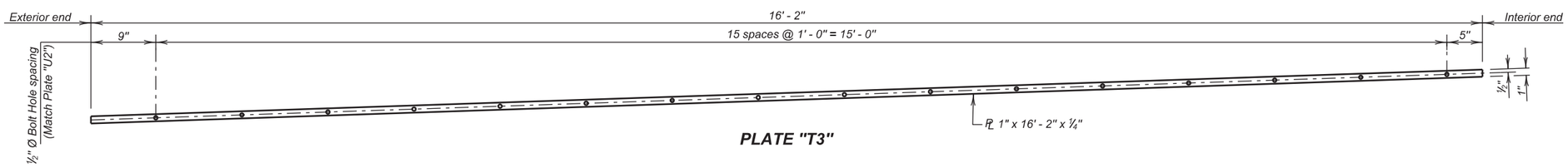


**PLATE "T3"**

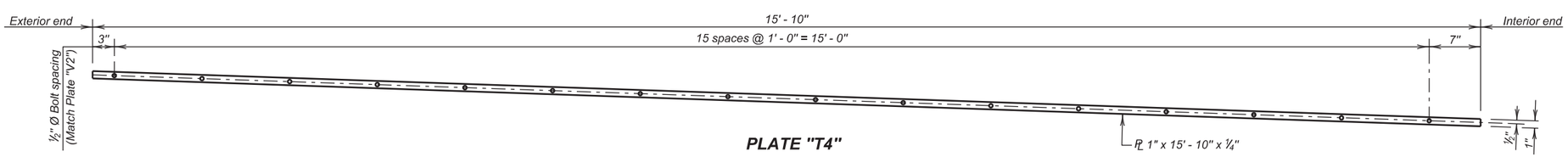


**PLATE "T4"**

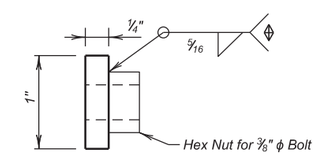


**SECTION L - L**

⊕ Nuts shall be welded to ¼" Plate as shown on Approach Slab side only.

*Use this sheet in conjunction with Sheet Nos. 11 &12 of 33.*

**(NORTH BOUND LANES)**
**JOINT DRAIN (CONTINUED)**

FOR

558' - 1 ¾" COMP. GIRDER BRIDGE

30' - 0" ROADWAY — 0° SKEW
OVER BIG SIOUX RIVER — SEC. 26-T89N-R48W
STR. NO. 64-165-405 — IM-PH 0291(122)0

UNION COUNTY
S. D. DEPT. OF TRANSPORTATION
OCTOBER 2015



| DESIGNED BY | CK. DES. BY | DRAFTED BY | |
|---|---|---|---|
| KSK | MM | KR | Kevin N. Goeden |
| UNIN02PT | 02PTRB13 | | BRIDGE ENGINEER |

| STATE OF | PROJECT | SHEET NO. | TOTAL SHEETS |
|---|---|---|---|
| S.D. | IM-PH 0291(122)0 | 86 | 284 |

★ The length of metal gutter will need to be determined in the field for each location individually prior to fabrication.

✳ Slope will be set in the field prior to fabrication to clear the existing berm spill cone.

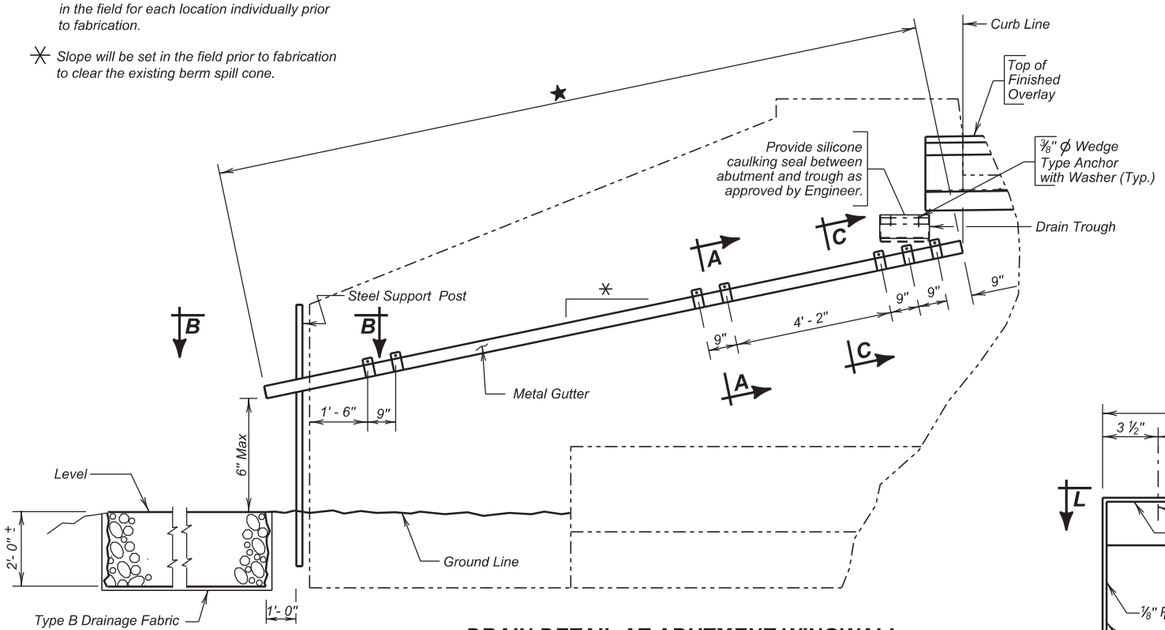


## DRAIN DETAIL AT ABUTMENT WINGWALL

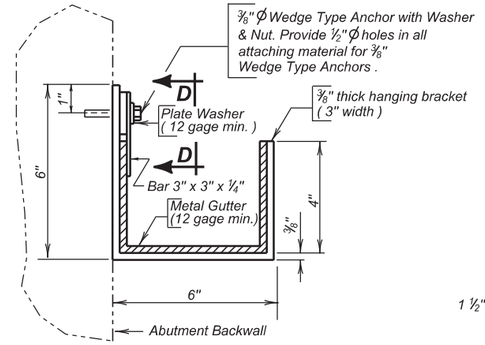


## SECTION A - A

( Typical Gutter Section at Bracket )

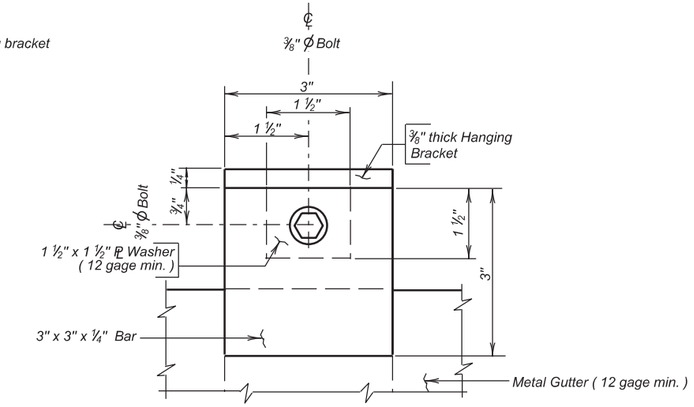


## VIEW D - D

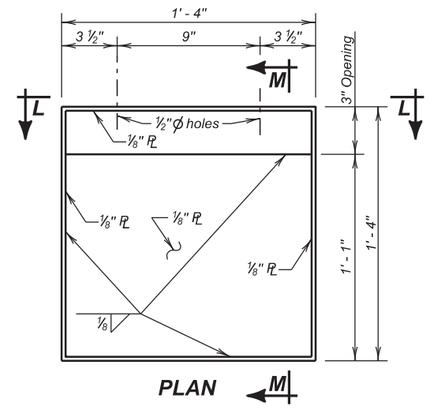


## PLAN

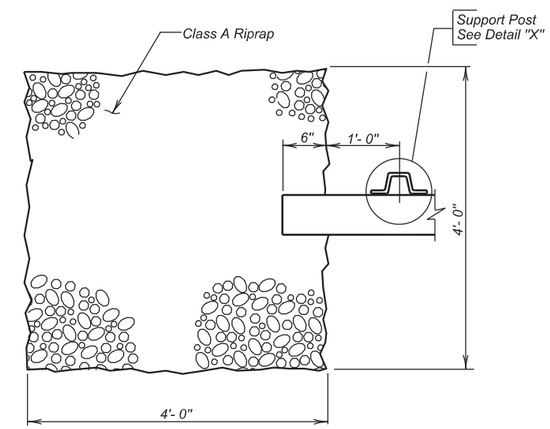


## VIEW B - B

( Detail of Rockpile )

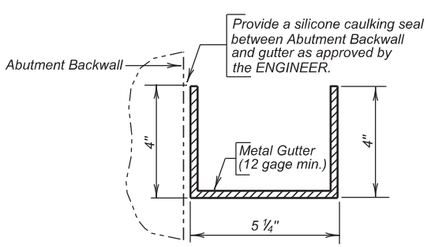


## SECTION C - C

( Typical Gutter Section )

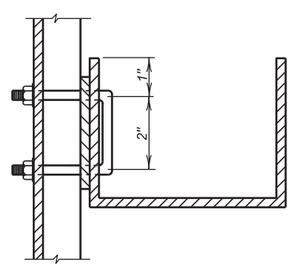


## SECTION Y - Y

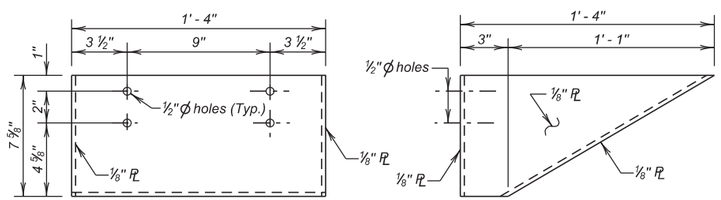


## SECTION L - L

## SECTION M - M

## DRAINAGE TROUGH DETAILS

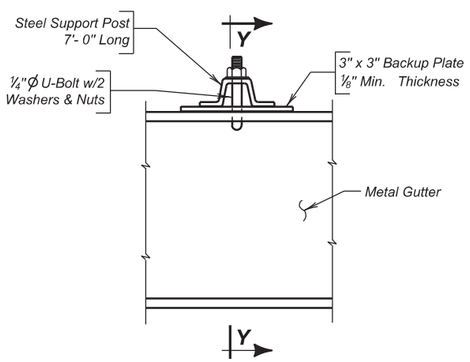


## DETAIL "X"

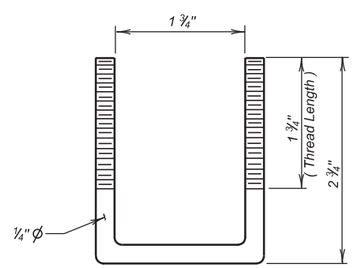


## U - BOLT

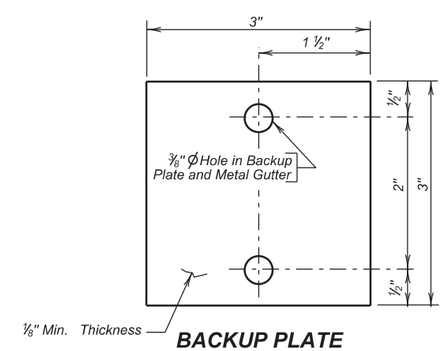


## BACKUP PLATE

Use this sheet in conjunction with Sheet Nos. 11 thru 13 of 33.

### ESTIMATED QUANTITIES

| ITEM | UNIT | QUANTITY |
|---|---|---|
| Abutment Joint Drain | Each | 2 |

**(NORTH BOUND LANES)**
**JOINT DRAIN (CONTINUED)**

FOR

558' - 1 ¾" COMP. GIRDER BRIDGE

30' - 0" ROADWAY — 0° SKEW
OVER BIG SIOUX RIVER — SEC. 26-T89N-R48W
STR. NO. 64-165-405 — IM-PH 0291(122)0

UNION COUNTY
S. D. DEPT. OF TRANSPORTATION
OCTOBER 2015



| DESIGNED BY | CK. DES. BY | DRAFTED BY | |
|---|---|---|---|
| KSK | MM | KR | Kevin N. Goeden |
| UNIN02PT | 02PTRB14 | | BRIDGE ENGINEER |

| STATE OF | PROJECT | SHEET NO. | TOTAL SHEETS |
|---|---|---|---|
| S.D. | IM-PH 0291(122)0 | 87 | 284 |

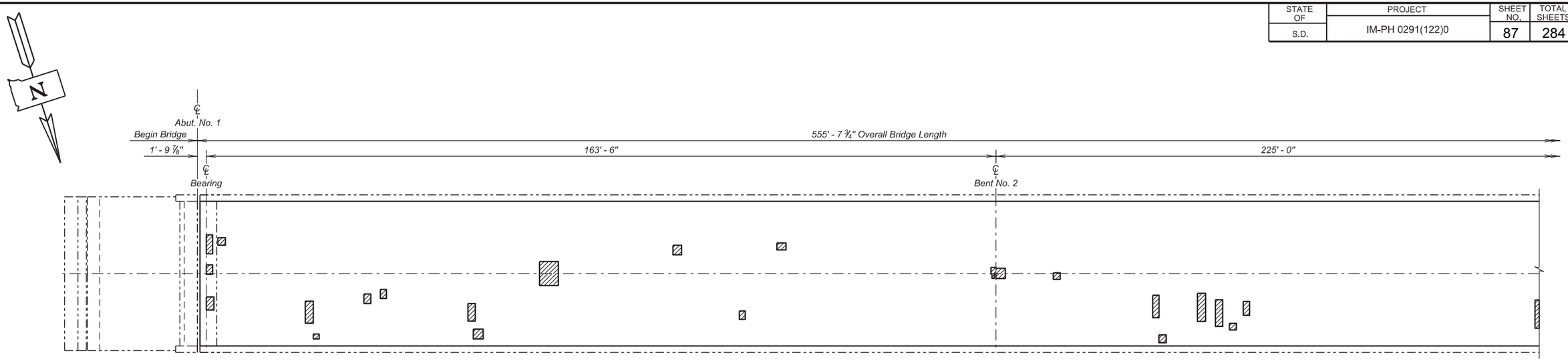


**PARTIAL PLAN**

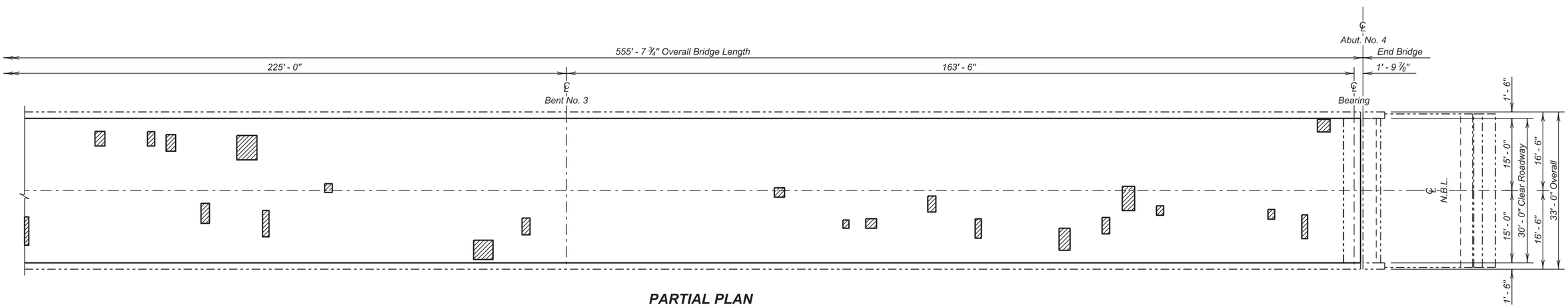


**PARTIAL PLAN**

*LEGEND:*

*Shaded areas indicate approximate location of unsound concrete requiring Concrete Removal, Class B*

**(NORTH BOUND LANES)**
**DECK DELAMINATION DETAILS**

FOR

558' - 1 ¾" COMP. GIRDER BRIDGE

30' - 0" ROADWAY — 0° SKEW
OVER BIG SIOUX RIVER — SEC. 26-T89N-R48W
STR. NO. 64-165-405 — IM-PH 0291(122)0

UNION COUNTY

S. D. DEPT. OF TRANSPORTATION

OCTOBER 2015



| DESIGNED BY | CK. DES. BY | DRAFTED BY | |
|---|---|---|---|
| KSK | BD | KR | Kevin N. Goeden |
| UNIN02PT | 02PTRB15 | | BRIDGE ENGINEER |

| STATE OF | PROJECT | SHEET NO. | TOTAL SHEETS |
|---|---|---|---|
| S.D. | IM-PH 0291(122)0 | 88 | 284 |

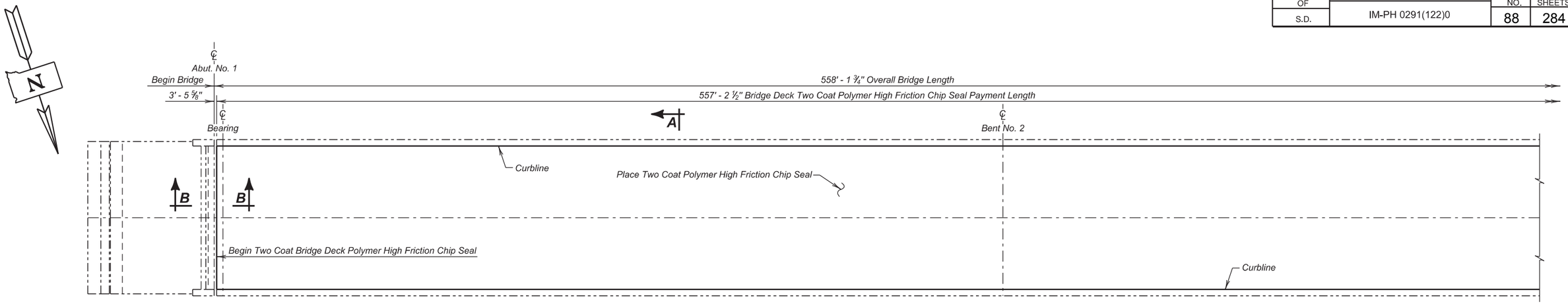


**PARTIAL PLAN**

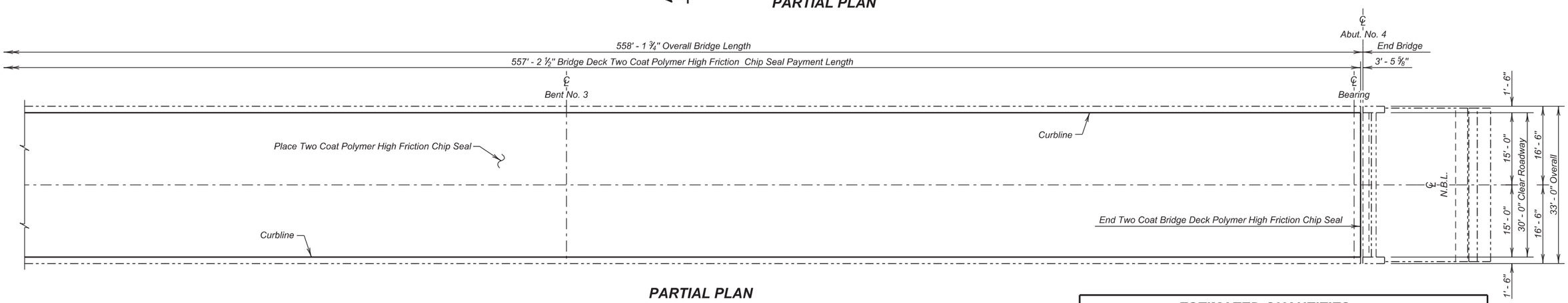


**PARTIAL PLAN**

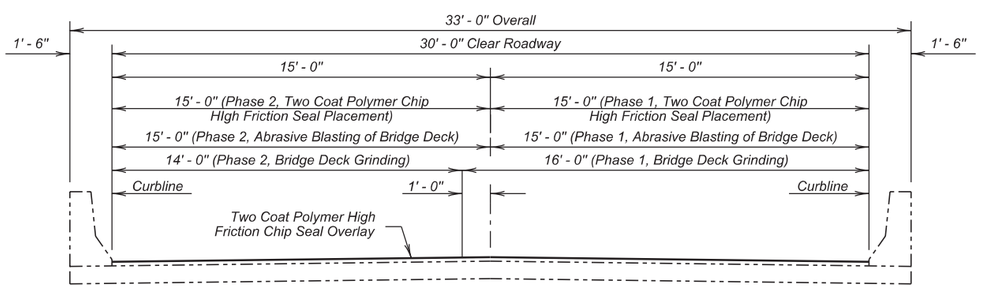


**SECTION A - A**

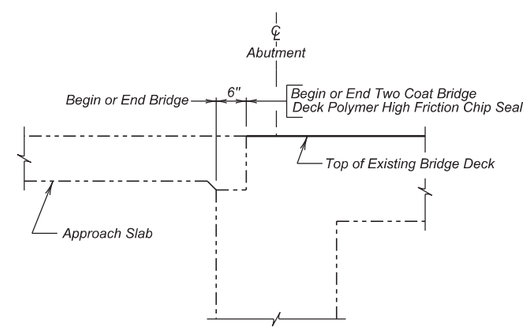


**SECTION B - B**

## ESTIMATED QUANTITIES

| | ITEM | UNIT | QUANTITY Phase I | QUANTITY Phase 2 |
|---|---|---|---|---|
| * | Concrete Patching Material, Bridge Deck | Cu. Ft. | 23.3 | 20.4 |
| | Two Coat Bridge Deck Polymer High Friction Chip Seal | Sq. Yd. | 918.7 | 918.7 |
| | Abrasive Blasting of Bridge Deck | Sq. Yd. | 918.7 | 918.7 |
| | Bridge Deck Grinding | Sq. Yd. | 979.9 | 857.5 |
| * | Concrete Removal, Class A | Sq. Yd. | 3.6 | 3.1 |
| * | Concrete Removal, Class B | Sq. Yd. | 3.6 | 3.1 |

* Concrete Removal, Class A; Concrete Removal, Class B; and Concrete Patching Material may not be encountered and may be removed from the project at the direction of the Engineer.

**(NORTH BOUND LANES)**

**TWO COAT BRIDGE DECK POLYMER HIGH FRICTION CHIP SEAL DETAILS**
FOR

558' - 1 3/4" COMP. GIRDER BRIDGE

30' - 0" ROADWAY — 0° SKEW
OVER BIG SIOUX RIVER — SEC. 26-T89N-R48W
STR. NO. 64-165-405 — IM-PH 0291(122)0

UNION COUNTY
S. D. DEPT. OF TRANSPORTATION
OCTOBER 2015



| DESIGNED BY | CK. DES. BY | DRAFTED BY | |
|---|---|---|---|
| KSK | BD | KR | Kevin N. Boeden BRIDGE ENGINEER |
| UNIN02PT | 02PTRB16 | | |

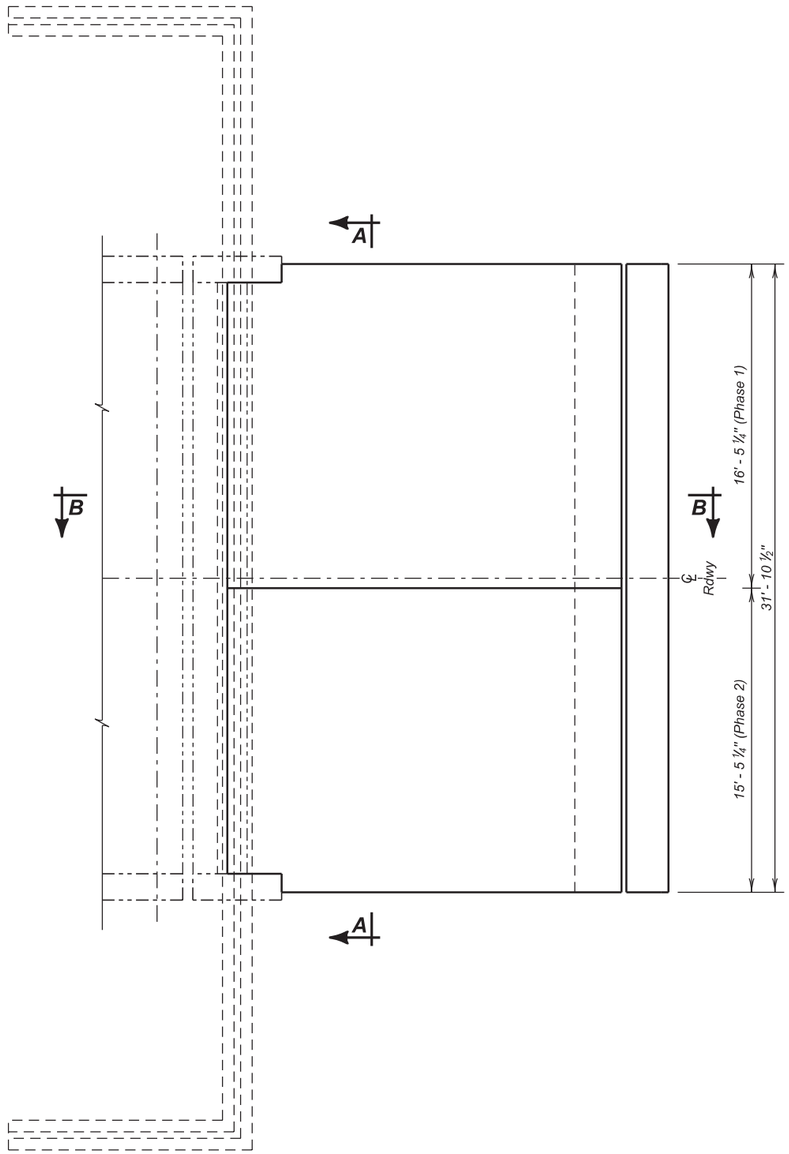


**PLAN**

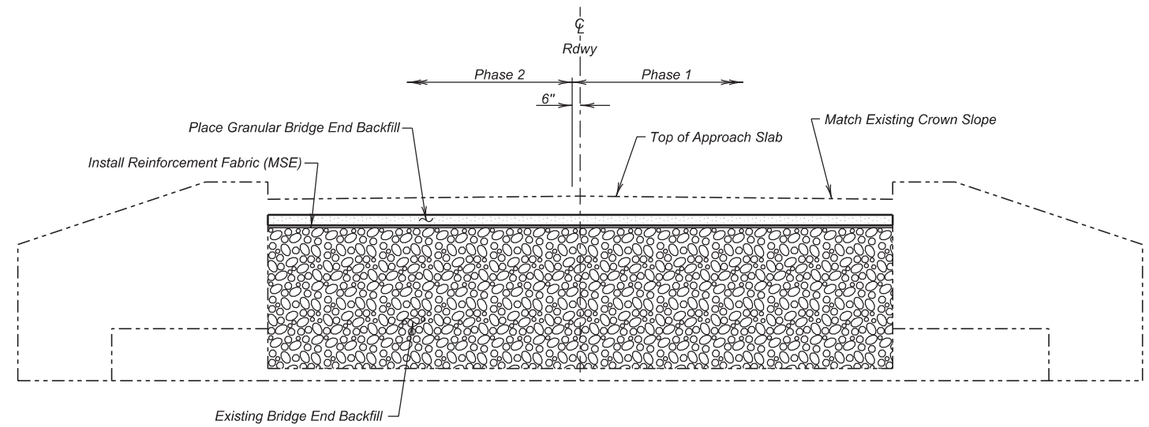


**SECTION A - A**

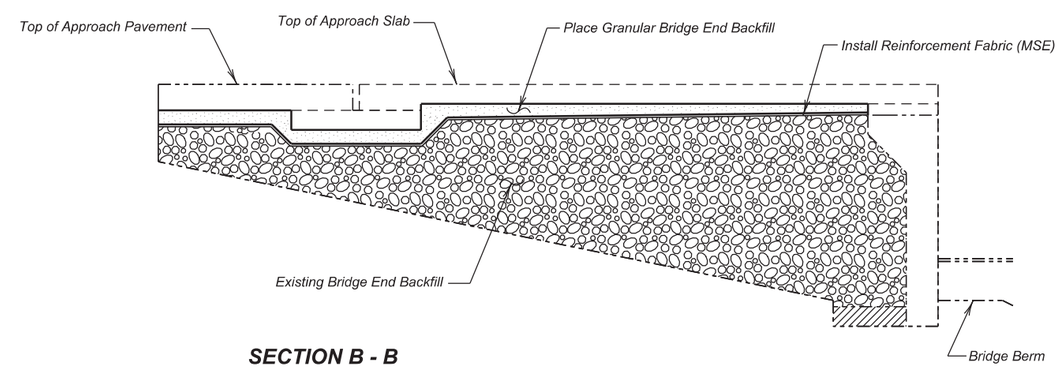


**SECTION B - B**

(Abutment No. 4)

(at ℄ Roadway)

**ESTIMATED QUANTITIES**

| ITEM | UNIT | QUANTITY Phase I | QUANTITY Phase 2 |
|---|---|---|---|
| ⌀ Granular Bridge End Backfill | CuYd | 2.3 | 2.4 |

⌀ Item 1 and is an approximate quantity contained in the above bid item and is for information only.

| | PHASE 1 | PHASE 2 |
|---|---|---|
| 1. MSE Geotextile Fabric | 48.8 Sq. Yd. | 52.0 Sq.Yd. |

**(NORTH BOUND LANES)**
**BRIDGE END BACKFILL MODIFICATION**
**(ABUT. NO. 4 ONLY)**
FOR

558' - 1 ¾" COMP. GIRDER BRIDGE

30' - 0" ROADWAY — 0° SKEW
OVER BIG SIOUX RIVER — SEC. 26-T89N-R48W
STR. NO. 64-165-405 — IM-PH 0291(122)0

UNION COUNTY
S. D. DEPT. OF TRANSPORTATION
OCTOBER 2015



| DESIGNED BY | CK. DES. BY | DRAFTED BY | |
|---|---|---|---|
| KSK | BD | KR | Kevin N. Goeden |
| UNIN02PT | 02PTRB17 | | BRIDGE ENGINEER |

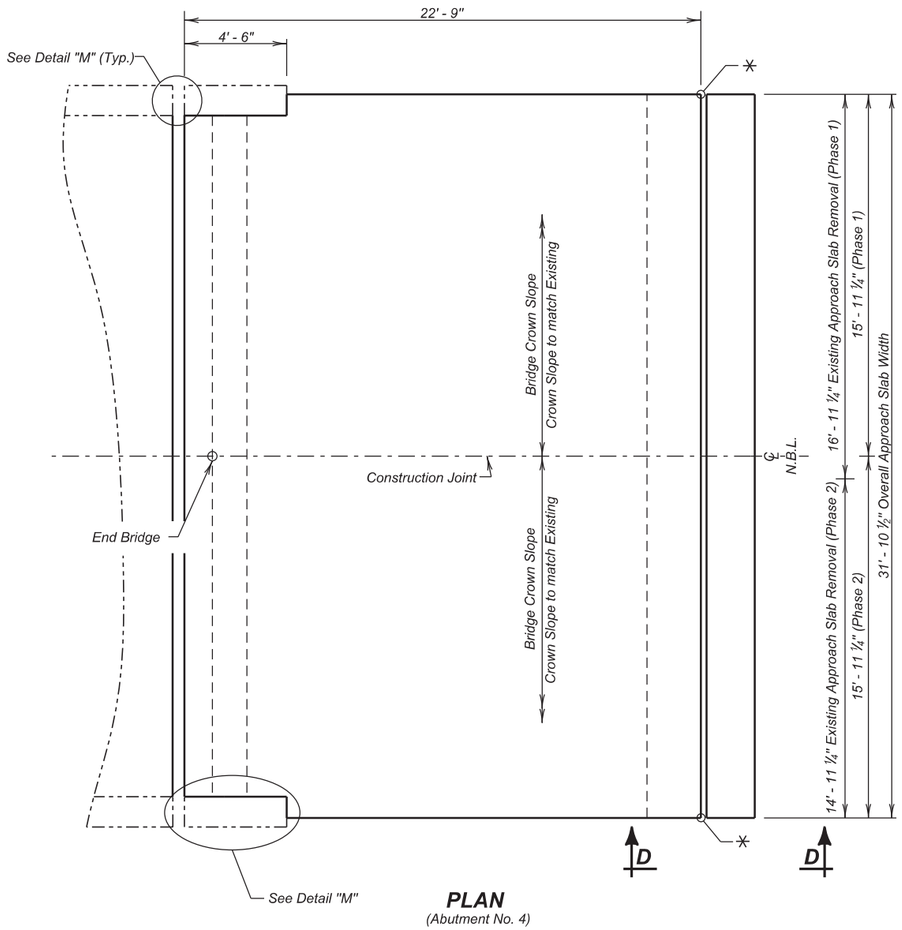


**PLAN**
(Abutment No. 4)

✳ Elevation is Top of Slab back of Curb at this point. See Approach Slab Notes.

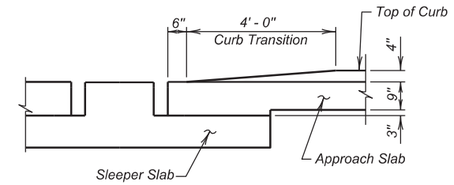


**VIEW D - D**

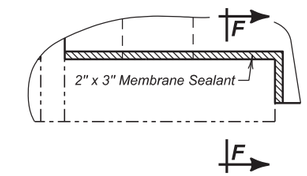


**DETAIL "M"**

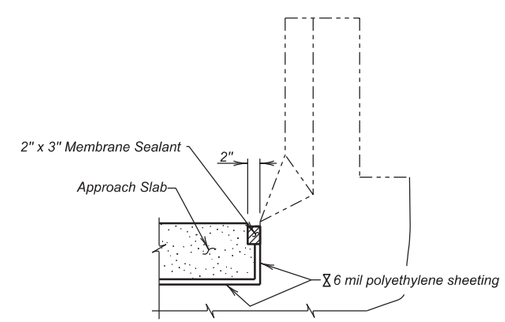


**SEC. F - F**

6 mil polyetylene sheeting shall not interfere with the bond between the Membrane Sealant and the approach slab.

Use this sheet in conjunction with Sheet Nos. 19 thru 21 of 33.

**(NORTH BOUND LANES)**
**APPROACH SLAB LAYOUT (ABUT. NO. 4 ONLY)**
FOR
558' - 1 ¾" COMP. GIRDER BRIDGE

30' - 0" ROADWAY — 0° SKEW
OVER BIG SIOUX RIVER — SEC. 26-T89N-R48W
STR. NO. 64-165-405 — IM-PH 0291(122)0

UNION COUNTY
S. D. DEPT. OF TRANSPORTATION
OCTOBER 2015



| DESIGNED BY | CK. DES. BY | DRAFTED BY | |
|---|---|---|---|
| KSK | BD | KR | Kevin N. Goeden |
| UNIN02PT | 02PTRB18 | | BRIDGE ENGINEER |

| STATE OF | PROJECT | SHEET NO. | TOTAL SHEETS |
|---|---|---|---|
| S.D. | IM-PH 0291(122)0 | 91 | 284 |

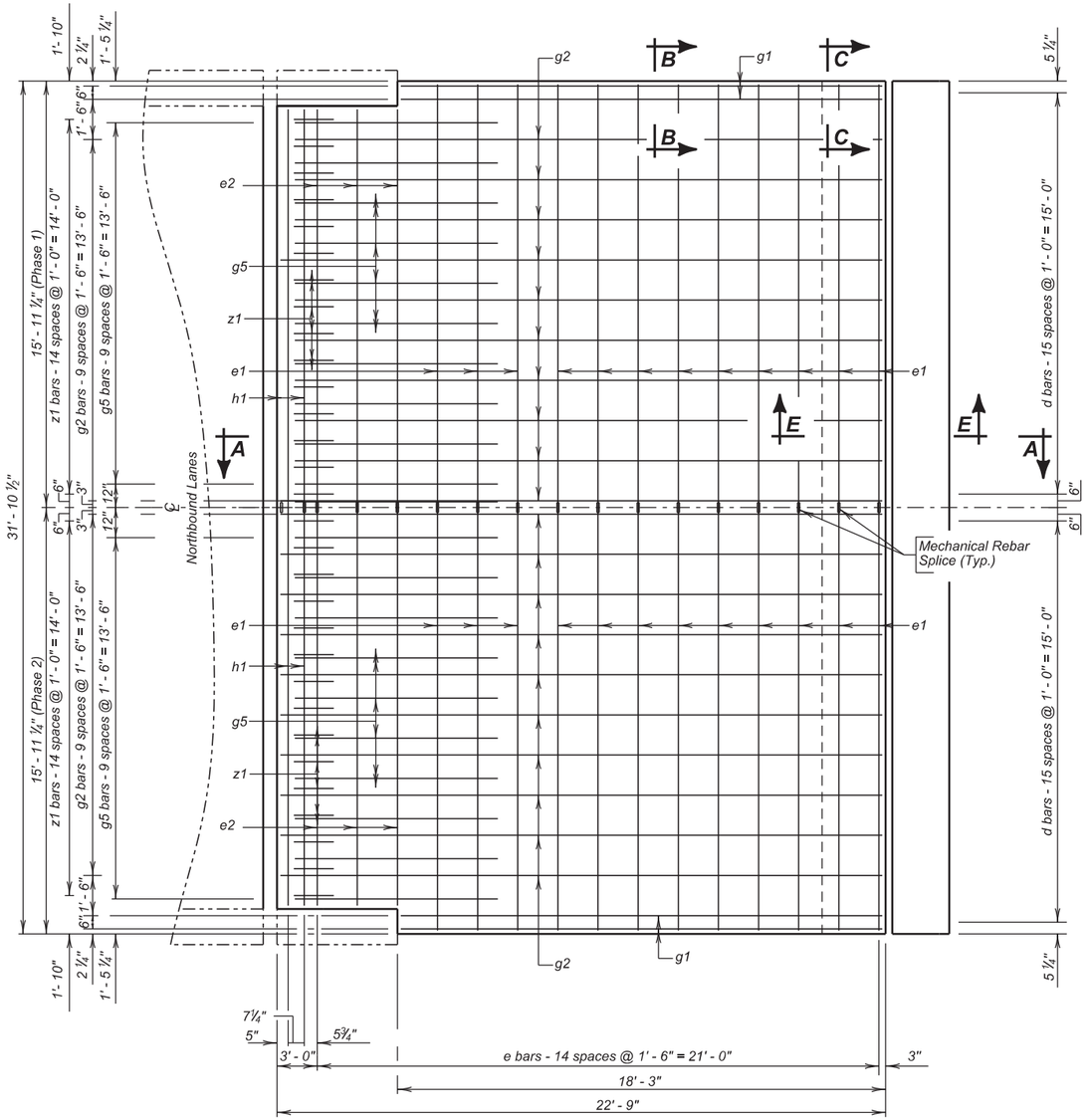


**PLAN**
(Top Steel)
(Abutment No. 4)

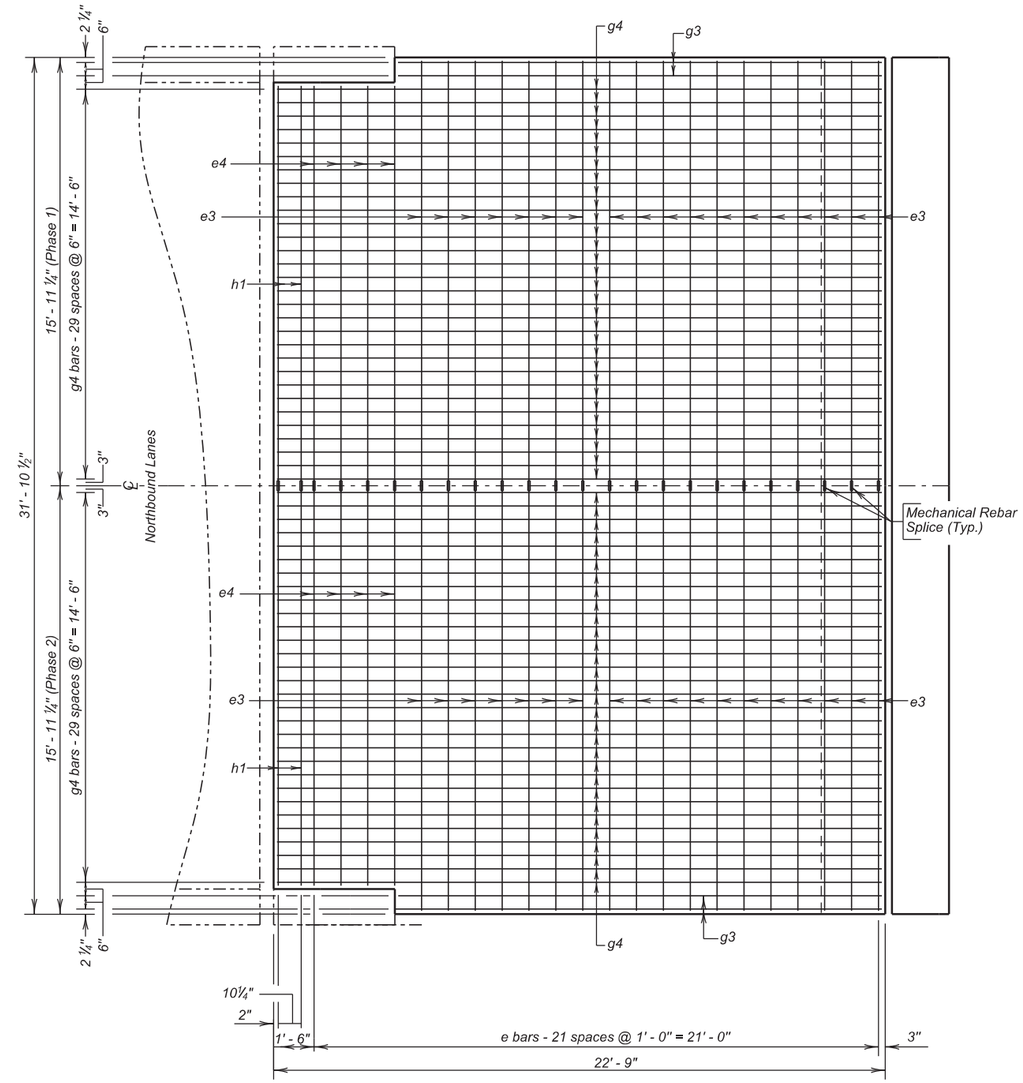


**PLAN**
(Bottom Steel)
(Abutment No. 4)

**(NORTH BOUND LANES)**
**APPROACH SLAB DETAILS (ABUT. NO. 4)**

558' - 1 ¾" COMP. GIRDER BRIDGE

30' - 0" ROADWAY — 0° SKEW
OVER BIG SIOUX RIVER — SEC. 26-T89N-R48W
STR. NO. 64-165-405 — IM-PH 0291(122)0

UNION COUNTY
S. D. DEPT. OF TRANSPORTATION
OCTOBER 2015



*Use this sheet in conjunction with sheet nos. 18, 20 and 21 of 33.*

| DESIGNED BY | CK. DES. BY | DRAFTED BY | |
|---|---|---|---|
| KSK | BD | KR | Kevin N. Goeden |
| UNIN02PT | 02PTRB19 | | BRIDGE ENGINEER |

| STATE OF | PROJECT | SHEET NO. | TOTAL SHEETS |
|---|---|---|---|
| S.D. | IM-PH 0291(122)0 | 92 | 284 |

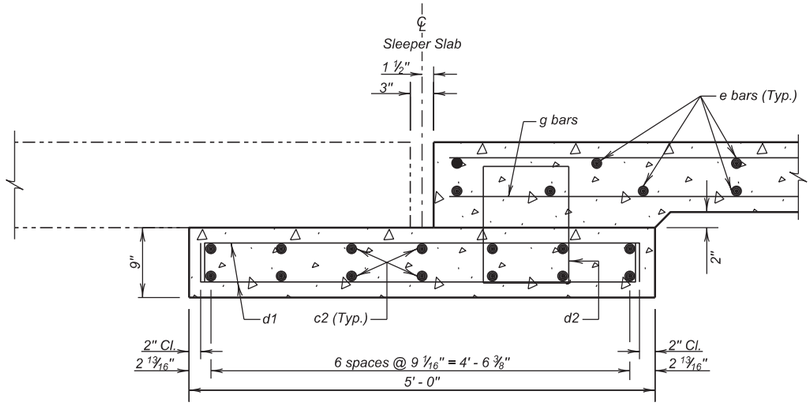


**SECTION E - E**

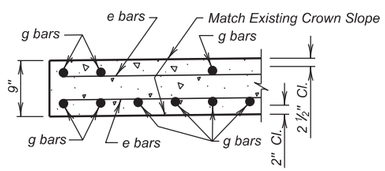


**SEC. C - C**

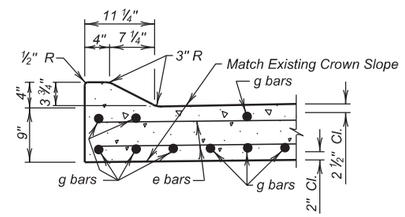


**SEC. B - B**

## REINFORCING SCHEDULE

( For One Approach and Sleeper Slab )

PHASE 1

| | Mk. | No. | Size | Length | Type |
|---|---|---|---|---|---|
| ⌀ | c1 | 14 | 5 | 15' - 9" | Str. |
| | d1 | 32 | 4 | 5' - 5" | 2 |
| | d2 | 16 | 4 | 5' - 1" | T2 |
| ⌀ | e1 | 12 | 4 | 15' - 9" | Str. |
| ⌀ | e2 | 3 | 4 | 14' - 10" | Str. |
| ⌀ | e3 | 18 | 6 | 15' - 9" | Str. |
| ⌀ | e4 | 4 | 6 | 14' - 10" | Str. |
| | g1 | 2 | 4 | 17' - 11" | Str. |
| | g2 | 10 | 4 | 22' - 6" | Str. |
| | g3 | 2 | 8 | 17' - 11" | Str. |
| | g4 | 30 | 8 | 22' - 6" | Str. |
| | g5 | 10 | 4 | 7' - 7" | Str. |
| ⌀ | h1 | 4 | 6 | 14' - 10" | Str. |
| △ | z1 | 15 | 6 | 3' - 1" | 17A |

PHASE 2

| | Mk. | No. | Size | Length | Type |
|---|---|---|---|---|---|
| ⌀ | c1 | 14 | 5 | 15' - 9" | Str. |
| | d1 | 32 | 4 | 5' - 5" | 2 |
| | d2 | 16 | 4 | 5' - 1" | T2 |
| ⌀ | e1 | 12 | 4 | 15' - 9" | Str. |
| ⌀ | e2 | 3 | 4 | 14' - 10" | Str. |
| ⌀ | e3 | 18 | 6 | 15' - 9" | Str. |
| ⌀ | e4 | 4 | 6 | 14' - 10" | Str. |
| | g1 | 2 | 4 | 17' - 11" | Str. |
| | g2 | 10 | 4 | 22' - 6" | Str. |
| | g3 | 2 | 8 | 17' - 11" | Str. |
| | g4 | 30 | 8 | 22' - 6" | Str. |
| | g5 | 10 | 4 | 7' - 7" | Str. |
| ⌀ | h1 | 4 | 6 | 14' - 10" | Str. |
| △ | z1 | 15 | 6 | 3'- 1" | 17A |

Bending Details

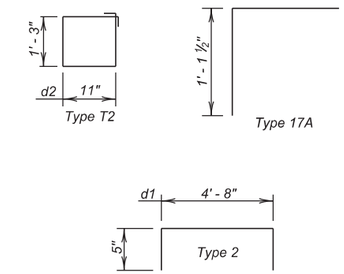


Note -
All Dimensions are out to out of bars.
All Bars to be Epoxy Coated.

△ Dowels

⌀ Splice (Mechanically Spliced)

## ESTIMATED QUANTITIES

(For One Approach and One Sleeper Slab)

| ITEM | UNIT | QUANTITY Phase I | QUANTITY Phase 2 |
|---|---|---|---|
| Remove Concrete Bridge Approach Slab | Sq Yd | 51.3 | 45.2 |
| Concrete Approach Slab for Bridge | Sq Yd | 39.8 | 39.8 |
| Concrete Approach Sleeper Slab for Bridge | Sq Yd | 8.9 | 8.9 |
| Install Dowel In Concrete | Each | 15 | 15 |
| No. 4 Rebar Splice | Each | 15 | — |
| No. 5 Rebar Splice | Each | 24 | — |
| No. 6 Rebar Splice | Each | 26 | — |

| | PHASE I | PHASE 2 |
|---|---|---|
| 1. Concrete in Approach Slabs. | 11.0 Cu. Yd | 11.0 Cu. Yd |
| ✳ 2. Epoxy Coated Re-Steel in Approach Slabs. | 3003 Lb. | 3003 Lb. |
| 3. Concrete in Sleeper Slabs | 2.2 Cu. Yd. | 2.2 Cu. Yd |
| 4. Epoxy Coated Re - Steel in Sleeper Slabs. | 254 Lb. | 254 Lb. |

Items 1 thru 4 are approximate quantities contained in the above bid item and are for information only.

✳ Does not include the following quantities for z1 bars as these are paid for in the Bid Item "Install Dowel in Concrete".

| PHASE I | PHASE 2 |
|---|---|
| 69 Lb. | 69 Lb. |

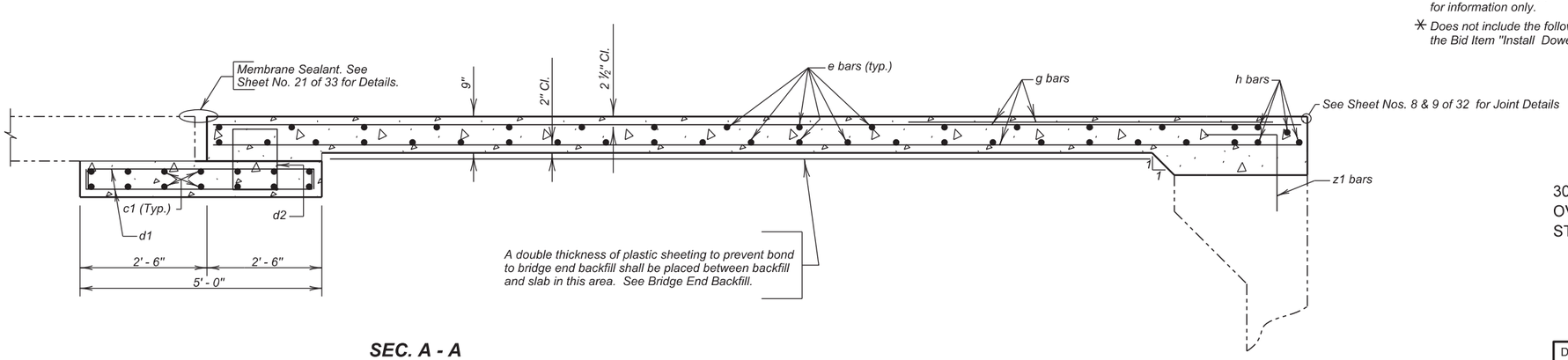


**SEC. A - A**

**(NORTH BOUND LANES)**
**APPROACH SLAB DETAILS (CONTINUED)**

FOR

558' - 1 3/4" COMP. GIRDER BRIDGE

30' - 0" ROADWAY — 0° SKEW
OVER BIG SIOUX RIVER — SEC. 26-T89N-R48W
STR. NO. 64-165-405 — IM-PH 0291(122)0

UNION COUNTY
S. D. DEPT. OF TRANSPORTATION
OCTOBER 2015



| DESIGNED BY | CK. DES. BY | DRAFTED BY | |
|---|---|---|---|
| KSK | BD | KR | Kevin N. Goeden |
| UNIN02PT | 02PTRB20 | | BRIDGE ENGINEER |

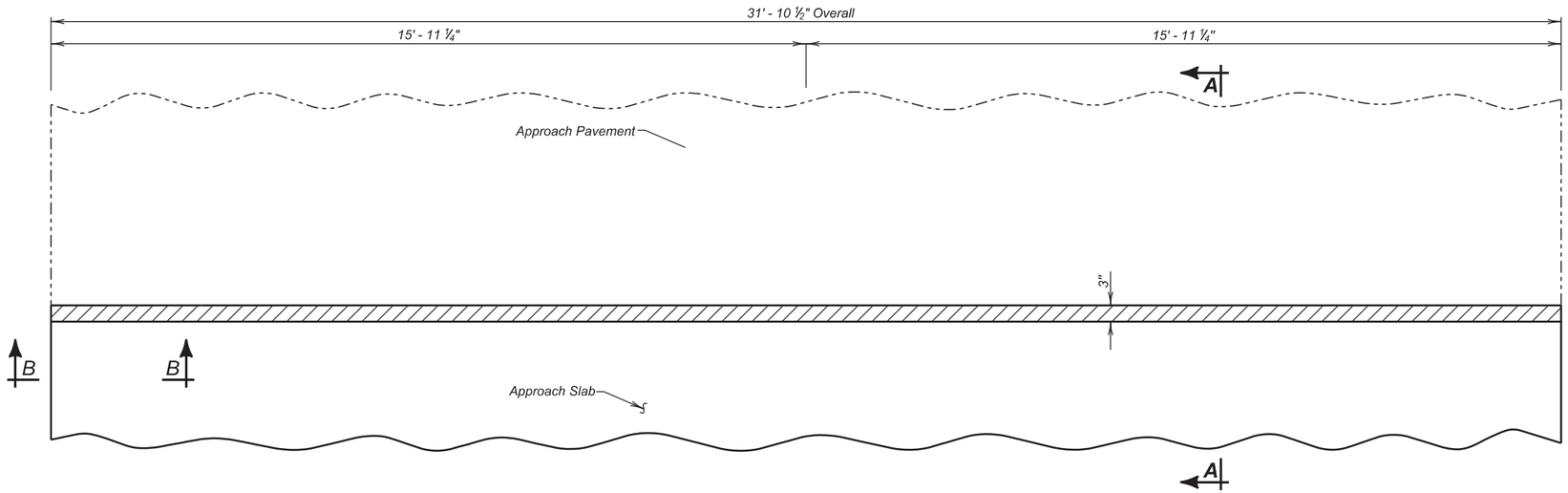


**PLAN**

| ESTIMATED QUANTITIES | | | |
|---|---|---|---|
| ITEM | UNIT | QUANTITY | |
| | | Phase I | Phase 2 |
| Membrane Sealant Expansion Joint | Ft | 15.9 | 15.9 |
| | | | |

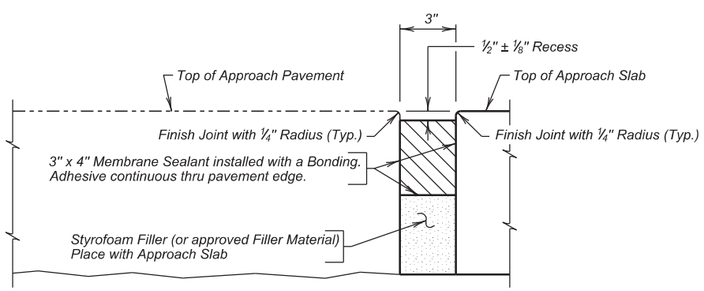


**SECTION A - A**

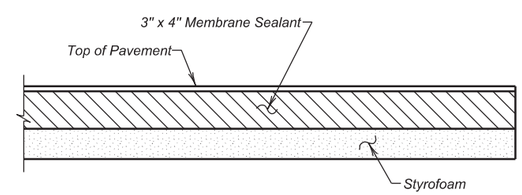


**SECTION B - B**

*Use this sheet in conjunction with sheet nos. 18 thru 20 of 33.*

**(NORTH BOUND LANES)**
**APPROACH SLAB JOINT DETAILS**

FOR

558' - 1 ¾" COMP. GIRDER BRIDGE

30' - 0" ROADWAY — 0° SKEW
OVER BIG SIOUX RIVER — SEC. 26-T89N-R48W
STR. NO. 64-165-405 — IM-PH 0291(122)0

UNION COUNTY

S. D. DEPT. OF TRANSPORTATION

OCTOBER 2015



| DESIGNED BY | CK. DES. BY | DRAFTED BY | |
|---|---|---|---|
| KSK | BD | KR | Kevin N. Goeden |
| UNIN02PT | 02PTRB21 | | BRIDGE ENGINEER |

| STATE OF | PROJECT | SHEET NO. | TOTAL SHEETS |
|---|---|---|---|
| S.D. | IM-PH 0291(122)0 | 94 | 284 |

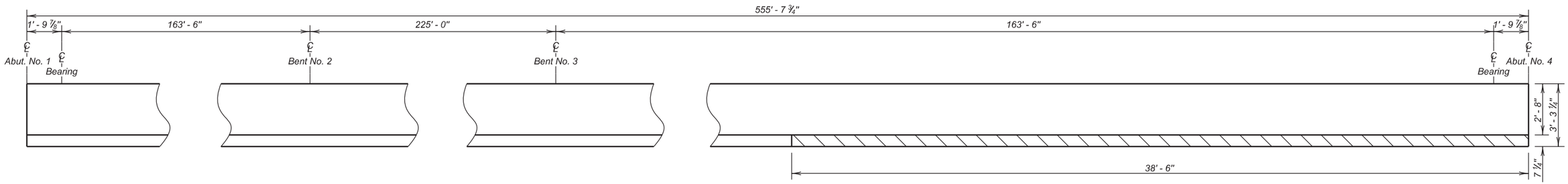


**VIEW A - A**
(Southwest Corner of Abutment No. 4)

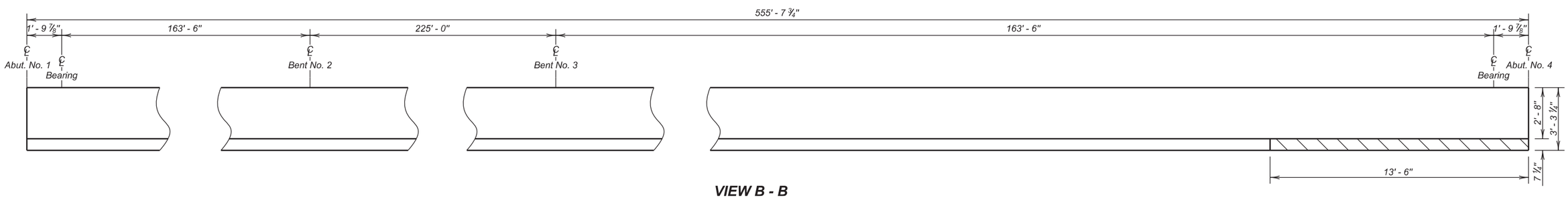


**VIEW B - B**
(Northwest Corner of Abutment No. 4)

LEGEND:

Shaded areas indicate limits of Concrete Breakout.

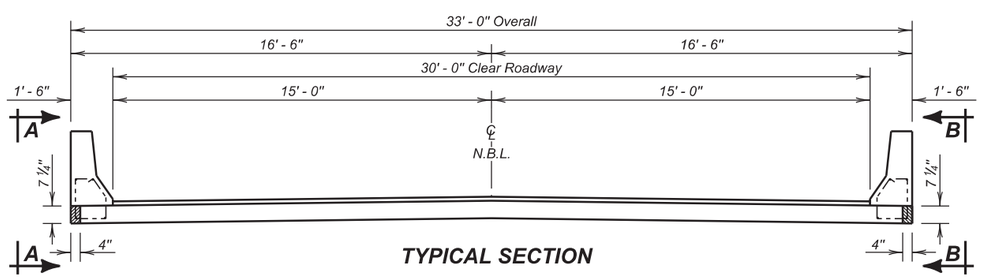


**TYPICAL SECTION**

## ESTIMATED QUANTITIES

| ITEM | UNIT | QUANTITY |
|---|---|---|
| * Breakout Structural Concrete | Cu. Yd. | 0.4 |
| * Concrete Patching Material, Miscellaneous | Cu. Ft. | 10.5 |
| Galvanic Anode | Each | 27 |

* Quantity is based on approximate dimensions shown in these plans. Actual quantity will vary depending on field conditions.

**(NORTH BOUND LANES)**
**SOFFIT REPAIR DETAILS**
FOR
558' - 1 3/4" COMP. GIRDER BRIDGE

30' - 0" ROADWAY — 0° SKEW
OVER BIG SIOUX RIVER — SEC. 26-T89N-R48W
STR. NO. 64-165-405 — IM-PH 0291(122)0

UNION COUNTY
S. D. DEPT. OF TRANSPORTATION
OCTOBER 2015



| DESIGNED BY | CK. DES. BY | DRAFTED BY | |
|---|---|---|---|
| KSK | BD | KR | Kevin N. Goeden |
| UNIN02PT | 02PTRB22 | | BRIDGE ENGINEER |

| STATE OF | PROJECT | SHEET NO. | TOTAL SHEETS |
|---|---|---|---|
| S.D. | IM-PH 029(112)10 | 95 | 284 |

BENCH MARK: No.

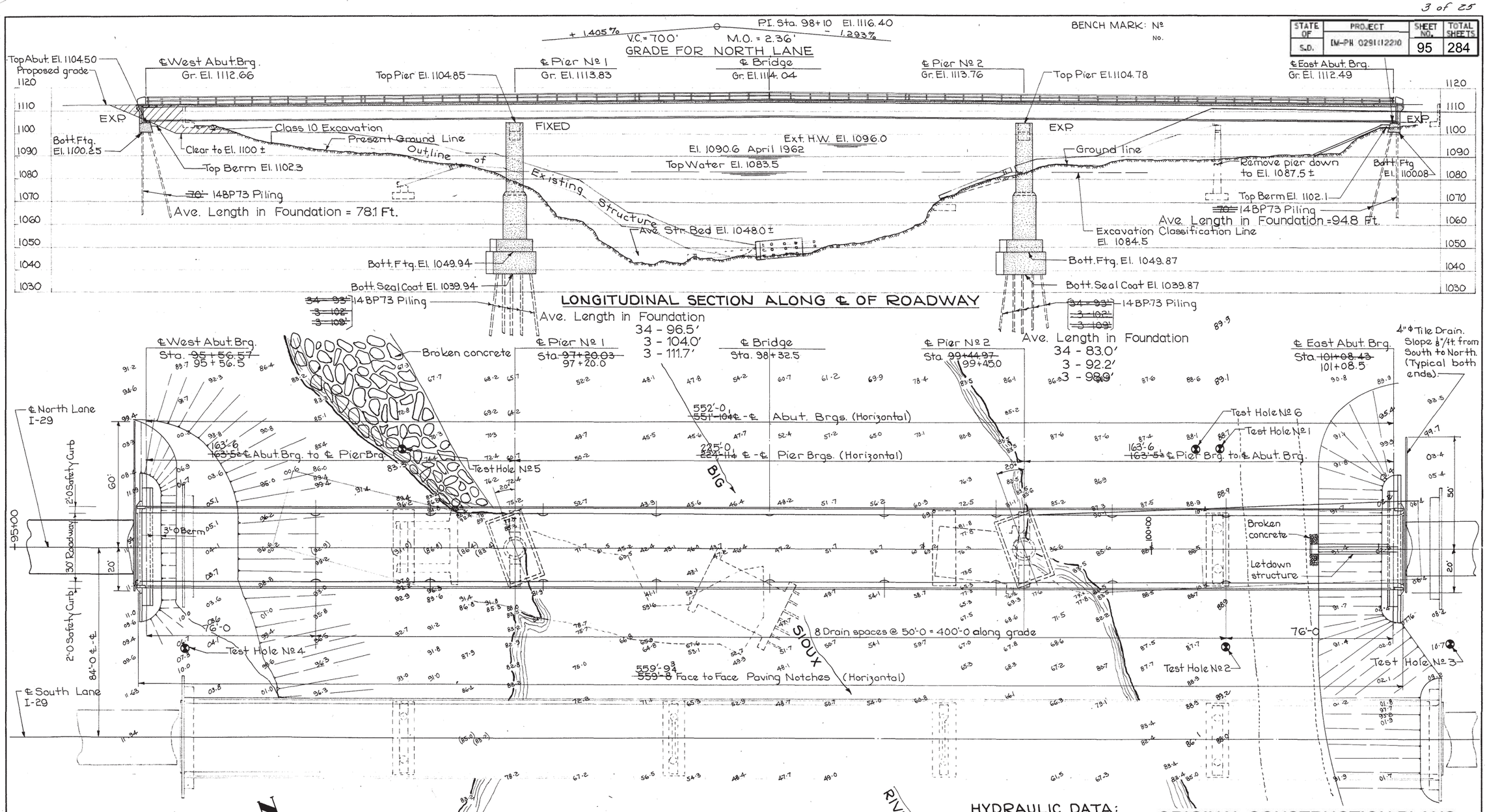


## SITUATION PLAN

Scale: 1" = 20'-0

**HYDRAULIC DATA:**
Drainage Area = 9000 sq. mi.
Design Q = 60,000 c.f.s.

**LOCATION:**
Woodbury County, Iowa
Union County, South Dakota
T 89 N R 48 W
Section 26
Over Big Sioux River

STR. NO. 64-165-405

Revised 12-14-62: Station and horizontal dimensions changed.

# ORIGINAL CONSTRUCTION PLANS

Design For
**552'-0 x 30'-0 CONTINUOUS WELDED PLATE GIRDER BRIDGE**
163'-6 End Spans 225'-0 Center Span
**SITUATION PLAN**
Station 98+32.5 Project No ER 41 (6)
**WOODBURY COUNTY**
IOWA STATE HIGHWAY
November 1962
Design No 462 Woodbury County

BENCH MARK: Nº 1-A Sta. 101+28.5 Rt. 66' I. H. C. B.M. El. 1112.8

| STATE OF | PROJECT | SHEET NO. | TOTAL SHEETS |
|---|---|---|---|
| S.D. | IM-PH 029(112)210 | 96 | 284 |

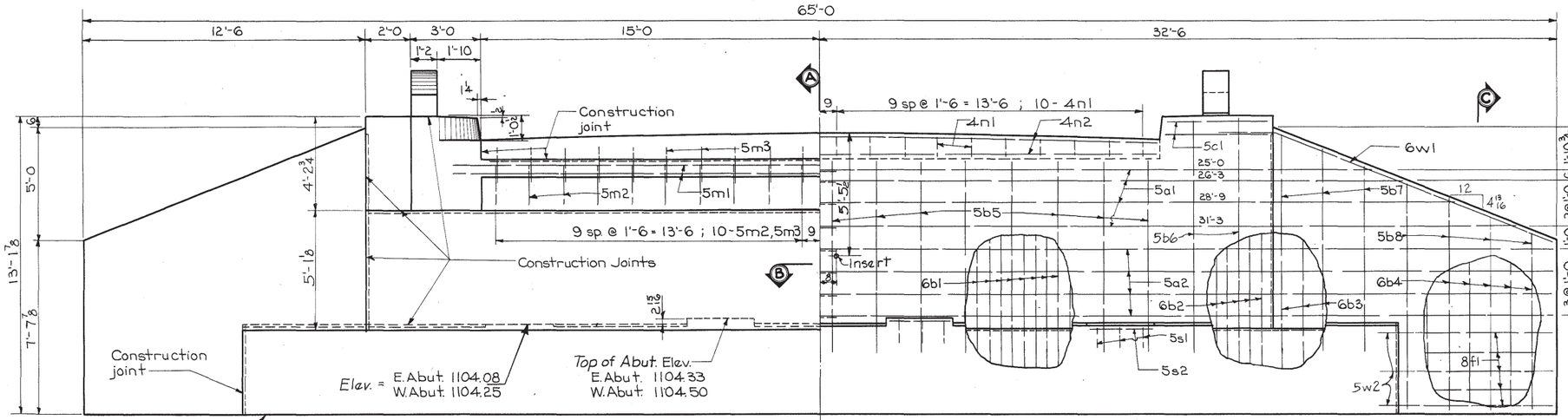


HALF REAR ELEVATION

HALF FRONT ELEVATION

Symmetrical about ℄ Roadway

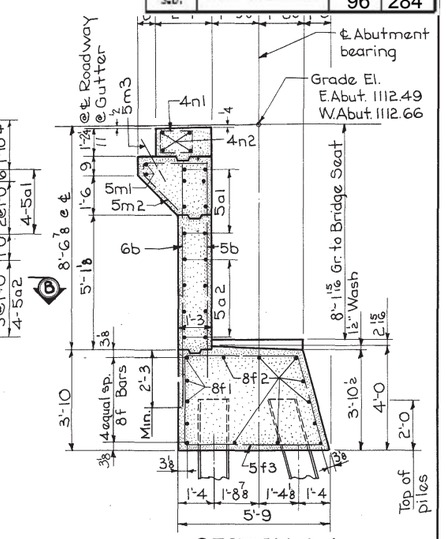


SECTION A-A

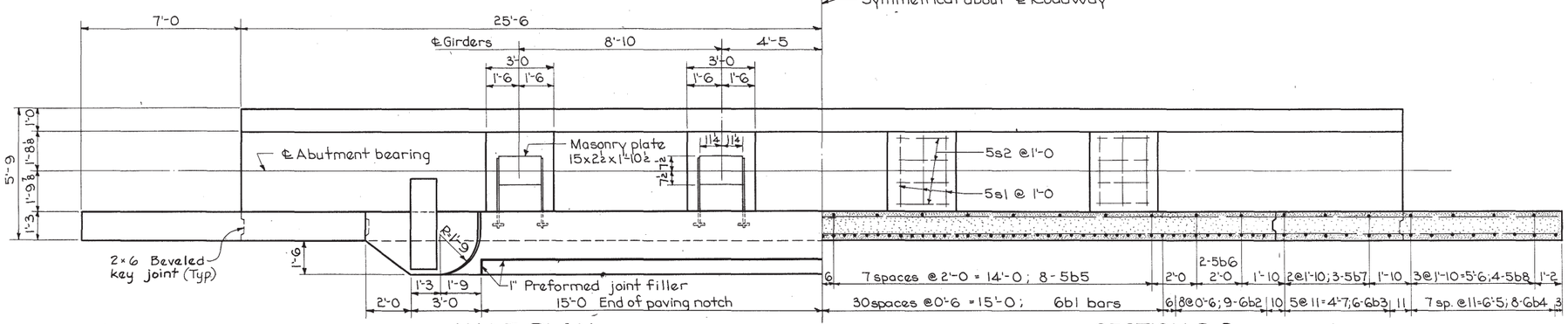


HALF PLAN

SECTION B-B

Masonry plates and girders are to be set before backwall is poured. Masonry plates are included in Superstructure estimate.

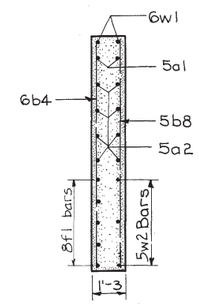


SECTION C-C

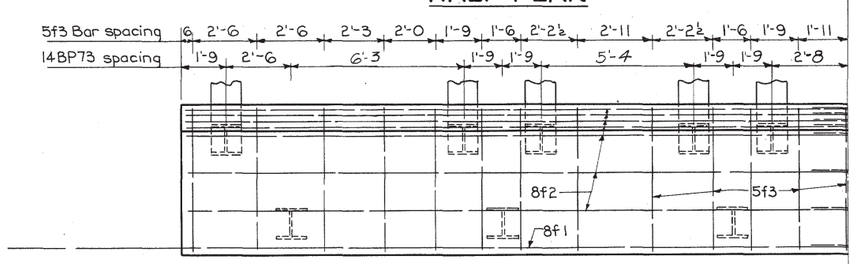


HALF FOOTING PLAN

16 - 14 BP73 x 70' Steel piles required per abutment. Batter front piles 1:4 in direction shown.

Abutment pile started in pilot holes drilled about 15' deep. Pile drove to design penetration without encountering any obstructions. Bearing by formula was not obtained. Pile bearing value approved by the load testing method. The batter pile were extended to obtain greater penetration.

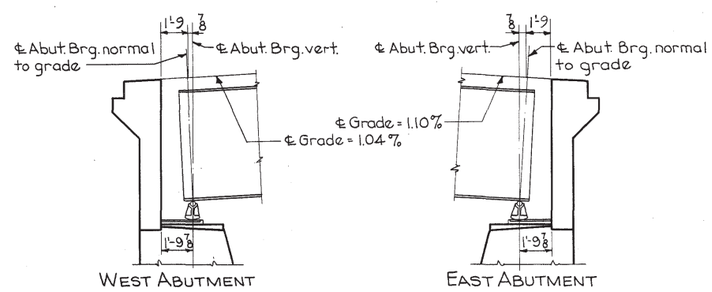


PART LONGITUDINAL SECTION

Showing grade variations along ℄ bridge at abutments.

NOTE:
Unless otherwise noted or shown, all distances are measured parallel to grade from bearings normal to grade.

STR. NO. 64-165-405

# ORIGINAL CONSTRUCTION PLANS

Design For

## 552'-0 x 30'-0 CONTINUOUS WELDED PLATE GIRDER BRIDGE

163'-6 End Spans 225'-0 Center Span

## ABUTMENT DETAILS

Station 98+32.5 Project Nº ER 41 (6)

## WOODBURY COUNTY

IOWA STATE HIGHWAY

November 1962



Design Nº 462 Woodbury County File Nº 21675

| STATE OF | PROJECT | SHEET NO. | TOTAL SHEETS |
|---|---|---|---|
| S.D. | BM-PH 029(112)210 | 97 | 284 |

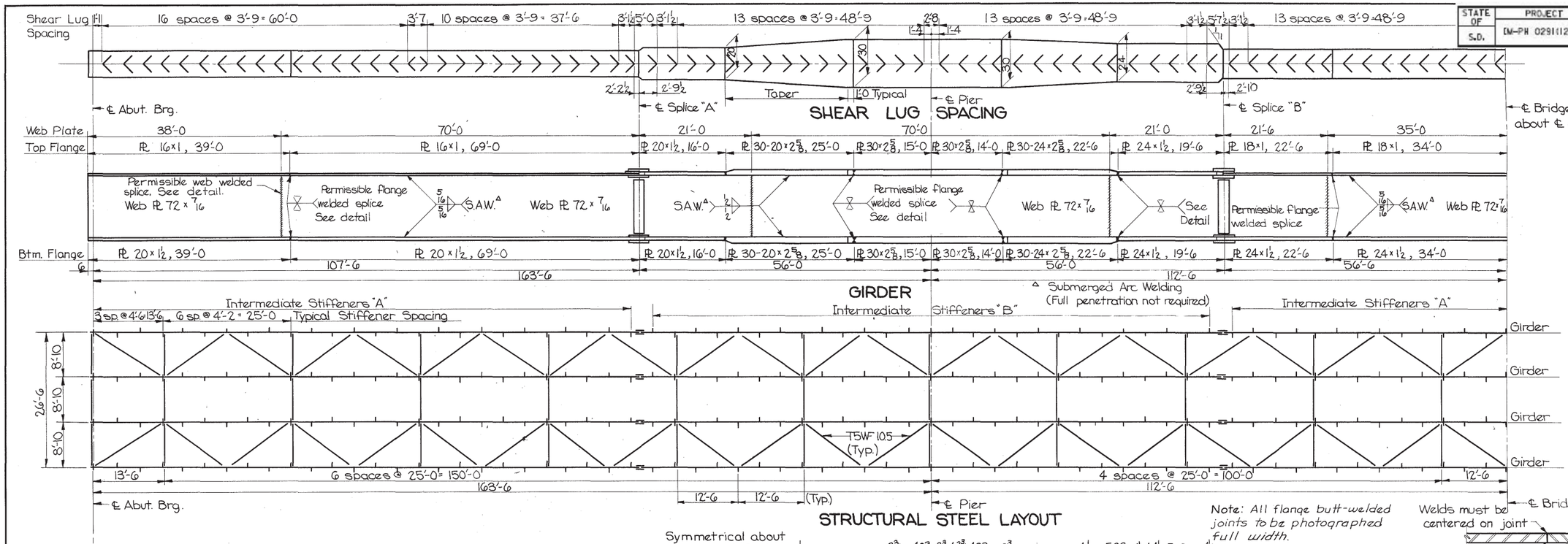


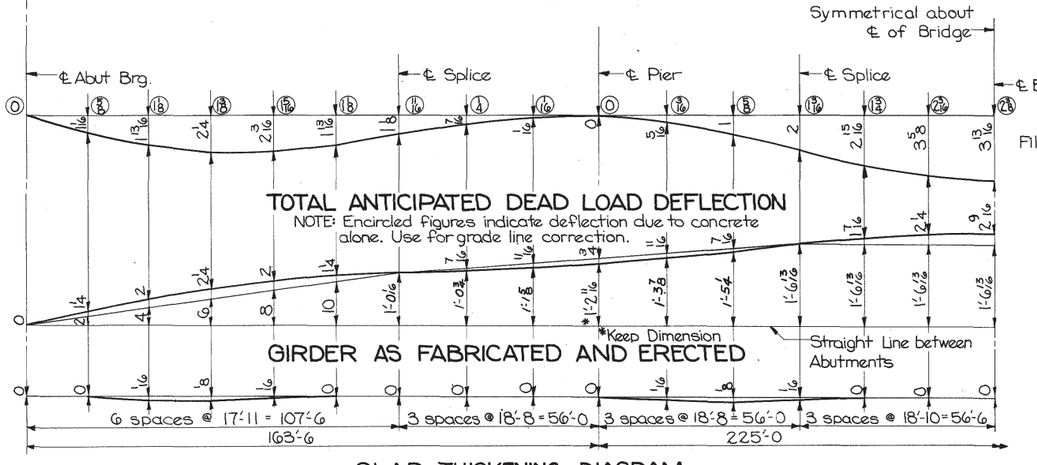


SLAB THICKENING DIAGRAM
(For Estimating Purposes Only.)

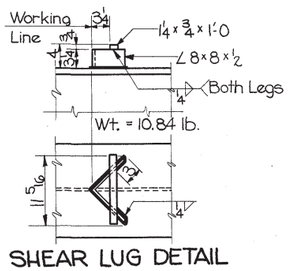


SHEAR LUG DETAIL
592 Required

| MOMENT AND REACTION TABLE | | Moment in Foot-Kips Reaction in Kips | | | | |
|---|---|---|---|---|---|---|
| | Load (kips) | Pos. M. End span | Neg. M. Pier | Pos. M. Ctr. Span | Abut. Reaction | Pier Reaction |
| D.L. #1 | 1.178 | 1,463 | 5,790 | 1,664 | 60.9 | 264.2 |
| D.L. #2 | 0.350 | 572 | 1,376 | 839 | 20.2 | 76.4 |
| U.L.L. | 0.480 | 1,331 | 2,100 | 1,673 | 36.0 | 110.3 |
| C.L.L. | 13.50 (M) 19.50 (Y) | 462 | 470 | 504 | 19.5 | 19.5 |
| IMP | | 310 | 403 | 311 | 9.6 | 20.4 |
| | | | 10,139 | | 146.2 | 490.8 |

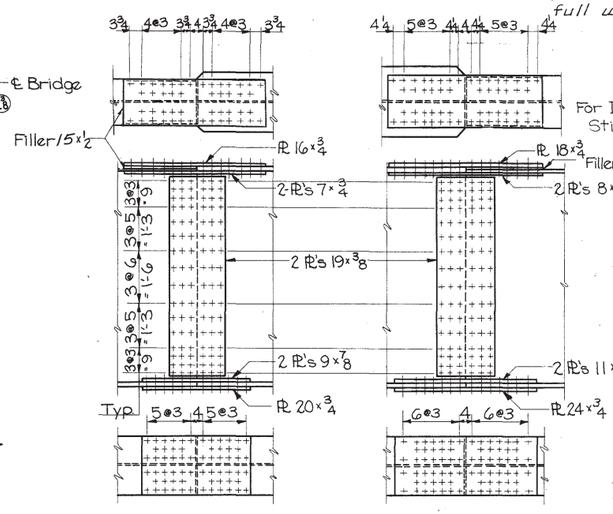


SPLICE "A"

SPLICE "B"

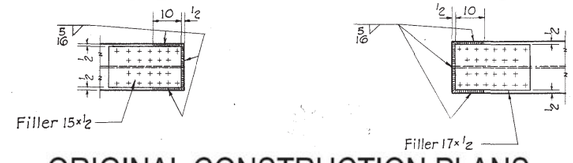


Note: All flange butt-welded joints to be photographed full width.

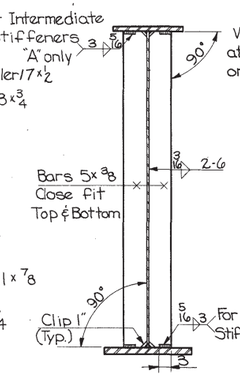


INTERMEDIATE STIFFENER DETAIL

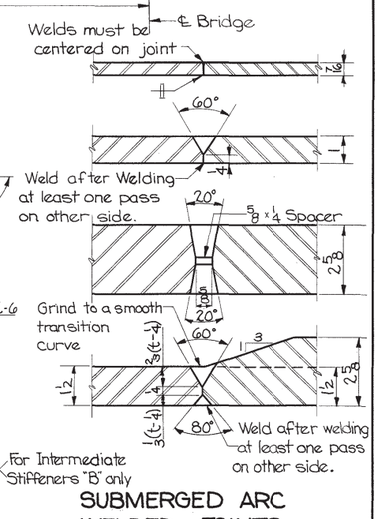


SUBMERGED ARC WELDED JOINTS

NOTE: See Sheet 9 of 12 for welding notes.

Design for
552'-0 × 30'-0 CONTINUOUS WELDED PLATE GIRDER BRIDGE
163'-6 End Spans 225'-0 Center Span
SUPERSTRUCTURE DETAILS
Station 98 + 32.5 Project No. ER 41(6)
WOODBURY COUNTY
Iowa State Highway Com

ORIGINAL CONSTRUCTION PLANS

changed. November 1962

STR. NO. 64-165-405

Woodbury County



File No. 21675

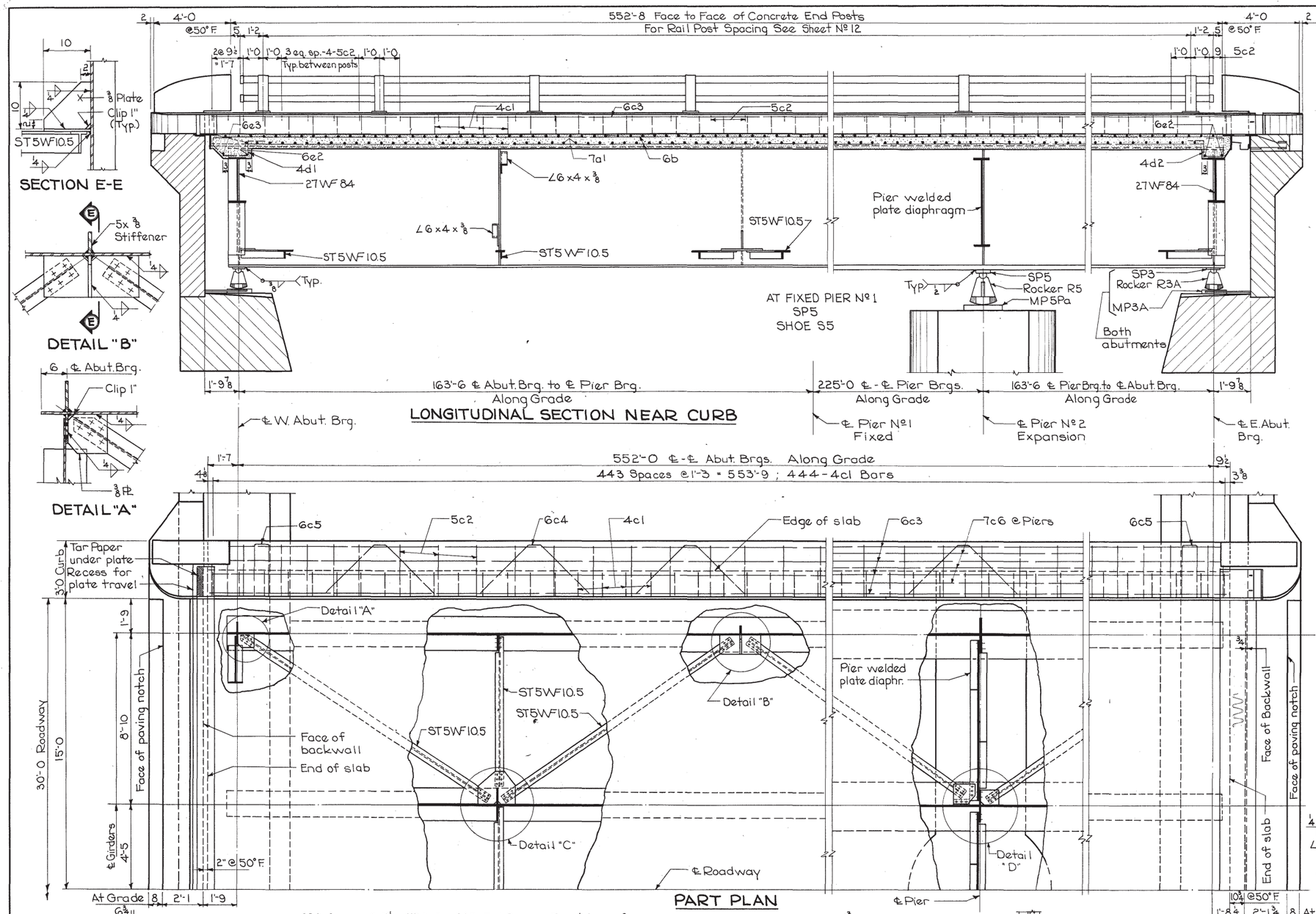


| REINFORCI | | | | | |
|---|---|---|---|---|---|
| STATE OF S.D. | PROJECT EM-PH 029(12)210 | | | SHEET NO. 98 | TOTAL SHEETS 284 |

| Bar | Location | | | | |
|---|---|---|---|---|---|
| 7a1 | Slab Transverse Top & Bott. | — | 1767 | 32'-8 | 117,985 |
| 6b1 | Slab Longit. Top & Bottom | — | 282 | 37'-0 | 15,672 |
| 6b2 | Slab Longit. Top & Bottom | — | 282 | 39'-5 | 16,696 |
| 6b3 | Slab Longit. Top & Bottom | — | 141 | 37'-1 | 7,854 |
| 4c1 | Curb Transverse | ⊏ | 888 | 4'-6 | 2,669 |
| 5c2 | Curb Transverse | ⊓ | 538 | 2'-9 | 1,543 |
| 6c3 | Curb Longitudinal | — | 120 | 38'-2 | 6,879 |
| 6c4 | Curb At Rail Post | ∧ | 138 | 8'-2 | 1693 |
| 6c5 | Curb At End Rail Posts | ⊂ | 4 | 5'-6 | 33 |
| 7c6 | Curb And Slab Over Piers | — | 58 | 40'-0 | 4742 |
| 4d1 | End Diaphragm Hoop | ⊔ | 21 | 5'-0 | 70 |
| 4d2 | End Diaphragm Hoop | ⊔ | 21 | 4'-3 | 60 |
| 4d3 | End Diaphragm Hoop | ⊏ | 6 | 3'-2 | 13 |
| 4d4 | End Diaphragm Hoop | ⊏ | 6 | 3'-0 | 12 |
| 4e1 | End Diaphragm Longit. | — | 6 | 2'-11 | 12 |
| 6e2 | End Diaphragm Longit. | — | 9 | 8'-6 | 115 |
| 6e3 | End Diaphragm Longit. | — | 1 | 32'-8 | 49 |
| 6b4 | Slab Longit. Top & Bott. Sec. 2 | — | 47 | 4'-4 | 306 |
| | | | | | |
| | | | Total (lbs.) | | ~~176,097~~ 176,403 |

## BENT BAR DETAILS

## CONCRETE PLACEMENT QUANTITIES

| | | |
|---|---|---|
| Section 1 | | 83.7 cy |
| Section 2 | | 83.1 cy |
| Section 3 | | 82.6 cy |
| Sections 4 & 5 | 2 @ 88.8 | 177.6 cy |
| Two Curbs | | 110.4 cy |
| | Total (cy) | 537.4 cy |

## ESTIMATED SUPERSTRUCTURE QUANTITIES

| Item | Unit | Quantity |
|---|---|---|
| Concrete | cy | 537.4 |
| Reinforcing Steel 176,403 | lb | ~~176,097~~ |
| Structural Steel | lb | 974,300 |

*Revised 10-24-63 Bar 6b4 added and quantities changed*

Design For

**552'-0 x 30'-0 CONTINUOUS WELDED PLATE GIRDER BRIDGE**

163'-6 End Spans 225'-0 Center Span

**SUPERSTRUCTURE DETAILS**

Station 98+32.5 Project Nº ER-41 (6)

**WOODBURY COUNTY**

STATE HIGHWAY

November 1962

**ORIGINAL CONSTRUCTION PLANS**



STR. NO. 64-165-405 bury County File Nº 21675

| STATE OF | PROJECT | SHEET NO. | TOTAL SHEETS |
|---|---|---|---|
| S.D. | EW-PH 0291(12)210 | 99 | 284 |

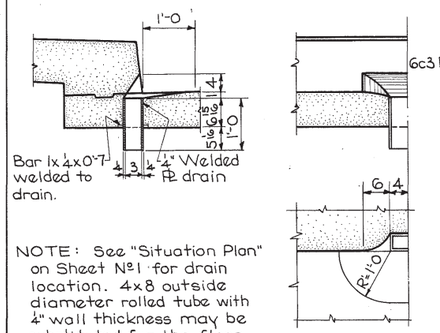


NOTE: See "Situation Plan" on Sheet Nº1 for drain location. 4x8 outside diameter rolled tube with 1/4" wall thickness may be substituted for the floor drain shown.

## DRAIN DETAILS

18 Required Wt. 20 lb. each

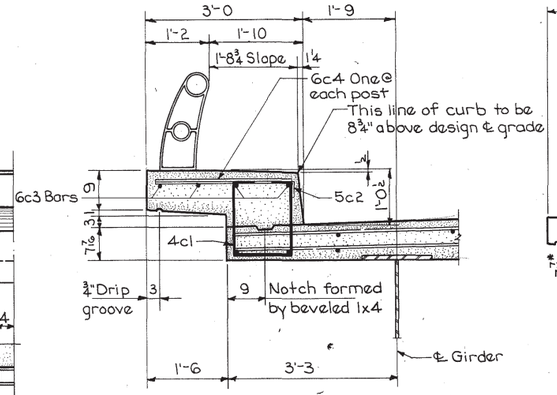


## CURB DETAILS

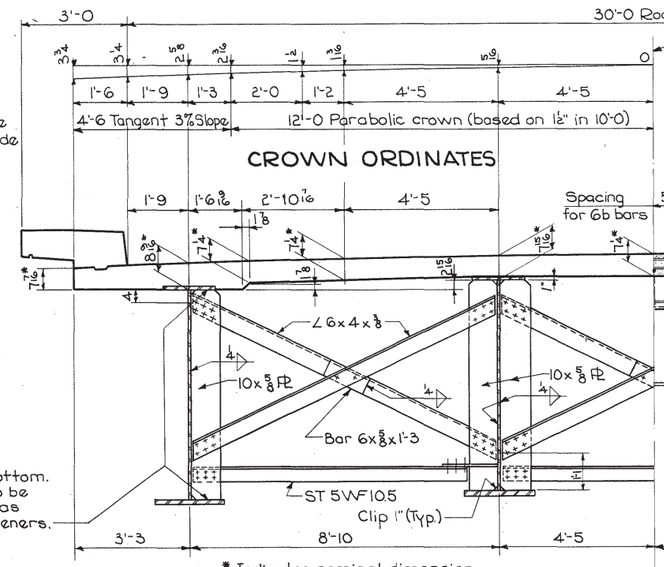


## CROWN ORDINATES

* Indicates nominal dimension

## HALF INTERMEDIATE SECTION

NOTE: Top transverse reinforcing steel is to be parallel to and 1 1/2" clear below top of slab. Bottom reinforcing steel is to be parallel to and 1 3/4" clear above bottom of slab except at haunch over girder. Top and bottom reinforcing steel is to be supported by individual bar chairs spaced at not more than 3'-0 centers longitudinally and transversely.

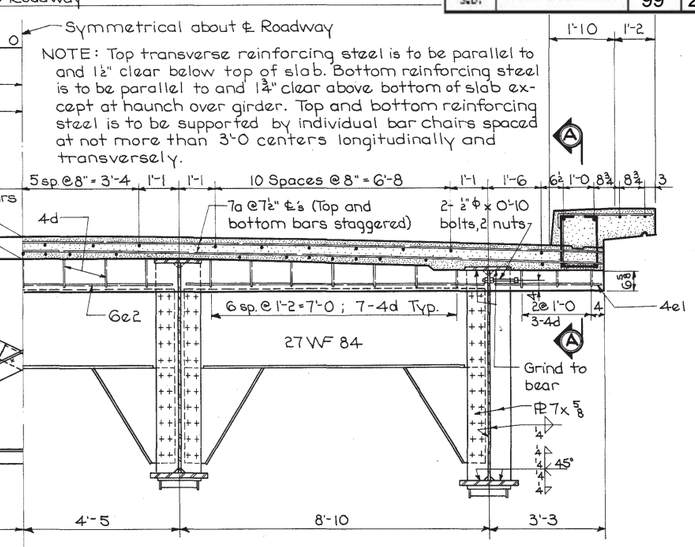


## HALF SECTION NEAR ABUTMENT

## SUPERSTRUCTURE NOTES:

This bridge is designed for H 20-S16 loading and alternate loading designated in the Bureau of Public Roads PPM.20-4, Section C, plus 19 lb. per sq. ft. of roadway for future wearing surface.

The floor slab as shown includes 1/2" wearing surface.

Field connections may be riveted or bolted, except as noted or shown. Girder splice connections require "High Tensile Strength Bolts". The estimated structural steel weight is based on riveted connections, except girder splice connections.

Unless otherwise noted, all bolts or rivets are to be 7/8" Φ and all open holes are to be 15/16" Φ.

All Structural Steel is to be ASTM A-36 Steel except the 1" tooth plate of the expansion device which shall be of low alloy high strength steel with the following minimum mechanical properties:

Tensile Strength-p.s.i. = 115,000 to 135,000.
Yield Point-min. p.s.i. = 100,000
Elongation in 2 inches-min.% = 18
Basic Allowable Tensile Strength-p.s.i. = 54,000
Reduction of Area is to be a minimum of 50% based on Standard 0.505 speciman if the thickness exceeds 3/4 inch.

All flange plates, flange splice plates and web splice plates are to be U.M. plates except flange plates that are cut to taper.

The girder splices are to be supported by falsework or other approved means as directed by the Engineer, and adjusted as closely as possible to the dimensions shown on the diagram "Girder As Fabricated And Erected" before riveting and bolting is completed.

The parts of structural steel inaccessible after erection are to be given three coats of paint in the shop.

Paint is to be omitted on tops of top flanges and all other steel surfaces in contact with concrete.

Approved stud shear connectors may be used as an alternate for the angle shear connectors shown. If studs are used, each angle lug 8x8x1/2 is to be replaced by a group of 13-7/8"Φx4 studs.

The centroid of the stud group is to be in the approximate location of the angle lug replaced. Maximum spacing between ℄ of stud rows is to be 24" and where the angle lug spacing exceeds 24" the equivalent studs are to be located in two or more rows so that the maximum spacing is not exceeded. Studs are to be welded in the shop at the locations shown on shop drawings approved by the Iowa State Highway Commission.

Shear lugs are spaced in multiples of the slab transverse reinforcing bar spacing and are located so as to clear bottom transverse bars.

The forms for roadway slab and curbs are to be supported by girders.

Special care should be exercised in handling and erection of these long girder sections.

Roadway slab shall be placed in sections and in sequence indicated on Sheet 7 and preferably at intervals not exceeding 24 hours. Curbs may be placed continuously. All the slab reinforcing steel is to be in place before any section is poured. Alternate procedures for placing concrete may be submitted for approval together with a statement of the proposed method and evidence that the Contractor possesses the necessary equipment and facilities to accomplish the required result.

Concrete was placed in the deck by the following sequence and dates.

| | |
|---|---|
| Section 1 | Oct. 17, 1963 |
| Section 2 | Oct. 18, 1963 |
| Section 3 & 5 | Oct. 21, 1963 |
| Section 4 | Oct. 22, 1963 |

Floor was finished with a finishing machine built and operated by an employ of Jensen Construction Company of Des Moines — Iowa.

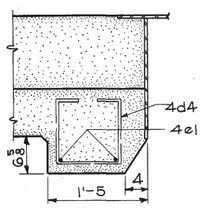


## SECTION A-A EAST ABUTMENT

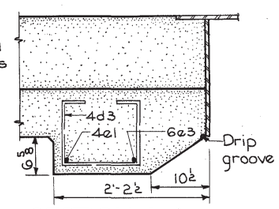


## SECTION A-A WEST ABUTMENT

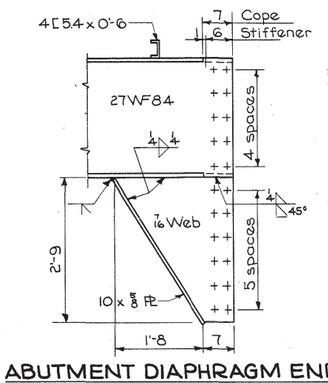


## ABUTMENT DIAPHRAGM END CONNECTION DETAILS

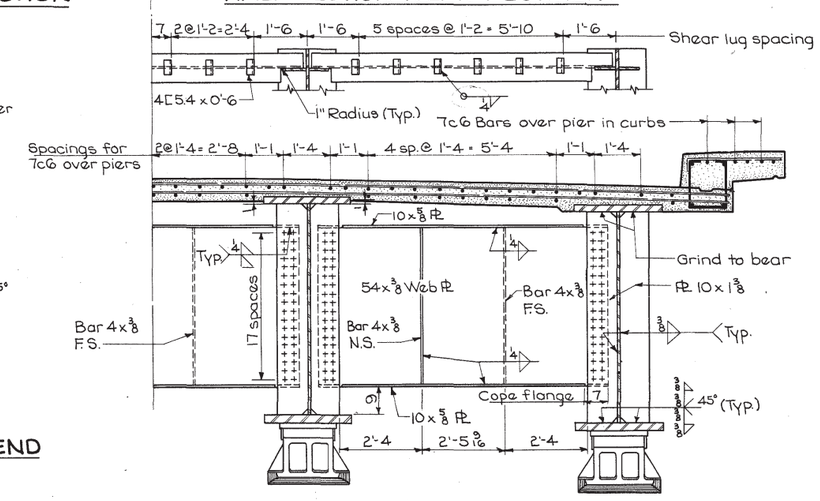


## HALF SECTION NEAR PIER

## WELD NOTE:

Welding shall be in accordance with the current Specifications of the American Welding Society for Welded Highway and Railway Bridges. Preheat all butt-welded flange plates to a minimum of 200°F.

## SPECIFICATIONS:

DESIGN: A.A.S.H.O., Series of 1961.
CONSTRUCTION: Iowa State Highway Commission Standard Specifications, Series of 1960, plus current Special Provisions and Supplemental Specifications.

Revised: 11-28-62 Minor note and detail added.

STR. NO. 64-165-405

# ORIGINAL CONSTRUCTION PLANS

Design For
552'-0x30'-0 CONTINUOUS WELDED PLATE GIRDER BRIDGE
163'-6 End Spans 225'-0 Center Span
SUPERSTRUCTURE DETAILS
Station 98+32.5 Project Nº ER 41(6)
WOODBURY COUNTY
IOWA STATE HIGHWAY
November 1962



Design Nº 462 Woodbury County File Nº 21675

| STATE OF | PROJECT | SHEET NO. | TOTAL SHEETS |
|---|---|---|---|
| S.D. | IM-PH 0291(12)10 | 100 | 284 |

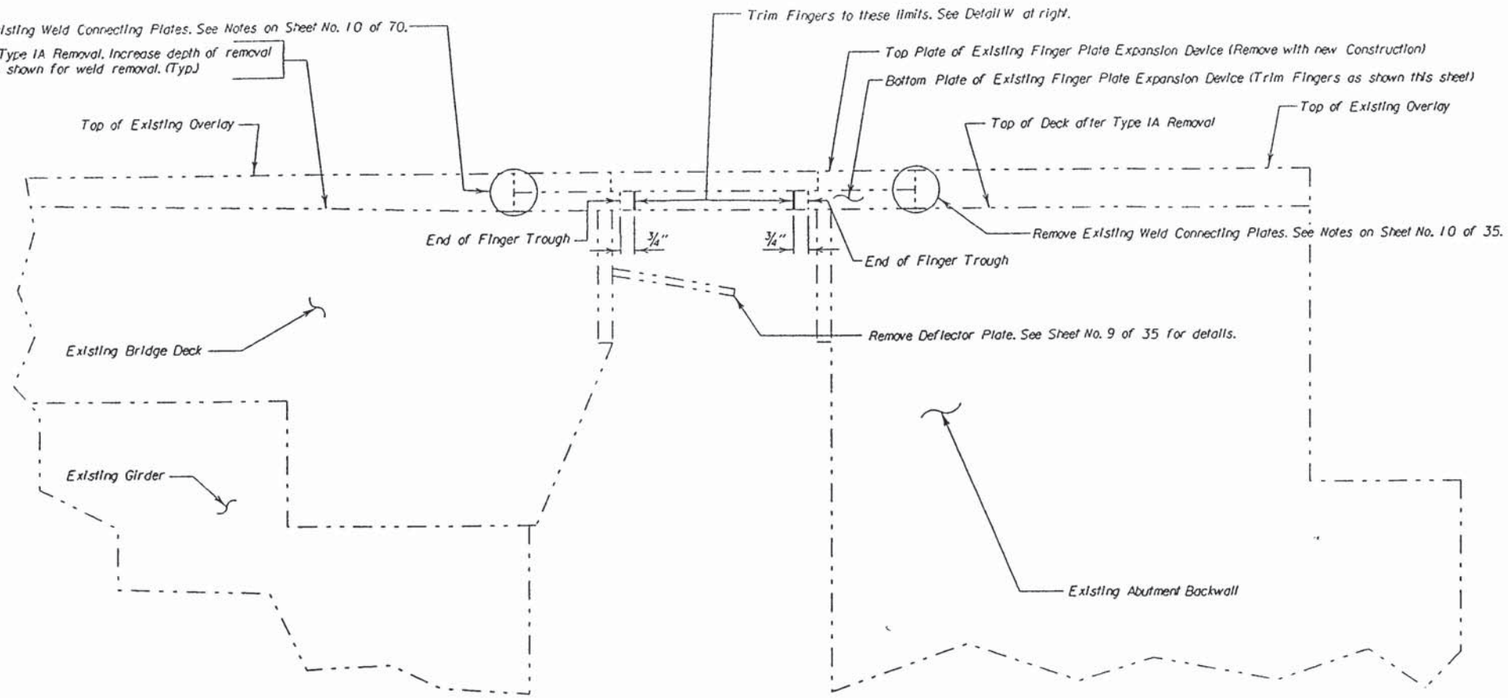


TYPICAL SECTION AT EXPANSION DEVICE

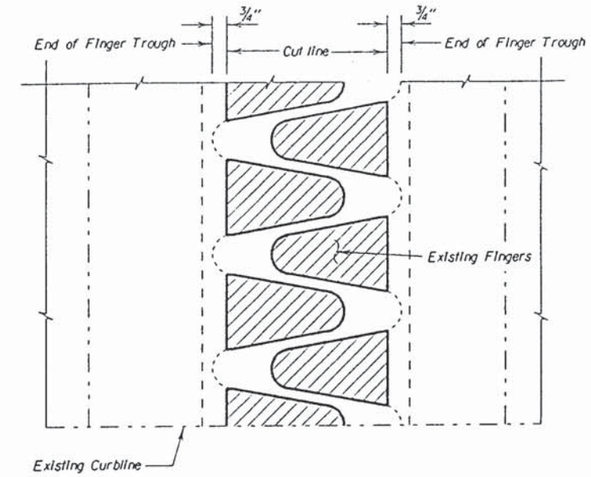


DETAIL W
(Trim all fingers in the Expansion Device as shown)

NOTE: All hatched areas are to be removed

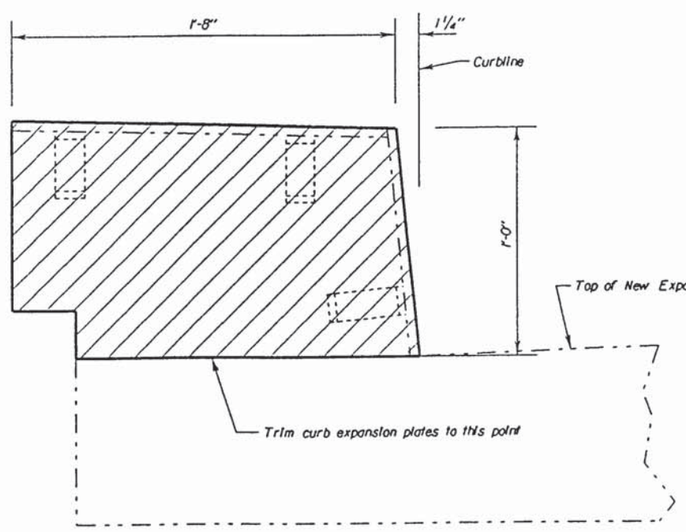


TYPICAL ABUTMENT CURB SECTION AT EXPANSION DEVICE

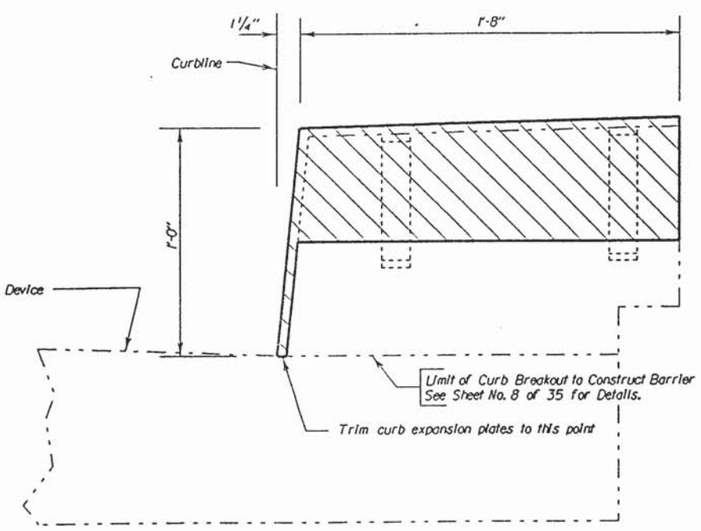


TYPICAL BRIDGE DECK CURB SECTION AT EXPANSION DEVICE

ESTIMATED QUANTITIES

| ITEM | UNIT | QUANTITY |
|---|---|---|
| Partial Removal Existing Bridge Joint | Each | 1 |

# ORIGINAL CONSTRUCTION PLANS

(NORTH BOUND LANES)
DETAILS OF JOINT MODIFICATION AT ABUTMENT NO. 1
FOR
558'-1 3/4" COMPOSITE GIRDER BRIDGE
30' - 0" ROADWAY
OVER BIG SIOUX RIVER SEC. 26-T89N-R48W
STA. 95 + 53.4 TO 101 + 11.6
STR. NO. 64-165-405 IM 29-1(010)
UNION CO., S. D. - WOODBURY CO., IA.
S. D. DEPT. OF TRANSPORTATION
MAY 1994



NOTE: All hatched areas are to be removed

NOTE: Use this sheet in conjunction with Sheet Nos. 11 through 14 of 35.

| DESIGNED BY | DRAWN BY | CHECKED BY | APPROVED |
|---|---|---|---|
| EJA | JLS | CWM | John C. Cole |
| UNIN3941 | 3941CD10 | | BRIDGE ENGINEER |

| STATE OF | PROJECT | SHEET NO. | TOTAL SHEETS |
|---|---|---|---|
| S.D. | EM-PH 0291(12)210 | 101 | 284 |

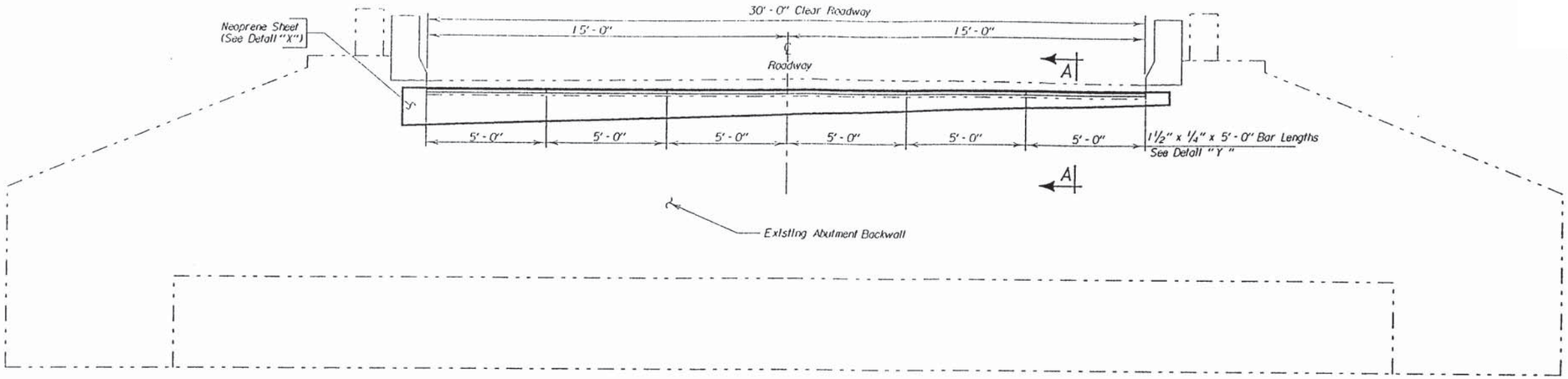


* 1½" x ¼" x 5' - 0" Bar is field welded to Existing Bridge Joint. For Details, See Detail "W" on Sheet No. 12 of 35.

## ELEVATION OF ABUTMENT

(For Details of the Drain Device for the Neoprene Sheet, See Sheet No. 19 of 35)
(Center Neoprene Sheet over Centerline Roadway as shown)

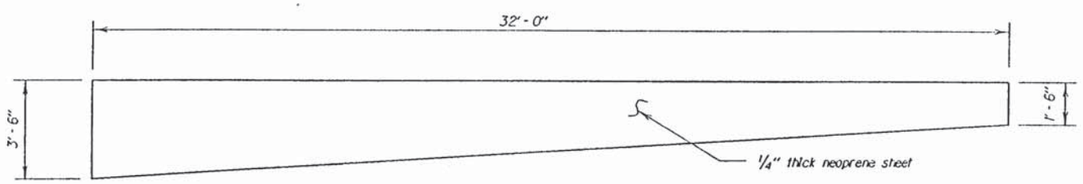


## DETAIL "X"

(Field Drill ⅝" ϕ Holes in Sheet at Bolt Locations. See Notes on Sheet No. 9 of 70)

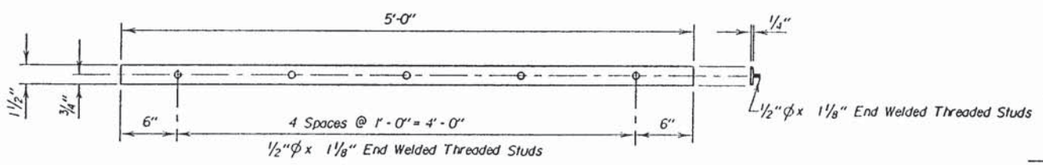


## DETAIL "Y"

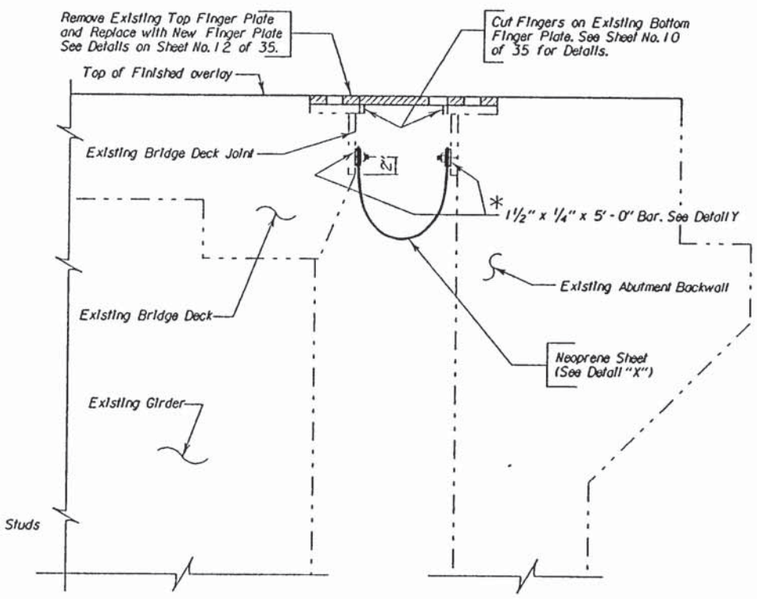


## SECTION A - A

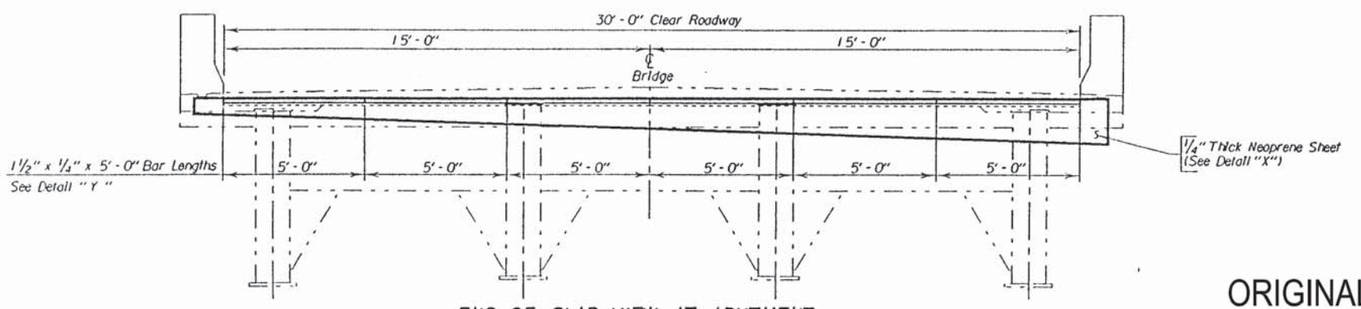


## END OF SLAB VIEW AT ABUTMENT

(NORTH BOUND LANES)
NEOPRENE SHEET ATTACHMENT AT ABUTMENT NO. 1
FOR

# 558'-1¾" COMPOSITE GIRDER BRIDGE

30' - 0" ROADWAY

OVER BIG SIOUX RIVER SEC. 26-T89N-R48W
STA. 95 + 53.4 TO 101 + 11.6
STR. NO. 64-165-405 IM 29-1(010)
UNION CO., S. D. - WOODBURY CO., IA.
S. D. DEPT. OF TRANSPORTATION
MAY 1994



ORIGINAL CONSTRUCTION PLANS

NOTE: Use this sheet in conjunction with Sheet Nos. 12 through 14 of 35.

| DESIGNED BY | DRAWN BY | CHECKED BY | APPROVED |
|---|---|---|---|
| CJD/EJA | CJD | CWM | John C. Cole |
| UNIN3941 | 3941C011 | | BRIDGE ENGINEER |

| STATE OF | PROJECT | SHEET NO. | TOTAL SHEETS |
|---|---|---|---|
| S.D. | IM-PH 029(112)210 | 102 | 284 |

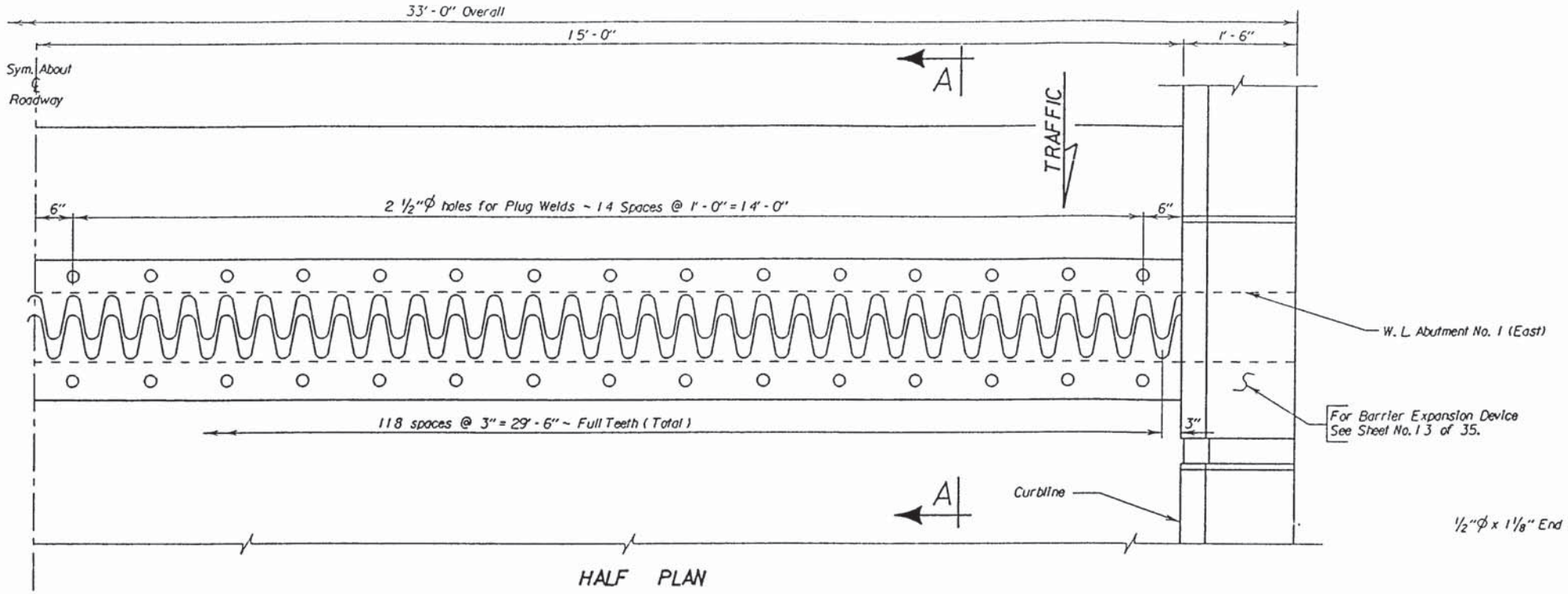


HALF PLAN

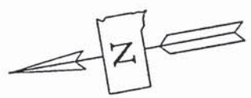


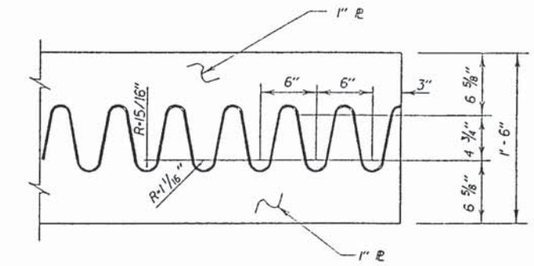


TOOTH LAYOUT

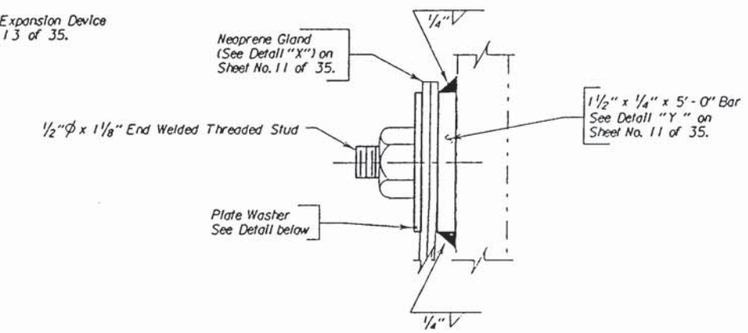


DETAIL "W"

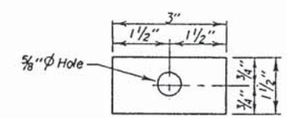


PLATE WASHER DETAIL

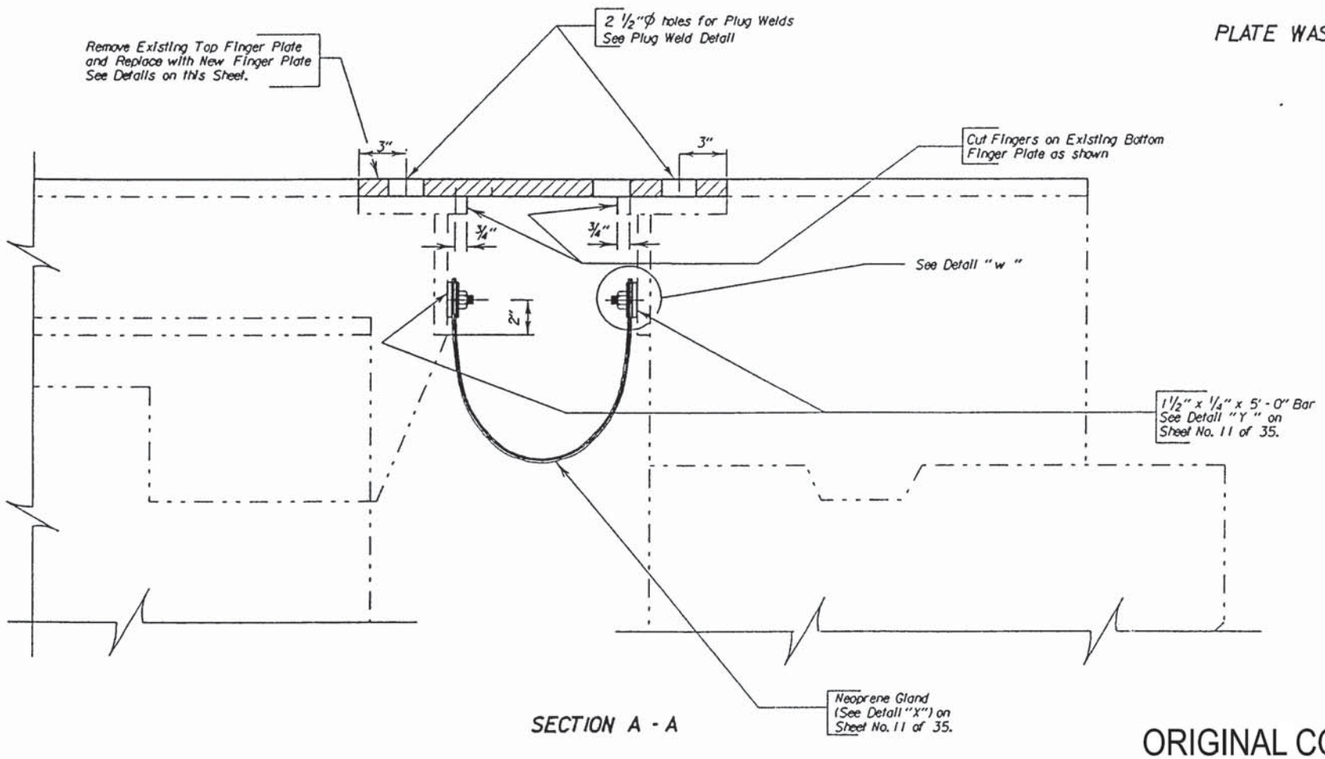


SECTION A - A

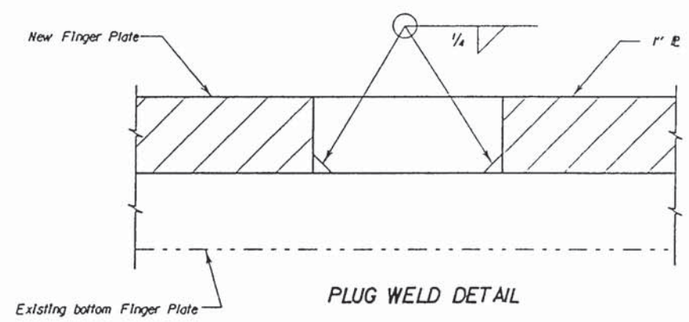


PLUG WELD DETAIL

(NORTH BOUND LANES)
ABUTMENT NO. 1 EXPANSION DEVICE MODIFICATION
OF
558'-1 3/4" COMPOSITE GIRDER BRIDGE
30' - 0" ROADWAY
OVER BIG SIOUX RIVER SEC. 26-T89N-R48W
STA. 95 + 53.4 TO 101 + 11.6
STR. NO. 64-165-405 IM 29-1(010)
UNION CO., S. D. - WOODBURY CO., IA.
S. D. DEPT. OF TRANSPORTATION
MAY 1994



ORIGINAL CONSTRUCTION PLANS

NOTE: Use this Sheet in conjunction with Sheet Nos. 9, 10, 11, 13 & 14 of 35.

| DESIGNED BY | DRAWN BY | CHECKED BY | APPROVED |
|---|---|---|---|
| EJA | CJD | CWM | BRIDGE ENGINEER |
| UNIN3941 | 3941CD12 | | |

| STATE OF | PROJECT | SHEET NO. | TOTAL SHEETS |
|---|---|---|---|
| S.D. | IM-PH 0291(12)210 | 103 | 284 |

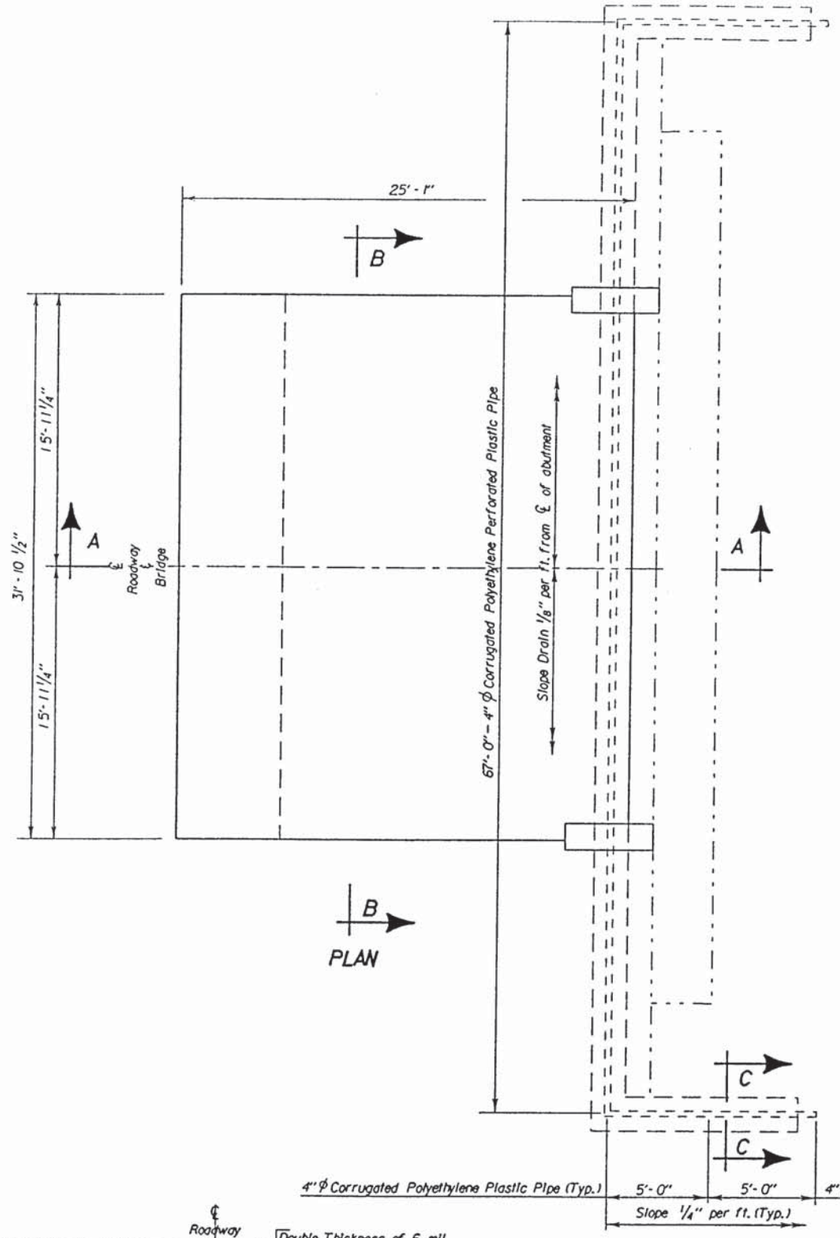


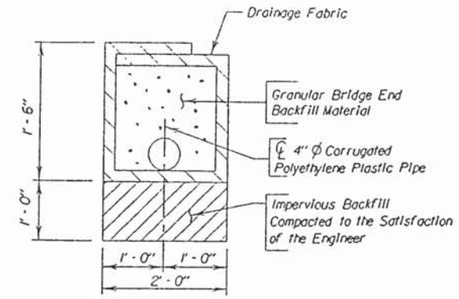


SEC. C - C

## ESTIMATED QUANTITIES
(for 2 Abutments)

| | ITEM | UNIT | QUANTITY |
|---|---|---|---|
| | Bridge End Backfill Underdrain Pipe | L.F. | 174.0 |
| ϕ | Bridge End Backfill Excavation | Cu. Yd. | 263.9 |
| * | Granular Bridge End Backfill | Cu. Yd. | 282.1 |
| | Drainage Fabric | Sq. Yd. | 489.8 |

1. 134 ft. 4" ϕ Corrugated Polyethylene Perforated Plastic Pipe for 2 Abutments.
2. 20 ft. 4" ϕ Corrugated Polyethylene Plastic Pipe for 2 Abutments.
3. 20 ft. 4" ϕ Std. Black Steel Pipe for 2 Abutments.
4. 2800 sq. ft. 6 mil Polyethylene Sheeting, not including laps.

Items 1 through 4 are approximate quantities contained in the above bid items and are for information only.

ϕ Bridge End Backfill Excavation will not be measured. Plans quantity payment will be full compensation for this item.

* Quantity has been adjusted by a "Shrinkage" factor of 1.3 to convert final compacted volume to loose volume.

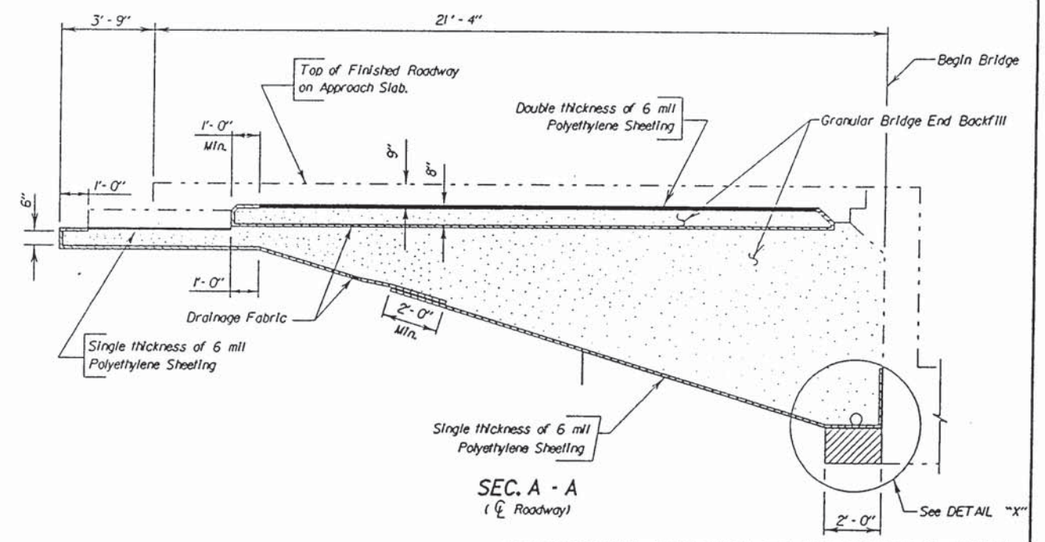


SEC. A - A
( ℄ Roadway)

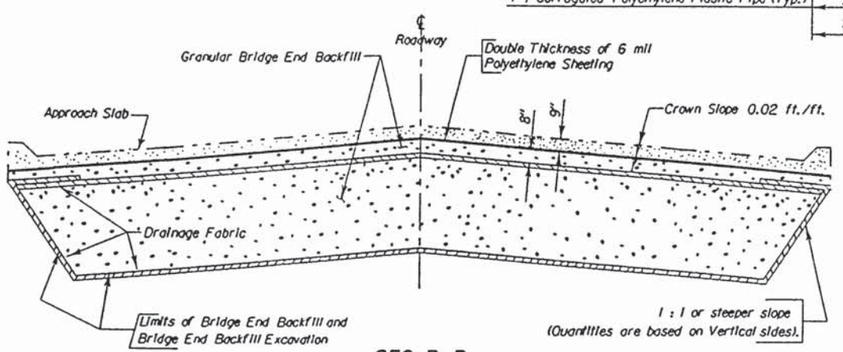


SEC. B-B

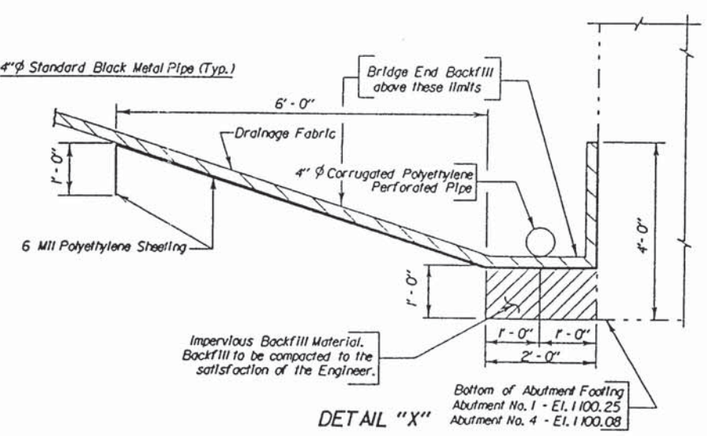


DETAIL "X"

# ORIGINAL CONSTRUCTION PLANS

(NORTH BOUND LANES)
BRIDGE END BACKFILL DETAILS
FOR

## 558' - 1 3/4" COMPOSITE GIRDER BRIDGE

30' - 0" ROADWAY

OVER BIG SIOUX RIVER — SEC. 26-T89N-R48W

STA. 95 + 53.4 TO 101 + 11.6

STR. NO. 64-165-405 — IM 29-1(0) 0

UNION CO., S. D. - WOODBURY CO., IA.

S. D. DEPT. OF TRANSPORTATION

MAY 1994



| DESIGNED BY | DRAWN BY | CHECKED BY | APPROVED |
|---|---|---|---|
| EJA/CJD | CJD | CWM | John C. Cole |
| UNIN3941 | 3941C016 | | BRIDGE ENGINEER |

| STATE OF | PROJECT | SHEET NO. | TOTAL SHEETS |
|---|---|---|---|
| S.D. | IM-PH 0291(12)10 | 104 | 284 |

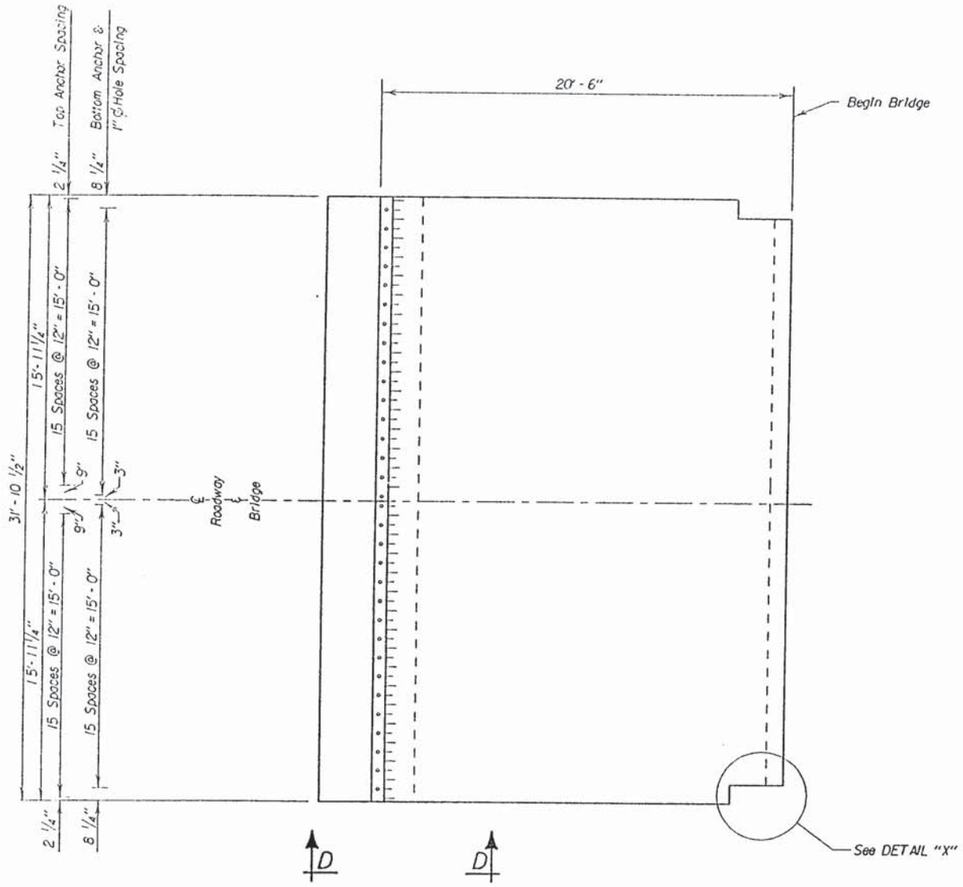


PLAN

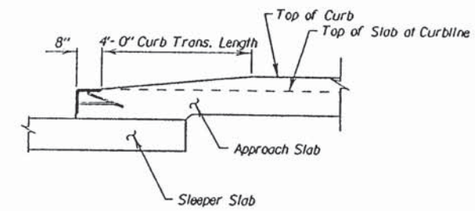


VIEW D-D

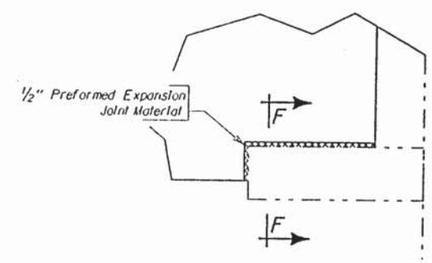


DETAIL "X"

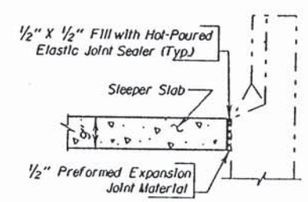


SECT. F-F

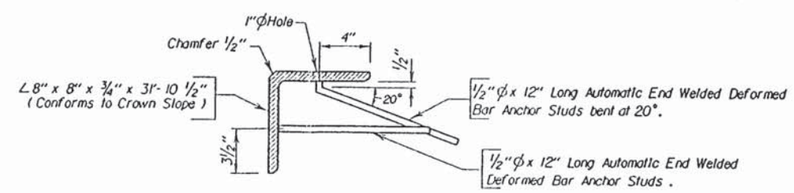


DETAIL "Y"

(See Sheet No. 18 of 35 for location of detail.)
(See Notes Regarding Armor Assembly Sheet No. 10 of 70.)

## ORIGINAL CONSTRUCTION PLANS

(NORTH BOUND LANES)
DETAILS OF APPROACH SLAB ADJACENT
TO BRIDGE
FOR
558'- 1 3/4" COMPOSITE GIRDER BRIDGE
30'-0" ROADWAY
OVER BIG SIOUX RIVER SEC. 26-T89N-R48W
STA. 95+53.4 TO 101+11.6
STR. NO. 64-165-405 IM 29-1(0)0
UNION CO., S.D. - WOODBURY CO., IA.
S. D. DEPT. OF TRANSPORTATION
JUNE 1994



| DESIGNED BY | DRAWN BY | CHECKED BY | APPROVED |
|---|---|---|---|
| EJA | C.J.D. | CWM | John C. Cole |
| UNIN3941 | 3941C017 | | BRIDGE ENGINEER |

| STATE OF | PROJECT | SHEET NO. | TOTAL SHEETS |
|---|---|---|---|
| S.D. | IM-PH 029(112)210 | 105 | 284 |

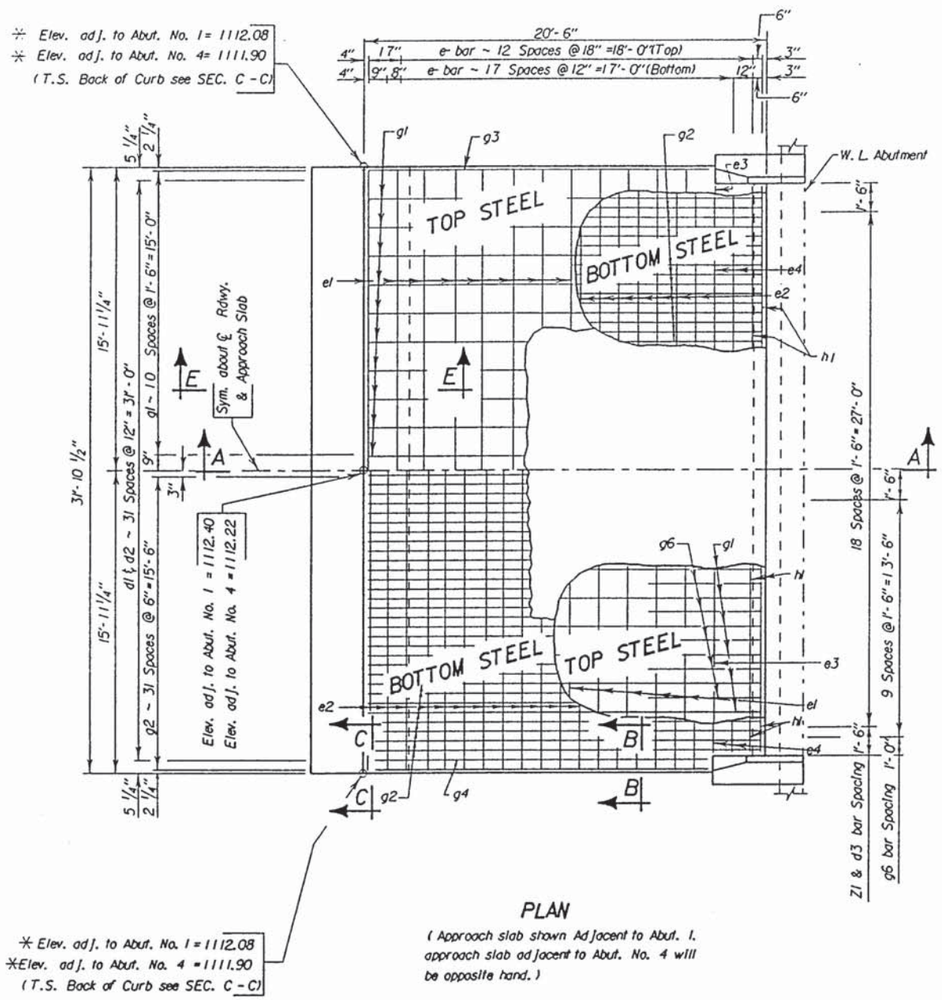


PLAN

(Approach slab shown Adjacent to Abut. 1. approach slab adjacent to Abut. No. 4 will be opposite hand.)

* Elevation Top Slab Back of Curb to this point.

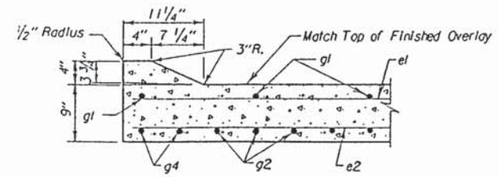


SEC. B-B

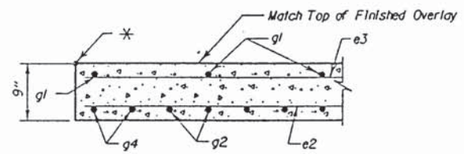


SEC. C-C

## REINFORCING SCHEDULE

(For Two Approach Slabs)

| Mk. | No. | Size | Length | Type | Bending Details |
|---|---|---|---|---|---|
| c1 | 28 | 5 | 31'-6" | Str. | |
| d1 | 128 | 4 | 5'-6" | 2 | |
| d2 | 64 | 4 | 5'-1" | T2 | |
| d3 | 38 | 4 | 4'-1" | 17A | |
| e1 | 24 | 4 | 31'-6" | Str. | |
| e2 | 36 | 6 | 31'-6" | Str. | |
| e3 | 2 | 4 | 29'-8" | Str. | |
| e4 | 6 | 6 | 29'-8" | Str. | |
| g1 | 40 | 4 | 20'-2" | Str. | |
| g2 | 120 | 8 | 20'-2" | Str. | |
| g3 | 4 | 4 | 17'-9" | Str. | |
| g4 | 8 | 8 | 17'-9" | Str. | |
| g6 | 42 | 4 | 6'-0" | Str. | |
| h1 | 8 | 6 | 29'-8" | Str. | |
| △ Z1 | 38 | 6 | 2'-6" | 19 | |

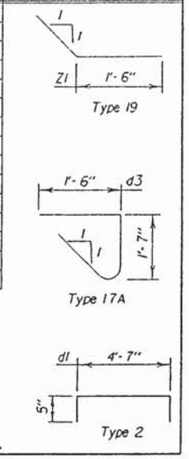


△ Dowel

NOTE --
Epoxy Coat all bars.
All dimensions are out to out of bars.

## ESTIMATED QUANTITIES

(For Two Approach Slabs)

| ITEM | UNIT | QUANTITY |
|---|---|---|
| Conc. Approach Slab Adjacent to Bridge | Cu. Yd. | 144.2 |
| Bridge Approach Sleeper Slab | Cu. Yd. | 33.4 |
| Install Dowel In Concrete | Each | 38 |

1. 39.1 Cu. Yd. Concrete In Approach Slabs.
△ 2. 10571 Lb. Epoxy coated Re-Steel In Approach Slabs.
3. 8.9 Cu. Yd. Concrete In Sleeper Slabs.
4. 1608 Lb. Epoxy coated Re-Steel In Sleeper Slabs.
5. 2566 Lb. Structural Steel In Armor Assembly.

Items 1 thru 5 are approximate quantities contained in the above bid item and are for information only.

△ Does not include 143 Lbs. for Z1 bars as these are paid for in the Bid Item "Install Dowel In Concrete".

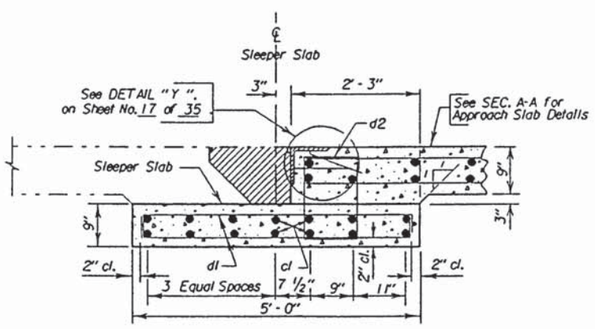


SEC. E-E
(Sleeper Slab)

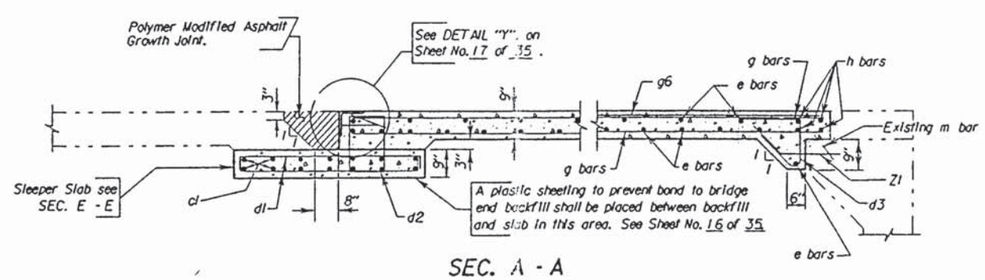


SEC. A-A

# ORIGINAL CONSTRUCTION PLANS

(NORTH BOUND LANES)
DETAILS OF APPROACH SLAB ADJACENT TO BRIDGE
FOR
558' - 1 3/4" COMPOSITE GIRDER BRIDGE
30'-0" ROADWAY

OVER BIG SIOUX RIVER SEC. 26-T89N-R48W
STA. 95+53.4 TO 101+11.6
STR. NO. 64-165-405 IM 29-1(010)
UNION CO., S.D. - WOODBURY CO., IA.

S. D. DEPT. OF TRANSPORTATION
JUNE 1994

33 OF 33

| DESIGNED BY | DRAWN BY | CHECKED BY | APPROVED |
|---|---|---|---|
| EJA | C.J.D. | CWM | John C. Cole |
| UNIN3941 | 3941CD18 | | BRIDGE ENGINEER |

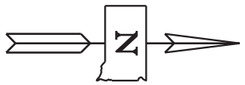


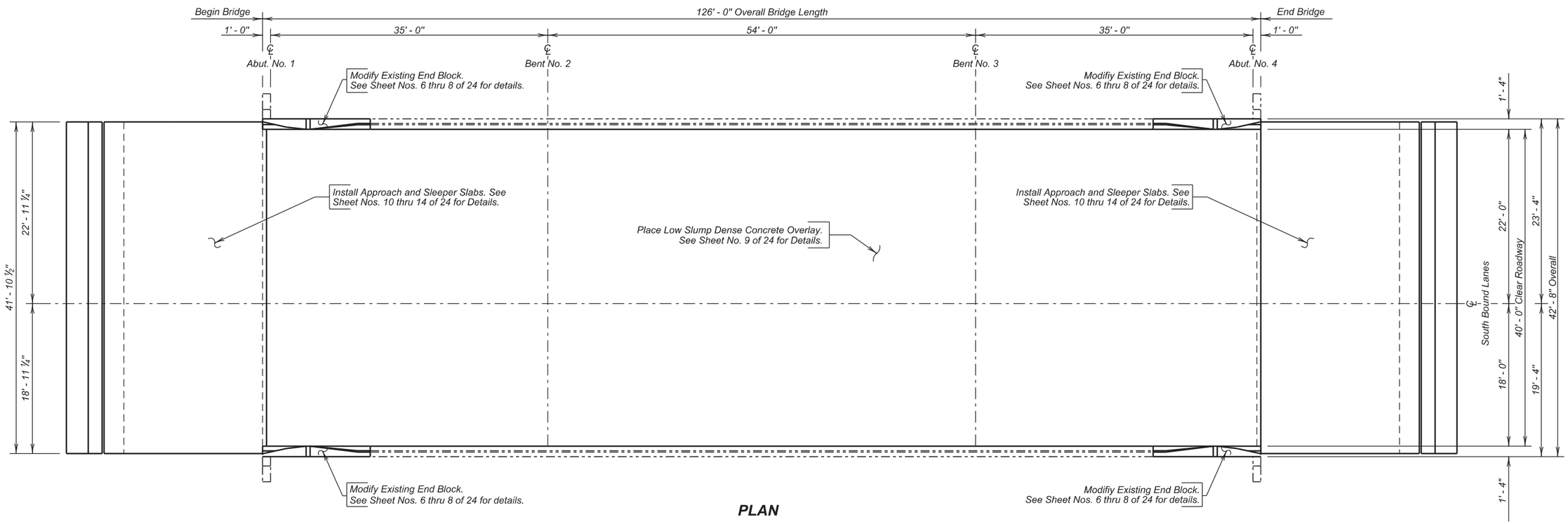


**PLAN**

## INDEX OF BRIDGE SHEETS -


*Sheet No. 1 - Layout for Upgrading*
*Sheet No. 2 - Estimate of Structure Quantities and Notes*
*Sheet No. 3 - Notes (Continued)*
*Sheet No. 4 - Notes (Continued)*
*Sheet No. 5 - Notes (Continued)*
*Sheet No. 6 - End Block Modification*
*Sheet No. 7 - End Block Modification (Continued)*
*Sheet No. 8 - End Block Modification (Continued)*
*Sheet No. 9 - Deck Profiles for Low Slump Dense Concrete Overlay*
*Sheet No. 10 -Approach Slab Underdrain Modification*
*Sheet No. 11 - Approach Slab Layout*
*Sheet No. 12 - Approach Slab Details*
*Sheet No. 13 - Approach Slab Details (Continued)*
*Sheet No. 14 - Approach Slab Joint Details*
*Sheet No. 15 - As Built Elevation Survey*
*Sheet No. 16 - As Built Elevation Survey (Continued)*
*Sheet No. 17 - Standard Plate Nos. 460.03 & 630.92*
*Sheet No. 18 thru 24 - Original Construction Plans*


**(SOUTH BOUND LANES)**
**UPGRADE TO LAYOUT**

FOR

# 126' - 0" CONTINUOUS CONCRETE BRIDGE

40' - 0" ROADWAY — 0° SKEW
OVER COUNTY ROAD — SEC. 15 - T89N - R48W
STR. NO. 64-154-385 — IM-PH 0291(122)0
PCN 02PT

UNION COUNTY

S. D. DEPT. OF TRANSPORTATION

OCTOBER 2015



*PLANS BY :*
*OFFICE OF BRIDGE DESIGN, SOUTH DAKOTA DEPARTMENT OF TRANSPORTATION*

| DESIGNED BY | CK. DES. BY | DRAFTED BY | |
|---|---|---|---|
| KSK | BD | KR | Kevin N. Goeden |
| UNIN02PT | 02PTRC01 | | BRIDGE ENGINEER |

## ESTIMATE OF STRUCTURE QUANTITIES

| ITEM NO. | DESCRIPTION | QUANTITY | UNIT |
|---|---|---|---|
| 009E3310 | Bridge Elevation Survey | LumpSum | LS |
| 110E0010 | Remove Concrete Bridge Approach Slab | 234.6 | SqYd |
| 410E2600 | Membrane Sealant Expansion Joint | 167.6 | Ft |
| 430E0300 | Granular Bridge End Backfill | 16.7 | CuYd |
| 460E0070 | Class A45 Concrete, Bridge Repair | 5.2 | CuYd |
| 460E0150 | Concrete Approach Slab for Bridge | 190.4 | SqYd |
| 460E0160 | Concrete Approach Sleeper Slab for Bridge | 67.4 | SqYd |
| 460E0300 | Breakout Structural Concrete | 5.2 | CuYd |
| 460E0380 | Install Dowel in Concrete | 26 | Each |
| 480E0200 | Epoxy Coated Reinforcing Steel | 522 | Lb |
| 480E0504 | No. 4 Rebar Splice | 28 | Each |
| 480E0505 | No. 5 Rebar Splice | 48 | Each |
| 480E0506 | No. 6 Rebar Splice | 44 | Each |
| 480E5000 | Galvanic Anode | 56 | Each |
| 550E0010 | Low Slump Dense Concrete Bridge Deck Overlay | 41.8 | CuYd |
| 550E0100 | Concrete Removal Type 1A | 555.6 | SqYd |
| 550E0110 | Concrete Removal Type 1B | 55.6 | SqYd |
| 550E0120 | Concrete Removal Type 1C | 27.8 | SqYd |
| 550E0130 | Concrete Removal Type 1D | 27.8 | SqYd |
| 550E140 | Concrete Removal Type B | 20.0 | Ft |
| 550E0200 | Class A45 Concrete Fill | 11.4 | CuYd |
| 550E0500 | Finishing and Curing | 555.6 | SqYd |
| | | | |

### SPECIFICATIONS

1. Design Specifications: AASHTO Standard Specifications for Highway Bridges 17th Edition using Working Stress (Load Factor) Design.

2. Construction Specifications: South Dakota Standard Specifications for Roads and Bridges, 2015 Edition and Required Provisions, Supplemental Specifications and Special Provisions as included in the Proposal.

### DETAILS AND DIMENSIONS OF EXISTING BRIDGE

All details and dimensions of the existing bridge contained in these plans, are based on the original construction plans and shop plans and are provided as information only. It is the Contractor's responsibility to inspect and verify the actual field conditions and any necessary as-built dimensions affecting the satisfactory completion of the work required for this project.

### SCOPE OF BRIDGE WORK & SEQUENCE OF OPERATIONS

All work on this structure shall be accomplished with the traffic control shown in the plans. Alternate sequence of operations may be submitted by the Contractor for approval by the Engineer two weeks prior to the pre-construction meeting.

1. Accomplish all Concrete Removal Type 1A, 1B, 1C, 1D, and B and place Class A45 Concrete Fill to the satisfaction of the Engineer for the first phase of construction.

2. Remove the existing approach slab for the first phase of construction.

3. Remove the existing endblocks and install new endblocks that accept thrie beam for the first phase of construction.

4. Place a Low Slump Dense Concrete Overlay to the elevations shown in the plans on the bridge deck for the first phase of construction.

5. Modify the Bridge End Backfill for the first phase of construction.

6. Install the Sleeper Slabs and Approach Slabs for the first phase of construction.

7. Switch traffic and repeat steps 1 through 6 for the second phase of construction.

### GENERAL CONSTRUCTION NOTES

1. All mild reinforcing steel shall conform to ASTM A615, Grade 60.

2. Use 2 inch clear cover on all reinforcing steel except as shown otherwise.

3. Request for construction joints or resteel splices at points other than those shown must be submitted to the Engineer for prior approval. If additional splices are approved, no payment will be allowed for the added quantity of reinforcing steel.

4. Surfaces of fresh concrete at construction joints shall be rough floated sufficiently to consolidate the surface. All construction joints shall be cleaned of surface laitance, curing compounds and other foreign materials prior to placing fresh concrete against the joint.

5. All exposed concrete edges or corners shall be chamfered ¾ inch except where noted in the plans. Match the existing chamfer if the chamfer differs.

6. The type of vibratory screed used shall be approved by the Engineer.

7. The mechanical rebar splices shall be in accordance with Section 480 of the Construction Specifications.

8. The Contractor shall only imprint one year plate on the structure. The year plate shall contain the date the existing bridge was built and shall be located as specified and detailed on Standard Plate No. 460.03.

9. Snap ties, if used in the barrier curb formwork, shall be epoxy coated. The epoxy coating shall be inert in concrete and compatible with the coating applied to the new epoxy coated reinforcing steel.

10. The concrete barriers shall be cured in accordance with Section 460.3.M of the Construction Specifications except that no curing compounds shall be allowed.

### DESIGN MIX OF CONCRETE

1. Class A45 Concrete shall be used for the bid items Concrete Approach Slab for Bridge, Concrete Approach Sleeper Slab for Bridge and Class A45 Concrete, Bridge Repair.

2. The Type of cement, concrete strength requirements, aggregate requirements, slump and air requirements for the contract items Class A45 Concrete Bridge Repair, Concrete Approach Sleeper Slab for Bridge and Concrete Approach Slab for Bridge shall conform to the requirements of Section 460 of the Construction Specification.

### CONCRETE BREAKOUT

1. The existing end blocks shall be broken out to the limits shown on the plans. Breakout limits shall be defined with a ¾" deep sawcut (unless specified otherwise in these plans), where practical, as approved by the Engineer. Reinforcing steel that is exposed and is scheduled for use in the new construction shall be cleaned and straightened to the satisfaction of the Engineer. Care shall be taken not to damage the existing reinforcing steel that is to be reused in the new construction during concrete breakout. Any reinforcing steel that is damaged during concrete breakout shall be replaced or repaired, as approved by the Engineer, by the Contractor at no cost to the Department.

2. All broken out concrete and discarded reinforcing bars shall be disposed of by the Contractor. Any disposal of discarded material shall be in accordance with the Environmental Commitments.

3. During concrete removal operations, no broken out concrete shall be allowed to fall onto the roadway below.

**ESTIMATE OF STRUCTURE QUANTITIES AND NOTES**
FOR
**1126' - 0" CONTINUOUS CONCRETE BRIDGE**

STR. NO. 64-154-385
OCTOBER 2015



| DESIGNED BY | CK. DES. BY | DRAFTED BY | |
|---|---|---|---|
| KSK | BD | KSK | Kevin N. Boeden BRIDGE ENGINEER |
| UNIN02PT | 02PTRC02 | | |

## GALVANIC ANODE

1. The Contractor shall furnish and place Galvanic anodes in the concrete repair areas specified in this plan set.

2. The galvanic anodes shall be supplied as one of the following:

   Galvashield XP2
   Vector Corrosion Technologies
   13312 N 56th St, Suite 102
   Tampa, FL 33617
   Phone: (813) 830-7566
   Website: www.vector-corrosion.com

   Sentinel Silver
   Euclid Chemical Company
   19218 Redwood Road
   Cleveland, OH 44110
   Phone: (800) 321-7628
   Website: www.euclidchemical.com

   Sika Galvashield XP+
   Sika Corporation US
   201 Polito Avenue
   Lyndhurst, NJ 07071
   Phone: (800) 933-7452
   Website: http://usa.sika.com

3. The anodes shall be placed in accordance with manufacturer's recommendations and as approved by the Engineer. The anodes have not been shown on the drawings. The Contractor shall provide shop drawings of the galvanic anode installation including locations of the individual anodes to the Office of Bridge Design.

4. The anodes shall be placed with a minimum ¾" cover and shall be set in Embedding Mortar per the manufacturer's recommendations. The anodes shall be fully encased in the concrete repair material. Where adequate cover does not exist, a concrete pocket shall be chipped out behind the anode to provide sufficient cover. The Contractor may need to chip around the reinforcing bar locally at the anode installation to make the electrical connection. The reinforcing steel at the connection location shall be cleaned per the manufacturer's recommendations to provide sufficient electrical connection and mechanical bond.

5. The electrical continuity of the electrical connections and reinforcing steel shall be confirmed per the manufacturer's recommendations.

6. The Contractor shall provide manufacturer's product literature and installation instructions to the Engineer 10 days prior to installation.

7. All costs associated with placing anodes including labor, equipment, materials and incidentals shall be included in the contract unit price per each for "Galvanic Anode".

## INSTALLING DOWELS IN CONCRETE

1. Holes drilled in the existing concrete shall be true and normal or as shown in the plans. Drilling holes using a core drill shall not be allowed. Care shall be taken not to damage the existing reinforcing steel. It is likely that some of the existing reinforcing steel shown in the original construction plans may have been placed out of position during original construction. Therefore, prior to the start of drilling any holes in the concrete, an effort will be made by Department forces to mark on the concrete surface where practical any locations of the in-place reinforcing steel. In spite of this precaution, the Contractor can still expect to encounter and have to drill through reinforcing steel or shift the dowel spacing as approved by the Engineer to miss the existing reinforcing steel. If the Contractor shifts the dowel spacing, the unused drill holes shall be completely filled with the epoxy resin specified in note number 2 as approved by the Engineer.

2. The epoxy resin mixture shall be of a type for bonding steel to hardened concrete and shall conform to AASHTO M235 Type IV, Grade 3 (Equivalent to ASTM C881, Type IV, Grade 3). Grade 1, 2 or 3 may be used for vertical dowels and Grade 3 epoxy shall be used for all horizontal dowels.

3. The diameter of the drilled holes shall not be less than 1/8 inch greater, nor more than 3/8 inch greater than the diameter of the dowels or as per the Manufacturer's recommendations. The drilled holes shall be blown out with compressed air using a device that will reach the back of the hole to ensure that all debris or loose material has been removed prior to epoxy injection.

4. Mix epoxy resin as recommended by the Manufacturer and apply by an injection method as approved by the Engineer. Beginning at the back of the drilled holes, fill the holes 1/3 to 1/2 full of epoxy, or as recommended by the Manufacturer, prior to insertion of the steel bar. Care shall be taken to prevent epoxy from running out of the horizontal holes prior to steel bar insertion. Rotate the steel bar during installation to eliminate voids and ensure complete bonding of the bar. Insertion of the bars by the dipping or painting method will not be allowed.

5. No loads shall be applied to the epoxy grouted dowel bars until the epoxy resin has had sufficient time to cure as specified by the epoxy resin manufacturer.

6. Dowel bars shall be deformed bars conforming to ASTM A615 Grade 60.

7. The cost of epoxy resin, dowels, installation and other incidental items shall be incidental to the contract unit price per each for "Install Dowel in Concrete".

## REMOVAL OF CONCRETE BRIDGE APPROACH SLAB

1. The existing concrete approach and sleeper slabs adjacent to the structure shall be completely removed by the Contractor.

2. The crushed concrete and reinforcing steel from the removal shall be disposed of by the Contractor at an approved site. An appropriate site will be as described in the Environmental Commitment notes in this set of plans.

3. All labor, tools, equipment and any incidentals necessary for removal and disposal of the existing approach and sleeper slabs shall be incidental to the contract unit price per square yard for "Remove Concrete Bridge Approach Slab".

## MODIFY EXISTING BRIDGE END BACKFILL

1. This work consists of bringing the existing bridge end backfill material up to the required elevation and repairing any damage to the in-place bridge end backfill material as approved by the Engineer.

2. Granular bridge end backfill shall conform to Section 882 of the Construction Specification. Granular material shall be placed and compacted using a smooth face vibratory roller or vibratory plate compactor according to Section 430.3 B of the Construction Specification.

3. The Reinforcement Fabric (MSE) shall conform to Section 831 of the Construction Specification.

4. The polyethylene sheeting shall be a minimum thickness of 6 mils and shall be sufficiently durable such that it will not puncture or tear when installed as intended.

5. The existing polyethylene sheeting under the existing approach slab and sleeper slab shall be removed and disposed of in accordance with the Environmental Commitments.

6. The surfaces on which the drainage fabric is to be placed shall be smooth and free of obstructions. The reinforcement fabric may be oriented in any direction.

7. Any equipment used to install the granular bridge end backfill over the reinforcement fabric shall be operated in such a manner that the reinforcement fabric is not damaged. To avoid damage to the reinforcement fabric, the equipment used to place, spread, and compact material over the reinforcement fabric shall be limited to handheld equipment.

**NOTES (CONTINUED)**
FOR
**126' - 0" CONTINUOUS CONCRETE BRIDGE**

STR. NO. 64-154-385
OCTOBER 2015



| DESIGNED BY | CK. DES. BY | DRAFTED BY | |
|---|---|---|---|
| KSK | BD | KSK | Kevin N. Boeden |
| UNIN02PT | 02PTRC03 | | BRIDGE ENGINEER |

**MODIFY EXISTING BRIDGE END BACKFILL (CONTINUED)**

8. Any reinforcement fabric that is torn or punctured shall be repaired or replaced by the Contractor at no additional cost to the Department. The repair shall consist of a patch of the same type of reinforcement fabric being placed over the ruptured area such that it overlaps the damaged area a minimum of 3 feet measured from any damaged area.

9. Seams shall be constructed by overlapping the fabric a minimum of 2 feet. All seams shall be inspected by the Engineer and any deficient seams repaired by the Contractor prior to placement of the bridge end backfill.

10. The granular bridge end backfill shall be compacted to a minimum of 97 percent of the maximum dry density as determined by SD 104 (AASHTO T99). The moisture content of the backfill material prior to and during compaction shall be adequate to provide satisfactory results. Maximum dry density and optimum moisture shall be determined by SD 104 (AASHTO T99).

11. The quantity specified in the plans for granular bridge end backfill was estimated. Actual amount installed may vary slightly due to changes in the field condition. Regardless of these limitations, the plan shown quantity will be the basis of payment. Field measurement for Granular Bridge End Backfill will not be made. Payment will be full compensation for all labor, equipment, materials, water, and all other items incidental to furnishing and installing the reinforcement fabric (MSE), the polyethylene sheeting and for furnishing and installing, including any hauling or stockpiling, of the granular bridge end backfill material.

**APPROACH SLABS**

1. Excavation for placement of new approach slabs and sleeper slabs shall be done with minimal disturbance to the underlying material.

2. The top of approach slab elevations shall be established during construction and shall be subject to the approval of the Engineer. Care shall be taken to provide a smooth transition from the bridge deck elevations to the new pavement elevations established in the field so as to prevent any dips or bumps in the areas of the bridge ends or ends of the new approach slabs. The maximum rate of grade transition through the approach slab shall be 1/8 inch in 10 feet.

3. Sleeper slab riser shall be cast with or later than the Approach Slab. Care shall be taken to ensure the correct grade is maintained across the joint.

4. The use of a vibratory screed will be required during placement of Class A45 Concrete for the approach slabs. Concrete placement in front of the screed shall be kept parallel to the screed.

5. The new approach slabs and sleeper slabs shall have a surface finish as stipulated in Section 460.3L.4 of the Construction Specifications.

6. The Concrete Approach Slabs Adjacent to Bridge shall be cured in accordance with Section 460.3M of the Construction Specifications.

7. Concrete Approach Sleeper Slab for Bridge will be paid for at the contract unit price per square yard. This payment shall be full compensation for all excavation, furnishing, hauling, and placing all materials including concrete, concrete anchors, and reinforcing steel; for disposal of all excavated material and surplus materials; and for labor, tools, equipment and any incidentals necessary to complete this item of work.

8. Concrete Approach Slab for Bridge will be paid for at the contract unit price per square yard. This payment shall be full compensation for all excavation, furnishing, hauling and placing all materials including concrete, asphalt paint or 6 mil polyethylene sheeting, elastic joint sealer and reinforcing steel; for disposal of all excavated material and surplus materials and for labor, tools, equipment and any incidentals necessary to complete this item of work.

**MEMBRANE SEALANT EXPANSION JOINT**

1. The Membrane Sealant shall be on the approved product list for Membrane Sealant Expansion Joints.

2. The manufacturer shall supply the membrane sealant in packaging that precompresses the membrane sealant. The precompressed dimension shall be as recommended by the sealant manufacturer, however, in no case shall the precompressed dimension exceed 75% of the joint opening width. The foam sealant shall be slowly self expanding to permit workers ample time to install the membrane sealant before the membrane sealant exceeds the joint opening width.

3. The membrane sealant shall provide a water tight seal throughout a joint movement range of +25% (minimum) from the specified joint opening dimension.

4. The membrane sealant shall be supplied in pieces a minimum of 5 feet in length. The foam sealant shall be ultra-violet and ozone resistant.

5. The bonding adhesive used to attach the membrane sealant to the adjacent concrete shall be approved by the membrane sealant manufacturer.

6. Adhesive used to join adjacent pieces of the membrane sealant shall be as recommended by the manufacturer.

7. If Styrofoam filler material is used in the construction, it shall be closed cell and water-tight as approved by the Engineer.

8. The minimum ambient air temperature at the time of joint installation and adhesive curing shall be 40°F.

9. A technical representative of the membrane sealant manufacturer shall be present at the jobsite during installation. The technical representative shall be knowledgeable in the correct procedures for the preparation and installation of the joint material to ensure the Contractor installs the joint to the manufacturers' recommendations.

10. Surfaces that will be in contact with the membrane sealant shall be thoroughly cleaned by abrasive blasting to remove all laitance and contaminants (such as oil, curing compounds, etc.) from the surface. A a minimum, two passes.of abrasive blasting with the nozzle held at an angle to within 1 to 2 inches of the surface will be required. Cleaning of the surfaces with solvents, wire brushing or grinding shall not be permitted.

11. After abrasive blasting, but immediately prior to membrane joint installation, the entire joint contact surface shall be air blasted. The air compressor used for joint cleaning shall be equipped with trap devices capable of providing moisture-free and oil-free air at a recommended pressure of 90 psi. To obtain complete bonding with the adhesive, the adjacent surfaces must be dry and clean. The contact surfaces for the joint shall be visually inspected by the Engineer immediately prior to joint installation to verify the surface is dry and clean.

12. Individual spliced sections shall be installed as per the manufacturers' recommendation. The membrane joint sealant manufacturer shall submit a detailed installation procedure to the Engineer at least 5 days prior to joint installation for his review.

13. Traffic shall not be allowed on the joint until the bonding adhesive has had time to cure, as recommended by the manufacturer.

14. Use plywood or other material to protect concrete adjacent to the join from spalling before any equipment is moved across the joint. Any spall will be repaired at the Contractor's expense by breaking out and replacing adjacent concrete, as approved by the Engineer.

15. The Membrane Sealant Expansion Joint will be measured in feet to the nearest one-tenth foot, complete in place. Measurement will be made of the overall horizontal length. The Membrane Sealant Expansion joint will be paid for at the contract unit price per foot complete in place. Payment for this item shall be full compensation for furnishing all the required material in place, including labor, equipment and incidentals necessary to complete the work in accordance with the plans and the foregoing specifications.

**NOTES (CONTINUED)**

FOR

126' - 0" CONTINOUS CONCRETE BRIDGE

STR. NO. 64-154-385

OCTOBER 2015



| DESIGNED BY | CK. DES. BY | DRAFTED BY | |
|---|---|---|---|
| KSK | BD | KSK | Kevin N. Boeden |
| UNIN02PT | 02PTRC04 | | BRIDGE ENGINEER |

## BRIDGE DECK OVERLAY

1. The preparation for resurfacing consists of Concrete Removal Type 1A on the entire bridge deck and Type 1B, Type 1C, Type 1D and Type B over the deck surface as detailed on the plan sheets. Such removal shall be in conformance with these plans and Section 550 of the construction specifications. Extreme care shall be taken during the Concrete Removal 1A to assure that the existing resteel is not damaged. In the event that resteel damage inadvertently occurs, the Bridge Construction Engineer shall be immediately notified. Any damaged resteel shall be repaired by the Contractor, as approved by the Engineer, at no additional cost to the Department.

2. Concrete Removal Type 1C, Concrete Removal Type 1D, Concrete Removal Type B and Class A45 Concrete Fill may not be encountered and may be omitted from the project as determined by the Engineer.

3. Concrete Removal Type 1C, Concrete Removal Type 1D and Class A45 Concrete Fill is not anticipated to exceed the plan shown quantities. If the Engineer determines that Concrete Removal Type 1C, Concrete Removal Type 1D and/or Class A45 Concrete Fill in excess of the plan shown quantity is necessary, payment for the additional quantity shall be conformance with Section 550.5 of the Construction Specifications.

4. A minimum thickness of 2" of Low Slump Dense Concrete shall be maintained on the bridge deck.

5. It will be necessary for the Contractor to shape the surface of the Low Slump Dense Concrete Bridge Deck Overlay within one foot of the curb as detailed in the plans to insure that water drains to the deck drains or off the ends of the bridge.

6. Concrete for final deck overlay shall be as specified for Low Slump Dense Concrete in Section 550 of the Construction Specifications.

7. No traffic will be allowed to operate on the scarified portion of the bridge deck. If it appears that the entire Low Slump Dense Concrete Overlay can not be completed prior to winter, the Type 1A, 1B, 1C, 1D and Type B removal shall not be done until work resumes in the spring. In the event that scarification has been started and due to unforeseen circumstances it becomes impossible to complete the placement of the Low Slump Dense Concrete Overlay on the entire surface of the structure prior to winter, the Office of Bridge Design shall be notified. Recommendations for handling winter traffic will then be made. These recommendations may include, but are not limited to, filling extra depth removal areas with Class A45 Concrete, placing an asphalt overlay on the uncompleted area so that the entire roadway width may be opened to traffic, removal of the asphalt overlay when work is resumed and scarifying an additional 1/4" of depth on the bridge deck. The cost of this work, including asphalt overlay, scarification, Class A45 Concrete, extra Low Slump Dense Concrete, and all other items incidental to this work, shall be at the expense of the Contractor.

8. During placement of the Low Slump Dense Concrete Overlay all vehicular traffic on lane open for travel shall be stopped by flaggers before entering onto the bridge and then allowed to proceed at a maximum of 5 MPH. To safely slow traffic to cross the bridge during the deck overlay period two advance flaggers shall be used.

## AS - BUILT ELEVATION SURVEY

The Contractor shall be responsible for recording the As-built deck elevations at the locations shown by the Table of As-Built Elevations shown in the plans. The elevations to be recorded in these tables shall be based on the National Geodetic Survey (NGS) North American Vertical Datum of 1988 (NAVD88). The Engineer shall provide the Contractor with a description, elevation, and location of the nearest benchmark that has a NAVD88 established elevation for the Contractor's use. The benchmark shown in the plans has not been tied to the NAVD88. The Contractor shall be responsible for establishing a NAVD88 elevation for the benchmark provided in the plans. All costs associated with obtaining the NAVD88 elevations at the locations shown in the table and for the benchmark shown in the plans, including all equipment, labor and any incidentals required shall be incidental to the contract lump sum price for Bridge Elevation Survey.

**NOTES (CONTINUED)**

FOR

**126' - 0" CONTINUOUS CONCRETE BRIDGE**

STR. NO. 64-154-385

OCTOBER 2015



| DESIGNED BY | CK. DES. BY | DRAFTED BY | |
|---|---|---|---|
| KSK | BD | KSK | Kevin N. Boeden |
| UNIN02PT | 02PTRC05 | | BRIDGE ENGINEER |

| STATE OF | PROJECT | SHEET NO. | TOTAL SHEETS |
|---|---|---|---|
| S.D. | IM-PH 0291(122)0 | 111 | 284 |

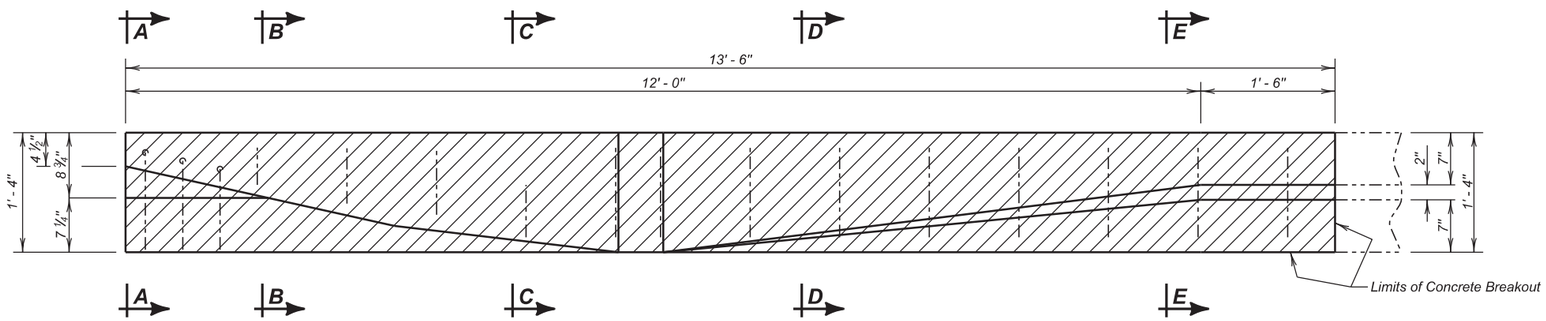


PLAN

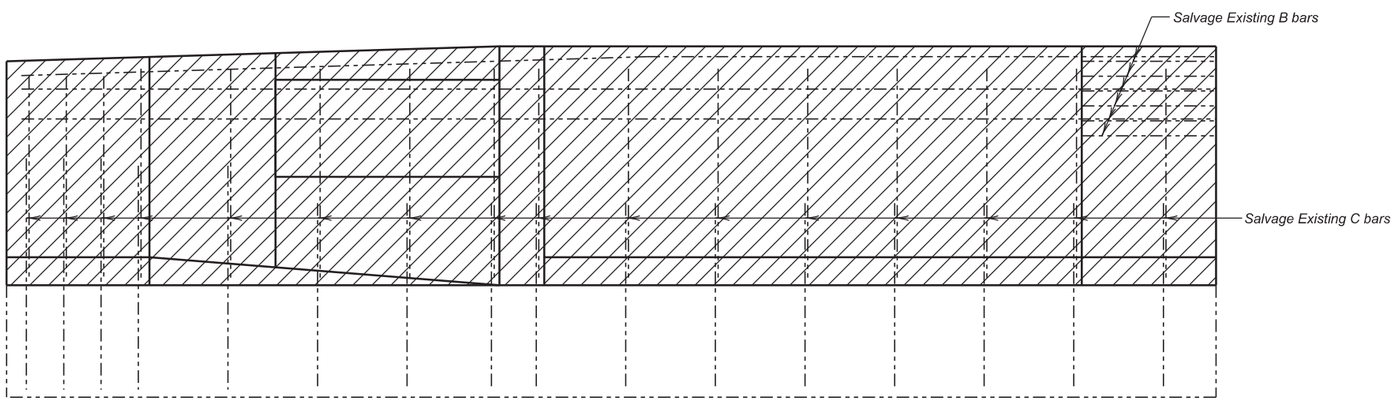


ELEVATION

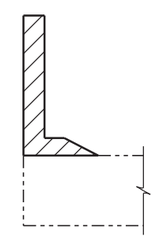

VIEW A - A

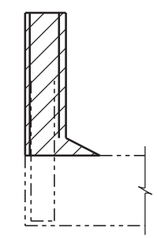

SEC. B - B

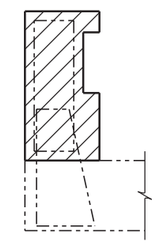

SEC. C - C

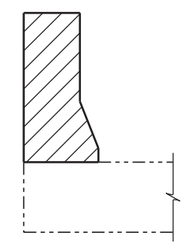

SEC. D - D

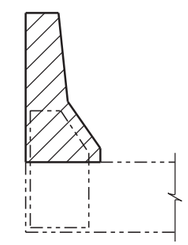

SEC. E - E

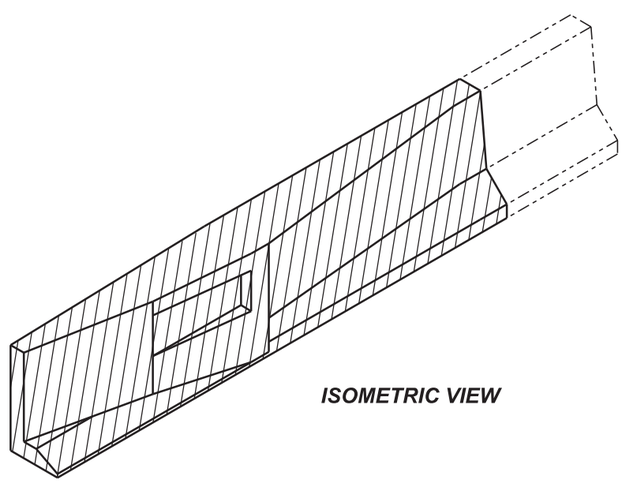

ISOMETRIC VIEW

**ESTIMATED QUANTITIES**
(All Four End Blocks)

| ITEM | UNIT | QUANTITY | |
|---|---|---|---|
| | | Phase 1 | Phase 2 |
| Breakout Structural Concrete | Cu. Yd. | 2.6 | 2.6 |
| | | | |
| | | | |

NOTE:
This sheet is to be used in conjunction with
Sheet Nos. 7 and 8 of 24.

Shaded areas indicate limits of concrete breakout.

**(SOUTH BOUND LANES)**
**END BLOCK MODIFICATION**

FOR

126' - 0" CONTINUOUS CONCRETE BRIDGE

40' - 0" ROADWAY — 0° SKEW
OVER COUNTY ROAD — SEC. 15 - T89N - R48W
STR. NO. 64-154-385 — IM-PH 0291(122)0

UNION COUNTY
S. D. DEPT. OF TRANSPORTATION
OCTOBER 2015



| DESIGNED BY | CK. DES. BY | DRAFTED BY | |
|---|---|---|---|
| KSK | BD | KR | Kevin N. Boeden |
| UNIN02PT | 02PTRC06 | | BRIDGE ENGINEER |

| STATE OF | PROJECT | SHEET NO. | TOTAL SHEETS |
|---|---|---|---|
| S.D. | IM-PH 0291(122)0 | 112 | 284 |

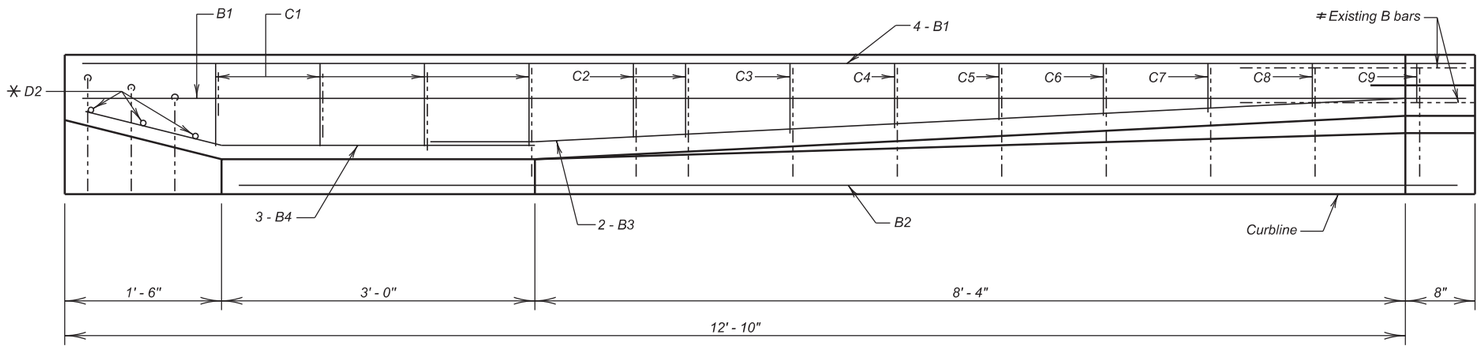


**PLAN**

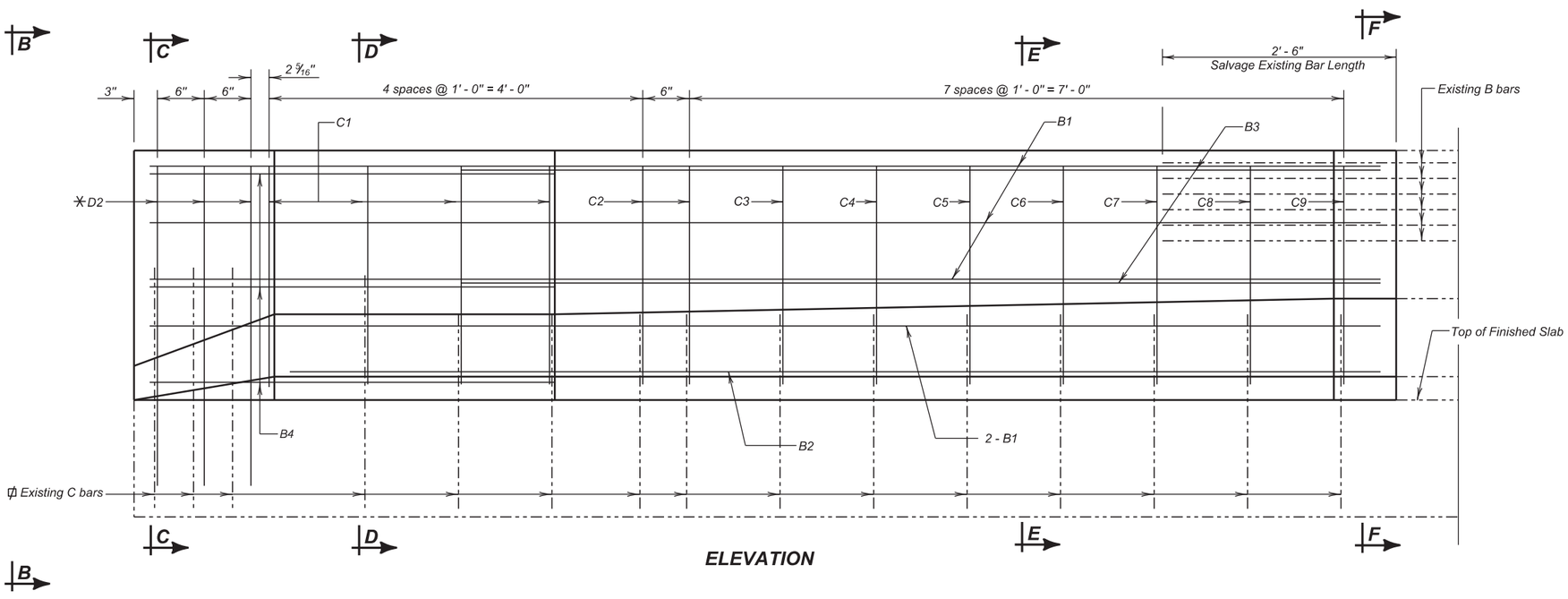


**ELEVATION**

## REINFORCING SCHEDULE

*( For Four End Blocks )*

| Mk. | No. | Size | Length | Type |
|---|---|---|---|---|
| B1 | 20 | 4 | 13' - 2" | Str. |
| B2 | 4 | 4 | 11' - 8" | Str. |
| B3 | 8 | 4 | 9' - 4" | 19B |
| B4 | 12 | 4 | 4' - 4" | 19B |
| C1 | 16 | 4 | 7' - 0" | T1 |
| C2 | 8 | 4 | 6' - 10" | T1 |
| C3 | 4 | 4 | 6' - 9" | T1 |
| C4 | 4 | 4 | 6' - 8" | T1 |
| C5 | 4 | 4 | 6' - 6" | T1 |
| C6 | 4 | 4 | 6' - 5" | T1 |
| C7 | 4 | 4 | 6' - 4" | T1 |
| C8 | 4 | 4 | 6' - 3" | T1 |
| C9 | 4 | 4 | 5' - 1" | S11 |
| △ D2 | 12 | 6 | 3' - 5" | Str. |

Bending Details

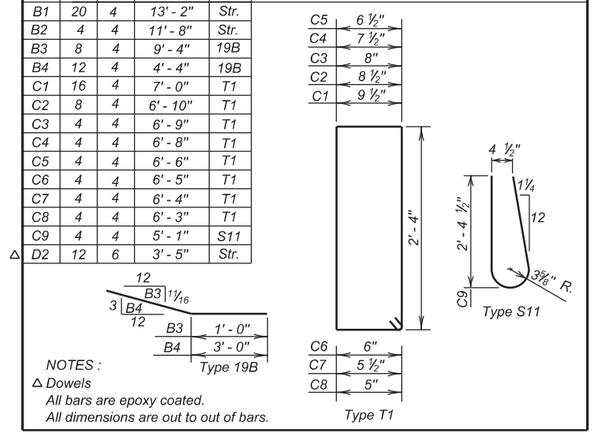


NOTES :
△ Dowels
All bars are epoxy coated.
All dimensions are out to out of bars.

## ESTIMATED QUANTITIES

| ITEM | UNIT | QUANTITY Phase 1 | QUANTITY Phase 2 |
|---|---|---|---|
| Class A45 Concrete, Bridge Repair | Cu. Yd. | 2.6 | 2.6 |
| ★ Epoxy Coated Reinforcing Steel | Lb. | 261 | 261 |
| Install Dowel in Concrete | Each | 6 | 6 |
| Galvanic Anode | Each | 28 | 28 |

★ Does not include the following quantities for D2 bars as these are paid for in the Bid Item "Install Dowel in Concrete".

| PHASE I | PHASE 2 |
|---|---|
| 31 Lb. | 31 Lb. |

NOTE:
This sheet is to be used in conjunction with Sheet Nos. 6 and 8 of 24.

ϕ Bend Existing Bars where necessary to maintain 2" clear cover.
✳ D2 are to be drilled in and grouted with epoxy.
≠ Extend existing B bars into new section (2' - 6").

**(SOUTH BOUND LANES)**
**END BLOCK MODIFICATION (CONTINUED)**

FOR

126' - 0" CONTINUOUS CONCRETE BRIDGE

40' - 0" ROADWAY — 0° SKEW
OVER COUNTY ROAD — SEC. 15 - T89N - R48W
STR. NO. 64-154-385 — IM-PH 0291(122)0

UNION COUNTY
S. D. DEPT. OF TRANSPORTATION
OCTOBER 2015



| DESIGNED BY | CK. DES. BY | DRAFTED BY | |
|---|---|---|---|
| KSK | BD | KR | Kevin N. Boeden |
| UNIN02PT | 02PTRC07 | | BRIDGE ENGINEER |

| STATE OF | PROJECT | SHEET NO. | TOTAL SHEETS |
|---|---|---|---|
| S.D. | IM-PH 0291(122)0 | 113 | 284 |

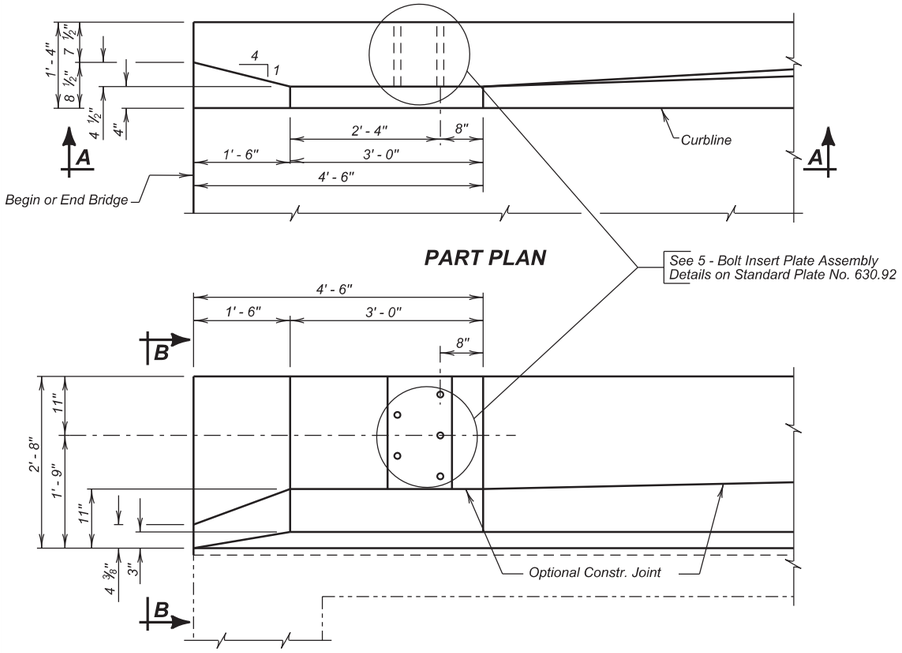


PART PLAN

VIEW A - A

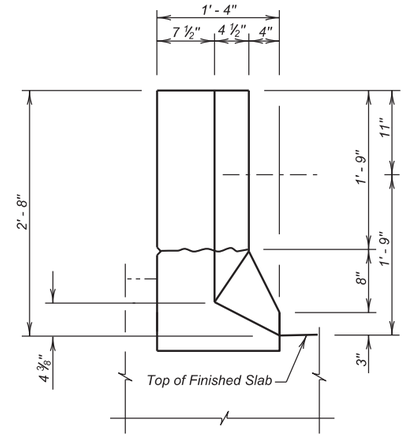


VIEW B - B

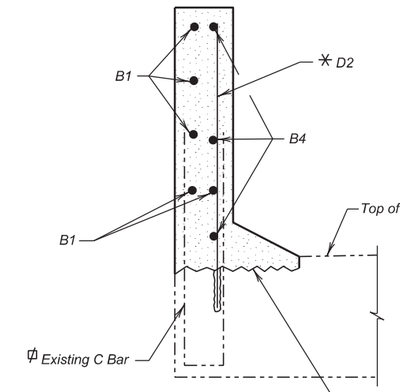


SEC. C - C

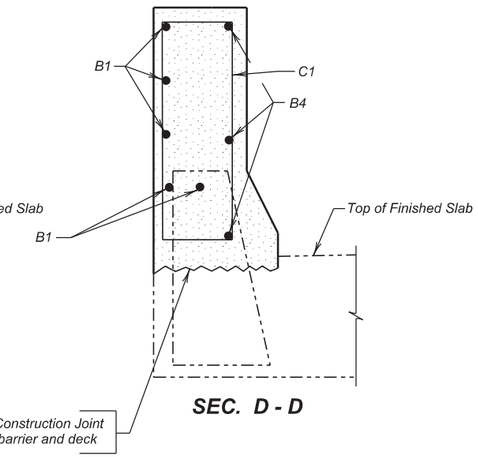


SEC. D - D

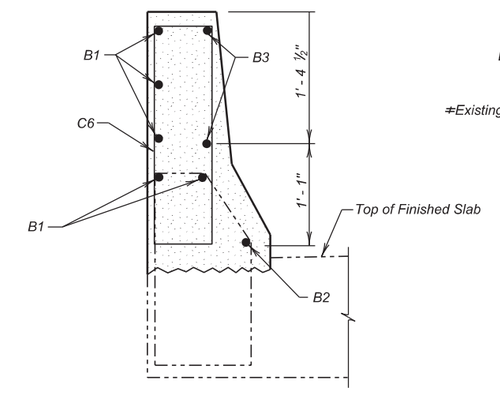


SEC. E - E

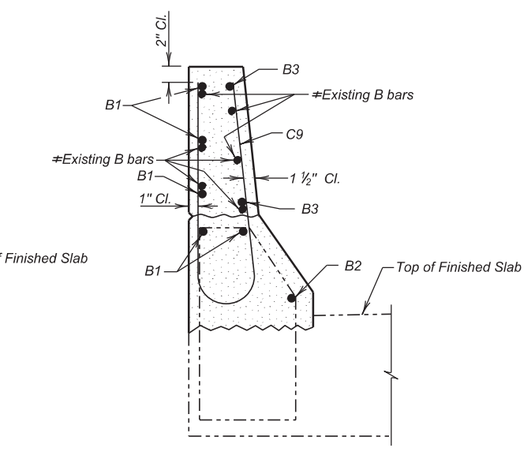


SEC. F - F

NOTE:
This sheet is to be used in conjunction with
Sheet Nos. 6 and 7 of 24.

ϕ Bend Existing Bars where necessary to maintain 2" clear cover.
✳ D2 are to be drilled in and grouted with epoxy.
≠ Extend existing B bars into new section (2' - 6").

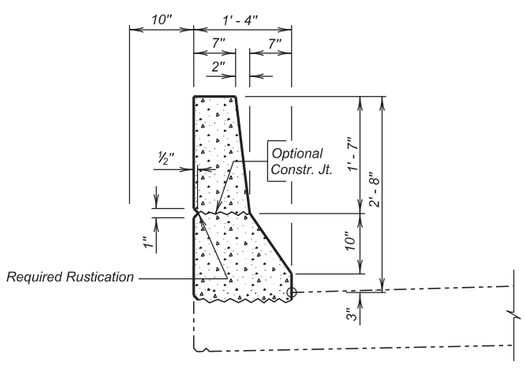


BARRIER DETAILS

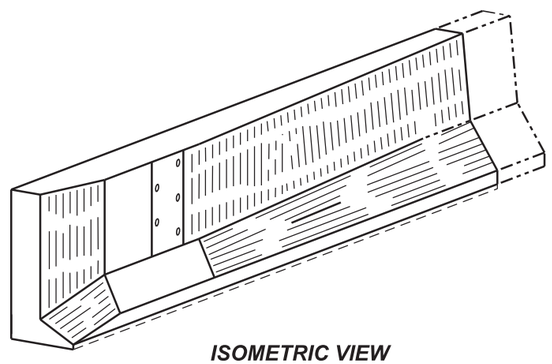

ISOMETRIC VIEW

**(SOUTH BOUND LANES)**
**END BLOCK MODIFICATION (CONTINUED)**

FOR

126' - 0" CONTINUOUS CONCRETE BRIDGE

40' - 0" ROADWAY — 0° SKEW
OVER COUNTY ROAD — SEC. 15 - T89N - R48W
STR. NO. 64-154-385 — IM-PH 0291(122)0

UNION COUNTY
S. D. DEPT. OF TRANSPORTATION
OCTOBER 2015



| DESIGNED BY | CK. DES. BY | DRAFTED BY | |
|---|---|---|---|
| KSK | BD | KR | Kevin N. Goeden |
| UNIN02PT | 02PTRC08 | | BRIDGE ENGINEER |

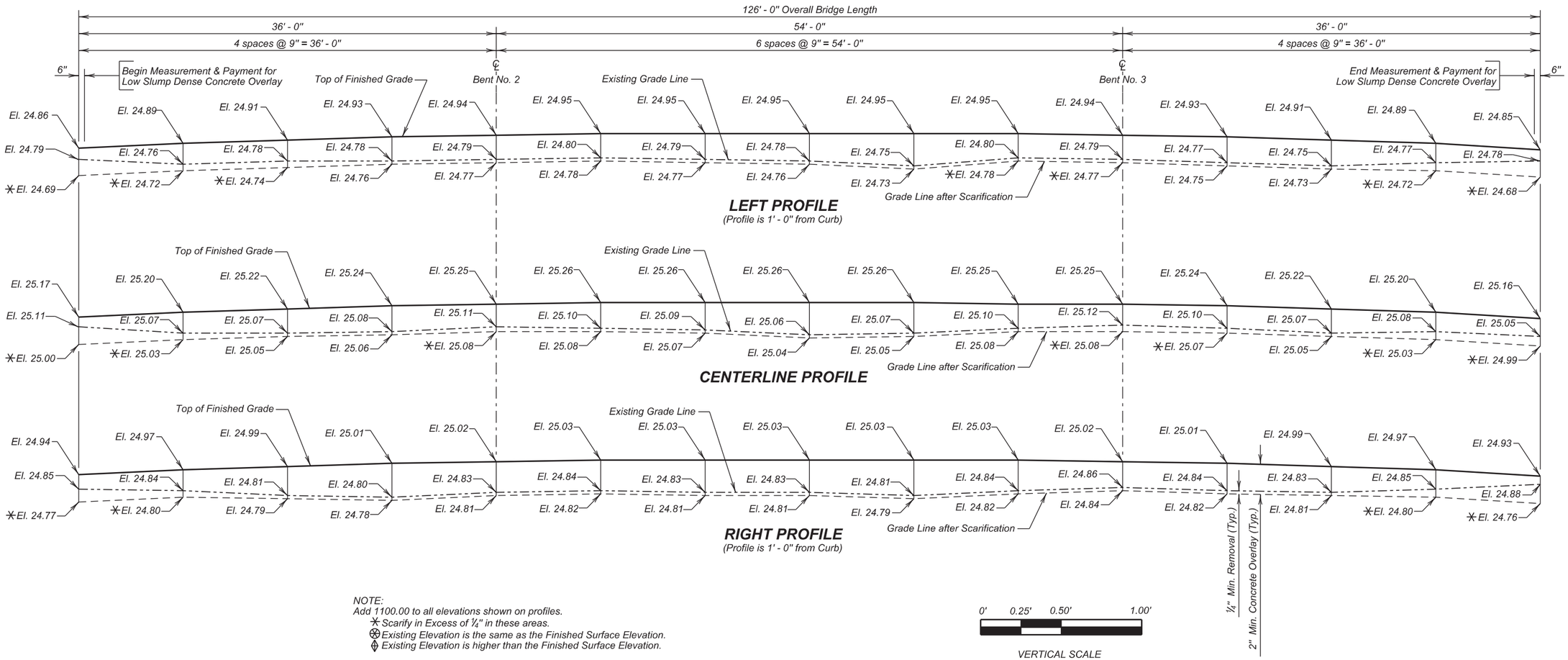


NOTE:
Add 1100.00 to all elevations shown on profiles.
✳ Scarify in Excess of ¼" in these areas.
⊗ Existing Elevation is the same as the Finished Surface Elevation.
⊕ Existing Elevation is higher than the Finished Surface Elevation.

**Benchmark Description:**
Chiseled "X" on top of NE Wingwall
of NBL Str. No. 64-155-385
Elevation 1125.30

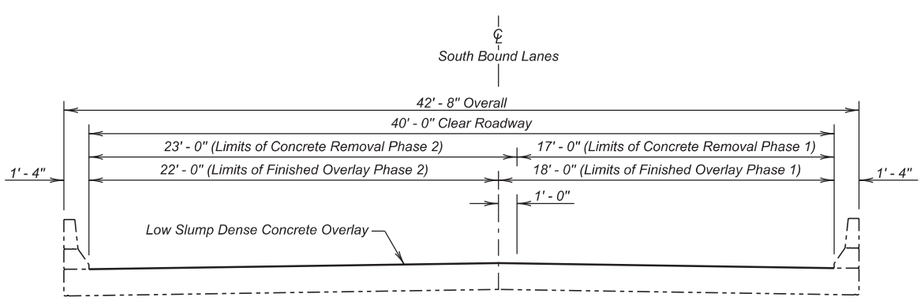


**TYPICAL SECTION**

**ESTIMATED QUANTITIES**

| ITEM | UNIT | QUANTITY Phase I | QUANTITY Phase 2 |
|---|---|---|---|
| Low Slump Dense Concrete Deck Overlay | Cu. Yd. | 19.3 | 22.5 |
| Concrete Removal Type 1A | Sq. Yd. | 263.9 | 291.7 |
| Concrete Removal Type 1B | Sq. Yd. | 26.4 | 29.2 |
| Concrete Removal Type 1C | Sq. Yd. | 13.2 | 14.6 |
| Concrete Removal Type 1D | Sq. Yd. | 13.2 | 14.6 |
| Concrete Removal Type B | Ft. | 10.0 | 10.0 |
| Finishing and Curing | Cu. Yd. | 250.0 | 305.6 |
| Class A45 Concrete Fill | Sq. Yd. | 5.4 | 6.0 |

**(SOUTH BOUND LANES)**
**DECK PROFILES FOR LOW SLUMP DENSE CONCRETE OVERLAY**
FOR
126' - 0" CONTINUOUS CONCRETE BRIDGE

40' - 0" ROADWAY — 0° SKEW
OVER COUNTY ROAD — SEC. 15 - T89N - R48W
STR. NO. 64-154-385 — IM-PH 0291(122)0

UNION COUNTY
S. D. DEPT. OF TRANSPORTATION
OCTOBER 2015



| DESIGNED BY | CK. DES. BY | DRAFTED BY | |
|---|---|---|---|
| KSK | BD | KR | Kevin N. Goeden |
| UNIN02PT | 02PTRC09 | | BRIDGE ENGINEER |

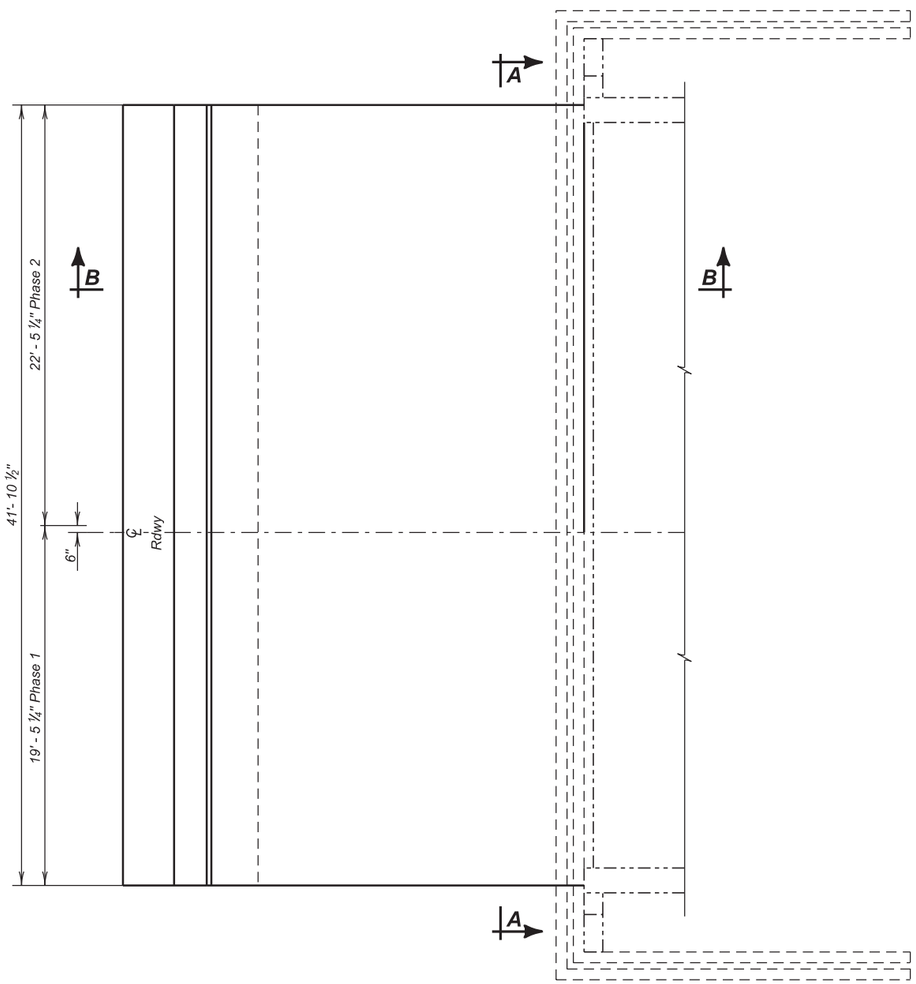


**PLAN**
(Abut. No. 1 Shown)
(Abutment No. 4 similar about rotation)

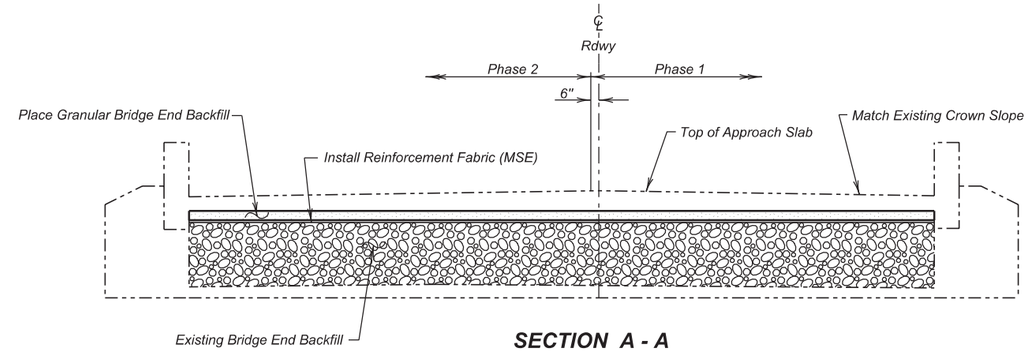


**SECTION A - A**

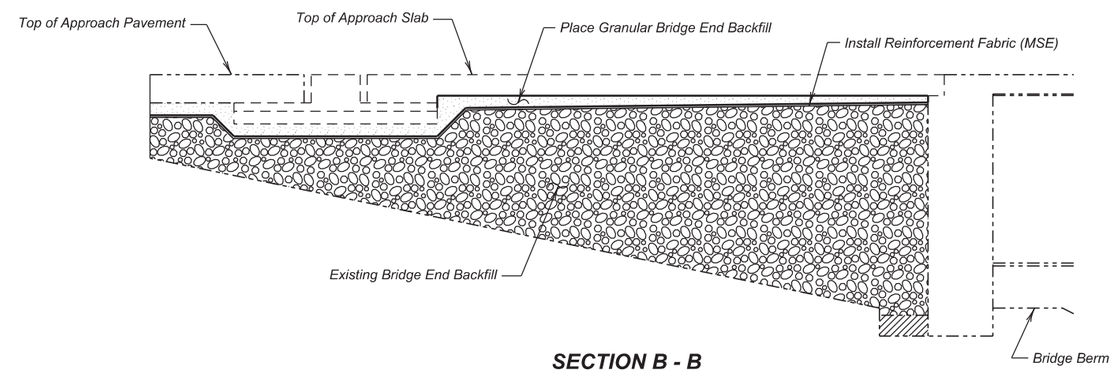


**SECTION B - B**
(at ℄ Roadway)

**ESTIMATED QUANTITIES**

| ITEM | UNIT | QUANTITY Phase I | QUANTITY Phase 2 |
|---|---|---|---|
| ϕ Granular Bridge End Backfill | CuYd | 7.7 | 9.0 |
| | | | |

ϕ Item 1 is an approximate quantity contained in the above bid item and is for information only.

| | PHASE 1 | PHASE 2 |
|---|---|---|
| 1. MSE Geotextile Fabric | 123.0 Sq. Yd. | 142.0 Sq. yd. |

**(SOUTH BOUND LANES)**
**APPROACH SLAB UNDERDRAIN MODIFICATION**
FOR
126' - 0" CONTINUOUS CONCRETE BRIDGE
40' - 0" ROADWAY — 0° SKEW
OVER COUNTY ROAD — SEC. 15 - T89N - R48W
STR. NO. 64-154-385 — IM-PH 0291(122)0

UNION COUNTY
S. D. DEPT. OF TRANSPORTATION
OCTOBER 2015



| DESIGNED BY | CK. DES. BY | DRAFTED BY | |
|---|---|---|---|
| KSK | BD | KR | Kevin N. Goeden |
| UNIN02PT | 02PTRC10 | | BRIDGE ENGINEER |

| STATE OF | PROJECT | SHEET NO. | TOTAL SHEETS |
|---|---|---|---|
| S.D. | IM-PH 0291(122)0 | 116 | 284 |

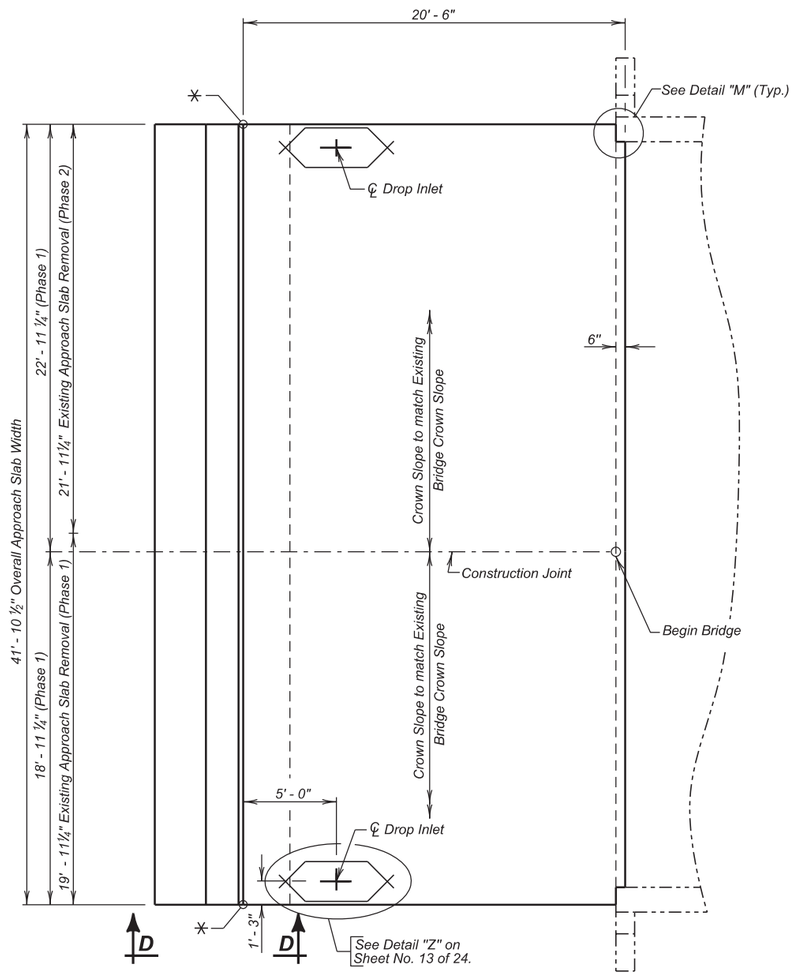


**PLAN**
(Adjacent to Abutment No. 1)

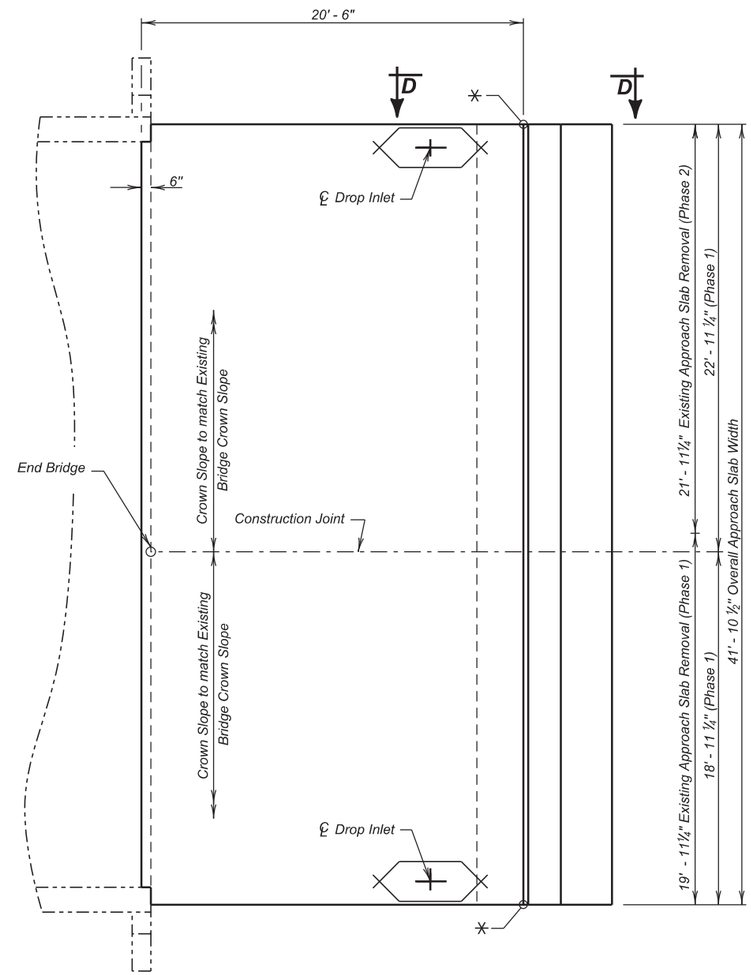


**PLAN**
(Adjacent to Abutment No. 4)

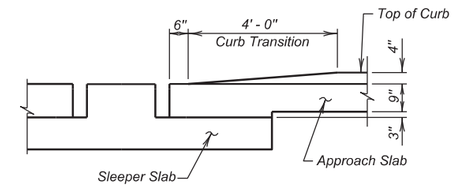


**VIEW D - D**

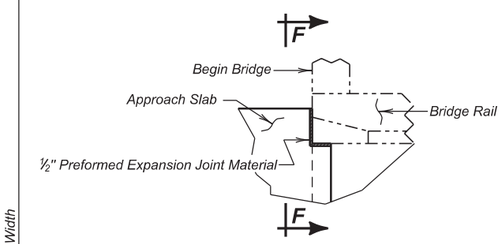


**DETAIL "M"**

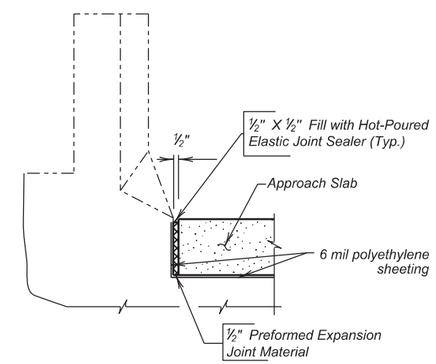


**SEC. F - F**

✳ Elevation is Top of Slab back of Curb at this point. See Approach Slab Notes.

Use this sheet in conjunction with Sheet Nos. 12 thru 14 of 24.

**(SOUTH BOUND LANES)**
**APPROACH SLAB LAYOUT**

FOR

126' - 0" CONTINUOUS CONCRETE BRIDGE

40' - 0" ROADWAY — 0° SKEW
OVER COUNTY ROAD — SEC. 15 - T89N - R48W
STR. NO. 64-154-385 — IM-PH 0291(122)0

UNION COUNTY
S. D. DEPT. OF TRANSPORTATION
OCTOBER 2015

11 OF 24

| DESIGNED BY | CK. DES. BY | DRAFTED BY | |
|---|---|---|---|
| KSK | BD | KSK | Kevin N. Boeden |
| UNIN02PT | 02PTKC11 | | BRIDGE ENGINEER |

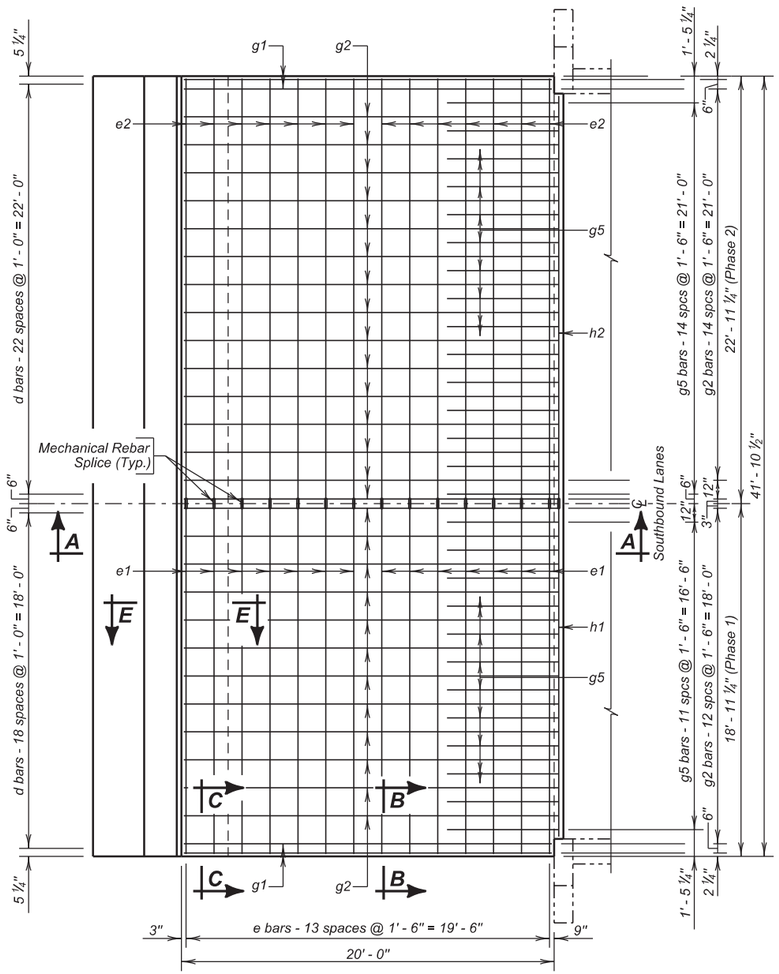


**PLAN**
(Top Steel)
(Adjacent to Abutment No. 1)

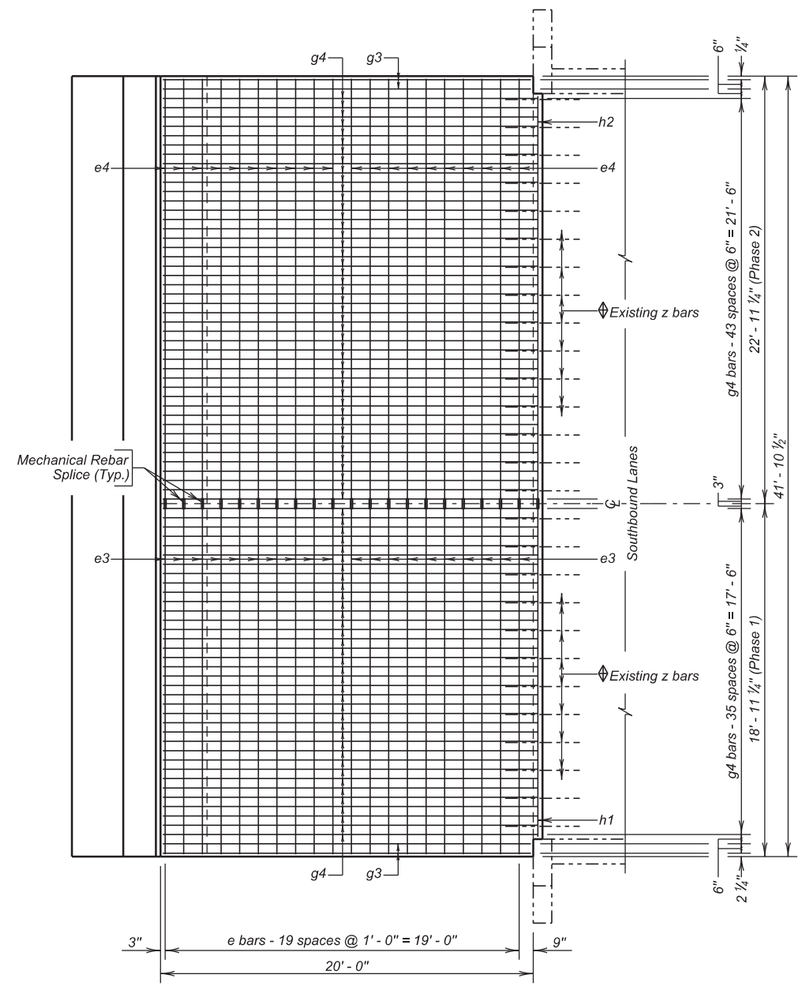


**PLAN**
(Bottom Steel)
(Adjacent to Abutment No. 4)

## REINFORCING SCHEDULE
( For Two Approach and Two Sleeper Slabs )

**PHASE 1**

| | Mk. | No. | Size | Length | Type |
|---|---|---|---|---|---|
| ⌀ | c1 | 48 | 5 | 18' - 9" | Str. |
| | d1 | 76 | 4 | 7' - 9" | 2 |
| | d2 | 38 | 4 | 6' - 5" | T2 |
| ⌀ | e1 | 28 | 4 | 18' - 9" | Str. |
| ⌀ | e3 | 40 | 6 | 18' - 9" | Str. |
| | g1 | 4 | 4 | 19' - 8" | Str. |
| | g2 | 24 | 4 | 20' - 1" | Str. |
| | g3 | 4 | 8 | 19' - 8" | Str. |
| | g4 | 72 | 8 | 20' - 2" | Str. |
| | g5 | 24 | 4 | 6' - 0" | Str. |
| ⌀ | h1 | 4 | 6 | 17' - 10" | Str. |
| △ϕ | z1 | 6 | 6 | 4' - 0" | Str. |
| | a3 | 8 | 4 | 7' - 4" | 19A |

**PHASE 2**

| | Mk. | No. | Size | Length | Type |
|---|---|---|---|---|---|
| ⌀ | c2 | 48 | 5 | 22' - 9" | Str. |
| | d1 | 92 | 4 | 7' - 9" | 2 |
| | d2 | 46 | 4 | 6' - 5" | T2 |
| ⌀ | e2 | 28 | 4 | 22' - 9" | Str. |
| ⌀ | e4 | 40 | 6 | 22' - 9" | Str. |
| | g1 | 4 | 4 | 19' - 8" | Str. |
| | g2 | 30 | 4 | 20' - 2" | Str. |
| | g3 | 4 | 8 | 19' - 8" | Str. |
| | g4 | 88 | 8 | 20' - 2" | Str. |
| | g5 | 30 | 4 | 6' - 0" | Str. |
| ⌀ | h2 | 4 | 6 | 21' - 10" | Str. |
| △ϕ | z1 | 8 | 6 | 4' - 0" | Str. |
| | a3 | 8 | 4 | 7' - 4" | 19A |

*Bending Details*

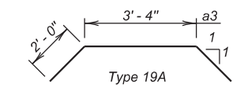


Type 19A

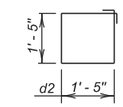


Type T2

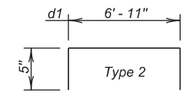


Type 2

*Note -*
*All Dimensions are out to out of bars.*
*All Bars to be Epoxy Coated.*

△ *Dowels*

ϕ *This quantity will vary depending on condition of existing z bars*

⌀ *Splice (Mechanically Spliced)*

## ESTIMATED QUANTITIES
(For Two Approach and Two Sleeper Slabs)

| ITEM | UNIT | QUANTITY Phase I | QUANTITY Phase 2 |
|---|---|---|---|
| Remove Concrete Bridge Approach Slab | Sq Yd | 111.7 | 122.9 |
| Concrete Approach Slab for Bridge | Sq Yd | 86.1 | 104.3 |
| Concrete Approach Sleeper Slab for Bridge | Sq Yd | 30.5 | 36.9 |
| Install Dowel In Concrete | Each | 6 | 8 |
| No. 4 Rebar Splice | Each | 28 | — |
| No. 5 Rebar Splice | Each | 48 | — |
| No. 6 Rebar Splice | Each | 44 | — |

| | PHASE I | PHASE 2 |
|---|---|---|
| 1. Concrete in Approach Slabs. | 22.4 Cu. Yd | 27.1 Cu. Yd |
| ✳ 2. Epoxy Coated Re-Steel in Approach Slabs. | 6183 Lbs. | 7488 Lbs. |
| 3. Concrete in Sleeper Slabs | 10.0 Cu. Yd | 12.2 Cu. Yd |
| 4. Epoxy Coated Re - Steel in Sleeper Slabs. | 1495 Lb. | 1812 Lbs. |

*Items 1 thru 4 are approximate quantities contained in the above bid item and are for information only.*

✳ *Does not include the following quantities for z1 bars as these are paid for in the Bid Item "Install Dowel in Concrete".*

| PHASE I | PHASE 2 |
|---|---|
| 36 Lb. | 48 Lb. |

ϕ *Salvage Existing z bars. If z bars cannot be reused, dowel in new z1 bars next to existing z bars. The quantity shown is an approximate quantity and will vary depending on field conditions.*

*Use this sheet in conjunction with Sheet Nos. 11, 13 & 14 of 24.*

**(SOUTH BOUND LANES)**
**APPROACH SLAB DETAILS**

FOR

126' - 0" CONTINUOUS CONCRETE BRIDGE

40' - 0" ROADWAY — 0° SKEW
OVER COUNTY ROAD — SEC. 15 - T89N - R48W
STR. NO. 64-154-385 — IM-PH 0291(122)0

UNION COUNTY

S. D. DEPT. OF TRANSPORTATION

OCTOBER 2015



| DESIGNED BY | CK. DES. BY | DRAFTED BY | |
|---|---|---|---|
| KSK | BD | KR | Kevin N. Goeden |
| UNIN02PT | 02PTRC12 | | BRIDGE ENGINEER |

| STATE OF | PROJECT | SHEET NO. | TOTAL SHEETS |
|---|---|---|---|
| S.D. | IM-PH 0291(122)0 | 118 | 284 |

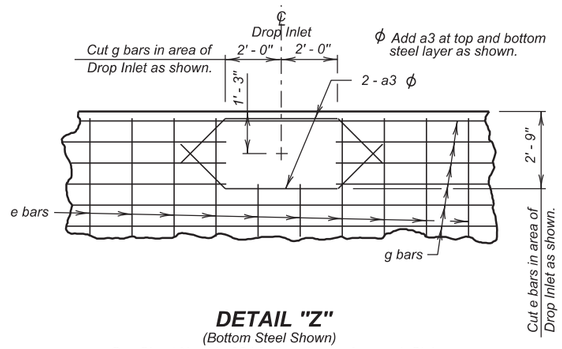


**DETAIL "Z"**
(Bottom Steel Shown)
See Sheet No. 11 of 24 for location on Approach Slab .

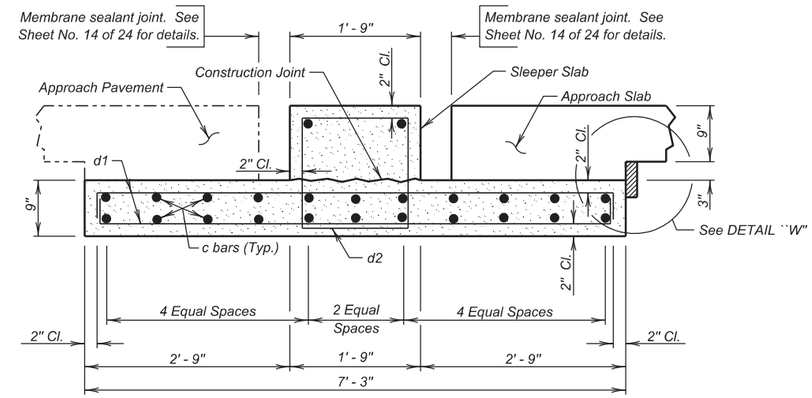


**SEC. E - E**
(Sleeper Slab)

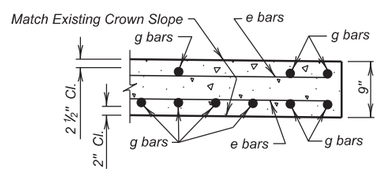


**SEC. C - C**

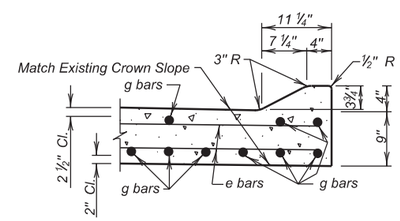


**SEC. B - B**

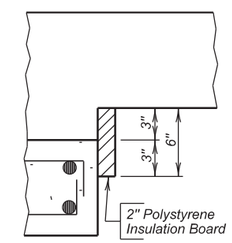


**DETAIL "W"**
The Polystyrene Insulation Board shall be firmly attached to the sleeper slab by a method to be approved by the Engineer.

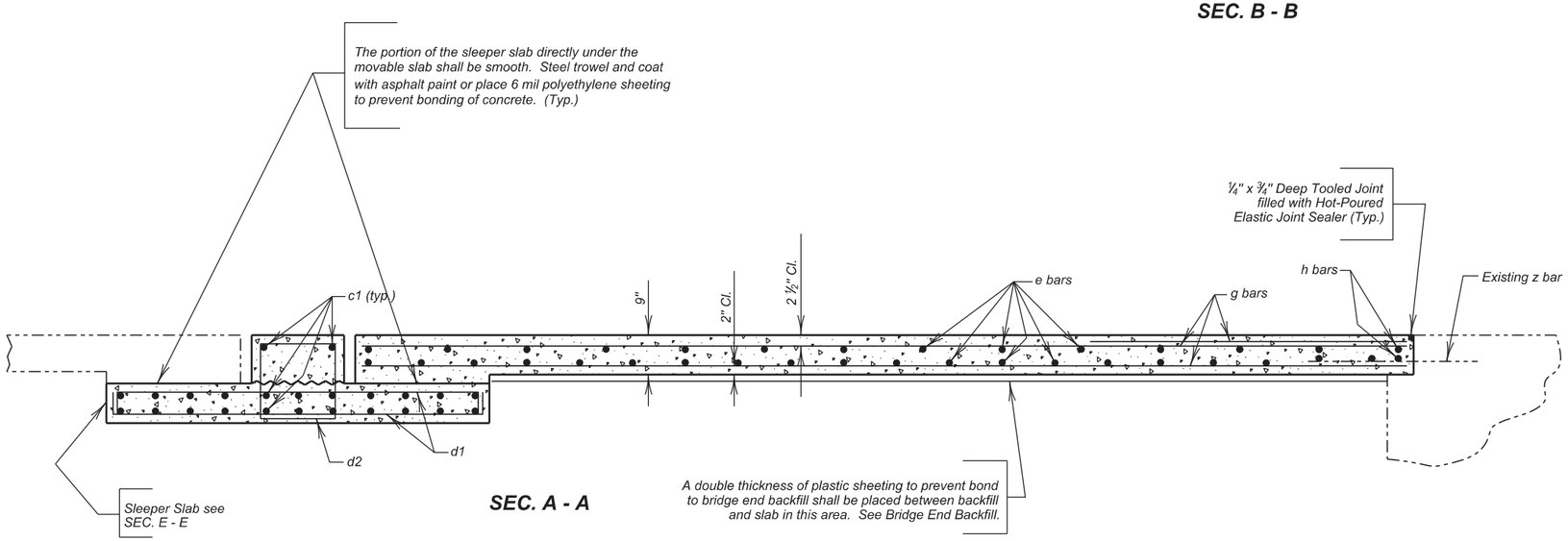


**SEC. A - A**

Use this sheet in conjunction with Sheet Nos. 11, 12, & 14 of 24.

**(SOUTH BOUND LANES)**
**APPROACH SLAB DETAILS (CONTINUED)**

FOR

126' - 0" CONTINUOUS CONCRETE BRIDGE

40' - 0" ROADWAY — 0° SKEW
OVER COUNTY ROAD — SEC. 15 - T89N - R48W
STR. NO. 64-154-385 — IM-PH 0291(122)0

UNION COUNTY
S. D. DEPT. OF TRANSPORTATION
OCTOBER 2015



| DESIGNED BY | CK. DES. BY | DRAFTED BY | |
|---|---|---|---|
| KSK | BD | KR | Kevin N. Boeden |
| UNIN02PT | 02PTRC13 | | BRIDGE ENGINEER |

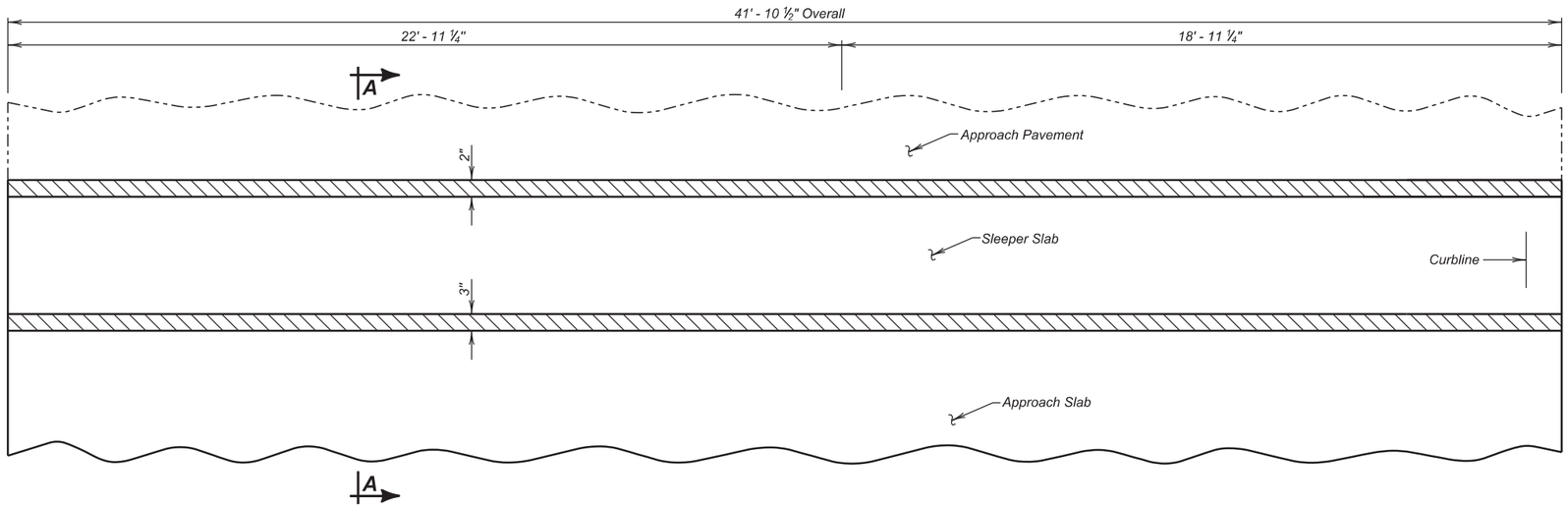


**PLAN**

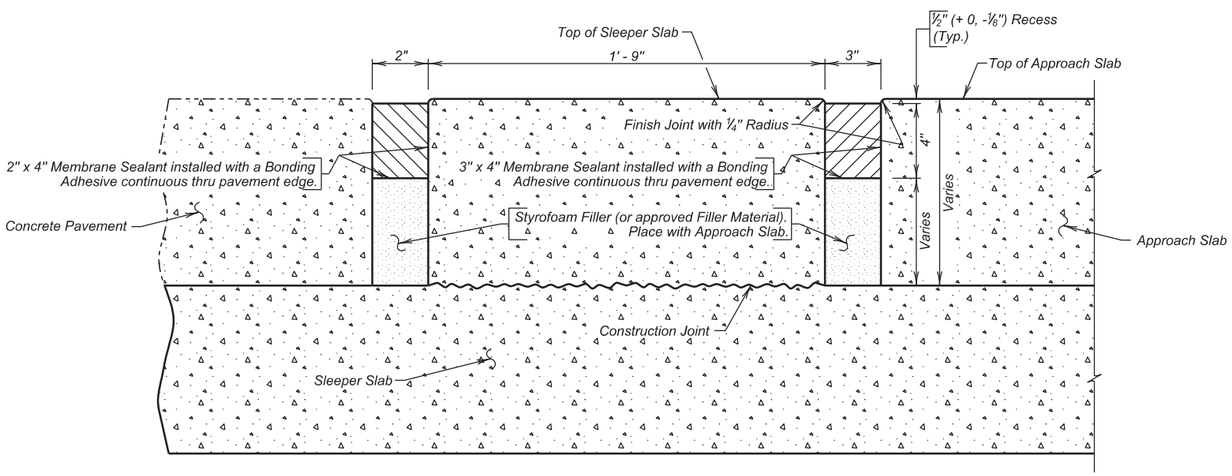


**SEC. A - A**

## ESTIMATED QUANTITIES

| ITEM | UNIT | QUANTITY | |
|---|---|---|---|
| | | Phase I | Phase 2 |
| Membrane Sealant Expansion Joint | Ft | 75.8 | 91.8 |
| | | | |

*Use this sheet in conjunction with Sheet Nos. 11 thru 13 of 24.*

**(SOUTH BOUND LANES)**
**APPROACH SLAB JOINT DETAILS**

FOR

126' - 0" CONTINUOUS CONCRETE BRIDGE

40' - 0" ROADWAY — 0° SKEW
OVER COUNTY ROAD — SEC. 15 - T89N - R48W
STR. NO. 64-154-385 — IM-PH 0291(122)0

UNION COUNTY

S. D. DEPT. OF TRANSPORTATION

OCTOBER 2015



| DESIGNED BY | CK. DES. BY | DRAFTED BY | |
|---|---|---|---|
| KSK | BD | KR | Kevin N. Goeden |
| UNIN02PT | 02PTRC14 | | BRIDGE ENGINEER |

| STATE OF | PROJECT | SHEET NO. | TOTAL SHEETS |
|---|---|---|---|
| S.D. | IM-PH 0291(122)0 | 120 | 284 |

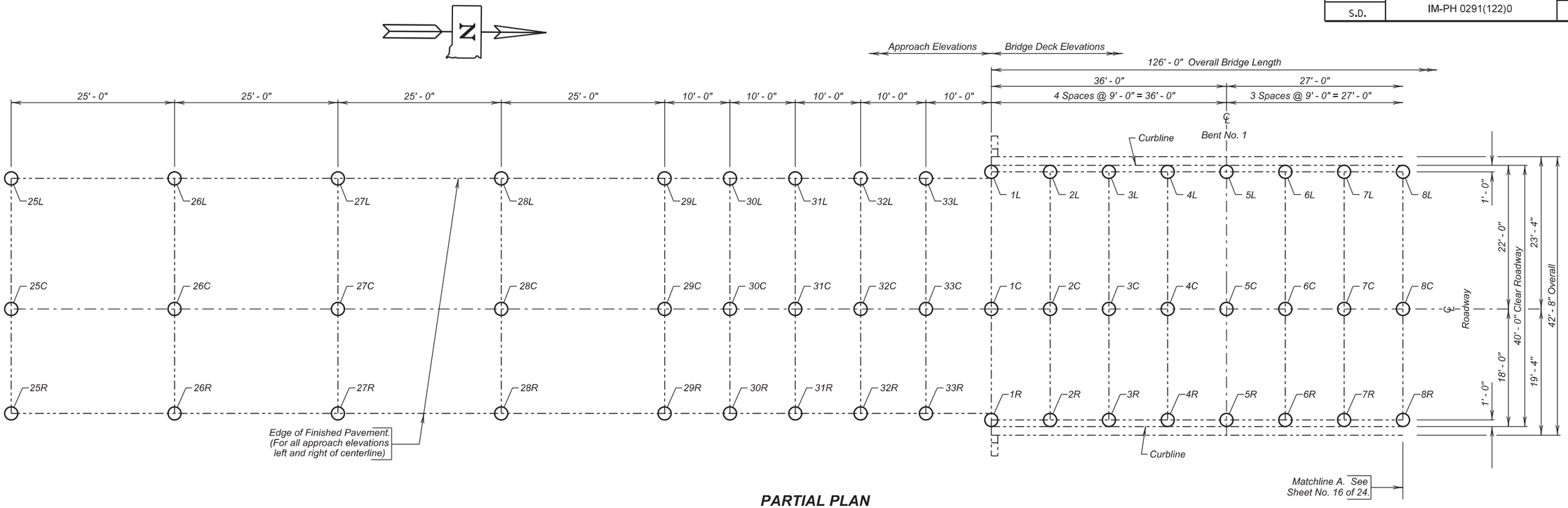


**PARTIAL PLAN**

| Table of Elevations - Bridge Deck | | | | | | | | | Table of Elevations - Approach Roadway | | | | | | | | |
|---|---|---|---|---|---|---|---|---|---|---|---|---|---|---|---|---|---|
| Location | Rod Reading | Elevation | Location | Rod Reading | Elevation | Location | Rod Reading | Elevation | Location | Rod Reading | Elevation | Location | Rod Reading | Elevation | Location | Rod Reading | Elevation |
| 1L | | | 1C | | | 1R | | | 25L | | | 25C | | | 25R | | |
| 2L | | | 2C | | | 2R | | | 26L | | | 26C | | | 26R | | |
| 3L | | | 3C | | | 3R | | | 27L | | | 27C | | | 27R | | |
| 4L | | | 4C | | | 4R | | | 28L | | | 28C | | | 28R | | |
| 5L | | | 5C | | | 5R | | | 29L | | | 29C | | | 29R | | |
| 6L | | | 6C | | | 6R | | | 30L | | | 30C | | | 30R | | |
| 7L | | | 7C | | | 7R | | | 31L | | | 31C | | | 31R | | |
| 8L | | | 8C | | | 8R | | | 32L | | | 32C | | | 32R | | |
| | | | | | | | | | 33L | | | 33C | | | 33R | | |

*NOTE :*
*The Contractor shall be responsible for producing the As - Built Elevation Survey soon after construction is complete and before the bridge is completely opened to traffic.*
***The As - Built Elevations of the overlay shall be based on the National Geodetic Survey North American Vertical Datum of 1988*** *and shall be taken and recorded at the locations shown by the table on this sheet. The completed table shall be given to the Engineer who will forward a copy to the Bridge Maintenance Engineer in the Office of Bridge Design and the Region Bridge Maintenance Engineer.*

***Benchmark Description:***
*Chiseled "X" on top of NE Wingwall of NBL Structure No. 64-155-385 Elevation 1125.30*

**SOUTH BOUND LANES**
**AS BUILT ELEVATION SURVEY**
FOR
126' - 0" CONTINUOUS CONCRETE BRIDGE

40' - 0" ROADWAY — 0 SKEW
OVER COUNTY ROAD — SEC. 15-T89N-R48W
STR. NO. 64-154-385 — IM-PH 0291(122)0

UNION COUNTY
S. D. DEPT. OF TRANSPORTATION
OCTOBER 2015



| DESIGNED BY | CK. DES. BY | DRAFTED BY | |
|---|---|---|---|
| EJA | NP | EJA | Kevin N. Goeden |
| UNIN02PT | 02PTKC15 | | BRIDGE ENGINEER |

| STATE OF | PROJECT | SHEET NO. | TOTAL SHEETS |
|---|---|---|---|
| S.D. | IM-PH 0291(122)0 | 121 | 284 |

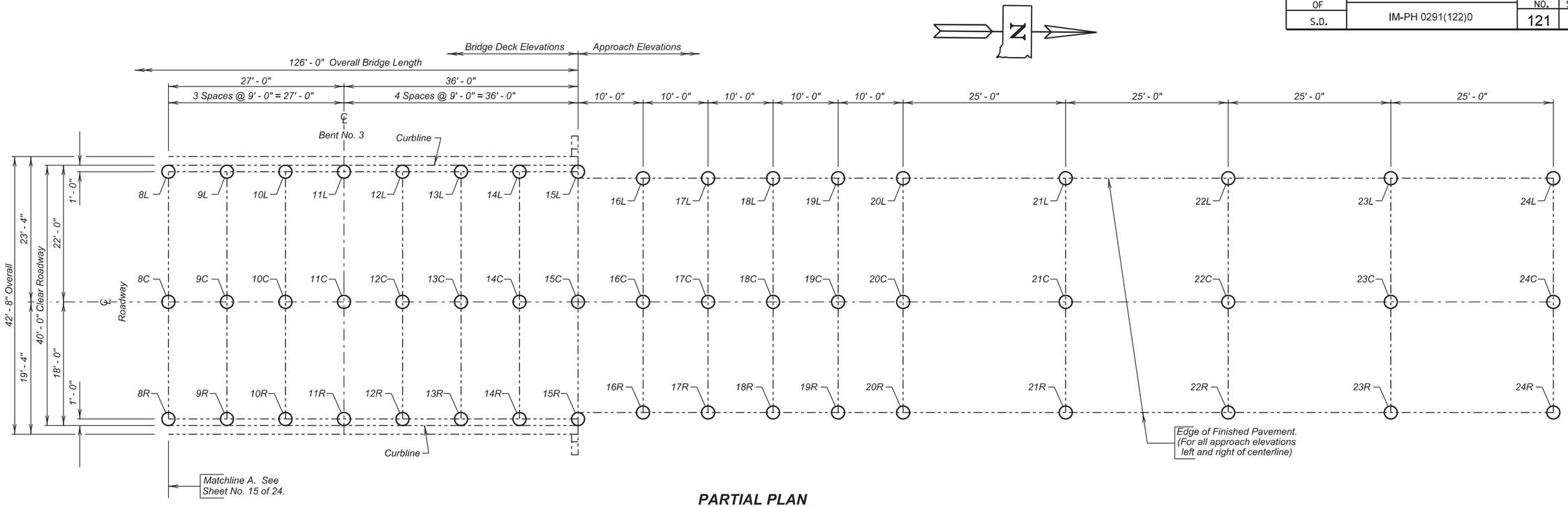


## PARTIAL PLAN

| Table of Elevations - Bridge Deck | | | | | | | | | Table of Elevations - Approach Roadway | | | | | | | | |
|---|---|---|---|---|---|---|---|---|---|---|---|---|---|---|---|---|---|
| Location | Rod Reading | Elevation | Location | Rod Reading | Elevation | Location | Rod Reading | Elevation | Location | Rod Reading | Elevation | Location | Rod Reading | Elevation | Location | Rod Reading | Elevation |
| 8L | | | 8C | | | 8R | | | 16L | | | 16C | | | 16R | | |
| 9L | | | 9C | | | 9R | | | 17L | | | 17C | | | 17R | | |
| 10L | | | 10C | | | 10R | | | 18L | | | 18C | | | 18R | | |
| 11L | | | 11C | | | 11R | | | 19L | | | 19C | | | 19R | | |
| 12L | | | 12C | | | 12R | | | 20L | | | 20C | | | 20R | | |
| 13L | | | 13C | | | 13R | | | 21L | | | 21C | | | 21R | | |
| 14L | | | 14C | | | 14R | | | 22L | | | 22C | | | 22R | | |
| 15L | | | 15C | | | 15R | | | 23L | | | 23C | | | 23R | | |
| | | | | | | | | | 24L | | | 24C | | | 24R | | |

**Benchmark Description:**

*Chiseled "X" on top of NE Wingwall of NBL Structure No. 64-155-385 Elevation 1125.30*

**SOUTH BOUND LANES**
**AS BUILT ELEVATION SURVEY (CONTINUED)**

FOR

126' - 0" CONTINUOUS CONCRETE BRIDGE

40' - 0" ROADWAY — 0 SKEW
OVER COUNTY ROAD — SEC. 15-T89N-R48W
STR. NO. 64-154-385 — IM-PH 0291(122)0

UNION COUNTY

S. D. DEPT. OF TRANSPORTATION

OCTOBER 2015



| DESIGNED BY | CK. DES. BY | DRAFTED BY | |
|---|---|---|---|
| EJA | NP | EJA | Kevin N. Goeden |
| UNIN02PT | 02PTKC16 | | BRIDGE ENGINEER |

**YEAR PLATE DETAILS FOR ORIGINAL CONSTRUCTION**

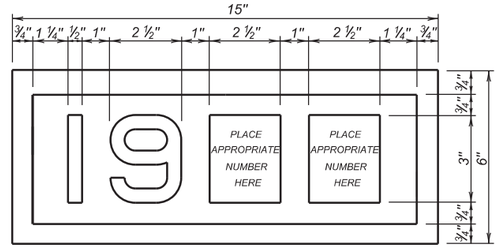


**YEAR PLATE DETAILS FOR NEW CONSTRUCTION**

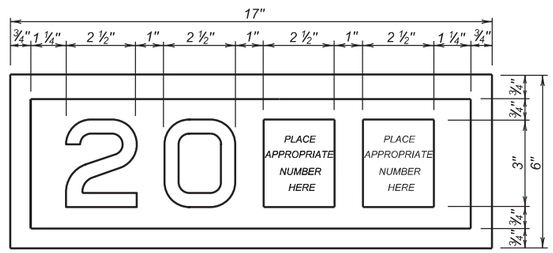


## GENERAL NOTES:

1. Year plates of the general dimensions shown shall be constructed on all box culverts and bridges. The year plates shall be constructed in reverse and attached to the forms in such a manner that the finished imprint in the concrete does not exceed one-half (½) inch in depth.
2. Year plates shall be located on structure(s) as follows:
   a. On cast-in-place box culverts the year plates shall be four and one - half (4 ½) inches below the top of the upstream parapet wall and centered laterally on the upstream face. On precast box culverts the year plate shall be centered laterally on the upstream face of the top slab. Where an extended interior wall interferes with this location, the year plate shall be centered in an adjacent barrel.
   b. On bridges with six (6) inch curbs or "Jersey" shaped barriers with no endblocks, the year plate shall be centered vertically on the curb face approximately six (6) inches from the end of the bridge, or as designated by the Engineer. On bridges with "Jersey" shaped barrier endblocks, the year plate shall be centered on the upper sloped portion of the barrier approximately 5'- 6" from the end of the bridge, or as designated by the Engineer. There shall be one year plate at each end of the bridge on opposite sides.
   c. When the plans specify that both the original date of construction and the date of reconstruction are to be shown, one date shall be placed as listed above and the other located adjacent to it. Both year plates shall be shown at each end of the bridge on opposite sides.
3. There will be no separate measurement or payment made for year plates on box culverts and bridges. All costs for this work shall be incidental to other contract items.

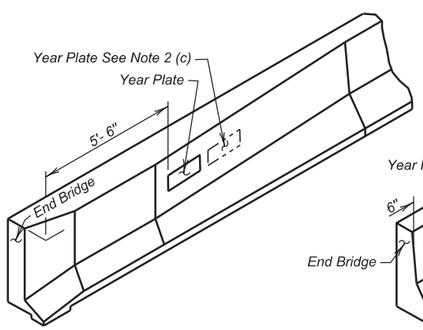


**JERSEY BARRIER**
(With Endblock)

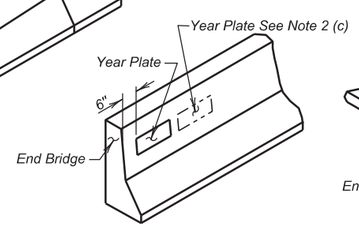


**JERSEY BARRIER**

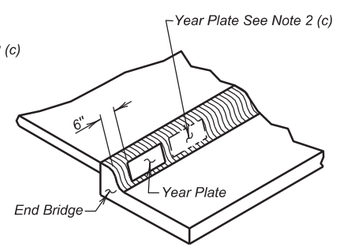


**TYPE B CURB**

June 26, 2012

| Published Date: 4th Qtr. 2015 | SDDOT | DUAL DATE YEAR PLATE DETAILS | PLATE NUMBER 460.03 |
|---|---|---|---|
| | | | Sheet 1 of 1 |

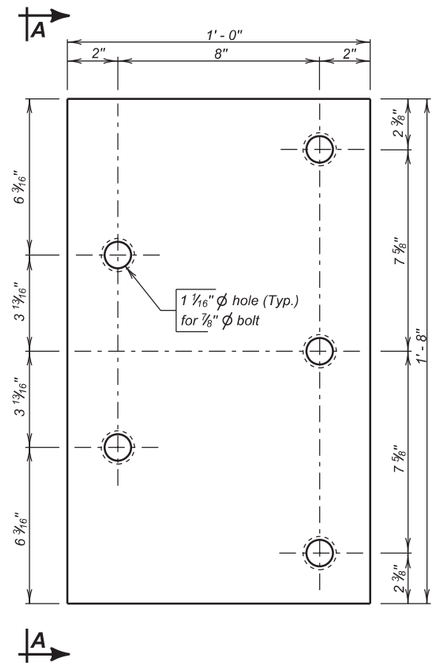


**ELEVATION**

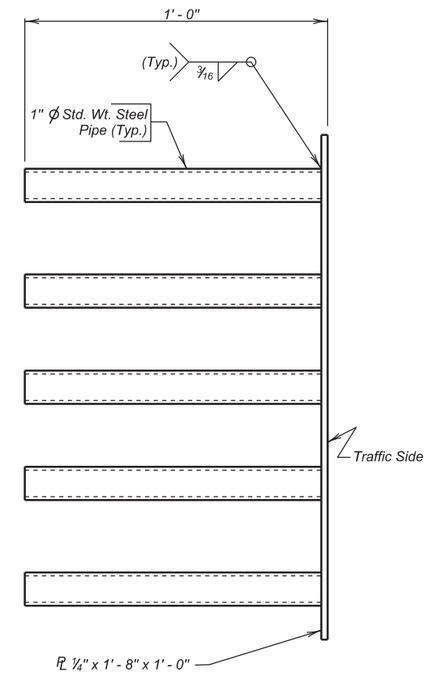


**VIEW A - A**

## GENERAL NOTES:

1. Steel plate for the insert assembly shall conform to ASTM A709 Grade 36. The steel pipes shall conform to ASTM A53 or ASTM A500 Grade B.
2. Welding and weld inspection shall be in conformance with AWS D1.1 - (Current Year) Structural Welding Code - Steel.
3. After fabrication, galvanize in accordance with AASHTO M111 (ASTM A123).
4. Bolts, nuts, and washers shall be provided with each assembly. Bolts shall be galvanized and conform to the requirements of ASTM A307, A325, or A449. Plain washers shall be galvanized and conform to ASTM F844.
5. Bolt heads shall be placed on the traffic side of the endblock. Bolt projection at the back side of the insert shall not exceed 1 inch beyond the nut.
6. The cost of the 5 bolt insert plate assembly complete in place including welding and galvanizing shall be incidental to the contract unit price per Cubic Yard for " Class A45 Concrete, Miscellaneous ", " Class A45 Concrete, Bridge Deck ", or " Class A45 Concrete, Bridge Repair ", as applicable.

December 23, 2013

| Published Date: 4th Qtr. 2015 | SDDOT | 5 BOLT INSERT PLATE ASSEMBLY | PLATE NUMBER 630.92 |
|---|---|---|---|
| | | | Sheet 1 of 1 |

| STATE OF | PROJECT | SHEET NO. | TOTAL SHEETS |
|---|---|---|---|
| S.D. | IM-PH 0291(12)210 | 123 | 284 |

B.M. #1 - Elev. 1106.64
I.P. in Pipe
280' Lt. Sta. 898+64

## NOTE —

T.S. at C. El. = Top of Slab Elevation at Curb
T.S. at ℄ El. = Top of Slab Elevation at Centerline.

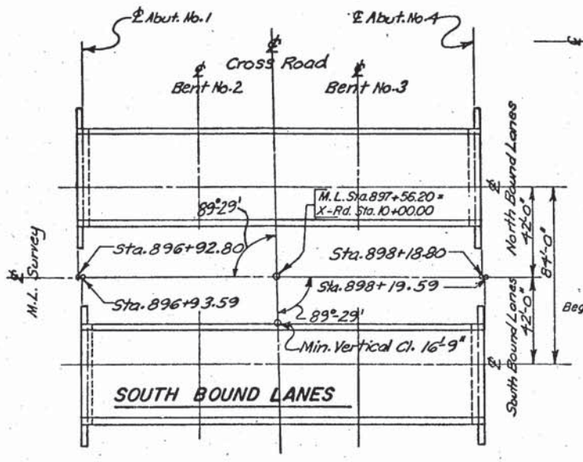


LAYOUT

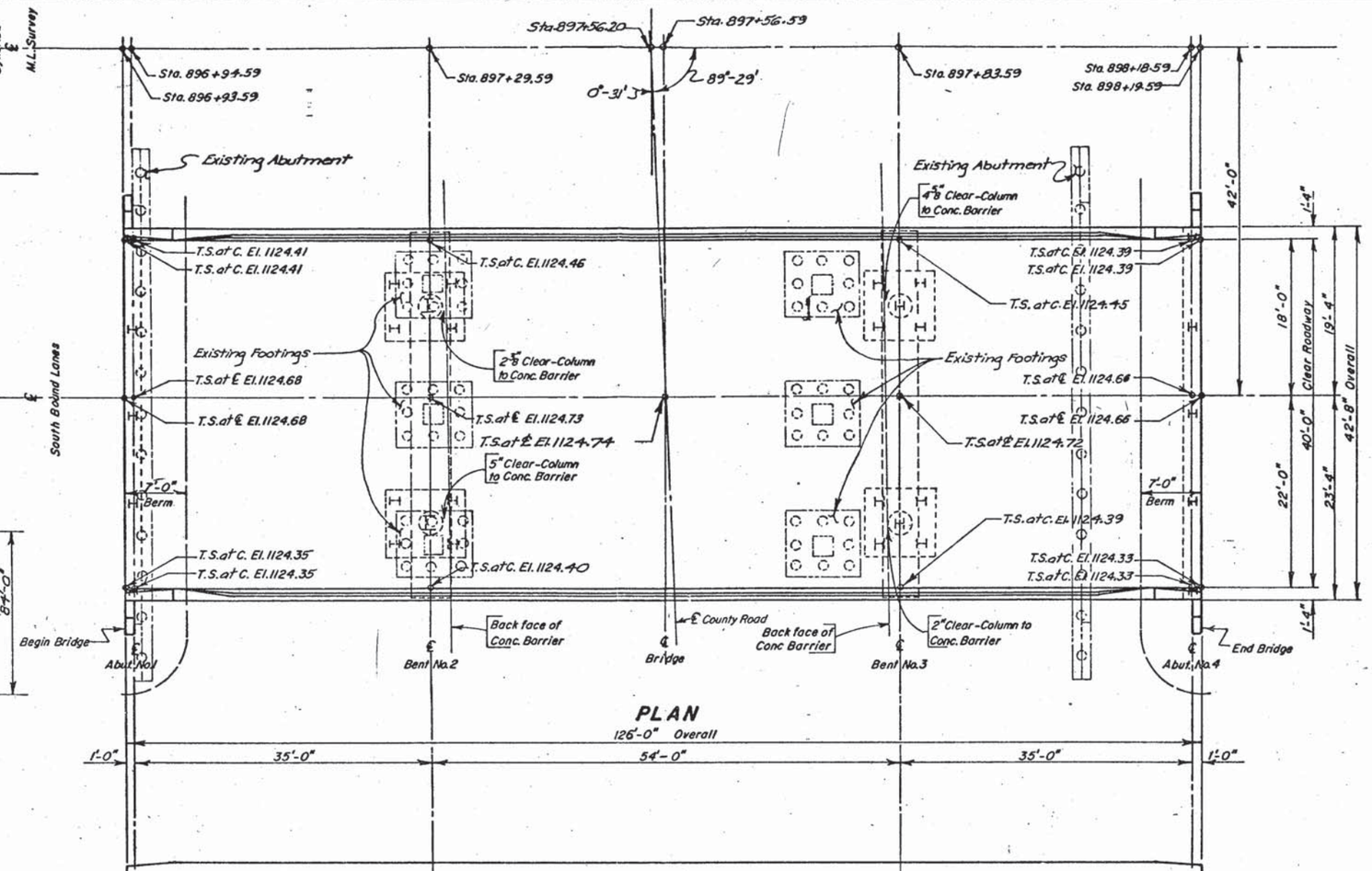


PLAN

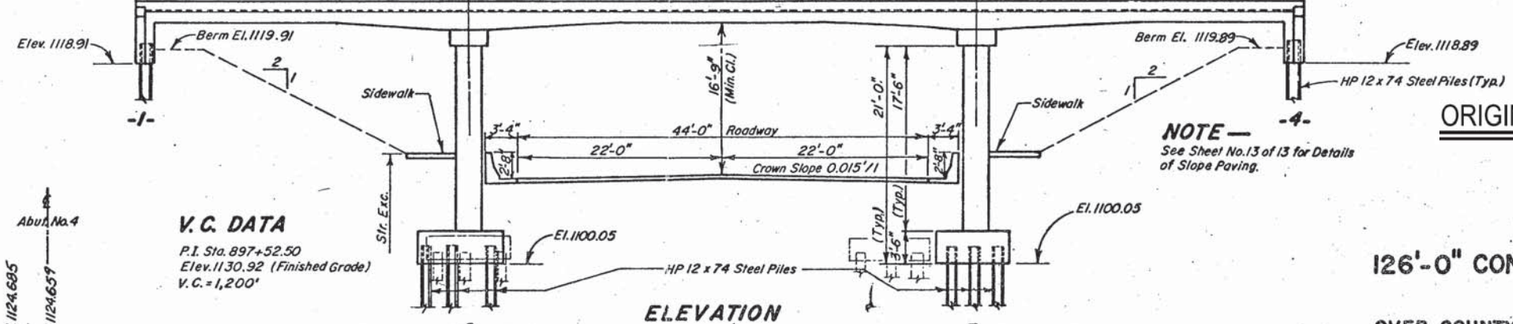


ELEVATION

## NOTE —

See Sheet No. 13 of 13 for Details of Slope Paving.

## V.C. DATA

P.I. Sta. 897+52.50
Elev. 1130.92 (Finished Grade)
V.C. = 1,200'

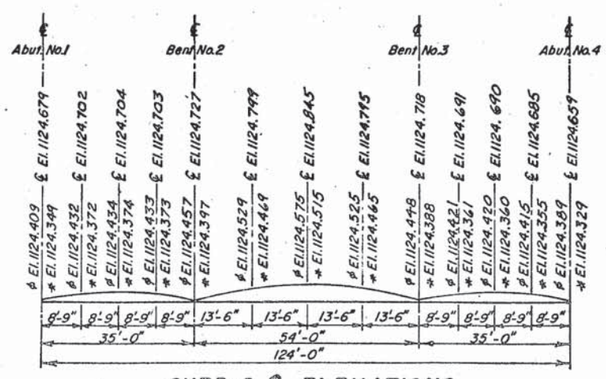


CURB & ℄ ELEVATIONS

Elevations indicated with ℄ are top of Finished Slab at 18'-0" Curb, with ℄ are top of Finished Slab at ℄ Roadway, with * are top of Finished Slab at 22'-0" Curb. Camber for Dead Load Deflection PLUS Plastic Flow, shown on Sheet No. 4 of 13 of Bridge Plans, have been included in the elevations shown above.

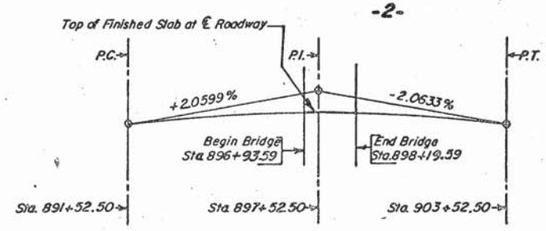


VERTICAL CURVE DATA
(INTERSTATE I-29)

-X220-

## INDEX OF BRIDGE SHEETS —


Sheet No. 1 - General Drawing & Layout
Sheet No. 2 - Estimate of Structure Quantities & Notes
Sheet No. 3 - Subsurface Investigations
Sheet No. 4 - Details of Abut. No. 1
Sheet No. 5 - Details of Abut. No. 4
Sheet No. 6 - Bent No. 2 Details
Sheet No. 7 - Bent No. 3 Details
Sheet No. 8 - Superstructure Details
Sheet No. 9 - End Block and Barrier Details
Sheet No. 10 - Details of Bridge End Backfill
Sheet No. 11 - Standard Plate No. 302 and 308.
Sheet No. 12 - Standard Plate No. 305.
Sheet No. 13 - Details for Slope Paving


ORIGINAL CONSTRUCTION PLANS

(SOUTH BOUND LANES)
GENERAL DRAWING & LAYOUT
FOR

# 126'-0" CONTINUOUS CONCRETE BRIDGE

40'-0" ROADWAY
OVER COUNTY ROAD — SEC. 15 - T89N - R48W
STA. 896+93.59 TO STA. 898+19.59 — I-29-1(36)2
STR. NO. 64-154-385 — HS 20-44 (& ALT.)
UNION COUNTY

S. D. DEPT. OF TRANSPORTATION
DIVISION OF HIGHWAYS
OCTOBER 1979 (18) OF (24)

SHEET 69 OF 135 SHEETS

-X220-

PLANS BY:
BRIDGE PROGRAM S. DAK. DEPT. OF HWYS.

| DESIGNED BY | DRAWN BY | CHECKED BY | APPROVED |
|---|---|---|---|
| | F.a.K. | W.C.P. | K.C. Wilson BRIDGE ENGINEER |

| STATE OF | PROJECT | SHEET NO. | TOTAL SHEETS |
|---|---|---|---|
| S.D. | EM-PH 0291(12)10 | 124 | 284 |

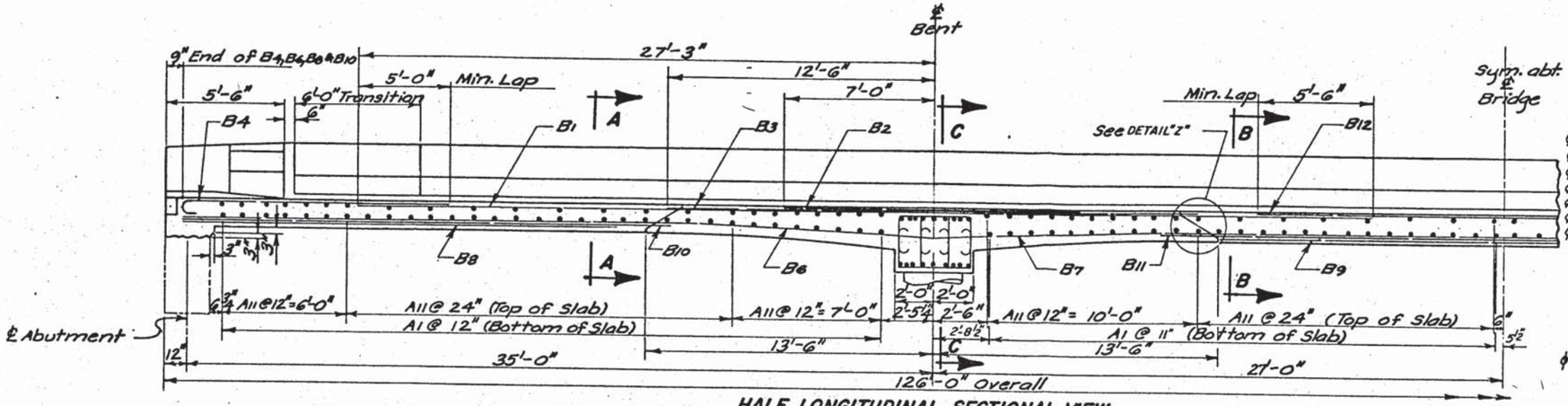


HALF LONGITUDINAL SECTIONAL VIEW

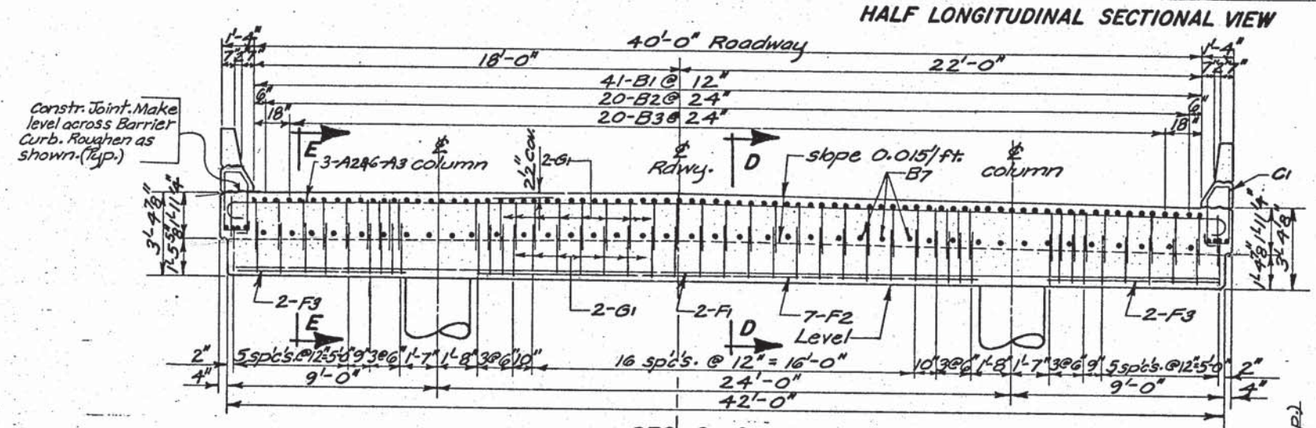


SEC. C-C

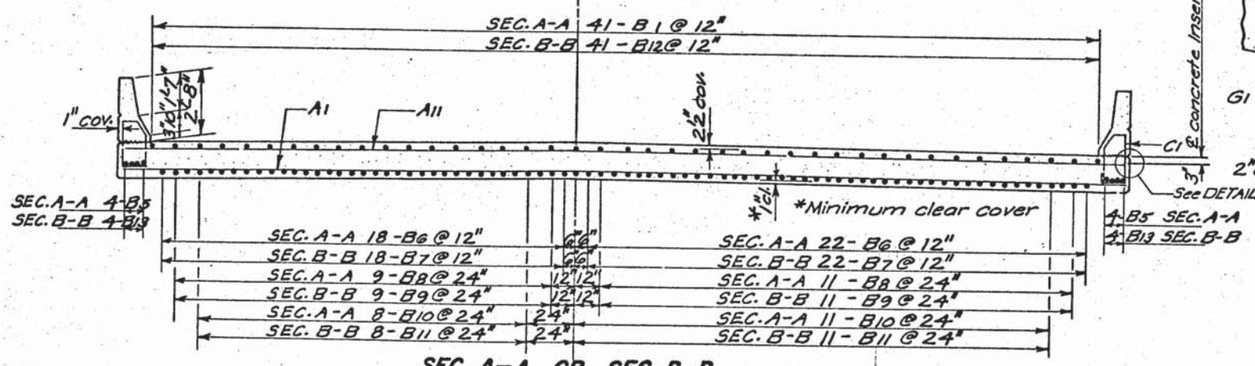


SEC. A-A OR SEC. B-B

NOTE: All Barrier Curb Details shown on sheet No. 6 of 13.

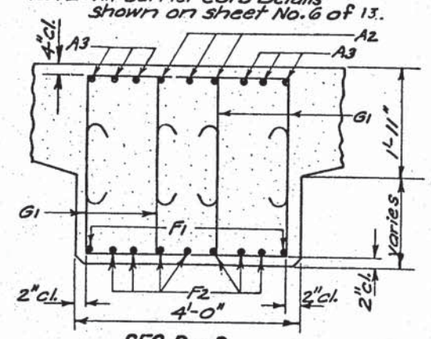


SEC. D-D

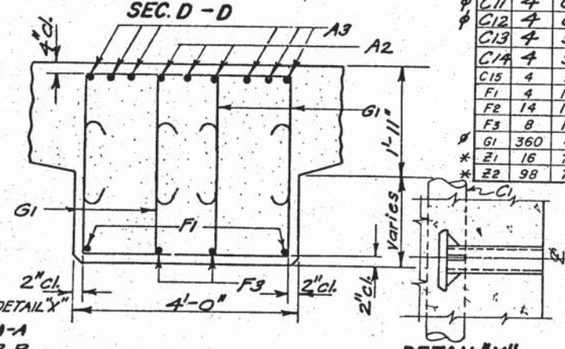


SEC. E-E

DETAIL "X"

See Sheet No. 39 of 135 for Location and spacing of Inserts for bolting one hole Steel Pipe Straps.

## REINFORCING SCHEDULE

| MK. | No. | Size | Length | Type |
|---|---|---|---|---|
| A1 | 118 | 5 | 42'-4" | Str. |
| A11 | 82 | 5 | 42'-4" | Str. |
| A2 | 6 | 10 | 45'-2" | 1 |
| A3 | 12 | 11 | 45'-6" | 1 |
| B1 | 82 | 10 | 48'-0" | Str. |
| B2 | 40 | 10 | 14'-0" | Str. |
| B3 | 40 | 10 | 29'-6" | Str. |
| B4 | 82 | 9 | 14'-4" | 1A |
| B5 | 16 | 5 | 35'-9" | Str. |
| B6 | 80 | 9 | 35'-3" | |
| B7 | 40 | 10 | 54'-0" | |
| B8 | 40 | 8 | 20'-6" | |
| B9 | 20 | 10 | 27'-0" | |
| B10 | 38 | 8 | 23'-0" | |
| B11 | 19 | 9 | 34'-0" | |
| B12 | 41 | 10 | 23'-6" | |
| B13 | 8 | 5 | 54'-0" | |
| B14 | 36 | 5 | 35'-6" | |
| B15 | 12 | 5 | 14'-3" | |
| B16 | 8 | 4 | 32'-3" | Str. |
| B17 | 8 | 4 | 7'-7" | 19A |
| B18 | 8 | 4 | 2'-6" | Str. |
| B19 | 12 | 8 | 8'-1" | 19B |
| B20 | 16 | 4 | 32'-3" | Str. |
| B21 | 12 | 6 | 3'-8" | 17A |
| B22 | 12 | 5 | 2'-3" | Str. |
| C1 | 234 | | 7'-0" | T2A |
| C2 | 206 | | 5'-1" | S11 |
| C3 | 4 | | 6'-7" | T1 |
| C4 | 4 | | 6'-10" | T1 |
| C5 | 12 | | 7'-1" | T1 |
| C6 | 4 | | 7'-4" | T1 |
| C7 | 4 | | 7'-7" | T1 |
| C8 | 4 | 5 | 7'-9" | T1 |
| C9 | 4 | 6 | 6'-11" | T7 |
| C10 | 4 | 6 | 5'-3" | 17 |
| C11 | 4 | 6 | 5'-2" | 17 |
| C12 | 4 | 6 | 4'-11" | 17 |
| C13 | 4 | 5 | 5'-5" | 17 |
| C14 | 4 | 5 | 5'-4" | 17 |
| C15 | 4 | 5 | 5'-1" | 17 |
| F1 | 4 | 10 | 41'-6" | Str. |
| F2 | 14 | 10 | 20'-9" | Str. |
| F3 | 8 | 10 | 7'-3" | Str. |
| G1 | 360 | 4 | 7'-7" | S3 |
| * Z1 | 16 | 7 | 4'-0" | Str. |
| * Z2 | 98 | 7 | 2'-0" | Str. |

Bending Details

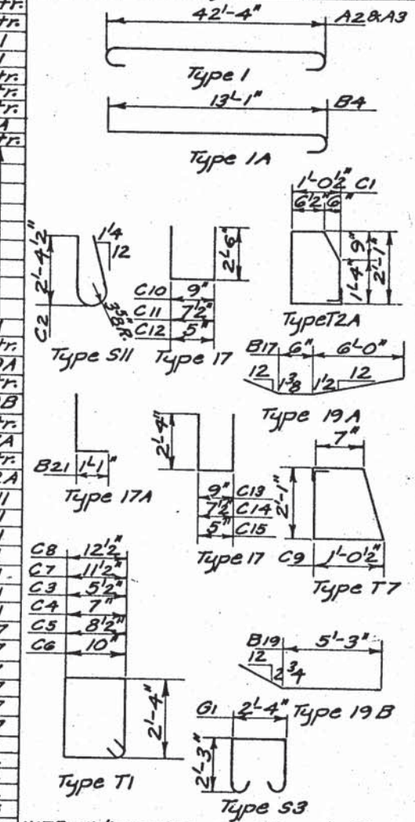


NOTE: All dimensions are out to out of bars.
*See Sheet No. 485 for location of Z1 bars.

## ESTIMATED QUANTITIES

| ITEM | UNIT | QUANTITY |
|---|---|---|
| Class "A" Concrete, Bridge Deck | Cu. Yd. | 342.4 |
| Reinforcement Conc. Masonry | Lb. | 40,761 |
| Epoxy Coated Reinforcing Steel | Lb. | 43,919 |

ϕ All A2, A3, A11, B1, B2, B3, B4, B12, C1, C9, C10, C11, C12 & G1 are to be Epoxy coated.

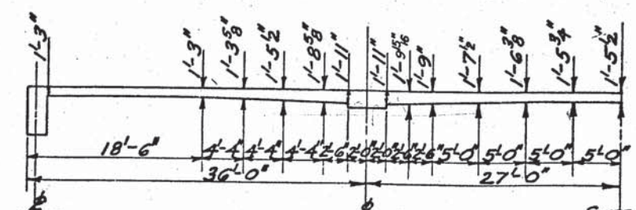


SLAB THICKNESS DIAGRAM

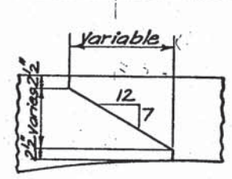


DETAIL "Z"
(Typical Construction Joint)

Δ For any longitudinal section parallel to ℄ Roadway.

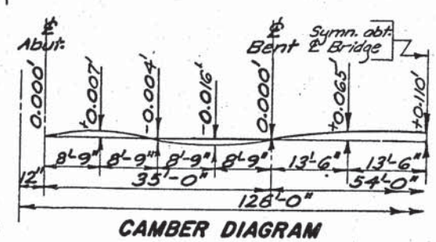


CAMBER DIAGRAM

Camber is calculated for dead load deflection plus plastic flow and shall be added to the proposed grade elevations at the respective stations to establish the elevations of the top of the finished roadway slab.

The 3/8"ϕ Concrete Inserts shall be internally threaded for use with a Standard Cap Screw and shall be of such design that when installed in the Concrete it will be capable of sustaining an ultimate load in tension of 2,500 pounds. The inserts shall be either galvanized or made of a corrosion resistant material. The cost of furnishing and installing the inserts shall be absorbed in the unit price bid for Reinforcing Steel

(SOUTH BOUND LANE)
SUPERSTRUCTURE DETAILS
FOR

# 126'-0" CONTINUOUS CONCRETE BRIDGE

40'-0" ROADWAY

OVER COUNTY ROAD — SEC. 15-T89N-R48W
STA. 896+93.59 TO 898+19.59 — I-29-1(36)2
STR. NO. 64-154-385 — HS20-44 (& ALT.)
UNION COUNTY

S.D. DEPT. OF TRANSPORTATION
DIVISION OF HIGHWAYS
OCTOBER 1979

ORIGINAL CONSTRUCTION PLANS

19 OF 24

SHEET 76 OF 125 SHEETS

| DESIGNED BY | DRAWN BY | CHECKED BY | APPROVED |
|---|---|---|---|
| | N.C.P. | L.M. | K.C. Wilson, BRIDGE ENGINEER |

| STATE OF | PROJECT | SHEET NO. | TOTAL SHEETS |
|---|---|---|---|
| S.D. | IM-PH 0291(12210) | 125 | 284 |

CONSTRUCTION NOTE:
Sides of recess for Special End Shoe may be beveled a maximum of 1/2" in 3 1/2" to facilitate form removal.

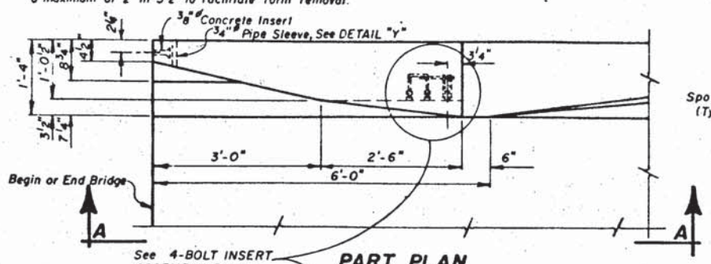


PART PLAN

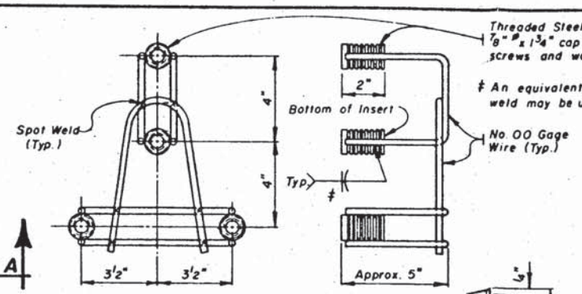


4 BOLT INSERT ASSEMBLY

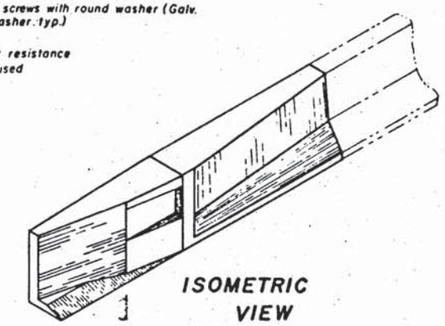

ISOMETRIC VIEW

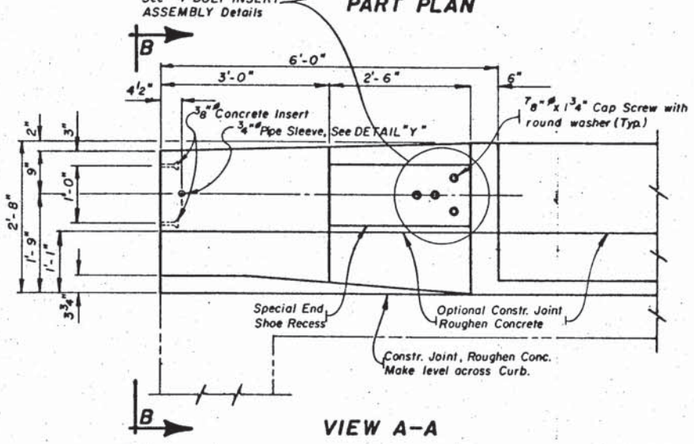


VIEW A-A

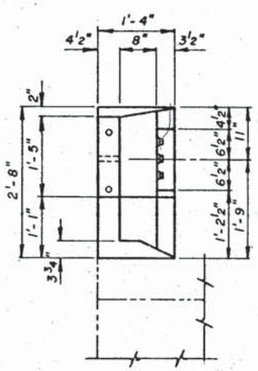

VIEW B-B

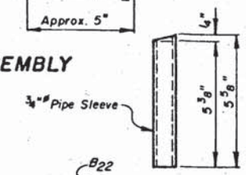


DETAIL "Y"

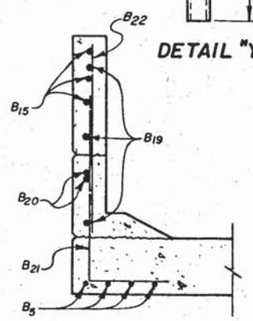

SEC. C-C

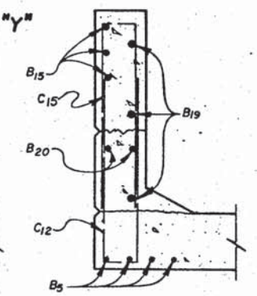

SEC. D-D

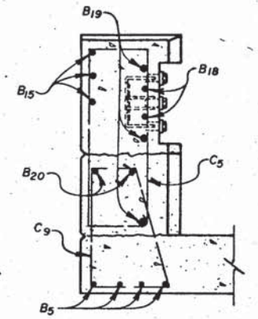

SEC. E-E

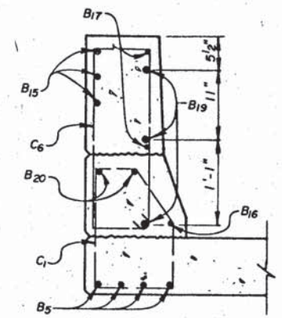

SEC. F-F

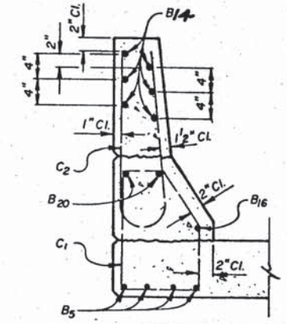

SEC. G-G

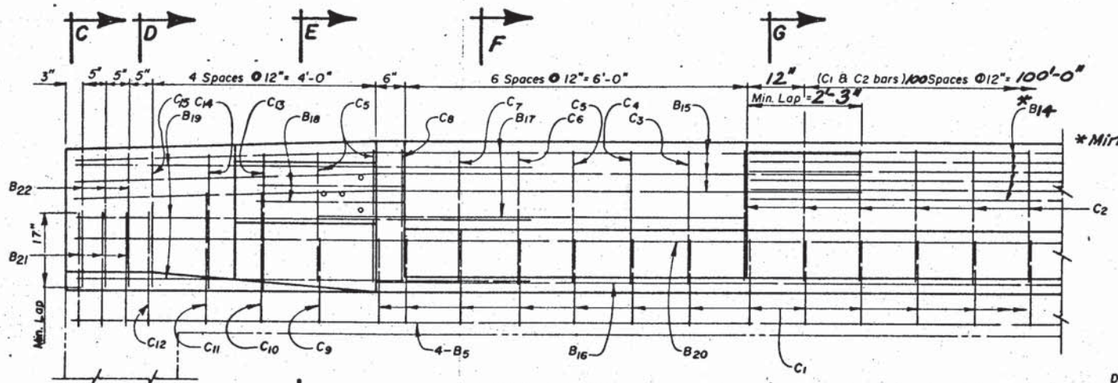


ELEVATION

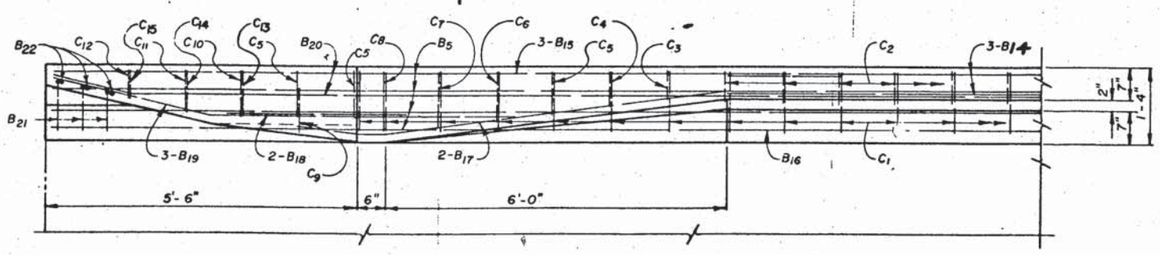


PLAN

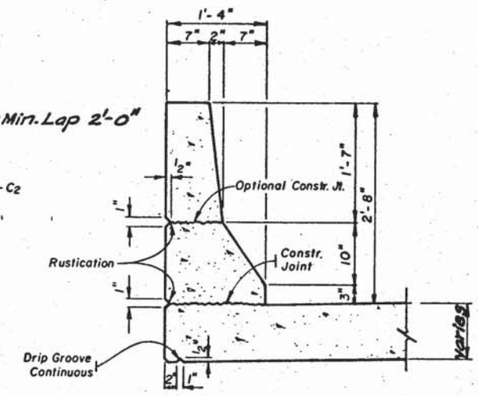


BARRIER DETAILS

NOTE:
For listing of re-bars See Reinforcing Schedule on Sheet No. 4 of 13.

## GENERAL NOTES —

1. Use 1 1/2" Clear Cover on all bars except as shown.
2. Reinforcing Steel shall conform to A.S.T.M. – A615, Grade 60.
3. End Blocks shall be built normal to grade.
4. Wires for the 4 - Bolt Insert Assembly are shown as the minimum allowable size designation being based on the United States Steel Wire Gage Standard. All wire shall conform to A.S.T.M. Specifications A-82 for Cold-drawn Steel Wire.
5. The Cost of the 4-Bolt Insert Assembly complete in place, including welding and galvanizing, shall be absorbed in the unit price bid for "Class 'A' Concrete, Bridge Deck."
6. Cap Screws and Washers shall be furnished as a part of the 4 - Bolt Insert Assembly and shall be galvanized to conform to A.S.T.M. Specifications A-153.
7. 3/8" ø Concrete Inserts shall be internally threaded for use with a standard machine bolt and shall be of such design that when installed in the concrete it will be capable of sustaining an ultimate load in tension of 2,500 pounds. The inserts shall either be galvanized or made of a corrosion resistant material. The cost of furnishing and installing the inserts shall be absorbed in the unit price bid for Reinforcing Steel.
8. The 3/4" ø Pipe Sleeve shall be standard galvanized pipe conforming to A.S.T.M. - A53 Grade B, A120 or A500 Grade B. The cost of furnishing and installing pipe sleeves shall be absorbed in the unit price bid for "Class 'A' Concrete, Bridge Deck."

ORIGINAL CONSTRUCTION PLANS

(SOUTH BOUND LANE)
END BLOCK AND BARRIER DETAILS
FOR

# 126'-0" CONTINUOUS CONCRETE BRIDGE

40'-0" ROADWAY
OVER COUNTY ROAD — SEC. 15 - T89N - R48W
STA. 896+93.59 TO 898+19.59 — I-29-1(36)2
STR. NO. 64-154-385 — HS 20-44 (8 ALT.)
UNION COUNTY

S. D. DEPT. OF TRANSPORTATION
DIVISION OF HIGHWAYS
OCTOBER 1979 (20) OF (24)
SHEET 77 OF 135 SHEETS

| DESIGNED BY | DRAWN BY | CHECKED BY | APPROVED |
|---|---|---|---|
| | L.S.B. W.C.P. | W.C.P. L.M. | K.C. Wilson BRIDGE ENGINEER |

CONC. BRIDGE

K-1

| STATE OF | PROJECT | SHEET NO. | TOTAL SHEETS |
|---|---|---|---|
| S.D. | IM-PH 0291(122)0 | 126 | 284 |

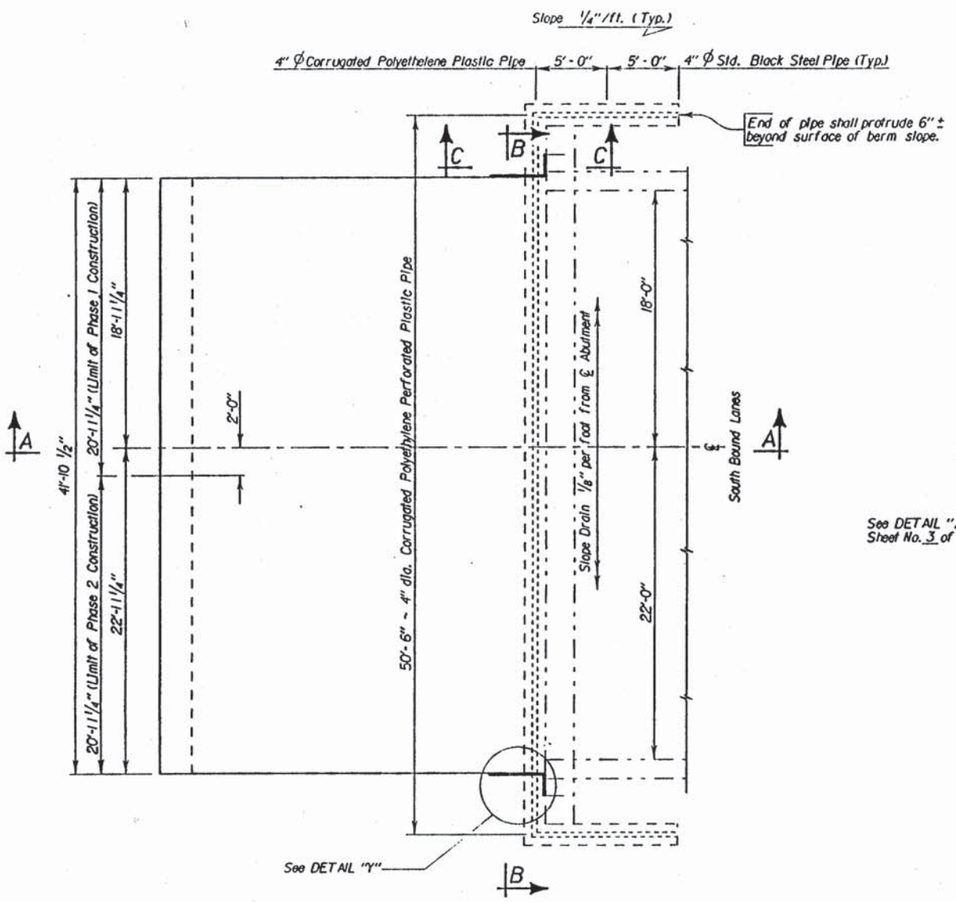


PLAN
(Shown adjacent to Abut. No. 1 Abut. No. 4 similar by opposite hand)

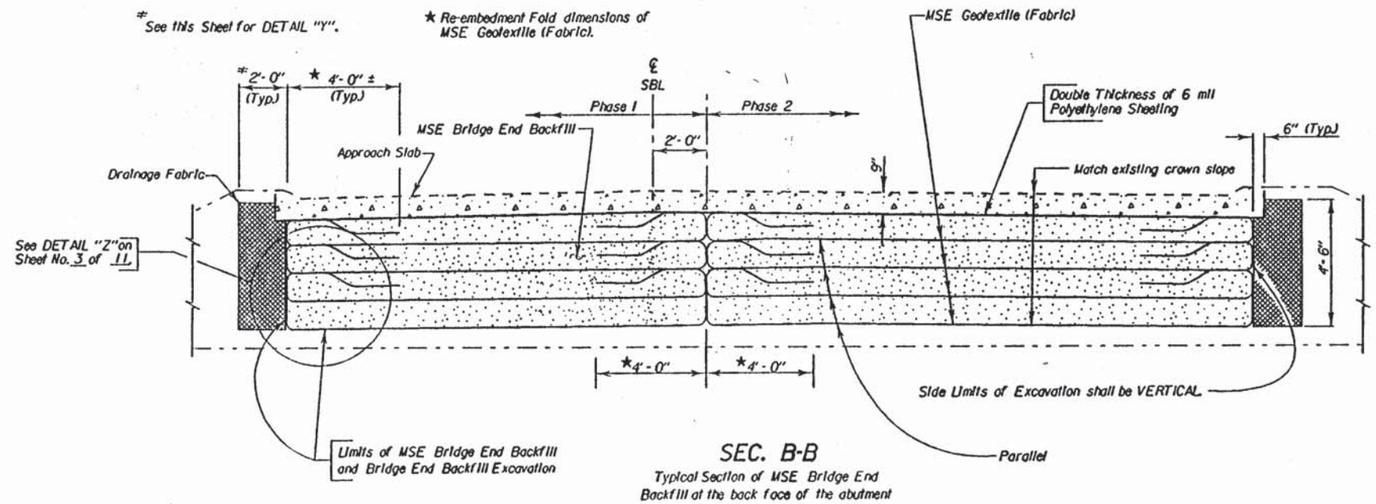


SEC. B-B
Typical Section of MSE Bridge End Backfill at the back face of the abutment

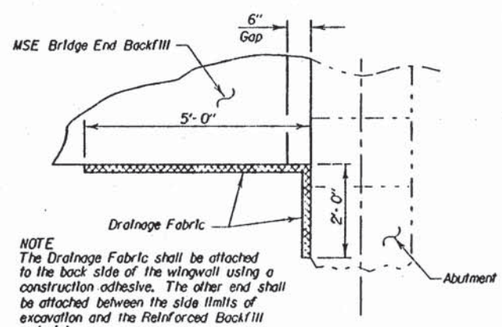


NOTE
The Drainage Fabric shall be attached to the back side of the wingwall using a construction adhesive. The other end shall be attached between the side limits of excavation and the Reinforced Backfill material.

DETAIL "Y"
(Typical all corners)

This sheet to be used in conjunction with Sheet No. 3 of 11.

* See Sheet No. 3 of 11 for SEC. A-A and SEC. C-C

THE CONTRACTOR HAS THE OPTION OF BUILDING THE APPROACH SLABS FOR THE FULL WIDTH OF THE ROADWAY AT ONE TIME OR BUILDING THE APPROACH SLABS IN TWO PHASES USING THE PLAN SHOWN OPTIONAL CONSTRUCTION JOINT. ALL REFERENCES TO PHASE 1 AND PHASE 2 CONSTRUCTION ARE GIVEN IN THE EVENT THE CONTRACTOR ELECTS TO BUILD THE APPROACH SLABS IN TWO PHASES.

## ESTIMATED QUANTITIES
(For Two Abutments)

| ITEM | UNIT | QUANTITY Phase I | QUANTITY Phase II |
|---|---|---|---|
| Bridge End Backfill Underdrain Pipe | L. F. | 70.5 | 70.5 |
| ※ Bridge End Backfill Excavation | C. Y. | 140.6 | 140.6 |
| MSE Bridge End Backfill | C. Y. | 117.2 | 117.2 |
| Drainage Fabric | S. Y. | 7 | 7 |
| MSE Geotextile (Fabric) | S. Y. | 79.9 | 79.9 |

| | Phase 1 | Phase 2 | | |
|---|---|---|---|---|
| 1. | 50.5 | 50.5 | L. F. | 4" ϕ Corrugated Polyethylene Perforated Plastic Pipe for 2 Abutments |
| 2. | 10 | 10 | L. F. | 4" ϕ Corrugated Polyethylene Plastic Pipe for 2 Abutments |
| 3. | 10 | 10 | L. F. | 4" ϕ Standard Black Steel Pipe for 2 Abutments |
| 4. | 251.2 | 251.2 | S. Y. | 6 mil Polyethylene Sheeting, not including laps. |

Items 1 thru 4 are approximate quantities contained in the above bid items and are for information only.

※ Bridge End Backfill Excavation will not be measured. Plans quantity payment will be full compensation for this item.

ORIGINAL CONSTRUCTION PLANS

(SOUTH BOUND LANES)
DETAILS OF MSE BRIDGE END BACKFILL
FOR
126'- 0" CONTINUOUS CONCRETE BRIDGE

40'-0" ROADWAY — SEC. 15-T89N-R48W
OVER COUNTY ROAD — 30° SKEW L. H. F.
STA. 896+93.59 TO 898+19.59 — IM 29-1(95)0
STR. NO. 64-154-385

UNION COUNTY
S. D. DEPT. OF TRANSPORTATION
AUGUST 1997 — 21 OF 24

| DESIGNED BY | DRAWN BY | CHECKED BY | APPROVED |
|---|---|---|---|
| EJA | EJA | CJD | John C. Cole |
| UNIN4252 | 4252PA02 | | BRIDGE ENGINEER |

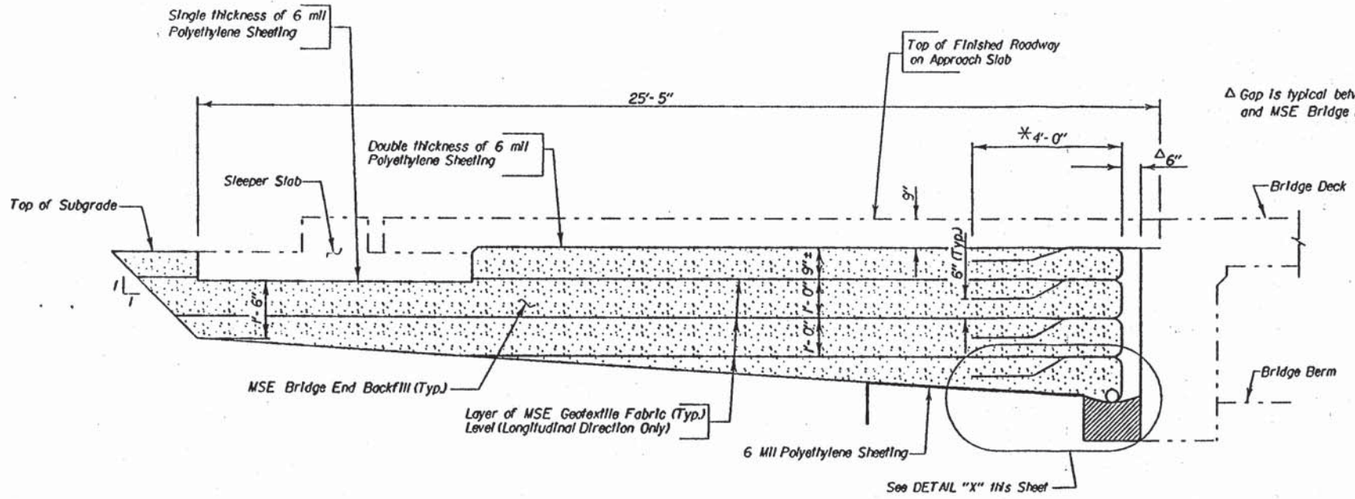


Δ Gap is typical between abutment backwall and MSE Bridge End Backfill.

## SEC. A-A

(@ ℄ Roadway)

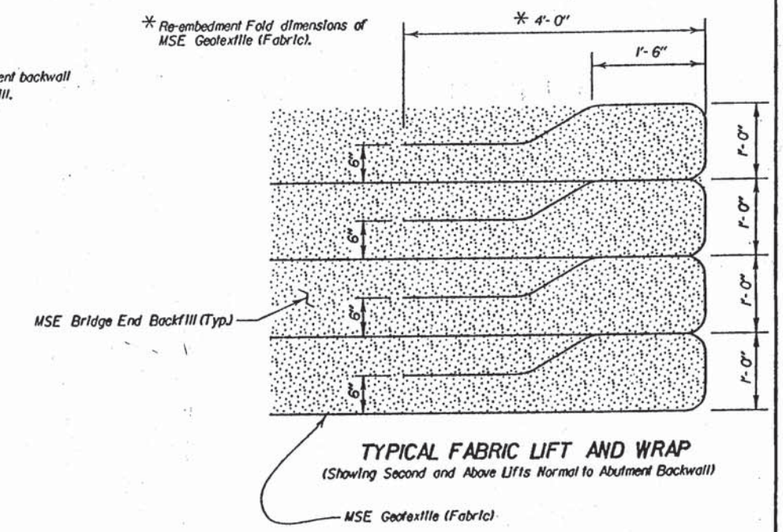


## TYPICAL FABRIC LIFT AND WRAP

(Showing Second and Above Lifts Normal to Abutment Backwall)

This sheet to be used in conjunction with Sheet No. 2 of 11.

THE CONTRACTOR HAS THE OPTION OF BUILDING THE APPROACH SLABS FOR THE FULL WIDTH OF THE ROADWAY AT ONE TIME OR BUILDING THE APPROACH SLABS IN TWO PHASES USING THE PLAN SHOWN OPTIONAL CONSTRUCTION JOINT. ALL REFERENCES TO PHASE I AND PHASE 2 CONSTRUCTION ARE GIVEN IN THE EVENT THE CONTRACTOR ELECTS TO BUILD THE APPROACH SLABS IN TWO PHASES.

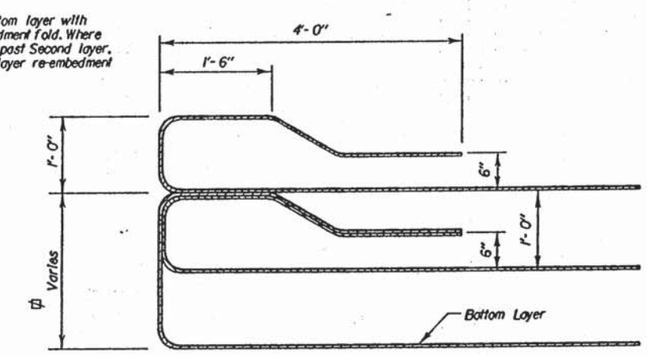


## DETAIL "Z"

(Fabric Wrap at Sides)

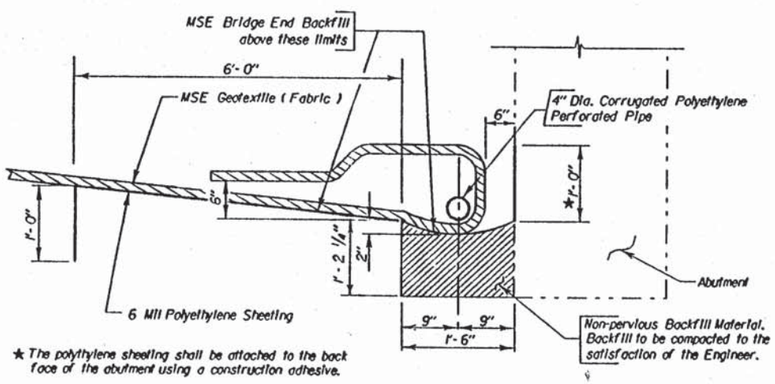


★ The polythylene sheeting shall be attached to the back face of the abutment using a construction adhesive.

## DETAIL "X"

(at Crown Point)

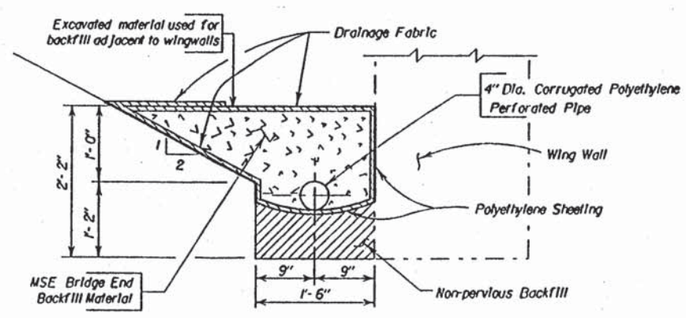


## SEC. C-C

(SOUTH BOUND LANES)
DETAILS OF MSE BRIDGE END BACKFILL
FOR

# 126'- 0" CONTINUOUS CONCRETE BRIDGE

40'-0" ROADWAY — SEC. 15-T89N-R48W
OVER COUNTY ROAD
STA. 896+93.59 TO 898+19.59 — IM 29-1(95)0
STR. NO. 64-154-385

UNION COUNTY
S. D. DEPT. OF TRANSPORTATION
AUGUST 1997 — 22 OF 24

ORIGINAL CONSTRUCTION PLANS

| DESIGNED BY | DRAWN BY | CHECKED BY | APPROVED |
|---|---|---|---|
| EJA | EJA | CJD | John C. Cole, BRIDGE ENGINEER |
| UNIN4252 | 4252PA03 | | |

| STATE OF | PROJECT | SHEET NO. | TOTAL SHEETS |
|---|---|---|---|
| S.D. | IM-PH 0291(122)0 | 128 | 284 |

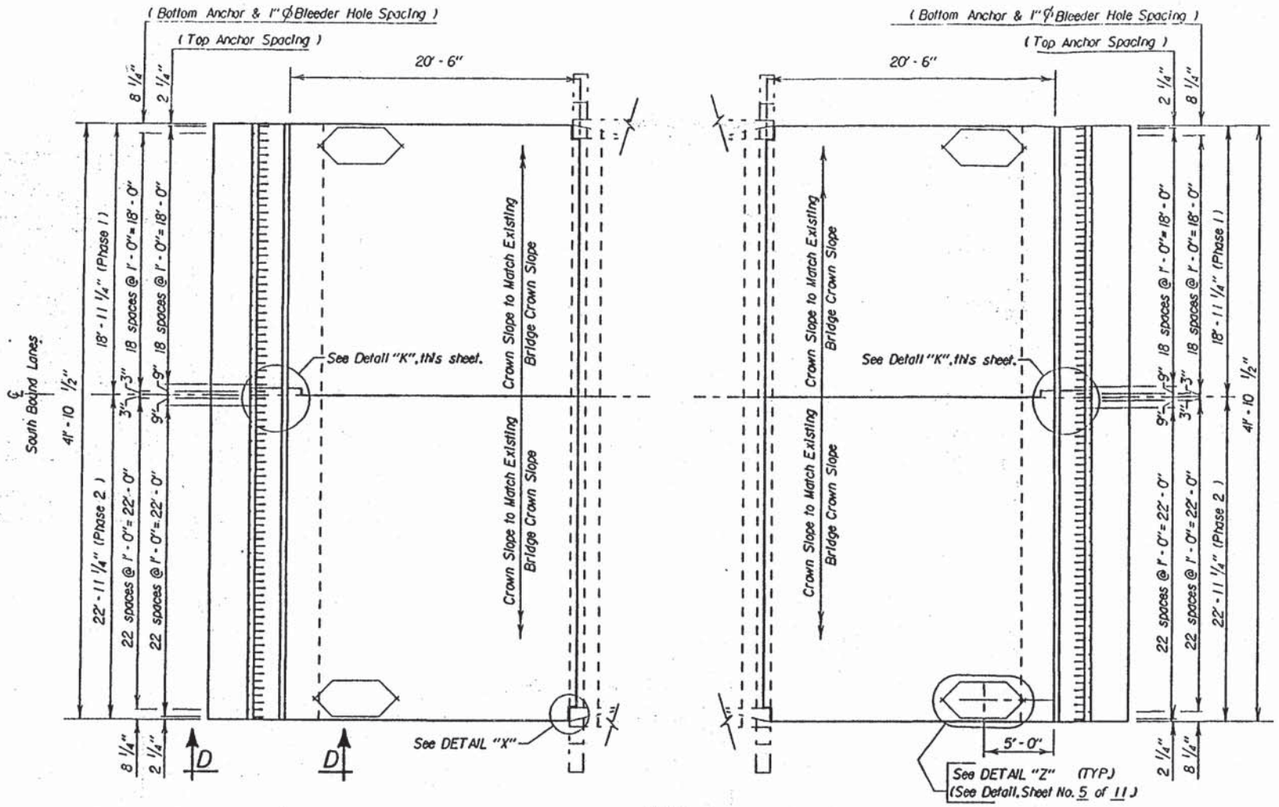


PLAN

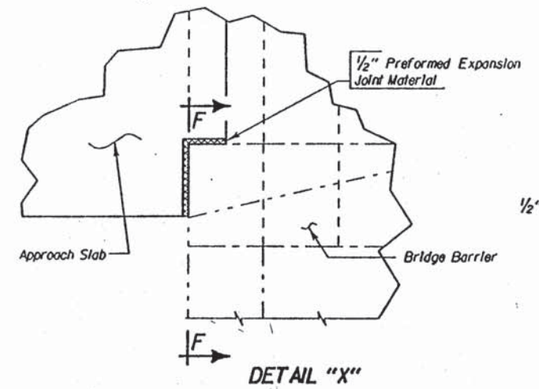


DETAIL "X"

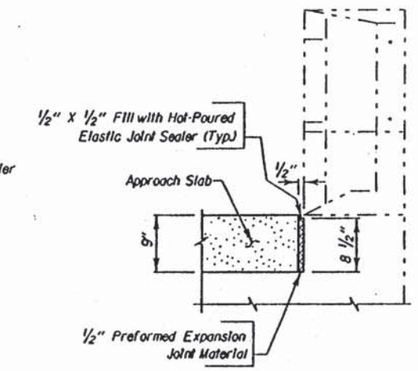


SEC. F - F

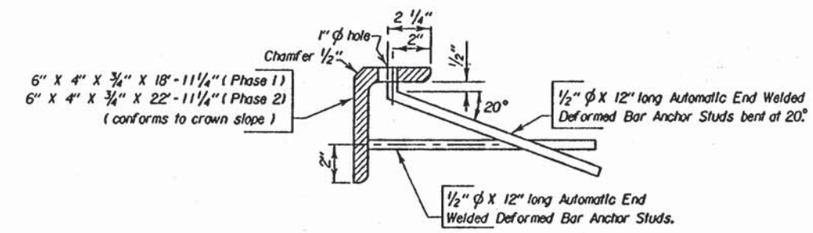


DETAIL "Y"

( See Sheet No. 5 of 11 for location of detail.)
( See Notes Regarding Armor Angle Assembly, Sheet No. 23 of 259 .)

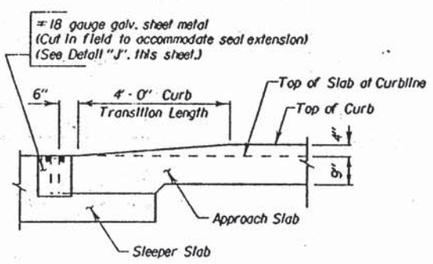


VIEW D - D

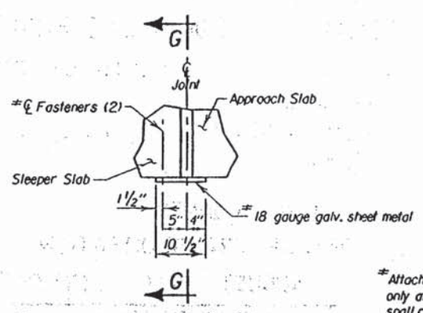


PLAN - DETAIL "J"

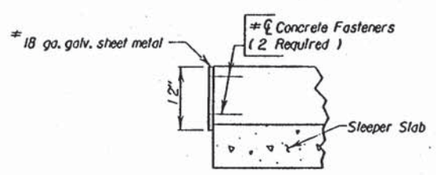


SEC. G - G

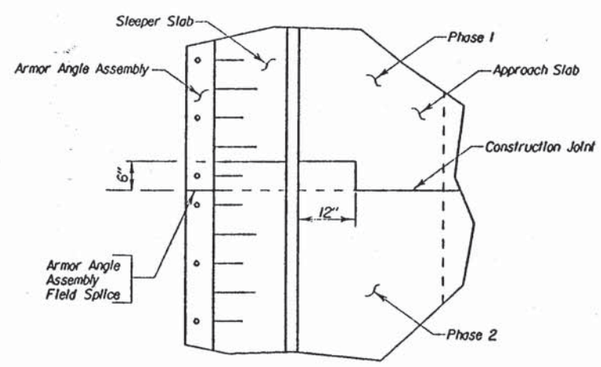


DETAIL "K"

#Attach 18 ga. galv. Sheet Metal to both ends of Sleeper Slab only after slab has been poured. Use fasteners that will not spall concrete, as approved by the Engineer.

THE CONTRACTOR HAS THE OPTION OF BUILDING THE APPROACH SLABS FOR THE FULL WIDTH OF THE ROADWAY AT ONE TIME OR BUILDING THE APPROACH SLABS IN TWO PHASES USING THE PLAN SHOWN OPTIONAL COSTRUCTION JOINT. ALL REFERENCES TO PHASE 1 AND PHASE 2 CONSTRUCTION ARE GIVEN IN THE EVENT THE CONTRACTOR ELECTS TO BUILD THE APPROACH SLABS IN TWO PHASES.

(SOUTH BOUND LANES)
DETAILS OF APPROACH SLAB
ADJACENT TO BRIDGE FOR

# 126'-0" CONTINUOUS CONCRETE BRIDGE

40'-0" ROADWAY
OVER COUNTY ROAD
STR. NO. 64-154-385

SEC. 15-T89N-R48W
IM 29-1(95) 0

UNION COUNTY
S. D. DEPT. OF TRANSPORTATION
JULY 1997



ORIGINAL CONSTRUCTION PLANS

| DESIGNED BY | DRAWN BY | CHECKED BY | APPROVED |
|---|---|---|---|
| EJA | GWP | CJD | John C. Cole |
| UNIN4252 | 4252PA04 | | BRIDGE ENGINEER |

| STATE OF | PROJECT | SHEET NO. | TOTAL SHEETS |
|---|---|---|---|
| S.D. | IM-PH 0291(12)210 | 129 | 284 |

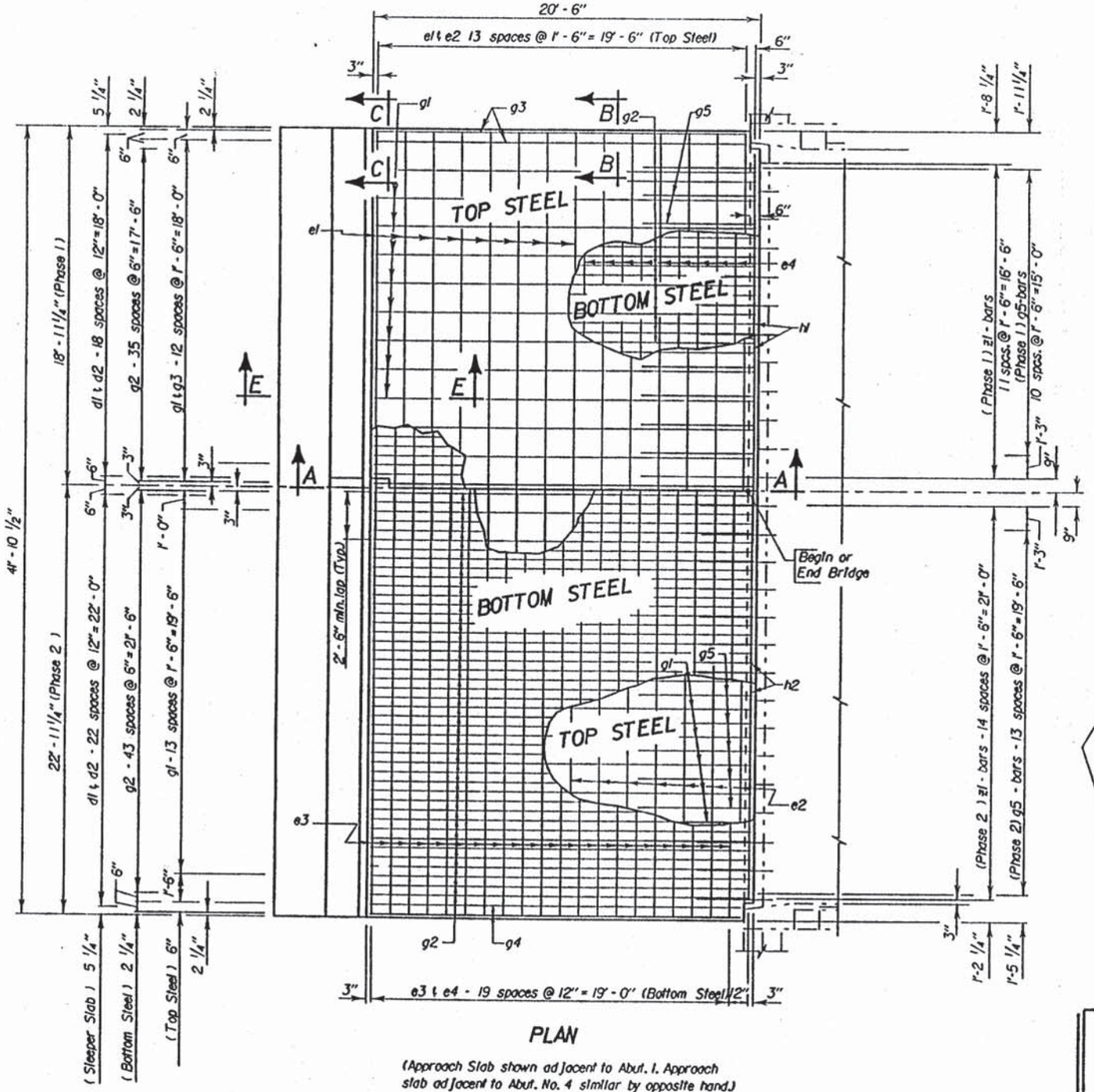


## PLAN

(Approach Slab shown adjacent to Abut. 1. Approach slab adjacent to Abut. No. 4 similar by opposite hand.)

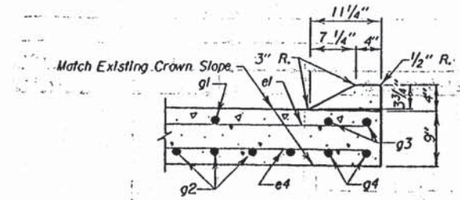


## SEC. B - B

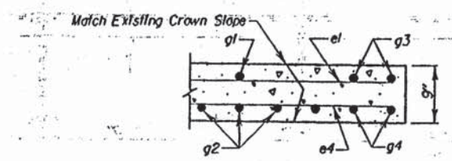


## SEC. C - C

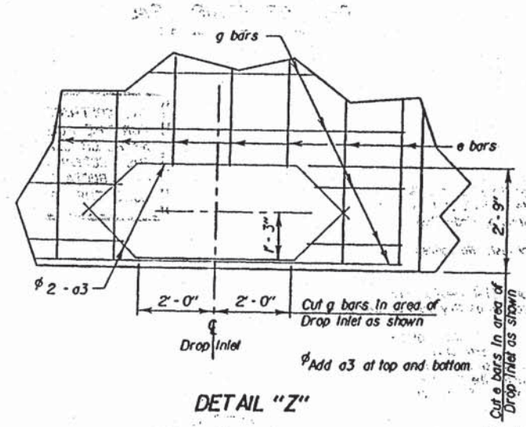


## DETAIL "Z"

THE CONTRACTOR HAS THE OPTION OF BUILDING THE APPROACH SLABS FOR THE FULL WIDTH OF THE ROADWAY AT ONE TIME OR BUILDING THE APPROACH SLABS IN TWO PHASES USING THE PLAN SHOWN OPTIONAL COSTRUCTION JOINT. ALL REFERENCES TO PHASE 1 AND PHASE 2 CONSTRUCTION ARE GIVEN IN THE EVENT THE CONTRACTOR ELECTS TO BUILD THE APPROACH SLABS IN TWO PHASES.

## REINFORCING SCHEDULE

(For Two Approach and Sleeper Slabs)

| | Mk. | No. | Size | Length | Type |
|---|---|---|---|---|---|
| PHASE 1 | a3 | 4 | 4 | 7'-4" | 19a |
| | c1 | 48 | 5 | 22'-6" | Str. |
| | d1 | 76 | 4 | 7'-9" | 2 |
| | d2 | 38 | 4 | 6'-3" | T2 |
| | e1 | 28 | 4 | 21'-6" | Str. |
| | e4 | 40 | 6 | 21'-6" | Str. |
| | g1 | 24 | 4 | 20'-2" | Str. |
| | g2 | 72 | 8 | 20'-2" | Str. |
| | g3 | 4 | 4 | 19'-8" | Str. |
| | g4 | 4 | 8 | 19'-8" | Str. |
| | g5 | 24 | 4 | 6'-0" | Str. |
| | h1 | 4 | 6 | 20'-6" | Str. |
| | △z1 | 24 | 6 | 4'-0" | Str. |
| PHASE 2 | a3 | 4 | 4 | 7'-4" | 19a |
| | c2 | 48 | 5 | 22'-7" | Str. |
| | d1 | 92 | 4 | 7'-9" | 2 |
| | d2 | 46 | 4 | 6'-3" | T2 |
| | e2 | 28 | 4 | 22'-7" | Str. |
| | e3 | 40 | 6 | 22'-7" | Str. |
| | g1 | 30 | 4 | 20'-2" | Str. |
| | g2 | 88 | 8 | 20'-2" | Str. |
| | g3 | 4 | 4 | 19'-8" | Str. |
| | g4 | 4 | 8 | 19'-8" | Str. |
| | g5 | 30 | 4 | 6'-0" | Str. |
| | h2 | 4 | 6 | 21'-8" | Str. |
| | △z1 | 30 | 6 | 4'-0" | Str. |

Bending Details

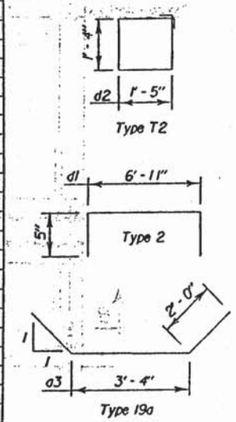


Note -
All Bars to be Epoxy Coated.
All Dimensions are out to out of bars.
△ Dowels

## ESTIMATED QUANTITIES

(For Two Approach and Sleeper Slabs)

| ITEM | UNIT | PHASE 1 QUANTITY | PHASE 2 QUANTITY |
|---|---|---|---|
| Conc. Approach Slab Adjacent to Bridge | S.Y. | 86 | 104.3 |
| Bridge Approach Sleeper Slab | S.Y. | 30.8 | 37.0 |
| Install Dowel In Concrete | Each | 24 | 30 |

| | PHASE 1 | PHASE 2 |
|---|---|---|
| 1. Concrete In Approach Slabs. | 22.1 Cu.Yds. | 26.8 Cu.Yds. |
| *2. Epoxy Coated Re-Steel In Approach Slabs. | 6396 lbs. | 7454 lbs. |
| 3. Concrete In Sleeper Slabs | 9.9 Cu.Yds. | 12.0 Cu.Yds. |
| 4. Epoxy Coated Re - Steel In Sleeper Slabs. | 1628 lbs. | 1799 lbs. |
| 5. Structural Steel In Armor Assembly. | 945 lbs. | 1144 lbs. |
| 6. Polyethylene Sheeting | 179 Sq.Yds. | 217 Sq.Yds. |

Items 1 thru 6 are approximate quantities contained in the above bid item and are for information only.

*Does not include the following quantities for z1 bars as these are paid for in the Bid Item "Install Dowel In Concrete".

| PHASE 1 | PHASE 2 |
|---|---|
| 144 lbs. | 180 lbs. |

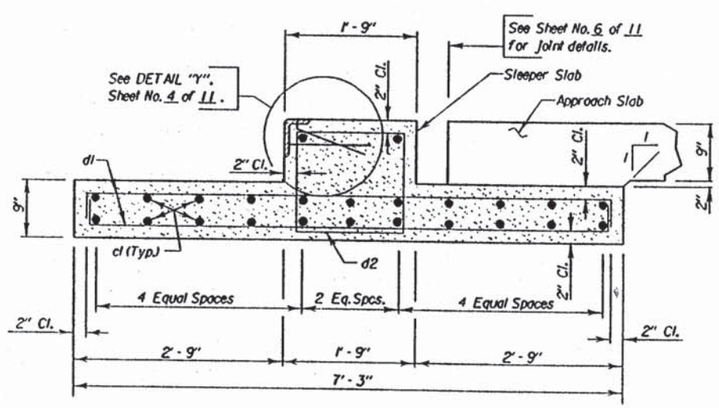


## SEC. E - E

(Sleeper Slab)

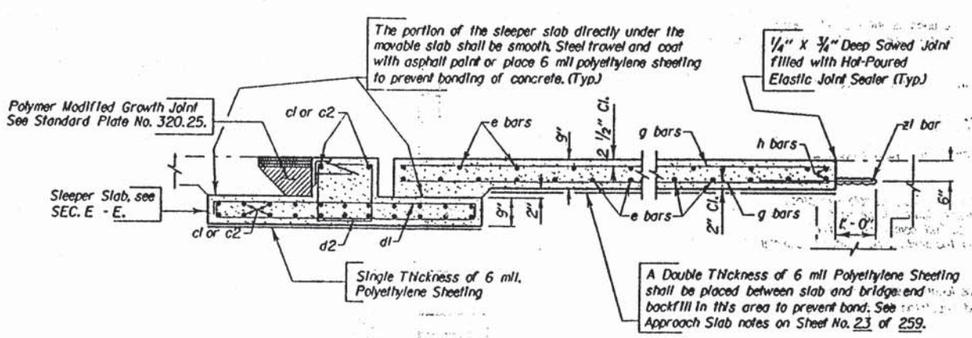


## SEC. A - A

# ORIGINAL CONSTRUCTION PLANS

(SOUTH BOUND LANES)
DETAILS OF APPROACH SLAB
ADJACENT TO BRIDGE FOR

## 126'-0" CONTINUOUS CONCRETE BRIDGE

40'-0" ROADWAY — SEC. 15-T89N-R48W

OVER COUNTY ROAD — IM 29-1(95) 0

STR. NO. 64-154-385

UNION COUNTY

S. D. DEPT. OF TRANSPORTATION

JULY 1997



| DESIGNED BY | DRAWN BY | CHECKED BY | APPROVED |
|---|---|---|---|
| EJA | GWP | CJD | John C. Cole, BRIDGE ENGINEER |
| UNIN4252 | 4252PA05 | | |

| STATE OF | PROJECT | SHEET NO. | TOTAL SHEETS |
|---|---|---|---|
| S.D. | IM-PH 0291(112)0 | 130 | 284 |

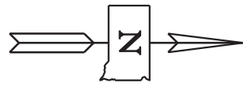


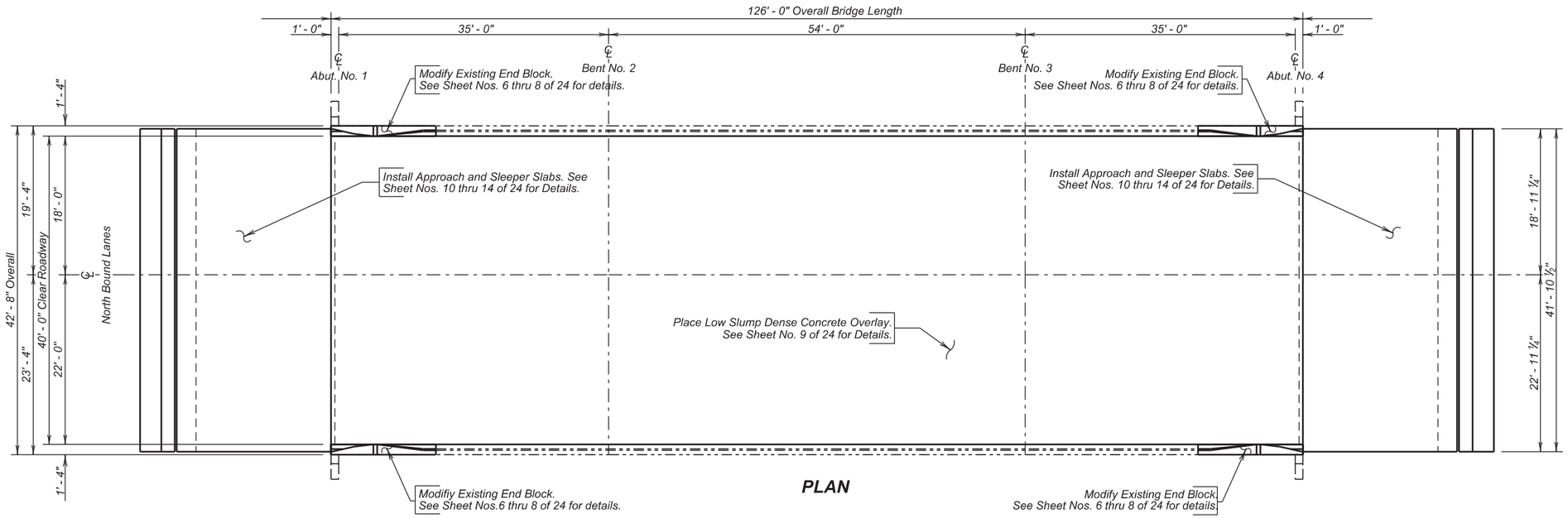


**PLAN**

## INDEX OF BRIDGE SHEETS -


*Sheet No. 1 - Layout for Upgrading*
*Sheet No. 2 - Estimate of Structure Quantities and Notes*
*Sheet No. 3 - Notes (Continued)*
*Sheet No. 4 - Notes (Continued)*
*Sheet No. 5 - Notes (Continued)*
*Sheet No. 6 - End Block Modification*
*Sheet No. 7 - End Block Modification (Continued)*
*Sheet No. 8 - End Block Modification (Continued)*
*Sheet No. 9 - Deck Profiles for Low Slump Dense Concrete Overlay*
*Sheet No. 10 - Approach Slab Underdrain Modification*
*Sheet No. 11 - Approach Slab Layout*
*Sheet No. 12 - Approach Slab Details*
*Sheet No. 13 - Approach Slab Details (Continued)*
*Sheet No. 14 - Approach Slab Joint Details*
*Sheet No. 15 - As Built Elevation Survey*
*Sheet No. 16 - As Built Elevation Survey (Continued)*
*Sheet No. 17 - Standard Plate Nos. 460.03 & 630.92*
*Sheet No. 18 thru 24 - Original Construction Plans*


**(NORTH BOUND LANES)**
**LAYOUT FOR UPGRADING**

FOR

126' - 0" CONTINUOUS CONCRETE BRIDGE

40' - 0" ROADWAY — 0 SKEW
OVER COUNTY ROAD — SEC. 15-T89N-R48W
STR. NO. 64-155-385 — IM-PH 0291(122)0
PCN 02PT

UNION COUNTY

S. D. DEPT. OF TRANSPORTATION

OCTOBER 2015



*PLANS BY :*
*OFFICE OF BRIDGE DESIGN, SOUTH DAKOTA DEPARTMENT OF TRANSPORTATION*

| DESIGNED BY | CK. DES. BY | DRAFTED BY | |
|---|---|---|---|
| KSK | BD | KSK | Kevin N. Goeden |
| UNIN02PT | 02PTKD01 | | BRIDGE ENGINEER |

# ESTIMATE OF STRUCTURE QUANTITIES

| ITEM NO. | DESCRIPTION | QUANTITY | UNIT |
|---|---|---|---|
| 009E3310 | Bridge Elevation Survey | LumpSum | LS |
| 110E0010 | Remove Concrete Bridge Approach Slab | 234.6 | SqYd |
| 410E2600 | Membrane Sealant Expansion Joint | 167.6 | Ft |
| 430E0300 | Granular Bridge End Backfill | 16.7 | CuYd |
| 460E0070 | Class A45 Concrete, Bridge Repair | 5.2 | CuYd |
| 460E0150 | Concrete Approach Slab for Bridge | 190.4 | SqYd |
| 460E0160 | Concrete Approach Sleeper Slab for Bridge | 67.4 | SqYd |
| 460E0300 | Breakout Structural Concrete | 5.2 | CuYd |
| 460E0380 | Install Dowel in Concrete | 26 | Each |
| 480E0200 | Epoxy Coated Reinforcing Steel | 522 | Lb |
| 480E0504 | No. 4 Rebar Splice | 28 | Each |
| 480E0505 | No. 5 Rebar Splice | 48 | Each |
| 480E0506 | No. 6 Rebar Splice | 44 | Each |
| 480E5000 | Galvanic Anode | 56 | Each |
| 550E0010 | Low Slump Dense Concrete Bridge Deck Overlay | 39.5 | CuYd |
| 550E0100 | Concrete Removal Type 1A | 555.6 | SqYd |
| 550E0110 | Concrete Removal Type 1B | 55.6 | SqYd |
| 550E0120 | Concrete Removal Type 1C | 27.8 | SqYd |
| 550E0130 | Concrete Removal Type 1D | 27.8 | SqYd |
| 550E140 | Concrete Removal Type B | 20.0 | Ft |
| 550E0200 | Class A45 Concrete Fill | 11.4 | CuYd |
| 550E0500 | Finishing and Curing | 555.6 | SqYd |
| | | | |

## SPECIFICATIONS

1. Design Specifications: AASHTO Standard Specifications for Highway Bridges 17th Edition using Working Stress (Load Factor) Design.

2. Construction Specifications: South Dakota Standard Specifications for Roads and Bridges, 2015 Edition and Required Provisions, Supplemental Specifications and Special Provisions as included in the Proposal.

## DETAILS AND DIMENSIONS OF EXISTING BRIDGE

All details and dimensions of the existing bridge contained in these plans, are based on the original construction plans and shop plans and are provided as information only. It is the Contractor's responsibility to inspect and verify the actual field conditions and any necessary as-built dimensions affecting the satisfactory completion of the work required for this project.

## SCOPE OF BRIDGE WORK & SEQUENCE OF OPERATIONS

All work on this structure shall be accomplished with the traffic control shown in the plans. Alternate sequence of operations may be submitted by the Contractor for approval by the Engineer two weeks prior to the pre-construction meeting.

1. Accomplish all Concrete Removal Type 1A, 1B, 1C, 1D, and B and place Class A45 Concrete Fill to the satisfaction of the Engineer for the first phase of construction.

2. Remove the existing approach slab for the first phase of construction.

3. Remove the existing endblocks and install new endblocks that accept thrie beam for the first phase of construction.

4. Place a Low Slump Dense Concrete Overlay to the elevations shown in the plans on the bridge deck and approach slabs for the first phase of construction.

5. Modify the Approach Slab Underdrain System for the first phase of construction.

6. Install the Sleeper Slabs and Approach Slabs for the first phase of construction.

7. Switch traffic and repeat steps 1 through 6 for the second phase of construction.

## GENERAL CONSTRUCTION NOTES

1. All mild reinforcing steel shall conform to ASTM A615, Grade 60.

2. Use 2 inch clear cover on all reinforcing steel except as shown otherwise.

3. Request for construction joints or resteel splices at points other than those shown must be submitted to the Engineer for prior approval. If additional splices are approved, no payment will be allowed for the added quantity of reinforcing steel.

4. Surfaces of fresh concrete at construction joints shall be rough floated sufficiently to consolidate the surface. All construction joints shall be cleaned of surface laitance, curing compounds and other foreign materials prior to placing fresh concrete against the joint.

5. All exposed concrete edges or corners shall be chamfered ¾ inch except where noted in the plans. Match the existing chamfer if the chamfer differs.

6. The type of vibratory screed used shall be approved by the Engineer.

7. The mechanical rebar splices shall be in accordance with Section 480 of the Construction Specifications.

8. The Contractor shall only imprint one year plate on the structure. The year plate shall contain the date the existing bridge was built and shall be located as specified and detailed on Standard Plate No. 460.03.

9. Snap ties, if used in the barrier curb formwork, shall be epoxy coated. The epoxy coating shall be inert in concrete and compatible with the coating applied to the new epoxy coated reinforcing steel.

10. The concrete barriers shall be cured in accordance with Section 460.3 M of the Construction Specifications except that no curing compounds shall be allowed.

## DESIGN MIX OF CONCRETE

1. Class A45 Concrete shall be used for the bid items Concrete Approach Slab for Bridge, Concrete Approach Sleeper Slab for Bridge, and Class A45 Concrete, Bridge Repair.

2. The Type of cement, concrete strength requirements, aggregate requirements, slump and air requirements for the contract items Class A45 Concrete Bridge Repair, Concrete Approach Sleeper Slab for Bridge and Concrete Approach Slab for Bridge shall conform to the requirements of Section 460 of the Construction Specification.

## CONCRETE BREAKOUT

1. The existing end blocks shall be broken out to the limits shown on the plans. Breakout limits shall be defined with a ¾" deep sawcut (unless specified otherwise in these plans), where practical, as approved by the Engineer. Reinforcing steel that is exposed and is scheduled for use in the new construction shall be cleaned and straightened to the satisfaction of the Engineer. Care shall be taken not to damage the existing reinforcing steel that is to be reused in the new construction during concrete breakout. Any reinforcing steel that is damaged during concrete breakout shall be replaced or repaired, as approved by the Engineer, by the Contractor at no cost to the Department.

2. All broken out concrete and discarded reinforcing bars shall be disposed of by the Contractor. Any disposal of discarded material shall be in accordance with the Construction Specifications.

3. During concrete removal operations, no broken out concrete shall be allowed to fall onto the roadway below.

**ESTIMATE OF STRUCTURE QUANTITIES AND NOTES**
FOR
**126' - 0" CONTINUOUS CONCRETE BRIDGE**

STR. NO. 64-155-385
OCTOBER 2015



| DESIGNED BY | CK. DES. BY | DRAFTED BY | |
|---|---|---|---|
| KSK | BD | KSK | Kevin N. Boeden |
| UNIN02PT | 02PTRD02 | | BRIDGE ENGINEER |

## GALVANIC ANODE

1. The Contractor shall furnish and place Galvanic anodes in the concrete repair areas specified in this plan set.

2. The galvanic anodes shall be supplied as one of the following:

   Galvashield XP2
   Vector Corrosion Technologies
   13312 N 56th St, Suite 102
   Tampa, FL 33617
   Phone: (813) 830-7566
   Website: www.vector-corrosion.com

   Sentinel Silver
   Euclid Chemical Company
   19218 Redwood Road
   Cleveland, OH 44110
   Phone: (800) 321-7628
   Website: www.euclidchemical.com

   Sika Galvashield XP+
   Sika Corporation US
   201 Polito Avenue
   Lyndhurst, NJ 07071
   Phone: (800) 933-7452
   Website: http://usa.sika.com

3. The anodes shall be placed in accordance with manufacturer's recommendations and as approved by the Engineer. The anodes have not been shown on the drawings. The Contractor shall provide shop drawings of the galvanic anode installation including locations of the individual anodes to the Office of Bridge Design.

4. The anodes shall be placed with a minimum ¾" cover and shall be set in Embedding Mortar per the manufacturer's recommendations. The anodes shall be fully encased in the concrete repair material. Where adequate cover does not exist, a concrete pocket shall be chipped out behind the anode to provide sufficient cover. The Contractor may need to chip around the reinforcing bar locally at the anode installation to make the electrical connection. The reinforcing steel at the connection location shall be cleaned per the manufacturer's recommendations to provide sufficient electrical connection and mechanical bond.

5. The electrical continuity of the electrical connections and reinforcing steel shall be confirmed per the manufacturer's recommendations.

6. The Contractor shall provide manufacturer's product literature and installation instructions to the Engineer 10 days prior to installation.

7. All costs associated with placing anodes including labor, equipment, materials and incidentals shall be included in the contract unit price per each for "Galvanic Anode".

## INSTALLING DOWELS IN CONCRETE

1. Holes drilled in the existing concrete shall be true and normal or as shown in the plans. Drilling holes using a core drill shall not be allowed. Care shall be taken not to damage the existing reinforcing steel. It is likely that some of the existing reinforcing steel shown in the original construction plans may have been placed out of position during original construction. Therefore, prior to the start of drilling any holes in the concrete, an effort will be made by Department forces to mark on the concrete surface where practical any locations of the in-place reinforcing steel. In spite of this precaution, the Contractor can still expect to encounter and have to drill through reinforcing steel or shift the dowel spacing as approved by the Engineer to miss the existing reinforcing steel. If the Contractor shifts the dowel spacing, the unused drill holes shall be completely filled with the epoxy resin specified in note number 2 as approved by the Engineer.

2. The epoxy resin mixture shall be of a type for bonding steel to hardened concrete and shall conform to AASHTO M235 Type IV, Grade 3 (Equivalent to ASTM C881, Type IV, Grade 3). Grade 1, 2 or 3 may be used for vertical dowels and Grade 3 epoxy shall be used for all horizontal dowels.

3. The diameter of the drilled holes shall not be less than 1/8 inch greater, nor more than 3/8 inch greater than the diameter of the dowels or as per the Manufacturer's recommendations. The drilled holes shall be blown out with compressed air using a device that will reach the back of the hole to ensure that all debris or loose material has been removed prior to epoxy injection.

4. Mix epoxy resin as recommended by the Manufacturer and apply by an injection method as approved by the Engineer. Beginning at the back of the drilled holes, fill the holes 1/3 to 1/2 full of epoxy, or as recommended by the Manufacturer, prior to insertion of the steel bar. Care shall be taken to prevent epoxy from running out of the horizontal holes prior to steel bar insertion. Rotate the steel bar during installation to eliminate voids and ensure complete bonding of the bar. Insertion of the bars by the dipping or painting method will not be allowed.

5. No loads shall be applied to the epoxy grouted dowel bars until the epoxy resin has had sufficient time to cure as specified by the epoxy resin manufacturer.

6. Dowel bars shall be deformed bars conforming to ASTM A615 Grade 60.

7. The cost of epoxy resin, dowels, installation and other incidental items shall be incidental to the contract unit price per each for "Install Dowel in Concrete".

## REMOVAL OF CONCRETE BRIDGE APPROACH SLAB

1. The existing concrete approach and sleeper slabs adjacent to the structure shall be completely removed by the Contractor.

2. The crushed concrete and reinforcing steel from the removal shall be disposed of by the Contractor at an approved site. An appropriate site will be as described in the Environmental Commitment notes in this set of plans.

3. All labor, tools, equipment and any incidentals necessary for removal and disposal of the existing approach and sleeper slabs shall be incidental to the contract unit price per square yard for "Remove Concrete Bridge Approach Slab".

## MODIFY EXISTING BRIDGE END BACKFILL

1. This work consists of bringing the existing bridge end backfill material up to the required elevation and repairing any damage to the in-place bridge end backfill material as approved by the Engineer.

2. Granular bridge end backfill shall conform to Section 882 of the Construction Specification. Granular material shall be placed and compacted using a smooth face vibratory roller or vibratory plate compactor according to Section 430.3 B of the Construction Specification.

3. The Reinforcement Fabric (MSE) shall conform to section 831 of the Construction Specification.

4. The polyethylene sheeting shall be a minimum thickness of 6 mils (0.152 mm) and shall be sufficiently durable such that it will not puncture or tear when installed as intended.

5. The existing polyethylene sheeting under the existing approach slab and sleeper slab shall be removed and disposed of in accordance with the waste disposal site notes.

6. The surfaces on which the reinforcement fabric is to be placed shall be smooth and free of obstructions. The reinforcement fabric may be oriented in any direction.

7. Any equipment used to install the granular bridge end backfill over the reinforcement fabric shall be operated in such a manner that the reinforcement fabric is not damaged. To avoid damage to the reinforcement fabric, the equipment used to place, spread, and compact material over the reinforcement fabric shall be limited to handheld equipment.

**NOTES (CONTINUED)**
FOR
**126' - 0" CONTINUOUS CONCRETE BRIDGE**

STR. NO. 64-155-385
OCTOBER 2015



| DESIGNED BY | CK. DES. BY | DRAFTED BY | |
|---|---|---|---|
| KSK | BD | KSK | Kevin N. Boeden |
| UNIN02PT | 02PTRD03 | | BRIDGE ENGINEER |

**MODIFY EXISTING BRIDGE END BACKFILL (CONTINUED)**

8. Any reinforcement fabric that is torn or punctured shall be repaired or replaced by the Contractor at no additional cost to the Department. The repair shall consist of a patch of the same type of reinforcement fabric being placed over the ruptured area such that it overlaps the damaged area a minimum of 3 feet measured from any damaged area.

9. Seams shall be constructed by overlapping the fabric a minimum of 2 feet. All seams shall be inspected by the Engineer and any deficient seams repaired by the Contractor prior to placement of the bridge end backfill.

10. The granular bridge end backfill shall be compacted to a minimum of 97 percent of the maximum dry density as determined by SD 104 ( AASHTO T99). The moisture content of the backfill material prior to and during compaction shall be adequate to provide satisfactory results. Maximum dry density and optimum moisture shall be determined by SD 104 (AASHTO T99).

11. The quantity specified in the plans for granular bridge end backfill was estimated. Actual amount installed may vary slightly due to changes in the field condition. Regardless of these limitations, the plan shown quantity will be the basis of payment. Field measurement for Granular Bridge End Backfill will not be made. Payment will be full compensation for all labor, equipment, materials, water, and all other items incidental to furnishing and installing the reinforcement (MSE), the polyethylene sheeting and for furnishing and installing, including any hauling or stockpiling, of the granular bridge end backfill material.

**APPROACH SLABS**

1. Excavation for placement of new approach slabs and sleeper slabs shall be done with minimal disturbance to the underlying material.

2. The top of approach slab elevations shall be established during construction and shall be subject to the approval of the Engineer. Care shall be taken to provide a smooth transition from the bridge deck elevations to the new pavement elevations established in the field so as to prevent any dips or bumps in the areas of the bridge ends or ends of the new approach slabs. The maximum rate of grade transition through the approach slab shall be 1/8 inch in 10 feet.

3. Sleeper slab riser shall be cast with or later than the Approach Slab. Care shall be taken to ensure the correct grade is maintained across the joint.

4. The use of a vibratory screed will be required during placement of Class A45 Concrete for the approach slabs. Concrete placement in front of the screed shall be kept parallel to the screed.

5. The new approach slabs and sleeper slabs shall have a surface finish as stipulated in Section 460.3L.4 of the Construction Specifications.

6. The Concrete Approach Slabs Adjacent to Bridge shall be cured in accordance with Section 460.3M of the Construction Specifications.

7. Concrete Approach Sleeper Slab for Bridge will be paid for at the contract unit price per square yard. This payment shall be full compensation for all excavation, furnishing, hauling, and placing all materials including concrete, concrete anchors, and reinforcing steel; for disposal of all excavated material and surplus materials; and for labor, tools, equipment and any incidentals necessary to complete this item of work.

8. Concrete Approach Slab for Bridge will be paid for at the contract unit price per square yard. This payment shall be full compensation for all excavation, furnishing, hauling and placing all materials including concrete, asphalt paint or 6 mil polyethylene sheeting, elastic joint sealer and reinforcing steel; for disposal of all excavated material and surplus materials and for labor, tools, equipment and any incidentals necessary to complete this item of work.

**MEMBRANE SEALANT EXPANSION JOINT**

1. The Membrane Sealant shall be on the approved product list for Membrane Sealant Expansion Joints.

2. The manufacturer shall supply the membrane sealant in packaging that precompresses the membrane sealant. The precompressed dimension shall be as recommended by the sealant manufacturer, however, in no case shall the precompressed dimension exceed 75% of the joint opening width. The foam sealant shall be slowly self expanding to permit workers ample time to install the membrane sealant before the membrane sealant exceeds the joint opening width.

3. The membrane sealant shall provide a water tight seal throughout a joint movement range of +25% (minimum) from the specified joint opening dimension.

4. The membrane sealant shall be supplied in pieces a minimum of 5 feet in length. The foam sealant shall be ultra-violet and ozone resistant.

5. The bonding adhesive used to attach the membrane sealant to the adjacent concrete shall be approved by the membrane sealant manufacturer.

6. Adhesive used to join adjacent pieces of the membrane sealant shall be as recommended by the manufacturer.

7. If Styrofoam filler material is used in the construction, it shall be closed cell and water-tight as approved by the Engineer.

8. The minimum ambient air temperature at the time of joint installation and adhesive curing shall be 40°F.

9. A technical representative of the membrane sealant manufacturer shall be present at the jobsite during installation. The technical representative shall be knowledgeable in the correct procedures for the preparation and installation of the joint material to ensure the Contractor installs the joint to the manufacturers' recommendations.

10. Surfaces that will be in contact with the membrane sealant shall be thoroughly cleaned by abrasive blasting to remove all laitance and contaminants (such as oil, curing compounds, etc.) from the surface. A a minimum, two passes.of abrasive blasting with the nozzle held at an angle to within 1 to 2 inches of the surface will be required. Cleaning of the surfaces with solvents, wire brushing or grinding shall not be permitted.

11. After abrasive blasting, but immediately prior to membrane joint installation, the entire joint contact surface shall be air blasted. The air compressor used for joint cleaning shall be equipped with trap devices capable of providing moisture-free and oil-free air at a recommended pressure of 90 psi. To obtain complete bonding with the adhesive, the adjacent surfaces must be dry and clean. The contact surfaces for the joint shall be visually inspected by the Engineer immediately prior to joint installation to verify the surface is dry and clean.

12. Individual spliced sections shall be installed as per the manufacturers' recommendation. The membrane joint sealant manufacturer shall submit a detailed installation procedure to the Engineer at least 5 days prior to joint installation for his review.

13. Traffic shall not be allowed on the joint until the bonding adhesive has had time to cure, as recommended by the manufacturer.

14. Use plywood or other material to protect concrete adjacent to the join from spalling before any equipment is moved across the joint. Any spall will be repaired at the Contractor's expense by breaking out and replacing adjacent concrete, as approved by the Engineer.

15. The Membrane Sealant Expansion Joint will be measured in feet to the nearest one-tenth foot, complete in place. Measurement will be made of the overall horizontal length. The Membrane Sealant Expansion joint will be paid for at the contract unit price per foot complete in place. Payment for this item shall be full compensation for furnishing all the required material in place, including labor, equipment and incidentals necessary to complete the work in accordance with the plans and the foregoing specifications.

**NOTES (CONTINUED)**

FOR

126' - 0" CONTINOUS CONCRETE BRIDGE

STR. NO. 64-155-385

OCTOBER 2015



| DESIGNED BY | CK. DES. BY | DRAFTED BY | |
|---|---|---|---|
| KSK | BD | KSK | Kevin N. Boeden |
| UNIN02PT | 02PTRD04 | | BRIDGE ENGINEER |

## BRIDGE DECK OVERLAY

1. The preparation for resurfacing consists of Concrete Removal Type 1A on the entire bridge deck and Type 1B, Type 1C, Type 1D and Type B over the deck surface as detailed on the plan sheets. Such removal shall be in conformance with these plans and Section 550 of the construction specifications. Extreme care shall be taken during the Concrete Removal 1A to assure that the existing resteel is not damaged. In the event that resteel damage inadvertently occurs, the Bridge Construction Engineer shall be immediately notified. Any damaged resteel shall be repaired by the Contractor, as approved by the Engineer, at no additional cost to the Department.

2. Concrete Removal Type 1C, Concrete Removal Type 1D, Concrete Removal Type B and Class A45 Concrete Fill may not be encountered and may be omitted from the project as determined by the Engineer.

3. Concrete Removal Type 1C, Concrete Removal Type 1D and Class A45 Concrete Fill is not anticipated to exceed the plan shown quantities. If the Engineer determines that Concrete Removal Type 1C, Concrete Removal Type 1D and/or Class A45 Concrete Fill in excess of the plan shown quantity is necessary, payment for the additional quantity shall be conformance with Section 550.5 of the Construction Specifications.

4. A minimum thickness of 2" of Low Slump Dense Concrete shall be maintained on the bridge deck.

5. It will be necessary for the Contractor to shape the surface of the Low Slump Dense Concrete Bridge Deck Overlay within one foot of the curb as detailed in the plans to insure that water drains to the floor drains or off the ends of the bridge.

6. Concrete for final deck overlay shall be as specified for Low Slump Dense Concrete in Section 550 of the Construction Specifications.

7. No traffic will be allowed to operate on the scarified portion of the bridge deck. If it appears that the entire Low Slump Dense Concrete Overlay can not be completed prior to winter, the Type 1A, 1B, 1C, 1D and Type B removal shall not be done until work resumes in the spring. In the event that scarification has been started and due to unforeseen circumstances it becomes impossible to complete the placement of the Low Slump Dense Concrete Overlay on the entire surface of the structure prior to winter, the Office of Bridge Design shall be notified. Recommendations for handling winter traffic will then be made. These recommendations may include, but are not limited to, filling extra depth removal areas with Class A45 Concrete, placing an asphalt overlay on the uncompleted area so that the entire roadway width may be opened to traffic, removal of the asphalt overlay when work is resumed and scarifying an additional 1/4" of depth on the bridge deck. The cost of this work, including asphalt overlay, scarification, Class A45 Concrete, extra Low Slump Dense Concrete, and all other items incidental to this work, shall be at the expense of the Contractor.

8. During placement of the Low Slump Dense Concrete Overlay all vehicular traffic on lane open for travel shall be stopped by flaggers before entering onto the bridge and then allowed to proceed at a maximum of 5 MPH to safely slow traffic to cross the bridge during the deck overlay period two advance flaggers shall be used.

## AS - BUILT ELEVATION SURVEY

The Contractor shall be responsible for recording the As-built deck elevations at the locations shown by the Table of As-Built Elevations shown in the plans. The elevations to be recorded in these tables shall be based on the National Geodetic Survey (NGS) North American Vertical Datum of 1988 (NAVD88). The Engineer shall provide the Contractor with a description, elevation, and location of the nearest benchmark that has a NAVD88 established elevation for the Contractor's use. The benchmark shown in the plans has not been tied to the NAVD88. The Contractor shall be responsible for establishing a NAVD88 elevation for the benchmark provided in the plans. All costs associated with obtaining the NAVD88 elevations at the locations shown in the table and for the benchmark shown in the plans, including all equipment, labor and any incidentals required shall be incidental to the contract lump sum price for Bridge Elevation Survey.

**NOTES (CONTINUED)**

FOR

**126' - 0" CONTINUOUS CONCRETE BRIDGE**

STR. NO. 64-155-385

OCTOBER 2015



| DESIGNED BY | CK. DES. BY | DRAFTED BY | |
|---|---|---|---|
| KSK | BD | KSK | Kevin N. Boeden |
| UNIN02PT | 02PTRD05 | | BRIDGE ENGINEER |

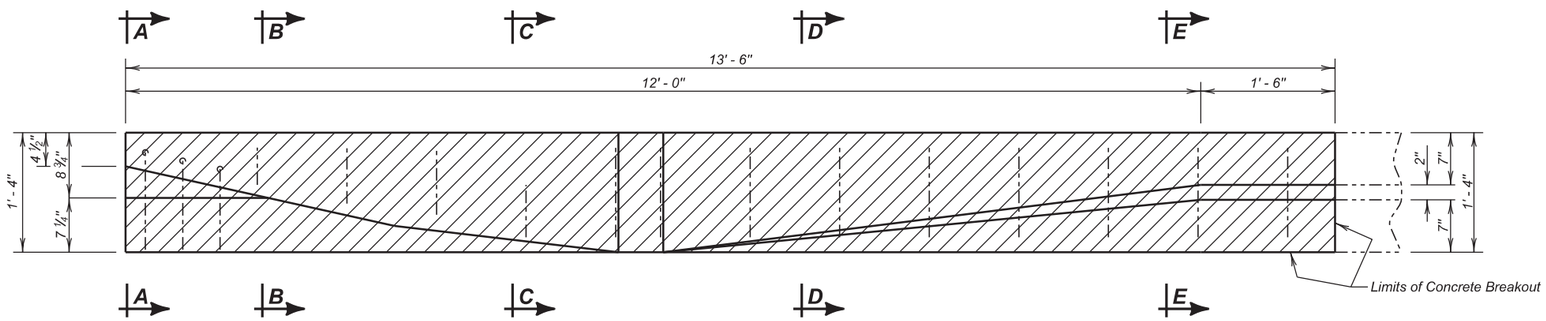


PLAN

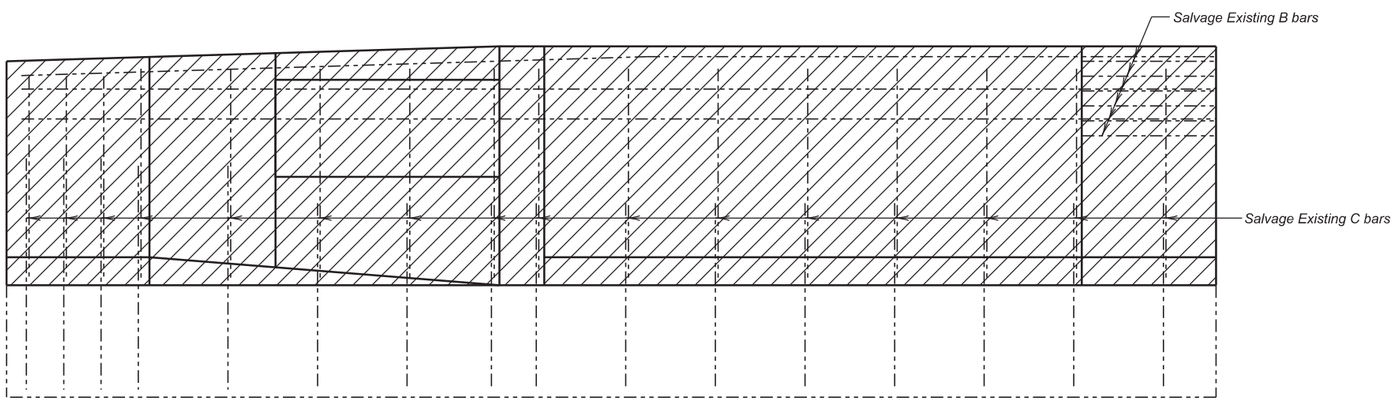


ELEVATION

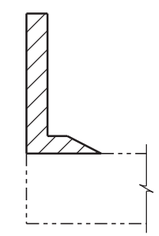

VIEW A - A

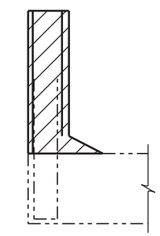

SEC. B - B

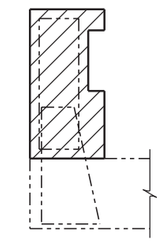

SEC. C - C

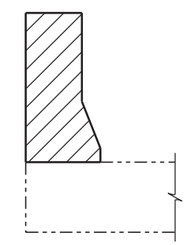

SEC. D - D

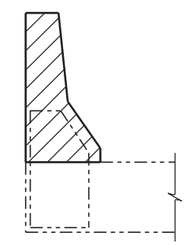

SEC. E - E

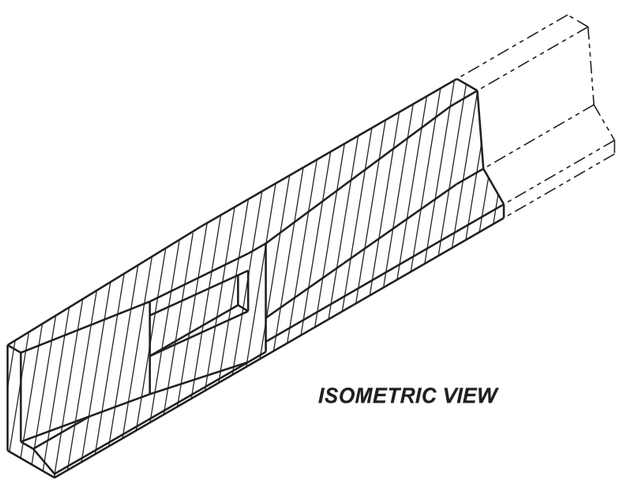

ISOMETRIC VIEW

**ESTIMATED QUANTITIES**
(All Four End Blocks)

| ITEM | UNIT | QUANTITY | |
|---|---|---|---|
| | | Phase 1 | Phase 2 |
| Breakout Structural Concrete | Cu. Yd. | 2.6 | 2.6 |
| | | | |
| | | | |

NOTE:
This sheet is to be used in conjunction with
Sheet Nos. 7 and 8 of 24.

Shaded areas indicate limits of concrete breakout.

**(NORTH BOUND LANES)**
**END BLOCK MODIFICATION**

FOR

126' - 0" CONTINUOUS CONCRETE BRIDGE

40' - 0" ROADWAY
OVER COUNTY ROAD
STR. NO. 64-155-385

0 SKEW
SEC. 15-T89N-R48W
IM-PH 0291(122)0

UNION COUNTY
S. D. DEPT. OF TRANSPORTATION
OCTOBER 2015



| DESIGNED BY | CK. DES. BY | DRAFTED BY | |
|---|---|---|---|
| KSK | BD | KR | Kevin N. Boeden |
| UNIN02PT | 02PTRD06 | | BRIDGE ENGINEER |

| STATE OF | PROJECT | SHEET NO. | TOTAL SHEETS |
|---|---|---|---|
| S.D. | IM-PH 0291(122)0 | 136 | 284 |

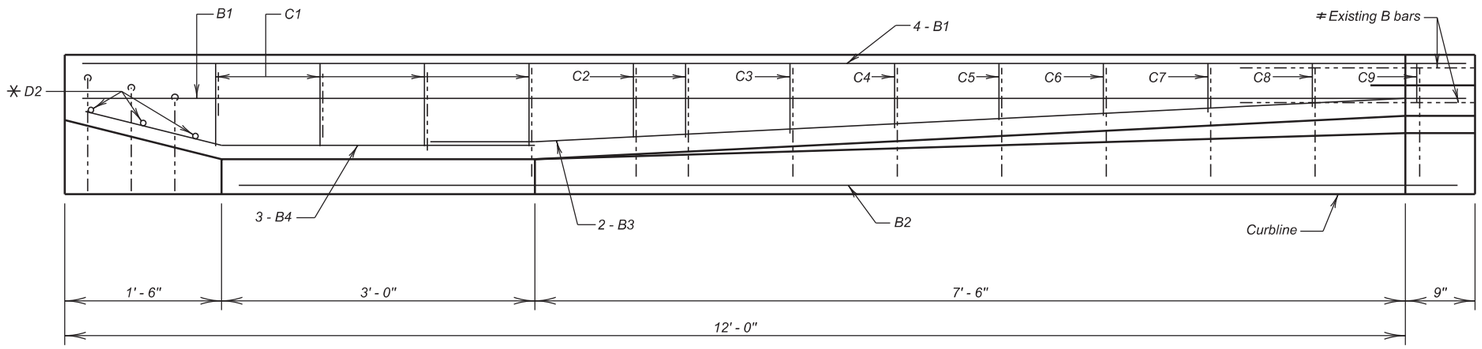


**PLAN**

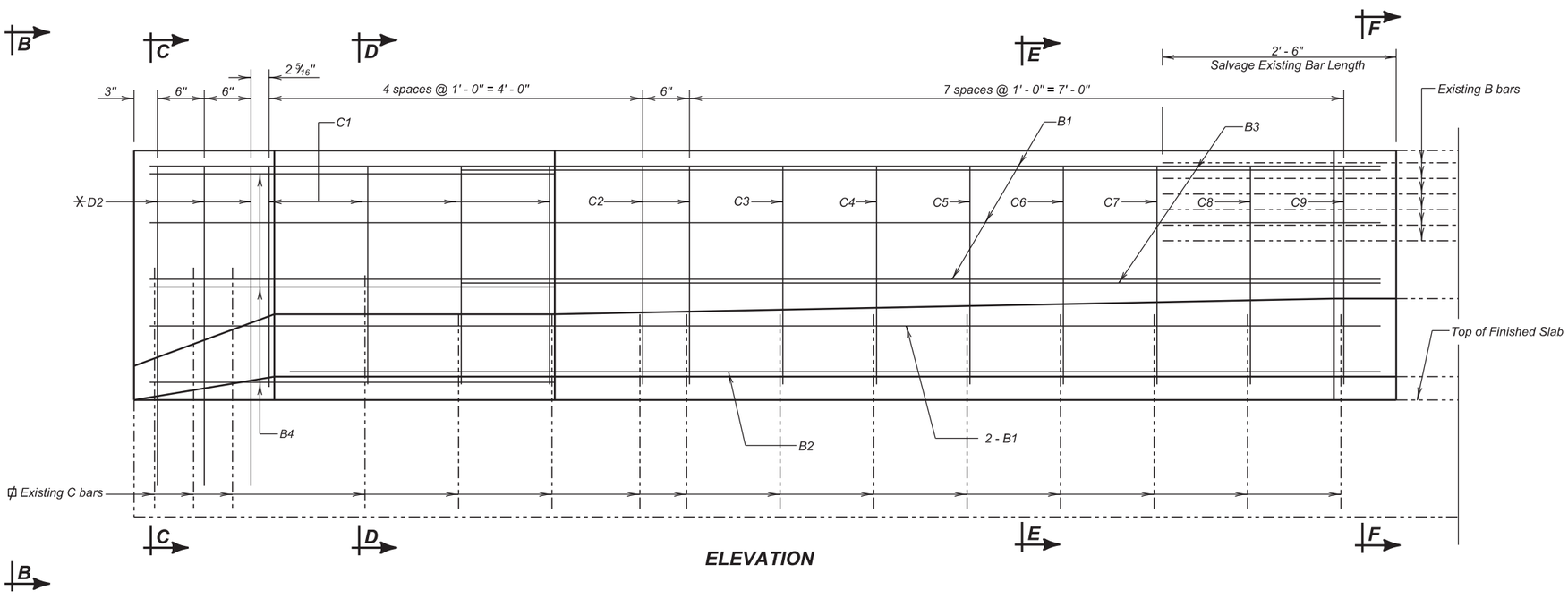


**ELEVATION**

## REINFORCING SCHEDULE

( For Four End Blocks )

| Mk. | No. | Size | Length | Type |
|---|---|---|---|---|
| B1 | 20 | 4 | 13' - 2" | Str. |
| B2 | 4 | 4 | 11' - 8" | Str. |
| B3 | 8 | 4 | 9' - 4" | 19B |
| B4 | 12 | 4 | 4' - 4" | 19B |
| C1 | 16 | 4 | 7' - 0" | T1 |
| C2 | 8 | 4 | 6' - 10" | T1 |
| C3 | 4 | 4 | 6' - 9" | T1 |
| C4 | 4 | 4 | 6' - 8" | T1 |
| C5 | 4 | 4 | 6' - 6" | T1 |
| C6 | 4 | 4 | 6' - 5" | T1 |
| C7 | 4 | 4 | 6' - 4" | T1 |
| C8 | 4 | 4 | 6' - 3" | T1 |
| C9 | 4 | 4 | 5' - 1" | S11 |
| △ D2 | 12 | 6 | 3' - 5" | Str. |

Bending Details

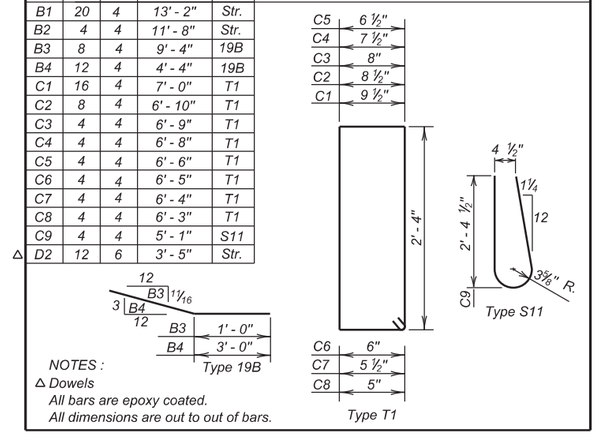


NOTES :
△ Dowels
All bars are epoxy coated.
All dimensions are out to out of bars.

## ESTIMATED QUANTITIES

| ITEM | UNIT | QUANTITY Phase 1 | QUANTITY Phase 2 |
|---|---|---|---|
| Class A45 Concrete, Bridge Repair | Cu. Yd. | 2.6 | 2.6 |
| ★ Epoxy Coated Reinforcing Steel | Lb. | 261 | 261 |
| Install Dowel in Concrete | Each | 6 | 6 |
| Galvanic Anode | Each | 28 | 28 |

★ Does not include the following quantities for D2 bars as these are paid for in the Bid Item "Install Dowel in Concrete".

| PHASE I | PHASE 2 |
|---|---|
| 31 Lb. | 31 Lb. |

NOTE:
This sheet is to be used in conjunction with Sheet Nos. 6 and 8 of 24.

ϕ Bend Existing Bars where necessary to maintain 2" clear cover.
✳ D2 are to be drilled in and grouted with epoxy.
≠ Extend existing B bars into new section (2' - 6").

**(NORTH BOUND LANES)**
**END BLOCK MODIFICATION (CONTINUED)**

FOR

126' - 0" CONTINUOUS CONCRETE BRIDGE

40' - 0" ROADWAY — 0 SKEW
OVER COUNTY ROAD — SEC. 15-T89N-R48W
STR. NO. 64-155-385 — IM-PH 0291(122)0

UNION COUNTY
S. D. DEPT. OF TRANSPORTATION
OCTOBER 2015



| DESIGNED BY | CK. DES. BY | DRAFTED BY | |
|---|---|---|---|
| KSK | BD | KR | Kevin N. Boeden |
| UNIN02PT | 02PTRD07 | | BRIDGE ENGINEER |

| STATE OF | PROJECT | SHEET NO. | TOTAL SHEETS |
|---|---|---|---|
| S.D. | IM-PH 0291(122)0 | 137 | 284 |

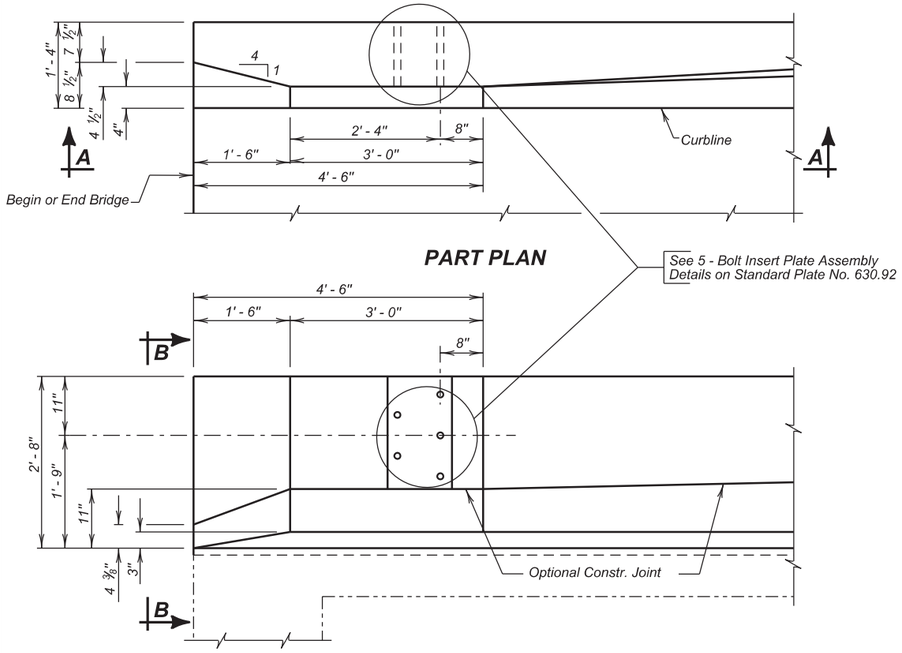


PART PLAN

VIEW A - A

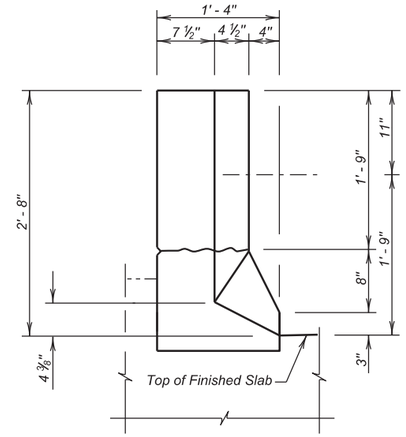


VIEW B - B

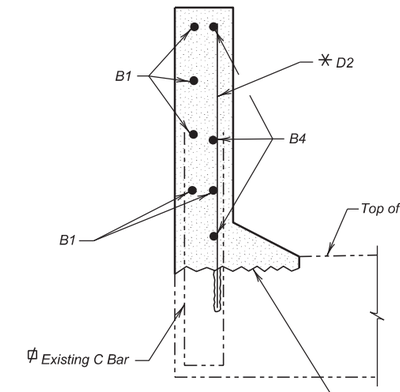


SEC. C - C

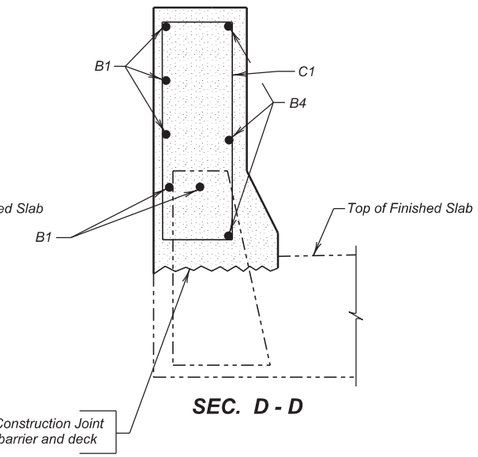


SEC. D - D

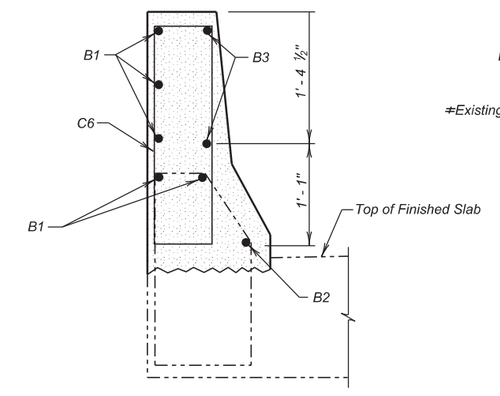


SEC. E - E

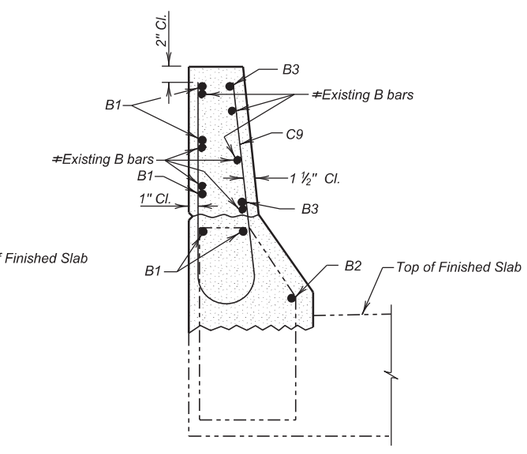


SEC. F - F

NOTE:
This sheet is to be used in conjunction with
Sheet Nos. 6 and 7 of 24.

ϕ Bend Existing Bars where necessary to maintain 2" clear cover.
✳ D2 are to be drilled in and grouted with epoxy.
≠ Extend existing B bars into new section (2' - 6").

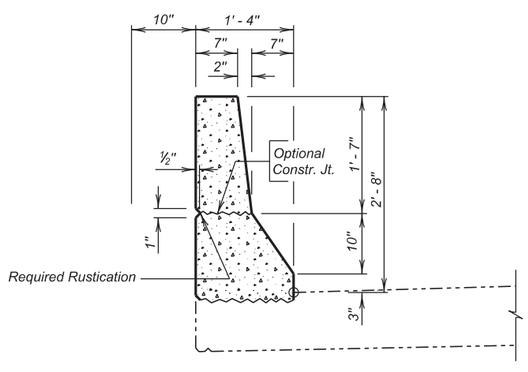


BARRIER DETAILS

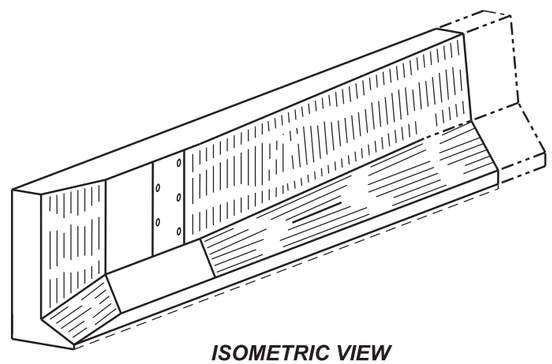

ISOMETRIC VIEW

**(NORTH BOUND LANES)**
**END BLOCK MODIFICATION (CONTINUED)**

FOR

126' - 0" CONTINUOUS CONCRETE BRIDGE

40' - 0" ROADWAY — 0 SKEW
OVER COUNTY ROAD — SEC. 15-T89N-R48W
STR. NO. 64-155-385 — IM-PH 0291(122)0

UNION COUNTY
S. D. DEPT. OF TRANSPORTATION
OCTOBER 2015



| DESIGNED BY | CK. DES. BY | DRAFTED BY | |
|---|---|---|---|
| KSK | BD | KR | Kevin N. Goeden |
| UNIN02PT | 02PTRD08 | | BRIDGE ENGINEER |

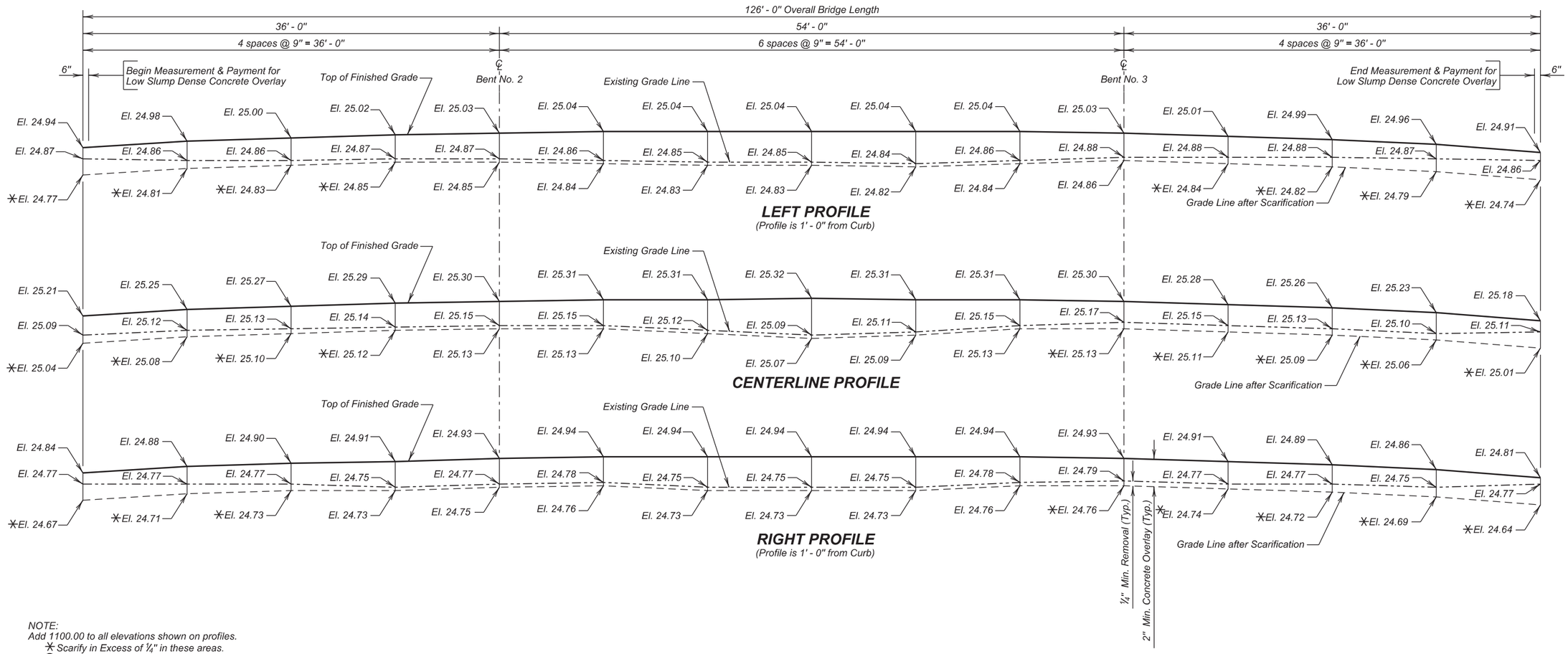


NOTE:
Add 1100.00 to all elevations shown on profiles.
✳ Scarify in Excess of ¼" in these areas.
⊗ Existing Elevation is the same as the Finished Surface Elevation.
⊕ Existing Elevation is higher than the Finished Surface Elevation.

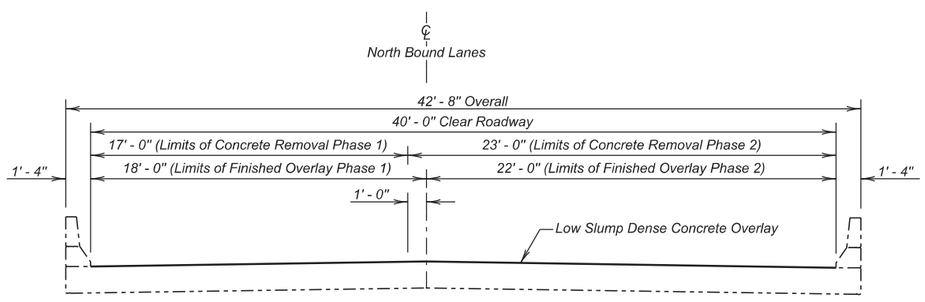


**TYPICAL SECTION**

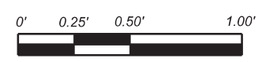


VERTICAL SCALE

**Benchmark Description:**

Chiseled "X" on top of
NE Wingwall
Elevation 1125.30

## ESTIMATED QUANTITIES

| ITEM | UNIT | QUANTITY Phase I | QUANTITY Phase 2 |
|---|---|---|---|
| Low Slump Dense Concrete Deck Overlay | Cu. Yd. | 18.1 | 21.4 |
| Concrete Removal Type 1A | Sq. Yd. | 263.9 | 291.7 |
| Concrete Removal Type 1B | Sq. Yd. | 26.4 | 29.2 |
| Concrete Removal Type 1C | Sq. Yd. | 13.2 | 14.6 |
| Concrete Removal Type 1D | Sq. Yd. | 13.2 | 14.6 |
| Concrete Removal Type B | Ft. | 10.0 | 10.0 |
| Finishing and Curing | Cu. Yd. | 250.0 | 305.6 |
| Class A45 Concrete Fill | Sq. Yd. | 5.4 | 6.0 |

**(NORTH BOUND LANES)**
**DECK PROFILES FOR LOW SLUMP DENSE CONCRETE OVERLAY**
FOR
126' - 0" CONTINUOUS CONCRETE BRIDGE

40' - 0" ROADWAY — 0 SKEW
OVER COUNTY ROAD — SEC. 15-T89N-R48W
STR. NO. 64-155-385 — IM-PH 0291(122)0

UNION COUNTY
S. D. DEPT. OF TRANSPORTATION
SEPTEMBER 2014



| DESIGNED BY | CK. DES. BY | DRAFTED BY | |
|---|---|---|---|
| KSK | BD | KR | Kevin N. Boeden |
| UNIN02PT | 02PTRD09 | | BRIDGE ENGINEER |

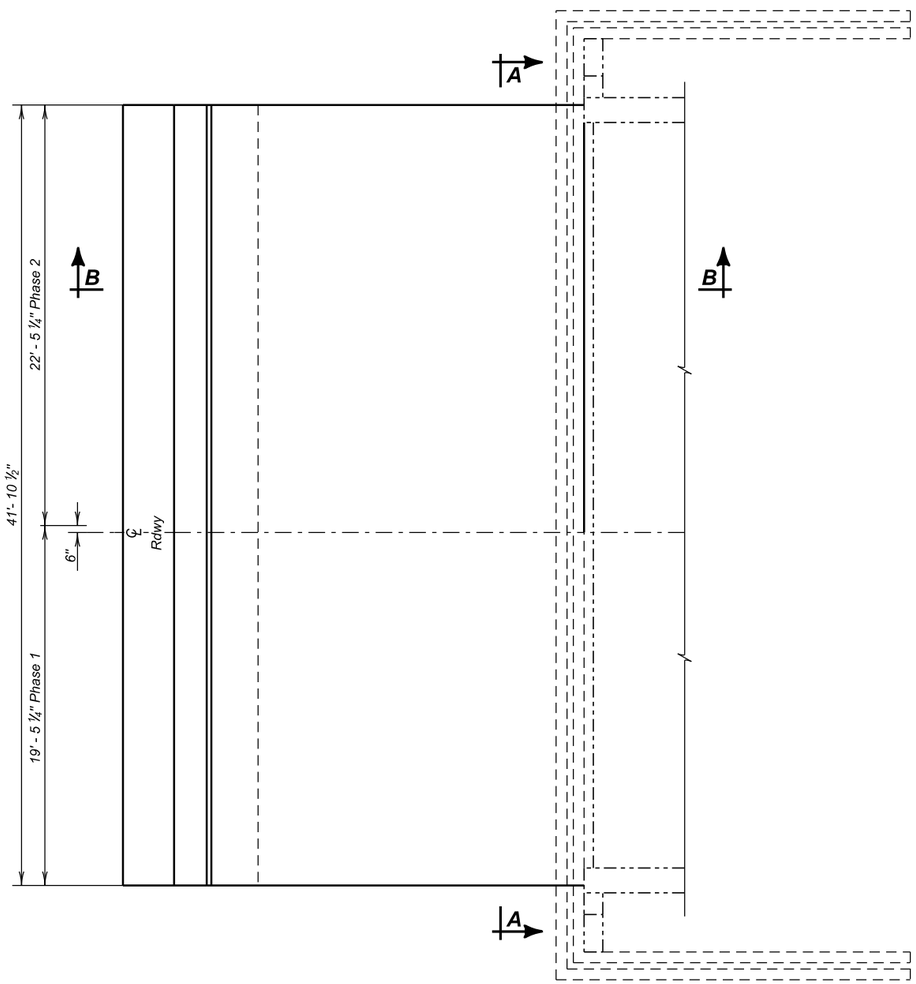


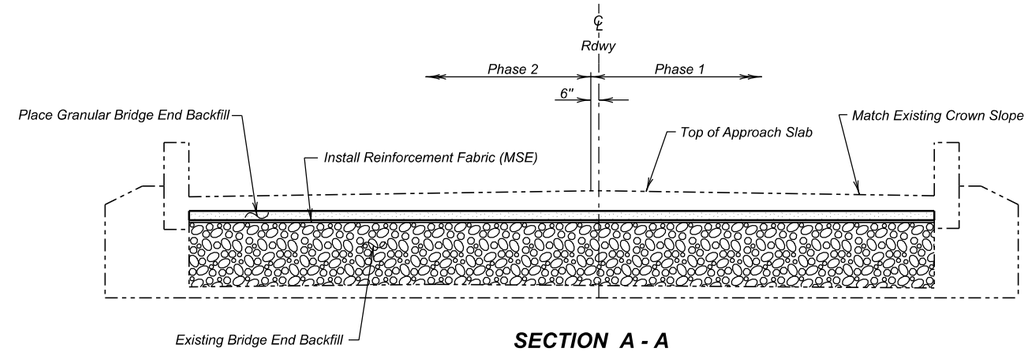


**SECTION A - A**

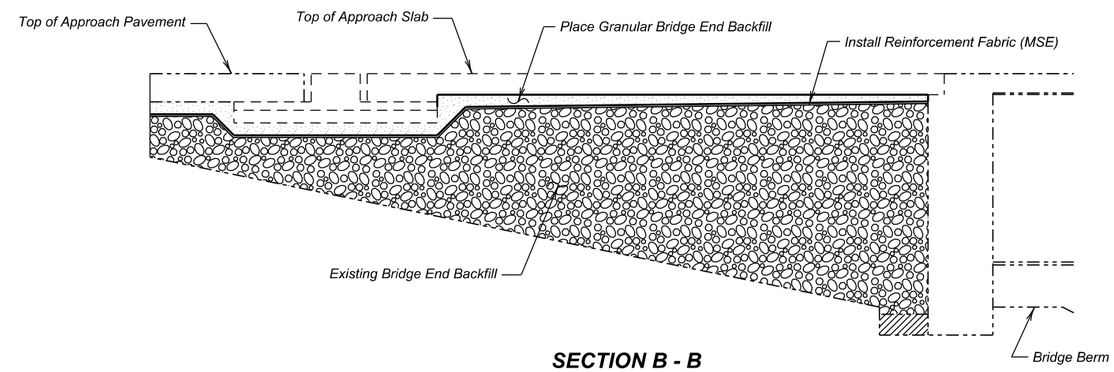


**SECTION B - B**
(at ℄ Roadway)

**(NORTH BOUND LANES)**
**APPROACH SLAB UNDERDRAIN DETAILS**

FOR

126' - 0" CONTINUOUS CONCRETE BRIDGE

40' - 0" ROADWAY — 0 SKEW
OVER COUNTY ROAD — SEC. 15-T89N-R48W
STR. NO. 64-155-385 — IM-PH 0291(122)0

UNION COUNTY
S. D. DEPT. OF TRANSPORTATION
OCTOBER 2015



**ESTIMATED QUANTITIES**

| ITEM | UNIT | QUANTITY Phase I | QUANTITY Phase 2 |
|---|---|---|---|
| ϕ Granular Bridge End Backfill | CuYd | 7.7 | 9.0 |
| | | | |

ϕ Item 1 is an approximate quantity contained in the above bid item and is for information only.

| | PHASE 1 | PHASE 2 |
|---|---|---|
| 1. MSE Geotextile Fabric | 123.0 Sq. Yd. | 142.0 Sq. Yd. |

| DESIGNED BY | CK. DES. BY | DRAFTED BY | |
|---|---|---|---|
| KSK | BD | KR | Kevin N. Goeden |
| UNIN02PT | 02PTRD10 | | BRIDGE ENGINEER |

| STATE OF | PROJECT | SHEET NO. | TOTAL SHEETS |
|---|---|---|---|
| S.D. | IM-PH 0291(122)0 | 140 | 284 |

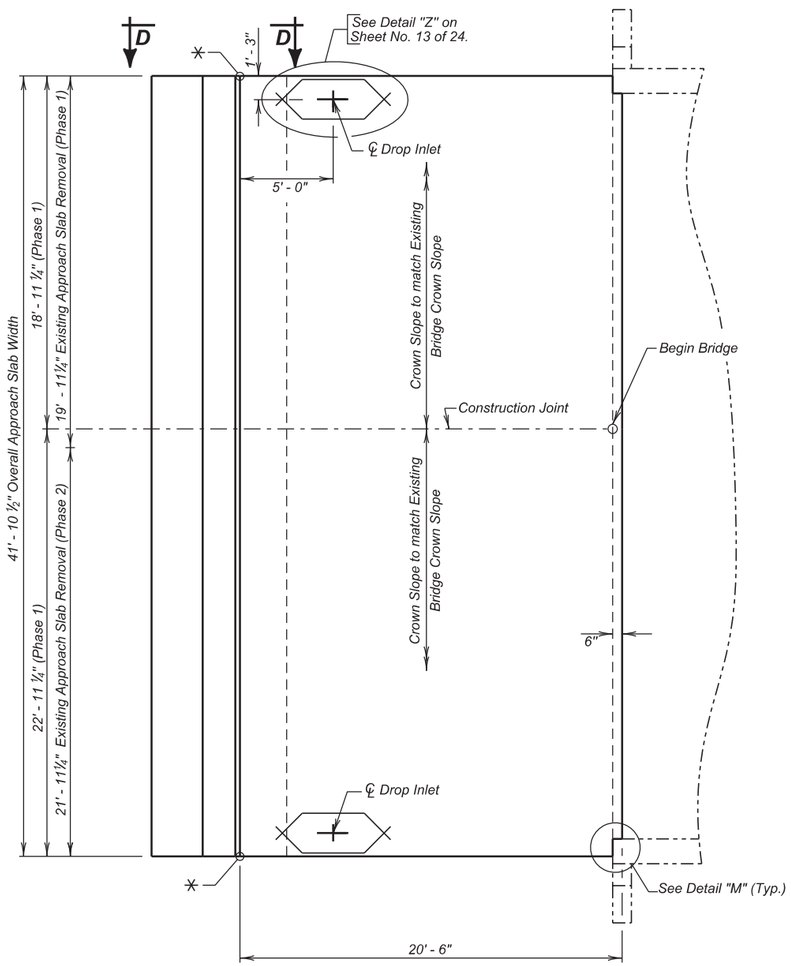


(Adjacent to Abutment No. 1)

**PLAN**

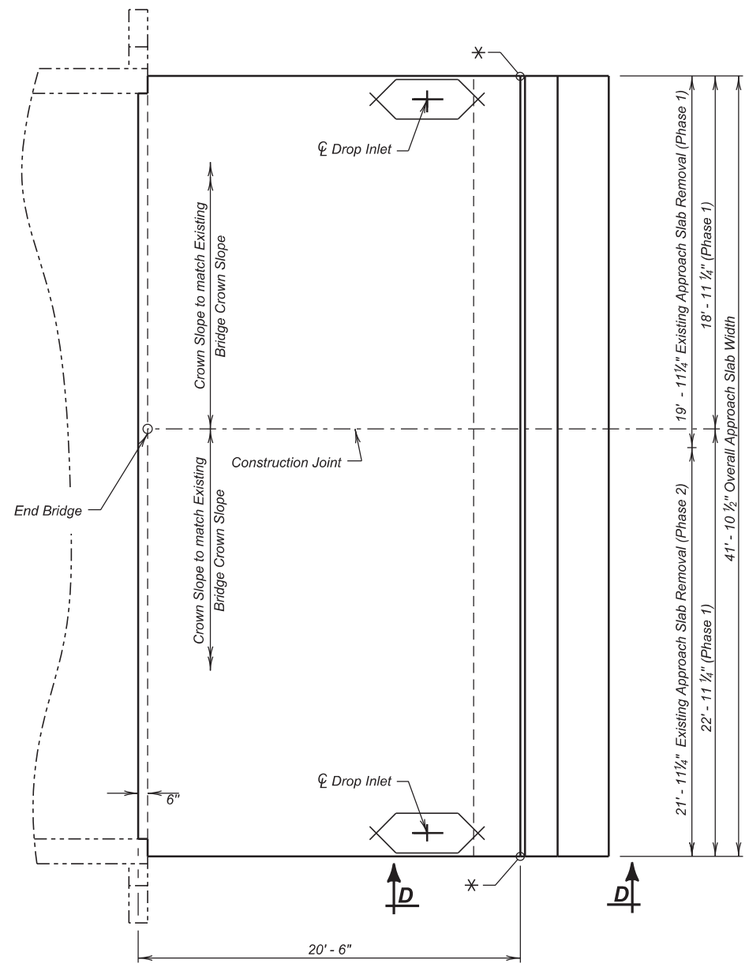


(Adjacent to Abutment No. 4)

**PLAN**

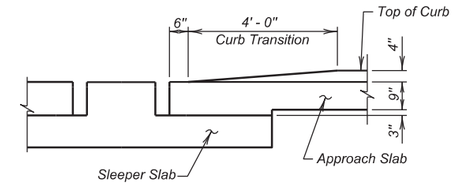


**VIEW D - D**

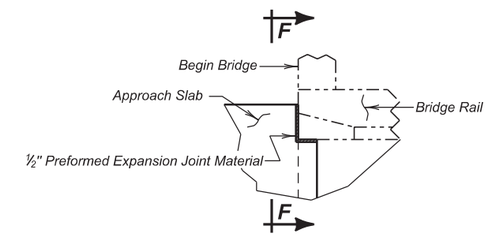


**DETAIL "M:**

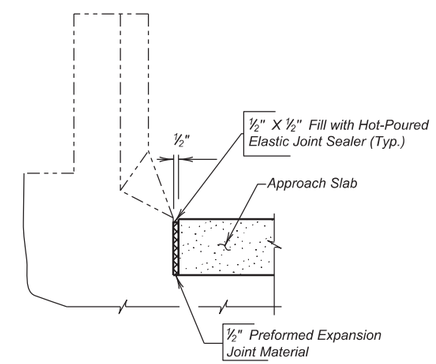


**SEC. F - F**

✳ Elevation is Top of Slab back of Curb at this point. See Approach Slab Notes.

Use in conjunction with Sheet Nos. 12 thru 14 of 24.

**(NORTH BOUND LANES)**
**APPROACH SLAB LAYOUT**

FOR

126' - 0" CONTINUOUS CONCRETE BRIDGE

40' - 0" ROADWAY — 0 SKEW
OVER COUNTY ROAD — SEC. 15-T89N-R48W
STR. NO. 64-155-385 — IM-PH 0291(122)0

UNION COUNTY

S. D. DEPT. OF TRANSPORTATION

OCTOBER 2015

11 OF 24

| DESIGNED BY | CK. DES. BY | DRAFTED BY | |
|---|---|---|---|
| KSK | BD | KR | Kevin N. Boeden |
| UNIN02PT | 02PTRD11 | | BRIDGE ENGINEER |

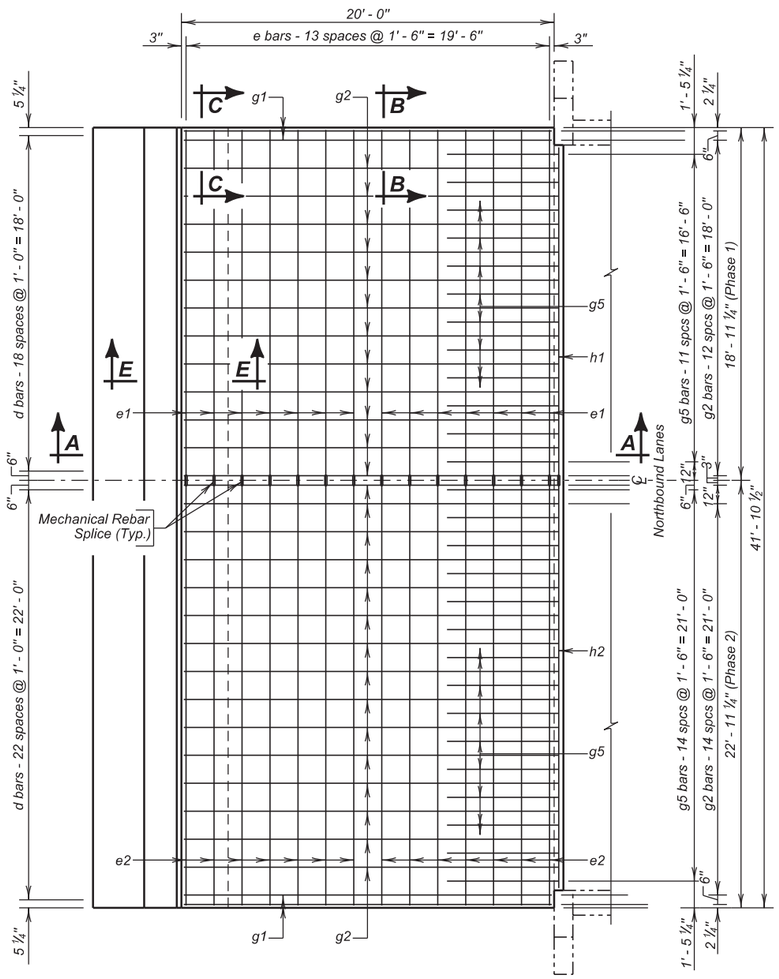


(Adjacent to Abutment No. 1)
(Top Steel)

**PLAN**

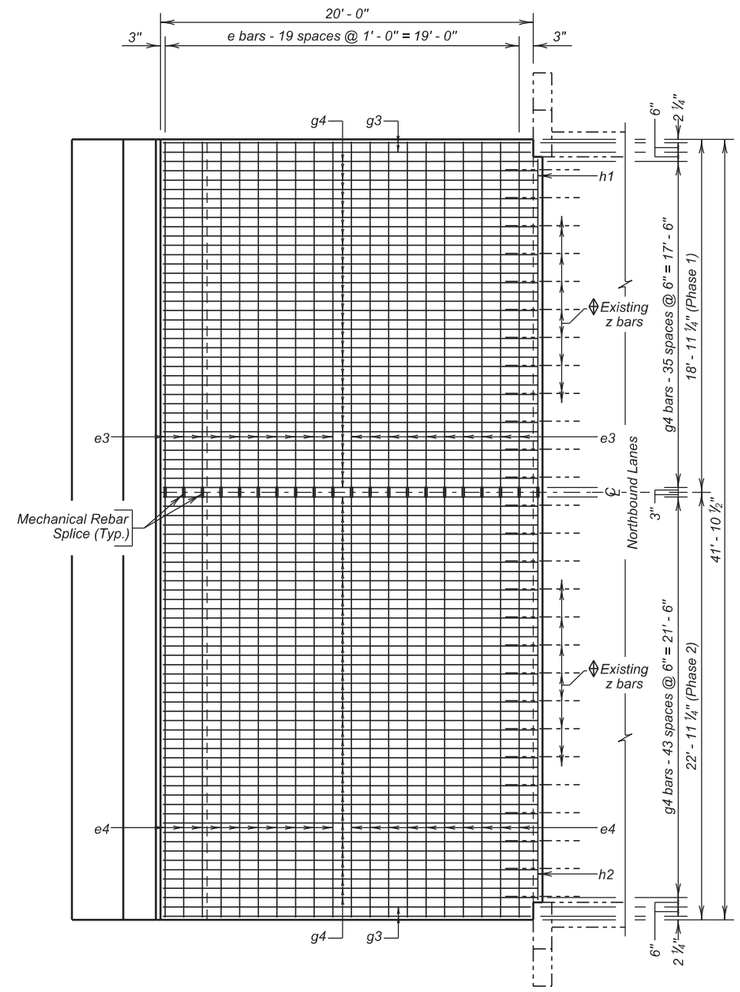


(Adjacent to Abutment No. 4)
(Bottom Steel)

**PLAN**

## REINFORCING SCHEDULE

*( For Two Approach and Two Sleeper Slabs )*

| | PHASE 1 | | | | |
|---|---|---|---|---|---|
| | Mk. | No. | Size | Length | Type |
| ⌀ | c1 | 48 | 5 | 18' - 9" | Str. |
| | d1 | 76 | 4 | 7' - 9" | 2 |
| | d2 | 38 | 4 | 6' - 5" | T2 |
| ⌀ | e1 | 28 | 4 | 18' - 9" | Str. |
| ⌀ | e3 | 40 | 6 | 18' - 9" | Str. |
| | g1 | 4 | 4 | 19' - 8" | Str. |
| | g2 | 24 | 4 | 20' - 1" | Str. |
| | g3 | 4 | 8 | 19' - 8" | Str. |
| | g4 | 72 | 8 | 20' - 2" | Str. |
| | g5 | 24 | 4 | 6' - 0" | Str. |
| ⌀ | h1 | 4 | 6 | 17' - 10" | Str. |
| △ϕ | z1 | 6 | 6 | 4' - 0" | Str. |
| | a3 | 8 | 4 | 19A | |

| | PHASE 2 | | | | |
|---|---|---|---|---|---|
| | Mk. | No. | Size | Length | Type |
| ⌀ | c2 | 48 | 5 | 22' - 9" | Str. |
| | d1 | 92 | 4 | 7' - 9" | 2 |
| | d2 | 46 | 4 | 6' - 5" | T2 |
| ⌀ | e2 | 28 | 4 | 22' - 9" | Str. |
| ⌀ | e4 | 40 | 6 | 22' - 9" | Str. |
| | g1 | 4 | 4 | 19' - 8" | Str. |
| | g2 | 30 | 4 | 20' - 2" | Str. |
| | g3 | 4 | 8 | 19' - 8" | Str. |
| | g4 | 88 | 8 | 20' - 2" | Str. |
| | g5 | 30 | 4 | 6' - 0" | Str. |
| ⌀ | h2 | 4 | 6 | 21' - 10" | Str. |
| △ϕ | z1 | 8 | 6 | 4' - 0" | Str. |
| | a3 | 8 | 4 | 7' - 4" | 19A |

Bending Details

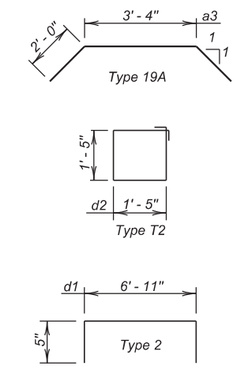


*Note -*
*All Dimensions are out to out of bars.*
*All Bars to be Epoxy Coated.*

△ *Dowels*

ϕ *This quantity will vary depending on condition of existing z bars*

⌀ *Splice (Mechanically Spliced)*

## ESTIMATED QUANTITIES

*(For Two Approach and Two Sleeper Slabs)*

| ITEM | UNIT | QUANTITY Phase I | QUANTITY Phase 2 |
|---|---|---|---|
| Remove Concrete Bridge Approach Slab | Sq Yd | 111.7 | 122.9 |
| Concrete Approach Slab for Bridge | Sq Yd | 86.1 | 104.3 |
| Concrete Approach Sleeper Slab for Bridge | Sq Yd | 30.5 | 36.9 |
| Install Dowel In Concrete | Each | 6 | 8 |
| No. 4 Rebar Splice | Each | 28 | — |
| No. 5 Rebar Splice | Each | 48 | — |
| No. 6 Rebar Splice | Each | 44 | — |

| | PHASE I | PHASE 2 |
|---|---|---|
| 1. Concrete in Approach Slabs. | 22.4 Cu. Yd | 27.1 Cu. Yd |
| ✳ 2. Epoxy Coated Re-Steel in Approach Slabs. | 6183 Lbs. | 7488 Lbs. |
| 3. Concrete in Sleeper Slabs | 10.0 Cu. Yd | 12.2 Cu. Yd |
| 4. Epoxy Coated Re - Steel in Sleeper Slabs. | 1495 Lb. | 1812 Lbs. |

*Items 1 thru 4 are approximate quantities contained in the above bid item and are for information only.*

✳ *Does not include the following quantities for z1 bars as these are paid for in the Bid Item "Install Dowel in Concrete".*

| PHASE I | PHASE 2 |
|---|---|
| 36 Lb. | 48 Lb. |

**(NORTH BOUND LANES)**
**APPROACH SLAB DETAILS**

FOR

126' - 0" CONTINUOUS CONCRETE BRIDGE

40' - 0" ROADWAY — 0 SKEW
OVER COUNTY ROAD — SEC. 15-T89N-R48W
STR. NO. 64-155-385 — IM-PH 0291(122)0

UNION COUNTY

S. D. DEPT. OF TRANSPORTATION

OCTOBER 2015

*Use this sheet in conjunction with Sheet Nos. 11, 13 and 14 of 24.*



| DESIGNED BY | CK. DES. BY | DRAFTED BY | |
|---|---|---|---|
| KSK | BD | KR | Kevin N. Goeden |
| UNIN02PT | 02PTRD12 | | BRIDGE ENGINEER |

| STATE OF | PROJECT | SHEET NO. | TOTAL SHEETS |
|---|---|---|---|
| S.D. | IM-PH 0291(122)0 | 142 | 284 |

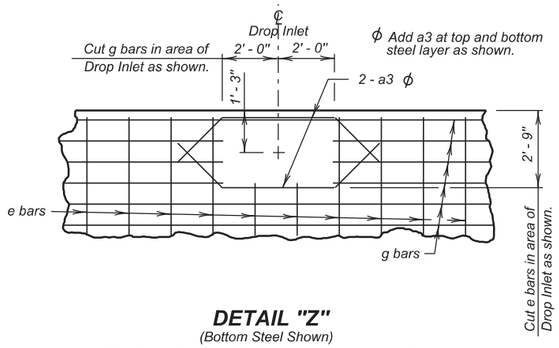


**DETAIL "Z"**
(Bottom Steel Shown)
See Sheet No. 11 of 24 for location on Approach Slab .

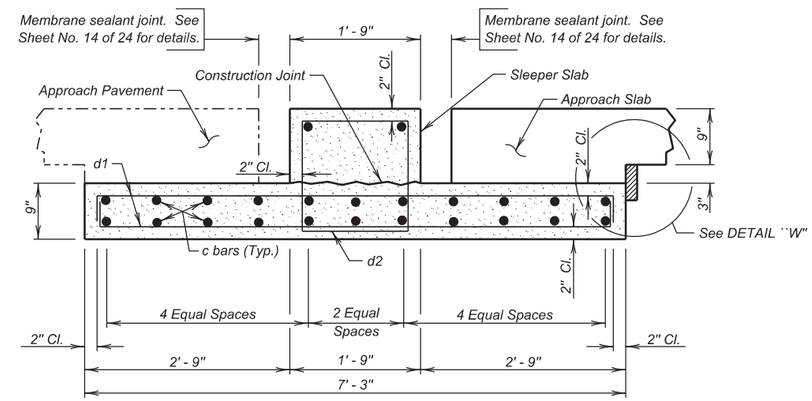


**SEC. E - E**
(Sleeper Slab)

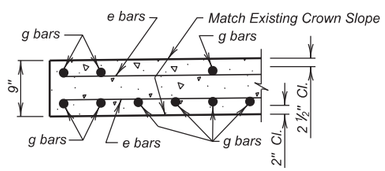


**SEC. C - C**

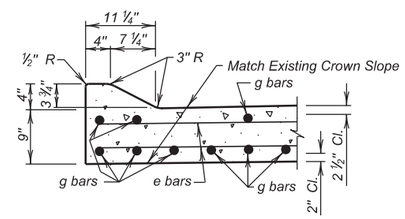


**SEC. B - B**

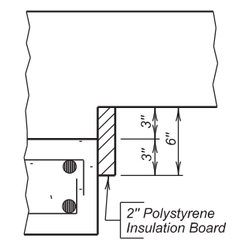


**DETAIL "W"**
The Polystyrene Insulation Board shall be firmly attached to the sleeper slab by a method to be approved by the Engineer.

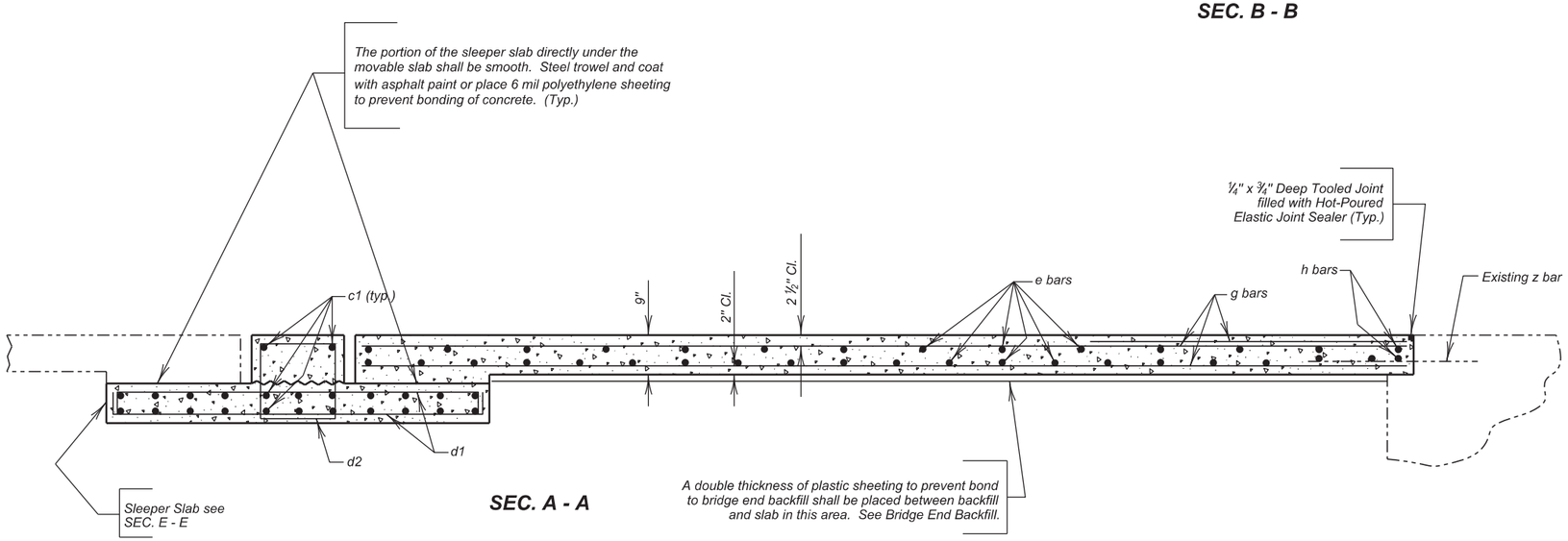


**SEC. A - A**

Use this sheet in conjunction with Sheet Nos. 11, 12 and 14 of 24.

**(NORTH BOUND LANES)**
**APPROACH SLAB DETAILS (CONTINUED)**

FOR

126' - 0" CONTINUOUS CONCRETE BRIDGE

40' - 0" ROADWAY — 0 SKEW
OVER COUNTY ROAD — SEC. 15-T89N-R48W
STR. NO. 64-155-385 — IM-PH 0291(122)0

UNION COUNTY
S. D. DEPT. OF TRANSPORTATION
OCTOBER 2015

13 OF 24

| DESIGNED BY | CK. DES. BY | DRAFTED BY | |
|---|---|---|---|
| KSK | KSK | KR | Kevin N. Boeden BRIDGE ENGINEER |
| UNIN02PT | 02PTRD13 | | |

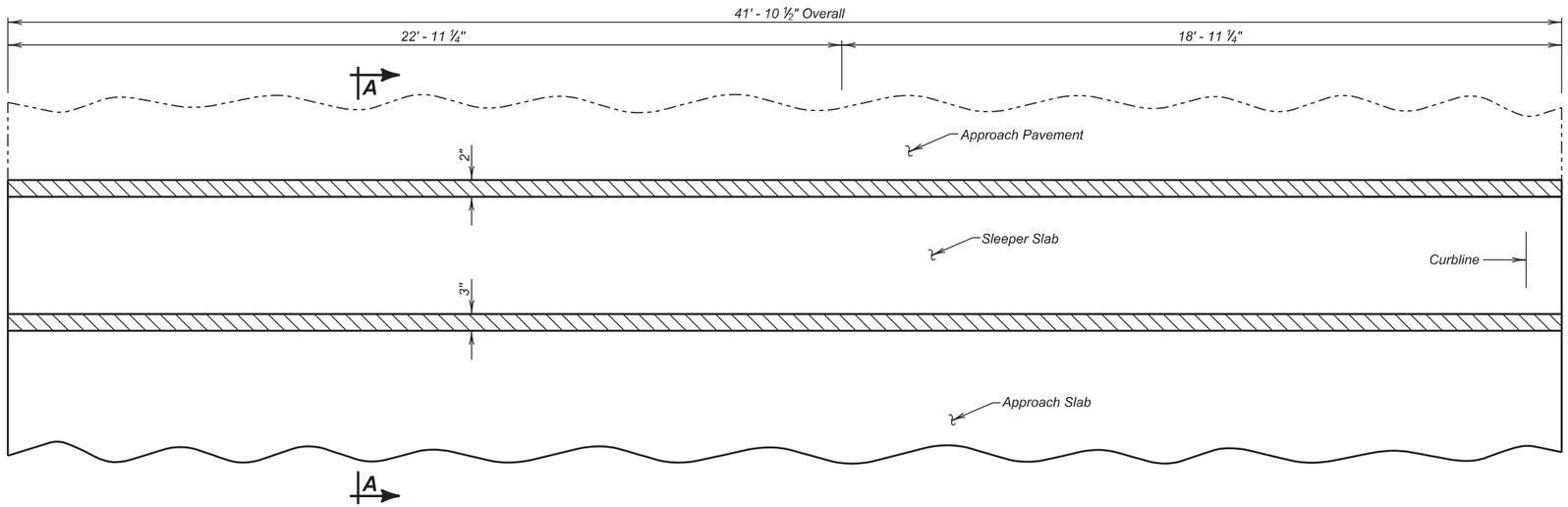


**PLAN**

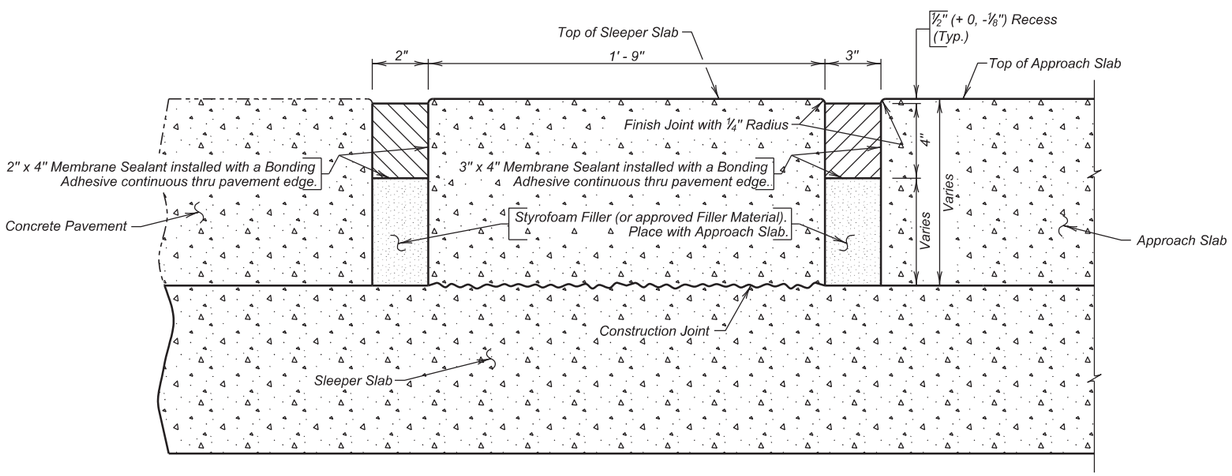


**SEC. A - A**

| ESTIMATED QUANTITIES | | | |
|---|---|---|---|
| ITEM | UNIT | QUANTITY | |
| | | Phase I | Phase 2 |
| Membrane Sealant Expansion Joint | Ft | 75.8 | 91.8 |
| | | | |

**(NORTH BOUND LANES)**
**APPROACH SLAB JOINT DETAILS**

FOR

126' - 0" CONTINUOUS CONCRETE BRIDGE

40' - 0" ROADWAY — 0 SKEW
OVER COUNTY ROAD — SEC. 15-T89N-R48W
STR. NO. 64-155-385 — IM-PH 0291(122)0

UNION COUNTY

S. D. DEPT. OF TRANSPORTATION

OCTOBER 2015

*Use this sheet in conjunction with Sheet Nos. 11 thru 13 of 24.*



| DESIGNED BY | CK. DES. BY | DRAFTED BY | |
|---|---|---|---|
| KSK | BD | KR | Kevin N. Goeden |
| UNIN02PT | 02PTRD14 | | BRIDGE ENGINEER |

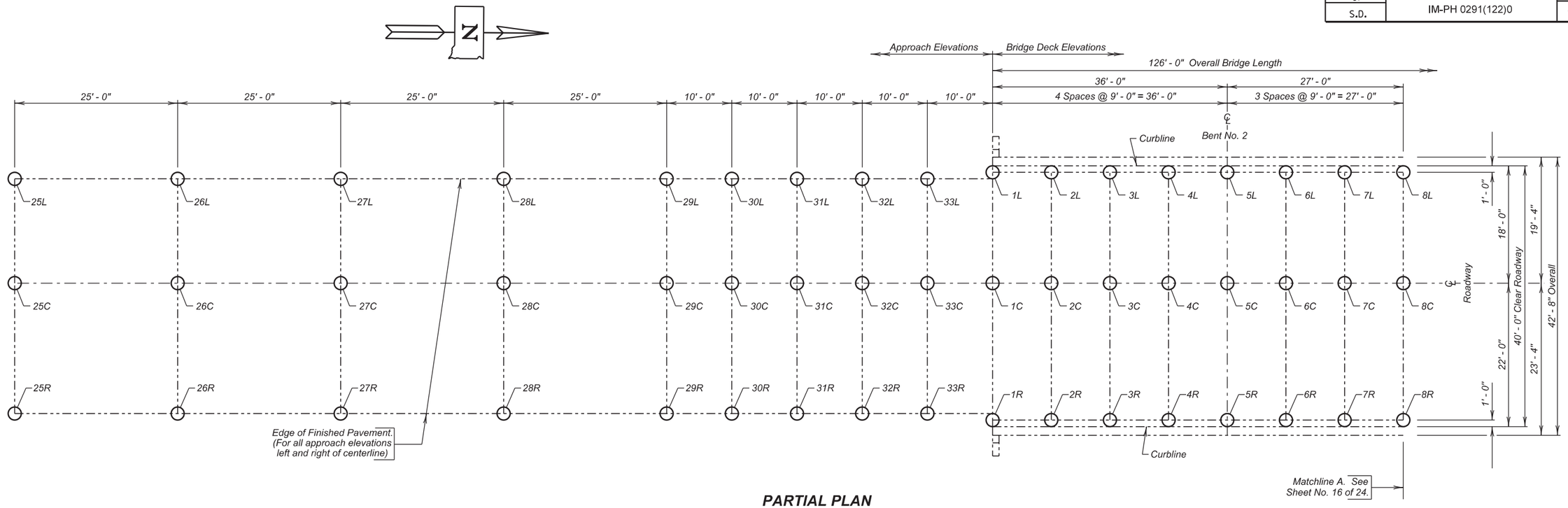


**PARTIAL PLAN**

| Table of Elevations - Bridge Deck | | | | | | | | | Table of Elevations - Approach Roadway | | | | | | | | |
|---|---|---|---|---|---|---|---|---|---|---|---|---|---|---|---|---|---|
| Location | Rod Reading | Elevation | Location | Rod Reading | Elevation | Location | Rod Reading | Elevation | Location | Rod Reading | Elevation | Location | Rod Reading | Elevation | Location | Rod Reading | Elevation |
| 1L | | | 1C | | | 1R | | | 25L | | | 25C | | | 25R | | |
| 2L | | | 2C | | | 2R | | | 26L | | | 26C | | | 26R | | |
| 3L | | | 3C | | | 3R | | | 27L | | | 27C | | | 27R | | |
| 4L | | | 4C | | | 4R | | | 28L | | | 28C | | | 28R | | |
| 5L | | | 5C | | | 5R | | | 29L | | | 29C | | | 29R | | |
| 6L | | | 6C | | | 6R | | | 30L | | | 30C | | | 30R | | |
| 7L | | | 7C | | | 7R | | | 31L | | | 31C | | | 31R | | |
| 8L | | | 8C | | | 8R | | | 32L | | | 32C | | | 32R | | |
| | | | | | | | | | 33L | | | 33C | | | 33R | | |

*NOTE :*
*The Contractor shall be responsible for producing the As - Built Elevation Survey soon after construction is complete and before the bridge is completely opened to traffic.*
***The As - Built Elevations of the overlay shall be based on the National Geodetic Survey North American Vertical Datum of 1988*** *and shall be taken and recorded at the locations shown by the table on this sheet. The completed table shall be given to the Engineer who will forward a copy to the Bridge Maintenance Engineer in the Office of Bridge Design and the Region Bridge Maintenance Engineer.*

***Benchmark Description:***
*Chiseled "X" on top of NE Wingwall*
*Elevation 1125.30*

**NORTH BOUND LANES**
**AS-BUILT ELEVATION SURVEY**
FOR
126' - 0" CONTINUOUS CONCRETE BRIDGE

40' - 0" ROADWAY — 0 SKEW
OVER COUNTY ROAD — SEC. 15-T89N-R48W
STR. NO. 64-155-385 — IM-PH 0291(122)0

UNION COUNTY
S. D. DEPT. OF TRANSPORTATION
OCTOBER 2015



| DESIGNED BY | CK. DES. BY | DRAFTED BY | |
|---|---|---|---|
| KSK | BD | KSK | Kevin N. Boeden |
| UNIN02PT | 02PTKD15 | | BRIDGE ENGINEER |

| STATE OF | PROJECT | SHEET NO. | TOTAL SHEETS |
|---|---|---|---|
| S.D. | IM-PH 0291(122)0 | 145 | 284 |

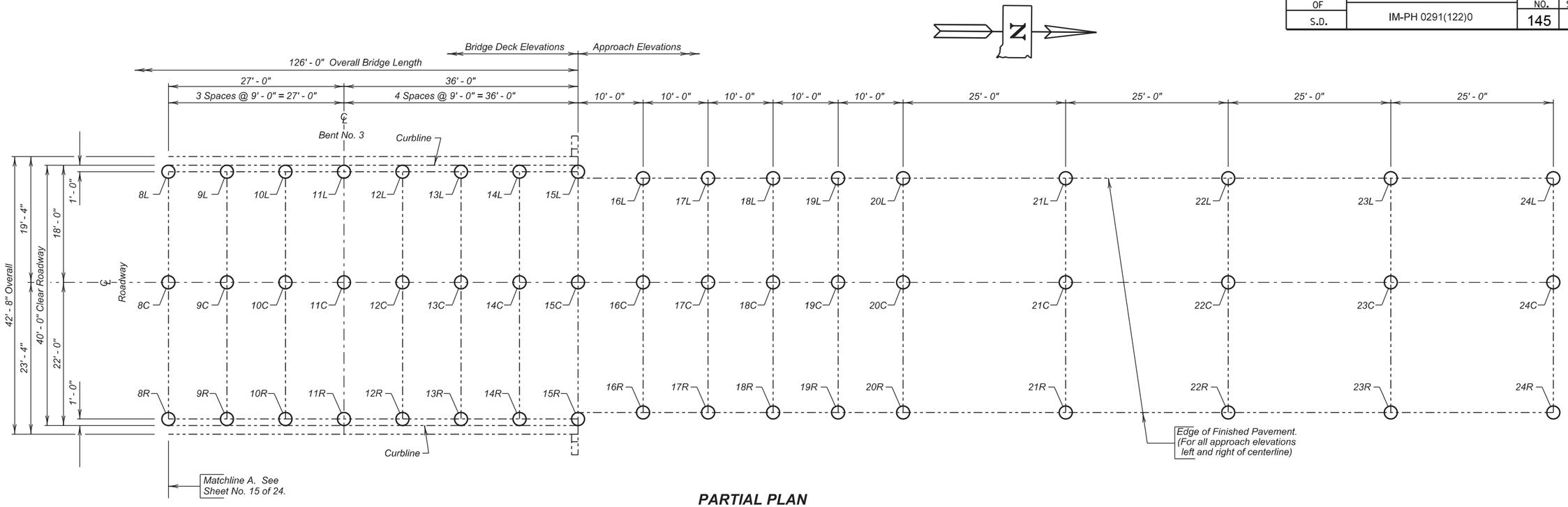


**PARTIAL PLAN**

| Table of Elevations - Bridge Deck | | | | | | | | | Table of Elevations - Approach Roadway | | | | | | | | |
|---|---|---|---|---|---|---|---|---|---|---|---|---|---|---|---|---|---|
| Location | Rod Reading | Elevation | Location | Rod Reading | Elevation | Location | Rod Reading | Elevation | Location | Rod Reading | Elevation | Location | Rod Reading | Elevation | Location | Rod Reading | Elevation |
| 8L | | | 8C | | | 8R | | | 16L | | | 16C | | | 16R | | |
| 9L | | | 9C | | | 9R | | | 17L | | | 17C | | | 17R | | |
| 10L | | | 10C | | | 10R | | | 18L | | | 18C | | | 18R | | |
| 11L | | | 11C | | | 11R | | | 19L | | | 19C | | | 19R | | |
| 12L | | | 12C | | | 12R | | | 20L | | | 20C | | | 20R | | |
| 13L | | | 13C | | | 13R | | | 21L | | | 21C | | | 21R | | |
| 14L | | | 14C | | | 14R | | | 22L | | | 22C | | | 22R | | |
| 15L | | | 15C | | | 15R | | | 23L | | | 23C | | | 23R | | |
| | | | | | | | | | 24L | | | 24C | | | 24R | | |

***Benchmark Description:***

*Chiseled "X" on top of NE Wingwall*
*Elevation 1125.30*

**NORTH BOUND LANES**
**AS-BUILT ELEVATION SURVEY (CONTINUED)**
FOR
126' - 0" CONTINUOUS CONCRETE BRIDGE

40' - 0" ROADWAY — 0 SKEW
OVER COUNTY ROAD — SEC. 15-T89N-R48W
STR. NO. 64-155-385 — IM-PH 0291(122)0

UNION COUNTY
S. D. DEPT. OF TRANSPORTATION
OCTOBER 2015



| DESIGNED BY | CK. DES. BY | DRAFTED BY | |
|---|---|---|---|
| KSK | BD | KSK | Kevin N. Goeden |
| UNIN02PT | 02PTKD16 | | BRIDGE ENGINEER |

**YEAR PLATE DETAILS FOR ORIGINAL CONSTRUCTION**

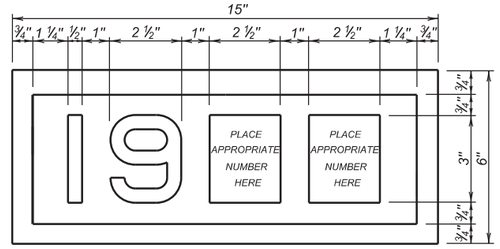


**YEAR PLATE DETAILS FOR NEW CONSTRUCTION**

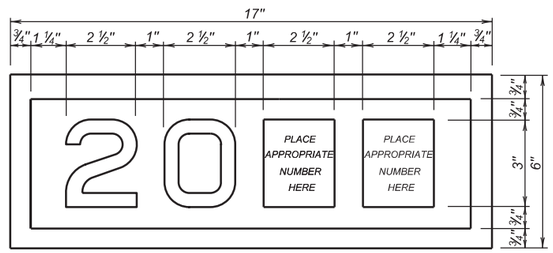


## GENERAL NOTES:

1. Year plates of the general dimensions shown shall be constructed on all box culverts and bridges. The year plates shall be constructed in reverse and attached to the forms in such a manner that the finished imprint in the concrete does not exceed one-half (½) inch in depth.
2. Year plates shall be located on structure(s) as follows:
   a. On cast-in-place box culverts the year plates shall be four and one - half (4 ½) inches below the top of the upstream parapet wall and centered laterally on the upstream face. On precast box culverts the year plate shall be centered laterally on the upstream face of the top slab. Where an extended interior wall interferes with this location, the year plate shall be centered in an adjacent barrel.
   b. On bridges with six (6) inch curbs or "Jersey" shaped barriers with no endblocks, the year plate shall be centered vertically on the curb face approximately six (6) inches from the end of the bridge, or as designated by the Engineer. On bridges with "Jersey" shaped barrier endblocks, the year plate shall be centered on the upper sloped portion of the barrier approximately 5'- 6" from the end of the bridge, or as designated by the Engineer. There shall be one year plate at each end of the bridge on opposite sides.
   c. When the plans specify that both the original date of construction and the date of reconstruction are to be shown, one date shall be placed as listed above and the other located adjacent to it. Both year plates shall be shown at each end of the bridge on opposite sides.
3. There will be no separate measurement or payment made for year plates on box culverts and bridges. All costs for this work shall be incidental to other contract items.

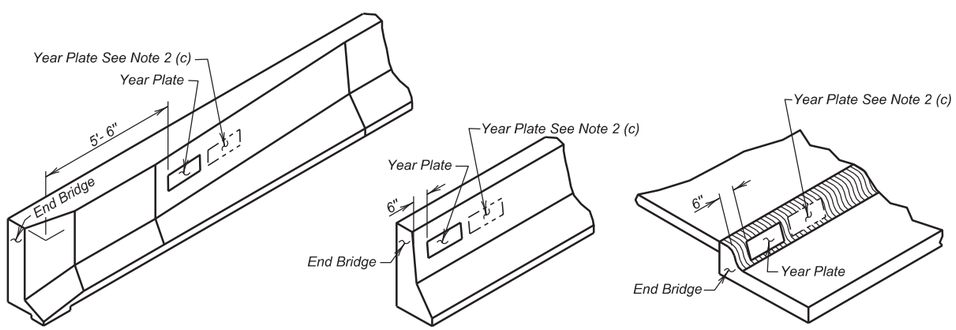


**JERSEY BARRIER** (With Endblock) **JERSEY BARRIER** **TYPE B CURB**

June 26, 2012

| Published Date: 4th Qtr. 2015 | SDDOT | DUAL DATE YEAR PLATE DETAILS | PLATE NUMBER 460.03 Sheet 1 of 1 |
|---|---|---|---|

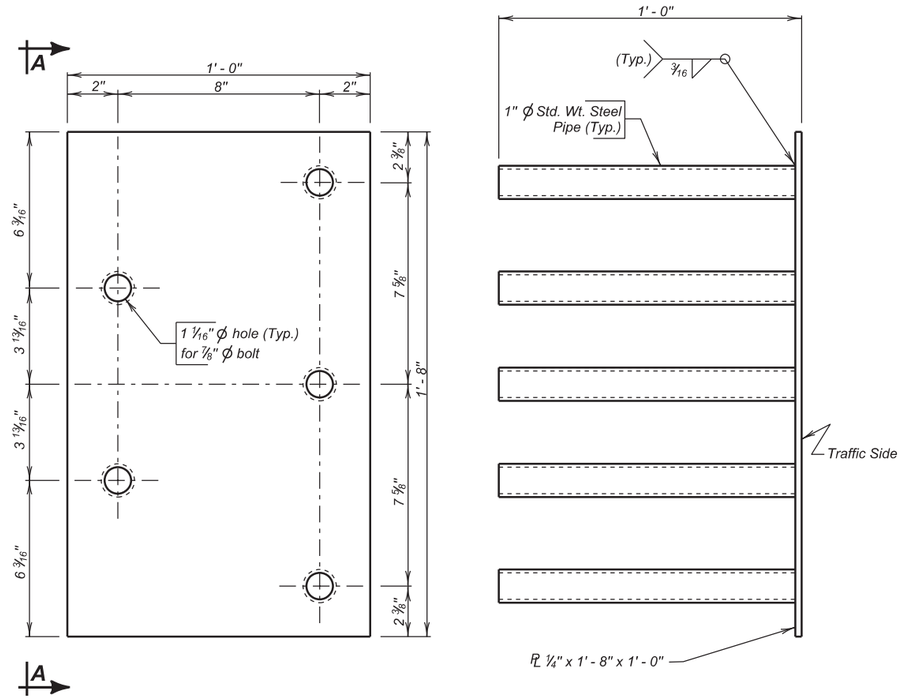


**ELEVATION** **VIEW A - A**

## GENERAL NOTES:

1. Steel plate for the insert assembly shall conform to ASTM A709 Grade 36. The steel pipes shall conform to ASTM A53 or ASTM A500 Grade B.
2. Welding and weld inspection shall be in conformance with AWS D1.1 - (Current Year) Structural Welding Code - Steel.
3. After fabrication, galvanize in accordance with AASHTO M111 (ASTM A123).
4. Bolts, nuts, and washers shall be provided with each assembly. Bolts shall be galvanized and conform to the requirements of ASTM A307, A325, or A449. Plain washers shall be galvanized and conform to ASTM F844.
5. Bolt heads shall be placed on the traffic side of the endblock. Bolt projection at the back side of the insert shall not exceed 1 inch beyond the nut.
6. The cost of the 5 bolt insert plate assembly complete in place including welding and galvanizing shall be incidental to the contract unit price per Cubic Yard for " Class A45 Concrete, Miscellaneous ", " Class A45 Concrete, Bridge Deck ", or " Class A45 Concrete, Bridge Repair ", as applicable.

December 23, 2013

| Published Date: 4th Qtr. 2015 | SDDOT | 5 BOLT INSERT PLATE ASSEMBLY | PLATE NUMBER 630.92 Sheet 1 of 1 |
|---|---|---|---|

| STATE OF | PROJECT | SHEET NO. | TOTAL SHEETS |
|---|---|---|---|
| S.D. | IM-PH 0291(12)10 | 147 | 284 |

B.M. #1 Elev. 1106.64
I.P. in Pipe
280' Lt. Sta. 898+64

## NOTE —

T.S. at C. El. = Top of Slab Elevation at Curb
T.S. at ℄ El. = Top of Slab Elevation at Centerline.

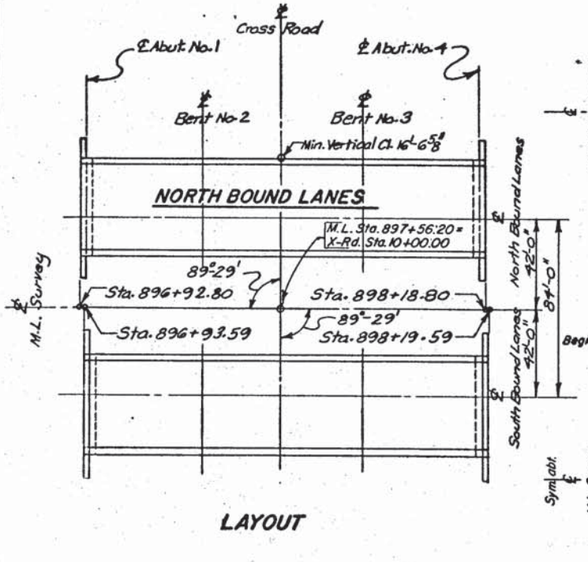


## LAYOUT

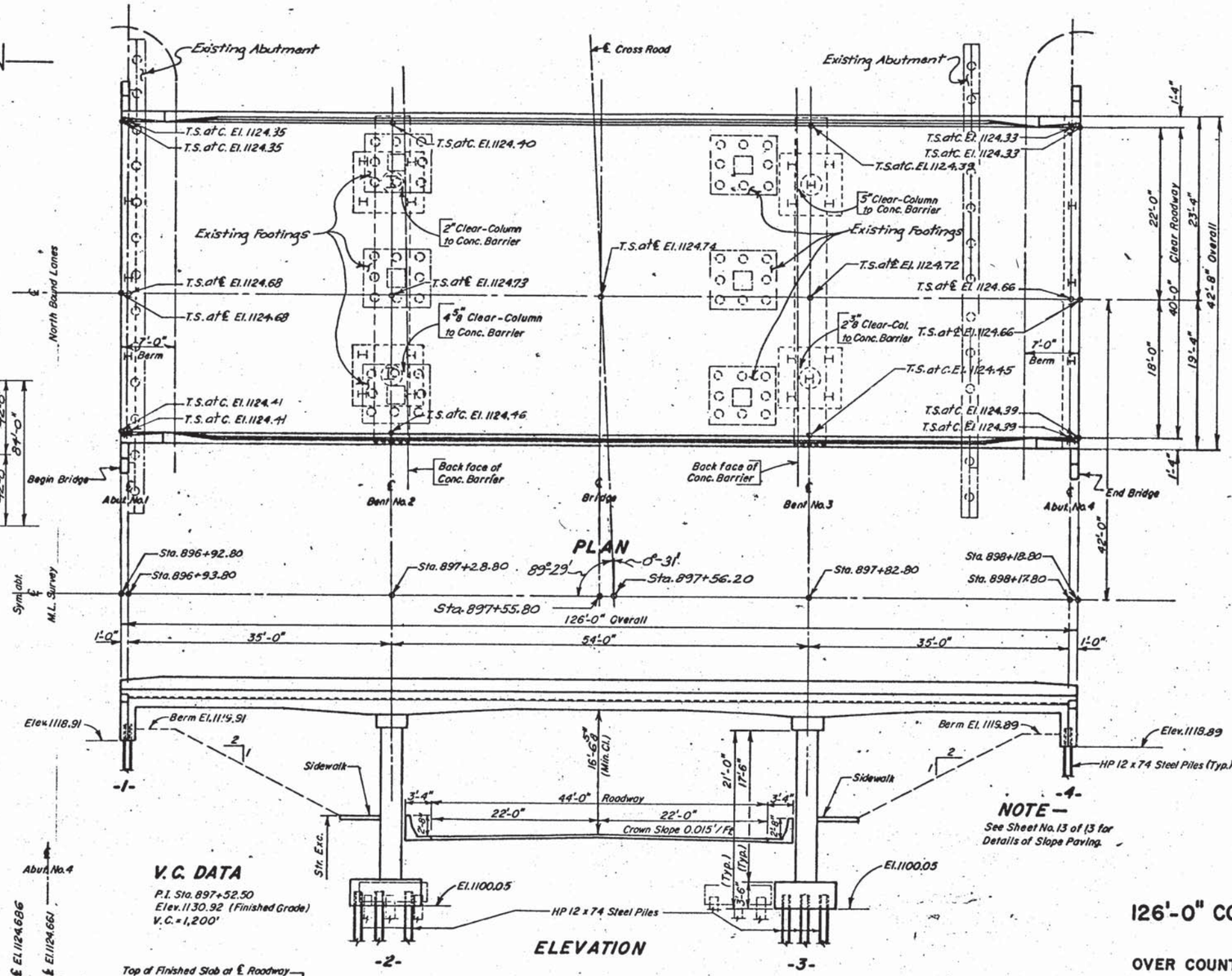


## PLAN




## ELEVATION

## NOTE —

See Sheet No. 13 of 13 for Details of Slope Paving.

## V.C. DATA

P.I. Sta. 897+52.50
Elev. 1130.92 (Finished Grade)
V.C. = 1,200'

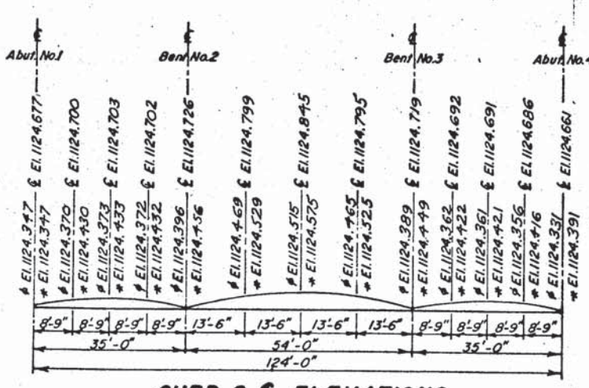


## CURB & ℄ ELEVATIONS

Elevations indicated with * are top of Finished Slab at 16'-0" Curb, with ℄ are top of Finished Slab at ℄ Roadway, with ♦ are top of Finished Slab at 22'-0" Curb. Camber for Dead Load Deflection PLUS Plastic Flow, shown on Sheet No. 4 of 13 of Bridge Plans, have been included in the elevations shown above.

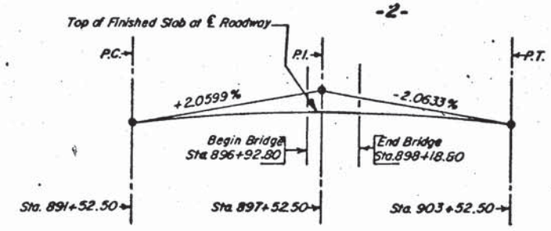


.0206

## VERTICAL CURVE DATA (INTERSTATE 1-29)

## INDEX OF BRIDGE SHEETS —

-X220-


Sheet No. 1 - General Drawing & Layout
Sheet No. 2 - Estimate of Structure Quantities & Notes
Sheet No. 3 - Subsurface Investigations
Sheet No. 4 - Details of Abut. No. 1
Sheet No. 5 - Details of Abut. No. 4
Sheet No. 6 - Bent No. 2 Details
Sheet No. 7 - Bent No. 3 Details
Sheet No. 8 - Superstructure Details
Sheet No. 9 - End Block and Barrier Details
Sheet No. 10 - Details of Bridge End Backfill
Sheet No. 11 - Standard Plate No. 302 and 308.
Sheet No. 12 - Standard Plate No. 305.
Sheet No. 13 - Details for Slope Paving


(NORTH BOUND LANES)
GENERAL DRAWING & LAYOUT
FOR

# 126'-0" CONTINUOUS CONCRETE BRIDGE

40'-0" ROADWAY
OVER COUNTY ROAD SEC. 15 - T89N - R48W
STA. 896+92.80 TO STA. 898+18.80 I-29-1(36)2
STR. NO. 64-155-385 HS 20-44 (& ALT.)
UNION COUNTY

S. D. DEPT. OF TRANSPORTATION
DIVISION OF HIGHWAYS
OCTOBER 1979

18 OF 24

SHEET 82 OF 135 SHEETS

ORIGINAL CONSTRUCTION PLANS

PLANS BY:
BRIDGE PROGRAM S.DAK. DEPT. OF HWYS.

-X220-

| DESIGNED BY | DRAWN BY | CHECKED BY | APPROVED |
|---|---|---|---|
| | F.E.K. | W.C.P. | R.C. Wilson BRIDGE ENGINEER |

# ORIGINAL CONSTRUCTION PLANS

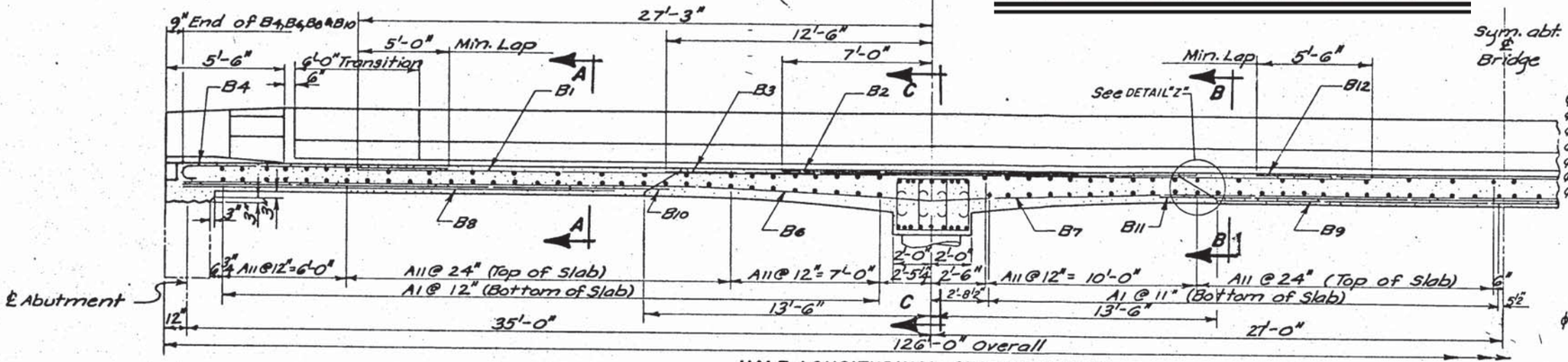


HALF LONGITUDINAL SECTIONAL VIEW

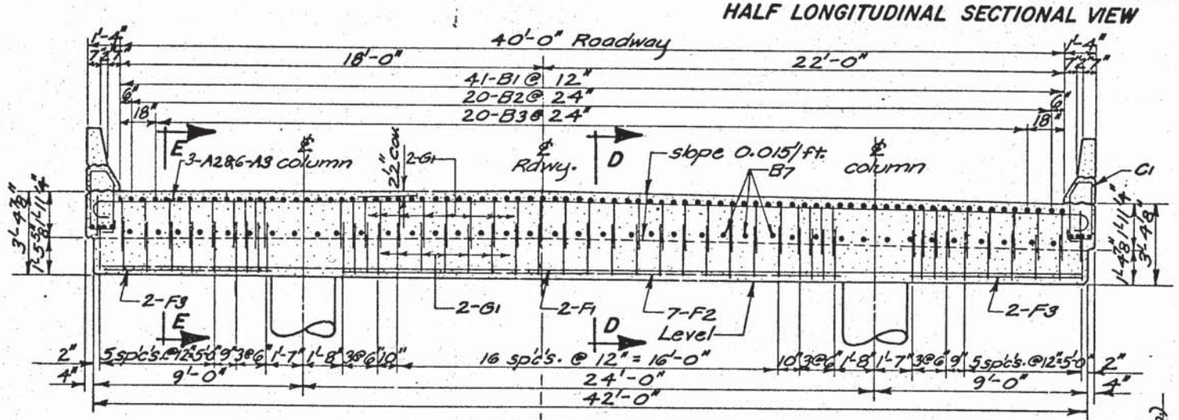


SEC. C-C

NOTE: All Barrier Curb Details shown on sheet No. 6 of 13.

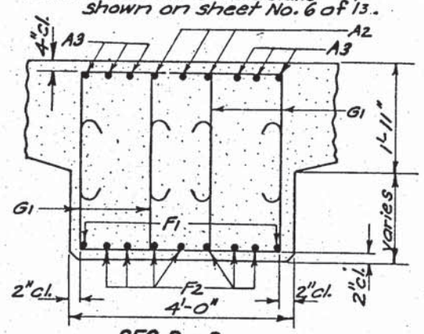


SEC. D-D

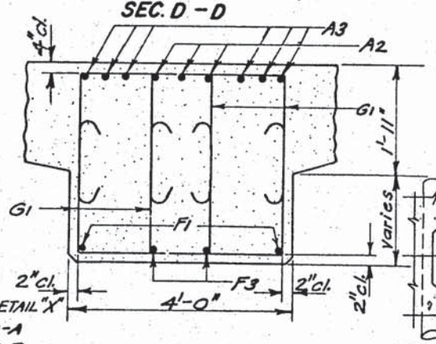


SEC. E-E

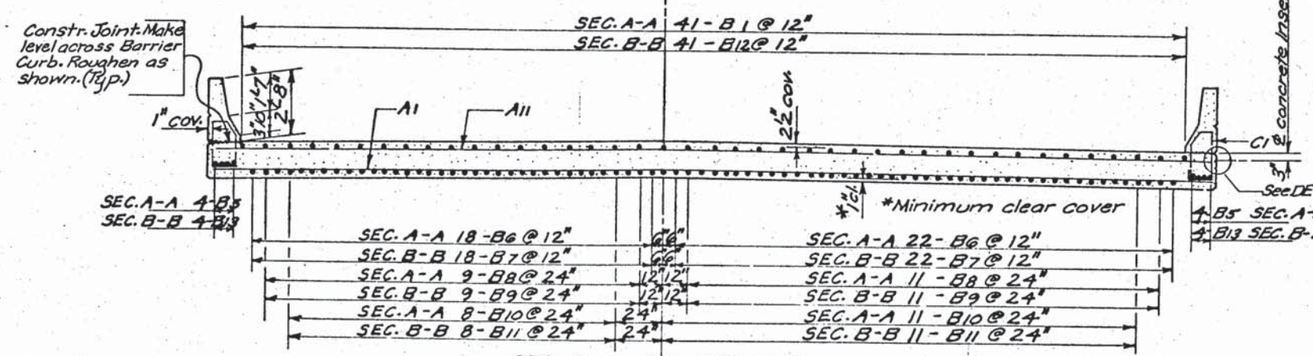


SEC. A-A OR SEC. B-B

DETAIL "X"

See Sheet No. 39 of 135 for Location and spacing of Inserts for bolting one hole Steel Pipe Straps.

## REINFORCING SCHEDULE

| MK. | No. | Size | Length | Type |
|---|---|---|---|---|
| A1 | 118 | 5 | 42'-4" | Str. |
| A11 | 82 | 5 | 42'-4" | Str. |
| A2 | 6 | 10 | 45'-2" | 1 |
| A3 | 12 | 11 | 45'-6" | 1 |
| B1 | 82 | 10 | 48'-0" | Str. |
| B2 | 40 | 10 | 14'-0" | Str. |
| B3 | 40 | 10 | 29'-6" | Str. |
| B4 | 82 | 9 | 14'-4" | 1A |
| B5 | 16 | 5 | 35'-9" | Str. |
| B6 | 80 | 9 | 35'-3" | |
| B7 | 40 | 10 | 54'-0" | |
| B8 | 40 | 8 | 20'-6" | |
| B9 | 20 | 10 | 27'-0" | |
| B10 | 38 | 8 | 23'-0" | |
| B11 | 19 | 9 | 34'-0" | |
| B12 | 41 | 10 | 23'-6" | |
| B13 | 8 | 5 | 54'-0" | |
| B14 | 36 | 5 | 35'-6" | |
| B15 | 12 | 5 | 14'-3" | |
| B16 | 8 | 4 | 32'-3" | Str. |
| B17 | 8 | 4 | 7'-7" | 19A |
| B18 | 8 | 4 | 2'-6" | Str. |
| B19 | 12 | 8 | 8'-1" | 19B |
| B20 | 16 | 4 | 32'-3" | Str. |
| B21 | 12 | 6 | 3'-8" | 17A |
| B22 | 12 | 5 | 2'-3" | Str. |
| C1 | 234 | | 7'-0" | T2A |
| C2 | 206 | | 5'-1" | S11 |
| C3 | 4 | | 6'-7" | T1 |
| C4 | 4 | | 6'-10" | T1 |
| C5 | 12 | | 7'-1" | T1 |
| C6 | 4 | | 7'-4" | T1 |
| C7 | 4 | | 7'-7" | T1 |
| C8 | 4 | 5 | 7'-9" | T1 |
| C9 | 4 | 6 | 6'-11" | T7 |
| C10 | 4 | 6 | 5'-3" | 17 |
| C11 | 4 | 6 | 5'-2" | 17 |
| C12 | 4 | 6 | 4'-11" | 17 |
| C13 | 4 | 5 | 5'-5" | 17 |
| C14 | 4 | 5 | 5'-4" | 17 |
| C15 | 4 | 5 | 5'-1" | 17 |
| F1 | 4 | 10 | 41'-6" | Str. |
| F2 | 14 | 10 | 20'-9" | Str. |
| F3 | 8 | 10 | 7'-3" | Str. |
| G1 | 360 | 4 | 7'-7" | S3 |
| * Z1 | 16 | 7 | 4'-0" | Str. |
| * Z2 | 98 | 7 | 2'-0" | Str. |

Bending Details

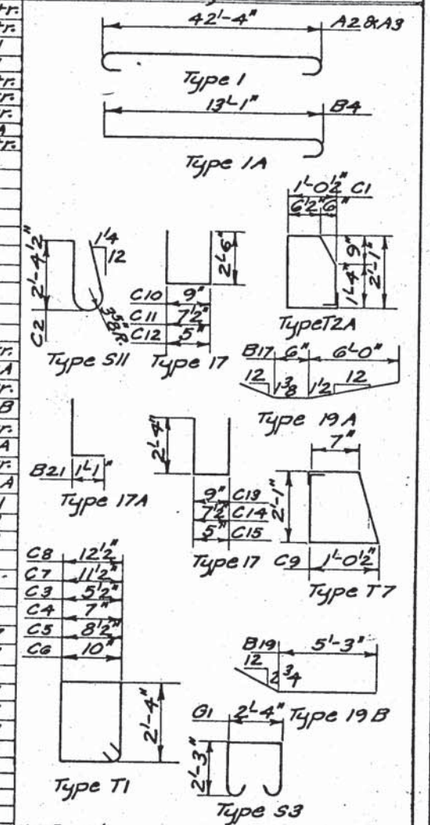


NOTE: All dimensions are out to out of bars.
*See Sheet No. 4 & 5 for location of Z1 bars.

## ESTIMATED QUANTITIES

| ITEM | UNIT | QUANTITY |
|---|---|---|
| Class "A" Concrete, Bridge Deck | Cu. Yd. | 342.4 |
| Reinforcement Conc. Masonry | Lbs. | 40,761 |
| Epoxy Coated Reinforcing Steel | Lbs. | 43,919 |

ϕ ALL A2, A3, A11, B1, B2, B3, B4, B12, C1, C9, C10, C11, C12 & G1 are to be Epoxy coated.

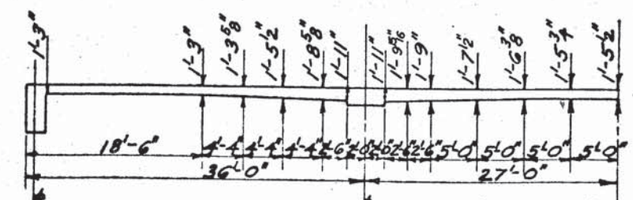


Δ SLAB THICKNESS DIAGRAM

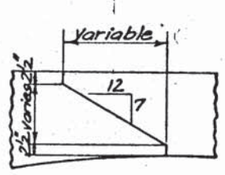


DETAIL "Z"
(Typical Construction Joint)

Δ For any longitudinal section parallel to ℄ Roadway.

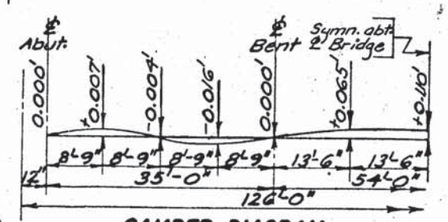


CAMBER DIAGRAM

Camber is calculated for dead load deflection plus plastic flow and shall be added to the proposed grade elevations at the respective stations to establish the elevations of the top of the finished roadway slab.

The 3/8" ϕ Concrete Inserts shall be interally threaded for use with a Standard Cap Screw and shall be of such design that when installed in the Concrete it will be capable of sustaining an ultimate load in tension of 2,500 pounds. The inserts shall be either galvanized or made of a corrosion resistant material. The cost of furnishing and installing the inserts shall be absorbed in the unit price bid for Reinforcing Steel.

(NORTH BOUND LANE)
SUPERSTRUCTURE DETAILS
FOR
# 126'-0" CONTINUOUS CONCRETE BRIDGE
40'-0" ROADWAY

OVER COUNTY ROAD — SEC. 15-T89N-R48W
STA. 896+92.80 TO 898+18.80 — I-29-1(36)2
STR. NO. 64-155-385 — HS20-44 (& ALT.)
UNION COUNTY

S.D. DEPT. OF TRANSPORTATION
DIVISION OF HIGHWAYS
OCTOBER 1979



| DESIGNED BY | DRAWN BY | CHECKED BY | APPROVED |
|---|---|---|---|
| | N.G.P. | L.M. | K.C. Wilson, BRIDGE ENGINEER |

| STATE OF | PROJECT | SHEET NO. | TOTAL SHEETS |
|---|---|---|---|
| S.D. | IM-PH 0291(12)210 | 149 | 284 |

CONSTRUCTION NOTE:
Sides of recess for Special End Shoe may be beveled a maximum of 1/2" in 3 1/2" to facilitate form removal

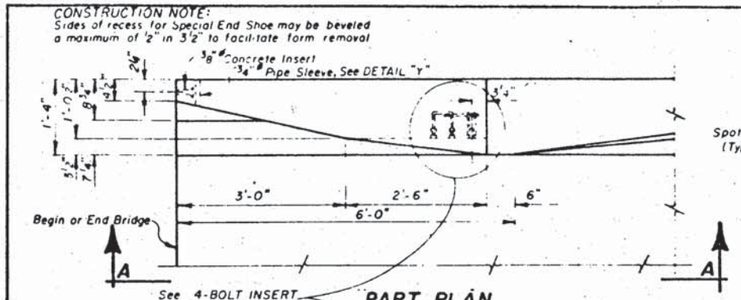


PART PLAN

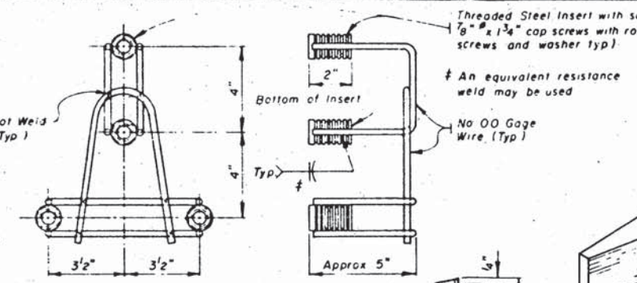


4 BOLT INSERT ASSEMBLY

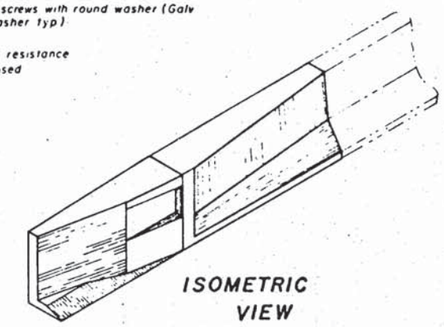

ISOMETRIC VIEW

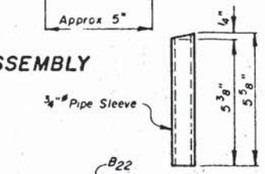


DETAIL "Y"

## GENERAL NOTES —

1. Use 1 1/2" Clear Cover on all bars except as shown
2. Reinforcing Steel shall conform to A.S.T.M - A615, Grade 60
3. End Blocks shall be built normal to grade
4. Wires for the 4-Bolt Insert Assembly are shown as the minimum allowable size designation being based on the United States Steel Wire Gage Standard All wire shall conform to A.S.T.M Specifications A-82 for Cold-drawn Steel Wire
5. The Cost of the 4-Bolt Insert Assembly complete in place, including welding and galvanizing, shall be absorbed in the unit price bid for "Class 'A' Concrete, Bridge Deck."
6. Cap Screws and Washers shall be furnished as a part of the 4-Bolt Insert Assembly and shall be galvanized to conform to A.S.T.M Specifications A-153.
7. 3/8"ϕ Concrete inserts shall be internally threaded for use with a standard machine bolt and shall be of such design that when installed in the concrete it will be capable of sustaining an ultimate load in tension of 2,500 pounds The inserts shall either be galvanized or made of a corrosion resistant material The cost of furnishing and installing the inserts shall be absorbed in the unit price bid for Reinforcing Steel
8. The 3/4"ϕ Pipe Sleeve shall be standard galvanized pipe conforming to A.S.T.M.- A53 Grade B, A120 or A500 Grade B. The cost of furnishing and installing pipe sleeves shall be absorbed in the unit price bid for "Class 'A' Concrete, Bridge Deck."

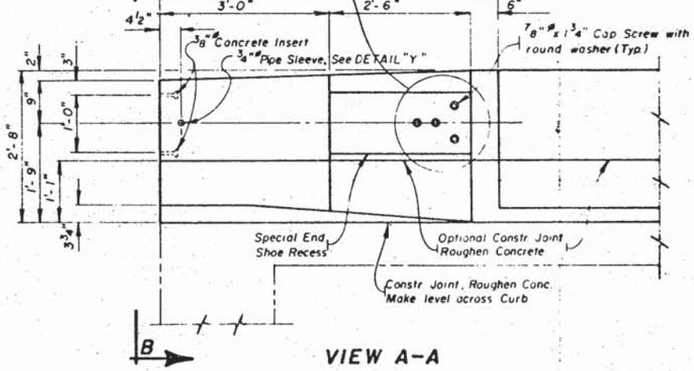


VIEW A-A

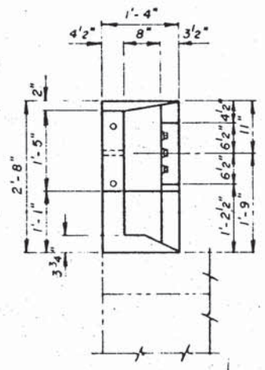

VIEW B-B

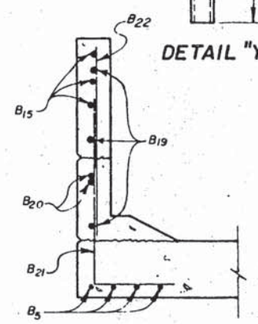

SEC. C-C

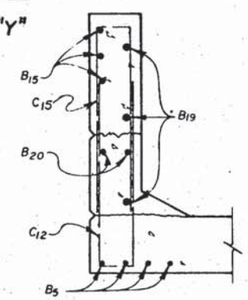

SEC. D-D

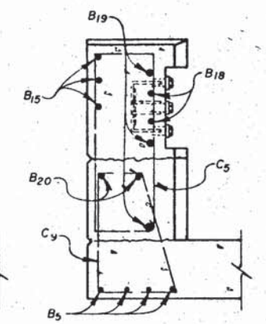

SEC. E-E

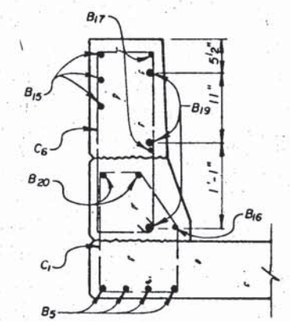

SEC. F-F

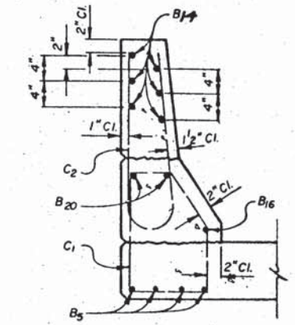

SEC. G-G

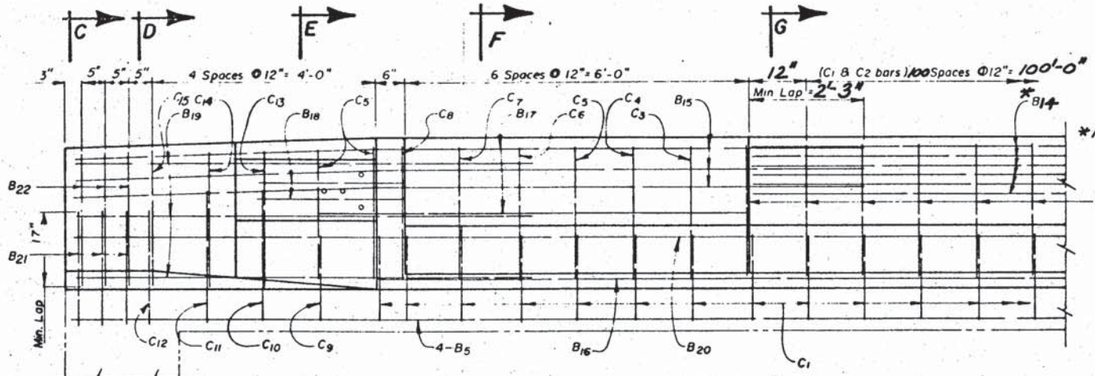


ELEVATION

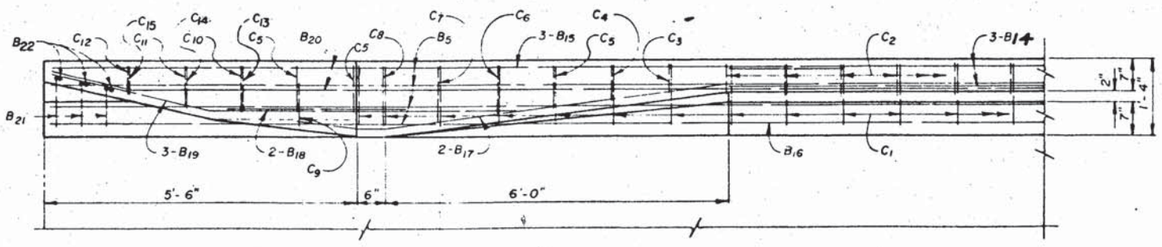

PLAN

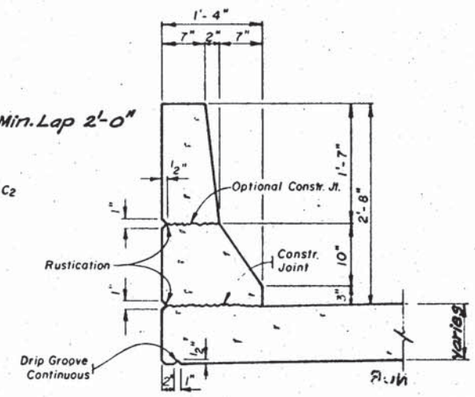


BARRIER DETAILS

NOTE.
For listing of re-bars See Reinforcing Schedule on Sheet No 4 of 13

ORIGINAL CONSTRUCTION PLANS

(NORTH BOUND LANE)
END BLOCK AND BARRIER DETAILS
FOR
**126'-0" CONTINUOUS CONCRETE BRIDGE**
40'-0" ROADWAY
OVER COUNTY ROAD SEC. 15-T89N-R48W
STA. 896+92.80 TO 898+18.80 I-29-1(36)2
STR. NO. 64-155-385 HS 20-44 (8 ALT.)
UNION COUNTY

S. D. DEPT. OF TRANSPORTATION
DIVISION OF HIGHWAYS
OCTOBER 1979 (20) OF (24)
SHEET 90 OF 135 SHEETS

| DESIGNED BY | DRAWN BY | CHECKED BY | APPROVED |
|---|---|---|---|
| | | | K.C. Wilson BRIDGE ENGINEER |

CONC BRIDGE a K-1

| STATE OF | PROJECT | SHEET NO. | TOTAL SHEETS |
|---|---|---|---|
| S.D. | IM-PH 029(122)0 | 150 | 284 |

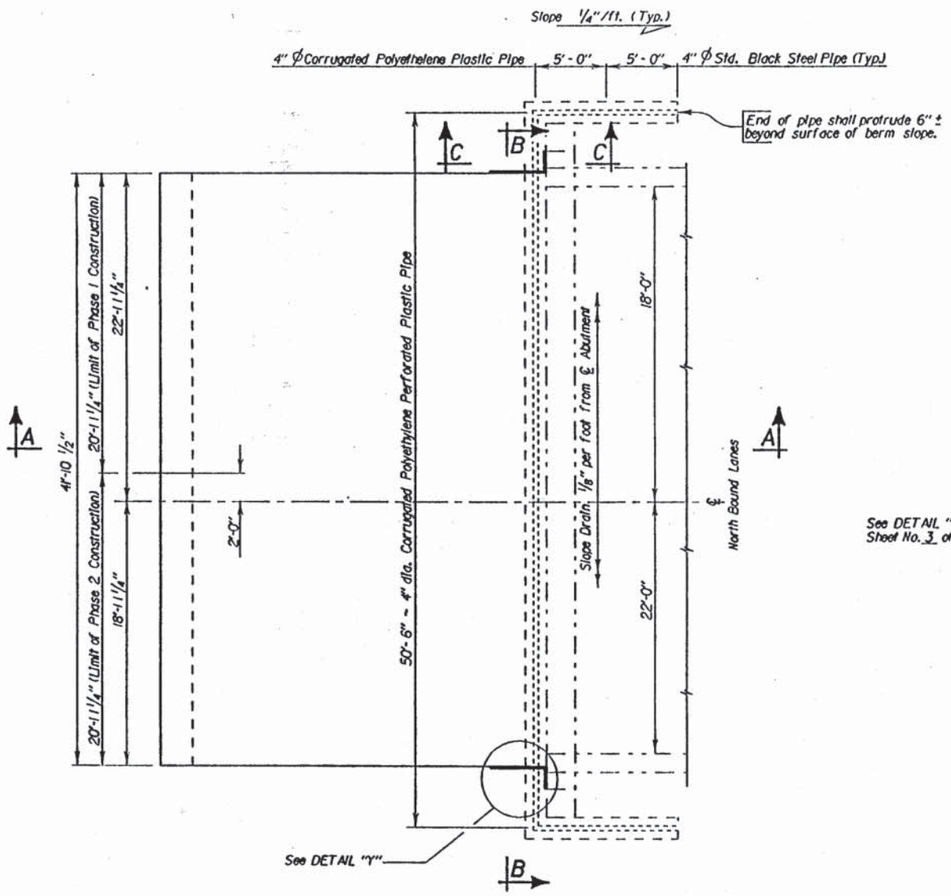


PLAN
(Shown adjacent to Abut. No. 1 Abut. No. 4 similar by opposite hand)

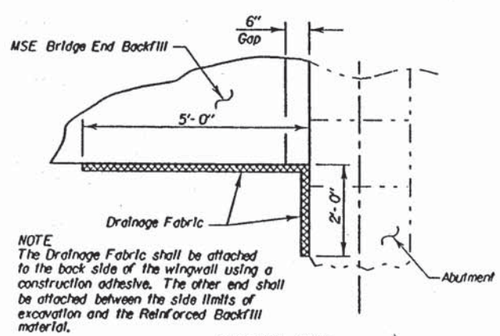


NOTE
The Drainage Fabric shall be attached to the back side of the wingwall using a construction adhesive. The other end shall be attached between the side limits of excavation and the Reinforced Backfill material.

DETAIL "Y"
(Typical all corners)

This sheet to be used in conjunction with Sheet No. 3 of 11.

* See Sheet No. 3 of 11 for SEC. A-A and SEC. C-C

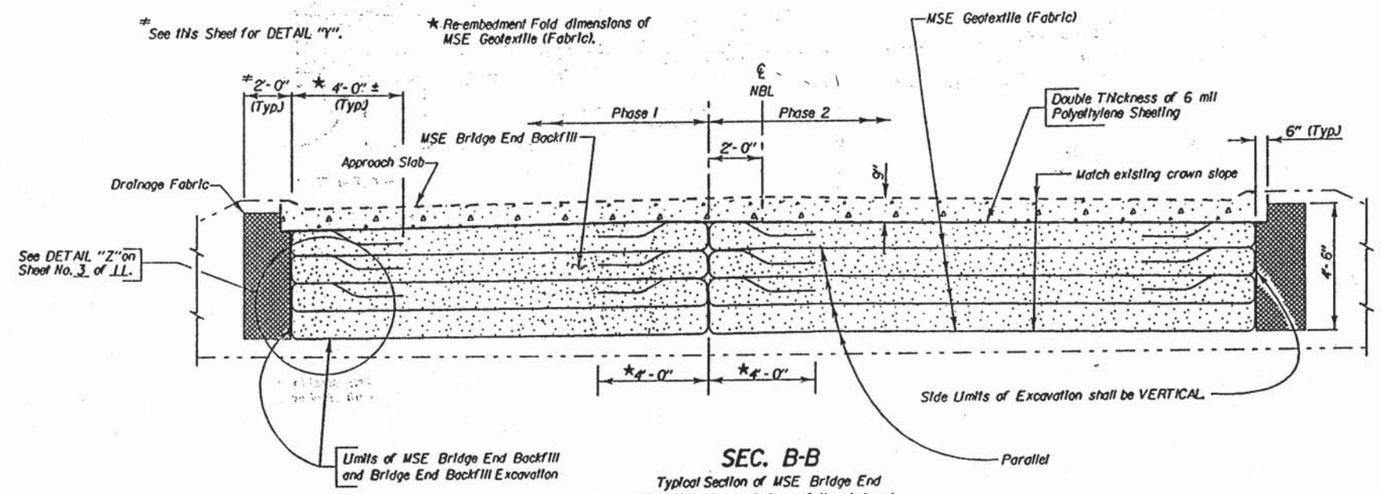


SEC. B-B
Typical Section of MSE Bridge End Backfill at the back face of the abutment

| ESTIMATED QUANTITIES (For Two Abutments) | | | |
|---|---|---|---|
| ITEM | UNIT | QUANTITY Phase I | QUANTITY Phase II |
| Bridge End Backfill Underdrain Pipe | L.F. | 70.5 | 70.5 |
| ⁂ Bridge End Backfill Excavation | C.Y. | 140.6 | 140.6 |
| MSE Bridge End Backfill | C.Y. | 117.2 | 117.2 |
| Drainage Fabric | S.Y. | 7 | 7 |
| MSE Geotextile (Fabric) | S.Y. | 79.9 | 79.9 |

| | Phase 1 | Phase 2 | |
|---|---|---|---|
| 1. | 50.5 | 50.5 | L.F. 4" ϕ Corrugated Polyethylene Perforated Plastic Pipe for 2 Abutments |
| 2. | 10 | 10 | L.F. 4" ϕ Corrugated Polyethylene Plastic Pipe for 2 Abutments |
| 3. | 10 | 10 | L.F. 4" ϕ Standard Black Steel Pipe for 2 Abutments |
| 4. | 25.2 | 25.2 | S.Y. 6 mil Polyethylene Sheeting, not including laps. |

Items 1 thru 4 are approximate quantities contained in the above bid items and are for information only.

⁂ Bridge End Backfill Excavation will not be measured. Plans quantity payment will be full compensation for this item.

# ORIGINAL CONSTRUCTION PLANS

(NORTH BOUND LANES)
DETAILS OF MSE BRIDGE END BACKFILL
FOR
126'- 0" CONTINUOUS CONCRETE BRIDGE

40'-0" ROADWAY — SEC. 15-T89N-R48W
OVER COUNTY ROAD — 30° SKEW L. H. F.
STA. 896+93.59 TO 898+19.59 — IM 29-1(95)0
STR. NO. 64-155-385

UNION COUNTY
S. D. DEPT. OF TRANSPORTATION
AUGUST 1997



| DESIGNED BY | DRAWN BY | CHECKED BY | APPROVED |
|---|---|---|---|
| EJA | EJA | CJD | John C. Cole, BRIDGE ENGINEER |
| UNIN4252 | 4252PB02 | | |

| STATE OF | PROJECT | SHEET NO. | TOTAL SHEETS |
|---|---|---|---|
| S.D. | IM-PH 0291(122)0 | 151 | 284 |

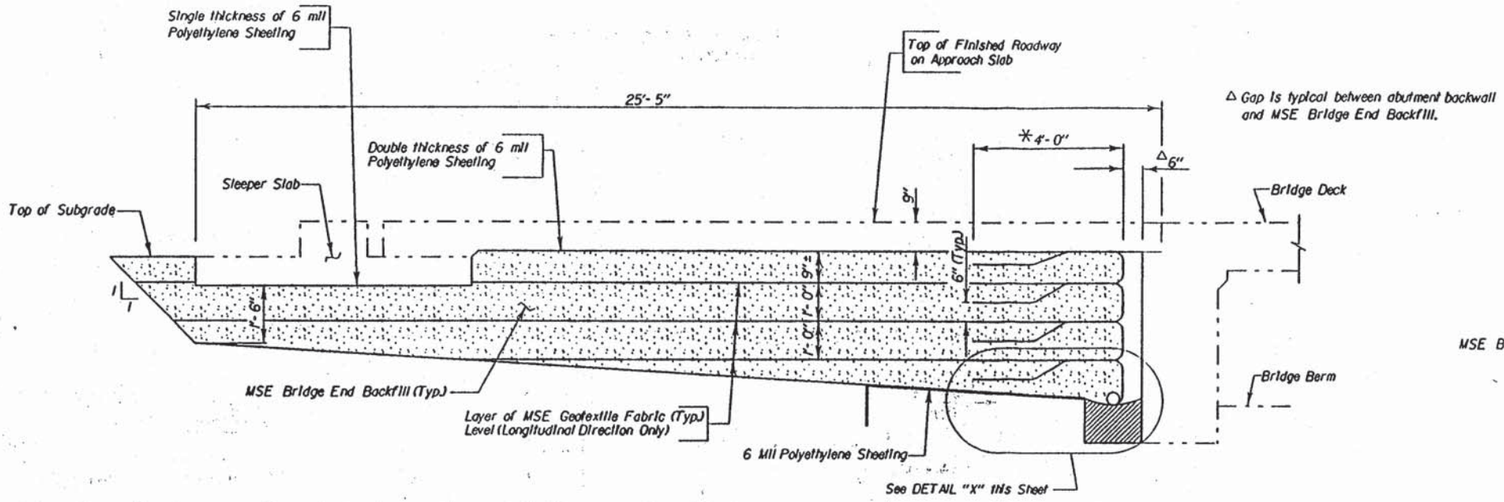


△ Gap is typical between abutment backwall and MSE Bridge End Backfill.

## SEC. A-A
(@ ℄ Roadway)

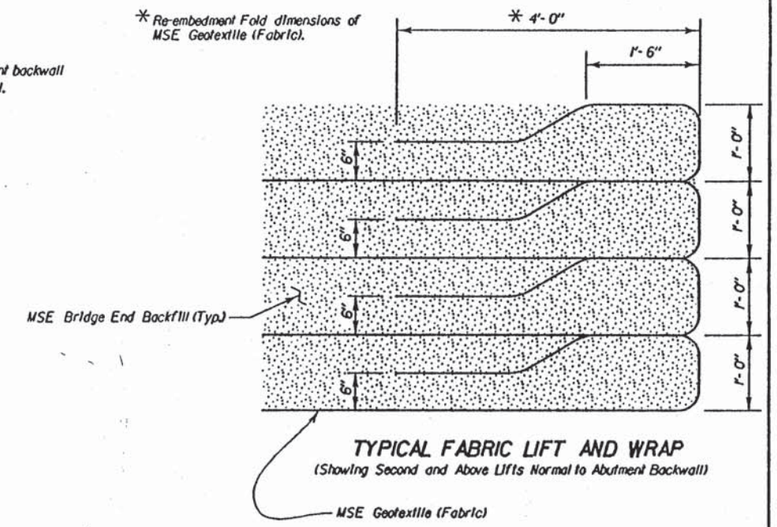


## TYPICAL FABRIC LIFT AND WRAP
(Showing Second and Above Lifts Normal to Abutment Backwall)

This sheet to be used in conjunction with Sheet No. 2 of 11.

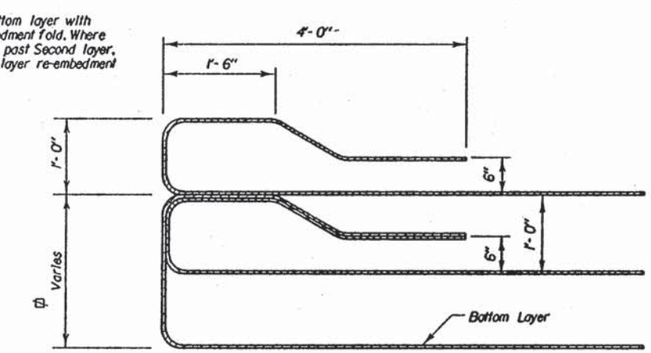


## DETAIL "Z"
(Fabric Wrap at Sides)

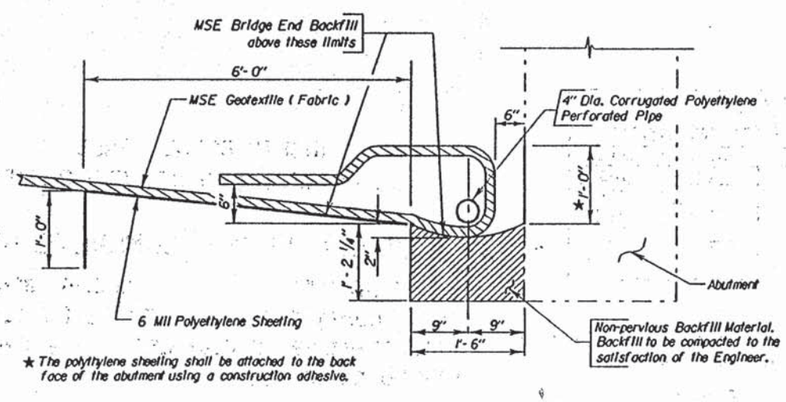


* The polyethylene sheeting shall be attached to the back face of the abutment using a construction adhesive.

## DETAIL "X"
(at Crown Point)

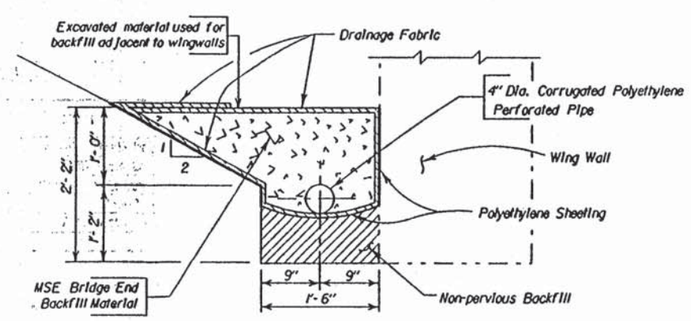


## SEC. C-C

(NORTH BOUND LANES)
DETAILS OF MSE BRIDGE END BACKFILL
FOR
126'- 0" CONTINUOUS CONCRETE BRIDGE

40'-0" ROADWAY — SEC. 15-T89N-R48W
OVER COUNTY ROAD
STA. 896+93.59 TO 898+19.59 — IM 29-1(95)0
STR. NO. 64-155-385

UNION COUNTY
S. D. DEPT. OF TRANSPORTATION
AUGUST 1997 — 22 OF 24

ORIGINAL CONSTRUCTION PLANS

| DESIGNED BY | DRAWN BY | CHECKED BY | APPROVED |
|---|---|---|---|
| EJA | EJA | CJD | John C. Cole |
| UNIN4252 | 4252PB03 | | BRIDGE ENGINEER |

| STATE OF | PROJECT | SHEET NO. | TOTAL SHEETS |
|---|---|---|---|
| S.D. | IM-PH 0291(12)210 | 152 | 284 |

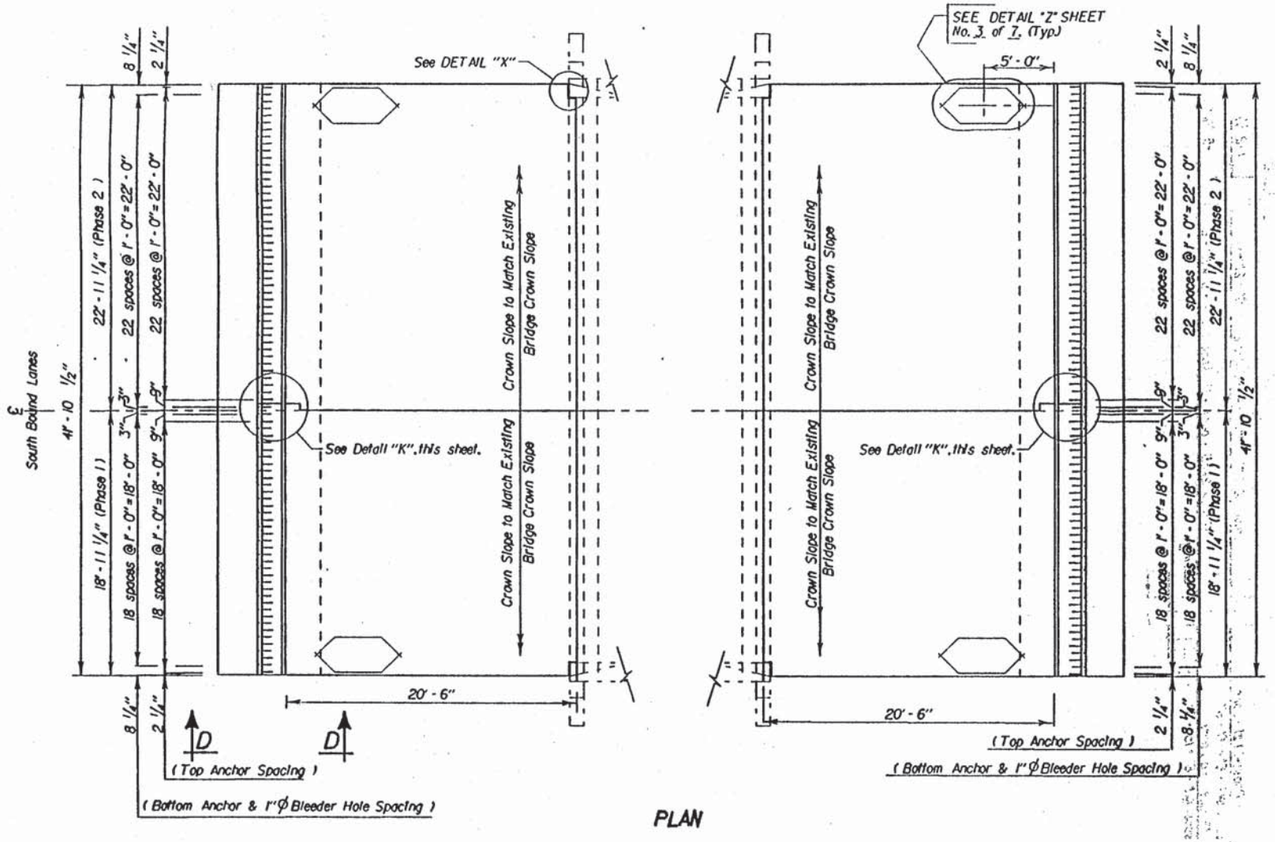


PLAN

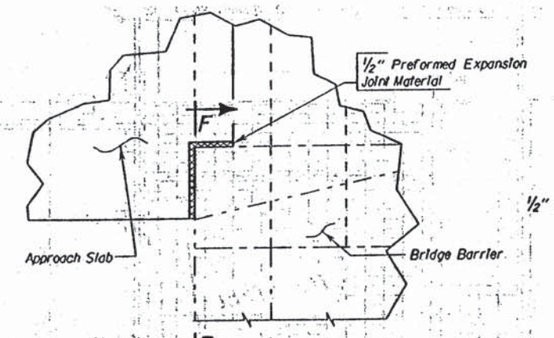


DETAIL "X"

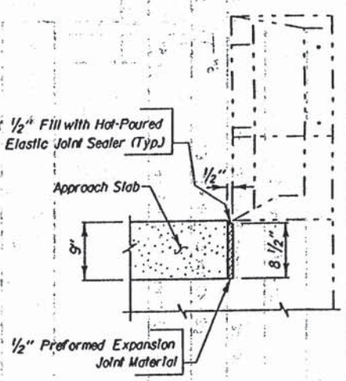


SEC. F - F

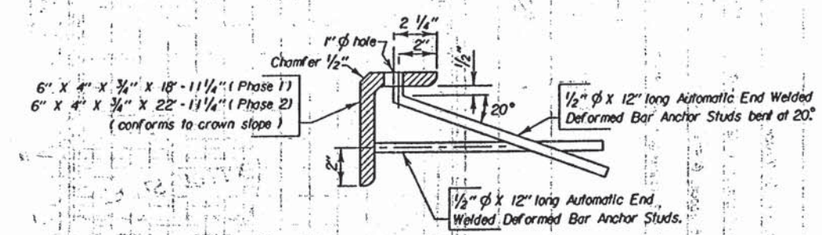


DETAIL "Y"

(See Sheet Nos. 3 and 4 of 7 for location of detail.)
(See Notes Regarding Armor Angle Assembly, Sheet No. 23 of 259.)

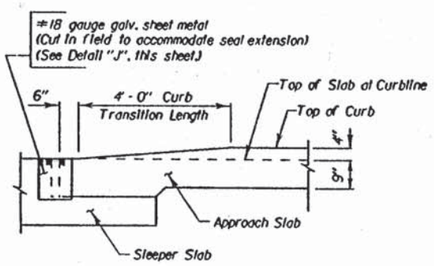


VIEW D - D

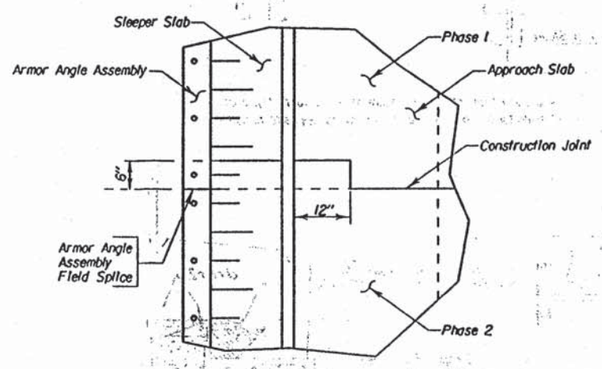


DETAIL "K"

THE CONTRACTOR HAS THE OPTION OF BUILDING THE APPROACH SLABS FOR THE FULL WIDTH OF THE ROADWAY AT ONE TIME OR BUILDING THE APPROACH SLABS IN TWO PHASES USING THE PLAN SHOWN OPTIONAL COSTRUCTION JOINT. ALL REFERENCES TO PHASE 1 AND PHASE 2 CONSTRUCTION ARE GIVEN IN THE EVENT THE CONTRACTOR ELECTS TO BUILD THE APPROACH SLABS IN TWO PHASES.

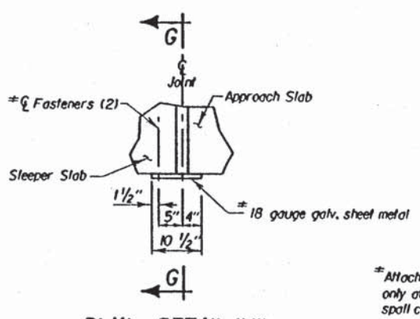


PLAN - DETAIL "J"

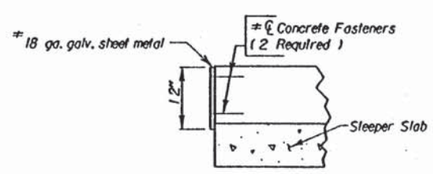


SEC. G - G

#Attach 18 ga. galv. Sheet Metal to both ends of Sleeper Slab only after slab has been poured. Use fasteners that will not spall concrete, as approved by the Engineer.

(NORTH BOUND LANES)
LAYOUT FOR UPGRADING
126'-0" CONTINUOUS CONCRETE BRIDGE
40'-0" ROADWAY
OVER COUNTY ROAD
STR. NO. 64-155-385
SEC. 15-T89N-R48W
IM 29-1(95) 0

UNION COUNTY
S. D. DEPT. OF TRANSPORTATION
JULY 1997



ORIGINAL CONSTRUCTION PLANS

| DESIGNED BY | DRAWN BY | CHECKED BY | APPROVED |
|---|---|---|---|
| EJA | GWP | CJD | John C. Cole, BRIDGE ENGINEER |
| UNIN4252 | 4252PB04 | | |

| STATE OF | PROJECT | SHEET NO. | TOTAL SHEETS |
|---|---|---|---|
| S.D. | IM-PH 0291(122)0 | 153 | 284 |

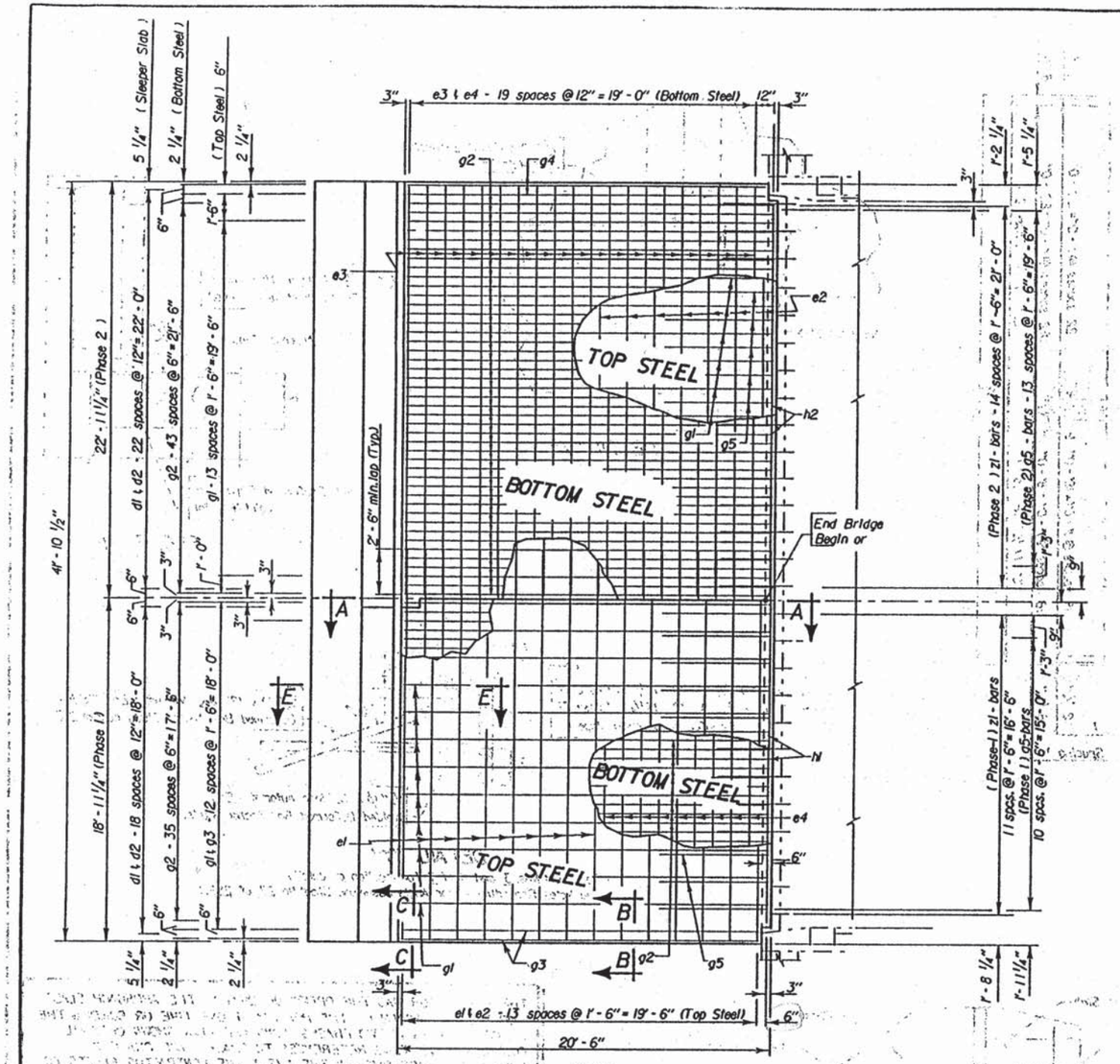


PLAN

(Approach Slab shown adjacent to Abut. No. 1. Approach slab adjacent to Abut. No. 4 similar by opposite hand.)

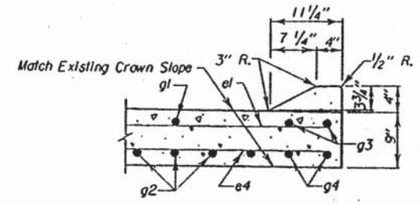


SEC. B - B

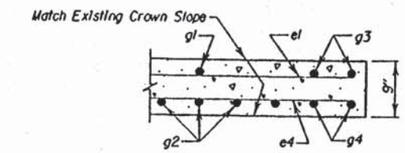


SEC. C - C

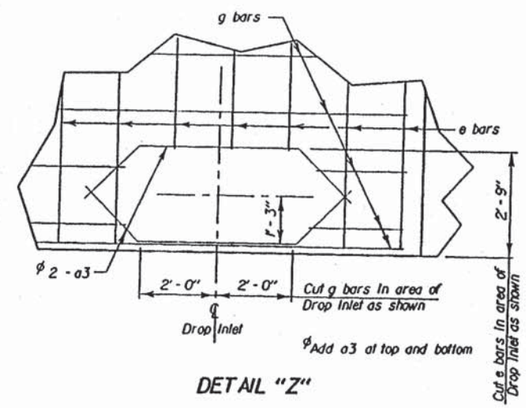


DETAIL "Z"

THE CONTRACTOR HAS THE OPTION OF BUILDING THE APPROACH SLABS FOR THE FULL WIDTH OF THE ROADWAY AT ONE TIME OR BUILDING THE APPROACH SLABS IN TWO PHASES USING THE PLAN SHOWN OPTIONAL COSTRUCTION JOINT. ALL REFERENCES TO PHASE 1 AND PHASE 2 CONSTRUCTION ARE GIVEN IN THE EVENT THE CONTRACTOR ELECTS TO BUILD THE APPROACH SLABS IN TWO PHASES.

## REINFORCING SCHEDULE
(For Two Approach and Sleeper Slabs)

| | Mk. | No. | Size | Length | Type |
|---|---|---|---|---|---|
| PHASE 1 | a3 | 4 | 4 | 7'-4" | 19a |
| | c1 | 48 | 5 | 21'-6" | Str. |
| | d1 | 76 | 4 | 7'-9" | 2 |
| | d2 | 38 | 4 | 6'-3" | T2 |
| | e1 | 28 | 4 | 21'-6" | Str. |
| | e4 | 40 | 6 | 21'-6" | Str. |
| | g1 | 24 | 4 | 20'-2" | Str. |
| | g2 | 72 | 8 | 20'-2" | Str. |
| | g3 | 4 | 4 | 19'-8" | Str. |
| | g4 | 4 | 8 | 19'-8" | Str. |
| | g5 | 24 | 4 | 6'-0" | Str. |
| | h1 | 4 | 6 | 20'-6" | Str. |
| | △z1 | 24 | 6 | 4'-0" | Str. |
| PHASE 2 | a3 | 4 | 4 | 7'-4" | 19a |
| | c2 | 48 | 5 | 22'-7" | Str. |
| | d1 | 92 | 4 | 7'-9" | 2 |
| | d2 | 46 | 4 | 6'-3" | T2 |
| | e2 | 28 | 4 | 22'-7" | Str. |
| | e3 | 40 | 6 | 22'-7" | Str. |
| | g1 | 30 | 4 | 20'-2" | Str. |
| | g2 | 88 | 8 | 20'-2" | Str. |
| | g3 | 4 | 4 | 19'-8" | Str. |
| | g4 | 4 | 8 | 19'-8" | Str. |
| | g5 | 30 | 4 | 6'-0" | Str. |
| | h2 | 4 | 6 | 21'-8" | Str. |
| | △z1 | 30 | 6 | 4'-0" | Str. |

Bending Details

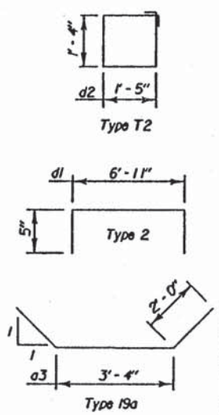


Note -
All Bars to be Epoxy Coated.
All Dimensions are out to out of bars.
△ Dowels

## ESTIMATED QUANTITIES
(For Two Approach and Sleeper Slabs)

| ITEM | UNIT | PHASE 1 QUANTITY | PHASE 2 QUANTITY |
|---|---|---|---|
| Conc. Approach Slab Adjacent to Bridge | S.Y. | 86 | 104.3 |
| Bridge Approach Sleeper Slab | S.Y. | 30.5 | 37.0 |
| Install Dowel in Concrete | Each | 24 | 30 |

| | PHASE 1 | PHASE 2 |
|---|---|---|
| 1. Concrete in Approach Slabs. | 22.1 Cu.Yds. | 26.8 Cu.Yds. |
| *2. Epoxy Coated Re-Steel in Approach Slabs. | 6396 lbs. | 7454 lbs. |
| 3. Concrete in Sleeper Slabs | 9.9 Cu.Yds. | 12.0 Cu.Yds. |
| 4. Epoxy Coated Re-Steel in Sleeper Slabs. | 1628 lbs. | 1799 lbs. |
| 5. Structural Steel in Armor Assembly. | 945 lbs. | 1144 lbs. |
| 6. Polyethylene Sheeting | 179 Sq.Yds. | 217 Sq.Yds. |

Items 1 thru 6 are approximate quantities contained in the above bid item and are for information only.

* Does not include the following quantities for z1 bars as these are paid for in the Bid Item "Install Dowel in Concrete".

| PHASE 1 | PHASE 2 |
|---|---|
| 144 lbs. | 180 lbs. |

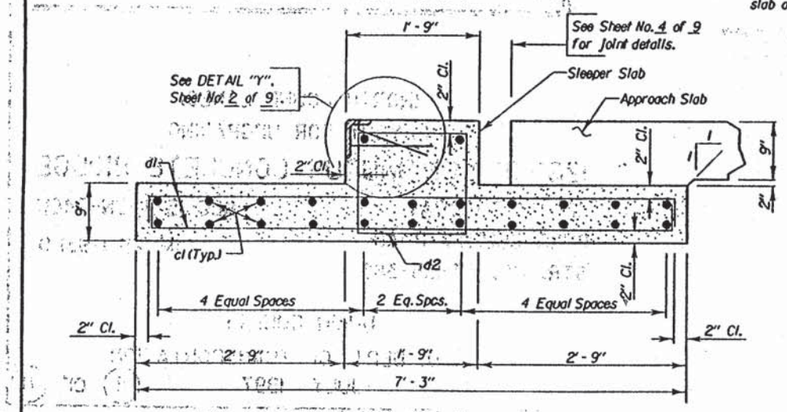


SEC. E - E
(Sleeper Slab)

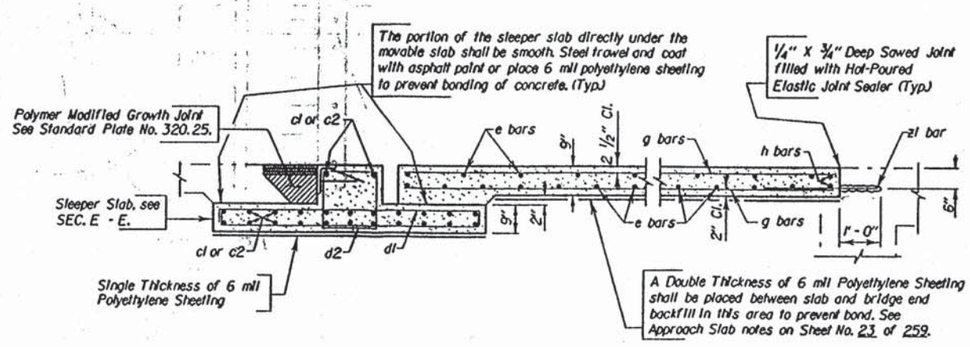


SEC. A - A

(NORTH BOUND LANES)
DETAILS OF APPROACH SLAB
ADJACENT TO BRIDGE FOR

# 126'-0" CONTINUOUS CONCRETE BRIDGE

40'-0" ROADWAY — SEC. 15-T89N-R48W
OVER COUNTY ROAD — IM 29-1(95) 0
STR. NO. 64-155-385

UNION COUNTY
S. D. DEPT. OF TRANSPORTATION
JULY 1997

24 OF 24

ORIGINAL CONSTRUCTION PLANS

| DESIGNED BY | DRAWN BY | CHECKED BY | APPROVED |
|---|---|---|---|
| EJA | GWP | CJD | John C. Cole, BRIDGE ENGINEER |
| UNIN4252 | 4252PB05 | | |

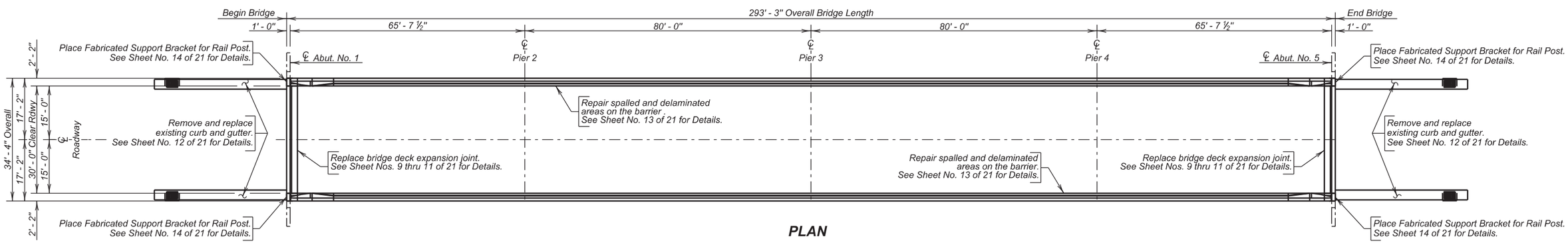


**PLAN**

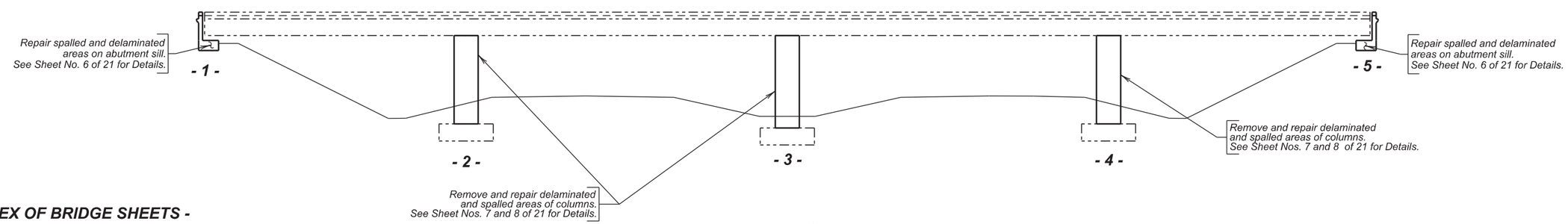


**ELEVATION**

## INDEX OF BRIDGE SHEETS -


Sheet No. 1 - Layout for Upgrading
Sheet No. 2 - Estimate of Structure Quantities and Notes
Sheet No. 3 - Notes (Continued)
Sheet No. 4 - Notes (Continued)
Sheet No. 5 - Notes (Continued)
Sheet No. 6 - Abutment No. 1 and Abutment No. 5 Repair Details
Sheet No. 7 - Column Repair Details
Sheet No. 8 - Column Repair Details (Continued)
Sheet No. 9 - Strip Seal Details
Sheet No. 10 - Strip Seal Details (Continued)
Sheet No. 11 - Strip Seal Details at Curb
Sheet No. 12 - Type D Reinforced Concrete Curb and Gutter Details
Sheet No. 13 - Barrier and Endblock Repair Details
Sheet No. 14 - Fabricated Support Bracket for Rail Post
Sheet No. 15 - Standard Plate No. 460.03
Sheet No. 16 - 21 - Original Construction Plans


**LAYOUT FOR UPGRADE**

FOR

293' - 3" BOX GIRDER BRIDGE

30' - 0" ROADWAY — 0° SKEW
OVER INTERSTATE 29 — SEC. 4-T89N-R48W
STR. NO. 64-149-367 — IM-PH 0291(122)0
PCN 02PT

UNION COUNTY

S. D. DEPT. OF TRANSPORTATION

OCTOBER 2015



PLANS BY :
OFFICE OF BRIDGE DESIGN, SOUTH DAKOTA DEPARTMENT OF TRANSPORTATION

| DESIGNED BY | CK. DES. BY | DRAFTED BY | |
|---|---|---|---|
| KSK | BD | KR | Kevin N. Goeden |
| UNIN02PT | 02PTRE01 | | BRIDGE ENGINEER |

## ESTIMATE OF STRUCTURE QUANTITIES

| ITEM NO. | DESCRIPTION | QUANTITY | UNIT |
|---|---|---|---|
| 110E0300 | Remove Concrete Curb and Gutter | 148 | Ft |
| 410E0030 | Structural Steel, Miscellaneous | LumpSum | LS |
| 410E2220 | Replace Expansion Device | 2 | Each |
| 460E0070 | Class A45 Concrete, Bridge Repair | 8.8 | CuYd |
| 460E0174 | Concrete Patching Material, Miscellaneous | 151.6 | CuFt |
| 460E0300 | Breakout Structural Concrete | 5.6 | CuYd |
| 460E0380 | Install Dowel in Concrete | 28 | Each |
| 460E8050 | Composite Fabric Wrap, Bridge Repair | 978.6 | SqFt |
| 480E0200 | Epoxy Coated Reinforcing Steel | 1126 | Lb |
| 480E5000 | Galvanic Anode | 59 | Each |
| | | | |

### SPECIFICATIONS

1. Design Specifications: AASHTO Standard Specifications for Highway Bridges 2002 17th Edition using Working Stress Design.

2. Construction Specifications: South Dakota Standard Specifications for Roads and Bridges, 2015 Edition and Required Provisions, Supplemental Specifications and Special Provisions as included in the Proposal.

3. All Welding and Welding Inspection shall be in conformance with the AASHTO/AWS Bridge Welding Code D1.5M/D1.5:2010 unless otherwise noted in the plan set.

### DETAILS AND DIMENSIONS OF EXISTING BRIDGE

All details and dimensions of the existing bridge contained in these plans are based on the original construction plans and shop plans and are provided as information only. It is the Contractor's responsibility to inspect and verify the actual field conditions and any necessary as-built dimensions affecting the satisfactory completion of the work required for this project.

### SHOP PLANS

Shop plans shall be required as specified by Section 410.3.A. of the Construction Specifications.

### SCOPE OF BRIDGE WORK & SEQUENCE OF OPERATIONS

All work on this structure shall be accomplished with the traffic control shown in the plans. Alternate sequence of operations may be submitted by the Contractor for approval by the Engineer two weeks prior to the pre-construction meeting.

1. Repair the abutment sills on Abutment No. 1 and Abutment No. 5.
2. Repair the columns at all three bents.
3. Breakout the bridge deck, barrier curb and joint at Abutment No. 1 & 5 for the first phase of construction
4. Place strip seal expansion devices at Abutments No. 1 and No. 5 for the first phase of construction.
5. Remove and replace the concrete curb and gutter at both ends of the bridge for the first phase of construction.
6. Repair the spalled and delaminated areas of the barrier for the first phase of construction.
7. Place an additional rail post on the abutment backwalls for the first phase of construction.
8. Switch traffic and repeat steps 3 through 7 for the second phase of construction.

### GENERAL CONSTRUCTION – BRIDGE

1. All mild reinforcing steel shall conform to ASTM A615, Grade 60.
2. Use 2" clear cover on all reinforcing steel except as shown otherwise.
3. All exposed concrete corners and edges shall be chamfered ¾" unless noted otherwise in the plans.
4. Surfaces of the fresh concrete at construction joints shall be rough floated sufficiently to consolidate the surface. All construction joints shall be cleaned of surface laitance, curing compounds and other foreign materials prior to placing fresh concrete against the joint.
5. Barrier curbs shall be built normal to the grade.
6. Request for construction joints or resteel splices other than those shown, must be submitted to the Engineer for prior approval. If additional splices are approved, no payment will be allowed for the added quantity of reinforcing steel.
7. Snap ties, if used in the barrier curb formwork, shall be epoxy coated. The epoxy coating shall be inert in concrete and compatible with the coating applied to the new epoxy coated reinforcing steel.
8. The concrete barriers shall be cured in accordance with Section 460.3 M. of the Construction Specifications except that no curing compounds shall be allowed.
9. The Contractor shall only imprint one year plate on the structure. The year plate shall contain the date the existing bridge was built and shall be located as specified and detailed on Standard Plate No. 460.03.

### DESIGN MIX OF CONCRETE

1. Class A45 Concrete shall be used for the bid item Replace Expansion Device and Class A45 Concrete, Bridge Repair.
2. The Type of cement, concrete strength requirements, aggregate requirements, slump and air requirements for the contract item Replace Expansion Device and Class A45 Concrete, Bridge Repair shall conform to the requirements of Section 460 of the Construction Specifications.

### REPLACE EXPANSION DEVICE

1. The end welded concrete anchors shall conform to Type A steel studs of Section 7 of the latest edition of the AWS D1.1 Structural Welding Code-Steel.
2. Material for the Steel Extrusion shall conform to ASTM A36, A242 or A588.
3. All steel components, steel plates, bars and structural shapes shall be galvanized after shop welding in accordance with ASTM A123.
4. Material for the Neoprene Strip shall conform to that specified in ASTM D2628 modified to omit the recovery test. No splices will be permitted in the Neoprene Strip. The Neoprene strip shall not be installed in phases.
5. The lubricant-adhesive used to install the neoprene seal shall conform to the requirements of ASTM D4070. The neoprene seal and the lubricant-adhesive should be supplied or recommended by the same source as they must be compatible.
6. The expansion joint, with the exception of the neoprene strip, will be installed one-half roadway width at a time while allowing for one-way traffic at all times.

**ESTIMATE OF STRUCTURE QUANTITIES AND NOTES**
FOR
**293' - 3" BOX GIRDER BRIDGE**

STR. NO. 64-149-367
OCTOBER 2015



| DESIGNED BY | CK. DES. BY | DRAFTED BY | |
|---|---|---|---|
| KSK | MM | KSK | Kevin N. Goeden |
| UNIN02PT | 02PTRE02 | | BRIDGE ENGINEER |

**REPLACE EXPANSION DEVICE (CONTINUED)**

7. Due to work on one-half of the deck at a time, splices in the steel extrusion will be required at the centerline of the roadway. Welded field splice details and the procedures for preparing the surfaces of the entire fabricated joint for welding and repairing the galvanizing after welding shall be included in the shop plans. Repair of galvanizing shall be zinc-based solder method in conformance with ASTM A780. No welds shall be permitted in the internal section of the extrusion where the Neoprene Strip is located.

8. The deck and curb shall be broken out and rebuilt to the limits shown in the plans.

9. The phase limits for construction prevent sufficient room for lap splice, therefore, the transverse reinforcing steel noted on the plan sheet shall be spliced with mechanical splice devices. Mechanical rebar splices shall be in accordance with Section 480 of the Construction Specifications.

10. Since the configuration and dimensions of the steel extrusions may vary according to each manufacturer's design, they need not conform exactly to that shown on the plan sheets; however, any deviations from the plan shown configuration or dimensions must be approved by the Office of Bridge Design.

11. The shape of the Preformed Neoprene Seal may vary from the sketch shown on the plan sheets according to the manufacturer's design; however, the wedge lugs must properly fit the groove in the Steel Extrusion. Before installation, shop plans of the proposed joint modification showing, in addition to fixed dimensions, the thickness of Preformed Neoprene Seal and dimensions pertinent to the fit of the Preformed Neoprene Seal in the Steel Extrusion shall be submitted to and approved by the Engineer.

12. The strip seal supplier shall submit a detailed gland installation procedure with the shop plans.

13. The Steel Extrusions shall be dry, clean and free from dirt, grease, and contaminants at the time Preformed Neoprene Seal is installed. The installation of the Preformed Neoprene Seal shall be as recommended by its manufacturer and approved by the Engineer, but in general shall be as follows: The Preformed Neoprene Seal shall be installed and bonded to the Steel Extrusion with a high-solids lubricant-adhesive. The Neoprene surfaces shall be roughened with a wire brush before the application of the lubricant-adhesive. The Preformed Neoprene Seal shall be installed after the Steel Extrusions are installed in the bridge deck.

14. The two Steel Extrusions of the new expansion joint shall be placed parallel to each other at the required joint opening as specified in the Joint Installation Table. So as to insure the proper functioning of the Neoprene Seal, strict adherence to the joint opening specified by the installation table will be required.

15. Hot-poured elastic joint sealer used to fill the 3/4" x 1/4" sawcut located at the interface of the new concrete to existing bridge deck concrete shall be applied in accordance with Section 380.3 P of the Specifications.

16. The new concrete surfaces of the bridge deck in the area of the expansion joint replacement shall be finished in accordance with Sections 460.3 L.4 of the Construction Specifications.

17. The complete expansion device shall be set at the correct grade and crown slope and securely supported during placement of Class A45 Concrete. Care shall be taken to ensure that the correct grade is maintained across the joint.

18. The cost of concrete breakout, removing and resetting guardrail, furnishing, galvanizing, welding, and installed all required materials including labor, equipment and incidentals necessary to complete the work in accordance with the plans shall be incidental to the contract unit price per each for "Replace Expansion Device".

**BENT REPAIR**

1. Deteriorated areas on the columns will be broken out and repaired according to the plans. Breakout limits shall be defined by a 3/4" deep sawcut, where practical, as approved by the Engineer.

2. Breakout concrete to the depths as shown on the plans or to sound concrete as approved by the Engineer. Care shall be taken not to damage the reinforcing steel in the cap and columns during concrete breakout. Any reinforcing steel that is damaged during concrete breakout shall be replaced or repaired (as approved by the Engineer) by the Contractor at no cost to the department. All broken out concrete shall be disposed of in accordance with the Environmental Commitment notes.

3. The deteriorated areas shown in the plans are an approximation and are based on a delamination survey obtained in October 2015. The actual repair areas will be determined in the field and as approved by the Engineer.

4. The area of unsound concrete is not anticipated to extend below the ground line. It is also not anticipated that the unsound concrete will extend into the column deeper than what is shown in the plans. If the concrete below the removal limits shown in the plans is unsound the Bridge Construction Engineer shall be immediately notified prior to any further concrete removal. Extreme care shall be exercised during concrete removal to not damage any resteel that may be exposed with concrete removal. Any reinforcing steel damaged by concrete removal shall be repaired as directed by the Engineer at no cost to the Department. Removal of concrete shall be accomplished with chipping hammers no heavier than 15 pounds.

5. After removing all loose concrete to the defined limits, the areas shall be sandblasted and blown clean with clean, dry, oil-free compressed air at 90 psi. Remove rust on exposed reinforcing steel by scraping, wire brushing or sand blasting as approved by the Engineer.

6. Galvanic anodes shall be placed in the removal areas in the bent cap. See "Galvanic Anode" notes for instructions on placement.

7. Concrete used in vertical or overhead patching applications on the bents where forms are not practical shall consist of one of the following products, or equal as approved by the Office of Bridge Design:

   HD 25 VO
   Dayton Superior
   1125 Byers Road
   Miamisburg, OH 45342
   Phone: (800)745-3700
   Website: www.daytonsuperior.com

   MasterEmaco N 400 RS
   BASF Building Systems
   889 Valley Park Drive
   Shakopee, MN 55379
   Phone: (800)433-9517
   Website: www.buildingsystems.basf.com

   Speed Crete Red Line
   The Euclid Chemical Company
   19218 Redwood Road
   Cleveland, OH 44110
   Phone: (800)321-7628
   Website: www.euclidchemical.com

   Meadow-Patch 210
   W. R. Meadows, Inc.
   P.O. Box 338
   Hampshire, IL 60140-0338
   Phone: (847)214-2100
   Website: www.wrmeadows.com

   The concrete patch material shall be applied and cured as recommended by the manufacturer and as approved by the Engineer.

   For non-overhead and non-vertical patching applications the Contractor may use packaged, dry, rapid-hardening cementitious mortar or concrete material conforming to the requirements of ASTM C 928, Type R-3 and shall contain no chlorides, magnesium or phosphates.

8. All costs associated with preparing concrete patch areas, including all labor, equipment, materials and incidentals shall be included in the contract unit price per cubic yard for "Breakout Structural Concrete".

**NOTES (CONTINUED)**
FOR
**293' - 3" BOX GIRDER BRIDGE**

STR. NO. 64-149-367
OCTOBER 2015



| DESIGNED BY | CK. DES. BY | DRAFTED BY | |
|---|---|---|---|
| KSK | MM | KSK | Kevin N. Goeden BRIDGE ENGINEER |
| UNIN02PT | 02PTRE03 | | |

## BENT REPAIR (CONTINUED)

9. The columns shall be rebuilt to the dimensions of the original construction plans unless otherwise shown on the plans.

10. All costs associated with placing concrete patch material, including all labor, equipment, materials and incidentals shall be included in the contract unit price per cubic foot for "Concrete Patching Material, Miscellaneous".

11. After the columns have been rebuilt to the dimensions of the original construction plans, they shall be wrapped with Fiber Reinforced Epoxy Composite Column Wrap according to the "Fiber Reinforced Epoxy Composite Column Wrap" Special Provision.

## CONCRETE BREAKOUT

1. The existing barriers and bearing riser shall be broken out to the limits shown on the plans. Breakout limits shall be defined with a ¾" deep sawcut (unless specified otherwise in these plans), where practical, as approved by the Engineer. Reinforcing steel that is exposed and is scheduled for use in the new construction shall be cleaned and straightened to the satisfaction of the Engineer. Care shall be taken not to damage the existing reinforcing steel that is to be reused in the new construction during concrete breakout. Any reinforcing steel that is damaged during concrete breakout shall be replaced or repaired, as approved by the Engineer, by the Contractor at no cost to the Department.

2. All broken out concrete and discarded reinforcing bars shall be disposed of by the Contractor. Any disposal of discarded material shall be in accordance with the Environmental Commitments.

3. During concrete removal operations, no broken out concrete shall be allowed to fall onto the roadway below.

4. The contract unit price per cubic yard for "Breakout Structural Concrete" shall include breaking out concrete, cleaning, straightening existing reinforcing steel and disposal of all broken out material.

## GALVANIC ANODES

1. The Contractor shall furnish and place Galvanic anodes in the concrete repair areas specified in this plan set.

2. The galvanic anodes shall be supplied as one of the following:

   Galvashield XP2
   Vector Corrosion Technologies
   13312 N 56th St, Suite 102
   Tampa, FL 33617
   Phone: (813) 830-7566
   Website: www.vector-corrosion.com

   Sentinel Silver
   Euclid Chemical Company
   19218 Redwood Road
   Cleveland, OH 44110
   Phone: (800)321-7628
   Website: www.euclidchemical.com

   Sika Galvashield XP+
   Sika Corporation US
   201 Polito Avenue
   Lyndhurst, NJ 07071
   Phone: (800) 933-7452
   Website: http://usa.sika.com

3. The anodes shall be placed in accordance with manufacturer's recommendations and as approved by the Engineer. The anodes have not been shown on the drawings. The Contractor shall provide shop drawing of the galvanic anode installation including locations of the individual anodes to the Office of Bridge Design.

4. The anodes shall be placed with a minimum ¾" cover and shall be set in Embedding Mortar per the manufacturer's recommendations. The anodes shall be fully encased in the concrete repair material. Where adequate cover does not exist, a concrete pocket shall be chipped out behind the anode to provide sufficient cover. The Contractor may need to chip around the reinforcing bar locally at the anode installation to make the electrical connection. The reinforcing steel at the connection location shall be cleaned per the manufacturer's recommendations to provide sufficient electrical connection and mechanical bond.

5. The electrical continuity of the electrical connections and reinforcing steel shall be confirmed per the manufacturer's recommendations.

6. The Contractor shall provide manufacturer's product literature and installation instructions to the Engineer 10 days prior to installation.

7. All costs associated with placing anodes including labor, equipment, materials and incidentals shall be included in the contract unit price per each for "Galvanic Anode".

## FABRICATED SUPPORT BRACKET FOR GAURDRAIL POST

1. All steel for the Fabricated Support Bracket shall conform to ASTM A709, Grade 36 and shall be galvanized in accordance with AASHTO M111 (ASTM A123).

2. The 3/4" diameter fully threaded stud shall conform to ASTM A307. Each anchor bolt shall be furnished with one hardened washer and one heavy hex nut. The 3/4" diameter shall be installed according to the "Installing Dowels in Concrete" Notes.

3. Welding and weld inspection shall be in accordance with AWS D1.1-90 Structural Welding Code.

4. The costs associated with placing the fabricated support bracket including labor, equipment, materials and incidentals shall be included in the lump sum price for "Structural Steel, Miscellaneous".

## INSTALLING DOWELS IN CONCRETE

1. Holes drilled in the existing concrete shall be true and normal or as shown in the plans. Drilling holes using a core drill shall not be allowed. Care shall be taken not to damage the existing reinforcing steel. It is likely that some of the existing reinforcing steel shown in the original construction plans may have been placed out of position during original construction. Therefore, prior to the start of drilling nay holes in the concrete, an effort will be made by Department forces to mark on the concrete surface where practical any location of the in-place reinforcing steel. In spite of the precaution, the Contractor can still expect to encounter and have to drill through reinforcing steel or shift the dowel spacing as approved by the Engineer to miss the existing reinforcing steel. If the Contractor shifts the dowel spacing, the unused drill holes shall be completely filled with the epoxy resin specified in note number 2.

2. The epoxy resin mixture shall be a type for bonding steel to hardened concrete and shall conform to AASHTO M235 Type IV (Equivalent to ASTM C881, Type IV). Grade 1, 2 or 3 may be used for vertical dowels.

3. The diameter of the drilled holes shall not be less than 1/8 inch greater, nor more than 3/8 inch greater than the diameter of the dowels or as per the Manufacturer's recommendations. The drilled holes shall be blown out with compressed air using a device that will reach the back of the hole to ensure that all debris or loose material has been removed prior to epoxy injection.

**INSTALL DOWEL IN CONCRETE (CONTINUED)**

4. Mix epoxy resin as recommended by the Manufacturer and apply by an injection method as approved by the Engineer. Beginning at the back of the drilled holes, fill the holes 1/3 to 1/2 full of epoxy, or as recommended by the Manufacturer, prior to insertion of the steel bar. Rotate the steel bar during installation to eliminate voids and ensure complete bonding of the bar. Insertion of the bars by the dipping or painting method will not be allowed.

5. No loads shall be applied to the epoxy grouted dowel bars until the epoxy resin has had sufficient time to cure as specified by the epoxy resin manufacturer.

6. Dowel bars shall be deformed bars conforming to ASTM A615 Grade 60.

7. The cost of epoxy resin, dowels, installation and other incidental items shall be incidental to the contract unit price per each for “Install Dowel in Concrete”.

| STATE OF | PROJECT | SHEET NO. | TOTAL SHEETS |
|---|---|---|---|
| S.D. | IM-PH 0291(122)0 | 159 | 284 |

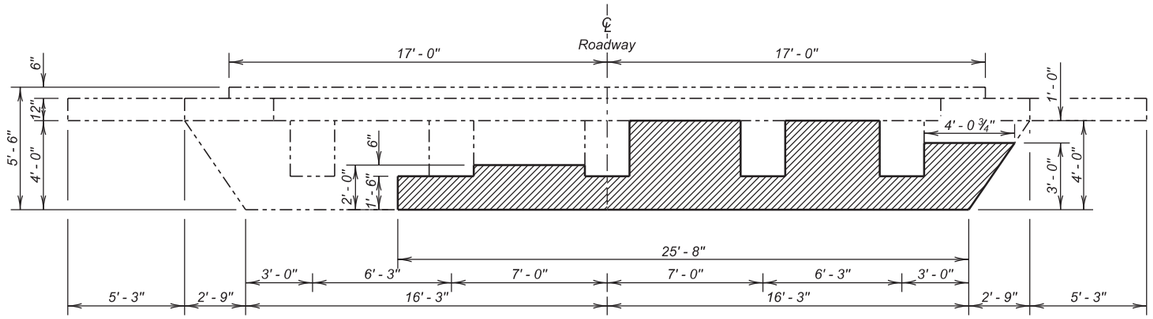


**PLAN**
(Abutment No. 1)

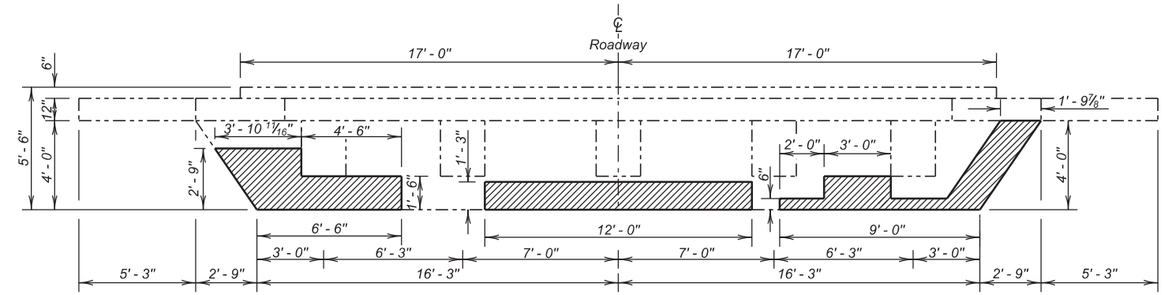


**PLAN**
(Abutment No. 5)

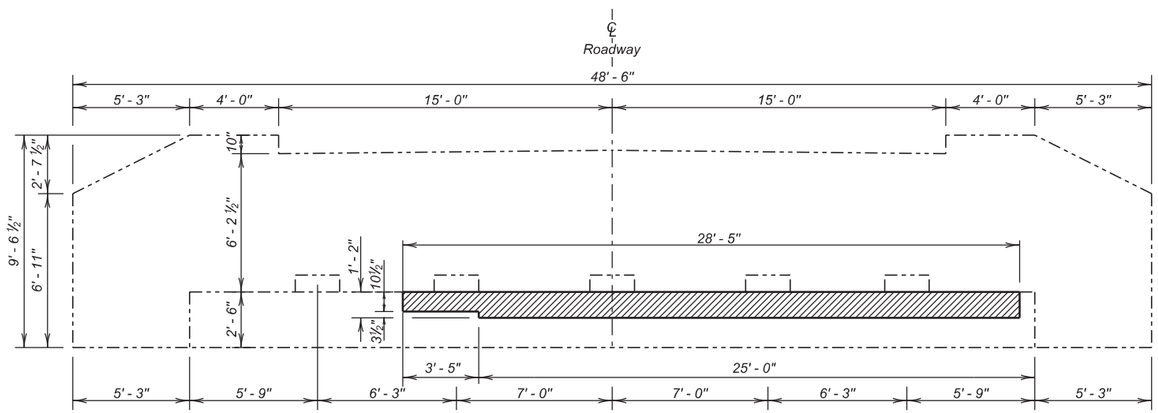


**ELEVATION**
(Abutment No. 1)

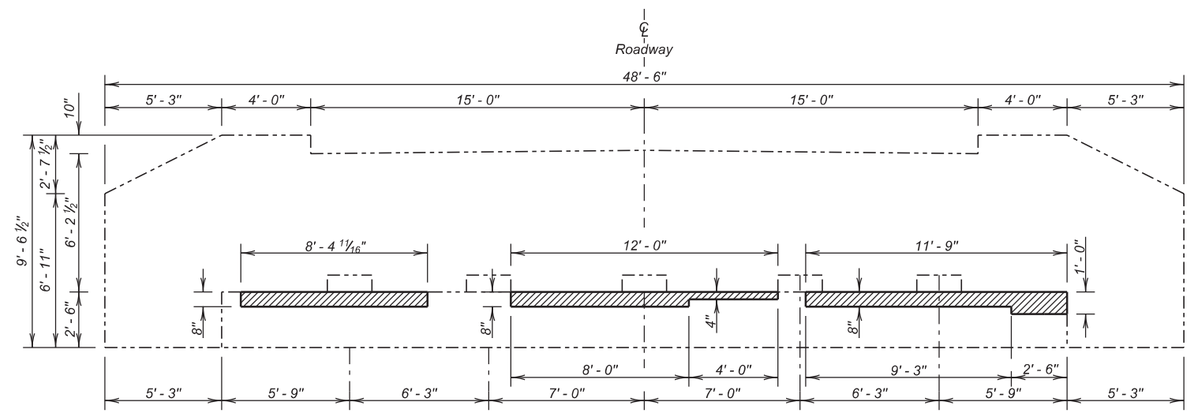


**ELEVATION**
(Abutment No. 5)

Limits of Abutment Repair

## ESTIMATED QUANTITIES

| | ITEM | UNIT | QUANTITY |
|---|---|---|---|
| * | Breakout Structural Concrete | CuYd | 4.1 |
| * | Concrete Patching Material, Miscellaneous | CuFt | 109.3 |
| | Galvanic Anode | Each | 32 |

* Quantity is based on approximate dimensions shown in these plans. Actual quantity will vary depending on field conditions.

**ABUTMENT NO. 1 AND ABUTMENT NO. 5 REPAIR DETAILS**
FOR
293' - 3" BOX GIRDER BRIDGE

30' - 0" ROADWAY — 0° SKEW
OVER INTERSTATE 29 — SEC. 4-T89N-R48W
STR. NO. 64-149-367 — IM-PH 0291(122)0

UNION COUNTY
S. D. DEPT. OF TRANSPORTATION
OCTOBER 2015



| DESIGNED BY | CK. DES. BY | DRAFTED BY | |
|---|---|---|---|
| KSK | BD | KR | Kevin N. Boeden |
| UNIN02PT | 02PTRE06 | | BRIDGE ENGINEER |

| STATE OF | PROJECT | SHEET NO. | TOTAL SHEETS |
|---|---|---|---|
| S.D. | IM-PH 0291(122)0 | 160 | 284 |

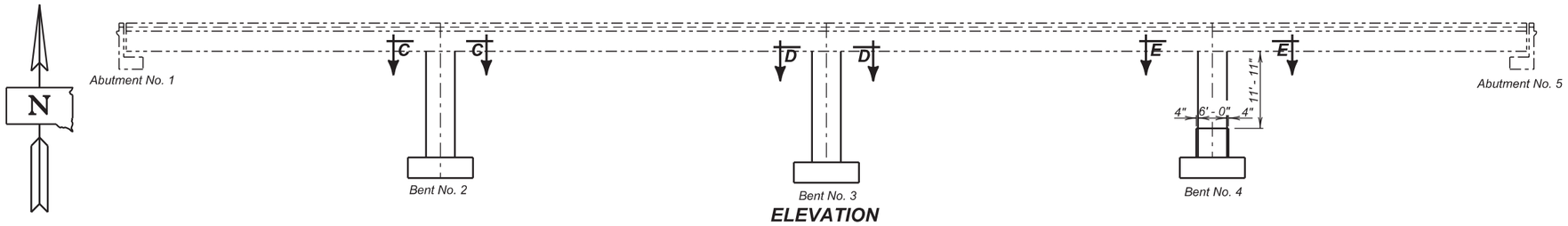


**ELEVATION**

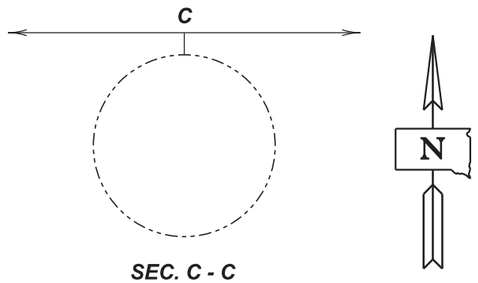


**SEC. C - C**

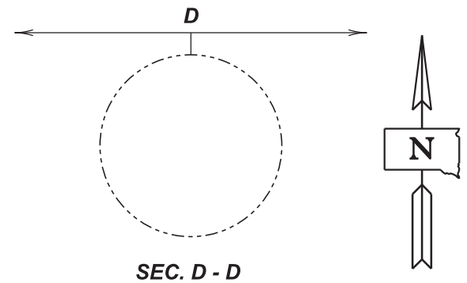


**SEC. D - D**

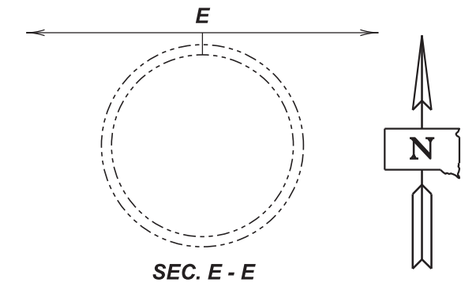


**SEC. E - E**

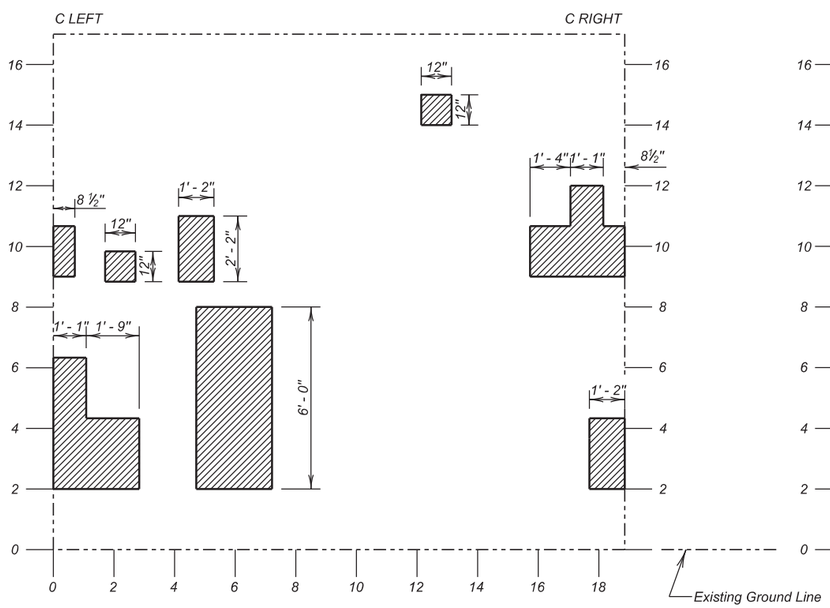


**ELEVATION**
(Bent No. 2)

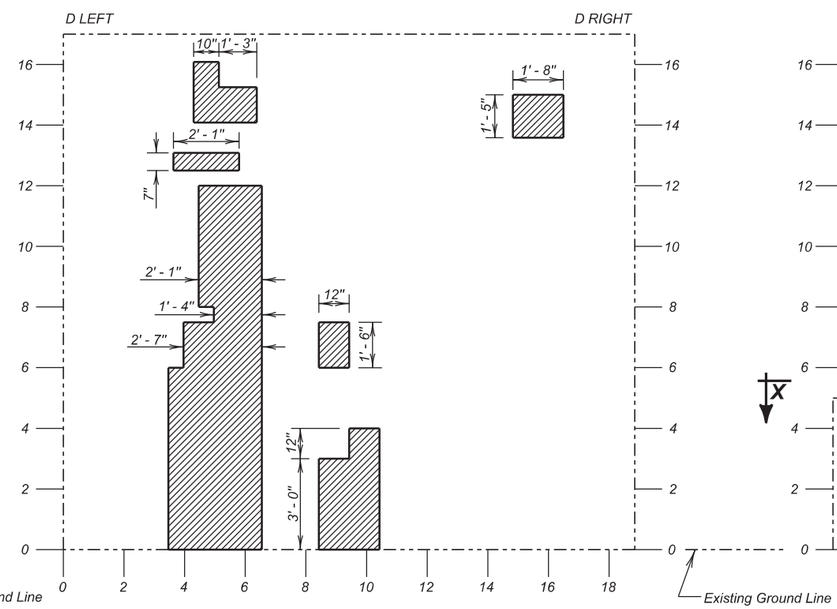


**ELEVATION**
(Bent No. 3)

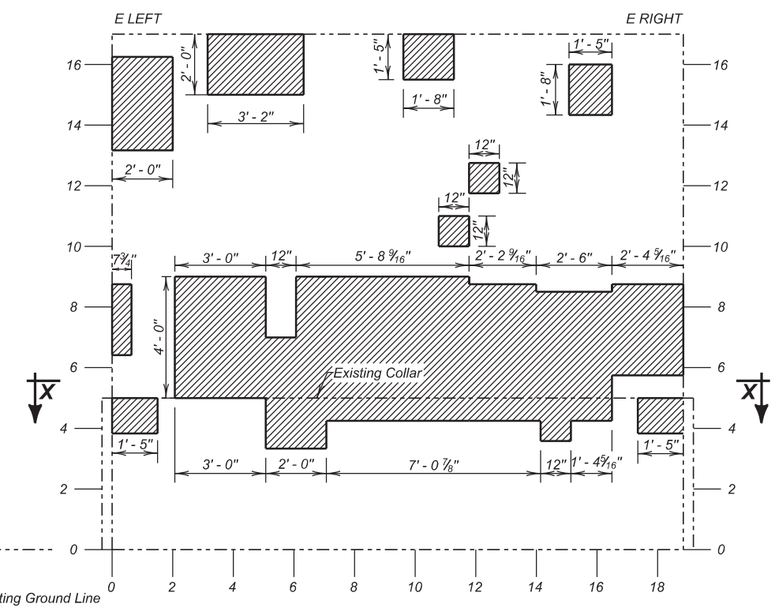


**ELEVATION**
(Bent No. 4)

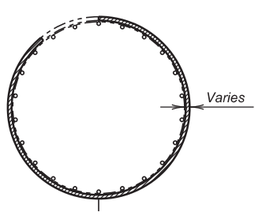


**SEC. X - X**
(Breakout Depth Typical at All Locations)

Limits of concrete removal

**COLUMN REPAIR DETAILS**

FOR

## 293' - 3" BOX GIRDER BRIDGE

30' - 0" ROADWAY
OVER INTERSTATE 29
STR. NO. 64-149-367

0° SKEW
SEC. 4-T89N-R48W
IM-PH 0291(122)0

UNION COUNTY
S. D. DEPT. OF TRANSPORTATION
OCTOBER 2015



| DESIGNED BY | CK. DES. BY | DRAFTED BY | |
|---|---|---|---|
| KSK | BD | KR | Kevin N. Boeden |
| UNIN02PT | 02PTRE07 | | BRIDGE ENGINEER |

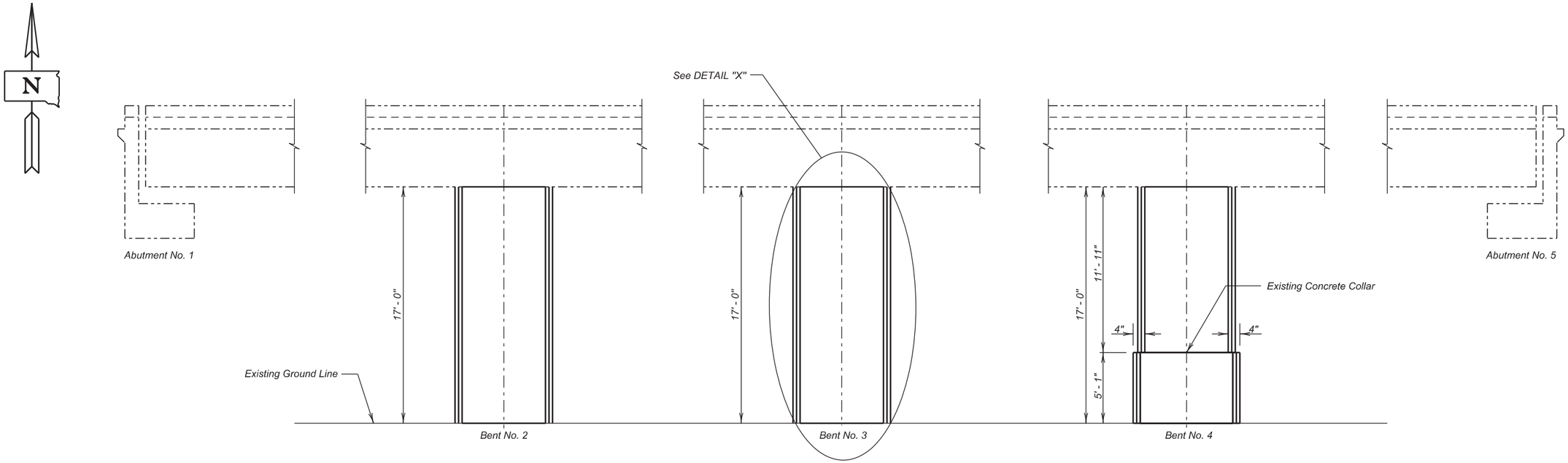


**ELEVATION**

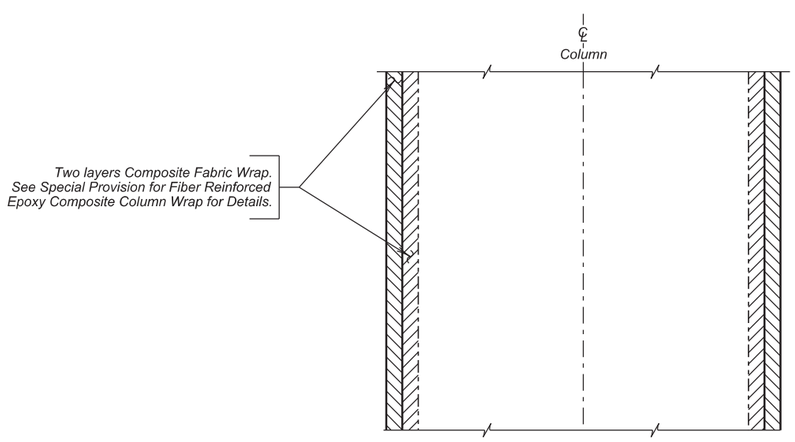


**DETAIL "X"**

**ESTIMATED QUANTITIES**

| ITEM | UNIT | QUANTITY |
|---|---|---|
| Breakout Structural Concrete | Cu. Yd. | 0.8 |
| Concrete Patching Material, Miscellaneous | Cu. Ft. | 22.8 |
| Composite Fabric Wrap, Bridge Repair | Sq. Ft. | 978.6 |

**COLUMN REPAIR DETAILS (CONTINUED)**

FOR

293' - 3" BOX GIRDER BRIDGE

30' - 0" ROADWAY
OVER INTERSTATE 29
STR. NO. 64-149-367

0° SKEW
SEC. 4-T89N-R48W
IM-PH 0291(122)0

UNION COUNTY
S. D. DEPT. OF TRANSPORTATION
OCTOBER 2015



| DESIGNED BY | CK. DES. BY | DRAFTED BY | |
|---|---|---|---|
| KSK | BD | KR | Kevin N. Goeden |
| UNIN02PT | 02PTRE08 | | BRIDGE ENGINEER |

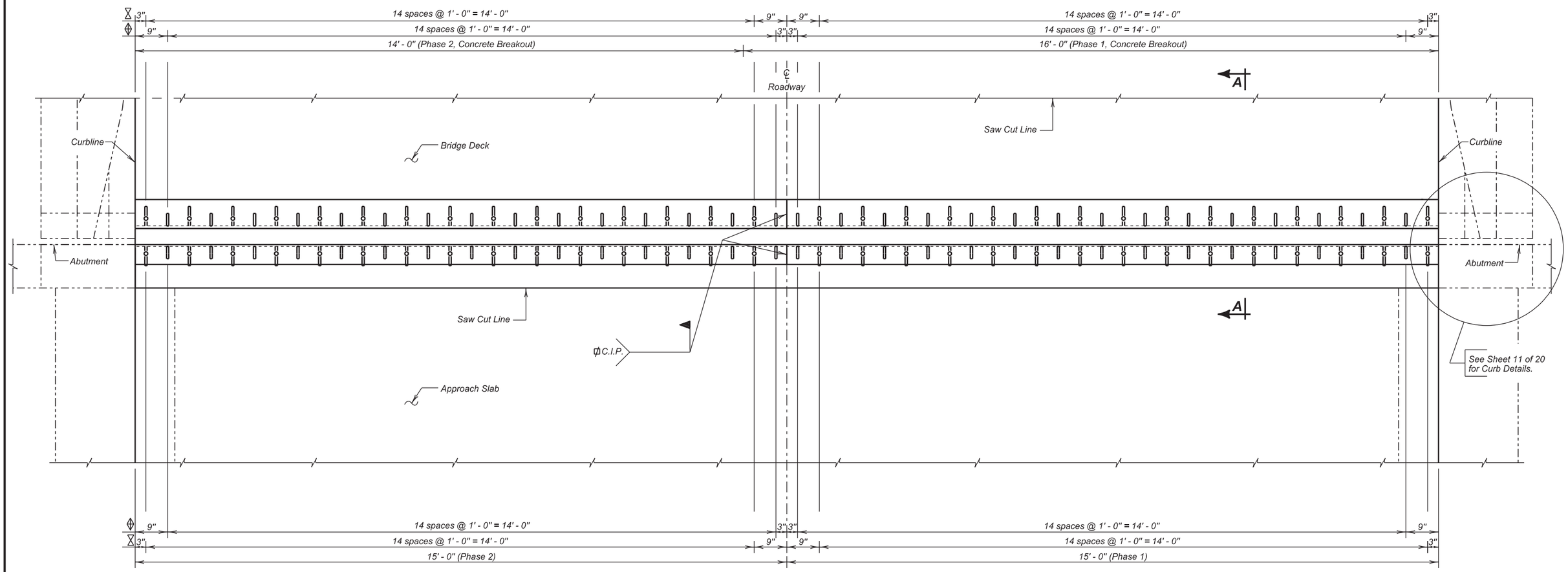


**PLAN**
(Neoprene Seal Not Shown)

**STRIP SEAL DETAILS**
FOR
293' - 3" BOX GIRDER BRIDGE

30' - 0" ROADWAY
OVER INTERSTATE 29
STR. NO. 64-149-367

0° SKEW
SEC. 4-T89N-R48W
IM-PH 0291(122)0

UNION COUNTY
S. D. DEPT. OF TRANSPORTATION
OCTOBER 2015

9 OF 21

⌖ ¾" ⌀ Horizontal End Welded Concrete Anchor Spacing

⧗ ¾" ⌀ Vertical End Welded Concrete Anchor and 1" ⌀ Bleeder Hole Spacing

NOTES -

⌀ Complete Joint Penetration Butt Splice at construction joint to be shown on shop plans for approval.

All dimensions shown are along the surface of the vertical ½" thick plate adjacent to concrete.

Use this sheet in conjunction with Sheet Nos. 10 and 11 of 21.

| DESIGNED BY | CK. DES. BY | DRAFTED BY | |
|---|---|---|---|
| KSK | MM | KR | Kevin N. Boeden |
| UNIN02PT | 02PTRE09 | | BRIDGE ENGINEER |

| STATE OF | PROJECT | SHEET NO. | TOTAL SHEETS |
|---|---|---|---|
| S.D. | IM-PH 0291(122)0 | 163 | 284 |

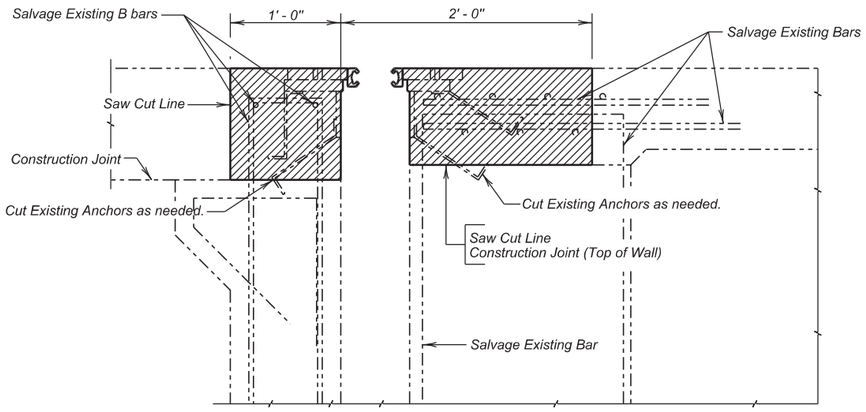


**SECTION A - A**
(Joint Breakout)
(Abut. No. 1, Abut. No. 5 Similar by Rotation)

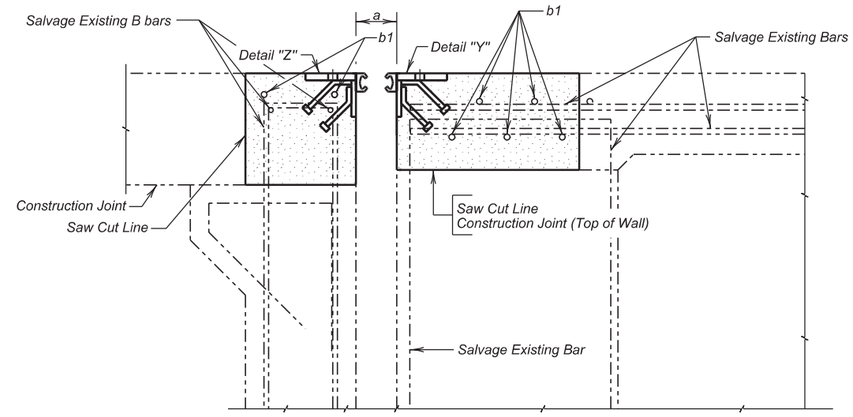


**SECTION A - A**
(Joint Replacement)
(New Construction)
(Abut. No. 1, Abut. No. 5 Similar by Rotation)

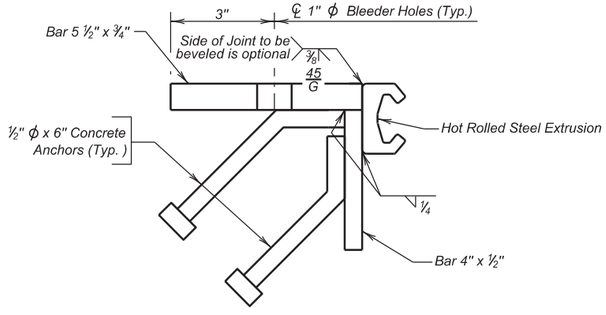


**DETAIL "Z"**

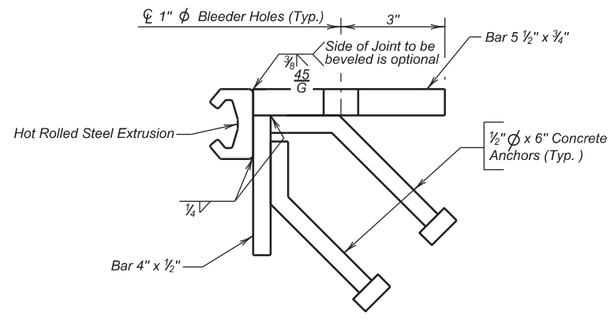


**DETAIL "Y"**

LEGEND:

Shaded areas indicate limits of Concrete Breakout.

| Dimension "a" | |
|---|---|
| Temp. | Abut. No. 4 |
| 30° | 2 7/16" |
| 40° | 2 9/16" |
| 50° | 2 9/16" |
| 60° | 2 9/16" |
| 70° | 2" |
| 80° | 1 15/16" |
| 90° | 1 13/16" |
| 100° | 1 11/16" |

Use this sheet in conjunction with Sheet Nos. 9 and 11 of 21.

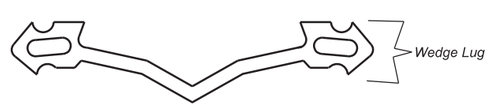


**DETAIL "E"**
Neoprene Seal shall have a 3" movement capability.

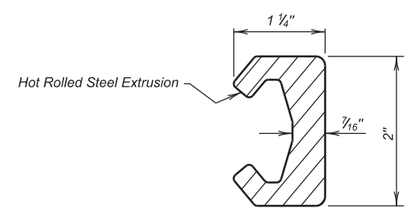


**HOT ROLLED STEEL EXTRUSION**

**STRIP SEAL DETAILS (CONTINUED)**
FOR
293' - 3" BOX GIRDER BRIDGE

30' - 0" ROADWAY
OVER INTERSTATE 29
STR. NO. 64-149-367

0° SKEW
SEC. 4-T89N-R48W
IM-PH 0291(122)0

UNION COUNTY
S. D. DEPT. OF TRANSPORTATION
OCTOBER 2015

10 OF 21

| DESIGNED BY | CK. DES. BY | DRAFTED BY | |
|---|---|---|---|
| KSK | MM | KR | Kevin N. Goeden |
| UNIN02PT | 02PTRE10 | | BRIDGE ENGINEER |

| STATE OF | PROJECT | SHEET NO. | TOTAL SHEETS |
|---|---|---|---|
| S.D. | IM-PH 0291(122)0 | 164 | 284 |

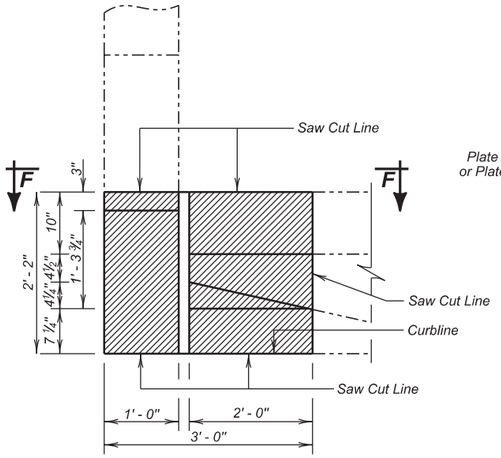


**PLAN**

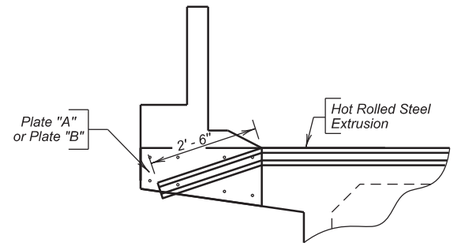


**SEC. A - A**

Resteel not shown for clarity
South East Corner Shown, North west corner similar by rotation.

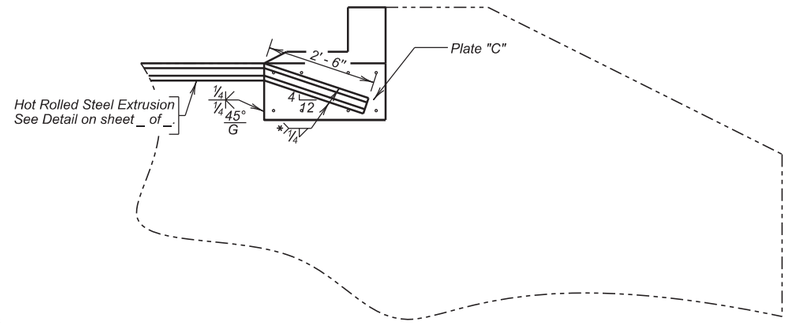


**SEC. B - B**

South East Corner Shown
All other corners similar by rotation.
(Resteel Not Shown for Clarity)

## REINFORCING SCHEDULE

(For One Bridge)

| Mk. | No. | Size | Length | Type |
|---|---|---|---|---|
| b1 | 14 | 5 | 16' - 11" | Str. |
| c1 | 2 | 4 | 6' - 6" | T7A |
| c2 | 2 | 4 | 6' - 11" | T7A |
| d1 | 8 | 6 | 1' - 8" | Str. |
| c5 | 2 | 4 | 2' - 7" | T1 |

Bending Details

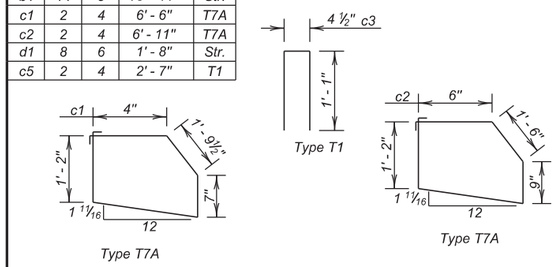


## ESTIMATED QUANTITIES

| ITEM | UNIT | QUANTITY |
|---|---|---|
| Replace Expansion Device | Each | 2 |

Items 1 thru 5 are approximate quantities contained in the above bid items and are for informational purposes only.

| | Phase 1 | Phase 2 |
|---|---|---|
| 1. Class A45 Concrete: | 3.4 Cu. Yd | 3.4 Cu. Yd. |
| 2. Epoxy Coated Reinforcing Steel: | 288 Lb. | 288 Lb. |
| 3. Structural Steel: | 1593 Lb. | 1593 Lb. |
| 4. Breakout Structural Concrete: | 3.7 Cu. Yd | 3.3 |
| 5. No. 5 Rebar Splice | 7 Each | - |

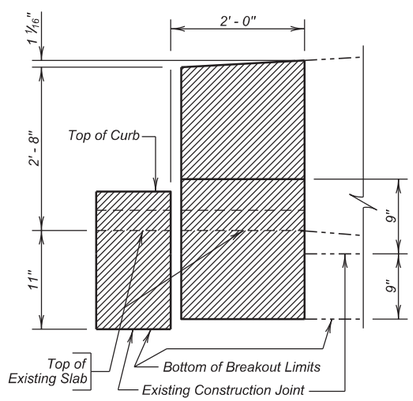


**VIEW F - F**

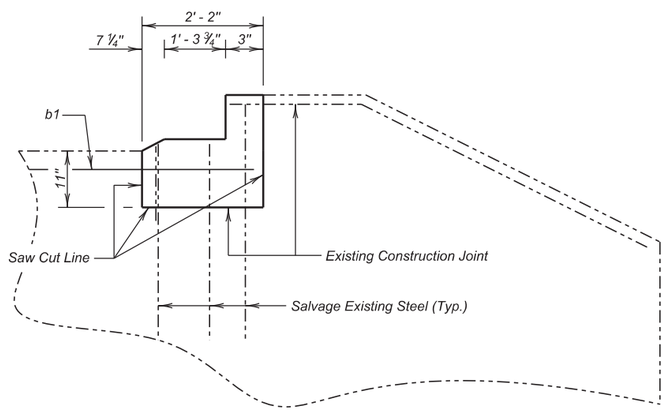


**SEC. D - D**

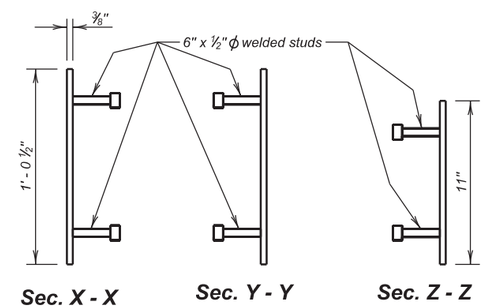


**Sec. X - X** **Sec. Y - Y** **Sec. Z - Z**

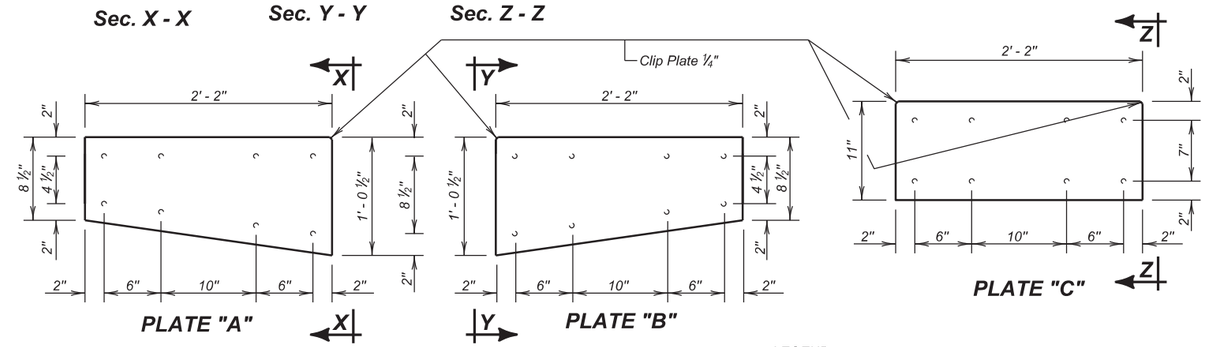


**PLATE "A"** **PLATE "B"** **PLATE "C"**

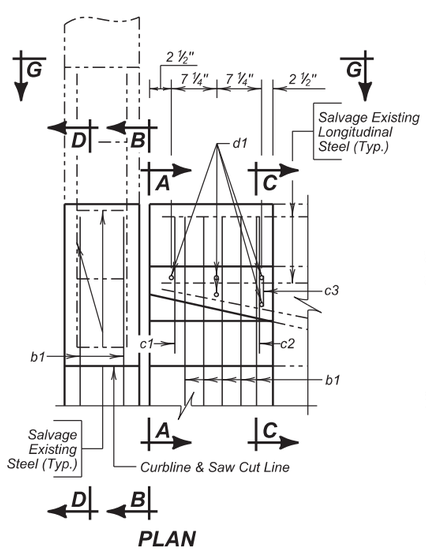


**PLAN**

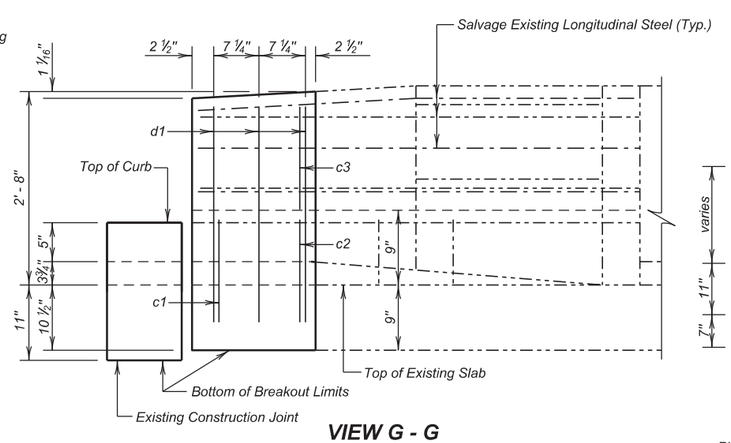


**VIEW G - G**

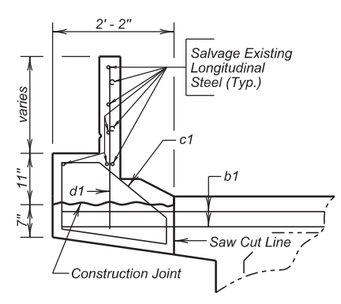


**SEC. A- A**

Plate "A" or Plate "B" not shown for Clarity

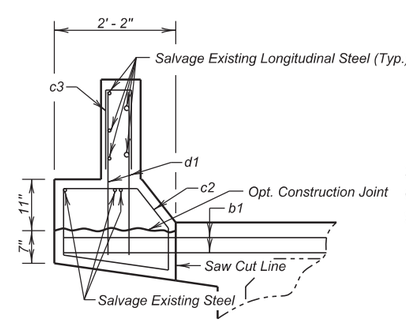


**SEC. C - C**

LEGEND:

Shaded areas indicate limits of Concrete Breakout.

Use this sheet in conjunction with Sheet Nos. 9 and 10 of 21.

**STRIP SEAL DETAILS AT CURB**

FOR

293' - 3" BOX GIRDER BRIDGE

30' - 0" ROADWAY
OVER INTERSTATE 29
STR. NO. 64-149-367

0° SKEW
SEC. 4-T89N-R48W
IM-PH 0291(122)0

UNION COUNTY
S. D. DEPT. OF TRANSPORTATION
OCTOBER 2015



| DESIGNED BY | CK. DES. BY | DRAFTED BY | |
|---|---|---|---|
| KSK | MM | KR | Kevin N. Goeden |
| UNIN02PT | 02PTRE11 | | BRIDGE ENGINEER |

| STATE OF | PROJECT | SHEET NO. | TOTAL SHEETS |
|---|---|---|---|
| S.D. | IM-PH 0291(122)0 | 165 | 284 |

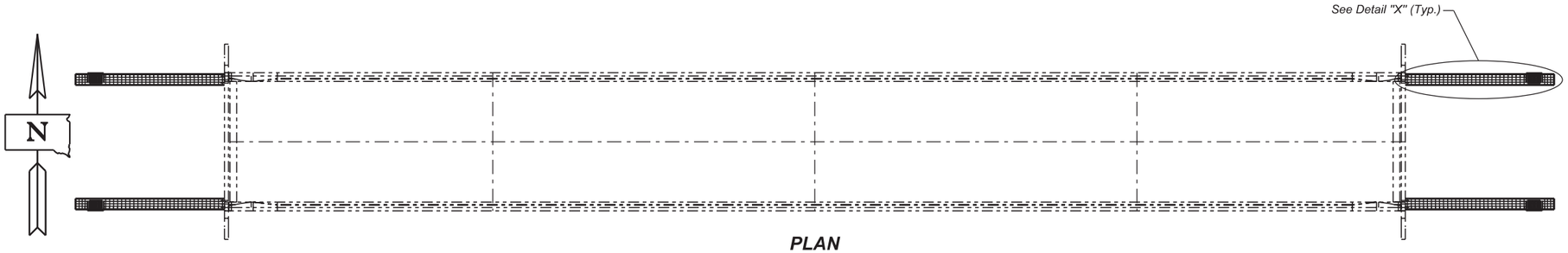


**PLAN**

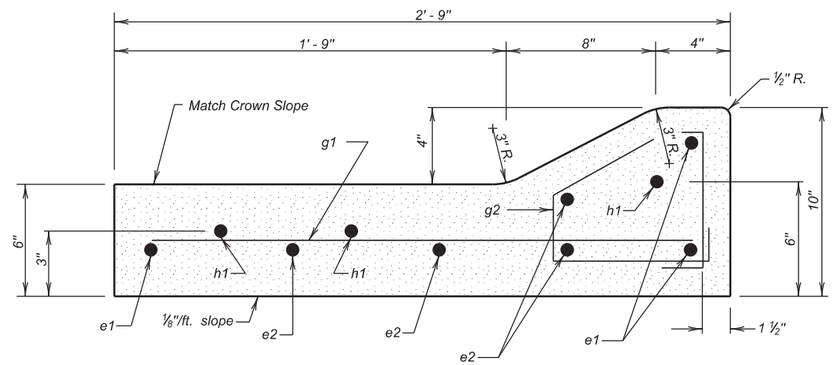


**SECTION A - A**

## REINFORCING SCHEDULE

(For All Four Corners)

| | Mk. | No. | Size | Length | Type |
|---|---|---|---|---|---|
| PHASE I | e1 | 6 | 4 | 36' - 8" | Str. |
| | e2 | 8 | 4 | 30'- 0" | Str. |
| | e3 | 8 | 4 | 2' - 10" | Str. |
| | g1 | 68 | 4 | 2' - 6" | Str. |
| | g2 | 62 | 4 | 3' - 1" | T1 |
| | △ h1 | 6 | 6 | 2' - 0" | Str. |
| PHASE 2 | e1 | 6 | 4 | 36' - 8" | Str. |
| | e2 | 8 | 4 | 30'- 0" | Str. |
| | e3 | 8 | 4 | 2' - 10" | Str. |
| | g1 | 68 | 4 | 2' - 6" | Str. |
| | g2 | 62 | 4 | 3' - 1" | T1 |
| | △ h1 | 6 | 6 | 2' - 0" | Str. |

Bending Details

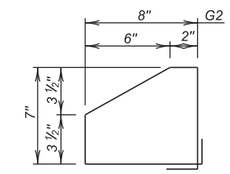


Type T1

NOTES:
All Dimensions are out to out of bars.
All Bars to be Epoxy Coated.
△ Dowels

## ESTIMATED QUANTITIES

(For All Four Corners)

| | ITEM | UNIT | PHASE I QUANTITY | PHASE 2 QUANTITY |
|---|---|---|---|---|
| | Remove Concrete Curb and Gutter | Ft | 74.0 | 74.0 |
| ★ | Epoxy Coated Reinforcing Steel | lb | 563 | 563 |
| | Class A45 Concrete, Bridge Repair | Cu. Yd. | 4.4 | 4.4 |
| | Install Dowel in Concrete | Each | 6 | 6 |

★ Does not include the following quantities for h1 bars as these are paid for in the Bid Item "Install Dowel in Concrete":

| Phase 1 | Phase 2 |
|---|---|
| 18 Lb | 18 Lb |

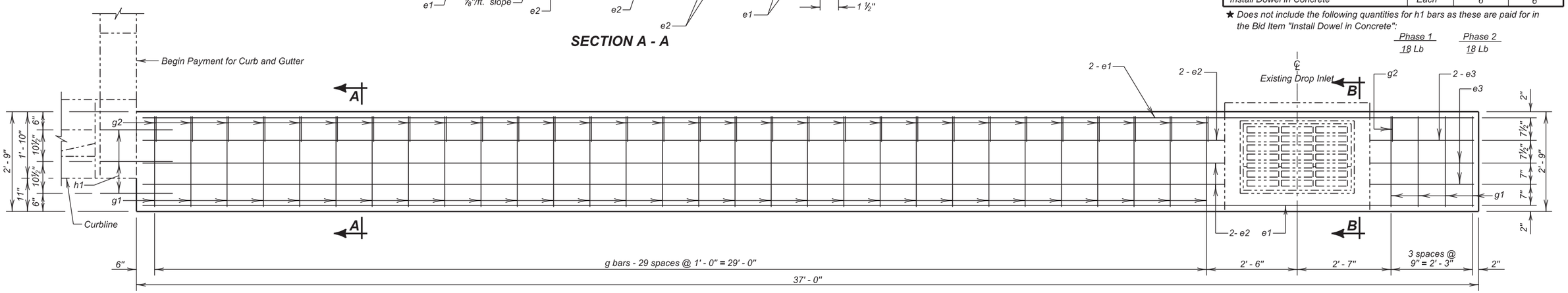


**DETAIL "X"**

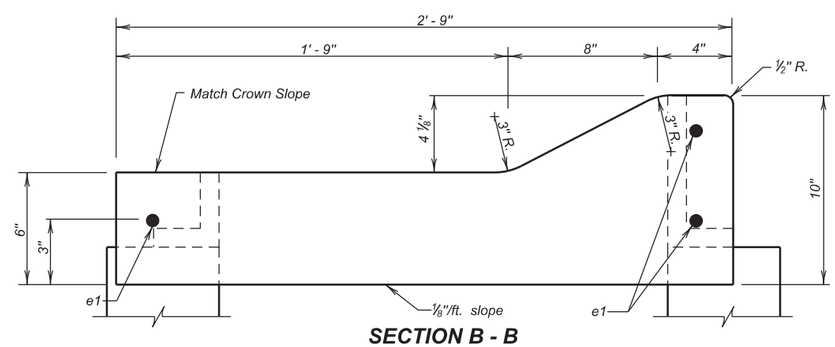


**SECTION B - B**

**TYPE D REINFORCED CONCRETE CURB AND GUTTER DETAILS**

FOR

293' - 3" BOX GIRDER BRIDGE

30' - 0" ROADWAY — 0° SKEW
OVER INTERSTATE 29 — SEC. 4-T89N-R48W
STR. NO. 64-149-367 — IM-PH 0291(122)0

UNION COUNTY
S. D. DEPT. OF TRANSPORTATION
OCTOBER 2015



| DESIGNED BY | CK. DES. BY | DRAFTED BY | |
|---|---|---|---|
| KSK | BD | KR | Kevin N. Boeden |
| UNIN02PT | 02PTRE12 | | BRIDGE ENGINEER |

| STATE OF | PROJECT | SHEET NO. | TOTAL SHEETS |
|---|---|---|---|
| S.D. | IM-PH 0291(122)0 | 166 | 284 |

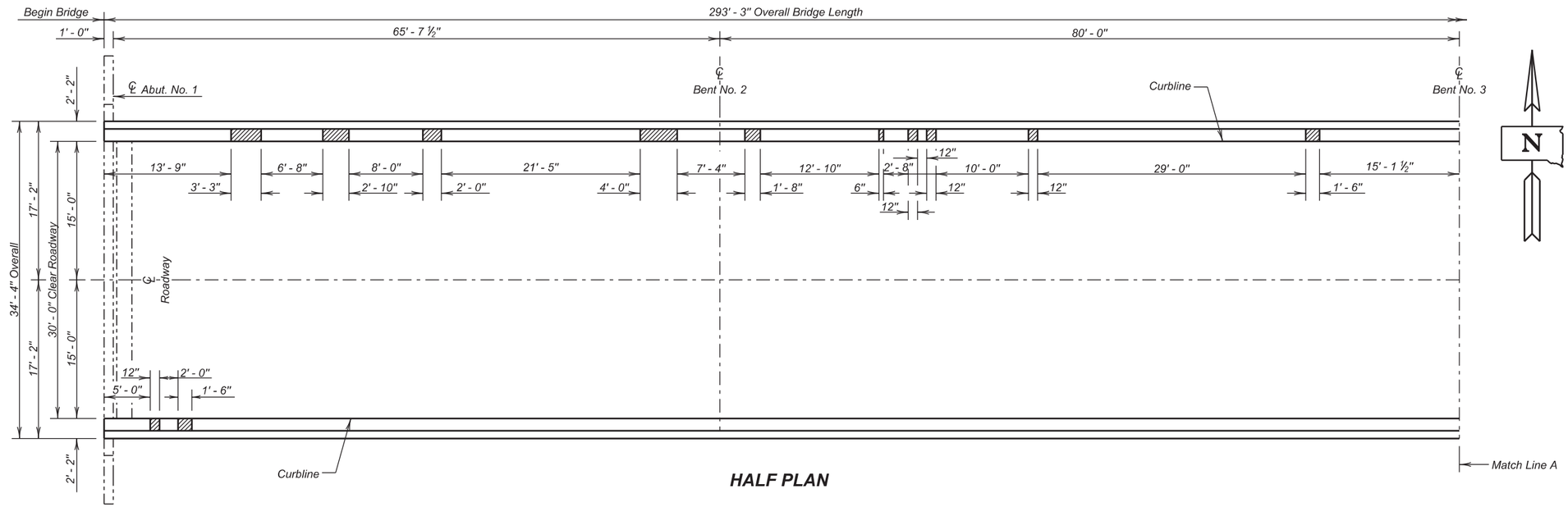


HALF PLAN

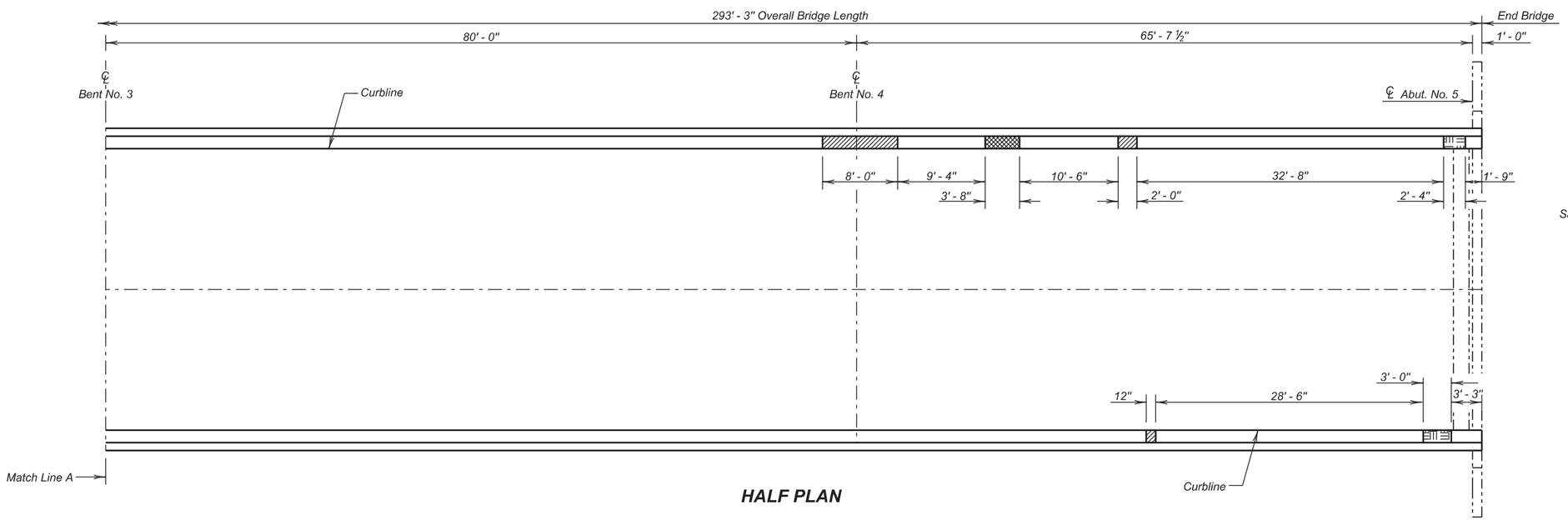


HALF PLAN

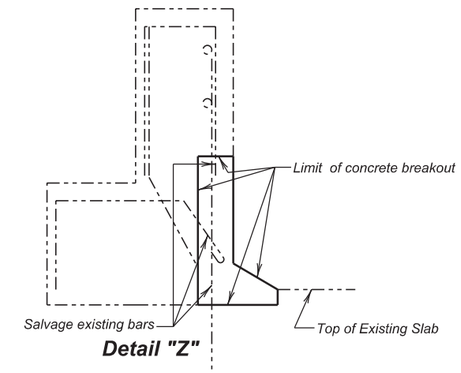


Detail "Z"

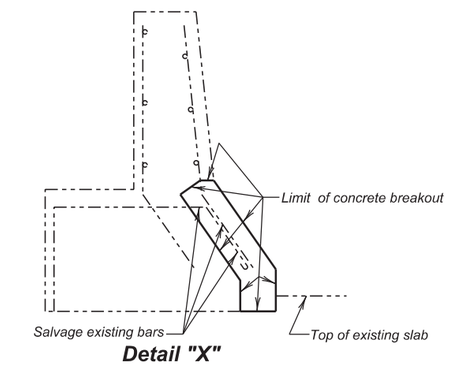


Detail "X"

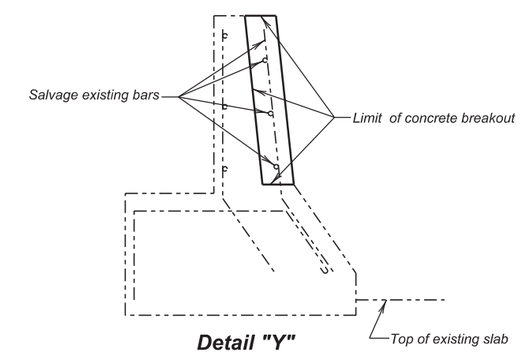


Detail "Y"

Barrier to be repaired in accordance with Detail "X"

Barrier to be repaired in accordance with Detail "Y"

Endblock to be repaired in accordance with Detail "Z"

## ESTIMATED QUANTITIES

| ITEM | UNIT | QUANTITY | |
|---|---|---|---|
| | | Phase I | Phase 2 |
| Breakout Structural Concrete | CuYd | 0.6 | 0.1 |
| Concrete Patching Material, Miscellaneous | CuFt | 16.2 | 3.3 |
| Galvanic Anode | Each | 22 | 5 |
| | | | |

**BARRIER AND END BLOCK REPAIR DETAILS**

FOR

293' - 3" BOX GIRDER BRIDGE

30' - 0" ROADWAY — 0° SKEW

OVER INTERSTATE 29 — SEC. 4-T89N-R48W

STR. NO. 64-149-367 — IM-PH 0291(122)0

UNION COUNTY

S. D. DEPT. OF TRANSPORTATION

OCTOBER 2015

13 OF 21

| DESIGNED BY | CK. DES. BY | DRAFTED BY | |
|---|---|---|---|
| KSK | BD | KR | Kevin N. Goeden |
| UNIN02PT | 02PTRE13 | | BRIDGE ENGINEER |

| STATE OF | PROJECT | SHEET NO. | TOTAL SHEETS |
|---|---|---|---|
| S.D. | IM-PH 0291(122)0 | 167 | 284 |

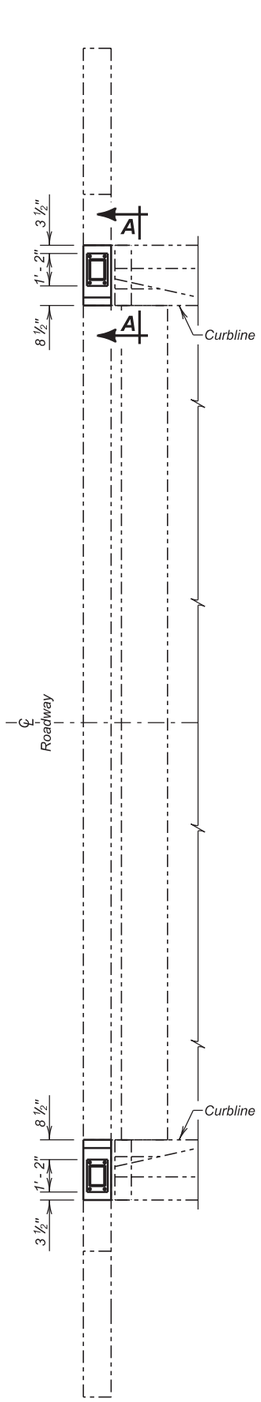


**PLAN**
(Abutment No. 1 Shown.
Abutment No. 5 similar by rotation)

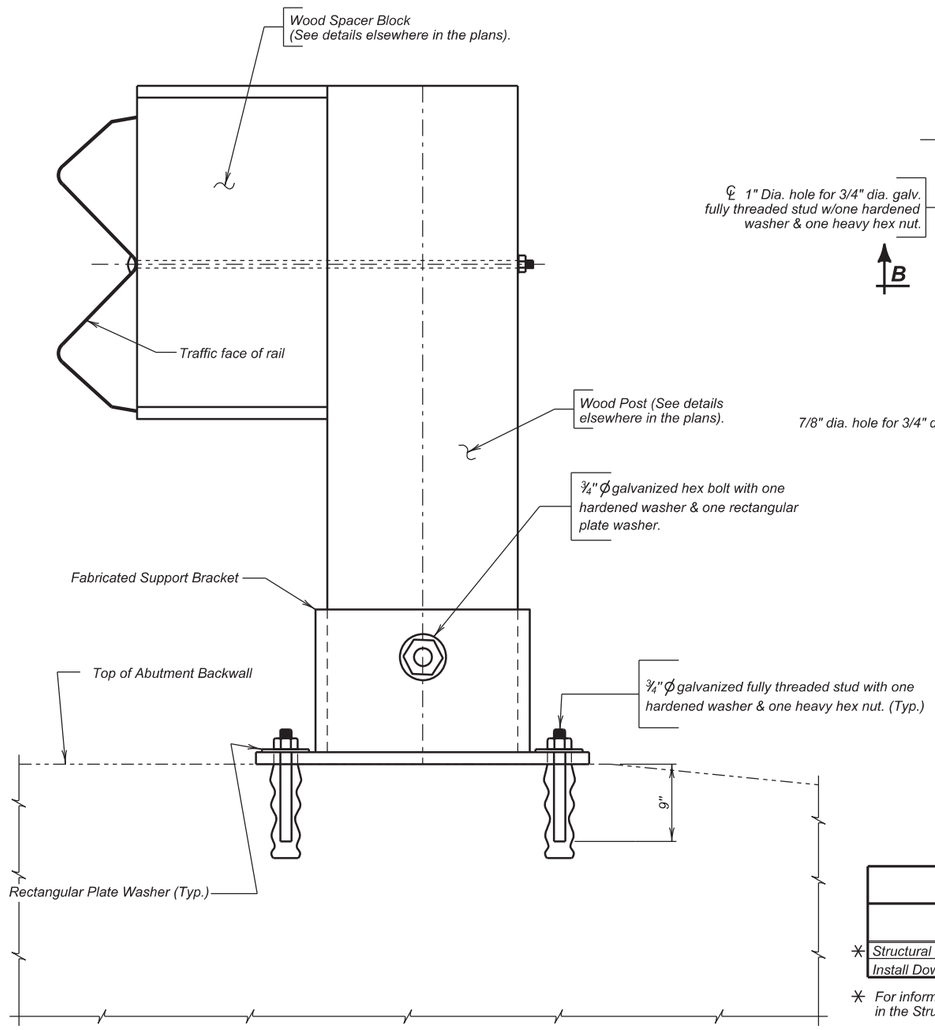


**SECTION A - A**

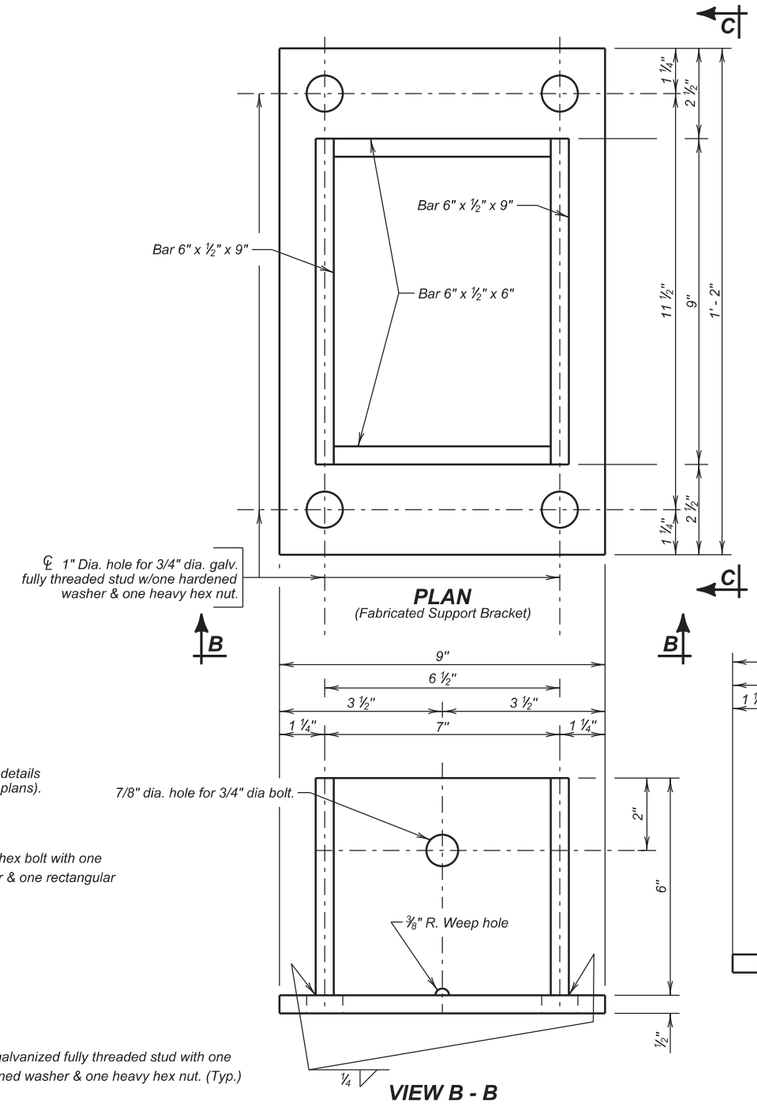


**PLAN**
(Fabricated Support Bracket)

**VIEW B - B**

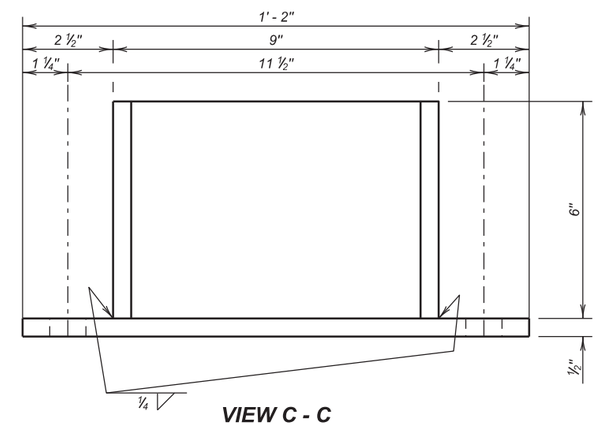


**VIEW C - C**

## ESTIMATED QUANTITIES

| ITEM | UNIT | QUANTITY Phase I | QUANTITY Phase 2 |
|---|---|---|---|
| ✳ Structural Steel, Miscellaneous | LS | LumpSum | LumpSum |
| Install Dowel in Concrete | Each | 8 | 8 |

✳ *For informational purposes only, 176 Lbs of Structural Steel are included in the Structural Steel, Miscellaneous bid item.*

**FABRICATED SUPPORT BRACKET FOR RAIL POST**
FOR
293' - 3" BOX GIRDER BRIDGE

30' - 0" ROADWAY
OVER INTERSTATE 29
STR. NO. 64-149-367

0° SKEW
SEC. 4-T89N-R48W
IM-PH 0291(122)0

UNION COUNTY
S. D. DEPT. OF TRANSPORTATION
OCTOBER 2015



| DESIGNED BY | CK. DES. BY | DRAFTED BY | |
|---|---|---|---|
| KSK | BD | KR | Kevin N. Boeder |
| LINC02PT | 02PTRE14 | | BRIDGE ENGINEER |

**YEAR PLATE DETAILS FOR ORIGINAL CONSTRUCTION**

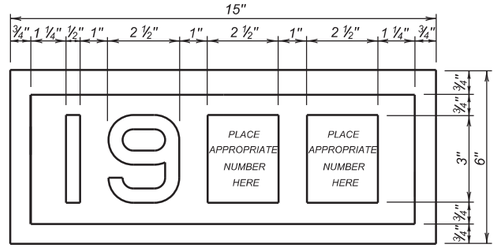


**YEAR PLATE DETAILS FOR NEW CONSTRUCTION**

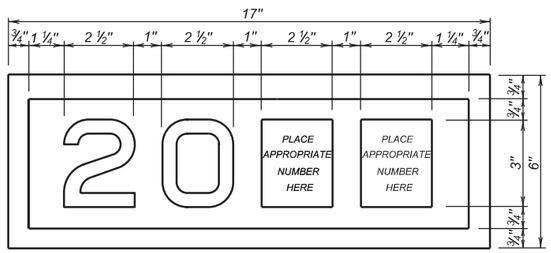


## GENERAL NOTES:

1. Year plates of the general dimensions shown shall be constructed on all box culverts and bridges. The year plates shall be constructed in reverse and attached to the forms in such a manner that the finished imprint in the concrete does not exceed one-half (½) inch in depth.
2. Year plates shall be located on structure(s) as follows:
   a. On cast-in-place box culverts the year plates shall be four and one - half (4 ½) inches below the top of the upstream parapet wall and centered laterally on the upstream face. On precast box culverts the year plate shall be centered laterally on the upstream face of the top slab. Where an extended interior wall interferes with this location, the year plate shall be centered in an adjacent barrel.
   b. On bridges with six (6) inch curbs or "Jersey" shaped barriers with no endblocks, the year plate shall be centered vertically on the curb face approximately six (6) inches from the end of the bridge, or as designated by the Engineer. On bridges with "Jersey" shaped barrier endblocks, the year plate shall be centered on the upper sloped portion of the barrier approximately 5'- 6" from the end of the bridge, or as designated by the Engineer. There shall be one year plate at each end of the bridge on opposite sides.
   c. When the plans specify that both the original date of construction and the date of reconstruction are to be shown, one date shall be placed as listed above and the other located adjacent to it. Both year plates shall be shown at each end of the bridge on opposite sides.
3. There will be no separate measurement or payment made for year plates on box culverts and bridges. All costs for this work shall be incidental to other contract items.

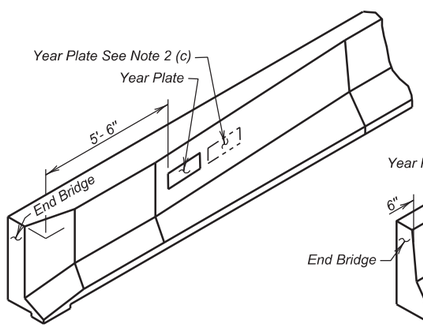


**JERSEY BARRIER**
(With Endblock)

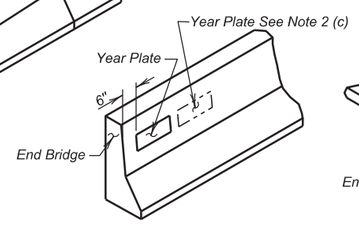


**JERSEY BARRIER**

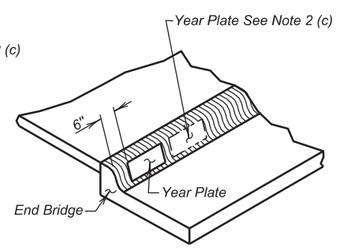


**TYPE B CURB**

June 26, 2012

| Published Date: 4th Qtr. 2015 | SDDOT | DUAL DATE YEAR PLATE DETAILS | PLATE NUMBER 460.03 |
|---|---|---|---|
| | | | Sheet 1 of 1 |

-X721-

| STATE OF | PROJECT | SHEET NO. | TOTAL SHEETS |
|---|---|---|---|
| S.D. | IM-PH 029(112)210 | 169 | 284 |

## INDEX OF BRIDGE SHEETS:—


Sheet No. 1 - General Drawing and Quantities
Sheet No. 2 - Details of Std. Superstructure SCBG-30-00-473.25-1-6 (9-22-58)
Sheet No. 3 - Exp. Device & Superstructure Det. SCBG-30-00-473.25-2-6 (3-20-58)
Sheet No. 4 - Box Girder Data and Shoe Det. SCBG-30-00-473.25-3-6 (3-20-58)
Sheet No. 5 - Std. Pier Details SCBG-30-00-473.25-4-6 (5-1-58)
Sheet No. 6 - Det. of Std. Reinf. Conc. Sill SCBG-30-00-473.25-5-6 (3-20-58)
Sheet No. 7 - Type-B Railing & Drain Det. SR-SCBG — 00-473.25-6-6 (12-30-58)


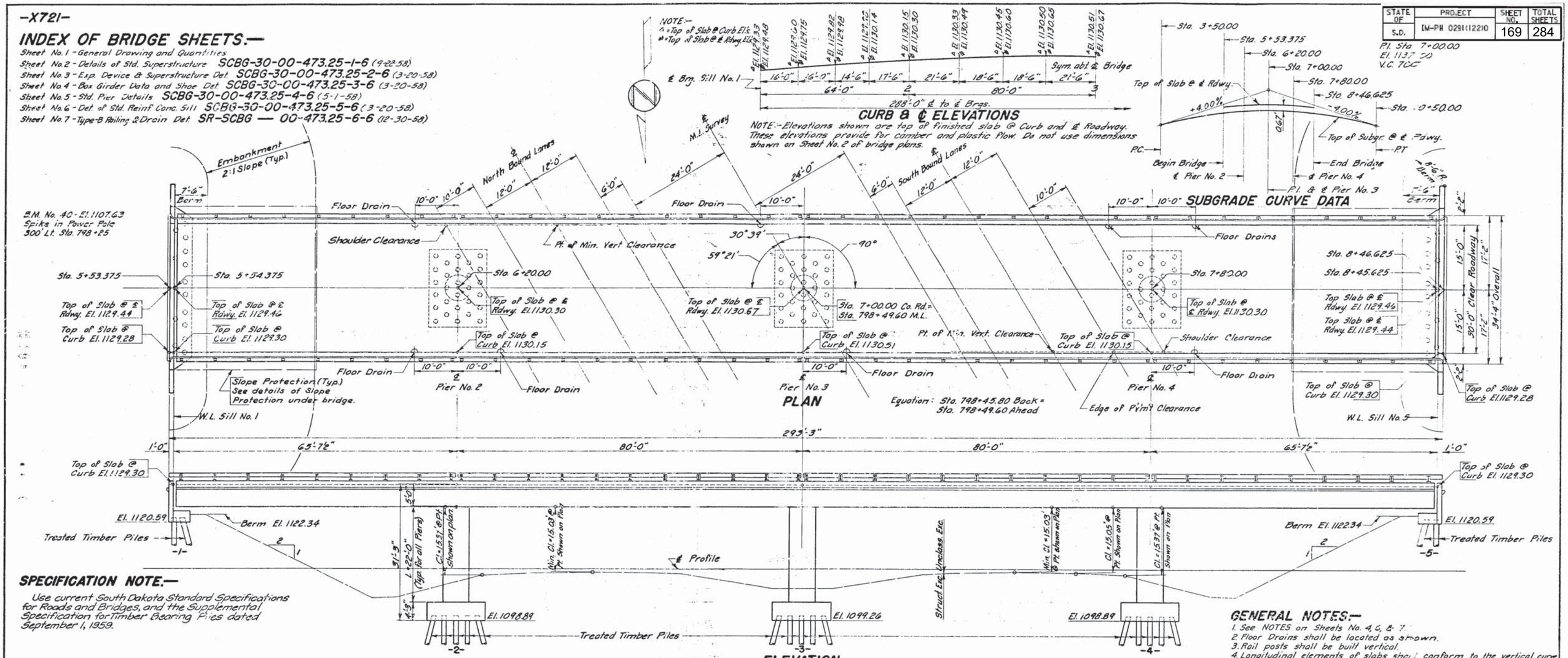


## SPECIFICATION NOTE:—

Use current South Dakota Standard Specifications for Roads and Bridges, and the Supplemental Specification for Timber Bearing Piles dated September 1, 1959.

## TEST HOLE DATA

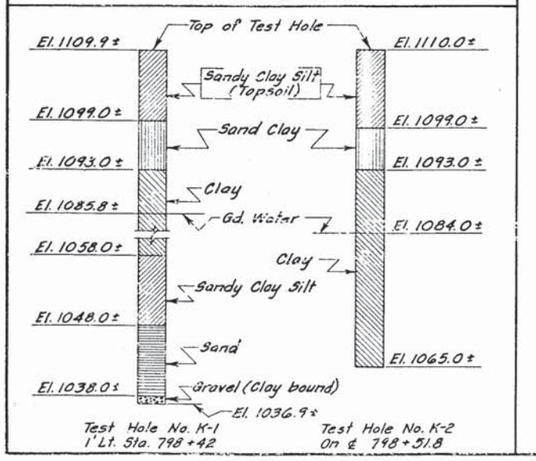


## ESTIMATED QUANTITIES

| ITEM | Concrete - Cu. Yds. Class "A" | Concrete - Cu. Yds. *Light Wt. | Steel - Lbs. Reinf. | Steel - Lbs. Struct. | Tubular Steel Railing Lin. Ft. | #Treated Timber Piles Lin. Ft. | Excavation - Cu. Yds. Struct. | Excavation - Cu. Yds. ▲Unclass. |
|---|---|---|---|---|---|---|---|---|
| Superstructure | | 695.3 | 158,600 | 9,410 | 588.9 | | | |
| Sills No. 1 & 5 | 58.6 | | 6,560 | | | 30 @ 75'=2250 | 40 | |
| Piers No. 2, 3, & 4 | 183.9 | | 22,360 | | | 84 @ 55'=4620 | 290 | |
| Totals | 242.5 | 695.3 | 187,520 | 9,410 | 588.9 | 6,870 | 330 | |

# One Treated Timber Test Pile shall be driven at Sills No. 1 & 5 and at Piers No 2, 3, & 4 before remaining piles are ordered.
▲ See Grading Plans for Unclassified Excavation.
PILE NOTE:-Piles driven at Sills No. 1 & 5 including test piles, shall obtain their Pull bearing (20 tons) in the natural ground below the new embankments elevations 1110.0± and 1110.0± respectively. Pre-bored holes thru the fill are required and shall be a minimum diameter 2" larger than the nominal diameter (3" from butt) of the pile.
*See supplemental specifications Dated Feb. 1, 1956.

## GENERAL NOTES:—

1. See NOTES on Sheets No. 4, 6, & 7.
2. Floor Drains shall be located as shown.
3. Rail posts shall be built vertical.
4. Longitudinal elements of slabs shall conform to the vertical curve.
5. Surface Finish, Sec. 463. x (3) of the current South Dakota Std. Specifications, shall also include such portions of the structure which are visible from any traveled lane.

NOTE: THESE PLANS HAVE RESTRICTED CLEARANCE. To be modified by CCC to provide 16.0± clearance

GENERAL DRAWING AND QUANTITIES
FOR
# 293'-3" BOX GIRDER BRIDGE
30'-0" ROADWAY

OVER I.S. NO. 29 STA. 798+49.60 SEC. 4-T89N-R48W
STA. 5+53.375 TO 8+46.625 I-29-1(6)0
UNION COUNTY
SOUTH DAKOTA H20-S16-44
DEPARTMENT OF HIGHWAYS & ALT.
SEPT. 1958 (16) OF (21)

ORIGINAL CONSTRUCTION PLANS

Rev. for Clearance 1-6-60
Rev. for Clearance 11-13-59

| DESIGNED BY | DRAWN BY | CHECKED BY B.O.M. & M.C.W. | APPROVED |
|---|---|---|---|
| | D.P. | | BRIDGE ENGINEER |

-X721-

6-149-3.5

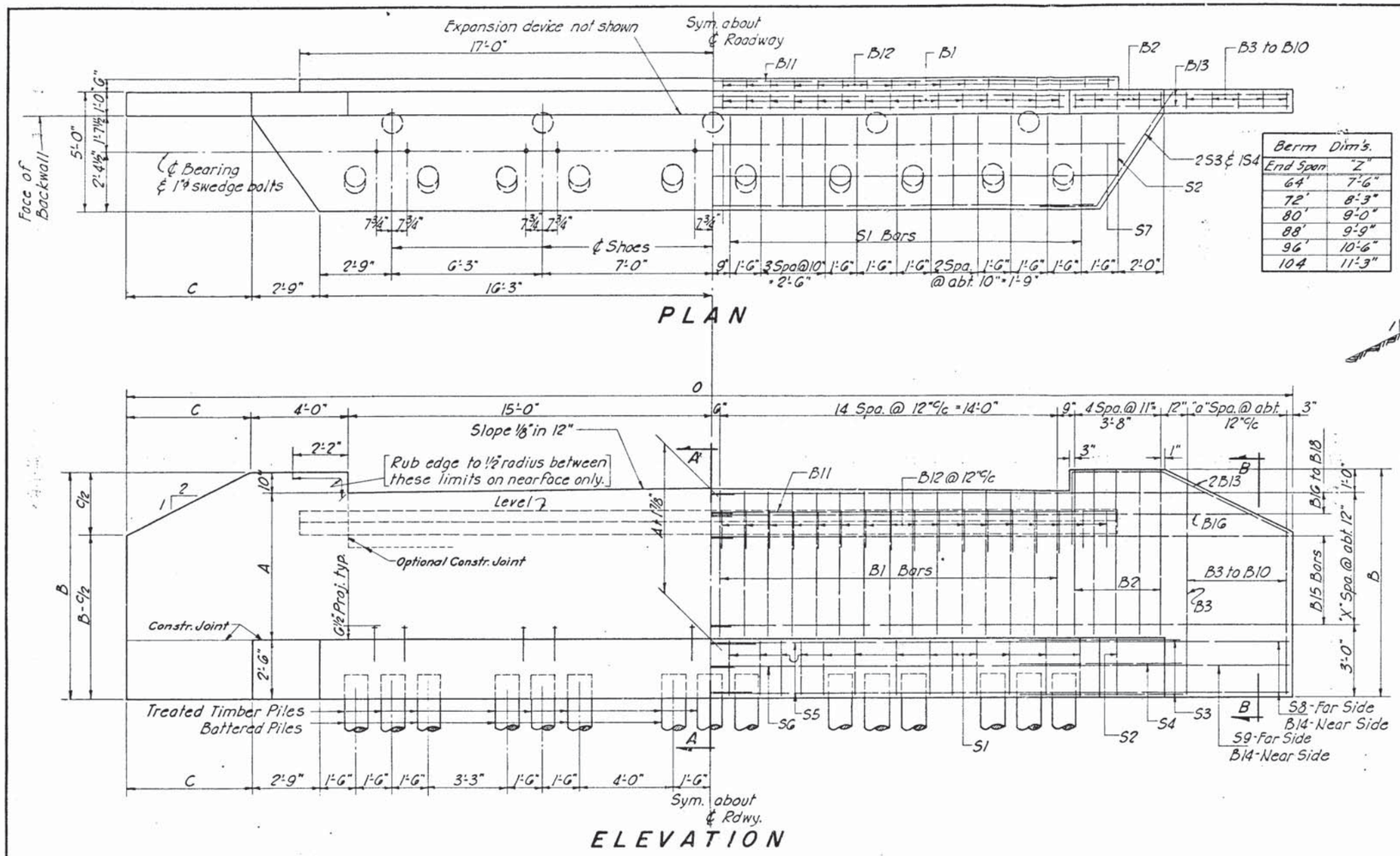


| Berm Dim's. | |
|---|---|
| End Span | "Z" |
| 64' | 7'-6" |
| 72' | 8'-3" |
| 80' | 9'-0" |
| 88' | 9'-9" |
| 96' | 10'-6" |
| 104 | 11'-3" |

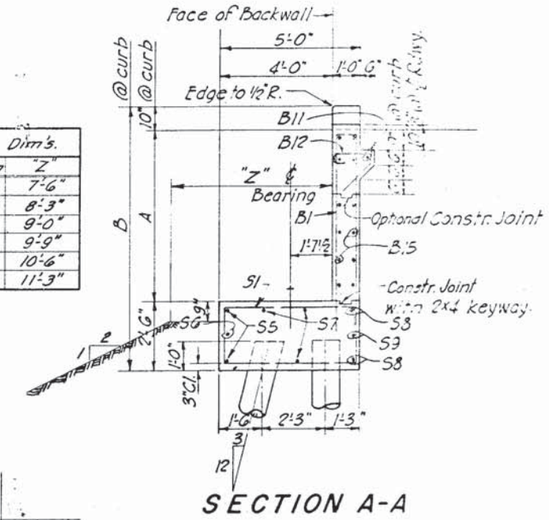


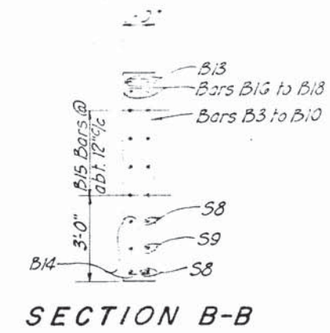


## GENERAL NOTES:

All exposed edges shall be chamfered 1" except as shown.
Use 2" clear cover on all reinforcing except as shown.
All swedge bolts shall be 1"ø x 1'-6" with hex nut and cut washer. (listed as structural steel in superstructure quantities.)

## SILL DATA (FOR ONE SILL)

### REINFORCING SCHEDULE

| LENGTH OVERALL | B1 No. | B1 Size | B1 "E" | B1 Length | B2 No. | B2 Size | B2 "F" | B2 Length | B3 No. | B3 Size | B3 "Y" | B3 Length | B4 No. | B4 Size | B4 "Y" | B4 Length | B5 No. | B5 Size | B5 "Y" | B5 Length | B6 No. | B6 Size | B6 "Y" | B6 Length | B7 No. | B7 Size | B7 "Y" | B7 Length | B8 No. | B8 Size | B8 "Y" | B8 Length | B9 No. | B9 Size | B9 "Y" | B9 Length |
|---|---|---|---|---|---|---|---|---|---|---|---|---|---|---|---|---|---|---|---|---|---|---|---|---|---|---|---|---|---|---|---|---|---|---|---|---|
| 293'-3" | 30 | 5 | 7'-5" | 15'-6" | 10 | 5 | 8'-2" | 17'-0" | 2 | 5 | 8'-8" | 19'-6" | 2 | 5 | 8'-2" | 18'-6" | 2 | 5 | 7'-8" | 17'-6" | 2 | 5 | 7'-11½" | 16'-6" | 2 | 5 | 6'-7½" | 15'-6" | None | | | | None | | | |
| 329'-3" | ↑ | 5 | 8'-2" | 17'-0" | ↓ | 5 | 8'-11" | 18'-6" | ↑ | ↓ | 9'-5" | 21'-0" | ↑ | ↓ | 8'-11½" | 20'-0" | ↑ | ↓ | 8'-6" | 19'-3" | ↑ | ↓ | 8'-0" | 18'-3" | ↑ | ↓ | 7'-6" | 17'-3" | 2 | 5 | 7'-0" | 16'-3" | None | | | |
| 365'-3" | | 5 | 8'-8" | 18'-0" | | 5 | 9'-5" | 19'-6" | | | 9'-11" | 22'-0" | | | 9'-4½" | 21'-0" | | | 8'-10½" | 20'-0" | | | 8'-4" | 18'-9" | | | 7'-9½" | 17'-9" | ↑ | ↓ | 7'-3" | 16'-9" | None | | | |
| 401'-3" | | 6 | 9'-8" | 20'-0" | | 6 | 10'-5" | 21'-6" | | | 10'-10½" | 24'-0" | | | 10'-4½" | 23'-0" | | | 9'-10½" | 22'-0" | | | 9'-4½" | 21'-0" | | | 8'-10½" | 20'-0" | | | 8'-4½" | 19'-0" | 2 | 5 | 7'-10½" | 18'-0" |
| 437'-3" | ↑ | 6 | 10'-2" | 21'-0" | ↑ | 6 | 10'-11" | 22'-6" | ↑ | ↓ | 11'-4½" | 25'-0" | ↑ | ↓ | 10'-11" | 24'-0" | ↑ | ↓ | 10'-5½" | 23'-0" | ↑ | ↓ | 9'-11½" | 22'-0" | ↑ | ↓ | 9'-5" | 21'-3" | ↑ | ↓ | 9'-0½" | 20'-3" | 2 | 5 | 8'-6½" | 19'-3" |
| 473'-3" | 30 | 6 | 10'-11" | 22'-6" | 10 | 6 | 11'-8" | 24'-0" | 2 | 5 | 12'-1½" | 26'-6" | 2 | 5 | 11'-7½" | 25'-6" | 2 | 5 | 11'-1" | 24'-3" | 2 | 5 | 10'-7" | 23'-3" | 2 | 5 | 10'-0½" | 22'-3" | 2 | 5 | 9'-6½" | 21'-3" | 2 | 5 | 9'-0" | 20'-3" |

### BAR BENDING DIAGRAMS

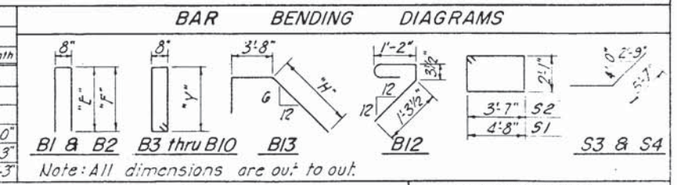


Note: All dimensions are out to out.

### REINFORCING SCHEDULE (CONT.)

| B10 No. | B10 Size | B10 "Y" | B10 Length | B11 No. | B11 Size | B12 Length | B12 No. | B12 Size | B12 Length | B13 No. | B13 Size | B13 "H" | B13 Length | B14 No. | B14 Size | B14 Length | B15 No. | B15 Size | B15 Length | B16 No. | B16 Size | B16 Length | B17 No. | B17 Size | B17 Length | B18 No. | B18 Size | B18 Length |
|---|---|---|---|---|---|---|---|---|---|---|---|---|---|---|---|---|---|---|---|---|---|---|---|---|---|---|---|---|
| | None | | | 2 | 5 | 18'-0" | 34 | 4 | 3'-3" | 4 | 6 | 5'-9" | 11'-6" | 6 | 4 | 7'-3" | 20 | 4 | 25'-9" | 4 | 4 | 23'-9" | 4 | 4 | 21'-9" | None | | |
| | None | | | ↓ | ↑ | ↓ | ↓ | ↑ | ↓ | ↓ | ↑ | 6'-7" | 12'-3" | ↓ | ↓ | 8'-0" | 20 | ↓ | 25'-9" | ↓ | ↑ | 23'-9" | ↓ | ↑ | 21'-9" | None | | |
| | None | | | | | | | | | | | 7'-11½" | 12'-9" | | | 8'-6" | 24 | | 23'-3" | | | 23'-9" | | | 21'-9" | None | | |
| | None | | | | | | | | | | | 8'-0" | 13'-9" | | | 9'-3" | 24 | | 27'-0" | | | 25'-6" | | | 23'-9" | 4 | 4 | 21'-9" |
| 2 | 5 | 8'-1" | 18'-3" | ↑ | ↑ | ↓ | ↑ | ↑ | ↓ | ↑ | ↑ | 8'-6½" | 14'-3" | ↑ | ↑ | 9'-9" | 24 | ↑ | 27'-6" | ↑ | ↑ | 25'-9" | ↑ | ↑ | 23'-9" | 4 | 4 | 21'-9" |
| 2 | 5 | 8'-5½" | 19'-0" | 2 | 5 | 18'-0" | 34 | 4 | 3'-3" | 4 | 6 | 9'-2½" | 15'-0" | 6 | 4 | 10'-6" | 28 | 4 | 29'-3" | 4 | 4 | 25'-9" | 4 | 4 | 23'-9" | 4 | 4 | 21'-9" |

### REINFORCING SCHEDULE (CONT.)

| S1 No. | S1 Size | S1 Length | S2 No. | S2 Size | S2 Length | S3 No. | S3 Size | S3 Length | S4 No. | S4 Size | S4 Length | S5 No. | S5 Size | S5 Length | S6 No. | S6 Size | S6 Length | S7 No. | S7 Size | S7 Length | S8 No. | S8 Size | S8 Length | S9 No. | S9 Size | S9 Length |
|---|---|---|---|---|---|---|---|---|---|---|---|---|---|---|---|---|---|---|---|---|---|---|---|---|---|---|
| 26 | 5 | 12'-3" | 2 | 5 | 12'-3" | 4 | 11 | 8'-3" | 2 | 4 | 6'-9" | 4 | 11 | 13'-6" | 2 | 4 | 17'-0" | 6 | 6 | 18'-6" | 4 | 11 | 26'-6" | 2 | 4 | 25'-0" |
| ↓ | ↓ | ↓ | ↓ | ↓ | ↓ | ↓ | ↓ | ↓ | ↓ | ↓ | ↓ | ↓ | ↓ | ↓ | ↓ | ↓ | ↓ | ↓ | ↓ | ↓ | ↓ | ↓ | 27'-3" | ↑ | ↓ | 25'-9" |
| | | | | | | | | | | | | | | | | | | | | | | | 27'-9" | | | 26'-3" |
| | | | | | | | | | | | | | | | | | | | | | | | 28'-3" | | | 27'-0" |
| | | | | | | | | | | | | | | | | | | | | | | | 29'-0" | | | 27'-6" |
| 26 | 5 | 14'-3" | 2 | 5 | 12'-3" | 4 | 11 | 8'-3" | 2 | 4 | 6'-9" | 4 | 11 | 13'-6" | 2 | 4 | 17'-0" | 6 | 6 | 18'-6" | 4 | 11 | 29'-9" | 2 | 4 | 28'-3" |

### DIMENSIONS

| A | B | B-C/2 | C | "a" | "x" | O |
|---|---|---|---|---|---|---|
| 6'-2½" | 9'-6½" | 3'-11" | 5'-3" | 4 | 3 | [illegible] |
| 5'-11½" | 10'-3½" | 3'-3½" | 5'-0" | 5 | 3 | [illegible] |
| 7'-5" | 10'-9½" | 3'-6" | [illegible] | 5 | 3 | [illegible] |
| 8'-5" | 11'-9" | 3'-1½" | [illegible] | 5 | 3 | [illegible] |
| 8'-11" | 12'-3" | 3'-3" | [illegible] | 5 | 3 | [illegible] |
| 9'-8" | 13'-0" | 3'-9" | 5'-3" | 4 | 3 | [illegible] |

Joints Rev 3-21-58

## ORIGINAL CONSTRUCTION PLANS

DETAILS OF STANDARD REINF CONC. SILL FOR
4-SPAN CONTINUOUS
CONCRETE BOX GIRDER BRIDGES
WITH
SINGLE COLUMN PIERS ON PILES
30'-0" ROADWAY 293'-3" TO 473'-3" OVERALL LENGTH

DECEMBER 1957 SOUTH DAKOTA H20-S16-44 & ALT.

DEPARTMENT OF HIGHWAYS
KIRKHAM, MICHAEL & ASS
CONSULTING ENGINEER



| DESIGNED BY | DRAWN BY | CHECKED BY | APPROVED BY |
|---|---|---|---|
| C.J.K. | [illegible] | C.J.K. | [illegible] |

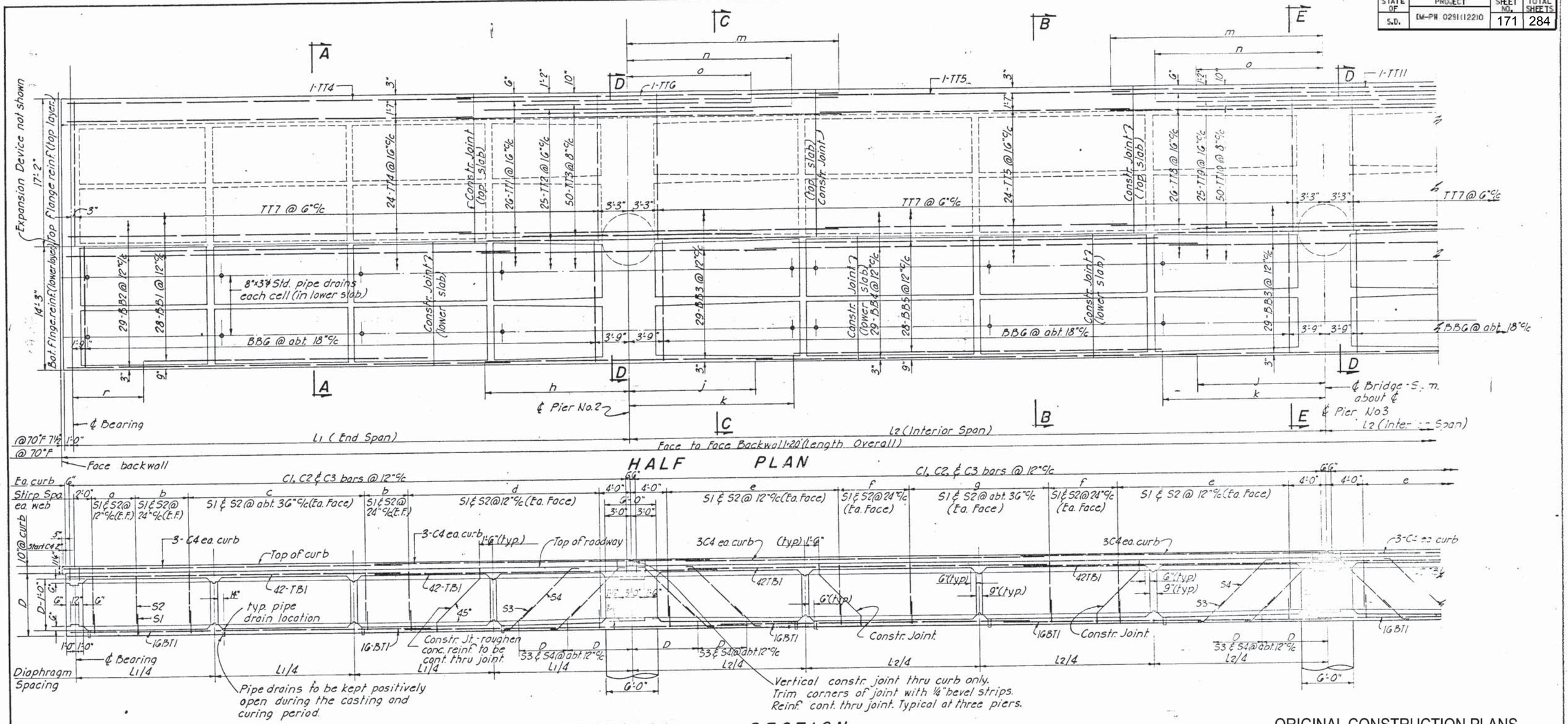


## ESTIMATED QUANTITIES

| LENGTH OVER ALL | TWO SILLS: CLASS A CONC. CU. YDS. | TWO SILLS: REINF. STEEL LBS. | TWO SILLS: NO. OF PILES | THREE PIERS: CLASS A CONC. CU. YDS. Constant Quantity | THREE PIERS: CU. YDS./Lin. Ft. Constant for 3 Cols. "a" | THREE PIERS: REINF. STEEL - LBS.Δ Constant Quantity | THREE PIERS: LBS./Lin. Ft. for 3 Cols. "a" | THREE PIERS: NO. OF PILES | GIRDER & CURBS: LIGHT WEIGHT CONC. CU. YDS. | GIRDER & CURBS: REINF. STEEL LBS. | GIRDER & CURBS: NO. OF LOCK DRAINS | GIRDER & CURBS: STRUCT. STEEL LBS. | TOTALS, Exclusive of Railing & Excavation: CLASS A CONC. CU. YDS. | TOTALS: LIGHT WEIGHT CONC. CU. YDS. | TOTALS: REINF. STEEL LBS. | TOTALS: STRUCT. STEEL LBS. | TOTALS: NO. OF PILES |
|---|---|---|---|---|---|---|---|---|---|---|---|---|---|---|---|---|---|
| 293'-3" | 59.6 | 4,560 | 30 | 114.8 | 3.141 | 8,565 | 628 | 84 | 69.3 | 58,600 | 40 | 9,870 | 173.4 + QL | 69.3 | 170,705 + PL | 9,870 | 114 |
| 329'-3" | 62.2 | 6,860 | 30 | 140.6 | 3.141 | 9,170 | 670 | 96 | 81.4 | 183,615 | 44 | 9,825 | 207.8 + QL | 81.4 | 199,645 + PL | 9,825 | 126 |
| 365'-3" | 64.6 | 7,140 | 30 | 171.0 | 3.141 | 12,770 | 755 | 108 | 93.3 | 214,095 | 52 | 10,035 | 235.4 + QL | 93.3 | 233,305 + PL | 10,035 | 138 |
| 401'-3" | 69.1 | 8,400 | 30 | 200.0 | 3.141 | 14,375 | 840 | 120 | 105.5 | 244,435 | 56 | 10,680 | 269.1 + QL | 105.5 | 261,210 + PL | 10,680 | 150 |

Δ - Includes wt. of 4-Spacer bars per pier.

ϕ - Cost of fabric pads to be absorbed in unit price bid for structural steel.

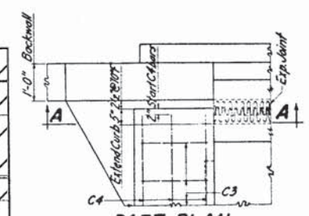


PART PLAN

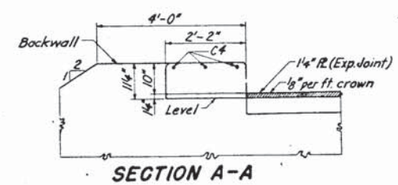


SECTION A-A

DETAILS OF CURB JOINT AT SILL

## ORIGINAL CONSTRUCTION PLANS

DETAILS OF STANDARD SUPERSTRUCTURE FOR

4-SPAN CONTINUOUS

CONCRETE BOX GIRDER BRIDGES

WITH

SINGLE COLUMN PIERS ON PILES

30'-0" ROADWAY 293'-3" TO 473'-3" OVERALL LENGTH

DECEMBER 1957 SOUTH DAKOTA H20-S16-44 & ALT.

DEPARTMENT OF HIGHWAYS

KIRKHAM, MICHAEL & ASSOCIATES
CONSULTING ENGINEERS



Curb Joint Rev. 9-24-57
Re-Steel Quant. Rev. 5-[illegible]
Re-Steel Quant. Rev. 3-[illegible]

| DESIGNED BY | DRAWN BY | CHECKED BY | APPROVED BY |
|---|---|---|---|
| [illegible] | [illegible] | [illegible] | |

| STATE OF | PROJECT | SHEET NO. | TOTAL SHEETS |
|---|---|---|---|
| S.D. | IM-PH 029(112)210 | 172 | 284 |

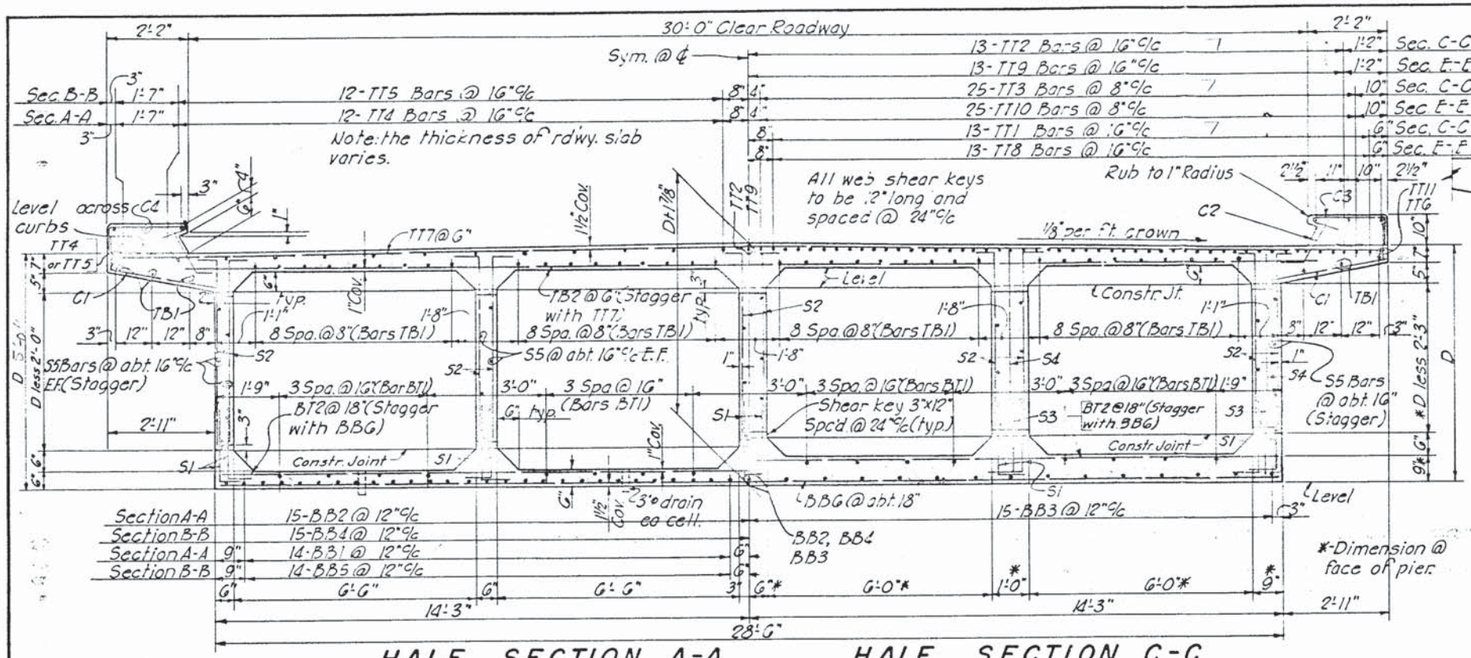


HALF SECTION A-A
HALF SECTION B-B

HALF SECTION C-C
HALF SECTION E-E

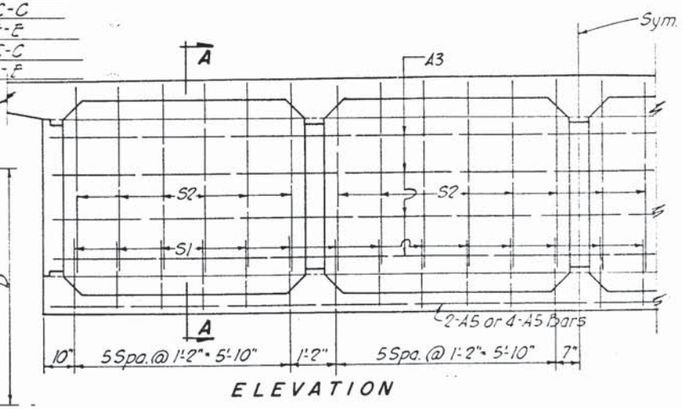


ELEVATION

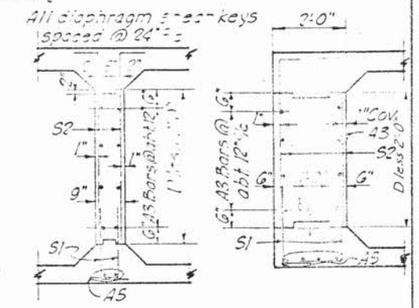


SECTION A-A (INTERIOR)

SECTION A-A (END DIAPH.)

TYPICAL DIAPHRAGM DETAILS

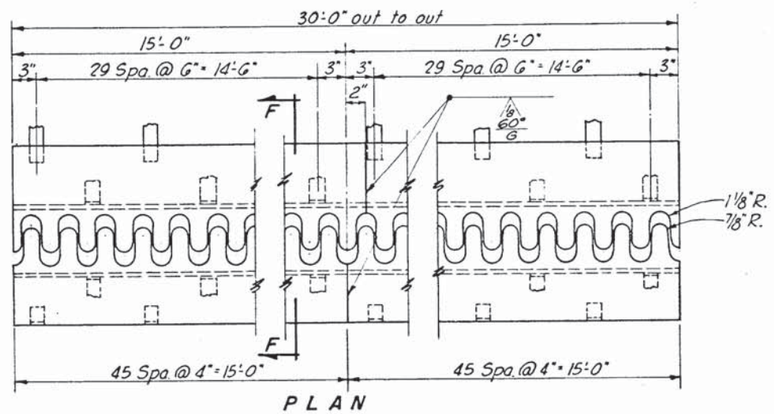


PLAN

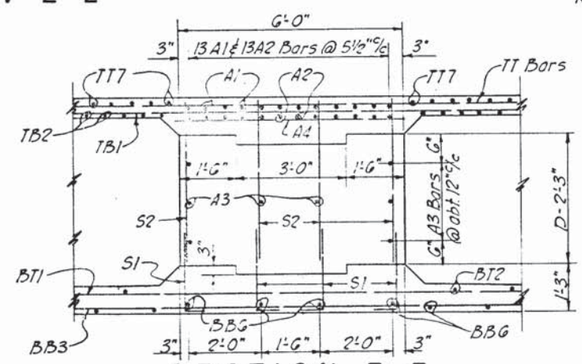


SECTION E-E

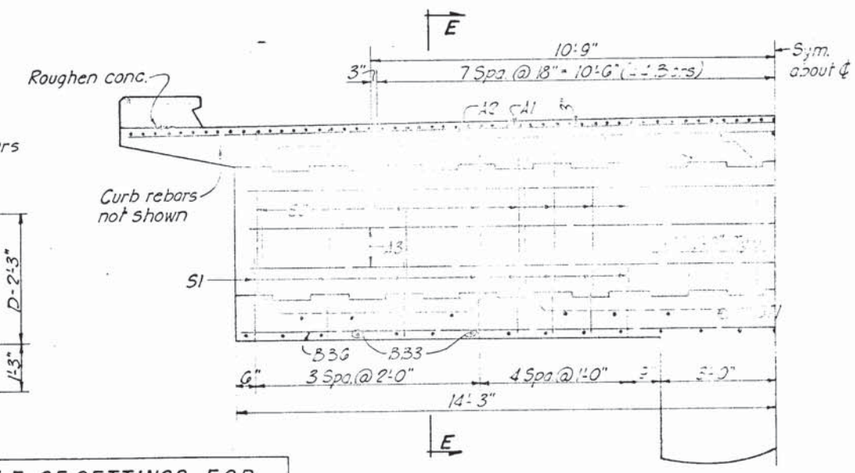


SECTION D-D
(Column Re-Steel not shown)

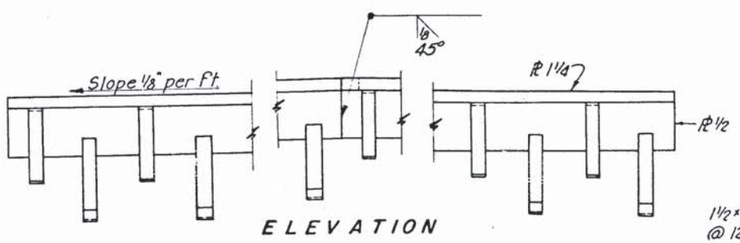


ELEVATION

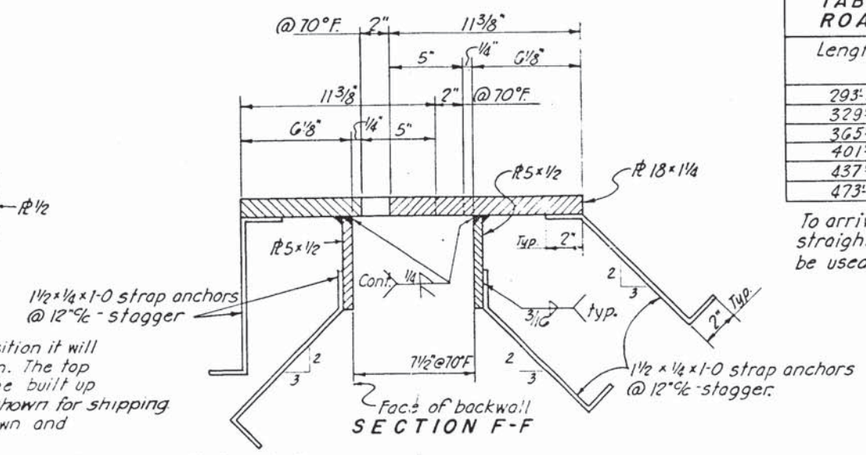


SECTION F-F

TABLE OF SETTINGS FOR ROADWAY EXPANSION DEVICES

| Length Overall | Temp. Range 120°F | 70°F | 20°F | -30°F |
|---|---|---|---|---|
| 293'-3" | 1 1/4" | 2" | 2 3/4" | 3 1/2" |
| 329'-3" | | | | |
| 365'-3" | | | | |
| 401'-3" | 1" | 2" | 3" | 4" |
| 437'-3" | | | | |
| 473'-3" | | | | |

To arrive at any value in-between, straight line proportioning should be used.

The Expansion Device shall be completely shop assembled, adjusted to the position it will take in the Final structure, and the pieces match marked for field erection. The top surface of the Expansion Device shall conform to the roadway crown. The built up Expansion Device may be made in sections of half the roadway width ± as shown for shipping. Splices shall be made near centerline of roadway with welds as shown and with roadway surface of welds ground smooth.

ROADWAY EXPANSION DEVICE DETAILS

Det Rev. 3-20-58

## ORIGINAL CONSTRUCTION PLANS

EXPANSION DEVICE & SUPERSTRUCTURE DETAILS FOR
4-SPAN CONTINUOUS
CONCRETE BOX GIRDER BRIDGES
WITH
SINGLE COLUMN PIERS ON PILES
30'-0" ROADWAY 293'-3" TO 473'-3" OVERALL LENGTH

DECEMBER 1957 SOUTH DAKOTA H20-S16-44 & ALT.
DEPARTMENT OF HIGHWAYS
KIRKHAM, MICHAEL & ASSOCIATES
CONSULTING ENGINEERS



| DESIGNED BY | DRAWN BY | CHECKED BY | APPROVED |
|---|---|---|---|
| DLE | RCH | CJK | |

SD03-30-00-473.03-2-3

| STATE OF | PROJECT | SHEET NO. | TOTAL SHEETS |
|---|---|---|---|
| S.D. | IM-PH 029(112)210 | 173 | 284 |

CONSTRUCTION NOTE:
Sides of recess for Special End Shoe may be beveled a maximum of 12" in 3'2" to facilitate form removal.

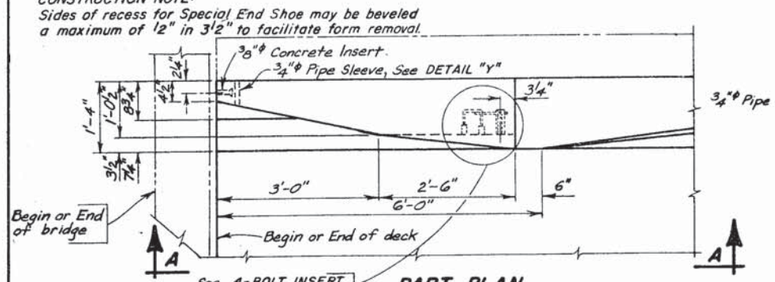


PART PLAN

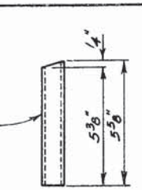


DETAIL "Y"

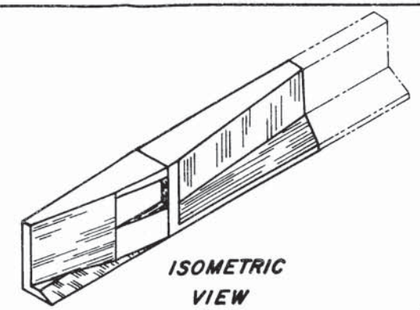

ISOMETRIC VIEW

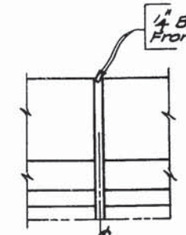


(Typical Detail for chamfering Barrier curb Face at existing construction Joints in curb)

## *REINFORCING SCHEDULE

| MK. | No. | Size | Length | Type | Bending Details |
|---|---|---|---|---|---|
| B15 | 12 | 5 | 14'-3" | Str. | |
| B16 | 72 | 4 | 45'-9" | Str. | |
| B17 | 8 | 4 | 7'-7" | 19A | |
| B18 | 8 | 4 | 2'-6" | Str. | |
| B19 | 8 | 8 | 8'-0" | 19B | |
| B20 | 16 | 5 | 2'-6" | Str. | |
| B21 | 16 | 6 | 2'-11" | Str. | |
| C22 | 1136 | 5 | 2'-5" | 19B | |
| C5 | 4 | | 3'-4" | T1 | |
| C6 | 4 | | 3'-6" | | |
| C7 | 16 | | 3'-7" | | |
| C8 | 4 | | 3'-9" | | |
| C9 | 4 | | 3'-10" | | |
| C10 | 4 | | 3'-11" | | |
| C11 | 4 | | 3'-6" | | |
| C12 | 4 | 5 | 3'-4" | T1 | |

★ B21

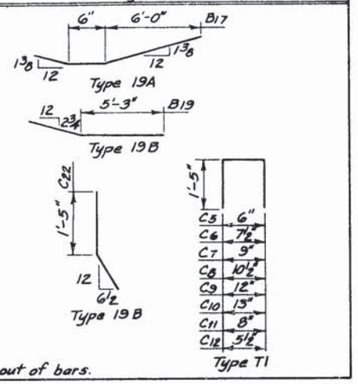


NOTE: All dimensions are out to out of bars.

## *ESTIMATED QUANTITIES

| ITEM | UNIT | QUANTITY |
|---|---|---|
| Class "K" Concrete (Bridge Repair) | Cu. Yds. | 44.4 |
| * Reinforcement Concrete Masonry | Lbs. | 5,674 |
| Breakout Structural Concrete | Cu. Yds. | 17.9 |
| Remove Bridge Railing | Lin. Ft. | 588.5 |
| Install Dowels in Concrete | Each | 16 |

* Does not include 70 Lbs. for B21 as these are paid for under item "Install Dowels in Concrete".
* For one bridge.
□ Existing Reinforcement

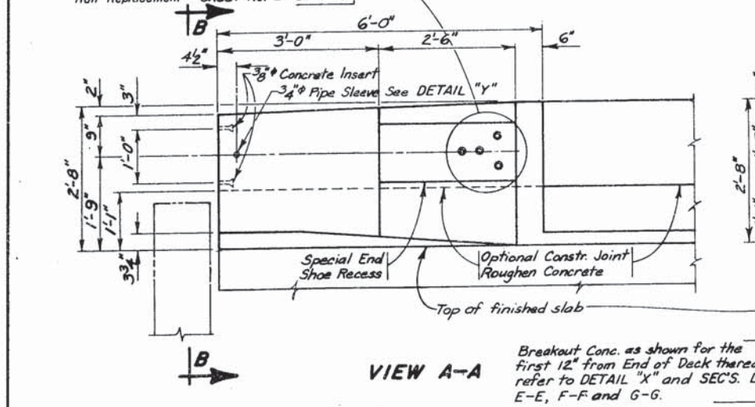


VIEW A-A

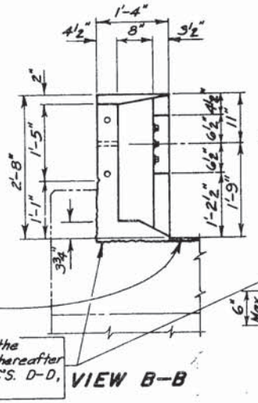

VIEW B-B

Breakout Conc. as shown for the first 12" from End of Deck thereafter refer to DETAIL "X" and SEC'S. D-D, E-E, F-F and G-G.

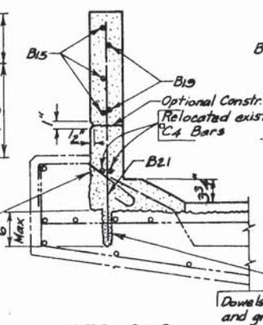


SEC. C-C

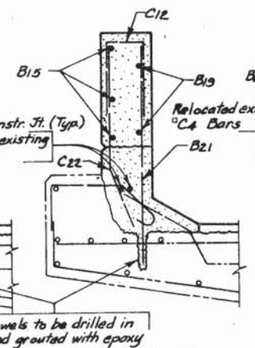


SEC. D-D

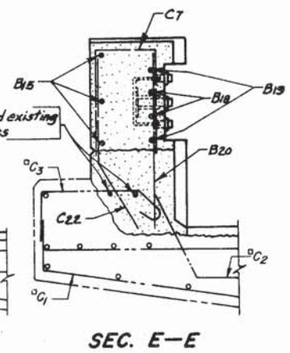

SEC. E-E

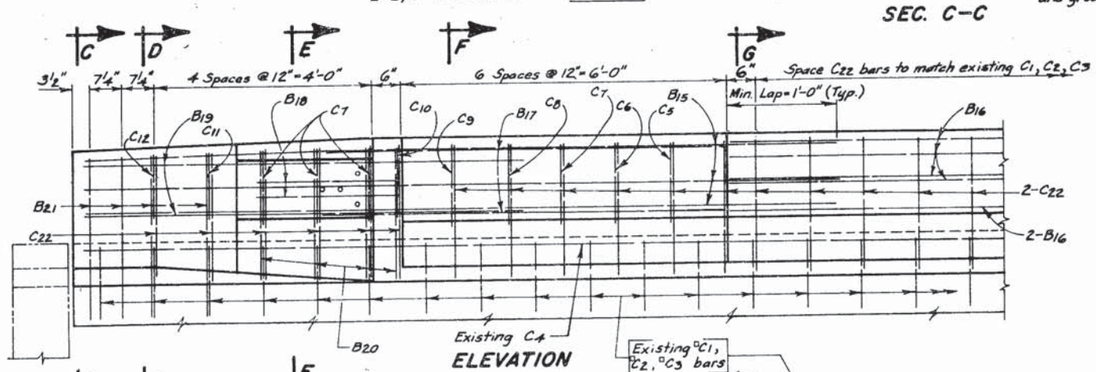


ELEVATION

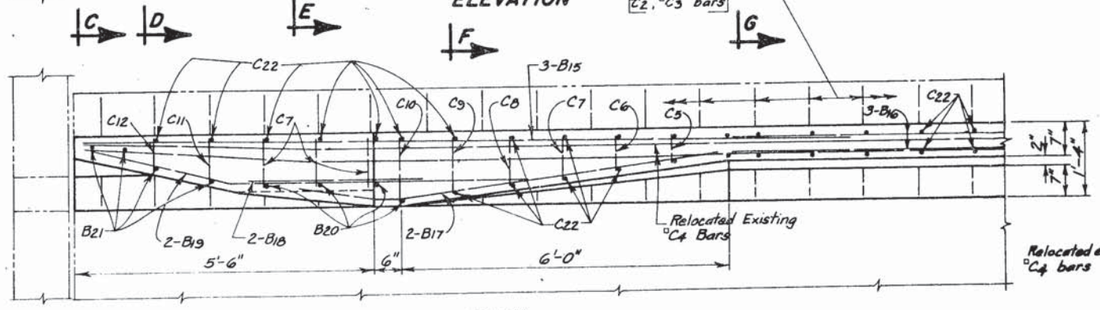


PLAN

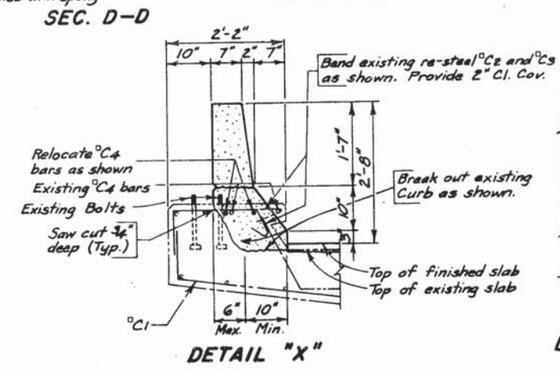


DETAIL "X"

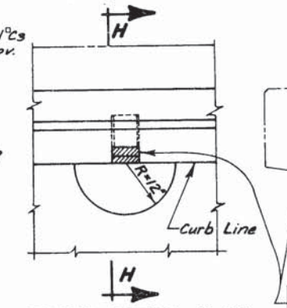


DRAIN DETAIL PLAN

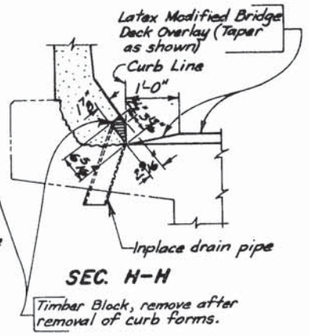


SEC. H-H

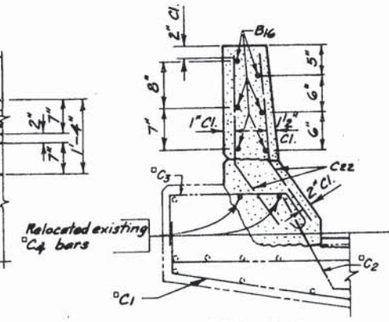


SEC. G-G

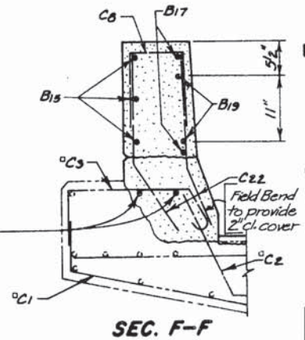


SEC. F-F

ORIGINAL CONSTRUCTION PLANS

BARRIER CURB DETAILS FOR REPLACEMENT OF RAILING
FOR
**293'-3" BOX GIRDER BRIDGE**
30'-0" ROADWAY

OVER I. S. NO. 29 STA. 798+49.60 SEC. 4-T89N-R48W
STA. 5+53.375 TO 6+46.625 IR 29-1(43)4
STR. NO. 64-149-367
UNION COUNTY HS 20-44 (& ALT.)
JULY 1983 Rail Sheet 20 OF 21

| DESIGNED BY | DRAWN BY | CHECKED BY | APPROVED |
|---|---|---|---|
| EOA 7V-83 | C.D. | W.C.P.&K. 7V-83 | BRIDGE ENGINEER |

| STATE OF | PROJECT | SHEET NO. | TOTAL SHEETS |
|---|---|---|---|
| S.D. | IM-PH 0291(12)210 | 174 | 284 |

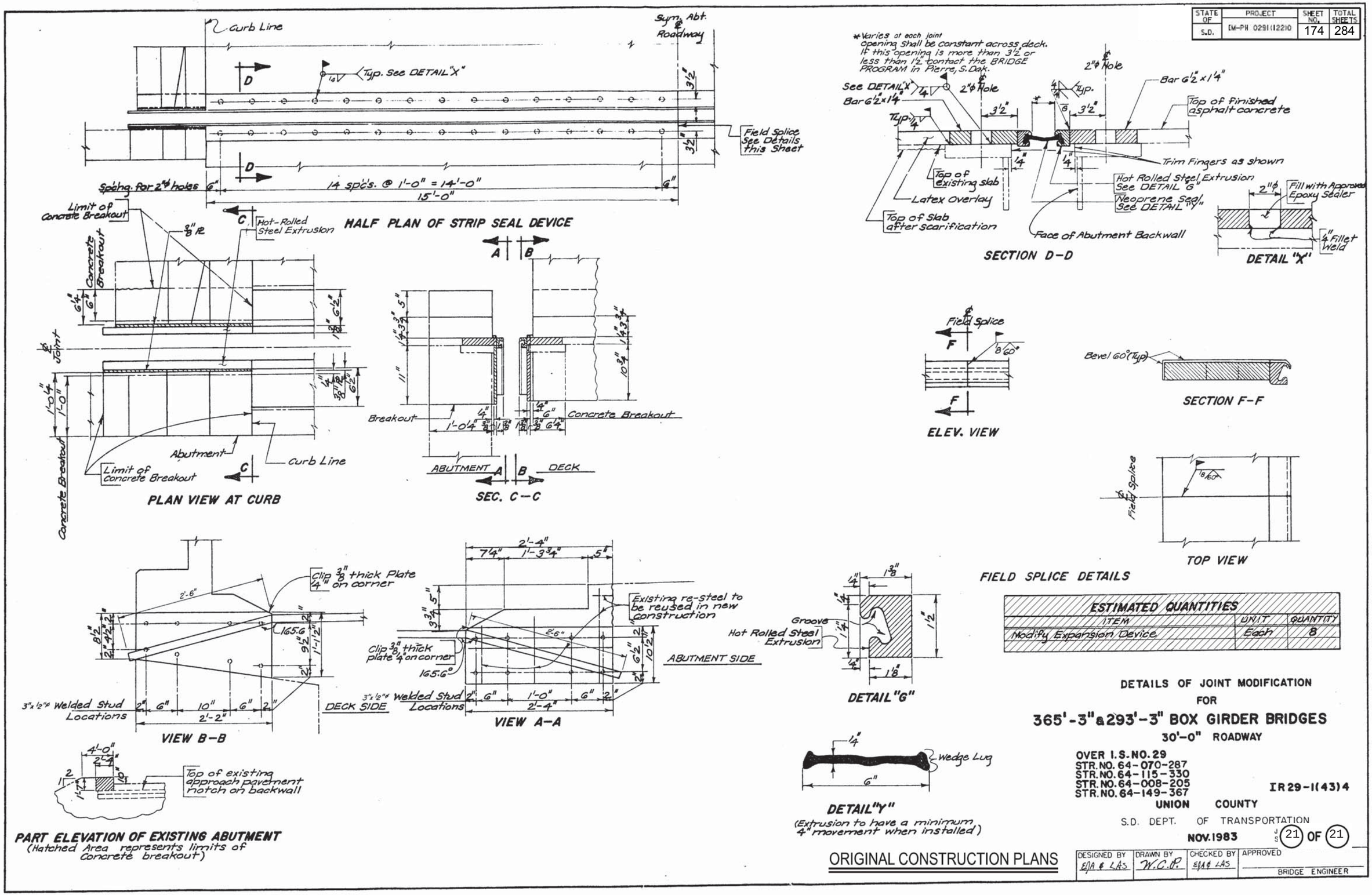


| ESTIMATED QUANTITIES | | |
|---|---|---|
| ITEM | UNIT | QUANTITY |
| Modify Expansion Device | Each | 8 |

DETAILS OF JOINT MODIFICATION
FOR
**365'-3" & 293'-3" BOX GIRDER BRIDGES**
30'-0" ROADWAY

OVER I.S. NO. 29
STR. NO. 64-070-287
STR. NO. 64-115-330
STR. NO. 64-008-205
STR. NO. 64-149-367
UNION COUNTY

IR 29-1(43)4

S.D. DEPT. OF TRANSPORTATION
NOV. 1983

J S 21 OF 21

ORIGINAL CONSTRUCTION PLANS

| DESIGNED BY | DRAWN BY | CHECKED BY | APPROVED |
|---|---|---|---|
| EJA & LAS | W.C.P. | EJA & LAS | BRIDGE ENGINEER |

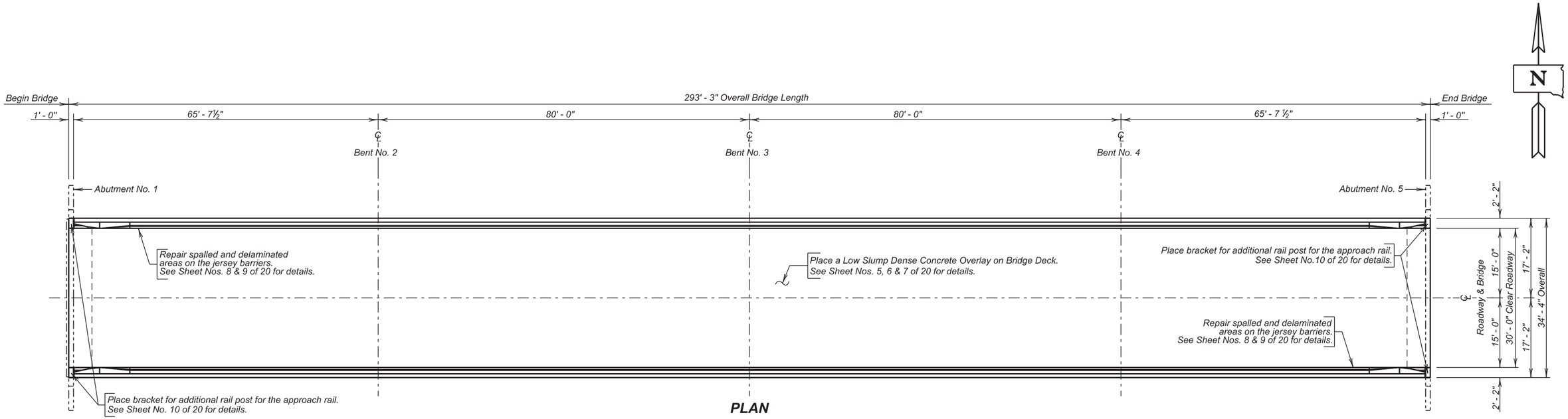


**PLAN**

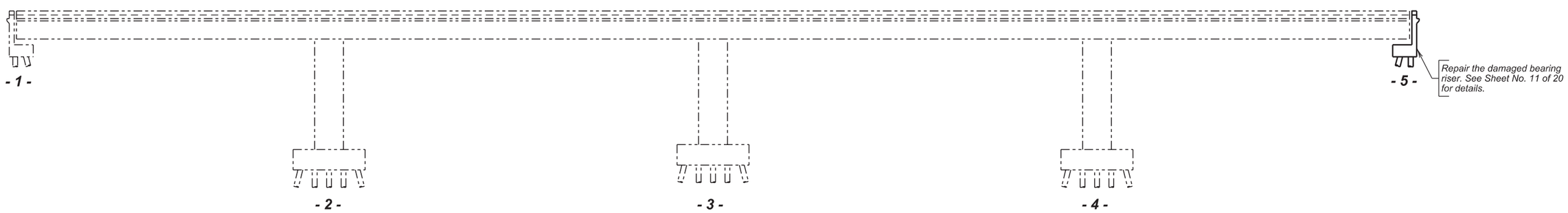


**ELEVATION**

## INDEX OF BRIDGE SHEETS -


Sheet No. 1 - Layout for Upgrading
Sheet No. 2 - Estimate of Structure Quantities and Notes
Sheet No. 3 - Notes (Continued)
Sheet No. 4 - Notes (Continued)
Sheet No. 5 - Deck Delamination Details
Sheet No. 6 - Low Slump Dense Concrete Bridge Deck Overlay
Sheet No. 7 - Low Slump Dense Concrete Overlay (Continued)
Sheet No. 8 - Barrier Repair Layout
Sheet No. 9 - Barrier Repair Details
Sheet No. 10 - Fabricated Support Bracket for Rail Post
Sheet No. 11 - Bearing Riser Repair
Sheet No. 12 - As Built Elevation Survey
Sheet No. 13 - As Built Elevation Survey (Continued)
Sheet No. 14 - As Built Elevation Survey (Continued)
Sheet Nos. 15 - 20 - Original Construction Plans


**LAYOUT FOR UPGRADING**

FOR

# 293' - 3" BOX GIRDER BRIDGE

30' - 0" ROADWAY — 0 SKEW
OVER INTERSTATE 29 — SEC. 18-T92N-R50W
STR. NO. 64-008-205 — IM-PH 0291(122)0
PCN 02PT

UNION COUNTY

S. D. DEPT. OF TRANSPORTATION

OCTOBER 2015



PLANS BY :
OFFICE OF BRIDGE DESIGN, SOUTH DAKOTA DEPARTMENT OF TRANSPORTATION

| DESIGNED BY | CK. DES. BY | DRAFTED BY | |
|---|---|---|---|
| KSK | BD | KR | Kevin N. Goeden |
| UNIN02PT | 02PTRF01 | | BRIDGE ENGINEER |

# ESTIMATE OF STRUCTURE QUANTITIES

| ITEM NO. | DESCRIPTION | QUANTITY | UNIT |
|---|---|---|---|
| 009E3310 | Bridge Elevation Survey | Lump Sum | LS |
| 410E0030 | Structural Steel, Miscellaneous | LumpSum | LS |
| 410E0570 | Bridge End Support | LumpSum | LS |
| 460E0174 | Concrete Patching Material, Miscellaneous | 128.1 | CuFt |
| 460E0300 | Breakout Structural Concrete | 4.4 | CuYd |
| 460E0380 | Install Dowel in Concrete | 16 | Each |
| 480E0200 | Epoxy Coated Reinforcing Steel | 68 | Lb |
| 480E5000 | Galvanic Anode | 160 | Each |
| 550E0010 | Low Slump Dense Concrete Bridge Deck Overlay | 72.3 | CuYd |
| 550E0100 | Concrete Removal Type 1A | 967.3 | SqYd |
| 550E0105 | Concrete Removal Type 2A | 241.3 | SqYd |
| 550E0110 | Concrete Removal Type 1B | 96.7 | SqYd |
| 550E0120 | Concrete Removal Type 1C | 48.4 | SqYd |
| 550E0130 | Concrete Removal Type 1D | 48.4 | SqYd |
| 550E0140 | Concrete Removal Type B | 20.0 | SqYd |
| 550E0200 | Class A45 Concrete Fill | 7.7 | CuYd |
| 550E0500 | Finishing and Curing | 967.4 | SqYd |
| | | | |

## SPECIFICATIONS

1. Design Specifications: AASHTO Standard Specifications for Highway Bridges 2002 17th Edition using Working Stress Design.

2. Construction Specifications: South Dakota Standard Specifications for Roads and Bridges, 2015 Edition and Required Provisions, Supplemental Specifications and Special Provisions as included in the Proposal.

3. All Welding and Welding Inspection shall be in conformance with the AASHTO/AWS Bridge Welding Code D1.5M/D1.5:2010 unless otherwise noted in this plan set.

## DETAILS AND DIMENSIONS OF EXISTING BRIDGE

All details and dimensions of the existing bridge contained in these plans are based on the original construction plans and shop plans and are provided as information only. It is the Contractor's responsibility to inspect and verify the actual field conditions and any necessary as-built dimensions affecting the satisfactory completion of the work required for this project.

## SHOP PLANS

Shop plans shall be required as specified by Section 410.3.A. of the Construction Specifications.

## SCOPE OF BRIDGE WORK & SEQUENCE OF OPERATIONS

All work on this structure shall be accomplished with the traffic control shown in the plans. Alternate sequence of operations may be submitted by the Contractor for approval by the Engineer two weeks prior to the pre-construction meeting.

1. Accomplish all Concrete Removal Type 1A, 2A, 1B, 1C, 1D, and B and place Class A45 Concrete Fill to the satisfaction of the Engineer for the first phase of construction.

2. Place a new Low Slump Dense Concrete Bridge Deck Overlay to the elevations shown in the plans on the bridge deck for the first phase of construction.

3. Repair the spalled and delaminated areas of the barrier for the first phase of construction.

4. Place an additional rail post on the abutment backwalls for the first phase of construction.

5. Switch traffic and repeat steps 1 through 4 for the second phase of construction.

6. Repair the bearing riser at abutment number 5.

## GENERAL CONSTRUCTION – BRIDGE

1. All mild reinforcing steel shall conform to ASTM A615, Grade 60.

2. Use 2" clear cover on all reinforcing steel except as shown otherwise.

3. All exposed concrete corners and edges shall be chamfered ¾" unless noted otherwise in the plans.

4. Surfaces of the fresh concrete at construction joints shall be rough floated sufficiently to consolidate the surface. All construction joints shall be cleaned of surface laitance, curing compounds and other foreign materials prior to placing fresh concrete against the joint.

5. Barrier curbs shall be built normal to the grade.

6. Request for construction joints or resteel splices other than those shown, must be submitted to the Engineer for prior approval. If additional splices are approved, no payment will be allowed for the added quantity of reinforcing steel.

7. Snap ties, if used in the barrier curb formwork, shall be epoxy coated. The epoxy coating shall be inert in concrete and compatible with the coating applied to the new epoxy coated reinforcing steel.

8. The concrete barriers shall be cured in accordance with Section 460.3 M of the Construction Specifications except that no curing compounds shall be allowed.

## BRIDGE DECK OVERLAY

1. The preparation for resurfacing consists of Type 1A Removal on the entire bridge deck and Type 2A, Type 1B, Type 1C, Type 1D and Type B Removal over the deck surface as detailed on the plan sheets. Such removal shall be in conformance with these plans and Section 550 of the Construction Specifications.

2. Type 1A removal shall consist of removing the existing concrete overlay to a depth of 2.25 inches. There are some specific areas, identified on the Deck Profile plan sheets that require Type 1A Removal in excess of 2.25 inches.

3. Extreme care shall be taken during the Type 1B Removal, Type 1C Removal, Type 1D Removal and Type B Removal to ensure that the existing resteel is not damaged. In the event that resteel damage inadvertently occurs, the Bridge Construction Engineer shall be immediately notified. Any damaged resteel shall be repaired by the Contractor, as approved by the Engineer, at no additional cost to the Department.

4. Type 2A Removal, Type 1B Removal, Type 1C Removal, Type 1D Removal, Type B Removal and Class A45 Concrete Fill may not be encountered and may be omitted from the project as determined by the Engineer.

5. Type 1C Removal, Type 1D Removal and Class A45 Concrete Fill is not anticipated to exceed the plan shown quantities. If the Engineer determines that Type 1C Removal, Type 1D Removal and/or Class A45 Concrete Fill in excess of the plan shown quantity is necessary, payment for the additional quantity shall be in conformance with Section 550.5 of the Construction Specifications.

6. Concrete for final deck overlay shall be as specified for Low Slump Dense Concrete in Section 550 of the Construction Specifications.

7. The bridge deck shall be overlayed with a minimum thickness of 2" Low Slump Dense Concrete.

8. It will be necessary for the Contractor to shape the surface of the Low Slump Dense Concrete Overlay within one foot of the curb as detailed in the plans to insure that water drains to the deck drains or off the ends of the bridge.

**ESTIMATE OF STRUCTURE QUANTITIES AND NOTES**
FOR
**293' - 3" BOX GIRDER BRIDGE**

STR. NO. 64-008-205
OCTOBER 2015



| DESIGNED BY | CK. DES. BY | DRAFTED BY | |
|---|---|---|---|
| KSK | MM | KSK | Kevin N. Goeden |
| UNIN02PT | 02PTRF02 | | BRIDGE ENGINEER |

## BRIDGE DECK OVERLAY (CONTINUED)

9. No traffic will be allowed to operate on the scarified portion of the bridge deck. If it appears that the entire Low Slump Dense Concrete Overlay can not be completed prior to winter, the Type 1A, 1B, 1C, 1D and Type B removal shall not be done until work resumes in the spring. In the event that scarification has been started and due to unforeseen circumstances it becomes impossible to complete the placement of the Low Slump Dense Concrete Overlay on the entire surface of the structure prior to winter, the Office of Bridge Design shall be notified. Recommendations for handling winter traffic will then be made. These recommendations may include, but are not limited to, filling extra depth removal areas with Class A45 Concrete, placing an asphalt overlay on the uncompleted area so that the entire roadway width may be opened to traffic, removal of the asphalt overlay when work is resumed and scarifying an additional 1/4" of depth on the bridge deck. The cost of this work, including asphalt overlay, scarification, Class A45 Concrete, extra Low Slump Dense Concrete and all other items incidental to this work, shall be at the expense of the Contractor.

10. During placement of the Low Slump Dense Concrete Overlay all vehicular traffic on the lane open for travel shall be stopped by flaggers before entering onto the bridge and then allowed to proceed at a maximum speed of 5 MPH. To safely slow traffic to cross the bridge during the deck overlay period two advance flaggers shall be used.

## CONCRETE BREAKOUT

1. The existing barriers and bearing riser shall be broken out to the limits shown on the plans. Breakout limits shall be defined with a ¾" deep sawcut (unless specified otherwise in these plans), where practical, as approved by the Engineer. Reinforcing steel that is exposed and is scheduled for use in the new construction shall be cleaned and straightened to the satisfaction of the Engineer. Care shall be taken not to damage the existing reinforcing steel that is to be reused in the new construction during concrete breakout. Any reinforcing steel that is damaged during concrete breakout shall be replaced or repaired, as approved by the Engineer, by the Contractor at no cost to the Department.

2. All broken out concrete and discarded reinforcing bars shall be disposed of by the Contractor. Any disposal of discarded material shall be in accordance with the Environmental Commitments.

3. During concrete removal operations, no broken out concrete shall be allowed to fall onto the roadway below.

4. The contract unit price per cubic yard for "Breakout Structural Concrete" shall include breaking out concrete, cleaning, straightening existing reinforcing steel and disposal of all broken out material.

## GALVANIC ANODES

1. The Contractor shall furnish and place Galvanic anodes in the concrete repair areas specified in this plan set.

2. The galvanic anodes shall be supplied as one of the following:

   Galvashield XP2
   Vector Corrosion Technologies
   13312 N 56th St, Suite 102
   Tampa, FL 33617
   Phone: (813) 830-7566
   Website: www.vector-corrosion.com

   Sentinel Silver
   Euclid Chemical Company
   19218 Redwood Road
   Cleveland, OH 44110
   Phone: (800)321-7628
   Website: www.euclidchemical.com

   Sika Galvashield XP+
   Sika Corporation US
   201 Polito Avenue
   Lyndhurst, NJ 07071
   Phone: (800) 933-7452
   Website: http://usa.sika.com

3. The anodes shall be placed in accordance with manufacturer's recommendations and as approved by the Engineer. The anodes have not been shown on the drawings. The Contractor shall provide shop drawing of the galvanic anode installation including locations of the individual anodes to the Office of Bridge Design.

4. The anodes shall be placed with a minimum ¾" cover and shall be set in Embedding Mortar per the manufacturer's recommendations. The anodes shall be fully encased in the concrete repair material. Where adequate cover does not exist, a concrete pocket shall be chipped out behind the anode to provide sufficient cover. The Contractor may need to chip around the reinforcing bar locally at the anode installation to make the electrical connection. The reinforcing steel at the connection location shall be cleaned per the manufacturer's recommendations to provide sufficient electrical connection and mechanical bond.

5. The electrical continuity of the electrical connections and reinforcing steel shall be confirmed per the manufacturer's recommendations.

6. The Contractor shall provide manufacturer's product literature and installation instructions to the Engineer 10 days prior to installation.

7. All costs associated with placing anodes including labor, equipment, materials and incidentals shall be included in the contract unit price per each for "Galvanic Anode".

## FABRICATED SUPPORT BRACKET FOR GAURDRAIL POST

1. All steel for the Fabricated Support Bracket shall conform to ASTM A709, Grade 36 and shall be galvanized in accordance with AASHTO M111 (ASTM A123).

2. The ¾" diameter fully threaded stud shall conform to ASTM A307. Each anchor bolt shall be furnished with one hardened washer and one heavy hex nut. The ¾" diameter shall be installed according to the "Installing Dowels in Concrete" Notes.

3. Welding and weld inspection shall be in accordance with AWS D1.1-90 Structural Welding Code.

4. The costs associated with placing the fabricated support bracket including labor, equipment, materials and incidentals shall be included in the lump sum price for "Structural Steel, Miscellaneous".

## INSTALLING DOWELS IN CONCRETE

1. Holes drilled in the existing concrete shall be true and normal or as shown in the plans. Drilling holes using a core drill shall not be allowed. Care shall be taken not to damage the existing reinforcing steel. It is likely that some of the existing reinforcing steel shown in the original construction plans may have been placed out of position during original construction. Therefore, prior to the start of drilling any holes in the concrete, an effort will be made by Department forces to mark on the concrete surface where practical any location of the in-place reinforcing steel. In spite of the precaution, the Contractor can still expect to encounter and have to drill through reinforcing steel or shift the dowel spacing as approved by the Engineer to miss the existing reinforcing steel. If the Contractor shifts the dowel spacing, the unused drill holes shall be completely filled with the epoxy resin specified in note number 2.

2. The epoxy resin mixture shall be a type for bonding steel to hardened concrete and shall conform to AASHTO M235 Type IV (Equivalent to ASTM C881, Type IV). Grade 1, 2 or 3 may be used for vertical dowels.

3. The diameter of the drilled holes shall not be less than 1/8 inch greater, nor more than 3/8 inch greater than the diameter of the dowels or as per the Manufacturer's recommendations. The drilled holes shall be blown out with compressed air using a device that will reach the back of the hole to ensure that all debris or loose material has been removed prior to epoxy injection.

**NOTES (CONTINUED)**
FOR
**293' - 3" BOX GIRDER BRIDGE**

STR. NO. 64-008-205
OCTOBER 2015



| DESIGNED BY | CK. DES. BY | DRAFTED BY | |
|---|---|---|---|
| KSK | MM | KSK | Kevin N. Goeden |
| UNIN02PT | 02PTRF03 | | BRIDGE ENGINEER |

## INSTALLING DOWELS IN CONCRETE (CONTINUED)

4. Mix epoxy resin as recommended by the Manufacturer and apply by an injection method as approved by the Engineer. Beginning at the back of the drilled holes, fill the holes 1/3 to 1/2 full of epoxy, or as recommended by the Manufacturer, prior to insertion of the steel bar. Rotate the steel bar during installation to eliminate voids and ensure complete bonding of the bar. Insertion of the bars by the dipping or painting method will not be allowed.

5. No loads shall be applied to the epoxy grouted dowel bars until the epoxy resin has had sufficient time to cure as specified by the epoxy resin manufacturer.

6. Dowel bars shall be deformed bars conforming to ASTM A615 Grade 60.

7. The cost of epoxy resin, dowels, installation and other incidental items shall be incidental to the contract unit price per each for "Install Dowel in Concrete".

## VERTICAL JACKS

1. Vertical jacks shall be used to carry the exterior box girder reaction at abutment number 5 during the time of the bearing riser repair. The intent of the jacking procedure is to transfer the girder reaction to the jack while keeping the vertical movement of the girder to the minimum amount necessary, as approved by the Engineer.

2. The vertical jack shall have a lock nut for mechanical load holding with hydraulic pressure released.

3. The vertical jack shall be able to safely support a load of 191 kips for the entire time required for the bearing riser.

4. Caution shall be exercised when transferring the box beam reactions to and from the jacks to insure that no damage to any of the existing structural components will occur due to the jacking procedure. Any damage to any of the structural components of the bridge caused by the jacking procedure will be repaired as approved by the Engineer at no cost to the Department.

5. Each jack shall have a bearing plate at both ends of sufficient area and thickness to limit the bearing stress on the loaded area of concrete to not more than 1600 psi.

6. The Contractor shall be required to submit a detailed set of plans outlining his jacking procedure to the Engineer a minimum of 30 days prior to use for approval by the Bridge Construction Engineer. Included in this procedure will be the name of the jack used, the load monitoring method for the jack, and details of bearing plates used to limit the bearing stress on the concrete.

7. All costs for materials, labor, equipment and incidentals necessary to perform the vertical jacking as shown by these plans shall be included in the lump sum contract unit price for "Bridge End Support."

## AS-BUILT ELEVATION SURVEY

The Contractor shall be responsible for recording the As-built deck elevations at the locations shown by the Table of As-Built Elevations shown in the plans. The elevations to be recorded in these tables shall be based on the National Geodetic Survey (NGS) North American Vertical Datum of 1988 (NAVD88). The Engineer shall provide the Contractor with a description, elevation, and location of the nearest benchmark that has a NAVD88 established elevation for the Contractor's use. The benchmark shown in the plans has not been tied to the NAVD88. The Contractor shall be responsible for establishing a NAVD88 elevation for the benchmark provided in the plans. All costs associated with obtaining the NAVD88 elevations at the locations shown in the table and for the benchmark shown in the plans, including all equipment, labor and any incidentals required shall be incidental to the contract lump sum price for Bridge Elevation Survey.

**NOTES (CONTINUED)**
FOR
**293' - 3" BOX GIRDER BRIDGE**

STR. NO. 64-008-205
OCTOBER 2015



| DESIGNED BY | CK. DES. BY | DRAFTED BY | |
|---|---|---|---|
| KSK | MM | KSK | Kevin N. Goeden |
| UNIN02PT | 02PTRF04 | | BRIDGE ENGINEER |

| STATE OF | PROJECT | SHEET NO. | TOTAL SHEETS |
|---|---|---|---|
| S.D. | IM-PH 0291(122)0 | 179 | 284 |

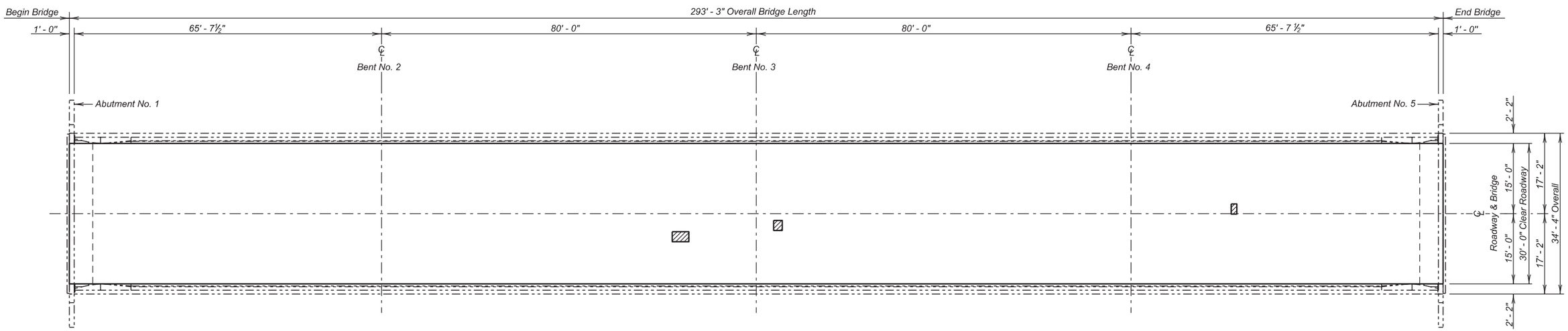


**PLAN**

*LEGEND:*

*Shaded areas indicate approximate location of unsound concrete requiring Concrete Removal, Type 1B.*

**DECK DELAMINATION DETAILS**

FOR

293' - 3" BOX GIRDER BRIDGE

30' - 0" ROADWAY — 0 SKEW
OVER INTERSTATE 29 — SEC. 18-T92N-R50W
STR. NO. 64-008-205 — IM-PH 0291(122)0

UNION COUNTY

S. D. DEPT. OF TRANSPORTATION

OCTOBER 2015

5 OF 20

| DESIGNED BY | CK. DES. BY | DRAFTED BY | |
|---|---|---|---|
| KSK | BD | KR | Kevin N. Goeden |
| UNIN02PT | 02PTRF05 | | BRIDGE ENGINEER |

| STATE OF | PROJECT | SHEET NO. | TOTAL SHEETS |
|---|---|---|---|
| S.D. | IM-PH 0291(122)0 | 180 | 284 |

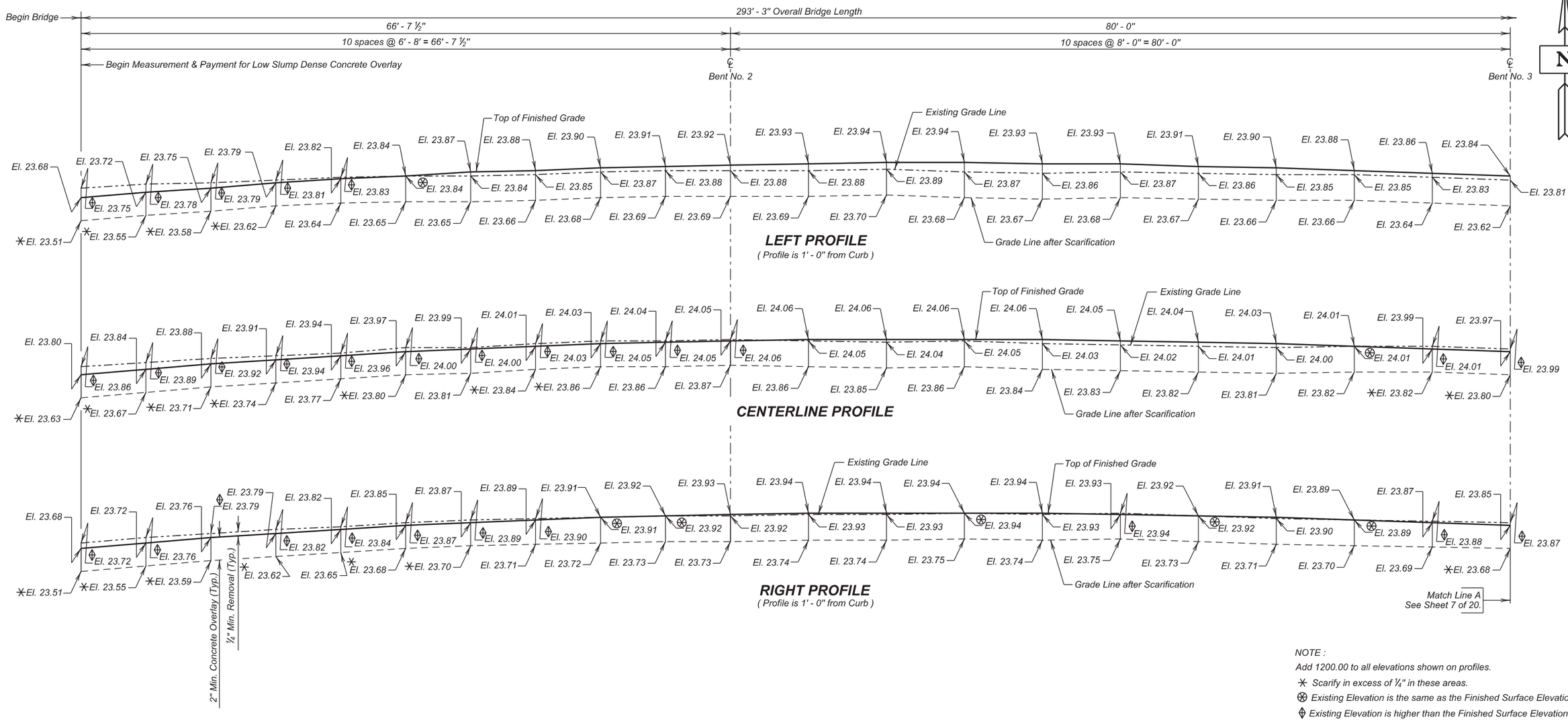


NOTE :

Add 1200.00 to all elevations shown on profiles.

✳ Scarify in excess of ¼" in these areas.

⊗ Existing Elevation is the same as the Finished Surface Elevation.

⊕ Existing Elevation is higher than the Finished Surface Elevation.

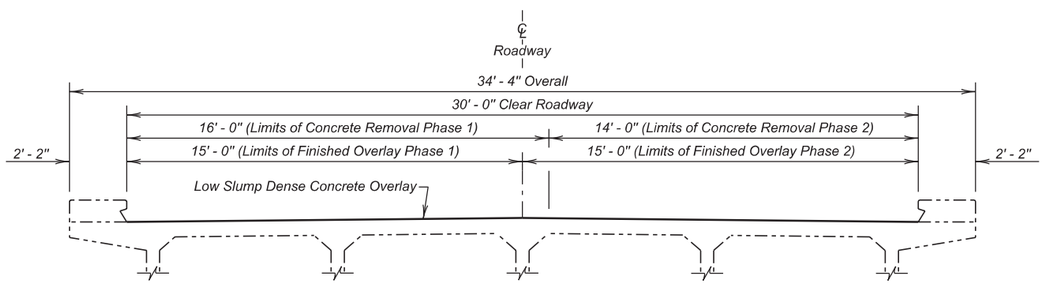


**TYPICAL SECTION**

**Benchmark Description:**

Brass Cap on top of SW Wingwall
Elevation 1224.40

0' 0.25' 0.50' 1.00'

VERTICAL SCALE

**LOW SLUMP DENSE CONCRETE OVERLAY**

FOR

293' - 3" BOX GIRDER BRIDGE

30' - 0" ROADWAY — 0 SKEW
OVER INTERSTATE 29 — SEC. 18-T92N-R50W
STR. NO. 64-008-205 — IM-PH 0291(122)0

UNION COUNTY

S. D. DEPT. OF TRANSPORTATION

OCTOBER 2015



| DESIGNED BY | CK. DES. BY | DRAFTED BY | |
|---|---|---|---|
| KSK | BD | KR | Kevin N. Goeden |
| UNIN02PT | 02PTRF06 | | BRIDGE ENGINEER |

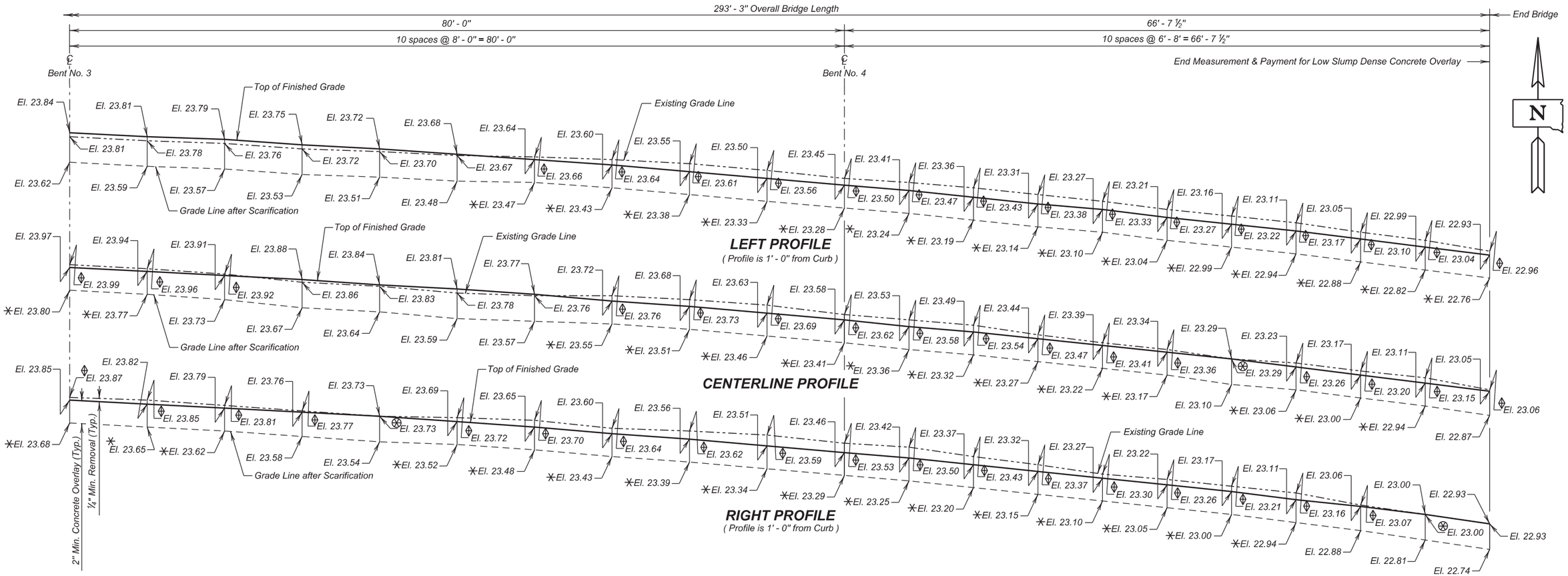


NOTE :

Add 1200.00 to all elevations shown on profiles.

✳ Scarify in excess of ¼" in these areas.

⊗ Existing Elevation is the same as the Finished Surface Elevation.

⊕ Existing Elevation is higher than the Finished Surface Elevation.

**Benchmark Description:**

Brass Cap on top of SW Wingwall
Elevation 1224.40

0' 0.25' 0.50' 1.00'

VERTICAL SCALE

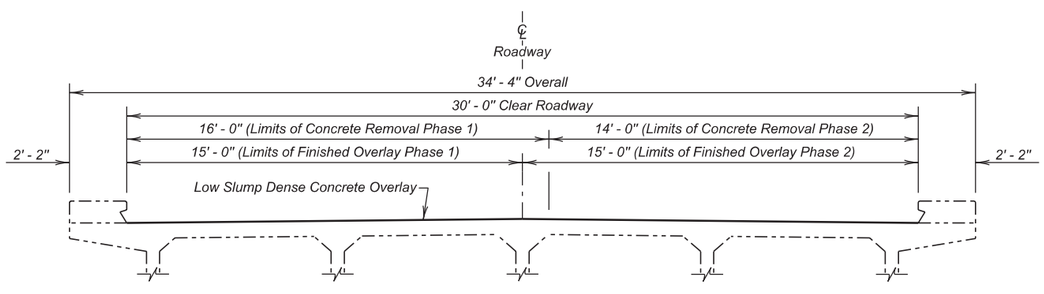


**TYPICAL SECTION**

## ESTIMATED QUANTITIES

| ITEM | UNIT | QUANTITY Phase I | QUANTITY Phase 2 |
|---|---|---|---|
| Low Slump Dense Concrete Deck Overlay | Cu. Yd. | 37.2 | 35.1 |
| Concrete Removal Type 1A | Sq. Yd. | 515.9 | 451.4 |
| Concrete Removal Type 2A | Sq. Yd. | 129.0 | 112.9 |
| Concrete Removal Type 1B | Sq. Yd. | 51.6 | 45.1 |
| Concrete Removal Type 1C | Sq. Yd. | 25.8 | 22.6 |
| Concrete Removal Type 1D | Sq. Yd. | 25.8 | 22.6 |
| Concrete Removal Type B | Ft. | 10.0 | 10.0 |
| Finishing and Curing | Sq. Yd. | 483.7 | 483.7 |
| Class A45 Concrete Fill | Cu. Yd. | 4.1 | 3.6 |

**LOW SLUMP DENSE CONCRETE OVERLAY (CONTINUED)**

FOR

293' - 3" BOX GIRDER BRIDGE

30' - 0" ROADWAY — 0 SKEW
OVER INTERSTATE 29 — SEC. 18-T92N-R50W
STR. NO. 64-008-205 — IM-PH 0291(122)0

UNION COUNTY

S. D. DEPT. OF TRANSPORTATION

OCTOBER 2015



| DESIGNED BY | CK. DES. BY | DRAFTED BY | |
|---|---|---|---|
| KSK | BD | KR | Kevin N. Boeden |
| UNIN02PT | 02PTRF07 | | BRIDGE ENGINEER |

| STATE OF | PROJECT | SHEET NO. | TOTAL SHEETS |
|---|---|---|---|
| S.D. | IM-PH 0291(122)0 | 182 | 284 |

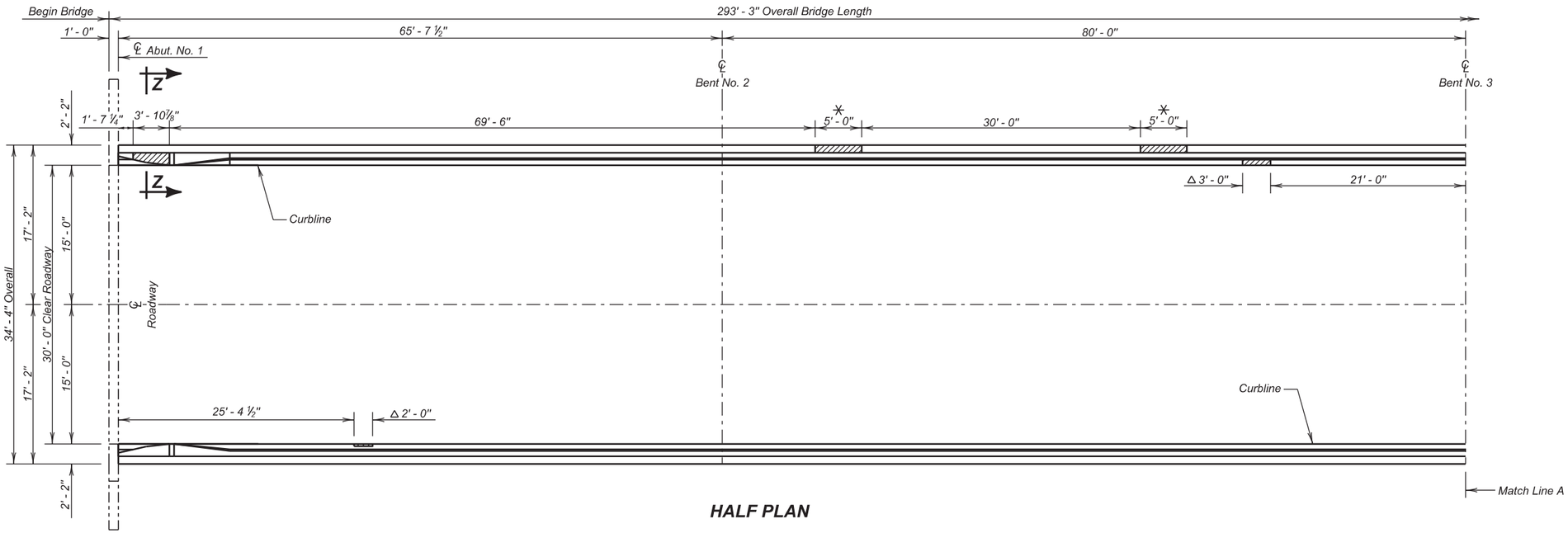


**HALF PLAN**

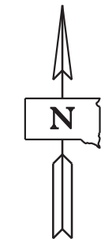


- Repair According to Detail "T"
- Repair According to Detail "W"
- Repair According to Detail "V"
- Repair According to Detail "X"
- Repair According to Detail "Y"
- Repair According to Detail "U"

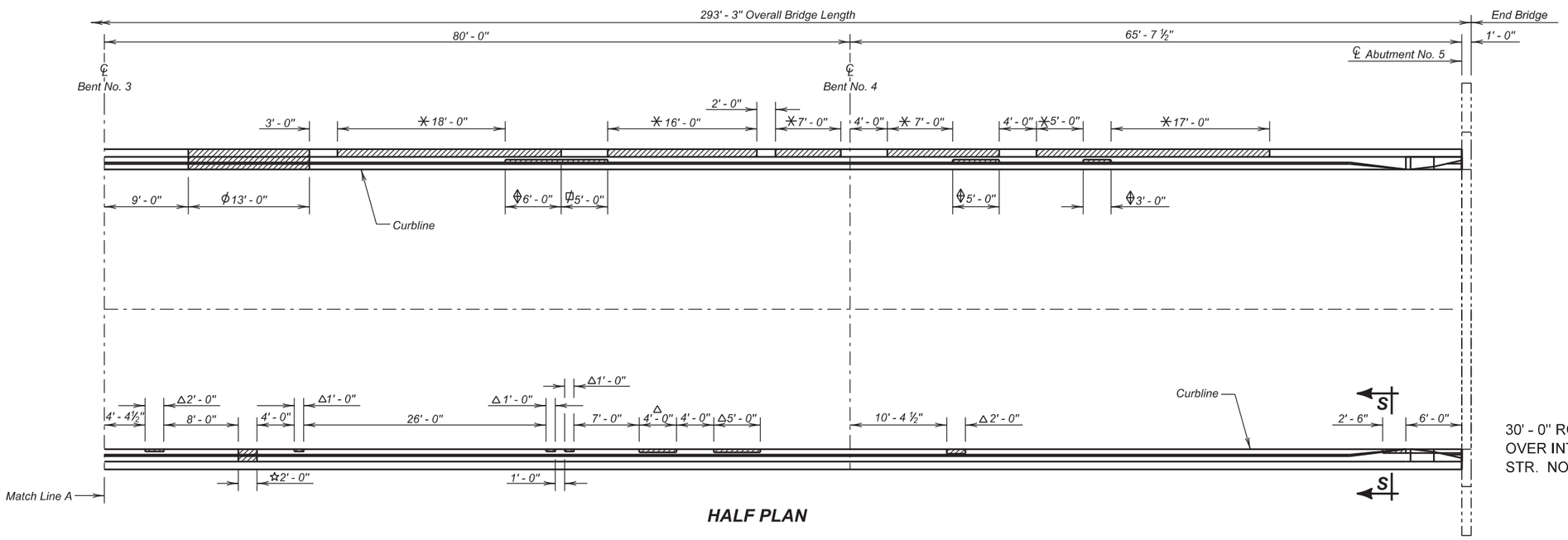


**HALF PLAN**

*Use this sheet in conjunction with Sheet No. 9 of 20*

**BARRIER REPAIR LAYOUT**

FOR

## 293' - 3" BOX GIRDER BRIDGE

30' - 0" ROADWAY
OVER INTERSTATE 29
STR. NO. 64-008-205

NO SKEW
SEC. 18-T92N-R50W
IM-PH 0291(122)0

UNION COUNTY
S. D. DEPT. OF TRANSPORTATION
OCTOBER 2015



| DESIGNED BY | CK. DES. BY | DRAFTED BY | |
|---|---|---|---|
| KSK | BD | KR | Kevin N. Goeden |
| UNIN02PT | 02PTRF08 | | BRIDGE ENGINEER |

| STATE OF | PROJECT | SHEET NO. | TOTAL SHEETS |
|---|---|---|---|
| S.D. | IM-PH 0291(122)0 | 183 | 284 |

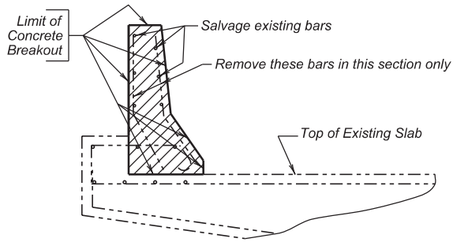


**DETAIL "X"**

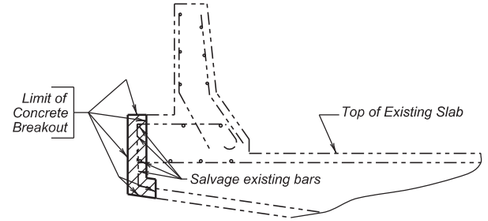


**DETAIL "Y"**

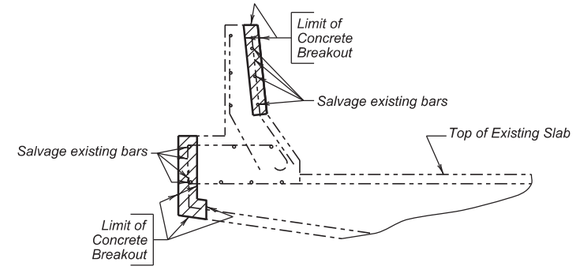


**DETAIL 'W'**

## REINFORCING SCHEDULE

| Mk. | No. | Size | Length | Type | Bending Details |
|---|---|---|---|---|---|
| Phase 1 | | | | | |
| c1 | 26 | 4 | 2' - 5" | 19B | |
| c2 | 13 | 4 | 2' - 3" | 17A | |
| | | | | | |
| Phase 2 | | | | | |
| c1 | 4 | 4 | 2' - 5" | 19B | |
| | | | | | |

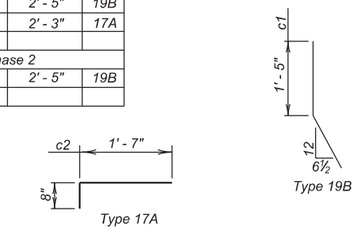


NOTES:
All Bars to be Epoxy Coated.
All dimensions are out to out of bars.

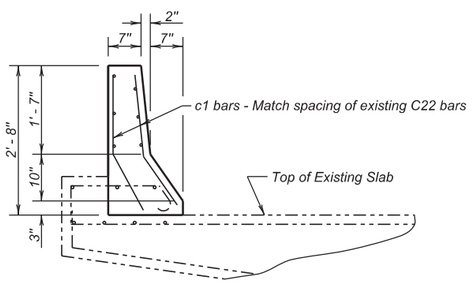


**DETAIL "X"**
(Reconstruction)

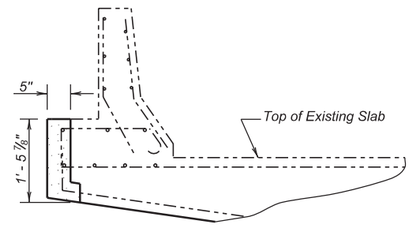


**DETAIL "Y"**
(Reconstruction)

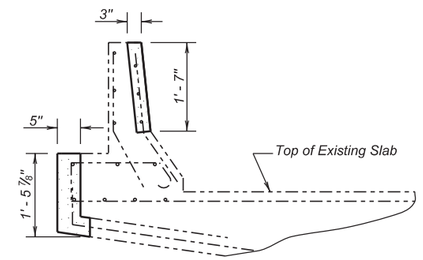


**DETAIL "W"**
(Reconstruction)

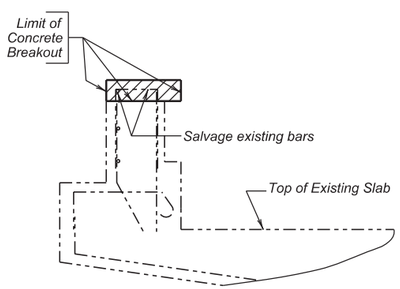


**SEC. Z - Z**

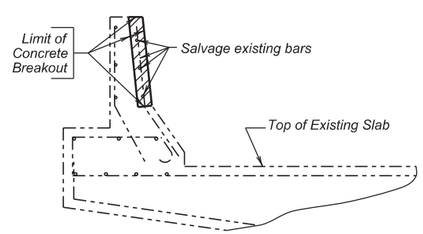


**DETAIL "T"**

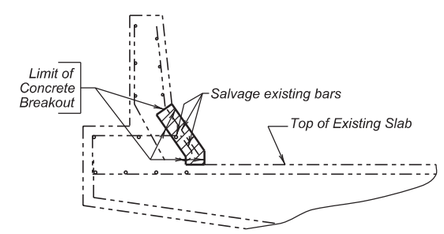


**DETAIL "V"**

Use this sheet in conjunction with Sheet No. 8 of 20.

## ESTIMATED QUANTITIES

| ITEM | UNIT | QUANTITY | |
|---|---|---|---|
| | | Phase I | Phase 2 |
| Breakout Structural Concrete | CuYd | 3.8 | 0.5 |
| Concrete Patching Material, Miscellaneous | CuFt | 114.2 | 13.1 |
| Epoxy Coated Reinforcing Steel | Lb | 62 | 6 |
| Galvanic Anode | Each | 143 | 16 |
| | | | |
| | | | |

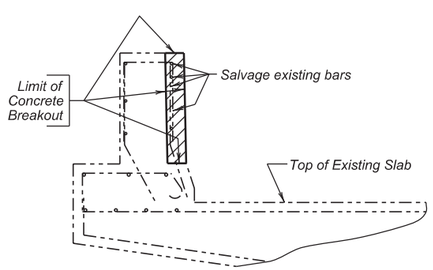


**SEC. S - S**

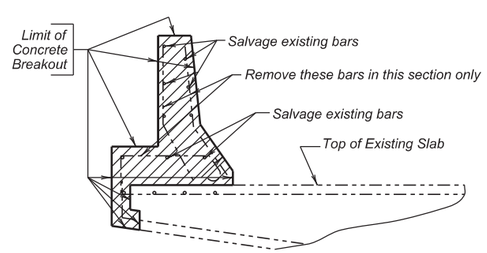


**DETAIL "U"**

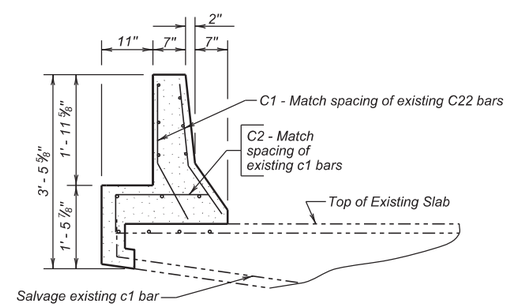


**DETAIL "U"**
(Reconstruction)

**BARRIER REPAIR DETAILS**
FOR
293' - 3" BOX GIRDER BRIDGE

30' - 0" ROADWAY
OVER INTERSTATE 29
STR. NO. 64-008-205

0 SKEW
SEC. 18-T92N-R50W
IM-PH 0291(122)0

UNION COUNTY
S. D. DEPT. OF TRANSPORTATION
OCTOBER 2015



| DESIGNED BY | CK. DES. BY | DRAFTED BY | |
|---|---|---|---|
| KSK | BD | KR | Kevin N. Goeden |
| UNIN02PT | 02PTRF09 | | BRIDGE ENGINEER |

| STATE OF | PROJECT | SHEET NO. | TOTAL SHEETS |
|---|---|---|---|
| S.D. | IM-PH 0291(122)0 | 184 | 284 |

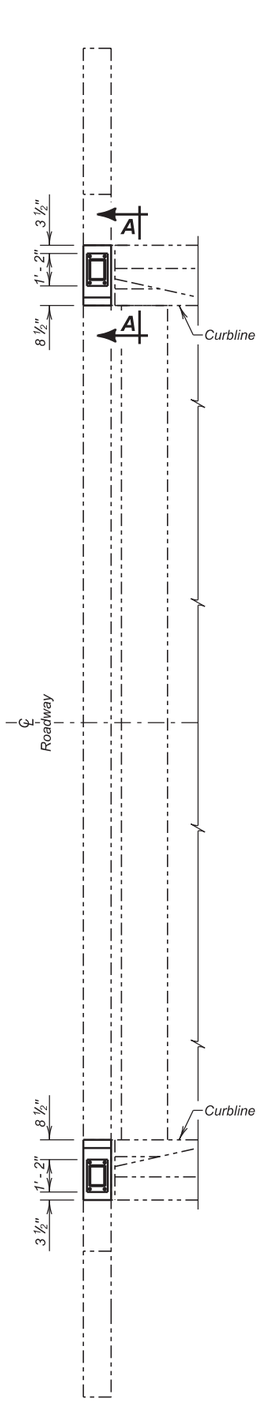


**PLAN**
(Abutment No. 1 Shown.
Abutment No. 5 similar by rotation)

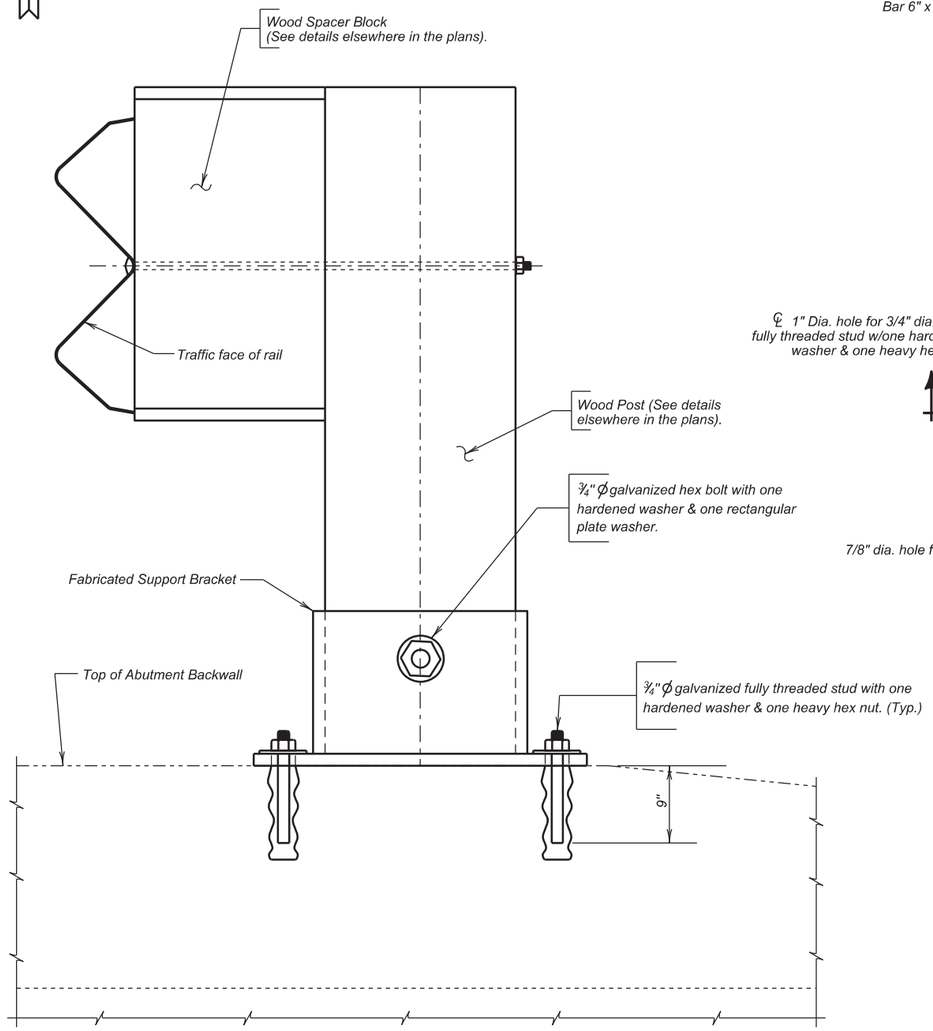


**SECTION A - A**

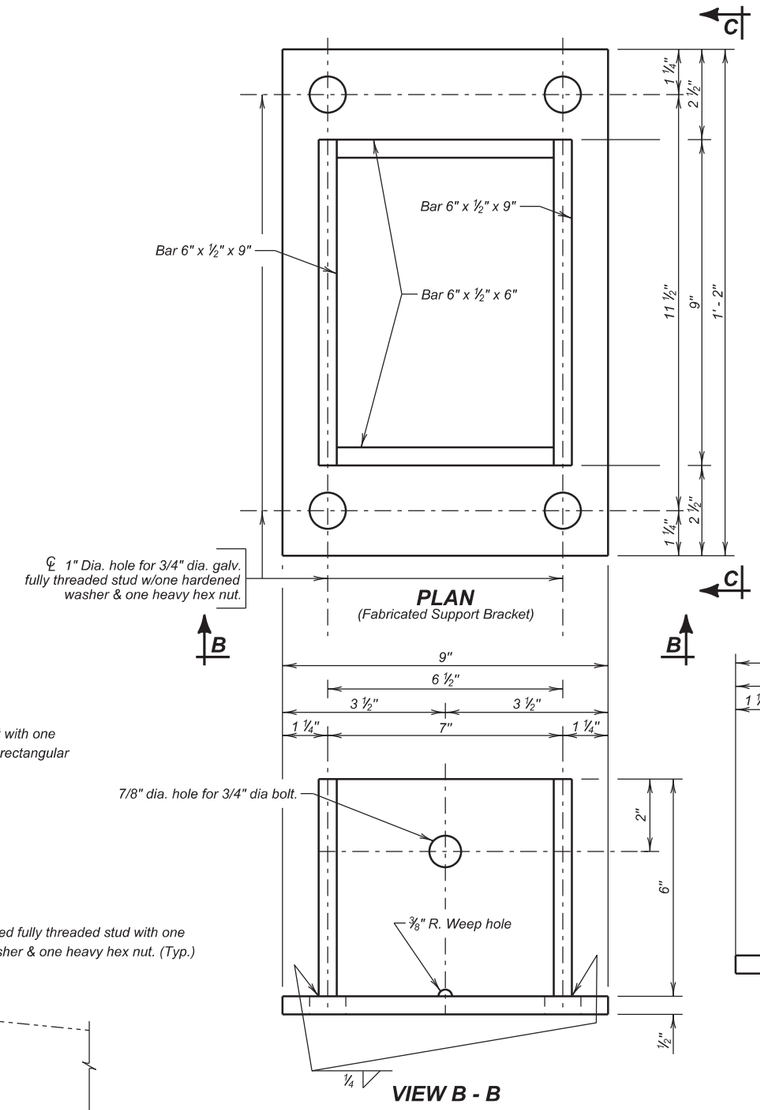


**PLAN**
(Fabricated Support Bracket)

**VIEW B - B**

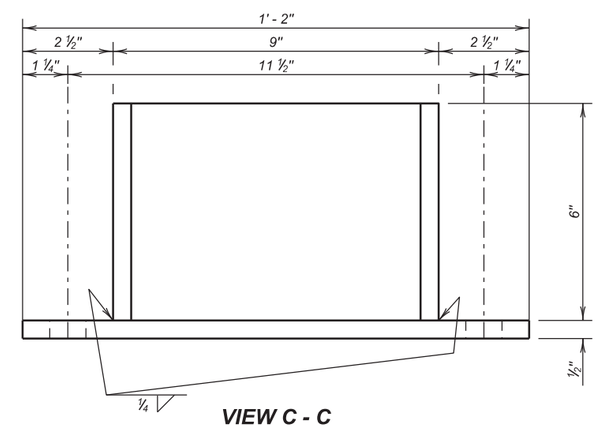


**VIEW C - C**

## ESTIMATED QUANTITIES

| ITEM | UNIT | QUANTITY Phase I | QUANTITY Phase 2 |
|---|---|---|---|
| ✳ Structural Steel, Miscellaneous | LS | LumpSum | LumpSum |
| Install Dowel in Concrete | Each | 8 | 8 |

✳ For informational purposes only, 176 Lbs of Structural Steel are included with the Structural Steel, Miscellaneous bid item.

**FABRICATED SUPPORT BRACKET FOR RAIL POST**

FOR

293' - 3" BOX GIRDER BRIDGE

30' - 0" ROADWAY — 0 SKEW
OVER INTERSTATE 29 — SEC. 18-T92N-R50W
STR. NO. 64-008-205 — IM-PH 0291(122)0

UNION COUNTY
S. D. DEPT. OF TRANSPORTATION
OCTOBER 2015



| DESIGNED BY | CK. DES. BY | DRAFTED BY | |
|---|---|---|---|
| KSK | BD | KR | Kevin N. Goeden |
| UNIN02PT | 02PTRF10 | | BRIDGE ENGINEER |

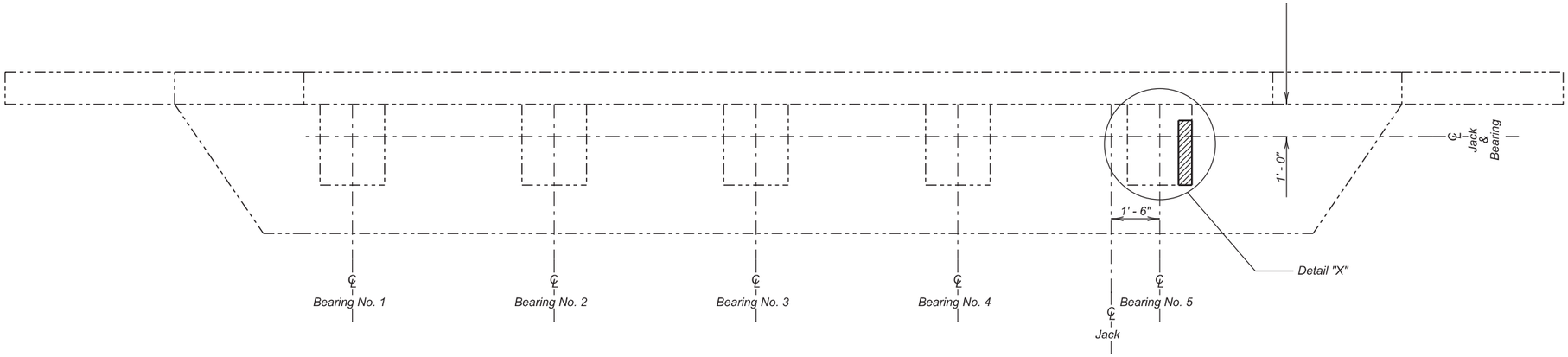


**PLAN**

(Abutment No. 5)

(Bearings are numbered from left to right facing the abutment backwall)

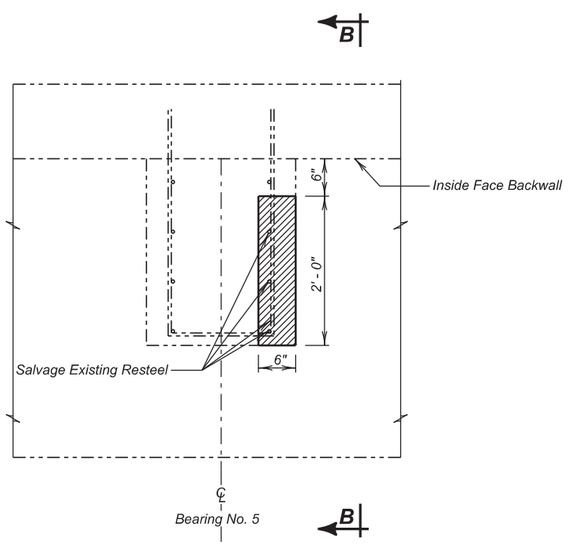


**DETAIL "X"**

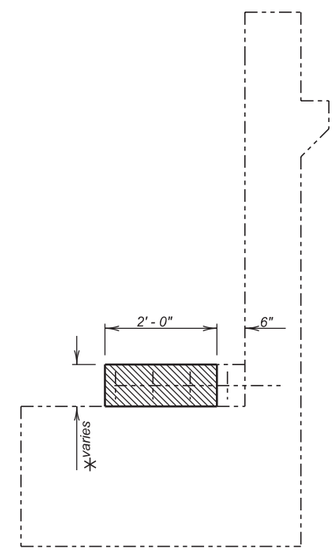


**SEC. B - B**

∗ Breakout entire height of bearing pad

**ESTIMATED QUANTITIES**

| ITEM | UNIT | QUANTITY |
|---|---|---|
| Bridge End Support | LS | LumpSum |
| Breakout Structural Concrete | CuYd | 0.1 |
| Concrete Patching Material, Miscellaneous | CuFt | 0.8 |
| Galvanic Anode | Each | 1 |

**BEARING RISER REPAIR**

FOR

293' - 3" BOX GIRDER BRIDGE

30' - 0" ROADWAY
OVER INTERSTATE 29
STR. NO. 64-008-205

NO SKEW
SEC. 18-T92N-R50W
IM-PH 0291(122)0

UNION COUNTY

S. D. DEPT. OF TRANSPORTATION

OCTOBER 2015



| DESIGNED BY | CK. DES. BY | DRAFTED BY | |
|---|---|---|---|
| KSK | BD | KSK | Kevin N. Boeden |
| UNIN02PT | 02PTRF11 | | BRIDGE ENGINEER |

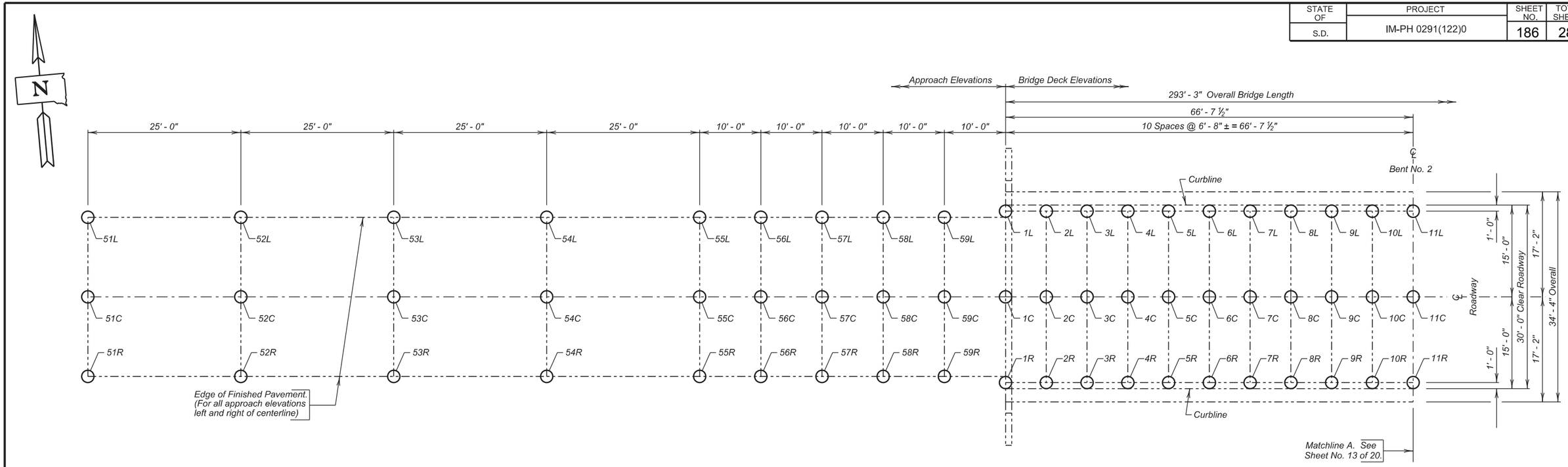


***PARTIAL PLAN***

| Table of Elevations - Bridge Deck | | | | | | | | | Table of Elevations - Approach Roadway | | | | | | | | |
|---|---|---|---|---|---|---|---|---|---|---|---|---|---|---|---|---|---|
| Location | Rod Reading | Elevation | Location | Rod Reading | Elevation | Location | Rod Reading | Elevation | Location | Rod Reading | Elevation | Location | Rod Reading | Elevation | Location | Rod Reading | Elevation |
| 1L | | | 1C | | | 1R | | | 51L | | | 51C | | | 51R | | |
| 2L | | | 2C | | | 2R | | | 52L | | | 52C | | | 52R | | |
| 3L | | | 3C | | | 3R | | | 53L | | | 53C | | | 53R | | |
| 4L | | | 4C | | | 4R | | | 54L | | | 54C | | | 54R | | |
| 5L | | | 5C | | | 5R | | | 55L | | | 55C | | | 55R | | |
| 6L | | | 6C | | | 6R | | | 56L | | | 56C | | | 56R | | |
| 7L | | | 7C | | | 7R | | | 57L | | | 57C | | | 57R | | |
| 8L | | | 8C | | | 8R | | | 58L | | | 58C | | | 58R | | |
| 9L | | | 9C | | | 9R | | | 59L | | | 59C | | | 59R | | |
| 10L | | | 10C | | | 10R | | | | | | | | | | | |
| 11L | | | 11C | | | 11R | | | | | | | | | | | |

*NOTE :*
*The Contractor shall be responsible for producing the As - Built Elevation Survey soon after construction is complete and before the bridge is completely opened to traffic.*
***The As - Built Elevations of the overlay shall be based on the National Geodetic Survey North American Vertical Datum of 1988*** *and shall be taken and recorded at the locations shown by the table on this sheet. The completed table shall be given to the Engineer who will forward a copy to the Bridge Maintenance Engineer in the Office of Bridge Design and the Region Bridge Maintenance Engineer.*

***Benchmark Description:***
*Brass Cap on top of SW Wingwall*
*Elevation 1224.40*

**AS-BUILT ELEVATION SURVEY (CONTINUED)**
FOR
293' - 3" BOX GIRDER BRIDGE

30' - 0" ROADWAY — 0 SKEW
OVER INTERSTATE 29 — SEC. 18-T92N-R50W
STR. NO. 64-008-205 — IM-PH 0291(122)0

UNION COUNTY
S. D. DEPT. OF TRANSPORTATION
OCTOBER 2015



| DESIGNED BY | CK. DES. BY | DRAFTED BY | |
|---|---|---|---|
| KSK | BD | KSK | Kevin N. Boeden |
| UNIN02PT | 02PTKF12 | | BRIDGE ENGINEER |

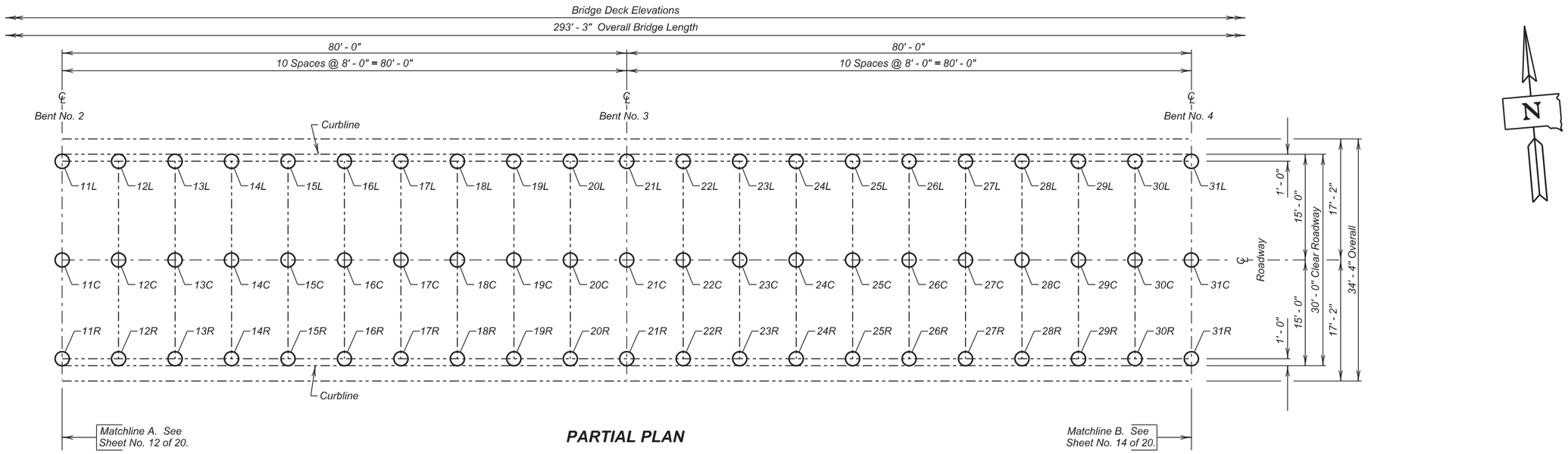


**PARTIAL PLAN**




| Location | Rod Reading | Elevation | Location | Rod Reading | Elevation | Location | Rod Reading | Elevation | Location | Rod Reading | Elevation | Location | Rod Reading | Elevation | Location | Rod Reading | Elevation |
|---|---|---|---|---|---|---|---|---|---|---|---|---|---|---|---|---|---|
| 11L | | | 11C | | | 11R | | | 22L | | | 22C | | | 22R | | |
| 12L | | | 12C | | | 12R | | | 23L | | | 23C | | | 23R | | |
| 13L | | | 13C | | | 13R | | | 24L | | | 24C | | | 24R | | |
| 14L | | | 14C | | | 14R | | | 25L | | | 25C | | | 25R | | |
| 15L | | | 15C | | | 15R | | | 26L | | | 26C | | | 26R | | |
| 16L | | | 16C | | | 16R | | | 27L | | | 27C | | | 27R | | |
| 17L | | | 17C | | | 17R | | | 28L | | | 28C | | | 28R | | |
| 18L | | | 18C | | | 18R | | | 29L | | | 29C | | | 29R | | |
| 19L | | | 19C | | | 19R | | | 30L | | | 30C | | | 30R | | |
| 20L | | | 20C | | | 20R | | | 31L | | | 31C | | | 31R | | |
| 21L | | | 21C | | | 21R | | | | | | | | | | | |

*NOTE :*
*The Contractor shall be responsible for producing the As - Built Elevation Survey soon after construction is complete and before the bridge is completely opened to traffic.* ***The As - Built Elevations of the overlay shall be based on the National Geodetic Survey North American Vertical Datum of 1988*** *and shall be taken and recorded at the locations shown by the table on this sheet. The completed table shall be given to the Engineer who will forward a copy to the Bridge Maintenance Engineer in the Office of Bridge Design and the Region Bridge Maintenance Engineer.*

***Benchmark Description:***
*Brass Cap on top of SW Wingwall*
*Elevation 1224.40*

**AS-BUILT ELEVATION SURVEY (CONTINUED)**
FOR
293' - 3" BOX GIRDER BRIDGE

30' - 0" ROADWAY — 0 SKEW
OVER INTERSTATE 29 — SEC. 18-T92N-R50W
STR. NO. 64-008-205 — IM-PH 0291(122)0

UNION COUNTY
S. D. DEPT. OF TRANSPORTATION
OCTOBER 2015



| DESIGNED BY | CK. DES. BY | DRAFTED BY | |
|---|---|---|---|
| KSK | BD | KSK | Kevin N. Goeden |
| UNIN02PT | 02PTKF13 | | BRIDGE ENGINEER |

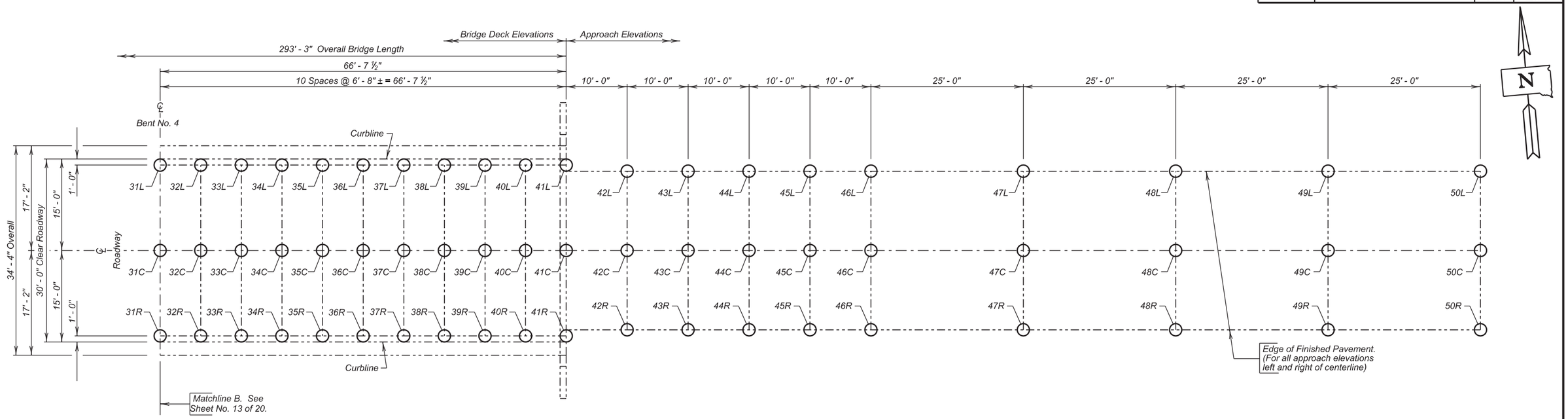


***PARTIAL PLAN***

| Table of Elevations - Bridge Deck | | | | | | | | | Table of Elevations - Approach Roadway | | | | | | | | |
|---|---|---|---|---|---|---|---|---|---|---|---|---|---|---|---|---|---|
| Location | Rod Reading | Elevation | Location | Rod Reading | Elevation | Location | Rod Reading | Elevation | Location | Rod Reading | Elevation | Location | Rod Reading | Elevation | Location | Rod Reading | Elevation |
| 31L | | | 31C | | | 31R | | | 42L | | | 42C | | | 42R | | |
| 32L | | | 32C | | | 32R | | | 43L | | | 43C | | | 43R | | |
| 33L | | | 33C | | | 33R | | | 44L | | | 44C | | | 44R | | |
| 34L | | | 34C | | | 34R | | | 45L | | | 45C | | | 45R | | |
| 35L | | | 35C | | | 35R | | | 46L | | | 46C | | | 46R | | |
| 36L | | | 36C | | | 36R | | | 47L | | | 47C | | | 47R | | |
| 37L | | | 37C | | | 37R | | | 48L | | | 48C | | | 48R | | |
| 38L | | | 38C | | | 38R | | | 49L | | | 49C | | | 49R | | |
| 39L | | | 39C | | | 39R | | | 50L | | | 50C | | | 50R | | |
| 40L | | | 40C | | | 40R | | | | | | | | | | | |
| 41L | | | 41C | | | 41R | | | | | | | | | | | |

*NOTE :*
*The Contractor shall be responsible for producing the As - Built Elevation Survey soon after construction is complete and before the bridge is completely opened to traffic.*
***The As - Built Elevations of the overlay shall be based on the National Geodetic Survey North American Vertical Datum of 1988*** *and shall be taken and recorded at the locations shown by the table on this sheet. The completed table shall be given to the Engineer who will forward a copy to the Bridge Maintenance Engineer in the Office of Bridge Design and the Region Bridge Maintenance Engineer.*

***Benchmark Description:***
*Brass Cap on top of SW Wingwall*
*Elevation 1224.40*

**AS-BUILT ELEVATION SURVEY (CONTINUED)**
FOR
293' - 3" BOX GIRDER BRIDGE

30' - 0" ROADWAY — 0 SKEW
OVER INTERSTATE 29 — SEC. 18-T92N-R50W
STR. NO. 64-008-205 — IM-PH 0291(122)0

UNION COUNTY
S. D. DEPT. OF TRANSPORTATION
OCTOBER 2015



| DESIGNED BY | CK. DES. BY | DRAFTED BY | |
|---|---|---|---|
| KSK | BD | KSK | Kevin N. Goeden |
| UNIN02PT | 02PTKF14 | | BRIDGE ENGINEER |

| STATE OF | PROJECT | SHEET NO. | TOTAL SHEETS |
|---|---|---|---|
| S.D. | IM-PH 029(112)10 | 189 | 284 |

-X721-

# INDEX OF BRIDGE SHEETS—


Sheet No.1 - General Drawing and Quantities
Sheet No.2 - Details of Std. Superstructure SCBG-30-00-473.25-1-6 (9-22-58)
Sheet No.3 - Expansion Device & Superstructure Details SCBG-30-00-473.25-2-6 (3-20-58)
Sheet No.4 - Box Girder Data & Shoe Details SCBG-30-00-473.25-3-6 (3-20-58)
Sheet No.5 - Standard Pier Details SCBG-30-00-473.25-4-6 (5-1-58)
Sheet No.6 - Details of Std. Reinf. Concrete Sill SCBG-30-00-473.25-5-6 (3-20-58)
Sheet No.7 - Type B Railing and Drain Details SR-SCBG-00-473.25-6-6 (9-22-58)


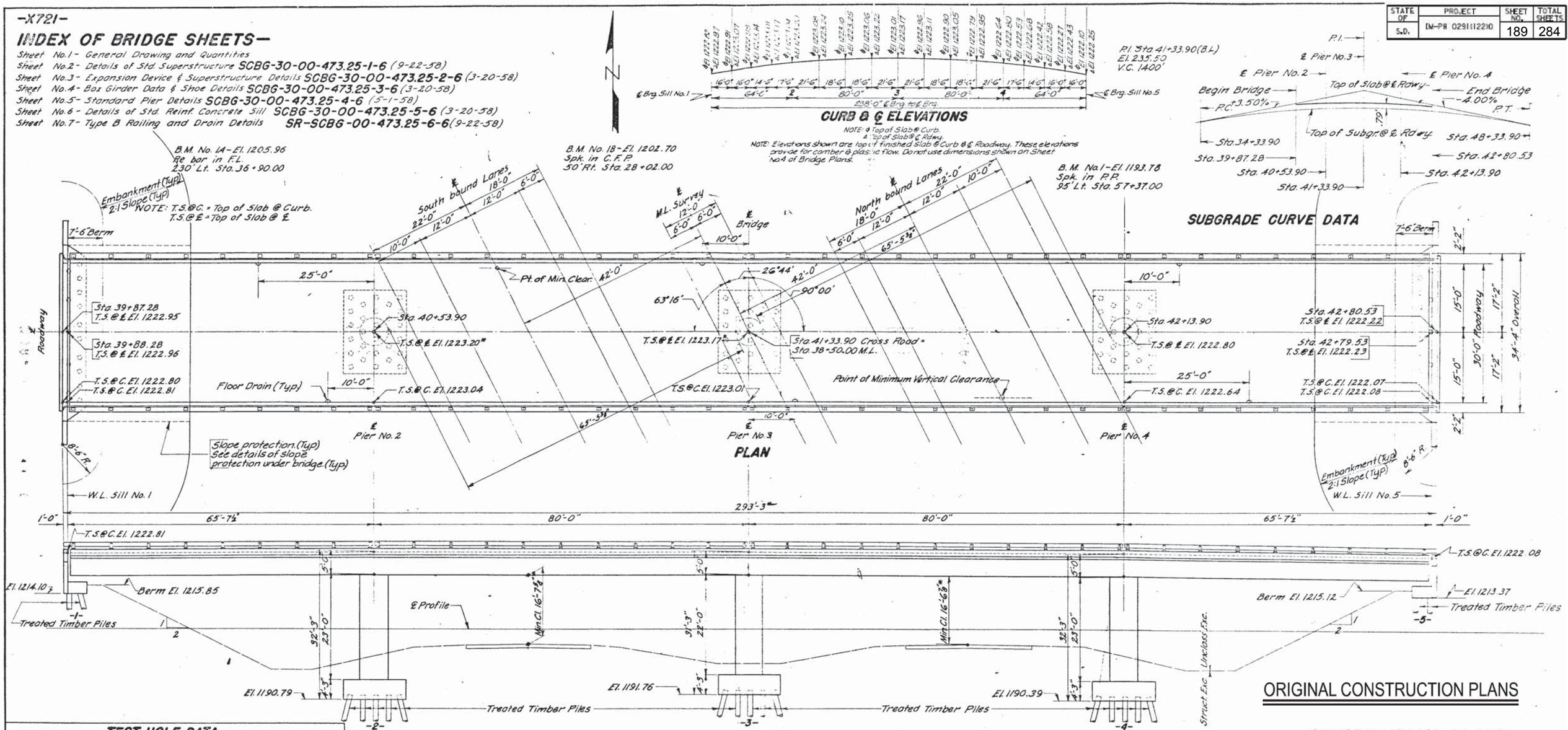


## TEST HOLE DATA

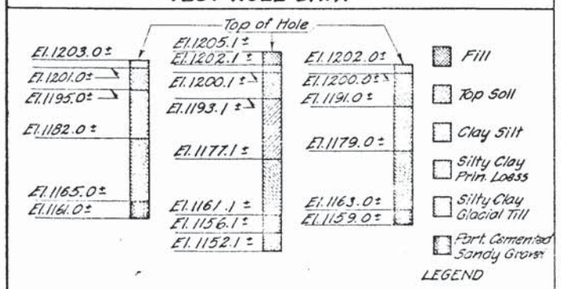


## ESTIMATED QUANTITIES

| ITEM | *Lightweight Conc. Cu. Yds. | Cl. A Conc. Cu. Yds. | Steel - LBS. Reinf. | Steel - LBS. Struct. | Steel - LBS. Railing | Treated Timber Piles @ Lin. Ft. | Pile Shoes @ No. | Excavation - Cu. Yds. Struct. | Excavation - Cu. Yds. Unclass. |
|---|---|---|---|---|---|---|---|---|---|
| Superstructure | 695.3 | | 28,600 | 9385 | 5888 | | | | |
| Bents No. 1 & No. 5 | | 98.0 | 6,560 | | | 30 @ 45' = 1350' | | 40 | |
| Piers No. 2, 3, & 4 | | 187.0 | 22,780 | | | 84 @ 45' = 3780' | 84 | 295 | |
| Totals | 695.3 | 284.0 | 57,940 | 9385 | 5888 | 5130 | * — | 335 | ^ — |

* One Treated Timber Test Pile shall be driven at Sills No. 1 and No. 5 and at Piers No. 2, 3, and 4 before remaining piles are ordered.
^ See Grading Plans for Unclassified Excavation.
† American No. 1 All Steel Pile Shoes, or equivalent shall be used, the cost to be included in the unit price bid for Treated Timber Piles.
PILE NOTE:- Piles driven at Sills No. 1 & 5, including Test Piles, shall obtain their full bearing (20 Tons) in the natural ground below the new embankments, elevations 1206.6' ± and 1208.1' ± respectively. Treated Piles requiring fill to natural ground are required and shall be a minimum diameter 2" larger than the nominal diameter (3 [illegible]) of the pile.
* See Supplemental Specifications dated Dec. 1, 1958.

## GENERAL NOTES—

1. See NOTES on Sheets No. 4, 6 & 7.
2. Floor Drains shall be located as shown on General Drawing.
3. Rail posts shall be built vertical.
4. Longitudinal elements of the slab shall conform to the vertical curve.
5. Surface finish, Sec. 46.3×(3) of the current South Dakota Std. Specifications, shall also include such portions of the structure which are visible from any traveled lane.

*Revised. 2-8-60

ORIGINAL CONSTRUCTION PLANS

# CONSTRUCTION PLANS

GENERAL DRAWING AND QUANTITIES

FOR

## 293'-3" BOX GIRDER BRIDGE

30'-0" ROADWAY

OVER I.S. NO. 29 STA. 38+50.00 SEC. 18-T92N-R50W

STA. 39+87.28 TO 42+80.53 I-29-1(7)15

UNION COUNTY H20-S16-44

SOUTH DAKOTA (Q ALT.)

DEPARTMENT OF HIGHWAYS

SEPT. 1958

STR. NO. 64-008-205

DRAWN BY R.K.

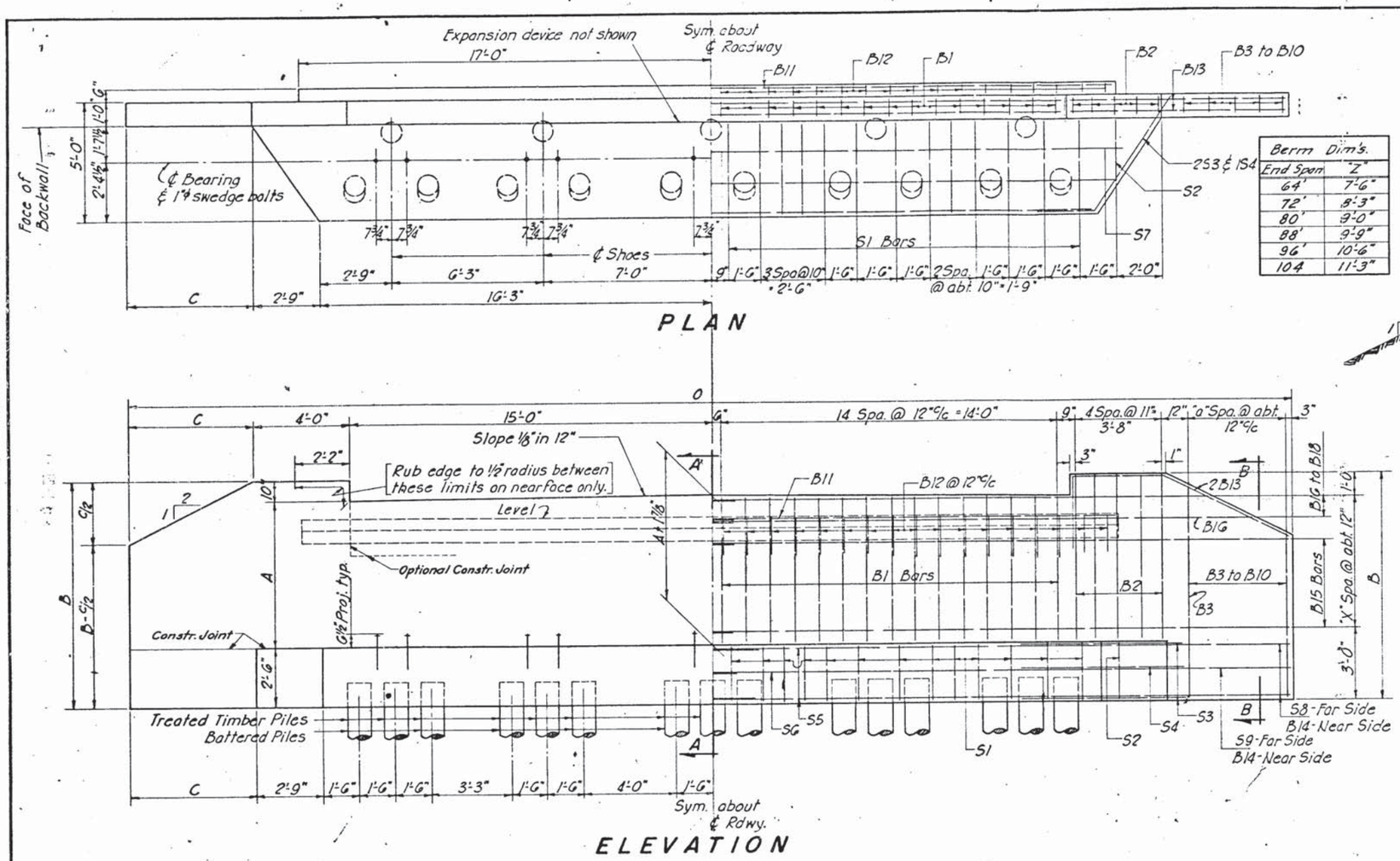


| Berm Dim's. | |
|---|---|
| End Span | "Z" |
| 64' | 7'-6" |
| 72' | 8'-3" |
| 80' | 9'-0" |
| 88' | 9'-9" |
| 96' | 10'-6" |
| 104 | 11'-3" |

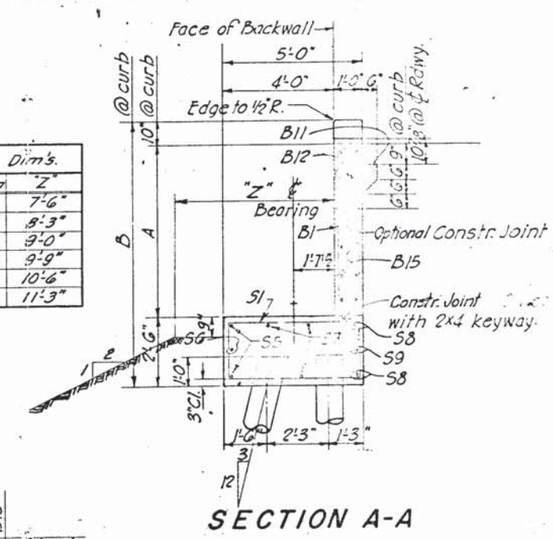


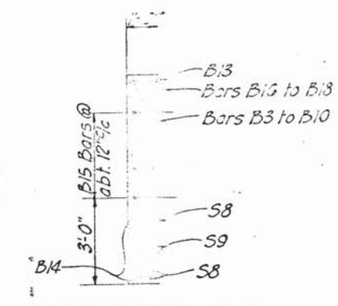


**GENERAL NOTES:**

All exposed edges shall be chamfered 1" except as shown.
Use 2" clear cover on all reinforcing except as shown.
All swedge bolts shall be 1¼"x1'-6" with hex nut and cut washer (listed as structural steel in superstructure quantities.)

## SILL DATA (FOR ONE SILL)

### REINFORCING SCHEDULE

| LENGTH OVERALL | B1 No. | B1 Size | B1 "E" | B1 Length | B2 No. | B2 Size | B2 "F" | B2 Length | B3 No. | B3 Size | B3 "Y" | B3 Length | B4 No. | B4 Size | B4 "Y" | B4 Length | B5 No. | B5 Size | B5 "Y" | B5 Length | B6 No. | B6 Size | B6 "Y" | B6 Length | B7 No. | B7 Size | B7 "Y" | B7 Length | B8 No. | B8 Size | B8 "Y" | B8 Length | B9 No. | B9 Size | B9 "Y" | B9 Length |
|---|---|---|---|---|---|---|---|---|---|---|---|---|---|---|---|---|---|---|---|---|---|---|---|---|---|---|---|---|---|---|---|---|---|---|---|---|
| 293'-3" | 30 | 5 | 7'-5" | 15'-6" | 10 | 5 | 8'-2" | 17'-0" | 2 | 5 | 8'-8" | 19'-6" | 2 | 5 | 8'-2" | 18'-6" | 2 | 5 | 7'-8" | 17'-6" | 2 | 5 | 7'-2" | 16'-6" | 2 | 5 | 6'-7½" | 15'-6" | None | | | | None | | | |
| 329'-3" | | 5 | 8'-2" | 17'-0" | | 5 | 8'-11" | 18'-6" | | | 9'-5" | 21'-0" | | | 8'-11½" | 20'-0" | | | 8'-6" | 19'-3" | | | 8'-0" | 18'-3" | | | 7'-6" | 17'-3" | 2 | 5 | 7'-0" | 16'-9" | None | | | |
| 365'-3" | | 5 | 8'-8" | 18'-0" | | 5 | 9'-5" | 19'-6" | | | 9'-11" | 22'-0" | | | 9'-4½" | 21'-0" | | | 8'-10½" | 20'-0" | | | 8'-4" | 19'-0" | | | 7'-9½" | 17'-9" | | | 7'-3" | 16'-9" | None | | | |
| 401'-3" | | 6 | 9'-8" | 20'-0" | | 6 | 10'-5" | 21'-6" | | | 10'-10½" | 24'-0" | | | 10'-4½" | 23'-0" | | | 9'-10½" | 22'-0" | | | 9'-4½" | 21'-0" | | | 8'-10½" | 20'-0" | | | 8'-4½" | 19'-0" | 2 | 5 | 7'-10½" | 18'-0" |
| 437'-3" | | 6 | 10'-2" | 21'-0" | | 6 | 10'-11" | 22'-6" | | | 11'-4½" | 25'-0" | | | 10'-11" | 24'-0" | | | 10'-5½" | 23'-0" | | | 9'-11" | 22'-0" | | | 9'-6" | 21'-3" | | | 9'-0½" | 20'-3" | 2 | 5 | 8'-6½" | 19'-3" |
| 473'-3" | 30 | 6 | 10'-11" | 22'-6" | 10 | 6 | 11'-8" | 24'-0" | 2 | 5 | 12'-1½" | 26'-6" | 2 | 5 | 11'-7½" | 25'-6" | 2 | 5 | 11'-1" | 24'-3" | 2 | 5 | 10'-7" | 23'-3" | 2 | 5 | 10'-0½" | 22'-3" | 2 | 5 | 9'-6½" | 21'-3" | 2 | 5 | 9'-0" | 20'-3" |

### BAR BENDING DIAGRAMS

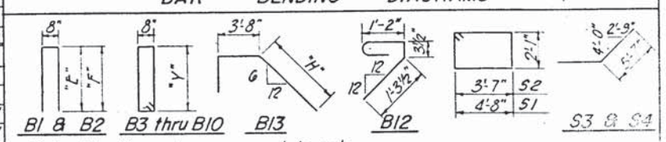


Note: All dimensions are out to out.

### REINFORCING SCHEDULE (CONT.)

| B10 No. | B10 Size | B10 "Y" | B10 Length | B11 No. | B11 Size | B11 Length | B12 No. | B12 Size | B12 Length | B13 No. | B13 Size | B13 "H" | B13 Length | B14 No. | B14 Size | B14 Length | B15 No. | B15 Size | B15 Length | B16 No. | B16 Size | B16 Length | B17 No. | B17 Size | B17 Length | B18 No. | B18 Size | B18 Length |
|---|---|---|---|---|---|---|---|---|---|---|---|---|---|---|---|---|---|---|---|---|---|---|---|---|---|---|---|---|
| | None | | | 2 | 5 | 13'-0" | 34 | 4 | 3'-3" | 4 | 6 | 5'-9" | 11'-6" | 6 | 4 | 7'-3" | 20 | 4 | 25'-0" | 4 | 4 | 23'-9" | 4 | 4 | 22'-9" | 4 | 4 | 21'-9" |
| | None | | | | | | | | | | | 6'-7" | 10'-3" | | | 8'-0" | 20 | | 25'-9" | | | 23'-9" | | | 22'-9" | | | 21'-9" |
| | None | | | | | | | | | | | 7'-11½" | 12'-9" | | | 9'-6" | 20 | | 26'-3" | | | 23'-9" | | | 22'-9" | | | 21'-9" |
| | None | | | | | | | | | | | 9'-0" | 13'-9" | | | 9'-3" | 20 | | 27'-0" | | | 23'-9" | | | 22'-9" | | | 21'-9" |
| 2 | 5 | 8'-1" | 18'-3" | | | | | | | | | 8'-5½" | 12'-3" | | | 9'-0" | 20 | | 27'-6" | | | 23'-9" | | | 22'-9" | | | 21'-9" |
| 2 | 5 | 8'-5½" | 19'-0" | 2 | 5 | 18'-0" | 34 | 4 | 3'-3" | 4 | 6 | 9'-4½" | 15'-0" | 6 | 4 | 10'-0" | 28 | 4 | 28'-3" | 4 | 4 | 25'-9" | 4 | 4 | 23'-9" | 4 | 4 | 21'-9" |

### REINFORCING SCHEDULE (CONT.)

| B19 No. | B19 Size | B19 Length | S1 No. | S1 Size | S1 Length | S2 No. | S2 Size | S2 Length | S3 No. | S3 Size | S3 Length | S4 No. | S4 Size | S4 Length | S5 No. | S5 Size | S5 Length | S6 No. | S6 Size | S6 Length | S7 No. | S7 Size | S7 Length | S8 No. | S8 Size | S8 Length | S9 No. | S9 Size | S9 Length |
|---|---|---|---|---|---|---|---|---|---|---|---|---|---|---|---|---|---|---|---|---|---|---|---|---|---|---|---|---|---|
| None | | | 26 | 5 | 14'-3" | 2 | 5 | 12'-3" | 4 | 11 | 8'-3" | 2 | 4 | 6'-9" | 4 | 11 | 18'-6" | 2 | 4 | 17'-0" | 6 | 6 | 8'-6" | 4 | 11 | 26'-6" | 2 | 4 | 25'-0" |
| None | | | | | | | | | | | | | | | | | | | | | | | | | | 27'-3" | | | 25'-9" |
| None | | | | | | | | | | | | | | | | | | | | | | | | | | 27'-9" | | | 26'-3" |
| None | | | | | | | | | | | | | | | | | | | | | | | | | | 28'-6" | | | 27'-0" |
| | | | | | | | | | | | | | | | | | | | | | | | | | | 29'-0" | | | 27'-6" |
| 26 | 5 | 14'-3" | 2 | 5 | 12'-3" | 4 | 11 | 8'-3" | 2 | 4 | 6'-9" | 4 | 11 | 18'-6" | 2 | 4 | 17'-0" | 6 | 6 | 8'-6" | 4 | 11 | 29'-9" | 2 | 4 | 28'-3" | 9'-8" | 13'-0" | 8'-9" |

### DIMENSIONS

| A | B | B-C | C | "Y" |
|---|---|---|---|---|
| 5'-2" | 9'-6½" | 5'-11" | 5'-3" | [illegible] |
| 5'-2" | 10'-11½" | 10'-3½" | 7'-3" | [illegible] |
| 5'-2" | 10'-9½" | 7'-6" | 5'-3" | [illegible] |
| 5'-2" | 11'-5" | 11'-9" | 8'-3" | [illegible] |
| 5'-2" | 12'-3" | 8'-3" | 5'-3" | [illegible] |
| 5'-2" | 13'-0" | 8'-9" | 5'-3" | [illegible] |
| 5'-2" | 13'-8" | 9'-3" | 5'-3" | [illegible] |
| 5'-2" | 13'-8" | 9'-9" | 5'-3" | [illegible] |
| 5'-2" | 13'-8" | 10'-3" | 5'-3" | [illegible] |
| 5'-2" | 13'-8" | 10'-9" | 5'-3" | [illegible] |
| 5'-2" | 13'-8" | 11'-3" | 5'-3" | [illegible] |
| 5'-2" | 9'-11" | 12'-3" | 5'-3" | [illegible] |

**ORIGINAL CONSTRUCTION PLANS**

DETAILS OF STANDARD REINF. CONC. SILL FOR
4-SPAN CONTINUOUS
CONCRETE BOX GIRDER BRIDGES
WITH
SINGLE COLUMN PIERS ON PILES
60'-0" ROADWAY 293'-3" TO 473'-3" OVERALL LENGTH

SEPTEMBER 1987 SOUTH DAKOTA PID-PB-44



STR. NO. 64-008-205

Joints Rev. 3-20-93

| STATE OF | PROJECT | SHEET NO. | TOTAL SHEETS |
|---|---|---|---|
| S.D. | IM-PH 0291(12)210 | 191 | 284 |

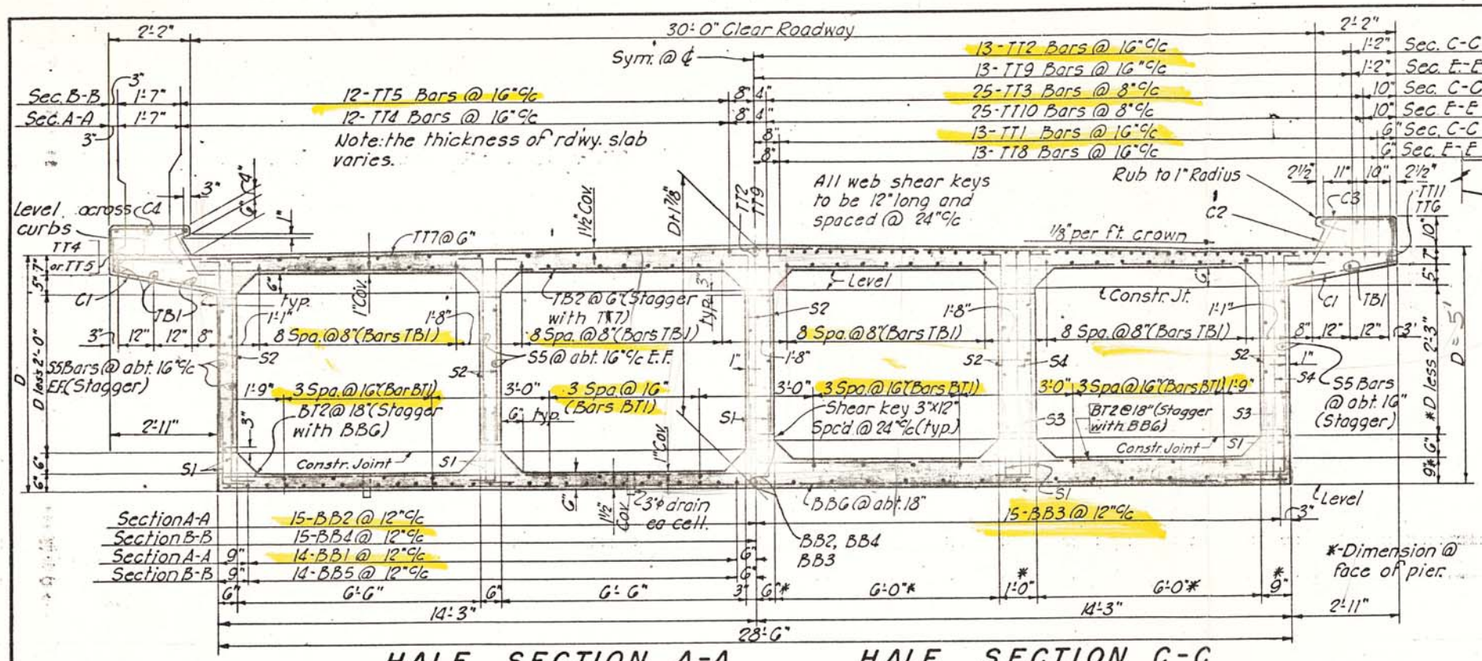


HALF SECTION A-A
HALF SECTION B-B

HALF SECTION C-C
HALF SECTION E-E

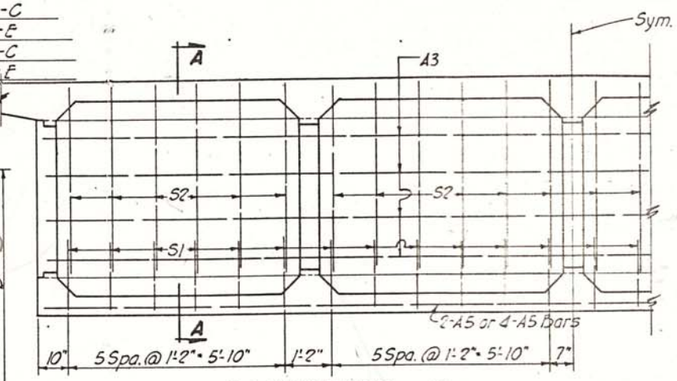


ELEVATION

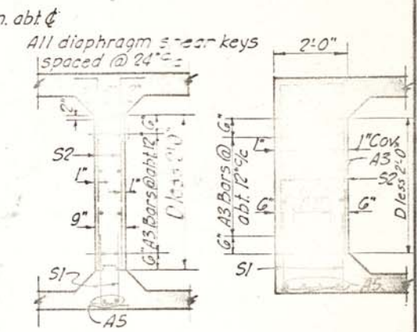


SECTION A-A (INTERIOR)

SECTION A-A (END DIAPH.)

TYPICAL DIAPHRAGM DETAILS

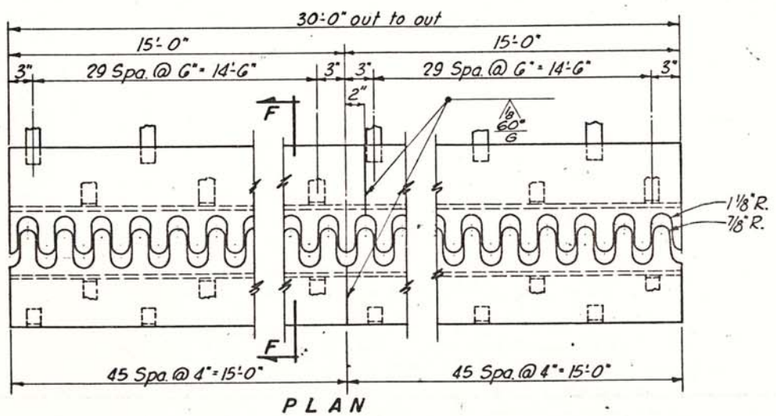


PLAN

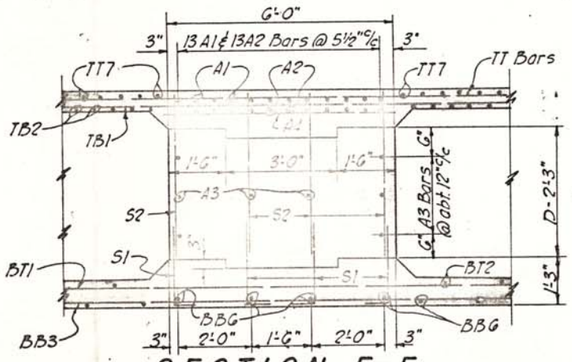


SECTION E-E

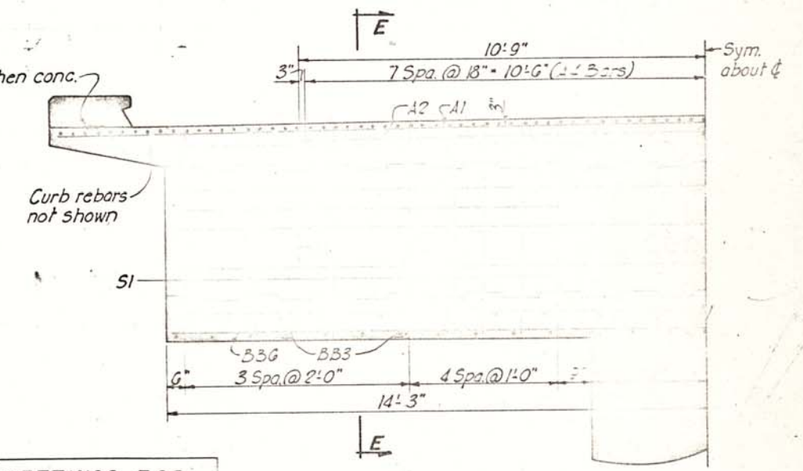


SECTION D-D
(Column Re-Steel not shown)

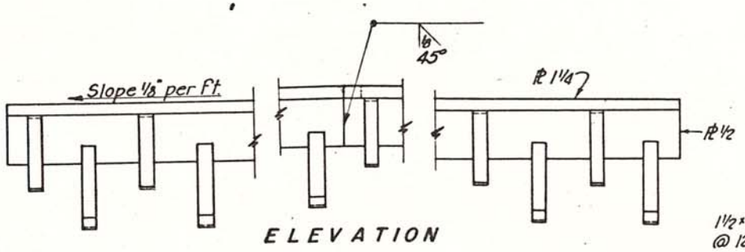


ELEVATION

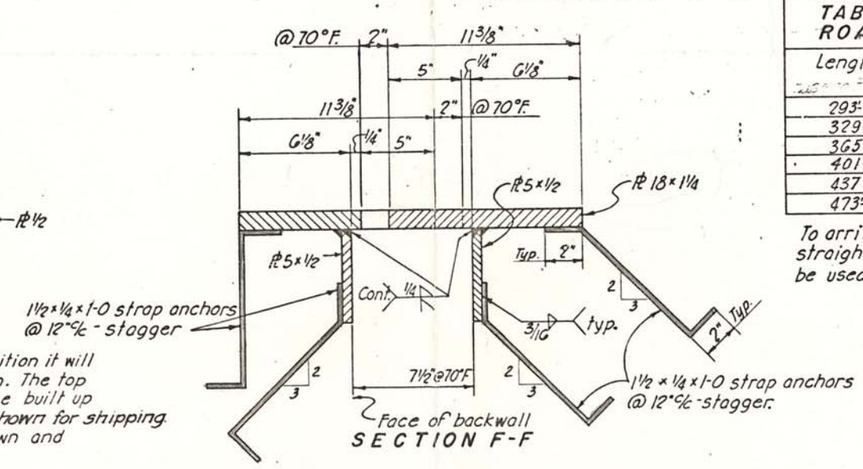


SECTION F-F

| TABLE OF SETTINGS FOR ROADWAY EXPANSION DEVICES | | | | |
|---|---|---|---|---|
| Length Overall | Temp. Range | | | |
| | 120°F | 70°F | 20°F | -30°F |
| 293'-3" | 1¼" | 2" | 2¾" | 3½" |
| 329'-3" | | | | |
| 365'-3" | | | | |
| 401'-3" | 1" | 2" | 3" | 4" |
| 437'-3" | | | | |
| 473'-3" | | | | |

To arrive at any value in-between, straight line proportioning should be used.

The Expansion Device shall be completely shop assembled, adjusted to the position it will take in the final structure, and the pieces match marked for field erection. The top surface of the Expansion Device shall conform to the roadway crown. The built up Expansion Device may be made in sections of half the roadway width ± as shown for shipping. Splices shall be made near centerline of roadway with welds as shown and with roadway surface of welds ground smooth.

ROADWAY EXPANSION DEVICE DETAILS

Det. Rev. 3-20-58

## ORIGINAL CONSTRUCTION PLANS

EXPANSION DEVICE & SUPERSTRUCTURE DETAILS FOR
4-SPAN CONTINUOUS
CONCRETE BOX GIRDER BRIDGES
WITH
SINGLE COLUMN PIERS ON PILES
30'-0" ROADWAY 293'-3" TO 473'-3" OVERALL LENGTH

DECEMBER 1957 SOUTH DAKOTA H20-S16-44
DEPARTMENT OF HIGHWAYS & ALT.
KIRKHAM, MICHAEL & ASSOCIATES CONSULTING ENGINEERS

STR. NO. 64-008-205



| DESIGNED BY | DRAWN BY | CHECKED BY | APPROVED |
|---|---|---|---|
| DLF | FCH | CJN | [illegible] BRIDGE ENGINEER |

MATHISON CO. 250 9-81 MC2918AA

| STATE OF | PROJECT | SHEET NO. | TOTAL SHEETS |
|---|---|---|---|
| S.D. | IM-PH 0291(122)0 | 192 | 284 |

CONSTRUCTION NOTE:
Sides of recess for Special End Shoe may be beveled a maximum of 1/2" in 3 1/2" to facilitate form removal.

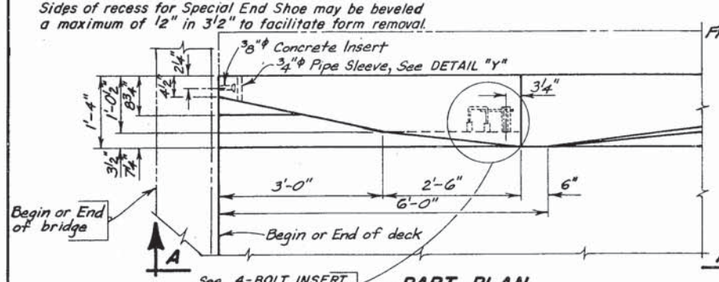


PART PLAN

See 4-BOLT INSERT ASSEMBLY Details on Sheet No. 2 of 2.

RAIL REPLACEMENT.

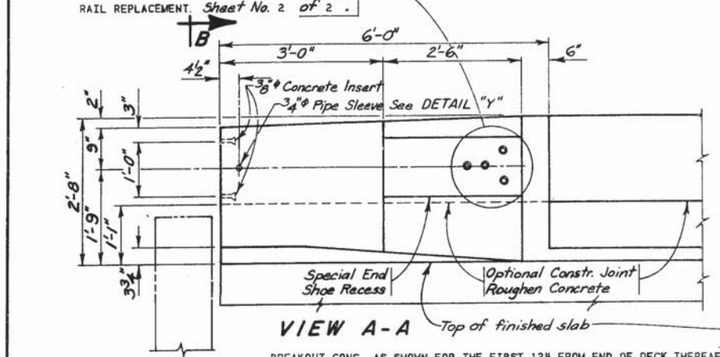


VIEW A-A

BREAKOUT CONC. AS SHOWN FOR THE FIRST 12" FROM END OF DECK THEREAFTER REFER TO DETAIL "X" AND SEC'S. D-D, E-E, F-F, AND G-G. FOR LEFT CURB ONLY. FOR RIGHT CURB REMOVE THE ENTIRE CURB MAKING SURE NOT TO DAMAGE ANY CURB STEEL AND THEN REBUILD THE CURB TO ITS ORIGINAL CONFIGURATION OUTSIDE THE LIMITS OF THE JERSEY BARRIER.

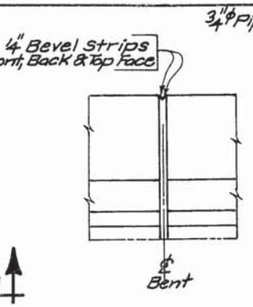


(Typical Detail for chamfering Barrier Curb Face at existing construction joints in curb)

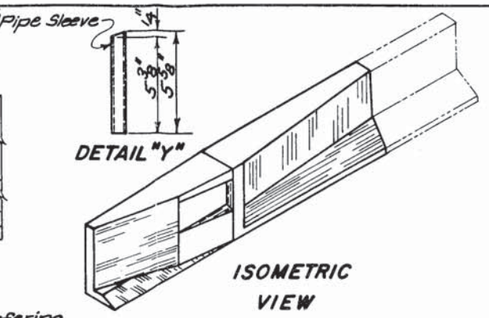


ISOMETRIC VIEW

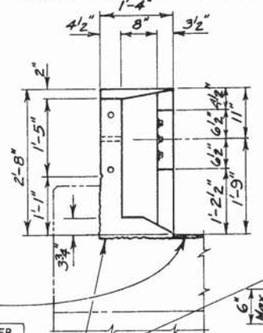


VIEW B-B

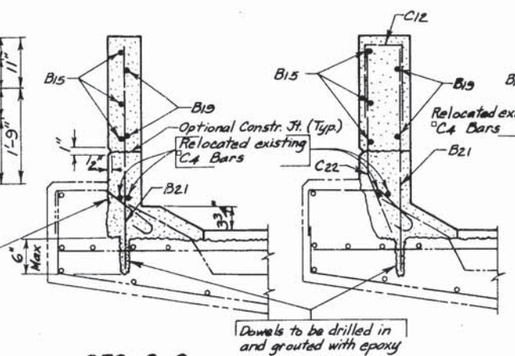


SEC. C-C SEC. D-D SEC. E-E

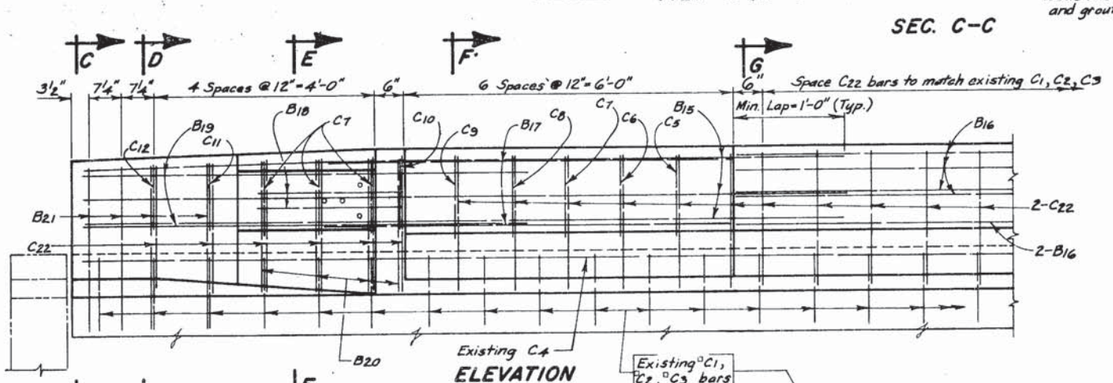


ELEVATION

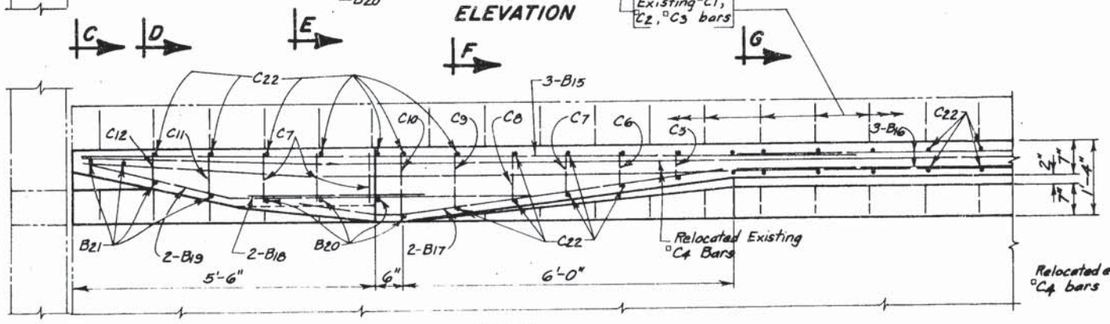


PLAN

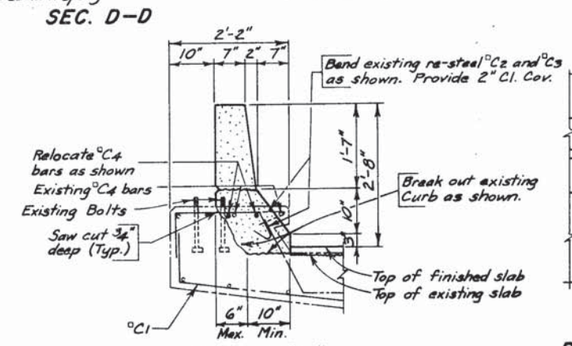


DETAIL "X"

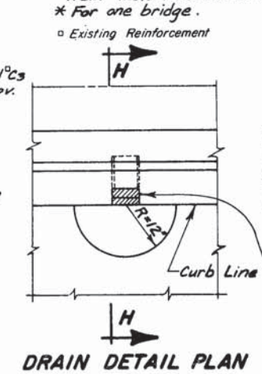


DRAIN DETAIL PLAN

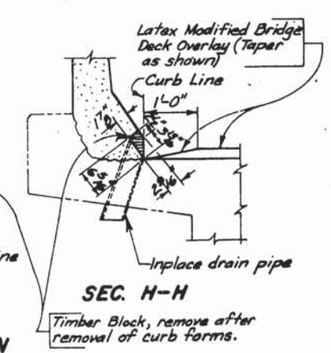


SEC. H-H

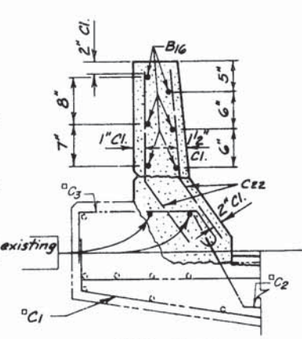


SEC. G-G

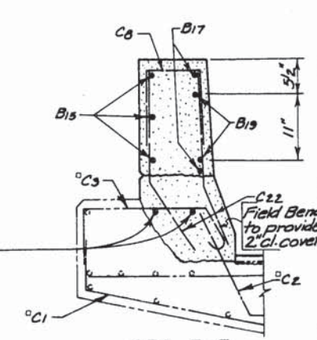


SEC. F-F

## *REINFORCING SCHEDULE

| MK. | No. | Size | Length | Type |
|---|---|---|---|---|
| B15 | 12 | 5 | 14'-3" | Str. |
| B16 | 72 | 4 | 45'-9" | Str. |
| B17 | 8 | 4 | 7'-7" | 19A |
| B18 | 8 | 4 | 2'-6" | Str. |
| B19 | 8 | 8 | 8'-0" | 19B |
| B20 | 16 | 5 | 2'-6" | Str. |
| ★ B21 | 16 | 6 | 2'-11" | Str. |
| C22 | 1136 | 5 | 2'-5" | 19B |
| C5 | 4 | ↑ | 3'-4" | T1 |
| C6 | 4 | | 3'-6" | ↑ |
| C7 | 16 | | 3'-7" | |
| C8 | 4 | | 3'-9" | |
| C9 | 4 | | 3'-10" | |
| C10 | 4 | | 3'-11" | |
| C11 | 4 | ↓ | 3'-6" | ↓ |
| C12 | 4 | 5 | 3'-4" | T1 |
| | | | | |
| | | | | |

Bending Details

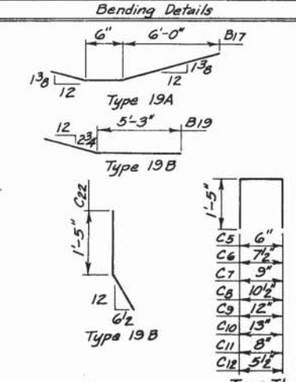


NOTE: All dimensions are out to out of bars.

## *ESTIMATED QUANTITIES

| ITEM | UNIT | QUANTITY |
|---|---|---|
| Class "A" Concrete (Bridge Repair) | Cu. Yds. | 4.96 |
| * Reinforcement Concrete Masonry | Lbs. | 5,674 |
| (Breakout) Structural Concrete | Cu. Yds. | 23.1 |
| Remove Bridge Railing | Lin. Ft. | 588.9 |
| Install Dowels in Concrete | Each | 16 |

* Does not include 70 Lbs. for B21 as these are paid for under item "Install Dowels in Concrete."
* For one bridge.
□ Existing Reinforcement

# ORIGINAL CONSTRUCTION PLANS

BARRIER CURB DETAILS FOR REPLACEMENT OF RAILING
FOR
## 293'-3" BOX GIRDER BRIDGE
30'-0" ROADWAY

OVER I.S. NO. 29 STA. 38+50.00 SEC. 18-T92N-R50W
STA. 39+87.28 TO 42+80.53 IR 29-1(43)4
STR. NO. 64-008-205 HS 20-44 (& ALT.)
UNION COUNTY
SEPT 1983



| DESIGNED BY | DRAWN BY | CHECKED BY | APPROVED |
|---|---|---|---|
| EJA TVO. | C.D. | K.C.P.& TVO. | BRIDGE ENGINEER |

W-11

| STATE OF | PROJECT | SHEET NO. | TOTAL SHEETS |
|---|---|---|---|
| S.D. | IM-PH 0291(122)0 | 193 | 284 |

Δ Rev. 12-84 M.C.V.

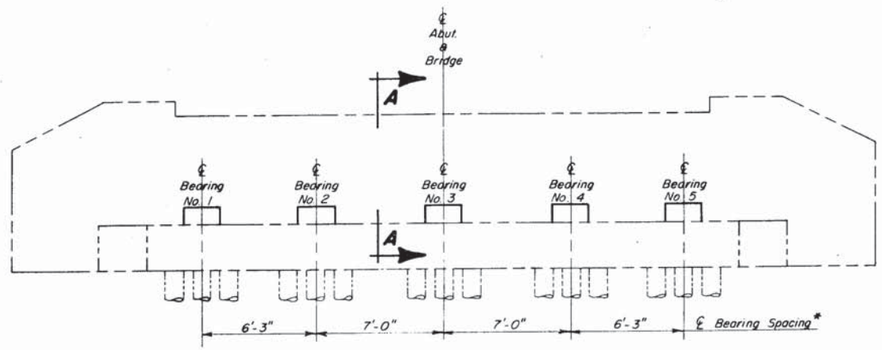


* Dimensions are approximate and must be field verified.

## ELEVATION OF EXISTING ABUTMENT

(Bearings are numbered from left to right facing the abutment backwall)

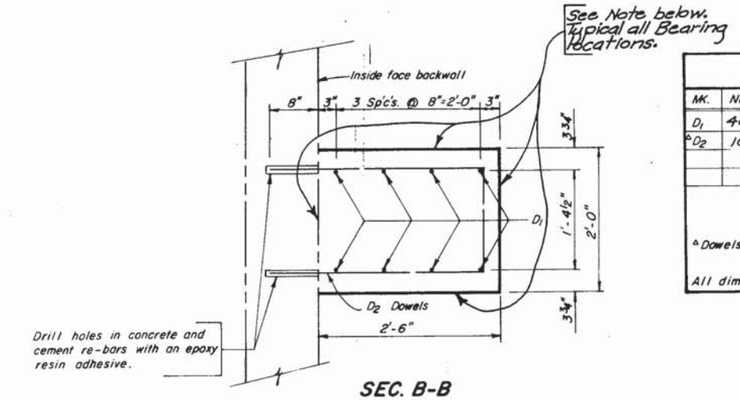


## SEC. B-B

NOTE: At all locations where the new concrete riser meets the existing sill and backwall, seal from water intrusion with a material acceptable to the ENGINEER.

## REINFORCING SCHEDULE (Two Abutments)

| MK. | No. | Size | Length | Type |
|---|---|---|---|---|
| $D_1$ | 40 | 4 | 2'-4" | 17 |
| Δ $D_2$ | 10 | 4 | 7'-5" | 17 |
| | | | | |
| | | | | |

Bending Details

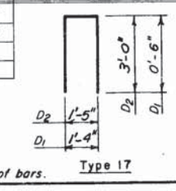


Type 17

Δ Dowels

All dimensions are out to out of bars.

## ESTIMATED QUANTITIES (Two Abuts.)

| ITEM | UNIT | QUANTITY |
|---|---|---|
| Class "A" Concrete - Bridge Repair | Cu. Yds. | 1.5 |
| Reinforcement Concrete Masonry | Lbs. | * 62 |
| Install Dowels in Concrete | Each | 10 |
| Jack Superstructure/Conc. Bridge | L.S. | L.S. |
| Elastomeric Bearings | Each | 10 |
| | | |
| | | |

* Does not include 50 lbs. for $D_2$ Dowels as these are paid for under the bid item "Install Dowels in Concrete".

FOR INFORMATIONAL PURPOSES THE ESTIMATED WEIGHT OF THE SPECIAL STEEL SHIM PLATES ARE 99 lbs. AND SHALL BE ABSORBED IN THE UNIT PRICE BID FOR "ELASTOMERIC BEARINGS". WEIGHT IS ESTIMATED USING AVERAGE BEVELED SHIM HEIGHT.

## ϕ TABLE OF CONCRETE RISER THICKNESSES (Theoretical)

| Abut. No. | Bearing No. | Concrete Riser Thickness |
|---|---|---|
| 1 | 1 | 9 1/2" |
| | 2 | 9 11/16" |
| | 3 | 9 3/4" |
| | 4 | 9 13/16" |
| | 5 | 9 5/8" |
| 5 | 1 | 9 3/8" |
| | 2 | 9 11/16" |
| | 3 | 9 3/4" |
| | 4 | 9 13/16" |
| | 5 | 9 9/16" |

Δ ϕ Dimensions assume an imbedment of the masonry plate into the riser pad to be approximately 1/2"

For informational purposes the estimated weight of the Masonry Plates and Retainer bars is 570 lbs.

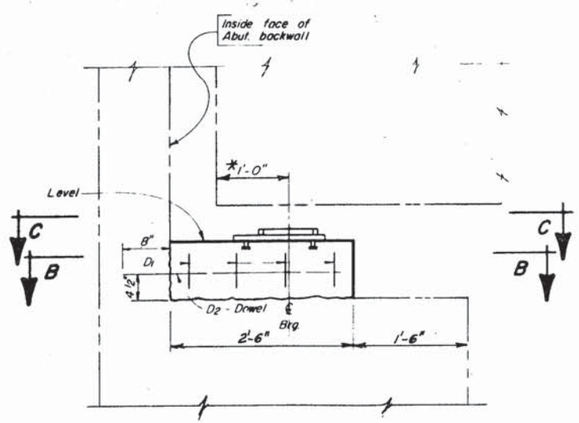


## SEC. A-A

Shim PL and elastomeric Bearing not shown for clarity.

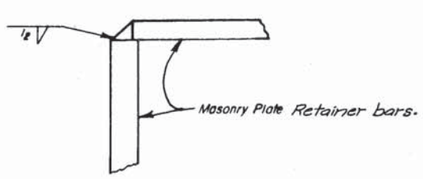


## DETAIL "Y"

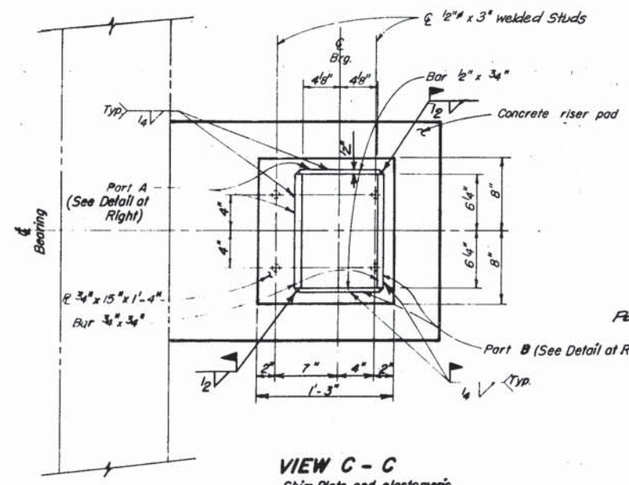


## VIEW C - C

Shim Plate and elastomeric bearing not shown for clarity

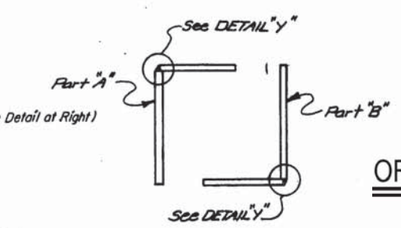


## MASONRY PLATE RETAINER

ORIGINAL CONSTRUCTION PLANS

BEARING REPLACEMENT DETAILS
FOR
**293'-3" BOX GIRDER BRIDGE**
30'-0" RDWY.

OVER I.S. No.29 Sta. 38+50.00 SEC.18-T92N-R50W
STA.39+87.28 TO 42+80.53 IR 29-1(43)4
STR. NO. 64-008-205 HS 20-44 (ϕ ALT.)
UNION COUNTY

S. D. DEPT OF TRANSPORTATION

NOV. 1983 (19) OF (20) SHEET

| DESIGNED BY | DRAWN BY | CHECKED BY | APPROVED |
|---|---|---|---|
| EJK & LAS | D.A.H. | EJK & LAS | BRIDGE ENGINEER |

| STATE OF | PROJECT | SHEET NO. | TOTAL SHEETS |
|---|---|---|---|
| S.D. | EM-PH 0291(12)10 | 194 | 284 |

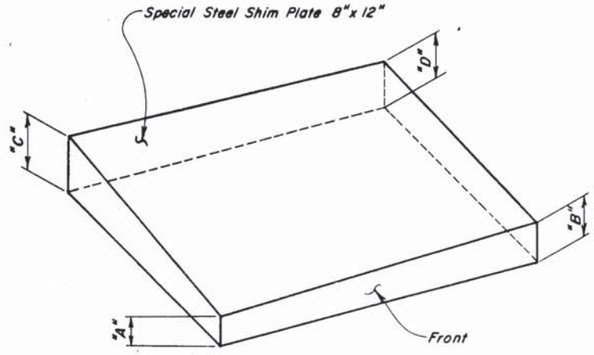


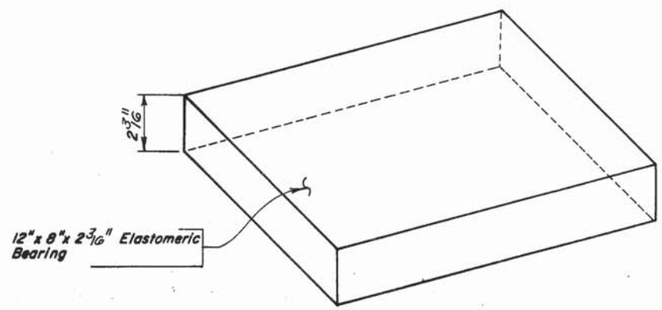


**BEARING ASSEMBLY**
(Expanded Isometric View of Shim plate and elastomeric Bearing)

**TABLE OF DIMENSIONS**
* (For Special Steel Shim Plates)

| | Location | Dimensions (INCHES) "A" | "B" | "C" | "D" |
|---|---|---|---|---|---|
| Abut. No. 1 | Bearing No. 1 | 15/16 | 13/16 | 5/8 | 1/2 |
| | Bearing No. 2 | 1 5/16 | 1 1/16 | 3/4 | 1/2 |
| | Bearing No. 3 | 9/16 | 9/16 | 1/2 | 1/2 |
| | Bearing No. 4 | 5/8 | 5/8 | 1/2 | 1/2 |
| | Bearing No. 5 | 3/4 | 3/4 | 1/2 | 1/2 |
| | | | | | |
| Abut. No. 5 | Bearing No. 1 | 1/2 | 5/8 | 3/4 | 7/8 |
| | Bearing No. 2 | 15/16 | 1 | 1/2 | 9/16 |
| | Bearing No. 3 | 9/16 | 1/2 | 1 1/16 | 1 |
| | Bearing No. 4 | 1 | 11/16 | 13/16 | 1/2 |
| | Bearing No. 5 | 1 1/4 | 1 1/2 | 1/2 | 3/4 |
| | | | | | |

* Field Verify (See Notes)

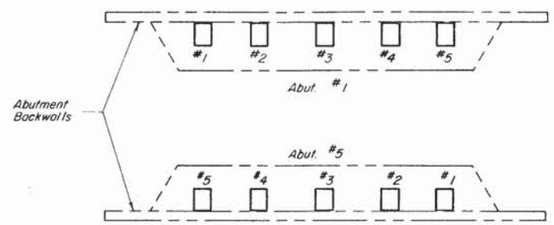


**BEARING LOCATION**

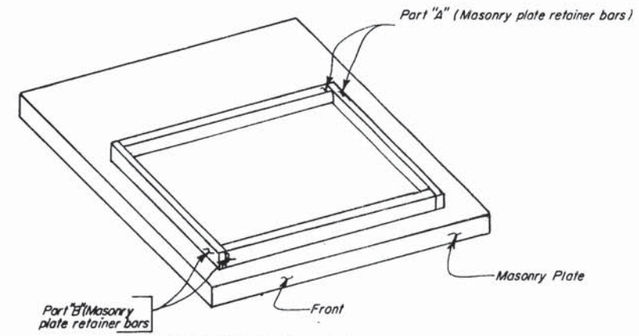


**ISOMETRIC VIEW OF MASONRY PLATE**
(For details of masonry plate retainer bars see Bearing Replacement Sheet No. 1 of 2.)

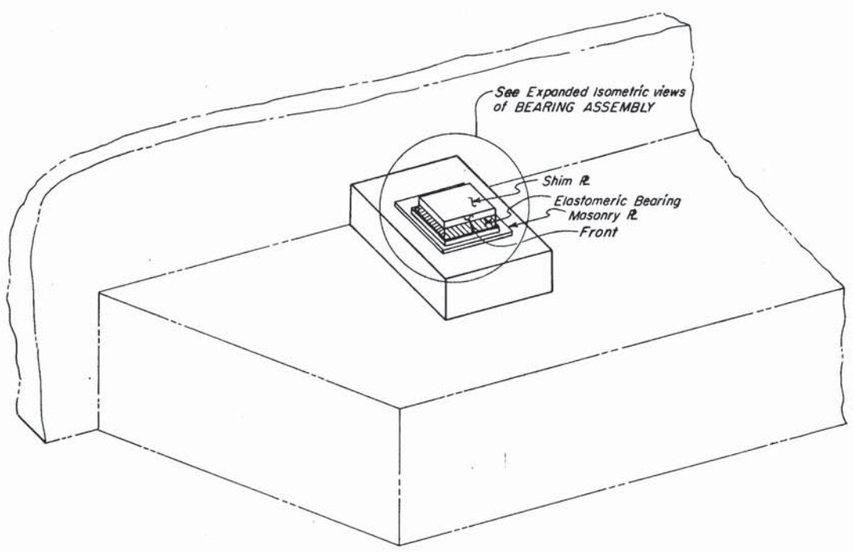


**BEARING ASSEMBLY ISOMETRIC VIEW**
(Superstructure not shown for clarity.)

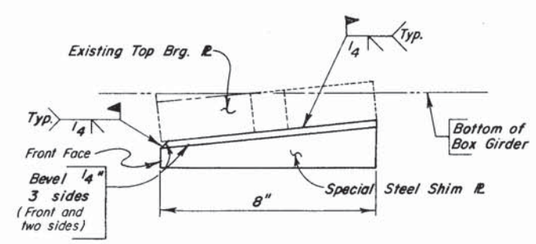


**SHIM PLATE ATTACHMENT DETAILS**

ORIGINAL CONSTRUCTION PLANS

**BEARING REPLACEMENT DETAILS**
**FOR**
**293'-3" BOX GIRDER BRIDGE**
**30'-0" ROADWAY**

OVER I.S. No. 29 Sta. 38+50.00 SEC. 18-T92N-R50W
STA. 39+87.28 TO 42+80.53 IR 29-1(43)4

STR. NO. 64-008-205 HS 20-44 (a ALT.)

UNION COUNTY
SEPT. 1983 SHEET 20 OF 20 SHEETS

| DESIGNED BY | DRAWN BY | CHECKED BY | APPROVED |
|---|---|---|---|
| E.Q.A & LAS | C.D. & D.A.H. | EQA LAS | BRIDGE ENGINEER |

| STATE OF | PROJECT | SHEET NO. | TOTAL SHEETS |
|---|---|---|---|
| S.D. | IM-PH 0291(122)0 | 195 | 284 |

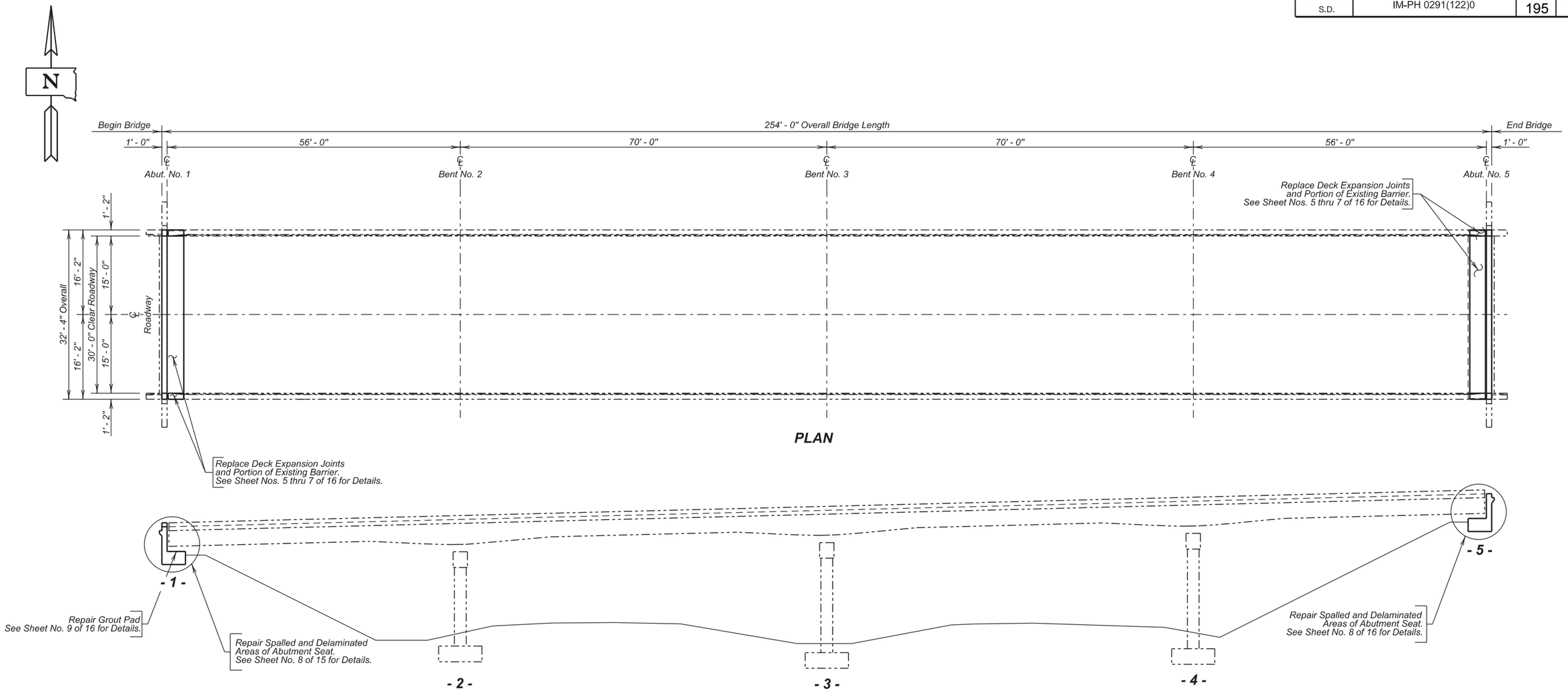


## INDEX OF BRIDGE SHEETS -


*Sheet No. 1 - Layout for Upgrading*
*Sheet No. 2 - Estimate of Structure Quantities and Notes*
*Sheet No. 3 - Notes (Continued)*
*Sheet No. 4 - Notes (Continued)*
*Sheet No. 5 - Joint Replacement Layout*
*Sheet No. 6 - Joint Replacement Details*
*Sheet No. 7 - Joint Replacement Details (Continued)*
*Sheet No. 8 - Abutment Sill Repair Details*
*Sheet No. 9 - Grout Pad Replacement at Abutment No. 1*
*Sheet Nos. 10 - Standard Plate No. 460.03*
*Sheet Nos. 11 - 16 - Original Construction Plans (Continued)*


**LAYOUT FOR UPGRADE**

FOR

254' - 0" CONT. COMPOSITE GIRDER BRIDGE

30' - 0" ROADWAY — 0° SKEW
OVER INTERSTATE 29 — SEC. 31/6-T97/96N-R50W
STR. NO. 42-065-230 — IM-PH 0291(122)0
PCN 02PT

LINCOLN COUNTY

S. D. DEPT. OF TRANSPORTATION

OCTOBER 2015

1 OF 16

*PLANS BY :*
*OFFICE OF BRIDGE DESIGN, SOUTH DAKOTA DEPARTMENT OF TRANSPORTATION*

| DESIGNED BY | CK. DES. BY | DRAFTED BY | |
|---|---|---|---|
| KSK | BD | KR | Kevin N. Goeden |
| LINC02PT | 02PTRG01 | | BRIDGE ENGINEER |

## ESTIMATE OF STRUCTURE QUANTITIES

| ITEM NO. | DESCRIPTION | QUANTITY | UNIT |
|---|---|---|---|
| 410E0550 | Jack Superstructure, Steel Girder | LumpSum | LS |
| 410E2220 | Replace Expansion Device | 2 | Each |
| 460E0174 | Concrete Patching Material, Miscellaneous | 16.2 | CuFt |
| 460E0300 | Breakout Structural Concrete | 0.6 | CuYd |
| 460E0310 | Breakout and Replace Grout Pad | 1 | Each |
| 480E5000 | Galvanic Anode | 10 | Each |
| | | | |

### SPECIFICATIONS

1. Design Specifications: AASHTO Standard Specifications for Highway Bridges 17th Edition using Working Stress Design.
2. Construction Specifications: South Dakota Standard Specifications for Roads and Bridges, 2015 Edition and Required Provisions, Supplemental Specifications and Special Provisions as included in the Proposal.
3. All Welding and Welding Inspection shall be in conformance with the AASHTO/AWS Bridge Welding Code D1.5M/D1.5:2010 unless otherwise noted in this plan set.

### DETAILS AND DIMENSIONS OF EXISTING BRIDGE

All details and dimensions of the existing bridge, contained in these plans, are based on the original construction plans and shop plans and are provided as information only. It is the Contractor's responsibility to inspect and verify the actual field conditions and any necessary as-built dimensions affecting the satisfactory completion of the work required for this project.

### SCOPE OF BRIDGE WORK & SEQUENCE OF OPERATIONS

All work on this structure shall be accomplished with the traffic control shown in the plans. Alternate sequence of operations may be submitted by the Contractor for approval by the Engineer a minimum of two weeks prior to the pre-construction meeting.

1. Repair the grout pad on Abutment No. 1.
2. Repair the abutment sills on Abutment No. 1 and Abutment No. 5.
3. Breakout the bridge deck and barrier curb and joint at Abutment No. 1 & 5 for the first phase of construction.
4. Place strip seal expansion devices at Abutment Nos. 1 and 5 for the first phase of construction.
5. Switch traffic and repeat steps 3 and 4 for the second phase of construction.

### GENERAL CONSTRUCTION - BRIDGE

1. All mild reinforcing steel shall conform to ASTM A615, Grade 60.
2. All exposed concrete corners and edges shall be chamfered 3/4" unless noted otherwise in the plans. Match existing chamfer if the existing chamfer differs.
3. Use 2" clear cover on all reinforcing steel except as shown otherwise.
4. Request for construction joints or resteel splices at points other than those shown, must be submitted to the Engineer for prior approval. If additional splices are approved, no payment will be allowed for the added quantity of reinforcing steel.
5. Surfaces of fresh concrete at construction joints shall be rough floated sufficiently to consolidate the surface. All construction joints shall be cleaned of surface laitance, curing compounds and other foreign materials prior to placing fresh concrete against the joint.
6. Barrier curbs and End block shall be built normal to the grade.
7. Contractor shall only imprint one year plate on the structure. The year plate shall contain the date the existing bridge was built and shall be located as specified and detailed on Standard Plate No. 460.03.
8. Snap ties, if used in the barrier curb formwork, shall be epoxy coated. The epoxy coating shall be inert in concrete and compatible with the coating applied to the new epoxy coated reinforcing steel.
9. The concrete barriers shall be cured in accordance with Section 460.3 M of the Construction Specifications except that no curing compounds shall be allowed.

### DESIGN MIX OF CONCRETE

1. Class A45 Concrete shall be used for the bid items "Replace Expansion Device" and "Class A45 Concrete, Bridge Repair".
2. The Type of cement, concrete strength requirements, aggregate requirements, slump and air requirements for the contract item "Replace Expansion Device" and "Class A45 Concrete, Bridge Repair" shall conform to the requirements of Section 460 of the Construction Specifications.

### CONCRETE BREAKOUT

1. The existing abutment sills, bridge deck and bridge barrier shall be broken out to the limits shown on the plans. Breakout limits shall be defined with a 3/4" deep sawcut (unless specified otherwise in these plans), where practical, as approved by the Engineer. Reinforcing steel that is exposed and is scheduled for use in the new construction shall be cleaned and straightened to the satisfaction of the Engineer. Care shall be taken not to damage the existing reinforcing steel that is to be reused in the new construction during concrete breakout. Any reinforcing steel that is damaged during concrete breakout shall be replaced or repaired, as approved by the Engineer, by the Contractor at no cost to the Department.
2. Extreme care shall be used not to nick, gouge, scratch, or damage in any other way, the existing steel girders when breaking out the abutment sills, concrete deck and barriers. Prior to deck removal, the limits of the girder top flanges shall be marked on top of the bridge deck. The Contractor shall not be allowed to use any impact type breakout equipment larger than power driven hand tools for slab removal within six inches of the actual limits of the top flange. At no time shall the use of any breakout method that will nick, gouge, or scratch the flange, or any other structural steel component to be reused, be allowed. In the event that any nicks, gouges, scratches, or other damage occur, the Office of Bridge Design shall be immediately notified. All damaged shall be repaired by the Contractor as recommended by the Office of Bridge Design. All costs involved in repairing any damage, including any non-destructive testing that may be required, shall be at the expense of the Contractor.
3. All broken out concrete shall be disposed of by the Contractor, in accordance with the Environmental Commitments.
4. During concrete removal operations, no broken out concrete shall be allowed to fall onto Interstate 29.
5. The contract unit price per cubic yard for "Breakout Structural Concrete" shall include breaking out concrete, straightening reinforcing steel, and disposal of all broken out material.

### GALVANIC ANODES

1. The Contractor shall furnish and place Galvanic anodes in the concrete repair areas specified in this plan set.

**ESTIMATE OF STRUCTURE QUANTITIES AND NOTES**
FOR
**254' - 0" CONT. COMPOSITE GIRDER BRIDGE**

STR. NO. 42-065-230
OCTOBER 2015



| DESIGNED BY | CK. DES. BY | DRAFTED BY | |
|---|---|---|---|
| KSK | MM | KSK | Kevin N. Boeden |
| LINC02PT | 02PTRG02 | | BRIDGE ENGINEER |

**GALVANIC ANODES (CONTINUED)**

2. The galvanic anodes shall be supplied as one of the following:

   Galvashield XP2
   Vector Corrosion Technologies
   13312 N 56th St, Suite 102
   Tampa, FL 33617
   Phone: (813)830-7566
   Website: www.vector-corrosion.com

   Sentinel Silver
   Euclid Chemical Company
   19218 Redwood Road
   Cleveland, OH 44110
   Phone: (800) 321-7628
   Website: www.euclidchemical.com

   Sika Galvashield XP+
   Sika Corporation US
   201 Polito Avenue
   Lyndhurst, NJ 07071
   Phone: (800)-933-7452
   Website: http://usa.sika.com

3. The anodes shall be placed in accordance with the manufacturer's recommendations and as approved by the Engineer. The anodes have not been shown on the drawings. The Contractor shall provide shop drawings of the galvanic anode installation including locations of the individual anodes to the Office of Bridge Design.

4. The anodes shall be placed with a minimum of 3/4" cover and shall be set in Embedding Mortar per the manufacturer's recommendations. The anodes shall be fully encased in the concrete repair material. Where adequate cover does not exist, a concrete pocket shall be chipped out behind the anode to provide sufficient cover. The Contractor may need to chip around the reinforcing bar locally at the anode installation to made the electrical connection. The reinforcing steel at the connection location shall be cleaned per the manufacturer's recommendations to provide sufficient electrical connection and mechanical bond.

5. The electrical continuity of the electrical connections and reinforcing steel shall be confirmed per the manufacturer's recommendations.

6. The Contractor shall provide manufacturer's product literature and installation instructions to the Engineer 10 days prior to installations.

7. All costs associated with placing anodes including labor, equipment, materials and incidentals shall be included in the contract unit price per each for "Galvanic Anode".

**REPLACE EXPANSION DEVICE**

1. All new structural steel plates and bars shall conform to ASTM A709, Grade 36. Material less than 1/4 inch thick may be ASTM A1011, Grade 36. The 5/8 inch diameter end welded deformed bar anchors shall be a commercially available Fluxed Deformed Bar Anchor Stud, automatically end welded, with material conforming to ASTM A496.

2. The end welded concrete anchors shall conform to Type A steel studs of Section 7 of the latest edition of the AWS D1.1 Structural Welding Code-Steel.

3. Material for the Steel Extrusion shall conform to ASTM A36, A242 or A588.

4. All steel components, steel plates, bars and structural shapes shall be galvanized after shop welding in accordance with ASTM A123.

5. Material for the Neoprene Strip shall conform to that specified in ASTM D2628 modified to omit the recovery test. No splices will be permitted in the Neoprene Strip. The Neoprene strip shall not be installed in phases.

6. The lubricant-adhesive used to install the neoprene seal shall conform to the requirements of ASTM D4070. The neoprene seal and the lubricant-adhesive should be supplied or recommended by the same source as they must be compatible.

7. The expansion joint, with the exception of the neoprene strip, will be installed one-half roadway width at a time while allowing for one-way traffic at all times.

8. Due to work on one-half of the deck at a time, splices in the steel extrusion will be required at the centerline of the roadway. Welded field splice details and the procedures for preparing the surfaces of the entire fabricated joint for welding and repairing the galvanizing after welding shall be included in the shop plans. Repair of galvanizing shall be zinc-based solder method in conformance with ASTM A780. No welds shall be permitted in the internal section of the extrusion where the Neoprene Strip is located.

9. The deck and curb shall be broken out and rebuilt to the limits shown in the plans.

10. The phase limits for construction prevent sufficient room for lap splice, therefore, the transverse reinforcing steel noted on the plan sheet shall be spliced with mechanical splice devices. Mechanical rebar splices shall be in accordance with Section 480 of the Construction Specifications.

11. Since the configuration and dimensions of the steel extrusions may vary according to each manufacturer's design, they need not conform exactly to that shown on the plan sheets; however, any deviations from the plan shown configuration or dimensions must be approved by the Office of Bridge Design.

12. The shape of the Preformed Neoprene Seal may vary from the sketch shown on the plan sheets according to the manufacturer's design; however, the wedge lugs must properly fit the groove in the Steel Extrusion. Before installation, shop plans of the proposed joint modification showing, in addition to fixed dimensions, the thickness of Preformed Neoprene Seal and dimensions pertinent to the fit of the Preformed Neoprene Seal in the Steel Extrusion shall be submitted to and approved by the Engineer.

13. The strip seal supplier shall submit a detailed gland installation procedure with the shop plans.

14. The Steel Extrusions shall be dry, clean and free from dirt, grease, and contaminants at the time Preformed Neoprene Seal is installed. The installation of the Preformed Neoprene Seal shall be as recommended by its manufacturer and approved by the Engineer, but in general shall be as follows: The Preformed Neoprene Seal shall be installed and bonded to the Steel Extrusion with a high-solids lubricant-adhesive. The Neoprene surfaces shall be roughened with a wire brush before the application of the lubricant-adhesive. The Preformed Neoprene Seal shall be installed after the Steel Extrusions are installed in the bridge deck.

15. The two Steel Extrusions of the new expansion joint shall be placed parallel to each other at the required joint opening as specified in the Joint Installation Table. So as to insure the proper functioning of the Neoprene Seal, strict adherence to the joint opening specified by the installation table will be required.

16. Hot-poured elastic joint sealer used to fill the 3/4" x 1/4" sawcut located at the interface of the new concrete to existing bridge deck concrete shall be applied in accordance with Section 380.3P of the Standard Specifications.

17. The new concrete surfaces of the bridge deck in the area of the expansion joint replacement shall be finished in accordance with Sections 460.3 L.4 of the Construction Specifications.

18. The complete expansion device shall be set at the correct grade and crown slope and securely supported during placement of Class A45 Concrete. Care shall be taken to ensure that the correct grade is maintained across the joint.

19. The cost of concrete breakout, removing and resetting guardrail, furnishing, galvanizing, welding, and installed all required materials including labor, equipment and incidentals necessary to complete the work in accordance with the plans shall be incidental to the contract unit price per each for "Replace Expansion Device".

## VERTICAL JACKS

1. Vertical jacks shall be used to carry the girder reactions at Abutment No. 1 during the time of grout pad repair. The intent of the jacking procedure is to transfer the girder reaction to the jack during the grout pad repair while keeping the vertical movement of the girder to the minimum amount necessary, as approved by the Engineer.

2. The vertical jack shall have a lock nut for mechanical load holding with hydraulic pressure released.

3. The vertical jack shall be able to safely support a load of 65 kips for the entire time required to repair the grout pad while allowing for the longitudinal girder movements due to temperature induced expansion and contraction.

4. Caution shall be exercised when transferring the girder reactions to and from the jacks to insure that no damage to any of the existing structural components will occur due to the jacking procedure. Any damage to any of the structural components of the bridge caused by the jacking procedure will be repaired as approved by the Engineer at no cost to the Department.

5. Each jack shall have the bearing plate at both ends of the sufficient area and thickness to limit the bearing stress on the loaded area of concrete to not more than 1600 psi and to limit the bearing stress on the loaded area of steel to not more than 20,000 psi.

6. Jacks shall be kept as close to the end of the girders as is possible to still adequately perform the construction required. Traffic shall be stopped when the hydraulic system of the jack is carrying the girder reaction. Traffic will be allowed to resume under the traffic control shown on the plans only after the lock nut for the mechanical load holding is engaged and the hydraulic pressure is no longer needed to support the girder reaction. No live load will be allowed directly over the jack after the lock nut for the mechanical load holding is engaged. Traffic control has been established based on keeping traffic off of the bridge for no more than 45 minutes when transferring the girder reaction to the jack in the mechanical load holding condition. If the Contractor cannot adequately complete the load transfer operations within the specified period, he shall submit his preferred time requirements in writing to the Engineer at the preconstruction meeting for consideration for approval.

7. The Contractor shall be required to submit a detailed set of plans outlining his jacking procedure to the Engineer a minimum of 30 days prior to use for approval by the Bridge Construction Engineer. Included in this procedure will be the name of the jack used, the load monitoring method for the jack, and details of bearing plates used to limit the bearing stress on the concrete and steel. This shall be submitted by a registered SD engineer.

8. All costs for materials, labor, equipment and incidentals necessary to perform the vertical jacking as shown by these plans shall be included in the contract lump sum price for "Jack Superstructure, Steel Girder Bridge"

## GROUT PAD REPAIR

1. The girder supported by jacking shall not be allowed to transfer any portion of its load to the newly constructed grout pad until the newly constructed grout pad has attained a minimum compressive strength of 2000psi.

2. After the vertical jacks have been locked, the existing bearing and grout pad shall be removed to the dimensions shown on sheet no. 9 of 16. Define the limits of removal with a 3/4 inch deep sawcut where possible. The existing grout pad recess shall be cleaned out to the depth of the original grout pad recess.

3. The elevation of the new grout pad shall match the existing grout pads and maintain the existing elevations at the top of the deck slab after all grout pad repair work is completed.

4. The grout used in the replacement of the grout pad shall be in accordance with Section 460.2 K of the Construction Specifications.

5. After the grout pad has been placed and has had sufficient time to cure, the bearing shall be reattached.

6. The cost of all labor, materials, equipment and any incidentals required including removing existing grout pad and furnishing and placing grout shall be included in the unit price per each for "Breakout and Replace Grout Pad."

**NOTES (CONTINUED)**

FOR

**254' - 0" CONT. COMPOSITE GIRDER BRIDGE**

STR. NO. 42-065-230

OCTOBER 2015



| DESIGNED BY | CK. DES. BY | DRAFTED BY | |
|---|---|---|---|
| KSK | MM | KSK | Kevin N. Goeden |
| LINC02PT | 02PTRG04 | | BRIDGE ENGINEER |

| STATE OF | PROJECT | SHEET NO. | TOTAL SHEETS |
|---|---|---|---|
| S.D. | IM-PH 0291(122)0 | 199 | 284 |

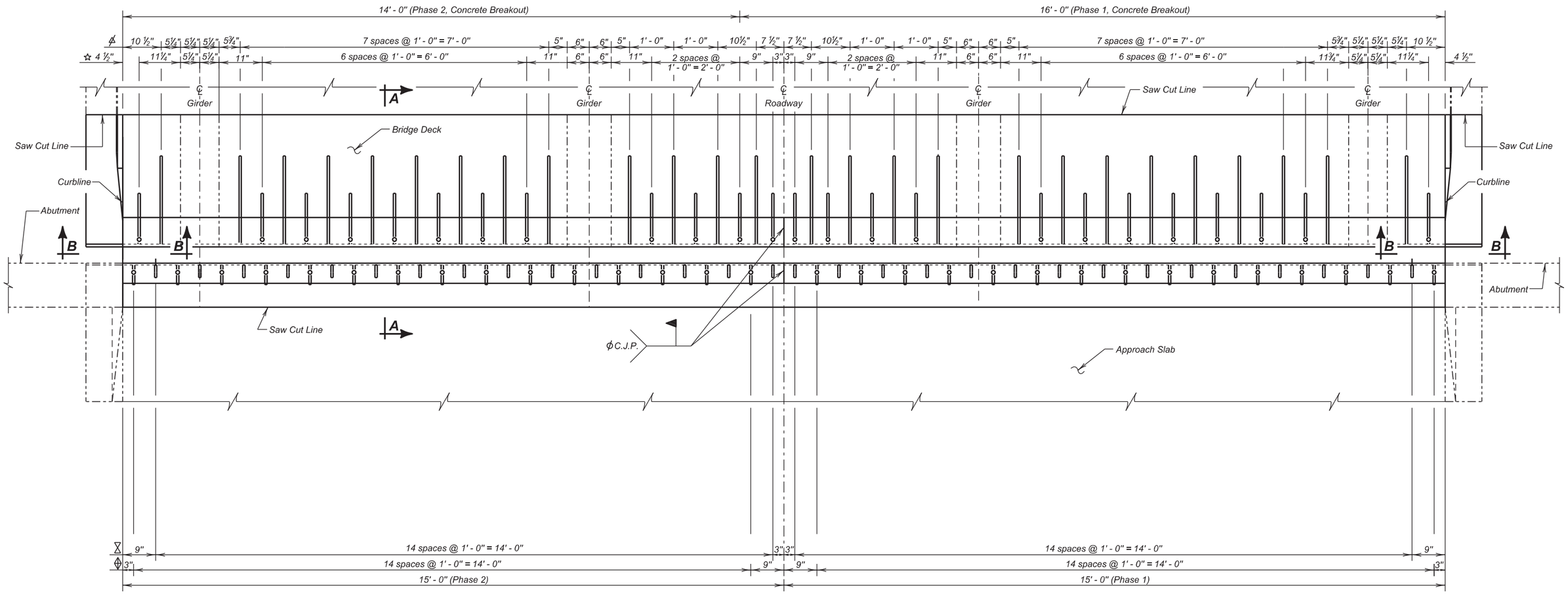


## PLAN

(Abutment No. 1 Shown)
(Abutment No. 4 Similar by Rotation)

⌖ ¾" ϕ Vertical End Welded Concrete Anchor Spacing and 1" ϕ Bleeder Hole Spacing

⌛ ¾" ϕ Horizontal End Welded Concrete Anchor Spacing

ϕ ⅝" ϕ Deformed Anchor Bar Spacing

☆ ½" Bar & 1" ϕ Bleeder Hole Spacing

NOTES -

ϕ Complete Joint Penetration Butt Splice at construction joint to be shown on shop Plans for approval.

All dimensions shown are along the surface of the vertical ¾" thick plate adjacent to concrete.

This sheet is to be used in conjunction with sheet 6 & 7 of 16.

**JOINT REPLACEMENT LAYOUT**

FOR

254' - 0" CONT. COMPOSITE GIRDER BRIDGE

30' - 0" ROADWAY — 0° SKEW
OVER INTERSTATE 29 — SEC. 31/6-T97/96N-R50W
STR. NO. 42-065-230 — IM-PH 0291(122)0

LINCOLN COUNTY
S. D. DEPT. OF TRANSPORTATION
OCTOBER 2015

5 OF 16

| DESIGNED BY | CK. DES. BY | DRAFTED BY | |
|---|---|---|---|
| KSK | MM | KR | Kevin N. Goeden |
| LINC02PT | 02PTRG05 | | BRIDGE ENGINEER |

| STATE OF | PROJECT | SHEET NO. | TOTAL SHEETS |
|---|---|---|---|
| S.D. | IM-PH 0291(122)0 | 200 | 284 |

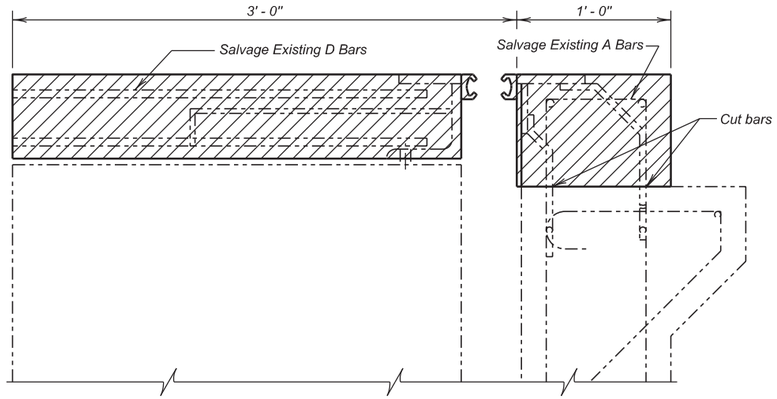


**SECTION A - A**
(Concrete Removal)

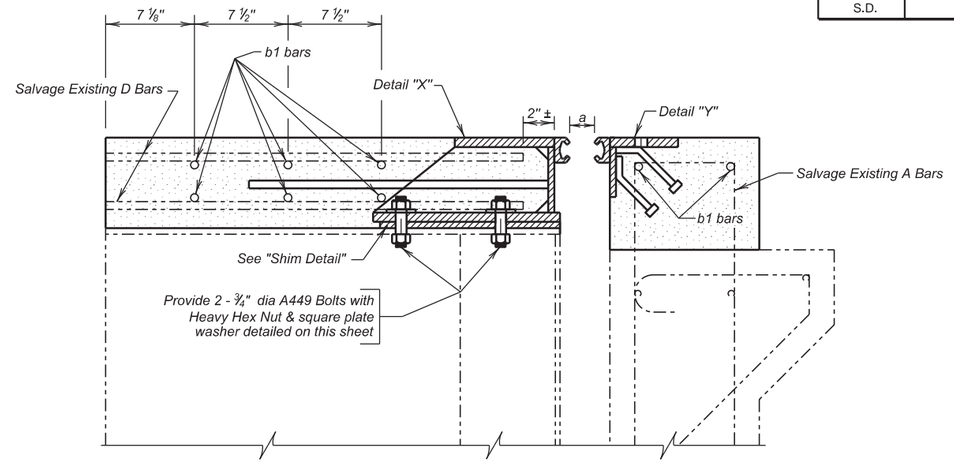


**SECTION A - A**
(New Construction)

LEGEND:

Shaded areas indicate limits of Concrete Breakout.

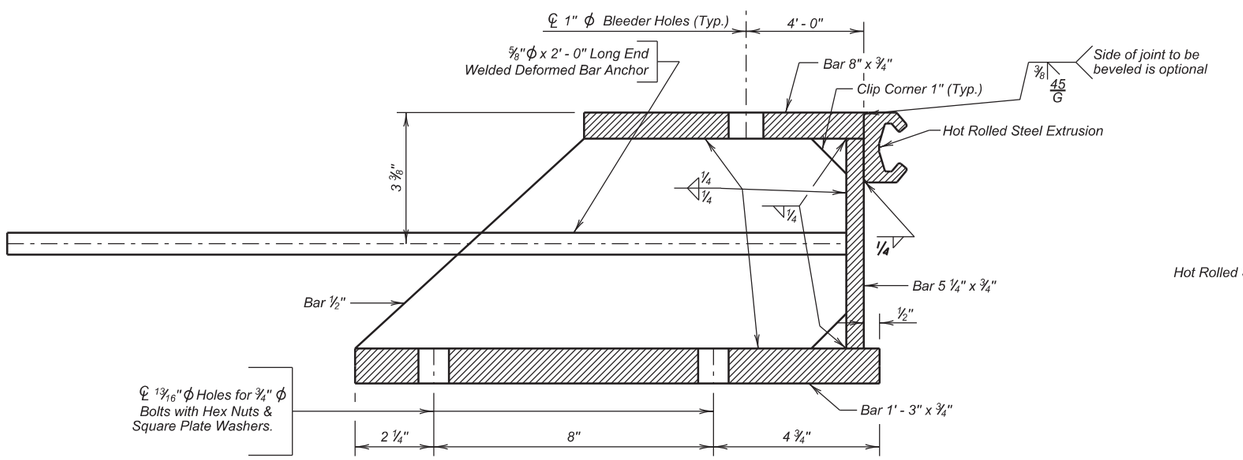


**DETAIL "X"**

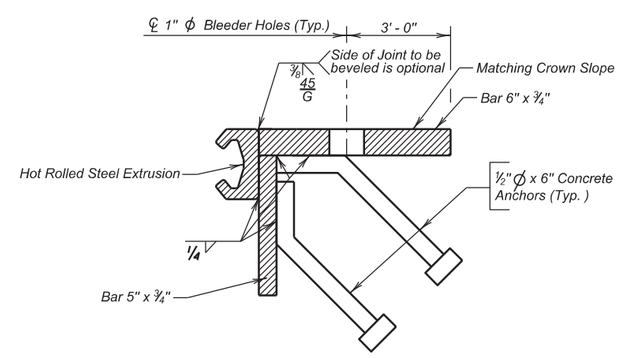


**DETAIL "Y"**

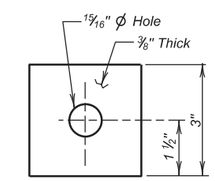


**SQUARE PLATE WASHER**

| Dimension "a" | |
|---|---|
| Temp. | Abut. No. 4 |
| 30° | 2 13/16" |
| 40° | 2 ⅝" |
| 50° | 2 ⅜" |
| 60° | 2 3/16" |
| 70° | 2" |
| 80° | 1 13/16" |
| 90° | 1 ⅝" |
| 100° | 1 ⅜" |

Use this sheet in conjunction with sheet no. 5 & 7 of 16.

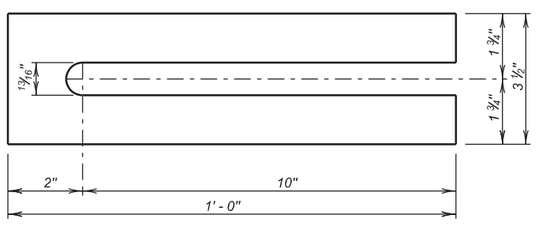


**SHIM DETAIL**

Provide : ½" = _
¼" = _
⅛" = _
1/16" = _

**DETAIL "E"**

Neoprene Seal shall have a 4" movement capability.

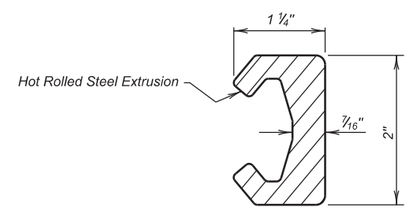


**HOT ROLLED STEEL EXTRUSION**

**JOINT REPLACEMENT DETAILS**

FOR

254' - 0" CONT. COMPOSITE GIRDER BRIDGE

30' - 0" ROADWAY — 0° SKEW
OVER INTERSTATE 29 — SEC. 31/6-T97/96N-R50W
STR. NO. 42-065-230 — IM-PH 0291(122)0

LINCOLN COUNTY
S. D. DEPT. OF TRANSPORTATION
OCTOBER 2015



| DESIGNED BY | CK. DES. BY | DRAFTED BY | |
|---|---|---|---|
| KSK | MM | KR | Kevin N. Goeden |
| LINC02PT | 02PTRG06 | | BRIDGE ENGINEER |

| STATE OF | PROJECT | SHEET NO. | TOTAL SHEETS |
|---|---|---|---|
| S.D. | IM-PH 0291(122)0 | 201 | 284 |

LEGEND:

Shaded areas indicate limits of Concrete Breakout.

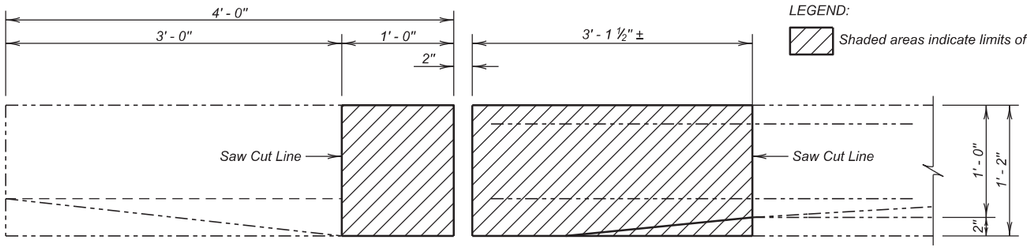


**PLAN**
(Breakout Shown)

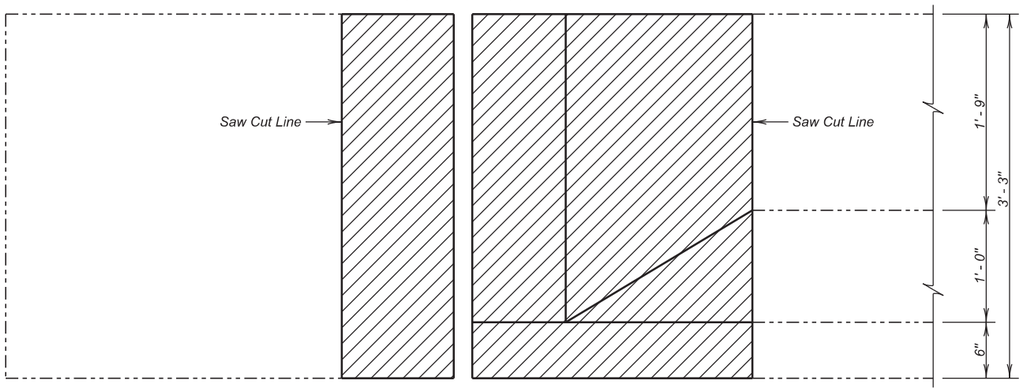


**ELEVATION**
(Breakout Shown)

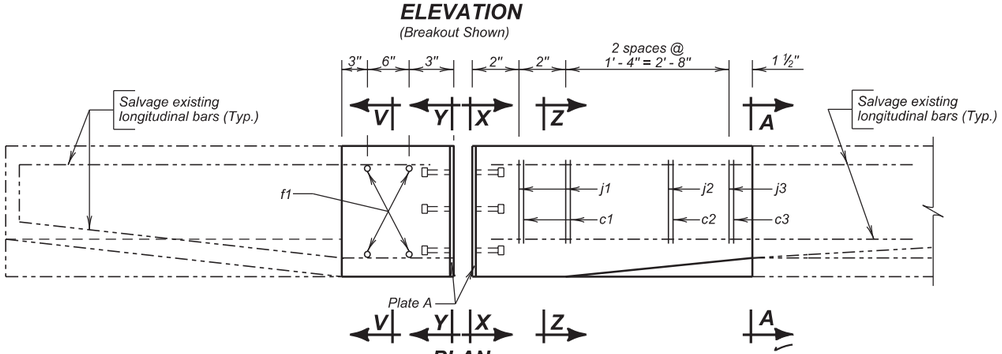


**PLAN**
(Reconstruction Shown)

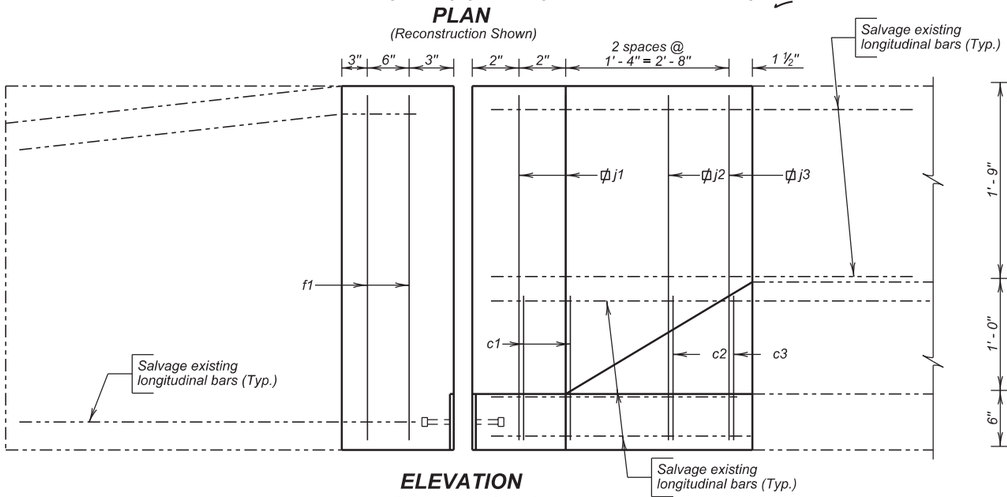


**ELEVATION**
(Reconstruction Shown)

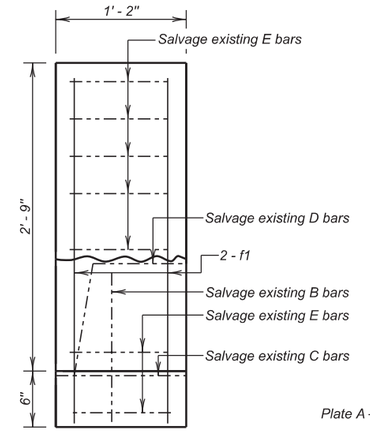


**SEC. V - V**

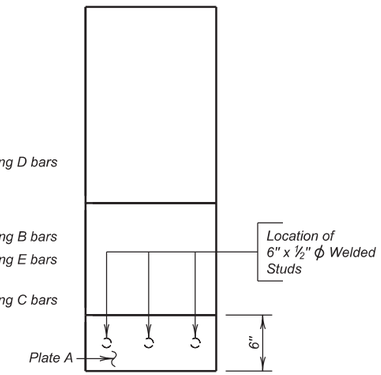


**SEC. Y - Y**

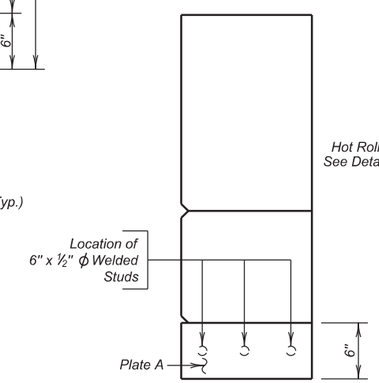


**SEC. X - X**

## REINFORCING SCHEDULE
(For all Four Corners)

| Mk. | No. | Size | Length | Type |
|---|---|---|---|---|
| b1 | 16 | 5 | 14' - 9" | Str. |
| c1 | 8 | 5 | 5' - 4" | T8 |
| c2 | 4 | 5 | 5' - 3" | T8 |
| c3 | 4 | 5 | 5' - 2" | T8 |
| f1 | 16 | 6 | 3' - 0" | Str. |
| j1 | 8 | 4 | 8' - 3" | T2 |
| j2 | 4 | 4 | 8' - 0" | T2 |
| j3 | 4 | 4 | 7' - 11" | T2 |

Bending Details

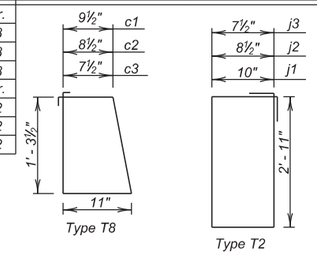


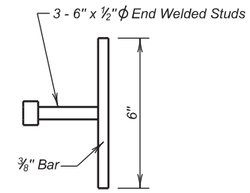


**VIEW C - C**

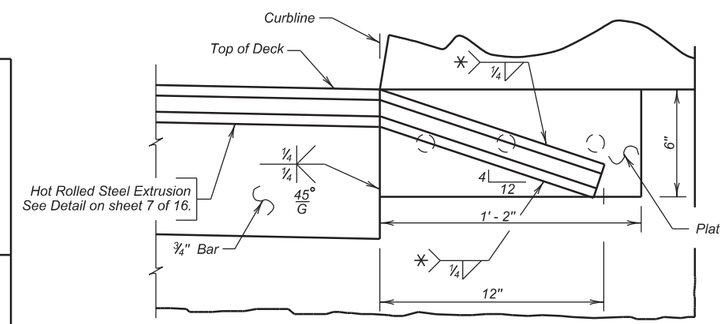


**SEC. B - B**

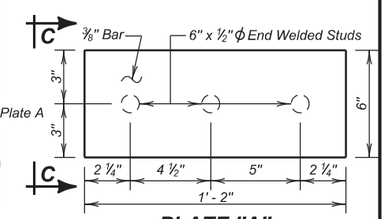


**PLATE "A"**

## ESTIMATED QUANTITIES

| ITEM | UNIT | QUANTITY |
|---|---|---|
| Replace Expansion Device | Each | 2 |

Items 1 thru 5 are approximate quantities contained in the above bid items and are for informational purposes only.

| | Phase 1 | Phase 2 |
|---|---|---|
| 1. Class A45 Concrete: | 2.4 Cu. Yd | 2.4 Cu. Yd. |
| 2. Epoxy Coated Reinforcing Steel: | 246 Lb. | 246 Lb. |
| 3. Structural Steel: | 1809 Lb. | 1809 Lb. |
| 4. Breakout Structural Concrete: | 2.4 Cu. Yd | 2.6 Cu. Yd |
| 5. No. 5 Rebar Splice | 8 Each | - |

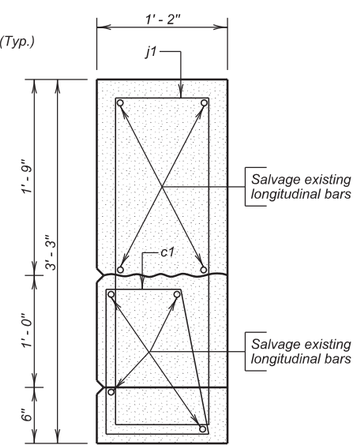


**SEC. Z - Z**

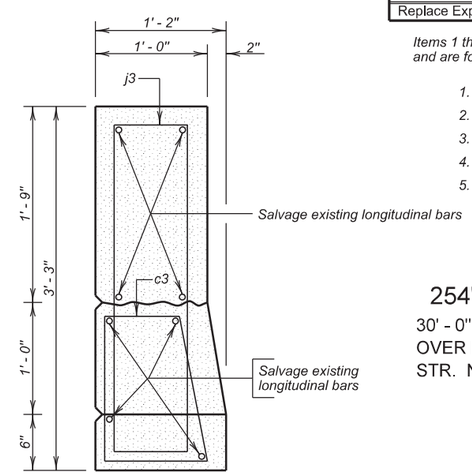


**SEC. A - A**

Use this sheet in conjunction with sheet no. 5 & 6 of 17.

**JOINT REPLACEMENT DETAILS (CONTINUED)**

FOR

254' - 0" CONT. COMPOSITE GIRDER BRIDGE

30' - 0" ROADWAY — 0° SKEW
OVER INTERSTATE 29 — SEC. 31/6-T97/96N-R50W
STR. NO. 42-065-230 — IM-PH 0291(122)0

LINCOLN COUNTY
S. D. DEPT. OF TRANSPORTATION
OCTOBER 2015



| DESIGNED BY | CK. DES. BY | DRAFTED BY | |
|---|---|---|---|
| KSK | MM | KR | Kevin N. Boeden |
| LINC02PT | 02PTRG07 | | BRIDGE ENGINEER |

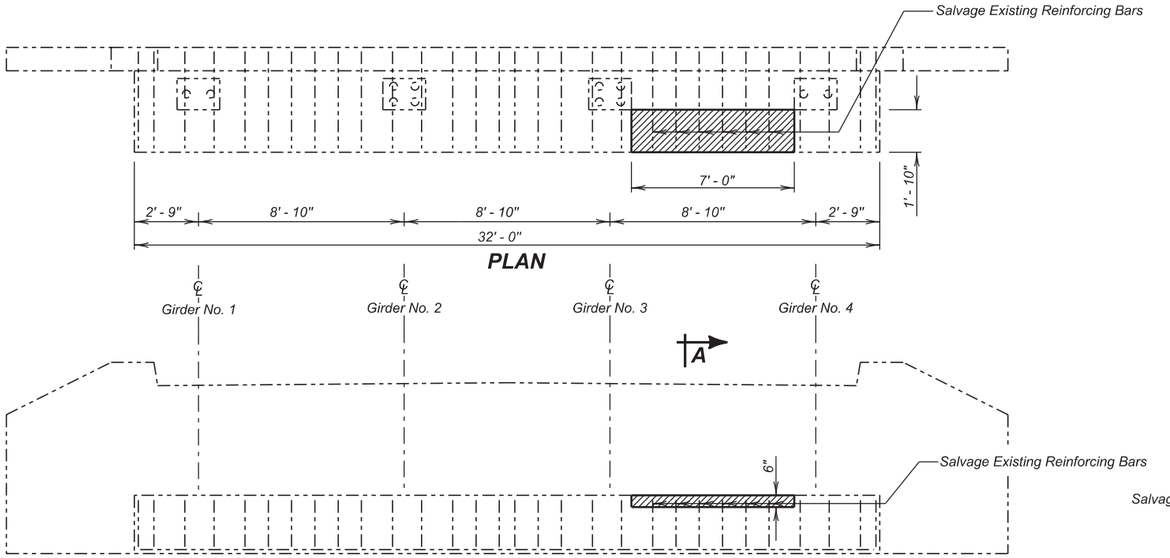


ELEVATION

A

ABUTMENT NUMBER 1

(Bearings not shown)

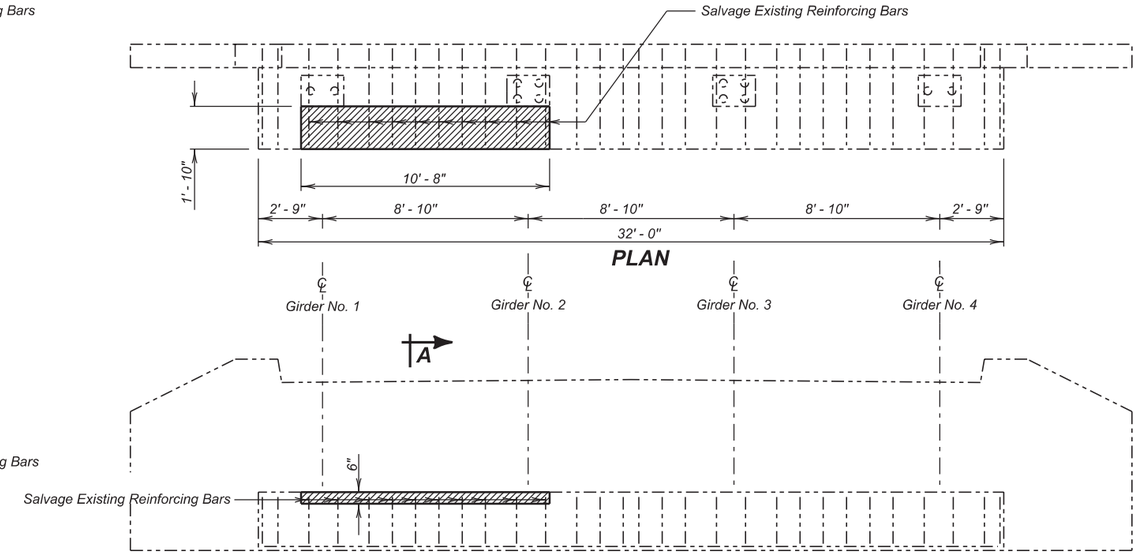


A

ELEVATION

ABUTMENT NUMBER 4

(Bearings not shown)

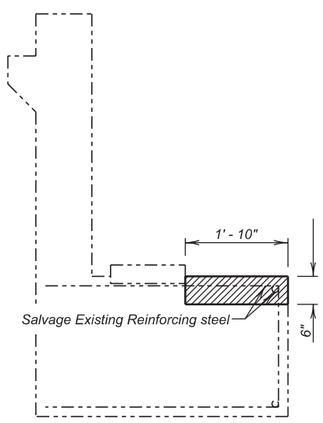


SEC. A - A

Shaded areas indicate approximate locations of concrete breakout and replacement. Dimensions shown will vary depending on field conditions. Concrete shall be broken out until sound concrete is reached.

## ESTIMATED QUANTITIES

| | ITEM | UNIT | QUANTITY |
|---|---|---|---|
| * | Breakout Structural Concrete | CuYd | 0.6 |
| * | Concrete Patching Material, Miscellaneous | CuFt | 16.2 |
| | Galvanic Anode | Each | 10 |
| | | | |

* Quantity is based on approximate dimensions shown in these plans. Actual quantity will vary depending on field conditions.

**ABUTMENT SILL REPAIR DETAILS**

FOR

254' - 0" CONT. COMPOSITE GIRDER BRIDGE

30' - 0" ROADWAY — 0° SKEW

OVER INTERSTATE 29 — SEC. 31/6-T97/96N-R50W

STR. NO. 42-065-230 — IM-PH 0291(122)0

LINCOLN COUNTY

S. D. DEPT. OF TRANSPORTATION

OCTOBER 2015



| DESIGNED BY | CK. DES. BY | DRAFTED BY | |
|---|---|---|---|
| KSK | BD | KSK | Kevin N. Boeden |
| LINC02PT | 02PTRG08 | | BRIDGE ENGINEER |

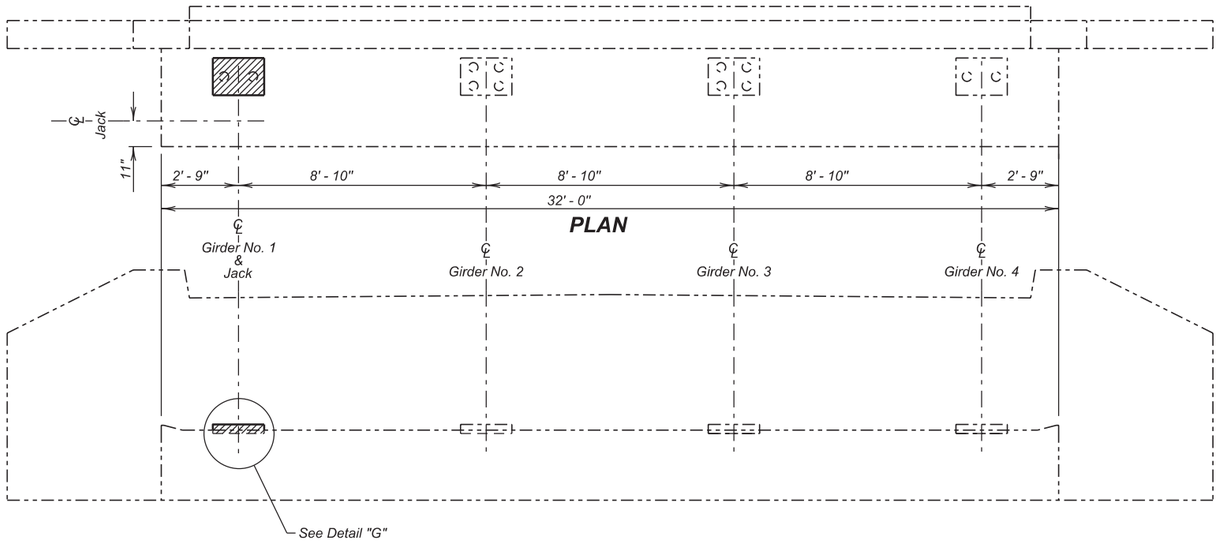


**PLAN**

**ELEVATION**

**ABUTMENT NUMBER 1**

(Bearings not shown for clarity)

Shaded areas indicate limits of grout pad breakout and replacement. See notes on Sheet No. 4 of 16.

| ESTIMATED QUANTITIES | | |
|---|---|---|
| ITEM | UNIT | QUANTITY |
| Breakout and Replace Grout Pad | Each | 1 |
| Jack Superstructure, Steel Girder Bridge | LS | LumpSum |

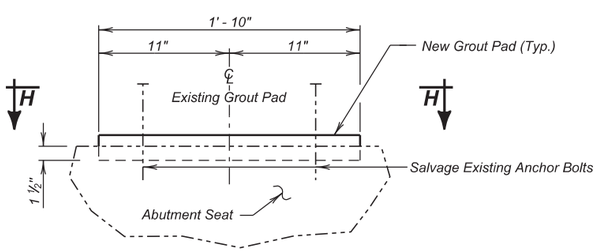


**DETAIL "G"**

(Bearing Not Shown for Clarity)

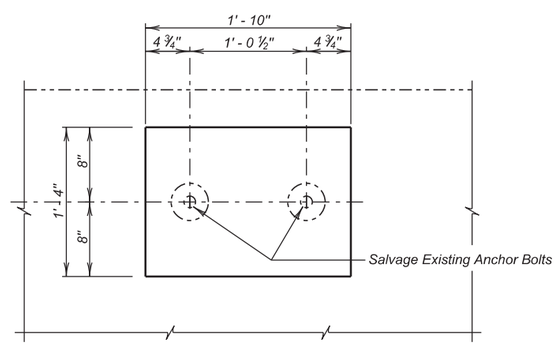


**SECTION H - H**

**NOTE-**

The grout pad replacement shall be placed to the to the same elevation as the existing grout pad.

**GROUT PAD REPLACEMENT AT ABUTMENT NO. 1**

FOR

254' - 0" CONT. COMPOSITE GIRDER BRIDGE

30' - 0" ROADWAY — 0° SKEW

OVER INTERSTATE 29 — SEC. 31/6-T97/96N-R50W

STR. NO. 42-065-230 — IM-PH 0909(79)387

LINCOLN COUNTY

S. D. DEPT. OF TRANSPORTATION

OCTOBER 2015



| DESIGNED BY | CK. DES. BY | DRAFTED BY | |
|---|---|---|---|
| KSK | BD | KSK | Kevin N. Boeden |
| LINC02PT | 02PTKG09 | | BRIDGE ENGINEER |

**YEAR PLATE DETAILS FOR ORIGINAL CONSTRUCTION**

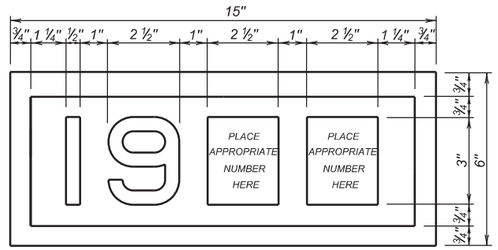


**YEAR PLATE DETAILS FOR NEW CONSTRUCTION**

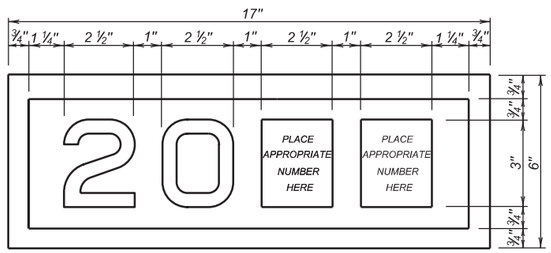


## GENERAL NOTES:

1. Year plates of the general dimensions shown shall be constructed on all box culverts and bridges. The year plates shall be constructed in reverse and attached to the forms in such a manner that the finished imprint in the concrete does not exceed one-half (½) inch in depth.
2. Year plates shall be located on structure(s) as follows:
   a. On cast-in-place box culverts the year plates shall be four and one - half (4 ½) inches below the top of the upstream parapet wall and centered laterally on the upstream face. On precast box culverts the year plate shall be centered laterally on the upstream face of the top slab. Where an extended interior wall interferes with this location, the year plate shall be centered in an adjacent barrel.
   b. On bridges with six (6) inch curbs or "Jersey" shaped barriers with no endblocks, the year plate shall be centered vertically on the curb face approximately six (6) inches from the end of the bridge, or as designated by the Engineer. On bridges with "Jersey" shaped barrier endblocks, the year plate shall be centered on the upper sloped portion of the barrier approximately 5'- 6" from the end of the bridge, or as designated by the Engineer. There shall be one year plate at each end of the bridge on opposite sides.
   c. When the plans specify that both the original date of construction and the date of reconstruction are to be shown, one date shall be placed as listed above and the other located adjacent to it. Both year plates shall be shown at each end of the bridge on opposite sides.
3. There will be no separate measurement or payment made for year plates on box culverts and bridges. All costs for this work shall be incidental to other contract items.

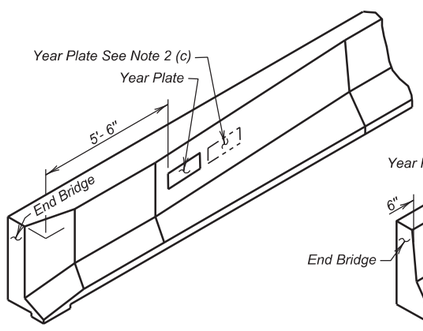


**JERSEY BARRIER**
(With Endblock)

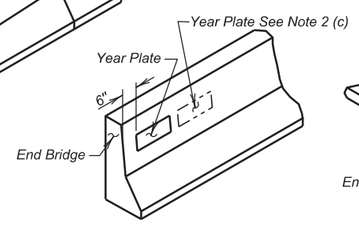


**JERSEY BARRIER**

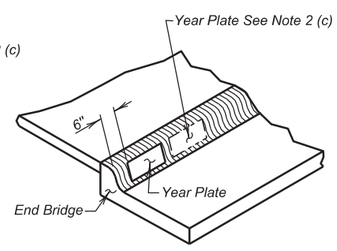


**TYPE B CURB**

June 26, 2012

| Published Date: 4th Qtr. 2015 | SDDOT | DUAL DATE YEAR PLATE DETAILS | PLATE NUMBER 460.03 |
|---|---|---|---|
| | | | Sheet 1 of 1 |

126' - 0" CONTINUOUS CONCRETE BRIDGE
STR. NO. 42-065-230
OCTOBER 2015

42025

| STATE OF | PROJECT | SHEET NO. | TOTAL SHEETS |
|---|---|---|---|
| S.D. | IM-PH 0291(122)10 | 205 | 284 |

-X731-

# INDEX OF BRIDGE SHEETS.—


Sheet No. 1 - General Drawing and Quantities.
Sheet No. 2 - Special Details.
Sheet No. 3 - Det. of Std. Reinf. Conc. Sill WP-252-30-00 (3-10-60)
Sheet No. 4 - Det. of Std. Reinf. Conc. Bent CB-252-30-00
Sheet No. 5 - Superstructure Details. 4CWG-252-30-00-1-3 (3-10-60)
Sheet No. 6 - Superstructure Details. 4CWG-252-30-00-2-3
Sheet No. 7 - Superstructure Details. 4CWG-252-30-00-3-3 (9-9-59)
Sheet No. 8 - Std. Railing and Drain Details. RA-1 (12-4-51)


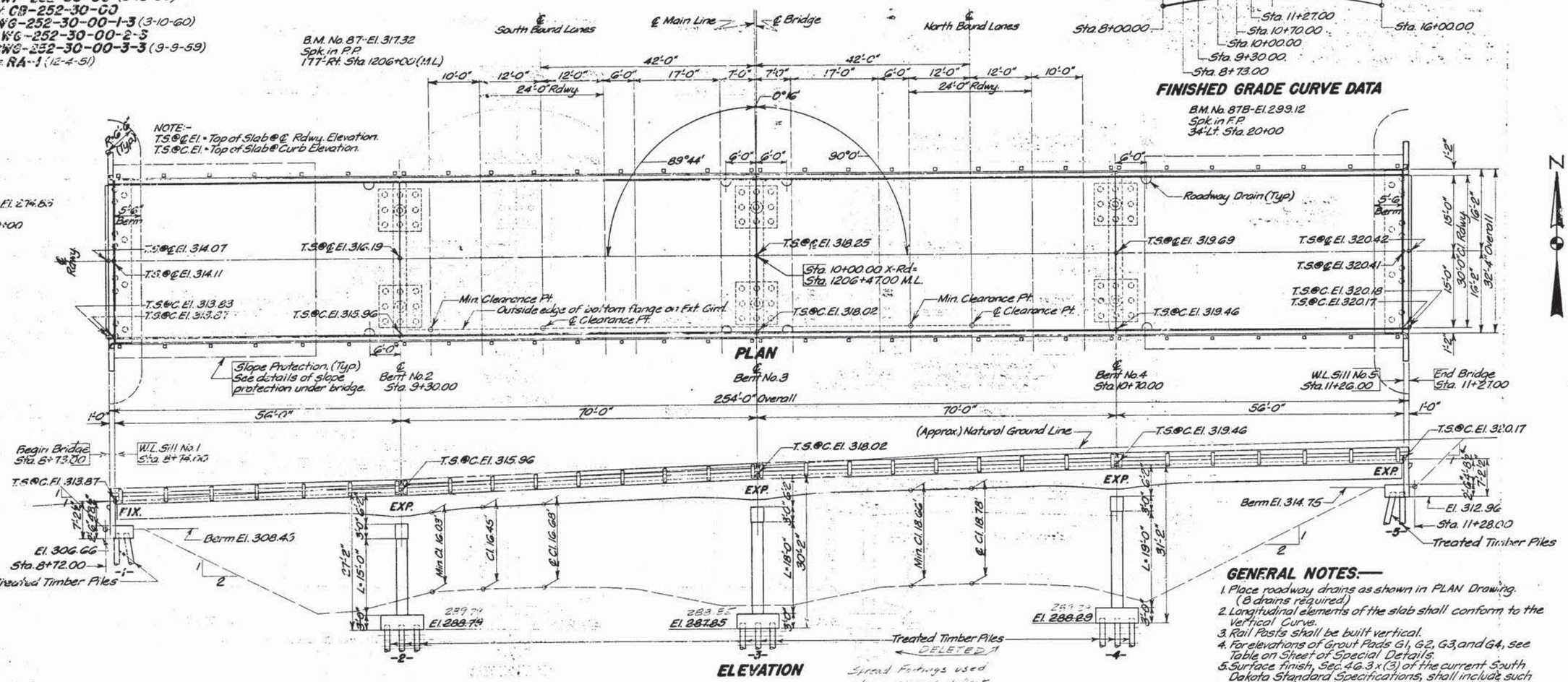


Spread Footings used also raised 1 foot on bents 2, 3, & 4 Ftg. Depth 6'0"

## GENERAL NOTES:—

1. Place roadway drains as shown in PLAN Drawing. (8 drains required.)
2. Longitudinal elements of the slab shall conform to the Vertical Curve.
3. Rail Posts shall be built vertical.
4. For elevations of Grout Pads G1, G2, G3, and G4, see Table on Sheet of Special Details.
5. Surface finish, Sec. 4G.3 x (3) of the current South Dakota Standard Specifications, shall include such portions of the structure which are visible from any traveled lane.

## SPECIFICATION NOTE:—

Use Current South Dakota Standard Specifications for Roads and Bridges, and the Supplemental Specification for Timber Bearing Piles dated September 1, 1959.

## TEST HOLE DATA

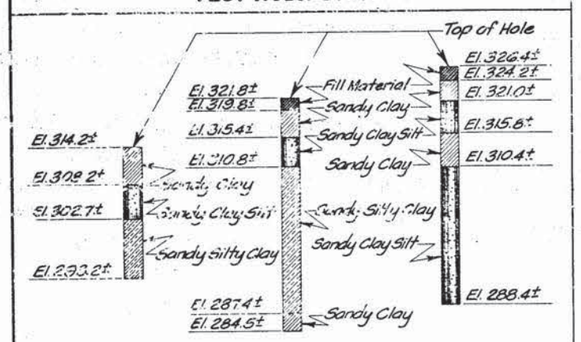


* Revised slab sheet No. 5

## ESTIMATED QUANTITIES

| ITEM | Cl. A Conc. Cu. Yds. | Steel-Lbs. Reinf. | Steel-Lbs. Struct. | Type RA-1 Steel Railing-Lin. Ft. | Treated Timber Piles ◊ Lin. Ft. | Excavation-Cu. Yds. Struct. | Excavation-Cu. Yds. ▲Unclass. | File Shoes * No. |
|---|---|---|---|---|---|---|---|---|
| Superstr. 252'-0" Cont. Comp. Unit | 1,457.5 | 39,780 | 139,900 | 510.3 | | | | |
| Substr. Sill No. 1 | 22.6 | 2280 | 505 | | | | | 12 |
| Substr. Sill No. 5 | 22.6 | 2280 | 2280 | | 12@15=180 | | | 12 |
| Substr. Bent No. 2 | 28.1 | 2345 | | | 12@15=180 | 15 | | 12 |
| Substr. Bent No. 3 | 29.0 | 2815 | | | 18@15=270 | 45 | | 18 |
| Substr. Bent No. 4 | 29.8 | 2915 | | | 18@15=270 | 40 | | 18 |
| | | | | | | 45 | | 18 |
| Totals | 1,561.1 | 49,475 | 144,185 | 510.3 | ◊ 1470 L.F. | 160 | Δ | * |

◊ One Treated Timber Test Pile shall be driven at Sills No. 1 and No. 5 and at Bents No. 2, 3, and 4 before remaining piles are ordered.
Δ See Grading Plans for Unclassified Excavation.
* American No. 1 All Steel Pile shoes or equivalent shall be used, the cost to be included in the unit price bid for Treated Timber Piles.

GENERAL DRAWING AND QUANTITIES
FOR
**254'-0" CONT. COMP. GIRDER VIADUCT**
30'-0" ROADWAY
OVER I.S. NO. 29 STA. 1206+47.00 SEC. 31/6-T97/96N-R50W
STA. 8+73.00 TO 11+27.00 I 29-2(5)47
LINCOLN COUNTY
SOUTH DAKOTA H20-S16-44
DEPARTMENT OF HIGHWAYS
APRIL 1960 (11) OF (16)

ORIGINAL CONSTRUCTION PLANS

-X731-

| DESIGNED BY | DRAWN BY | CHECKED BY | APPROVED |
|---|---|---|---|
| | R.C.M. | H.A. | BRIDGE ENGINEER |

Gr. # 2

4/2025

| STATE OF | PROJECT | SHEET NO. | TOTAL SHEETS |
|---|---|---|---|
| S.D. | IM-PH 0291(122)0 | 206 | 284 |

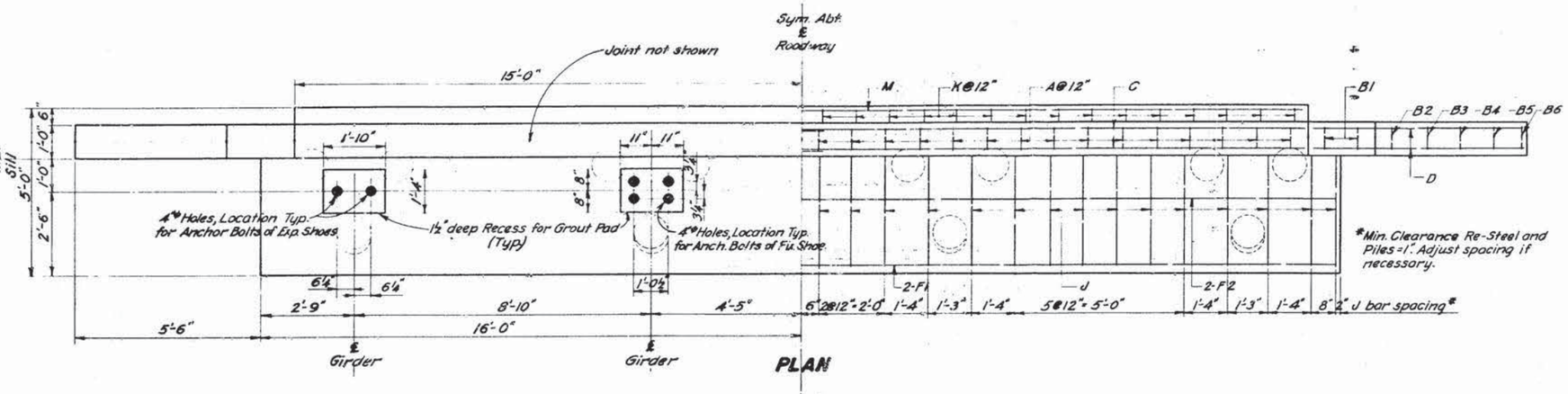


PLAN

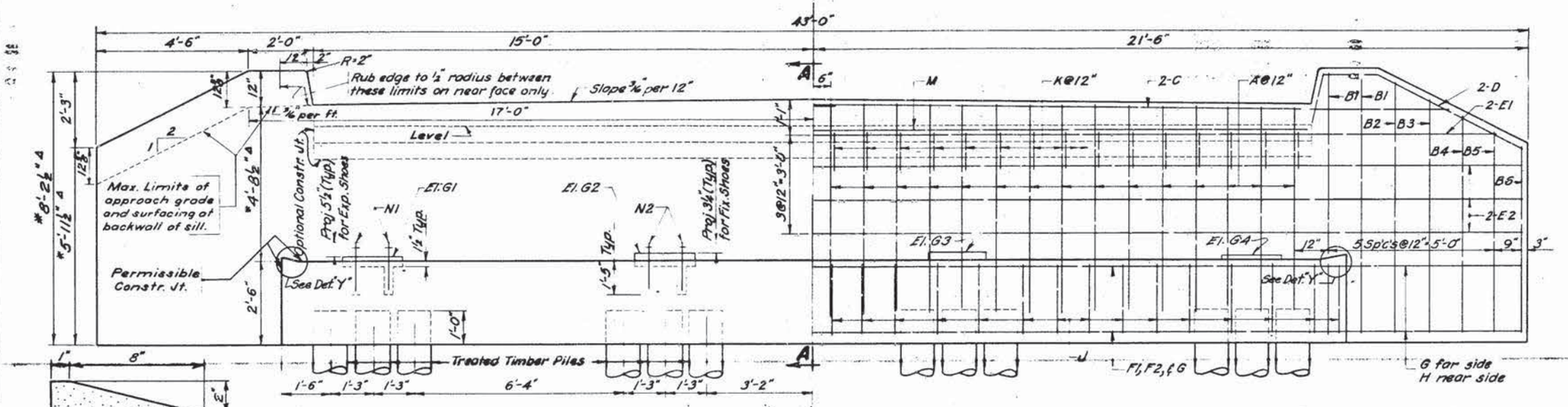


ELEVATION

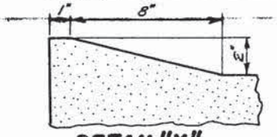

DETAIL "Y"

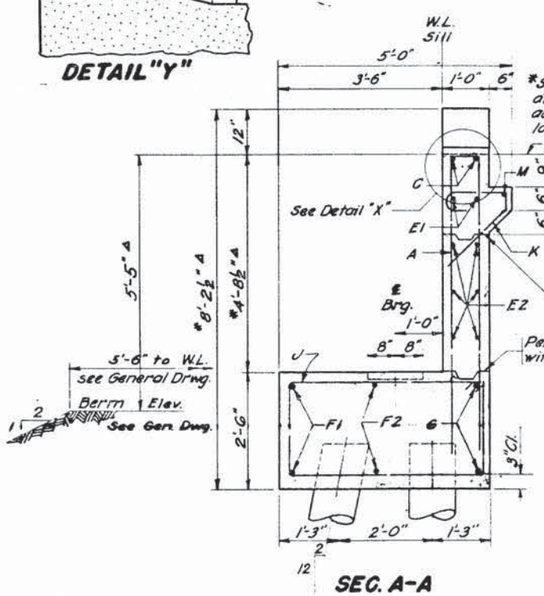


SEC. A-A

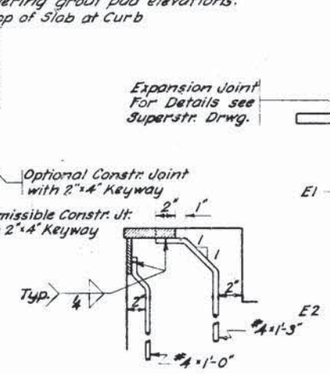


DETAIL FOR ANCHORAGE

NOTE:- For Grout Pad elevations G1, G2, G3, & G4, See Table on General Drawing.

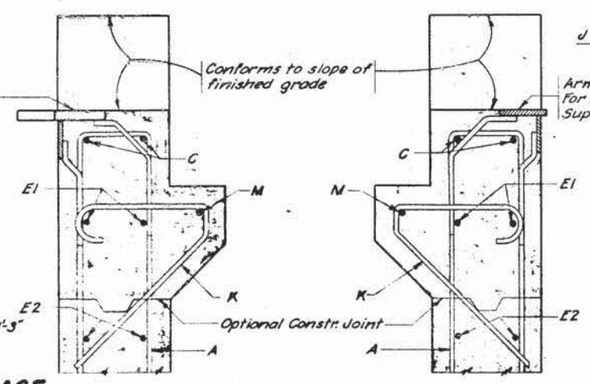


DETAIL "X"

Sill with Expansion Joint. (Exp. End)

Sill with Armored Joint (Fixed End)

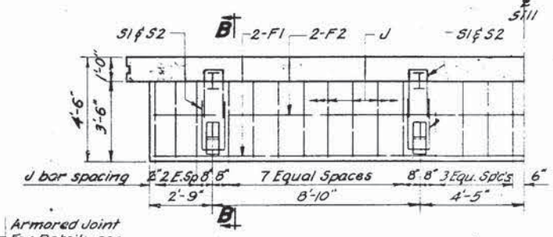


PART HALF PLAN

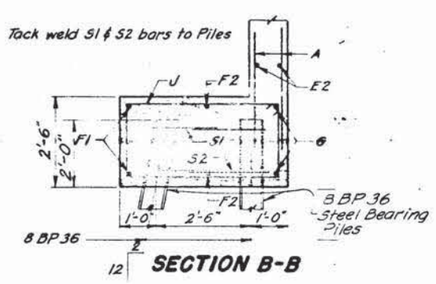


SECTION B-B

SKETCHES FOR STEEL PILING (ALTERNATE)

Revised-3-10-'60
Rev. for ¾ Crown 9-9-59

## REINFORCING SCHEDULE

| Mark | No. | Size | Length | Type |
|---|---|---|---|---|
| A | 30 | 4 | 13'-0" | S10 |
| B1 | 4 | | 17'-9" | T1 |
| B2 | 2 | | 17'-3" | |
| B3 | 2 | | 16'-3" | |
| B4 | 2 | | 15'-3" | |
| B5 | 2 | | 14'-3" | |
| B6 | 2 | 4 | 13'-6" | T1 |
| C | 4 | 5 | 19'-6" | Str. |
| D | 4 | 5 | 8'-0" | 22 |
| E1 | 4 | 4 | 21'-0" | Str. |
| E2 | 12 | 4 | 22'-0" | |
| F1 | 2 | 11 | 31'-6" | |
| F2 | 2 | 8 | 31'-6" | |
| G | 2 | 11 | 42'-6" | |
| H | 4 | 4 | 6'-6" | Str. |
| J | 30 | | 13'-6" | T1 |
| K | 30 | | 3'-6" | 12 |
| M | 1 | | 29'-6" | Str. |
| †S1 | 8 | | 5'-3" | S10 |
| †S2 | 8 | 4 | 5'-9" | S10 |
| ϕN1 | 8 | 14"ϕ | 1'-9" | Str. |
| ϕN2 | 16 | 14"ϕ | 1'-6" | Str. |

Bar Bends

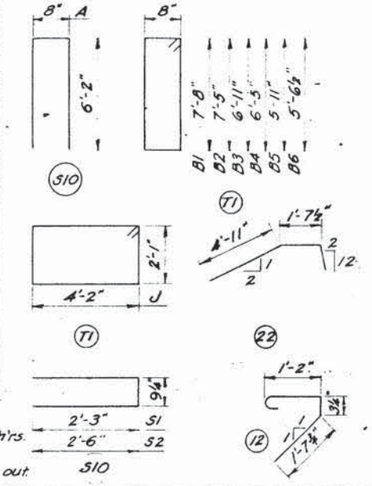


† For steel piling only

ϕ Swedge bolts, heavy Hex Nuts & Cut W'sh'rs.

All dimensions of bars are out to out.

## ESTIMATED QUANTITIES (1 SILL)

| ITEM | Unit | Sill with Treated Timber Piles Exp. End | Sill with Treated Timber Piles Fixed End | Sill with Steel Piles Exp. End | Sill with Steel Piles Fixed End |
|---|---|---|---|---|---|
| Class "A" Concrete | Cu. Yds. | 22.6 | 22.6 | 22.6 | 22.6 |
| Reinforcing Steel | Lbs. | 2280 | 2280 | 2340 | 2340 |
| Structural Steel Armored Joint | Lbs. | — | 505 | — | 505 |
| Structural Steel Expansion Joint | Lbs. | 820 | — | 820 | — |
| Timber Piles | No. | 12 | 12 | — | — |
| Steel Piles 8 BP 36 | No. | — | — | 8 | 8 |
| Structure Excavation | Cu. Yds. | 17 | 17 | 17 | 17 |

## GENERAL NOTES—

1. All exposed edges shall be chamfered 1" except as shown.
2. Use 2" clear cover on all Reinforcing Steel except as shown.
3. All Reinforcing Steel bars shall conform to A.S.T.M. Specifications A305 (Current) and A15 (Current) Int. Grade.
4. Specifications for Grout shall be the same as for Class "A" Concrete except that the maximum size of aggregate shall be reduced to ¼. Grout quantity shall be included in and paid for as Class "A" Concrete.
5. Design Loading: H20-S16-44
6. STRESSES:
   Re Steel $f_s$ = 20,000 p.s.i. (Int. Grade)
   Conc. $f_c$ = 1,600 p.s.i.
   Conc. $f'_c$ = 4000 p.s.i. (28 days)
7. MINIMUM BRG. VALUE FOR PILING:
   Timber = 18 Tons per pile
   Steel = 30 Tons per pile
8. See General Drawing for type and length of piles and for location of Fixed or Expansion Joints and shoes.

ORIGINAL CONSTRUCTION PLANS

DETAILS FOR

# STANDARD REINFORCED CONCRETE SILL

FOR

252'-0" 4-SPAN, CONT., COMP., WELDED PL. GIRDER UNIT

30'-0" ROADWAY — 0° SKEW

SOUTH DAKOTA — 12 OF 16

DEPARTMENT OF HIGHWAYS

1959 — H20-S16-44

| DESIGNED BY | DRAWN BY | CHECKED BY | APPROVED |
|---|---|---|---|
| F.K. | F.K. | | |

BRIDGE ENGINEER

WP-252-30-00

| STATE OF | PROJECT | SHEET NO. | TOTAL SHEETS |
|---|---|---|---|
| S.D. | IM-PH 0291(122)0 | 207 | 284 |

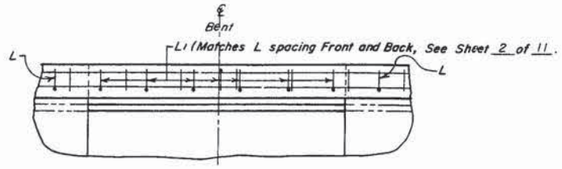


TYPICAL PLAN VIEW AT BENTS

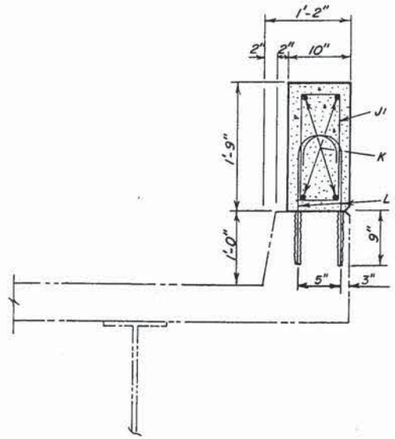


SEC. A-A

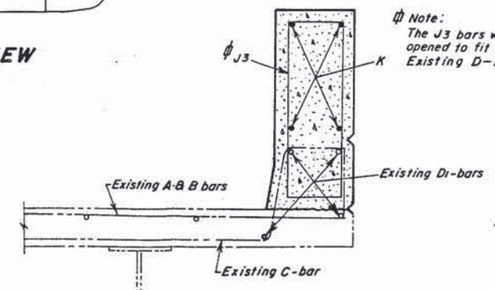


ϕ Note: The J3 bars will have to be opened to fit over the Existing D-bars.

SEC. B-B

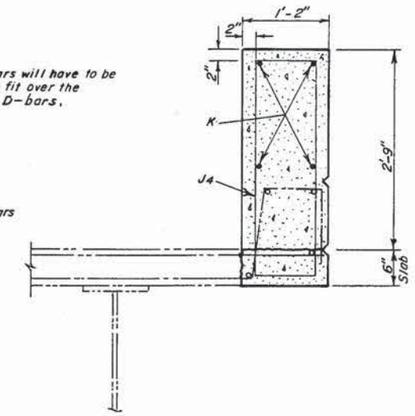


SEC. C-C

## REINFORCING SCHEDULE

(For One Bridge)

| Mk. | No. | Size | Length | Type | Bending Details |
|---|---|---|---|---|---|
| J1 | 324 | 4 | 4'-7" | T2 | |
| J2 | 4 | 4 | 4'-11" | T2 | |
| J3 | 4 | 4 | 7'-1" | T2 | |
| J4 | 8 | 4 | 8'-3" | T2 | |
| * K | 40 | 4 | 51'-3" | Str. | |
| # L | 400 | 6 | 2'-6" | 1A | |

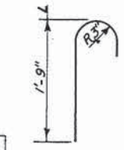


Type 1A

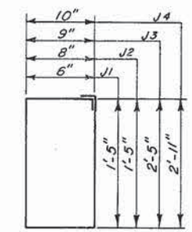


Type T2

* Bend in field as necessary to fit - Min. Lap = 1'-3"
NOTE - All dimensions are out to out of bars.

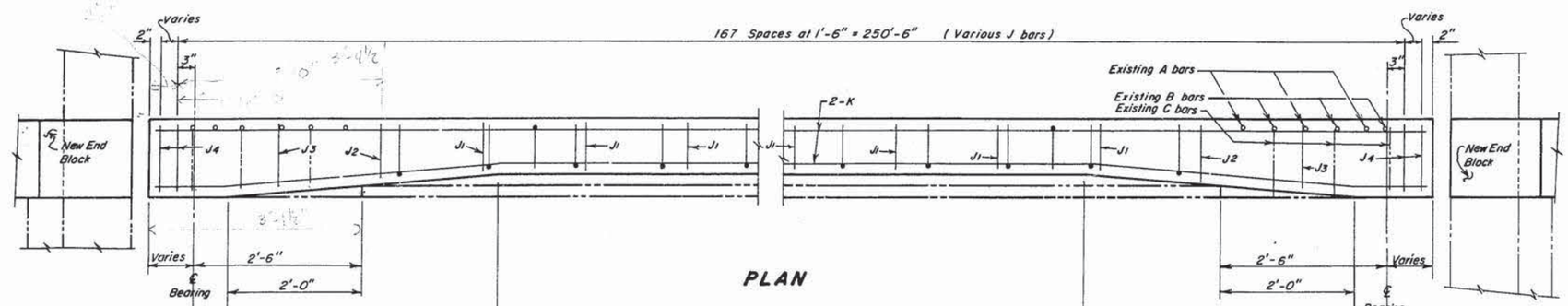


PLAN

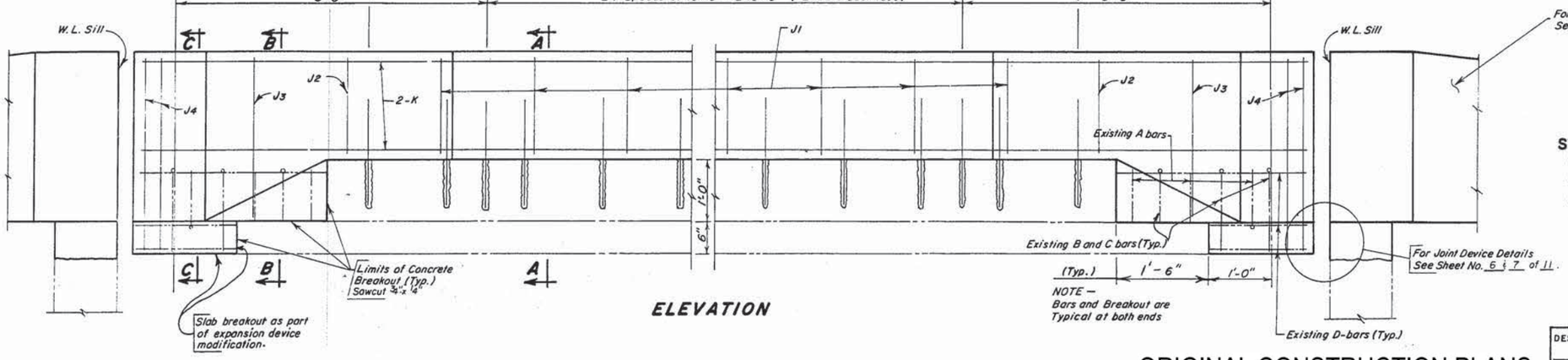


ELEVATION

NOTE — Bars and Breakout are Typical at both ends

For End Block Details See Sheet No. 4 of 11.

For Joint Device Details See Sheet No. 6 & 7 of 11.

# Does not include 1502 lbs. for dowel bars as these are paid for under the bid item "Install Dowels in Concrete."

## ESTIMATED QUANTITIES (For 5 Bridges)

| ITEM | UNIT | QUANTITY |
|---|---|---|
| Class "A45" Concrete - Bridge Repair | Cu. Yds. | 138.0 |
| # Reinforcement for Concrete Masonry | Lbs. | 12,187 |
| Install Dowels in Concrete | Each | 2000 |
| Breakout Structural Concrete | Cu. Yds. | 2.4 |
| Remove Bridge Railing | Lin. Ft. | 255.5 |

RAIL REPLACEMENT
FOR
**254'-0" CONT. COMP. GIRDER BRIDGES**

STR. NO'S. 42-065-160 OVER I.S. NO. 29
" " 42-065-170
" " 42-065-200
" " 42-065-230
" " 42-065-260 IR 29-2(51)50

LINCOLN COUNTY
S. D. DEPT. OF TRANSPORTATION
APRIL 1986 13 OF 16

| DESIGNED BY | DRAWN BY | CHECKED BY | APPROVED |
|---|---|---|---|
| LAS | f.a.k. | T.W. | BRIDGE ENGINEER |

ORIGINAL CONSTRUCTION PLANS

| STATE OF | PROJECT | SHEET NO. | TOTAL SHEETS |
|---|---|---|---|
| S.D. | IM-PH 0291(122)0 | 208 | 284 |

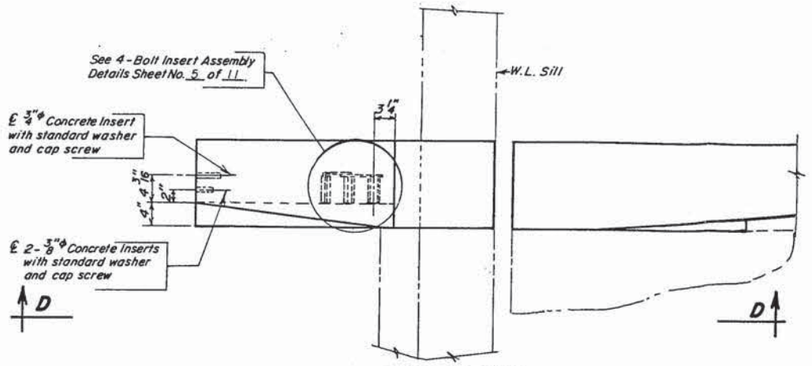


END BLOCK PLAN VIEW

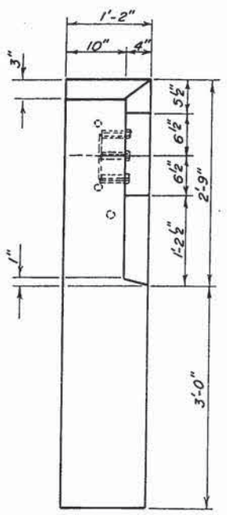


VIEW E-E

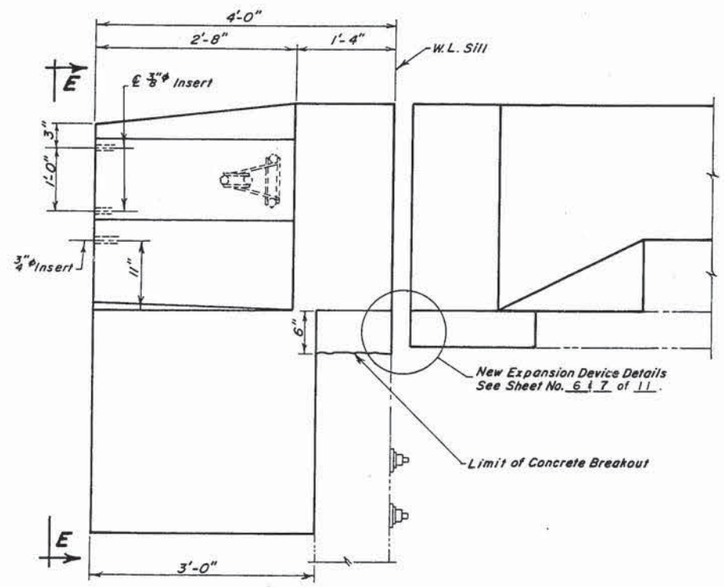


VIEW D-D

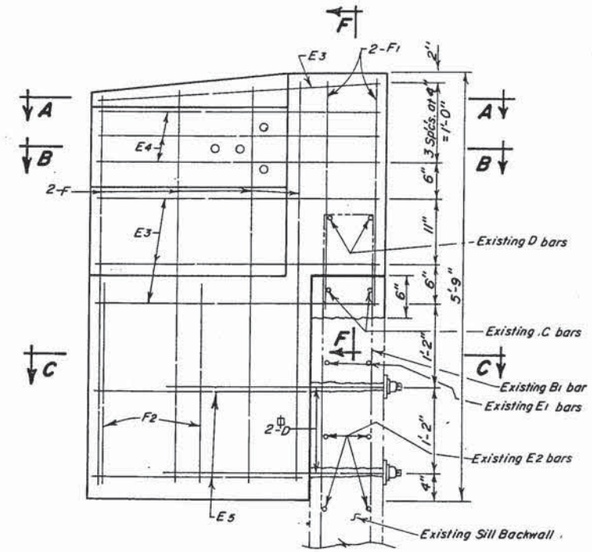


ELEVATION

## REINFORCING SCHEDULE
(For One Bridge - Four Anchor Blocks)

| Mk. | No. | Size | Length | Type | Bending Details |
|---|---|---|---|---|---|
| E3 | 16 | 4 | 10'-3" | T7A | |
| E4 | 12 | 4 | 10'-2" | T2A | |
| E5 | 8 | 4 | 8'-1" | T2 | |
| F | 32 | 6 | 5'-2" | Str. | |
| F1 | 16 | 6 | 3'-1" | Str. | |
| F2 | 8 | 6 | 2'-9" | Str. | |
| φD | 16 | 8 | 3'-2" | Str. | |
| | | | | | |
| | | | | | |

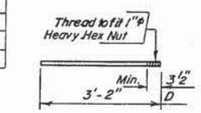


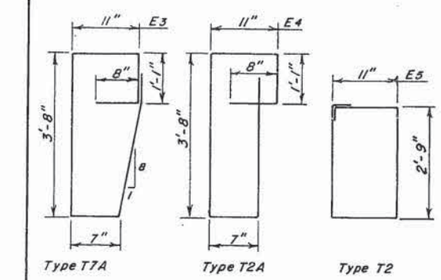


NOTE - All dimensions are out to out of bars

φD dowels to be drilled in and grouted with epoxy. See Notes for specifications on materials and procedures. D-Dowels shall be #8 deformed bars. Alternatively, #7 Richmond Threaded Dowel Bars, with rolled threads to fit 1"φ heavy hex nuts may be used. For informational purposes, the estimated weight of the D-Dowels, nuts, washers and plates is 860 lbs. for 5 bridges.

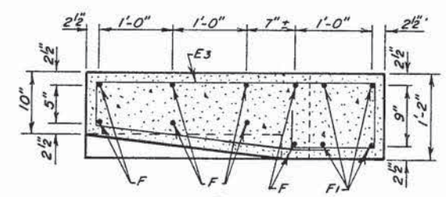


SEC. A-A

## ESTIMATED QUANTITIES (For 5 Bridges)

| ITEM | UNIT | QUANTITY |
|---|---|---|
| Class "A45" Concrete - Bridge Repair | Cu. Yds. | 16.2 |
| Reinforcement Concrete Masonry | Lbs. | 2948 |
| Install Dowels in Concrete | Each | 80 |
| | | |
| | | |
| | | |

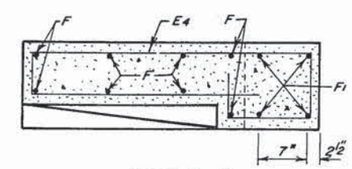


SEC. B-B

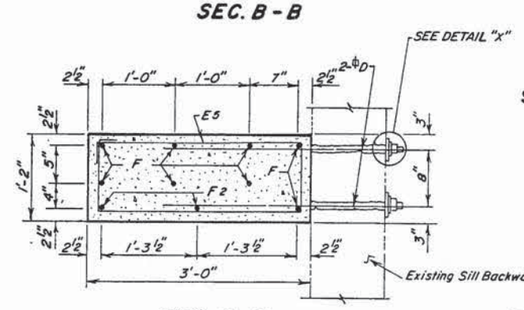


SEC. C-C

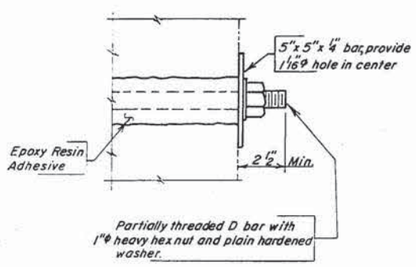


DETAIL "X"

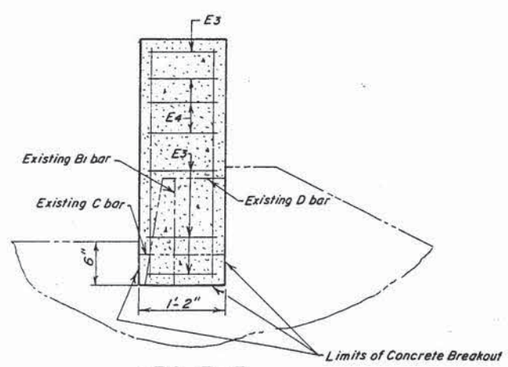


SEC. F-F

# ORIGINAL CONSTRUCTION PLANS

END BLOCK DETAILS
FOR
**254'-0" CONT. COMP. GIRDER BRIDGES**

STR. NO'S. 42-065-160 OVER I.S. NO. 29
" " 42-065-170
" " 42-065-200
" " 42-065-230
" " 42-065-260 IR 29-2(51)50

LINCOLN COUNTY

S. D. DEPT. OF TRANSPORTATION
APRIL 1986



| DESIGNED BY | DRAWN BY | CHECKED BY | APPROVED |
|---|---|---|---|
| LAS | f.o.k. | TW | BRIDGE ENGINEER |

| STATE OF | PROJECT | SHEET NO. | TOTAL SHEETS |
|---|---|---|---|
| S.D. | IM-PH 0291(12)210 | 209 | 284 |

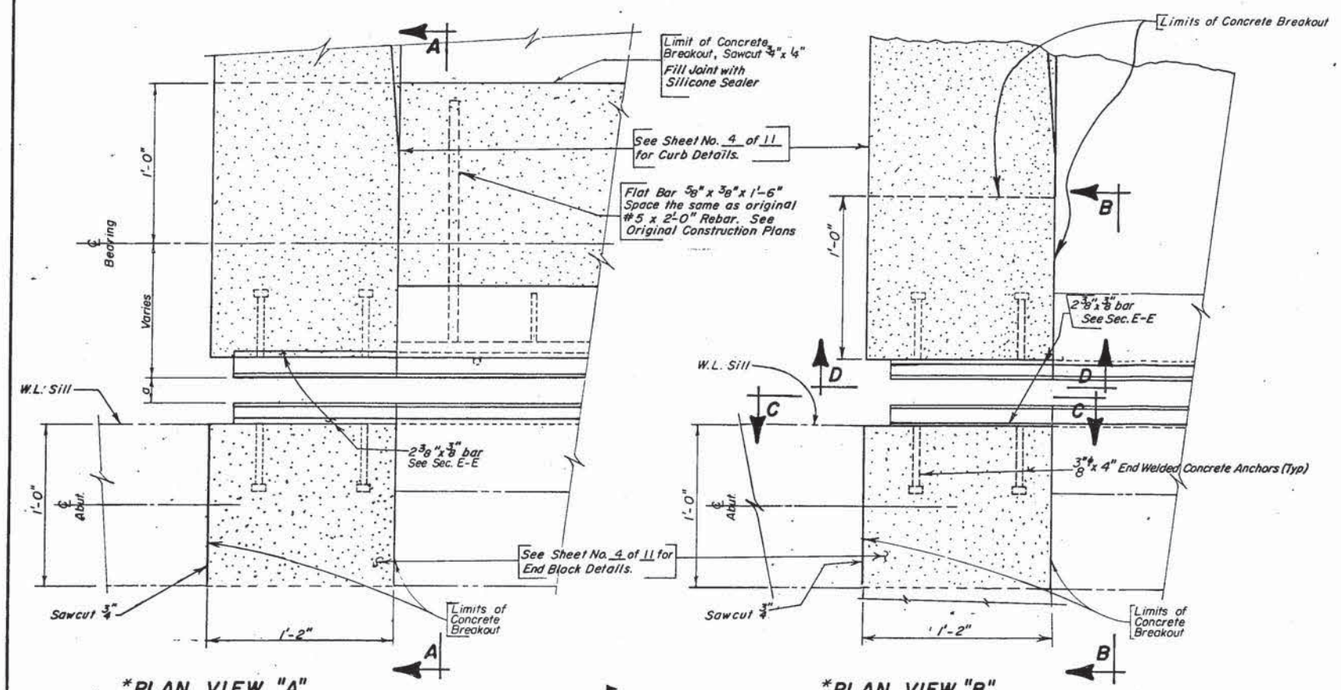


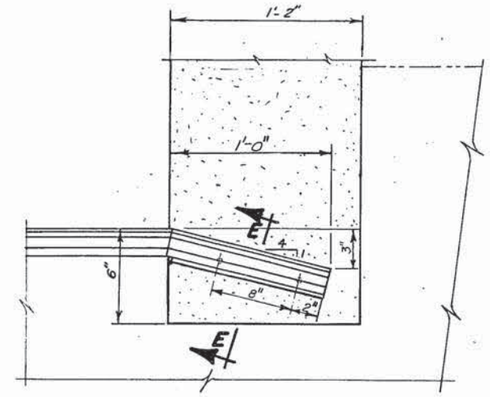


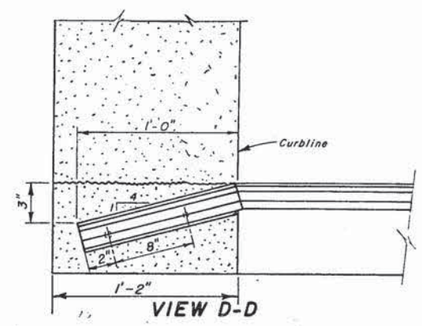


| "a" | | |
|---|---|---|
| Temp (°F) | Exp @ 1 Sill | Exp @ 2 Sills |
| 40 | 2 9/16" | 2 3/16" |
| 50 | 2 3/8" | 2 1/8" |
| 60 | 2 3/16" | 2 1/16" |
| 70 | 2" | 2" |
| 80 | 1 13/16" | 1 15/16" |
| 90 | 1 5/8" | 1 7/8" |

## NOTES:

1. Breakout Abutment Curbs to the lines and limits shown, and the deck when required to allow placement of the strip seal Extrusion Anchor Bolts. Clean and re-use existing reinforcing steel.
2. Extend the Neoprene Seal 6 inches on each side so water will flow into the Expansion Device Drains.

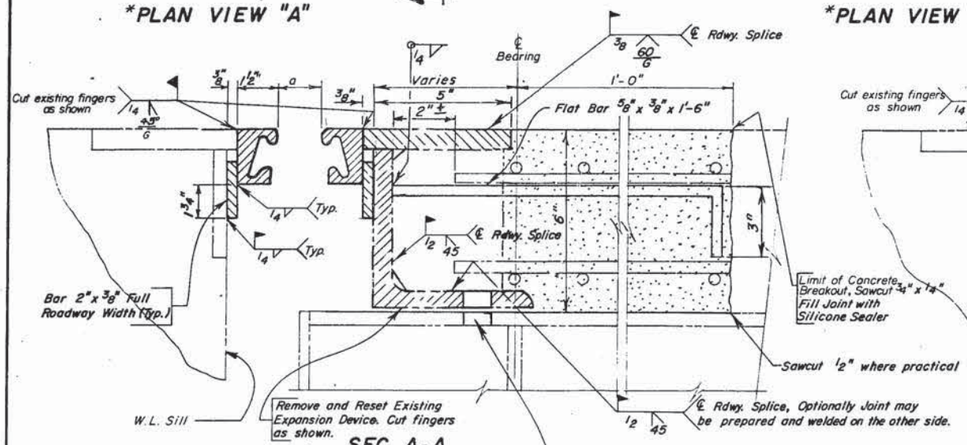


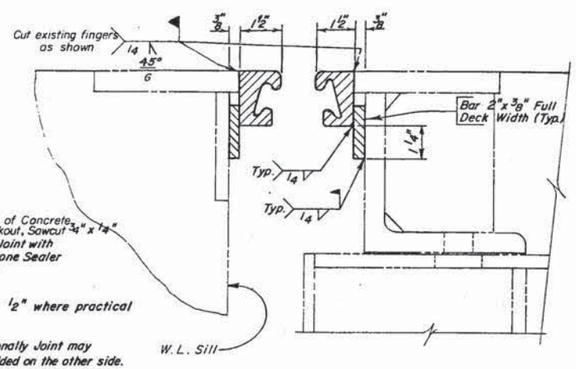


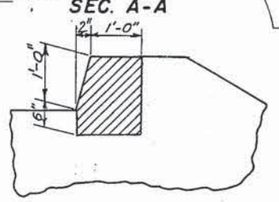


LIMITS OF CONCRETE BREAKOUT AT ABUTMENTS

* At the Abutment of Str. No. 42-065-230 the existing devices will require removal, modification and resetting, use Plan View "A". Str. Nos. 42-065/160/170/200/260 will only require modification of the existing device, use Plan View "B".

DETAIL "C"

Neoprene Seal shall have a 4" Movement Capability.

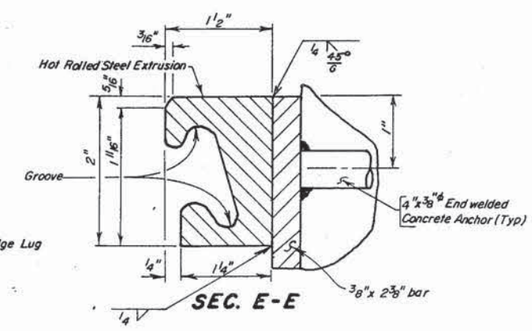


## ESTIMATED QUANTITIES

| Structure Number | Abutment Number | Roadway Width | Plan View # | Modify Expansion Device (Each) | Remove and Reset Expansion Device (Each) |
|---|---|---|---|---|---|
| 42-065-160 | 1,5 | 24' | B | 2 | |
| 42-065-170 | 1,5 | 30' | B | 2 | |
| 42-065-200 | 1,5 | 30' | B | 2 | |
| 42-065-230 | 5 | 30' | A | | 1 |
| 42-065-260 | 1,5 | 30' | B | 2 | |
| | | | TOTAL | 8 | 1 |

EXPANSION DEVICE MODIFICATION
FOR EXPANSION ABUTMENTS
FOR

# 254'-0" CONT. COMP. GIRDER BRIDGES

STR. NO'S 42-065-160 OVER I.S. 29
42-065-170
42-065-200
42-065-230
42-065-260 IR 29-2(51)50

LINCOLN COUNTY

S. D. DEPT. OF TRANSPORTATION

MARCH 1986 (15) OF (16)

ORIGINAL CONSTRUCTION PLANS

| DESIGNED BY | DRAWN BY | CHECKED BY | APPROVED |
|---|---|---|---|
| LAS | DAH | TW | BRIDGE ENGINEER |

| STATE OF | PROJECT | SHEET NO. | TOTAL SHEETS |
|---|---|---|---|
| S.D. | IM-PH 0291(12)210 | 210 | 284 |

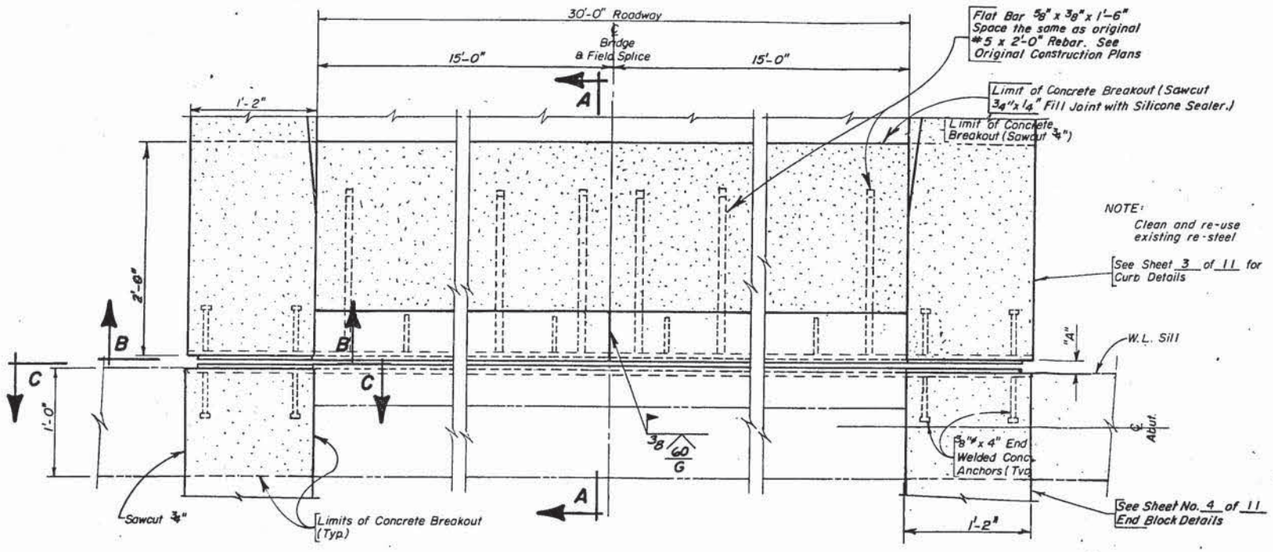


PLAN VIEW

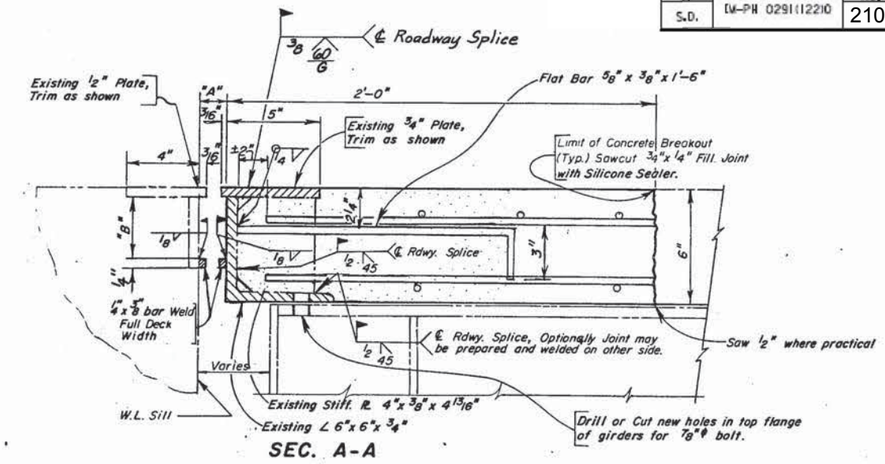


SEC. A-A

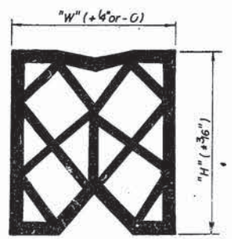


PREFORMED ELASTOMERIC COMPRESSION SEAL

The Compression Seal shown can be obtained from the following suppliers. Their addresses and type of compression seals are listed directly to the right:

| | Type | Seal Size | | Groove Size | |
|---|---|---|---|---|---|
| | | W | H | B | A |
| Watson Bowman & ACME CORP. 95 Pineview Drive Amherst, N.Y. 14120 | WJ-225 | 2 1/4" | 2 5/8" | 3 1/2" | 1 3/4" |
| The D.S. Brown Co. P.O. Box 158 N. Baltimore, Ohio 45872 | CV-2250 | 2 1/4" | 2 1/2" | 3 3/8" | 1 7/8" |

| ESTIMATED QUANTITIES | | |
|---|---|---|
| STRUCTURE NUMBER | Roadway Width | Remove and Reset Expansion Device |
| | Feet | Each |
| 42-065-230 (Abut. 1) | 30 | 1 |

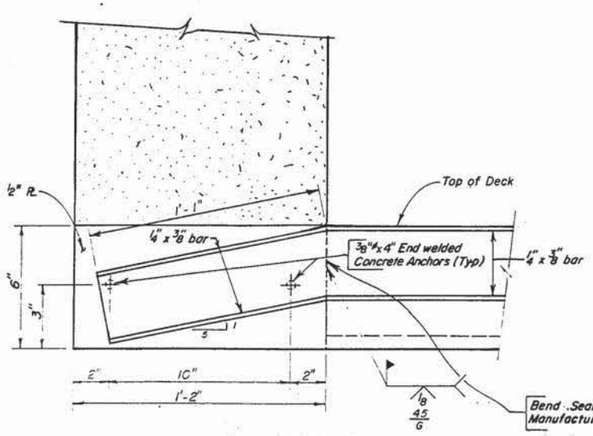


VIEW B-B

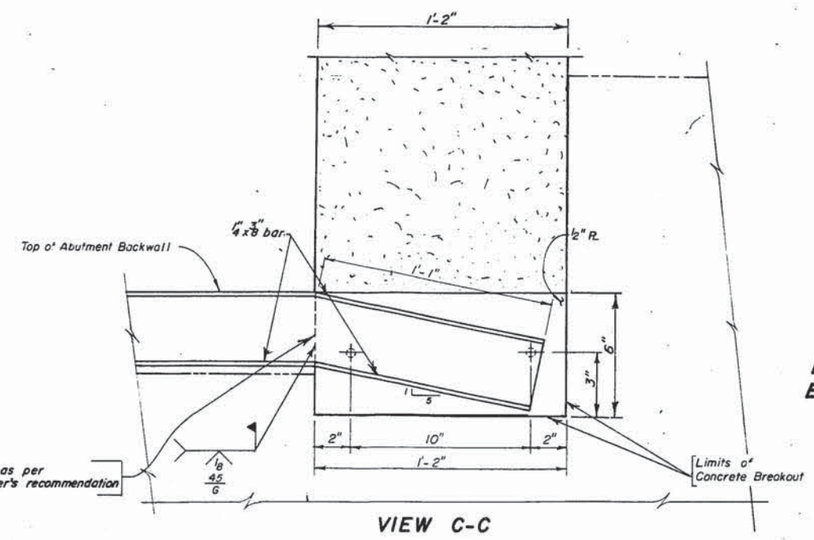


VIEW C-C

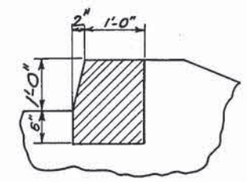


LIMITS OF CONCRETE BREAKOUT AT ABUTMENTS

ORIGINAL CONSTRUCTION PLANS

COMPRESSION SEAL DETAILS
FOR FIXED ABUTMENTS
FOR
254'-0" CONT. COMP. GIRDER BRIDGES
30'-0" ROADWAY

STR. NO. 42-065-230 IR 29-2(51)50
LINCOLN COUNTY

S. D. DEPT. OF TRANSPORTATION

MARCH 1986



| DESIGNED BY | DRAWN BY | CHECKED BY | APPROVED |
|---|---|---|---|
| LAS | D.A.H. | TW | BRIDGE ENGINEER |

| STATE OF | PROJECT | SHEET NO. | TOTAL SHEETS |
|---|---|---|---|
| S.D. | IM-PH 0291(122)0 | 211 | 284 |

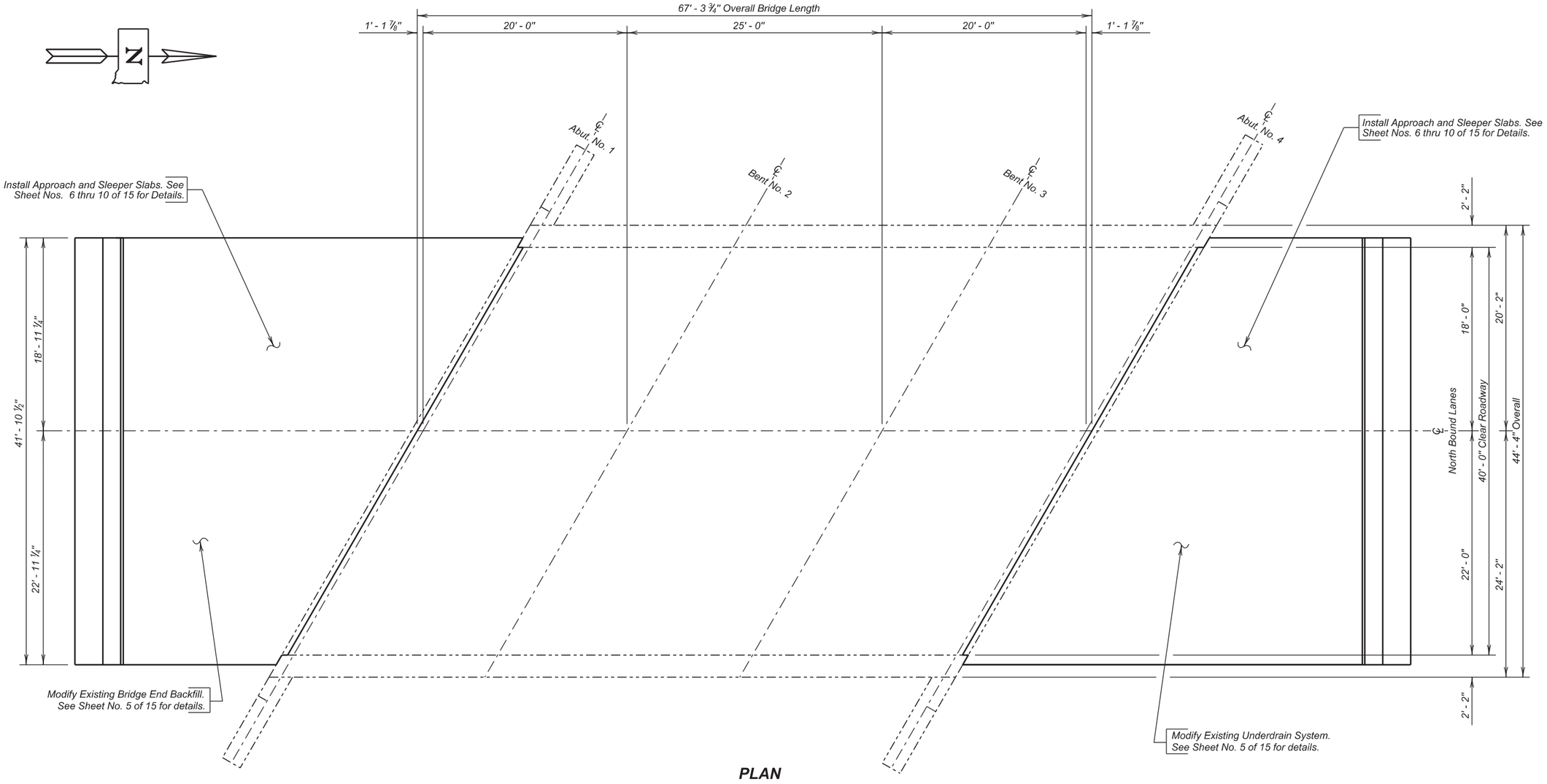


**PLAN**

## INDEX OF BRIDGE SHEETS


*Sheet No. 1 - Layout for Upgrading*
*Sheet No. 2 - Estimate of Structure Quantities and Notes*
*Sheet No. 3 - Notes (Continued)*
*Sheet No. 4 - Notes (Continued)*
*Sheet No. 5 - Bridge End Backfill Modification*
*Sheet No. 6 - Approach Slab Layout*
*Sheet No. 7 - Approach Slab Details (Continued)*
*Sheet No. 8 - Approach Slab Details (Continued)*
*Sheet No. 9 - Approach Slab Details (Continued)*
*Sheet No. 10 - Approach Slab Joint Details*
*Sheet Nos. 11 -15 - Original Construction Plans*


**(NORTH BOUND LANES)**
**LAYOUT FOR UPGRADE**

FOR

67' - 3 ¾" CONT. CONCRETE BRIDGE

40' - 0" ROADWAY — 30° SKEW L.H.F.
OVER CREEK — SEC. 30-T93N-R50W
STR. NO. 64-006-164 — IM-PH 0291(122)0
PCN 02PT

UNION COUNTY

S. D. DEPT. OF TRANSPORTATION

OCTOBER 2015

1 OF 15

*PLANS BY :*
*OFFICE OF BRIDGE DESIGN, SOUTH DAKOTA DEPARTMENT OF TRANSPORTATION*

| DESIGNED BY | CK. DES. BY | DRAFTED BY | |
|---|---|---|---|
| KSK | BD | KR | Kevin N. Goeden |
| UNIN02PT | 02PTRH01 | | BRIDGE ENGINEER |

# ESTIMATE OF STRUCTURE QUANTITIES

| ITEM NO. | DESCRIPTION | QUANTITY | UNIT |
|---|---|---|---|
| 110E0010 | Remove Concrete Bridge Approach Slab | 301.4 | SqYd |
| 410E2600 | Membrane Sealant Expansion Joint | 167.6 | Ft |
| 430E0300 | Granular Bridge End backfill | 14.6 | CuYd |
| 460E0150 | Concrete Approach Slab for Bridge | 257.1 | SqYd |
| 460E0160 | Concrete Approach Sleeper Slab for Bridge | 67.5 | SqYd |
| 460E0380 | Install Dowel in Concrete | 14 | Each |
| 480E0504 | No. 4 Rebar Splice | 34 | Each |
| 480E0505 | No. 5 Rebar Splice | 48 | Each |
| 480E0506 | No. 6 Rebar Splice | 54 | Each |
| | | | |

## SPECIFICATIONS

1. Design Specifications: AASHTO Standard Specifications for Highway Bridges 17th Edition using Working Stress Design.

2. Construction Specifications: South Dakota Standard Specifications for Roads and Bridges, 2015 Edition and Required Provisions, Supplemental Specifications and Special Provisions as included in the Proposal.

## DETAILS AND DIMENSIONS OF EXISTING BRIDGE

All details and dimensions of the existing bridge, contained in these plans, are based on the original construction plans and shop plans and are provided as information only. It is the Contractor's responsibility to inspect and verify the actual field conditions and any necessary as-built dimensions affecting the satisfactory completion of the work required for this project.

## SCOPE OF BRIDGE WORK & SEQUENCE OF OPERATIONS

All work on this structure shall be accomplished with the traffic control shown in the plans. Alternate sequence of operations may be submitted by the Contractor for approval by the Engineer a minimum of two weeks prior to the pre-construction meeting.

1. Breakout and remove the existing approach and sleeper slabs for the first phase of construction.

2. Install the bridge end backfill, sleeper slabs, and approach slabs for the first phase of construction.

3. Switch traffic and repeat steps 1 and 2 for the second phase of construction.

## GENERAL CONSTRUCTION - BRIDGE

1. All mild reinforcing steel shall conform to ASTM A615, Grade 60.

2. All exposed concrete corners and edges shall be chamfered 3/4" unless noted otherwise in the plans. Match existing chamfer if the existing chamfer differs.

3. Use 2" clear cover on all reinforcing steel except as shown otherwise.

4. Request for construction joints or resteel splices at points other than those shown, must be submitted to the Engineer for prior approval. If additional splices are approved, no payment will be allowed for the added quantity of reinforcing steel.

5. Surfaces of fresh concrete at construction joints shall be rough floated sufficiently to consolidate the surface. All construction joints shall be cleaned of surface laitance, curing compounds and other foreign materials prior to placing fresh concrete against the joint.

6. The type of vibratory screed shall be approved by the Engineer.

## REMOVAL OF CONCRETE BRIDGE APPROACH SLAB

1. The existing concrete approach and sleeper slab adjacent to the structure shall be completely removed by the Contractor.

2. The crushed concrete and reinforcing steel from the removal shall be disposed of by the Contractor at an approved site. An appropriate site will be as described in the Environmental Commitment notes in this set of plans.

3. All labor, tools, equipment and any incidentals necessary for removal and disposal of the existing approach and sleeper slabs shall be incidental to the contract unit price per square yard for "Remove Concrete Bridge Approach Slab".

## MODIFY EXISTING BRIDGE END BACKFILL

1. This work consists of bringing the existing bridge end backfill material up to the required elevation and repairing any damage to the in-place bridge end backfill material as approved by the Engineer.

2. Granular bridge end backfill shall conform to Section 882 of the Construction Specification. Granular material shall be placed and compacted using a smooth face vibratory roller or vibratory plate compactor according to Section 430.3 B of the Construction Specification.

3. The Reinforcement Fabric (MSE) shall conform to section 831 of the Construction Specification.

4. The polyethylene sheeting shall be a minimum thickness of 6 mils (0.152 mm) and shall be sufficiently durable such that it will not puncture or tear when installed as intended.

5. The existing polyethylene sheeting under the existing approach slab and sleeper slab shall be removed and disposed of in accordance with the waste disposal site notes.

6. The surfaces on which the drainage fabric is to be placed shall be smooth and free of obstructions. The drainage fabric may be oriented in any direction.

7. Any equipment used to install the granular bridge end backfill over the drainage fabric shall be operated in such a manner that the drainage fabric is not damaged. To avoid damage to the drainage fabric, the equipment used to place, spread, and compact material over the drainage fabric shall be limited to handheld equipment.

8. Any drainage fabric that is torn or punctured shall be repaired or replaced by the Contractor at no additional cost to the Department. The repair shall consist of a patch of the same type of drainage fabric being placed over the ruptured area such that it overlaps the damaged area a minimum of 3 feet measured from any damaged edge.

9. Seams shall be constructed by overlapping the fabric a minimum of 2 feet. All seams shall be inspected by the Engineer and any deficient seams repaired by the Contractor prior to placement of the bridge end backfill material.

10. The granular bridge end backfill shall be compacted to a minimum of 97 percent of maximum dry density as determined by SD 104 (AASHTO T99). The moisture content of the backfill material prior to and during compaction shall be adequate to provide satisfactory results. Maximum dry density and optimum moisture shall be determined by SD 104 (AASHTO T99).

11. The quantity specified in the plans for granular bridge end backfill was estimated. Actual amount installed may vary slightly due to changes in the field condition. Regardless of these limitations, the plan shown quantity will be the basis of payment. Field measurement for Granular Bridge End Backfill will not be made. Payment will be full compensation for all labor, equipment, materials, water, and all other items incidental to furnishing and installing the reinforcement fabric (MSE), the polyethylene sheeting and for furnishing and installing, including any hauling or stockpiling, of the granular bridge end backfill material.

**ESTIMATE OF STRUCTURE QUANTITIES AND NOTES**
FOR
67' - 3¾" CONT. CONCRETE BRIDGE

STR. NO. 64-006-164
OCTOBER 2015



| DESIGNED BY | CK. DES. BY | DRAFTED BY | |
|---|---|---|---|
| KSK | BD | KSK | Kevin N. Boeden |
| UNIN02PT | 02PTRH02 | | BRIDGE ENGINEER |

## INSTALLING DOWELS IN CONCRETE

1. Holes drilled in the existing concrete shall be true and normal as shown in the plans. Drilling holes using a core drill shall not be allowed. Care shall be taken not to damage the existing reinforcing steel. It is likely that some of the existing reinforcing steel shown in the original construction plans may have been placed out of position during original construction. Therefore, prior to the start of drilling any holes in the concrete, an effort will be made by Department forces to mark on the concrete surface where practical any locations of the in-place reinforcing steel. In spite of this precaution, the Contractor can still expect to encounter and have to drill through reinforcing steel. If the Contractor shifts the dowel spacing, the unused drill holes shall be completely filled with the epoxy resin specified in note number 2.

2. The epoxy resin mixture shall be of a type for bonding steel to hardened concrete and shall conform to AASHTO M235 Type IV, Grade 3 (Equivalent to ASTM C881, Type IV, Grade 3).

3. The diameter of the drilled holes shall not be less than 1/8 inch greater, nor more than 3/8 inch greater than the diameter of the dowels or as per the Manufacturer's recommendations. The drilled holes shall be blown out with compressed air using a device that will reach the back of the hole to ensure that all debris or loose material has been removed prior to epoxy injection.

4. Mix epoxy resin as recommended by the Manufacturer and apply by an injection method as approved by the Engineer. Beginning at the back of the drilled holes, fill the holes 1/3 to 1/2 full or epoxy, or as recommended by the Manufacturer, prior to insertion of the steel bar. Care shall be taken to prevent epoxy from running out of the horizontal holes prior to steel bar insertion. Rotate the steel bar during installation to eliminate voids and ensure complete bonding of the bar. Insertion of the bars by the dipping or painting method will not be allowed.

5. No loads shall be applied to the epoxy grouted dowel bars until the epoxy resin has had sufficient time to cure as specified by the epoxy resin manufacturer.

6. Dowel bars shall be deformed bars conforming to ASTM A615 Grade 60.

7. The cost of epoxy resin, dowels, installation and other incidental items shall be incidental to the contract unit price per each for "Install Dowel in Concrete".

## APPROACH SLABS

1. Excavation for placement of new approach slabs and sleeper slabs shall be done with minimal disturbance to the underlying material.

3. The top of approach slab elevations shall be established during construction and shall be subject to the approval of the Engineer. Care shall be taken to provide a smooth transition from the bridge deck elevations to the new pavement elevations established in the field so as to prevent any dips or bumps in the areas of the bridge ends or ends of the new approach slabs. The maximum rate of grade transition through the approach slab shall be 1/8 inch per 10 feet.

4. Sleeper slab riser shall be cast with or later than the Approach Slab. Care shall be taken to ensure the correct grade is maintained across the joint.

5. The use of a vibratory screed will be required during placement of Class A45 Concrete for the approach slabs. Concrete placement in front of the screed shall be kept parallel to the screed.

6. The concrete in the approach slab shall be tined parallel with the skew of the bridge.

7. The new approach slabs and sleeper slabs shall have a surface finish as stipulated in Section 460.3 L.4 of the Construction Specifications.

8. The Concrete Approach Slabs Adjacent to Bridge shall be cured in accordance with Section 460.3 M of the Construction Specifications. The minimum 7 day cure time requirement shall be waived. The approach slabs shall be cured until a minimum compressive strength of 4,000 psi is reached.

9. Concrete Approach Sleeper Slab for Bridge will be paid for at the contract unit price per square yard. This payment shall be full compensation for all excavation, furnishing, hauling, and placing all materials including concrete, concrete anchors, and reinforcing steel; for disposal of all excavated material and surplus materials; and for labor, tools, equipment and any incidentals necessary to complete this item of work.

10. Concrete Approach Slab for Bridge will be paid for at the contract unit price per square yard. This payment shall be full compensation for all excavation, furnishing, hauling and placing all materials including concrete, asphalt paint or 4 mil polyethylene sheeting, elastic joint sealer and reinforcing steel; for disposal of all excavated material and surplus materials and for labor, tools, equipment and any incidentals necessary to complete this item of work.

## MECHANICAL REBAR SPLICES

Mechanical splice devices will be required for the transverse approach slab and sleeper slab reinforcing steel. The mechanical rebar splices shall be in accordance with Section 480 of the Construction Specifications.

## MEMBRANE SEALANT EXPANSION JOINT

1. The Membrane Sealant shall be on the approved product list for Membrane Sealant Expansion Joint.

2. The manufacturer shall supply the membrane sealant in packaging that precompresses the membrane sealant. The precompressed dimension shall be as recommended by the sealant manufacturer, however, in no case shall the precompressed dimension exceed 75% of the joint opening width. The foam sealant shall be slowly self expanding to permit workers ample time to install the membrane sealant before the membrane sealant exceeds the joint opening width.

3. The membrane sealant shall provide a water tight seal throughout a joint movement range of +25% (minimum from the specified joint opening dimension.

4. The membrane sealant shall be supplied in pieces a minimum of 5 feet in length. The foam sealant shall be ultra-violet and ozone resistant.

5. The bonding adhesive used to attach the membrane sealant to the adjacent concrete shall be approved by the membrane sealant manufacturer.

6. Adhesive used to join adjacent pieces of the membrane sealant shall be as recommended by the manufacturer.

7. If Styrofoam filler material is used in the construction, it shall be closed cell and water-tight as approved by the Engineer.

8. The minimum ambient air temperature at the time of joint installation and adhesive curing shall be 40°F.

9. A technical representative of the membrane sealant manufacturer shall be present at the jobsite during installation. The technical representative shall be knowledgeable in the correct procedures for the preparation and installation of the joint material to ensure the Contractor installs the joint to the manufacturers' recommendations.

**NOTES (CONTINUED)**
FOR
**67' - 3¾" CONT. CONCRETE BRIDGE**

STR. NO. 64-006-164
OCTOBER 2015



| DESIGNED BY | CK. DES. BY | DRAFTED BY | |
|---|---|---|---|
| KSK | BD | KSK | Kevin N. Goeden BRIDGE ENGINEER |
| UNIN02PT | 02PTRH03 | | |

**MEMBRANE SEALANT EXPANSION JOINT (CONTINUED)**

10. Surfaces that will be in contact with the membrane sealant shall be thoroughly cleaned by abrasive blasting to remove all laitance and contaminants (such as oil, curing compounds, etc.) from the surface. At a minimum, two passes of abrasive blasting with the nozzle held at an angle to within 1 to 2 inches of the surface will be required. Cleaning of the surfaces with solvents, wire brushing, or grinding shall not be permitted.

11. After abrasive blasting, but immediately prior to membrane joint installation, the entire joint contact surface shall be air blasted. The air compressor used for joint cleaning shall be equipped with trap devices capable of providing moisture-free and oil-free air at a recommended pressure of 90 psi. To obtain complete bonding with the adhesive, the adjacent surfaces must be dry and clean. The contact surfaces for the joint shall be visually inspected by the Engineer immediately prior to joint installation to verify the surface is dry and clean.

12. Individual spliced sections shall be installed as per the manufacturers' recommendations. The membrane joint sealant manufacturer shall submit a detailed installation procedure to the Engineer at least 5 days prior to joint installation for his review.
13. Traffic shall not be allowed on the joint until the bonding adhesive has had time to cure, as recommended by the manufacturer.

14. Use plywood or other material to protect concrete adjacent to the joint from spalling before any equipment is moved across the joint. Any spall areas will be repaired at the Contractor's expense by breaking out and replacing adjacent concrete, as approved by the Engineer.

15. The Membrane Sealant Expansion Joint will be measured in feet to the nearest one-tenth foot, complete in place. Measurement will be made of the overall horizontal length. The Membrane Sealant Expansion Joint will be paid for at the contract unit price per foot complete in place. Payment for this item shall be full compensation for furnishing all the required materials in place, including labor, equipment and incidentals necessary to complete the work in accordance with the plans and the foregoing specifications.

**NOTES (CONTINUED)**
FOR
67' - 3¾" CONT. CONCRETE BRIDGE

STR. NO. 64-006-164
OCTOBER 2015



| DESIGNED BY | CK. DES. BY | DRAFTED BY | |
|---|---|---|---|
| KSK | BD | KSK | Kevin N. Boeden |
| UNIN02PT | 02PTRH04 | | BRIDGE ENGINEER |

| STATE OF | PROJECT | SHEET NO. | TOTAL SHEETS |
|---|---|---|---|
| S.D. | IM-PH 0291(122)0 | 215 | 284 |

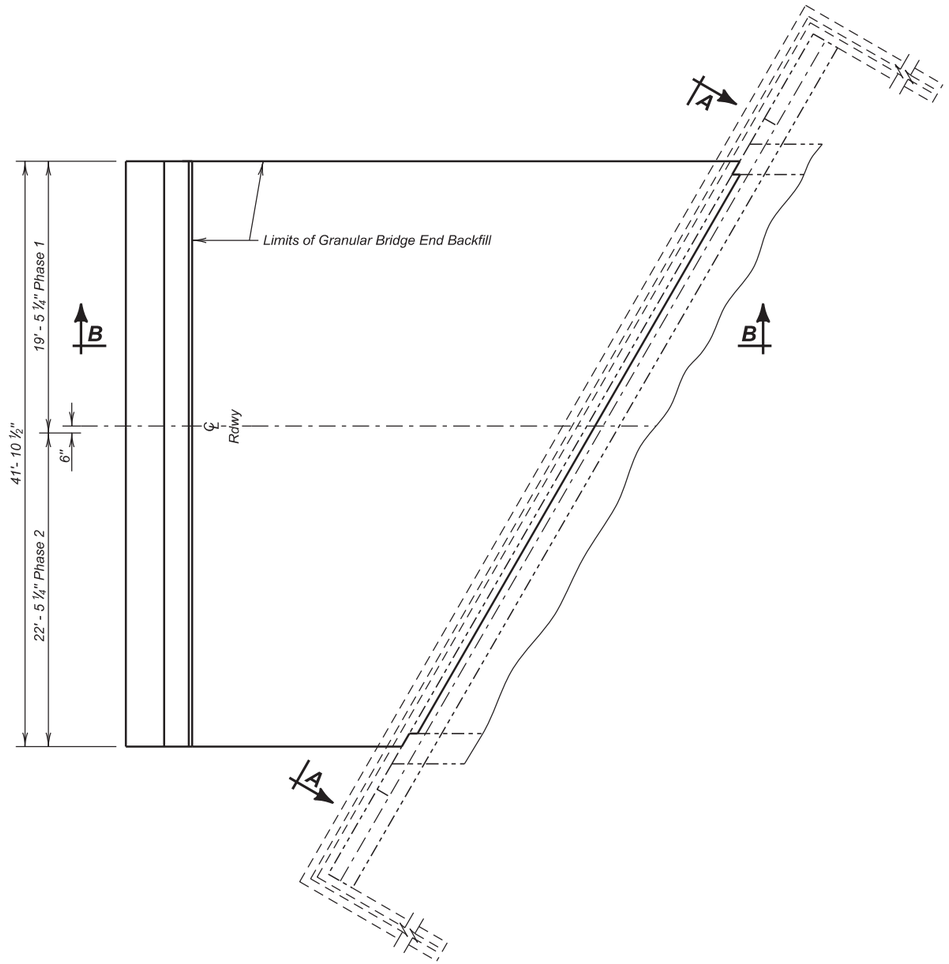


**PLAN**
(Bridge End Backfill shown adjacent to Abut. No. 1.)

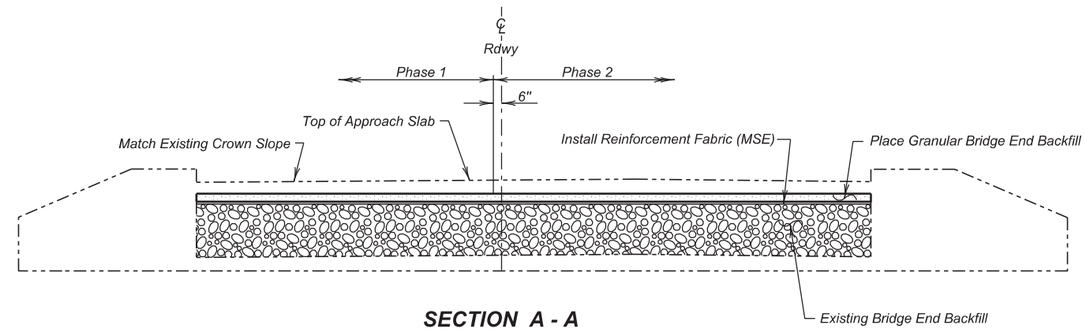


**SECTION A - A**

## ESTIMATED QUANTITIES

| ITEM | UNIT | QUANTITY Phase I | QUANTITY Phase 2 |
|---|---|---|---|
| ¢ Granular Bridge End Backfill | CuYd | 6.8 | 7.8 |
| | | | |

¢ Item 1 is an approximate quantity contained in the above bid item and is for information only.

| | PHASE 1 | PHASE 2 |
|---|---|---|
| 1. Reinforcement Fabric (MSE) | 158.6 Sq. Yd. | 183.0 Sq. Yd. |

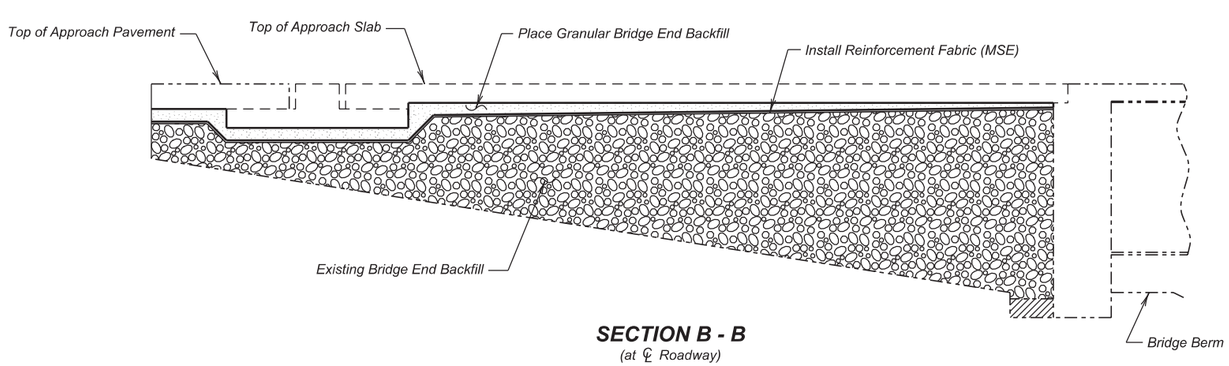


**SECTION B - B**
(at ℄ Roadway)

**(NORTH BOUND LANES)**
**BRIDGE END BACKFILL MODIFICATION**
FOR
67' - 3 ¾" CONT. CONCRETE BRIDGE

40' - 0" ROADWAY — 30° SKEW L.H.F.
OVER CREEK — SEC. 30-T93N-R50W
STR. NO. 64-006-164 — IM-PH 0291(122)0

UNION COUNTY
S. D. DEPT. OF TRANSPORTATION
OCTOBER 2015



| DESIGNED BY | CK. DES. BY | DRAFTED BY | |
|---|---|---|---|
| KSK | BD | KR | Kevin N. Goeden |
| UNIN02PT | 02PTRH05 | | BRIDGE ENGINEER |

| STATE OF | PROJECT | SHEET NO. | TOTAL SHEETS |
|---|---|---|---|
| S.D. | IM-PH 0291(122)0 | 216 | 284 |

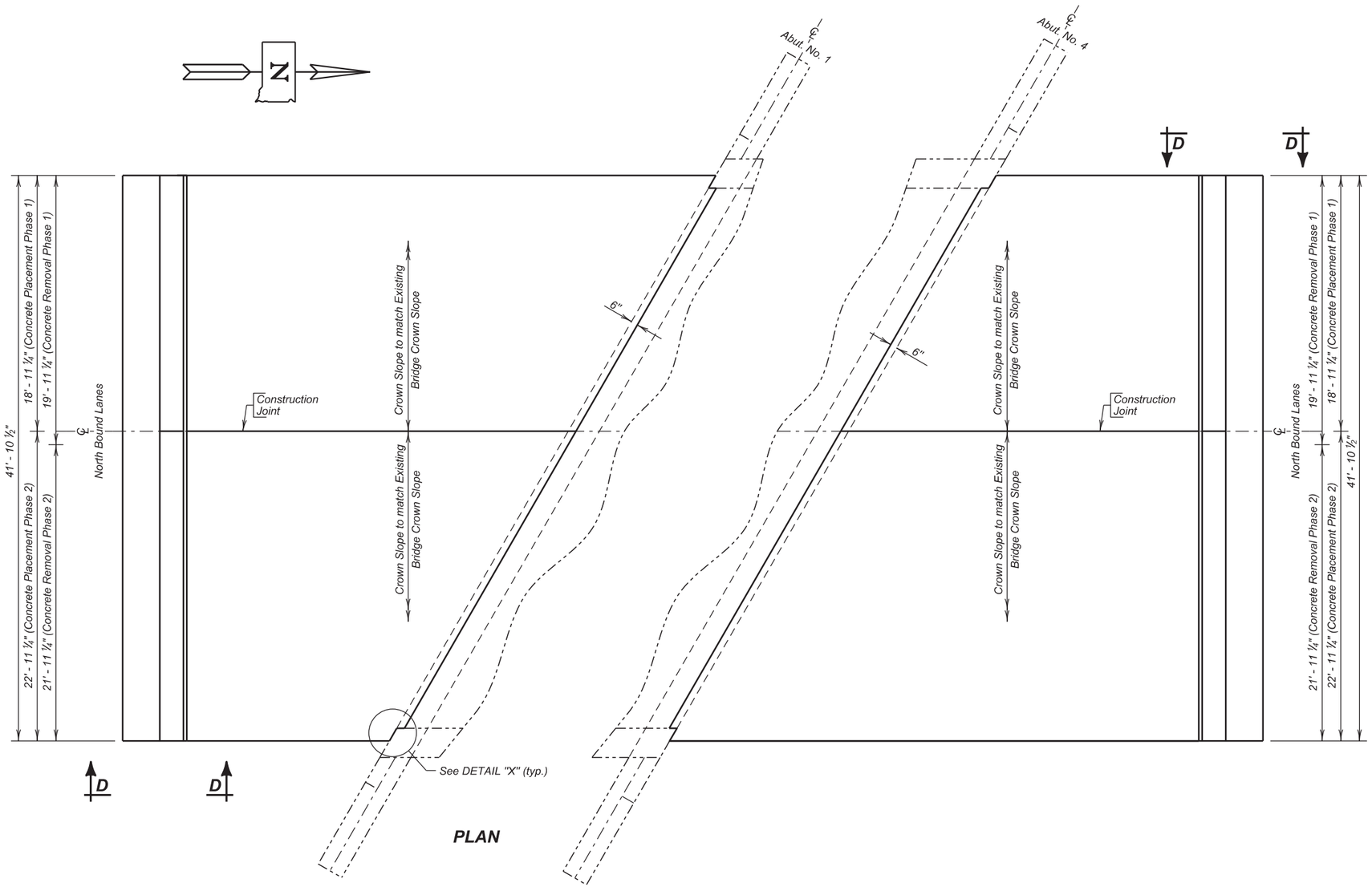


PLAN

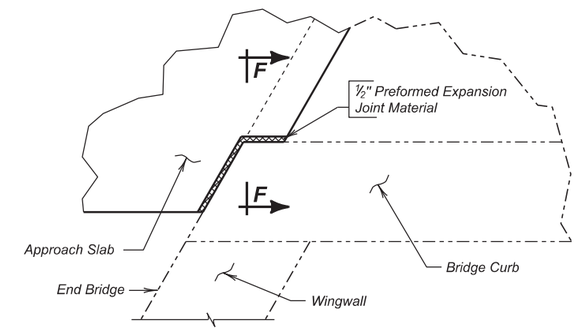


DETAIL "X"
(Typical at both barriers)
(Railing not shown)

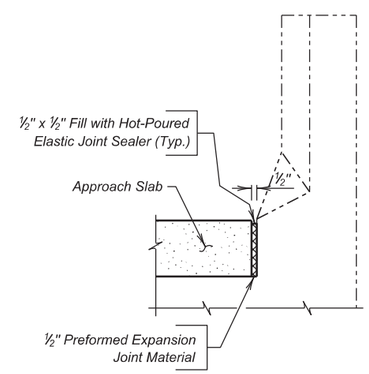


SEC. F - F

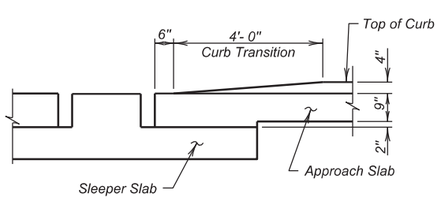


VIEW D - D

**(NORTH BOUND LANES)**
**APPROACH SLAB LAYOUT**
FOR
67' - 3 ¾" CONT. CONCRETE BRIDGE

40' - 0" ROADWAY
OVER CREEK
STR. NO. 64-006-164

30° SKEW L.H.F.
SEC. 30-T93N-R50W
IM-PH 0291(122)0

UNION COUNTY
S. D. DEPT. OF TRANSPORTATION
OCTOBER 2015

6 OF 15

| DESIGNED BY | CK. DES. BY | DRAFTED BY | |
|---|---|---|---|
| KSK | BD | KR | Kevin N. Boeden |
| UNIN02PT | 02PTRH06 | | BRIDGE ENGINEER |

| STATE OF | PROJECT | SHEET NO. | TOTAL SHEETS |
|---|---|---|---|
| S.D. | IM-PH 0291(122)0 | 217 | 284 |

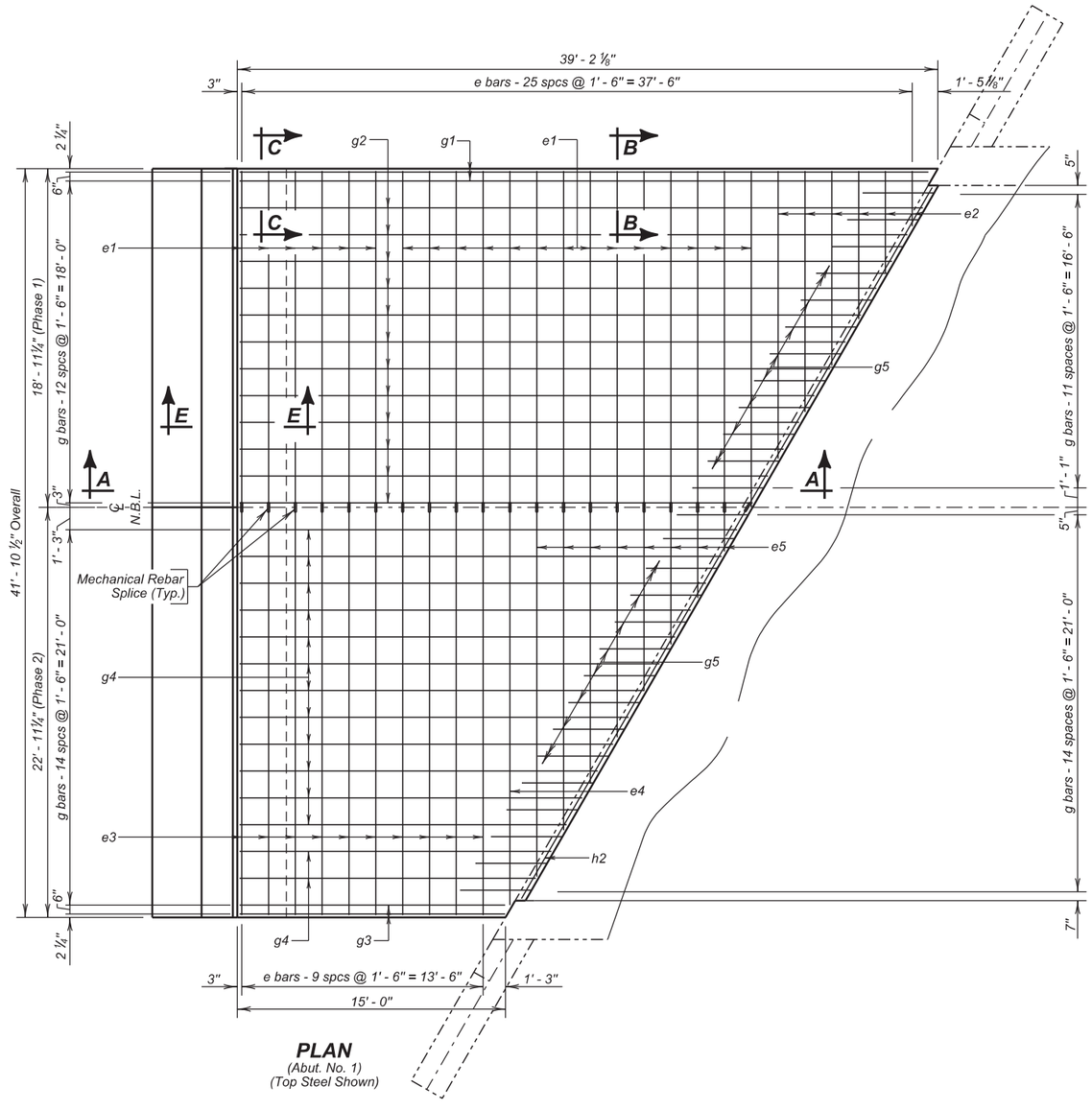


**PLAN**
(Abut. No. 1)
(Top Steel Shown)

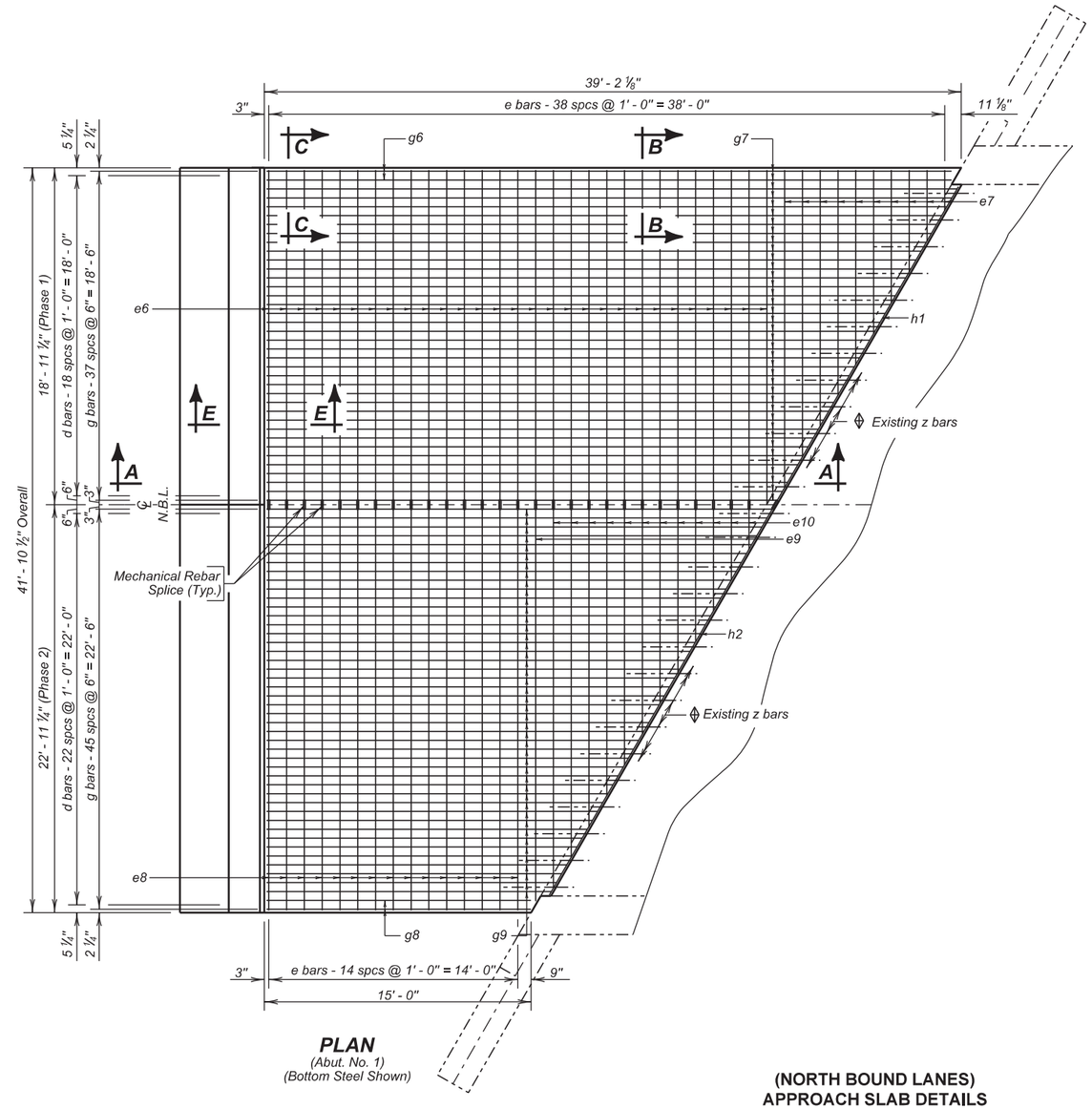


**PLAN**
(Abut. No. 1)
(Bottom Steel Shown)

◊ *Salvage Existing z bars. If z bars cannot be reused, dowel in new z1 bars next to existing z bars. The quantity shown is an approximate quantity and will vary depending on field conditions.*

**(NORTH BOUND LANES)**
**APPROACH SLAB DETAILS**

FOR

67' - 3 3/4" CONT. CONCRETE BRIDGE

40' - 0" ROADWAY — 30° SKEW L.H.F.
OVER CREEK — SEC. 30-T93N-R50W
STR. NO. 64-006-164 — IM-PH 0291(122)0

UNION COUNTY
S. D. DEPT. OF TRANSPORTATION
OCTOBER 2015



| DESIGNED BY | CK. DES. BY | DRAFTED BY | |
|---|---|---|---|
| KSK | BD | KR | Kevin N. Goeden |
| UNIN02PT | 02PTRH07 | | BRIDGE ENGINEER |

| STATE OF | PROJECT | SHEET NO. | TOTAL SHEETS |
|---|---|---|---|
| S.D. | IM-PH 0291(122)0 | 218 | 284 |

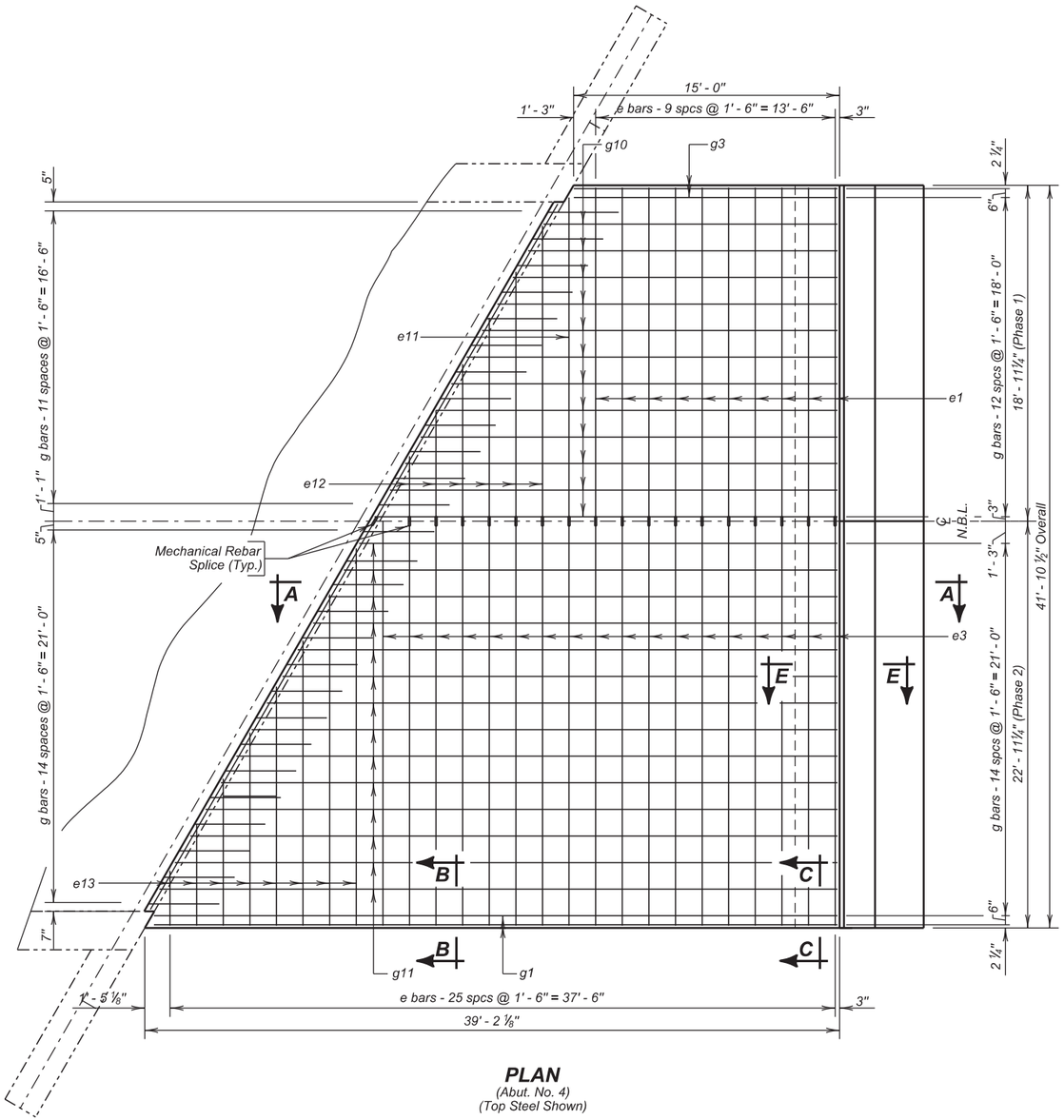


**PLAN**
(Abut. No. 4)
(Top Steel Shown)

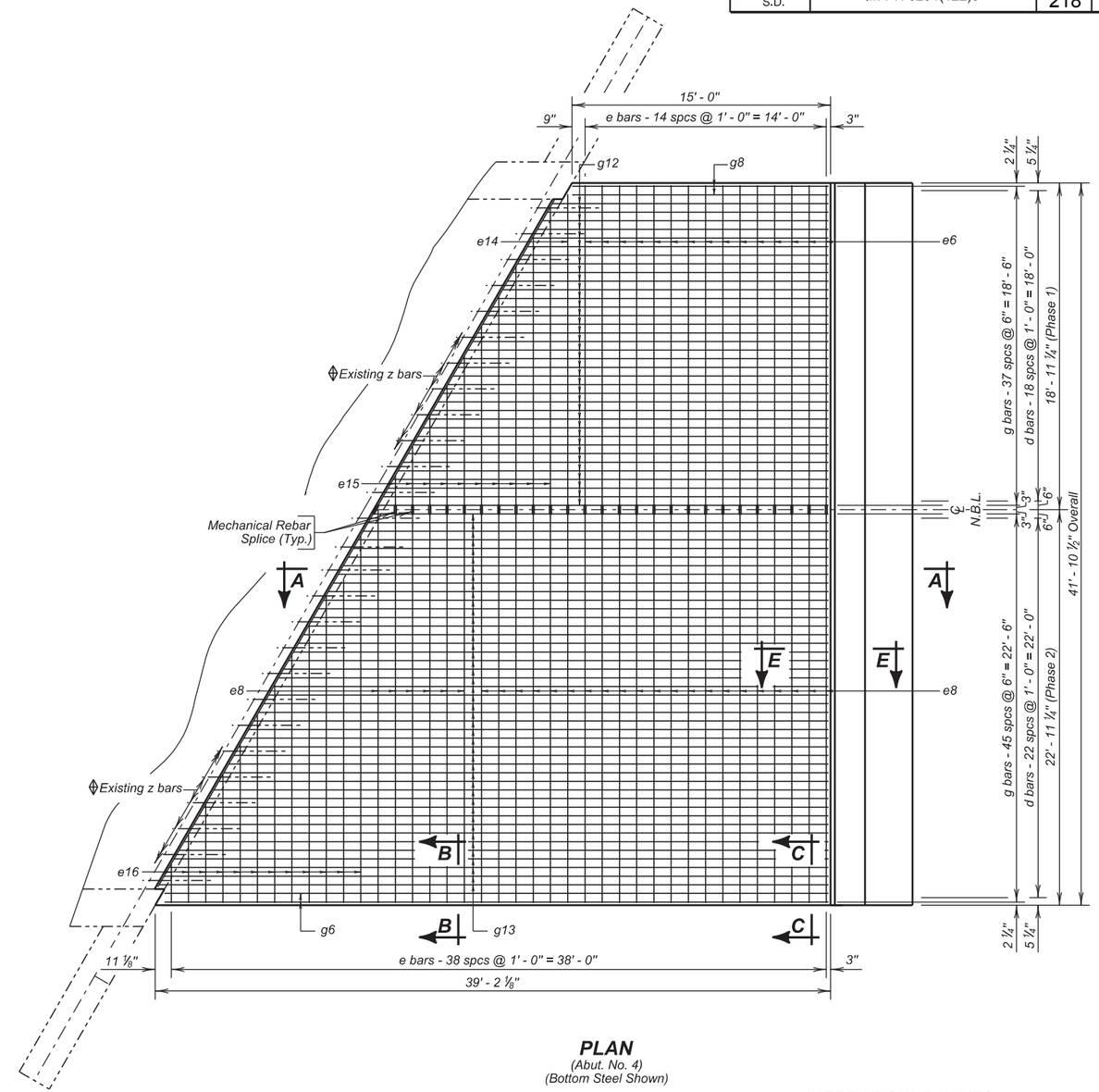


**PLAN**
(Abut. No. 4)
(Bottom Steel Shown)

**(NORTH BOUND LANES)**
**APPROACH SLAB DETAILS (CONTINUED)**

FOR

67' - 3 3/4" CONT. CONCRETE BRIDGE

40' - 0" ROADWAY
OVER CREEK
STR. NO. 64-006-164

30° SKEW L.H.F.
SEC. 30-T93N-R50W
IM-PH 0291(122)0

UNION COUNTY

S. D. DEPT. OF TRANSPORTATION

OCTOBER 2015

8 OF 15

Salvage Existing z bars. If z bars cannot be reused, dowel in new z1 bars next to existing z bars. The quantity shown is an approximate quantity and will vary depending on field conditions.

| DESIGNED BY | CK. DES. BY | DRAFTED BY | |
|---|---|---|---|
| KSK | BD | KR | Kevin N. Goeden |
| UNIN02PT | 02PTRH07 | | BRIDGE ENGINEER |

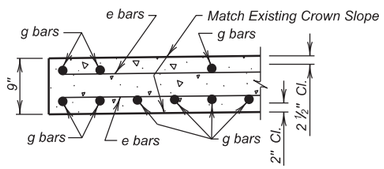


**SEC. C - C**

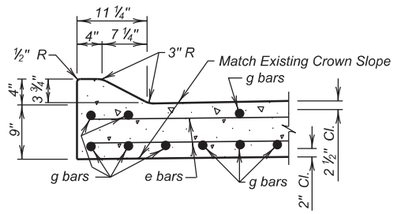


**SEC. B - B**

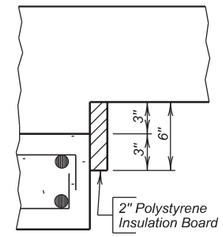


**DETAIL "W"**

*The Polystyrene Insulation Board shall be firmly attached to the sleeper slab by a method to be approved by the Engineer.*

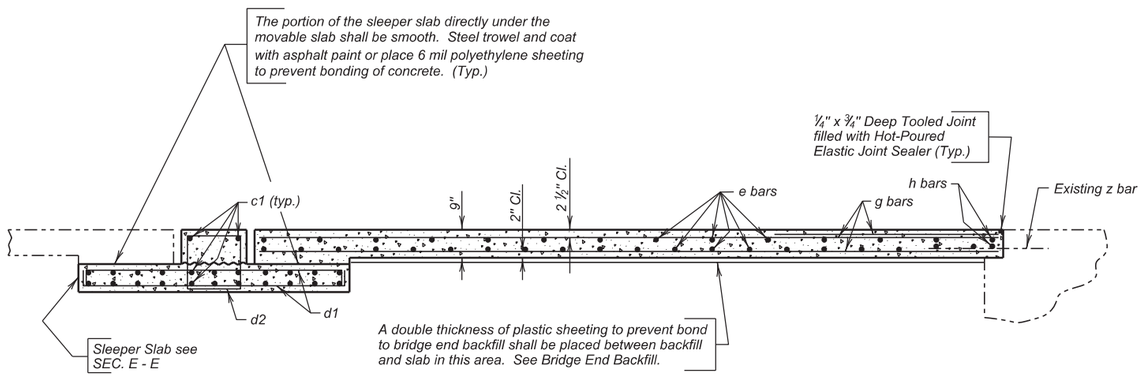


**SEC. A - A**

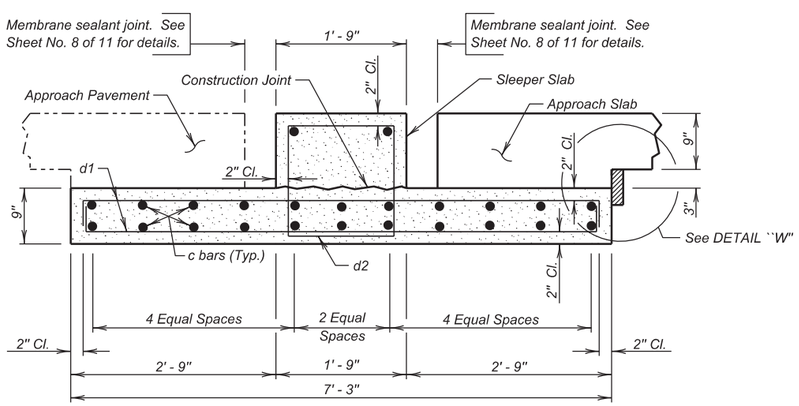


**SEC. E - E**

(Sleeper Slab)

## REINFORCING SCHEDULE

( For Two Approach and Two Sleeper Slabs )

PHASE 1

| | Mk. | No. | Size | Length | Type |
|---|---|---|---|---|---|
| ⌀ | c1 | 48 | 5 | 18' - 9" | Str. |
| | d1 | 76 | 4 | 7' - 9" | 2 |
| | d2 | 38 | 4 | 6' - 5" | T2 |
| ⌀ | e1 | 30 | 4 | 18' - 9" | Str. |
| ✳ | e2 | 3 | 4 | 19' - 2" | Str. |
| ⌀ | e6 | 44 | 6 | 18' - 9" | Str. |
| ✳ | e7 | 5 | 6 | 20' - 1" | Str. |
| ⌀ | e11 | 1 | 4 | 18' - 3" | Str. |
| ✳⌀ | e12 | 3 | 4 | 20' - 1" | Str. |
| ⌀ | e14 | 1 | 6 | 18' - 3" | Str. |
| ✳⌀ | e15 | 5 | 6 | 19' - 6" | Str. |
| | g1 | 2 | 4 | 38' - 6" | Str. |
| ✳ | g2 | 6 | 4 | 66' - 10" | Str. |
| | g3 | 2 | 4 | 14' - 10" | Str. |
| | g5 | 24 | 4 | 6' - 0" | Str. |
| | g6 | 2 | 8 | 38' - 6" | Str. |
| ✳ | g7 | 18 | 8 | 67' - 6" | Str. |
| | g8 | 2 | 8 | 14' - 10" | Str. |
| ✳ | g10 | 6 | 4 | 42' - 7" | Str. |
| ✳ | g12 | 18 | 8 | 42' - 1" | Str. |
| ⌀ | h1 | 4 | 6 | 20' - 7" | Str. |
| Δϕ | z1 | 6 | 6 | 4' - 0" | Str. |

PHASE 2

| | Mk. | No. | Size | Length | Type |
|---|---|---|---|---|---|
| ⌀ | c2 | 48 | 5 | 22' - 9" | Str. |
| | d1 | 92 | 4 | 7' - 9" | 2 |
| | d2 | 46 | 4 | 6' - 5" | T2 |
| ⌀ | e3 | 28 | 4 | 22' - 9" | Str. |
| | e4 | 1 | 4 | 22' - 3" | Str. |
| ✳⌀ | e5 | 4 | 4 | 23' - 1" | Str. |
| ⌀ | e8 | 42 | 6 | 22' - 9" | Str. |
| | e9 | 1 | 6 | 22' - 3" | Str. |
| ✳⌀ | e10 | 6 | 6 | 24' - 0" | Str. |
| ✳⌀ | e13 | 4 | 4 | 24' - 4" | Str. |
| ✳ | e16 | 6 | 6 | 23' - 6" | Str. |
| | g1 | 2 | 4 | 38' - 6" | Str. |
| | g3 | 2 | 4 | 14' - 10" | Str. |
| ✳ | g4 | 7 | 4 | 44' - 4" | Str. |
| | g5 | 30 | 4 | 6' - 0" | Str. |
| | g6 | 2 | 8 | 38' - 6" | Str. |
| | g8 | 2 | 8 | 14' - 10" | Str. |
| ✳ | g9 | 22 | 8 | 44' - 5" | Str. |
| ✳ | g11 | 7 | 4 | 65' - 1" | Str. |
| ✳ | g13 | 22 | 8 | 65' - 2" | Str. |
| ⌀ | h2 | 4 | 6 | 25' - 3" | Str. |
| Δϕ | z1 | 8 | 6 | 4' - 0" | Str. |

Bending Details

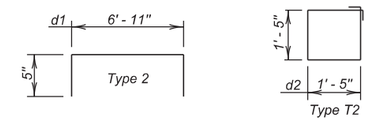


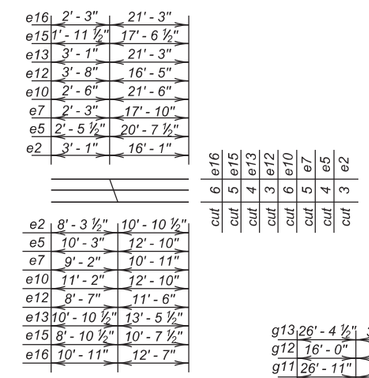


Note -
All Dimensions are out to out of bars.
All Bars to be Epoxy Coated.

Δ Dowels
ϕ This quantity will vary depending on condition of existing z bars
✳ Cut bars
⌀ Splice (Mechanically Spliced)

## ESTIMATED QUANTITIES

(For Two Approach and Two Sleeper Slabs)

| ITEM | UNIT | QUANTITY Phase I | QUANTITY Phase 2 |
|---|---|---|---|
| Remove Concrete Bridge Approach Slab | Sq Yd | 143.5 | 157.9 |
| Concrete Approach Slab for Bridge | Sq Yd | 116.3 | 140.8 |
| Concrete Approach Sleeper Slab for Bridge | Sq Yd | 30.5 | 37.0 |
| Install Dowel In Concrete | Each | 6 | 8 |
| No. 4 Rebar Splice | Each | 34 | — |
| No. 5 Rebar Splice | Each | 48 | — |
| No. 6 Rebar Splice | Each | 54 | — |

| | PHASE I | PHASE 2 |
|---|---|---|
| 1. Concrete in Approach Slabs. | 29.9 Cu. Yd | 36.3 Cu. Yd |
| ✳ 2. Epoxy Coated Re-Steel in Approach Slabs. | 8311 Lbs. | 10,040 Lbs. |
| 3. Concrete in Sleeper Slabs | 10.0 Cu. Yd | 12.2 Cu. Yd |
| 4. Epoxy Coated Re - Steel in Sleeper Slabs. | 1495 Lbs. | 1812 Lbs. |

Items 1 thru 4 are approximate quantities contained in the above bid item and are for information only.

✳ Does not include the following quantities for z1 bars as these are paid for in the Bid Item "Install Dowel in Concrete".

| PHASE I | PHASE 2 |
|---|---|
| 36 Lbs. | 48 Lbs. |

**(NORTH BOUND LANES)**
**APPROACH SLAB DETAILS (CONTINUED)**

FOR

67' - 3 ¾" CONT. CONCRETE BRIDGE

40' - 0" ROADWAY — 30° SKEW L.H.F.
OVER CREEK — SEC. 30-T93N-R50W
STR. NO. 64-006-164 — IM-PH 0291(122)0

UNION COUNTY

S. D. DEPT. OF TRANSPORTATION

OCTOBER 2015



| DESIGNED BY | CK. DES. BY | DRAFTED BY | |
|---|---|---|---|
| KSK | BD | KR | Kevin N. Boeden |
| UNIN02PT | 02PTRH08 | | BRIDGE ENGINEER |

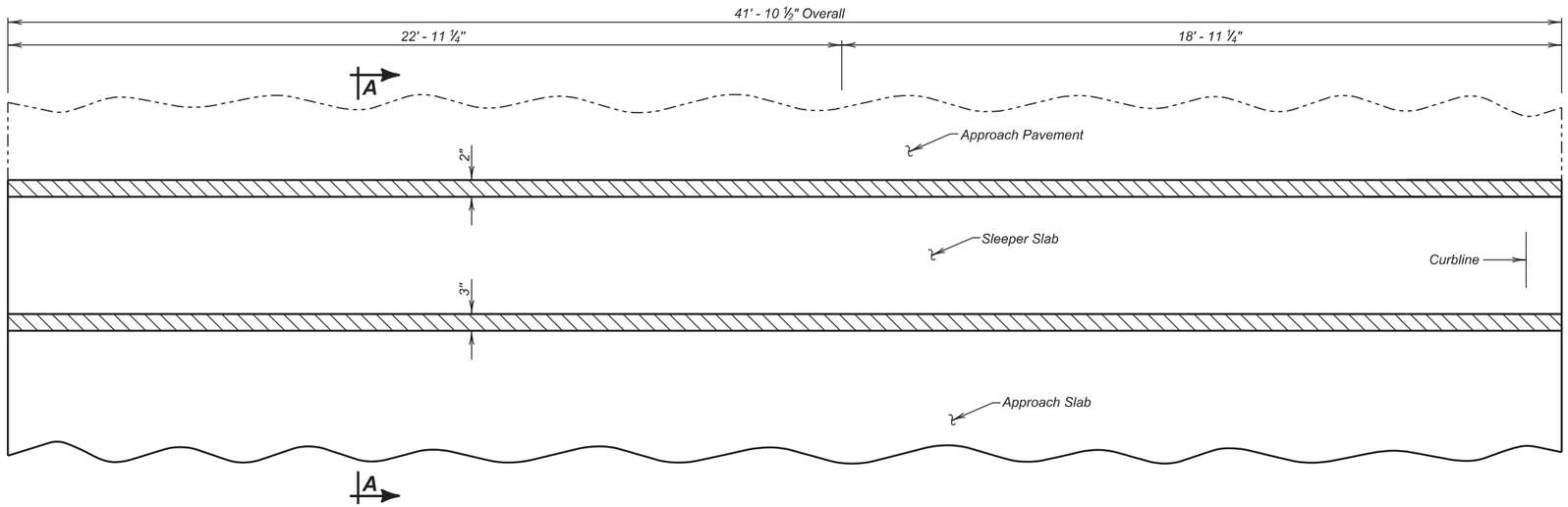


**PLAN**

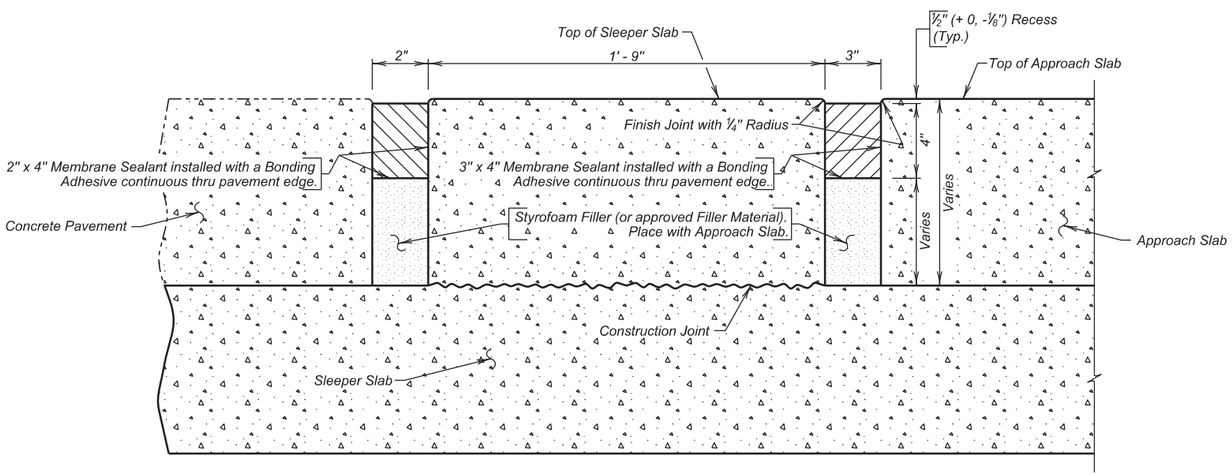


**SEC. A - A**

## ESTIMATED QUANTITIES

| ITEM | UNIT | QUANTITY | |
|---|---|---|---|
| | | Phase I | Phase 2 |
| Membrane Sealant Expansion Joint | Ft | 75.8 | 91.8 |
| | | | |

**(NORTH BOUND LANES)**
**APPROACH SLAB JOINT DETAILS**

FOR

67' - 3 ¾" CONT. CONCRETE BRIDGE

40' - 0" ROADWAY — 30° SKEW L.H.F.
OVER CREEK — SEC. 30-T93N-R50W
STR. NO. 64-006-164 — IM-PH 0291(122)0

UNION COUNTY

S. D. DEPT. OF TRANSPORTATION

OCTOBER 2015



| DESIGNED BY | CK. DES. BY | DRAFTED BY | |
|---|---|---|---|
| KSK | BD | KR | Kevin N. Goeden |
| UNIN02PT | 02PTRH09 | | BRIDGE ENGINEER |

64/16

| STATE OF | PROJECT | SHEET NO. | TOTAL SHEETS |
|---|---|---|---|
| S.D. | IM-PH 0291(122)10 | 221 | 284 |

—X020—

# INDEX OF BRIDGE SHEETS—NORTH BOUND LANES


Sheet No. 1 – General Drawing and Quantities.
Sheet No. 2 – Superstructure Details.
Sheet No. 3 – Details of Abut. No. 1.
Sheet No. 4 – Details of Abut. No. 4.
Sheet No. 5 – Bent Details.
Sheet No. 6 – Slab Elev. and Conc. Placing Seq.
Sheet No. 7 – Type RA-1M Steel Railing Modification Details.


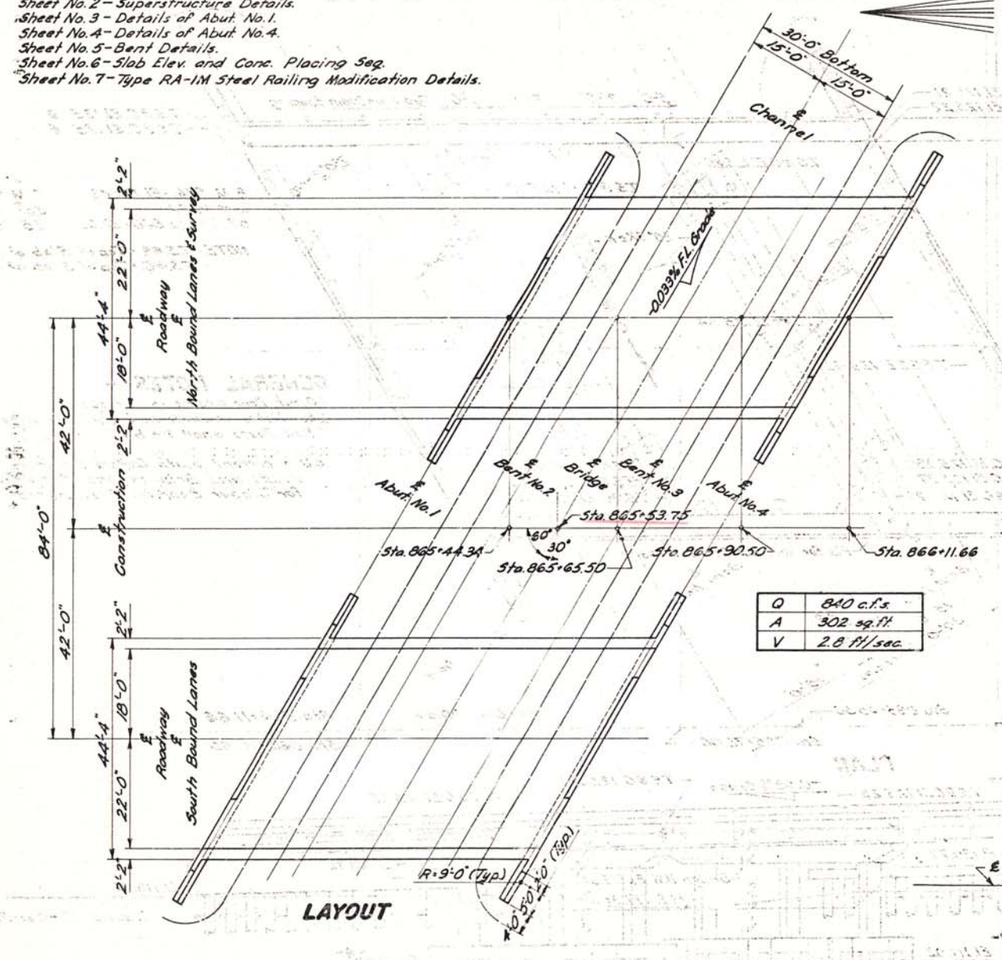


LAYOUT

| | |
|---|---|
| Q | 840 c.f.s. |
| A | 302 sq. ft. |
| V | 2.8 ft/sec. |

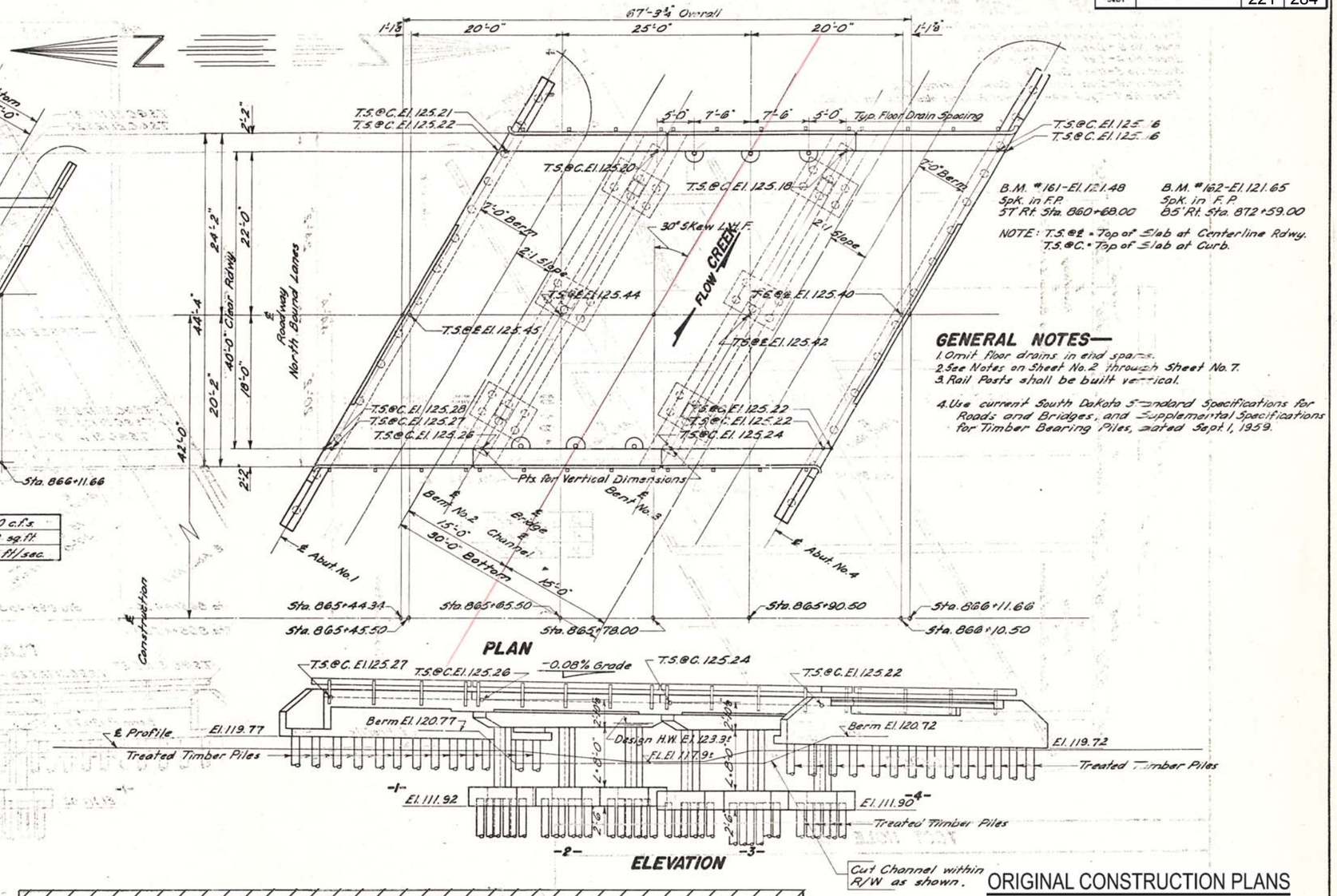


PLAN

ELEVATION

B.M. #161 – El. 121.48
Spk. in F.P.
5' Rt. Sta. 860+68.00

B.M. #162 – El. 121.65
Spk. in F.P.
85' Rt. Sta. 872+59.00

NOTE: T.S.@℄ = Top of Slab at Centerline Rdwy.
T.S.@C. = Top of Slab at Curb.

## GENERAL NOTES—

1. Omit floor drains in end spans.
2. See Notes on Sheet No. 2 through Sheet No. 7.
3. Rail Posts shall be built vertical.
4. Use current South Dakota Standard Specifications for Roads and Bridges, and Supplemental Specifications for Timber Bearing Piles, dated Sept. 1, 1959.

## TEST HOLE DATA

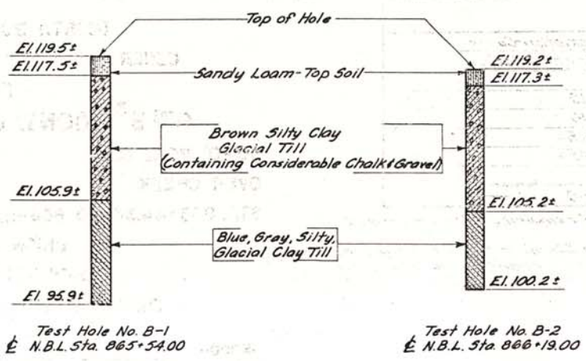


Test Hole No. B-1
℄ N.B.L. Sta. 865+54.00

Test Hole No. B-2
℄ N.B.L. Sta. 866+19.00

## ESTIMATED QUANTITIES

| ITEM | Cl. "A" Conc. Cu. Yds. | Steel-lbs. Reinf. | Steel-lbs. Struct. | Type RA-1M Steel Railing Lin. Ft. | Treated Timber Piles-# Lin. Ft. | Excavation-Cu. Yds. Struct. | Excavation-Cu. Yds. Unclass. |
|---|---|---|---|---|---|---|---|
| Superstructure | 91.4 | 31,180 | 65 | 127.3 | | | |
| Abut. No. 1 | 25.1 | 2,310 | 640 | | 14 @ 45' = 630 | 10 | |
| Abut. No. 4 | 25.1 | 2,310 | 640 | | 14 @ 45' = 630 | 10 | |
| Bent No. 2 | 18.6 | 4,030 | | | 18 @ 40' = 720 | 45 | |
| Bent No. 3 | 19.6 | 4,030 | | | 18 @ 40' = 720 | 45 | |
| | 186.8 | 42,860 | 1,345 | 127.3 | 2,700 | 110 | |

♦One Treated Timber Test Pile shall be driven at Abuts. No. 1 & 4 and at Bents No. 2 & 3 before remaining piles are ordered.
△See Grading Plans for Unclassified Excavation.
PILE NOTE: Piles driven at Abuts. No. 1 & No. 4 including test piles shall obtain their full bearing (20 tons) in the natural ground below the embankments at elevations 119.6± & 113.6± respectively. Predrilled holes through fill are required and shall have a minimum diameter 2" larger than the nominal diameter (3" from butt) of the pile.

ORIGINAL CONSTRUCTION PLANS

(NORTH BOUND LANES)

GENERAL DRAWING AND QUANTITIES

FOR

67'-3¾" CONT. CONC. BRIDGE

40'-0" ROADWAY — 30° SKEW L.H.F.

OVER CREEK — SEC. 30-T93N-R50W

STA. 865+44.34 TO 866+11.66 — I-29-1(13)27

UNION COUNTY

SOUTH DAKOTA — H20-S16-44 (& ALT.)

DEPARTMENT OF HIGHWAYS

JAN. 1960



-X020-

| DESIGNED BY | DRAWN BY | CHECKED BY | APPROVED |
|---|---|---|---|
| | O. C. | H.A. | K. R. Sears, BRIDGE ENGINEER |

| STATE OF | PROJECT | SHEET NO. | TOTAL SHEETS |
|---|---|---|---|
| S.D. | IM-PH 0291(12)210 | 222 | 284 |

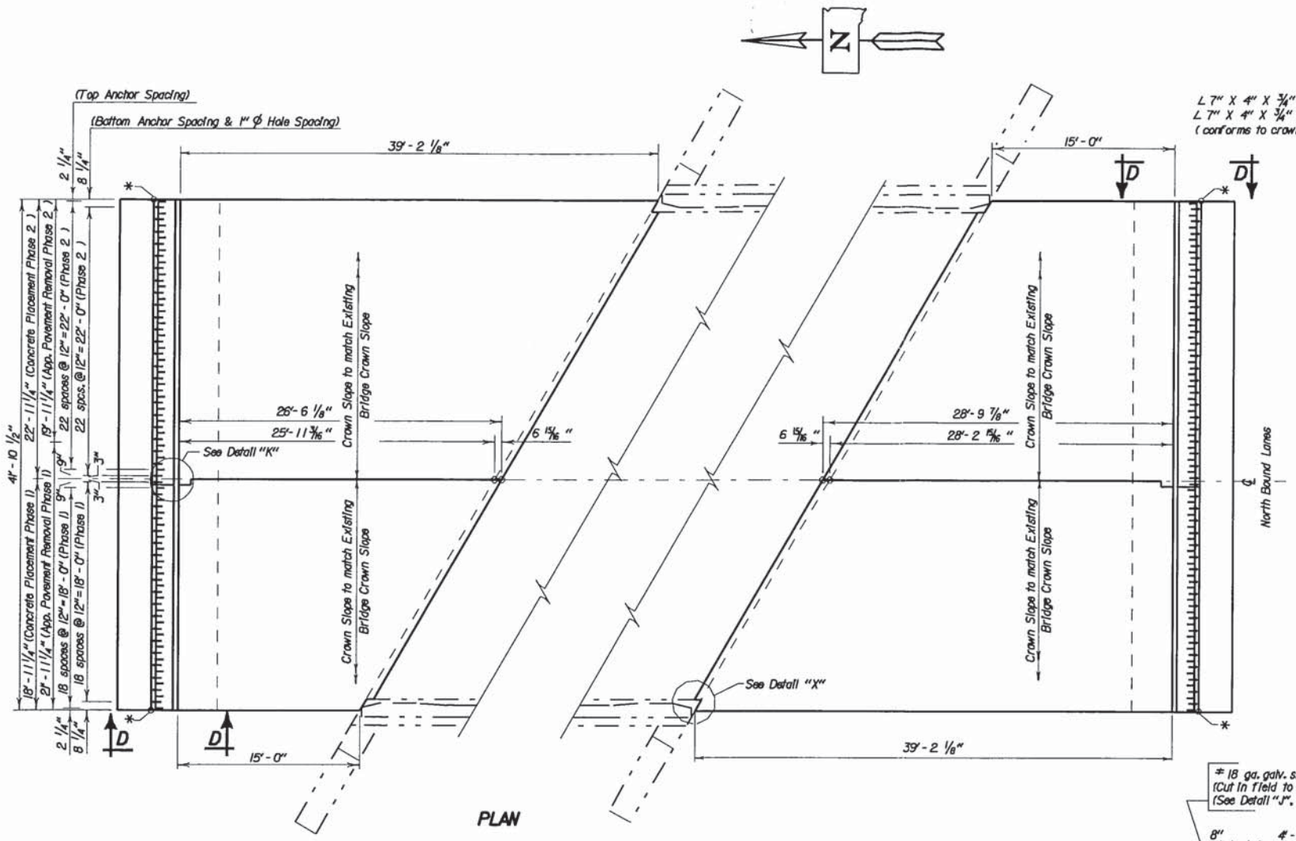


PLAN

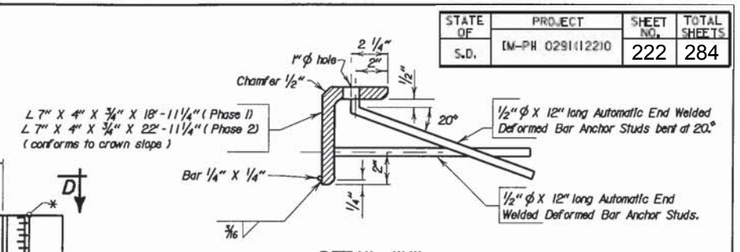


DETAIL "Y"

(See Sheet Nos. 14 of 24 for location of detail.)
(See Notes Regarding Armor Angle Assembly)

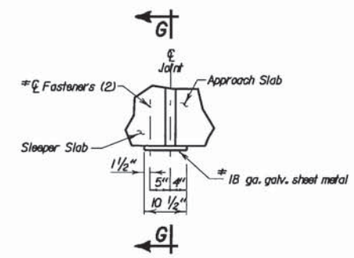


PLAN - DETAIL "J"

* Attach 18 ga. galv. Sheet Metal to both ends of Sleeper Slab only after slab has been poured. Use fasteners that will not spall concrete, as approved by the Engineer.

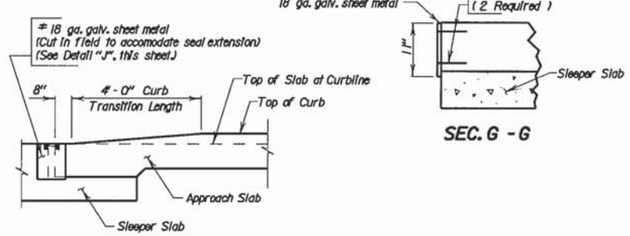


VIEW D - D

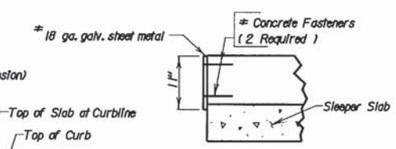


SEC. G - G

THE CONTRACTOR HAS THE OPTION OF BUILDING THE APPROACH SLABS FOR THE FULL WIDTH OF THE ROADWAY AT ONE TIME OR BUILDING THE APPROACH SLABS IN TWO PHASES USING THE PLAN SHOWN OPTIONAL CONSTRUCTION JOINT. ALL REFERENCES TO PHASE I AND PHASE 2 CONSTRUCTION ARE GIVEN IN THE EVENT THE CONTRACTOR ELECTS TO BUILD THE APPROACH SLABS IN TWO PHASES.

* Elevation is Top of Slab back of Curb at this point. See Approach Slab Notes.

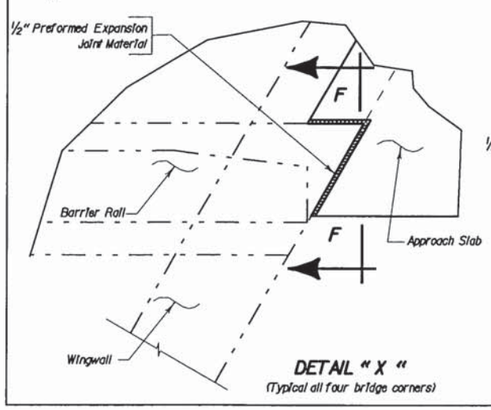


DETAIL "X"

(Typical all four bridge corners)

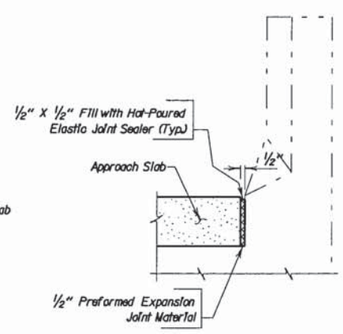


SEC. F - F

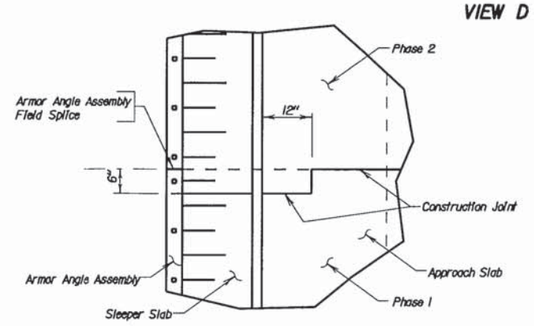


DETAIL "K"

## ORIGINAL CONSTRUCTION PLANS

(NORTH BOUND LANES)

LAYOUT OF APPROACH SLAB ADJ. TO BRIDGE

**67' - 3 3/4" CONT. CONCRETE BRIDGE**

40' - 0" ROADWAY — 30° SKEW L. H. F.

OVER CREEK — SEC. 30-T93N-R50W

STR. NO. 64-006-164 — IM 29-1(63)27

UNION COUNTY

S. D. DEPT. OF TRANSPORTATION

JULY 2001



| DESIGNED BY | DRAWN BY | CHECKED BY | APPROVED |
|---|---|---|---|
| TJO | TJO/CJD | EJA | John C. Cole |
| UNIN5587 | 558TSAII | | BRIDGE ENGINEER |

| STATE OF | PROJECT | SHEET NO. | TOTAL SHEETS |
|---|---|---|---|
| S.D. | IM-PH 0291(12)210 | 223 | 284 |

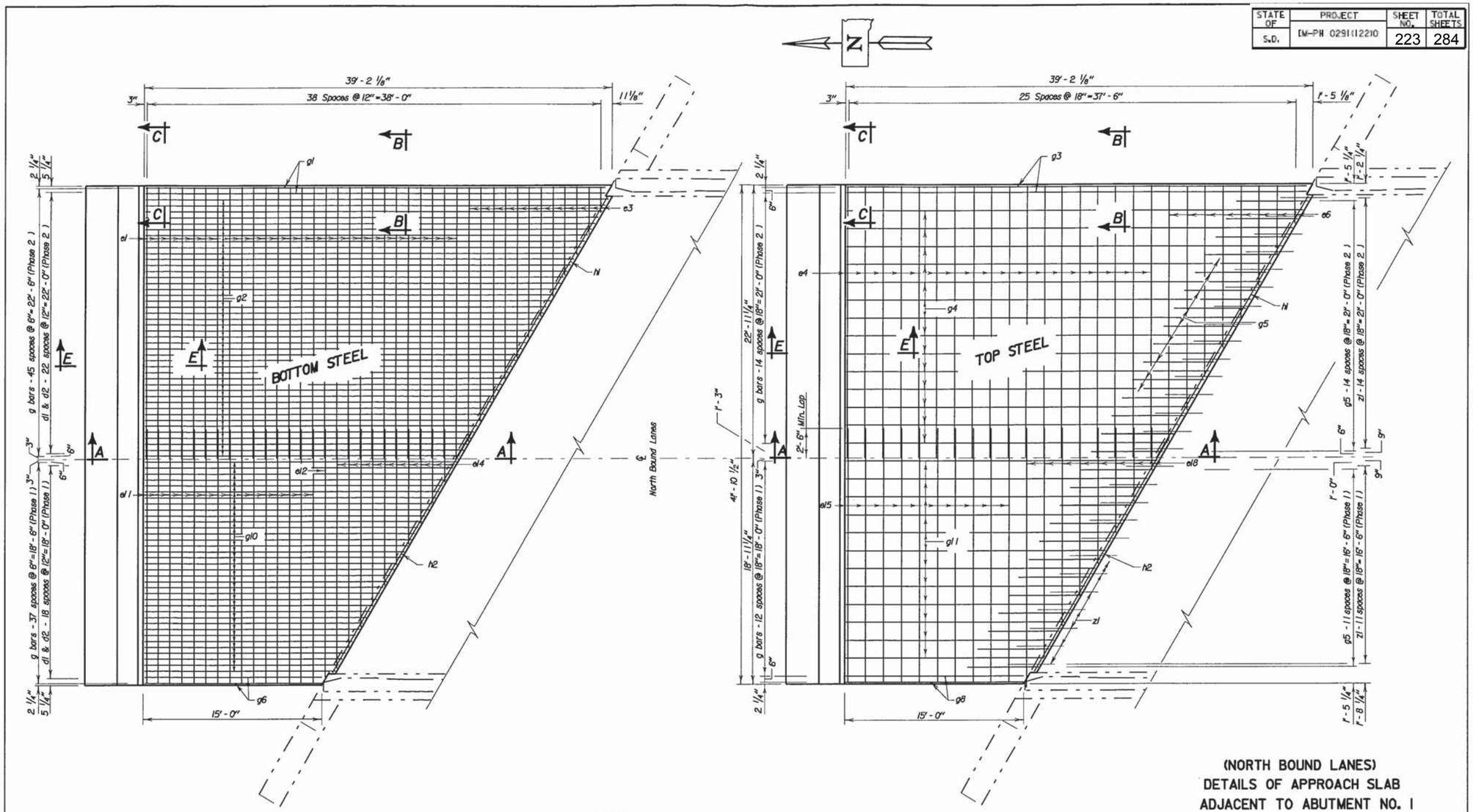


**PLAN**
(Abut. No. 1)

THE CONTRACTOR HAS THE OPTION OF BUILDING THE APPROACH SLABS FOR THE FULL WIDTH OF THE ROADWAY AT ONE TIME OR BUILDING THE APPROACH SLABS IN TWO PHASES USING THE PLAN SHOWN OPTIONAL CONSTRUCTION JOINT. ALL REFERENCES TO PHASE 1 AND PHASE 2 CONSTRUCTION ARE GIVEN IN THE EVENT THE CONTRACTOR ELECTS TO BUILD THE APPROACH SLABS IN TWO PHASES.

(NORTH BOUND LANES)
DETAILS OF APPROACH SLAB
ADJACENT TO ABUTMENT NO. 1

## 67' - 3 3/4" CONT. CONCRETE BRIDGE

40' - 0" ROADWAY — 30° SKEW L. H. F.
OVER CREEK — SEC. 30-T93N-R50W
STR. NO. 64-006-164 — IM 29-1(63)27
UNION COUNTY
S. D. DEPT. OF TRANSPORTATION
JULY 2001 — 13 OF 15

ORIGINAL CONSTRUCTION PLANS

| DESIGNED BY | DRAWN BY | CHECKED BY | APPROVED |
|---|---|---|---|
| TJO | TJO/CJD | EJA | John C. Cole |
| UNIN5587 | 5587SA12 | | BRIDGE ENGINEER |

| STATE OF | PROJECT | SHEET NO. | TOTAL SHEETS |
|---|---|---|---|
| S.D. | IM-PH 0291(122)0 | 224 | 284 |

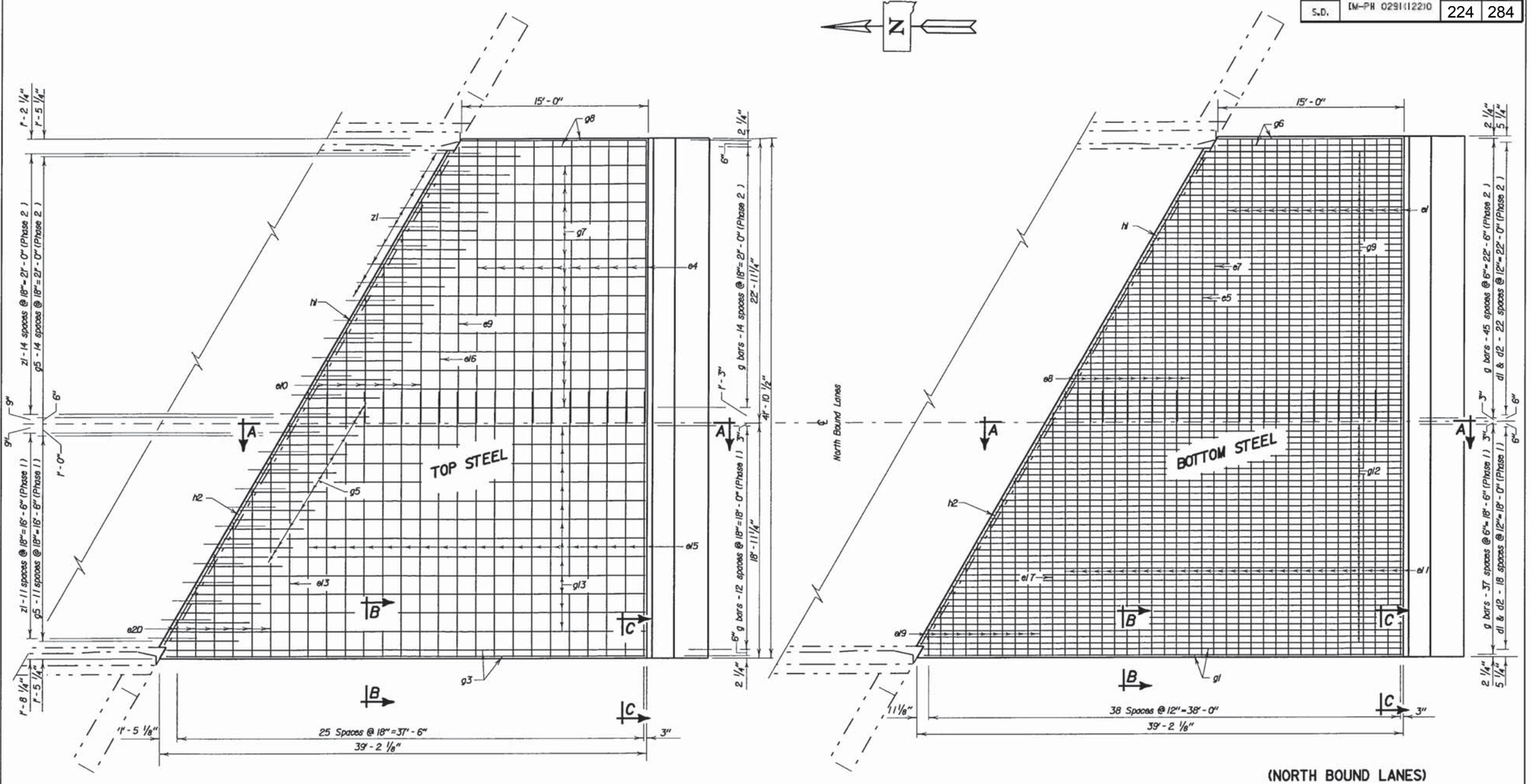


PLAN
(Abut. No. 4)

THE CONTRACTOR HAS THE OPTION OF BUILDING THE APPROACH SLABS FOR THE FULL WIDTH OF THE ROADWAY AT ONE TIME OR BUILDING THE APPROACH SLABS IN TWO PHASES USING THE PLAN SHOWN OPTIONAL CONSTRUCTION JOINT. ALL REFERENCES TO PHASE I AND PHASE 2 CONSTRUCTION ARE GIVEN IN THE EVENT THE CONTRACTOR ELECTS TO BUILD THE APPROACH SLABS IN TWO PHASES.

(NORTH BOUND LANES)
DETAILS OF APPROACH SLAB
ADJACENT TO ABUTMENT NO. 4

**67' - 3 3/4" CONT. CONCRETE BRIDGE**

40' - 0" ROADWAY — 30° SKEW L. H. F.
OVER CREEK — SEC. 30-T93N-R50W
STR. NO. 64-006-164 — IM 29-1(63)27
UNION COUNTY
S. D. DEPT. OF TRANSPORTATION
JULY 2001



ORIGINAL CONSTRUCTION PLANS

| DESIGNED BY | DRAWN BY | CHECKED BY | APPROVED |
|---|---|---|---|
| TJO | TJO/CJD | EJA | John C. Cole, BRIDGE ENGINEER |
| IJNIN5587 | 5587SA13 | | |

| STATE OF | PROJECT | SHEET NO. | TOTAL SHEETS |
|---|---|---|---|
| S.D. | IM-PH 0291(122)0 | 225 | 284 |

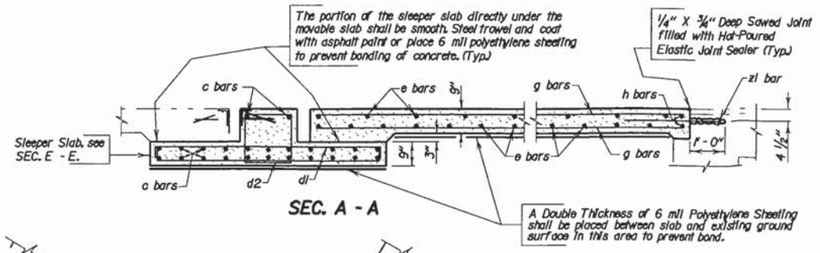


SEC. A - A

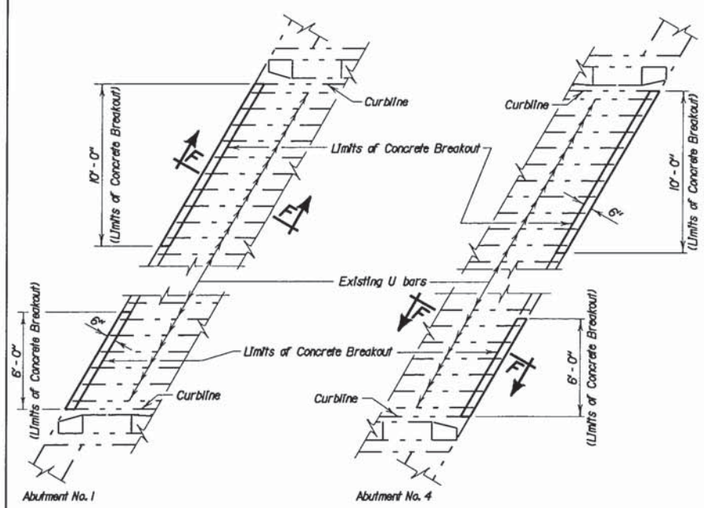


PAVEMENT NOTCH LAYOUT

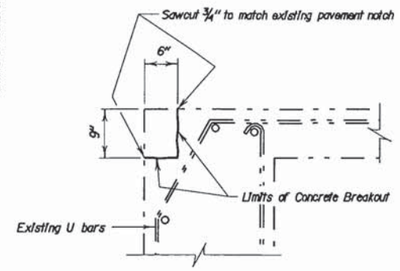


SEC. F - F

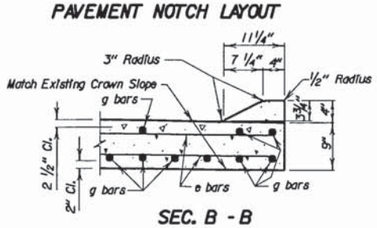


SEC. B - B

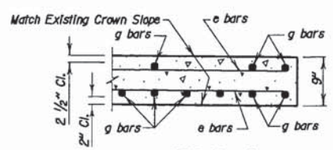


SEC. C - C

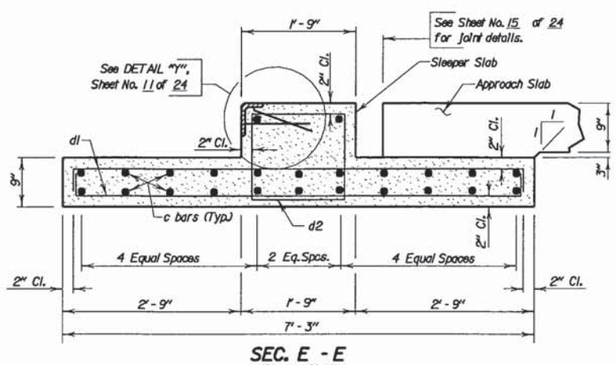


SEC. E - E
(Sleeper Slab)

## REINFORCING SCHEDULE
( For Two Approach and Sleeper Slabs)

PHASE 1

| Mk. | No. | Size | Length | Type |
|---|---|---|---|---|
| c1 | 48 | 5 | 21' - 4" | Str. |
| d1 | 76 | 4 | 7' - 9" | 2 |
| d2 | 38 | 4 | 6' - 5" | T2 |
| e1 1 | 43 | 6 | 21' - 4" | Str. |
| e12 | 1 | 6 | 20' - 9" | Str. |
| e13 | 1 | 4 | 18' - 7" | Str. |
| * e14 | 5 | 6 | 24' - 4" | Str. |
| e15 | 29 | 4 | 21' - 4" | Str. |
| e17 | 1 | 6 | 19' - 5" | Str. |
| * e18 | 4 | 4 | 25' - 2" | Str. |
| * e19 | 5 | 6 | 19' - 9" | Str. |
| * e20 | 3 | 4 | 19' - 0" | Str. |
| g1 | 2 | 8 | 38' - 6" | Str. |
| g3 | 2 | 4 | 38' - 6" | Str. |
| g5 | 24 | 4 | 6' - 0" | Str. |
| g6 | 2 | 8 | 14' - 10" | Str. |
| g8 | 2 | 4 | 14' - 10" | Str. |
| * g10 | 18 | 8 | 41' - 1" | Str. |
| * g11 | 6 | 4 | 42' - 6" | Str. |
| * g12 | 18 | 8 | 67' - 4" | Str. |
| * g13 | 6 | 4 | 66' - 8" | Str. |
| h2 | 4 | 6 | 23' - 2" | Str. |
| △ z1 | 24 | 6 | 4' - 0" | Str. |

Bending Details

| | | |
|---|---|---|
| e3 | 2' - 2" | 21' - 2" |
| e6 | 3' - 0" | 21' - 2" |
| e8 | 4' - 1" | 19' - 9" |
| e10 | 5' - 0" | 18' - 0" |
| e14 | 4' - 4" | 20' - 0" |
| e18 | 3' - 6" | 21' - 8" |
| e19 | 2' - 1" | 17' - 8" |
| e20 | 3' - 0" | 16' - 0" |

| | |
|---|---|
| 3 | e10, e20 |
| 4 | e6, e8 |
| 5 | e5, e14, e19 |
| 6 | e3 |

| | | |
|---|---|---|
| e20 | 8' - 3" | 10' - 9" |
| e19 | 9' - 0" | 10' - 9" |
| e18 | 11' - 3" | 13' - 11" |
| e14 | 11' - 4" | 13' - 0" |
| e10 | 10' - 2" | 12' - 10" |
| e8 | 11' - 1" | 12' - 9" |
| e6 | 10' - 10" | 13' - 4" |
| e3 | 10' - 10" | 12' - 6" |

| | | |
|---|---|---|
| g2 | 26' - 4" | 38' - 8" |
| g4 | 26' - 11" | 38' - 2" |
| g7 | 16' - 6" | 22' - 7" |
| g9 | 15' - 11" | 28' - 4" |
| g10 | 15' - 11" | 26' - 0" |
| g11 | 16' - 6" | 26' - 0" |
| g12 | 28' - 7" | 38' - 9" |
| g13 | 28' - 7" | 38' - 1" |

| | |
|---|---|
| 7 | g4, g7 |
| 6 | g11, g13 |
| 22 | g2, g9 |
| 18 | g10, g12 |

| | | |
|---|---|---|
| g13 | 32' - 11" | 33' - 9" |
| g12 | 33' - 6" | 33' - 10" |
| g11 | 20' - 10" | 21' - 8" |
| g10 | 20' - 10" | 21' - 1" |
| g9 | 22' - 0" | 22' - 3" |
| g7 | 21' - 8" | 22' - 7" |
| g4 | 32' - 1" | 33' - 0" |
| g2 | 32' - 4" | 32' - 8" |

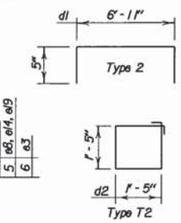


PHASE 2

| Mk. | No. | Size | Length | Type |
|---|---|---|---|---|
| c2 | 48 | 5 | 22' - 8" | Str. |
| d1 | 92 | 4 | 7' - 9" | 2 |
| d2 | 46 | 4 | 6' - 5" | T2 |
| e1 | 42 | 6 | 22' - 8" | Str. |
| * e3 | 6 | 6 | 23' - 4" | Str. |
| e4 | 28 | 4 | 22' - 8" | Str. |
| e5 | 1 | 6 | 21' - 6" | Str. |
| * e6 | 4 | 4 | 24' - 2" | Str. |
| e7 | 1 | 6 | 22' - 3" | Str. |
| * e8 | 5 | 6 | 23' - 10" | Str. |
| e9 | 1 | 4 | 22' - 3" | Str. |
| * e10 | 3 | 4 | 23' - 0" | Str. |
| e16 | 1 | 4 | 20' - 7" | Str. |
| g1 | 2 | 8 | 38' - 6" | Str. |
| * g2 | 22 | 8 | 65' - 0" | Str. |
| g3 | 2 | 4 | 38' - 6" | Str. |
| * g4 | 7 | 4 | 65' - 1" | Str. |
| g5 | 30 | 4 | 6' - 0" | Str. |
| g6 | 2 | 8 | 14' - 10" | Str. |
| * g7 | 7 | 4 | 44' - 3" | Str. |
| g8 | 2 | 4 | 14' - 10" | Str. |
| * g9 | 22 | 8 | 44' - 3" | Str. |
| h1 | 4 | 6 | 25' - 2" | Str. |
| △ z1 | 30 | 6 | 4' - 0" | Str. |

Note -
All Dimensions are out to out of bars.
All Bars to be Epoxy Coated.
△ Dowels
* Cut Bars

THE CONTRACTOR HAS THE OPTION OF BUILDING THE APPROACH SLABS FOR THE FULL WIDTH OF THE ROADWAY AT ONE TIME OR BUILDING THE APPROACH SLABS IN TWO PHASES USING THE PLAN SHOWN OPTIONAL CONSTRUCTION JOINT. ALL REFERENCES TO PHASE 1 AND PHASE 2 CONSTRUCTION ARE GIVEN IN THE EVENT THE CONTRACTOR ELECTS TO BUILD THE APPROACH SLABS IN TWO PHASES.

## ESTIMATED QUANTITIES
( For Two Approach and Sleeper Slabs)

| ITEM | UNIT | PHASE 1 QUANTITY | PHASE 2 QUANTITY |
|---|---|---|---|
| Concrete Approach Slab for Bridge | Cu Yd | 116.2 | 141.0 |
| Concrete Approach Sleeper Slab for Bridge | Cu Yd | 39.5 | 36.9 |
| Install Dowel in Concrete | Each | 24 | 30 |
| Breakout Structural Concrete | Cu Yd | 0.2 | 3.3 |

| | PHASE 1 | PHASE 2 |
|---|---|---|
| 1. Concrete In Approach Slabs. | 304 Cu Yd | 367 Cu Yd |
| ⊗ 2. Epoxy Coated Reinforcing Steel In Approach Slabs. | 8580 Lb | 10,004 Lb |
| 3. Concrete In Sleeper Slabs. | 10.1 Cu Yd | 12.2 Cu Yd |
| 4. Epoxy Coated Reinforcing Steel In Sleeper Slabs. | 1624 Lb | 1908 Lb |
| 5. Structural Steel In Armor Assembly. | 950 Lb | 1139 Lb |
| 6. Polyethylene Sheeting. | 270 Sq Yd | 328 Sq Yd |

Items 1 thru 6 are approximate quantities contained in the above bid item and are for information only.

⊗ Does not include the following quantities for z1 bars as these are paid for in the Bid Item "Install Dowel in Concrete".

| PHASE 1 | PHASE 2 |
|---|---|
| 144 Lb | 180 Lb |

# ORIGINAL CONSTRUCTION PLANS

(NORTH BOUND LANES)

DETAILS OF APPROACH SLAB ADJ. TO BRIDGE

67' - 3 3/4" CONT. CONCRETE BRIDGE

40' - 0" ROADWAY — 30° SKEW L. H. F.

OVER CREEK — SEC. 30-T93N-R50W

STR. NO. 64-006-164 — IM 29-1(63)27

UNION COUNTY

S. D. DEPT. OF TRANSPORTATION

JULY 2001 — 15 OF 15

| DESIGNED BY | DRAWN BY | CHECKED BY | APPROVED |
|---|---|---|---|
| TJO | TJO/CJD | EJA | John C. Cole, BRIDGE ENGINEER |
| UNIN5587 | 5587SA14 | | |

| STATE OF | PROJECT | SHEET NO. | TOTAL SHEETS |
|---|---|---|---|
| S.D. | IM-PH 0291(122)0 | 226 | 284 |

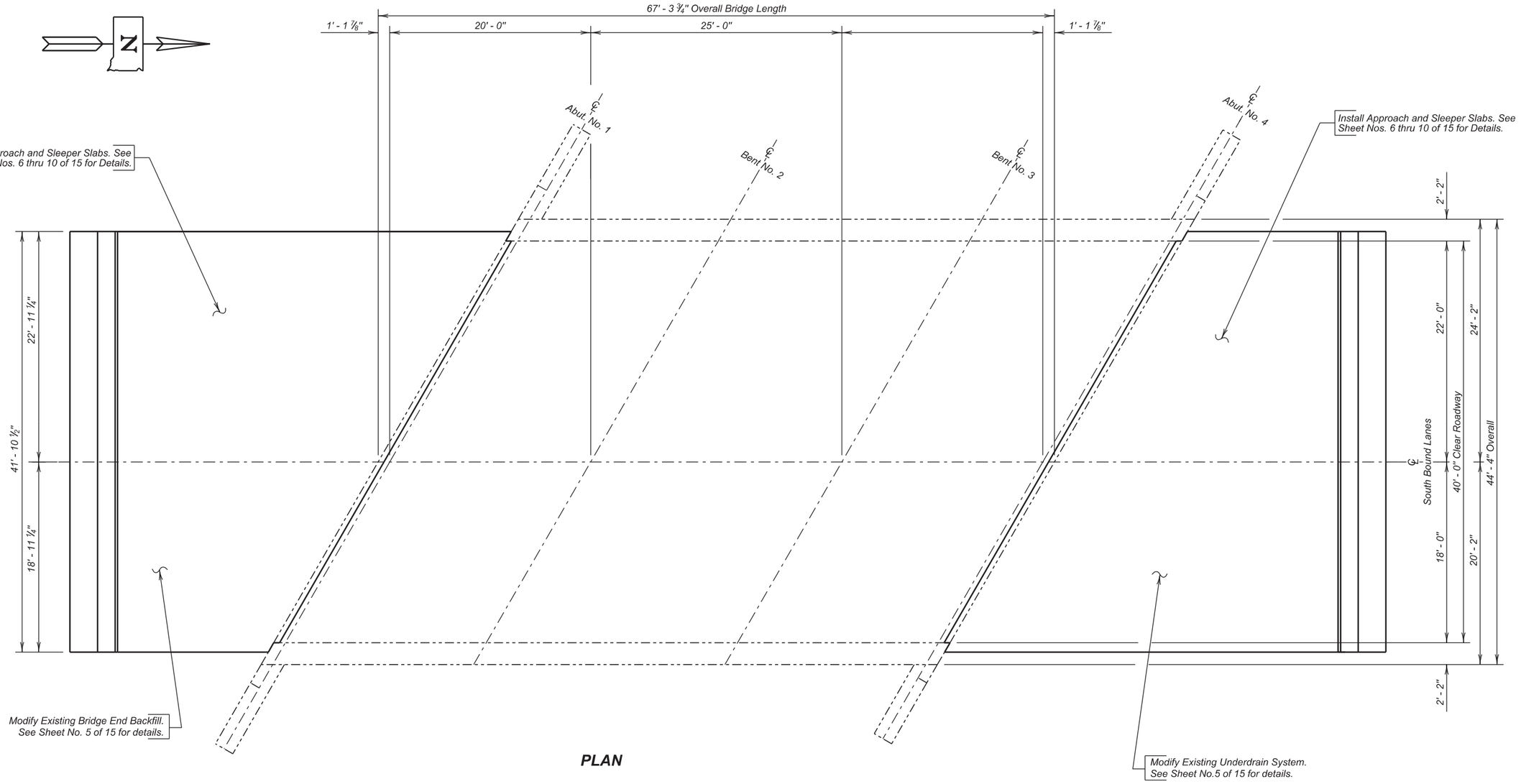


**PLAN**

## INDEX OF BRIDGE SHEETS


*Sheet No. 1 - Layout for Upgrading*
*Sheet No. 2 - Estimate of Structure Quantities and Notes*
*Sheet No. 3 - Notes (Continued)*
*Sheet No. 4 - Notes (Continued)*
*Sheet No. 5 - Bridge End Backfill Modification*
*Sheet No. 6 - Approach Slab Layout*
*Sheet No. 7 - Approach Slab Details*
*Sheet No. 8 - Approach Slab Details (Continued)*
*Sheet No. 9 - Approach Slab Details (Continued)*
*Sheet No. 10 - Approach Slab Joint Details*
*Sheet No. 11 - 15 - Original Construction Plans*


**(SOUTH BOUND LANES)**
**LAYOUT FOR UPGRADE**

FOR

67' - 3 ¾" CONT. CONCRETE BRIDGE

40' - 0" ROADWAY
OVER CREEK
STR. NO. 64-005-164
PCN 02PT

30° SKEW L.H.F.
SEC. 30-T93N-R50W
IM-PH 0291(122)0

UNION COUNTY

S. D. DEPT. OF TRANSPORTATION

OCTOBER 2015



*PLANS BY :*
*OFFICE OF BRIDGE DESIGN, SOUTH DAKOTA DEPARTMENT OF TRANSPORTATION*

| DESIGNED BY | CK. DES. BY | DRAFTED BY | |
|---|---|---|---|
| KSK | BD | KR | Kevin N. Goeden |
| UNIN02PT | 02PTRI01 | | BRIDGE ENGINEER |

# ESTIMATE OF STRUCTURE QUANTITIES

| ITEM NO. | DESCRIPTION | QUANTITY | UNIT |
|---|---|---|---|
| 110E0010 | Remove Concrete Bridge Approach Slab | 301.4 | SqYd |
| 410E2600 | Membrane Sealant Expansion Joint | 167.6 | Ft |
| 430E0300 | Granular Bridge End Backfill | 14.6 | CuYd |
| 460E0150 | Concrete Approach Slab for Bridge | 257.1 | SqYd |
| 460E0160 | Concrete Approach Sleeper Slab for Bridge | 67.5 | SqYd |
| 460E0380 | Install Dowel in Concrete | 14 | Each |
| 480E0504 | No. 4 Rebar Splice | 34 | Each |
| 480E0505 | No. 5 Rebar Splice | 48 | Each |
| 480E0506 | No. 6 Rebar Splice | 54 | Each |
| | | | |

## SPECIFICATIONS

1. Design Specifications: AASHTO Standard Specifications for Highway Bridges 17th Edition using Working Stress Design.

2. Construction Specifications: South Dakota Standard Specifications for Roads and Bridges, 2015 Edition and Required Provisions, Supplemental Specifications and Special Provisions as included in the Proposal.

## DETAILS AND DIMENSIONS OF EXISTING BRIDGE

All details and dimensions of the existing bridge, contained in these plans, are based on the original construction plans and shop plans and are provided as information only. It is the Contractor's responsibility to inspect and verify the actual field conditions and any necessary as-built dimensions affecting the satisfactory completion of the work required for this project.

## SCOPE OF BRIDGE WORK & SEQUENCE OF OPERATIONS

All work on this structure shall be accomplished with the traffic control shown in the plans. Alternate sequence of operations may be submitted by the Contractor for approval by the Engineer a minimum of two weeks prior to the pre-construction meeting.

1. Breakout and remove the existing approach and sleeper slabs for the first phase of construction.

2. Install the bridge end backfill, sleeper slabs, and approach slabs for the first phase of construction.

3. Switch traffic and repeat steps 1 and 2 for the second phase of construction.

## GENERAL CONSTRUCTION - BRIDGE

1. All mild reinforcing steel shall conform to ASTM A615, Grade 60.

2. All exposed concrete corners and edges shall be chamfered 3/4" unless noted otherwise in the plans. Match existing chamfer if the existing chamfer differs.

3. Use 2" clear cover on all reinforcing steel except as shown otherwise.

4. Request for construction joints or resteel splices at points other than those shown, must be submitted to the Engineer for prior approval. If additional splices are approved, no payment will be allowed for the added quantity of reinforcing steel.

5. Surfaces of fresh concrete at construction joints shall be rough floated sufficiently to consolidate the surface. All construction joints shall be cleaned of surface laitance, curing compounds and other foreign materials prior to placing fresh concrete against the joint.

6. The type of vibratory screed shall be approved by the Engineer.

## DESIGN MIX OF CONCRETE

1. Class A45 Concrete shall be used for the bid items Concrete Approach Slab for Bridge and Concrete Approach Sleeper Slab for Bridge.

2. The Type of cement, concrete strength requirements, aggregate requirements, slump and air requirements for the contract items Concrete Approach Sleeper Slab for Bridge and Concrete Approach Slab for Bridge shall conform to the requirements of Section 460 of the Construction Specification.

## REMOVAL OF CONCRETE BRIDGE APPROACH SLAB

1. The existing concrete approach and sleeper slabs adjacent to the structure shall be completely removed by the Contractor.

2. The crushed concrete and reinforcing steel from the removal shall be disposed of by the Contractor at an approved site. An appropriate site will be as described in the Environmental Commitment notes in this set of plans.

3. All labor, tools, equipment and any incidentals necessary for removal and disposal of the existing approach and sleeper slabs shall be incidental to the contract unit price per square yard for "Remove Concrete Bridge Approach Slab".

## MODIFY EXISTING BRIDGE END BACKFILL

1. This work consists of bringing the existing bridge end backfill material up to the required elevation and repairing any damage to the in-place bridge end backfill material as approved by the Engineer.

2. Granular bridge end backfill shall conform to Section 882 of the Construction Specification. Granular material shall be placed and compacted using a smooth face vibratory roller or vibratory plate compactor according to Section 430.3 B of the Construction Specification.

3. The Reinforcement Fabric (MSE) shall conform to section 831 of the Construction Specification.

4. The polyethylene sheeting shall be a minimum thickness of 6 mils and shall be sufficiently durable such that it will not puncture or tear when installed as intended.

5. The existing polyethylene sheeting under the existing approach slab and sleeper slab shall be removed and disposed of in accordance with the waste disposal site notes.

6. The surfaces on which the drainage fabric is to be placed shall be smooth and free of obstructions. The drainage fabric may be oriented in any direction.

7. Any equipment used to install the granular bridge end backfill over the drainage fabric shall be operated in such a manner that the drainage fabric is not damaged. To avoid damage to the drainage fabric, the equipment used to place, spread, and compact material over the drainage fabric shall be limited to handheld equipment.

8. Any drainage fabric that is torn or punctured shall be repaired or replaced by the Contractor at no additional cost to the Department. The repair shall consist of a patch of the same type of drainage fabric being placed over the ruptured area such that it overlaps the damaged area a minimum of 3 feet measured from any damaged edge.

9. Seams shall be constructed by overlapping the fabric a minimum of 2 feet. All seams shall be inspected by the Engineer and any deficient seams repaired by the Contractor prior to placement of the bridge end backfill material.

10. The granular bridge end backfill shall be compacted to a minimum of 97 percent of maximum dry density as determined by SD 104 (AASHTO T99). The moisture content of the backfill material prior to and during compaction shall be adequate to provide satisfactory results. Maximum dry density and optimum moisture shall be determined by SD 104 (AASHTO T99).

11. The quantity specified in the plans for granular bridge end backfill was estimated. Actual amount installed may vary slightly due to changes in the field condition. Regardless of these limitations, the plan shown quantity will be the basis of payment. Field measurement for Granular Bridge End Backfill will not be made. Payment will be full compensation for all labor, equipment, materials, water, and all other items incidental to furnishing and installing the drainage fabric, the polyethylene sheeting and for furnishing and installing, including any hauling or stockpiling, of the granular bridge end backfill material.

**ESTIMATE OF STRUCTURE QUANTITIES AND NOTES**
FOR
**67' - 3¾" CONT. CONCRETE BRIDGE**

STR. NO. 65-005-164
OCTOBER 2015



| DESIGNED BY | CK. DES. BY | DRAFTED BY | |
|---|---|---|---|
| KSK | BD | KSK | Kevin N. Goeden |
| UNIN02PT | 02PTRI02 | | BRIDGE ENGINEER |

## INSTALLING DOWELS IN CONCRETE

1. Holes drilled in the existing concrete shall be true and normal as shown in the plans. Drilling holes using a core drill shall not be allowed. Care shall be taken not to damage the existing reinforcing steel. It is likely that some of the existing reinforcing steel shown in the original construction plans may have been placed out of position during original construction. Therefore, prior to the start of drilling nay holes in the concrete, an effort will be made by Department forces to mark on the concrete surface where practical any locations of the in-place reinforcing steel. In spite of this precaution, the Contractor can still expect to encounter and have to drill through reinforcing steel. If the Contractor shifts the dowel spacing, the unused drill holes shall be completely filled with the epoxy resin specified in note number 2.

2. The epoxy resin mixture shall be of a type for bonding steel to hardened concrete and shall conform to AASHTO M235 Type IV, Grade 3 (Equivalent to ASTM C881, Type IV, Grade 3).

3. The diameter of the drilled holes shall not be less than 1/8 inch greater, nor more than 3/8 inch greater than the diameter of the dowels or as per the Manufacturer's recommendations. The drilled holes shall be blown out with compressed air using a device that will reach the back of the hole to ensure that all debris or loose material has been removed prior to epoxy injection.

4. Mix epoxy resin as recommended by the Manufacturer and apply by an injection method as approved by the Engineer. Beginning at the back of the drilled holes, fill the holes 1/3 to 1/2 full or epoxy, or as recommended by the Manufacturer, prior to insertion of the steel bar. Care shall be taken to prevent epoxy from running out of the horizontal holes prior to steel bar insertion. Rotate the steel bar during installation to eliminate voids and ensure complete bonding of the bar. Insertion of the bars by the dipping or painting method will not be allowed.

5. No loads shall be applied to the epoxy grouted dowel bars until the epoxy resin has had sufficient time to cure as specified by the epoxy resin manufacturer.

6. Dowel bars shall be deformed bars conforming to ASTM A615 Grade 60.

7. The cost of epoxy resin, dowels, installation and other incidental items shall be incidental to the contract unit price per each for "Install Dowel in Concrete".

## APPROACH SLABS

1. Excavation for placement of new approach slabs and sleeper slabs shall be done with minimal disturbance to the underlying material.

3. The top of approach slab elevations shall be established during construction and shall be subject to the approval of the Engineer. Care shall be taken to provide a smooth transition from the bridge deck elevations to the new pavement elevations established in the field so as to prevent any dips or bumps in the areas of the bridge ends or ends of the new approach slabs. The maximum rate of grade transition through the approach slab shall be 1/8 inch per 10 feet.

4. Sleeper slab riser shall be cast with or later than the Approach Slab. Care shall be taken to ensure the correct grade is maintained across the joint.

5. The use of a vibratory screed will be required during placement of Class A45 Concrete for the approach slabs. Concrete placement in front of the screed shall be kept parallel to the screed.

6. The concrete in the approach slab shall be tined parallel with the skew of the bridge.

7. The new approach slabs and sleeper slabs shall have a surface finish as stipulated in Section 460.3 L.4 of the Construction Specifications.

8. The Concrete Approach Slabs Adjacent to Bridge shall be cured in accordance with Section 460.3 M of the Construction Specifications. The minimum 7 day cure time requirement shall be waived. The approach slabs shall be cured until a minimum compressive strength of 4,000 psi is reached.

9. Concrete Approach Sleeper Slab for Bridge will be paid for at the contract unit price per square yard. This payment shall be full compensation for all excavation, furnishing, hauling, and placing all materials including concrete, concrete anchors, and reinforcing steel; for disposal of all excavated material and surplus materials; and for labor, tools, equipment and any incidentals necessary to complete this item of work.

10. Concrete Approach Slab for Bridge will be paid for at the contract unit price per square yard. This payment shall be full compensation for all excavation, furnishing, hauling and placing all materials including concrete, asphalt paint or 4 mil polyethylene sheeting, elastic joint sealer and reinforcing steel; for disposal of all excavated material and surplus materials and for labor, tools, equipment and any incidentals necessary to complete this item of work.

## MECHANICAL REBAR SPLICES

Mechanical splice devices will be required for the transverse approach slab and sleeper slab reinforcing steel. The mechanical rebar splices shall be in accordance with Section 480 of the Construction Specifications.

## MEMBRANE SEALANT EXPANSION JOINTS

1. The Membrane Sealant shall be on the approved product list for Membrane Sealant Expansion Joints.

2. The manufacturer shall supply the membrane sealant in packaging hat precompresses the membrane sealant. The precompressed dimension shall be as recommended by the sealant manufacturer, however, in no case shall the precompressed dimension exceed 75% of the joint opening width. The foam sealant shall be slowly self expanding to permit workers ample time to install the membrane sealant before the membrane sealant exceeds the joint opening width.

3. The membrane sealant shall provide a water tight seal throughout a joint movement range of + 25% (minimum from the specified joint opening dimension.

4. The membrane sealant shall be supplied in pieces a minimum of 5 feet in length. The foam sealant shall be ultra-violet and ozone resistant.

5. The bonding adhesive used to attach the membrane sealant to the adjacent concrete shall be approved by the membrane sealant manufacturer.

6. Adhesive used to join adjacent pieces of the membrane sealant shall be as recommended by the manufacturer.

7. If Styrofoam filler material is used in the construction, it shall be closed cell and water-tight as approved by the Engineer.

8. The minimum ambiet air temperature at the time of joint installation and adhesive curing shall be 40°F.

9. A technical representative of the membrane sealant manufacturer shall be present at the jobsite during installation. The technical representative shall be knowledgeable in the correct procedures for the preparation and installation of the joint material to ensure the Contractor installs the joint to the manufacturers' recommendations.

**NOTES (CONTINUED)**
FOR
**67' - 3¾" CONT. CONCRETE BRIDGE**

STR. NO. 64-005-164
OCTOBER 2015



| DESIGNED BY | CK. DES. BY | DRAFTED BY | |
|---|---|---|---|
| KSK | BD | KSK | Kevin N. Boeden BRIDGE ENGINEER |
| UNIN02PT | 02PTRI03 | | |

**MEMBRANE SEALANT EXPASION JOINT (CONTINUED)**

10. Surfaces that will be in contact with the membrane sealant shall be thoroughly cleaned by abrasive blasting to remove all laitance and contaminants (such as oil, curing compounds, etc.) from the surface. At a minimum, two passes of abrasive blasting with the nozzle held at an angle to within 1 to 2 inches of the surface will be required. Cleaning of the surfaces with solvents, wire brushing, or grinding shall not be permitted.

11. After abrasive blasting, but immediately prior to membrane joint installation, the entire joint contact surface shall be air blasted. The air compressor used for joint cleaning shall be equipped with trap devices capable of providing moisture-free and oil-free air at a recommended pressure of 90 psi. To obtain complete bonding with the adhesive, the adjacent surfaces must be dry and clean. The contact surfaces for the joint shall be visually inspected by the Engineer immediately prior to joint installation to verify the surface is dry and clean.

12. Individual spliced sections shall be installed as per the manufacturers' recommendations. The membrane joint sealant manufacturer shall submit a detailed installation procedure to the Engineer at least 5 days prior to joint installation for his review.
13. Traffic shall not be allowed on the joint until the bonding adhesive has had time to cure, as recommended by the manufacturer.

14. Use plywood or other material to protect concrete adjacent to the joint from spalling before any equipment is moved across the joint. Any spall areas will be repaired at the Contractor's expense by breaking out and replacing adjacent concrete, as approved by the Engineer.

15. The Membrane Sealant Expansion Joint will be measured in feet to the nearest one-tenth foot, complete in place. Measurement will be made of the overall horizontal length. The Membrane Sealant Expansion Joint will be paid for at the contract unit price per foot complete in place. Payment for this item shall be full compensation for furnishing all the required materials in place, including labor, equipment and incidentals necessary to complete the work in accordance with the plans and the foregoing specifications.

**NOTES (CONTINUED)**
FOR
67' - 3¾" CONT. CONCRETE BRIDGE

STR. NO. 64-005-164
OCTOBER 2015



| DESIGNED BY | CK. DES. BY | DRAFTED BY | |
|---|---|---|---|
| KSK | BD | KSK | Kevin N. Boeden |
| UNIN02PT | 02PTRI04 | | BRIDGE ENGINEER |

| STATE OF | PROJECT | SHEET NO. | TOTAL SHEETS |
|---|---|---|---|
| S.D. | IM-PH 0291(122)0 | 230 | 284 |

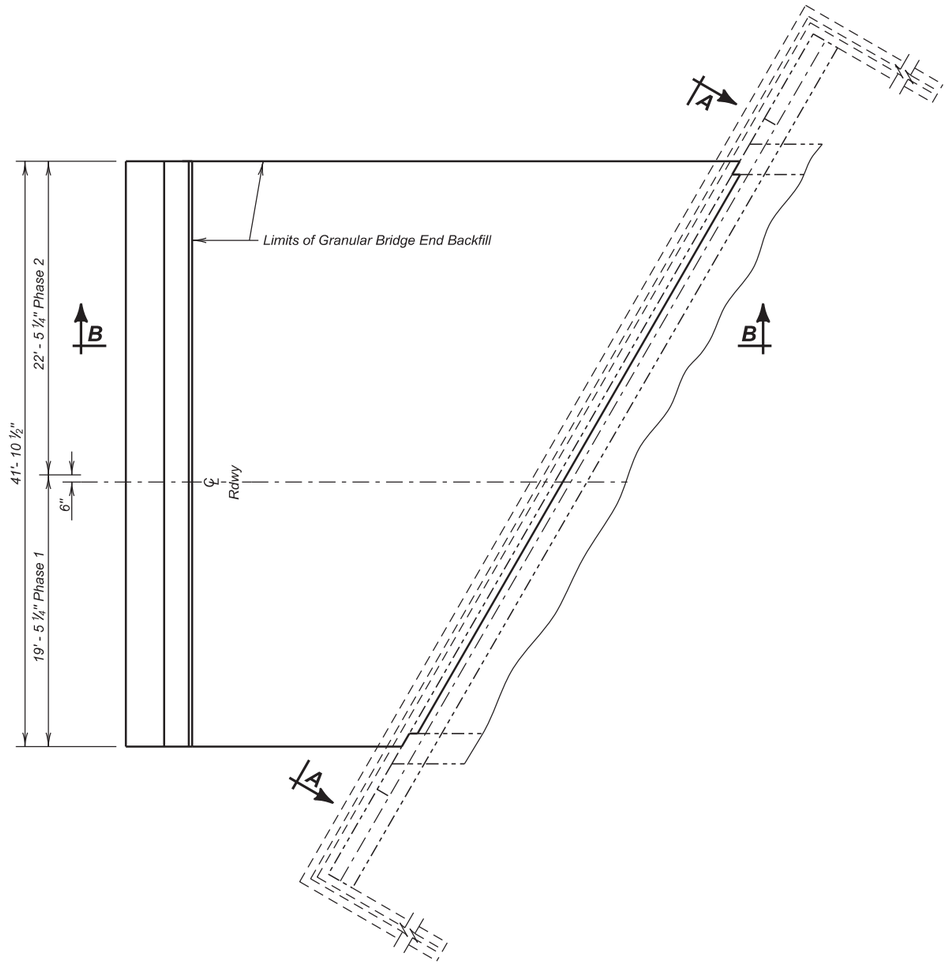


**PLAN**
(Bridge End Backfill shown adjacent to Abut. No. 1.)

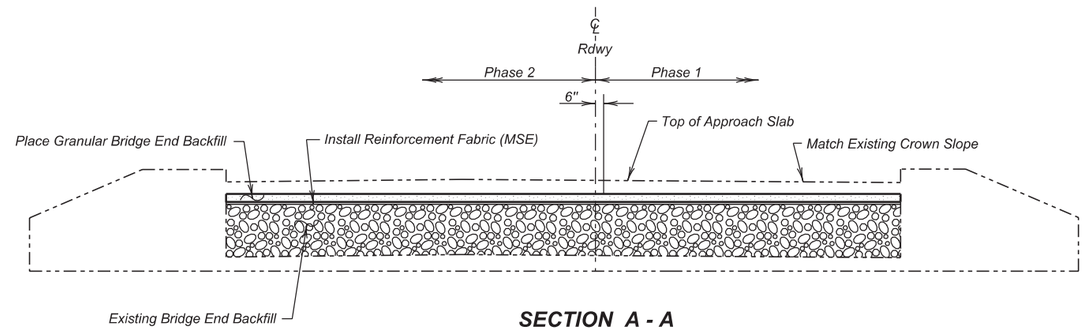


**SECTION A - A**

## ESTIMATED QUANTITIES

| ITEM | UNIT | QUANTITY Phase I | QUANTITY Phase 2 |
|---|---|---|---|
| ¢ Granular Bridge End Backfill | CuYd | 6.8 | 7.8 |
| | | | |

¢ Item 1 and is an approximate quantity contained in the above bid item and is for information only.

| | PHASE 1 | PHASE 2 |
|---|---|---|
| 1. MSE Geotextile Fabric | 158.6 Sq.Yd. | 183.0 Sq.Yd. |

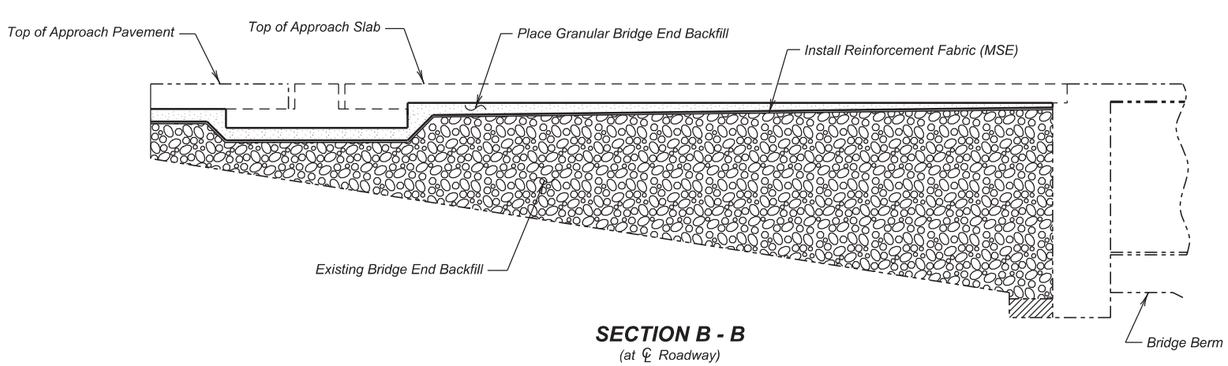


**SECTION B - B**
(at ℄ Roadway)

**(SOUTH BOUND LANES)**
**BRIDGE END BACKFILL MODIFICATION**
FOR
67' - 3 ¾" CONT. CONCRETE BRIDGE

40' - 0" ROADWAY — 30° SKEW L.H.F.
OVER CREEK — SEC. 30-T93N-R50W
STR. NO. 64-005-164 — IM-PH 0291(122)0

UNION COUNTY
S. D. DEPT. OF TRANSPORTATION
OCTOBER 2015



| DESIGNED BY | CK. DES. BY | DRAFTED BY | |
|---|---|---|---|
| KSK | BD | KR | Kevin N. Goeden |
| UNIN02PT | 02PTRI05 | | BRIDGE ENGINEER |

| STATE OF | PROJECT | SHEET NO. | TOTAL SHEETS |
|---|---|---|---|
| S.D. | IM-PH 0291(122)0 | 231 | 284 |

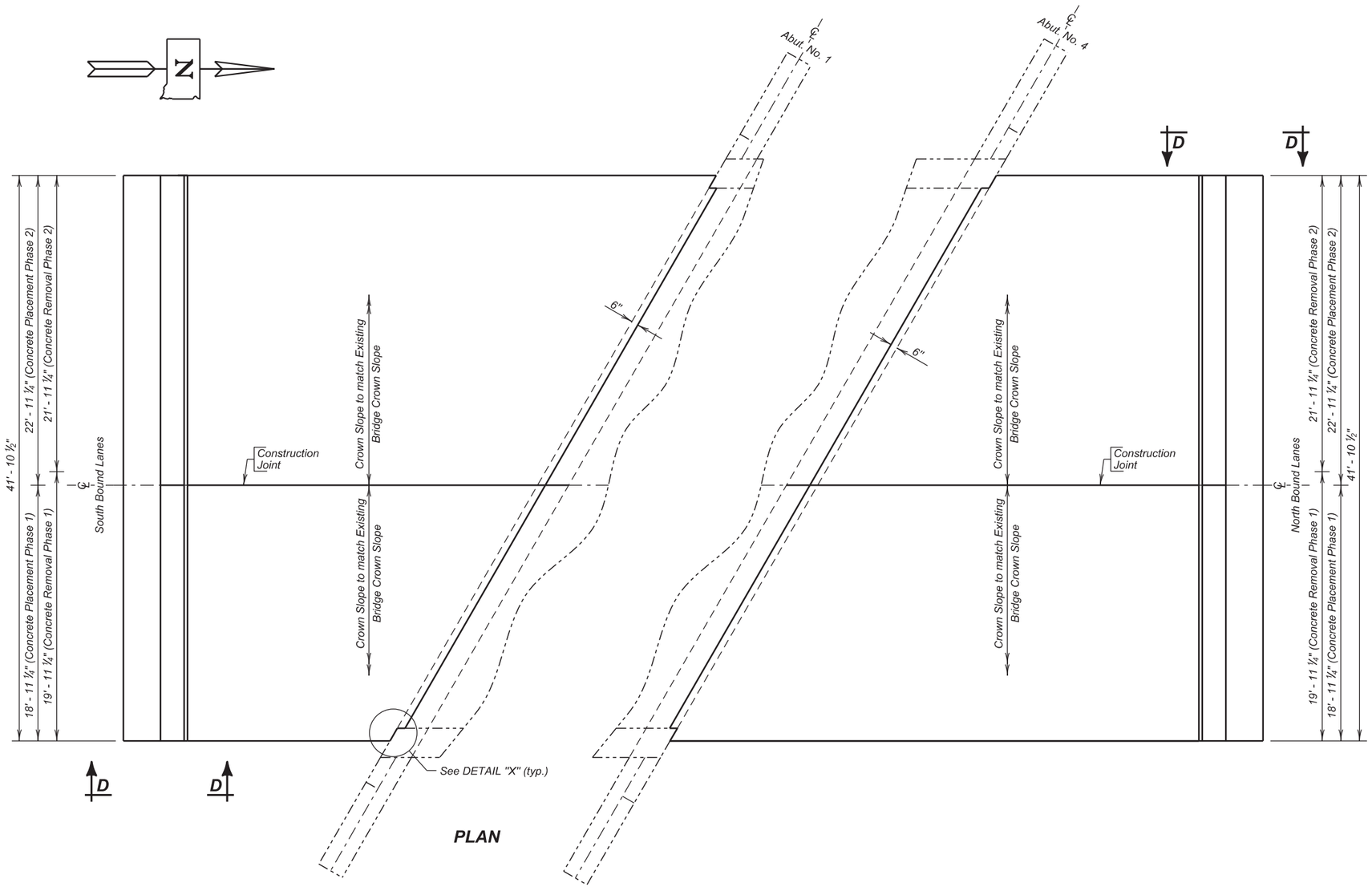


PLAN

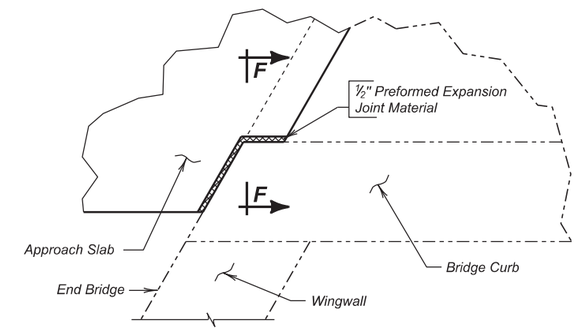


DETAIL "X"
(Typical at both barriers)
(Railing not shown)

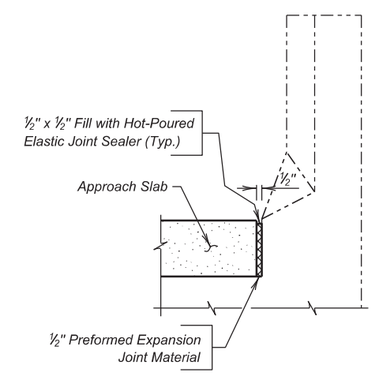


SEC. F - F

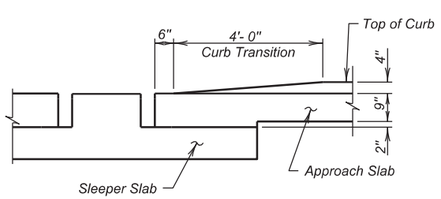


VIEW D - D

**(SOUTH BOUND LANES)**
**APPROACH SLAB LAYOUT**
FOR
67' - 3 ¾" CONT. CONCRETE BRIDGE

40' - 0" ROADWAY
OVER CREEK
STR. NO. 64-005-164

30° SKEW L.H.F.
SEC. 30-T93N-R50W
IM-PH 0291(122)0

UNION COUNTY
S. D. DEPT. OF TRANSPORTATION
OCTOBER 2015

6 OF 15

| DESIGNED BY | CK. DES. BY | DRAFTED BY | |
|---|---|---|---|
| KSK | BD | KR | Kevin N. Boeden |
| UNIN02PT | 02PTRH06 | | BRIDGE ENGINEER |

| STATE OF | PROJECT | SHEET NO. | TOTAL SHEETS |
|---|---|---|---|
| S.D. | IM-PH 0291(122)0 | 232 | 284 |

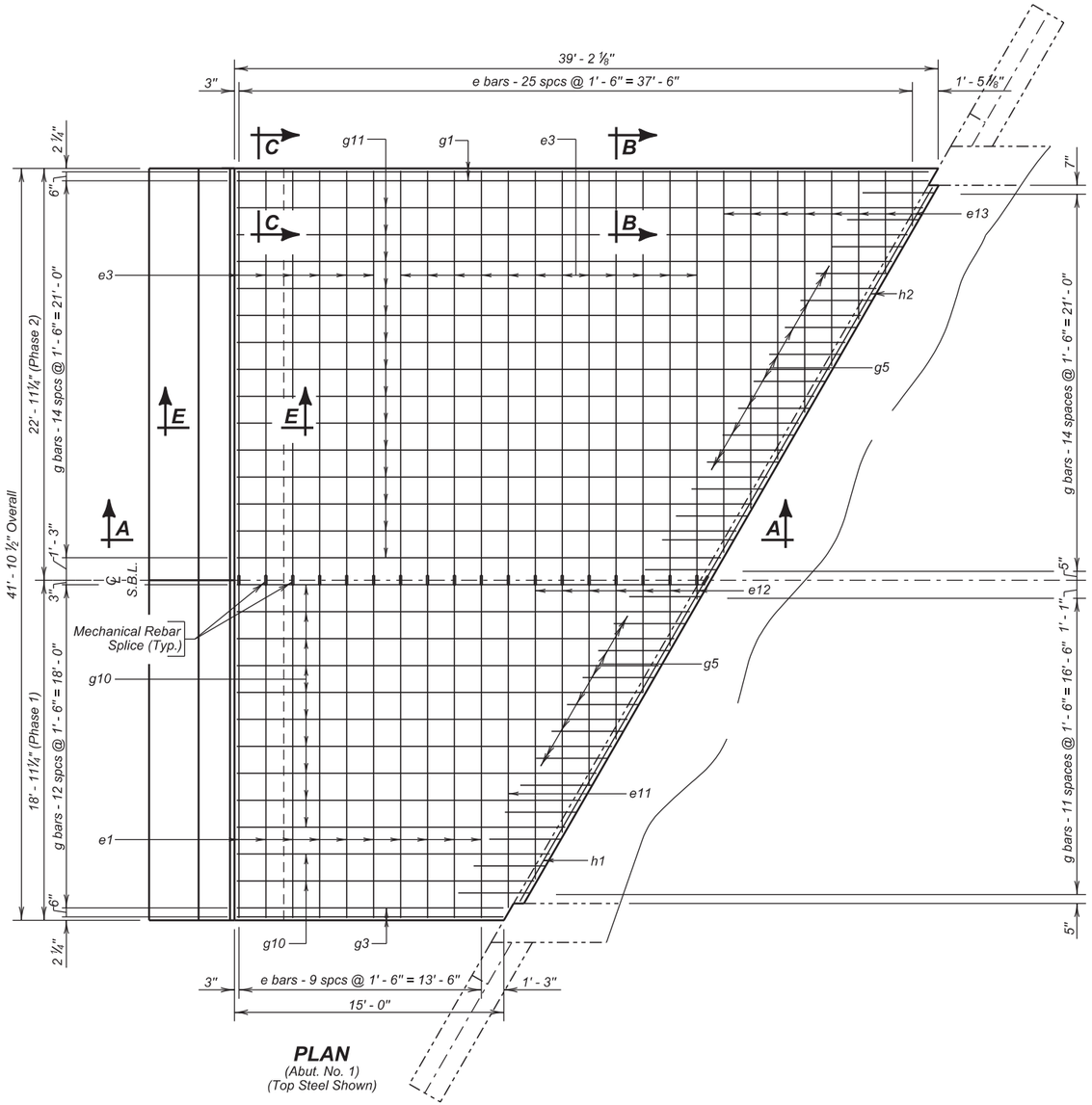


**PLAN**
(Abut. No. 1)
(Top Steel Shown)

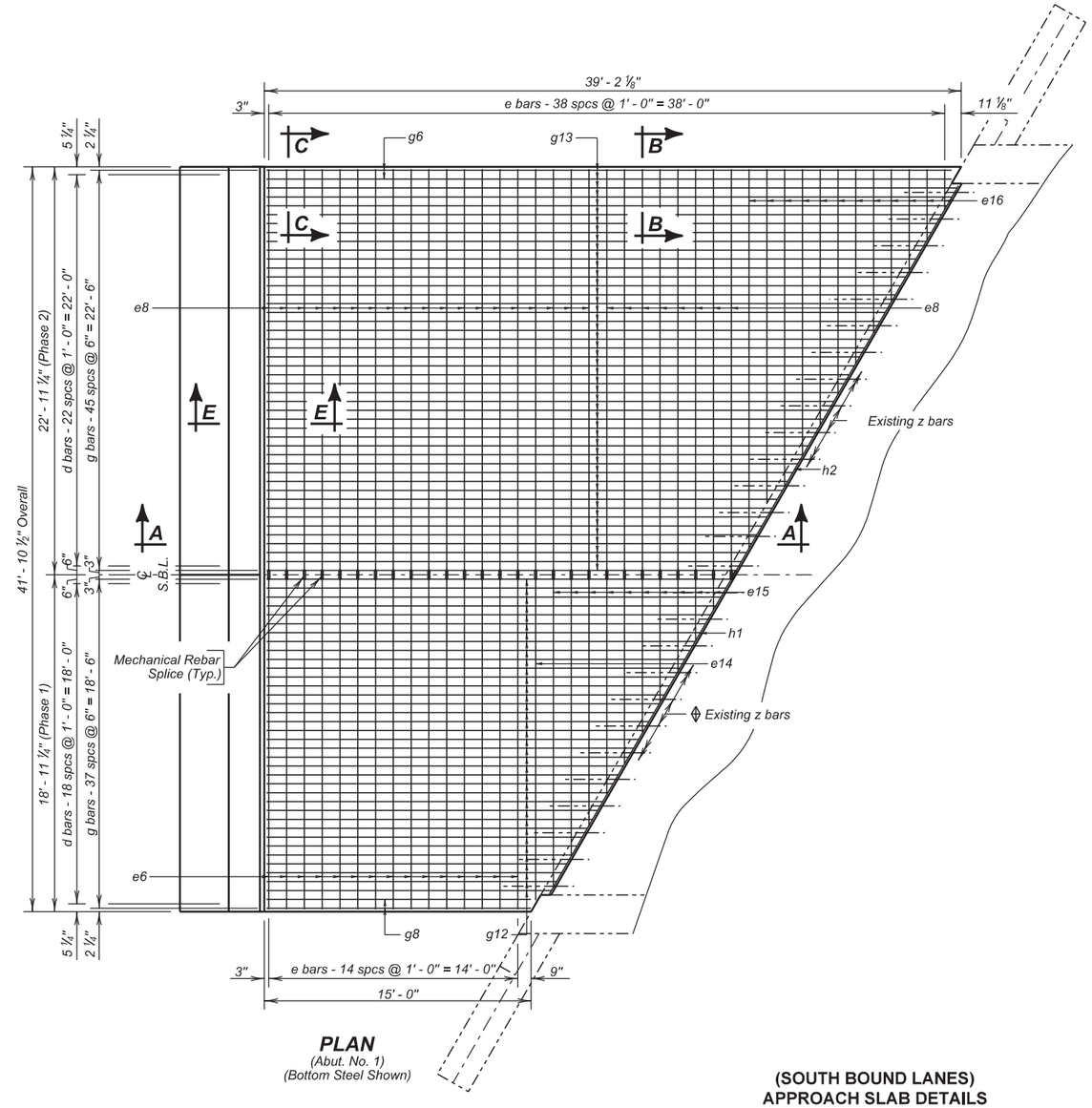


**PLAN**
(Abut. No. 1)
(Bottom Steel Shown)

◊ *Salvage Existing z bars. If z bars cannot be reused, dowel in new z1 bars next to existing z bars. The quantity shown is an approximate quantity and will vary depending on field conditions.*

**(SOUTH BOUND LANES)**
**APPROACH SLAB DETAILS**

FOR

67' - 3 3/4" CONT. CONCRETE BRIDGE

40' - 0" ROADWAY — 30° SKEW L.H.F.
OVER CREEK — SEC. 30-T93N-R50W
STR. NO. 64-005-164 — IM-PH 0291(122)0

UNION COUNTY
S. D. DEPT. OF TRANSPORTATION
OCTOBER 2015

7 OF 15

| DESIGNED BY | CK. DES. BY | DRAFTED BY | |
|---|---|---|---|
| KSK | BD | KR | Kevin N. Goeden |
| UNIN02PT | 02PTRI07 | | BRIDGE ENGINEER |

| STATE OF | PROJECT | SHEET NO. | TOTAL SHEETS |
|---|---|---|---|
| S.D. | IM-PH 0291(122)0 | 233 | 284 |

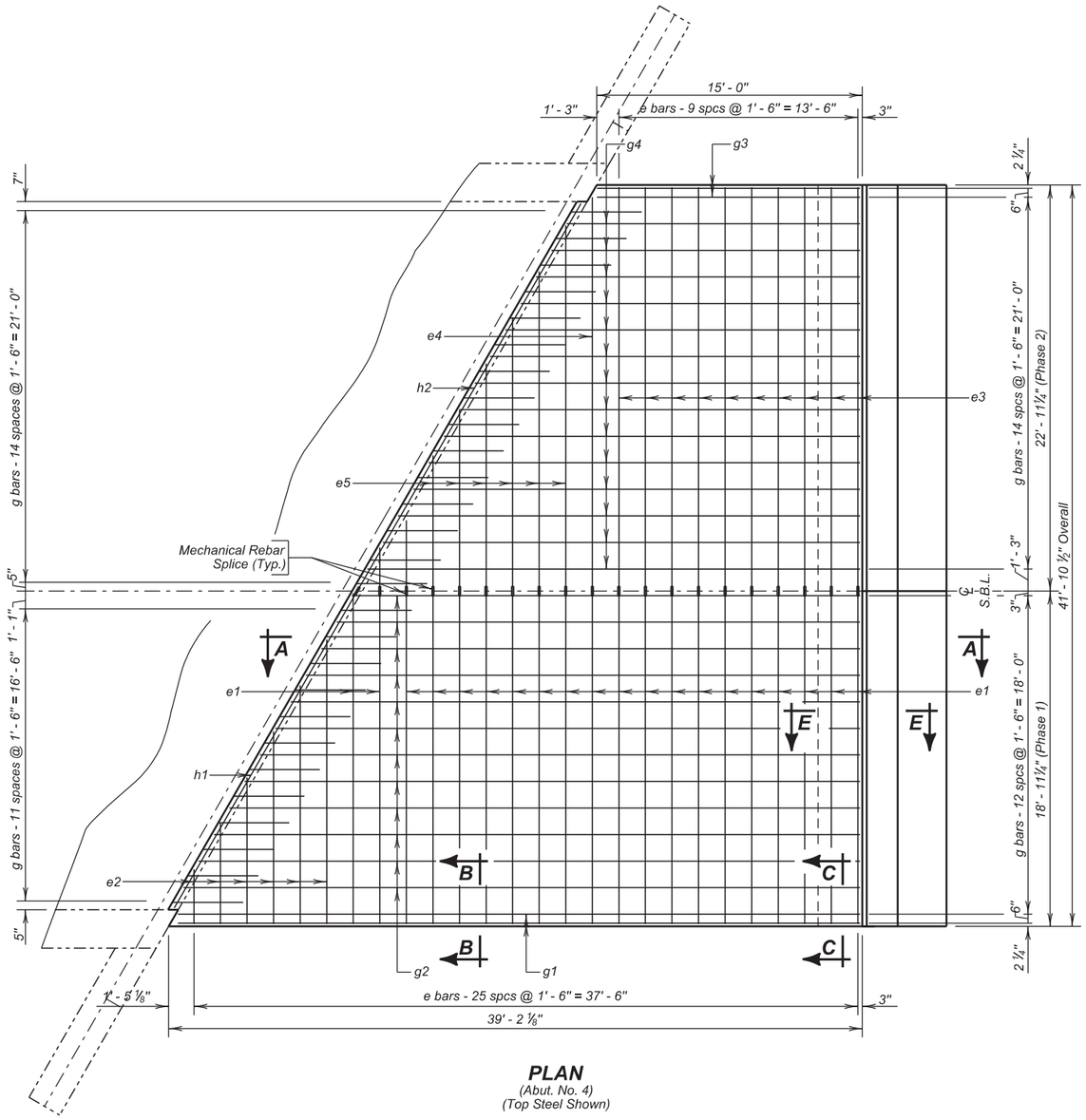


**PLAN**
(Abut. No. 4)
(Top Steel Shown)

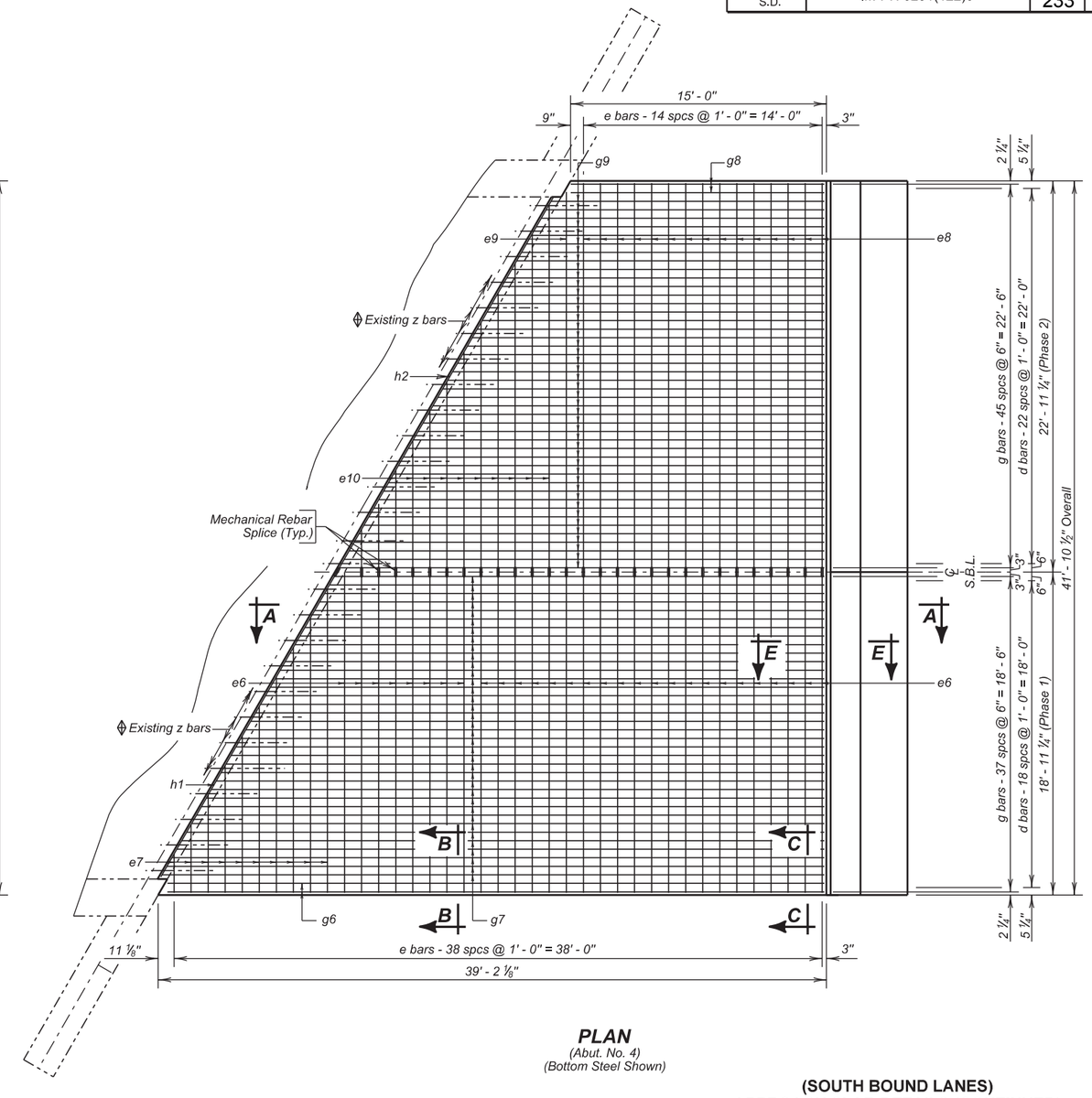


**PLAN**
(Abut. No. 4)
(Bottom Steel Shown)

**(SOUTH BOUND LANES)**
**APPROACH SLAB DETAILS (CONTINUED)**

FOR

67' - 3 ¾" CONT. CONCRETE BRIDGE

40' - 0" ROADWAY — 30° SKEW L.H.F.
OVER CREEK — SEC. 30-T93N-R50W
STR. NO. 64-005-164 — IM-PH 0291(122)0

UNION COUNTY

S. D. DEPT. OF TRANSPORTATION

OCTOBER 2015

8 OF 15

Salvage Existing z bars. If z bars cannot be reused, dowel in new z1 bars next to existing z bars. The quantity shown is an approximate quantity and will vary depending on field conditions.

| DESIGNED BY | CK. DES. BY | DRAFTED BY | |
|---|---|---|---|
| KSK | BD | KR | Kevin N. Goeden |
| UNIN02PT | 02PTRI08 | | BRIDGE ENGINEER |

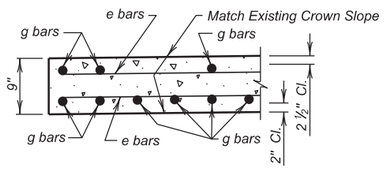


**SEC. C - C**

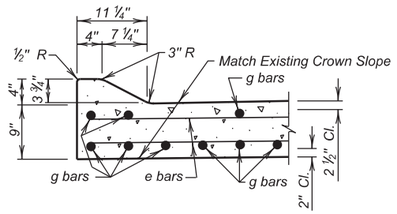


**SEC. B - B**

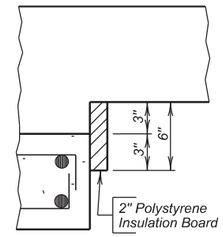


**DETAIL "W"**

*The Polystyrene Insulation Board shall be firmly attached to the sleeper slab by a method to be approved by the Engineer.*

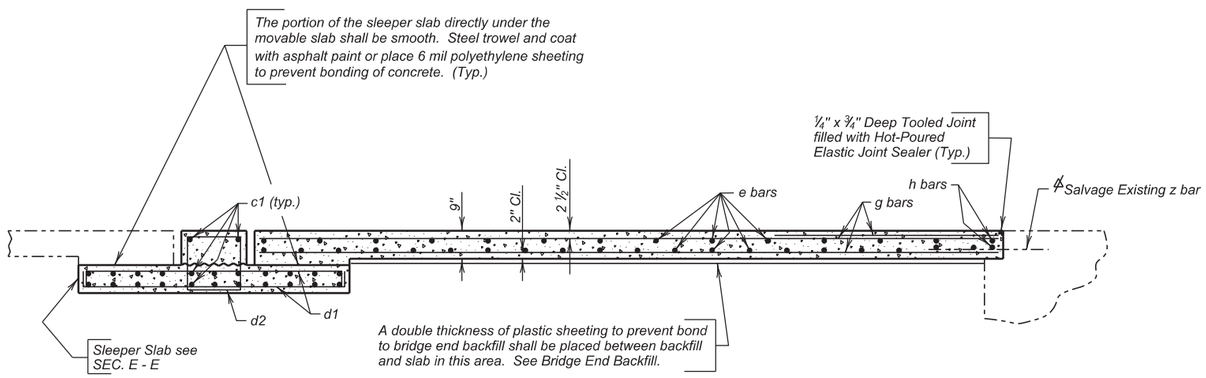


**SEC. A - A**

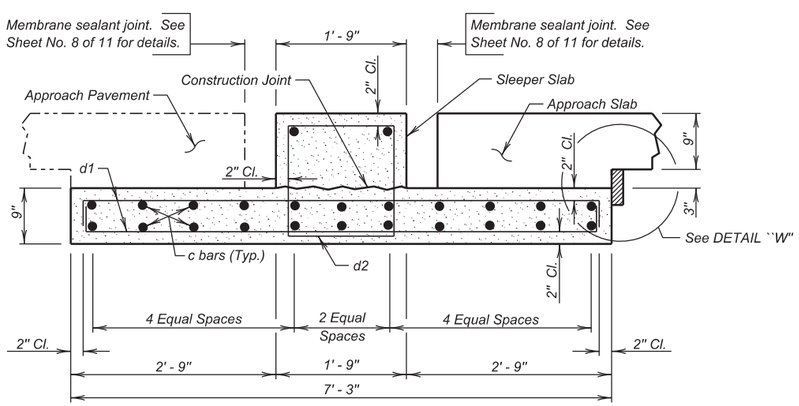


**SEC. E - E**

(Sleeper Slab)

*If the existing z bars are unsalvage able, install new z bars according to the "Installing Dowels in Concrete" notes on Sheet 3 of 15. New z bars shall be installed 6" from the existing z bars. The quantity shown in the re-steel schedule is to account for any unsalvageable z bars.*

## REINFORCING SCHEDULE

( For Two Approach and Two Sleeper Slabs )

PHASE 1

| | Mk. | No. | Size | Length | Type |
|---|---|---|---|---|---|
| ⌀ | c1 | 48 | 5 | 18' - 9" | Str. |
| | d1 | 76 | 4 | 7' - 9" | 2 |
| | d2 | 38 | 4 | 6' - 5" | T2 |
| ⌀ | e1 | 30 | 4 | 18' - 9" | Str. |
| ✳ | e2 | 3 | 4 | 19' - 2" | Str. |
| ⌀ | e6 | 44 | 6 | 18' - 9" | Str. |
| ✳ | e7 | 5 | 6 | 20' - 1" | Str. |
| ⌀ | e11 | 1 | 4 | 18' - 3" | Str. |
| ✳⌀ | e12 | 3 | 4 | 20' - 1" | Str. |
| ⌀ | e14 | 1 | 6 | 18' - 3" | Str. |
| ✳⌀ | e15 | 5 | 6 | 19' - 6" | Str. |
| | g1 | 2 | 4 | 38' - 6" | Str. |
| ✳ | g2 | 6 | 4 | 66' - 10" | Str. |
| | g3 | 2 | 4 | 14' - 10" | Str. |
| | g5 | 24 | 4 | 6' - 0" | Str. |
| | g6 | 2 | 8 | 38' - 6" | Str. |
| ✳ | g7 | 18 | 8 | 67' - 6" | Str. |
| | g8 | 2 | 8 | 14' - 10" | Str. |
| ✳ | g10 | 6 | 4 | 42' - 7" | Str. |
| ✳ | g12 | 18 | 8 | 42' - 1" | Str. |
| ⌀ | h1 | 4 | 6 | 20' - 7" | Str. |
| Δϕ | z1 | 6 | 6 | 4' - 0" | Str. |

PHASE 2

| | Mk. | No. | Size | Length | Type |
|---|---|---|---|---|---|
| ⌀ | c2 | 48 | 5 | 22' - 9" | Str. |
| | d1 | 92 | 4 | 7' - 9" | 2 |
| | d2 | 46 | 4 | 6' - 5" | T2 |
| ⌀ | e3 | 28 | 4 | 22' - 9" | Str. |
| | e4 | 1 | 4 | 22' - 3" | Str. |
| ✳⌀ | e5 | 4 | 4 | 23' - 1" | Str. |
| ⌀ | e8 | 42 | 6 | 22' - 9" | Str. |
| | e9 | 1 | 6 | 22' - 3" | Str. |
| ✳⌀ | e10 | 6 | 6 | 24' - 0" | Str. |
| ✳⌀ | e13 | 4 | 4 | 24' - 4" | Str. |
| ✳ | e16 | 6 | 6 | 23' - 6" | Str. |
| | g1 | 2 | 4 | 38' - 6" | Str. |
| | g3 | 2 | 4 | 14' - 10" | Str. |
| ✳ | g4 | 7 | 4 | 44' - 4" | Str. |
| | g5 | 30 | 4 | 6' - 0" | Str. |
| | g6 | 2 | 8 | 38' - 6" | Str. |
| | g8 | 2 | 8 | 14' - 10" | Str. |
| ✳ | g9 | 22 | 8 | 44' - 5" | Str. |
| ✳ | g11 | 7 | 4 | 65' - 1" | Str. |
| ✳ | g13 | 22 | 8 | 65' - 2" | Str. |
| ⌀ | h2 | 4 | 6 | 25' - 3" | Str. |
| Δϕ | z1 | 8 | 6 | 4' - 0" | Str. |

Bending Details

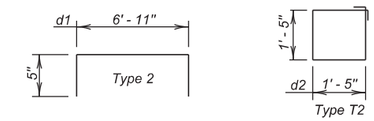


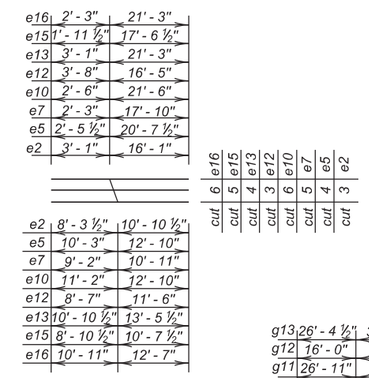


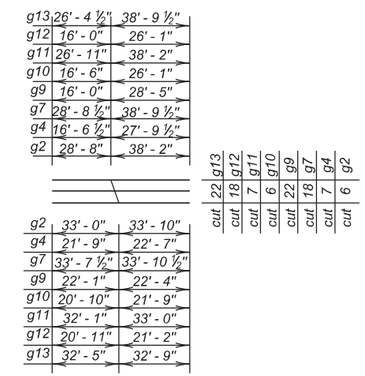


Note -
All Dimensions are out to out of bars.
All Bars to be Epoxy Coated.

Δ Dowels
ϕ This quantity will vary depending on condition of existing z bars
✳ Cut bars
⌀ Splice (Mechanically Spliced)

## ESTIMATED QUANTITIES

(For Two Approach and Two Sleeper Slabs)

| ITEM | UNIT | QUANTITY Phase I | QUANTITY Phase 2 |
|---|---|---|---|
| Remove Concrete Bridge Approach Slab | Sq Yd | 143.5 | 157.9 |
| Concrete Approach Slab for Bridge | Sq Yd | 116.3 | 140.8 |
| Concrete Approach Sleeper Slab for Bridge | Sq Yd | 30.5 | 37.0 |
| Install Dowel In Concrete | Each | 6 | 8 |
| No. 4 Rebar Splice | Each | 34 | — |
| No. 5 Rebar Splice | Each | 48 | — |
| No. 6 Rebar Splice | Each | 54 | — |

| | PHASE I | PHASE 2 |
|---|---|---|
| 1. Concrete in Approach Slabs. | 30.0 Cu. Yd | 36.3 Cu. Yd |
| ✳ 2. Epoxy Coated Re-Steel in Approach Slabs. | 8311 Lbs. | 10,040 Lbs |
| 3. Concrete in Sleeper Slabs | 10.0 Cu. Yd | 12.2 Cu. Yd |
| 4. Epoxy Coated Re - Steel in Sleeper Slabs. | 1495 Lbs. | 1812 Lbs. |

Items 1 thru 4 are approximate quantities contained in the above bid item and are for information only.

✳ Does not include the following quantities for z1 bars as these are paid for in the Bid Item "Install Dowel in Concrete".

| PHASE I | PHASE 2 |
|---|---|
| 36 Lb. | 48 Lb. |

**(SOUTH BOUND LANES)**
**APPROACH SLAB DETAILS (CONTINUED)**

FOR

67' - 3 ¾" CONT. CONCRETE BRIDGE

40' - 0" ROADWAY — 30° SKEW L.H.F.
OVER CREEK — SEC. 30-T93N-R50W
STR. NO. 64-005-164 — IM-PH 0291(122)0

UNION COUNTY

S. D. DEPT. OF TRANSPORTATION

OCTOBER 2015



| DESIGNED BY | CK. DES. BY | DRAFTED BY | |
|---|---|---|---|
| KSK | BD | KR | Kevin N. Boeden |
| UNIN02PT | 02PTRI09 | | BRIDGE ENGINEER |

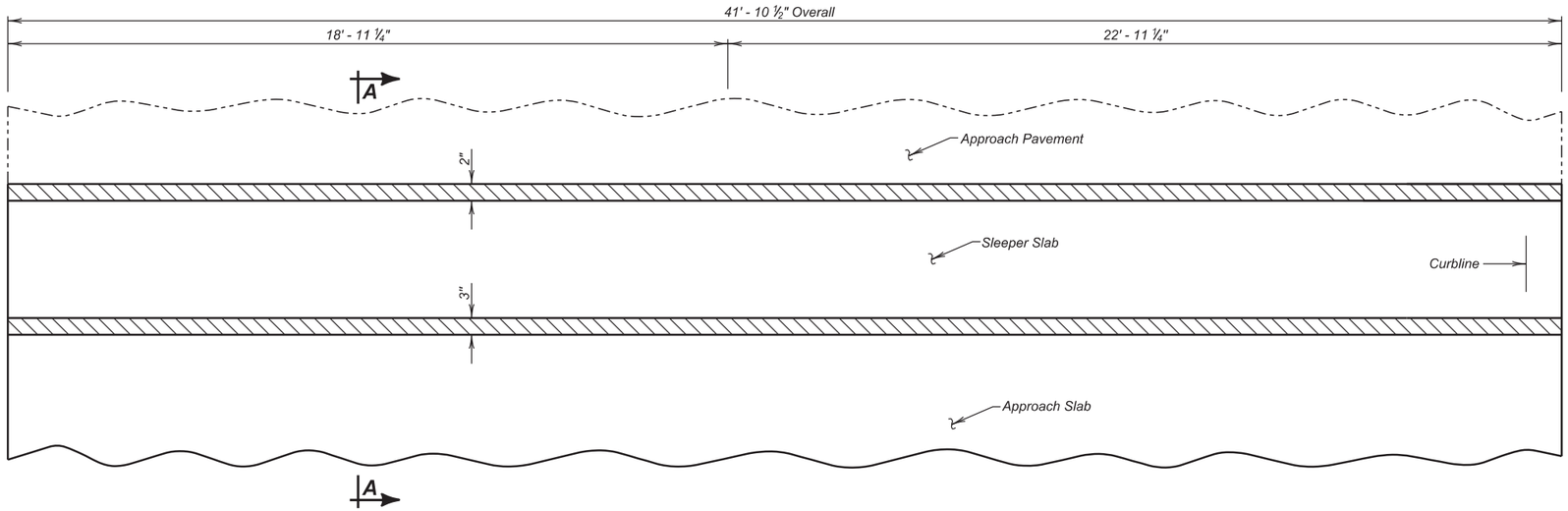


**PLAN**

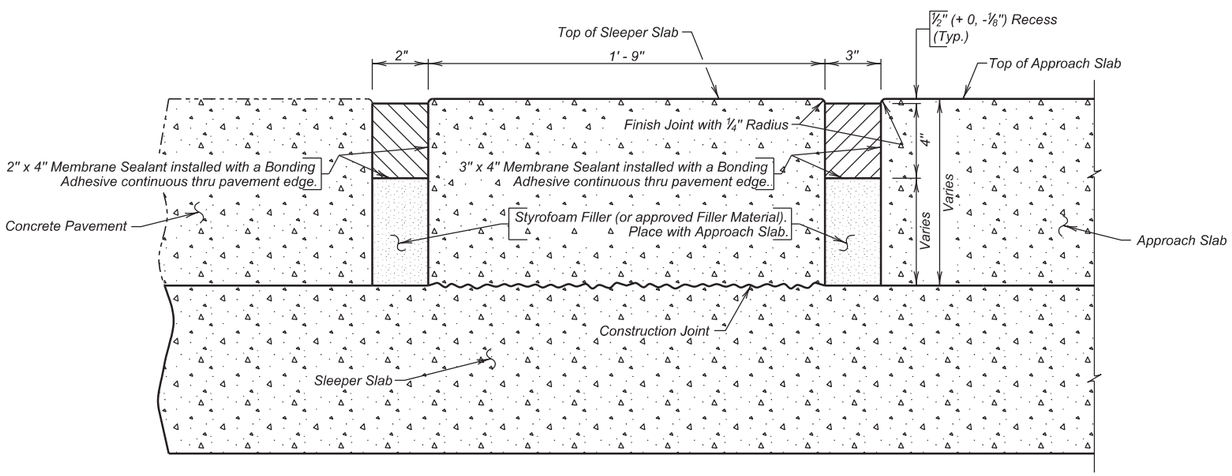


**SEC. A - A**

## ESTIMATED QUANTITIES

| ITEM | UNIT | QUANTITY | |
|---|---|---|---|
| | | Phase I | Phase 2 |
| Membrane Sealant Expansion Joint | Ft | 75.8 | 91.8 |
| | | | |

**(SOUTH BOUND LANES)**
**APPROACH SLAB JOINT DETAILS**

FOR

67' - 3 ¾" CONT. CONCRETE BRIDGE

40' - 0" ROADWAY — 30° SKEW L.H.F.
OVER CREEK — SEC. 30-T93N-R50W
STR. NO. 64-005-164 — IM-PH 0291(122)0

UNION COUNTY

S. D. DEPT. OF TRANSPORTATION

OCTOBER 2015



| DESIGNED BY | CK. DES. BY | DRAFTED BY | |
|---|---|---|---|
| KSK | BD | KR | Kevin N. Goeden |
| UNIN02PT | 02PTRI10 | | BRIDGE ENGINEER |

| STATE OF | PROJECT | SHEET NO. | TOTAL SHEETS |
|---|---|---|---|
| S.D. | IM-PH 029(112)210 | 236 | 284 |

# INDEX OF BRIDGE SHEETS—SOUTH BOUND LANES


Sheet No. 1 – General Drawing and Quantities.
Sheet No. 2 – Superstructure Details.
Sheet No. 3 – Details of Abut. No. 1.
Sheet No. 4 – Details of Abut. No. 4.
Sheet No. 5 – Bent Details.
Sheet No. 6 – Slab Elev. and Conc. Placing Seq.
Sheet No. 7 – Type RA-IM Steel Railing Modification Details.


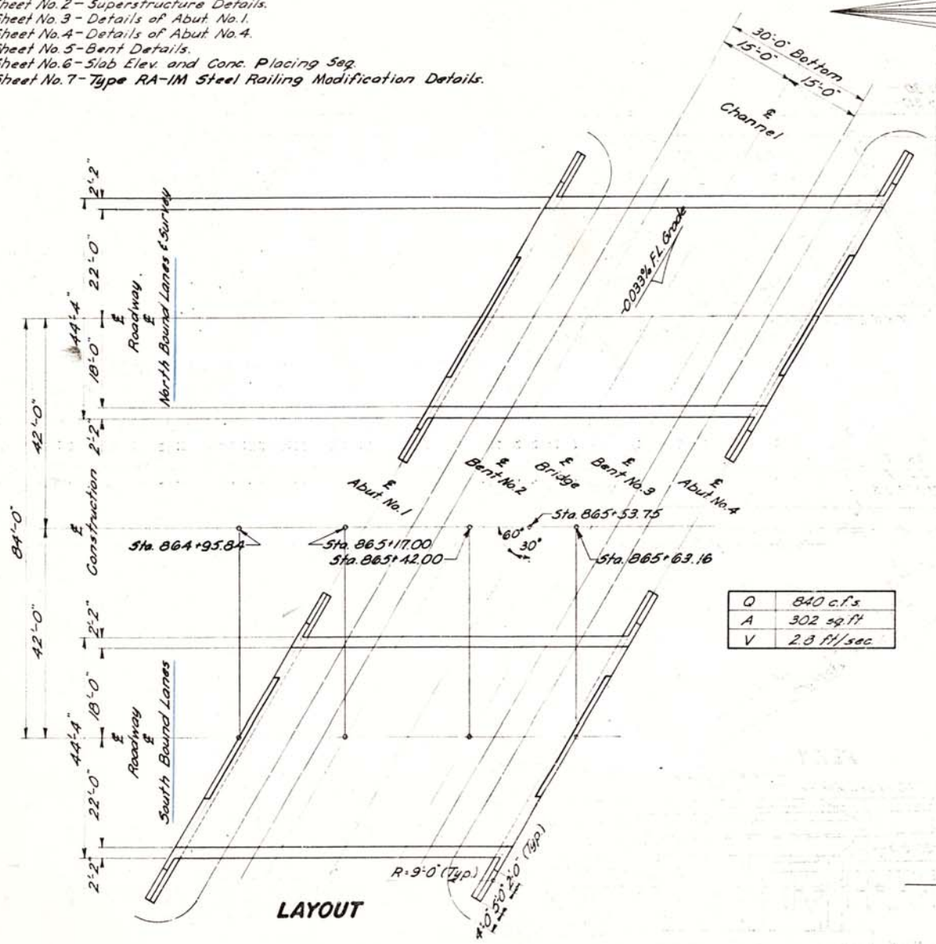


LAYOUT

| | |
|---|---|
| Q | 840 c.f.s. |
| A | 302 sq. ft. |
| V | 2.8 ft./sec. |

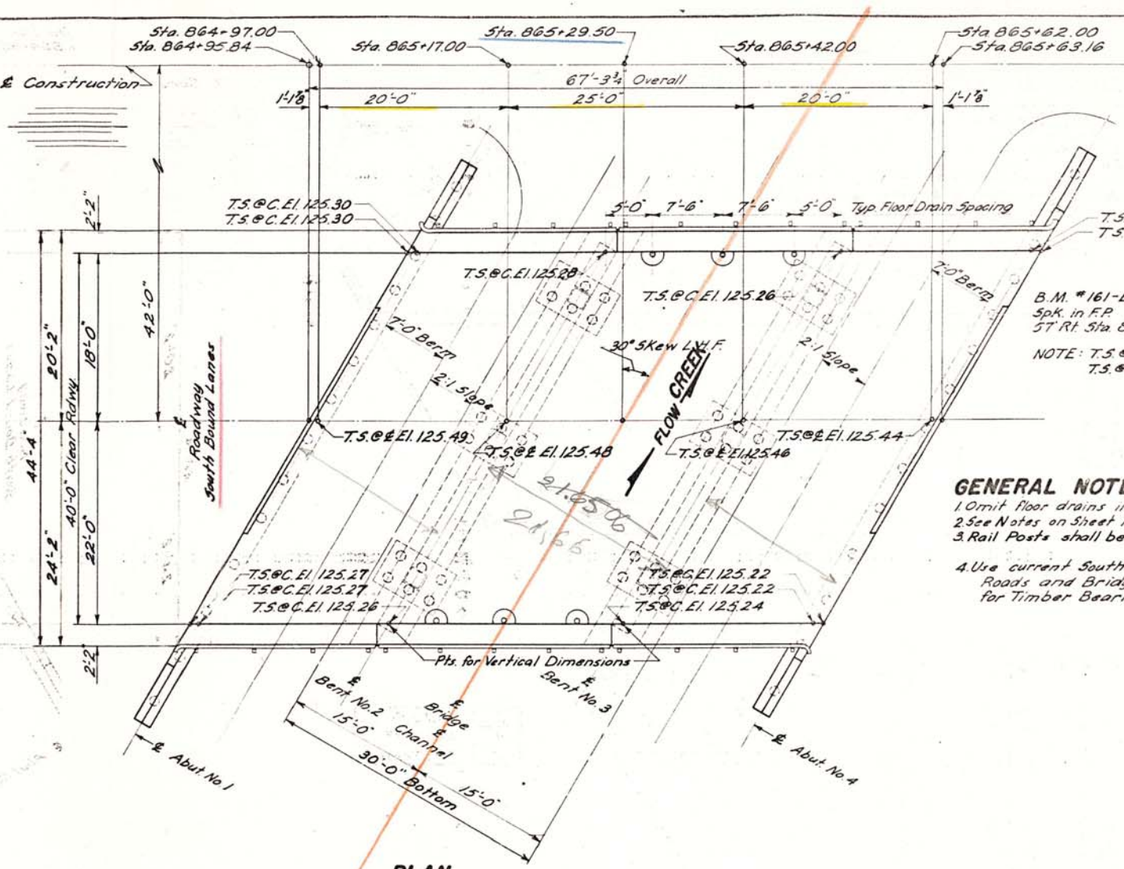


B.M. #161 – El. 121.48
Spk. in F.P.
57' Rt. Sta. 860+68.00

B.M. #162 – El. 121.65
Spk. in F.P.
85' Rt. Sta. 872+59.00

NOTE: T.S.@℄ = Top of Slab at Centerline Rdwy.
T.S.@C. = Top of Slab at Curb.

## GENERAL NOTES—

1. Omit floor drains in end spans.
2. See Notes on Sheet No. 2 through Sheet No. 7.
3. Rail Posts shall be built vertical.
4. Use current South Dakota Standard Specifications for Roads and Bridges, and Supplemental Specifications for Timber Bearing Piles, dated Sept. 1, 1959.

PLAN

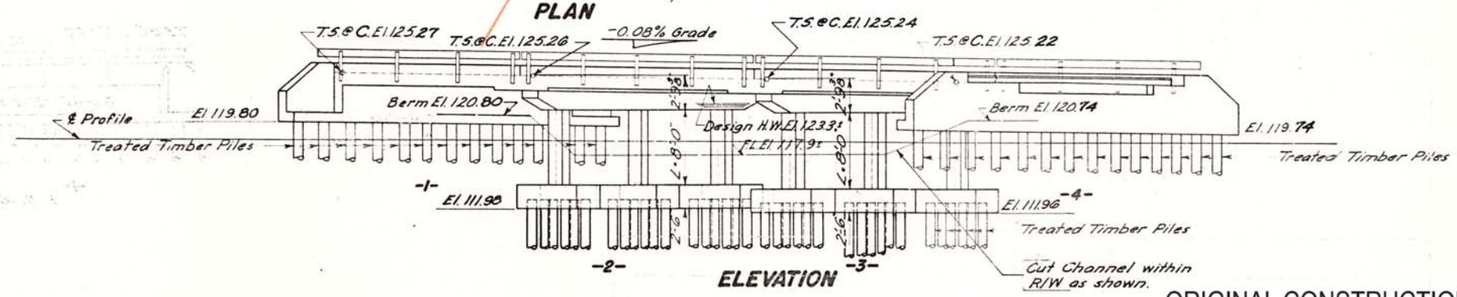


ELEVATION

## TEST HOLE DATA

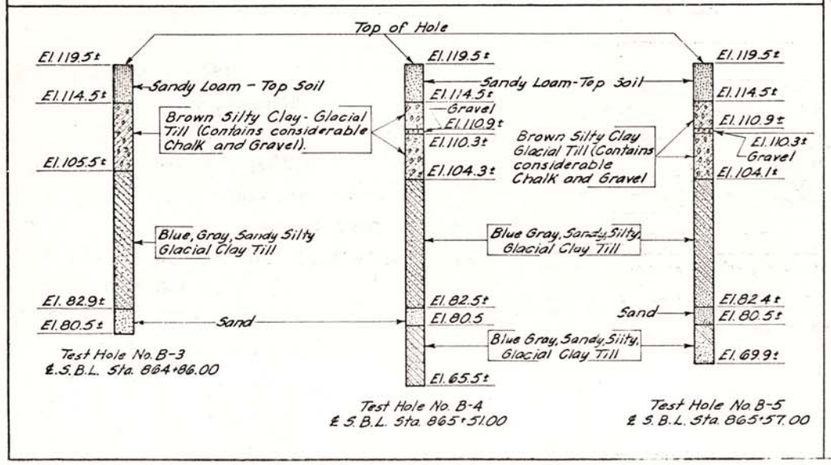


## ESTIMATED QUANTITIES

| ITEM | Cl. A Conc. Cu. Yds. | Steel Lb. Reinf. | Steel Lb. Struct. | Type RA(IM) Steel Railing Lin. Ft. | Treated Timber* Piles Lin. Ft. | Excavation-Cu. Yds. Unclass. | Excavation-Cu. Yds. Struct. | Excavation-Cu. Yds. Cofferdam |
|---|---|---|---|---|---|---|---|---|
| Superstructure | 87.4 | 31,180 | 65 | 137.3 | | | | |
| Abut. No. 1 | 25.2 | 2,310 | 640 | | 14@45'-630 | 10 | | |
| Abut. No. 4 | 25.2 | 2,310 | 640 | | 14@45'-630 | 10 | | |
| Bent No. 2 | 19.6 | 4,030 | | | 18@40'-720 | 45 | | |
| Bent No. 3 | 19.6 | 4,030 | | | 18@40'-720 | 45 | | |
| | 187.0 | 43,860 | 1,345 | 137.3 | 2,700 | 110 | | |

*One Treated Timber Test Pile shall be driven at Abuts. No. 1 & 4 and at Bents No. 2 & 3 before remaining piles are ordered.
ΔSee Grading Plans for Unclassified Excavation.
PILE NOTE: Piles driven at Abuts. No. 1 & No. 4 including test piles shall obtain their full bearing (20 tons) in the natural ground below the embankments at elevations 119.5± & 119.3± respectively. Prebored holes through fill are required and shall have a minimum diameter 2" larger than the nominal diameter (3 ft. from butt) of the pile. EE 12-8-61 KEH

# ORIGINAL CONSTRUCTION PLANS

(SOUTH BOUND LANES)

GENERAL DRAWING AND QUANTITIES

FOR

## 67'-3¾" CONT. CONC. BRIDGE

40'-0" ROADWAY — 30° SKEW L.H.F.

OVER CREEK — SEC. 30-T93N-R50W

84' RT. STA. 864+95.84 TO 84' RT. STA. 865+63.16 — I-29-1(13)27

UNION COUNTY — H20-S16-44 (8 ALT.)

SOUTH DAKOTA

DEPARTMENT OF HIGHWAYS

JAN. 1960



-X020-

| DESIGNED BY | DRAWN BY | CHECKED BY | APPROVED |
|---|---|---|---|
| | O.C. | H.A. | R.R. Sun |

BRIDGE ENGINEER

| STATE OF | PROJECT | SHEET NO. | TOTAL SHEETS |
|---|---|---|---|
| S.D. | IM-PH 029(112)210 | 237 | 284 |

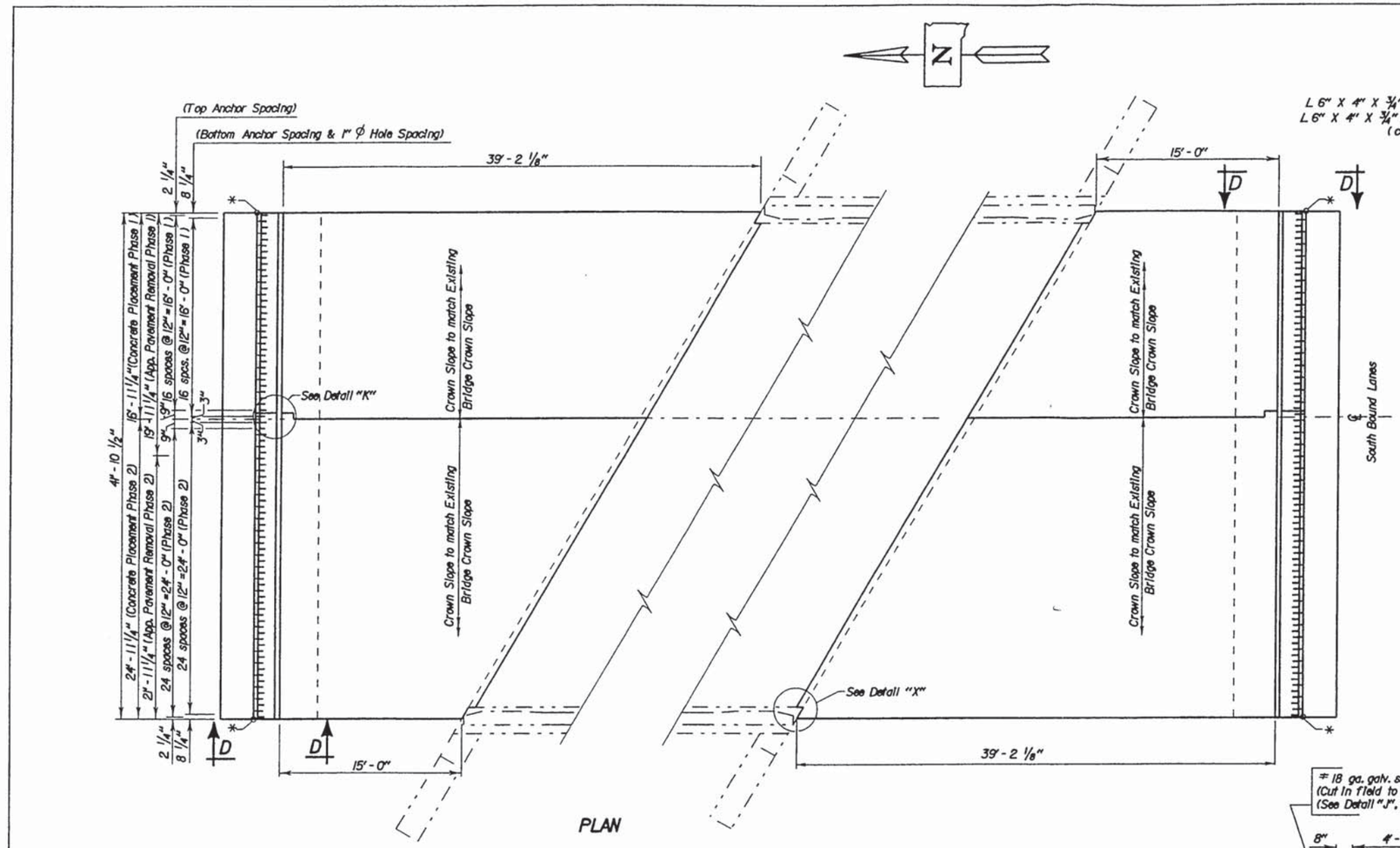


PLAN

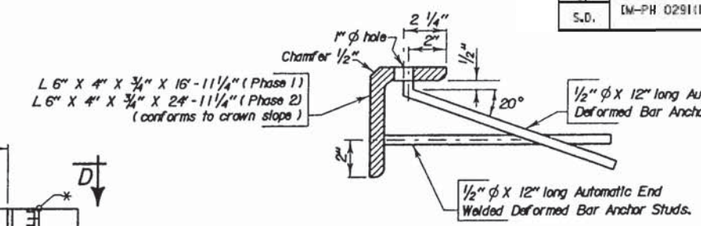


DETAIL "Y"

(See Sheet No. 14 of 24 for location of detail)
(See Notes Regarding Armor Angle Assembly.)

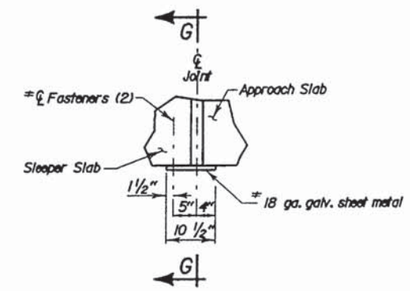


PLAN - DETAIL "J"

*Attach 18 ga. galv. Sheet Metal to both ends of Sleeper Slab only after slab has been poured. Use fasteners that will not spall concrete, as approved by the Engineer.

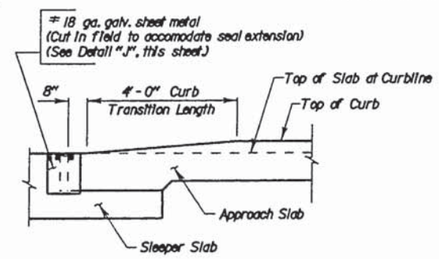


VIEW D - D

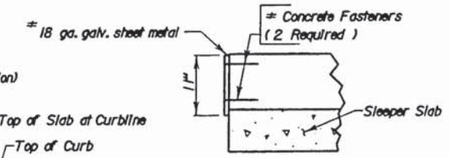


SEC. G - G

THE CONTRACTOR HAS THE OPTION OF BUILDING THE APPROACH SLABS FOR THE FULL WIDTH OF THE ROADWAY AT ONE TIME OR BUILDING THE APPROACH SLABS IN TWO PHASES USING THE PLAN SHOWN OPTIONAL CONSTRUCTION JOINT. ALL REFERENCES TO PHASE 1 AND PHASE 2 CONSTRUCTION ARE GIVEN IN THE EVENT THE CONTRACTOR ELECTS TO BUILD THE APPROACH SLABS IN TWO PHASES.

*Elevation is Top of Slab back of Curb at this point. See Approach Slab Notes.

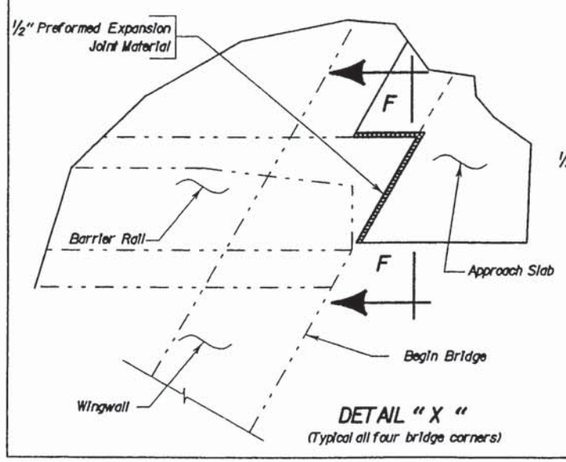


DETAIL "X"

(Typical all four bridge corners)

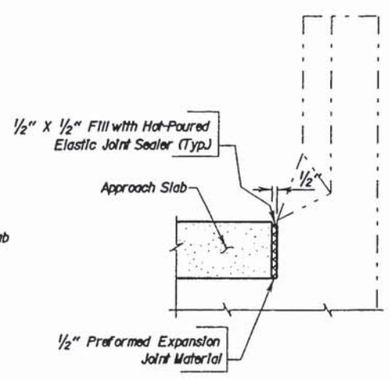


SEC. F - F

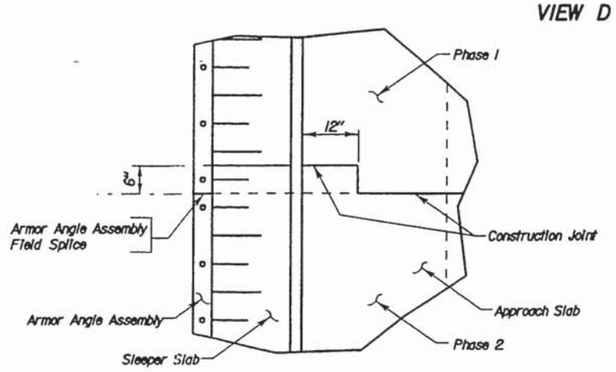


DETAIL "K"

## ORIGINAL CONSTRUCTION PLANS

(SOUTH BOUND LANES)

LAYOUT OF APPROACH SLAB ADJ. TO BRIDGE

**67' - 3 3/4" CONT. CONCRETE BRIDGE**

40' - 0" ROADWAY — 30° SKEW L. H. F.

OVER CREEK — SEC. 30-T93N-R50W

STR. NO. 64-005-164 — IM 29-1(44)27

UNION COUNTY

S. D. DEPT. OF TRANSPORTATION

JUNE 2000



| DESIGNED BY | DRAWN BY | CHECKED BY | APPROVED |
|---|---|---|---|
| EJA | TB | CJD | John C. Cole |
| UNIN5886 | 5886SAII | | BRIDGE ENGINEER |

| STATE OF | PROJECT | SHEET NO. | TOTAL SHEETS |
|---|---|---|---|
| S.D. | IM-PH 0291(122)10 | 238 | 284 |

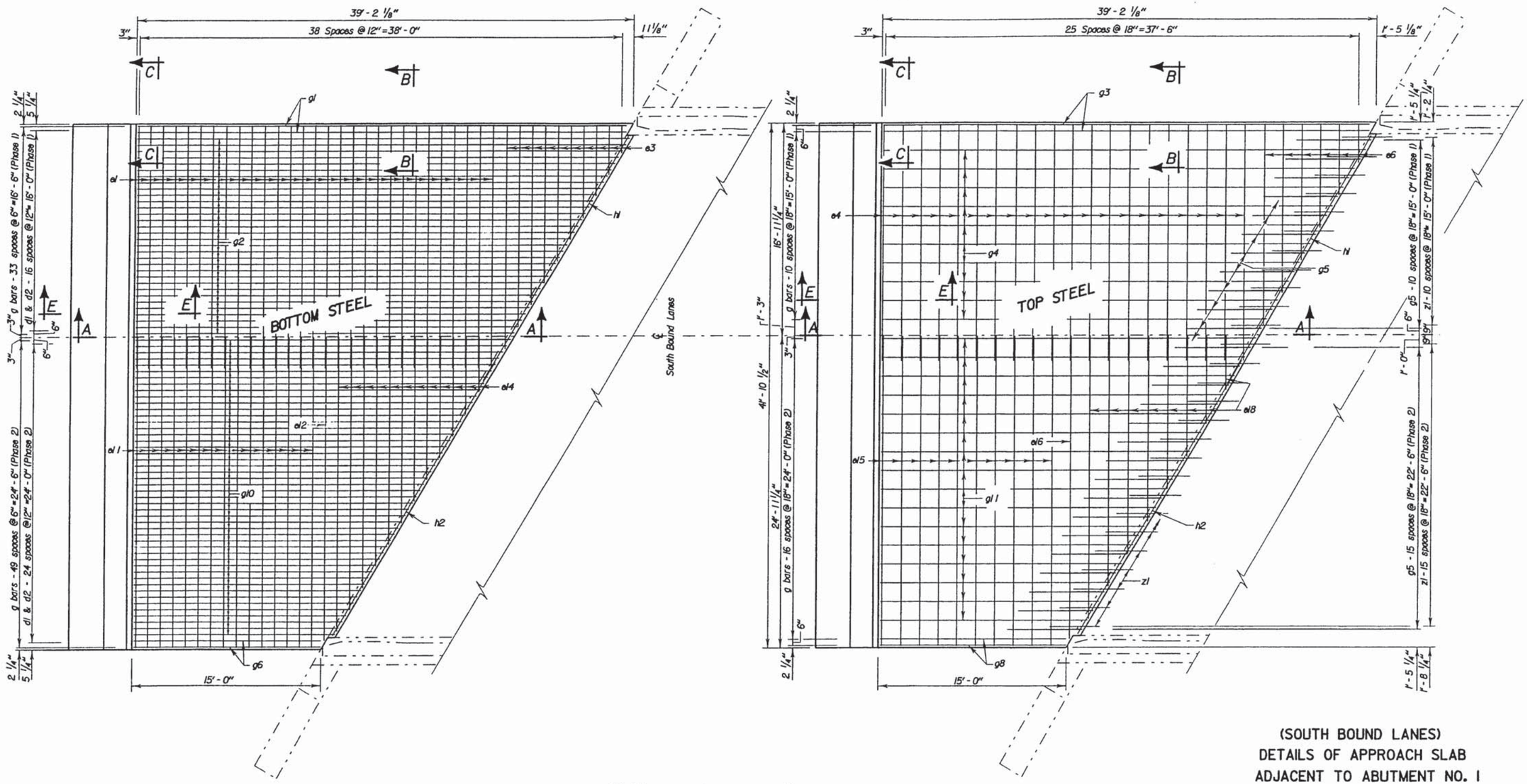


PLAN
(Abut. No. 1)

THE CONTRACTOR HAS THE OPTION OF BUILDING THE APPROACH SLABS FOR THE FULL WIDTH OF THE ROADWAY AT ONE TIME OR BUILDING THE APPROACH SLABS IN TWO PHASES USING THE PLAN SHOWN OPTIONAL CONSTRUCTION JOINT. ALL REFERENCES TO PHASE 1 AND PHASE 2 CONSTRUCTION ARE GIVEN IN THE EVENT THE CONTRACTOR ELECTS TO BUILD THE APPROACH SLABS IN TWO PHASES.

(SOUTH BOUND LANES)
DETAILS OF APPROACH SLAB
ADJACENT TO ABUTMENT NO. 1

## 67' - 3¾" CONT. CONCRETE BRIDGE

40' - 0" ROADWAY — 30° SKEW L. H. F.
OVER CREEK — SEC. 30-T93N-R50W
STR. NO. 64-005-164 — IM 29-1(44)27

UNION COUNTY

S. D. DEPT. OF TRANSPORTATION
JUNE 2000



ORIGINAL CONSTRUCTION PLANS

| DESIGNED BY | DRAWN BY | CHECKED BY | APPROVED |
|---|---|---|---|
| EJA | TB | CJD | John C. Cole |
| UNIN5886 | 5886SA12 | | BRIDGE ENGINEER |

| STATE OF | PROJECT | SHEET NO. | TOTAL SHEETS |
|---|---|---|---|
| S.D. | IM-PH 0291(122)0 | 239 | 284 |

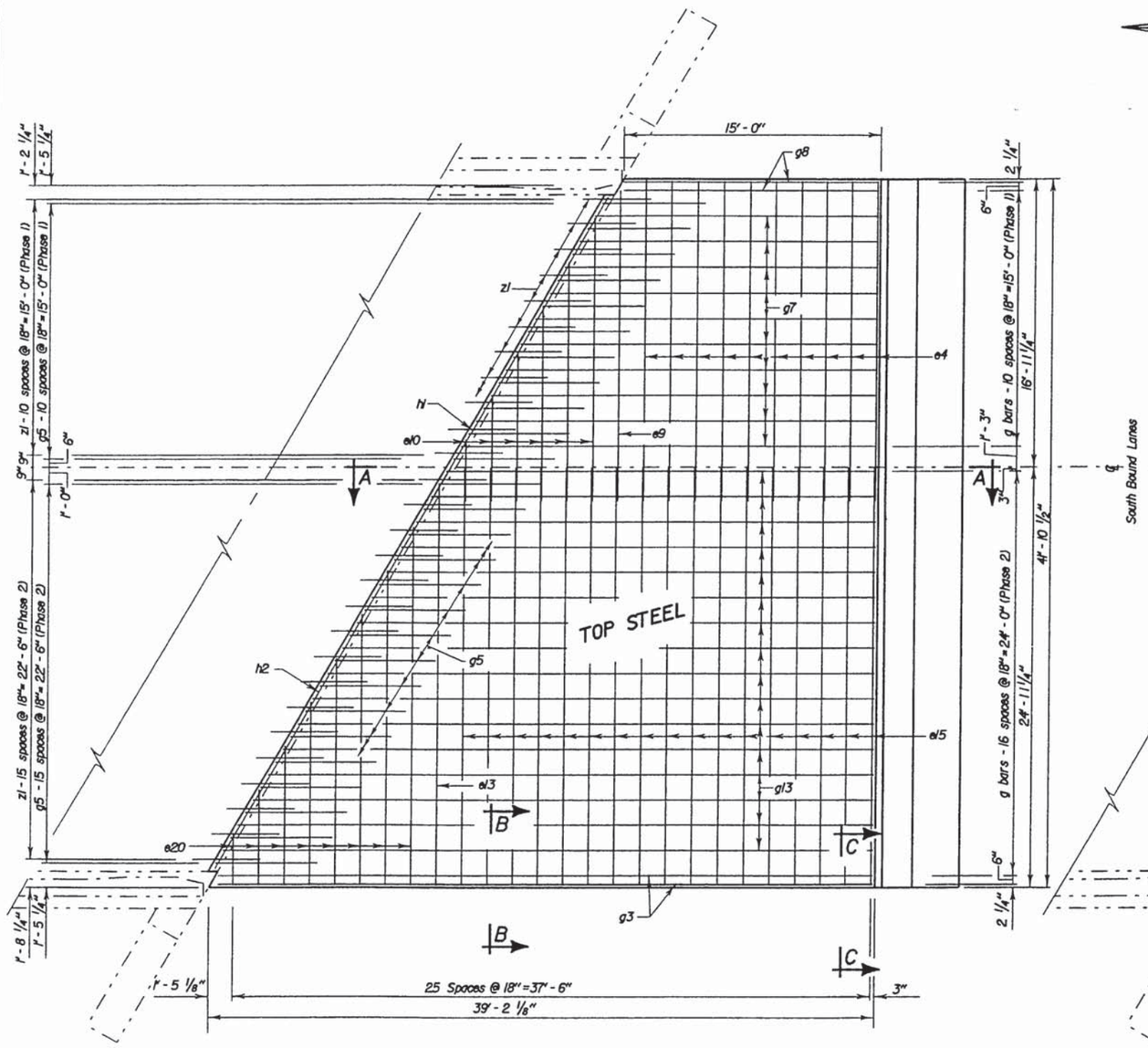


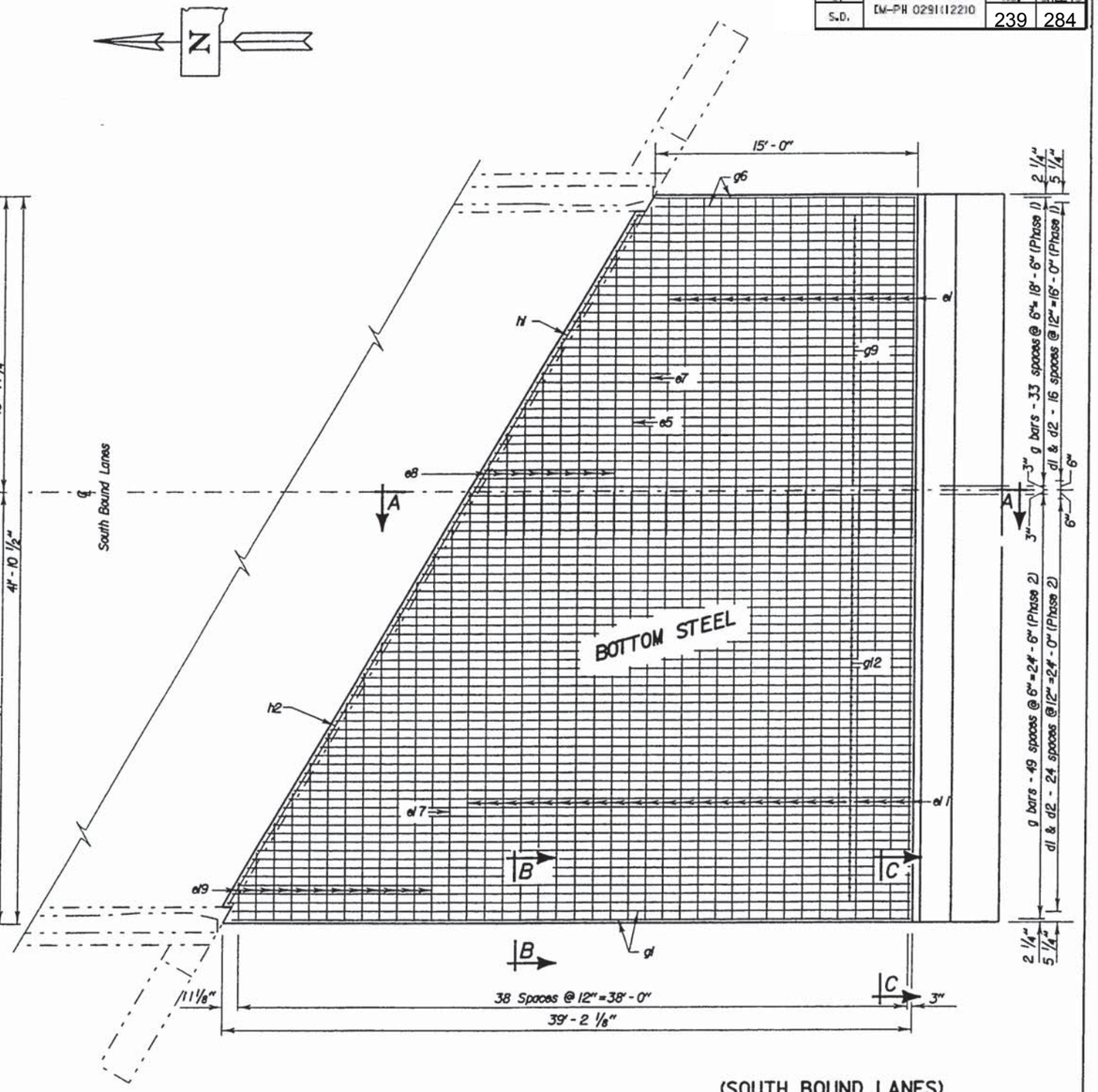


PLAN
(Abut. No. 4)

THE CONTRACTOR HAS THE OPTION OF BUILDING THE APPROACH SLABS FOR THE FULL WIDTH OF THE ROADWAY AT ONE TIME OR BUILDING THE APPROACH SLABS IN TWO PHASES USING THE PLAN SHOWN OPTIONAL CONSTRUCTION JOINT. ALL REFERENCES TO PHASE 1 AND PHASE 2 CONSTRUCTION ARE GIVEN IN THE EVENT THE CONTRACTOR ELECTS TO BUILD THE APPROACH SLABS IN TWO PHASES.

(SOUTH BOUND LANES)
DETAILS OF APPROACH SLAB
ADJACENT TO ABUTMENT NO. 4

# 67' - 3¾" CONT. CONCRETE BRIDGE

40' - 0" ROADWAY — 30° SKEW L. H. F.
OVER CREEK — SEC. 30-T93N-R50W
STR. NO. 64-005-164 — IM 29-1(44)27
UNION COUNTY
S. D. DEPT. OF TRANSPORTATION
JUNE 2000



ORIGINAL CONSTRUCTION PLANS

| DESIGNED BY | DRAWN BY | CHECKED BY | APPROVED |
|---|---|---|---|
| EJA | TB | CJD | John C. Cole |
| UNIN5886 | 5886SA13 | | BRIDGE ENGINEER |

| STATE OF | PROJECT | SHEET NO. | TOTAL SHEETS |
|---|---|---|---|
| S.D. | IM-PH 029(112)210 | 240 | 284 |

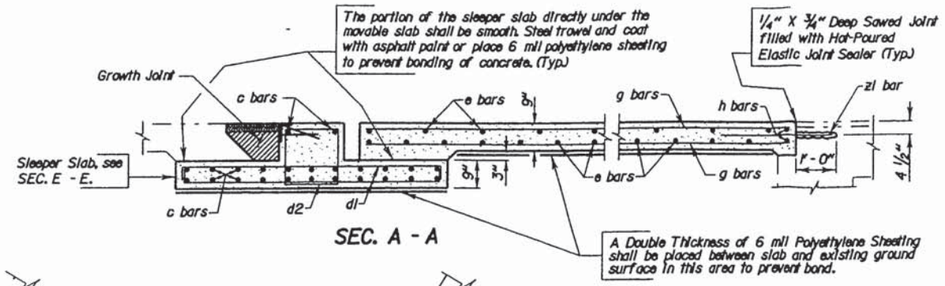


SEC. A - A

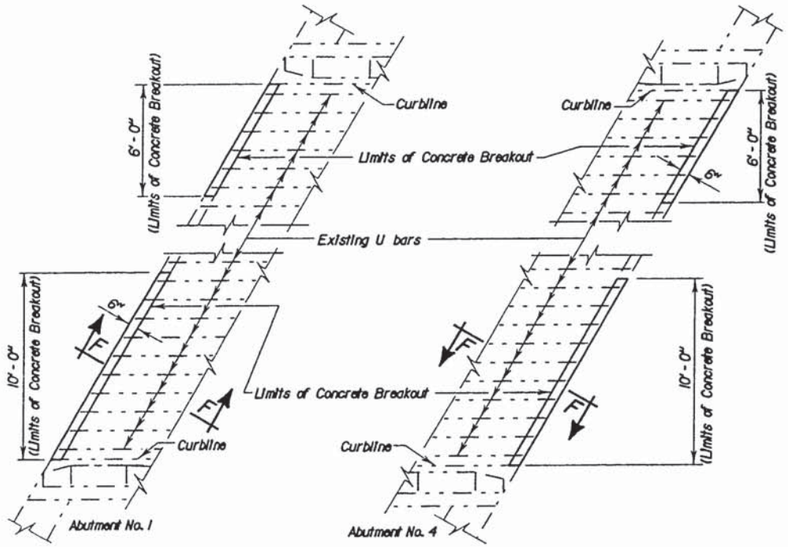


PAVEMENT NOTCH LAYOUT

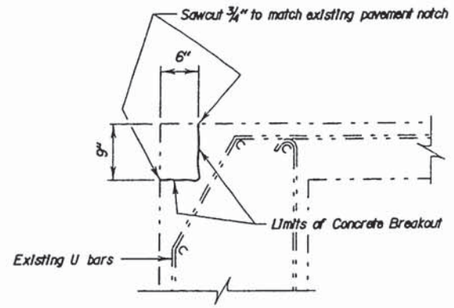


SEC. F - F

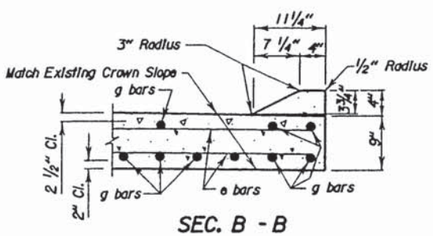


SEC. B - B

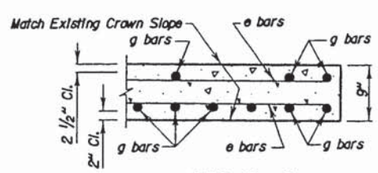


SEC. C - C

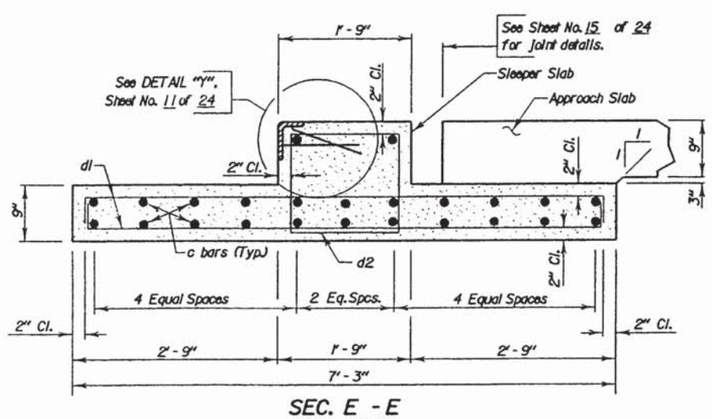


SEC. E - E
(Sleeper Slab)

## REINFORCING SCHEDULE
( For Two Approach and Sleeper Slabs )

PHASE 1

| Mk. | No. | Size | Length | Type |
|---|---|---|---|---|
| c1 | 48 | 5 | 19'-0" | Str. |
| d1 | 68 | 4 | 7'-9" | 2 |
| d2 | 34 | 4 | 6'-5" | T2 |
| e1 | 44 | 6 | 19'-0" | Str. |
| * e3 | 5 | 6 | 19'-11" | Str. |
| e4 | 30 | 4 | 18'-4" | Str. |
| e5 | 1 | 6 | 17'-6" | Str. |
| * e6 | 3 | 4 | 19'-2" | Str. |
| e7 | 1 | 6 | 18'-3" | Str. |
| * e8 | 4 | 6 | 19'-8" | Str. |
| e9 | 1 | 4 | 18'-3" | Str. |
| * e10 | 3 | 4 | 20'-5" | Str. |
| g1 | 2 | 8 | 38'-6" | Str. |
| * g2 | 16 | 8 | 68'-7" | Str. |
| g3 | 2 | 4 | 38'-6" | Str. |
| * g4 | 5 | 4 | 68'-8" | Str. |
| g5 | 22 | 4 | 6'-0" | Str. |
| g6 | 2 | 8 | 14'-10" | Str. |
| * g7 | 5 | 4 | 40'-1" | Str. |
| g8 | 2 | 4 | 14'-10" | Str. |
| * g9 | 16 | 8 | 40'-1" | Str. |
| h1 | 4 | 6 | 20'-8" | Str. |
| △ z1 | 22 | 6 | 4'-0" | Str. |

Bending Details

| | | |
|---|---|---|
| e3 | 2'-2" | 17'-9" |
| e6 | 3'-1" | 16'-1" |
| e8 | 3'-10" | 15'-10" |
| e10 | 3'-8" | 16'-9" |
| e14 | 4'-3" | 23'-5" |
| e18 | 4'-3" | 22'-6" |
| e19 | 2'-3" | 21'-3" |
| e20 | 3'-1" | 21'-3" |

| | |
|---|---|
| 3 | e6, e10 |
| 4 | e20, e8, e18 |
| 5 | e3 |
| 6 | e19, e14 |

| | | |
|---|---|---|
| e20 | 10'-10" | 13'-6" |
| e19 | 10'-11" | 12'-7" |
| e18 | 12'-1" | 14'-8" |
| e14 | 12'-11" | 14'-9" |
| e10 | 8'-10" | 11'-7" |
| e8 | 8'-10" | 10'-10" |
| e6 | 8'-3" | 10'-11" |
| e3 | 9'-1" | 10'-10" |

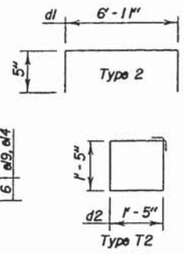


| | | |
|---|---|---|
| g2 | 29'-10" | 38'-9" |
| g4 | 30'-6" | 38'-2" |
| g7 | 16'-7" | 24'-4" |
| g9 | 16'-0" | 24'-11" |
| g10 | 16'-0" | 29'-6" |
| g11 | 16'-7" | 29'-6" |
| g12 | 25'-3" | 38'-9" |
| g13 | 25'-3" | 38'-2" |

| | |
|---|---|
| 5 | g4, g7 |
| 8 | g11, g13 |
| 16 | g2, g9 |
| 24 | g10, g12 |

| | | |
|---|---|---|
| g13 | 31'-4" | 32'-1" |
| g12 | 31'-10" | 32'-2" |
| g11 | 22'-7" | 23'-6" |
| g10 | 22'-8" | 22'-10" |
| g9 | 20'-3" | 20'-8" |
| g7 | 20'-1" | 20'-10" |
| g4 | 33'-1" | 34'-9" |
| g2 | 34'-2" | 34'-5" |

PHASE 2

| Mk. | No. | Size | Length | Type |
|---|---|---|---|---|
| c2 | 48 | 5 | 24'-8" | Str. |
| d1 | 100 | 4 | 7'-9" | 2 |
| d2 | 50 | 4 | 6'-5" | T2 |
| e11 | 41 | 6 | 24'-9" | Str. |
| e12 | 1 | 6 | 24'-1" | Str. |
| e13 | 1 | 4 | 23'-6" | Str. |
| * e14 | 6 | 6 | 27'-8" | Str. |
| e15 | 27 | 4 | 24'-9" | Str. |
| e16 | 1 | 4 | 24'-1" | Str. |
| e17 | 1 | 6 | 22'-9" | Str. |
| * e18 | 4 | 4 | 26'-9" | Str. |
| * e19 | 6 | 6 | 23'-6" | Str. |
| * e20 | 4 | 4 | 24'-4" | Str. |
| g1 | 2 | 8 | 38'-6" | Str. |
| g3 | 2 | 4 | 38'-6" | Str. |
| g5 | 32 | 4 | 6'-0" | Str. |
| g6 | 2 | 8 | 14'-10" | Str. |
| g8 | 2 | 4 | 14'-10" | Str. |
| * g10 | 24 | 8 | 45'-6" | Str. |
| * g11 | 8 | 4 | 46'-1" | Str. |
| * g12 | 24 | 8 | 64'-0" | Str. |
| * g13 | 8 | 4 | 63'-5" | Str. |
| h2 | 4 | 6 | 27'-3" | Str. |
| △ z1 | 32 | 6 | 4'-0" | Str. |

Note -
All Dimensions are out to out of bars.
All Bars to be Epoxy Coated.
△ Dowels
* Cut Bars

THE CONTRACTOR HAS THE OPTION OF BUILDING THE APPROACH SLABS FOR THE FULL WIDTH OF THE ROADWAY AT ONE TIME OR BUILDING THE APPROACH SLABS IN TWO PHASES USING THE PLAN SHOWN OPTIONAL CONSTRUCTION JOINT. ALL REFERENCES TO PHASE 1 AND PHASE 2 CONSTRUCTION ARE GIVEN IN THE EVENT THE CONTRACTOR ELECTS TO BUILD THE APPROACH SLABS IN TWO PHASES.

## ESTIMATED QUANTITIES
( For Two Approach and Sleeper Slabs )

| ITEM | UNIT | PHASE 1 QUANTITY | PHASE 2 QUANTITY |
|---|---|---|---|
| Concrete Approach Slab for Bridge | S.Y. | 104.8 | 153.3 |
| Concrete Approach Sleeper Slab for Bridge | S.Y. | 27.3 | 40.2 |
| Install Dowel in Concrete | Each | 22 | 32 |
| Breakout Structural Concrete | C.Y. | 0.1 | 0.3 |

| | PHASE 1 | PHASE 2 |
|---|---|---|
| 1. Concrete in Approach Slabs | 27.3 Cu.Yd. | 39.8 Cu.Yd. |
| ⊛ 2. Epoxy Coated Re-Steel in Approach Slabs. | 7648 Lb. | 10920 Lb. |
| 3. Concrete in Sleeper Slabs | 9.0 Cu.Yd. | 13.3 Cu.Yd. |
| 4. Epoxy Coated Re-Steel in Sleeper Slabs. | 1349 Lb. | 1967 Lb. |
| 5. Structural Steel in Armor Assembly | 850 Lb. | 1238 Lb. |
| 6. Polyethylene Sheeting | 241 Sq.Yd. | 358 Sq.Yd. |

Items 1 thru 6 are approximate quantities contained in the above bid item and are for information only.

⊛ Does not include the following quantities for z1 bars as these are paid for in the Bid Item "Install Dowel in Concrete".

| PHASE 1 | PHASE 2 |
|---|---|
| 132 Lb. | 192 Lb. |

ORIGINAL CONSTRUCTION PLANS

(SOUTH BOUND LANES)

DETAILS OF APPROACH SLAB ADJ. TO BRIDGE

67' - 3 3/4" CONT. CONCRETE BRIDGE

40' - 0" ROADWAY — 30° SKEW L. H. F.

OVER CREEK — SEC. 30-T93N-R50W

STR. NO. 64-005-164 — IM 29-1(44)27

UNION COUNTY

S. D. DEPT. OF TRANSPORTATION

JUNE 2000



| DESIGNED BY | DRAWN BY | CHECKED BY | APPROVED |
|---|---|---|---|
| EJA UNIN5886 | TB 5586SA14 | CJD/SLG | BRIDGE ENGINEER |

| STATE OF SOUTH DAKOTA | PROJECT | SHEET | TOTAL SHEETS |
|---|---|---|---|
| | IM-PH 0291(122)0 | 241 | 284 |

Plotting Date: 05/11/2016

# SURFACING DETAILS (Removal)

## STR. NO. 64-164-405 I29 MRM 0.05 SBL & STR. NO. 64-165-405 I29 MRM 0.05 NBL

Remove Concrete Pavement

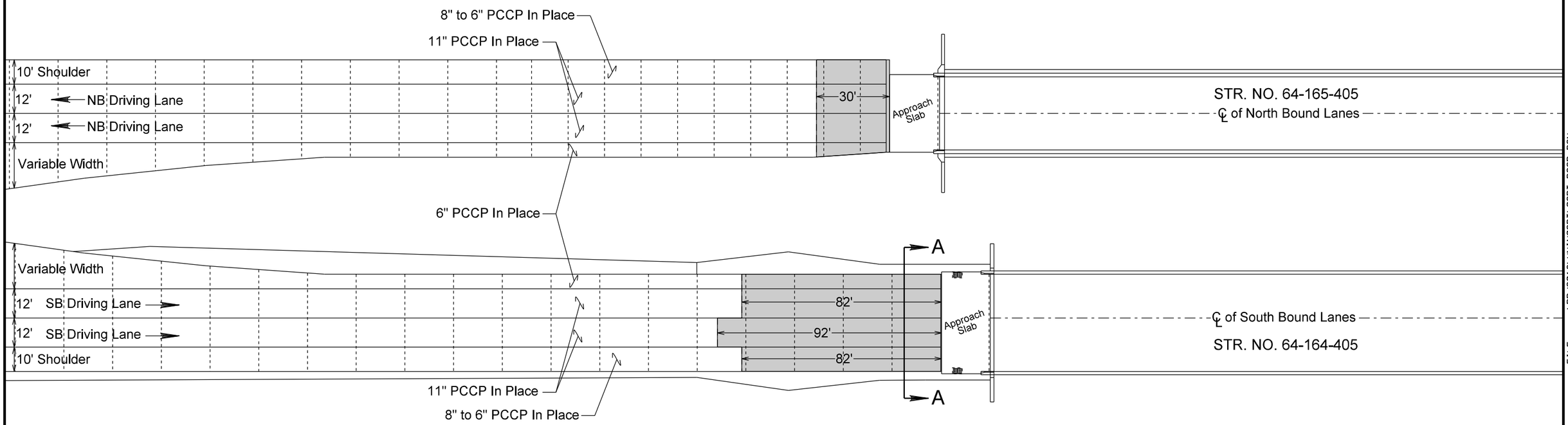


| Item | Quantity | Unit |
|---|---|---|
| Unclassified Excavation | 20 | CuYd |
| Remove Concrete Pavement | 508 | SqYd |

Sheet 1 of 3

PLOT SCALE - 1:40

PLOT NAME - 2

FILE - ...\PRJ2016\UNIN02PT\02PT_PCCP.DGN

PLOTTED FROM - TRMI11118

# SURFACING DETAILS (Placement)

## STR. NO. 64-164-405 I29 MRM 0.05 SBL & STR. NO. 64-165-405 I29 MRM 0.05 NBL

LEGEND:

Sawed Longitudinal Joint with Tie Bars or Longitudinal Construction Joint With Tie Bars ——— LT ——— LT ——— LT ———

Transverse Contraction Joint - - - - - - - - - - - - - - - - - - - - - - - - - - - - - - - - - - - - - - - -

Longitudinal Construction Joint without Tie Bars ——— L ——— L ——— L ——— L ———

Steel Bar Insertion in Longitudinal or Transverse Joints —— SB ——— SB ———

Transverse contraction joints within these areas shall not have dowel bar assemblies. All other transverse contraction joints shall have dowel bar assemblies.

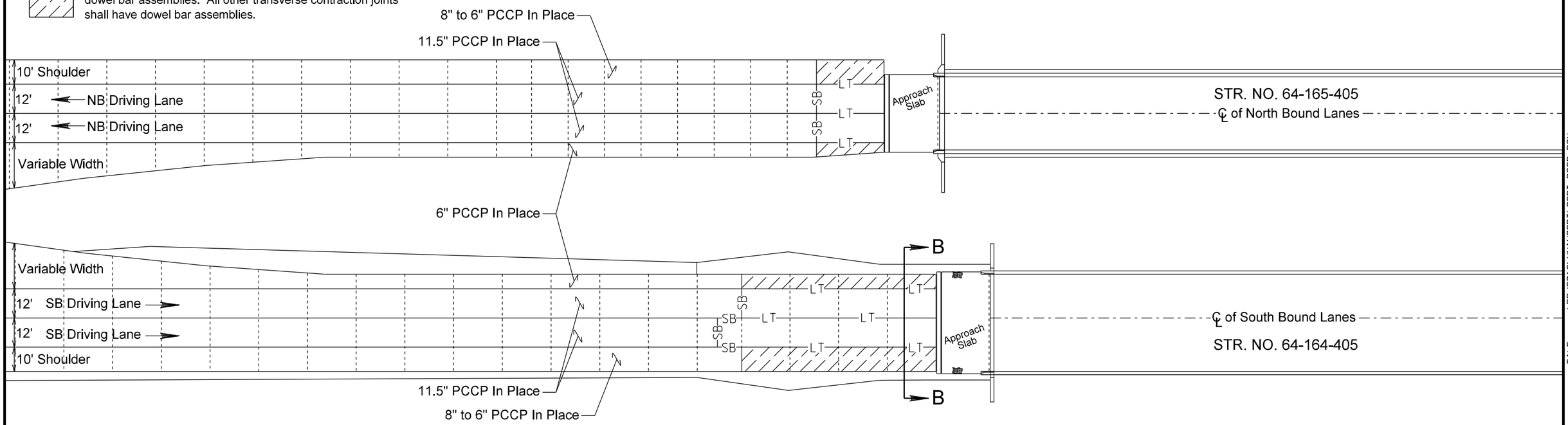


| Item | Quantity | Unit |
|---|---|---|
| 11" Nonreinforced PCC Pavement | 488 | SqYd |
| Dowel Bar | 84 | Each |
| Insert Steel Bar In PCC Pavement | 40* | Each |

*Quantity includes 24 1 1/2" x 18" Plain Round Dowel Bars, 8 No. 11 x 18" Deformed Tie Bars and 8 No. 5 x 24" Deformed Tie Bars.



PLOT SCALE - 1:40
PLOT NAME - 3
FILE - ...\PRJ2016\UNIN02PT\02PT_PCCP.DGN
PLOTTED FROM - TRMI11118

# SURFACING DETAILS

## STR. NO. 64-164-405 I29 MRM 0.05 SBL
## & STR. NO. 64-165-405 I29 MRM 0.05 NBL

## SECTION A-A (Removal)

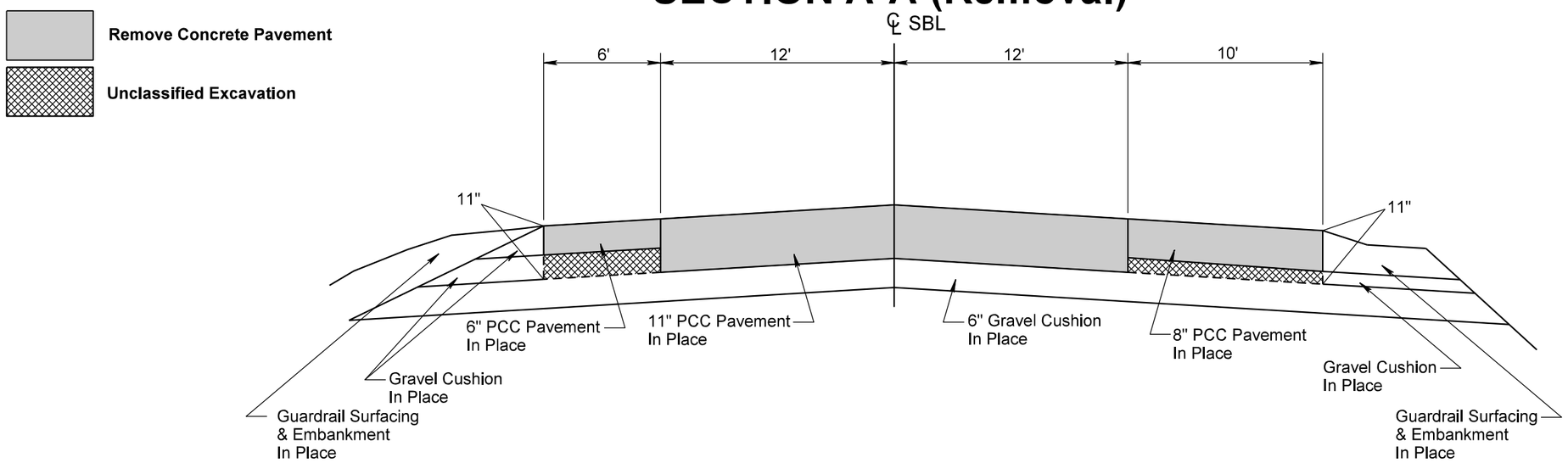


## SECTION B-B (Placement)

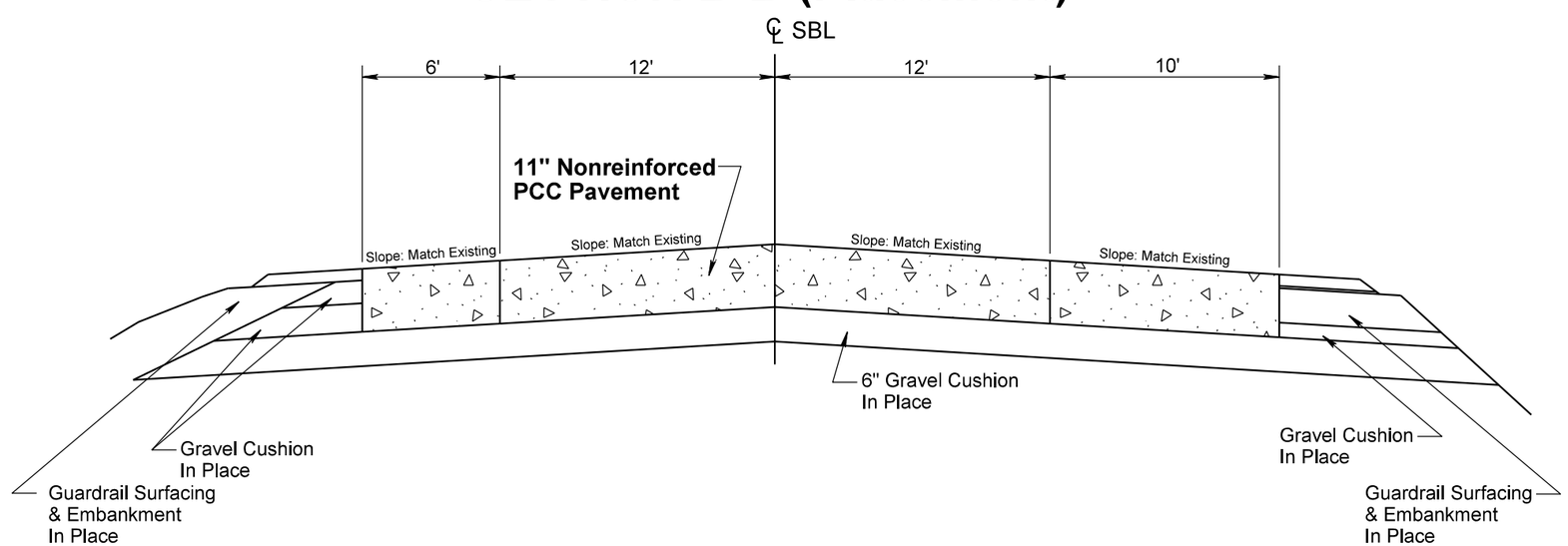




PLOT SCALE - 1:6.6
PLOTTED FROM - TRM111118
PLOT NAME - 4
FILE - ...\PRJ2016\UNIN02PT\02PT_PCCP.DGN

| STATE OF SOUTH DAKOTA | PROJECT | SHEET | TOTAL SHEETS |
|---|---|---|---|
| | IM-PH 0291(122)0 | 244 | 284 |

Plotting Date: 05/11/2016

# SURFACING DETAILS (Removal)

## STR. NO. 64-154-385 I29 MRM 2.48 SBL & STR. NO. 64-155-385 I29 MRM 2.48 NBL

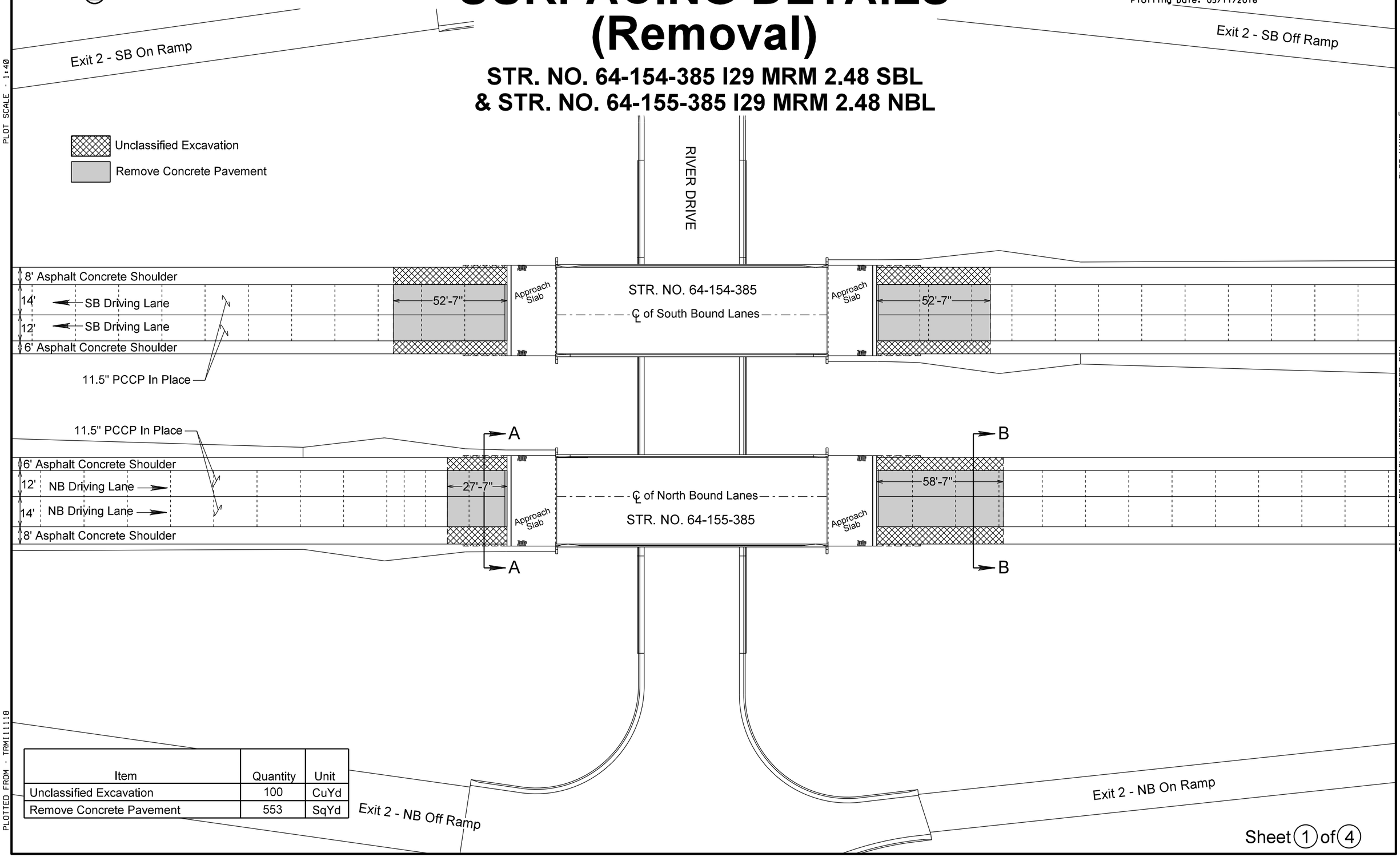


| Item | Quantity | Unit |
|---|---|---|
| Unclassified Excavation | 100 | CuYd |
| Remove Concrete Pavement | 553 | SqYd |



PLOT SCALE - 1:40
PLOT NAME - 5
FILE - ...\PRJ2016\UNIN02PT\02PT_PCCP.DGN
PLOTTED FROM - TRMI11118

# SURFACING DETAILS (Placement)

## STR. NO. 64-154-385 I29 MRM 2.48 SBL & STR. NO. 64-155-385 I29 MRM 2.48 NBL

LEGEND:

Sawed Longitudinal Joint with Tie Bars or Longitudinal Construction Joint With Tie Bars ——— LT ——— LT ——— LT ———

Transverse Contraction Joint - - - - - - - - - - - - - - - - - - - - - - - - - - - - - - - -

Longitudinal Construction Joint without Tie Bars ——— L ——— L ——— L ——— L ———

Steel Bar Insertion in Longitudinal or Transverse Joints ——— SB ——— SB ———

Transverse contraction joints within these areas shall not have dowel bar assemblies. All other transverse contraction joints shall have dowel bar assemblies.

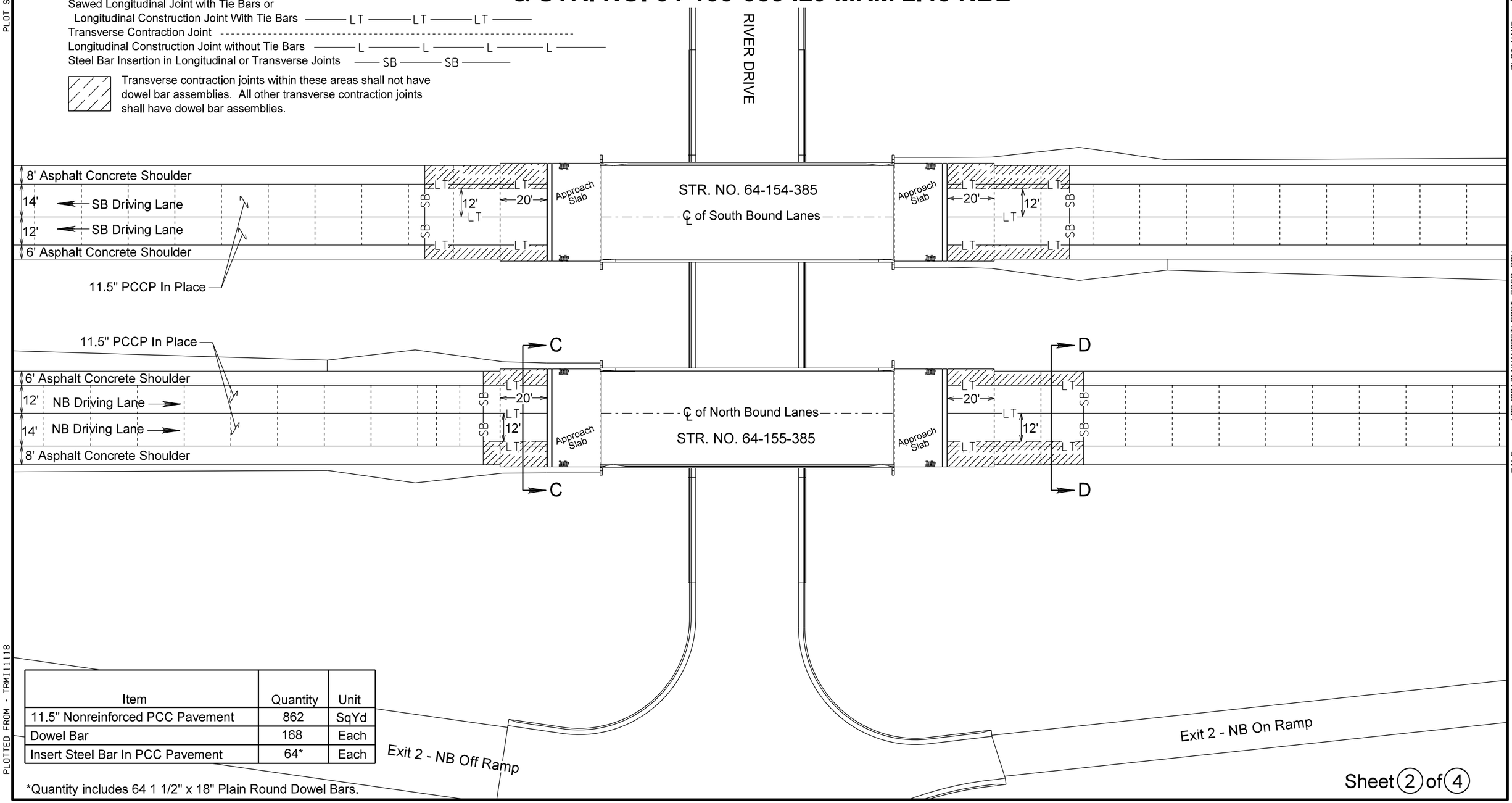


| Item | Quantity | Unit |
|---|---|---|
| 11.5" Nonreinforced PCC Pavement | 862 | SqYd |
| Dowel Bar | 168 | Each |
| Insert Steel Bar In PCC Pavement | 64* | Each |

*Quantity includes 64 1 1/2" x 18" Plain Round Dowel Bars.



PLOT SCALE - 1:40
PLOT NAME - 6
FILE - ...\PRJ2016\UNIN02PT\02PT_PCCP.DGN
PLOTTED FROM - TRMI11118

# SURFACING DETAILS

## STR. NO. 64-154-385 I29 MRM 2.48 SBL
## & STR. NO. 64-155-385 I29 MRM 2.48 NBL

Remove Concrete Pavement

Unclassified Excavation

## SECTION A-A (Removal)

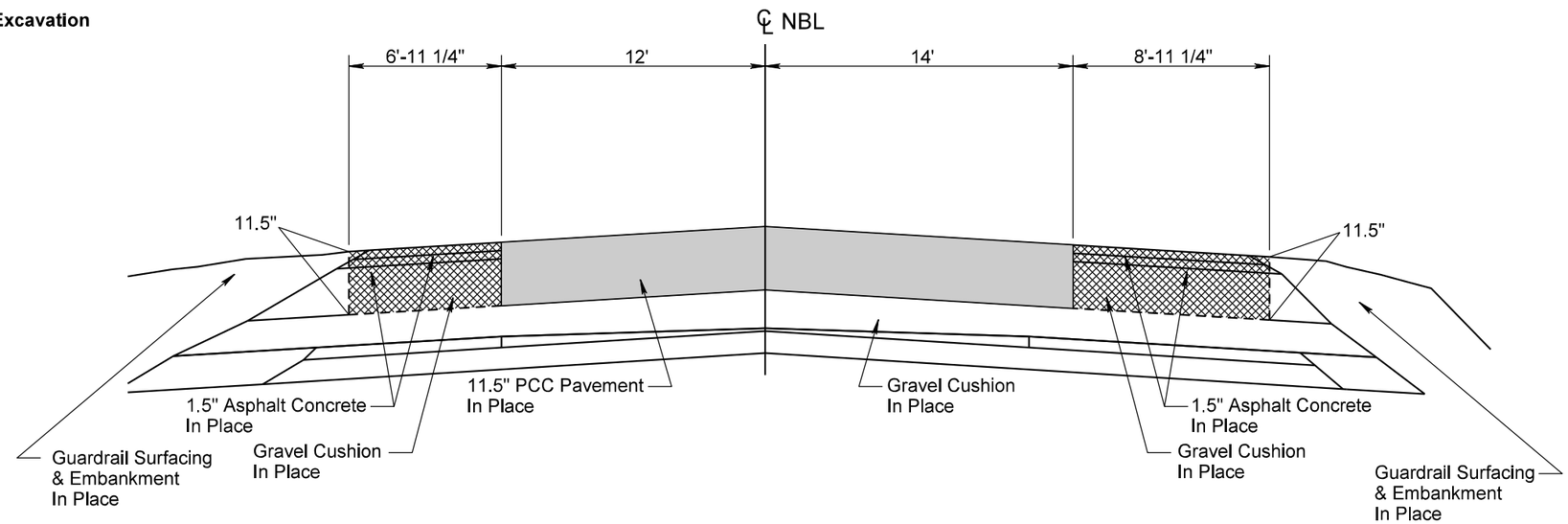


## SECTION C-C (Placement)

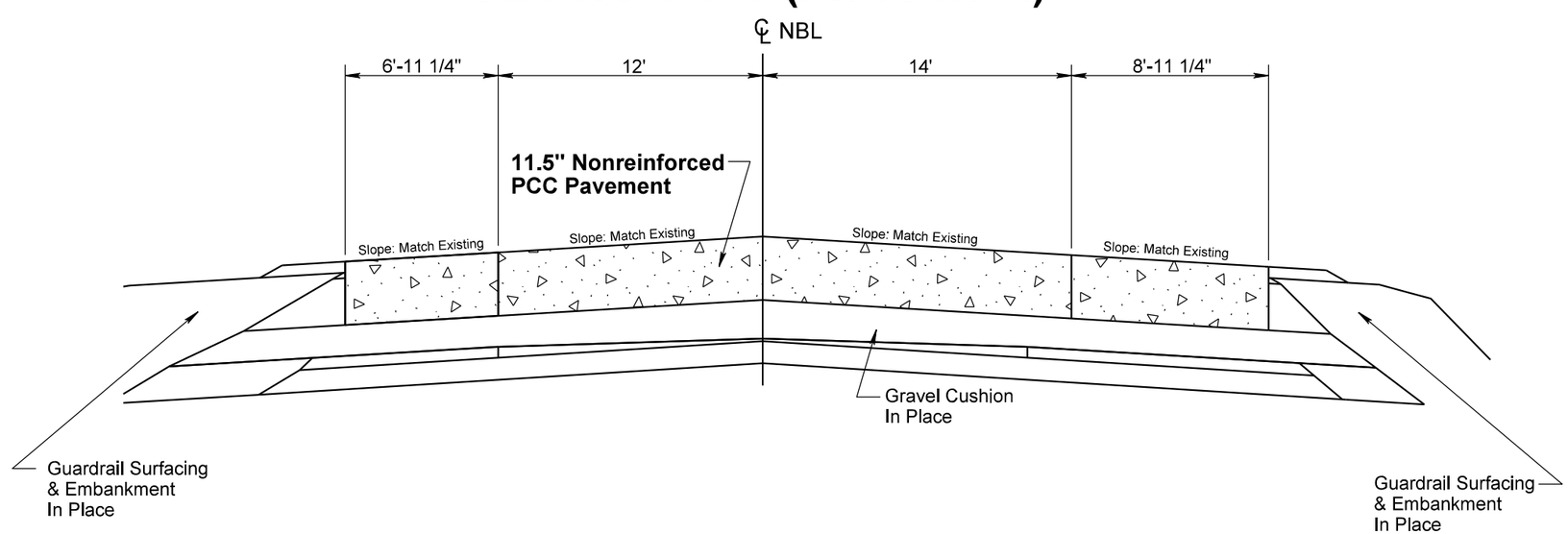




PLOT SCALE - 1:6.6
PLOTTED FROM - TRMI11118
PLOT NAME - 7
FILE - ...\PRJ2016\UNIN02PT\02PT_PCCP.DGN

# SURFACING DETAILS

## STR. NO. 64-154-385 I29 MRM 2.48 SBL
## & STR. NO. 64-155-385 I29 MRM 2.48 NBL

## SECTION B-B (Removal)

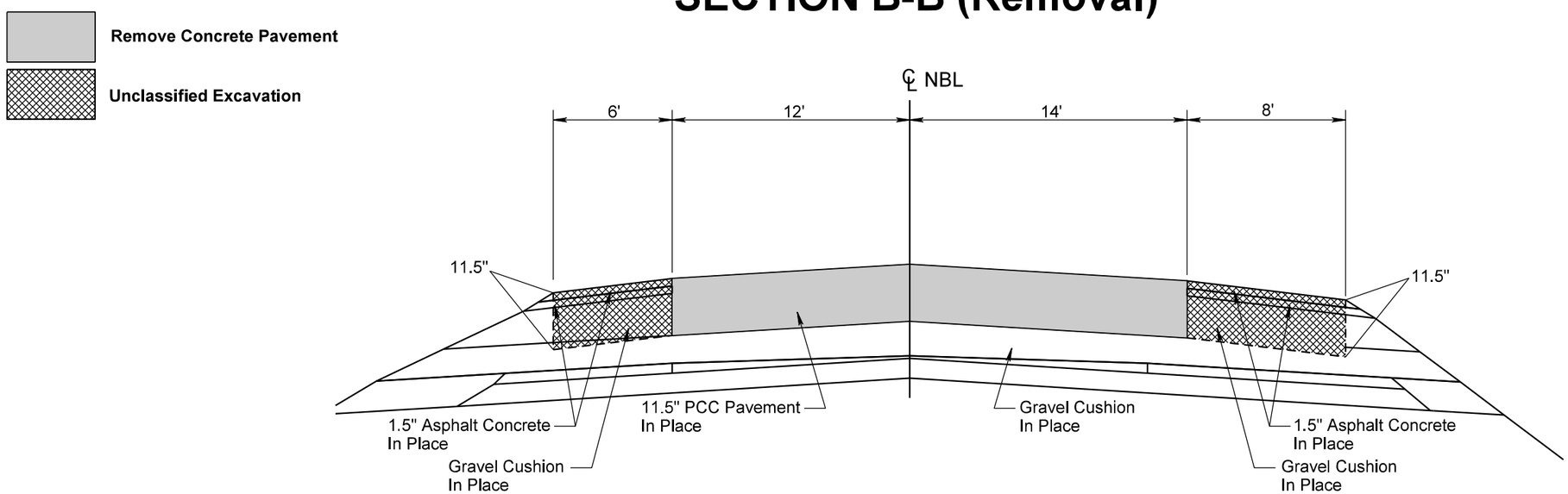


## SECTION D-D (Placement)

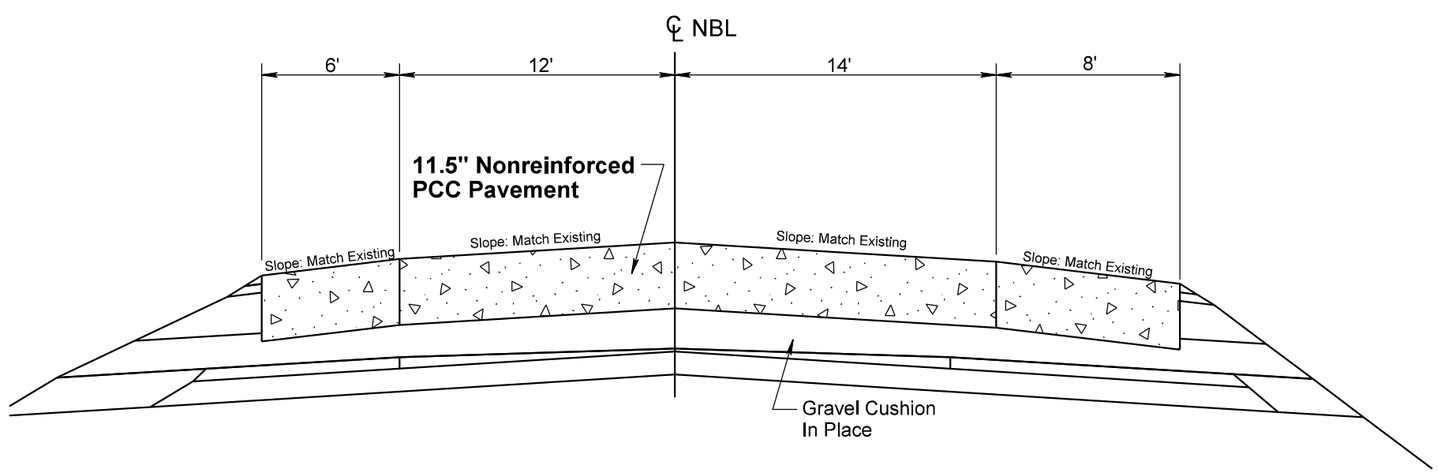




PLOT SCALE - 1:6.6
PLOTTED FROM - TRMI11118
PLOT NAME - 8
FILE - ...\PRJ2016\UNIN02PT\02PT_PCCP.DGN

# SURFACING DETAILS (Removal)

## STR. NO. 64-005-164 I29 MRM 30.92 SBL & STR. NO. 64-006-164 I29 MRM 30.92 NBL

Unclassified Excavation

Remove Concrete Pavement

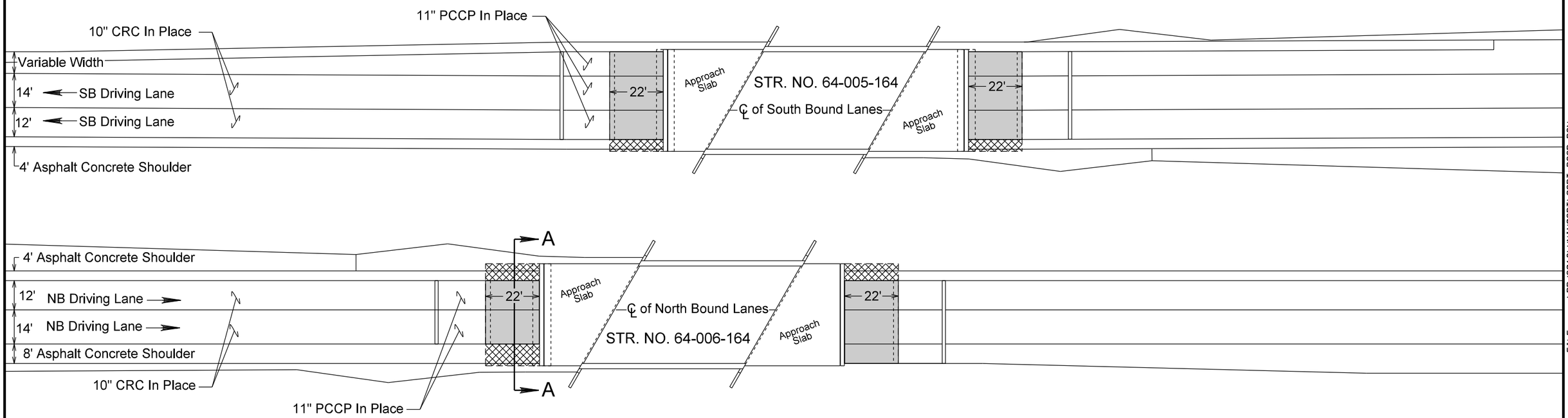


| Item | Quantity | Unit |
|---|---|---|
| Unclassified Excavation | 25 | CuYd |
| Remove Concrete Pavement | 324 | SqYd |



PLOT SCALE - 1:40
PLOT NAME - 9
FILE - ...\PRJ2016\UNIN02PT\02PT_PCCP.DGN
PLOTTED FROM - TRMI11118

# SURFACING DETAILS (Placement)

## STR. NO. 64-005-164 I29 MRM 30.92 SBL & STR. NO. 64-006-164 I29 MRM 30.92 NBL

LEGEND:

Sawed Longitudinal Joint with Tie Bars or Longitudinal Construction Joint With Tie Bars — LT — LT — LT —

Transverse Contraction Joint - - - - - - - - - - - - - - - - - - - - - - - - - - - - - - - - - - - - - - - -

Longitudinal Construction Joint without Tie Bars — L — L — L — L —

Steel Bar Insertion in Longitudinal or Transverse Joints — SB — SB —

Transverse contraction joints within these areas shall not have dowel bar assemblies. All other transverse contraction joints shall have dowel bar assemblies.

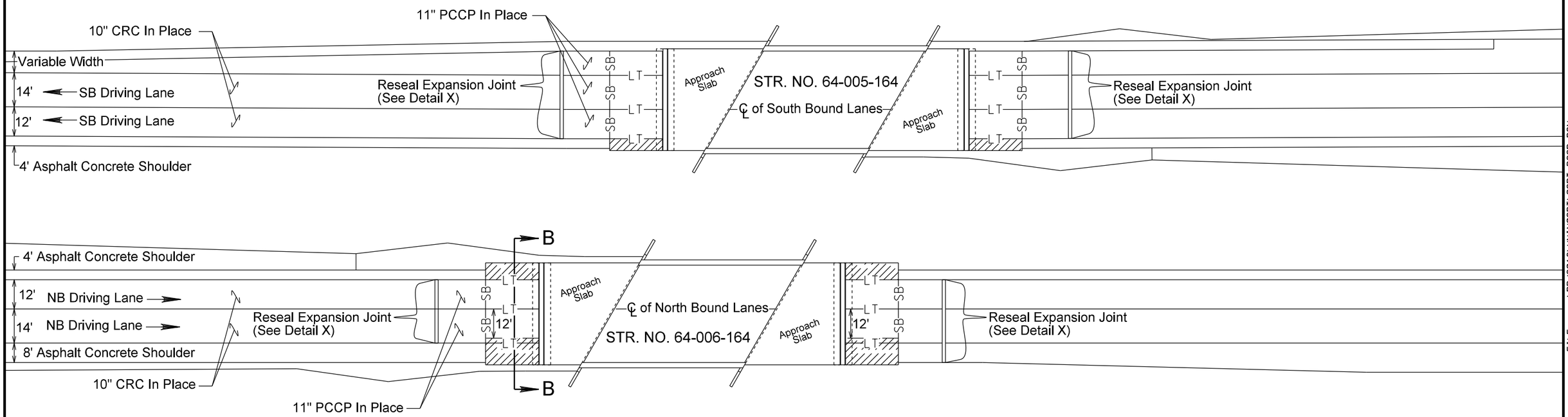


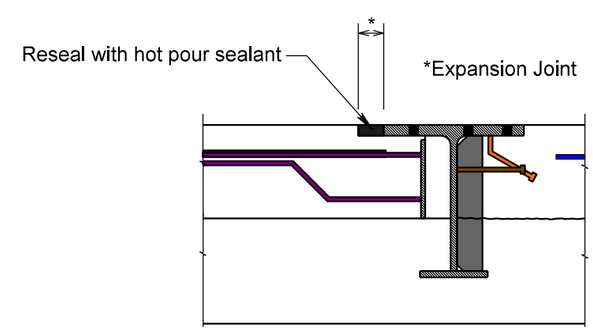


DETAIL X

| Item | Quantity | Unit |
|---|---|---|
| 11" Nonreinforced PCC Pavement | 400 | SqYd |
| Insert Steel Bar In PCC Pavement | 76* | Each |

*Quantity includes 76 1 1/2" x 18" Plain Round Dowel Bars.



PLOT SCALE - 1:40
PLOT NAME - 10
FILE - ...\PRJ2016\UNIN02PT\02PT_PCCP.DGN
PLOTTED FROM - TRMI11118

# SURFACING DETAILS

## STR. NO. 64-005-164 I29 MRM 30.92 SBL
## & STR. NO. 64-006-164 I29 MRM 30.92 NBL

Remove Concrete Pavement

Unclassified Excavation

## SECTION A-A (Removal)

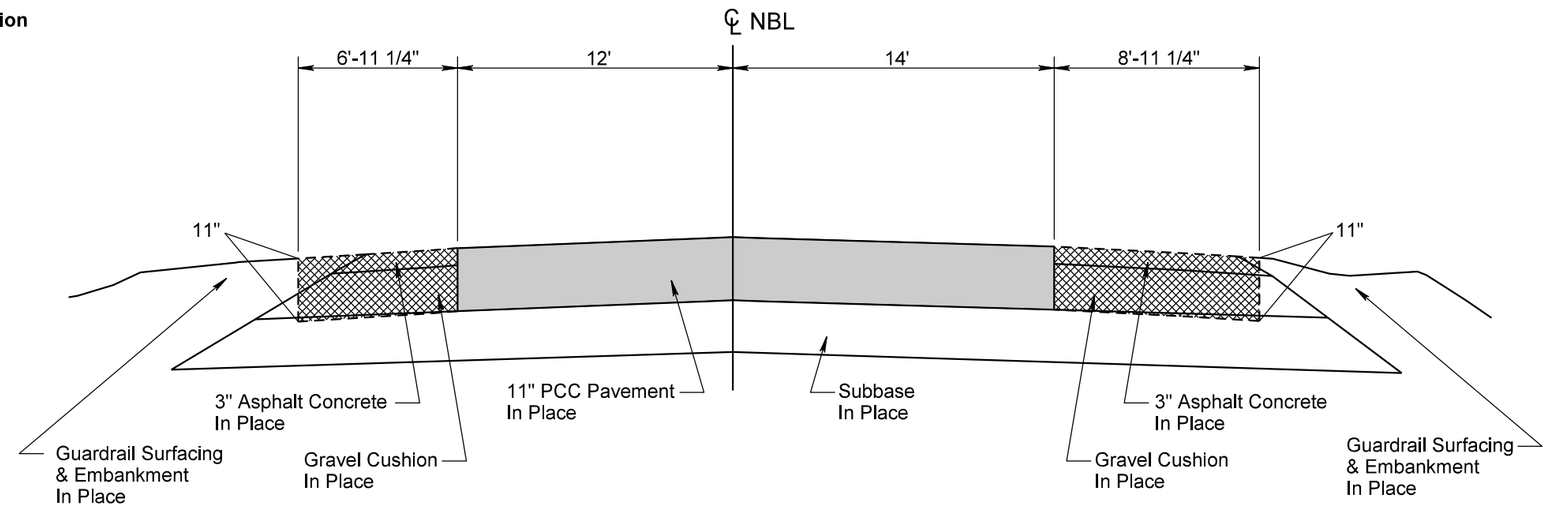


## SECTION B-B (Placement)

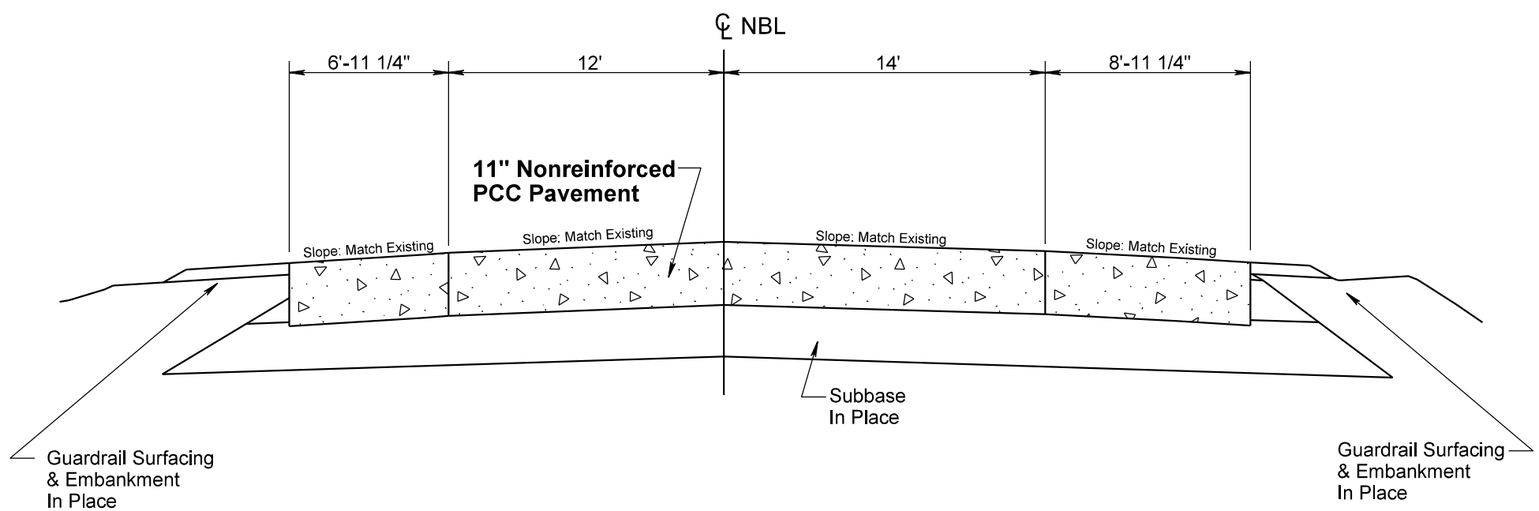




PLOT SCALE - 1:6.6
PLOTTED FROM - TRMI11118
PLOT NAME - 11
FILE - ...\PRJ2016\UNIN02PT\02PT_PCCP.DGN

# PAVEMENT PROFILE FOR BRIDGE

## AT WEST END OF STR. NO. 64-164-405

NOTE: Add 1100.00 to all elevations shown on profile.

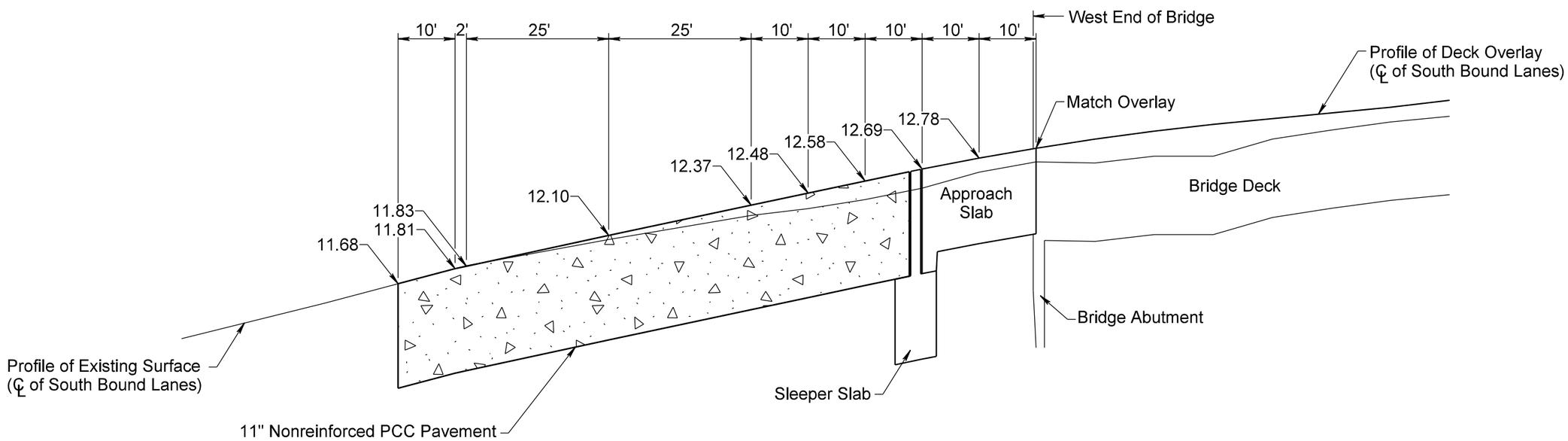



PLOT SCALE - 1:1
PLOT NAME - 12
FILE ...\PRJ2016\UNIN02PT\02PT_PCCP.DGN
PLOTTED FROM - TRMI11118

# PAVEMENT PROFILE FOR BRIDGE

## AT SOUTH END OF STR. NO. 64-154-385

NOTE: Add 1100.00 to all elevations shown on profile.

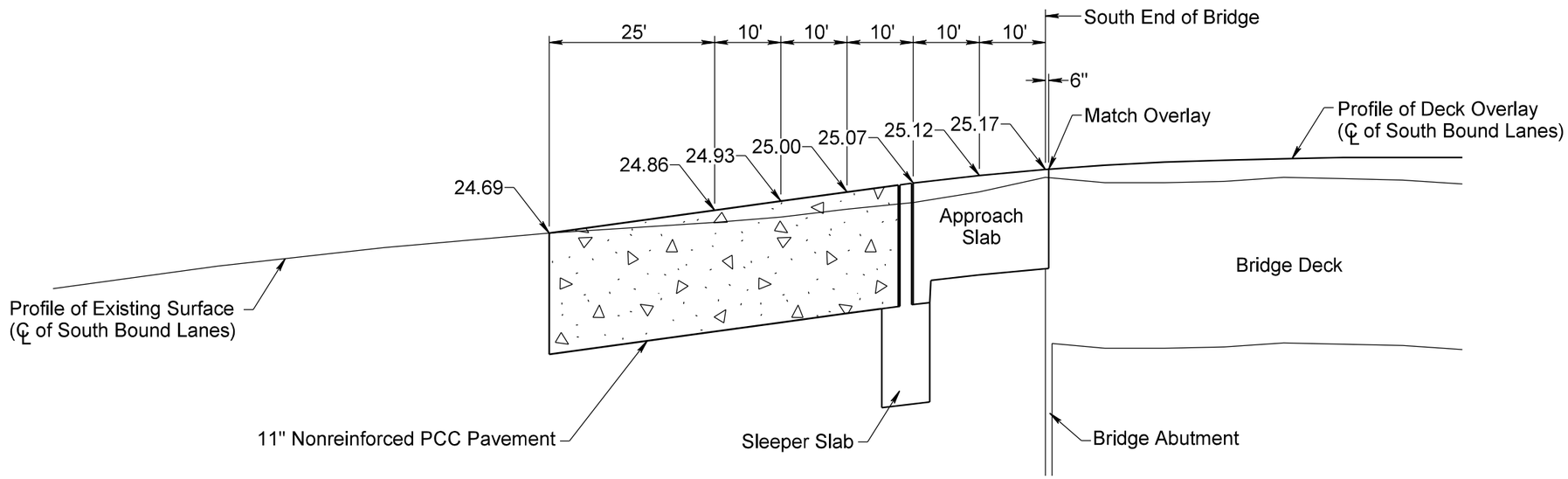


# PAVEMENT PROFILE FOR BRIDGE

## AT NORTH END OF STR. NO. 64-154-385

NOTE: Add 1100.00 to all elevations shown on profile.

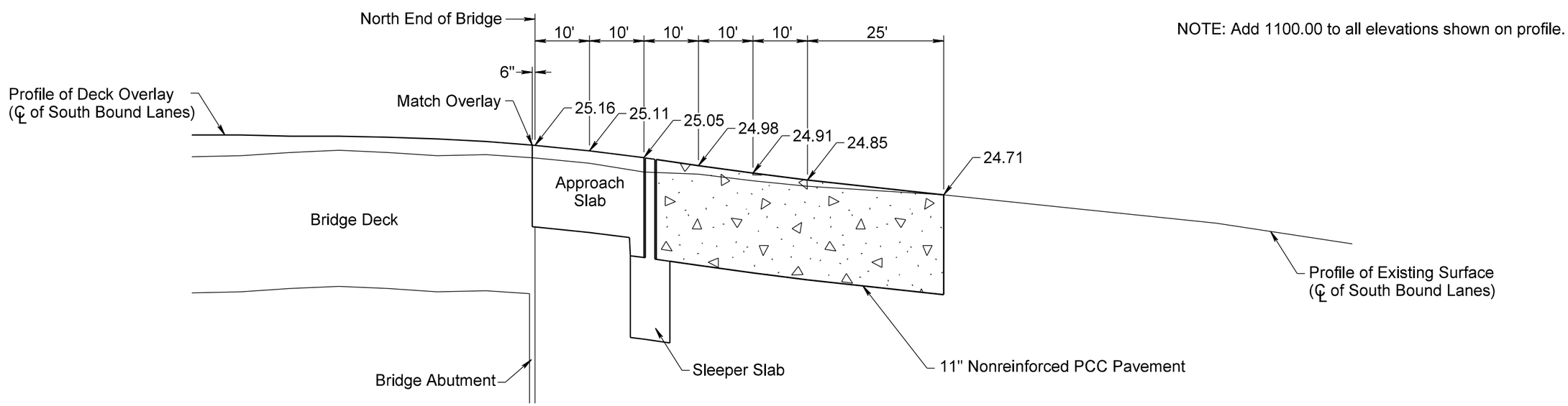



PLOT SCALE - 1:1
PLOT NAME - 13
FILE - ...\PRJ2016\UNIN02PT\02PT_PCCP.DGN
PLOTTED FROM - TRMI11118

# PAVEMENT PROFILE FOR BRIDGE

## AT SOUTH END OF STR. NO. 64-155-385

NOTE: Add 1100.00 to all elevations shown on profile.

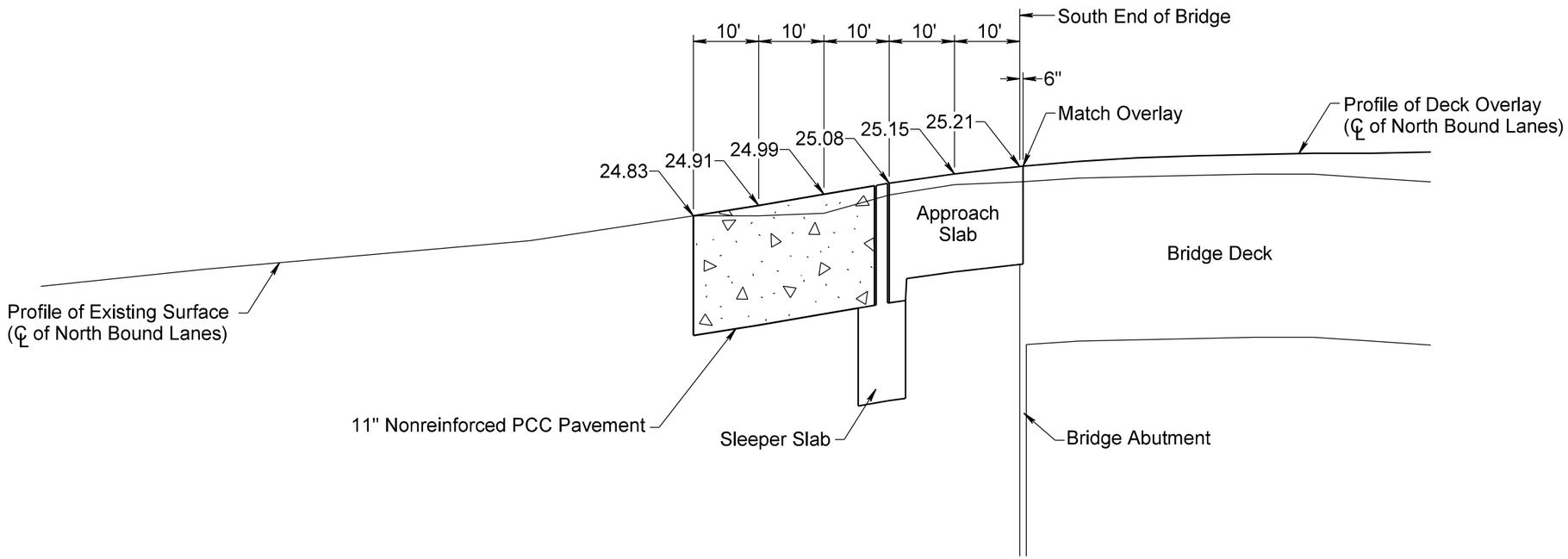


# PAVEMENT PROFILE FOR BRIDGE

## AT NORTH END OF STR. NO. 64-155-385

NOTE: Add 1100.00 to all elevations shown on profile.

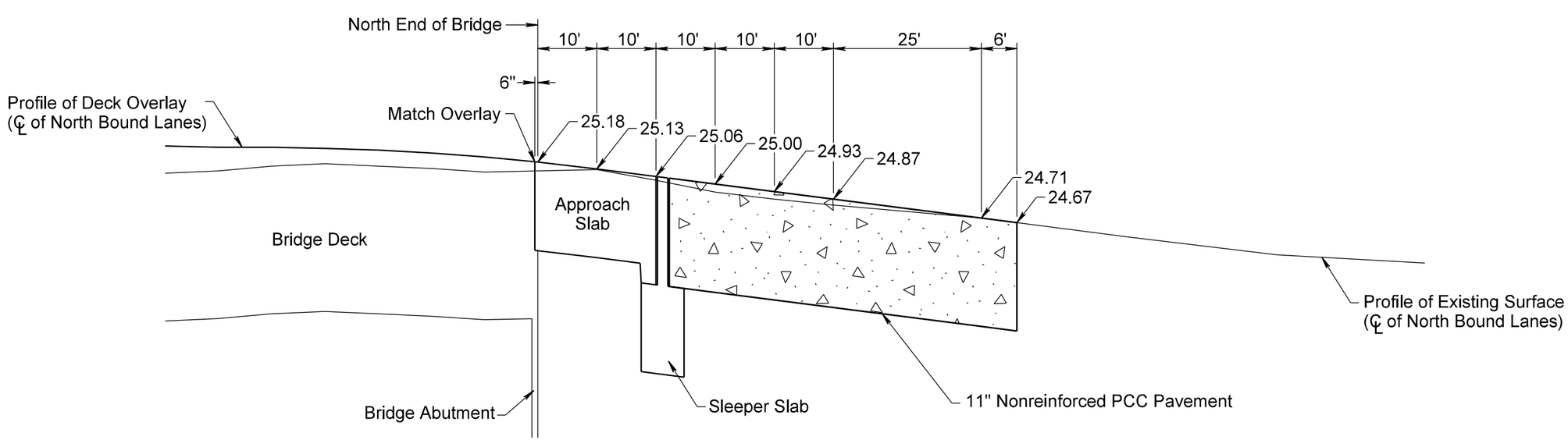



PLOT SCALE - 1:1
PLOT NAME - 14
FILE - ...\PRJ2016\UNIN02PT\02PT_PCCP.DGN
PLOTTED FROM - TRM111118

| STATE OF SOUTH DAKOTA | PROJECT | SHEET | TOTAL SHEETS |
|---|---|---|---|
| | IM-PH 0291(122)0 | 254 | 284 |

Plotting Date: 05/11/2016

# DROP INLET FRAME & GRATE RESET

## STR. NO. 64-164-405 I29 SBL MRM 0.05 (WEST END)

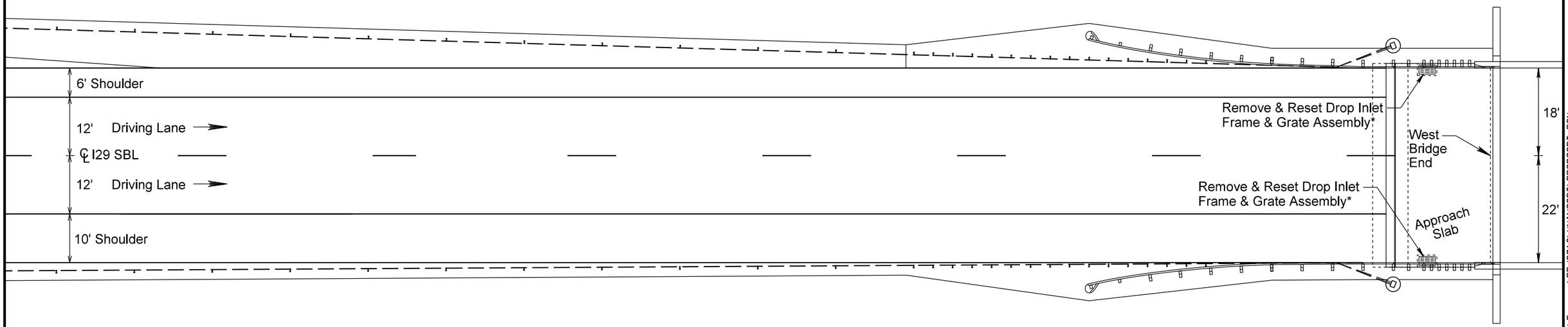


*Drop Inlet is in place and the Contractor will be required to use Class M6 Concrete as shown to get the Frame & Grate Assembly flush with the new Approach Slab.

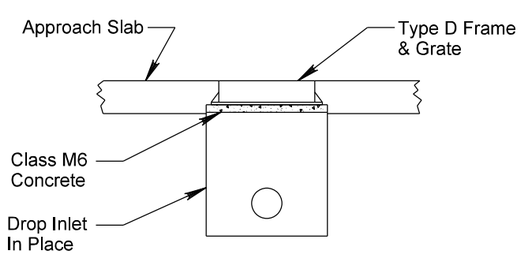


PLOT SCALE - 1:20

PLOT NAME - 15

FILE - ...\PRJ2016\UNIN02PT\DROP02PT.DGN

PLOTTED FROM - TRM111118

| STATE OF SOUTH DAKOTA | PROJECT | SHEET | TOTAL SHEETS |
|---|---|---|---|
| | IM-PH 0291(122)0 | 255 | 284 |

Plotting Date: 05/11/2016

# DROP INLET FRAME & GRATE RESET

## STR. NO. 64-164-405 I29 SBL MRM 0.05 (EAST END)

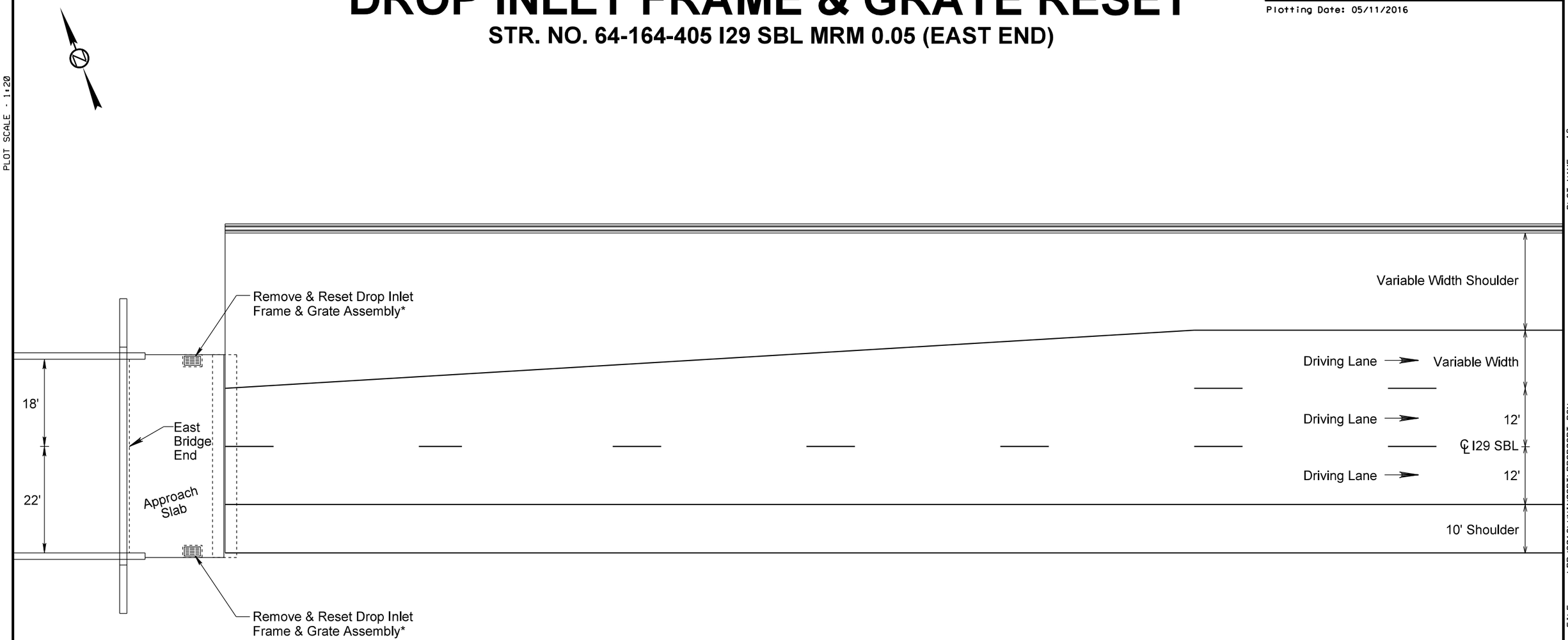


*Drop Inlet is in place and the Contractor will be required to use Class M6 Concrete as shown to get the Frame & Grate Assembly flush with the new Approach Slab.

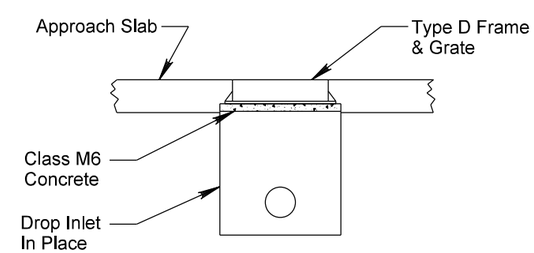


PLOT SCALE - 1:20

PLOT NAME - 16

FILE - ...\PRJ2016\UNIN02PT\DROP02PT.DGN

PLOTTED FROM - TRM111118

| STATE OF SOUTH DAKOTA | PROJECT | SHEET | TOTAL SHEETS |
|---|---|---|---|
| | IM-PH 0291(122)0 | 256 | 284 |

Plotting Date: 05/11/2016

# DROP INLET FRAME & GRATE RESET

## STR. NO. 64-154-385 I29 SBL MRM 2.48 (SOUTH END)
## & STR. NO. 64-155-385 I29 NBL MRM 2.48 (SOUTH END)

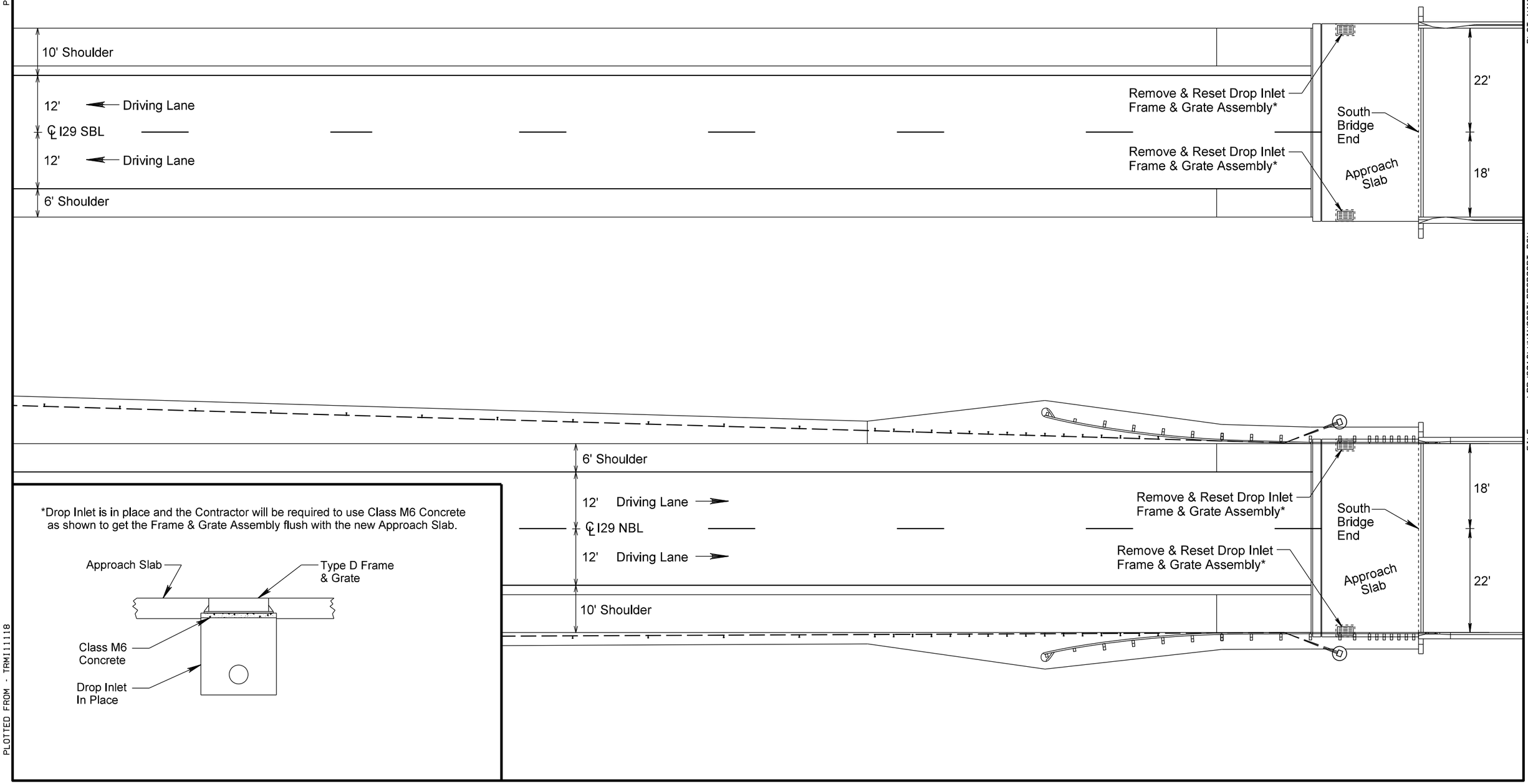


*Drop Inlet is in place and the Contractor will be required to use Class M6 Concrete as shown to get the Frame & Grate Assembly flush with the new Approach Slab.




PLOT SCALE - 1:20

PLOT NAME - 17

FILE - ...\PRJ2016\UNIN02PT\DROP02PT.DGN

PLOTTED FROM - TRMI11118

| STATE OF SOUTH DAKOTA | PROJECT | SHEET | TOTAL SHEETS |
|---|---|---|---|
| | IM-PH 0291(122)0 | 257 | 284 |

Plotting Date: 05/11/2016

# DROP INLET FRAME & GRATE RESET

## STR. NO. 64-154-385 I29 SBL MRM 2.48 (NORTH END)
## & STR. NO. 64-155-385 I29 NBL MRM 2.48 (NORTH END)

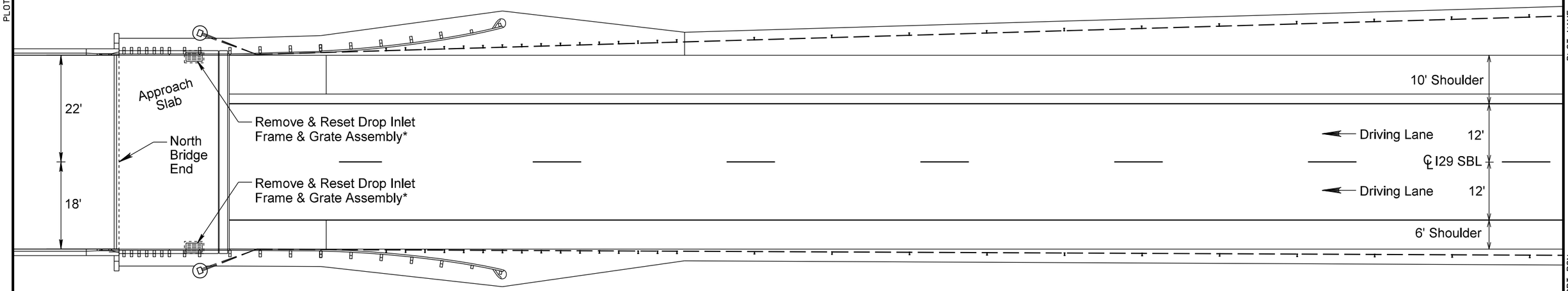


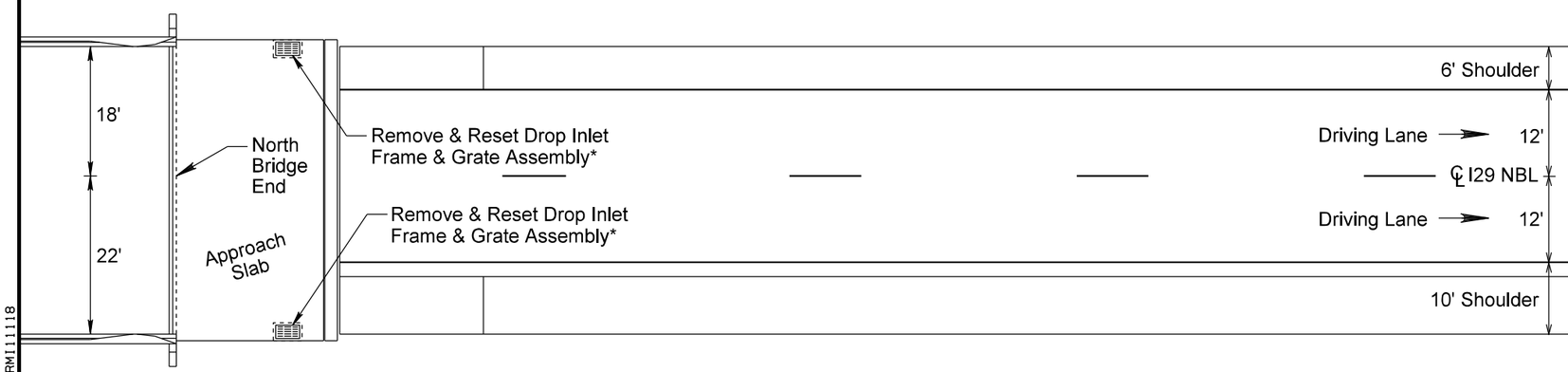


*Drop Inlet is in place and the Contractor will be required to use Class M6 Concrete as shown to get the Frame & Grate Assembly flush with the new Approach Slab.

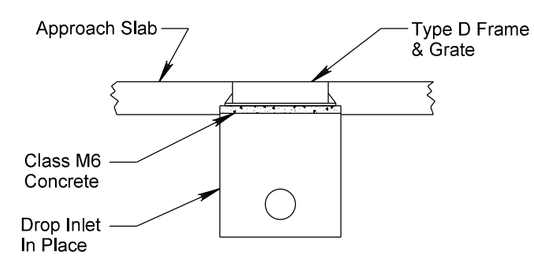


PLOT SCALE - 1:20

PLOT NAME - 18

FILE - ...\PRJ2016\UNIN02PT\DROP02PT.DGN

PLOTTED FROM - TRMI11118

# INSTALLATION OF GUARDRAIL

## STR. NO. 64-164-405 I29 MRM 0.05 SBL

| STATE OF SOUTH DAKOTA | PROJECT | SHEET | TOTAL SHEETS |
|---|---|---|---|
| | IM-PH 0291(122)0 | 258 | 284 |

Plotting Date: 05/11/2016

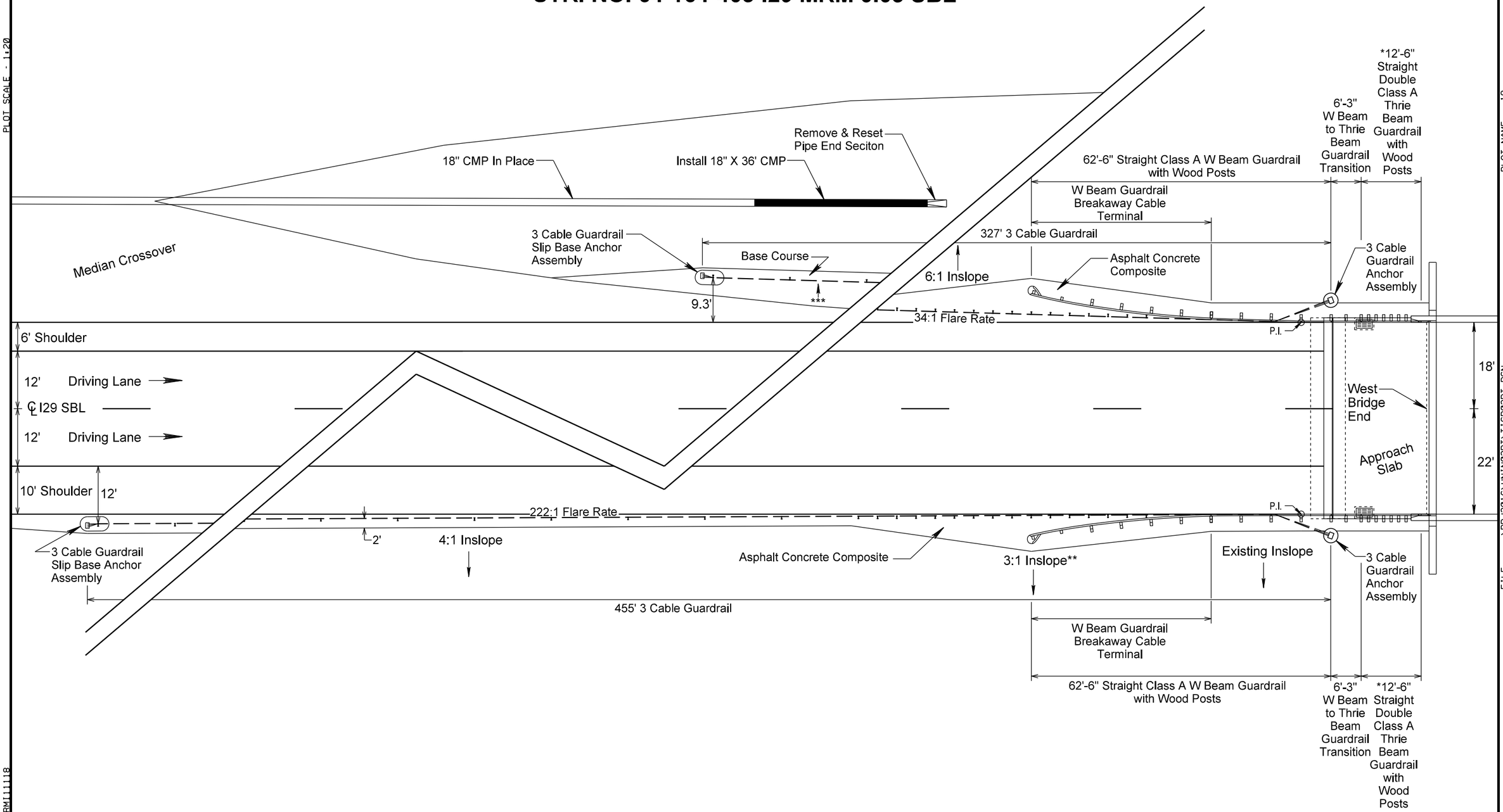


*2'-1 1/4" of guardrail overlaps onto End Block.

**Transition from a 4:1 inslope to a 3:1 inslope in 38'. Transition from a 3:1 Inslope to the existing inslope in 38'.

***Match the cross slope on the shoulder and Median Crossover.

PLOT SCALE - 1:20

PLOT NAME - 19

FILE - ...\PR\2016\UNIN02PT\TIGR02PT.DGN

PLOTTED FROM - TRM11118

| STATE OF SOUTH DAKOTA | PROJECT | SHEET | TOTAL SHEETS |
|---|---|---|---|
| | IM-PH 0291(122)0 | 259 | 284 |

Plotting Date: 05/11/2016

# INSTALLATION OF GUARDRAIL

## STR. NO. 64-154-385 I29 MRM 2.48 SBL & STR. NO. 64-155-385 I29 MRM 2.48 NBL

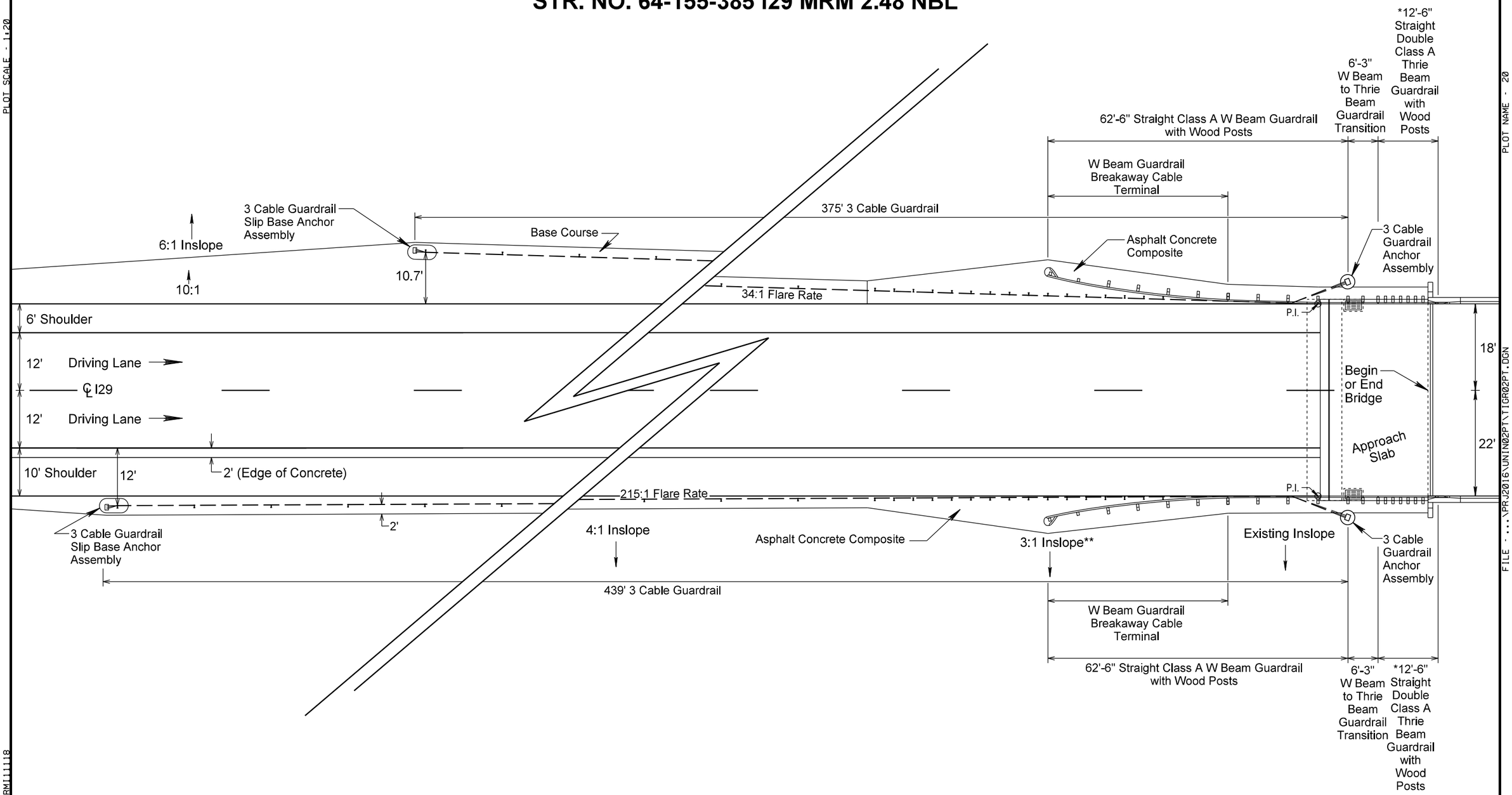


*2'-1 1/4" of guardrail overlaps onto the bridge.

**Transition from a 4:1 inslope to a 3:1 inslope in 38'. Transition from a 3:1 Inslope to the existing inslope in 38'.

PLOT SCALE - 1:20

PLOT NAME - 20

FILE - ...\PRJ2016\UNIN02PT\TIGR02PT.DGN

PLOTTED FROM - TRM111118

# INSTALLATION OF GUARDRAIL

## STR. NO. 64-149-367 I29 MRM 4.35

| STATE OF SOUTH DAKOTA | PROJECT | SHEET | TOTAL SHEETS |
|---|---|---|---|
| | IM-PH 0291(122)0 | 260 | 284 |

Plotting Date: 05/11/2016

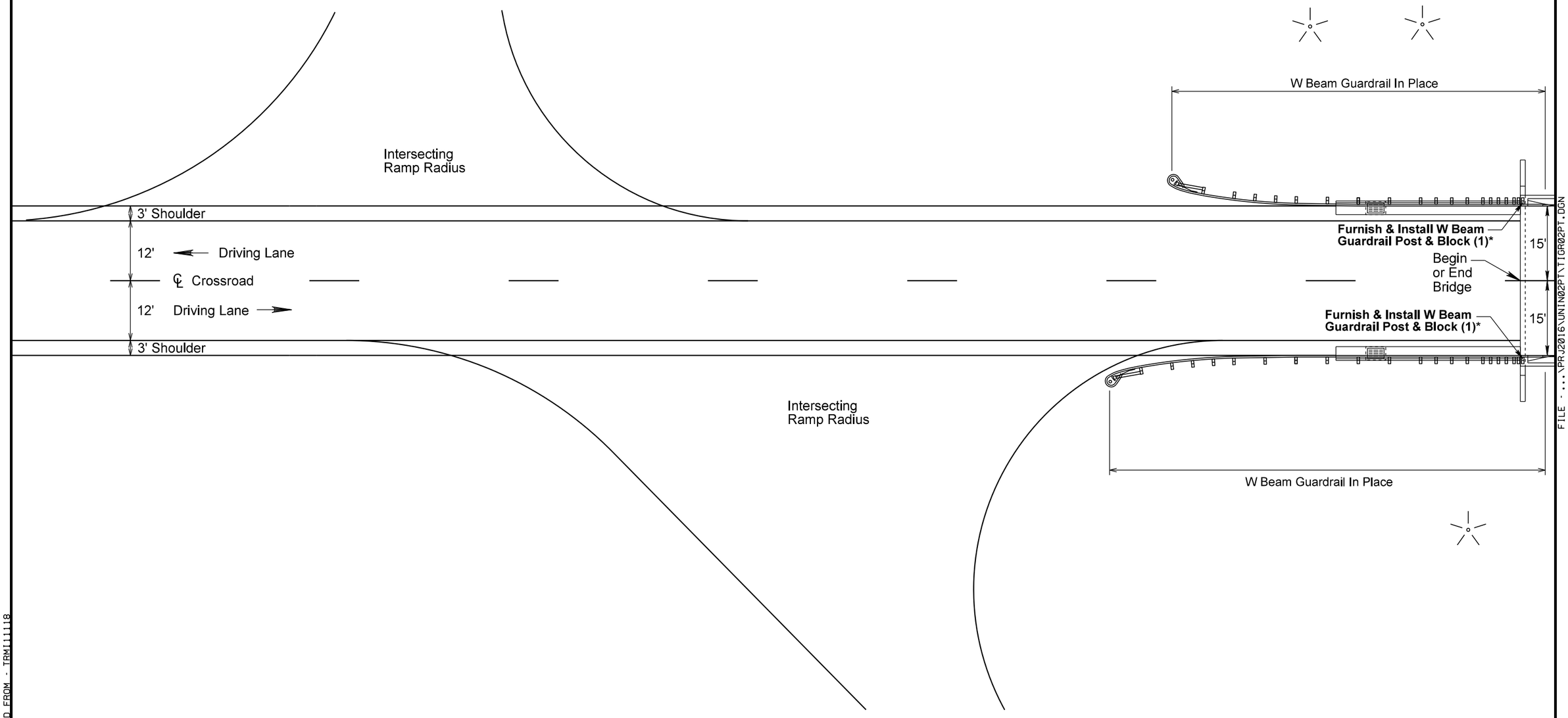


*In the Details for Str. No. 64-149-367, refer to notes and details for Fabricated Support Bracket for Rail Post.

PLOT SCALE - 1:20

PLOT NAME - 21

FILE - ...\PRJ2016\UNIN02PT\TIGR02PT.DGN

PLOTTED FROM - TRM111118

# INSTALLATION OF GUARDRAIL

## STR. NO. 64-008-205 I29 MRM 26.71 (WEST END)

| STATE OF SOUTH DAKOTA | PROJECT | SHEET | TOTAL SHEETS |
|---|---|---|---|
| | IM-PH 0291(122)0 | 261 | 284 |

Plotting Date: 05/11/2016

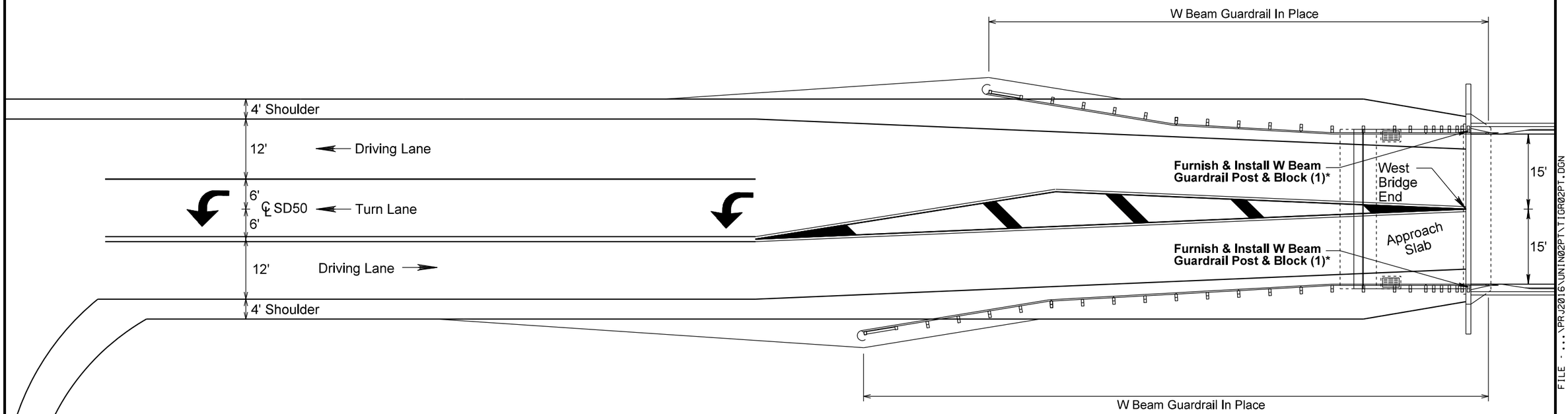


*In the Details for Str. No. 64-149-367, refer to notes and details for Fabricated Support Bracket for Rail Post.

PLOT SCALE - 1:20

PLOT NAME - 22

FILE - ...\PRJ2016\UNIN02PT\TIGR02PT.DGN

PLOTTED FROM - TRMI11118

# INSTALLATION OF GUARDRAIL

## STR. NO. 64-008-205 I29 MRM 26.71 (EAST END)

| STATE OF SOUTH DAKOTA | PROJECT | SHEET | TOTAL SHEETS |
|---|---|---|---|
| | IM-PH 0291(122)0 | 262 | 284 |

Plotting Date: 05/11/2016

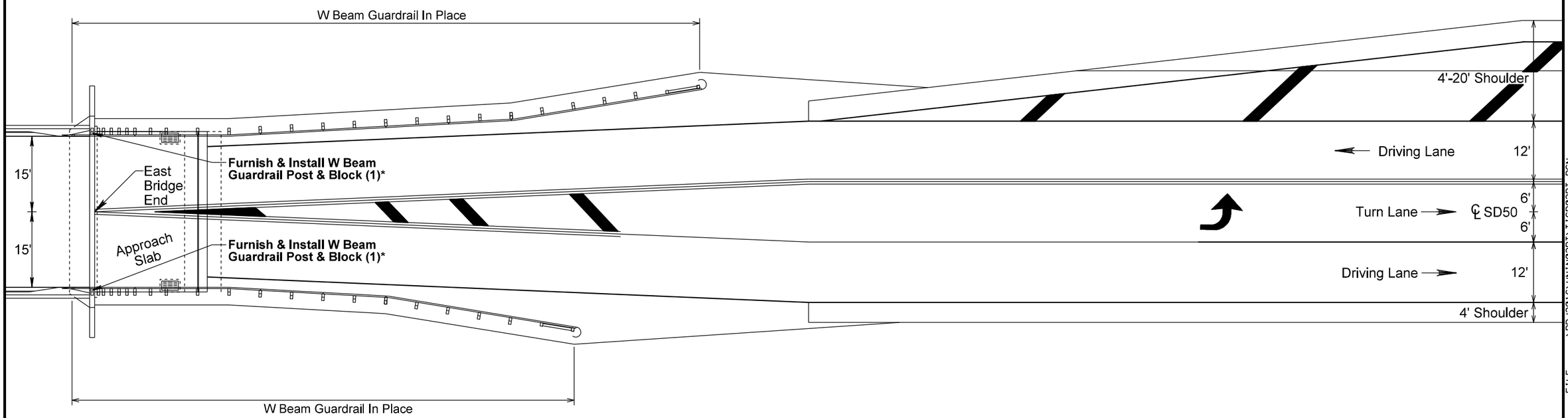


*In the Details for Str. No. 64-149-367, refer to notes and details for Fabricated Support Bracket for Rail Post.

PLOT SCALE - 1:20

PLOT NAME - 23

FILE - ...\PRJ2016\UNIN02PT\TIGR02PT.DGN

PLOTTED FROM - TRMI11118

# INSTALLATION OF GUARDRAIL

## STR. NO. 64-005-164 I29 MRM 30.92 SBL

| STATE OF SOUTH DAKOTA | PROJECT | SHEET | TOTAL SHEETS |
|---|---|---|---|
| | IM-PH 0291(122)0 | 263 | 284 |

Plotting Date: 05/11/2016

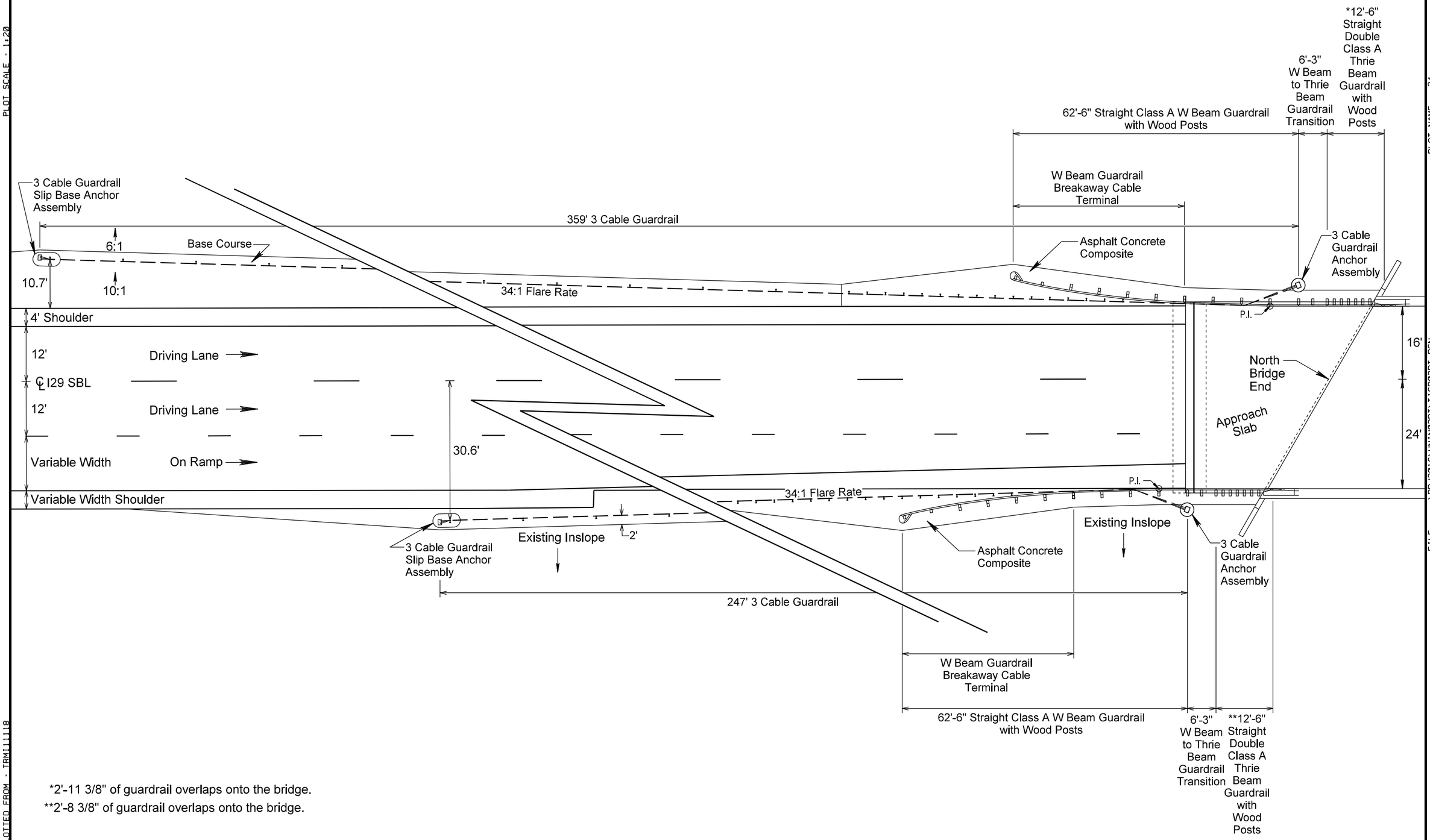


*2'-11 3/8" of guardrail overlaps onto the bridge.

**2'-8 3/8" of guardrail overlaps onto the bridge.

PLOT SCALE - 1:20

PLOT NAME - 24

FILE - ...\PRJ2016\UNIN02PT\TIGR02PT.DGN

PLOTTED FROM - TRM111118

# INSTALLATION OF GUARDRAIL

## STR. NO. 64-006-164 I29 MRM 30.92 NBL

| STATE OF SOUTH DAKOTA | PROJECT | SHEET | TOTAL SHEETS |
|---|---|---|---|
| | IM-PH 0291(122)0 | 264 | 284 |

Plotting Date: 05/11/2016

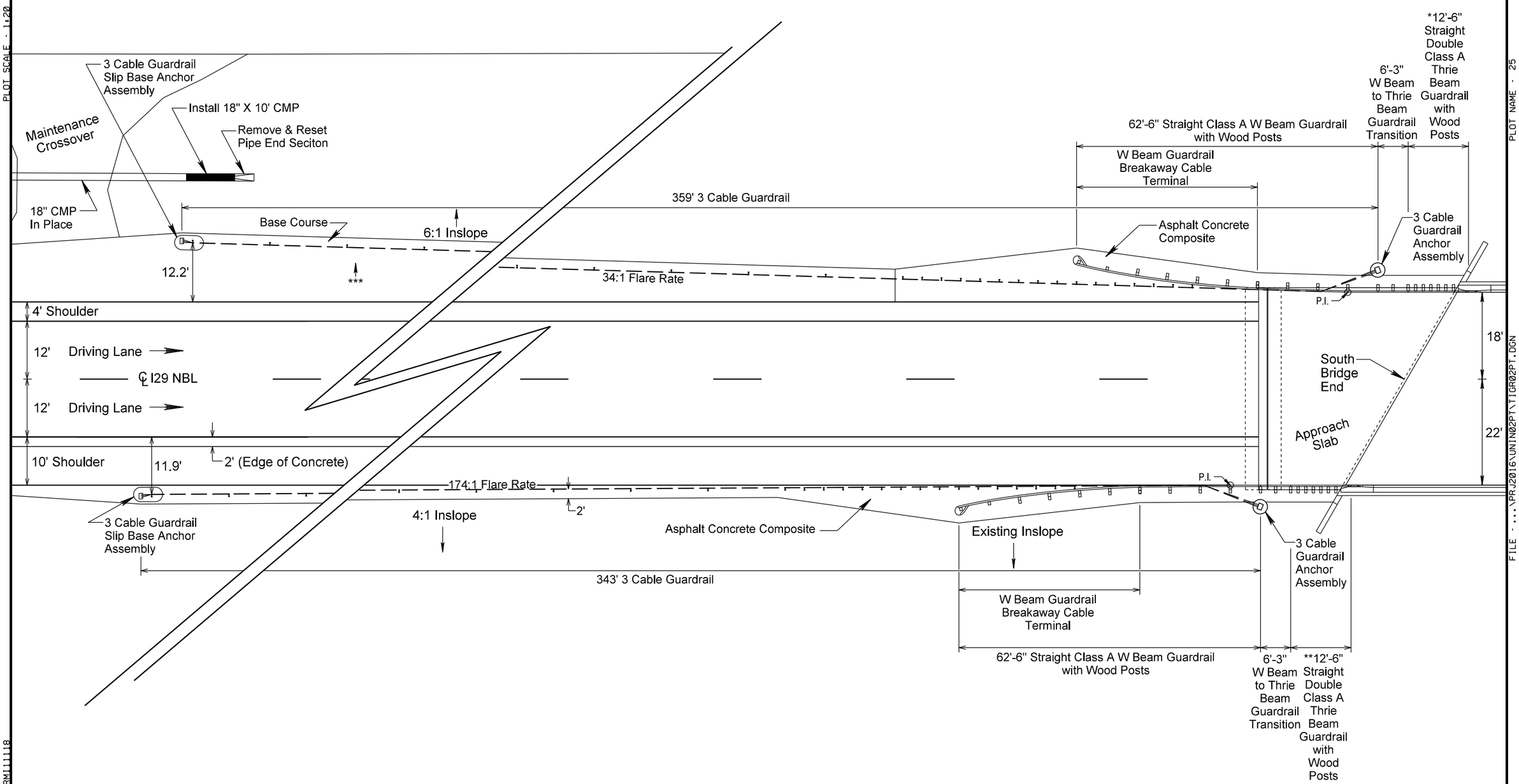


*2'-11 3/8" of guardrail overlaps onto the bridge.

**2'-8 3/8" of guardrail overlaps onto the bridge.

***Match the cross slope on the shoulder and Maintenance Crossover.

PLOT SCALE - 1:20

PLOT NAME - 25

FILE - ...\PRJ2016\UNIN02PT\TIGR02PT.DGN

PLOTTED FROM - TRM111118

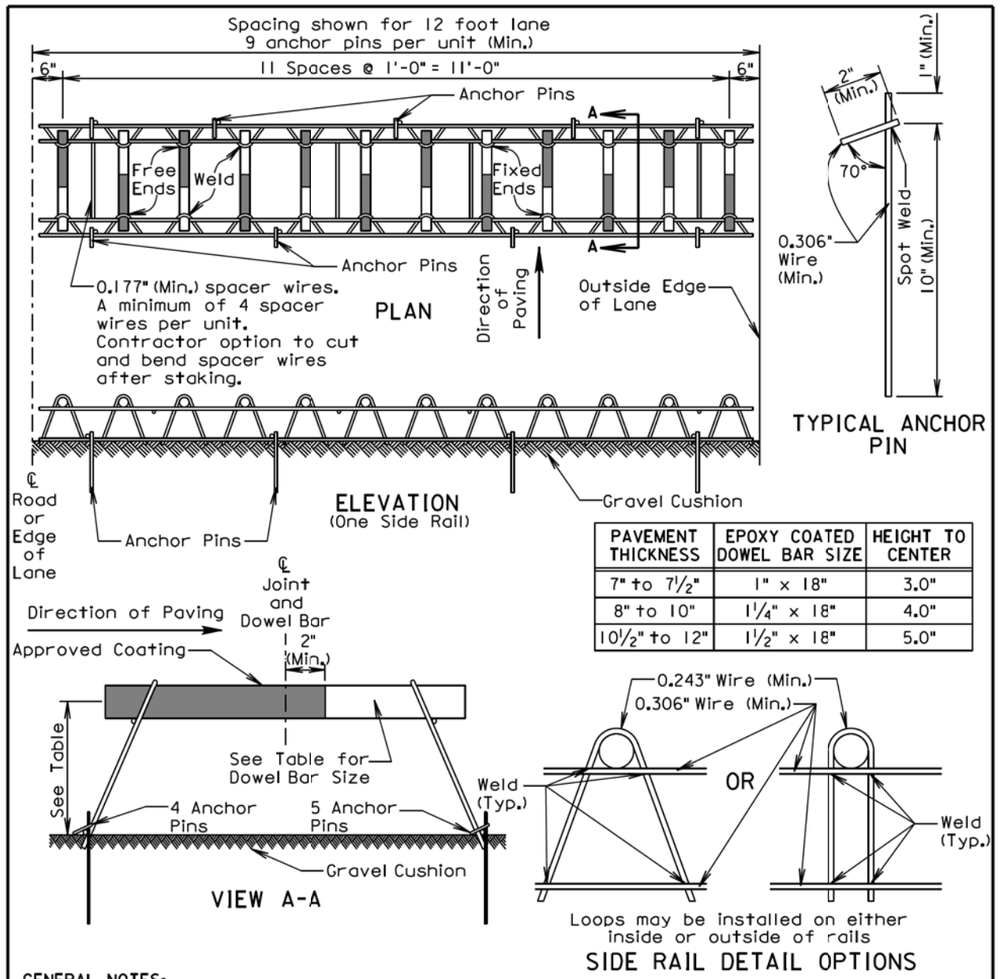


| PAVEMENT THICKNESS | EPOXY COATED DOWEL BAR SIZE | HEIGHT TO CENTER |
|---|---|---|
| 7" to 7½" | 1" x 18" | 3.0" |
| 8" to 10" | 1¼" x 18" | 4.0" |
| 10½" to 12" | 1½" x 18" | 5.0" |

**GENERAL NOTES:**

Longitudinal joint tie bars shall be placed a minimum of 15 inches from the transverse contraction joint.

Centerline of individual dowel bars shall be parallel to top of subgrade ±1/8 inch in 18 inches and to all other dowel bars in the assembly ±1/16 inch in 18 inches.

Centerline of individual dowel bars shall be parallel to the centerline of the roadway ±1/2 inch in 18 inches.

The transverse contraction joints shall be sawed perpendicular to the centerline of the roadway and the dowel bars shall be centered on the sawed joint ±1 inch.

Supporting devices as shown on this sheet, or equivalent as approved by the Engineer, shall be used to maintain proper horizontal and vertical alignment of the dowel bars.

August 30, 2013

| Published Date: 2nd Qtr. 2016 | SDDOT | PCC PAVEMENT DOWEL BAR ASSEMBLY FOR TRANSVERSE CONTRACTION JOINTS 12 Bar Assembly on Granular Base Material | PLATE NUMBER 380.01 Sheet 1 of 1 |
|---|---|---|---|

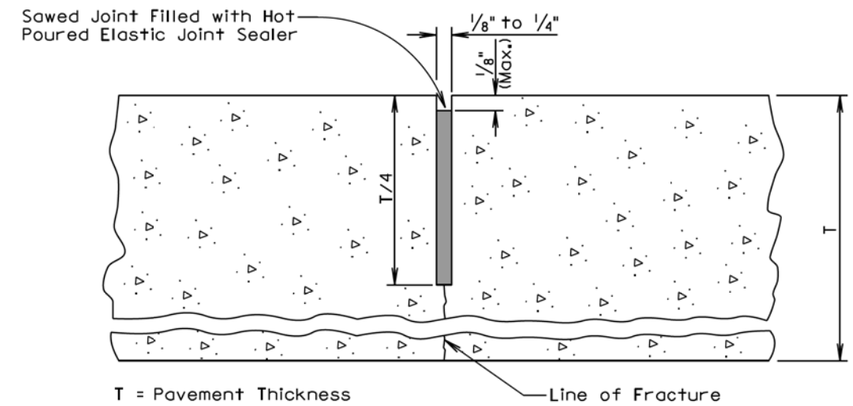


**GENERAL NOTES:**

If an early entrance sawcut does not develop the full transverse crack, then the saw cut to control cracking shall be a minimum of 1/4 the thickness of the pavement.

All hot poured elastic joint sealer material spilled on the surface of the concrete pavement shall be removed as soon as the material has cooled. The extent of removal of material shall be to the satisfaction of the Engineer. All costs for removal of the spilled joint sealer material shall be borne by the Contractor.

June 26, 2015

| Published Date: 2nd Qtr. 2016 | SDDOT | PCC PAVEMENT TRANSVERSE CONTRACTION JOINT WITH OR WITHOUT DOWEL BAR ASSEMBLY | PLATE NUMBER 380.05 Sheet 1 of 1 |
|---|---|---|---|


PLOT SCALE - 1:200
PLOT NAME - 26
FILE - ...\STANDARDPLATES_02PT.DGN
.PLOTTED FROM - TRM111118

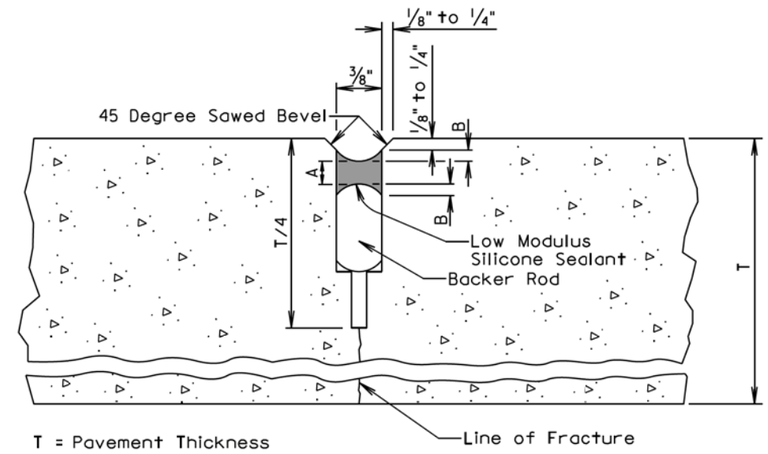


| LOW MODULUS SILICONE SEALANT ALLOWABLE CONSTRUCTION TOLERANCES | | | |
|---|---|---|---|
| A (Min.) (In.) | A (Max.) (In.) | B (Min.) (In.) | B (Max.) (In.) |
| 3/16 | 5/16 | 1/8 | 1/4 |

GENERAL NOTES:

The first saw cut to control cracking shall be a minimum of 1/4 the thickness of the pavement. Additional sawing for widening the saw cut to provide the width for the installation of the low modulus silicone joint sealant will be necessary.

The backer rod shall be a nonmoisture absorbing resilient material approximately 25% larger in diameter than the width of the joint to be sealed.

June 26, 2013

| Published Date: 2nd Qtr. 2016 | SDDOT | PCC PAVEMENT BEVELED TRANSVERSE CONTRACTION JOINT WITH OR WITHOUT DOWEL BAR ASSEMBLY | PLATE NUMBER 380.06 |
|---|---|---|---|
| | | | Sheet 1 of 1 |


PLOT SCALE - 1:200

PLOT NAME - 27

FILE - ...\STANDARDPLATES_02PT.DGN

.PLOTTED FROM - TRMI11118

## DETAIL A
## TRANSVERSE CONSTRUCTION JOINT WITH TIE BARS

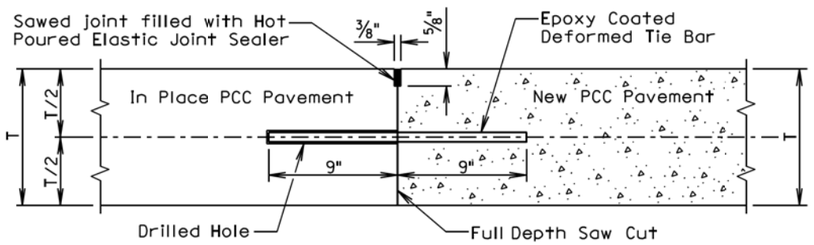


T = In Place PCC Pavement and New PCC Pavement Thickness

**GENERAL NOTES:**

The term "In Place PCC Pavement" in the above drawing indicates that the in place PCC pavement was placed on a previous project.

See sheet 2 of 2 of this standard plate to determine if Detail A shall be used.

The tie bars shall be embedded a minimum depth of 9 inches into the in place PCC pavement and anchored with an epoxy resin adhesive.

No. 9 epoxy coated deformed tie bars shall be used in 10 inch thickness and less PCC Pavement and No. 11 epoxy coated deformed tie bars shall be used in 10.5 inch thickness and greater PCC Pavement. The tie bar spacing shall be 18 inches center to center and shall be a minimum of 3 inches and a maximum of 9 inches from the pavement edges.

## DETAIL B
## TRANSVERSE CONSTRUCTION JOINT WITH DOWEL BARS

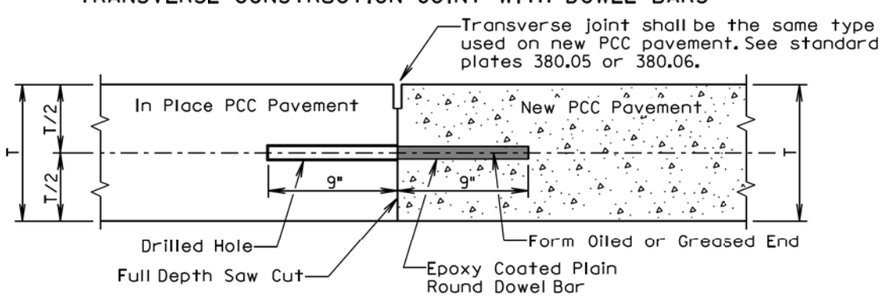


T = In Place PCC Pavement and New PCC Pavement Thickness

**GENERAL NOTES:**

The term "In Place PCC Pavement" in the above drawing indicates that the in place PCC pavement was placed on a previous project or current project.

See sheet 2 of 2 of this standard plate to determine if Detail B shall be used.

The plain round dowel bars shall be embedded a minimum depth of 9 inches into the in place PCC pavement and anchored with an epoxy resin adhesive.

The epoxy coated plain round dowel bar size, number, and spacing shall be the same as detailed on the corresponding dowel bar assembly standard plate (380.01, 380.02, 380.03, or 380.04). The epoxy coated plain round dowel bars shall be a minimum of 3 inches and a maximum of 6 inches from the pavement edges.

*September 6, 2013*

| Published Date: 2nd Qtr. 2016 | SDDOT | PCC PAVEMENT TRANSVERSE CONSTRUCTION JOINTS WITH TIE BARS OR DOWEL BARS | PLATE NUMBER 380.08 |
|---|---|---|---|
| | | | Sheet 1 of 2 |

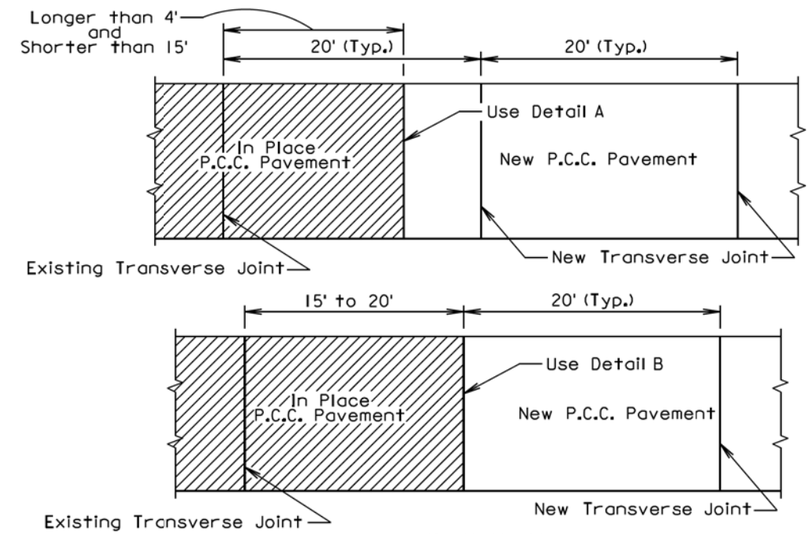


PLAN VIEW
(For typical transverse joint spacing of 20' on the current project)

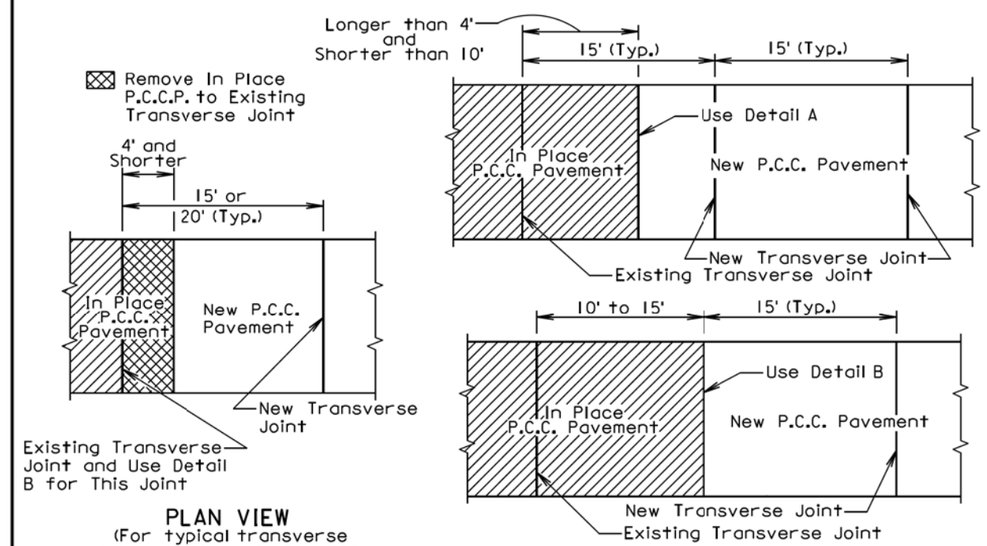


PLAN VIEW
(For typical transverse joint spacing of 15' or 20' on the current project)

PLAN VIEW
(For typical transverse joint spacing of 15' on the current project)

*September 6, 2013*

| Published Date: 2nd Qtr. 2016 | SDDOT | PCC PAVEMENT TRANSVERSE CONSTRUCTION JOINTS WITH TIE BARS OR DOWEL BARS | PLATE NUMBER 380.08 |
|---|---|---|---|
| | | | Sheet 2 of 2 |

PLOT SCALE - 1:200
PLOT NAME - 28
FILE - ...\STANDARDPLATES_02PT.DGN
.PLOTTED FROM - TRM111118

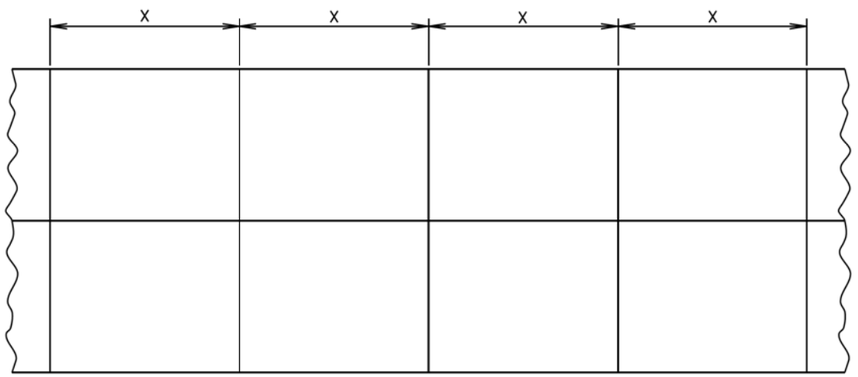


| PCCP Thickness | Transverse Contraction Joint Spacing (X) |
|---|---|
| 8" to 9.5" | 15' |
| 10" and Thicker | 20' |

August 31, 2013

Published Date: 2nd Qtr. 2016

SDDOT

**PCC PAVEMENT TYPICAL CONTRACTION JOINT SPACING**

PLATE NUMBER 380.09

Sheet 1 of 1

## LONGITUDINAL CONSTRUCTION JOINT WITH TIE BARS

(DRILLED IN BARS)

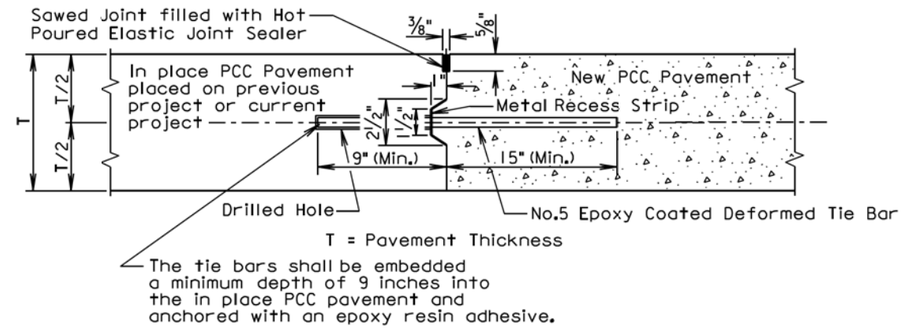


## LONGITUDINAL CONSTRUCTION JOINT WITH TIE BARS

(INSERTED OR FORMED IN BARS)

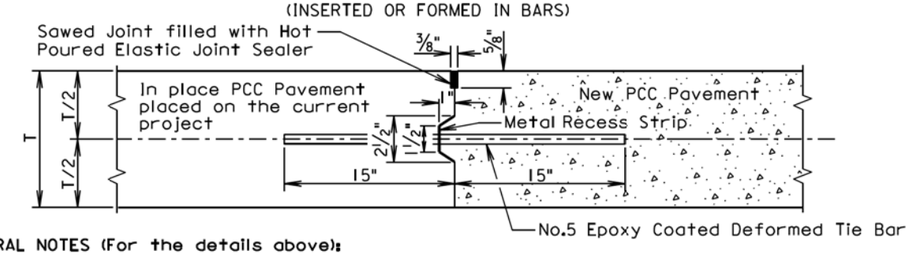


**GENERAL NOTES (For the details above):**

The epoxy coated deformed tie bars shall be spaced in accordance with the following tables:

| Tie Bar Spacing 48" Maximum | |
|---|---|
| Transverse Contraction Joint Spacing | Number of Tie Bars |
| 6.5' to 10' | 2 |
| 10.5' to 14' | 3 |
| 14.5' to 18' | 4 |
| 18.5' to 22' | 5 |

| Tie Bar Spacing 30" Maximum | |
|---|---|
| Transverse Contraction Joint Spacing | Number of Tie Bars |
| 5' to 7' | 2 |
| 7.5' to 9.5' | 3 |
| 10' to 12' | 4 |
| 12.5' to 14.5' | 5 |
| 15' to 17' | 6 |
| 17.5' to 19.5' | 7 |
| 20' to 22' | 8 |

The tie bars shall be placed a minimum of 15 inches from transverse contraction joints.

The required number of tie bars as shown in the table shall be uniformly spaced within each panel. The uniformly spaced tie bars shall be spaced a maximum of 48 inches center to center for a female keyway and shall be spaced a maximum of 30 inches center to center for a vertical face and male keyway. The maximum tie bar spacing shall apply to tie bars within each panel.

The keyway illustrated in the above details depict a female keyway.

The keyway is optional and is not required. When concrete pavement is formed and a keyway is provided, a metal recess strip shall be used. When concrete pavement is slip formed, a metal recess strip is not required.

August 31, 2013

Published Date: 2nd Qtr. 2016

SDDOT

**PCC PAVEMENT LONGITUDINAL JOINTS WITH TIE BARS**

PLATE NUMBER 380.10

Sheet 1 of 2


PLOT SCALE - 1:200

PLOTTED FROM - TRM111118

PLOT NAME - 29

FILE - ...\STANDARDPLATES_02PT.DGN

## SAWED LONGITUDINAL JOINT WITH TIE BARS
(POURED MONOLITHICALLY)

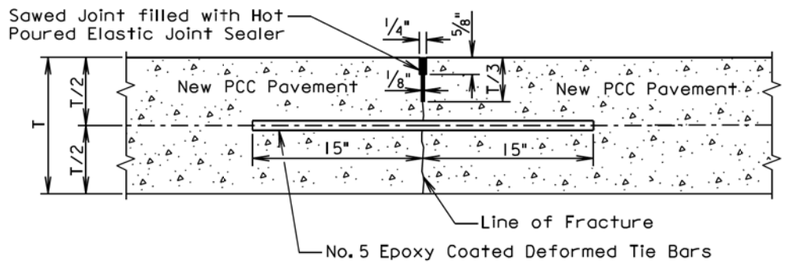


T = Pavement Thickness

**GENERAL NOTES (For the detail above):**

The epoxy coated deformed tie bars shall be spaced in accordance with the following table:

| Tie Bar Spacing 48" Maximum | |
|---|---|
| Transverse Contraction Joint Spacing | Number of Tie Bars |
| 6.5' to 10' | 2 |
| 10.5' to 14' | 3 |
| 14.5' to 18' | 4 |
| 18.5' to 22' | 5 |

The tie bars shall be placed a minimum of 15 inches from the transverse contraction joints.

The required number of tie bars as shown in the table shall be uniformly spaced within each panel with a maximum space of 48 inches center to center. The maximum tie bar spacing shall apply to tie bars within each panel.

The first saw cut to control cracking shall be a minimum of 1/3 the thickness of the pavement. Additional sawing for widening the saw cut to provide the width for the installation of the hot poured elastic joint sealer is necessary.

August 31, 2013

Published Date: 2nd Qtr. 2016 | SDDOT | PCC PAVEMENT LONGITUDINAL JOINTS WITH TIE BARS | PLATE NUMBER 380.10 | Sheet 2 of 2

**GENERAL NOTES:**

Either flanged channel steel posts or S3x5.7 steel I beam posts shall be used, but post type shall be consistent thoughout the project. The S3x5.7 Steel I Beam post shall be used for the end posts.

All costs associated with furnishing and constructing the 3 cable guardrail anchor assembly including the concrete anchor, cable anchor bracket, compensating device, steel turnbuckle cable assembly, and necessary hardware shall be incidental to the contract unit price per each for "3 Cable Guardrail Anchor Assembly".

All costs associated with furnishing and constructing the 3 cable guardrail including posts, cable, cable splices, and hardware shall be incidental to the contract unit price per foot for "3 Cable Guardrail".

The following table and criteria shall apply to the arrangement of the Spring Cable End Assemblies (Compensation Devices) and Turnbuckle Cable End Assemblies:

| LENGTH OF CABLE RUN | CRITERIA FOR ARRANGEMENT OF THE SPRING CABLE END ASSEMBLIES (COMPENSATION DEVICES) AND TURNBUCKLE CABLE END ASSEMBLIES |
|---|---|
| Less than 500' | Use turnbuckle on the approaching traffic end and compensating device on the other end of each individual cable, except in the W Beam to 3 Cable Transition where all compensating devices shall be provided at the bridge ends. |
| Greater than 500' to 1000' | Use compensating device on each end of each individual cable. |
| Greater than 1000' | Start new run by interlacing at last parallel post as shown on sheet 2 of 6. |

All Compensating Devices shall be attached to the cable anchor bracket when one end of the run is attached to a bridge.

Compensating Devices must have a spring rate of 450 ± 50 pounds per inch and shall have a total available travel of 6 inches minimum.

The cable shall be retensioned after the initial 2 week pretension period in accordance with the following table:

| CABLE TENSIONING SPECIFICATIONS | | | | | | | | | | | | | | |
|---|---|---|---|---|---|---|---|---|---|---|---|---|---|---|
| Temperature Range (Degree F) | -20 to -11 | -10 to -1 | 0 to 9 | 10 to 19 | 20 to 29 | 30 to 39 | 40 to 49 | 50 to 59 | 60 to 69 | 70 to 79 | 80 to 89 | 90 to 99 | 100 to 109 | 110 to 120 |
| Spring Compression (Inch) | 4 1/4 | 4 | 3 3/4 | 3 1/2 | 3 1/4 | 3 | 2 3/4 | 2 1/2 | 2 1/4 | 2 | 1 3/4 | 1 1/2 | 1 1/4 | 1 |

| POST SPACING FOR HORIZONTAL CURVES | |
|---|---|
| Roadway ℄ Curvature | Maximum Post Spacing (Ft) |
| 1° and Less | 16' |
| Greater than 1° to 8° | 12' |
| Greater than 8° to 13° | 8' |
| Greater than 13° | NOT ALLOWED |

December 16, 2015

Published Date: 2nd Qtr. 2016 | SDDOT | 3 CABLE GUARDRAIL (LOW TENSION) | PLATE NUMBER 629.01 | Sheet 1 of 6

PLOT SCALE - 1:200
PLOT NAME - 30
FILE - ...\STANDARDPLATES_02PT.DGN
.PLOTTED FROM - TRMI11118

Published Date: 2nd Qtr. 2016

SDDOT

3 CABLE GUARDRAIL (LOW TENSION)

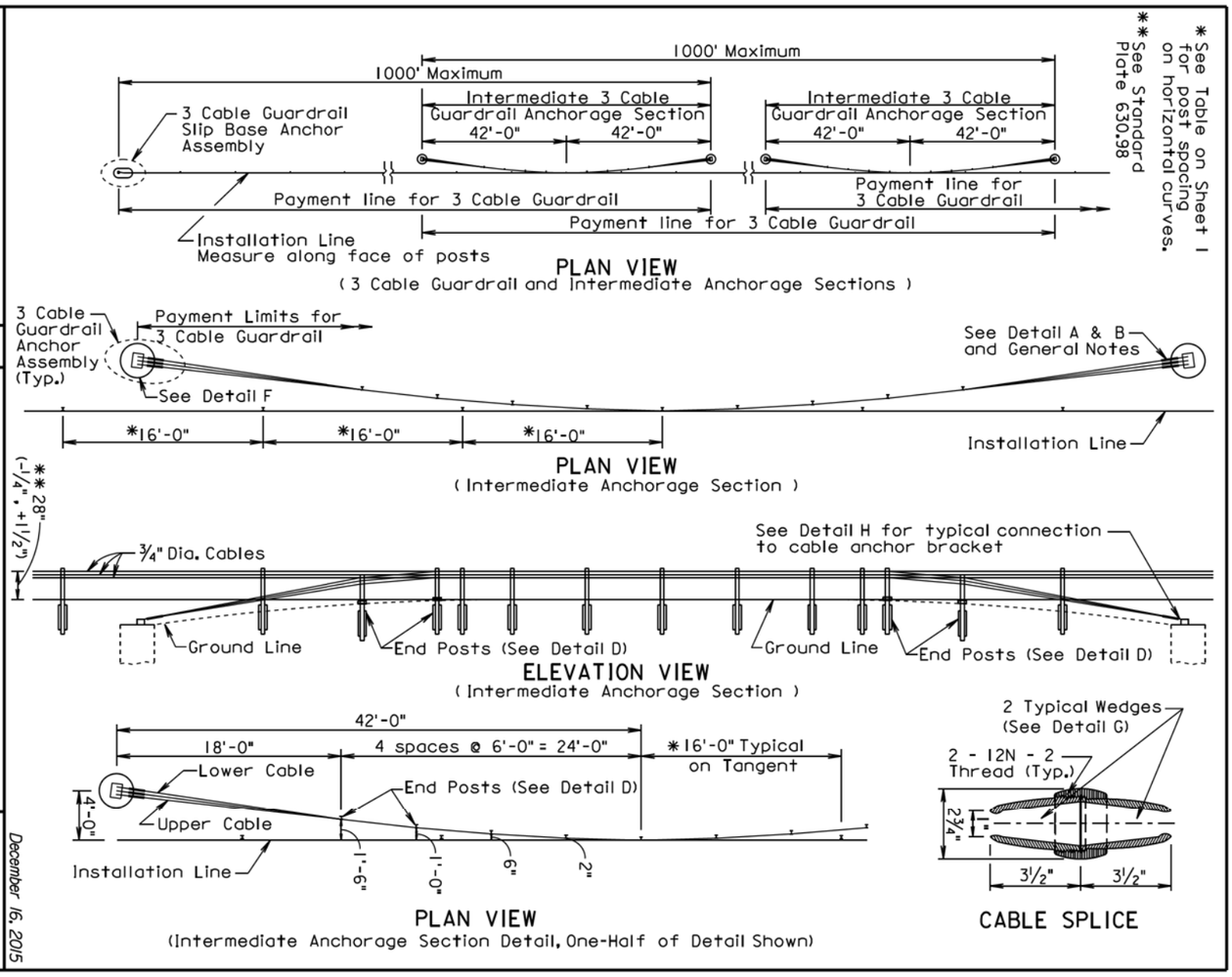


PLATE NUMBER 629.01

Sheet 2 of 6

December 16, 2015

Published Date: 2nd Qtr. 2016

SDDOT

3 CABLE GUARDRAIL (LOW TENSION)

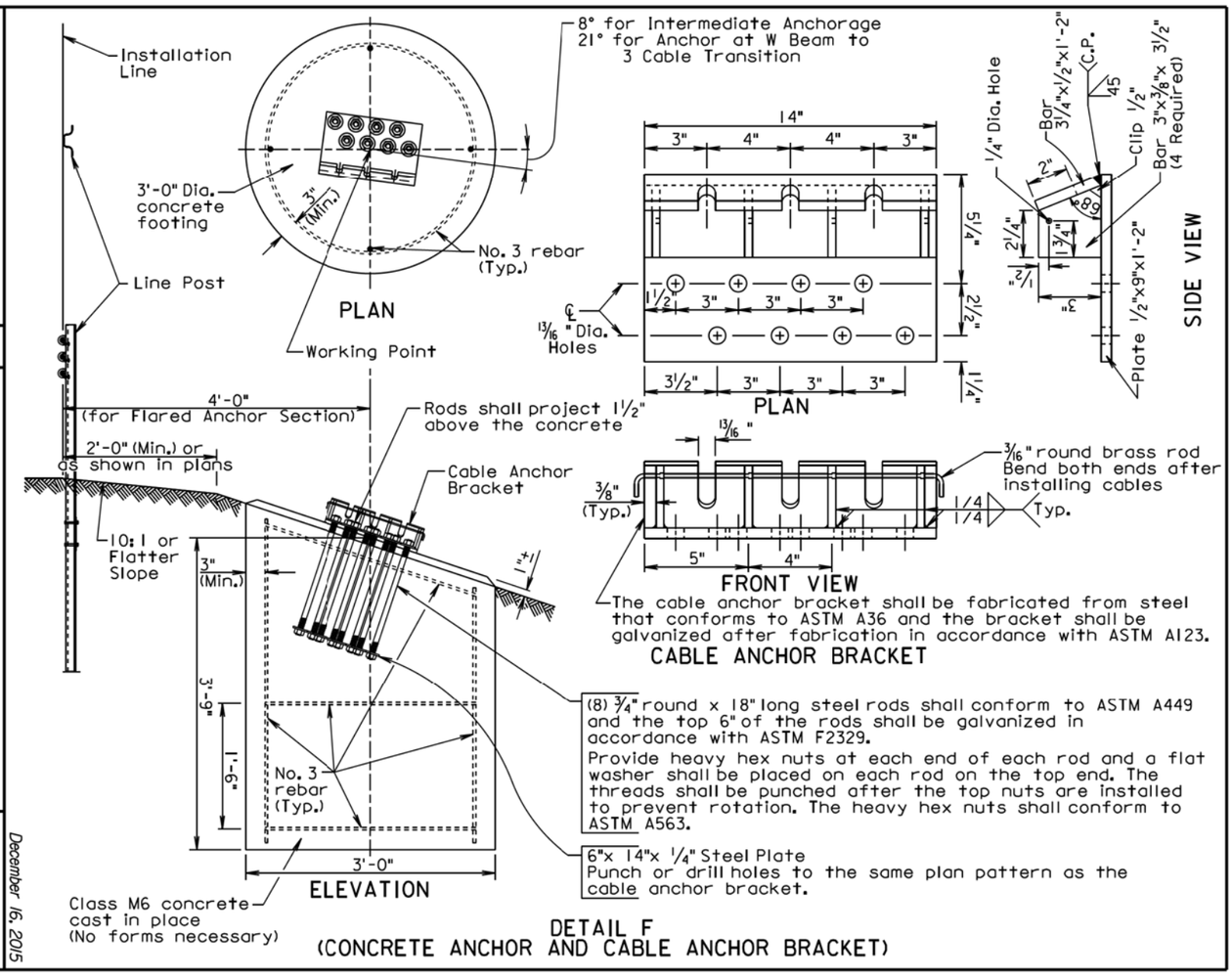


PLATE NUMBER 629.01

Sheet 3 of 6

December 16, 2015

STATE OF SOUTH DAKOTA

PROJECT IM-PH 0291(122)0

SHEET 270

TOTAL SHEETS 284

Plotting Date: 06/20/2016

Published Date: 2nd Qtr. 2016

SDDOT

3 CABLE GUARDRAIL (LOW TENSION)

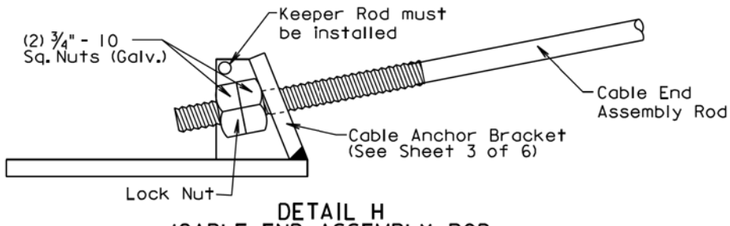


DETAIL H
(CABLE END ASSEMBLY ROD CONNECTION TO CABLE ANCHOR BRACKET)

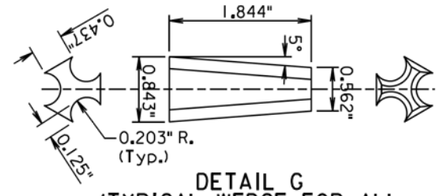


DETAIL G
(TYPICAL WEDGE FOR ALL SPLICES AND CABLE FITTINGS)

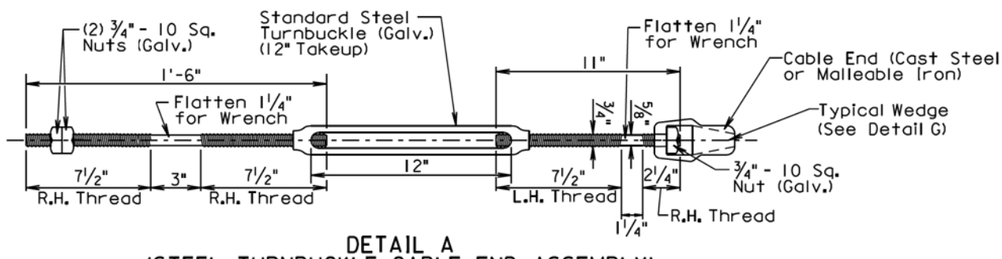


DETAIL A
(STEEL TURNBUCKLE CABLE END ASSEMBLY)
Minimum Tensile Strength = 25,000 Lbs.

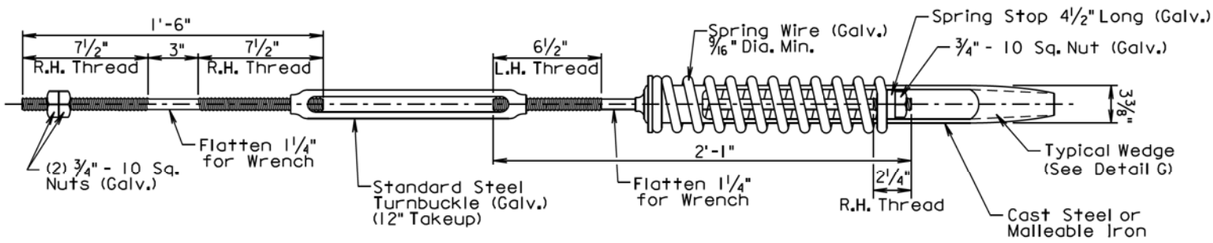


DETAIL B
(SPRING CABLE END ASSEMBLY WITH TURNBUCKLE)
(COMPENSATING DEVICE)

PLATE NUMBER 629.01

Sheet 4 of 6

December 16, 2015

Published Date: 2nd Qtr. 2016

SDDOT

3 CABLE GUARDRAIL (LOW TENSION)

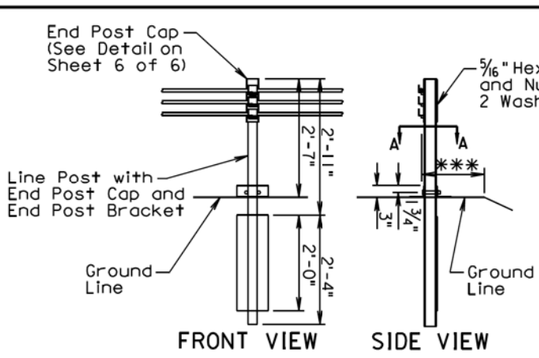


DETAIL D
(END POST)

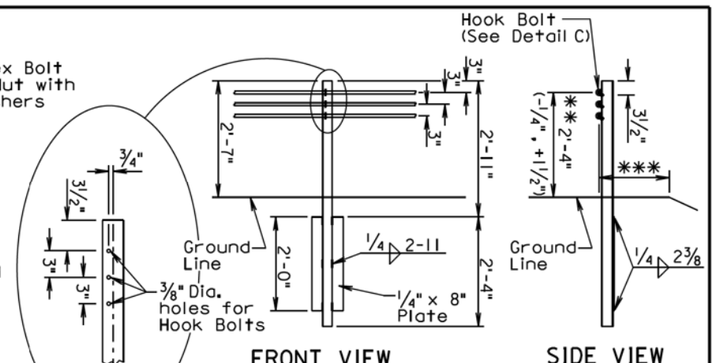


DETAIL E
(LINE POST)

** See Standard Plate 630.98
*** 2' (Min.) or as shown in plans

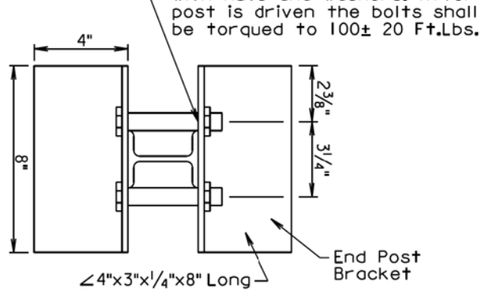


SECTION A-A

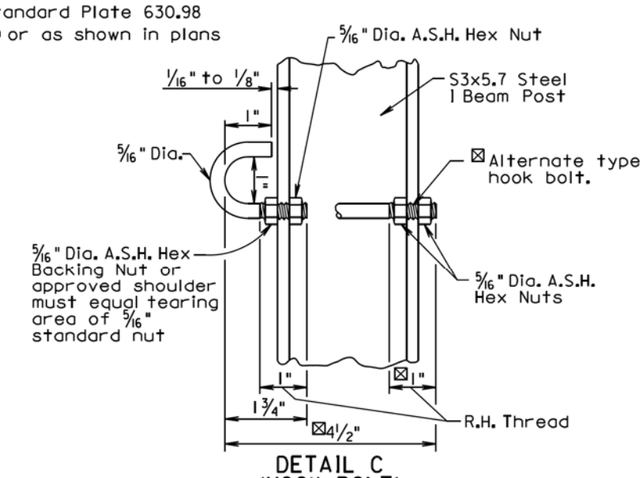


DETAIL C
(HOOK BOLT)

S3x5.7 STEEL I BEAM POST
FOR 3 CABLE GUARDRAIL

PLATE NUMBER 629.01

Sheet 5 of 6

December 16, 2015

STATE OF SOUTH DAKOTA | PROJECT IM-PH 0291(122)0 | SHEET 271 | TOTAL SHEETS 284

Plotting Date: 06/20/2016

Published Date: 2nd Qtr. 2016

SDDOT

# 3 CABLE GUARDRAIL (LOW TENSION)

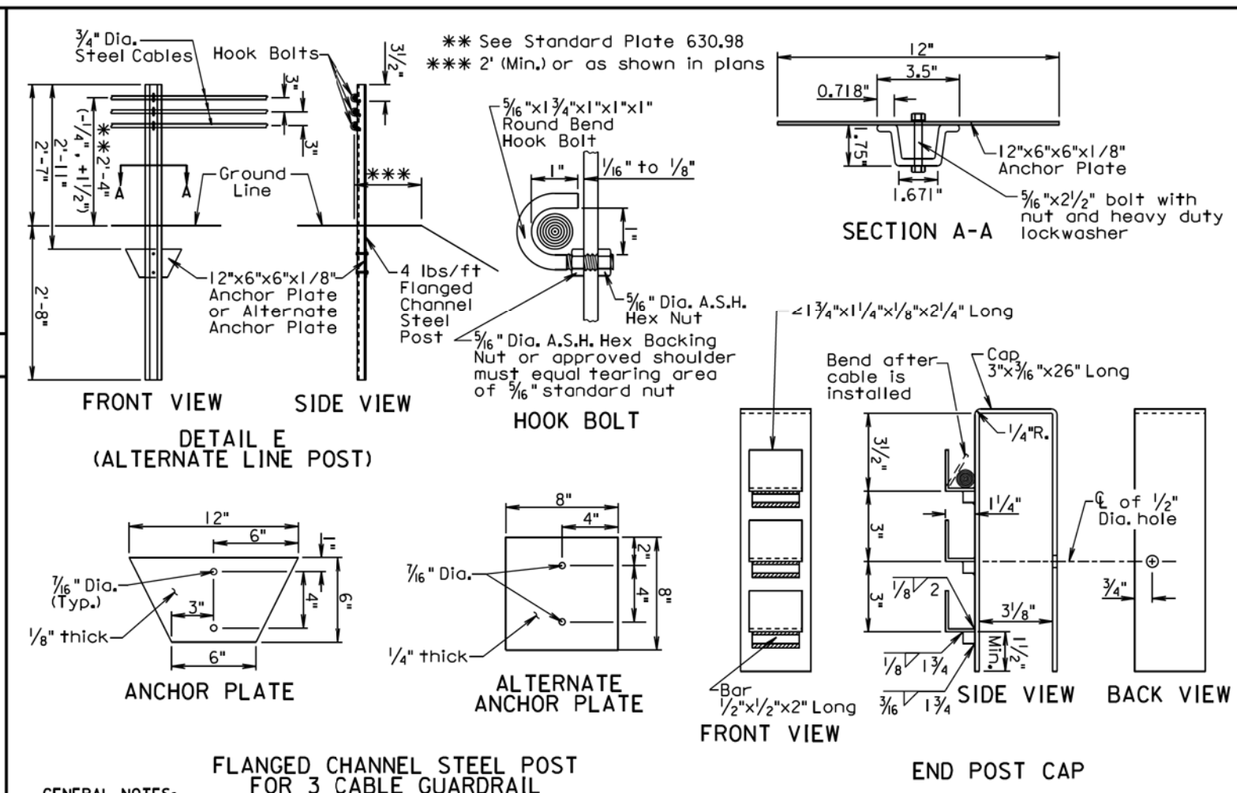


FLANGED CHANNEL STEEL POST FOR 3 CABLE GUARDRAIL

**GENERAL NOTES:**

Flanged channel steel posts shall be produced from high strength steel in accordance with ASTM A499, Grade 60.

Anchor plates shall be in conformance with ASTM A709, Grade 36.

Bolt shall be in conformance with ASTM A307. Nut shall be in conformance with ASTM A563 Grade DH.

Bolt shall be galvanized in accordance with ASTM F2329.

Finish for the post and anchor plate shall be a baked on high quality dark green enamel.

Alternate anchor plate may be unfinished.

PLATE NUMBER 629.01

Sheet 6 of 6

December 16, 2015

Published Date: 2nd Qtr. 2016

SDDOT

# W BEAM TO 3 CABLE TRANSITION

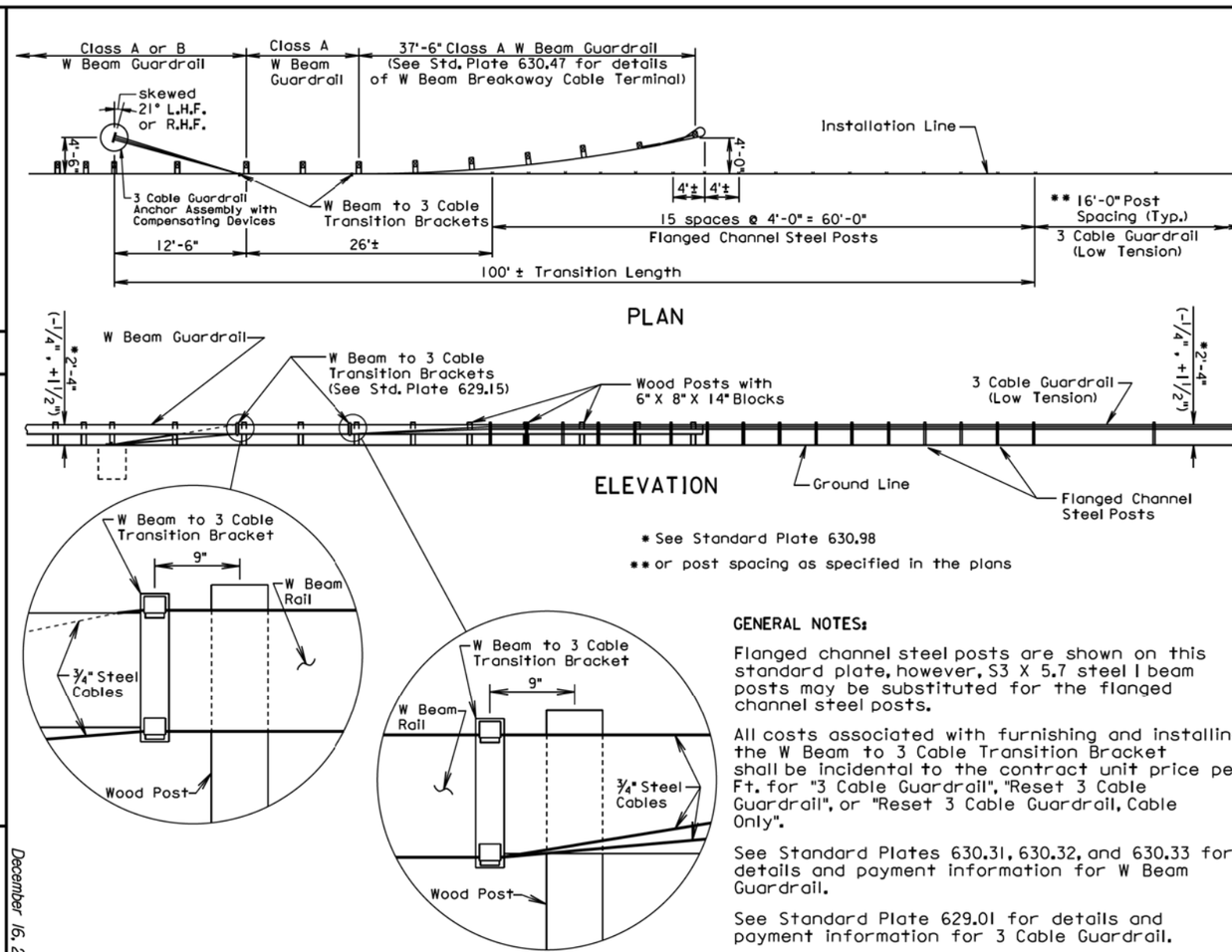


**GENERAL NOTES:**

Flanged channel steel posts are shown on this standard plate, however, S3 X 5.7 steel I beam posts may be substituted for the flanged channel steel posts.

All costs associated with furnishing and installing the W Beam to 3 Cable Transition Bracket shall be incidental to the contract unit price per Ft. for "3 Cable Guardrail", "Reset 3 Cable Guardrail", or "Reset 3 Cable Guardrail, Cable Only".

See Standard Plates 630.31, 630.32, and 630.33 for details and payment information for W Beam Guardrail.

See Standard Plate 629.01 for details and payment information for 3 Cable Guardrail.

PLATE NUMBER 629.05

Sheet 1 of 1

December 16, 2014

STATE OF SOUTH DAKOTA | PROJECT IM-PH 0291(122)0 | SHEET 272 | TOTAL SHEETS 284

Plotting Date: 06/20/2016

Published Date: 2nd Qtr. 2016

SDDOT

# 3 CABLE GUARDRAIL SLIP BASE ANCHOR ASSEMBLY

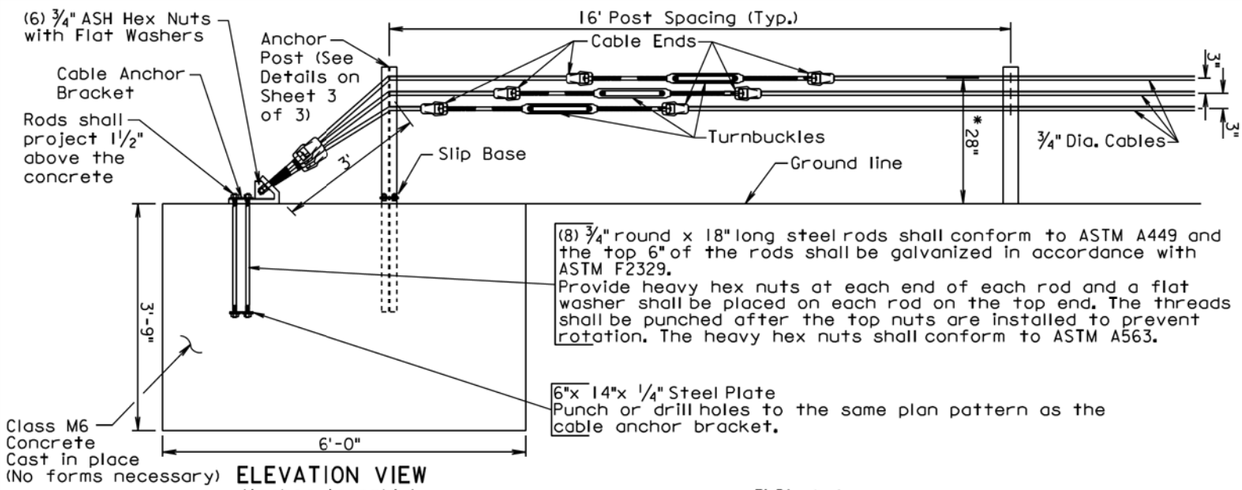


(8) ¾" round x 18" long steel rods shall conform to ASTM A449 and the top 6" of the rods shall be galvanized in accordance with ASTM F2329.
Provide heavy hex nuts at each end of each rod and a flat washer shall be placed on each rod on the top end. The threads shall be punched after the top nuts are installed to prevent rotation. The heavy hex nuts shall conform to ASTM A563.

6"x 14"x ¼" Steel Plate
Punch or drill holes to the same plan pattern as the cable anchor bracket.

ELEVATION VIEW
(Anchor Assembly)

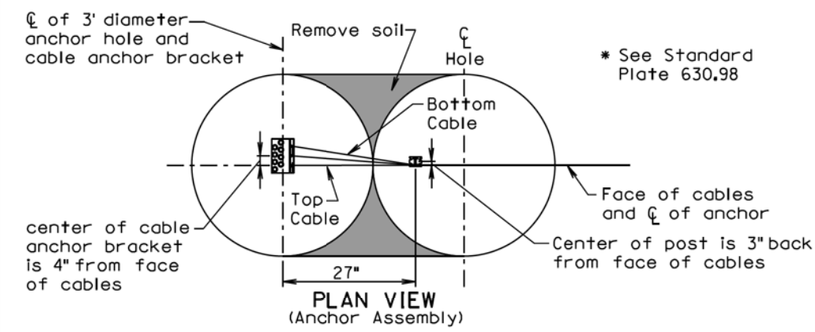


* See Standard Plate 630.98

PLAN VIEW
(Anchor Assembly)

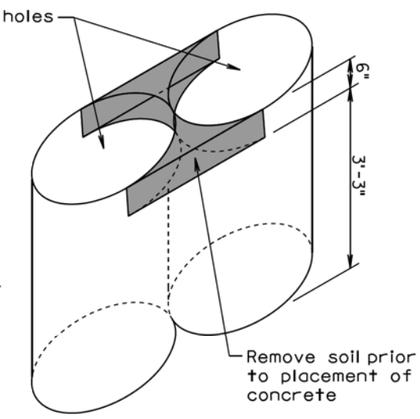


ISOMETRIC VIEW

**ANCHOR CONSTRUCTION NOTES:**

1. Auger two 3' diameter by 3'-9" deep holes tangent to each other.
2. Clean out the top 6 inches of soil between the holes.
3. Place concrete in holes with anchor bolts and slip base stub post in place.
4. For informational purposes the neat line concrete volume of the anchor is 1.9 cubic yards.

PLATE NUMBER 629.10

Sheet 1 of 3

June 26, 2015

Published Date: 2nd Qtr. 2016

SDDOT

# 3 CABLE GUARDRAIL SLIP BASE ANCHOR ASSEMBLY

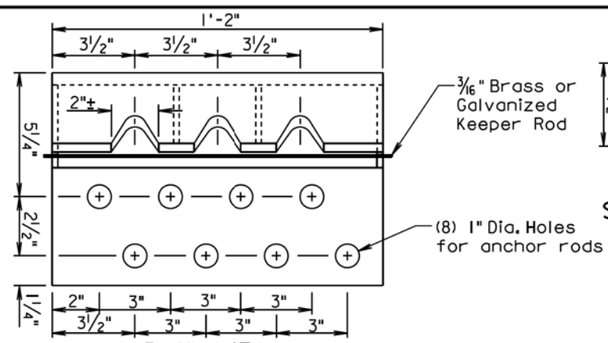


PLAN VIEW

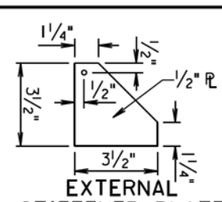


EXTERNAL STIFFENER PLATE

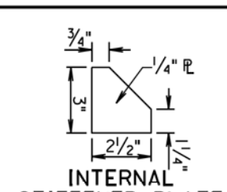


INTERNAL STIFFENER PLATE

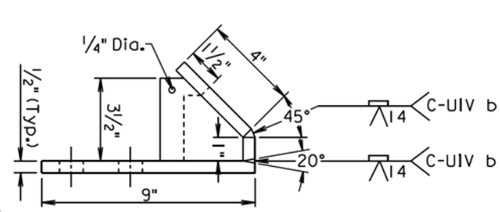


SIDE VIEW

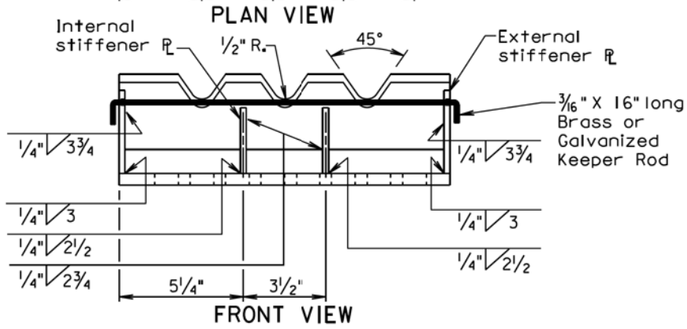


FRONT VIEW

CABLE ANCHOR BRACKET

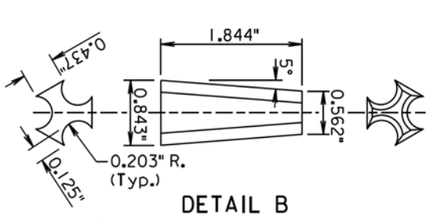


DETAIL B
(Typical Wedge for All Splices and Cable Fittings)

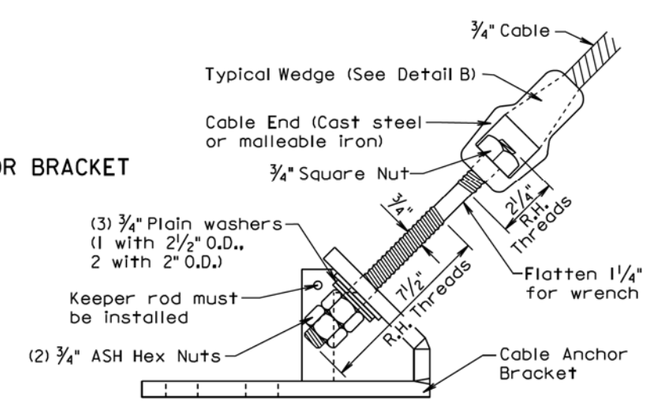


CABLE END ASSEMBLY ROD CONNECTION TO CABLE ANCHOR BRACKET

PLATE NUMBER 629.10

Sheet 2 of 3

June 26, 2015

STATE OF SOUTH DAKOTA

PROJECT IM-PH 0291(122)0

SHEET 273

TOTAL SHEETS 284

Plotting Date: 06/20/2016

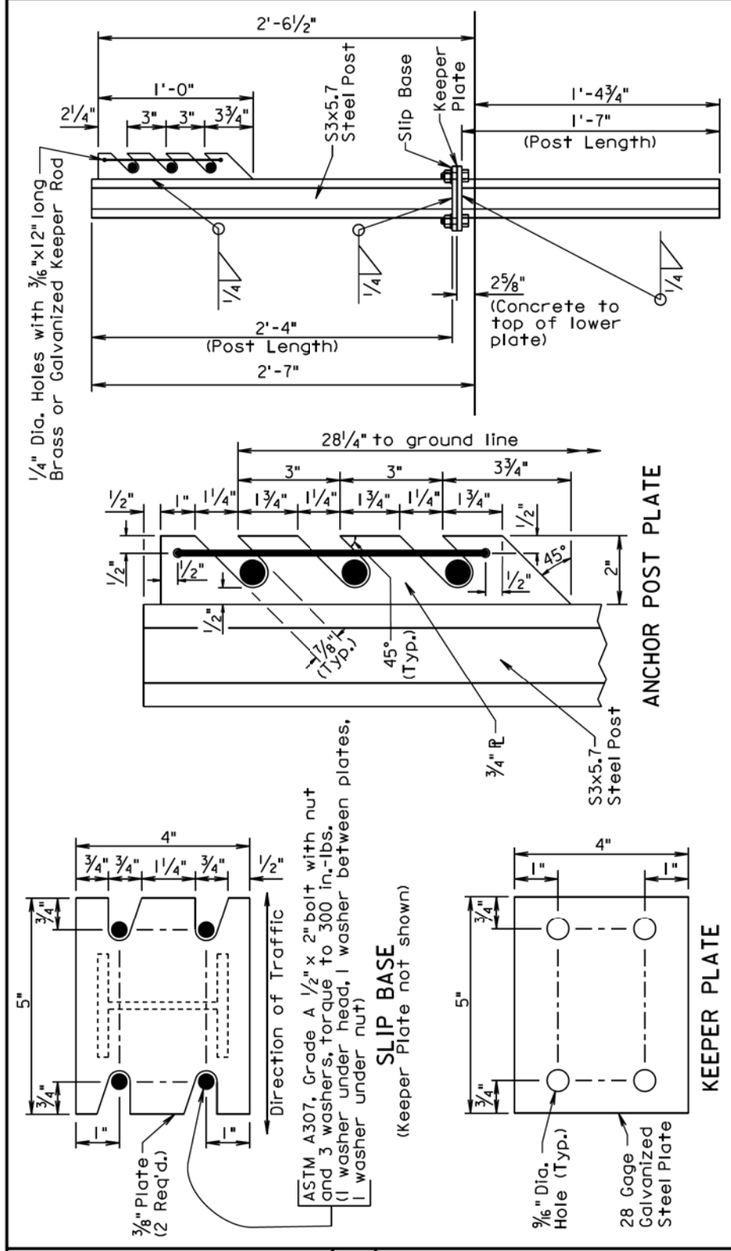


**GENERAL NOTES:**

Anchor post shall be a S3x5.7 rolled steel section. Post and plates shall conform to ASTM A709, Grade 36 and shall be galvanized in accordance with ASTM A123.

¾" round wire cable shall consist of three strands (7 wires per strand) and have a minimum tensile strength of 25,000 pounds.

Cast steel elements shall conform to AASHTO M103 (ASTM 27-73) grade U-60-30.

All costs associated with furnishing and constructing the 3 cable guardrail slip base anchor assembly including the concrete anchor, cable anchor bracket, anchor bolts, plates, slip base stub post, anchor post, steel turnbuckles, cable ends, U-bolt cable clips, and necessary hardware shall be incidental to the contract unit price per each for "3 Cable Guardrail Slip Base Anchor Assembly".

June 26, 2015

| Published Date: 2nd Qtr. 2016 | SDDOT | 3 CABLE GUARDRAIL SLIP BASE ANCHOR ASSEMBLY | PLATE NUMBER 629.10 |
|---|---|---|---|
| | | | Sheet 3 of 3 |

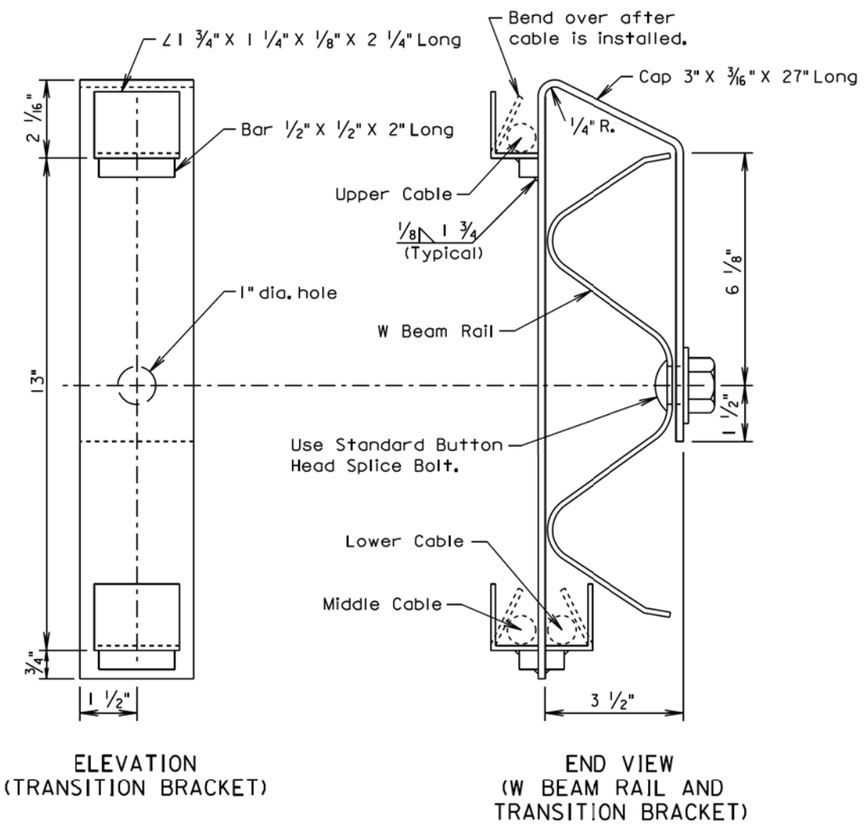


**GENERAL NOTES:**

Steel used in the fabrication of the bracket shall conform to ASTM A36 and the bracket shall be galvanized after fabrication in accordance with ASTM A123.

March 31, 2000

| Published Date: 2nd Qtr. 2016 | SDDOT | W BEAM TO 3 CABLE TRANSITION BRACKET | PLATE NUMBER 629.15 |
|---|---|---|---|
| | | | Sheet 1 of 1 |


PLOT SCALE - 1:200
PLOT NAME - 35
FILE - ...\STANDARDPLATES_02PT.DGN
PLOTTED FROM - TRMI11118

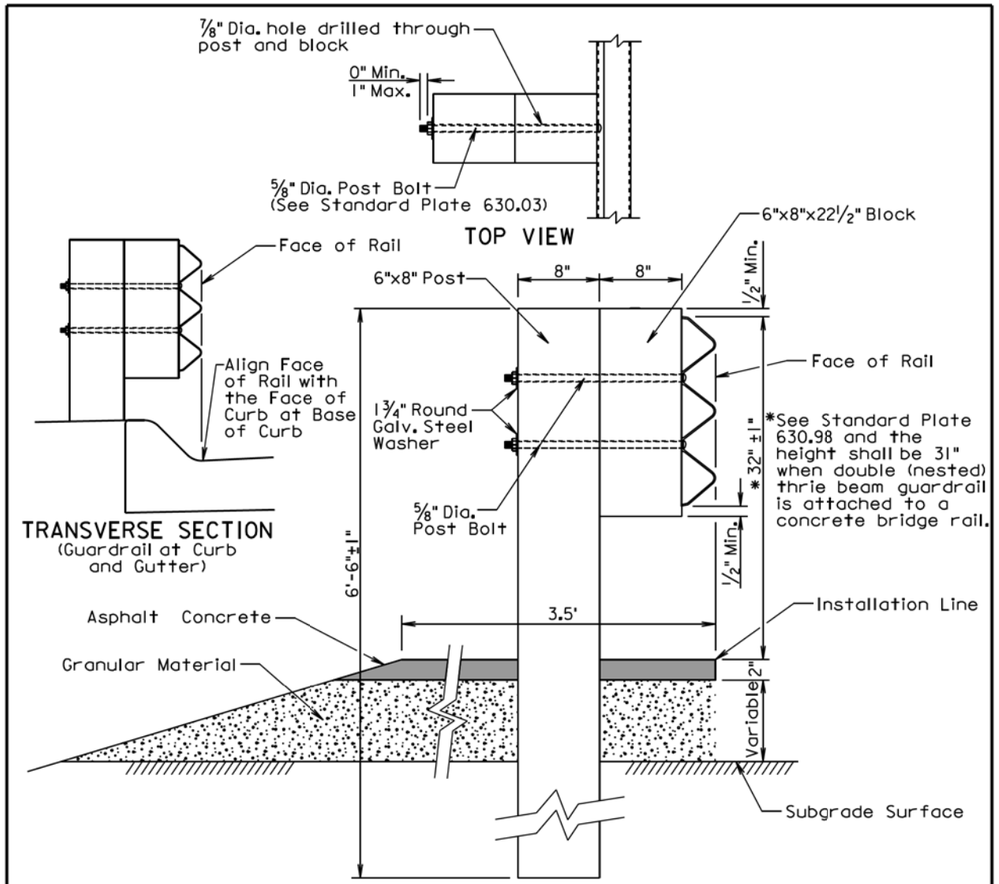


**GENERAL NOTES:**

Asphalt concrete shall be the same type used elsewhere on the project or shall be as specified in the plans. If asphalt concrete is not specified in the plans, the asphalt concrete shall conform to the Specifications for "Asphalt Concrete Composite." For informational purposes, the Rate of Materials for the 3.5' wide section of asphalt concrete as shown above shall be 4.80 Tons per Station.

Granular material shall be the same type used elsewhere on the project or shall be as specified in the plans. If granular material type is not specified in the plans, the material shall conform to the Specifications for "Base Course". The granular material shall be placed the same thickness as the mainline surfacing or as specified in the plans.

The cross slope for the surfacing and subgrade surface shall be as specified in the plans (See Typical Sections and/or Cross Sections).

The top of post and top of block shall have a true square cut. The top of block shall be ±1 inch from the top of the post.

June 26, 2015

| Published Date: 2nd Qtr. 2016 | SDDOT | THRIE BEAM GUARDRAIL POST INSTALLATION | PLATE NUMBER 630.01 |
|---|---|---|---|
| | | | Sheet 1 of 1 |

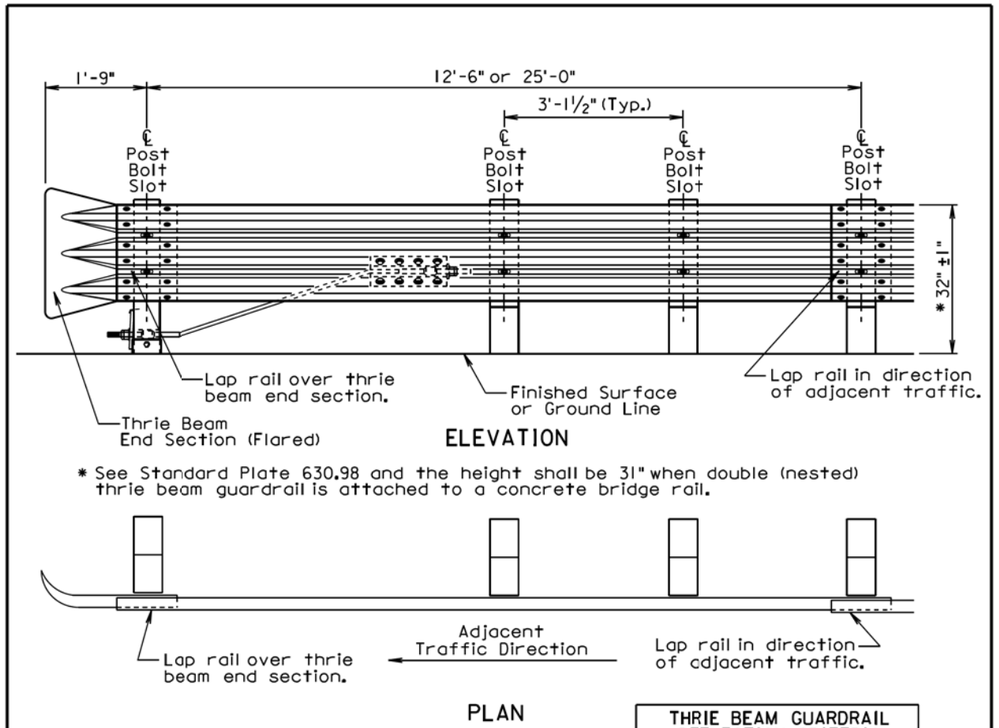


| THRIE BEAM GUARDRAIL DEFLECTION CRITERIA | |
|---|---|
| POST SPACING | MAXIMUM DEFLECTION |
| 6'-3" | 2'-6" |
| 3'-1 1/2" | 1'-9" |

For Informational Purposes Only

**GENERAL NOTES:**

All thrie beam rail shall be Type 1.

There will be no separate payment for furnishing and installing Thrie Beam End Sections (Flared) and Thrie Beam Terminal Connectors. All costs for the Thrie Beam End Sections (Flared) and Thrie Beam Terminal Connectors shall be incidental to the contract unit price per foot for the respective "Thrie Beam Guardrail" bid item.

Thrie beam rail section lengths may be 12'-6" and/or 25'-0". The combination of section lengths used shall be compatible with the total length of rail per site as shown in the plans.

Thrie Beam End Sections (Flared) shall only be used in a one-way traffic situation. See Standard Plate 630.80 for Thrie Beam End Section (Flared) in the Beam Guardrail Trailing End Terminal.

All costs for constructing thrie beam guardrail including labor, equipment, and materials including all posts, blocks, steel beam rail, and hardware shall be incidental to the contract unit price per foot for the respective "Thrie Beam Guardrail" bid item.

June 26, 2015

| Published Date: 2nd Qtr. 2016 | SDDOT | THRIE BEAM GUARDRAIL INSTALLATION | PLATE NUMBER 630.02 |
|---|---|---|---|
| | | | Sheet 1 of 1 |


PLOT SCALE - 1:200
PLOT NAME - 36
FILE - ...\STANDARDPLATES_02PT.DGN
_PLOTTED FROM - TRM111118

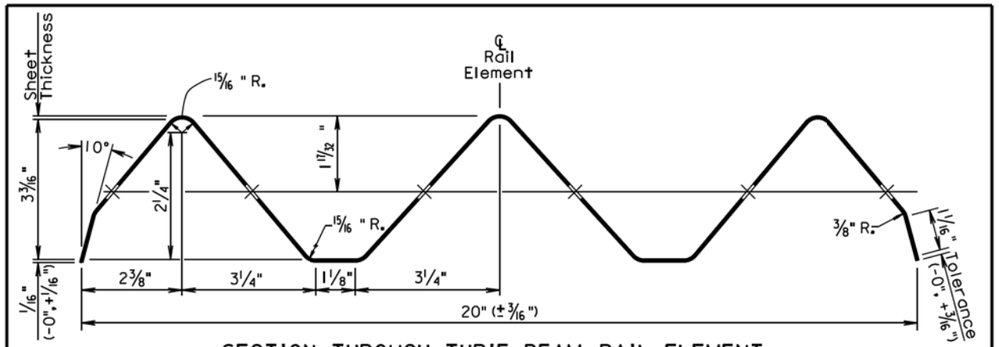


SECTION THROUGH THRIE BEAM RAIL ELEMENT

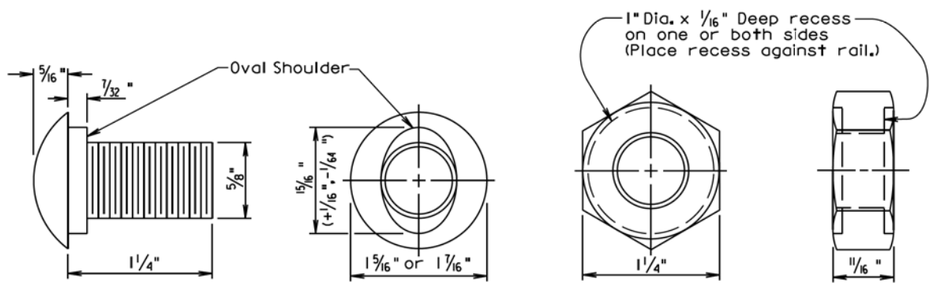


The Post Bolt is similar except the post bolt is 18" long.

SPLICE BOLT
(5/8" BUTTON HEAD BOLT AND RECESS NUT)

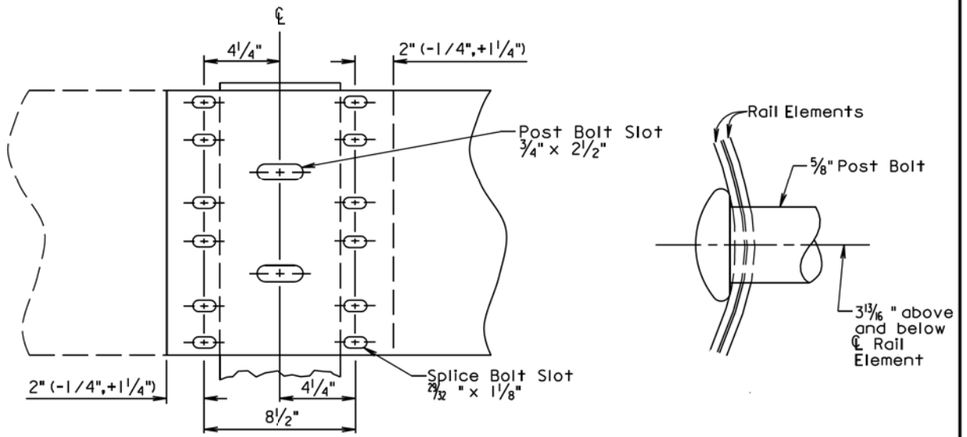


Lap in direction of traffic.

RAIL SPLICE

March 31, 2000

| Published Date: 2nd Qtr. 2016 | SDDOT | THRIE BEAM RAIL, RAIL SPLICE, AND HARDWARE | PLATE NUMBER 630.03 Sheet 1 of 1 |
|---|---|---|---|

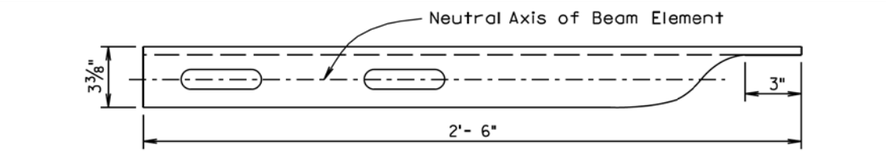


TOP VIEW

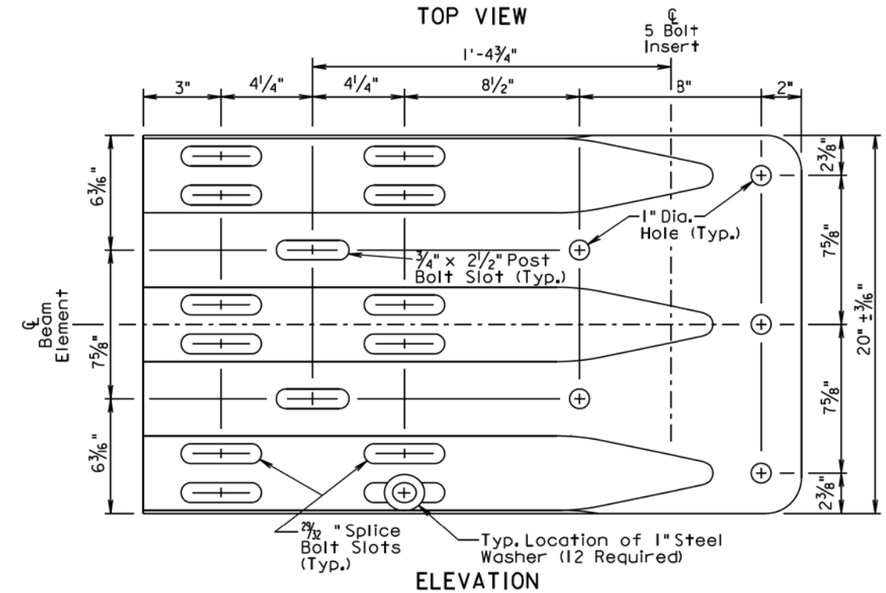


ELEVATION
THRIE BEAM TERMINAL CONNECTOR

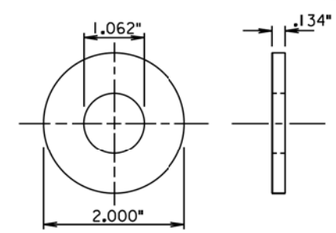


1" STEEL WASHER

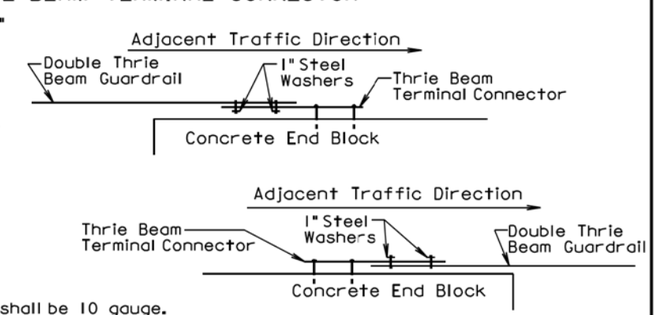


**GENERAL NOTES:**

Thrie Beam Terminal Connectors shall be 10 gauge.

When the thrie beam terminal connector is used to connect the rail to the bridge, 1" steel washers shall be used at the lap splice and the washers shall be in direct contact with the 3" slots of the thrie beam terminal connector. See the drawings above for the typical locations of the 1" steel washers.

There will be no separate payment for furnishing and installing the Thrie Beam Terminal Connector. All costs for the Thrie Beam Terminal Connector shall be incidental to the contract unit price per foot for the respective "Thrie Beam Guardrail" bid item.

September 14, 2001

| Published Date: 2nd Qtr. 2016 | SDDOT | THRIE BEAM TERMINAL CONNECTOR AND 1" STEEL WASHER | PLATE NUMBER 630.05 Sheet 1 of 1 |
|---|---|---|---|

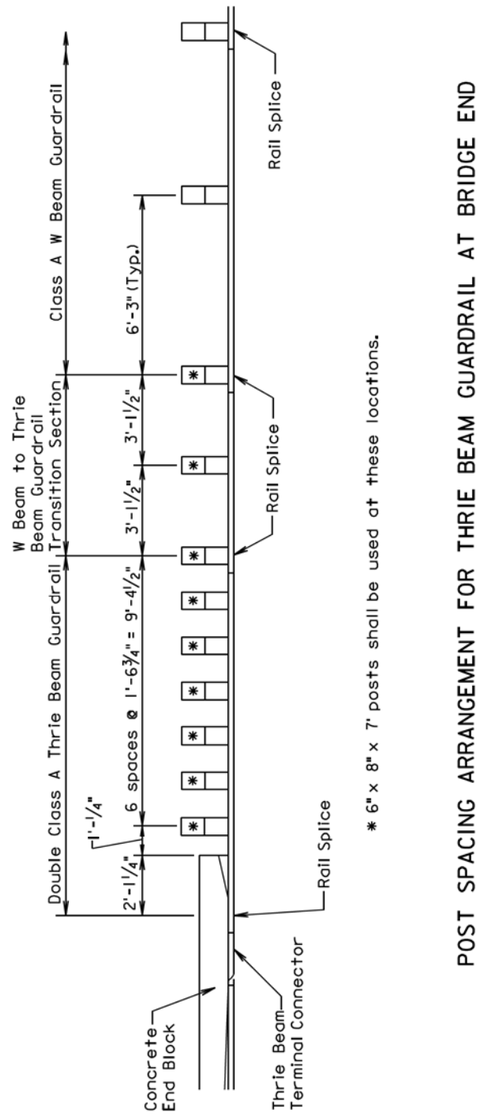


* 6" x 8" x 7' posts shall be used at these locations.

POST SPACING ARRANGEMENT FOR THRIE BEAM GUARDRAIL AT BRIDGE END

December 23, 2002

| Published Date: 2nd Qtr. 2016 | SDDOT | POST SPACING ARRANGEMENT FOR THRIE BEAM GUARDRAIL AT BRIDGE END | PLATE NUMBER 630.15 Sheet 1 of 1 |
|---|---|---|---|

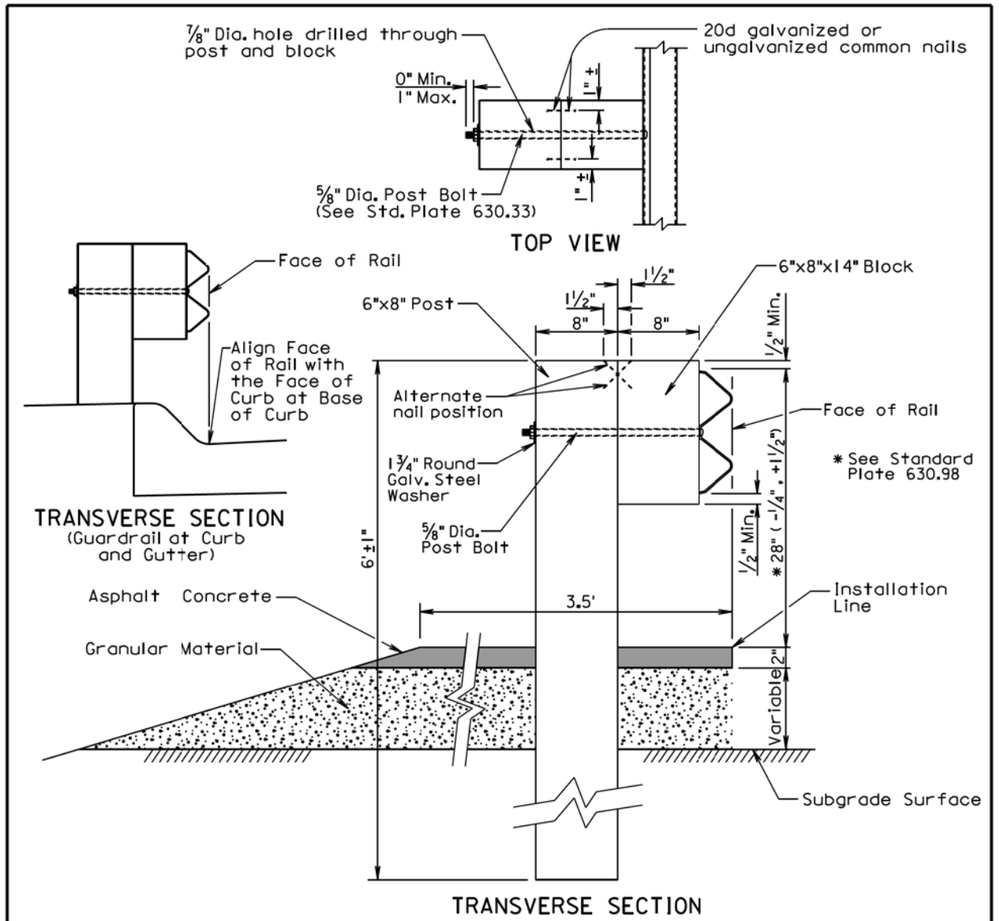


**GENERAL NOTES:**

Asphalt concrete shall be the same type used elsewhere on the project or shall be as specified in the plans. If asphalt concrete is not specified in the plans, the asphalt concrete shall conform to the Specifications for "Asphalt Concrete Composite." For informational purposes, the Rate of Materials for the 3.5' wide section of asphalt concrete as shown above shall be 4.80 Tons per Station.

Granular material shall be the same type used elsewhere on the project or shall be as specified in the plans. If granular material type is not specified in the plans, the material shall conform to the Specifications for "Base Course". The granular material shall be placed the same thickness as the mainline surfacing or as specified in the plans.

The cross slope for the surfacing and subgrade surface shall be as specified in the plans (See Typical Sections and/or Cross Sections).

The top of post and top of block shall have a true square cut. The top of block shall be ±1 inch from the top of the post.

June 26, 2015

| Published Date: 2nd Qtr. 2016 | SDDOT | W BEAM GUARDRAIL POST INSTALLATION | PLATE NUMBER 630.31 Sheet 1 of 1 |
|---|---|---|---|

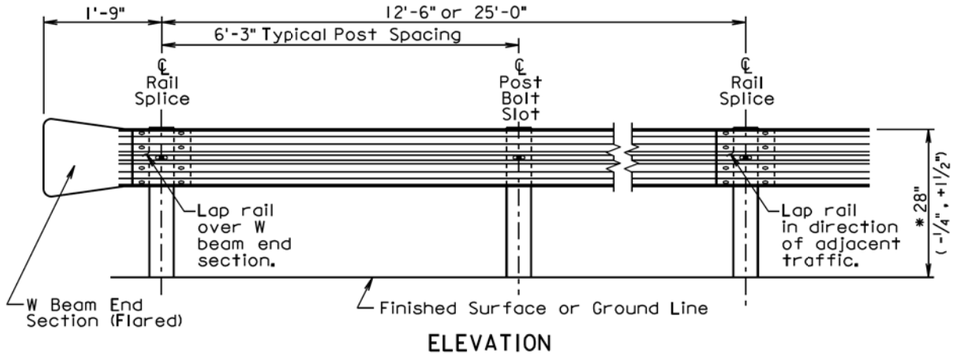


ELEVATION

*See Standard Plate 630.98

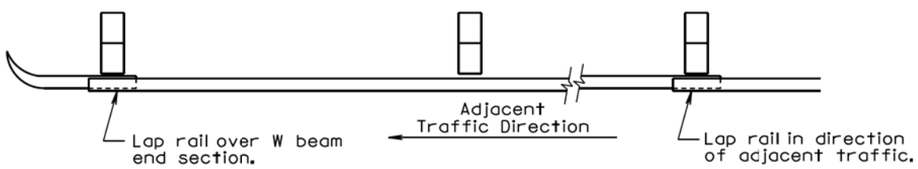


PLAN

| W BEAM GUARDRAIL DEFLECTION CRITERIA | |
|---|---|
| POST SPACING | MAXIMUM DEFLECTION |
| 6'-3" | 5'-0" |
| 3'-1 1/2" | 3'-9" |

For Informational Purposes Only

**GENERAL NOTES:**

All W beam rail shall be Type I.

There will be no separate payment for furnishing and installing W Beam End Sections (Flared) and W Beam Terminal Connectors. All costs for the W Beam End Sections (Flared) and W Beam Terminal Connectors shall be incidental to the contract unit price per foot for the respective "W Beam Guardrail" bid item.

W beam rail section lengths may be 12'-6" and/or 25'-0". The combination of section lengths used shall be compatible with the total length of rail per site as shown in the plans.

W Beam End Sections (Flared) shall only be used in a one way traffic situation. See Standard Plate 630.80 for W Beam End Section (Flared) in the Beam Guardrail Trailing End Terminal.

All costs for constructing W beam guardrail including labor, equipment, and materials including all posts, blocks, steel beam rail, and hardware shall be incidental to the contract unit price per foot for the respective "W Beam Guardrail" bid item.

June 26, 2015

| Published Date: 2nd Qtr. 2016 | SDDOT | W BEAM GUARDRAIL INSTALLATION | PLATE NUMBER 630.32 |
|---|---|---|---|
| | | | Sheet 1 of 1 |

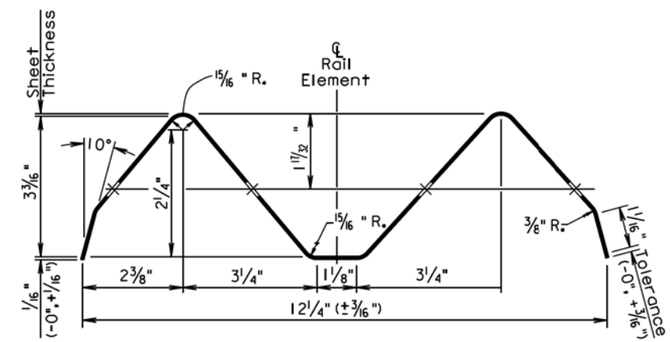


SECTION THROUGH W BEAM RAIL ELEMENT

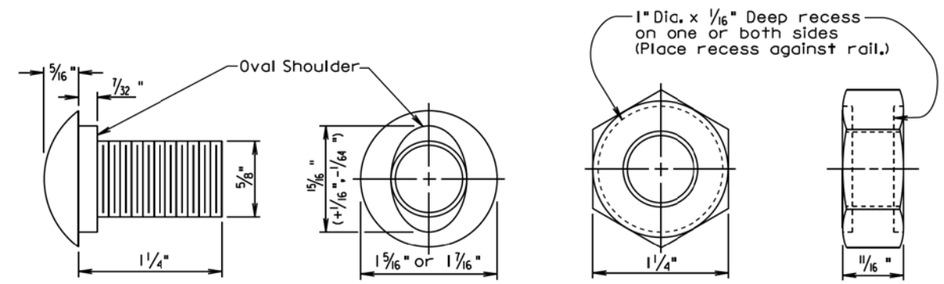


The Post Bolt is similar except the post bolt is 18" long.

SPLICE BOLT
(5/8" BUTTON HEAD BOLT AND RECESS NUT)

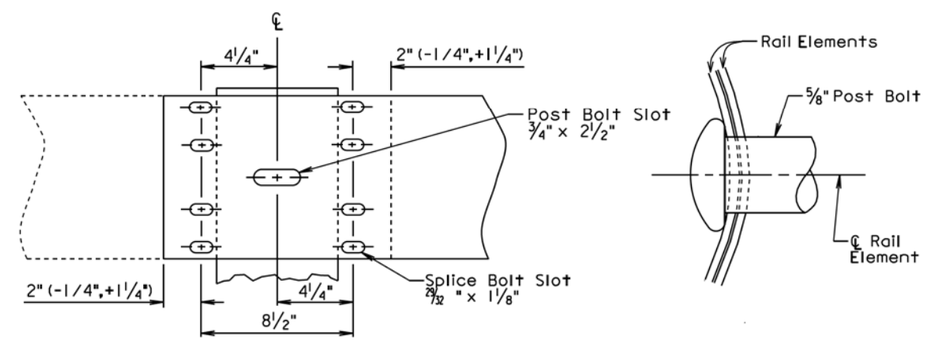


Lap in direction of traffic.

RAIL SPLICE

December 23, 2004

| Published Date: 2nd Qtr. 2016 | SDDOT | W BEAM RAIL, RAIL SPLICE, AND HARDWARE | PLATE NUMBER 630.33 |
|---|---|---|---|
| | | | Sheet 1 of 1 |


PLOT SCALE - 1:200
PLOT NAME - 39
FILE - ...\STANDARDPLATES_02PT.DGN
.PLOTTED FROM - TRMI11118

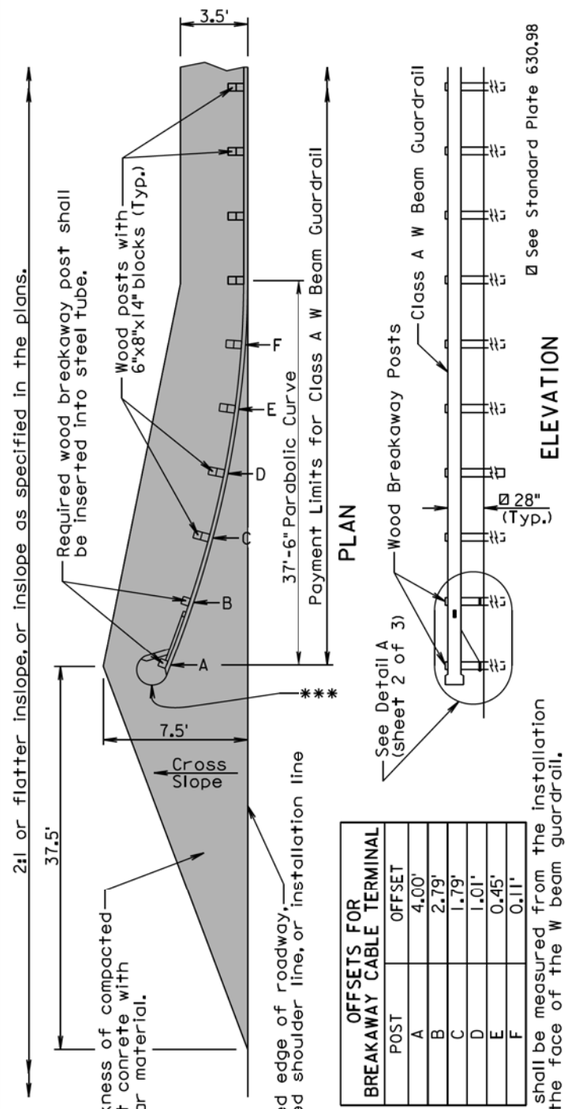


**OFFSETS FOR BREAKAWAY CABLE TERMINAL**

| POST | OFFSET |
|---|---|
| A | 4.00' |
| B | 2.79' |
| C | 1.79' |
| D | 1.01' |
| E | 0.45' |
| F | 0.11' |

**GENERAL NOTES:**

The finished embankment surfacing cross slope shall match the roadway cross slope; however, if a steeper cross slope is necessary the steepest allowable cross slope is 10:1.

Asphalt concrete shall be the same type used elsewhere on the project or shall be as specified in the plans. If asphalt concrete is not specified in the plans, the asphalt concrete shall conform to the Specifications for "Asphalt Concrete Composite."

Granular material shall be the same type used elsewhere on the project or shall be as specified in the plans. If granular material type is not specified in the plans, the material shall conform to the Specifications for "Base Course". The granular material shall be placed the same thickness as the mainline surfacing or as specified in the plans.

***An adhesive object marker shall be placed on the end section buffer after placement of the end section buffer. The adhesive object marker dimensions may be 16" x 16" or other variation due to the shape of the end section buffer. A minimum of 256 square inches of object marker reflective sheeting area is required. The reflective sheeting shall be fluorescent yellow super or very high intensity. All costs for furnishing and installing the adhesive object marker shall be incidental to various contract items.

Costs for constructing the W Beam Guardrail Breakaway Cable Terminal including labor, equipment, and materials including the anchor bracket, cable assembly, steel tubes, soil plates, bearing plate, pipe sleeve, W beam end section(buffer), modified W beam terminal connector, and all necessary hardware shall be incidental to the contract unit price per each for "W Beam Guardrail Breakaway Cable Terminal".

December 16, 2014

Published Date: 2nd Qtr. 2016

SDDOT

**W BEAM GUARDRAIL BREAKAWAY CABLE TERMINAL**

PLATE NUMBER 630.47

Sheet 1 of 3

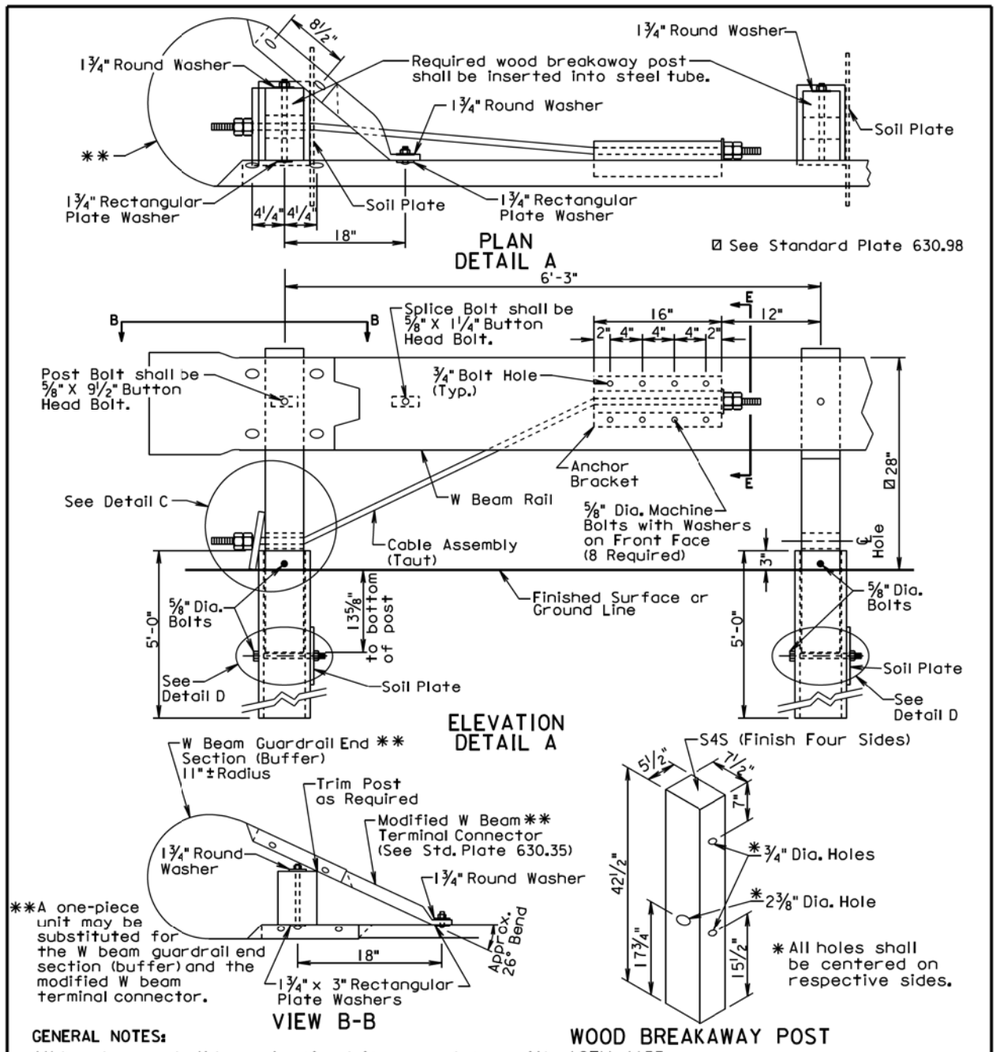


**GENERAL NOTES:**

All hardware shall be galvanized in accordance with ASTM A153.

The steel tubes shall meet the requirements of ASTM Specification A500, Grade B, and shall be galvanized after fabrication in accordance with the requirements of AASHTO Specification M111.

The anchor bracket, soil plate, and bearing plate shall be fabricated from steel that meets ASTM A36 Specifications. They shall be galvanized after fabrication in accordance with ASTM A123.

The W Beam End Section (Buffer) shall be 12 gage galvanized steel.

The cable shall be ¾", Type II, with Class A coating in conformance with AASHTO M30.

December 16, 2014

Published Date: 2nd Qtr. 2016

SDDOT

**W BEAM GUARDRAIL BREAKAWAY CABLE TERMINAL**

PLATE NUMBER 630.47

Sheet 2 of 3

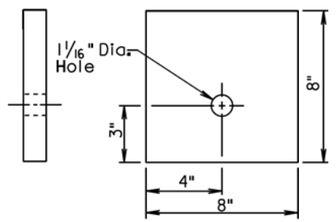


BEARING PLATE

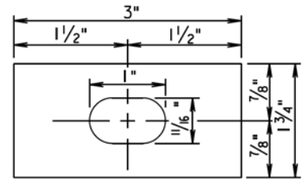


RECTANGULAR PLATE WASHER

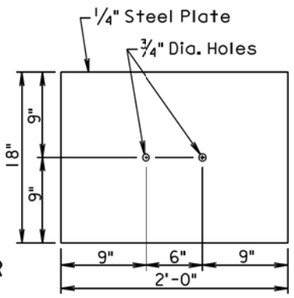


SOIL PLATE

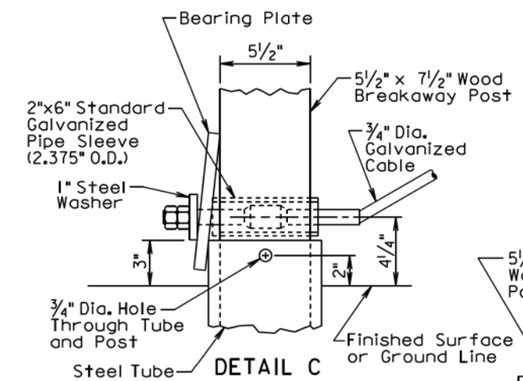


DETAIL C

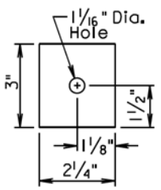


END PLATE

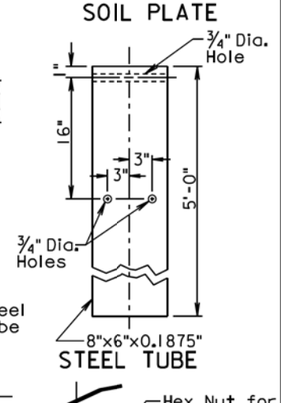


STEEL TUBE

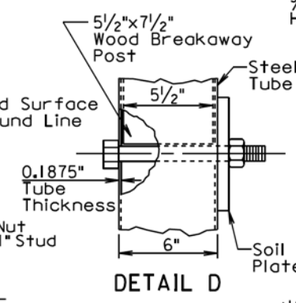


DETAIL D

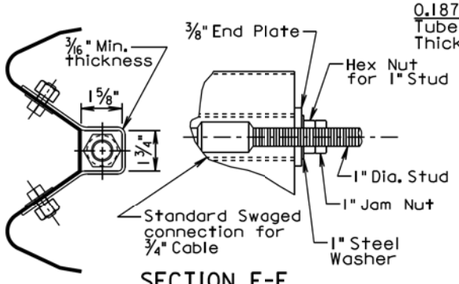


SECTION E-E
(END PLATE REMOVED)

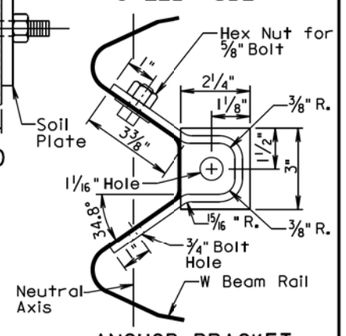


ANCHOR BRACKET

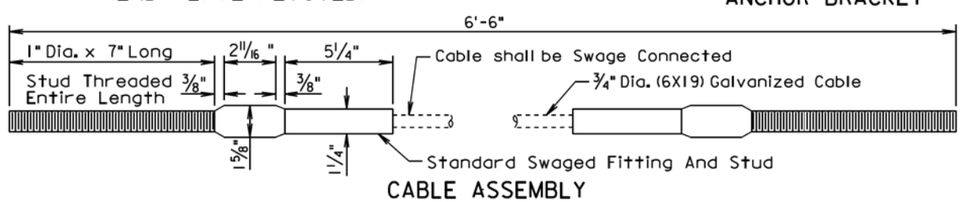


CABLE ASSEMBLY

December 16, 2014

| Published Date: 2nd Qtr. 2016 | SDDOT | W BEAM GUARDRAIL BREAKAWAY CABLE TERMINAL | PLATE NUMBER 630.47 Sheet 3 of 3 |
|---|---|---|---|

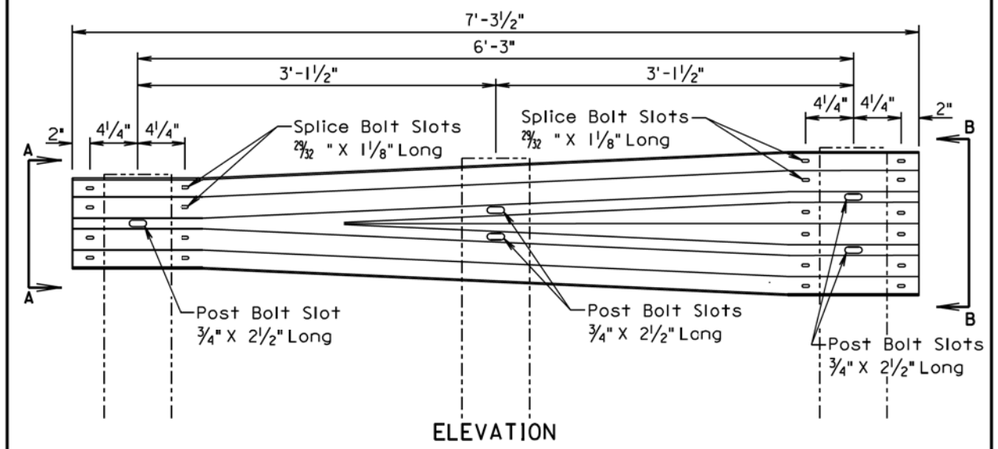


ELEVATION

VIEW A-A

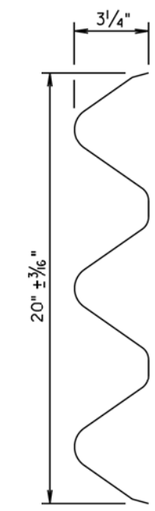


VIEW B-B

**GENERAL NOTE:**

All costs for constructing the W Beam to Thrie Beam Guardrail Transition including labor, equipment, and materials including two posts, two blocks, W beam to thrie beam transition section, and hardware shall be incidental to the contract unit price per each for "W Beam to Thrie Beam Guardrail Transition".

March 31, 2000

| Published Date: 2nd Qtr. 2016 | SDDOT | W BEAM TO THRIE BEAM GUARDRAIL TRANSITION SECTION | PLATE NUMBER 630.82 Sheet 1 of 1 |
|---|---|---|---|


PLOT SCALE - 1:200
PLOT NAME - 41
FILE - ...\STANDARDPLATES_02PT.DGN
PLOTTED FROM - TRMI1118

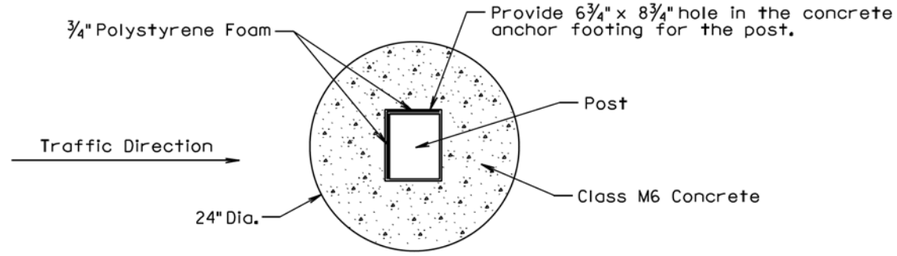


PLAN
(PREFERRED 24" DIA. ROUND CONCRETE ANCHOR FOOTING)

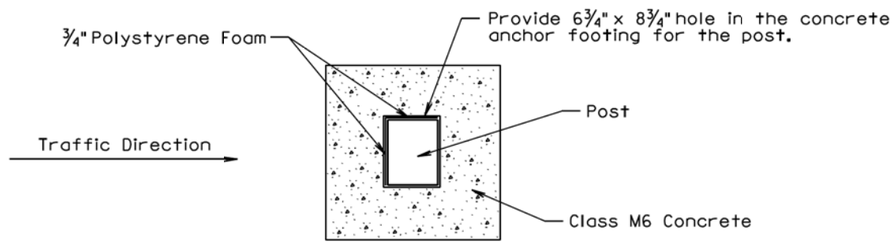


PLAN
(20" x 20" SQUARE CONCRETE ANCHOR FOOTING)

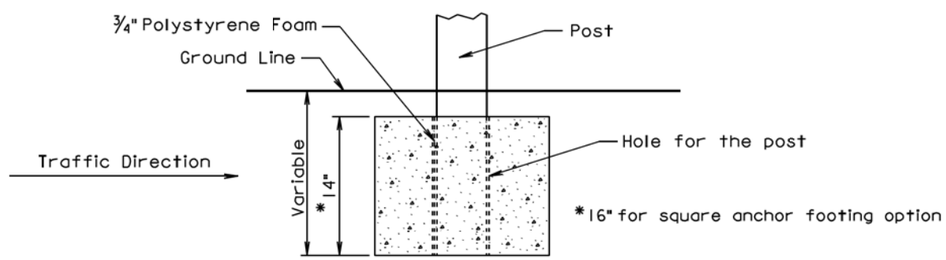


ELEVATION

**GENERAL NOTES:**

In areas where the required guardrail wood post depth is not obtainable, shorter posts may be used and shall be anchored in concrete in accordance with the details shown on this standard plate.

A 20" x 20" square concrete anchor footing may be used in lieu of the 24" diameter round anchor footing.

Forms for the concrete anchor footing hole is not required.

Concrete for the concrete anchor footing shall be Class M6.

Three quarter inch polystyrene foam shall be attached to two sides of the posts. See details above for placement position of the polystyrene foam.

There will be no separate payment for furnishing and installing the concrete anchor footing for short guardrail post. All costs for concrete anchor footings shall be incidental to the contract unit price per foot for the respective "Thrie Beam or W Beam Guardrail" bid item.

March 31, 2000

| Published Date: 2nd Qtr. 2016 | SDDOT | CONCRETE ANCHOR FOOTING FOR SHORT GUARDRAIL POST | PLATE NUMBER 630.84 Sheet 1 of 1 |
|---|---|---|---|

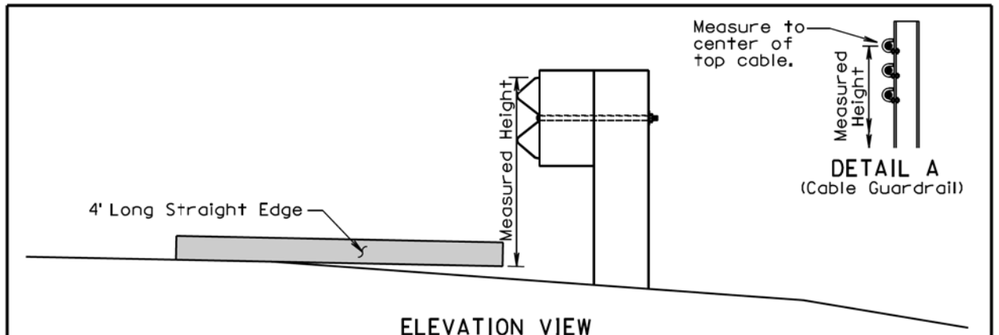


ELEVATION VIEW
(Guardrail Adjacent to Differential Slopes)

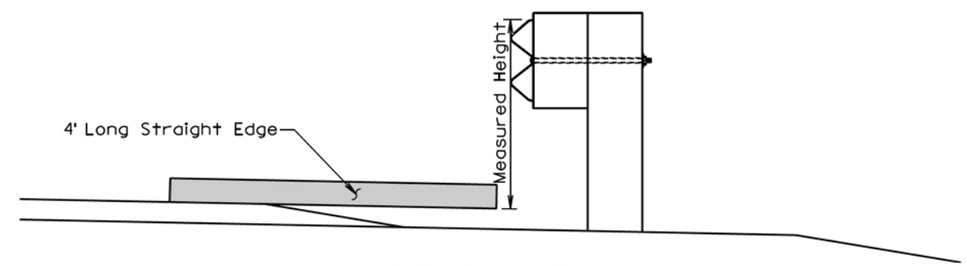


ELEVATION VIEW
(Guardrail Adjacent to Differential Surfacing Elevations)

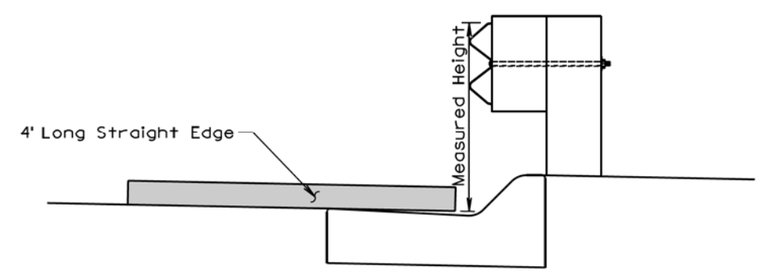


ELEVATION VIEW
(Guardrail at Curb and Gutter)

**GENERAL NOTES:**

The W Beam guardrail shown is for illustrative purpose. The guardrail height for all types of guardrail systems shall be measured in accordance with this standard plate.

When measuring height of cable guardrail or cable barrier the height shall be measured to the center of the top cable. See Detail A.

June 26, 2010

| Published Date: 2nd Qtr. 2016 | SDDOT | MEASURING GUARDRAIL HEIGHT | PLATE NUMBER 630.98 Sheet 1 of 1 |
|---|---|---|---|


PLOT SCALE - 1:200
PLOT NAME - 42
FILE - ...\STANDARDPLATES_02PT.DGN
.PLOTTED FROM - TRMI11118

PLAN VIEW

1. Finished embankment surfacing cross slope shall be the same as the roadway cross slope.
2. Finished embankment surfacing cross slope transition.
3. Finished embankment surfacing cross slope shall be 10:1, however, a cross slope flatter than 10:1 may be used to obtain the 6" minimum thickness of granular material.

**GENERAL NOTES:**

Asphalt concrete shall be the same type used elsewhere on the project or shall be as specified in the plans. If asphalt concrete is not specified in the plans, the asphalt concrete shall conform to the Specifications for "Asphalt Concrete Composite."

Granular material shall be the same type used elsewhere on the project or shall be as specified in the plans. If granular material type is not specified in the plans, the material shall conform to the Specifications for "Base Course".

February 10, 2014

Published Date: 2nd Qtr. 2016

SDDOT

**EMBANKMENT AND SURFACING FOR TYPICAL MEDIAN PROTECTION**

PLATE NUMBER 630.99

Sheet 1 of 1




TYPICAL GUARDRAIL LAYOUTS

- (B) Steel Beam Guardrail Delineation
- [E] Guardrail Terminal End Object Marker
- (C) 3 Cable Guardrail Delineation
- (M) Type 2 Object Marker

* For two-way traffic, install delineation at the opposite end of structure the same as shown. Back-to-back delineation is required for two-way traffic, single-sided delineation for one-way traffic.

June 26, 2011

Published Date: 2nd Qtr. 2016

SDDOT

**DELINEATION OF GUARDRAIL AT BRIDGES**

PLATE NUMBER 632.40

Sheet 1 of 4

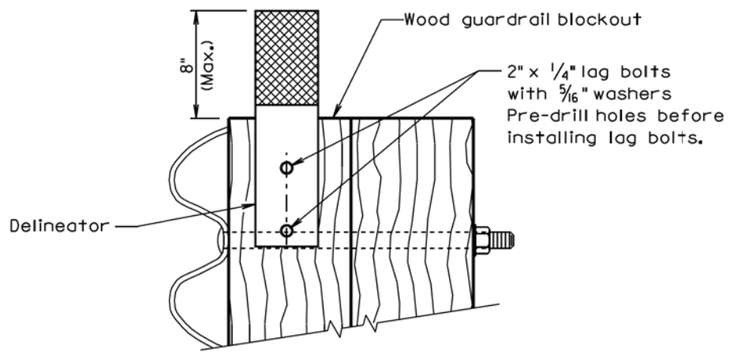


## (B) STEEL BEAM GUARDRAIL DELINEATION

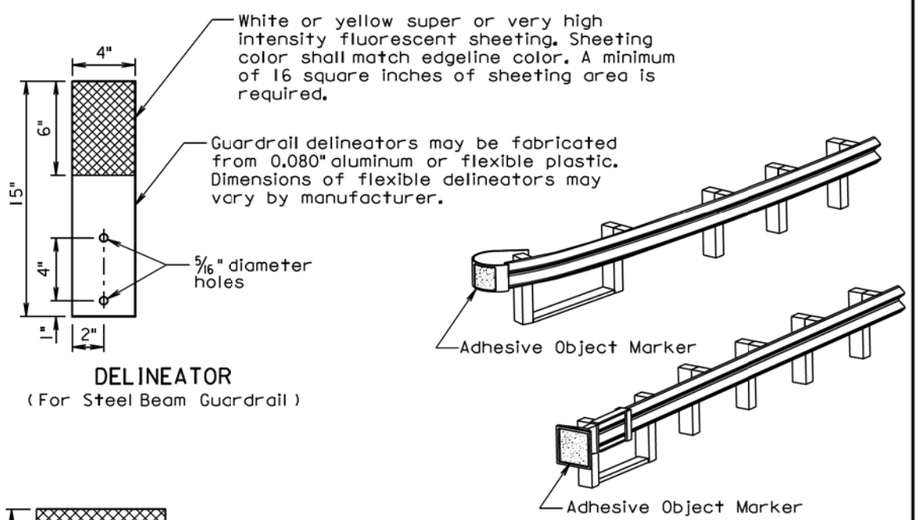


DELINEATOR
( For Steel Beam Guardrail )

## (E) GUARDRAIL TERMINAL END OBJECT MARKER

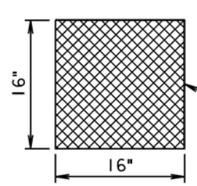


ADHESIVE OBJECT MARKER

Adhesive object marker dimensions may vary due to shape of terminal end. A minimum of 256 square inches of object marker sheeting area is required. The sheeting shall be fluorescent yellow super or very high intensity.

June 26, 2011

Published Date: 2nd Qtr. 2016 | SDDOT | DELINEATION OF GUARDRAIL AT BRIDGES | PLATE NUMBER 632.40 | Sheet 2 of 4

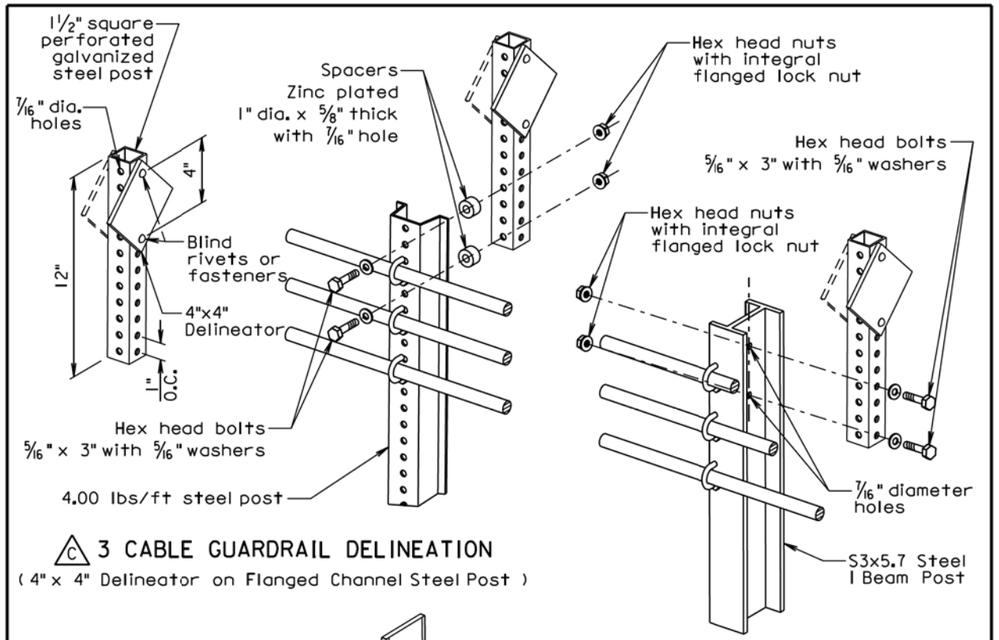


## (C) 3 CABLE GUARDRAIL DELINEATION
( 4" x 4" Delineator on Flanged Channel Steel Post )

## (C) 3 CABLE GUARDRAIL DELINEATION
( 4" x 4" Delineator on I Beam Steel Post )

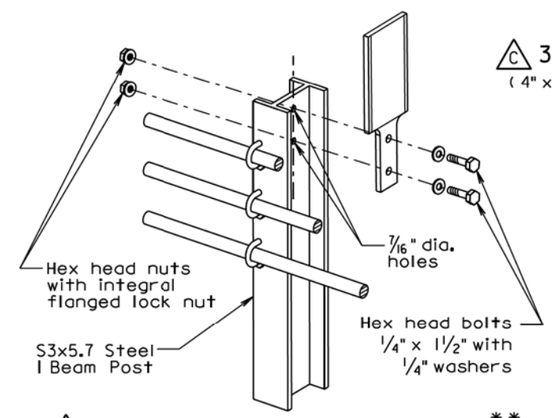


## (C) 3 CABLE GUARDRAIL DELINEATION**
( Flexible 3" x 6" Delineator on I Beam Post )

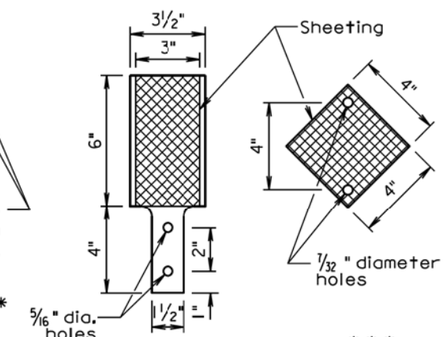


## DELINEATORS***
( For 3 Cable Guardrail )

** Flexible delineators may be attached to post with manufacturer approved adhesive instead of bolts.

*** Dimensions of flexible delineators may vary by manufacturer. A minimum of 16 square inches of sheeting area is required. The sheeting shall be white or yellow super or very high intensity fluorescent sheeting. The sheeting color shall match the edgeline color.

June 26, 2011

Published Date: 2nd Qtr. 2016 | SDDOT | DELINEATION OF GUARDRAIL AT BRIDGES | PLATE NUMBER 632.40 | Sheet 3 of 4

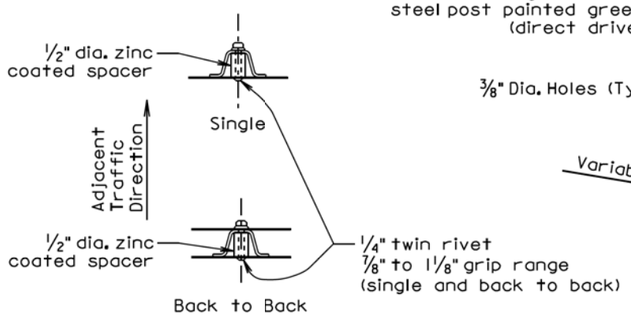


TYPE 2 OBJECT MARKER DETAILS AND POST ORIENTATION

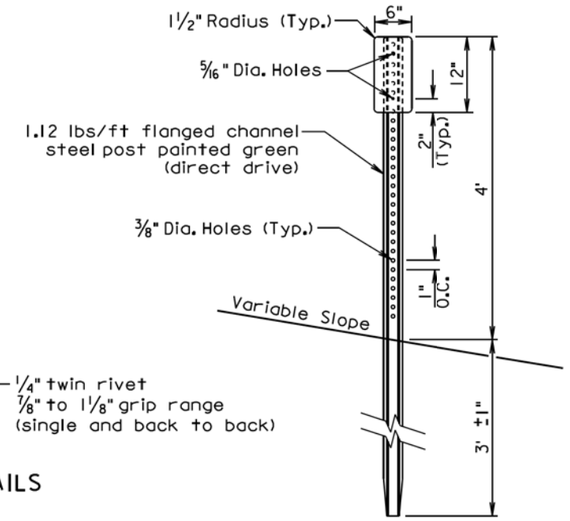


(M) TYPE 2 OBJECT MARKER
(For Marking 3 Cable Guardrail Anchor)

**GENERAL NOTES:**

The delineators shall be covered with a minimum of 16 square inches of reflective sheeting. The reflective sheeting shall be of either very high intensity or super high intensity material. For bridges along two-way roadways the sheeting shall be on both sides of the delineator and shall be white in color. For one-way roadways the sheeting will only be required on the side facing traffic and the color will be the same as the nearest pavement marking, yellow on the left side of the roadway and white on the right side.

The first delineator shall be attached to the post nearest the bridge with additional delineators spaced in advance of the bridge at approximately 50 foot intervals. At bridges with short lengths of guardrail, less than 200 feet, a minimum of 4 delineators shall be placed in addition to the yellow object marker. The spacing between the delineators shall be approximately one third of the length of the guardrail. This will provide for a shorter spacing. At bridges with longer lengths of guardrail, greater than 200 feet, including bridges that have cable guardrail transitioning into the steel beam guardrail, the delineators will be placed at a spacing of approximately 50 feet. Delineation shall extend throughout the length of the guardrail system.

All costs for furnishing and installing single or back to back guardrail delineation shall be included in the contract unit price per each for "Guardrail Delineator".

An adhesive object marker shall be placed on the end of the W beam guardrail end terminal. The adhesive object marker dimensions may vary due to the shape of the terminal end. A minimum of 256 square inches of object marker reflective sheeting area is required. The reflective sheeting shall be fluorescent yellow super or very high intensity. All costs for furnishing and installing the adhesive object marker shall be incidental to various contract items.

A type 2 object marker shall be placed adjacent to the 3 cable guardrail anchor at the location noted on sheet 1 of this standard plate. The type 2 object marker (6" x 12") shall have a fluorescent yellow very high or super high intensity reflective sheeting. All costs for furnishing and installing the type 2 object marker including the steel post, 6" x 12" reflective panel, and hardware shall be included in the contract unit price per each for "Type 2 Object Marker" for single-sided and "Type 2 Object Marker Back to Back" for back to back type 2 object markers.

*June 26, 2011*

| | | | |
|---|---|---|---|
| *Published Date: 2nd Qtr. 2016* | SDDOT | ***DELINEATION OF GUARDRAIL AT BRIDGES*** | *PLATE NUMBER* 632.40 |
| | | | *Sheet 4 of 4* |