STATE OF SOUTH DAKOTA	PROJECT	SHEET NO.	TOTAL SHEETS
	P 0028(32)319	1	135

Plotting Date: 10/23/2015

STATE OF SOUTH DAKOTA
DEPARTMENT OF TRANSPORTATION
PLANS FOR PROPOSED

PROJECT P 0028(32)319
S.D. HIGHWAY 28
CLARK & HAMLIN COUNTIES

CURB & GUTTER REPLACEMENT, DRAINAGE IMPROVEMENTS,
COLD MILLING ASPHALT CONCRETE,
ASPHALT CONCRETE RESURFACING & ROW PLANS

PCN 02QK

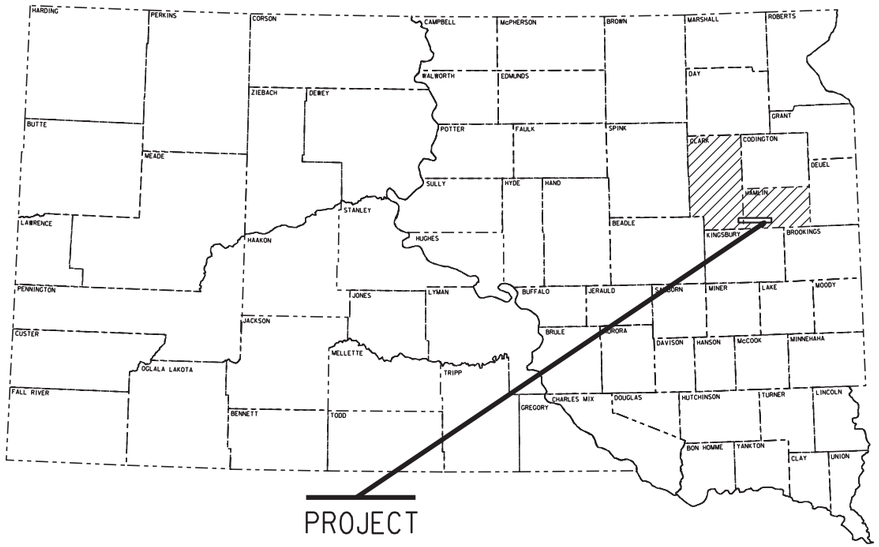

INDEX OF SHEETS

Sheet 1	Title Sheet and Layout Map
Sheet 2-5	Estimate of Quantities & Environmental Commitments
Sheet 6-7	Typical Resurfacing Sections
Sheet 8-10	Rates of Materials, Table of Additional Quantities & Summary of Asphalt Concrete
Sheet 11	Table of Project Stationing and Material Quantities
Sheet 12-15	Tables for Mainline Culvert Work, Storm Sewer and Approach Pipe
Sheet 16	Table of Pavement and Curb and Gutter Quantities
Sheet 17	Table of Reinforced Concrete Drop Inlets Locations and Quantities
Sheet 18-23	Permanent Sign Installation Tables
Sheet 24-38	Plan Notes
Sheet 39-41	Storm Water Pollution Prevent Plan Checklist
Sheet 42-51	Traffic Control
Sheet 52	Permanent Pavement Markings
Sheet 53-54	Control Data and Horizontal Alignment & Topography Symbology and Legends
Sheet 55-62	Plan and Profile Sheet
Sheet 63-64	Removal Layouts
Sheet 65-71	Curb & Gutter Layouts & Curb Ramp Details
Sheet 72-76	Erosion and Sediment Control Legend & Plan Sheets
Sheet 77	Dewatering and Sediment Collection System
Sheet 78	Culvert Replacement Detail
Sheet 79-80	Pavement Transition Details
Sheet 81	Recessed Rumble Strips
Sheet 82	Installation of Type B Drop Inlet
Sheet 83-84	Special Sign Design Details
Sheet 85-91	Sign Installation Details
Sheet 92-117	Standard Plates
Sheet 118-135	Cross Sections & Approach Pipe Cross Sections

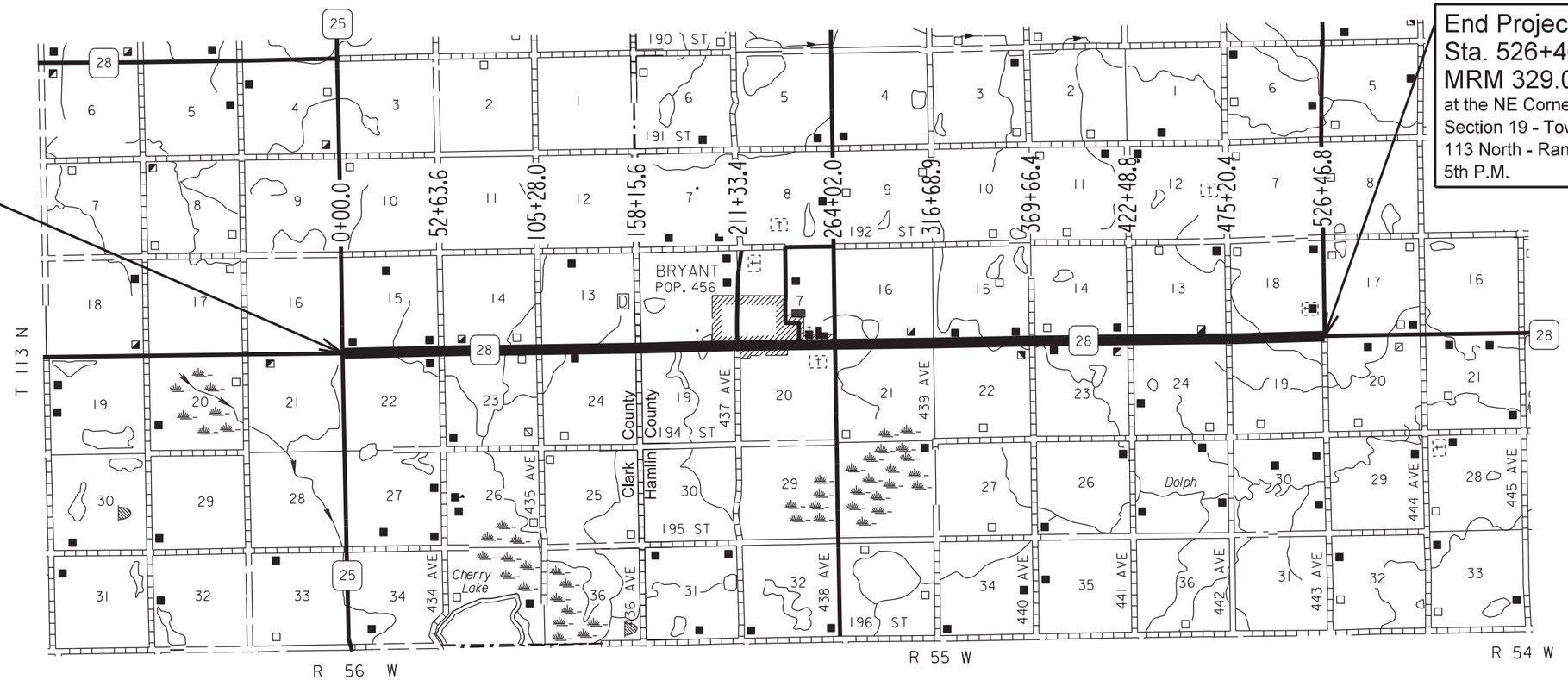

6

SCALES

		URBAN
PLAN		1"=40'
PROFILE.	HORIZONTAL:	1"=40'
	VERTICAL:	1"=10'
CROSS SECTIONS	HORIZONTAL:	1"=20'
	VERTICAL:	1"=10'

DESIGN DESIGNATION

ADT (2014)	839
ADT (2034)	1037
DHV	116.1
D	53%
T DHV	8.2%
T ADT	18.1%
V	65 MPH Rural 35 MPH Urban

STORM WATER PERMIT

Major Receiving
Body of Water: Cheery Lake, McShane Slough, Dolph Creek
Area Disturbed: 4 Acres
Total Project Area: 177 Acres
Approx Begin Lat/Long: 44.587351, -97.553077

GROSS LENGTH	52,631.80 FEET	9.968 MILES
LENGTH OF EXCEPTIONS	0.00 FEET	0.000 MILES
NET LENGTH	52,631.80 FEET	9.968 MILES

PLOT SCALE - 1:7000
PLOT NAME - 1
FILE - ...\02QK_TITLE_SHEET.DGN
PLOTTED FROM - TRAB17882

ESTIMATE OF QUANTITIES

STATE OF SOUTH DAKOTA	PROJECT	SHEET	TOTAL SHEETS
	P 0028(32)319	2	135

BID ITEM NUMBER	ITEM	QUANTITY	UNIT
004E0020	Construction and Maintenance of Detour(s)	Lump Sum	LS
009E0010	Mobilization	Lump Sum	LS
100E0010	Clear and Grub Stump	6	Each
100E0020	Clear and Grub Tree	176	Each
100E0100	Clearing	Lump Sum	LS
110E0130	Remove Traffic Sign	103	Each
110E0300	Remove Concrete Curb and Gutter	2,272	Ft
110E0400	Remove Drop Inlet	5	Each
110E0500	Remove Pipe Culvert	2	Ft
110E0510	Remove Pipe End Section	12	Each
110E1010	Remove Asphalt Concrete Pavement	634.0	SqYd
110E1130	Remove Concrete Driveway Pavement	211.7	SqYd
110E1140	Remove Concrete Sidewalk	170.6	SqYd
110E1690	Remove Sediment	4.0	CuYd
110E1695	Remove Sediment Filter Bag	592	Ft
110E1700	Remove Silt Fence	640	Ft
110E5720	Salvage Drop Inlet Frame and Grate Assembly	3	Each
110E7500	Remove Pipe for Reset	289	Ft
110E7510	Remove Pipe End Section for Reset	27	Each
120E0010	Unclassified Excavation	2,486	CuYd
120E0100	Unclassified Excavation, Digouts	498	CuYd
120E0600	Contractor Furnished Borrow Excavation	500	CuYd
120E0900	Contaminated Material Excavation	100	CuYd
120E4100	Reprofiling Ditch	4.6	Sta
230E0100	Remove and Replace Topsoil	Lump Sum	LS
250E0020	Incidental Work, Grading	Lump Sum	LS
260E1010	Base Course	3,982.8	Ton
320E0007	PG 64-28 Asphalt Binder	1,617.0	Ton
320E1002	Class Q2 Hot Mixed Asphalt Concrete	28,063.6	Ton
320E1200	Asphalt Concrete Composite	376.0	Ton
320E4000	Hydrated Lime	280.4	Ton
320E7008	Grind 8" Rumble Strip or Stripe in Asphalt Concrete	18.2	Mile
330E0100	SS-1h or CSS-1h Asphalt for Tack	128.5	Ton
330E0210	SS-1h or CSS-1h Asphalt for Flush Seal	36.9	Ton
330E2000	Sand for Flush Seal	542.2	Ton
332E0010	Cold Milling Asphalt Concrete	8,544	SqYd
380E3020	6" PCC Driveway Pavement	88.5	SqYd
380E3540	8" PCC Approach Pavement	243.4	SqYd
421E0100	Pipe Culvert Undercut	97	CuYd
450E0112	15" RCP Class 2, Furnish	6	Ft
450E0120	15" RCP, Install	6	Ft
450E0122	18" RCP Class 2, Furnish	296	Ft

BID ITEM NUMBER	ITEM	QUANTITY	UNIT
450E0130	18" RCP, Install	296	Ft
450E0142	24" RCP Class 2, Furnish	330	Ft
450E0150	24" RCP, Install	330	Ft
450E0408	18" RCP Bend, Furnish	6	Each
450E0409	18" RCP Bend, Install	6	Each
450E2004	15" RCP Flared End, Furnish	1	Each
450E2005	15" RCP Flared End, Install	1	Each
450E2008	18" RCP Flared End, Furnish	7	Each
450E2009	18" RCP Flared End, Install	7	Each
450E2016	24" RCP Flared End, Furnish	6	Each
450E2017	24" RCP Flared End, Install	6	Each
450E2028	36" RCP Flared End, Furnish	1	Each
450E2029	36" RCP Flared End, Install	1	Each
450E2200	24" RCP Sloped End, Furnish	10	Each
450E2201	24" RCP Sloped End, Install	10	Each
450E2304	18" RCP Safety End, Furnish	2	Each
450E2307	18" RCP Safety End, Install	2	Each
450E2400	RCP Arch to Round Transition Furnish	1	Each
450E2401	RCP Arch to Round Transition Install	1	Each
450E3002	18" RCP Arch Class 2, Furnish	570	Ft
450E3010	18" RCP Arch, Install	570	Ft
450E5211	18" CMP Flared End, Furnish	1	Each
450E5212	18" CMP Flared End, Install	1	Each
450E5509	18" CMP Arch 16 Gauge, Furnish	146	Ft
450E5510	18" CMP Arch, Install	146	Ft
450E6006	18" CMP Arch Safety End, Furnish	6	Each
450E6007	18" CMP Arch Safety End, Install	6	Each
450E8300	Culvert Joint Cleaning	100.0	Ft
450E8305	Repair Culvert Joint	100.0	Ft
450E8310	Chemical Grout Void Fill	100.0	Gal
* 450E8900	Cleanout Pipe Culvert	7	Each
450E9000	Reset Pipe	289	Ft
450E9001	Reset Pipe End Section	27	Each
462E0100	Class M6 Concrete	12.0	CuYd
464E0100	Controlled Density Fill	4.4	CuYd
480E0100	Reinforcing Steel	1,497	Lb
600E0300	Type III Field Laboratory	1	Each
632E1320	2.0"x2.0" Perforated Tube Post	984.0	Ft
632E1340	2.5"x2.5" Perforated Tube Post	38.0	Ft
632E3203	Flat Aluminum Sign, Nonremovable Copy High Intensity	174.3	SqFt
632E3205	Flat Aluminum Sign, Nonremovable Copy Super/Very High Intensity	451.5	SqFt

ESTIMATE OF QUANTITIES

BID ITEM NUMBER	ITEM	QUANTITY	UNIT
633E0030	Cold Applied Plastic Pavement Marking, 24"	14	Ft
633E1300	Pavement Marking Paint, White	337	Gal
633E1305	Pavement Marking Paint, Yellow	172	Gal
633E5015	Grooving for Cold Applied Plastic Pavement Marking, 24"	14	Ft
634E0010	Flagging	500.0	Hour
634E0020	Pilot Car	150.0	Hour
634E0110	Traffic Control Signs	1,298	SqFt
634E0120	Traffic Control, Miscellaneous	Lump Sum	LS
634E0265	Type 3 Barricade, 6' Double Sided	4	Each
634E0285	Type 3 Barricade, 8' Double Sided	12	Each
634E0600	4" Temporary Pavement Marking Tape Type I	11,750	Ft
634E0630	Temporary Pavement Marking	30.5	Mile
634E0810	Groove 6" Wide Rumble Strip	425	Ft
634E2000	Longitudinal Pedestrian Barricade	120	Ft
634E2015	Temporary Pedestrian Access Route	Lump Sum	LS
634E2020	Temporary Curb Ramp	3	Each
650E0060	Type B66 Concrete Curb and Gutter	2,315	Ft
650E4680	Type P8 Concrete Gutter	294	Ft
650E6280	8" Concrete Valley Gutter	193.5	SqYd
651E0040	4" Concrete Sidewalk	1,942	SqFt
651E7000	Type 1 Detectable Warnings	50	SqFt
670E1200	Type B Frame and Grate Assembly	8	Each
670E2200	Type C Frame and Grate	6	Each
671E7010	Adjust Manhole	8	Each
730E0204	Type C Permanent Seed Mixture	32	Lb
730E0206	Type D Permanent Seed Mixture	280	Lb
731E0100	Fertilizing	92	Lb
732E0100	Mulching	2.0	Ton
732E0200	Fiber Mulching	0.9	Ton
734E0154	12" Diameter Erosion Control Wattle	550	Ft
734E0165	Remove and Reset Erosion Control Wattle	140	Ft
734E0180	Sediment Filter Bag	592	Ft
734E0604	High Flow Silt Fence	640	Ft
734E0610	Mucking Silt Fence	45	CuYd
734E0620	Repair Silt Fence	160	Ft
734E0680	Flocculent Housing Unit	2	Each
734E0683	500K Gallon Treatment Flocculent Bag	2	Each
734E0845	Sediment Control at Inlet with Frame and Grate	14	Each
734E5005	Dewatering	Lump Sum	LS
734E5010	Sweeping	5	Hour
831E1010	Geogrid Reinforcement	1,213	SqYd

BID ITEM NUMBER	ITEM	QUANTITY	UNIT
900E0010	Refurbish Single Mailbox	10	Each
900E0012	Refurbish Double Mailbox	1	Each
900E0015	Multiple Mailbox Support	1	Each
900E1980	Storage Unit	1	Each

*** - Denotes Non-Participating**

SPECIFICATIONS

Standard Specifications for Roads and Bridges, 2015 Edition and Required Provisions, Supplemental Specifications, and Special Provisions as included in the Proposal.

ENVIRONMENTAL COMMITMENTS

ENVIRONMENTAL COMMITMENTS

An Environmental Commitment is a measure that SDDOT commits to implement in order to avoid, minimize, and/or mitigate a real or potential environmental impact. Environmental commitments to various agencies and the public have been made to secure approval of this project. An agency mentioned below with permitting authority can influence a project if perceived environmental impacts have not been adequately addressed. Unless otherwise designated, the Contractor's primary contact regarding matters associated with these commitments will be the Project Engineer. These environmental commitments are not subject to change without prior written approval from the SDDOT Environmental Office. The environmental commitments associated with this project are as follows:

COMMITMENT A: WETLANDS

Approximately 0.037 acres of wetlands will be temporarily impacted by the project. These unavoidable impacts to wetlands are less than 0.1 acres and the "*Statewide Wetland Finding for South Dakota Federal-Aid Highway Projects"* will apply.

Table of Impacted Wetlands

Wetland No.	Type	Station	Impact Left (Acres)	Impact Right (Acres)	Temporary Impact (Acres)	Total Impact (Acres)
1	PEMC	178+59 (L)	-	-	0.007	0
2	PEMC	178+59(R)	-	-	0.007	0
3	PEMA	195+16 (L)	-	-	0.007	0
4	PEMA	195+16(R)	-	-	0.016	0
					0.037	0

Action Taken/Required:

Temporary impacts will not be mitigated as original grades will be re-established.

Additional ROW easement at the above locations will require a supplement wetland investigation be conducted. Please contact the Environmental office at 605-773-3268 if the work requires additional ROW needs.

COMMITMENT B: FEDERALLY THREATENED, ENDANGERED, AND PROTECTED SPECIES

COMMITMENT B2: WHOOPING CRANE

The Whooping Crane is a spring and fall migratory bird in South Dakota that is about 5 feet tall and typically stops on wetlands, rivers, and agricultural lands along their migration route. An adult Whooping Crane is white with a red crown and a long, dark, pointed bill. Immature Whooping Cranes are cinnamon brown. While in flight, their long necks are kept straight and their long dark legs trail behind. Adult Whooping Cranes' black wing tips are visible during flight.

Action Taken/Required:

Harassment or other measures to cause the Whooping Crane to leave the site is a violation of the Endangered Species Act. If a Whooping Crane is sighted roosting in the vicinity of the project, borrow pit, or staging site associated with the project, cease construction activities in the affected area until the Whooping Crane departs and contact the Project Engineer. The Project Engineer will contact the Environmental Office so that the sighting can be reported to USFWS.

COMMITMENT C: WATER SOURCE

The Contractor shall not withdraw water with equipment previously used outside the State of South Dakota without prior approval from the SDDOT Environmental Office. Thoroughly wash all construction equipment before entering South Dakota to reduce the risk of invasive species introduction into the project vicinity.

The Contractor shall not withdraw water directly from streams of the James, Big Sioux, and Vermillion watersheds without prior approval from the SDDOT Environmental Office.

Action Taken/Required:

The Contractor shall obtain the necessary permits from the regulatory agencies such as the Department of Environment and Natural Resources (DENR) and the United States Army Corps of Engineers (COE) prior to executing water extraction activities.

COMMITMENT D: WATER QUALITY STANDARDS

COMMITMENT D1: SURFACE WATER QUALITY

The unnamed tributaries of Dolph Creek, Cherry North Lake, and McShane Slough are classified as fish and wildlife propagation, recreation, irrigation, and stock watering waters. Because of these beneficial uses, special construction measures may have to be taken to ensure that this water body is not impacted.

Action Taken/Required:

The Contractor is advised the South Dakota Surface Water Quality Standards, administered by the Department of Environment and Natural Resources (DENR), apply to this project. Special construction measures shall be taken to ensure the above standard(s) of the surface waters are maintained and protected.

COMMITMENT D2: SURFACE WATER DISCHARGE

The Unnamed tributaries of Dolph Creek, Cherry North Lake, and McShane Slough are classified as fish and wildlife propagation, recreation, irrigation and stock watering waters. Because of these beneficial uses, special construction measures may have to be taken to ensure that this water body is not impacted.

Action Taken/Required:

If construction dewatering is required, the Contractor shall obtain a Temporary Discharge Permit from the DENR and provide a copy to the Project Engineer. Contact the DENR Surface Water Program at 605-773-3351 to apply for a permit.

COMMITMENT E: STORM WATER

Construction activities constitute 1 acre or more of earth disturbance.

Action Taken/Required:

Construction activities constitute 1 acre or more of earth disturbance.

Action Taken/Required:

The DENR and the US Environmental Protection Agency (EPA) have issued separate general permits for the discharge of storm water runoff. The DENR permit applies to discharges on state land and the EPA permit applies to discharges on federal or reservation land. The Contractor is advised this project is regulated under the Phase II Storm Water Regulations and must receive coverage under the General Permit for Construction Activities. A Notice of Intent (NOI) will be submitted to DENR a minimum of 15 days prior to project start by the DOT Environmental Office. A letter must be received from DENR that acknowledges project coverage under this general permit before project start. The Contractor is advised that permit coverage may also be required by off-site activities, such as borrow and staging areas, which are the responsibility of the Contractor.

The Contractor shall adhere to the "Special Provision Regarding Storm Water Discharges to Waters of the State".

A major component of the storm water construction permits is development and implementation of a Storm Water Pollution Prevention Plan (SWPPP), which is a joint effort and responsibility of the SDDOT and the Contractor. Erosion control measures and best management practices will be implemented in accordance with the SWPPP. The SWPPP is a dynamic document and is to be available on-site at all times.

Information on storm water permits and SWPPPs are available on the following websites:

SDDOT: http://sddot.com/transportation/highways/environmental/stormwater/Default.aspx

DENR: http://www.denr.sd.gov/des/sw/stormwater.aspx

EPA: http://cfpub.epa.gov/npdes/home.cfm?program_id=6

Contractor Certification Form:

The "Department of Environmental and Natural Resources – Contractor Certification Form" (SD EForm – 2110LDV1-ContractorCertification.pdf) shall be completed by the Contractor or their certified Erosion Control Supervisor after the award of the contract. Work may not begin on the project until this form is signed.

ENVIRONMENTAL COMMITMENTS

The form certifies under penalty of law that the Contractor understands and will comply with the terms and conditions of the Surface Water Discharge General Permit for Storm Water Discharges Associated with Construction Activities for the Project.

The online form can be found at:
http://denr.sd.gov/des/sw/eforms/E2110LDV1-ContractorCertification.pdf

COMMITMENT H: WASTE DISPOSAL SITE

The Contractor shall furnish a site(s) for the disposal of construction and/or demolition debris generated by this project.

Action Taken/Required:

Construction and/or demolition debris may not be disposed of within the State ROW.

The waste disposal site(s) shall be managed and reclaimed in accordance with the following from the General Permit for Construction/Demolition Debris Disposal Under the South Dakota Waste Management Program issued by the Department of Environment and Natural Resources.

The waste disposal site(s) shall not be located in a wetland, within 200 feet of surface water, or in an area that adversely affects wildlife, recreation, aesthetic value of an area, or any threatened or endangered species, as approved by the Project Engineer.

If the waste disposal site(s) is located such that it is within view of any ROW, the following additional requirements shall apply:

1. Construction and/or demolition debris consisting of concrete, asphalt concrete, or other similar materials shall be buried in a trench completely separate from wood debris. The final cover over the construction and/or demolition debris shall consist of a minimum of 1 foot of soil capable of supporting vegetation. Waste disposal sites provided outside of the State ROW shall be seeded in accordance with Natural Resources Conservation Service recommendations. The seeding recommendations may be obtained through the appropriate County NRCS Office. The Contractor shall control the access to waste disposal sites not within the State ROW through the use of fences, gates, and placement of a sign or signs at the entrance to the site stating “No Dumping Allowed”.

2. Concrete and asphalt concrete debris may be stockpiled within view of the ROW for a period of time not to exceed the duration of the project. Prior to project completion, the waste shall be removed from view of the ROW or buried and the waste disposal site reclaimed as noted above.

The above requirements will not apply to waste disposal sites that are covered by an individual solid waste permit as specified in SDCL 34A-6-58, SDCL 34A-6-1.13, and ARSD 74:27:10:06.

Failure to comply with the requirements stated above may result in civil penalties in accordance with South Dakota Solid Waste Law, SDCL 34A-6-1.31.

All costs associated with furnishing waste disposal site(s), disposing of waste, maintaining control of access (fence, gates, and signs), and reclamation of the waste disposal site(s) shall be incidental to the various contract items.

COMMITMENT I: HISTORICAL PRESERVATION OFFICE CLEARANCES

The SDDOT has obtained concurrence with the State Historical Preservation Office (SHPO or THPO) for all work included within the project limits and all department designated sources and designated option material sources, stockpile sites, storage areas, and waste sites provided within the plans.

Action Taken/Required:

All earth disturbing activities not designated within the plans require review of cultural resources impacts. This work includes, but is not limited to: Contractor furnished material sources, material processing sites, stockpile sites, storage areas, plant sites, and waste areas.

The Contractor shall arrange and pay for a cultural resource survey and/or records search. The Contractor has the option to contact the state Archaeological Research Center (ARC) at 605-394-1936 or another qualified archaeologist, to obtain either a records search or a cultural resources survey. A record search might be sufficient for review; however, a cultural resources survey may need to be conducted by a qualified archaeologist.

The Contractor shall provide ARC with the following: a topographical map or aerial view on which the proposed site is clearly outlined, site dimensions, project number, and PCN. If applicable, provide evidence that the site has been previously disturbed by farming, mining, or construction activities with a landowner statement that artifacts have not been found on the site.

The Contractor shall submit the records search or cultural resources survey report and if the location of the site is within the current geographical or historic boundaries of any South Dakota reservation to SDDOT Environmental Engineer, 700 East Broadway Avenue, Pierre, SD 57501-2586 (605-773-3180). SDDOT will submit the information to the appropriate SHPO/THPO. Allow **30 Days** from the date this information is submitted to the Environmental Engineer for SHPO/THPO review.

If evidence for historic or cultural resources is uncovered during project construction activities, then such activities shall cease and the Project Engineer shall be immediately notified. The Project Engineer will contact the SDDOT Environmental Engineer in order to determine an appropriate course of action.

SHPO/THPO review does not relieve the Contractor of the responsibility for obtaining any additional permits and clearances for Contractor furnished material sources, material processing sites, stockpile sites, storage areas, plant sites, and waste areas that affect wetlands, threatened and endangered species, or waterways. The Contractor shall provide the required permits and clearances to the Project Engineer at the preconstruction meeting.

COMMITMENT L: CONTAMINATED MATERIAL

Contaminated soil and/or known gas stations, undergrounds storage tanks, etc. are located within the project limits. Petroleum contaminated may be located at the following sites:

Description	Station	L / R
Cenex Gas Station	219+50 to 223+00	L

Action Taken/Required:

The Contractor shall give notice to the Engineer when contaminated soil is encountered on the project. The Engineer will contact the SDDOT Environmental Engineer, at 605-773-3180, so that contact with the Department of Environment and Natural Resources (DENR) and consultant to inspect and monitor removal of any contaminated soil can be initiated.

The Contractor shall be responsible for having the existing underground utilities located in the construction area. Underground utilities damaged by the Contractor due to negligence shall be repaired at the Contractor’s expense.

Petroleum contaminated soil may be disposed of at the Brookings SD Landfill (phone 605-693-3667). Measurement of “Contaminated Material Excavation” shall be in accordance with Section 120.4 of the Specifications. All costs for excavating and transporting the contaminated materials to the disposal site and all fees charged per cubic yard by the disposal site shall be incidental to the contract unit price per cubic yard for “Contaminated Material Excavation”.

The estimated quantity of “Contaminated Material Excavation” is100 cubic yards. The quantity of “Contaminated Material Excavation” may vary from the plans. No adjustment will be made to the contract unit price for variations in the quantity of “Contaminated Material Excavation”. The estimated quantity of “Contaminated Material Excavation” is provided in the Estimate of Quantities

COMMITMENT N: SECTION 404 PERMIT

The SDDOT has obtained a Section 404 Permit from the US Army Corps of Engineers for the permanent actions associated with this project.

Action Taken/Required:

The Contractor shall comply with all requirements contained in the Section 404 permit.

The Contractor shall also be responsible for obtaining a Section 404 permit for any dredge, excavation, or fill activities associated with staging areas, borrow sites, waste disposal sites, or material processing sites that affect wetlands or waters of the United States.

TYPICAL RESURFACING SECTIONS

Section 1:

Sta. 0+15 to Sta. 220+50

Sta. 235+00 to Sta. 526+46.8

In Place and Resurfacing Section

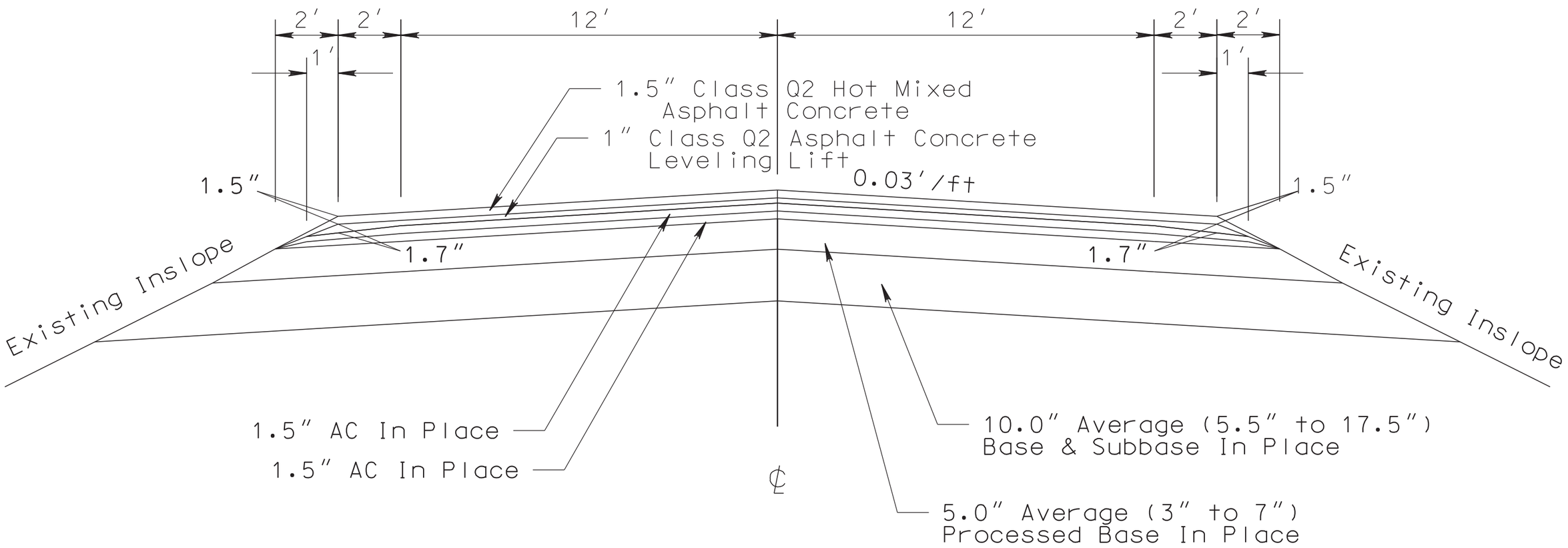

PLOT SCALE - 1:3.22001
PLOTTED FROM - TRAB17882
PLOT NAME - 2
FILE - ...\REGIONDESIGN\02OKTYP.DGN

TYPICAL RESURFACING SECTIONS

STATE OF SOUTH DAKOTA	PROJECT	SHEET NO.	TOTAL SHEETS
	P 0028(32)319	7	135

Plotting Date: 10/23/2015

Section 2:
Sta. 220+50 to Sta. 235+00
In Place Section

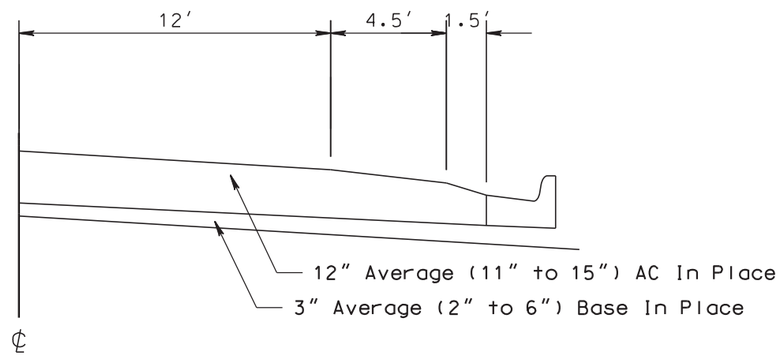

Cold Milling Section

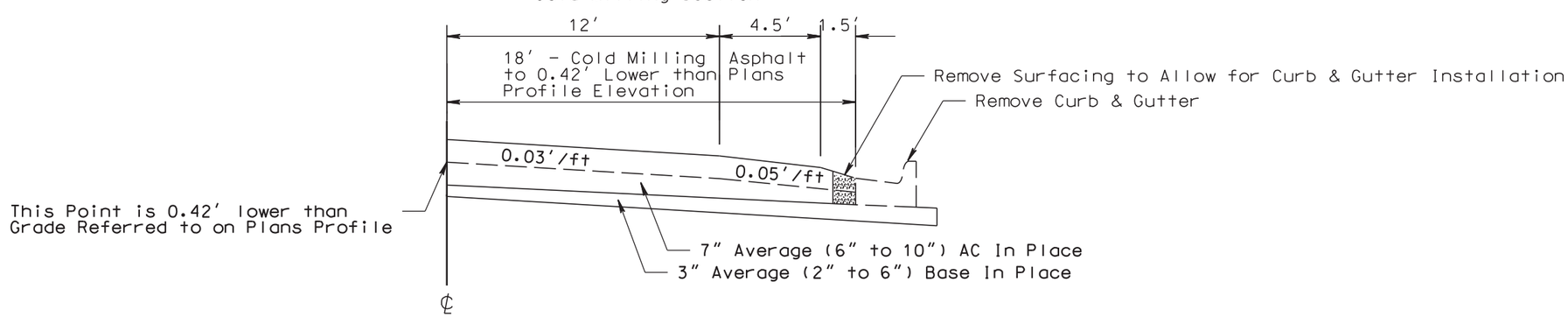

Resurfacing Section

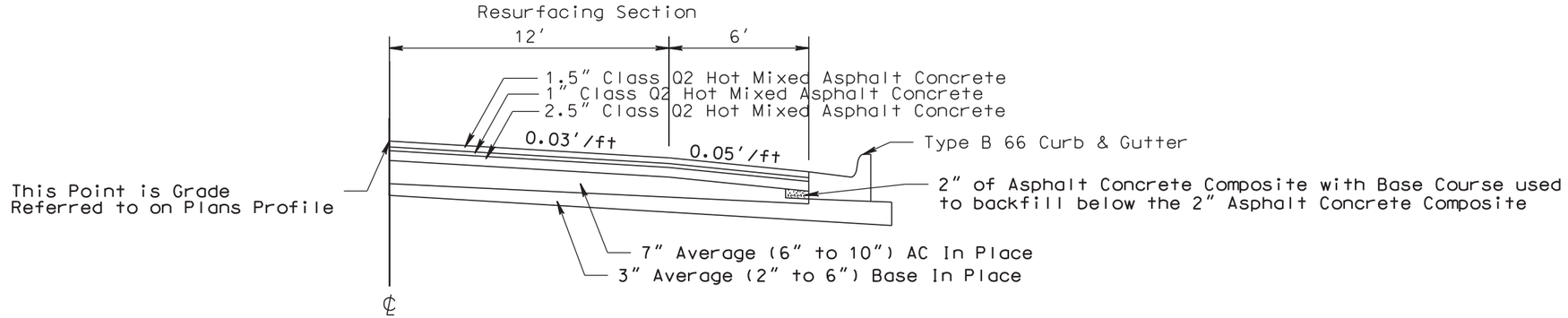

PLOT SCALE - 1:5.83335

PLOT NAME - 3

FILE - ...\REGIONDESIGN\02OKTYP.DGN

PLOTTED FROM - TRAB17882

RATES OF MATERIALS

The Estimate of Quantities is based on the following quantities of material per mile.

Section 1 **Sta. 0+15 to Sta. 220+50**
Sta. 235+00 to Sta. 526+46.8

CLASS Q2 HOT MIXED ASPHALT CONCRETE -1" FIRST LIFT

Crushed Aggregate.....	951 Tons
PG 64-28 Asphalt Binder.....	59 Tons
Total without Lime	**1010 Tons**
Hydrated Lime.....	10 Tons
Total with Lime	**1020 Tons**

The exact proportion of these materials will be determined on construction.

SS-1h or CSS-1h Emulsified Asphalt for Tack at the rate of **6.9** tons applied **31** feet wide.
(Rate = 0.09 Gal./Sq.Yd.)

CLASS Q2 HOT MIXED ASPHALT CONCRETE -1.5" FINAL LIFT

Crushed Aggregate.....	1380 Tons
PG 64-28 Asphalt Binder.....	85 Tons
Total without Lime	**1465 Tons**
Hydrated Lime.....	15 Tons
Total with Lime	**1480 Tons**

The exact proportion of these materials will be determined on construction.

SS-1h or CSS-1h Emulsified Asphalt for Tack at the rate of **4.9** tons applied **33** feet wide.
(Rate = 0.06 Gal./Sq.Yd.)

FLUSH SEAL

SS-1h or CSS-1h Emulsified Asphalt for Flush Seal at the rate of **3.5** tons applied **28** feet wide.
(Rate = 0.05 Gal./Sq.Yd.).

Sand for Flush Seal at the rate of **52** tons applied **22** feet wide. (Rate = 8 Lb./Sq.Yd.).

The Estimate of Quantities is based on the following quantities of material per Station.

Section 2 **Sta. 220+50 to Sta. 235+00**

CLASS Q2 HOT MIXED ASPHALT CONCRETE -2.5" FIRST LIFT

Crushed Aggregate.....	52.38 Tons
PG 64-28 Asphalt Binder.....	3.23 Tons
Total without Lime	**55.61 Tons**
Hydrated Lime.....	0.56 Tons
Total with Lime	**56.17 Tons**

The exact proportion of these materials will be determined on construction.

SS-1h or CSS-1h Emulsified Asphalt for Tack at the rate of **0.15** tons applied **36** feet wide.
(Rate = 0.09 Gal./Sq.Yd.)

CLASS Q2 HOT MIXED ASPHALT CONCRETE -1" SECOND LIFT

Crushed Aggregate.....	20.94 Tons
PG 64-28 Asphalt Binder.....	1.29 Tons
Total without Lime	**22.23 Tons**
Hydrated Lime.....	0.22 Tons
Total with Lime	**22.45 Tons**

The exact proportion of these materials will be determined on construction.

SS-1h or CSS-1h Emulsified Asphalt for Tack at the rate of **0.10** tons applied **36** feet wide.
(Rate = 0.06 Gal./Sq.Yd.)

CLASS Q2 HOT MIXED ASPHALT CONCRETE -1.5" FINAL LIFT

Crushed Aggregate.....	31.45 Tons
PG 64-28 Asphalt Binder.....	1.94 Tons
Total without Lime	**33.39 Tons**
Hydrated Lime.....	0.33 Tons
Total with Lime	**33.72 Tons**

The exact proportion of these materials will be determined on construction.

SS-1h or CSS-1h Emulsified Asphalt for Tack at the rate of **0.10** tons applied **36** feet wide.
(Rate = 0.06 Gal./Sq.Yd.)

FLUSH SEAL

SS-1h or CSS-1h Emulsified Asphalt for Flush Seal at the rate of **0.09** tons applied **36** feet wide.
(Rate = 0.05 Gal./Sq.Yd.).

Sand for Flush Seal at the rate of **1.60** tons applied **36** feet wide. (Rate = 8 Lb./Sq.Yd.).

STATE OF SOUTH DAKOTA	PROJECT	SHEET NO.	TOTAL SHEETS
	P 0028(32)319	9	135

TABLE OF ADDITIONAL QUANTITIES

LOCATIONS:	BASE COURSE TON	CLASS Q2 HOT MIXED ASPHALT CONCRETE (w/out Specified Density) TON	PG 64-28 ASPHALT BINDER TON	HYDRATED LIME TON	Virgin Aggregate N.A.B.I. TON	SS-1h/ CSS-1h ASPH. FOR TACK TON	SS-1h/ CSS-1h ASPH. FOR FLUSH SEAL TON	SAND FOR FLUSH SEAL TON	COLD MILLING ASPHALT CONCRETE SQ YD
Sta 73+20 Lt Farm Entrance - Surface with Asphalt to ROW Line	-	12	0.70	0.12	11.2	0.06	-	-	-
Sta 378+44 Rt Farm Entrance - Surface with Asphalt to ROW Line	-	12	0.70	0.12	11.2	0.06	-	-	-
Sta 526+47 Lt 443rd Ave - Surface with Asphalt to ROW Line	-	26	1.51	0.26	24.2	0.13	0.10	0.91	69
Sta 526+47 Rt 443rd Ave - Surface with Asphalt to ROW Line	-	26	1.51	0.26	24.2	0.13	0.10	0.91	69
14 Section Line Roads with Asphalt to end of Radius (434, 435, 436, 439, 440, 441, & 442 Avenues)	210	252	14.62	2.52	234.9	1.26	-	-	-
13 Farm & Residential Drives with Asphalt Pad	195	65	3.77	0.65	60.6	0.33	-	-	-
37 Field Entrances with Asphalt Pad	555	185	10.73	1.85	172.4	0.93	-	-	-
Begin Project - Cold Mill 50' Surfacing Taper	-	-	-	-	-	-	-	-	167
Cold Mill 200' long tapers and surface 100' long tapers near ends of C&G replacement	-	56	3.25	0.56	52.2	0.28	0.22	1.96	1600
End of Project - Cold Mill 125' Surfacing Taper and 2.5" Asphalt Surfacing 50' beyond center of Intersection to the East	-	23	1.33	0.23	21.4	0.12	0.09	0.81	417
City of Bryant Sta 202+75 thru Sta 264+02									
Sta 202+75 Lt Residential Entrance & Mailbox Pullout - Surface Entrance with Asphalt to ROW Line	-	18	1.04	0.18	16.8	0.09	-	-	-
Sta 203+50 Lt Locust St - Surface with Asphalt to end of Radius	15	18	1.04	0.18	16.8	0.09	-	-	-
Sta 205+10 Lt Residential Drive - Asphalt Pad	15	3	0.17	0.03	2.8	0.02	-	-	-
Sta 206+55 Lt Residential Entrance - Surface with Asphalt to ROW Line	-	14	0.81	0.14	13.0	0.07	-	-	-
Sta 207+30 Lt Lebanon St - Surface with Asphalt to end of Radius	15	18	1.04	0.18	16.8	0.09	-	-	-
Sta 211+33 Lt Broadway St - Surface with Asphalt to ROW Line	-	26	1.51	0.26	24.2	0.13	0.10	0.91	83
Sta 211+33 Rt Broadway St - Surface with Asphalt to end of Radius	30	18	1.04	0.18	16.8	0.09	-	-	-
Sta 212+65 Rt Residential Drive - Asphalt Pad	10	3	0.17	0.03	2.8	0.02	-	-	-
Sta 213+65 Rt Residential Drive - Asphalt Pad	10	3	0.17	0.03	2.8	0.02	-	-	-
Sta 214+70 Lt Park Entrance - Asphalt to ROW Line	10	18	1.04	0.18	16.8	0.09	-	-	-
Sta 214+70 Rt Parkview Care Center - Asphalt to ROW Line	-	30	1.74	0.30	28.0	0.15	-	-	106
Sta 216+45 Rt Residential Entrance - Asphalt to ROW Line	-	15	0.87	0.15	14.0	0.08	-	-	-
Sta 217+20 Lt Park Entrance - Asphalt to ROW Line	10	18	1.04	0.18	16.8	0.09	-	-	-
Sta 217+30 Rt Commercial Drive - Asphalt Pad	15	4	0.23	0.04	3.7	0.02	-	-	-
Sta 219+10 Lt Cenex Bulk Tank -Asphalt Pad	20	6	0.35	0.06	5.6	0.03	-	-	-
Sta 220+89 Rt Residential Drive - Base Course Only	5	-	-	-	-	-	-	-	-
Sta 221+10 Lt Cenex Fuel Island - Asphalt Pad	10	10	0.58	0.10	9.3	0.05	-	-	-
Sta 221+97 Lt Railway St - 4" Depth of Asphalt Concrete	10	17	0.99	0.17	15.8	0.09	0.07	0.60	-
Sta 223+28 Lt Hill St - 4" Depth of Asphalt Concrete	10	17	0.99	0.17	15.8	0.09	0.07	0.60	-
Sta 223+28 Rt Hill St - 4" Depth of Asphalt Concrete	10	21	1.22	0.21	19.6	0.11	-	-	-
Sta 224+52 Rt Residential Drive	-	-	-	-	-	-	-	-	-
Sta 224+89 Lt Residential Garage	-	-	-	-	-	-	-	-	-
Sta 225+22 Lt Alley & Residential Garage - Base Course Only	10	-	-	-	-	-	-	-	-
Sta 225+25 Rt Shared Drive	-	-	-	-	-	-	-	-	-
Sta 226+94 Lt Underwood St - 4" Depth of Asphalt Concrete	10	23	1.33	0.23	21.4	0.12	0.09	0.81	-
Sta 226+94 Rt Underwood St - Base Course Only	20	-	-	-	-	-	-	-	-
Sta 228+80 Lt Alley & Residential Garage - Base Course Only	10	-	-	-	-	-	-	-	-
Sta 228+81 Rt Shared Drive - Base Course Only	5	-	-	-	-	-	-	-	-
Sta 230+60 Lt Prosper St - 4" Depth of Asphalt Concrete	10	23	1.33	0.23	21.4	0.12	0.09	0.81	-
Sta 230+60 Rt Prosper St - 4" Depth of Asphalt Concrete	10	18	1.04	0.18	16.8	0.09	0.07	0.63	-
Sta 231+76 RT Residential Drive - Base Course Only	5	-	-	-	-	-	-	-	-
Sta 232+52 Lt Alley & Residential Garage - Base Course Only	10	-	-	-	-	-	-	-	-
Sta 233+24 Rt Residential Drive - Base Course Only	5	-	-	-	-	-	-	-	-
Sta 234+27 Lt Lee St - 4" Depth of Asphalt Concrete	10	14	0.81	0.14	13.0	0.07	0.06	0.49	-
Sta 234+27 Rt Lee St - Base Course Only	10	-	-	-	-	-	-	-	-
Sta 234+90 Rt Driveway - Asphalt Pad	10	4	0.23	0.04	3.7	0.02	-	-	-
Sta 234+43 Lt Garage Drive - Asphalt Pad	20	4	0.23	0.04	3.7	0.02	-	-	-
Sta 238+65 Lt Car Wash - Asphalt Pad	15	5	0.29	0.05	4.7	0.03	-	-	-
Sta 234+90 Lt Residential Drive - Asphalt Pad	15	4	0.23	0.04	3.7	0.02	-	-	-
Sta 234+90 Lt Residential Drive - Asphalt Pad	15	4	0.23	0.04	3.7	0.02	-	-	-
Sta 244+60 Lt William St - Asphalt to ROW Line	-	26	1.51	0.26	24.2	0.13	0.10	0.91	81
Sta 244+60 Rt Field Entrance - Asphalt Pad	15	3	0.17	0.03	2.8	0.02	-	-	-
Sta 247+85 Lt Lutheran Church Entrance - Asphalt Pad	15	5	0.29	0.05	4.7	0.03	-	-	-
Sta 259+90 Lt Commercial Drive - Asphalt Pad	15	6	0.35	0.06	5.6	0.03	-	-	-
Sta 259+90 Rt to Sta 264+02 Cemetery pad and 438 Ave - 16' wide pad for Cemetery and Asphalt to ROW line of 438 Ave	-	105	6.09	1.05	97.9	0.53	0.42	3.68	83
Sta 264+02 Lt 438 Ave - Asphalt to ROW Line	-	26	1.51	0.26	24.2	0.13	0.10	0.91	69
TOTALS	**1390**	**1204**	**69.8**	**12.0**	**1122.1**	**6.0**	**1.7**	**14.9**	**2744**

The tonnage shown in the Table of Additional Quantities for Class Q2 Hot Mix Asphalt Concrete is based on an average compacted thickness of 2 inches, unless otherwise indicated.

Application shall be at the rate shown on the plans or as directed by the Engineer.

The above quantities are included in the Estimate of Quantities.

PLOTTED FROM - TRAB17892

SUMMARY OF ASPHALT CONCRETE

LOCATIONS:	Class Q2 Hot Mixed Asphalt Concrete with Specified Density Compaction TONS	Class Q2 Hot Mixed Asphalt Concrete without Specified Density Compaction TONS
Section 1 - 1st and 2nd lift	24233.8	-
Section 2 - 1st lift (24' wide with Specified Density)	542.4	272.1
Section 2 - 2nd lift (24' wide with Specified Density)	217.0	108.5
Section 2 - 3rd lift (24' wide with Specified Density)	325.4	163.5
Spot leveling, strengthening, and repair of existing surface	-	996.9
Table of Additional Quantities	-	1204.0
TOTAL	**25318.6**	**2745.0**

Total Class Q2 Hot Mixed Asphalt Concrete: 28063.6 *Tons*

PLOTTED FROM - TRAB17882

TABLE OF PROJECT STATIONING

SECTION	STATION	TO	STATION	LENGTH (Ft)	GROSS SECTION LENGTH (Ft)	GROSS SECTION LENGTH (Miles)
1	+15.00	to	220+50.00	22035.00	51181.80	9.694
	235+00.00	to	526+46.80	29146.80		
2	220+50.00	to	235+00.00	1450.00	1450.00	0.275
TOTAL:					52631.80	9.968

TABLE OF MATERIAL QUANTITIES

	UNCLASSIFIED EXCAVATION, DIG OUTS	BASE COURSE	COLD MILLING ASPHALT CONCRETE	CLASS Q2 HOT MIXED ASPHALT CONCRETE	HYDRATED LIME	PG 64-28 ASPHALT BINDER	VIRG.. AGGR. (NABI.)	CLASS Q2 HOT MIXED ASPHALT CONCRETE	HYDRATED LIME	PG 64-28 ASPHALT BINDER	VIRG.. AGGR. (NABI.)	CLASS Q2 HOT MIXED ASPHALT CONCRETE	HYDRATED LIME	PG 64-28 ASPHALT BINDER	VIRG.. AGGR. (NABI.)	CLASS Q2 HOT MIXED ASPHALT CONCRETE	HYDRATED LIME	PG 64-28 ASPHALT BINDER	VIRG. AGGR. (NABI.)	ASPHALT CONCRETE COMPOSITE	SS-1h/ CSS-1h ASPH. FOR TACK	SS-1h/ CSS-1h ASPH. FOR FLUSH SEAL	SAND FOR FLUSH SEAL
	50.0			<----------Spot Leveling---------->				<----------2.5" Lift---------->				<----------1" Lift---------->				<----------1.5" Lift---------->							
SECTION	CuYd	Ton	SqYd	Ton	Ton	Ton	Ton	Ton	Ton	Ton	Ton	Ton	Ton	Ton	Ton	Ton	Ton	Ton	Ton	Ton	Ton	Ton	Ton
1	484.7	969.4	-	969.4	9.7	56.2	903.5	-	-	-	-	9887.4	96.9	571.9	9218.6	14346.4	145.4	823.9	13377.1	-	114.4	33.9	504.1
2	13.7	27.4	5800	27.5	0.3	1.6	25.6	814.5	8.1	46.8	759.6	325.5	3.2	18.7	303.6	488.9	4.8	28.1	456.0	-	5.1	1.3	23.2
Sub totals	498.4	996.8	5800	996.9	10.0	57.8	929.1	814.5	8.1	46.8	759.6	10212.9	100.1	590.6	9522.2	14835.3	150.2	852.0	13833.1	0.0	119.5	35.2	527.3
Additional Quantities	-	1390	2744	-	-	-	-	-	-	-	-	-	-	-	-	1204.0	12.0	69.8	1122.1	-	9.0	1.7	14.9
Culvert Replacment	-	1166	-	-	-	-	-	-	-	-	-	-	-	-	-	-	-	-	-	321.0	-	-	-
Maintenance of Traffic	-	250	-	-	-	-	-	-	-	-	-	-	-	-	-	-	-	-	-	-	-	-	-
Curb & Gutter Replacement	-	150	-	-	-	-	-	-	-	-	-	-	-	-	-	-	-	-	-	40.0	-	-	-
Removal of Abandonded Railroad Crossing , Sta 219+06.	-	30	-	-	-	-	-	-	-	-	-	-	-	-	-	-	-	-	-	15.0	-	-	-
Totals	498.4	3982.8	8544	996.9	10.0	57.8	929.1	814.5	8.1	46.8	759.6	10212.9	100.1	590.6	9522.2	16039.3	162.2	921.8	14955.2	376.0	128.5	36.9	542.2

PLOTTED FROM - TRAB17982

TABLE OF MAINLINE CULVERT WORK

Culvert #	MRM	+ Disp	Station	Side	In Place Culvert Size and Type		Per Original Plans: Culvert Length (Ft)	Per Original Plans: Direction of Flow	Incidental Work, Grading LS	Remove Pipe Culvert (Ft)	Remove Pipe for Reset (Each)	Remove Pipe End Section (Each)	Remove Pipe End Section for Reset (Each)	Furnish and Install: 24" RCP (Ft)	Furnish and Install: 18" RCP Flared End (Each)	Furnish and Install: 24" RCP Flared End (Each)	Furnish and Install: 36" RCP Flared End (Each)	Furnish and Install: 24" RCP Sloped End (Each)	Furnish and Install: 18" CMP Flared End (Each)	Reset Pipe (Ft)	Reset Pipe End Section (Each)	Clean-out Pipe Culvert (Each)	Culvert Joint Cleaning (Ft)	Repair Culvert Joint (Ft)	Chemical Grout Void Fill (Gallons)	Comments
433 Ave	319.91	0.000	0+00																							Begin Project SD 25 Junction
1	320.00	0.07	5+49	Lt	18"	CMP	56	South	Lump Sum					56				1								Replace 18"-56' CMP and Flared Ends with 24" RCP
				Rt														1								
2	320.00	0.202	12+45	Lt	24"	CMP	68	South	Lump Sum					66				1								Replace 24"-68' CMP and Flared Ends with 24" RCP
				Rt														1								
3	320.00	0.503	28+28	Lt	24"	CMP	68	South	Lump Sum					68				1								Replace 24"-68' CMP and Flared Ends with 24" RCP
				Rt														1								
4	320.00	0.769	42+45	Lt	24"	RCP	50	South			6		1							6	1					
				Rt							4		1							4	1					
434 Ave																										
5	321.00	0.020	58+32	Lt	18"	RCP	80	South														1				Too much debris in culvert to determine extent of repairs. Complete culvert cleanout and further evaluate during construction.
				Rt							4		1							4	1					
6	321.00	0.630	89+32	Lt	Twin 8'x4' RCBC		54	South														1				Clean off Apron and Shape ditch bottom at end of culvert on the Lt and Rt.
				Rt																						
7	321.00	0.630	100+12	Lt	18"	RCP	48	North			4		1							4	1					
				Rt							4		1							4	1					
435 Ave																										
8	322.00	0.228	121+40	Lt	2-42"	RCP	86	South			24		2							24	2					Shape ditch bottom at end of culvert on the Rt.
				Rt							8		2							8	2					
9	322.00	0.570	139+50	Lt	24"	RCP	52	North			12		1							12	1					Shape ditch bottom from culvert end easterly for a distance of 500ft on the Rt.
				Rt							4		1							4	1					
10	322.00	0.844	154+03	Lt	24"	RCP	54	South			8	1				1				8						Shape ditch bottom at end of culvert on the Rt.
				Rt							6	1				1				6						
436 Ave																										
11	323.00	0.120	169+52	Lt	18"	RCP	48	North			8		1							8	1					Too much debris in culvert to determine extent of repairs or if total culvert cleanout is required. Evaluate during construction.
				Rt							6		1							6	1					
12	323.00	0.292	178+59	Lt	18"	CMP	74	Equalizer (Unspec-ified)	Lump Sum					74				1								Replace 18" -74' CMP and Flared Ends with 24" RCP
				Rt														1								
13	323.00	0.602	195+16	Lt	24"	CMP	66	Equalizer (Unspec-ified)	Lump Sum					66				1								Replace 24" -66' CMP and Flared Ends with 24" RCP
				Rt														1								

PLOTTED FROM - TRAB17882

STATE OF SOUTH DAKOTA	PROJECT	SHEET NO.	TOTAL SHEETS
	P 0028(32)319	13	135

TABLE OF MAINLINE CULVERT WORK

Culvert #	MRM	+ Disp	Station	Side	In Place Culvert Size and Type		Per Original Plans: Culvert Length	Per Original Plans: Direction of Flow	Incidental Work, Grading	Remove Pipe Culvert	Remove Pipe for Reset	Remove Pipe End Section	Remove Pipe End Section for Reset	Furnish and Install: 24" RCP	Furnish and Install: 18" RCP Flared End	Furnish and Install: 24" RCP Flared End	Furnish and Install: 36" RCP Flared End	Furnish and Install: 24" RCP Sloped End	Furnish and Install: 18" CMP Flared End	Reset Pipe	Reset Pipe End Section	Clean-out Pipe Culvert	Culvert Joint Cleaning	Repair Culvert Joint	Chemical Grout Void Fill	Comments
							(Ft)		LS	(Ft)	(Ft)	(Each)	(Each)	(Ft)	(Each)	(Each)	(Each)	(Each)	(Each)	(Ft)	(Each)	(Each)	(Ft)	(Ft)	(Gallons)	
437 Ave																										Broadway Street in Bryant
14	324.00	0.080	219+64	Lt	2-36"	CMP A	66	South														2				Culverts upto 1/3 full of debris on 6-11-15.
				Rt																						
15	324.42	0.024	239+03	Lt	2-42"	CMP A	64	South														2				Culverts upto 1/3 full of debris on 6-11-15.
				Rt																						
16	324.55	0.080	249+15	Lt	18"	CMP	68	South				1							1							Williams St
				Rt																						
438 Ave																										
17	324.92	0.038	266+18	Lt	18"	RCP	44	South			4	1			1					4						
				Rt							8	1			1					8						
18	325.00	0.331	283+99	Lt	36"	RCP	42	South			10	1					1			10			48	48	45	3/4ft water in culvert on 6-11-15. Seal Joints in Culverts. Estimate 13 joints including joints that will be tied with this project.
				Rt							4		1							4	1					
19	325.00	0.931	316+08	Lt	24"	RCP	40	North																		Shape ditch bottom at end of culvert on the Lt. & Rt.
				Rt						1						1										
439 Ave																										
20	325.00	1.010	320+00	Lt	24"	CMP	46	North																		Shape ditch bottom at end of culvert on the Lt.
				Rt																						
21	326.00	0.222	332+24	Lt	18"	CMP	50	North																		No Work Required
				Rt																						
22	326.00	0.488	344+31	Lt	42"	RCP	46	South			6		1							6	1		52	52	55	1' water in culvert on 6-11-15. Seal Joints. Estimate 13 joints including joints that will be tied with this project.
				Rt							4		1							4	1					
23	326.00	0.562	355+21	Lt	24"	CMP	70	South																		Shape ditch bottom at end of culvert on the Rt.
				Rt																						
24	326.00	0.834	364+61	Lt	24"	RCP	66	South			8		1							8	1					
				Rt						1	4					1				4						
440 Ave																										
25	326.00	1.011	373+71	Lt	30"	RCP	84	South			12		1							12	1					Shape ditch bottom from culvert end easterly for a distance of 100ft on the Lt.
				Rt							12		1							12	1					
26	327.00	0.173	383+54	Lt	24"	RCP	54	South			10		1							10	1					Shape ditch bottom at end of culvert on the Lt. & Rt.
				Rt							8		1							8	1					
27	327.00	0.411	396+01	Lt	18"	RCP	50	South			8		1							8	1					
				Rt							4	1			1					4						

PLOTTED FROM - TRAB17882

TABLE OF MAINLINE CULVERT WORK

Culvert #	MRM	+ Disp	Station	Side	In Place Culvert Size and Type		Per Original Plans: Culvert Length (Ft)	Per Original Plans: Direction of Flow	Incidental Work, Grading LS	Remove Pipe Culvert (Ft)	Remove Pipe for Reset (Ft)	Remove Pipe End Section (Each)	Remove Pipe End Section for Reset (Each)	Furnish and Install: 24" RCP (Ft)	Furnish and Install: 18" RCP Flared End (Each)	Furnish and Install: 24" RCP Flared End (Each)	Furnish and Install: 36" RCP Flared End (Each)	Furnish and Install: 24" RCP Sloped End (Each)	Furnish and Install: 18" CMP Flared End (Each)	Reset Pipe (Ft)	Reset Pipe End Section (Each)	Clean-out Pipe Culvert (Each)	Culvert Joint Cleaning (Ft)	Repair Culvert Joint (Ft)	Chemical Grout Void Fill (Gallons)	Comments
28	327.00	0.636	407+43	Lt	36"	RCP	74	South			10		1							10	1					Shape ditch bottom at end of culvert on the Lt.
				Rt							8		1							8	1					
441 Ave																										
29	328.00	0.496	450+46	Lt	24"	RCP	54	North			8		1							8	1					
				Rt							4		1							4	1					
442 Ave																										
30	328.00	0.947	475+96	Lt	24"	RCP	62	North			14	1				1				14						
				Rt							12	1				1				12						
31	329.00	0.323	493+13	Lt	30"	RCP	62	North																		No Work Required. Recent culvert replacement.
				Rt																						
32	329.00	0.518	503+71	Lt	18"	RCP	54	South			6	1			1					6						
				Rt							6	1			1					6						
33	329.00	0.931	525+72	Lt	18"	RCP	42	South			6	1			1					6						Joints separated and left crushed
				Rt																						
443 Ave																										End of Project
								TOTAL	Lump Sum	2	274	12	26	330	6	6	1	10	1	274	26	6	100	100	100	

Culvert type and size obtained from a combination of visual inspection and original construction plans. Additional repair may be required at time of construction.

In place Culvert Markers shall be removed and reset when performing Culvert Work. Cost to remove and reset Culvert Markers shall be incidental to the various culvert contract items.

PLOTTED FROM - TRAB17982

TABLE OF STORM SEWER AND APPROACH PIPE QUANTITIES

STATE OF SOUTH DAKOTA	PROJECT	SHEET	TOTAL SHEETS
	P 0028(32)319	15	135

		Reinforced Concrete																	Corrugated Metal												
		Circular			Circular Flared End			Circular Safety End			Circular Bend			Arch to Round Transition				Arch		Arch		Arch Safety End						Remove Pipe		Reset		Clean
		15" Cl. 2	18" Cl. 2		15"	18"		18"			18' 7.5°			18" to 18"				18" Cl. 2		18" 16 Ga		18"						for Reset	End Section for Reset	Pipe	Pipe End Section	Out Pipe Culvert
Station	Offset (L/R)	Ft	Ft		Each	Each		Each			Each			Each				Ft		Ft		Each						Ft	Each	Ft	Each	Each
211+03-36' L		6			1																									1		1	
219+70-36' L to 219+85-35' L																												15		15		
220+35.31-27.36' R to 221+66-19.67' R			112			1					3																					
* 223+47.66-21.78' r to 226+48.00-19.67' R											1							294														
226+48-19.67' L to 226+48-19.67' R																		36														
* 226+48-19.67' L to 227+42-19.67' L																		90														
226+48-19.67' R to 227+42-19.67' R																		90														
230+19-19.67' L to 230+19-19.67' R																		38														
230+19-19.67' R to 230+45-19.3' R														1				22														
234+09-19' L to 234+78-29' L																																1
234+72.1-28.3' L to 235+70-29.3' L			94					1			1																					
234+72.7-31.5' L to 235+00-31.75' L			22								1																					
235+00-31.75' L to 235+70-32' L			68					1																								
235+41-30'L																				112		4										
238+69-43' L																				34		2										
Subtotal:		6	296		1	1		2			6			1				570		146		6						15	1	15	1	1

Pipes denoted with an asterisk(*) indicate that the entire length or a portion of the pipe requires watertight joints in accordance with the STORM SEWER plan note.

TABLE OF PAVEMENT AND CURB AND GUTTER QUANTITIES

			Concrete Curb and Gutter	Concrete Gutter	Type A	PCC Driveway Pavement	Concrete Valley Gutter	
			Type B 66	Type P8	8" PCC Approach Pavement	6"	8"	
Station to Station		**L/R**	Ft	Ft	SqYd	SqYd	SqYd	Comments
221+37.00	222+30.41	L					63.2	Railway St
222+08.91	222+13.44	L				2.5		Misc. Concrete Patching
222+06.34	222+30.41	L	32.4					25' Radius
222+30.41	222+90.45	L	60.0					Str
222+90.45	223+10.45	L	31.2					25' Radius
222+90.45	223+58.29	L					23.8	Hill St.
223+05.17	223+10.45	L				2.3		Misc. Concrete Patching
223+46.29	223+58.29	L	19.0					12' Radius
223+58.29	224+78.00	L	119.7					Str
224+78.00	224+94.00	L		16.0	15.6	12.5		Residential Garage
224+94.00	225+10.00	L	16.0					Str
225+10.00	225+34.00	L		24.0	20	16.4		Alley and Residential Garage
225+34.00	226+51.38	L	117.4					Str
226+51.38	226+76.38	L	39.2					25' Radius
226+51.38	227+37.06	L					29.9	Underwood St
227+12.06	227+37.06	L	39.5					25' Radius
227+37.06	228+65.00	L	127.9					Str
228+65.00	228+95.00	L		30.0	23.3			Alley
228+95.00	230+22.24	L	127.2					Str
230+22.24	230+47.24	L	39.6					25' Radius
230+47.24	230+47.15	L	7.0					Str
230+22.24	230+98.66	L					25.8	Prospect St
230+73.39	230+73.66	L	7.0					Str
230+73.66	230+98.66	L	39.7					25' Radius
230+98.66	232+32.00	L	133.3					Str
232+32.00	232+72.00	L		40.0	28.9	23.6		Alley and Residential Garage
232+72.00	233+97.29	L	125.3					Str
233+97.29	234+09.27	L	18.3					25' Radius
220+70.00	220+81.00	R	11.0					Str
220+81.00	220+97.00	R		16.0	15.6	15.6		Residential Drive
220+97.00	222+84.92	R	187.9					Str
222+84.92	223+09.91	R	40.1					25' Radius
222+84.92	223+57.46	R					25.4	Hill St.
223+45.31	223+45.47	R	5.0					Str
223+45.47	223+57.46	R	18.5					12' Radius
223+57.46	224+44.00	R	86.5					Str
224+44.00	224+60.00	R		16.0	15.6	15.6		Residential Garage
224+60.00	225+17.00	R	57.0					Str
225+17.00	225+33.00	R		16.0	15.6			Drive
225+33.00	226+80.00	R	147.0					Str
226+80.00	227+12.00	R		32.0	24.4			Underwood St
227+12.00	228+69.00	R	157.0					Str
228+69.00	228+93.00	R		24.0	20			Drive
228+93.00	230+21.96	R	129.0					Str
230+21.96	230+46.95	R	39.6					25' Radius
230+21.96	230+97.57	R					25.4	Hill St.
230+72.75	230+97.57	R	39.0					25' Radius
230+97.57	231+64.00	R	66.4					Str
231+64.00	231+88.00	R		24.0	20			Residential Drive
231+88.00	233+35.00	R	147.0					Str
233+35.00	233+59.00	R		24.0	20			Residential Drive
233+59.00	234+12.00	R	53.0					Str
234+12.00	234+44.00	R		32.0	24.4			Lee St
234+44.00	234+75.00	R	31.0					Str
Total:			2314.7	294.0	243.4	88.5	193.5	

PLOTTED FROM - TRAB17892

TABLE OF REINFORCED CONCRETE DROP INLETS LOCATION AND QUANTITIES

Station	Offset	Lt/Rt	Type	Size	Top of Curb Elevation	Top of Wall Elevation	Floor Elevation	Height of Drop Inlet (Ft)	Class M-6 Concrete (CuYd)	Reinforcing Steel (Lb)	Salvage Drop Inlet Frame and Grate Assembly (Each)	Frame and Grate/Lid Type
221+43	26.5	L	C	3'X4'	-	1837.29	1835.58	1.71	0.85	103	-	C
221+66	19.67	R	B	2'X3'	1838.29	1837.23	1835.20	2.03	0.66	78	-	B
222+14	23	L	C	-	-	-	-	-	-	-	1	C
223+48	21	L	C	-	-	-	-	-	-	-	1	C
223+48	21.78	R	C	4'X5'	-	1837.24	1835.02	2.22	1.76	184	-	C
234+03	19	L	C	-	-	-	-	-	-	-	1	C
226+48	19.67	R	B	3'X4'	1838.43	1837.37	1835.35	2.02	1.18	163	-	B
226+48	19.67	L	B	3'X4'	1838.43	1837.37	1835.45	1.92	1.20	160	-	B
227+42	19.67	L	B	3'X4'	1838.38	1837.32	1835.60	1.72	1.19	153	-	B
227+42	19.67	R	B	3'X4'	1838.38	1837.32	1835.55	1.77	1.20	155	-	B
230+19	19.67	L	B	2'X3'	1838.18	1837.12	1835.55	1.57	0.56	68	-	B
230+19	19.67	R	B	3'X4'	1838.18	1837.12	1835.35	1.77	1.20	155	-	B
234+09	19.67	R	B	3'X4'	1837.75	1836.69	1834.26	2.43	1.35	176	-	B
235+00	31.75	L	C	3'X'4'	-	1836.40	1834.68	1.72	0.85	103	-	C
								Total	**11.98**	**1497**	**3**	

Total Frame and Grate/Lids:	
Type B	**8**
Type C	**6**

Salvaged Drop Inlet Frame and Grate Assemblies shall be given to the city of Bryant. Should an assembly be damaged or unwanted by the city, the assemblies shall become the property of the Contractor for disposal.

PLOTTED FROM - TRAB17882

P 0028(32)319, PCN 02QK, SD28 Permanent Sign Installation Table

MRM + Displacement	Side of Road	Description	Sign Code	Width (Inches)	Height (Inches)	Flat Aluminum sign, Nonremovable Copy High Intensity (SQFT)	Flat Aluminum Sign, Nonremovable Copy Super/Very High Intensity (SQFT)	2.0"x2.0" Perforated Tube Post 12 ga. (FT)	2.5"x2.5" Perforated Tube Post 10 Ga. (FT)	(N.A.B.I.) Square Tube Anchor Sleeve (Each)	(N.A.B.I.) 48" Winged Slip Base Anchor (Each)	Remove Traffic Sign (Each)	Direction Sign Faces	Current Type of Post	Remarks
319.00 + 0.917	Lt.	Stop	R1-1	36	36		7.5	10		1		1	E	4" X 6" Wood	Replace Existing Sign with New Sign on New Post
319.00 + 0.957	Lt.	<--- De Smet 13 / JCT 212 20 --->	D1-2A	90	36	22.5			26		2	1	E	4" X 6" Wood	Replace Existing Sign at 320.00 + 0.034 with New Sign on New Post at MRM 319.00 + 0.957
319.00 + 0.995	Lt.	SD 28	M1-5	24	24	4.0		11		1		1	E	4" X 6" Wood	Replace Existing Sign Assembly at 320.00 + 0.104 with New Sign Assembly on New Post at MRM 319.00 + 0.995
		Vertical Right Arrow	M6-2R	21	15	2.2							E		
320.00 + 0.002	Rt.	East	M3-2	24	12	2.0		11		1		1	W	4" X 6" Wood	Replace Existing Sign Assembly with New Sign Assembly on New Post.
		SD 28	M1-5	24	24	4.0							W		
320.00 + 0.033	Lt.	Junction Marker	M2-1	21	15	2.2		11		1		1	E	4" X 6" Wood	Replace Existing Sign Assembly at 320.00 + 0.196 with New Sign Assembly on New Post at MRM 320.00 + 0.033.
		SD 25	M1-5	24	24	4.0							E		
320.00 + 0.071	Lt.	Stop Ahead	W3-1A	48	48		16.0		12	1		1	E	4" X 6" Wood	Replace Existing Sign at 320.00 + 0.322 with New Sign on New Post at MRM 320.00 + 0.071
320.00 + 0.089	Rt.	No Passing Zone	W14-3	48X48X36			5.6	11		1		1	E	4" X 6" Wood	Replace Existing Sign with New Sign on New Post
320.00 + 0.196	Lt.	No Passing Zone	W14-3	48X48X36			5.6	11		1			W	4" X 6" Wood	Replace Existing Sign with New Sign on New Post. Removal paid for by junction marker assembly above
320.00 + 0.463	Lt.	No Passing Zone	W14-3	48X48X36			5.6	11		1		1	W	4" X 6" Wood	Replace Existing Sign with New Sign on New Post
320.00 + 0.540	Rt.	No Passing Zone	W14-3	48X48X36			5.6	11		1		1	E	4" X 6" Wood	Replace Existing Sign with New Sign on New Post
320.00 + 0.747	Lt.	No Passing Zone	W14-3	48X48X36			5.6	11		1		1	W	4" X 6" Wood	Replace Existing Sign with New Sign on New Post
320.00 + 0.819	Rt.	No Passing Zone	W14-3	48X48X36			5.6	11		1		1	E	4" X 6" Wood	Replace Existing Sign with New Sign on New Post
320.00 + 0.959	Lt.	Stop	R1-1	30	30		5.2	9		1		1	N	4" X 6" Wood	Replace Existing Sign with New Sign on New Post
320.00 + 0.966	Rt.	Stop	R1-1	30	30		5.2	9		1		1	S	4" X 6" Wood	Replace Existing Sign with New Sign on New Post
320.00 + 0.984	Rt.	East	M3-2	24	12	2.0		11		1		1	W	4" X 6" Wood	Replace Existing Sign Assembly with New Sign Assembly on New Post.
		SD 28	M1-5	24	24	4.0							W		
321.00 + 0.002	Lt.	No Passing Zone	W14-3	48X48X36			5.6	11		1		1	W	4" X 6" Wood	Replace Existing Sign with New Sign on New Post

PLOTTED FROM - TRAB10100

P 0028(32)319, PCN 02QK, SD28 Permanent Sign Installation Table

MRM + Displacement	Side of Road	Description	Sign Code	Width (Inches)	Height (Inches)	Flat Aluminum sign, Nonremovable Copy High Intensity (SQFT)	Flat Aluminum Sign, Nonremovable Copy Super/Very High Intensity (SQFT)	2.0"x2.0" Perforated Tube Post 12 ga. (FT)	2.5"x2.5" Perforated Tube Post 10 Ga. (FT)	(N.A.B.I.) Square Tube Anchor Sleeve (Each)	(N.A.B.I.) 48" Winged Slip Base Anchor (Each)	Remove Traffic Sign (Each)	Direction Sign Faces	Current Type of Post	Remarks
321.00 + 0.011	Rt.	No Passing Zone	W14-3	48X48X36			5.6	11		1		1	E	4" X 6" Wood	Replace Existing Sign with New Sign on New Post
321.00 + 0.395	Rt.	No Passing Zone	W14-3	48X48X36			5.6	11		1		1	E	4" X 6" Wood	Replace Existing Sign with New Sign on New Post
321.00 + 0.584	Lt.	No Passing Zone	W14-3	48X48X36			5.6	11		1		1	W	4" X 6" Wood	Replace Existing Sign with New Sign on New Post
321.00 + 0.868	Lt.	No Passing Zone	W14-3	48X48X36			5.6	11		1		1	W	4" X 6" Wood	Replace Existing Sign with New Sign on New Post
321.00 + 0.902	Lt.	Stop	R1-1	30	30		5.2	9		1		1	N	4" X 6" Wood	Replace Existing Sign with New Sign on New Post
321.00 + 0.908	Rt.	Stop	R1-1	30	30		5.2	9		1		1	S	4" X 6" Wood	Replace Existing Sign with New Sign on New Post
321.00 + 0.937	Rt.	No Passing Zone	W14-3	48X48X36			5.6	11		1		1	E	4" X 6" Wood	Replace Existing Sign with New Sign on New Post
322.00 + 0.284	Rt.	No Passing Zone	W14-3	48X48X36			5.6	11		1		1	E	4" X 6" Wood	Replace Existing Sign with New Sign on New Post
322.00 + 0.461	Lt.	No Passing Zone	W14-3	48X48X36			5.6	11		1		1	W	4" X 6" Wood	Replace Existing Sign with New Sign on New Post
322.00 + 0.871	Lt.	No Passing Zone	W14-3	48X48X36			5.6	11		1		1	W	4" X 6" Wood	Replace Existing Sign with New Sign on New Post
322.00 + 0.882	Rt.	No Passing Zone	W14-3	48X48X36			5.6	11		1		1	E	4" X 6" Wood	Replace Existing Sign with New Sign on New Post
322.00 + 0.916	Lt.	Clark County	I-1	30	24	5.0		9		1		1	E	4" X 6" Wood	Replace Existing Sign with New Sign on New Post
322.00 + 0.919	Lt.	Stop	R1-1	30	30		5.2	9		1		1	N	Steel	Replace Existing Sign with New Sign on New Post
322.00 + 0.929	Rt.	Stop	R1-1	30	30		5.2	9		1		1	S	Steel	Replace Existing Sign with New Sign on New Post
322.00 + 0.939	Rt.	Hamlin County	I-1	30	24	5.0		9		1		1	W	4" X 6" Wood	Replace Existing Sign with New Sign on New Post
323.00 + 0.171	Rt.	No Passing Zone	W14-3	48X48X36			5.6	11		1		1	E	4" X 6" Wood	Replace Existing Sign with New Sign on New Post
323.00 + 0.246	Lt.	No Passing Zone	W14-3	48X48X36			5.6	11		1		1	W	4" X 6" Wood	Replace Existing Sign with New Sign on New Post
323.00 + 0.592	Lt.	No Passing Zone	W14-3	48X48X36			5.6	11		1		1	W	4" X 6" Wood	Replace Existing Sign with New Sign on New Post
323.00 + 0.592	Rt.	Speed Reduction 45 MPH	W3-5	36	36		9.0	11		1		1	W	4" X 6" Wood	Replace Existing Sign with New Sign on New Post at MRM 323.00 + 0.592
323.00 + 0.594		No Passing Zone	W14-3	48X48X36			5.6	11		1			E		Replace Existing Sign with New Sign on New Post
323.00 + 0.711	Lt.	Speed Limit 65 MPH	R2-1	24	30	5.0		9		1		1	E	4" X 6" Wood	Replace Existing Sign with New Sign on New Post
323.00 + 0.713	Rt.	Speed Limit 45 MPH	R2-1	24	30	5.0		9		1		1	W	4" X 6" Wood	Replace Existing Sign with New Sign on New Post
323.00 + 0.732	Rt.	Bryant Pop. 456	D1-1D	48	18	6.0		9		1		1	W	4" X 6" Wood	Replace Existing Sign with New Sign on New Post
323.00 + 0.762	Lt.	Stop	R1-1	30	30		5.2	9		1		1	N	4" X 6" Wood	Replace Existing Sign with New Sign on New Post
323.00 + 0.840	Lt.	Stop	R1-1	30	30		5.2	9		1		1	N	Telespar	Replace Existing Sign with New Sign on New Post

PLOTTED FROM - TRAB10100

P 0028(32)319, PCN 02QK, SD28 Permanent Sign Installation Table

MRM + Displacement	Side of Road	Description	Sign Code	Width (Inches)	Height (Inches)	Flat Aluminum sign, Nonremovable Copy High Intensity (SQFT)	Flat Aluminum Sign, Nonremovable Copy Super/Very High Intensity (SQFT)	2.0"x2.0" Perforated Tube Post 12 ga. (FT)	2.5"x2.5" Perforated Tube Post 10 Ga. (FT)	(N.A.B.I.) Square Tube Anchor Sleeve (Each)	(N.A.B.I.) 48" Winged Slip Base Anchor (Each)	Remove Traffic Sign (Each)	Direction Sign Faces	Current Type of Post	Remarks
323.00 + 0.877	Lt.	No Passing Zone	W14-3	48X48X36			5.6	11		1			W		New Sign Installation
323.00 + 0.904	Lt.	Speed Limit 45 MPH	R2-1	24	30	5.0		9		1		1	E	4" X 6" Wood	Replace Existing Sign with New Sign on New Post
323.00 + 0.906	Rt.	Speed Limit 35 MPH	R2-1	24	30	5.0		9		1		1	W	4" X 6" Wood	Replace Existing Sign with New Sign on New Post
323.00 + 0.915	Lt.	Stop	R1-1	30	30		5.2	9		1		1	N	Telespar	Replace Existing Sign with New Sign on New Post
323.00 + 0.924	Rt.	Stop	R1-1	30	30		5.2	9		1		1	S	4" X 6" Wood	Replace Existing Sign with New Sign on New Post
323.00 + 0.925	Rt.	Camper Symbol	D9-3a	24	24	4.0						1	W	Light Pole	Replace Existing Sign with New Sign on Light Pole
		Horizontal Left Arrow	M6-1L	21	15	2.2							W		Replace Existing Sign with New Sign on Light Pole
		Truck Route		24	18	3.0							W		Replace Existing Sign with New Sign on Light Pole
		Horizontal Left Arrow	M6-1L	21	15	2.2							W		Replace Existing Sign with New Sign on Light Pole
323.00 + 0.956	Rt.	City Park <---		24	24	4.0		9		1		1	W	4" X 6" Wood	Replace Existing Sign with New Sign on New Post
		No Passing Zone										1	E		Remove Do Not Replace
324.00 + 0.020	Lt.	City Park --->		24	24	4.0		9		1		1	E	4" X 6" Wood	Replace Existing Sign with New Sign on New Post
324.00 + 0.062	Lt.	West	M3-4	24	12	2.0		11		1		1	E	U-Channel	Replace Existing Sign Assembly with New Sign Assembly on New Post.
		SD 28	M1-5	24	24	4.0							E		
324.00 + 0.086	Lt.	Speed Limit 35 MPH	R2-1	24	30	5.0		9		1		1	E	4" X 6" Wood	Replace Existing Sign with New Sign on New Post
324.00 + 0.113	Rt.	Business District <---		36	24	6.0		9		1		1	W	4" X 6" Wood	Replace Existing Sign with New Sign on New Post
324.00 + 0.116	Lt.	Stop	R1-1	30	30		5.2					1	N	Light Pole	Replace Existing Sign with New Sign on Light Pole
324.00 + 0.147	Lt.	Stop	R1-1	30	30		5.2					1	N	Light Pole	Replace Existing Sign with New Sign on Light Pole
324.00 + 0.156	Rt.	Stop	R1-1	30	30		5.2	9		1		1	S	4" X 6" Wood	Replace Existing Sign with New Sign on New Post
324.00 + 0.217	Lt.	Stop	R1-1	30	30		5.2	9		1		1	N	Telespar	Replace Existing Sign with New Sign on New Post
324.00 + 0.226	Rt.	Stop	R1-1	30	30		5.2					1	S	Light Pole	Replace Existing Sign with New Sign on Light Pole
		Speed Limit 35 MPH	R2-1	24	30	5.0							W		Replace Existing Sign with New Sign on Light Pole
324.00 + 0.240	Lt.	Business District --->		36	24	6.0		9		1		1	E	4" X 6" Wood	Replace Existing Sign with New Sign on New Post
324.00 + 0.290	Lt.	Stop	R1-1	30	30		5.2	9		1		1	N	U-Channel	Replace Existing Sign with New Sign on New Post

PLOTTED FROM - TRAB10100

P 0028(32)319, PCN 02QK, SD28 Permanent Sign Installation Table

MRM + Displacement	Side of Road	Description	Sign Code	Width (Inches)	Height (Inches)	Flat Aluminum sign, Nonremovable Copy High Intensity (SQFT)	Flat Aluminum Sign, Nonremovable Copy Super/Very High Intensity (SQFT)	2.0"x2.0" Perforated Tube Post 12 ga. (FT)	2.5"x2.5" Perforated Tube Post 10 Ga. (FT)	(N.A.B.I.) Square Tube Anchor Sleeve (Each)	(N.A.B.I.) 48" Winged Slip Base Anchor (Each)	Remove Traffic Sign (Each)	Direction Sign Faces	Current Type of Post	Remarks
324.00 + 0.296	Lt.	West	M3-4	24	12	2.0						1	E	Light Pole	Replace Existing Sign with New Sign on Light Pole
		SD 28	M1-5	24	24	4.0							E		Replace Existing Sign with New Sign on Light Pole
324.00 + 0.296	Rt.	Stop	R1-1	30	30		5.2					1	S	Light Pole	Replace Existing Sign with New Sign on Light Pole
324.00 + 0.298	Rt.	East	M3-2	24	12	2.0		11		1		1	W	U-Channel	Replace Existing Sign Assembly with New Sign Assembly on New Post.
		SD 28	M1-5	24	24	4.0							W		
324.00 + 0.360	Lt.	Stop	R1-1	30	30		5.2	9		1		1	N	4" X 6" Wood	Replace Existing Sign with New Sign on New Post
324.00 + 0.380	Rt.	Speed Limit 45 MPH	R2-1	24	30	5.0		9		1		1	W	4" X 6" Wood	Replace Existing Sign with New Sign on New Post
324.00 + 0.405	Lt.	Speed Limit 35 MPH	R2-1	24	30	5.0		9		1		1	E	4" X 6" Wood	Replace Existing Sign with New Sign on New Post
324.00 + 0.470	Rt.	No Passing Zone	W14-3	48X48X36			5.6	11		1		1	E	4" X 6" Wood	Replace Existing Sign with New Sign on New Post
324.00 + 0.554	Lt.	Stop	R1-1	30	30		5.2	9		1		1	N	4" X 6" Wood	Replace Existing Sign with New Sign on New Post
324.00 + 0.570	Rt.	Speed Limit 65 MPH	R2-1	24	30	5.0		9		1		1	W	4" X 6" Wood	Replace Existing Sign with New Sign on New Post
324.00 + 0.572	Lt.	Speed Limit 45 MPH	R2-1	24	30	5.0		9		1		1	E	4" X 6" Wood	Replace Existing Sign with New Sign on New Post
324.00 + 0.660	Lt.	Bryant Pop. 456	D1-1D	48	18	6.0		9		1		1	E	4" X 6" Wood	Replace Existing Sign with New Sign on New Post
324.00 + 0.705	Lt.	Speed Reduction 45 MPH	W3-5	36	36		9.0	11		1		1	E	4" X 6" Wood	Replace Existing Sign with New Sign on New Post
324.00 + 0.924	Lt.	Stop	R1-1	30	30		5.2	9		1		1	N	4" X 6" Wood	Replace Existing Sign with New Sign on New Post
324.00 + 0.933	Rt.	Stop	R1-1	30	30		5.2	9		1		1	S	4" X 6" Wood	Replace Existing Sign with New Sign on New Post
324.00 + 0.948	Rt.	East	M3-2	24	12	2.0		11		1		1	W	4" X 6" Wood	Replace Existing Sign Assembly with New Sign Assembly on New Post.
		SD 28	M1-5	24	24	4.0							W		
324.00 + 0.954	Lt.	No Passing Zone	W14-3	48X48X36			5.6	11		1		1	W	4" X 6" Wood	Replace Existing Sign with New Sign on New Post
325.00 + 0.235	Rt.	Deer Crossing	W11-3	36	36		9.0	11		1		1	W	4" X 6" Wood	Replace Existing Sign with New Sign on New Post
325.00 + 0.338	Rt.	No Passing Zone	W14-3	48X48X36			5.6	11		1		1	E	4" X 6" Wood	Replace Existing Sign with New Sign on New Post
325.00 + 0.439	Lt.	No Passing Zone	W14-3	48X48X36			5.6	11		1		1	W	4" X 6" Wood	Replace Existing Sign with New Sign on New Post
325.00 + 0.645	Lt.	Deer Crossing	W11-3	36	36		9.0	11		1		1	E	4" X 6" Wood	Replace Existing Sign with New Sign on New Post
325.00 + 0.842	Rt.	No Passing Zone	W14-3	48X48X36			5.6	11		1		1	E	U-Channel	Replace Existing Sign with New Sign on New Post
325.00 + 0.926	Lt.	No Passing Zone	W14-3	48X48X36			5.6	11		1		1	W	4" X 6" Wood	Replace Existing Sign with New Sign on New Post
325.00 + 0.958	Rt.	Stop	R1-1	30	30		5.2	9		1		1	S	4" X 6" Wood	Replace Existing Sign with New Sign on New Post

PLOTTED FROM - TRAB10100

P 0028(32)319, PCN 02QK, SD28 Permanent Sign Installation Table

MRM + Displacement	Side of Road	Description	Sign Code	Width (Inches)	Height (Inches)	Flat Aluminum sign, Nonremovable Copy High Intensity (SQFT)	Flat Aluminum Sign, Nonremovable Copy Super/Very High Intensity (SQFT)	2.0"x2.0" Perforated Tube Post 12 ga. (FT)	2.5"x2.5" Perforated Tube Post 10 Ga. (FT)	(N.A.B.I.) Square Tube Anchor Sleeve (Each)	(N.A.B.I.) 48" Winged Slip Base Anchor (Each)	Remove Traffic Sign (Each)	Direction Sign Faces	Current Type of Post	Remarks
326.00 + 0.282	Rt.	No Passing Zone	W14-3	48X48X36			5.6	11		1		1	E	4" X 6" Wood	Replace Existing Sign with New Sign on New Post
326.00 + 0.755	Lt.	No Passing Zone	W14-3	48X48X36			5.6	11		1		1	W	4" X 6" Wood	Replace Existing Sign with New Sign on New Post
326.00 + 0.932	Lt.	Stop	R1-1	30	30		5.2	9		1		1	N	U-Channel	Replace Existing Sign with New Sign on New Post
326.00 + 0.941	Rt.	Stop	R1-1	30	30		5.2	9		1		1	S	4" X 6" Wood	Replace Existing Sign with New Sign on New Post
327.00 + 0.080	Lt.	No Passing Zone	W14-3	48X48X36			5.6	11		1		1	W	4" X 6" Wood	Replace Existing Sign with New Sign on New Post
327.00 + 0.082	Rt.	No Passing Zone	W14-3	48X48X36			5.6	11		1		1	E	4" X 6" Wood	Replace Existing Sign with New Sign on New Post
327.00 + 0.324	Lt.	No Passing Zone	W14-3	48X48X36			5.6	11		1		1	W	4" X 6" Wood	Replace Existing Sign with New Sign on New Post
327.00 + 0.422	Rt.	No Passing Zone	W14-3	48X48X36			5.6	11		1		1	E	4" X 6" Wood	Replace Existing Sign with New Sign on New Post
327.00 + 0.662	Rt.	No Passing Zone	W14-3	48X48X36			5.6	11		1		1	E	4" X 6" Wood	Replace Existing Sign with New Sign on New Post
327.00 + 0.766	Lt.	No Passing Zone	W14-3	48X48X36			5.6	11		1		1	W	4" X 6" Wood	Replace Existing Sign with New Sign on New Post
327.00 + 0.918	Lt.	Stop	R1-1	30	30		5.2	9		1		1	N	4" X 6" Wood	Replace Existing Sign with New Sign on New Post
327.00 + 0.930	Rt.	Stop	R1-1	30	30		5.2	9		1		1	S	4" X 6" Wood	Replace Existing Sign with New Sign on New Post
328.00 + 0.168	Rt.	No Passing Zone	W14-3	48X48X36			5.6	11		1		1	E	4" X 6" Wood	Replace Existing Sign with New Sign on New Post
328.00 + 0.465	Lt.	No Passing Zone	W14-3	48X48X36			5.6	11		1		1	W	4" X 6" Wood	Replace Existing Sign with New Sign on New Post
328.00 + 0.852	Lt.	No Passing Zone	W14-3	48X48X36			5.6	11		1		1	W	4" X 6" Wood	Replace Existing Sign with New Sign on New Post
328.00 + 0.868	Rt.	No Passing Zone	W14-3	48X48X36			5.6	11		1		1	E	4" X 6" Wood	Replace Existing Sign with New Sign on New Post
328.00 + 0.932	Lt.	Stop	R1-1	30	30		5.2	9		1		1	N	4" X 6" Wood	Replace Existing Sign with New Sign on New Post
328.00 + 0.943	Rt.	Stop	R1-1	30	30		5.2	9		1		1	S	4" X 6" Wood	Replace Existing Sign with New Sign on New Post
329.00 + 0.271	Lt.	No Passing Zone	W14-3	48X48X36			5.6	11		1		1	W	4" X 6" Wood	Replace Existing Sign with New Sign on New Post
329.00 + 0.288	Rt.	No Passing Zone	W14-3	48X48X36			5.6	11		1		1	E	4" X 6" Wood	Replace Existing Sign with New Sign on New Post
329.00 + 0.543	Lt.	No Passing Zone	W14-3	48X48X36			5.6	11		1		1	W	4" X 6" Wood	Replace Existing Sign with New Sign on New Post
329.00 + 0.608	Rt.	No Passing Zone	W14-3	48X48X36			5.6	11		1		1	E	4" X 6" Wood	Replace Existing Sign with New Sign on New Post
329.00 + 0.870	Rt.	No Passing Zone	W14-3	48X48X36			5.6	11		1		1	E	4" X 6" Wood	Replace Existing Sign with New Sign on New Post
					TOTAL	174.3	451.5	984.0	38.0	98.0	2.0	103.0			

PLOTTED FROM - TRAB10100

P 0028(32)319, PCN 02QK, Sign Summary SD 28

Sign Code	Description	Width (Inches)	Height (Inches)	Sq. Ft.	No.	Flat Aluminum Sign, Nonremovable Copy High Intensity (SQFT)	Flat Aluminum Sign, Nonremovable Copy Super or Very High Intensity (SQFT)	Text / Background
	Truck Route	24	18	3.0	1	3.0		Black on White
	City Park <---	24	24	4.0	1	4.0		White on Blue
	City Park --->	24	24	4.0	1	4.0		White on Blue
	Business District <---	36	24	6.0	1	6.0		White on Green
	Business District --->	36	24	6.0	1	6.0		White on Green
D1-1D	Bryant Pop. 456	48	18	6.0	2	12.0		White on Green
D1-2A	<--- De Smet 13 / JCT 212 20 --->	90	36	22.5	1	22.5		White on Green
D9-3a	Camper Symbol	24	24	4.0	1	4.0		White on Blue
I-1	Clark County	30	24	5.0	1	5.0		White on Green
I-1	Hamlin County	30	24	5.0	1	5.0		White on Green
M1-5	SD 25	24	24	4.0	1	4.0		See Standard Plate 632.20
M1-5	SD 28	24	24	4.0	7	28.0		See Standard Plate 632.20
M2-1	Junction Marker	21	15	2.2	1	2.2		Black on White / Green Border
M3-2	East	24	12	2.0	4	8.0		Black on White / Green Border
M3-4	West	24	12	2.0	2	4.0		Black on White / Green Border
M6-1L	Horizontal Left Arrow	21	15	2.2	1	2.2		Black on White
M6-1L	Horizontal Left Arrow	21	15	2.2	1	2.2		White on Blue
M6-2R	Vertical Right Arrow	21	15	2.2	1	2.2		Black on White / Green Border
R1-1	Stop	30	30	5.2	28		145.6	White on Red
R1-1	Stop	36	36	7.5	1		7.5	White on Red
R2-1	Speed Limit 35mph	24	30	5.0	4	20.0		Black on White
R2-1	Speed Limit 45mph	24	30	5.0	4	20.0		Black on White
R2-1	Speed Limit 65mph	24	30	5.0	2	10.0		Black on White
W11-3	Deer Crossing	36	36	9.0	2		18.0	Black on Fluorescent Yellow
W14-3	No Passing Zone	48X48X36		5.6	44		246.4	Black on Fluorescent Yellow
W3-1A	Stop Ahead	48	48	16.0	1		16.0	Black on Fluorescent Yellow
W3-5	Reduced Speed Aheed 45 MPH	36	36	9.0	2		18.0	Black on Fluorescent Yellow
					Totals	**174.3**	**451.5**	

PLOTTED FROM - TRAB10100

SURFACING THICKNESS DIMENSIONS

Plans tonnage will be applied even though the thickness may vary from that shown on the plans.

At those locations where material must be placed to achieve a required elevation, plans tonnage may be varied to achieve the required elevation.

SCOPE OF WORK

Work on this project involves replacement of curb & gutter, storm sewer and ADA improvements through Bryant, culvert repairs and replacement, cold milling asphalt concrete, placement of asphalt concrete pavement, rumble stripes, permanent sign replacement and pavement markings.

UTILITIES

The Contractor shall be aware that the existing utilities shown in the plans were surveyed prior to the design of this project and might have been relocated or replaced by a new utility facility prior to construction of this project, might be relocated or replaced by a new utility facility during the construction of this project, or might not require adjustment and may remain in its current location. The Contractor shall contact each utility owner and confirm the status of all existing and new utility facilities. The utility contact information is provided elsewhere in the plans or bidding documents.

For Rural Culvert Repair Locations:
Utilities are not planned to be affected on this project. If utilities are identified near the improvement area through the SD One Call Process as required by South Dakota Codified Law 49-7A and Administrative Rule Article 20:25, the Contractor shall contact the Project Engineer to determine modifications that will be necessary to avoid utility impacts.

SEQUENCE OF OPERATIONS

The Contractor shall submit to the Area Engineer a minimum of 2 weeks prior to the Preconstruction Meeting a detailed plan of how the culvert replacement will be staged. A plan shall also be submitted detailing how the storm sewer upgrades, replacement of curb & gutter, driveways and sidewalk will be staged. The plans shall show how the Contractor is going to maintain traffic, where equipment and materials are going to be stored on the project site and the total length of the work space. These plans shall be approved by the Area Engineer prior to starting work on the culvert replacement and storm sewer upgrades, replacement of curb & gutter, driveways and sidewalk.

The following general Sequence of Operations shall be adhered to. Any changes must be approved in writing by the Area Engineer prior to changes being made.

1. Install fixed location construction signing prior to start of work.
2. Install temporary erosion measures.
3. Complete culvert repairs and replacements.
4. Complete storm sewer upgrades, curb & gutter replacement, ADA curb ramp upgrade, sidewalk and driveway pavement.
5. Complete erosion control.
6. Complete cold milling operations.
7. Excavate digouts and complete backfill operations.
8. Complete all asphalt concrete strengthening and leveling.
9. Complete gravel placement operations on rural approaches and intersecting roads.
10. Knockdown gravel to allow access on approaches and intersecting roads.
11. Complete asphalt paving operations.
12. Final shape gravel on approaches and intersecting roads.
13. Grind rumble stripes.
14. Place flush seal if required.
15. Install permanent pavement markings.
16. Install new permanent signing.
17. Refurbish mailboxes.
18. Remove fixed location construction project signing.
19. Mow project inslopes and complete any remaining project cleanup.

Storm sewer upgrades, replacement of curb & gutter, driveways and sidewalk through Bryant (Sta. 218+50 to 237+00) shall be done approximately half width at a time such that one lane of traffic can be maintained at all times. A minimum roadway width of 13' shall be maintained at all times. The following shall be the sequence of operations for work within Bryant:

1. Place erosion control.
2. Complete storm sewer upgrades. Left side of roadway and then Right side of roadway. Remove only the curb & gutter necessary to complete storm sewer upgrades.
3. Complete remainder of curb & gutter and sidewalk removals on the right side.
4. Complete curb & gutter, valley gutter, sidewalk, and driveway pavement on the right side.
5. Complete remainder of curb & gutter and sidewalk removals on the left side.
6. Complete curb & gutter, valley gutter, sidewalk, and driveway pavement on the left side.
7. Complete removal of abandoned railroad crossing at Sta. 219+06.
8. Complete cold milling asphalt concrete.

Completion of Curb & Gutter replacement, ADA Curb Ramp upgrade, sidewalk and driveway pavement may be done at any time prior to resurfacing operations. City streets on the north side of SD 28 may be closed to traffic to facilitate construction, however consecutive streets may not be closed simultaneously. On the south side of SD28, Prospect St and Lee St may be closed to traffic, however these streets may not closed simultaneously. Hill St and Underwood St south of SD28 shall be open to traffic at all times. Access to Parkview Care Center shall be maintained at all times. Refer to the Special Provision for Contract Time.

Mainline culvert replacement shall be done approximately half width at a time such that one lane of traffic can be maintained at all times. A minimum roadway width of 13' shall be maintained at all times. The following shall be the sequence of operations for replacing a mainline culvert:

1. Place erosion control.
2. Widen shoulder with base course (Construction and Maintenance of Detours).
3. Saw-cut and remove asphalt surfacing one half roadway width.
4. Excavate to remove in place culvert.
5. Undercut for new culvert sections.
6. Install new culvert sections.
7. Place backfill and base course to allow traffic to return to roadway.
8. Repeat Steps 1 thru 7 for the 2nd half of the roadway.
9. Place asphalt concrete composite to repair the roadway surface.

Completion of culvert repair and replacement may be done at any time prior to resurfacing operations, however the placement of Class Q2 Hot Mixed Asphalt Concrete over the culvert replacement sites cannot begin until the asphalt concrete repairs over the culvert replacement have been exposed to normal traffic for a period of at least 14 calendar days.

The Contractor shall keep all businesses and residents within the City of Bryant informed of the progression and prosecution of work in areas which have a direct effect on their access.

The Contractor shall conduct a public meeting at a designated place prior to beginning work within the city of Bryant. Public announcements shall be made so all affected parties are aware of this meeting. The Contractor shall be responsible for the public announcements however, the Engineer shall approve the public announcements prior to submitting to the media. The meeting must be conducted by the Contractor's Superintendent or management person.
The purpose of these meetings shall be to:

☐Present the work schedule

☐Coordinate work activities with subcontractors, city and utility companies

☐Coordinate traffic control

☐Coordinate pedestrian access needs

☐Coordinate public and private access

☐Inform businesses, residents, and public of project status

All costs related to meeting and public announcements shall be incidental to the contract lump sum price for TRAFFIC CONTROL, MISCELLANEOUS.

The Contractor will be required to maintain storm drainage throughout the duration of the project. The Contractor shall ensure adequate drainage at various storm water tie in points along the project prior to nightfall.

TRAFFIC CONTROL

SD28 shall remain open to traffic at all times.

Removing, relocating, covering, salvaging and resetting of existing traffic control devices, including delineation, shall be the responsibility of the Contractor. Cost of this work shall be incidental to the various contract items unless otherwise specified in the plans. Delineators and signs damaged or lost shall be replaced by the Contractor at no cost to the State.

Indiscriminate driving and parking of vehicles within the right-of-way will not be permitted. Any damage to the vegetation, surfacing, embankment, delineators and existing signs resulting from such indiscriminate use shall be repaired and/or restored by the Contractor, at no expense to the State, and to the satisfaction of the Engineer.

Work activities during non-daylight hours are subject to prior approval.

Work zones for the various construction operations that utilize a pilot car shall not exceed 3 miles in length.

The bottom of signs on portable or temporary supports shall not be less than seven feet above the pavement in urban areas and one foot above the pavement in rural areas. Portable sign supports may be used as long as the duration is less than 3 days. If the duration is more than 3 days the signs shall be on fixed location, ground mounted, breakaway supports.

The Contractor will be responsible for maintaining all existing traffic control signing for the safety of the traveling public.

“Grooved Pavement” signs shall be placed east and west of Bryant until all cold milled areas are covered with asphalt concrete. Attached to each sign shall be a “Next 1 Mile” sign. These signs are included in the Itemized List for Traffic Control Signs.

During the storm sewer upgrades and replacement of the curb & gutter, driveways and sidewalks, traffic control during working hours shall be controlled through the use of flaggers and/or pilot car and flaggers. During non-workings hours, the layout indicated on Standard Plate 634.03 shall be utilized with a maximum spacing of 20 feet for the channelizing devices.

250 tons of Base Course has been included in the Estimate of Quantities for use at intersecting city streets to maintain traffic while curb & gutter replacement is underway within the city of Bryant.

No Parking signs have been included in the Itemized List for Traffic Control Signs for placement within the city of Bryant.

Orange plastic safety fence shall be provided to enclose any areas that are unsafe for pedestrian traffic including the last 50’ of pipe excavation that is allowed to be open overnight, during undercutting operations, and when sidewalk has been removed. All related costs to furnish, place and maintain the plastic safety fence shall be incidental to the contract lump sum price for TRAFFIC CONTROL, MISCELLANEOUS. Where the unsafe areas for pedestrian traffic are adjacent to the pedestrian access path, Longitudinal Pedestrian Barricade shall be used. All costs shall be incidental to the contract price per foot for LONGITUDINAL PEDESTRIAN BARRICADE.

Traffic Control signs, as shown in the Itemized List for Traffic Control Signs, are estimates. Contractor’s operation may require adjustments in quantities, either more or less. Payment will be for those signs actually ordered by the Engineer and used.

Traffic Control for culvert repair work shall be as follows:

For signing purposes, a work area shall be no longer than two miles for culvert repair operations.

Flaggers and FLAGGER symbol signs shall be in place when work activities or equipment present a hazard to workers, through traffic, or encroaches into driving lanes open to traffic.

Traffic Control for mainline culvert replacement shall be as follows:

Signing for a maximum of 2 work sites has been included in the Itemized List for Traffic Control Signs. A Maximum of 2 sites may be worked on simultaneously. The length of a work zone shall be limited to 1 culvert site and there shall be a minimum of 1000 Ft between work zones.

Flaggers shall be used to control traffic during working hours as depicted on Standard Plate 634.23.

During nonworking hours traffic shall be controlled by the use of STOP signs as depicted on Standard Plate 634.25.

Type 3 Barricades shall be placed on each side of the open cut and also in front of any equipment and material on the roadway.

Maximum spacing of channelizing devices along the work space shall be 20 feet.

Loose Gravel signs shall be placed when appropriate at the culvert replacement sites.

During the culvert replacement the Contractor shall be required to widen the shoulders with Base Course to accommodate traffic through the project. All costs to temporarily widen the roadway at the culvert replacement sites shall be incidental to the contract lump sum price for CONSTRUCTION AND MAINTENANCE OF DETOUR(S). At a minimum the widening shall be constructed so that the inslope is no steeper than 3:1 and that a minimum of 12” of granular material is placed to accommodate traffic.

Upon completion of the installation of the new culvert installation any excess materials used for temporary widening no longer required shall be removed from the project. All costs to remove the temporary widening shall be incidental to the contract lump sum price for CONSTRUCTION AND MAINTENANCE OF DETOUR(S).

CONSTRUCTION SIGN INSTALLATION

The Contractor is advised that sidewalk exists along the project where some of the signing is to be installed. In some cases the sidewalk is immediately behind the curb and gutter. The method of supporting the signs shall take this into account so that the sidewalk remains usable by pedestrians in accordance with the American’s with Disability Act. Any damage to the sidewalk due to sign installation shall be repaired as directed by the Engineer, at no cost to the City of Bryant or the SDDOT.

4” TEMPORARY PAVEMENT MARKING TAPE TYPE I

The 4” Temporary Pavement Marking Tape Type I shall be used to mark the No Passing Zones and Stop Bars as indicated by the Standard Plate 634.25.

Temporary Raised Pavement Markers may be used in place of the temporary pavement marking tape to mark the No Passing Zones.

A quantity of 2,350 feet of temporary pavement marking tape has been provided for in the Estimate of Quantities for each culvert replacement location.

TEMPORARY PEDESTRIAN ACCESS ROUTE

A Temporary Pedestrian Access Route (TPAR) shall be provided when crosswalks, sidewalks, or other pedestrian facilities are blocked, closed, or relocated. A TPAR may consist of a combination of existing and/or temporary pedestrian facilities. The TPAR shall be kept free of any obstructions and hazards, such as holes, debris, mud, snow, construction equipment, traffic control signing, stored materials, etc.

The Contractor shall notify the Engineer at least 72 hours prior to start of any construction operation that will necessitate a change in pedestrian access. Whenever possible, the TPAR shall only utilize in-place street crossing(s). Pedestrian traffic signal displays controlling a crosswalk that is closed shall be covered or removed.

TEMPORARY CURB RAMP

Temporary Curb Ramps should be firm, stable, and have a non-slip surface. They shall not warp or buckle, and should be made of materials strong enough to support a weight of 800 pounds. Temporary Curb Ramps shall also be color contrasting and contain marked edges so they are noticeable by pedestrians who have visual impairments. Lateral joints or gaps between surfaces shall be a maximum of 0.5 inches in width.

Temporary Curb Ramps shall be the full width of the temporary pedestrian access route, with a recommended width of 60” and a minimum width of 48”. Temporary Curb Ramps shall have a maximum slope of 1:12, and have free draining surfaces with a maximum cross slope of 2 percent. Handrails on Temporary Curb Ramps are not required unless the curb ramp has a rise exceeding 6” and a length exceeding 72”.

All costs shall be incidental to the contract unit price per each for TEMPORARY CURB RAMP.

LONGITUDINAL PEDESTRIAN BARRICADE

Longitudinal Pedestrian Barricades should not be used to provide positive protection for pedestrians.

Barricade rail supports may not project into pedestrian routes more than 4 inches from the face of the barricade. To prevent any tripping hazard to pedestrians, ballast shall be located behind or internal to the device.

When Longitudinal Pedestrian Barricades are combined in a series, the maximum gap between devices that do not interlock shall be one inch. Joints between devices that do interlock shall be closed and flush to prevent canes or small wheels from being trapped and to facilitate safe hand trailing. When used as a sidewalk closure mechanism, Longitudinal Pedestrian Barricade must run the entire width of the sidewalk. Longitudinal Pedestrian Barricade should provide a color contrasting pattern. Black should not be used to color any base on a device. The devices should comply with the general color and stripe pattern requirements of Section 6F.68 of the MUTCD.

Longitudinal Pedestrian Barricade shall have continuous bottom and top surfaces. A gap height or opening from the walkway surface up to a maximum of 2 inches is allowed for drainage purposes. The top edge of the bottom portion shall be a minimum of 8 inches above the walkway. The top of the top portion shall be between 34 and 38 inches above the walkway. The top surface shall be smooth to allow safe hand trailing. Both upper and lower surfaces shall share a common vertical plane.

All costs shall be incidental to the contract unit price per foot for LONGITUDINAL PEDESTRIAN BARRICADE.

TYPE III FIELD LABORATORY

The lab shall be equipped with an internet connection such as DSL, cable modem, or other approved service. The internet connection shall be provided with a multi-port wireless router. The internet connection shall be a minimum speed of 512 Kb unless limited by job location and approved by the DOT. Prior to installing the wireless router the Contractor shall submit the wireless router's technical data to the Area Office to check for compatibility with the state's computer equipment. The internet connection is intended for state personnel usage only. The Contractor's personnel are prohibited from using the internet connection unless pre-approved by the Project Engineer. These items shall be incidental to the contract unit price per each for TYPE III FIELD LABORATORY.

STORAGE UNIT

The Contractor shall provide a storage unit such as a portable storage container or a semi-trailer meeting the minimum size requirements from the table below:

Project Total Asphalt Concrete Tonnage	Minimum Internal Size (Cu Ft)	Minimum External Size (L x W x H)
Less than 50,000 ton	1,166	20' x 8' x 8.6' std
More than 50,000 ton	2,360	40' x 8' x 8.6' std
All Gyratory Controlled QC/QA Projects	2,360	40' x 8' x 8.6' std

The storage unit is intended for use only by the Engineer for the duration of the project. The QC lab personnel or the Contractor will not be allowed to use the storage container while it is on the project, without permission of the Engineer.

The storage unit shall be on site and operational prior to asphalt concrete production. Upon completion of asphalt concrete production, the Engineer will notify the Contractor when the storage unit can be removed from the project. The storage unit use will not exceed 30 calendar days from the completion of asphalt concrete production. The storage unit will remain the property of the Contractor.

The storage unit shall be weather proof and shall be set in a level position. The storage unit shall be able to be locked with a padlock.

The storage unit shall be placed adjacent to the QA lab, as approved by the Engineer.

The following shall apply when the storage unit provided on the project is a portable storage container:

1. The portable storage container shall be constructed of steel.
2. The portable storage container shall be set such that it is raised above the surrounding ground level to keep water from ponding under or around the storage container.

The following shall apply when the storage unit provided on the project is a semi-trailer:

1. A set of steps and hand railings shall be provided at the exterior door.
2. If the floor of the semi-trailer is 18 inches or more above the ground, a landing shall be constructed at the exterior door. The minimum dimensions for the landing shall be 4 feet by 5 feet. The top of the landing shall be level with the threshold or opening of the doorway.
3. The semi-trailer may be connected to the QA lab by a stable elevated walkway. The walkway shall be a minimum of 48 inches wide and contain handrails installed at 32 inches above the deck of the walkway. The walkway shall be constructed such that it is stable and the deck does not deform during use and allows for proper door operation. Walkway construction shall be approved by the Engineer.

All cost for furnishing, maintaining, and removing the storage unit including labor, equipment, and materials including any necessary walkways, landings, stairways, and handrails shall be included in the contract unit price per each for STORAGE UNIT.

GENERAL NOTES

The Contractor shall be required to mow the inslopes with a rotary mower to a height of 6 inches for a distance of 14 feet from the edge of the roadway (or shoulder) for the length of the project. This work will be completed to the satisfaction of the Engineer after all construction activities are completed. All costs associated with this work shall be incidental to the various contract items.

CLEARING

At the 3 rural locations, the existing ROW is 75' from CL of SD28. The Contractor shall give the Engineer a minimum of 2 weeks advance notice to mark the limits of tree removal and measure the diameter of trees that qualify for payment as Clear and Grub Tree.

Prior to removing the trees from Parcel No. 2 (Sta. 219+55 R to 220+20 R the Contractor shall contact the landowner (Greg) at 605-520-6631.

Station	to	Station	Clear and Grub Stump (Each)	Clear and Grub Tree (Each)	Comments
220+13 L&R		230+34 L&R	3	21	Bryant
39+00 R		47+00 R	1	35	Rural
122+00 R		127+50 R	-	20	Rural
369+75 R		379+50 R	2	100	Rural
		Total:	6	176	

COLD MILLING ASPHALT CONCRETE

The Los Angeles Abrasion Loss value on the aggregate used for the in place asphalt concrete was 23 percent. This value was obtained from testing during construction of the in place asphalt concrete.

The placement of asphalt concrete shall begin within **5** working days after completion of cold milling of mainline asphalt concrete.

Cold Milling Asphalt shall be done according to the typical section and to the established elevation indicated on the profile sheets from Sta 220+50 to 235+00. Cold Milling of Asphalt shall consist of removing the in place asphalt to an average depth of **5"**.

The cold milled asphalt concrete material shall become the property of Contractor for his disposal.

TABLE OF ASPHALT CONCRETE PAVEMENT REMOVAL

Station	to	Station	L/R	Quantity (SqYd)	Comments
221+37.0		222+30.4	L	126.1	Railway St. Int.
222+30.4		222+90.5	L	6.7	Mainline C&G Install
222+90.5		223+58.3	L	97.7	Hill St. Int.
223+58.3		226+51.4	L	30.0	Mainline C&G Install
226+51.4		227+37.1	L	122.6	Underwood St. Int.
227+37.1		230+22.2	L	27.2	Mainline C&G Install
230+22.2		230+98.7	L	82.9	Prosper St. Int.
230+98.7		234+10.3	L	26.2	Mainline C&G Install
233+97.3		234+56.1	L	57.3	Lee St. Int.
220+70.0		220+98.0	R	1.7	Mainline C&G Install
223+83.0		224+67.0	R	0.6	Mainline C&G Install
225+80.0		227+80.0	R	6.0	Mainline C&G Install
230+52.9		230+73.0	R	37.8	Prosper St. Int.
230+60.0		234+52.0	R	11.2	Mainline C&G Install
			Total:	634.	

Mainline C&G Install provides for removal of asphalt pavement in front of the new Curb & Gutter.

TABLE OF CONCRETE CURB AND GUTTER REMOVAL

Station	to	Station	L/R	Quantity (Ft)
222+06.3		223+10.3	L	124
223+46.3		225+08.7	L	169
225+34.3		226+76.4	L	162
227+14.1		228+68.2	L	176
228+91.4		230+47.4	L	166
230+45.0		230+45.0	L	4
230+73.5		232+35.1	L	172
230+75.0		230+75.0	L	7
232+68.2		234+09.5	L	151
220+92.8		223+10.2	R	229
223+45.4		224+46.4	R	110
224+56.7		225+16.0	R	61
225+31.8		226+64.1	R	133
227+23.8		230+47.1	R	334
230+72.7		233+35.8	R	274
			Total:	2272

TABLE OF CONCRETE DRIVEWAY PAVEMENT REMOVAL

Station	to	Station	L/R	Quantity (SqYd)
224+81.6		224+90.6	L	13.80
225+07.8		225+36.3	L	34.32
228+66.7		228+92.5	L	20.81
230+42.1		230+83.4	L	33.66
232+34.9		232+69.3	L	37.07
224+45.2		224+58.1	R	17.99
225+14.6		225+32.7	R	7.73
230+43.0		230+76.8	R	30.63
231+68.1		231+84.8	R	15.72
			Total:	211.73

Removal quantities for Driveway Pavement begin at the edge of asphalt surfacing on SD28.

TABLE OF SIDEWALK REMOVAL

Station	to	Station	L/R	Quantity (SqYd)
211+03.9		211+08.1	L	10.94
225+66.4		225+70.0	L	3.03
226+61.9		226+65.2	L	7.38
229+88.1		229+89.8	L	1.02
230+28.1		230+44.7	L	17.79
233+32.1		233+35.8	L	2.19
220+94.8		223+07.4	R	106.60
223+49.5		223+66.2	R	9.04
224+33.0		224+45.7	R	7.01
224+57.9		224+71.0	R	5.59
			Total:	170.59

TABLE OF DROP INLET REMOVAL

All costs for removal of the frame and grate assembly shall be incidental to the contract unit price per each for REMOVE DROP INLET.

Station	L/R	Quantity (Each)
220+94	R	1
223+48	R	1
230+41	L	1
230+41	R	1
234+09	R	1
	Total:	5

INCIDENTAL WORK, GRADING

Station	L/R	Remarks
5+40	L&R	Take out 18”-56’ CMP w/Flared Ends
12+45	L&R	Take out 24”-68’ CMP w/Flared Ends
28+28	L&R	Take out 24”-68’ CMP w/Flared Ends
178+59	L&R	Take out 18”-74’ CMP w/Flared Ends
195+16	L&R	Take out 24”-66’ CMP w/Flared Ends
219+06	L&R	Remove abandoned railroad crossing
220+57 to 220+94	R	Take out 15”-39’ RCP w/Flared End
222+13 to 223+08	L	Restore Landscaping Rock
230+41	L&R	Take out 18”-36’ RCP
230+41 to 230+44	R	Take out 18”-4’ RCP
234+77	L	Take out 18” Flared Ends
235+12 to 235+70	L	Take out 15”-116’ RCP w/Safety Ends
238+38 to 239+00	L	Take out 18”-62’ RCP w/Safety Ends

DROP INLETS

Where drop inlets are constructed within areas of curb and gutter, the Contractor shall construct weep holes of at least 3 inches in diameter in the drop inlet walls. The weep holes shall be constructed at the same elevation as the adjacent top of the earthen subgrade and shall be maintained clean and open at all times until the permanent surfacing is placed. The drop inlets shall be covered throughout construction operations as necessary with an Engineer approved cover to provide safe travel for motorists and to prevent materials from entering the storm sewer system. After the permanent surfacing has been placed, the Contractor shall seal the weep holes with grout and remove all debris from the drop inlet. All costs involved with the coverings, weep holes, and removing debris from the drop inlets shall be incidental to the contract unit prices for the components of the drop inlets.

The plan shown quantities of the drop inlet components such as Class M6 Concrete, Reinforcing Steel, Type B Frame and Grate Assembly, and Type C Frame and Grate will be the basis of payment for these items.

If additions or reductions to the number of drop inlets are ordered by the Engineer, payment for the components required to construct the drop inlets will be made at the contract unit prices for the components of the drop inlets.

CONTROLLED DENSITY FILL FOR PIPE

Controlled density fill shall be in conformance with Section 464 of the Specifications.

The controlled density fill shall be placed between the pipes from the base of pipe elevation to the haunch of the pipes.

TABLE OF CONTROLLED DENSITY FILL FOR PIPE

Station	Quantity (CuYd)
234+72 L to 235+75 L	4.4
Total:	4.4

CONCRETE PIPE CONNECTIONS

Pipe connections to existing pipes, manholes, junction boxes, and drop inlets shall be done by breaking a hole into the existing structure and inserting the pipe. A concrete collar shall then be poured around the pipe in the area of the connection.

When it is not possible to use a normal pipe joint (male-female ends), connections to existing pipe shall be made by placing a 2’ wide by 6” thick M6 concrete collar around the outside of the connection. The concrete collar shall be reinforced with 6x6 W2.9 x W2.9 wire mesh.

All costs for constructing the concrete collars including materials and labor shall be incidental to the contract unit price per foot for the corresponding pipe bid item.

STORM SEWER

Reinforced concrete pipe may be either bell and spigot or tongue and groove. The pipe sections shall be adjoined such that the ends are fully entered and the inner surfaces are reasonably flush and even.

Lift holes in the reinforced concrete pipe shall be plugged with grout.

Watertight joints are required for reinforced concrete pipe, drop inlets, manholes, and junction boxes where storm sewers run parallel to and within 10 feet horizontally from existing or proposed water mains.

Watertight joints are required where reinforced concrete pipes, drop inlets, manholes, or junction boxes cross water mains and are separated a distance of 18 inches or less, above or below, the water main.

If watertight joints are required then the watertight joints shall extend for a distance of 10 feet beyond the water main. This measurement shall be from the sealed concrete joint to the outer most surface of the water main.

Watertight joint seals shall conform to the following requirements:

1. Reinforced Concrete Pipe (Circular): Gasketed pipe shall conform to the requirements of ASTM C443. Non-gasketed concrete pipe shall be sealed with a mastic joint seal conforming to the requirements of ASTM C990 and encased with a minimum 2' wide by 6" thick M6 concrete collar reinforced with 6x6 W2.9 x W2.9 wire mesh.

2. Reinforced Concrete Pipe (Arch): Joints shall be sealed with a waterstop seal meeting the requirements of ASTM C990. Waterstop seals shall consist of hydrophilic compounds such as Waterstop-RX or ConSeal CS-231.

3. Drop Inlets, Manholes, and Junction Boxes: Joints shall be sealed with a waterstop seal or seal wrap meeting the requirements of ASTM C990 or encased with a minimum 2' wide by 6" thick M6 concrete collar reinforced with 6x6 W2.9 x W2.9 wire mesh. Waterstop seal shall contain hydrophilic compounds such as Waterstop-RX or ConSeal CS-231. Seal wrap shall be a self adhesive external joint wrap such as ConWrap CS-217 or Mar Mac Seal Wrap.

Gaskets and seals (mastic, waterstop, and seal wraps) shall be installed in accordance with the manufacturer's recommendations.

The cost for furnishing and installing all gaskets, mastic joint seal, waterstop seal, seal wrap, concrete collars, and for plugging the lift holes shall be incidental to the contract unit price per foot for the corresponding pipe bid item.

TABLE OF 4" CONCRETE SIDEWALK

Station	to	Station	L/R	Quantity (SqFt)
211+03.17		211+16.53	L	332.1
225+66.20		225+70.20	L	31.9
226+60.09		226+68.27	L	141.4
229+87.99		229+89.99	L	12.0
230+28.15		230+44.57	L	223.4
233+32.09		233+35.85	L	21.0
220+70.00		220+75.00	R	25.0
221+03.00		223+04.56	R	1006.6
223+48.06		223+66.19	R	101.7
224+33.00		224+38.00	R	24.8
224+66.00		224+71.00	R	22.0
			Total:	1941.9

TYPE 1 DETECTABLE WARNINGS

Detectable warnings shall be in compliance with the Americans with Disabilities Act regulations.

The detectable warnings shall be installed according to the manufacturer's installation instructions.

A concrete thickness equal to the adjacent concrete sidewalk thickness and 2 inches of granular cushion material shall be placed below the Type 1 Detectable Warnings. When concrete is placed below the detectable warnings then the concrete thickness shall be transitioned at the rate of 1" per foot to match the adjacent concrete sidewalk thickness.

The detectable warnings shall be a brick red color for application in concrete curb ramps. Cast iron plates may be a natural patina (weathered steel).

When Type 1 Detectable Warnings are specified, the Contractor shall furnish and install only one of the products listed in the Type 1 Detectable Warnings table.

Type 1 Detectable Warnings

Product	Manufacturer
Detectable Warning Plate Cast Iron Plate	Neenah Foundry Company Neenah, WI 800-558-5075 http://www.neenahfoundry.com/
Detectable Warning Plate Cast Iron Plate	Deeter Foundry Lincoln, NE 800-234-7466 http://www.deeter.com/
Detectable Warning Plate Cast Iron Plate(No Coating)	East Jordan Iron Works, Inc. 301 Spring Street East Jordan, MI 49727 800-626-4653 http://www.ejiw.com

TABLE OF TYPE 1 DETECTABLE WARNINGS

Station	L/R	Quantity (SqFt)
211+14.92	27.32' L	10
222+99.00	28.17' R	10
223+49.47	27.69'R	10
226+64.40	26.95'L	10
230+27.37	37.98'L	10
	Total:	50

ADJUSTMENT OF MANHOLES

The Contractor shall adjust manholes to the extent necessary on this project. Adjusting the manholes may consist of removing the upper course of brick or removing the concrete walls, replacing the removed materials with brick or Class M6 concrete, placing adjusting rings if necessary, and resetting the manhole frame and lid. The elevation of the lid shall be set at the same elevation of the adjacent new pavement or surrounding ground. All manhole frames, lids, and rings that are cracked or broken due to carelessness of the Contractor shall be replaced with new manhole frames, lids, and rings that conform with the Specifications at the Contractor's expense. Manholes shall be adjusted to the satisfaction of the Engineer. All costs involved in adjusting the manholes shall be incidental to the contract unit price per each for ADJUST MANHOLE.

The Engineer may direct adjustment of manholes that were not included in these plans. Payment for adjusting manholes that were not included in the plans will be at the contract unit price per each for ADJUST MANHOLE.

TABLE OF ADJUST MANHOLES

Station	L/R	Type of Adjustment
211+33	CL	Adjust to final finish asphalt surface elev.
217+70	L	Adjust to final finish asphalt surface elev.
221+97	L	* Adjust to final finish asphalt surface elev.
223+29	L	Adjust to final finish asphalt surface elev.
226+94	CL	Adjust to final finish asphalt surface elev.
230+61	CL	* Adjust to final finish asphalt surface elev.
234+26	R	* Adjust to final finish asphalt surface elev.
237+68	R	Adjust to final finish asphalt surface elev.

*Surrounded by Concrete

CLEANOUT PIPE CULVERTS

At those culvert locations where Cleanout Pipe Culvert is required, as indicated on the Table of Mainline Culvert Work, the ditches at the inlet and outlet shall also be cleaned.

Cleanout of pipe culverts shall be done in advance of culvert repair operations. At those locations where further evaluation of culvert repairs are required, the culvert cleaning shall be scheduled such that there is adequate time to evaluate what repairs are required and allow for ordering and delivery of culvert materials.

Material in all existing culverts shall be cleaned out by water flushing or other approved methods.

Material removed from the culverts shall become the property of the Contractor for disposal.

The Contractor shall implement appropriate sediment control measures prior to water flushing in order to prevent discharges from the project boundaries to comply with the Storm Water Permit.

DITCH CLEANOUT

Shaping of ditch bottom at ends of culverts (ditch cleanout) is required at several locations identified in the Table of Mainline Culvert Work. There shall be no specific contract item for ditch cleanout. Ditch cleanout shall be included in the contract unit prices for the various culvert contract items.

Ditch cleanout shall include cleaning of the culvert end treatment apron which is typically a Flared End on this project. There will be no payment of the contract item Cleanout Pipe Culvert if all that is required is cleaning of the culvert end treatment apron.

Unless otherwise indicated in the Table of Mainline Culvert Work, ditch cleanout shall extend from the end of the culvert to within 1 foot of the Right-of-Way (ROW) Line. The bottom of the ditch cleanout shall be a minimum of 10 feet wide and the side slopes on the channel shall be 20:1 or flatter. For those locations where there is no channel from the inlet/out let of the culvert to the ROW Line ditch cleanout shall be completed such that there is a flat area of 100 Square Feet created at the inlet/outlet and the sides slopes around the flat area shall be 20:1 or flatter.

Material removed from the ditch shall become the property of the Contractor for disposal.

CORRUGATED METAL PIPE

Corrugated metal pipes shall have 2 ⅔-inch X ½-inch corrugations for 42-inch and smaller round pipe and 48-inch and smaller arch pipe unless otherwise stated in the plans. Corrugated metal pipes shall have 3-inch X 1-inch or 5-inch X 1-inch corrugations for 48-inch and larger round pipe and 54-inch and larger arch pipe unless otherwise stated in the plans.

The gauge of the corrugated metal ends shall match the thickest gauge of corrugated metal pipe it is connected to.

GENERAL MAINLINE TRANSVERSE CULVERT REPAIR AND REPLACEMENT

Prior to beginning culvert repair and replacement operations it may be necessary to dewater the work area. The area around the pipe inlet and outlets shall be blocked with sandbags wrapped in 6 mil polyethylene sheeting and dewatered. All costs associated with sandbagging and dewatering shall be incidental to the contract unit prices for the various pipe contract items. The pipe shall be installed in dry bedding.

The Contractor is encouraged to thoroughly investigate the culvert repair sites prior to bidding. Prior to working on the sites that are inundated with water, a complete dewatering plan shall be submitted for approval to the Engineer. No separate payment for dewatering will be made.

Prior to beginning culvert work at all work locations, the Contractor shall remove and stockpile 3 inches of in place topsoil from the construction areas. On completion of construction operations this salvaged topsoil shall be spread evenly over the embankment at the work sites. No separate payment for removal and replacement of topsoil will be made

Fill material shall be obtained from Contractor furnished sources and approved by the Engineer.

Compaction of inslope embankments shall be to the satisfaction of the Engineer.

It is not anticipated that water for compaction will be required. However, if in the opinion of the Engineer the fill material is extremely dry, water may be ordered and placed to the satisfaction of the Engineer. All costs for any added water shall be incidental to the contract unit price per cubic yard for CONTRACTOR FURNISHED BORROW EXCAVATION.

Haul of embankment material on established traveled roadways shall be limited to trucks hauling legal loads and which do not sustain damage to the roadway, as approved by the Engineer. Hauling of material in the roadway ditches will not be allowed.

Additional excavation may be required to ensure positive drainage into and out of extended culverts. Excavated material shall be incorporated into the embankment slope.

The Contractor shall be responsible for restoration of any areas disturbed outside the limits of the work area.

RCP AND CMP CULVERT REPAIRS FOR MAINLINE CULVERTS

All pipe and end treatments designated for removal shall become the property of the Contractor for his disposal.

Tie bolts shall be installed at all joint locations where existing pipe sections and end treatments are being reset or installed new. This may require drilling holes into the existing pipe sections and end treatments. Tie bolts shall be installed in accordance with Standard Plate No. 450.18. New RCP culvert installations shall have all the joint locations tied together with tie bolts.

When necessary to remove end sections of CMP culverts, they may be cut with a torch. If the culvert is cut the damaged area shall be painted with a galvanizing paint approved by the Engineer. All costs associated with cutting and painting shall be incidental to the various contract items.

The Contractor is advised of the risk of lead exposure when cutting galvanized paint. The Contractor should plan his/her operations accordingly, and inform employees of hazards of lead exposure.

Joints between concrete pipe culvert sections shall be protected against infiltration as indicated in Section 450.3 A of the Specifications. If an existing concrete pipe culvert section has a damaged joint or there is poor alignment of the joints, 2 layers of drainage fabric shall be placed over the joint.

Culvert barrel and culvert end treatments that are to be removed and reset shall be cleaned prior to resetting. There will be no payment of the contract item Cleanout Pipe Culvert to clean sections of culverts that are removed and reset.

It is the responsibility of the Contractor to visit the sites to determine the extent of culvert cleaning work required.

The Contractor shall implement appropriate sediment control measures prior to water flushing in order to prevent discharges from project boundaries to comply with the Storm Water Permit.

The Contractor shall be responsible for properly disposing of the removed materials.

MAINLINE CROSS PIPE REPLACEMENT

After the existing pipe has been removed, the new pipe culvert shall be undercut to a minimum depth of 1 foot and backfilled with base course. The depth of undercut is an estimate and the actual depth necessary shall be determined during construction. The Engineer will determine how much undercut shall be done in accordance with Section 421 of the Specifications, but will not reduce the undercut to less than 1 foot in depth. Compaction of the undercut backfill will be in accordance with Section 421.3 A.

The culvert will be bedded in accordance with Section 450.3 F.2, Class B Bedding with the following exception. The undercut area shall extend 2 feet from the outermost diameter on both sides of the pipe with the back of the excavated area being sloped 3:1 upward to the top of the roadway surface. The Select Granular Backfill for the Class B Bedding will conform to the specification for Base Course. See Culvert Replacement Detail.

The remainder of the pipe culvert excavation shall be backfilled with soils taken from the pipe removal excavation or other suitable material as approved by the Engineer. The backfill will be benched into 3:1 excavation slope. Compaction of the backfill material shall be governed by the Specified Density Method.

The minimum testing as shown in M.S.T.R Section 4.1.E.3.a.1 will be required.

After the new pipe has been backfilled to the top of the subgrade, a 12'" depth of base course and 5" depth (2- 2.5" lifts) of asphalt concrete composite shall be placed as a patch matching the existing asphalt concrete.

All costs to saw cut asphalt, remove and dispose of asphalt, excavate and backfill the material to the bottom of the pipe and slope the excavating limits at a 3:1 backslope shall be paid for at the contract unit price per cubic yard for UNCLASSIFIED EXCAVATION. Pipe Culvert Undercut shall be paid for at the contract unit price per Cubic Yard for PIPE CULVERT UNDERCUT. No additional payment will be made for asphalt removal, excavation, or disposal of material to accommodate temporary channel diversions or pipes. Base course for the undercut backfill will be paid for at the contract unit price per ton for BASE COURSE.

The cost for asphalt concrete composite installed over the pipe replacement shall be paid for at the contract unit price per ton for ASPHALT CONCRETE COMPOSITE

Pipe flowline shall match that of existing pipe. This may require that ditches be excavated in each direction from the pipe ends to maintain proper water flow through the pipe. The excavated material shall become the property of the Contractor for his disposal. All costs associated with this work shall be incidental to the contract lump sum price for INCIDENTAL WORK, GRADING.

TABLE OF MAINLINE CULVERT REPLACEMENT EXCAVATION AND SURFACING QUANTITIES

Station	Unclassified Excavation (CuYd)	Base Course for Culvert Undercut & Bedding (Ton)	Base Course for Surfacing (12" Depth) (Ton)	Asphalt Concrete Composite (5" Depth) (Ton)
5+49	404	68	145	61
12+45	544	78	160	63
28+28	452	80	150	63
178+59	570	86	162	68
195+16	516	80	157	66
Total:	2486	392	774	321

Ditch cleanout at the replaced culverts shall extend from the end of the culvert to within 1 foot of the Right-of-Way (ROW) Line. The bottom of the ditch cleanout shall be a minimum of 10 feet wide and the side slopes on the channel shall be 20:1 or flatter. For those locations where there is no channel from the inlet/out let of the culvert to the ROW Line ditch cleanout shall be completed such that there is a flat area of 100 Square Feet created at the inlet/outlet and the sides slopes around the flat area shall be 20:1 or flatter. Ditch cleanout material may be incorporated into the inslope, subject to approval by the Engineer. Ditch cleanout shall be included in the contract unit prices for the various culvert contract items.

TABLE OF PIPE CULVERT UNDERCUT

The Table of Pipe Culvert Undercut is intended to be used to establish an estimated quantity of Pipe Culvert Undercut for bidding purposes only. The depth of undercut is an estimate and the actual depth necessary shall be determined during construction. The Engineer will determine undercut in accordance with Section 421 of the Specifications.

Station	Undercut Depth (Ft)	Quantity (CuYd)
5+49	1	16.8
12+45	1	19.3
28+28	1	19.7
178+59	1	21.2
195+16	1	19.7
	Total:	96.7

The table contains the rate of pipe culvert undercut per foot of pipe length and should be used as an aid in determining the actual amount of undercut to be performed during construction. The table is derived from the Culvert Replacement Detail and conforms to the Specifications. When calculating pipe culvert undercut, the length of pipe ends should be included in the overall pipe length.

Storm sewer and approach pipes do not require undercutting unless specified otherwise in these plans.

Pipe Diameter (In)	Round Pipe Undercut Rate for 1' Depth (CuYd/Ft)	Arch Pipe Undercut Rate for 1' Depth (CuYd/Ft)
24	0.2407	0.2577
30	0.2623	0.2847
36	0.2840	0.3110
42	0.3056	0.3337
48	0.3272	0.3596
54	0.3488	0.3827
60	0.3704	0.4105
66	0.3920	---
72	0.4136	0.4630
78	0.4352	---

CONTRACTOR FURNISHED BORROW EXCAVATION

The Contractor shall provide a suitable site for Contractor furnished borrow excavation material. The Contractor is responsible for obtaining all required permits and clearances for the borrow site. A quantity of 500 cubic yards of Contractor Furnished Borrow Excavation has been included in the Estimate of Quantities for use at culvert replacement sites, should the excavated material be determined not suitable for reuse.

Restoration of the Contractor furnished borrow excavation site shall be the responsibility of the Contractor.

REMOVE AND REPLACE TOPSOIL

All costs associated with removing and replacing the topsoil along areas to receive new curb & gutter and sidewalk shall be incidental to the contract lump sum price for REMOVE AND REPLACE TOPSOIL.

REPROFILING DITCH

Reprofiling ditch (ditch cleanout) shall be completed at 3 locations on this project. Those locations are as follows:

Begin Station	End Station	Length in Stations	Comments
219+30 Lt	224+40 Lt	1.1	Shape ditch to drain water to mainline cross pipes at Sta. 219+64
219+55 Rt	220+35 Rt	0.8	Shape ditch to drain water to mainline cross pipes at Sta. 219+64
235+76 Lt	238+50 Lt	2.7	Shape ditch to drain water from outlet end of culvert Sta. 235+76 to inlet end of culvert Sta. 238+50
TOTAL		**4.6**	

REPROFILING DITCH (CONT.)

The Engineer shall establish the grade control necessary to establish positive drainage in the reprofiling ditch locations.

The Contractor shall disturb the least amount of area possible while completing the reprofiling ditch work.

Prior to starting reprofiling ditch work the Contractor shall remove and stockpile 4 inches of in place topsoil from the construction areas. On completion of reprofiling ditch work this salvaged topsoil shall be spread evenly over the newly shaped ditch.

Any excess material generated from the reprofiling ditch work shall become the property of the contractor for disposal.

All costs associated with reprofiling ditch including removal and replacement of topsoil, disposal of excess material and shaping of ditch bottom to eliminate standing water shall be incidental to the contract unit price per station for REPROFILING DITCH.

The Contractor shall be responsible for visiting the sites prior to preparing the bid.

GEOGRID

Geogrid shall be placed between the first and second lifts of the Base Course. 1213 sq. yds of geogrid have been included in the Estimate of Quantities. This quantity is assumed to cover 1156 sq. yds. The grid quantity has been increased by 5% to account for overlaps.

Station	Width of Geogrid Placement (Ft)	Length of Geogrid Placement (Ft)	Quantity of Geogrid (SqYd)
5+49	32	61	227.7
12+45	32	67	250.1
28+28	32	63	235.2
178+59	32	68	253.9
195.16	32	66	246.4
		Total:	1213.3

Geogrid Specification:

The geogrid will be a biaxial grid of single layer construction. Vibratory welded, integrally formed or woven and coated geogrids will be acceptable. Grids with laser welded grid junctions will not be allowed. The geogrid will be certified by the supplier to meet the following specification prior to installation:

Property	Test	MARV
Wide Width Strip Tensile Strength (Ultimate)	ASTM6637 Method B	850lb/ft MD and XD

Geogrid will be paid for at the contract unit price per sq. yd. To account for overlaps the payment quantities will be based on area covered plus 5%. Payment will be full compensation for furnishing and installing the geogrid only.

Installation Procedure:

- The geogrid should be kept as taut as possible.
- Base Course will be dumped at least 20 feet behind the leading edge of the fill and pushed into place with a loader or dozer.
- No equipment shall be allowed to operate directly on the geogrid.
- All seams in the geogrid will be overlapped at least 1 foot and in a manner that prevents Base Course being pushed under the geogrid.
- Geogrid will be unrolled parallel to centerline.

ASPHALT CONCRETE COMPOSITE

Asphalt Concrete Composite shall be paver laid in lifts not exceeding 2.5” in depth.

REINFORCED CONCRETE PIPE JOINT REPAIR AND VOID GROUTING

A. CULVERT JOINT CLEANING

1. This work shall consist of cleaning of the culvert joints, washing the entire culvert and joints with a high pressure washer, and if needed, wire brush cleaning of each joint to be repaired as directed by the Engineer. The entire culvert shall be clean and dry and most notably the specified joints shall be thoroughly cleaned to the satisfaction of the Engineer using a power washer with water pressure of at least 2500 psi. The culvert must be in a clean condition so that no deleterious material is trapped in the joints that are being repaired. The Contractor shall dispose of all debris removed from the culverts during the cleaning operation as approved by the Engineer.

2. All costs for equipment, material and labor for the culvert joint cleaning work shall be incidental to the contract unit price per foot for Culvert Joint Clean which shall be compensation in full for all equipment.

3. Contractor shall visit the project to determine the extent of cleaning needed for Culvert Joint Cleaning prior to bidding work.

B. REPAIR CULVERT JOINT

This work shall consist of repairing culvert joints in accordance with the Chemical Grout Manufacturer’s directions for the sealing of each joint to prevent future infiltration/exfiltration of soils and water. Joint Sealing also prevents the soil stabilization and void filling grout from expanding back into the structure during injection. The following shall apply:

1. The work shall consist of repairing the concrete culvert joint with a sealant comprised of water reactive hydrophilic polyurethane resin and dry oil free oakum. The work shall include the furnishing by the Contractor, of all supervision, training, labor, materials, tools, lighting and equipment for the performance of all operations necessary to repair or seal joints between concrete pipe sections throughout the culvert. All grout will be injected under such pressure so as not to damage the existing drainage structure or roadway structure.

2. The Contractor shall provide a notarized statement, from the Manufacturer, that the polyurethane foam resin meets the specified requirements, along with submitting the Manufacturer’s current product specification and installation instructions. The grout materials shall be non-flammable and non-toxic when cured.

3. The Contractor shall be an Approved Contractor of the Manufacturer of the specified product and shall provide written certification from the Manufacturer attesting to their Approved Contractor status.

4. All product documentation and Contractor submittals must be submitted to the Engineer prior to or at the preconstruction conference. The Contractor must have the Engineer’s approval prior to commencing any of this work.

5. The Contractor shall follow the Manufacturer’s installation instructions throughout the repair process and install components in accordance with Manufacturer’s specifications.

6. The Contractor shall provide safe storage and handling of materials prior to delivery and at the project site. All material installation, handling and storage shall be in accordance with Manufacturer’s recommendations.

7. Temperature of the resin is critical from the point of pumping to the point of injection. All polyurethanes react faster at higher temperatures. Drum heaters and heated hoses are required when ambient or ground temperatures are below 70 degrees Fahrenheit. The optimum hose temperature will vary with the weather conditions and the particular job site conditions with the minimum hose temperature being 75 degrees Fahrenheit and the maximum hose temperature being 95 degrees Fahrenheit and the drum temperature not to exceed 90 degrees Fahrenheit.

8. The Contractor shall provide worker and inspector safety and worker protective gear in accordance with the manufacturer, including but not limited to chemical goggles, face shields, eye wash system and NBR gloves.

9. The Contractor shall submit to the Engineer for approval a detailed procedure for the installation of the polyurethane grout.

REINFORCED CONCRETE PIPE JOINT REPAIR AND VOID GROUTING (Cont.)

10. The work shall include, but is not limited to sealing each pipe joint with a hydrophilic polyurethane grout meeting the following specifications:

GEL FOAM II (For Saturating Oakum Rope Joint Packing Material) as manufactured by Green Mountain International, LLC or equal.

ULTRA (Single Component Grout For Joint Injection) as manufactured by Green Mountain International, LLC or equal.

11. UV Protection (Gel Coat) – The work shall consist of trimming excess grout and oakum from the interior face of the joint prior to applying the Gel Coat. The epoxy gel compound shall be recommended by the Manufacturer for both surface sealing and protecting the hydrophilic grout from UV exposure. The epoxy gel compound shall be mixed and handled in accordance with the Manufacturer's recommendations and shall meet the following requirements:

Epoxy gel sealant compounds manufactured by Green Mountain Grouts, LLC or equal.

12. All costs for all equipment, material and labor required to complete the work shall be incidental to the contract unit price per foot for Repair Culvert Joint. Completion of the work includes initial saturated oakum rope packing of each joint, follow up injection of resin into the back side of each joint, trimming the excess grout and oakum from the interior face of the joint, application of the epoxy gel coat and site clean-up.

13. Contractor shall visit the project to determine the extent of work needed for Repairing the Culvert Joints prior to bidding the work.

C. DUAL COMPONENT CHEMICAL GROUT FOR VOID FILLING

1. This work shall consist of filling external voids surrounding the culvert, with an injected high expansion chemical grout compound. The work shall include furnishing the chemical grout by the Contractor, all supervision, training, labor, materials, tools, lighting and equipment for the performance of all operations necessary to fill external voids around the drainage structure. Holes shall be strategically drilled as required and grout injected throughout the structure to effectively fill all voids that have developed outside of the structure due to the infiltration of external soils and materials into the culvert and "piping" (water running outside and under the structure due to separated joints). All grout shall be injected under such pressure so as not to damage the existing drainage structure or roadway structure. All joints shall be appropriately cleaned and sealed, with appropriate recommended cure time, prior to the injection of the void grouting. After completion of the void filling, all holes shall be properly sealed.

2. The Contractor must supply the Engineer with three (3) prior job references of projects where they have successfully injected urethane resin for subgrade void filling applications, or soil stabilization. In lieu of three (3) prior job references the Contractor shall:

a) Obtain hands on training from the supplier on the installation procedures, or

b) Have the supplier on site to provide training to Contractor's staff. Supplier shall be present for at least one complete culvert repair and until the Engineer is satisfied that Contractor's staff is competent in performing this work.

3. The Contractor shall provide a notarized statement, from the Manufacturer, that the polyurethane foam resin meets the specified requirements for filling voids, along with submitting the Manufacturer's current product specification and installation instructions.

4. The Contractor shall follow the Manufacturer's installation instructions throughout the repair process and install components in accordance with Manufacturer's specifications.

5. The Contractor shall be an Approved Contractor of the Manufacturer of the specified product and shall provide certification from the Manufacturer attesting to their Approved Contractor status.

6. The Contractor shall provide safe storage and handling of materials prior to delivery and at the project site. All material installation, handling and storage shall be in accordance with the Manufacturer's recommendations.

7. The Contractor shall provide worker and inspector safety and worker protective gear in accordance with the Manufacturer, including but not limited to chemical goggles, face shields, eye wash system, Tyvek or equivalent clothing protection and NBR gloves.

8. All product documentation and Contractor submittals must be submitted to the Engineer prior to or at the preconstruction conference. The Contractor must have the Engineer's approval prior to commencing on any of this work.

9. The chemical grout or void filling materials shall be a dual component hydrophobic polyurethane grout compound.

10. The grout materials shall be non-flammable and non-toxic when cured.

11. The grout mixture shall have expansion properties listed in the data sheets of greater than twenty (20) times its original volume and cure to rigid closed cell polyurethane foam. The grout shall expand to fill any voids and bond to the exterior surface of the structure. VF dual component polyurethane grouts as manufactured by Green Mountain International LLC or equal.

12. It is the Contractor's responsibility to locate reinforcing bars and conduit prior to drilling any grout holes.

13. The typical method consists of placing a layer of chemical grout behind or around the structure. The Contractor shall submit for approval by the Engineer a detailed grouting plan showing the spacing, orientation and depth of the grout holes, as well as type of polyurethane grout to be used, range of gel times, equipment, mixing procedures, recommended injection pressure, technique for monitoring grout travel and any other pertinent information. The grouting plan should address the prevention of overfilling and prevention of damage to structures or roadway. The Contractor shall submit this detailed procedure for the installation of the expansion grout to the Engineer for approval. The holes are drilled with a rotary percussion hammer drill using a sharp masonry bit with a minimum diameter of 3/8 inch to a maximum diameter of 5/8 inch. Care must be taken to prevent holes from causing damage to reinforcing bars or utility conduits. Drilled holes should be vacuumed and flushed. Use injection grout and methods as recommended by Manufacturer.

TEMPERATURE of the resin is critical from the point of pumping to the point of injection.
All polyurethanes react faster at higher temperatures. Drum heaters and heated hoses are required when ambient and ground temperatures are below 70 degrees Fahrenheit. The optimum hose temperature will vary with the weather conditions and the particular job site conditions with the minimum hose temperature being 75 degrees Fahrenheit and the maximum hose temperature being 95 degrees Fahrenheit and the drum temperature not to exceed 90 degrees Fahrenheit.

Injection can be monitored by either applicator's visual inspection or by pumping a specific amount of injection grout into each hole. The work will start at the inlet end of the pipe and proceed downstream to the outlet. Inject bottom row every other hole. When material appears at the adjacent port, discontinue injection at entry port and begin injection at the adjacent port. Continue injection process section by section from bottom of pipe to top of pipe in a continuous manner to next pipe section. Injection pressure will vary from 200 psi to 3000 psi depending on the width of the joint, thickness of the structure, and condition of the concrete. After the grout cures, excess material shall be trimmed to be flush with the pipe interior wall and the pipe left clean.

14. All costs for filling external voids surrounding the culvert shall be incidental to the contract unit price per gallon for Chemical Grout Void Fill for all equipment, intermediate and post cleanup, material and labor required to complete the work. Any overfilling of voids that results in damage to overlying pavement, highway user ride quality, or drainage structure integrity shall be corrected by the Contractor at no expense to the Owner. All corrections shall be approved by the Engineer.

15. Contractor shall visit the project to determine the extent of work needed for the Grout Void Fill prior to bidding the work.

REMOVAL OF ABANDONED RAILROAD CROSSING

At Sta. 219+06 are the remains of an abandoned railroad crossing. The Contractor shall remove the steel rail and railroad ties that remain within the highway right-of-way. Removal shall allow for a minimum of 18" of new surfacing to be placed. All costs to remove and dispose of the abandoned railroad crossing materials shall be incidental to the contract lump sum price for INCIDENTAL WORK, GRADING.

The edges of the removal limits shall be saw cut full depth prior the removing the abandoned railroad crossing. The maximum length, as measured along centerline of the crossing removal, shall be limited to 10 feet.

A minimum of 12" of Base Course and 6" of Asphalt Concrete Composite shall be placed after the crossing is removed. Included in the Estimate of Quantities is **30** tons of Base Course and **15** tons of Asphalt Concrete Composite to restore the roadway surface. Compaction of the Base Course shall be to the satisfaction of the Engineer.

SHOULDER PREPARATION

Vegetation and accumulated material adjacent to the existing surface edge shall be removed to the satisfaction of the Engineer prior to placement of mainline surfacing. Any remaining windrow of accumulated material shall be re-spread evenly on the inslope adjacent to the asphalt shoulder to the satisfaction of the Engineer prior to the application of the flush seal.

Any vegetation damaged outside of the asphalt concrete limits shall be repaired and/or restored by the Contractor, at no expense to the State, and to the satisfaction of the Engineer.

This shoulder work shall be incidental to other contract items. Separate measurement and payment will not be made.

Prior to construction, State Maintenance Forces will spray the shoulders to kill existing vegetation. It will be the Contractor's responsibility to notify the State at least 30 days in advance of when he plans to begin work on the surface of the highway. The State assumes no responsibility for the effectiveness of the herbicide applied.

INTERSECTING ROADS AND ENTRANCES

Intersecting roads and entrances shall be satisfactorily cleared of vegetation, shaped, and compacted prior to placement of mainline surfacing. This work will be considered incidental to other contract items. Separate measurement and payment will not be made.

EXCAVATION OF UNSTABLE MATERIAL

Included in the Estimate of Quantities are **50** Cubic Yards of Unclassified Excavation, Digouts per mile for the necessary removal of unstable material.

Backfill shall be Base Course paid for at the contract unit price per ton.

The digout shall be extended to the shoulder and the granular material backfill shall daylight to the inslope to allow water to escape the subgrade.

A copy of the surfacing/subgrade investigation for this project is available from the Watertown Area and the Aberdeen Region offices.

BASE COURSE

Included in the Estimate of Quantities are **100** tons of Base Course per mile for backfill of Unclassified Excavation, Digouts.

Included in the Estimate of Quantities are **150** tons of Base Course for use under and adjacent of the new curb and gutter, gutter and driveway pavement.

WATER FOR COMPACTION OF GRANULAR MATERIALS

Cost of water for compaction of the granular material shall be incidental to the contract unit price for the various contract items. Six percent, plus or minus, moisture will be required at the time of compaction unless otherwise directed by the Engineer.

ASPHALT FOR TACK

Included in the Estimate of Quantities are **3** tons of SS-1h or CSS-1h Asphalt for Tack for surface repair, strengthening, and spot leveling areas throughout the project. (Rate = 0.05 Gal./ Sq.Yd.).

CLASS Q2 HOT MIXED ASPHALT CONCRETE

Mineral Aggregate:
Mineral aggregate for Class Q2 Hot Mixed Asphalt Concrete shall conform to the requirements of Class Q2.

The Asphalt Concrete Leveling Lift shall be compacted by the Specified Roller Coverage Method.

All remaining requirements of the Specifications for Class Q2 Hot Mixed Asphalt Concrete shall apply.

ADDITIONAL QUANTITIES:

Included in the Estimate of Quantities are **100** tons of Class Q2 Hot Mixed Asphalt Concrete and, **1.0** tons of Hydrated Lime of Asphalt concrete and **5.8** tons of PG 64-28 Asphalt Binder, per mile for spot leveling, strengthening, and repair of the existing surface. This material shall be placed where and as directed by the Engineer.

FLUSH SEAL

Application of Flush Seal shall be completed within 10 working days following completion of the asphalt concrete surfacing.

For each working day that the Flush Seal remains uncompleted after the 10 working day limitation, the Contractor will be assessed liquidated damages at the rate of $250.00 per day.

The liquidated damages shall apply only up to the Substantial Completion Date, as extended. After the Substantial Completion Date, liquidated damages will be assessed in accordance with the schedule set forth in Section 8.8 of the specifications.

Application of Flush Seal may be eliminated by the Engineer. If the paved surface remains tight, the Engineer shall notify the Contractor as soon as possible that the Flush Seal is unnecessary.

SAND FOR FLUSH SEAL

The sand application shall be placed 11' wide in each lane, leaving 12" on center line and 6" on each edge line free of sand.

REFURBISH MAILBOXES

Existing mailboxes shall be removed, turnouts constructed, and mailboxes reset on new posts with the necessary support hardware for single or double mailbox assemblies (See Standard Plate No's. 900.02, 900.03 and 900.05). The local Postmaster will determine the recommended mounting height of the mailboxes throughout the project. The Contractor shall coordinate with the Engineer on the proper postal representative to contact.

TABLE OF REFURBISH MAILBOXES

Location MRM	SIDE	SINGLE MAILBOX EACH	DOUBLE MAILBOX EACH	MULTIPLE MAILBOX SUPPORT
320.00 +0.8	L	1		
320.00 +0.9	L	1		
321.00 +0.3	L	1		
323.00 +0.7	L	1		
323.00 +0.8	L	1		
324.00 +0.1	R	1		
324.00 +0.2	R	1		
324.00 +0.3	R			1*
324.00 +0.4	R		1	
327.00 +0.1	R	1		
327.00 +0.8	R	1		
328.00 +0.7	R	DND		
329.00 +0.7	R	1		
TOTALS		10	1	1

* 5 mailboxes to be located on this multiple mailbox support.
DND – Do Not Disturb

If large mailboxes are located at double mailbox installations, a single post may need to be used for the large mailbox.

All costs for removing existing mailboxes, providing temporary mailboxes, and resetting mailboxes with new posts and necessary support hardware shall be incidental to the contract unit price per each for REFURBISH SINGLE MAILBOX or REFURBISH DOUBLE MAILBOX or MULTIPLE MAILBOX SUPPORT.

RUMBLE STRIPES

Rumble Stripe installation shall be completed prior to application of the Flush Seal and Permanent Pavement Markings. In the event the Flush Seal is eliminated from the contract, the Contractor will still be required to apply a Flush Seal to the newly installed 8” Rumble Stripes at a width of 1.0’ and at the same rate as specified in this plan set. No adjustment in the contract unit price will be made and SS-1h or CSS-1h will be paid at the contract unit price per ton.

The Contractor shall be required to remove loose material from the driving surface and/or asphalt shoulders of the roadway. Loose material may be broomed to the edge of shoulders and it shall be the Contractor’s responsibility to ensure the loose material does not enter any vegetated areas and/or waterways.

All costs associated with the work shall be incidental to the contract unit price per mile for GRIND 8” RUMBLE STRIP OR STRIPE IN ASPHALT CONCRETE.

TABLE OF 8” RUMBLE STRIPES

Station to Station	Length (Ft)	Length (Miles)
0+75 to 200+00 Lt & Rt	39,850	
245+00 to 526+00 Lt & Rt	56,200	
TOTAL	96,050	18.2

RUMBLE STRIPS AT SD 25 JUNCTION

Rumble Strip installation shall be completed prior to application of the Flush Seal and Permanent Pavement Markings.

The Contractor shall grind rumble strips in the asphalt concrete on SD 28 at the SD 25 Junction according to the detail Recessed Rumble Strip Layout.

All costs for installing rumble strips shall be incidental to the contract unit price per foot for GROOVE 6” WIDE RUMBLE STRIP. Basis of Payment shall be plans quantity of 425 Ft.

In the event the Flush Seal is eliminated from the contract, the Contractor will still be required to apply a Flush Seal to the newly installed rumble strips at the same rate as specified in this plan set. No adjustment in the contract unit price will be made and SS-1h or CSS-1h will be paid at the contract unit price per ton.

TEMPORARY AND PERMANENT PAVEMENT MARKINGS

Maintaining size, shape, and dimension of existing pavement markings shall be the responsibility of the Contractor for both temporary and permanent pavement marking applications.

Temporary Flexible Vertical Markers (Tabs) shall be used to mark dashed centerline, No Passing Zones and applicable lane lines on the wear course or after application of the Flush Seal. **Paint will not be allowed for Temporary Pavement Marking on the Asphalt Concrete Class Q2 Hot Mixed Asphalt Concrete wear course or after application of the Flush Seal.**

The following items shall be reproduced with the Permanent Pavement Markings:
STOP Bar at the beginning of the project (Cold Applied Plastic Pavement Marking).

TEMPORARY PAVEMENT MARKINGS

The total length of no passing zone on this project is estimated to be **7.5** miles. There are a total of **22** No Passing Zones.

Quantities of Temporary Pavement Markings consist of:

- One pass on top of the Cold Milled Surface within city of Bryant.
- One pass on top of the 2.5” Class Q2 Hot Mixed Asphalt Concrete within city of Bryant.
- One pass on top of the 1” Class Q2 Hot Mixed Asphalt Concrete
- One pass on top of the 1.5” Class Q2 Hot Mixed Asphalt Concrete
- One pass on top of the Flush Seal.

If the Flush Seal is eliminated, the application of the Temporary Pavement Marking on top of the Flush Seal will be eliminated. No adjustment in the contract unit price for Temporary Pavement Marking will be made because of a variation in quantities.

Temporary Flexible Vertical Markers (Tabs) may be used as detailed in the specifications. Covers on the tabs shall be sufficiently secured to prevent traffic from dislodging the cover and when removed, the covers shall be properly disposed. The Contractor shall remove and properly dispose of the tabs after Permanent Pavement Marking is applied. Method of removal shall be nondestructive to the road surface and shall be accomplished within one week of completion of the Permanent Pavement Marking.

Any Temporary Flexible Vertical Markers (Tabs) with covers removed before the flush seal shall be replaced prior to Flush Seal application.

Cost for furnishing, applying, removing and disposing of the Temporary Flexible Vertical Markers (Tabs) shall be included in the contract unit price per mile for TEMPORARY PAVEMENT MARKING.

Flagger symbol signs (W20-7) and flaggers, or a shadow vehicle shall be positioned on the roadway shoulder in advance of workers for both directions of traffic during the installation of Temporary Flexible Vertical Markers (Tabs). The traffic control device used shall be moved to provide proper warning of the work operation. A Workers symbol sign (W21-1) shall be mounted on the rear of the shadow vehicle. The method of traffic control used by the Contractor for this work shall be approved by the Engineer.

PERMANENT PAVEMENT MARKING

All materials shall be applied as per manufacturer’s recommendations.

The Contractor shall advise the Engineer a minimum of 3 weeks prior to the application of the permanent pavement marking to allow the State to check and mark the location of no passing zones.

The application of Permanent Pavement Marking paint may not begin until 7 calendar days following completion of final surfacing (including Flush Seal if applied) and shall be completed within 14 calendar days following completion of the final surfacing.

For each working day the application of permanent pavement marking paint remains uncompleted beyond the time limits described in the preceding paragraph, the Contractor will be assessed liquidated damages at the rate of $250.00 per day.

The liquidated damages shall apply up to the Substantial Completion Date, as extended. After the Substantial Completion Date, liquidated damages will be assessed in accordance with Section 8.8 of the specifications, until the permanent pavement marking is completed, even though the project may be open to traffic.

COLD WEATHER, WATERBORNE PAINT

Waterborne paint applied after October 15 shall be formulated as cold weather, waterborne paint and shall be applied in accordance with manufacturer’s recommendations, including minimum temperature requirements.

Cold weather, waterborne paint shall conform to Section 980 of the Specifications except for the following:

980.1: Resin Binder shall be Fastrack™ XSR manufactured by Dow, or approved equal.

980.1 A. Quantitative Requirements:

Pigment, percent by weight: 60.0 – 63.0 for white and 58.5 – 61.5 for yellow.

Pigment, percent by weight; tested in accordance with ASTM D3723: 60.0 – 63.0 for white and 56.1 – 59.2 for yellow.

Non-volatile Vehicle, percent by weight; tested in accordance with NIST 141C (Method 4051.1): 41.5 minimum for white and 51.5 minimum for yellow.

GROOVE FOR PAVEMENT MARKING

The work shall generally consist of grooving the asphalt surface and subsequent application of cold applied plastic tape.

All surfaces receiving cold applied plastic pavement markings shall be grooved prior to application of the cold applied plastic pavement markings.

The groove shall be made in a single pass dry cut using stacked diamond or carbide tipped cutting heads mounted on a floating head with controls capable of providing uniform depth and alignment. The equipment shall be self- vacuuming and leave the cut groove ready for pavement marking installation. The pavement marking shall be placed in the grooves the same day the grooving is completed. Grooves shall be clean and dry prior to pavement marking application.

Groove cleaning: Grooves must be cleaned by using high pressure compressed air (90 psi minimum).

If the cold applied plastic pavement marking tape (including primer if required) does not immediately follow dry pavement grooving, the following shall apply:

Within 24 hours prior to placing the cold applied plastic pavement marking tape the groove shall be sandblasted and free of any residue or laitance. If the cold applied plastic pavement marking tape is not placed within 24 hours of sandblasting, the groove shall be re- sandblasted.

The cold applied plastic pavement marking tape shall be installed in accordance with the manufacturer's recommendations.

PERMANENT SIGNING

Existing signs that are to be moved as per the remarks in the signing table shall be staked in the field by the Contractor and checked by the Engineer. The Contractor shall give the Engineer a minimum of one week to check staked locations prior to sign/post installation.

The Contractor shall be responsible for contacting South Dakota One Call to locate the utilities at the staked sign installation locations.

Prior to ordering sign posts, the Contractor shall verify post lengths. The height of the post shall not exceed the minimum height needed by more than 0.5 feet. Any portion that extends above the sign shall be cut off. No separate payment will be made for cutting the post or for that length cut off.

Prior to ordering signs, the Contractor shall verify dimensions, background, border, and legend of the signs.

REMOVE EXISTING SIGNS

Existing signs within the project limits are summarized in the Sign Table. This table provides the approximate MRM location for each sign. Existing signs in the table are indicated to be removed and not reused.

All existing signs and hardware listed to be removed shall become the property of the Contractor.

Holes remaining from the removal of 4"x6" wood posts shall be backfilled and compacted with material placed in layers not to exceed 6 inches in depth.

All costs associated with the removal of existing signs, posts, hardware, and backfilled holes shall be incidental to the contract unit price per each for Remove Traffic Sign.

All existing sign posts and/or sign bases shall be removed in their entirety.

All existing sign overlays listed for removal and replacement shall be removed and replaced with new sign overlays.

On all logo sign overlays listed for removal and replacement the existing logo shall be reinstalled on the new sign sheeting.

NEW PERMANENT SIGNING

New signs for installation are summarized in the Sign Table.

Sign Design

Signs shall be constructed as required per the Manual on Uniform Traffic Control Devices (MUTCD), the latest edition of "Standard Highway Signs", and as specified on the Special Sign Design sheets.

All upper/lower case letters and numerals shall be as required per the MUTCD, the latest edition of "Standard Highway Signs", and as illustrated on the Special Sign Design sheets.

The Contractor shall furnish the Aberdeen Region Traffic Engineer (P.O. Box 1767; Aberdeen, SD 57402) with a detailed sign layout sheet for each sign shown. These detailed sign layouts shall be approved by the Region Traffic Engineer prior to ordering the signs.

Sign Sheeting

All signs shall be manufactured in accordance with the sheeting manufacturer's recommendations utilizing a matched component system, including inks, electronic cuttable films, and protective overlay films. Digitally printed signs will not be accepted.

Sign Installation Hardware

Aluminum U-Channel stiffeners shall be used on all standard highway signs greater than 36 inches in width and shall conform to Alloy 6063-T6 or 6061-T6. The U-Channel shall be 2 inches in width and free of holes. The U-Channel stiffeners shall also be used to connect various signs together so that an entire sign assembly can be erected on a single installation.

Stiffeners may be fastened to signs by use of ¼ inch diameter drive rivets.

Refer to the Breakaway Sign Supports diagram for typical sign and stiffener details.

The Contractor shall use 3/8 inch diameter rust proof machine sign bolts, flat metal washers, neoprene washers (against the sign sheeting), lock washers, and nuts to fasten the sign to the channel aluminum and posts. A minimum of two bolts shall extend through each post.

All costs associated with furnishing and installing the new permanent signs, and with furnishing and installing stiffeners and hardware shall be incidental to the contract unit price per square foot for Flat Aluminum Sign, Nonremovable Copy High Intensity, or Flat Aluminum Sign, Nonremovable Copy Super/Very High Intensity.

SQUARE TUBE ANCHOR SLEEVE

The Contractor shall furnish and install new square tube anchor sleeve as follows:

2.5" x 18", 12 Gauge square tube anchor sleeve, (or equivalent components as approved by the Engineer).

A 2.25" x 2.25" x 4' perforated tube post (12 Gauge) shall be used as the anchor post for installation with the square tube anchor sleeve.

SQUARE TUBE POST SLEEVE

All 2.5" x 2.5" perforated tube post (10 Gauge) shall be sleeved with a 2 3/16" x 2 3/16"x4' perforated tube post (10 Gauge).

WINGED SLIP BASE ANCHOR

The Contractor shall furnish and install new winged slip base anchor as required per the plans.

Winged slip base anchor shall be installed using direct drive method.

Winged slip base anchor shall consist of a slip base (upper), 48 inch long winged anchor (lower), and hardware kit.

MILEAGE REFERENCE MARKERS

MRMs (Mileage Reference Markers) are not to be disturbed. If an MRM is attached to a sign listed for replacement it shall be salvaged and reattached to the new sign in the same location. Payment for this work shall be incidental to the various signing contract items.

MYCORRHIZAL INOCULUM

Mycorrhizal inoculum shall consist of mycorrhizal fungi spores and mycorrhizal fungi-infected root fragments in a solid carrier. The carrier may include organic materials, calcinated clay, or other materials consistent with application and good plant growth. The supplier shall provide certification of the fungal species claimed and the live propagule count. The inoculum shall include the following fungal species:

Glomus intraradices 25%
Glomus aggregatu 25%
Glomus mosseae 25%
Glomus etunicatum 25%

Type C Permanent Seed Mixture seed shall be inoculated by the seed supplier with a minimum of 100,000 live propagules of mycorrhizal fungi per acre. All costs of inoculating the seed shall be incidental to the contract unit price per pound for the corresponding permanent seed mixture.

Type D Permanent Seed Mixture seed shall be inoculated by the seed supplier with a minimum of 20,000 live propagules of mycorrhizal fungi per 1,000 square feet. All costs of inoculating the seed shall be incidental to the contract unit price per pound for the corresponding permanent seed mixture.

The mycorrhizal inoculum shall be as shown below or an approved equal:

Product	Manufacturer
MycoApply	Mycorrhizal Applications, Inc. Grants Pass, OR Phone: 1-866-476-7800 http://www.mycorrhizae.com/

FERTILIZING

Fertilizer shall be used for the Type D Permanent Seed Mixture. Application of fertilizer will not be required on this project with the Type C Permanent Seed Mixture.

A commercial fertilizer with a minimum guaranteed analysis of 13-13-13, 18-46-0, 11-52-0, or an approved alternate fertilizer sold for use as a lawn starter fertilizer shall be applied to all areas designated for permanent seeding of Type D Permanent Seed Mixture. The application rate of fertilizer shall be 100 pounds per acre.

PERMANENT SEEDING

The areas to be seeded consist of all newly graded areas within the project limits except for the top of roadways and temporary easements under cultivation.

The Estimated rural area to seed with Type C Permanent Seed Mixture is 1 ¾ acres.

The estimated urban area to seed with Type D Permanent Seed Mixture is 40,000 Sq. Ft.

Type C Permanent Seed Mixture shall consist of the following:

Grass Species	Variety	Pure Live Seed (PLS) (Pounds/Acre)
Western Wheatgrass	Arriba, Flintlock, Rodan, Rosana	16
Canada Wildrye	Mandan	2
	Total:	18

Type D Permanent Seed Mixture shall consist of the following:

Grass Species	Variety	Pure Live Seed (PLS) (Pounds/1000 SqFt)
Kentucky Bluegrass	Avalanche, Appalachian, Wildhorse, Blue Bonnet	1.4
Perennial Ryegrass	Turf Type Varieties	1.4
Creeping Red Fescue	Epic, Boreal	1.4
Chewings Fescue	Ambrose, K2, VNS, Zodiac	1.4
Alkali Grass	Fults, Fults II, Quill, Salty	1.4
	Total:	7

MULCHING (GRASS HAY OR STRAW)

A quantity of **2** tons of Grass Hay or Straw Mulch has been added to the Estimate of Quantities for temporary erosion control on rural areas determined by the Engineer during construction.

FIBER MULCHING

Fiber mulch shall be applied in a separate operation following permanent seeding.

An additional 2% by weight of tackifier shall be added to the fiber mulch product selected from the approved product list. If the product selected has guar gum tackifier included, then the additional 2% of tackifier shall be guar gum. If the product selected has synthetic tackifier included, then the additional 2% of tackifier shall be synthetic.

The Contractor shall allow the fiber mulch to cure a minimum of 18 hours prior to watering or any storm event to ensure proper cohesion between the soil and fiber particles.

All costs for the additional tackifier added to the fiber mulch including labor, equipment, and materials shall be incidental to the contract unit price per pound for FIBER MULCHING.

The fiber mulch provided shall be from the approved product list. The approved product list for fiber mulch may be viewed at the following internet site:

http://sddot.com/business/certification/products/Default.aspx

TABLE OF FIBER MULCHING

Station	to	Station	L/R	Quantity (Lb)
211+00		211+18	L	30
219+50		220+35	L	80
223+49		226+74	L	170
227+15		230+45	L	160
230+77		234+07	L	160
234+43		235+28	L	100
235+58		238+56	L	350
238+76		239+00	L	30
220+00		223+07	R	290
223+48		230+44	R	320
230+75		235+00	R	200
			Total:	1890

EROSION CONTROL WATTLE

Erosion control wattles for restraining the flow of runoff and sediment shall be installed at locations noted in the table and at locations determined by the Engineer during construction. Refer to Standard Plate 734.06 for details.

The Contractor shall provide certification that the erosion control wattles do not contain noxious weed seeds.

Erosion control wattles shall remain on the project to decompose.

An additional quantity of 12” Diameter Erosion Control Wattles has been added to the Estimate of Quantities for temporary erosion and sediment control in highway ditch channels and as an alternative to low flow or high flow silt fence at wetland areas adjacent to the highway.

The erosion control wattle provided shall be from the approved product list. The approved product list for erosion control wattle may be viewed at the following internet site:

http://sddot.com/business/certification/products/Default.aspx

TABLE OF EROSION CONTROL WATTLE

Station	L/R	Diameter (Inch)	Location	Quantity (Ft)
5+49	L	12	Culvert Inlet	20
12+45	L	12	Culvert Inlet	20
28+28	L	12	Culvert Inlet	20
178+59	L&R	12	Culvert Ends (Equalizer)	40
195+16	L&R	12	Culvert Ends (Equalizer)	40
210+98	L	12	Culvert Inlet	20
219+63	L	12	Twin Culvert Inlet	30
238+50	L	12	Culvert Inlet	20
239+03	L	12	Twin Culvert Inlet	30
			Additional Quantity:	310
			Total:	550

HIGH FLOW SILT FENCE

The high flow silt fence fabric provided shall be from the approved product list. The approved product list for high flow silt fence may be viewed at the following internet site:

http://sddot.com/business/certification/products/Default.aspx

High flow silt fence shall be placed at the locations that will minimize siltation of adjacent streams, lakes, dams, or drainage areas as determined by the Engineer during construction. Refer to Standard Plate 734.05 for details.

An additional quantity of **200** ft of high flow silt fence has been added to the Estimate of Quantities for temporary sediment control.

INTERIM SEDIMENT CONTROL AT INLETS, MANHOLES, AND JUNCTION BOXES AFTER CURB & GUTTER REMOVAL AND BEFORE PLACEMENT OF CURB & GUTTER AND SURFACING

Refer to Standard Plate 734.05 for details of installation of high flow silt fence at drop inlets, manholes, and junction boxes.

The high flow silt fence fabric provided shall be from the approved product list. The approved product list for high flow silt fence may be viewed at the following internet site:

http://sddot.com/business/certification/products/Default.aspx

In addition, the Contractor shall do the following for this installation:

- A space of at least 1' shall be provided between the silt fence installation and the inlet. This space shall be filled completely with a 2" depth of aggregate, 2" minus or smaller.
- The top elevation of the silt fence shall be such that a 12" horizontal flap of silt fence will remain at the bottom.
- The base of the silt fence shall conform to the natural ground profile but does not need to be trenched in at the bottom.
- The extra 12" of the silt fence material may be cut so that the material will lay flat upon the subgrade.
- Sediment filter bags shall be placed on the 12" flap around the perimeter of the silt fence installation. The sediment filter bags shall overlap 6" at the ends and be placed tightly together.
- The sediment filter bags shall be filled with clean aggregate 2" minus or smaller.

Sediment Filter Bag

Product	Manufacturer
Snake Bag	Sacramento Bag Manufacturing Co. Sacramento, CA Phone: 1-800-287-2247 www.sacbag.com

The sediment filter bag shall be the Snake Bag from Sacramento Bag Manufacturing Company or an approved equal.

All costs for furnishing and installing the sediment filter bags shall be incidental to the contract unit price per foot for SEDIMENT FILTER BAG.

All costs for removing the sediment filter bags shall be incidental to the contract unit price per foot for REMOVE SEDIMENT FILTER BAG.

Payment for high flow silt fence shall be as stated in Section 734.5 of the Specifications.

All costs for furnishing, installing, and removing the 2" depth of aggregate shall be incidental to other erosion and sediment control bid items.

All costs for removing and disposing of sediment collected by the sediment control device shall be incidental to the contract unit price per cubic yard for REMOVE SEDIMENT.

The removed sediment shall be placed at a location away from the drop inlet where the sediment will not be washed back into the drop inlet or other storm sewer system.

The Contractor and Engineer shall inspect and maintain the sediment control device once every week and within 24 hours after every rainfall event greater than ½".

INTERIM SEDIMENT CONTROL AT INLETS, MANHOLES, AND JUNCTION BOXES AFTER CURB & GUTTER REMOVAL AND BEFORE PLACEMENT OF CURB & GUTTER AND SURFACING

Station	L/R	High Flow Silt Fence Quantity (Ft)	Sediment Filter Bag Quantity (Ft)	Remove Sediment Quantity (CuYd)
221+43	L	22	32	0.25
221+66	R	18	24	0.25
222+14	L	38	48	0.25
223+47	L	38	48	0.25
223+48	R	38	48	0.25
226+48	L	22	32	0.25
226+48	R	22	32	0.25
227+42	L	22	32	0.25
227+42	R	22	32	0.25
230+19	L	18	24	0.25
230+19	R	22	32	0.25
230+41	L	38	48	0.25
230+41	R	38	48	0.25
234+03	L	38	48	0.25
234+09	R	22	32	0.25
235+00	L	22	32	0.25
	Totals:	440	592	4

SEDIMENT CONTROL AT INLETS WITH FRAMES AND GRATES

This type of sediment control device should be used where there is pavement in the vicinity of the drop inlets and storm water or sediment could possibly enter the frame and grate. Sediment Control at Inlet with Frame and Grate shall be installed prior to working in the vicinity of the drop inlets.

The Contractor shall be responsible for maintaining and repairing the sediment control devices for the duration of the project for which sediment control measures are required. Maintenance shall be scheduled to prevent storm water from backing up into the driving lane.

SEDIMENT CONTROL AT INLET WITH FRAME AND GRATE will be paid for one time at each location, regardless of the number of times the sediment control devices are installed, inspected, cleaned, removed, repaired, or replaced. All costs associated with furnishing, installing, inspecting, maintaining, cleaning, sediment removal, and repairing Sediment Control at Inlet with Frame and Grate shall be incidental to the contract unit price per each for SEDIMENT CONTROL AT INLET WITH FRAME AND GRATE.

Sediment collection devices shall be:

A commercial made sediment collection device from the "Sediment Control at Inlet with Frame and Grate" list or an approved equal. The device shall be installed in reinforced concrete drop inlets according to the manufacturer's recommendations.

A sediment control device as shown on Standard Plate 734.10. Filter fabric used for constructing the sediment control at inlets with frames and grates shall be the same type of fabric that is used in high flow silt fence from the approved product list. The approved product list may be viewed at the following internet site:

http://sddot.com/business/certification/products/Default.aspx

Sediment Control at Inlet with Frame and Grate Approved List:

Product	Manufacturer
InfraSafe Debris Collection Device with filter sock	Royal Environmental Systems, Inc. Stacy, MN Phone: 1-800-817-3240 www.royalenterprises.net
Dandy Curb Sack	Dandy Products Inc. Dublin, OH Phone: 1-800-591-2284 www.dandyproducts.com
Silt Trapper	Storm Water Solutions Lakeville, MN Phone: 1-952-461-4376 www.silttrapper.com
DIP Basket	Skyview Construction Co., LLC Waubay, SD Phone: 1-605-520-0555 www.skyviewconst.com

SEDIMENT CONTROL AT INLETS WITH FRAMES AND GRATES (Cont.)

FLEXSTORM Inlet Filters	Inlet and Pipe Protection, Inc. Naperville, IL Phone: 1-866-287-8655 www.inletfilters.com
GR-8 Guard or Combo Guard	ERTEC Environmental Systems LLC Alameda, CA Phone: 1-866-521-0724 www.ertecsystems.com
Sediment Catchers	Shaun Jensen Brookings, SD Phone: 1-605-690-4950
Grate FX, 640Slammer, or VertPro	Enviroscape ECM, Ltd. Oakwood, OH Phone: 1-419-594-3210 www.strawblanket.com
BX Inlet Sediment Boxes	BX Civil and Construction Dell Rapids, SD Phone: 1-605-428-5483 bx-cc.com

TABLE OF SEDIMENT CONTROL AT INLETS WITH FRAMES AND GRATES

Station	L/R	Quantity (Each)
221+43	L	1
221+66	R	1
222+14	L	1
223+47	L	1
223+48	R	1
226+48	L	1
226+48	R	1
227+42	L	1
227+42	R	1
230+19	L	1
230+19	R	1
234+03	L	1
234+08	R	1
235+00	L	1
	Total:	14

DEWATERING AND SEDIMENT COLLECTING

The Contactor has the option to treat sediment laden water trapped within the project limits with the DEWATERING AND SEDIMENT COLLECTION SYSTEM as detailed in these plans, or the Contractor may elect to transport sediment laden water off the project.

If the Contractor elects to transport sediment laden water off the project, no additional payment for loading, transporting, and labor costs will be made. Water transported off the project limits shall not be disposed of in an area where it can enter a waterway. The disposal site must be approved by the Engineer.

STREET SWEEPING

Vehicle tracking of sediment from the construction site shall be minimized. Street sweeping shall be used if erosion and sediment control best management practices are not adequate to prevent sediment from being tracked onto the street.

The Contractor shall use a pickup broom having integral self-contained storage to clean the roadway. The pickup broom used shall be a minimum of 6 feet wide and have working gutter brooms.

At a minimum, sweeping will be required prior to opening any segment or roadway to traffic.

All costs for cleaning the roadway with a pickup broom shall be incidental to the contract unit price per hour for SWEEPING.

STORM WATER POLLUTION PREVENTION PLAN CHECKLIST

*(The numbers right of the title headings are **reference numbers** to the GENERAL PERMIT FOR STORM WATER DISCHARGES ASSOCIATED WITH CONSTRUCTION ACTIVITIES*

❖ **SITE DESCRIPTION (4.2 1)**

- **Project Limits: See Title Sheet (4.2 1.b)**
- **Project Description: See Title Sheet (4.2 1.a.)**
- **Site Map(s): See Title Sheet and Plans (4.2 1.f. (1)-(6))**
- **Major Soil Disturbing Activities** (check all that apply)
  - ☒ Clearing and grubbing
  - ☒ Excavation/borrow
  - ☐ Grading and shaping
  - ☐ Filling
  - ☐ Cutting and filling
  - ☐ Other (describe):
- **Total Project Area** 177 Acres **(4.2 1.b.)**
- **Total Area To Be Disturbed** 4 acres **(4.2 1.b.)**
- **Existing Vegetative Cover (%)** 75%
- **Soil Properties:** AASHTO Soil Series Classification A-4, A-6, A-7 **(4.2 1. d.)**
- **Name of Receiving Water Body/Bodies** Cherry Lake, McShane Slough, Dolph Creek **(4.2 1.e.)**

❖ **ORDER OF CONSTRUCTION ACTIVITIES (4.2 1.c.)**

(Stabilization measures shall be initiated as soon as possible, but in no case later than 14 days after the construction activity in that portion of the site has temporarily or permanently ceased. Initiation of final or temporary stabilization may exceed the 14-day limit if earth disturbing activities will be resumed within 21 days.)

- **Special sequencing requirements (**see Sequence of Operations).
- **Install perimeter protection where runoff sheets from the site.**
- **Install channel and ditch bottom protection.**
- **Clearing and grubbing.**
- **Remove and store topsoil.**
- **Stabilize disturbed areas.**
- **Install utilities, storm sewers, curb and gutter.**
- **Install inlet and culvert protection after completing storm drainage and other utility installations.**
- **Complete final grading.**
- **Complete final paving of concrete.**
- **Complete traffic control installation and protection devices.**
- **Reseed areas disturbed by removal activities**.

❖ **EROSION AND SEDIMENT CONTROLS (4.2 2.a.(1)(a)-(f))**

(Check all that apply)

- **Stabilization Practices (See Detail Plan Sheets)**
  - ☐ Temporary Seeding (Cover Crop Seeding)
  - ☒ Permanent Seeding
  - ☐ Sodding
  - ☐ Planting (Woody Vegetation for Soil Stabilization)
  - ☒ Mulching (Grass Hay or Straw)
  - ☐ Hydraulic Mulch (Wood Fiber Mulch)
  - ☐ Soil Stabilizer
  - ☐ Bonded Fiber Matrix
  - ☐ Erosion Control Blankets or Mats
  - ☐ Vegetation Buffer Strips
  - ☐ Roughened Surface (e.g. tracking)
  - ☐ Dust Control
  - ☐ Other:
- **Structural Temporary Erosion and Sediment Controls**
  - ☒ Silt Fence
  - ☐ Floating Silt Curtain
  - ☐ Straw Bale Check
  - ☐ Temporary Berm
  - ☐ Temporary Slope Drain
  - ☒ Straw Wattles or Rolls
  - ☐ Turf Reinforcement Mat
  - ☐ Rip Rap
  - ☐ Gabions
  - ☐ Rock Check Dams
  - ☐ Sediment Traps/Basins
  - ☒ Inlet Protection
  - ☐ Outlet Protection
  - ☐ Surface Inlet Protection (Area Drain)
  - ☒ Curb Inlet Protection
  - ☐ Stabilized Construction Entrances
  - ☐ Entrance/Exit Equipment Tire Wash
  - ☐ Interceptor Ditch
  - ☐ Concrete Washout Area
  - ☐ Temporary Diversion Channel
  - ☐ Work Platform
  - ☐ Temporary Water Barrier
  - ☐ Temporary Water Crossing
  - ☐ Other:
- **Wetland Avoidance**

  Will construction and/or erosion and sediment controls impinge on regulated wetlands? Yes ☒ No ☐ If yes, the structural and erosion and sediment controls have been included in the total project wetland impacts and have been included in the 404 permit process with the USACE.
- **Storm Water Management (4.2 2.b., (1) and (2))**

  Storm water management will be handled by temporary controls outlined in "EROSION AND SEDIMENT CONTROLS" above, and any permanent controls needed to meet permanent storm water management needs in the post construction period. Permanent controls will be shown on the plans and noted as permanent.
- **Other Storm Water Controls (4.2 2.c., (1) and (2))**
  - **Waste Disposal**

    All liquid waste materials will be collected and stored in sealed metal containers approved by the project engineer. All trash and construction debris from the site will be deposited in the approved containers. Containers will be serviced as necessary, and the trash will be hauled to an approved disposal site or licensed landfill. All onsite personnel will be instructed in the proper procedures for waste disposal, and notices stating proper practices will be posted in the field office. The general contractor's representative responsible for the conduct of work on the site will be responsible for seeing waste disposal procedures are followed.
  - **Hazardous Waste**

    All hazardous waste materials will be disposed of in a manner specified by local or state regulations or by the manufacturer. Site personnel will be instructed in these practices, and the individual designated as the contractor's on-site representative will be responsible for seeing that these practices are followed.
  - **Sanitary Waste**

    Portable sanitary facilities will be provided on all construction sites. Sanitary waste will be collected from the portable units in a timely manner by a licensed waste management contractor or as required by any local regulations.

❖ **Maintenance and Inspection (4.2 3. and 4.2 4.)**

- **Maintenance and Inspection Practices**
  - Inspections will be conducted at least one time per week and after a storm event of 0.50 inches or greater.
  - All controls will be maintained in good working order. Necessary repairs will be initiated within 24 hours of the site inspection report.
  - Silt fence will be inspected for depth of sediment and for tears in order to ensure the fabric is securely attached to the posts and that the posts are well anchored. Sediment buildup will be removed from the silt fence when it reaches $^{1}/_{3}$ of the height of the silt fence.
  - Sediment basins and traps will be checked. Sediment will be removed when depth reaches approximately 50 percent of the structure's capacity, and at the conclusion of the construction.
  - Check dams will be inspected for stability. Sediment will be removed when depth reaches ½ the height of the dam.
  - All seeded areas will be checked for bare spots, washouts, and vigorous growth free of significant weed infestations.
  - Inspection and maintenance reports will be prepared on form DOT 298 for each site inspection, this form will also be used to document changes to the SWPPP. A copy of the completed inspection form will be filed with the SWPPP documents.
  - The SDDOT Project Engineer and contractor's site superintendent are responsible for inspections. Maintenance, repair activities are the responsibility of the contractor. The SDDOT Project Engineer will complete the inspection and maintenance reports and distribute copies per the distribution instructions on DOT 298.

❖ **Non-Storm Water Discharges (3.0)**

The following non-storm water discharges are anticipated during the course of this project (check all that apply).

- ☐ Discharges from water line flushing.
- ☐ Pavement wash-water, where no spills or leaks of toxic or hazardous materials have occurred.
- ☒ Uncontaminated ground water associated with dewatering activities.

❖ **Materials Inventory (4.2. 2.c.(2))**

The following materials or substances are expected to be present on the site during the construction period. These materials will be handled as noted under the headings "EROSION AND SEDIMENT CONTROLS" and "SPILL PREVENTION" (check all that apply).

- ☒ Concrete and Portland Cement
- ☐ Detergents
- ☒ Paints
- ☒ Metals
- ☒ Bituminous Materials
- ☒ Petroleum Based Products
- ☐ Cleaning Solvents
- ☐ Wood
- ☒ Cure
- ☐ Texture
- ☒ Chemical Fertilizers
- ☐ Other:

❖ Spill Prevention (4.2 2.c.(2))

➢ **Material Management**

- Housekeeping
  - Only needed products will be stored on-site by the contractor.
  - Except for bulk materials the contractor will store all materials under cover and in appropriate containers.
  - Products must be stored in original containers and labeled.
  - Material mixing will be conducted in accordance with the manufacturer's recommendations.
  - When possible, all products will be completely used before properly disposing of the container off site.
  - The manufacturer's directions for disposal of materials and containers will be followed.
  - The contractor's site superintendent will inspect materials storage areas regularly to ensure proper use and disposal.
  - Dust generated will be controlled in an environmentally safe manner.
  - Vegetation areas not essential to the construction project will be preserved and maintained as noted on the plans.

- Hazardous Materials
  - Products will be kept in original containers unless the container is not resealable.
  - Original labels and material safety data sheets will be retained in a safe place to relay important product information.
  - If surplus product must be disposed of, manufacturer's label directions for disposal will be followed.
  - Maintenance and repair of all equipment and vehicles involving oil changes, hydraulic system drain down, de-greasing operations, fuel tank drain down and removal, and other activities which may result in the accidental release of contaminants will be conducted on an impervious surface and under cover during wet weather to prevent the release of contaminants onto the ground.
  - Wheel wash water will be collected and allowed to settle out suspended solids prior to discharge. Wheel wash water will not be discharged directly into any storm water system or storm water treatment system.
  - Potential pH-modifying materials such as: bulk cement, cement kiln dust, fly ash, new concrete washings, concrete pumping, residuals from concrete saw cutting (either wet or dry), and mixer washout waters will be collected on site and managed to prevent contamination of storm water runoff.

➢ **Product Specific Practices (6.8)**

- Petroleum Products
  All on-site vehicles will be monitored for leaks and receive regular preventive maintenance to reduce the chance of leakage. Petroleum products will be stored in tightly sealed containers which are clearly labeled.
- Fertilizers
  Fertilizers will be applied only in the amounts specified by the SDDOT. Once applied, fertilizers will be worked into the soil to limit the exposure to storm water. Fertilizers will be stored in an enclosed area. The contents of partially used fertilizer bags will be transferred to sealable containers to avoid spills.
- Paints
  All containers will be tightly sealed and stored when not required for use. The excess will be disposed of according to the manufacturer's instructions and any applicable state and local regulations.
- Concrete Trucks
  Contractors will provide designated truck washout areas on the site. These areas must be self contained and not connected to any storm water outlet of the site. Upon completion of construction washout areas will be properly stabilized.

➢ **Spill Control Practices (4.2 2 c.(2))**

In addition to the previous housekeeping and management practices, the following practices will be followed for spill prevention and cleanup if needed.

- For all hazardous materials stored on site, the manufacturer's recommended methods for spill clean up will be clearly posted. Site personnel will be made aware of the procedures and the locations of the information and cleanup supplies.
- Appropriate cleanup materials and equipment will be maintained by the contractor in the materials storage area on-site. As appropriate, equipment and materials may include items such as brooms, dust pans, mops, rags, gloves, goggles, kitty litter, sand, sawdust, and plastic and metal trash containers specifically for clean up purposes.
- All spills will be cleaned immediately after discovery and the materials disposed of properly.
- The spill area will be kept well ventilated and personnel will wear appropriate protective clothing to prevent injury from contact with a hazardous substance.
- After a spill a report will be prepared describing the spill, what caused it, and the cleanup measures taken. The spill prevention plan will be adjusted to include measures to prevent this type of spill from reoccurring, as well as clean up instructions in the event of reoccurrences.
- The contractor's site superintendent, responsible for day-to-day operations, will be the spill prevention and cleanup coordinator. The contractor is responsible for ensuring that the site superintendent has had appropriate training for hazardous materials handling, spill management, and cleanup.

➢ **Spill Response (4.2 2 c.(2))**

The primary objective in responding to a spill is to quickly contain the material(s) and prevent or minimize migration into storm water runoff and conveyance systems. If the release has impacted on-site storm water, it is critical to contain the released materials on-site and prevent their release into receiving waters. If a spill of pollutants threatens storm water or surface water at the site, the spill response procedures outlined below must be implemented in a timely manner to prevent the release of pollutants.

- The contractor's site superintendent will be notified immediately when a spill or the threat of a spill is observed. The superintendent will assess the situation and determine the appropriate response.
- If spills represent an imminent threat of escaping erosion and sediment controls and entering receiving waters, personnel will be directed to respond immediately to contain the release and notify the superintendent after the situation has been stabilized.
- Spill kits containing appropriate materials and equipment for spill response and cleanup will be maintained by the contractor at the site.
- If oil sheen is observed on surface water (e.g. settling ponds, detention ponds, swales), action will be taken immediately to remove the material causing the sheen. The contractor will use appropriate materials to contain and absorb the spill. The source of the oil sheen will also be identified and removed or repaired as necessary to prevent further releases.
- If a spill occurs the superintendent or the superintendent's designee will be responsible for completing the spill reporting form and for reporting the spill to SD DENR.
- Personnel with primary responsibility for spill response and clean up will receive training by the contractor's site superintendent or designee. The training must include identifying the location of the spill kits and other spill response equipment and the use of spill response materials.
- Spill response equipment will be inspected and maintained as necessary to replace any materials used in spill response activities.

❖ Spill Notification

In the event of a spill, the contractor's site superintendent will make the appropriate notification(s), consistent with the following procedures:

➢ A release or spill of a regulated substance (includes petroleum and petroleum products) must be reported to DENR immediately **if any one of the following** conditions exists:

- The discharge threatens or is in a position to threaten the waters of the state (surface water or ground water).
- The discharge causes an immediate danger to human health or safety.
- The discharge exceeds 25 gallons.
- The discharge causes a sheen on surface water.
- The discharge of any substance that exceeds the ground water quality standards of ARSD (Administrative Rules of South Dakota) chapter 74:51:01.
- The discharge of any substance that exceeds the surface water quality standards of ARSD chapter 74:51:01.
- The discharge of any substance that harms or threatens to harm wildlife or aquatic life.
- The discharge of crude oil in field activities under SDCL (South Dakota Codified Laws) chapter 45-9 is greater than 1 barrel (42 gallons).

To report a release or spill, call DENR at 605-773-3296 during regular office hours (8 a.m. to 5 p.m. Central time). To report the release after hours, on weekends or holidays, call State Radio Communications at 605-773-3231. Reporting the release to DENR does not meet any obligation for reporting to other state, local, or federal agencies. Therefore, the responsible person must also contact local authorities to determine the local reporting requirements for releases. DENR recommends that spills also be reported to the National Response Center at (800) 424-8802.

❖ Construction Changes (4.4)

When changes are made to the construction project that will require alterations in the temporary erosion controls of the site, the Storm Water Pollution Prevention Plan (SWPPP) will be amended to provide appropriate protection to disturbed areas, all storm water structures, and adjacent waters. The SDDOT Project Engineer will modify the SWPPP plan (DOT 298) and drawings to reflect the needed changes. Copies of changes will be routed per DOT 298. Copies of forms and the SWPPP will be retained in a designated place for review over the course of the project.

❖ CERTIFICATIONS

➢ **Certification of Compliance with Federal, State, and Local Regulations**

The Storm Water Pollution Prevention Plan (SWPPP) for this project reflects the requirements of all local municipal jurisdictions for storm water management and sediment and erosion control as established by ordinance, as well as other state and federal requirements for sediment and erosion control plans, permits, notices or documentation as appropriate.

➢ **South Dakota Department of Transportation**

I certify under penalty of law that this document and all attachments were prepared under my direction or supervision in accordance with a system designed to assure that qualified personnel properly gather and evaluate the information submitted. Based on my inquiry of the person or persons who manage the system, or those persons directly responsible for gathering the information, the information submitted is, to the best of my knowledge and belief, true, accurate, and complete. I am aware that there are significant penalties for submitting false information, including the possibility of fine and imprisonment for knowing violations.

Authorized Signature (See the General Permit, Section 6.7.1.C.)

➢ **Prime Contractor**

This section is to be executed by the General Contractor after the award of the contract. This section may be executed any time there is a change in the Prime Contractor of the project.

I certify under penalty of law that this document and all attachments will be revised or maintained under my direction or supervision in accordance with a system designed to assure that qualified personnel properly gather and evaluate the information submitted. Based on my inquiry of the person or persons who manage the system, or those persons directly responsible for gathering the information, the information submitted is, to the best of my knowledge and belief, true, accurate, and complete. I am aware that there are significant penalties for submitting false information, including the possibility of fine and imprisonment for knowing violations.

_____

Authorized Signature

❖ CONTACT INFORMATION

➢ **Contractor Information**:

- Prime Contractor Name: _____
- Contractor Contact Name: _____
- Address: _____
- _____
- City: _____State: _____Zip: _____
- Office Phone: _____Field: _____
- Cell Phone: _____Fax: _____

➢ **Erosion Control Supervisor**

- Name: _____
- Address: _____
- _____
- City: _____State: _____Zip: _____
- Office Phone: _____Field: _____
- Cell Phone: _____Fax: _____

➢ **SDDOT Project Engineer**

- Name: _____
- Business Address: _____
- Job Office Location: _____
- City: _____State: _____Zip: _____
- Office Phone: _____Field: _____
- Cell Phone: _____Fax: _____

➢ **SD DENR Contact Spill Reporting**
- Business Hours Monday-Friday (605) 773-3296
- Nights and Weekends (605) 773-3231

➢ **SD DENR Contact for Hazardous Materials.**
- (605) 773-3153

➢ **National Response Center Hotline**
- (800) 424-8802.

STATE OF SOUTH DAKOTA	PROJECT	SHEET NO.	TOTAL SHEETS
	P 0028(32)319	42	135

Plotting Date: 10/23/2015

FIXED LOCATION GROUND MOUNTED BREAKAWAY SUPPORT SIGNS

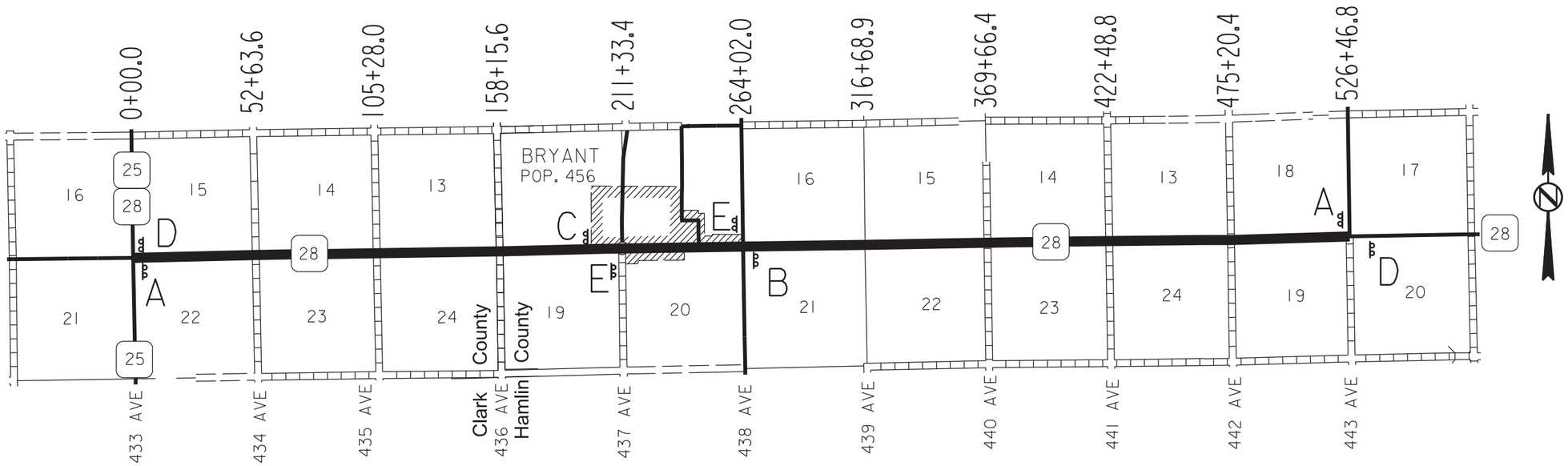

A

ROAD WORK
NEXT 10 MILES

G20-1

B

ROAD WORK
NEXT 5 MILES

G20-1

C

ROAD WORK
NEXT 4 MILES

G20-1

D

END
ROAD WORK

G20-2

E

GROOVED
PAVEMENT *

W8-15P

Next 1 Miles

W7-3aP

ROAD
WORK
AHEAD

W20-1 ROAD WORK AHEAD signs shall be mounted on portable supports, and shall be placed on intersecting roadways as directed by the Engineer. ROAD WORK AHEAD signs shall be moved as necessary to keep current with the work activities.

EXACT LOCATION OF SIGNS TO BE DETERMINED IN THE FIELD BY THE ENGINEER.

* GROOVED PAVEMENT signs shall only be visible when the condition exists. Signs shall be covered or removed when the grooved road condition is not present.

PLOT SCALE - 1:5250

PLOTTED FROM - TRAB17882

PLOT NAME - 4

FILE - ...\020K_FIXED SIGNS.DGN

STATE OF SOUTH DAKOTA	PROJECT	SHEET NO.	TOTAL SHEETS
	P 0028(32)319	43	135

Plotting Date: 10/23/2015

FIXED LOCATION GROUND MOUNTED BREAKAWAY SUPPORT SIGNS

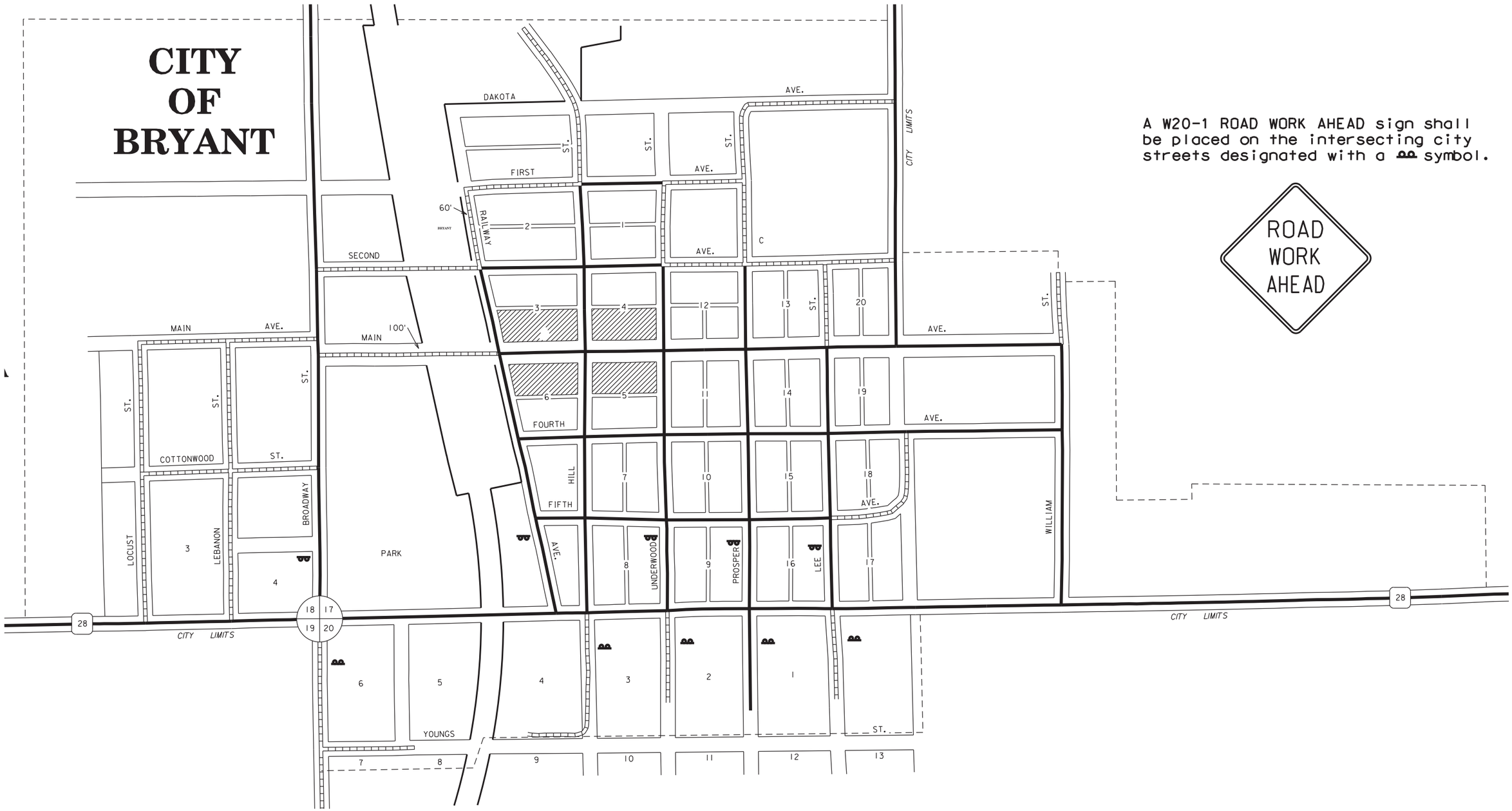

A W20-1 ROAD WORK AHEAD sign shall be placed on the intersecting city streets designated with a symbol.

PLOT SCALE - 1:5250

PLOTTED FROM - TRAB17892

PLOT NAME - 5

FILE - ...\020K_FIXED SIGNS.DGN

TRAFFIC CONTROL AT CITY STREETS
(WHERE CITY STREET CAN BE CLOSED TO TRAFFIC)

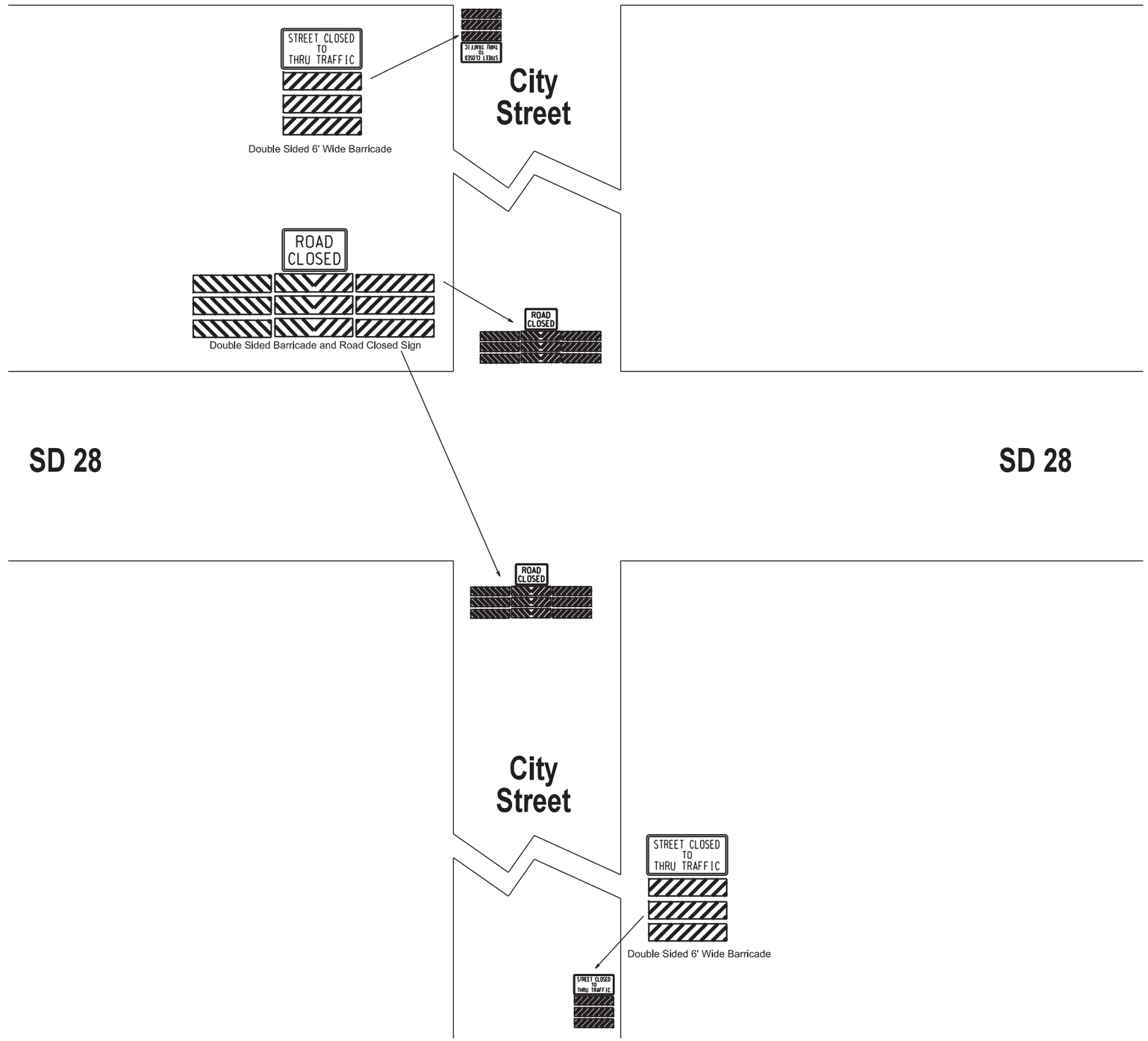

STATE OF SOUTH DAKOTA	PROJECT	SHEET NO.	TOTAL SHEETS
	P 00208(32)319	45	135

Plotting Date: 10/23/2015

SIDEWALK CLOSURE DETAIL

Public Sidewalk adjacent to project limits

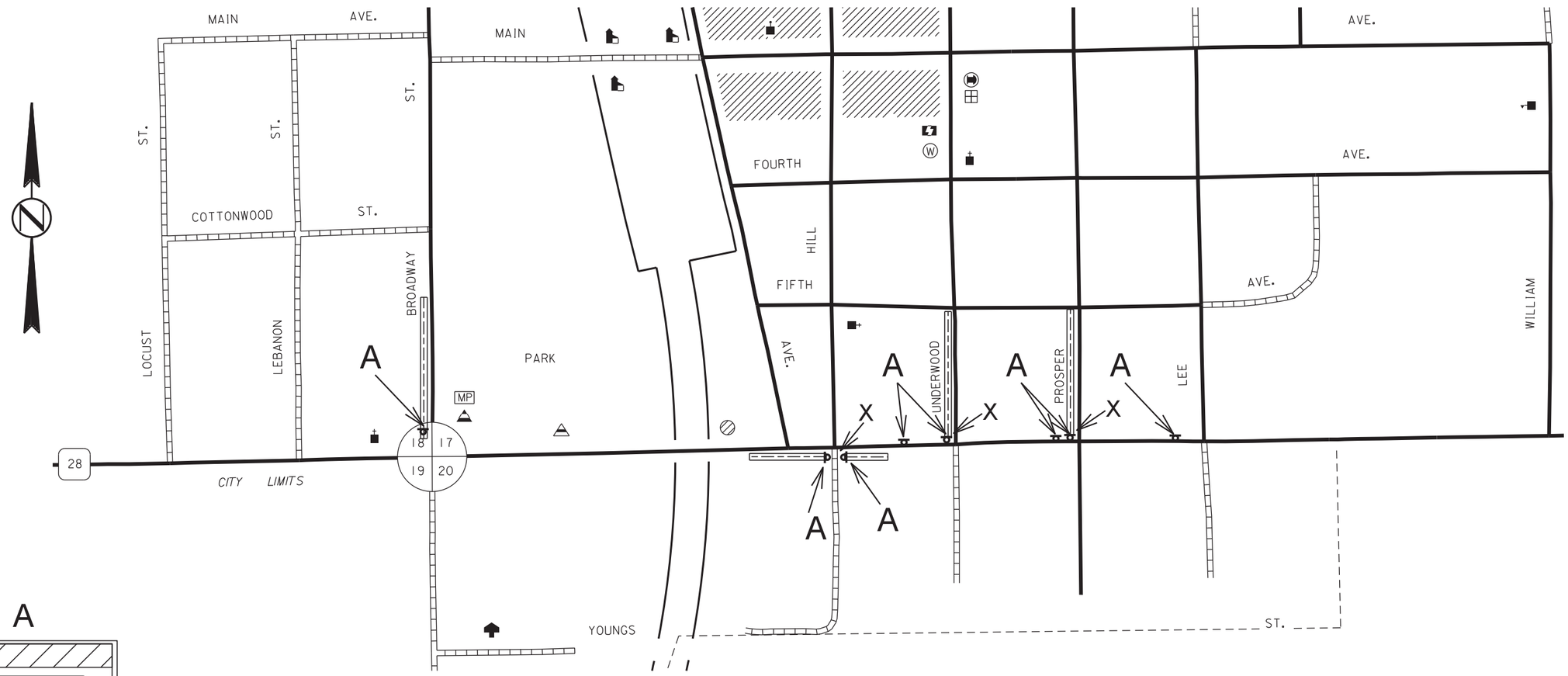

A

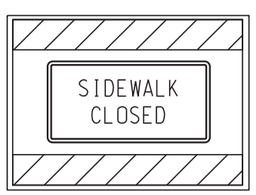

Sidewalk Closed sign attached to a Longitudinal Pedestrian Barricade

Notes: There are 3 locations shown where a mid-block sidewalk closure shall be installed to block a private sidewalk that connects to SD28.

Sidewalk Closed signs shall be attached to both sides of the Longitudinal Pedestrian Barricade located on Public Sidewalk adjacent to streets.

An additional 24 Ft of Longitudinal Pedestrian Barricade has been included in the Estimate of Quantities to be placed at each temporary pedestrian crossing to be used to provide positive seperation between motorists and pedestrians.

Provide a
Temporary Pedestrian Access Route
and/or
Temporary Curb Ramp
from Sidewalk to Street Surface
at locations indicated with a
"X"

PLOT SCALE - 1:350

PLOTTED FROM - TRAB17882

PLOT NAME - 7

FILE - ...\020K_ADA LAYOUT.DGN

GUIDES FOR TRAFFIC CONTROL DEVICES TEMPORARY ROAD MARKER INSTALLATION

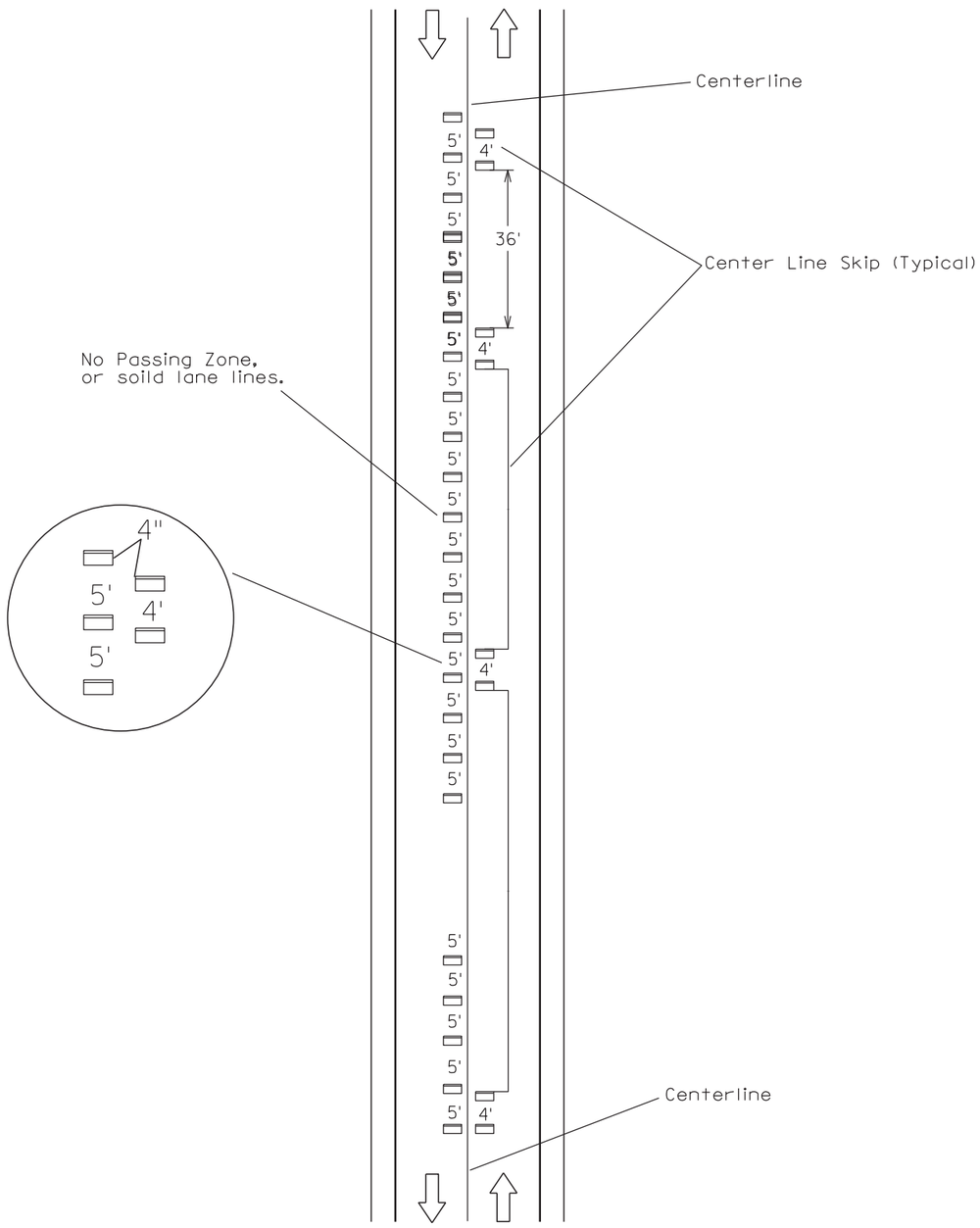

GUIDES FOR TRAFFIC CONTROL DEVICES APPLICATION OF TEMPORARY PAVEMENT MARKING TABS

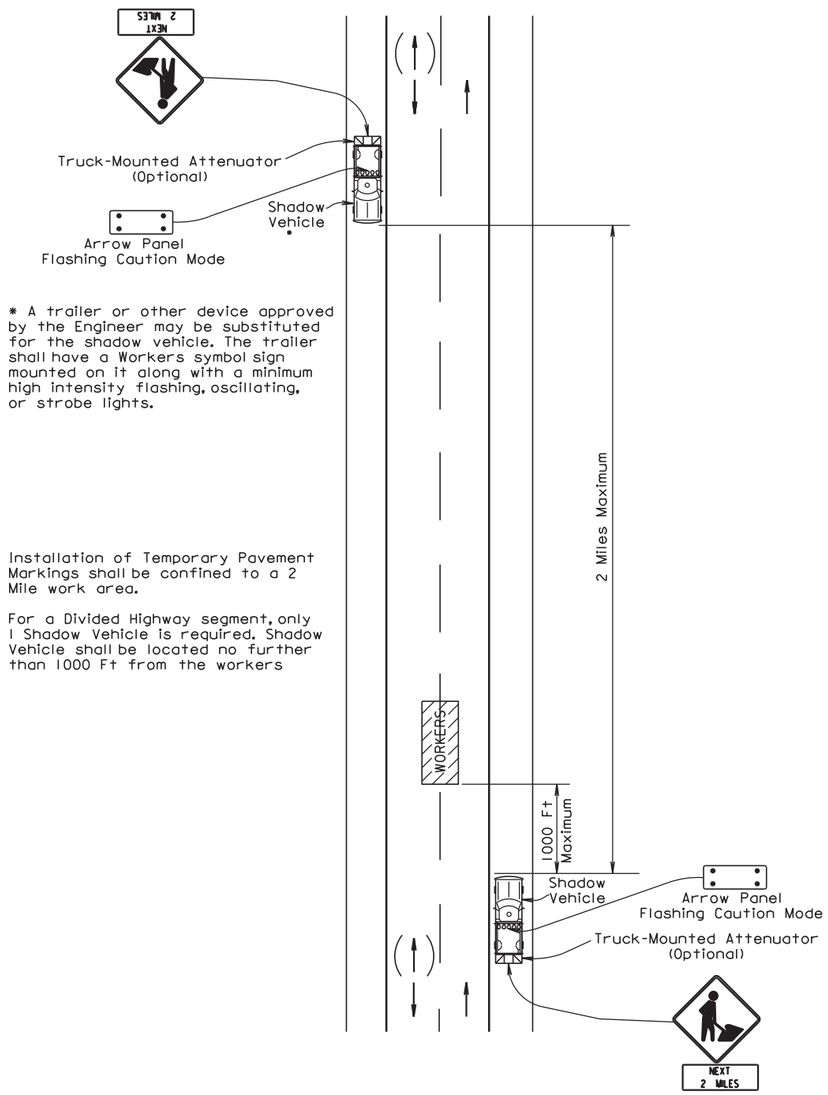

* A trailer or other device approved by the Engineer may be substituted for the shadow vehicle. The trailer shall have a Workers symbol sign mounted on it along with a minimum high intensity flashing, oscillating, or strobe lights.

Installation of Temporary Pavement Markings shall be confined to a 2 Mile work area.

For a Divided Highway segment, only 1 Shadow Vehicle is required. Shadow Vehicle shall be located no further than 1000 Ft from the workers

PLOT SCALE - 1:28000
PLOTTED FROM - TRAB17882
PLOT NAME - 8
FILE - ...\020K_TEMPMARKERS.DGN

The signs illustrated are not required if the work space is behind a barrier, more than 2 feet behind the curb, or 15 feet or more from the edge of any roadway.

The signs illustrated shall be used where there are distracting situations; such as: vehicles parked on shoulder, vehicles accessing the work site via the highway, and equipment traveling on or crossing the roadway to perform work operations.

The ROAD WORK AHEAD sign may be replaced with other appropriate signs, such as the SHOULDER WORK sign. The SHOULDER WORK sign may be used for work adjacent to the shoulder.

* If the work space is on a divided highway, an advance warning sign should also be placed on the left side of the directional roadway.

For short term, short duration, or mobile operations, all signs and channelizing devices may be eliminated if a vehicle with an activated flashing or revolving yellow light is used.

Posted Speed Prior to Work (M.P.H.)	Spacing of Advance Warning Signs (Feet) (A)
0 - 30	200
35 - 40	350
45 - 50	500
55	750
60 - 80	1000

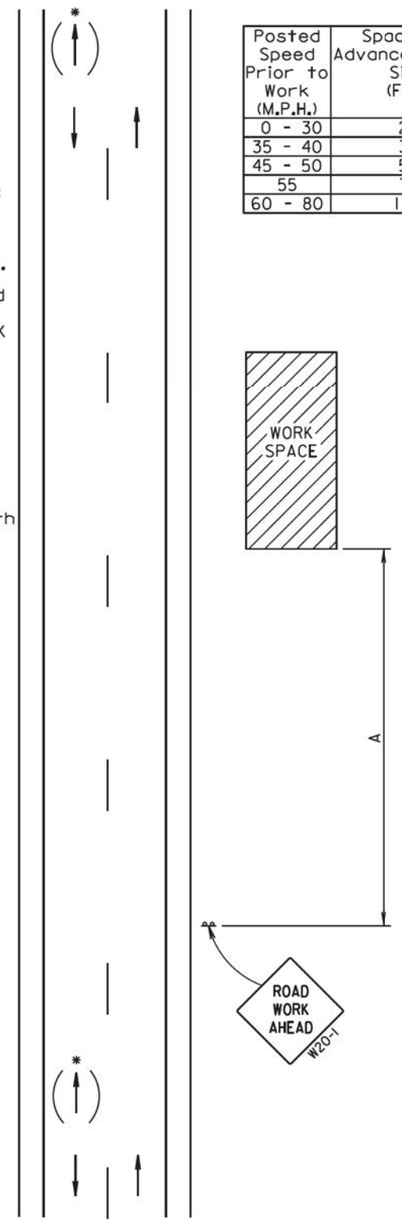

April 15, 2015

Published Date: 3rd Qtr. 2015

SDDOT

GUIDES FOR TRAFFIC CONTROL DEVICES
WORK BEYOND THE SHOULDER

PLATE NUMBER 634.01

Sheet 1 Of 1

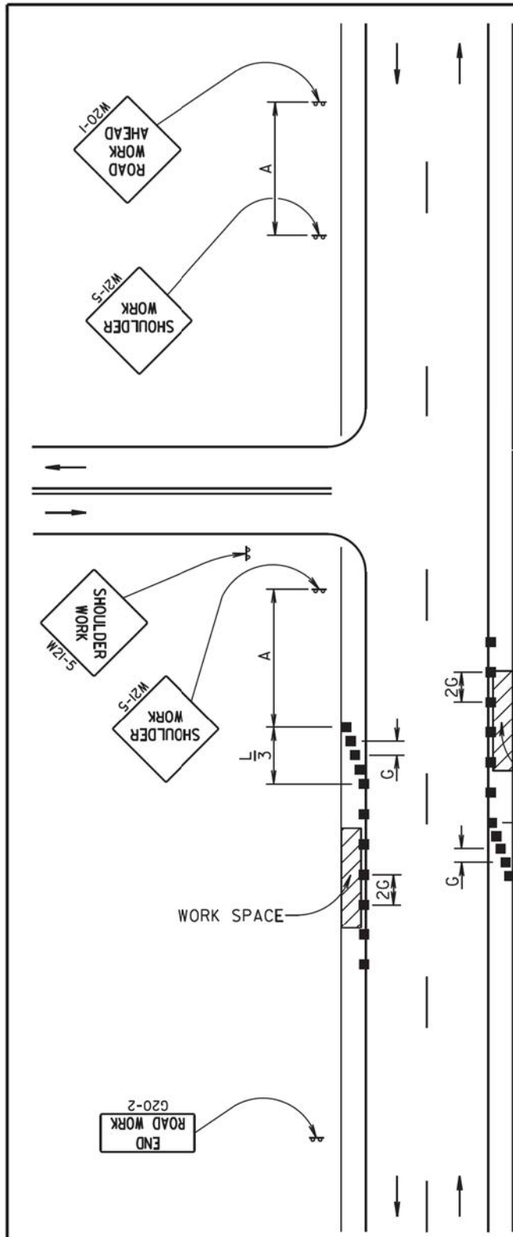

Posted Speed Prior to Work (M.P.H.)	Spacing of Advance Warning Signs (Feet) (A)	Taper Length (Feet) (L)	Spacing of Channelizing Devices (Feet) (G)
0 - 30	200	180	25
35 - 40	350	320	25
45 - 50	500	600	50
55	750	660	50
60 - 65	1000	780	50

■ Channelizing Device

END ROAD WORK
G20-2

The channelizing devices shall be drums or 42" cones if traffic control must remain overnight.

For short duration operations (1 hour or less) all channelizing devices may be eliminated if a vehicle with an activated flashing or revolving yellow light is used.

Worker signs (W21-1 or W21-1a) may be used instead of SHOULDER WORK signs.

A SHOULDER WORK sign should be placed on the left side of a divided or one-way roadway only if the left shoulder is affected.

The SHOULDER WORK sign on an intersecting roadway is not required if drivers emerging from that roadway will encounter another advance warning sign before they reach a work activity area.

September 22, 2014

Published Date: 3rd Qtr. 2015

SDDOT

GUIDES FOR TRAFFIC CONTROL DEVICES
WORK ON SHOULDERS

PLATE NUMBER 634.03

Sheet 1 of 1

PLOT SCALE - 1:200
PLOT NAME - 1
FILE - ...\63401 & 63403.DGN
-PLOTTED FROM - TRAB17982

Posted Speed Prior to Work (M.P.H.)	Spacing of Advance Warning Signs (Feet) (A)
0 - 30	200
35 - 40	350
45 - 50	500
55	750
60 - 75	1000

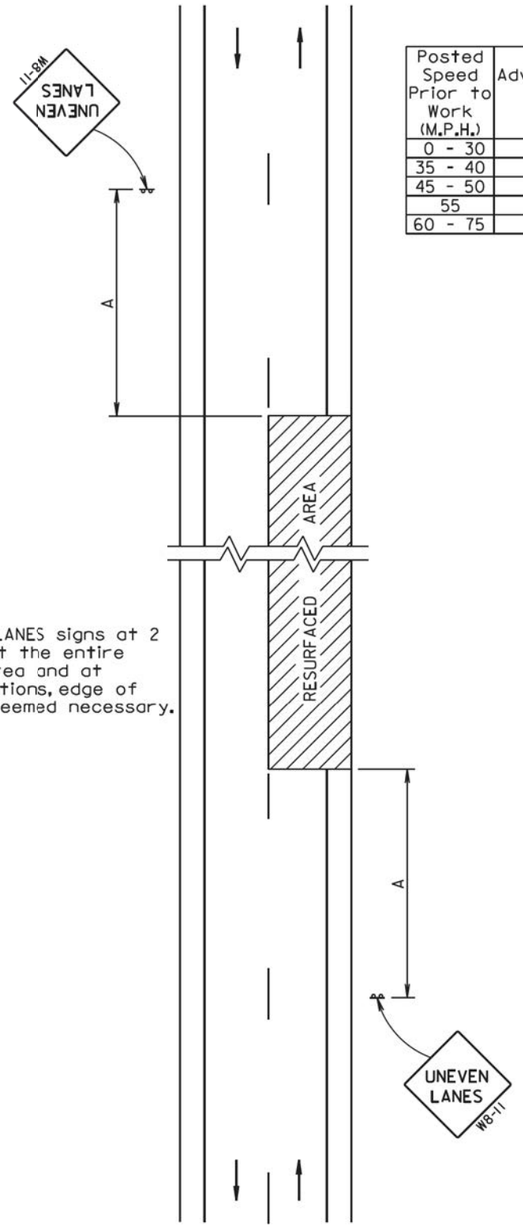

Install additional UNEVEN LANES signs at 2 mile intervals throughout the entire length of the uneven area and at affected major intersections, edge of towns, and other sites deemed necessary.

April 15, 2015

Published Date: 3rd Qtr. 2015

SDDOT

GUIDES FOR TRAFFIC CONTROL DEVICES
UNEVEN ROAD SURFACE

PLATE NUMBER 634.22

Sheet 1 of 1

Posted Speed Prior to Work (M.P.H.)	Spacing of Advance Warning Signs (Feet) (A)	Spacing of Channelizing Devices (Feet) (G)
0 - 30	200	25
35 - 40	350	25
45 - 50	500	50
55	750	50
60 - 65	1000	50

Flagger

Channelizing Device

For low-volume traffic situations with short work zones on straight roadways where the flagger is visible to road users approaching from both directions, a single flagger may be used.

The ROAD WORK AHEAD and the END ROAD WORK signs may be omitted for short duration operations (1 hour or less).

For tack and/or flush seal operations, when flaggers are not being used, the FRESH OIL sign (W21-2) shall be displayed in advance of the liquid asphalt areas.

Flashing warning lights and/or flags may be used to call attention to the advance warning signs.

The channelizing devices shall be drums or 42" cones.

Channelizing devices are not required along the centerline adjacent to work area when pilot cars are utilized for escorting traffic through the work area.

END ROAD WORK G20-2

Channelizing devices and flaggers shall be used at intersecting roads to control intersecting road traffic as required.

The buffer space should be extended so that the two-way traffic taper is placed before a horizontal or vertical curve to provide adequate sight distance for the flagger and queue of stopped vehicles.

The length of A may be adjusted to fit field conditions.

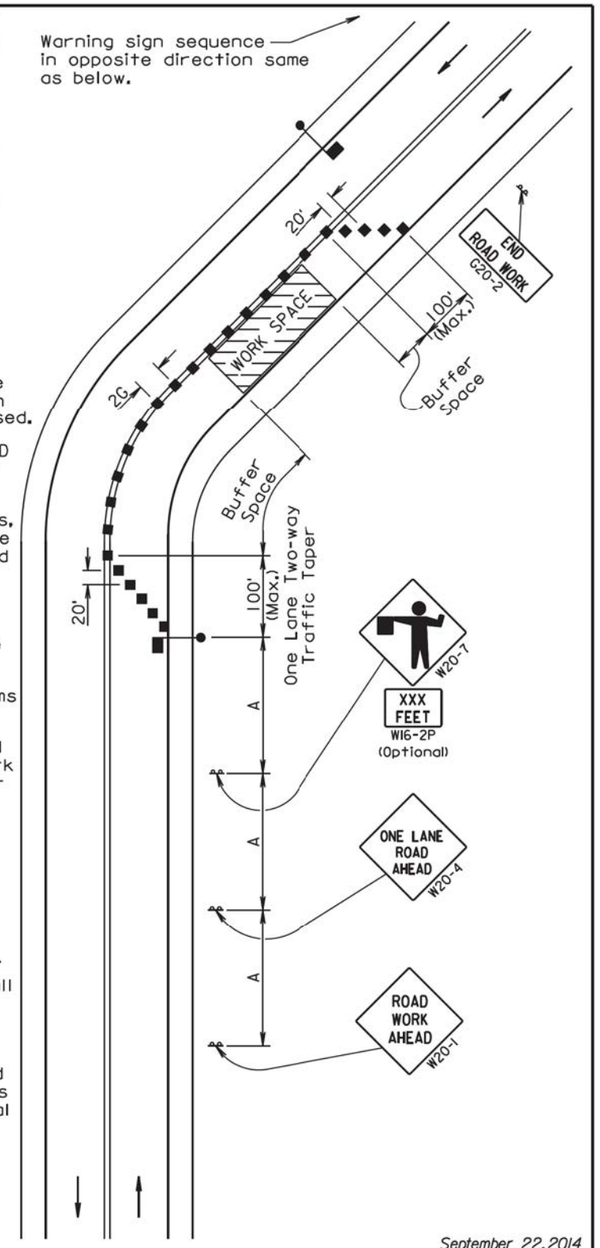

September 22, 2014

Published Date: 3rd Qtr. 2015

SDDOT

GUIDES FOR TRAFFIC CONTROL DEVICES
LANE CLOSURE WITH FLAGGER PROVIDED

PLATE NUMBER 634.23

Sheet 1 of 1

Posted Speed Prior to Work (M.P.H.)	Spacing of Advance Warning Signs (Feet) (A)	Taper Length (Feet) (L)	Spacing of Channelizing Devices (Feet) (G)
0 - 30	200	180	25
35 - 40	350	320	25
45 - 50	500	600	50
55	750	660	50
60 - 65	1000	780	50

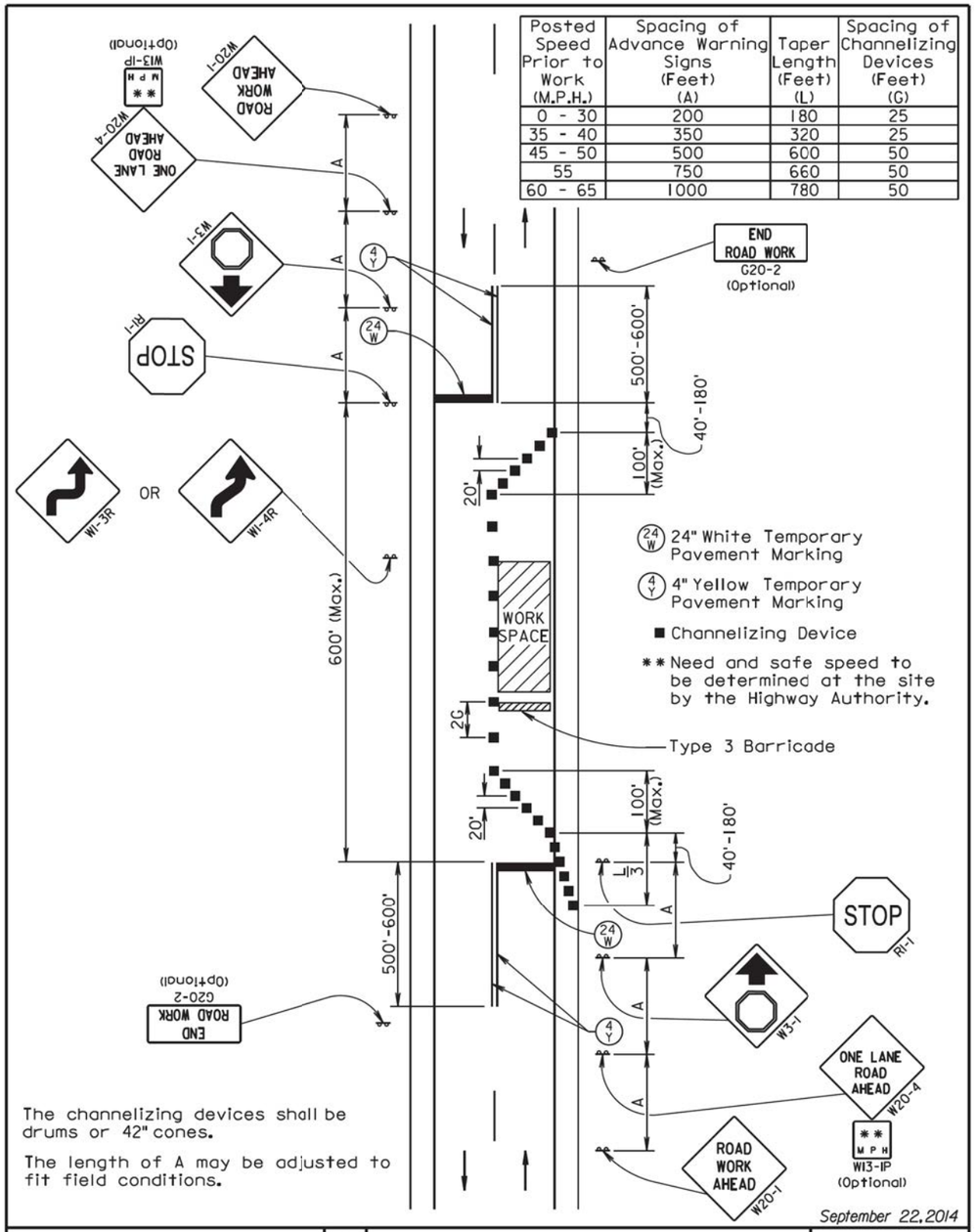

Published Date: 3rd Qtr. 2015

SDDOT

GUIDES FOR TRAFFIC CONTROL DEVICES
LANE CLOSURE USING STOP SIGNS

PLATE NUMBER 634.25

Sheet 1 of 1

Posted Speed Prior to Work (M.P.H.)	Spacing of Advance Warning Signs (Feet) (A)
0 - 30	200
35 - 40	350
45 - 50	500
55	750
60 - 65	1000

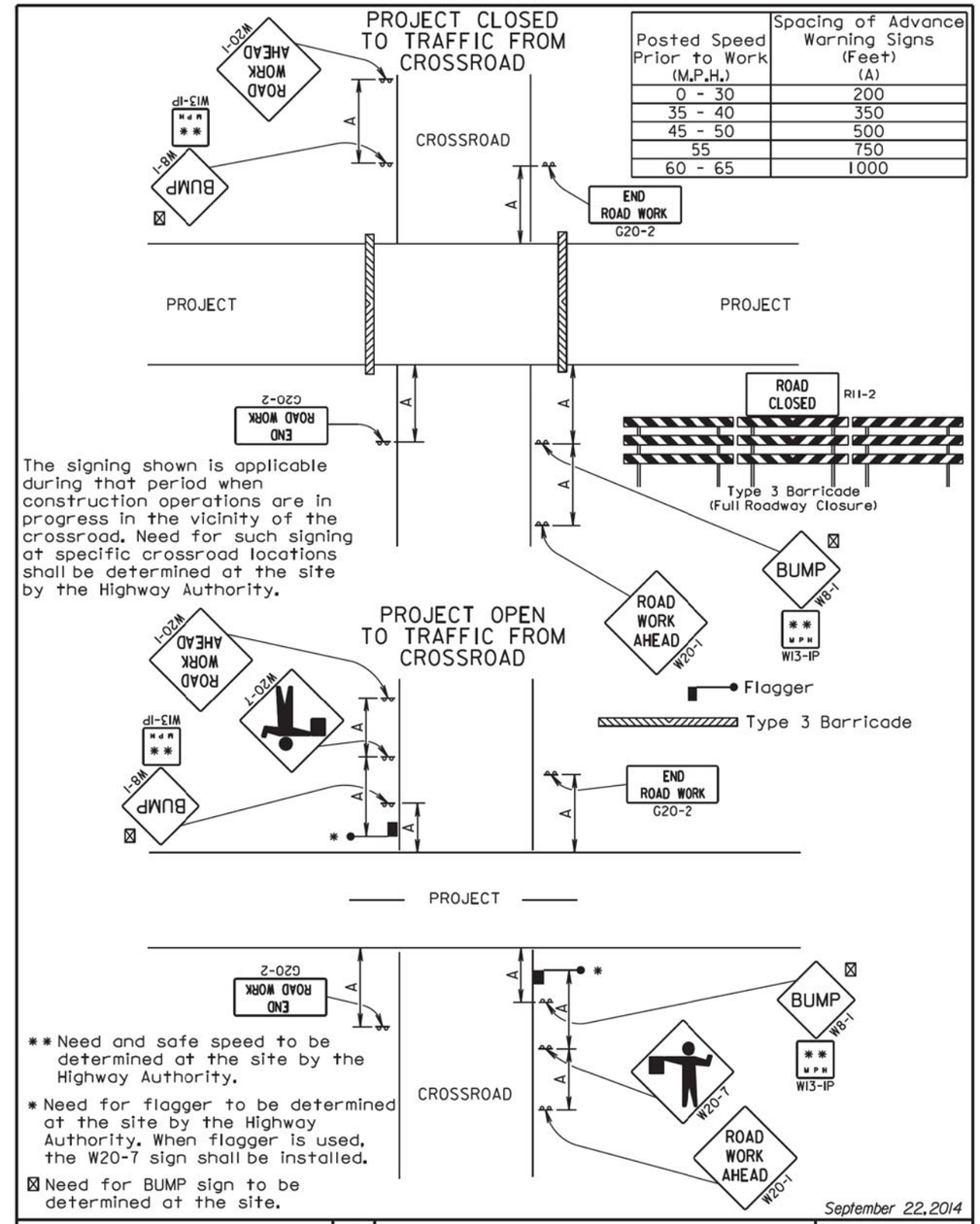

Published Date: 3rd Qtr. 2015

SDDOT

GUIDES FOR TRAFFIC CONTROL DEVICES
CROSSROAD SIGNING

PLATE NUMBER 634.32

Sheet 1 of 1

PLOT SCALE - 1:200
PLOT NAME - 3
FILE - ...\63425 & 63432.DGN
-PLOTTED FROM - TRAB17982

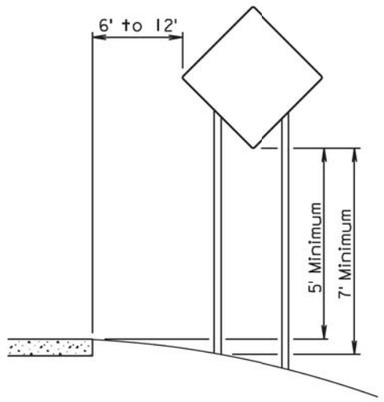

RURAL DISTRICT

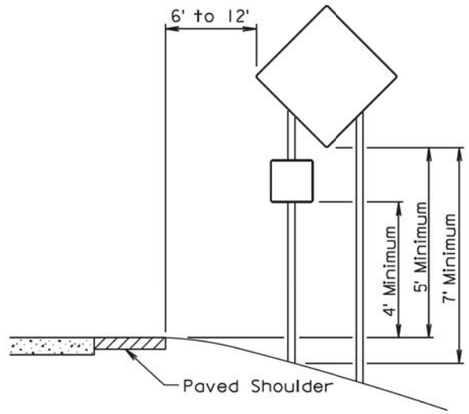

RURAL DISTRICT WITH SUPPLEMENTAL PLATE

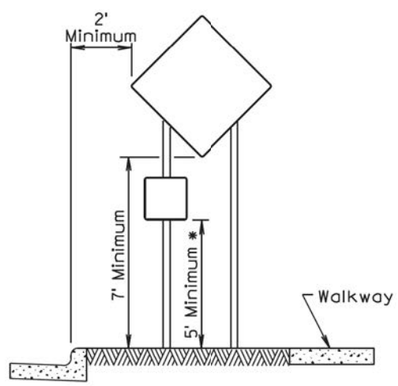

URBAN DISTRICT

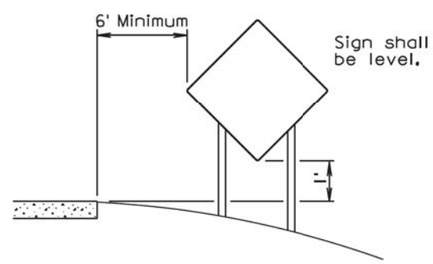

RURAL DISTRICT
3 DAY MAXIMUM
(Not applicable to regulatory signs)

* If the bottom of supplemental plate is mounted lower than 7 feet above a pedestrian walkway, the supplemental plate should not project more than 4" into the pedestrian facility.

September 22, 2014

Published Date: 3rd Qtr. 2015 | SDDOT | **CRASHWORTHY SIGN SUPPORTS (Typical Construction Signing)** | PLATE NUMBER 634.85 | Sheet 1 of 1

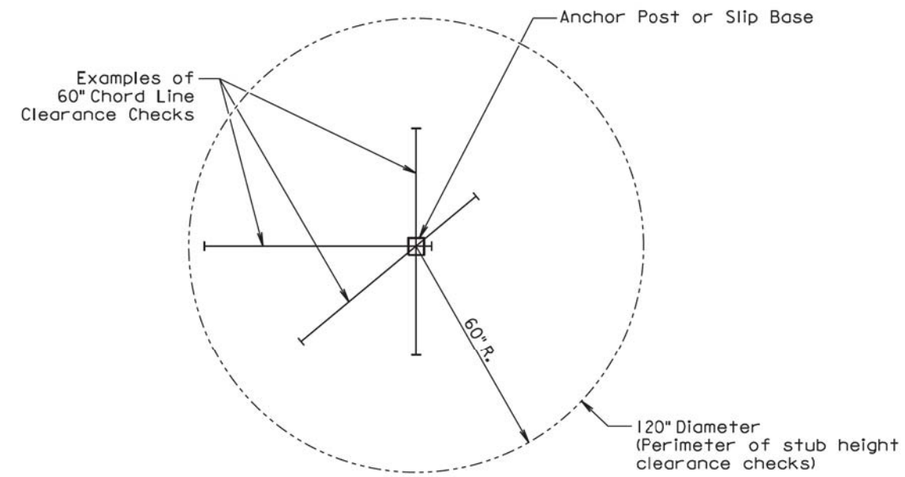

PLAN VIEW
(Examples of stub height clearance checks)

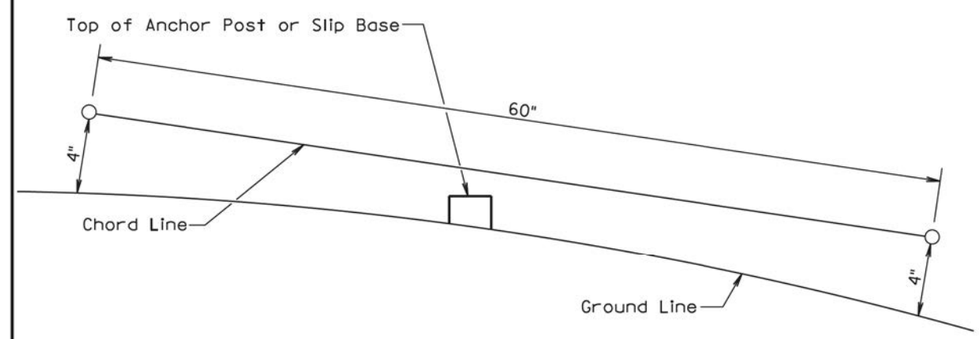

ELEVATION VIEW

GENERAL NOTES:

The top of anchor posts and slip bases SHALL NOT extend above a 60" chord line within a 120" diameter circle around the post with ends 4" above the ground.

At locations where there is curb and gutter adjacent to the breakaway sign support, the stub height shall be a maximum of 4" above the ground line at the localized area adjacent to the breakaway support stub.

The 4" stub height clearance is not necessary for U-channel lap splices where the support is designed to yield (bend) at the base.

July 1, 2005

Published Date: 3rd Qtr. 2015 | SDDOT | **BREAKAWAY SUPPORT STUB CLEARANCE** | PLATE NUMBER 634.99 | Sheet 1 of 1

PLOT SCALE - 1:200
PLOT NAME - 4
FILE - ...\63485 & 63499.DGN
-PLOTTED FROM - TRAB17882

ITEMIZED LIST FOR TRAFFIC CONTROL SIGNS

SIGN CODE	SIGN DESCRIPTION	CONVENTIONAL ROAD NUMBER	SIGN SIZE	SQFT PER SIGN	SQFT
R1-1	STOP	4	30" x 30"	6	24
R8-3	NO PARKING (symbol)	8	24" x 24"	4	32
R9-9	SIDEWALK CLOSED	13	24" x 12"	2	26
R11-2	ROAD CLOSED	8	48" x 30"	10	80
R11-4	STREET CLOSED TO THRU TRAFFIC	4	60" x 30"	13	52
W1-3	REVERSE TURN (L or R)	2	48" x 48"	16	32
W3-1	STOP AHEAD (symbol)	4	48" x 48"	16	64
W7-3aP	NEXT __ MILES (plaque)	2	36" x 30"	8	16
W8-1	BUMP	13	48" x 48"	16	208
W8-6	TRUCK CROSSING	4	48" x 48"	16	64
W8-7	LOOSE GRAVEL	10	48" x 48"	16	160
W8-11	UNEVEN LANES	4	48" x 48"	16	64
W8-15	GROOVED PAVEMENT	2	48" x 48"	16	32
W8-15P	MOTORCYCLE (plaque)	2	24" x 18"	3	6
W13-1P	ADVISORY SPEED (plaque)	4	30" x 30"	6	24
W20-1	ROAD WORK AHEAD	14	48" x 48"	16	224
W20-4	ONE LANE ROAD AHEAD	4	48" x 48"	16	64
W20-7	FLAGGER (symbol)	4	48" x 48"	16	64
W21-5	SHOULDER WORK	2	48" x 48"	16	32
G20-1	ROAD WORK NEXT __ MILES	4	36" x 18"	5	20
G20-2	END ROAD WORK	2	36" x 18"	5	10
		CONVENTIONAL ROAD TRAFFIC CONTROL SIGNS SQFT			1298

TYPE 3 BARRICADES

ITEM DESCRIPTION	QUANTITY
Type 3 Barricade, 6' Double Sided	4 Each
Type 3 Barricade, 8' Double Sided	12 Each

PLOTTED FROM - TRAB17882

TWO LANE UNDIVIDED ROADWAY

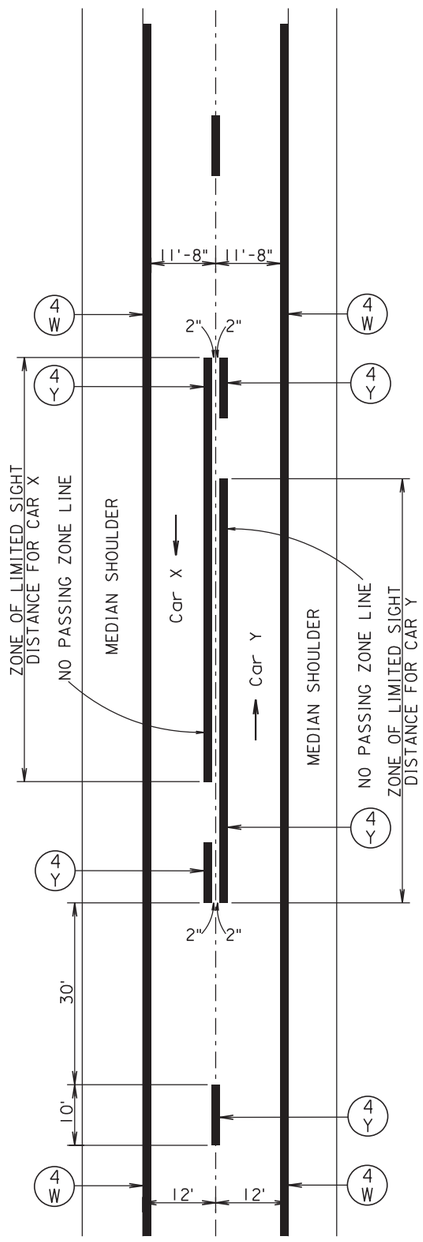

KEY	ITEM
4 W	4" White
4 Y	4" Yellow

FURNISHING AND APPLYING PAVEMENT MARKING PAINT

1. The approximate paint application rates shall be as follows:

Undivided Roadway	Divided Roadway
Yellow Centerline 12± Gallons/Pass-Mile (Includes No-passing lines)	White Centerline 4.60 Gallons/Pass-Mile
White Edgeline 16.90 Gallons/Pass-Mile (Solid Line)	Yellow or White Edgeline 16.90 Gallons/Pass-Mile (Solid Line)

2. The typical pavement markings as shown on this sheet shall be applied throughout the entire length of the project.

3. Exact location of the NO PASSING ZONE lines will be determined in the field by the Engineer. A dash of white paint will mark the beginning and end of all no passing zones. NO PASSING ZONE signs and the ending post in fence lines, if present, shall not be used as the beginning and ending NO PASSING ZONE lines.

4. Traffic Control shall be incidental to the cost of application. The striper and advance or trailing warning vehicle shall be equipped with flashing amber lights or advance warning arrow panel.

PLOT SCALE - 1:200
PLOTTED FROM - TRAB17882
PLOT NAME - 9
FILE - ...\020K PAVEMENT MARKING DETAILS.DGN

CONTROL DATA

HORIZONTAL AND VERTICAL CONTROL POINTS						
POINT	STATION	OFFSET	DESCRIPTION	NORTHING	EASTING	ELEVATION
CP 1	218+90.72	13.9' R	PK Nail	285170.5539	2627796.5716	
CP 2	223+28.84	0.1' L	PK Nail	285197.7258	2628234.1369	
CP 3	226+96.80	0.2' R	PK Nail	285208.8520	2628601.9203	
CP 4	231+61.16	0.1' R	PK Nail	285223.3820	2629066.0603	
CP 5	235+38.51	28.4' R	Rebar	285206.7189	2629444.2110	1837.46

HORIZONTAL ALIGNMENT DATA

MAINLINE

Type	Station			Northing	Easting
POB	210+61.98			285162.775	2626967.759
		TL= 71.22	N 88°01'17" E		
PI	211+33.20		Delta = 0°31'30" R	285165.234	2627038.939
		TL= 830.61	N 88°32'47" E		
PI	219+63.81		Delta = 0°20'26" L	285186.303	2627869.285
		TL= 1796.49	N 88°13'21" E		
PI	237+60.31		Delta = 0°03'49" R	285242.031	2629664.915
		TL= 142.28	N 88°17'10" E		
POE	239+02.59			285246.286	2629807.131

The coordinates shown on this sheet are based on the South Dakota State Plane Coordinate System. North Zone (NAD 83/07);
Geoid 09; SF = 099988782
The elevations shown on this sheet are based on NAVD 88.

STATE OF SOUTH DAKOTA	PROJECT	SHEET	TOTAL SHEETS
	P 0034(150)272	54	135

Plotting Date: 10/23/2015

EXISTING TOPOGRAPHY SYMBOLOGY AND LEGEND

Anchor
Antenna
Approach
Assumed Corner
Azimuth Marker
BBQ Grill/ Fireplace
Bearing Tree
Bench Mark
Box Culvert
Bridge
Brush
Buildings
Bulk Tank
Cattle Guard
Cemetery
Centerline
Cistern
Clothes Line
Commercial Sign Double Face
Commercial Sign One Post
Commercial Sign Overhead
Commercial Sign Two Post
Concrete Symbol
Creek Edge
Curb/Gutter
Curb
Dam Grade/Dike/Levee
Deck Edge
Ditch Block
Doorway Threshold
Drainage Profile
Drop Inlet
Edge Of Asphalt
Edge Of Concrete
Edge Of Gravel
Edge Of Other
Edge Of Shoulder
Elec. Trans./Power Jct. Box
Fence Barbwire
Fence Chainlink
Fence Electric
Fence Misc.
Fence Rock
Fence Snow
Fence Wood
Fence Woven
Fire Hydrant
Flag Pole
Flower Bed
Gas Valve Or Meter
Gas Pump Island
Grain Bin
Guardrail
Guide Sign One Post
Guide Sign Two Post
Gutter
Guy Pole
Haystack

Hedge
Highway R.O.W. Marker
Interstate Close Gate
Iron Pin
Irrigation Ditch
Lake Edge
Lawn Sprinkler
Mailbox
Manhole Electric
Manhole Gas
Manhole Misc
Manhole Sanitary Sewer
Manhole Storm Sewer
Manhole Telephone
Manhole Water
Merry-Go-Round
Microwave Radio Tower
Misc. Line
Misc. Property Corner
Misc. Post
Overhang Or Encroachment
Overhead Utility Line — OH —
Parking Meter
Pipe With End Section
Pipe With Headwall
Pipe Without End Section
Playground Slide
Playground Swing
Power And Light Pole
Power And Telephone Pole
Power Meter
Power Pole
Power Pole And Transformer
Power Tower Structure
Propane Tank
Property Pipe
Property Pipe With Cap
Property Stone
Public Telephone
Railroad Crossing Signal
Railroad Milepost Marker
Railroad Profile
Railroad R.O.W. Marker
Railroad Signs
Railroad Switch
Railroad Track
Railroad Trestle
Rebar
Rebar With Cap
Reference Mark
Regulatory Sign One Post
Regulatory Sign Two Post
Retaining Wall
Riprap
River Edge
Rock And Wire Baskets
Rockpiles
Satellite Dish
Septic Tank

Shrub Tree
Sidewalk
Sign Face
Sign Post
Slough Or Marsh
Spring
Stream Gauge
Street Marker
Subsurface Utility Exploration Test Hole
Telephone Fiber Optics — T/F —
Telephone Junction Box
Telephone Pole
Television Cable Jct Box
Television Tower
Test Wells/Bore Holes
Traffic Signal
Trash Barrel
Tree Belt
Tree Coniferous
Tree Deciduous
Tree Stumps
Triangulation Station
Underground Electric Line — P —
Underground Gas Line — G —
Underground High Pressure Gas Line — HG —
Underground Sanitary Sewer — S —
Underground Storm Sewer — S —
Underground Tank
Underground Telephone Line — T —
Underground Television Cable — TV —
Underground Water Line — W —
Warning Sign One Post
Warning Sign Two Post
Water Fountain
Water Hydrant
Water Meter
Water Tower
Water Valve
Water Well
Weir Rock
Windmill
Wingwall
Witness Corner

State and National Line
County Line
Section Line
Quarter Line
Sixteenth Line
Property Line
Construction Line
R. O. W. Line
New R. O. W. Line
Cut and Fill Limits
Control of Access
New Control of Access
Proposed ROW
(After Property Disposal)

Plot Scale - 1:200
Plotted From - trab17882
File - ...\RegionDesign\toposymb.dgn

STATE OF SOUTH DAKOTA	PROJECT	SHEET NO.	TOTAL SHEETS
	P 0028(32)319	55	135

Plotting Date: 10/23/2015

211+03-36'L
Remove Pipe End for Reset
(15" RCP)

211+03-36' L
Install 15"-6' RCP and
Reset Flared End

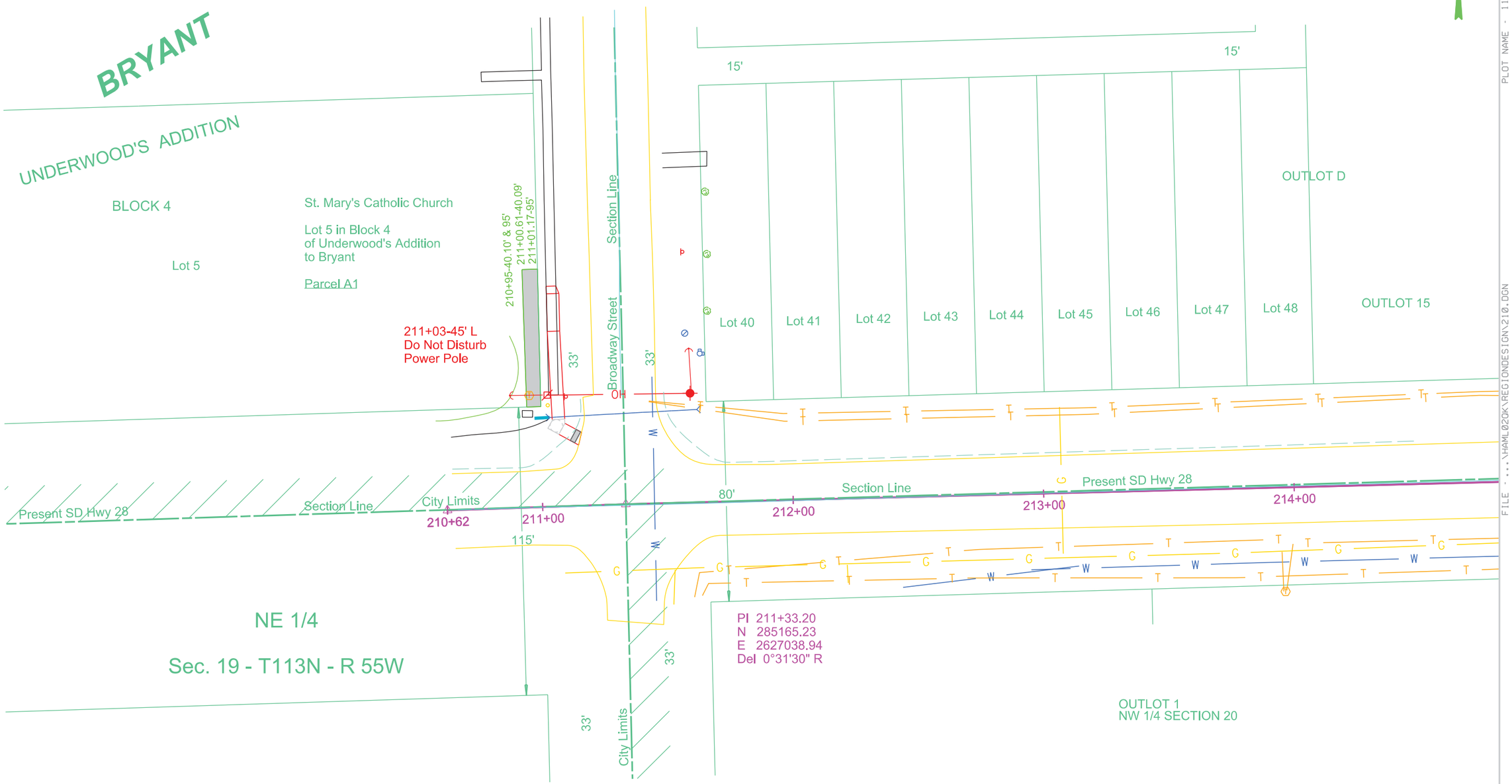

Parcel A1
210+95 to 211+01.17 L
Temporary Easement for
Sidewalk containing
323 sq ft, more or less

PLOT SCALE - 1:40
PLOT NAME - 11
FILE - ...\HAML020K\REGIONDESIGN\210.DGN
PLOTTED FROM - TRAB17882

Rev. 6-10-15 SLS

STATE OF SOUTH DAKOTA	PROJECT	SHEET NO.	TOTAL SHEETS
	P 0028(32)319	56	135

Plotting Date: 10/23/2015

219+70-36' L to 219+85-35'L
Remove Pipe for Reset -15 Ft
(15" RCP)

219+64
Do Not Disturb
Twin CMPA

219+64
Clean Out Culverts

219+70-36' L to 219+85-35'L
Reset Pipe - 15 Ft
(15" RCP)

Reprofile Ditch
within R.O.W.
at the following locations:
219+30 L to 220+40 L
219+55 R to 220+35 R

Take Out Drop Inlet &
Frame & Grate at the
following locations:
220+94-21'R
223+48-22'R

220+57-33' R to 220+94-21'R
Take Out 15" -39' RCP
with Flared End
(Incidental Work, Grading)

220+35.31-27.36'R to 221+66-19.67' R
Install 18"-112' RCP (8' & 104'),
3 Long Radius Bends,
& 1 Flared End
(Between Outlet & Drop Inlet)

Clear and Grub
Stump at the
following locations:
220+13-36'R
220+61-36'R

221+43.00-26.50'L
Install 3'x4' Type C Drop Inlet
and Type C Frame and Grate
(within existing 15" RCP storm sewer)

Clear and Grub
Tree at the
following locations:
220+28-35'R
220+44-35'R
220+76-35'R
220+99-35'R
221+14-34'R
221+31-34'R
221+47-34'R
221+62-34'R
222+12-33'R
222+43-30'R
222+61-31'R
224+72-27'R
224+79-27'L
224+96-28'L

221+66.00-19.67'R
Install 2' X 3' Type B Drop Inlet
and Type B Frame & Grate

222+13 to 223+08 - 21'L to 42'L
Minimize Disturbance to Landscaping
and Restore Landscaping Rock Upon
Completion of Work
(Incidental Work, Grading)

223+47.66-21.78'R
Install 4'x5' Type C Drop Inlet
and Type C Frame and Grate
(within existing 15" RCP storm sewer)

223+47.66-21.78' R to 226+48-19.67'R
Install 18"- 294' RCPA (18' & 276')
& 1 Long Radius Bend
(Between Drop Inlets)

Do Not Disturb Drop Inlet
at the following locations:
222+14-23'L
223+48-21'L

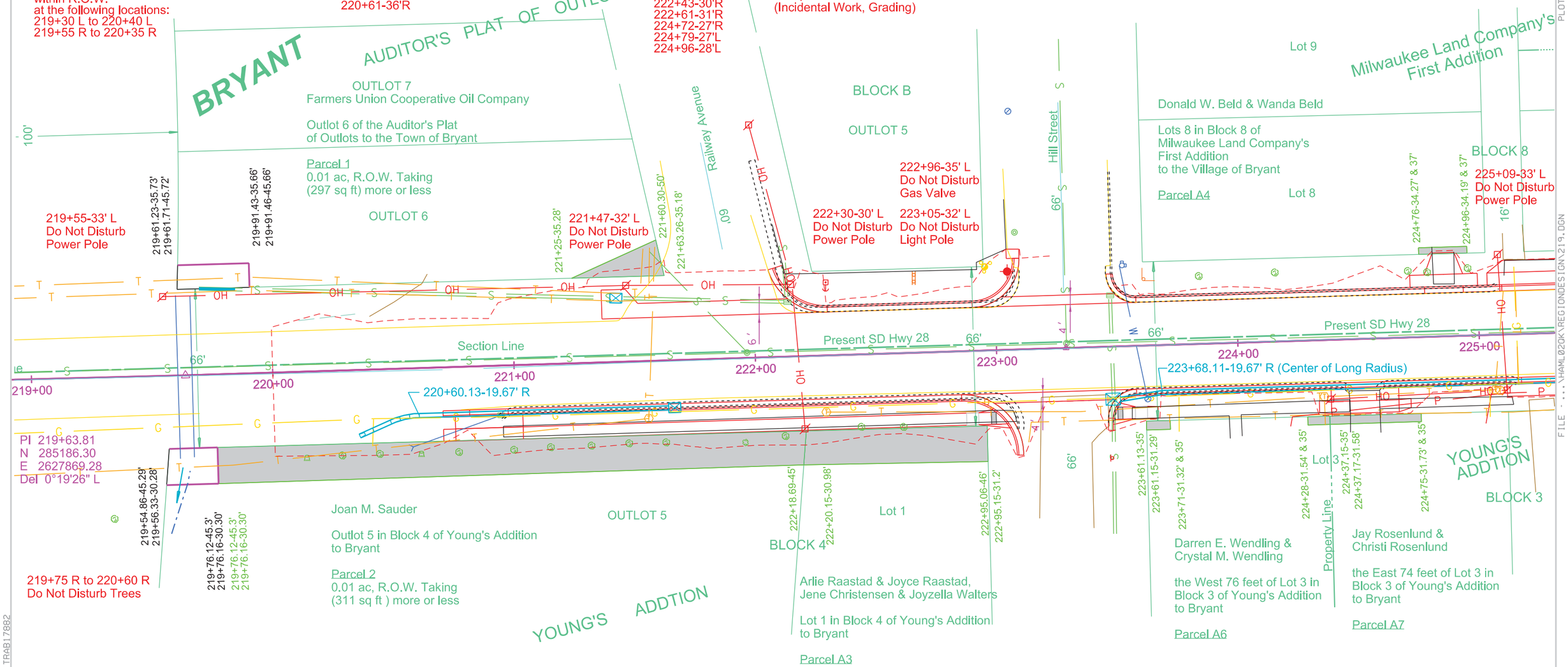

Parcel 1
221+25 to 221+63.26 L
Temporary Easement for
Drainage containing
283 sq ft, more or less

Parcel 2
219+76.12 to 222+20.15 R
Temporary Easement for
Sidewalk, Ent. & Drainage containing
3529 sq ft, more or less

Parcel A3
222+18.69 to 222+95.15 R
Temporary Easement for
Sidewalk containing
1091 sq ft, more or less

Parcel A4
224+76 to 224+96 L
Temporary Easement for
Ent. containing
55 sq ft, more or less

Parcel A6
223+61.13 to 223+71 R
Temporary Easement for
Sidewalk containing
36 sq ft, more or less

Parcel A6
224+28 to 224+37.17 R
Temporary Easement for
Ent. & Sidewalk containing
32 sq ft, more or less

Parcel A7
224+37.15 to 224+75 R
Temporary Easement for
Ent. & Sidewalk containing
127 sq ft, more or less

PLOT SCALE - 1:40
PLOTTED FROM - TRAB17882
PLOT NAME - 12
FILE - ...\HAML020K\REGIONDESIGN\219.DGN

STATE OF SOUTH DAKOTA	PROJECT	SHEET NO.	TOTAL SHEETS
	P 0028(32)319	57	135

Plotting Date: 10/23/2015

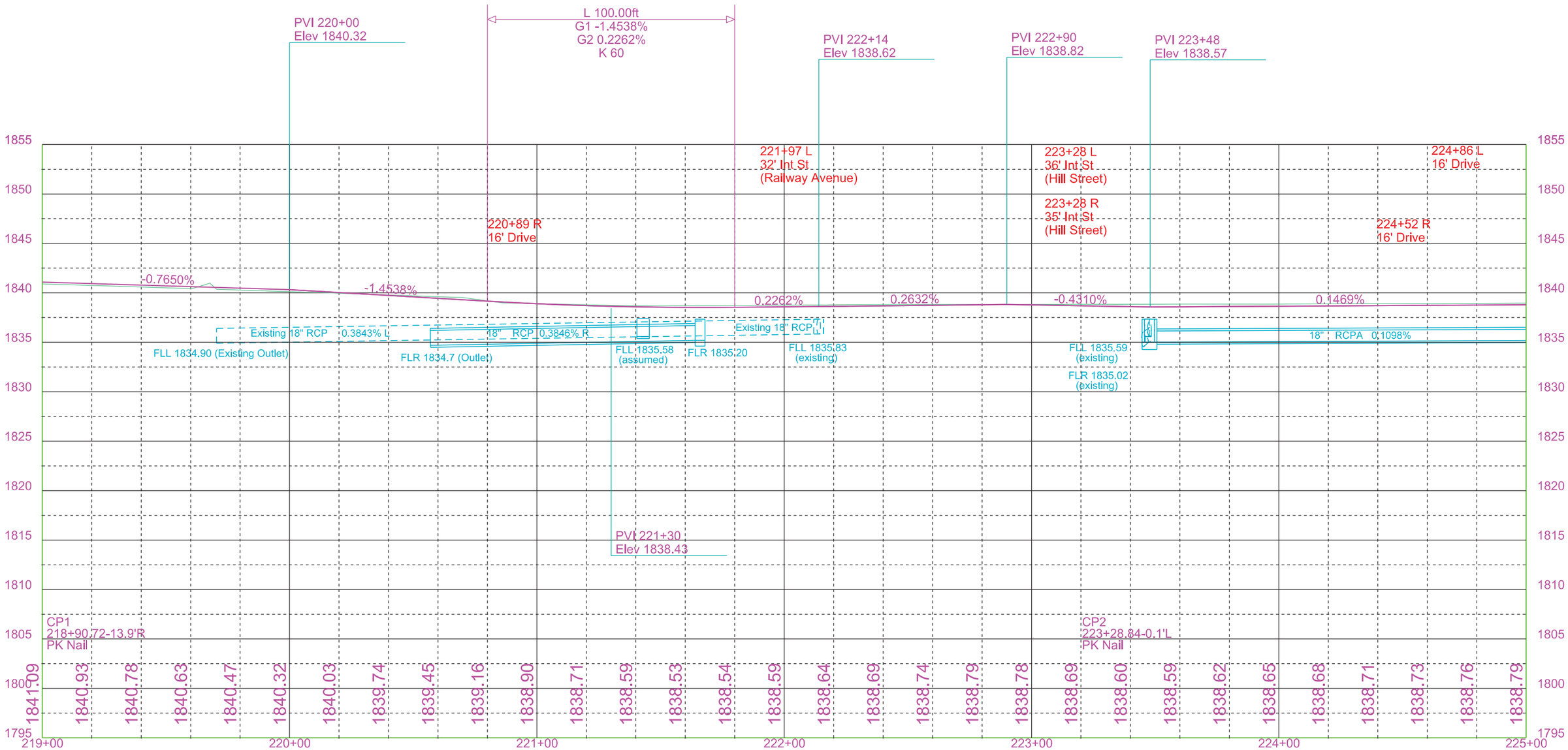

PLOT SCALE - 1:40

PLOT NAME - 13

FILE - ...\HAML020K\REGIONDESIGN\219V.DGN

PLOTTED FROM - TRAB17882

Rev. 6-2-15 SLS

STATE OF SOUTH DAKOTA	PROJECT	SHEET NO.	TOTAL SHEETS
	P 0028(32)319	58	135

Plotting Date: 10/23/2015

226+48-19.67'L to 226+48-19.67' R
Install 18"- 36' RCPA
(Between Drop Inlets)

226+48-19.67'L to 227+42-19.67' L
Install 18"- 90' RCPA
(Between Drop Inlets)

226+48-19.67'R to 227+42-19.67' R
Install 18"- 90' RCPA
(Between Drop Inlets)

Take Out Drop Inlet &
Frame & Grate
at the following locations:
230+41-19'L
230+41-19'R

230+41-19'L to 230+41-19'R
Take Out 18"-36' RCP
(Incidental Work, Grading)

230+41-19'R to 230+44-19'R
Take Out 18"-4' RCP
(Incidental Work, Grading)

Install 3'x4' Type B Drop Inlet
and Type B Frame and Grate
at the following locations:
226+48-19.67'L
226+48-19.67'R
227+42-19.67'L
227+42-19.67'R
230+19-19.67'R

230+19-19.67'L to 230+19-19.67'R
Install 18"- 38' RCPA
(Between Drop Inlets)

230+19-19.67'R to 230+45-19.3'R
Install 18"- 22' RCPA &
1-4' 18" RCPA to 18" RCP Transition
(Between Drop Inlet and
Existing Storm Sewer)

Install 2'x3' Type B Drop Inlet
and Type B Frame and Grate
at the following locations:
230+19-19.67'L

Clear and Grub Tree
at the following locations:
226+67-38'L
229+12-26'L
229+26-28'L
229+91-28'L
230+13-27'L
230+23-26'L
230+34-36'L

Clear and Grub Stump
at the following locations:
226+67-28'L

BRYANT

Milwaukee Land Company's First Addition

Property Line

Lot 6

Rolland O. Thoreson & Margie A. Thoreson

Lot 7 in Block 8 of
Milwaukee Land Company's First Addition
to the Village of Bryant

Parcel A5

Lot 7

BLOCK 8

225+42 L to 226+34 L
Do Not Disturb Trees

224+96-34.19'L & 37'

226+45-33.61'

226+56-45' & 58'

226+61.51-33.55'

226+61.62-58'

16'

Underwood Street

66'

Lot 9

227+21-33'L
Do Not Disturb
Fire Hydrant

Lot 8

Milwaukee Land Company's Second Addition

Lot 6

Rick Winters & Jo Ann Winters

Lot 7 in Block 9 of
Milwaukee Land Company's Second Addition
to the Town of Bryant

Parcel A8

Lot 7

BLOCK 9

16'

230+22-32.29' & 70'

230+27.03-32.27'

230+27.21-70'

Prosper Street

66'

230+85-36'L
Do Not Disturb
Fire Hydrant

230+83-30'L
Do Not Disturb
Light Pole

Section Line

225+00

226+00

66'

227+00

66'

Present SD Hwy 28

228+00

Section Line

229+00

230+00

66'

231+00

230+80-33'R
Do Not Disturb
Power Pole

Lot 2

BLOCK 3

YOUNG'S
ADDTION

Property Line

66'

Lot 3

BLOCK 2

YOUNG'S
ADDTION

Lot 2

Property Line

Parcel A5
226+45 to 226+61.62 L
Temporary Easement for
Sidewalk containing
199 sq ft, more or less

Parcel A8
230+22 to 230+27.21 L
Temporary Easement for
Sidewalk containing
193 sq ft, more or less

PLOT SCALE - 1:40

PLOT NAME - 14

FILE - ...\HAML020K\REGIONDESIGN\225.DGN

PLOTTED FROM - TRAB17882

STATE OF SOUTH DAKOTA	PROJECT	SHEET NO.	TOTAL SHEETS
	P 0028(32)319	59	135

Plotting Date: 10/23/2015

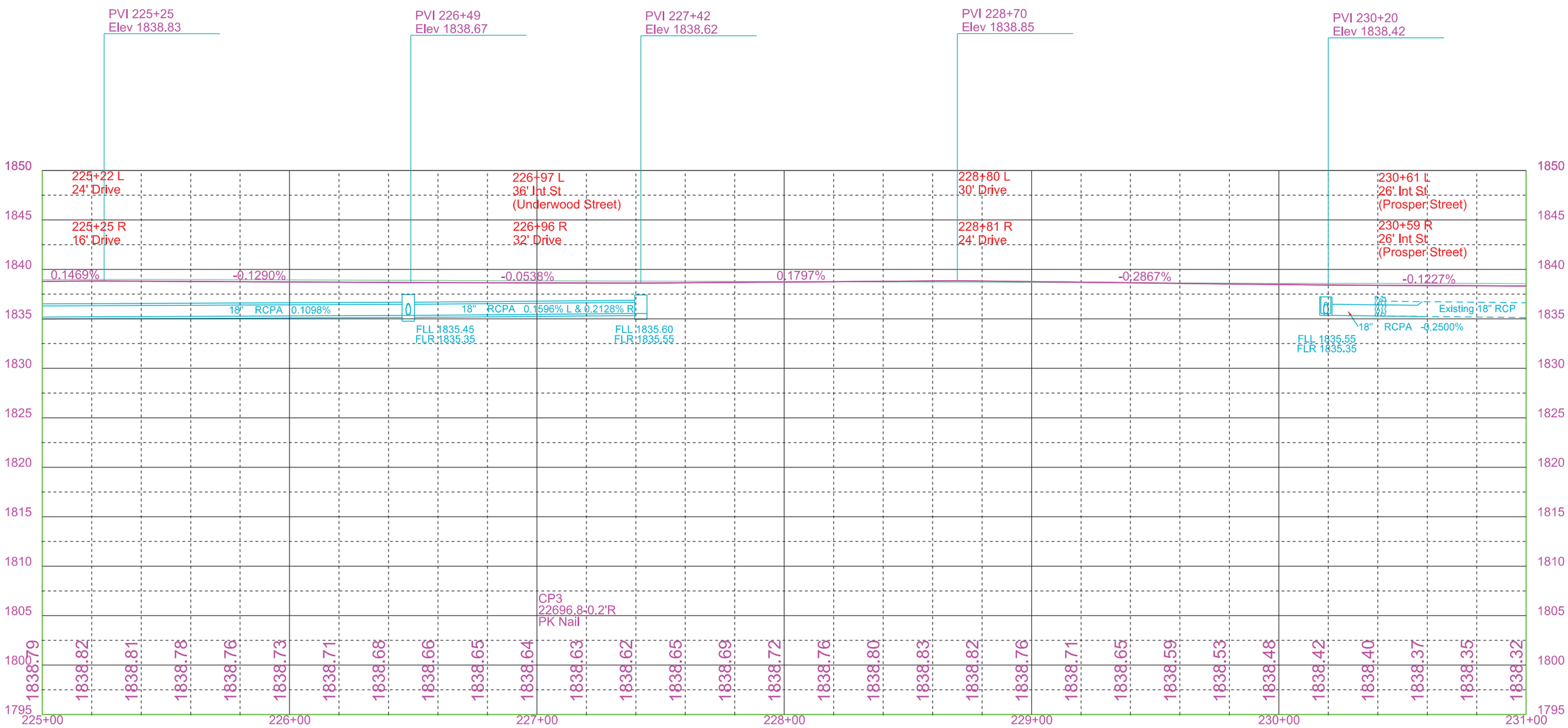

PLOT SCALE - 1:40

PLOT NAME - 15

FILE - ...\HAML020K\REGIONDESIGN\225V.DGN

PLOTTED FROM - TRAB17882

Rev 6-5-15 SLS

STATE OF SOUTH DAKOTA	PROJECT	SHEET NO.	TOTAL SHEETS
	P 0028(32)319	60	135

Plotting Date: 10/23/2015

Install 3'x4' Type B Drop Inlet and Type B Frame and Grate at the following locations: 234+09-19.67'R

Take Out Drop Inlet & Frame & Grate at the following locations: 234+09-19'R

Do Not Disturb Drop Inlet at the following locations: 234+03-19'L

234+03-19' L to 234+78-29'L Clean Out Culvert between Drop Inlet and Flared End

Take out 18" Flared End (Incidental Work, Grading) 234+77-31'L 234+77-29'L

235+12 L to 235+70 L Take Out 15" -116' RCP with Safety Ends (Incidental Work, Grading)

234+72.1-28.3' to 235+70-29.3'L Install 18"- 94' RCP, 1 Long Radius Bend & 1 Safety End (Between Existing 18" RCP storm sewer & Outlet)

234+72.7-31.5' to 235+00-31.75'L Install 18"- 22' RCP & 1 Long Radius Bend (Between Existing 18" RCP storm sewer & Drop Inlet)

235+00-31.75'L to 235+70-32'L Install 18"- 68' RCP & 1 Safety End (Between Drop Inlet & Outlet)

235+00.0-31.75'L Install 3'x4' Type C Drop Inlet and Type C Frame and Grate

Reprofile Ditch within R.O.W. at the following locations: 235+76 L to 238+50 L

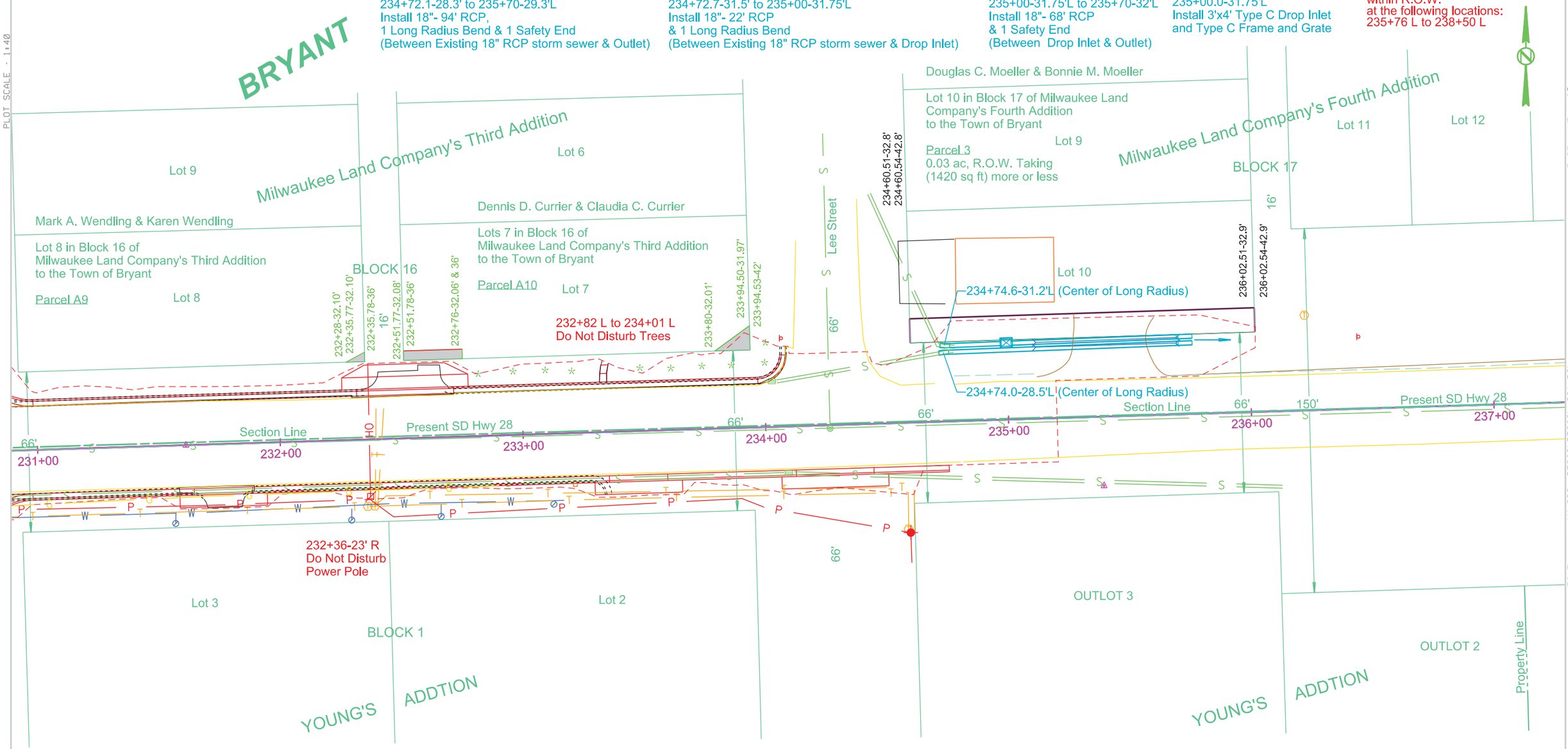

Parcel A9
232+28 to 232+35.78 L
Temporary Easement for Drive containing
15 sq ft, more or less

Parcel A10
232+51.77 to 232+76 L
Temporary Easement for Drive containing
95 sq ft, more or less

Parcel A10
233+80 to 233+94.53 L
Temporary Easement for Drainage containing
73 sq ft, more or less

PLOT SCALE - 1:40

PLOTTED FROM - TRAB17882

PLOT NAME - 16

FILE - ...\HAML02OK\REGIONDESIGN\231.DGN

Rev. 6-5-15 SLS

STATE OF SOUTH DAKOTA	PROJECT	SHEET NO.	TOTAL SHEETS
	P 0028(32)319	61	135

Plotting Date: 10/23/2015

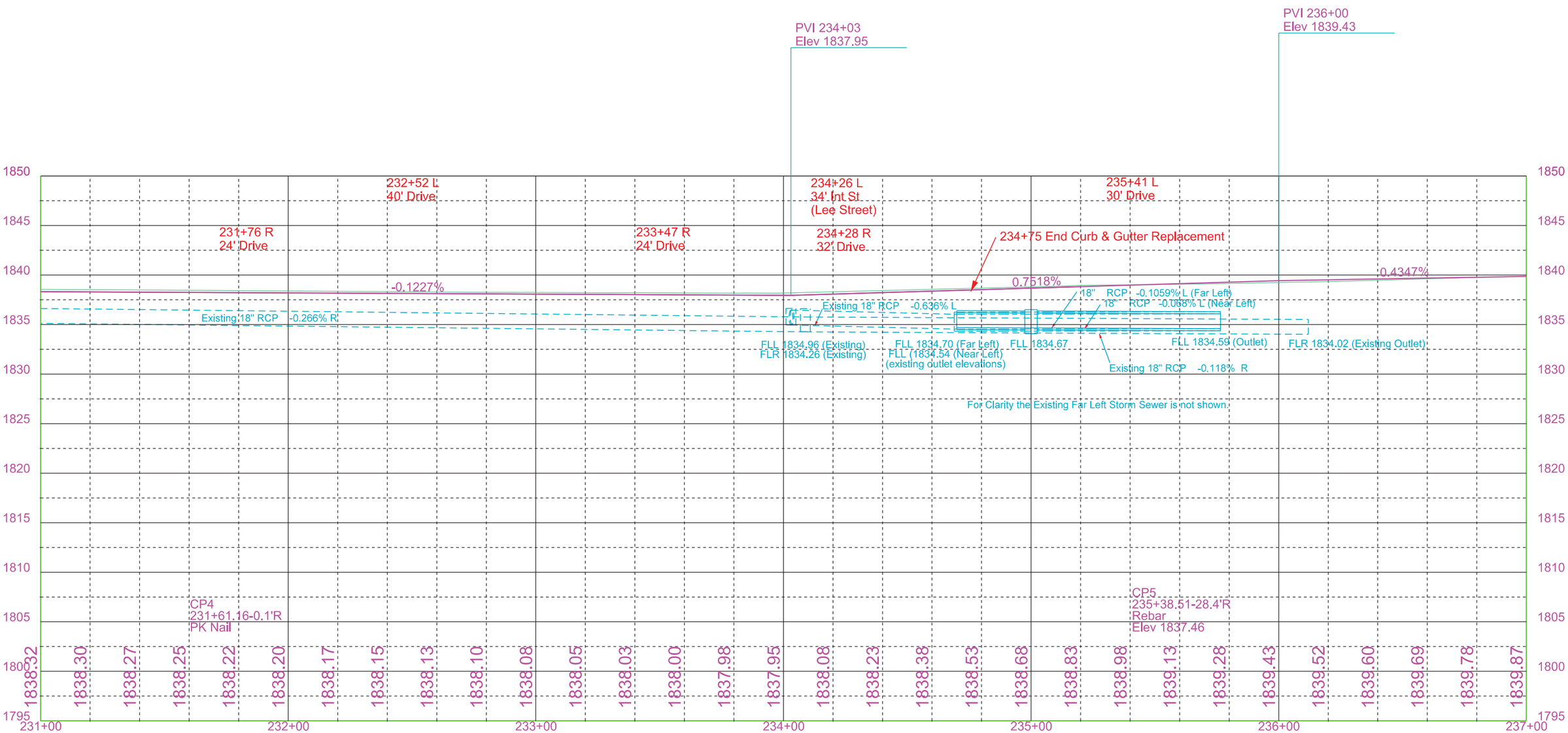

PLOT SCALE - 1:40

PLOT NAME - 17

FILE - ...\HAML02OK\REGIONDESIGN\231V.DGN

PLOTTED FROM - TRAB17982

STATE OF SOUTH DAKOTA	PROJECT	SHEET NO.	TOTAL SHEETS
	P 0028(32)319	62	135

Plotting Date: 10/23/2015

238+38 L to 239+00 L
Take Out 18" - 62' RCP
with Safety Ends
(Incidental Work, Grading)

239+03
Do Not Disturb
Twin CMP

238+69-43' L
Install 18" - 34 CMPA
with 2 Safety Ends

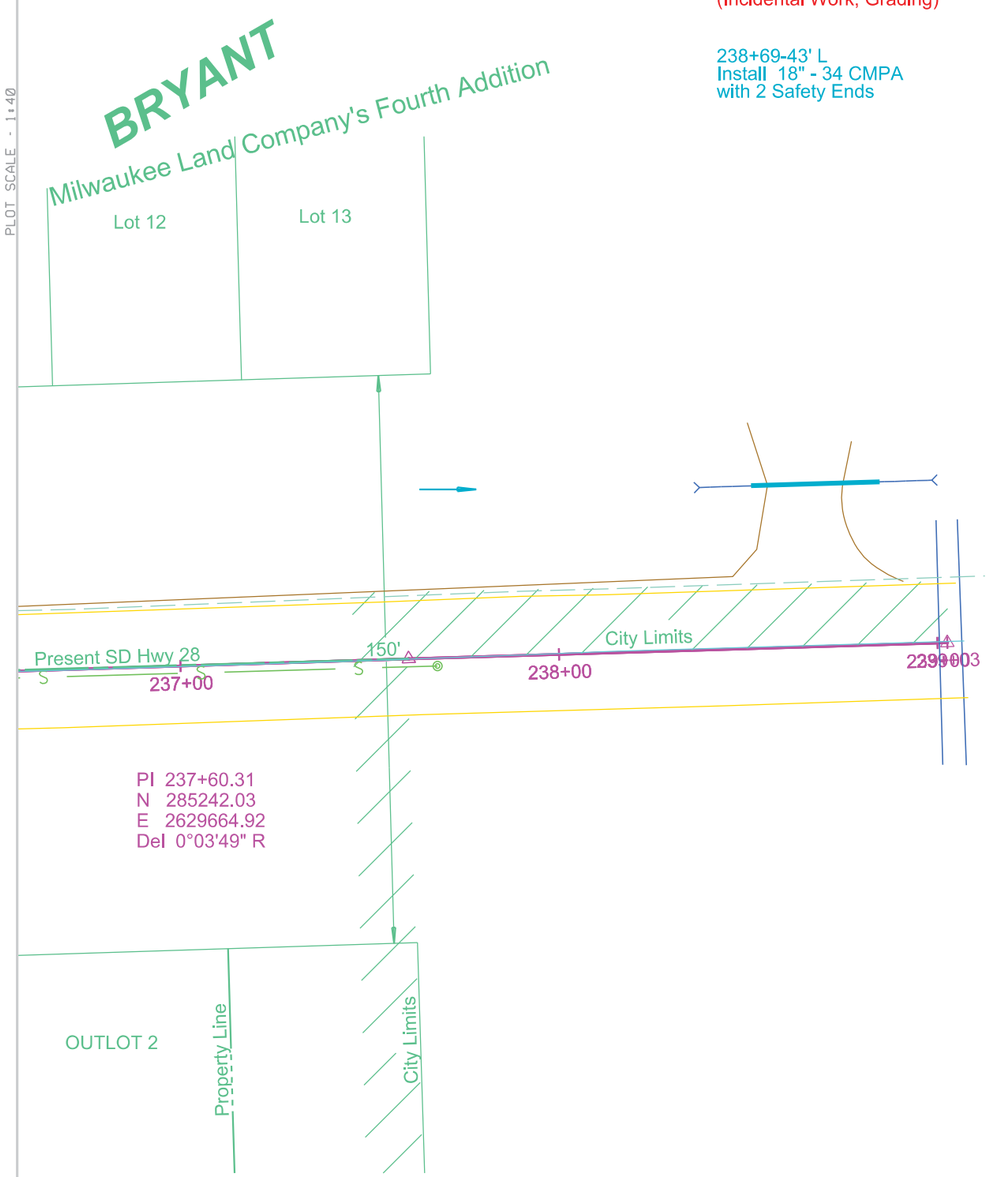

PLOT SCALE - 1:40

PLOTTED FROM - TRAB17882

PLOT NAME - 18

FILE - ...\HAML020K\REGIONDESIGN\237.DGN

REMOVAL LAYOUTS

STATE OF SOUTH DAKOTA	PROJECT	SHEET NO.	TOTAL SHEETS
	P 0028(32)319	63	135

Plotting Date: 10/23/2015

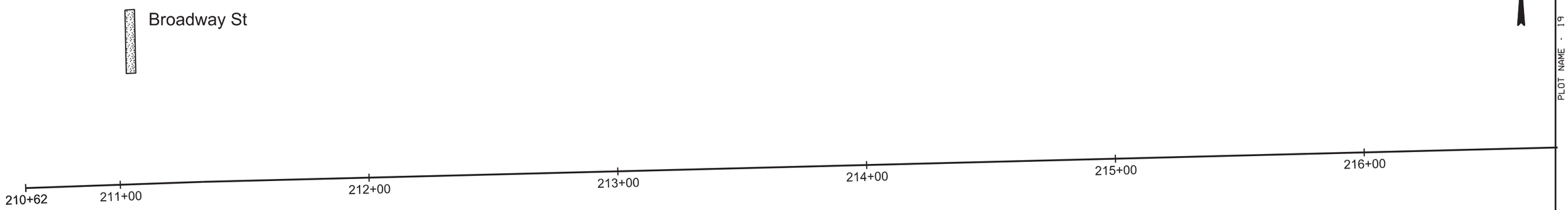

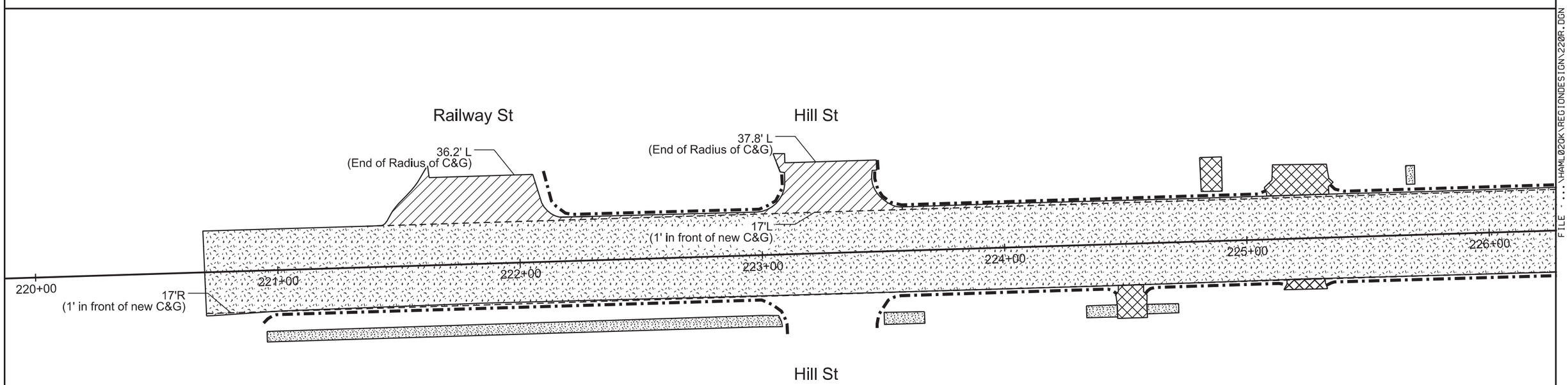

Remove Sidewalk

Remove Asphalt Concrete

Remove PCC Driveway Pavement

Cold Milling Asphalt Concrete

Remove Concrete Curb and Gutter

Notes:
Asphalt Concrete Pavement shall be sawcut 1' in front of the new Curb and Gutter to allow for placement of forms. Remove Asphalt Concrete quantities were determined based upon including this 1' strip.

PLOT SCALE - 1:40

PLOT NAME - 19

FILE - ...\HAML020K\REGIONDESIGN\220R.DGN

PLOTTED FROM - TRAB17882

STATE OF SOUTH DAKOTA	PROJECT	SHEET NO.	TOTAL SHEETS
	P 0028(32)319	64	135

Plotting Date: 10/23/2015

REMOVAL LAYOUTS

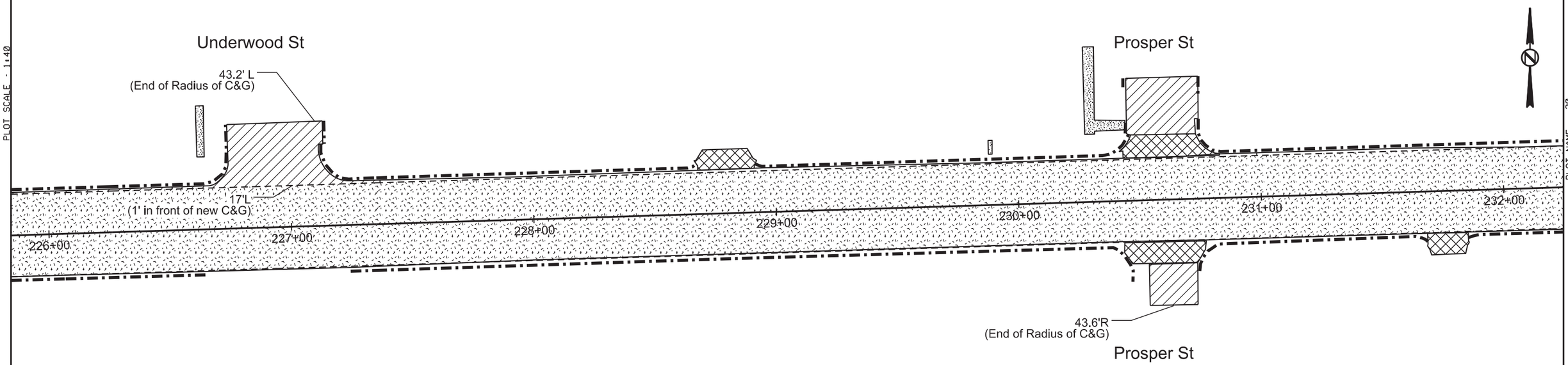

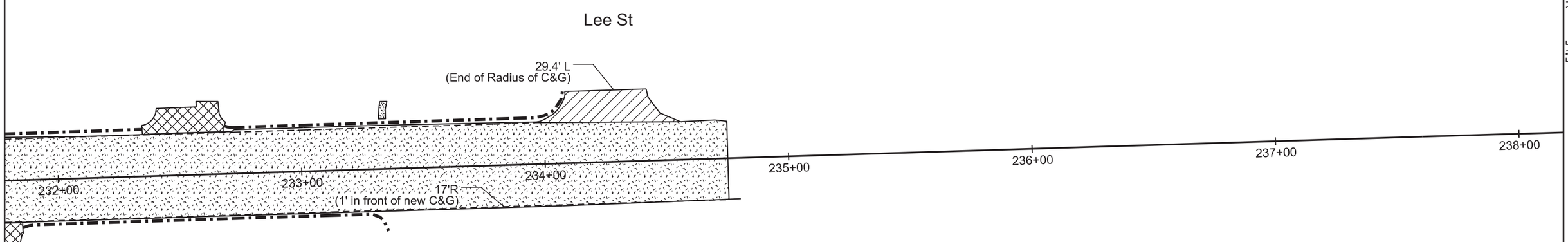

Remove Sidewalk

Remove Asphalt Concrete

Remove PCC Driveway Pavement

Cold Milling Asphalt Concrete

Remove Concrete Curb and Gutter

Notes:
Asphalt Concrete Pavement shall be sawcut 1' in front of the new Curb and Gutter to allow for placement of forms. Remove Asphalt Concrete quantities were determined based upon including this 1' strip.

PLOT SCALE - 1:40

PLOT NAME - 20

FILE - ...\HAML020K\REGIONDESIGN\226R.DGN

PLOTTED FROM - TRAB17882

STATE OF SOUTH DAKOTA	PROJECT	SHEET NO.	TOTAL SHEETS
	P 0028(32)319	65	135

Plotting Date: 10/23/2015

CURB & GUTTER LAYOUT

1 222+06.34 - 36.24' L
Begin 25' Radius
Transition from existing valley gutter
to Type B66 C&G
Match existing elevation

2 222+30.41 - 18.00' L
End 25' Radius
Begin Str C & G
TC El 1838.40

3 222+90.45 - 18.00' L
End Str C&G
Begin 20' Radius
TC El 1838.56

4 223+10.45 - 37.79' L
End 20' Radius
Transition from Type B66 C&G
to existing valley gutter
Match existing elevation

5 223+46.29 - 30.13' L
Begin 12' Radius
TC El 1838.75 (Assumed)

6 223+58.29 - 18.00' L
End 12' Radius
Begin Str C & G
TC El 1838.33

7 224+78.00 - 18.00' L
End Str C&G
Begin Type P Gutter
TC El 1838.50 (Theor.)

8 224+94.00 - 18.00' L
End Type P Gutter
Begin Str. C&G
TC El 1838.52 (Theor.)

9 225+10.00 - 18.00' L
End Str C&G
Begin Type P Gutter
TC El 1838.55 (Theor.)

10 225+34 - 18.00' L
End Type P Gutter
Begin Str C & G
TC El 1838.56 (Theor.)

11 226+51.38 - 18.00' L
End Str C&G
Begin 25' Radius
TC El 1838.41

12 226+76.38 - 42.94' L
End 25' Radius
TC El 1839.02 (Assumed)

NOTE: All Curb & Gutter shown on this sheet is B66

All P Gutter shown on this sheet is P8

All Sidewalk is 5' wide except as noted.

Detectable Warning Surface

6" PCC Driveway Pavement

8" Concrete Valley Gutter

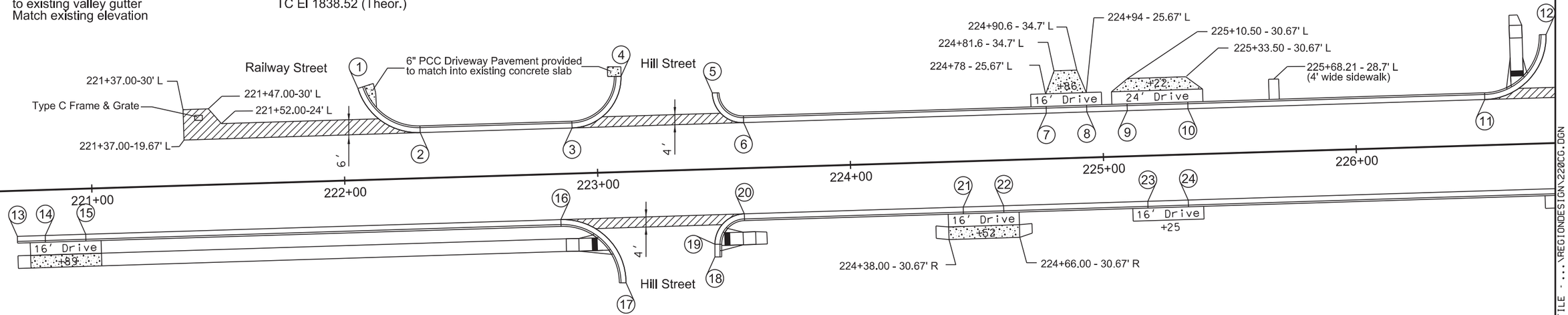

13 220+70.00 - 18.00' R
Begin Str. C&G
TC El 1839.04

14 220+81.00 - 18.00' R
End Str C & G
Begin Type P Gutter
TC El 1838.88 (Theor.)

15 220+97.00 - 18.00' R
End Type P Gutter
Begin Str C&G
TC El 1838.67 (Theor.)

16 222+84.92 - 18.00' R
End Str C&G
Begin 25' Radius
TC El 1838.55

17 223+09.91 - 43.78' R
End 25' Radius
TC El 1838.30 (Adjust as needed)

18 223+45.31 - 34.63' R
Begin Str C & G
TC El 1838.13 (Adjsut as needed)

19 223+45.47 - 29.63' R
End Str C&G
Begin 12' Radius
TC El 1838.18 (Theor.)

20 223+57.46 - 18.00' R
End 12' Radius
Begin Str. C&G
TC El 1838.32

21 224+44.00 - 18.00' R
End Str C&G
Begin Type P Gutter
TC El 1838.45 (Theor.)

22 224+60.00 - 18.00' R
End Type P Gutter
Begin Str C & G
TC El 1838.45 (Theor.)

23 225+17.00 - 18.00' R
End Str C&G
Begin Type P Gutter
TC El 1838.56 (Theor.)

24 225+33.00 - 18.00' R
End Type P Gutter
Begin Str C&G
TC El 1838.56 (Theor.)

PLOT SCALE - 1:40
PLOT NAME - 21
FILE ...\REGIONDESIGN\220CG.DGN
PLOTTED FROM - TRAB17982

STATE OF SOUTH DAKOTA	PROJECT	SHEET NO.	TOTAL SHEETS
	P 0028(32)319	66	135

Plotting Date: 10/23/2015

CURB & GUTTER LAYOUT

1 227+12.06 - 43.22' L
Begin 25' Radius
TC El 1838.97 (Assumed)

2 227+37.06 - 18.00' L
End 25' Radius
Begin Str C & G
TC El 1838.36

3 228+65.00 - 18.00' L
End Str C&G
Begin Type P Gutter
TC El 1838.58 (Theor.)

4 228+95.00 - 18.00' L
End Type P Gutter
Begin Str C&G
TC El 1838.52 (Theor.)

5 230+22.24 - 18.00' L
End Str C&G
Begin 25' Radius
TC El 1838.16

6 230+47.24 - 43.32' L
End 25' Radius
Begin Str C & G
TC El 1838.83

7 230+47.15 - 50.32' L
End Str C&G
TC El 1838.95 (Assumed)

8 230+73.39 - 50.47' L
End Str. C&G
TC El 1838.67 (Assumed)

9 230+73.66 - 43.46' L
End Str C&G
Begin 25' Radius
TC El 1838.57

10 230+98.66 - 18.00' L
End 25' Radius
Begin Str C & G
TC El 1838.06

11 232+32.00 - 18.00' L
End Str C&G
Begin Type P Gutter
TC El 1837.90 (Theor.)

12 232+72.00 - 18.00' L
End Type P Gutter
Begin Str C&G
TC El 1837.85 (Theor.)

NOTE: All Curb & Gutter shown on this sheet is B66

All P Gutter shown on this sheet is P8

All Sidewalk is 5' wide except as noted.

Detectable Warning Surface

6" PCC Driveway Pavement

8" Concrete Valley Gutter

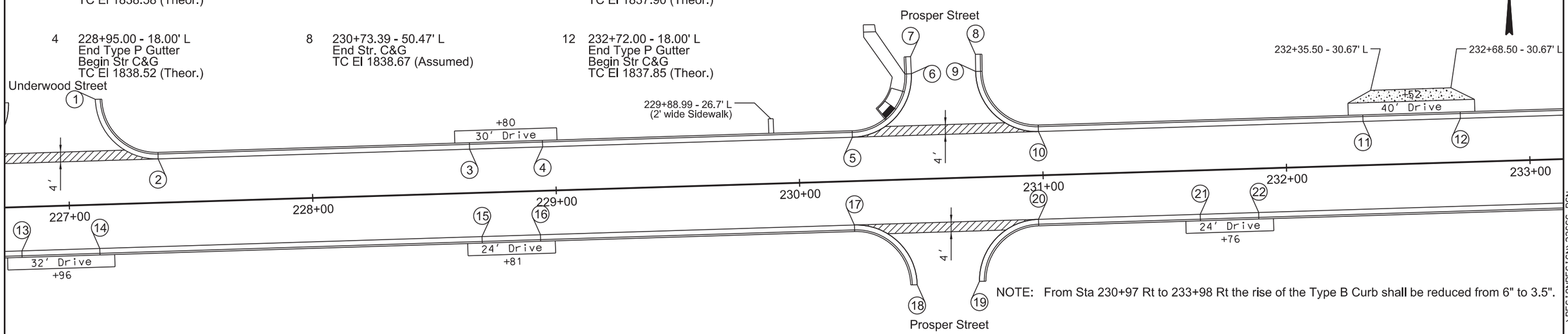

NOTE: From Sta 230+97 Rt to 233+98 Rt the rise of the Type B Curb shall be reduced from 6" to 3.5".

13 226+80.00 - 18.00' R
Begin Type P Gutter
End Str. C&G
TC El 1838.39 (Theor.)

14 227+12.00 - 18.00' R
End Type P Gutter
Begin Str C&G
TC El 1838.38 (Theor.)

15 228+69.00 - 18.00' R
End Str C&G
Begin Type P Gutter
TC El 1838.39 (Theor.)

16 228+93.00 - 18.00' R
End Type P Gutter
Begin Str C&G
TC El 1838.32 (Theor.)

17 230+21.96 - 18.00' R
End Str C&G
Begin 25' Radius
TC El 1838.16

18 230+46.95 - 43.30' R
End 25' Radius
TC El 1838.48 (Assumed)

19 230+72.75 - 42.70' R
Begin 25' Radius
TC El 1838.20 (Assumed)

20 230+97.57 - 18.00' R
End 25' Radius
Begin Str. Modified Type B C&G
TC El 1837.86

21 231+64.00 - 18.00' R
End Str Modified Type B C&G
Begin Type P Gutter
TC El 1837.78 (Theor.)

22 231+88.00 - 18.00' R
End Type P Gutter
Begin Str Modified Type B C & G
TC El 1837.75 (Theor.)

PLOT SCALE - 1:40

PLOTTED FROM - TRAB17882

PLOT NAME - 22

FILE - ...\REGIONDESIGN\226CG.DGN

CURB & GUTTER LAYOUT

1 233+97.29 - 18.00' L
End Str C&G
Begin 25' Radius
TC El 1837.70

2 234+09.27 - 29.48' L
End 25' Radius
TC El 1837.56 (Theor.)

NOTE: All Curb & Gutter shown on this sheet is B66

All P Gutter shown on this sheet is P8

All Sidewalk is 5' wide except as noted.

Detectable Warning Surface

6" PCC Driveway Pavement

8" Concrete Valley Gutter

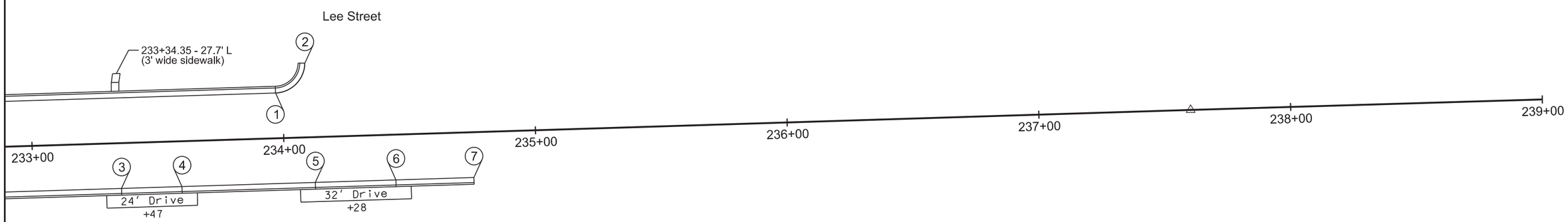

NOTE: From Sta 230+97 Rt to 233+98 Rt the rise of the Type B Curb shall be reduced from 6" to 3.5".

3 233+35.00 - 18.00' R
End Str Modified Type B C&G
Begin Type P Gutter
TC El 1837.57 (Theor.)

4 233+59.00 - 18.00' R
End Type P Gutter
Begin Str Modified Type B C&G
TC El 1837.54 (Theor.)

5 234+12.00 - 18.00' R
End Str C&G
Begin Type P Gutter
TC El 1837.75 (Theor.)

6 234+44.00 - 18.00' R
End Type P Gutter
Begin Str C&G
TC El 1838.00 (Theor.)

7 234+75.00 - 18.00' R
End Str C&G
TC El 1838.23 (Theor.)

PLOT SCALE - 1:40
PLOTTED FROM - TRAB17982
PLOT NAME - 23
FILE - ...\REGIONDESIGN\233CG.DGN

STATE OF SOUTH DAKOTA	PROJECT	SHEET NO.	TOTAL SHEETS
	P 0028(32)319	68	135

Plotting Date: 10/23/2015

CURB RAMP DETAILS
Broadway Street

1 211+14.92 - 27.32' L
Center Detectable Warning

2 211+08.90 - 31.20' L
Begin Ramp Slope

NOTE: All Curb & Gutter shown on this sheet is B66.

All P Gutter shown on this sheet is P8.

All Sidewalk is 5' wide except as noted.

* Landing
** Ramp slopes with 8.3% max slope
*** Sidewalk with 5% max long slope
▬ Detectable Warning Surface

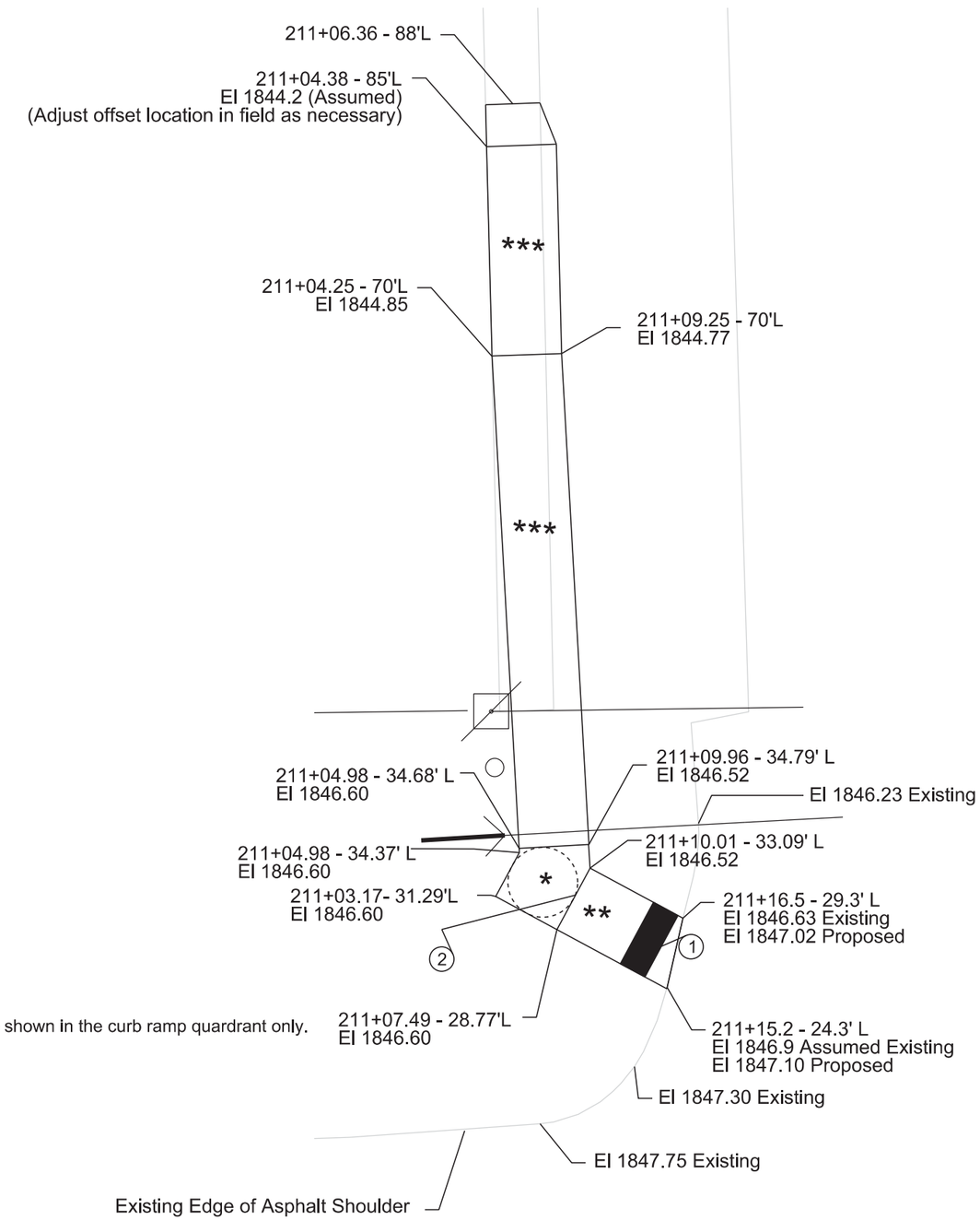

Existing sidewalk, and edge of asphalt are shown in the curb ramp quardrant only.

PLOT SCALE - 1:10

PLOTTED FROM - TRAB17982

PLOT NAME - 24

FILE - ...\REGIONDESIGN\211CG_DTL.DGN

STATE OF SOUTH DAKOTA	PROJECT	SHEET NO.	TOTAL SHEETS
	P 0028(32)319	69	135

Plotting Date: 10/23/2015

CURB RAMP DETAILS
Hill Street

NOTE: All Curb & Gutter shown on this sheet is B66.

All P Gutter shown on this sheet is P8.

All Sidewalk is 5' wide except as noted.

* Landing
** Ramp slopes with 8.3% max slope
*** Sidewalk with 5% max long slope
▬ Detectable Warning Surface

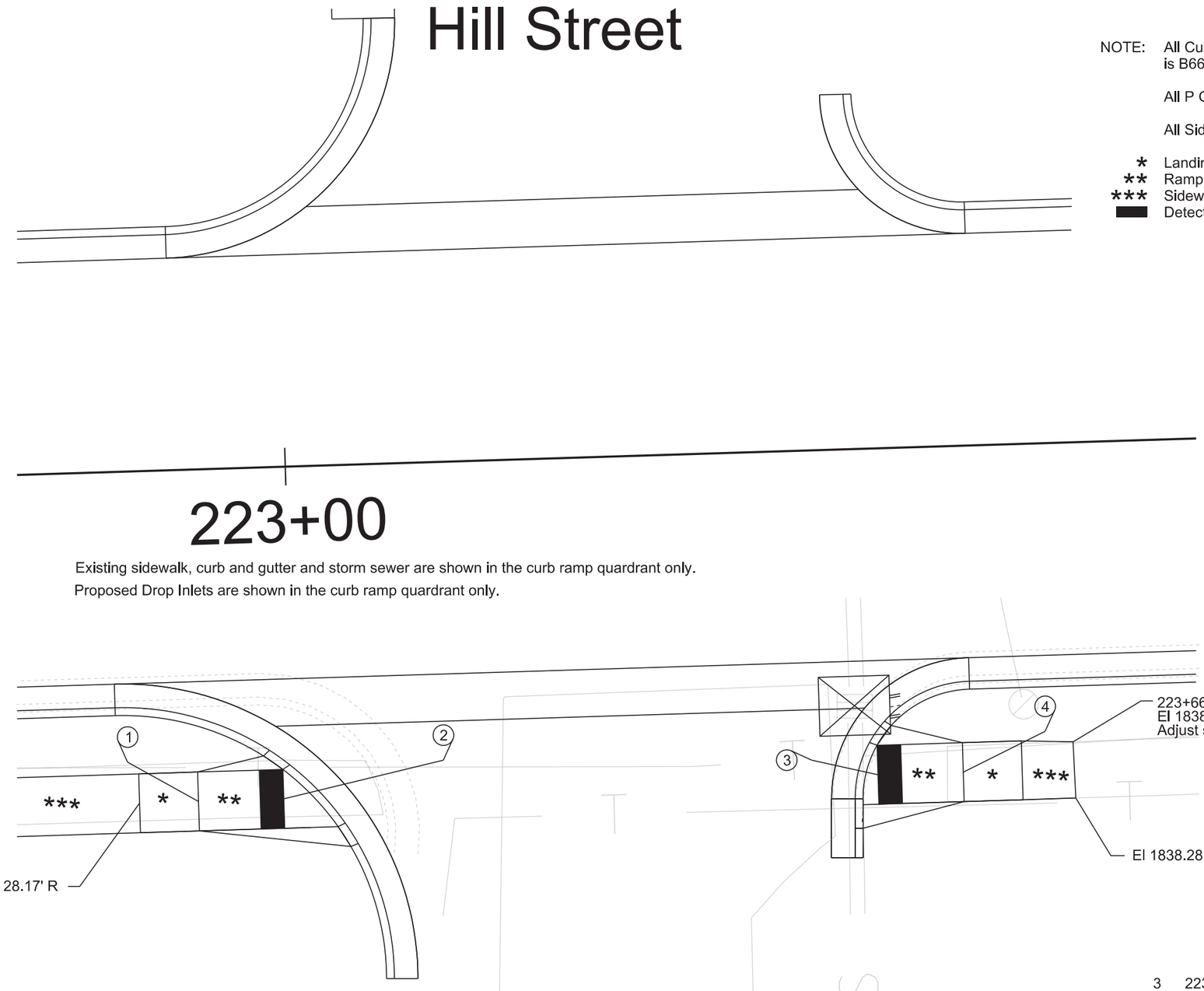

Existing sidewalk, curb and gutter and storm sewer are shown in the curb ramp quardrant only.
Proposed Drop Inlets are shown in the curb ramp quardrant only.

1 222+91.75 - 28.17' R
Begin Ramp Slope

2 222+99 - 28.17' R
Center Detectable Warning

3 223+49.47 - 27.69' R
Center Detectable Warning

4 223+56.71- 27.69' R
Begin Ramp Slope

PLOT SCALE - 1:10

PLOTTED FROM - TRAB17882

PLOT NAME - 25

FILE - ...\REGIONDESIGN\222CG_DTL.DGN

STATE OF SOUTH DAKOTA	PROJECT	SHEET NO.	TOTAL SHEETS
	P 0028(32)319	70	135

Plotting Date: 10/23/2015

CURB RAMP DETAILS
Underwood Street

1 226+64.40 - 41.95' L
Begin Ramp Slope

2 226+64.40 - 26.95' L
Center Detectable Warning

NOTE: All Curb & Gutter shown on this sheet is B66.

All P Gutter shown on this sheet is P8.

All Sidewalk is 5' wide except as noted.

* Landing
** Ramp slopes with 8.3% max slope
*** Sidewalk with 5% max long slope
Detectable Warning Surface

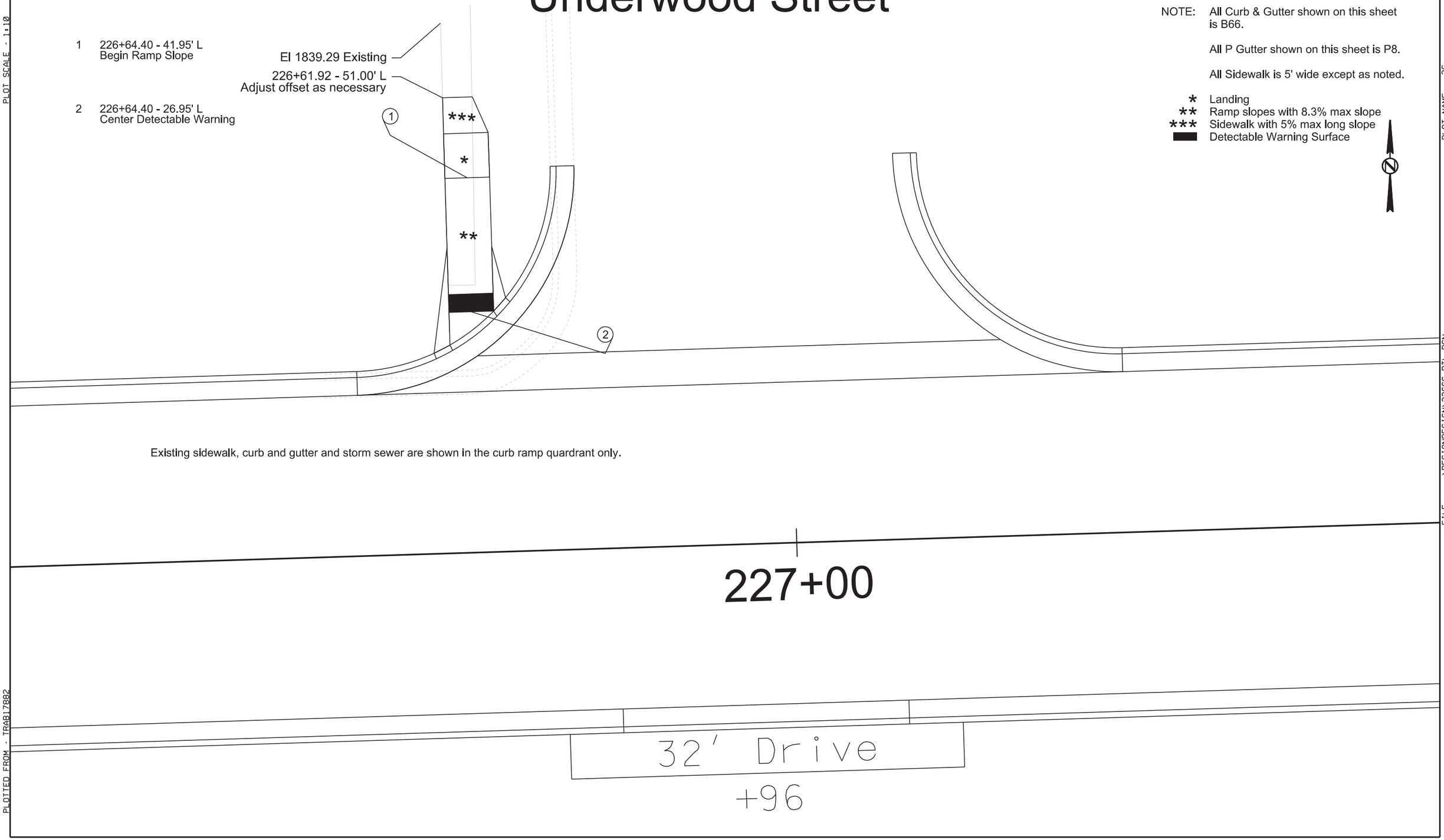

Existing sidewalk, curb and gutter and storm sewer are shown in the curb ramp quardrant only.

PLOT SCALE - 1:10

PLOT NAME - 26

FILE - ...\REGIONDESIGN\226CG_DTL.DGN

PLOTTED FROM - TRAB17882

STATE OF SOUTH DAKOTA	PROJECT	SHEET NO.	TOTAL SHEETS
	P 0028(32)319	71	135

Plotting Date: 10/23/2015

CURB RAMP DETAILS
Prosper Street

1 230+27.37 - 37.98' L
Center Detectable Warning

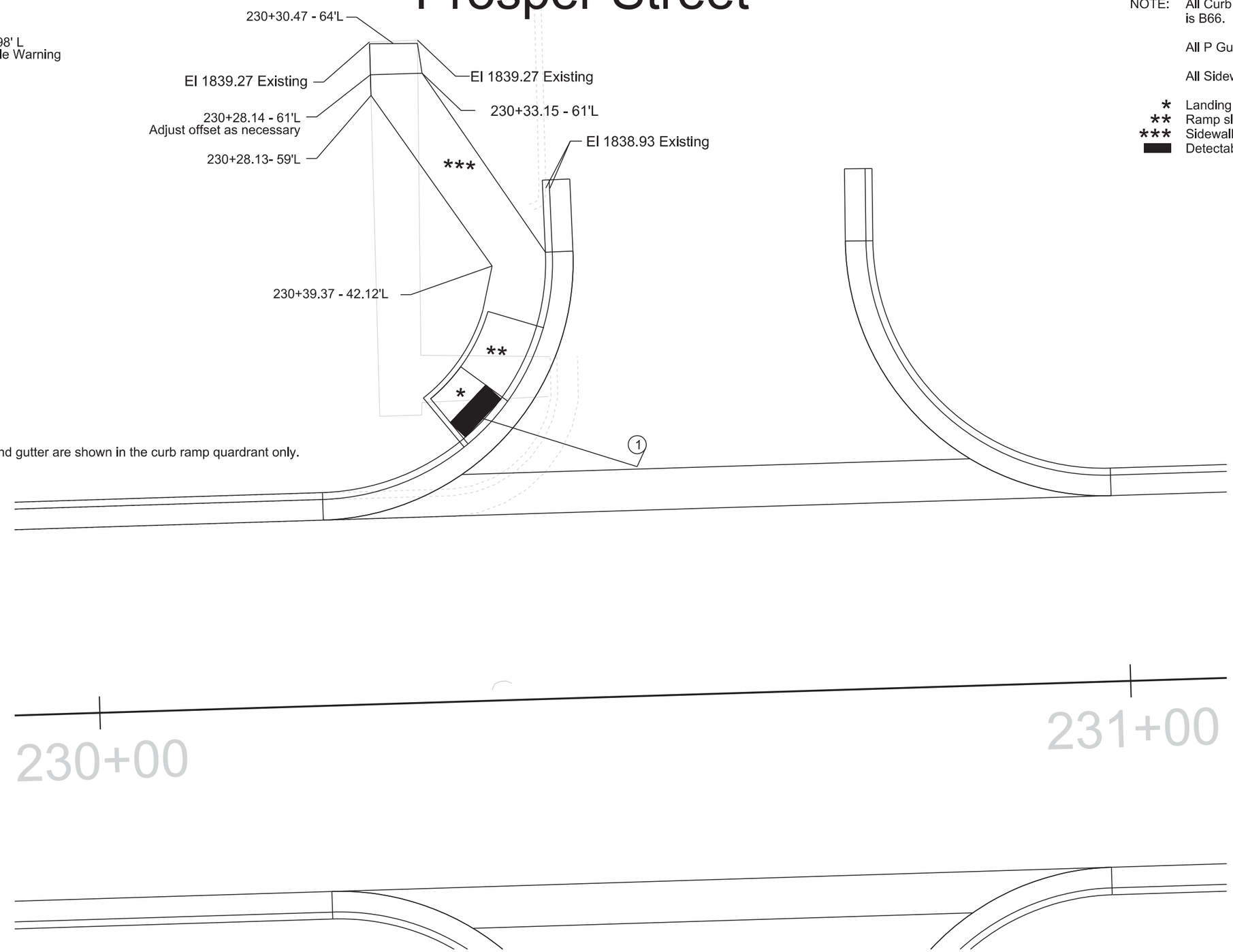

Existing sidewalk and curb and gutter are shown in the curb ramp quardrant only.

NOTE: All Curb & Gutter shown on this sheet is B66.

All P Gutter shown on this sheet is P8.

All Sidewalk is 5' wide except as noted.

* Landing (Max 2% Slope in any Direction)
** Ramp slopes with 8.3% max slope
*** Sidewalk with 5% max long slope
▬ Detectable Warning Surface

PLOT SCALE - 1:10

PLOT NAME - 27

FILE - ...\REGIONDESIGN\230CC_DTL.DGN

PLOTTED FROM - TRAB17882

STATE OF SOUTH DAKOTA	PROJECT	SHEET	TOTAL SHEETS
	P-PH 0240(12)128	72	135

Plotting Date: 10/23/2015

EROSION AND SEDIMENT CONTROL LEGEND

SYMBOLOGY FOR BEST MANAGEMENT PRACTICES

- STORM WATER DISCHARGE POINT
- LOW FLOW SILT FENCE
- HIGH FLOW SILT FENCE
- HIGH FLOW SILT FENCE AT PIPE INLET
- SILT TRAP
- SEDIMENT CONTROL AT INLET BEFORE PLACEMENT OF SURFACING
- TEMPORARY SEDIMENT BARRIER
- TEMPORARY WATER BARRIER
- FLOATING SILT CURTAIN
- SEDIMENT FILTER BAGS
- TRIANGULAR SILT BARRIERS
- EROSION CONTROL WATTLES ON SLOPES
- EROSION CONTROL WATTLES AT INLETS
- EROSION CONTROL WATTLES IN DITCHES
- EROSION BALES
- SURFACE ROUGHENING
- SOIL STABILIZER / TEMPORARY MULCH / DUST CONTROL
- CUT INTERCEPTOR DITCH
- TEMPORARY SLOPE DRAIN
- SEDIMENT CONTROL AT INLET AFTER PLACEMENT OF SURFACING
- INTERMEDIATE PHASE--SOIL STABILIZER, FINAL PHASE--FIBER REINFORCED MATRIX
- ROCK CHECK DAM
- VEGETATED BUFFER STRIP
- TYPE 1 EROSION CONTROL BLANKET
- TYPE 2 EROSION CONTROL BLANKET
- TYPE 3 EROSION CONTROL BLANKET
- TYPE 4 EROSION CONTROL BLANKET
- TYPE 1 TURF REINFORCEMENT MAT
- TYPE 2 TURF REINFORCEMENT MAT
- TYPE 3 TURF REINFORCEMENT MAT
- SYNTHETIC CHANNEL PROTECTION
- TYPE 1 SEDIMENT TRAP
- TYPE 2 SEDIMENT TRAP
- TYPE 3 SEDIMENT TRAP

BEST MANAGEMENT PRACTICES

Best Management Practices (BMPs) are split into three categories and are to be used throughout construction.

INITIAL PHASE

BMPs from the Legend shown as Orange Symbols on the Erosion and Sediment Control Plan Sheets are to be installed in the Initial Phase prior to earth disturbing activities and remain in place for the Intermediate Phase for temporary stabilization and in the Final Phase to achieve final stabilization.

INTERMEDIATE PHASE

BMPs from the Legend shown as Blue Symbols on the Erosion and Sediment Control Plan Sheets are to be installed in the Intermediate Phase for temporary stabilization and remain in place in the Final Phase to achieve final stabilization.

FINAL PHASE

BMPs from the Legend shown as Green Symbols on the Erosion and Sediment Control Plan Sheets are to be installed in the Final Phase to achieve final stabilization.

If these items are applicable they are to be shown in the updated SWPPP using the Symbols given.

- TS — TOPSOIL STOCKPILES
- B — BORROW AREAS
- CE — STABILIZED CONSTRUCTION ENTRANCES
- VB — VEGETATED BUFFER STRIPS
- CW — CONCRETE WASHOUTS
- AP — ASPHALT PLANT SITES
- CP — CONCRETE PLANT SITES
- V — VEHICLE AND EQUIPMENT PARKING, FUELING, AND MAINTENANCE AREAS
- D — DUMPSTER OR OTHER TRASH AND DEBRIS CONTAINERS
- M — ON-SITE CONSTRUCTION MATERIAL STORAGE AREAS
- SK — SPILL KIT
- WP — WORK PLATFORM

Plot Scale - 1:200
Plotted From - trab17882
File - ...\RegionDesign\E&SCLegend.dgn

STATE OF SOUTH DAKOTA	PROJECT	SHEET NO.	TOTAL SHEETS
	P 0028(32)319	73	135

Plotting Date: 10/23/2015

EROSION AND SEDIMENT CONTROL PLAN

INTERMEDIATE PHASE
Install 12" Diameter Erosion Control Wattles* around pipe inlets at the following locations:
210+98 L 20 Ft
219+64 L 30 Ft
*Remove and Reset Wattles as needed.

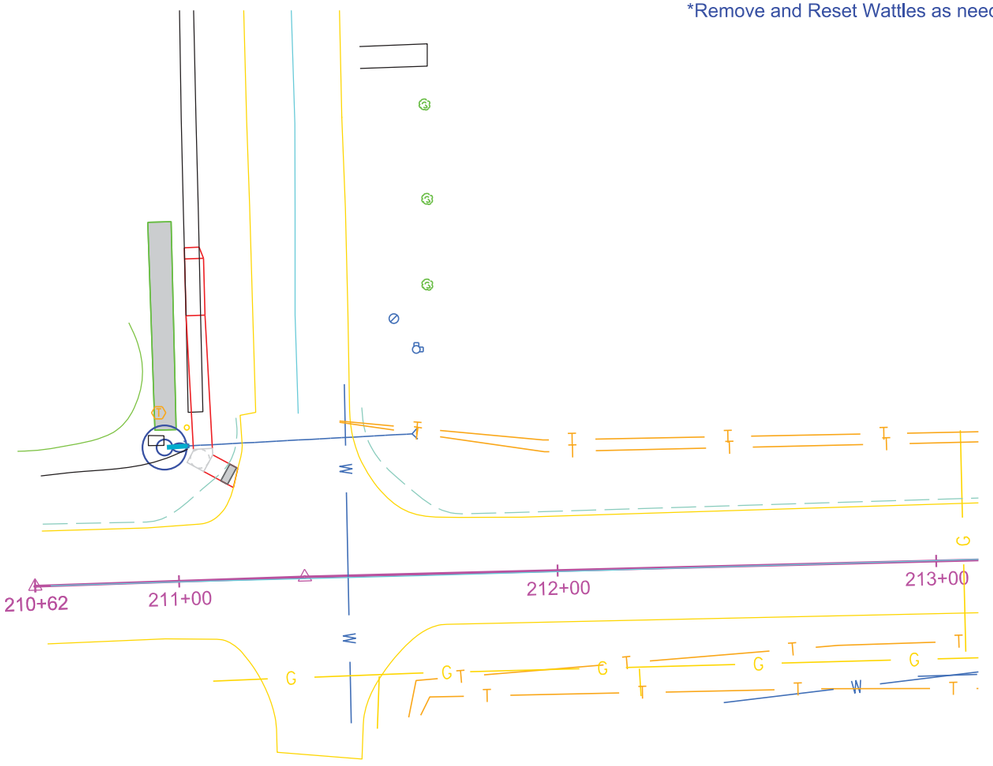

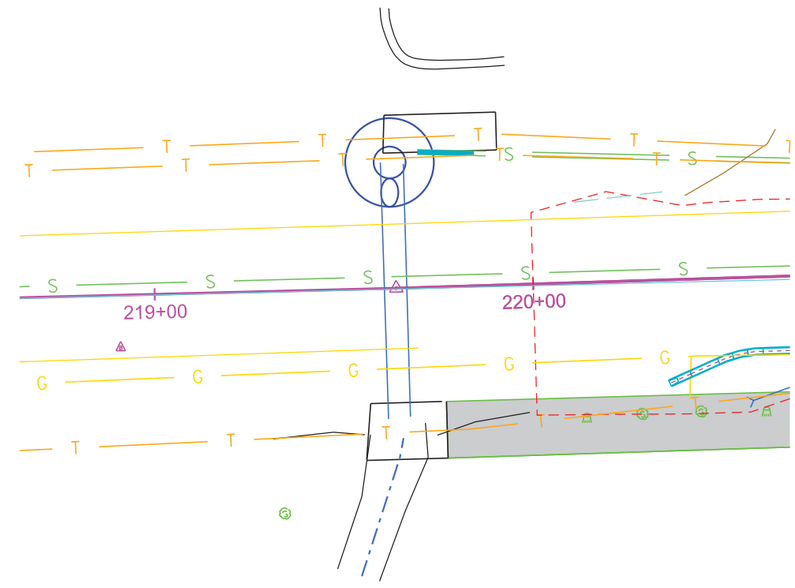

PLOT SCALE - 1:40
PLOT NAME - 29
FILE - ...\REGIONDESIGN\211EC.DGN
PLOTTED FROM - TRAB17882

STATE OF SOUTH DAKOTA	PROJECT	SHEET NO.	TOTAL SHEETS
	P 0028(32)319	74	135

Plotting Date: 10/23/2015

EROSION AND SEDIMENT CONTROL PLAN

INTERMEDIATE PHASE

Install Interim Sediment Control at Inlets, Manholes, and Junction Boxes before the placement of surfacing at the following locations:

221+43 L 22 Ft High Flow Silt Fence, 32 Ft Sediment Filter Bags
221+66 R 18 Ft High Flow Silt Fence, 24 Ft Sediment Filter Bags
222+14 L 38 Ft High Flow Silt Fence, 48 Ft Sediment Filter Bags
223+47 L 38 ft High Flow Silt Fence, 48 Ft Sediment Filter Bags
223+48 R 38 ft High Flow Silt Fence, 48 Ft Sediment Filter Bags
226+48 L 22 ft High Flow Silt Fence, 32 Ft Sediment Filter Bags
226+48 R 22 ft High Flow Silt Fence, 32 Ft Sediment Filter Bags

FINAL PHASE

Install Sediment Control at Inlets with Frames and Grates after the placement of surfacing at the following locations:

221+43 L 1 Each
221+66 R 1 Each
222+14 L 1 Each
223+47 L 1 Each
223+48 R 1 Each
226+48 L 1 Each
226+48 R 1 Each

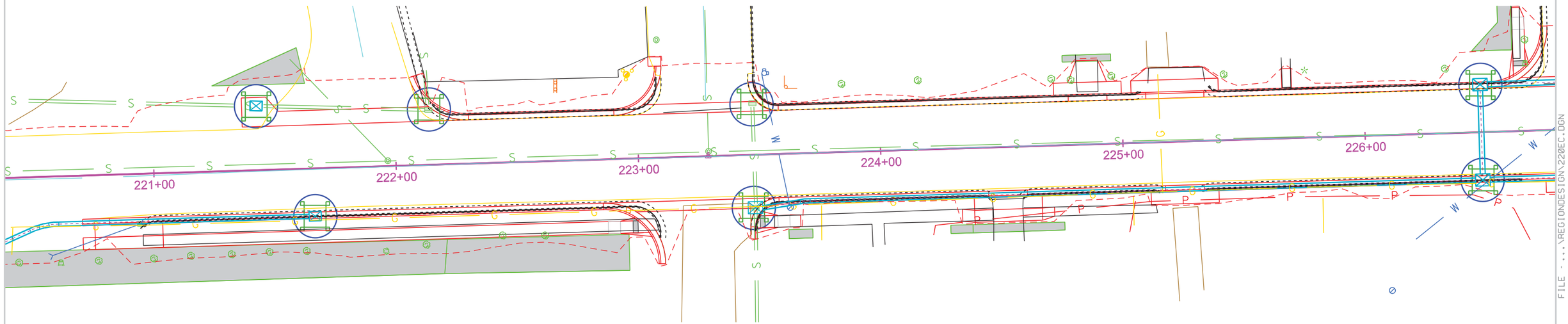

PLOT SCALE - 1:40
PLOT NAME - 30
FILE ....\REGIONDESIGN\220EC.DGN
PLOTTED FROM - TRAB17882

STATE OF SOUTH DAKOTA	PROJECT	SHEET NO.	TOTAL SHEETS
	P 0028(32)319	75	135

Plotting Date: 10/23/2015

EROSION AND SEDIMENT CONTROL PLAN

INTERMEDIATE PHASE
Install Interim Sediment Control at Inlets, Manholes, and Junction Boxes before the placement of surfacing at the following locations:
227+42 L 22 Ft High Flow Silt Fence, 32 Ft Sediment Filter Bags
227+42 R 22 Ft High Flow Silt Fence, 32 Ft Sediment Filter Bags
230+19 L 18 Ft High Flow Silt Fence, 24 Ft Sediment Filter Bags
230+19 R 22 ft High Flow Silt Fence, 32 Ft Sediment Filter Bags
230+41 L 38 ft High Flow Silt Fence, 48 Ft Sediment Filter Bags
230+41 R 38 ft High Flow Silt Fence, 48 Ft Sediment Filter Bags

FINAL PHASE
Install Sediment Control at Inlets with Frames and Grates after the placement of surfacing at the following locations:
227+42 L 1 Each
227+42 R 1 Each
230+19 L 1 Each
230+19 R 1 Each

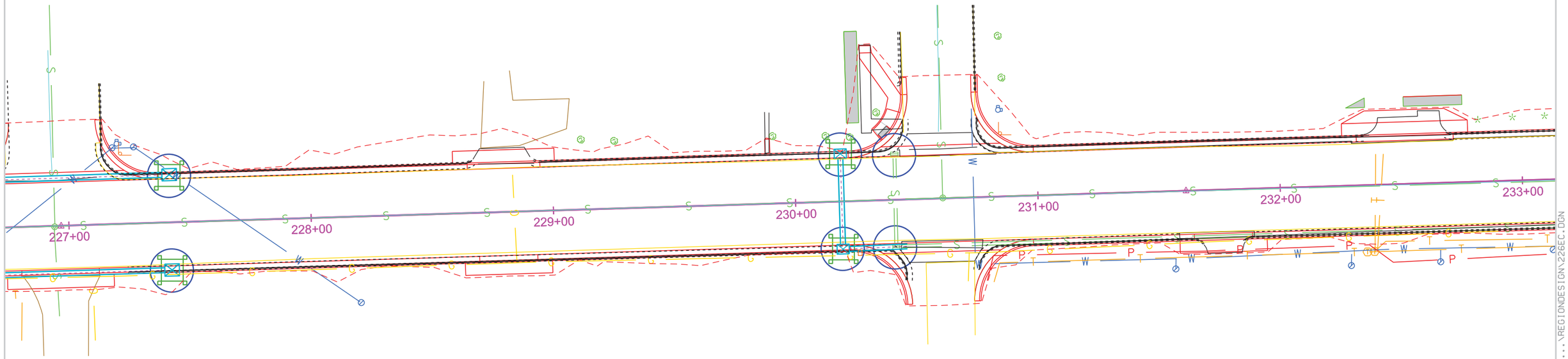

PLOT SCALE - 1:40
PLOT NAME - 31
FILE - ...\REGIONDESIGN\226EC.DGN
PLOTTED FROM - TRAB17882

STATE OF SOUTH DAKOTA	PROJECT	SHEET NO.	TOTAL SHEETS
	P 0028(32)319	76	135

Plotting Date: 10/23/2015

EROSION AND SEDIMENT CONTROL PLAN

INTERMEDIATE PHASE
Install Interim Sediment Control at Inlets, Manholes, and Junction Boxes before the placement of surfacing at the following locations:
234+03 L 38 Ft High Flow Silt Fence, 48 Ft Sediment Filter Bags
234+09 R 22 Ft High Flow Silt Fence, 32 Ft Sediment Filter Bags
235+00 L 22 Ft High Flow Silt Fence, 32 Ft Sediment Filter Bags

INTERMEDIATE PHASE
Install 12" Diameter Erosion Control Wattles* around pipe inlets at the following locations:
238+50 L 20 Ft
239+03 L 30 Ft
*Remove and Reset Wattles as needed.

FINAL PHASE
Install Sediment Control at Inlets with Frames and Grates after the placement of surfacing at the following locations:
234+08 L 1 Each
234+09 R 1 Each
235+00 L 1 Each

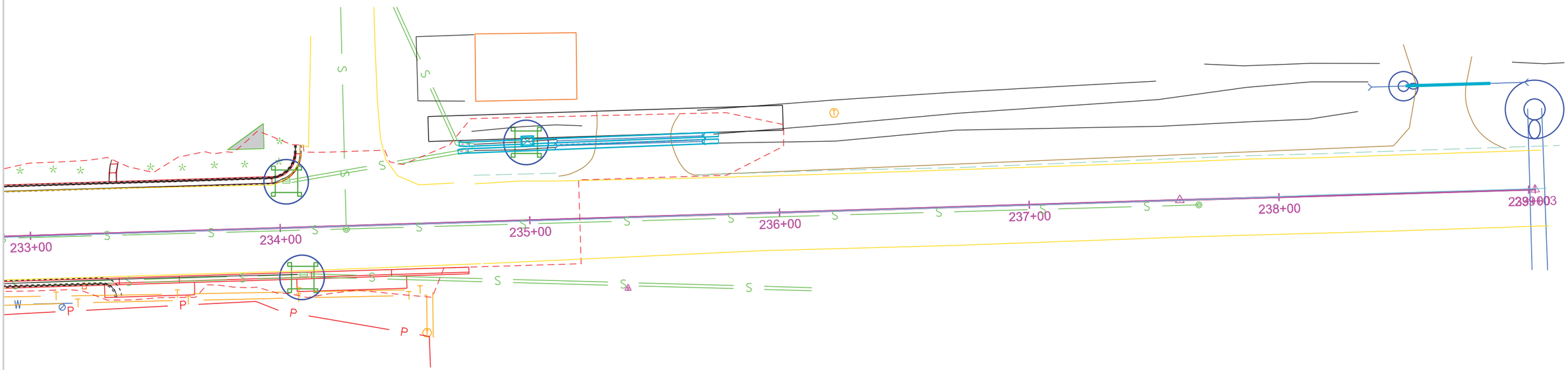

PLOT SCALE - 1:40
PLOT NAME - 32
FILE - ...\REGIONDESIGN\233EC.DGN
PLOTTED FROM - TRAB17882

DEWATERING AND SEDIMENT COLLECTION SYSTEM

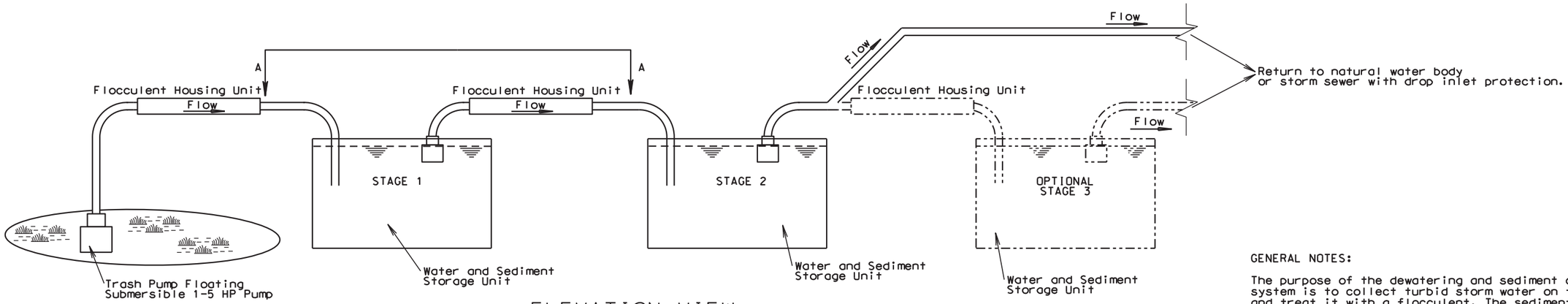

ELEVATION VIEW
CASCADE SYSTEM

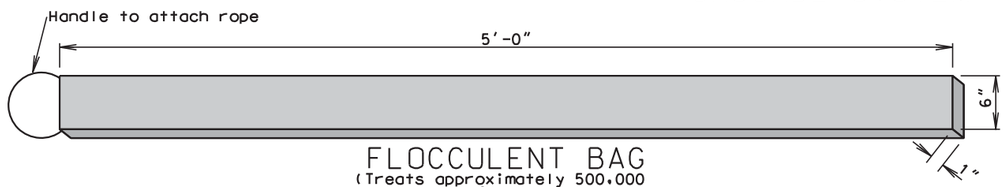

FLOCCULENT BAG
(Treats approximately 500,000
gallons of storm water)

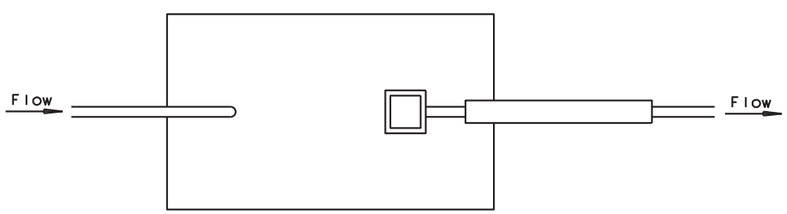

VIEW A-A

FLOCCULENT HOUSING UNIT (Estimated Quantities) (For Information Only)			
NO.	DESCRIPTION	QUANTITY	UNIT
1	4" or 6" Dia. Sch. 40 Gate Valve	1	Each
2	4" X 6" or 6" X 8" Sch. 40 PVC Bushing	2	Each
3	6" or 8" Dia. Sch. 40 PVC "Y"	1	Each
4	6" or 8" Dia. Sch. 40 PVC Female Threaded Cap	1	Each
5	1" Dia. Sch. 80 PVC Drain Valve	1	Each
6	1/2" Eye Bolt With Wing Nut and Rubber Gromets	1	Each
7	6" or 8" Dia. Sch. 40 PVC Pipe	10	Ft.
8	6" or 8" Dia. Sch. 40 PVC Male Adapter	1	Each
9	4" or 6" Dia. Sch. 40 PVC Swing Check Valve	1	Each

MAXIMUM PUMPING TIME			
Pump Type	Flow Rate (gpm)	No. of 500 K Gallon Treatment Floc. Bags Required	Expended After: (Hours)
2"	50-250	1	30
3" gas	250-350	1	30-40
4" diesel	500-750	1-2	24-33
6" diesel	750-1000	2-3	25-36

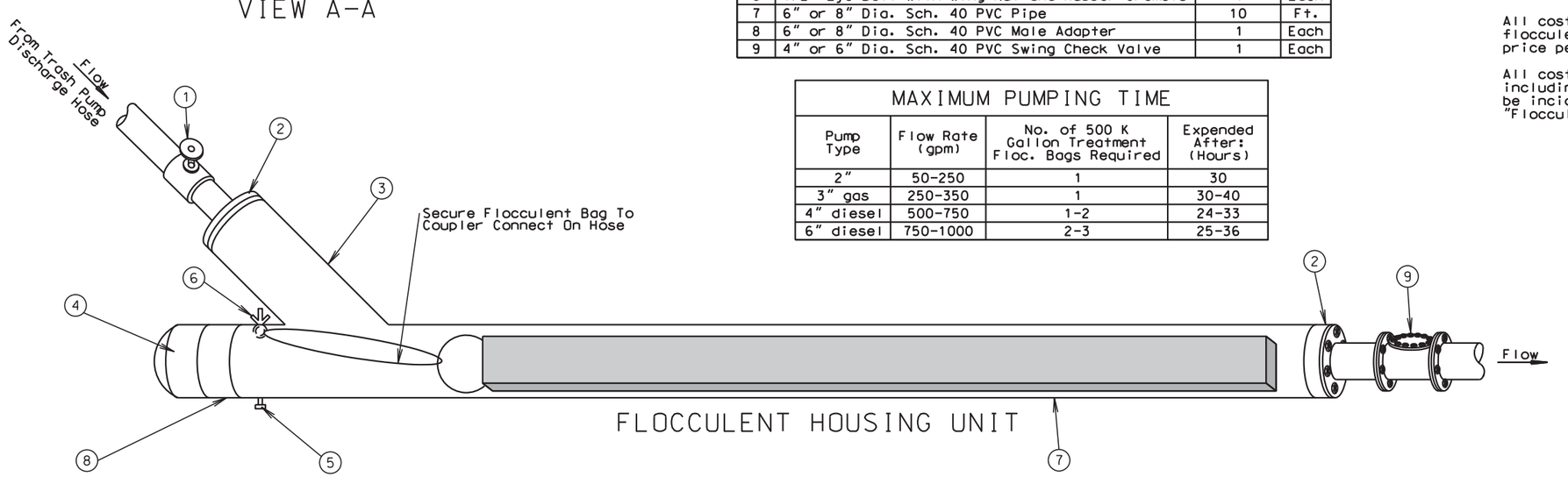

FLOCCULENT HOUSING UNIT

GENERAL NOTES:

The purpose of the dewatering and sediment collection system is to collect turbid storm water on the project and treat it with a flocculent. The sediment would then settle in the storage units and the clear water would then be discharged into the storm sewer, lake, stream, vegetated ditch, or other Engineer approved site. Clear water for this project is defined as having a maximum of 30 mg/L of suspended solids. The clear water discharged shall have a ph between 6.1 and 8.5, with a ph of 7.0 preferred.

The drawing of the cascade system is for conceptual purposes only; however, the cascade system shall at a minimum incorporate the use of 2 flocculent housing units and 2 water and sediment storage units.

Design and construction of the water and sediment storage units are project site specific and shall be the Contractor's responsibility. A water and sediment storage unit may consist of a storage bin lined with plastic, the bed of a dump truck lined with plastic, a sediment basin, or other Engineer approved unit.

The 500,000 gallon treatment flocculent bag shall be a BIOSTAR™ CH product or approved equal. Information concerning the product may be found on the Internet at the following location: http://www.biostar-ch.com

All costs for the dewatering and sediment collection system including disposing of sediment collected in the water and sediment storage units, pumping, furnishing and using the water and sediment collection units, labor, materials, and incidentals necessary for the dewatering and sediment collection system shall be incidental to the contract lump sum price for "Dewatering".

All costs for using the 500,000 gallon treatment flocculent bag shall be incidental to the contract unit price per each "500 K Gallon Treatment Flocculent Bag".

All costs for using the flocculent housing units including all labor, materials, and incidentals shall be incidental to the contract unit price per each for "Flocculent Housing Unit".

Plot Scale - 1:300
Plotted From - trab17882
File - ...\LumpSumDewatering.dgn

CULVERT REPLACEMENT DETAIL

DRAWING
NOT TO SCALE

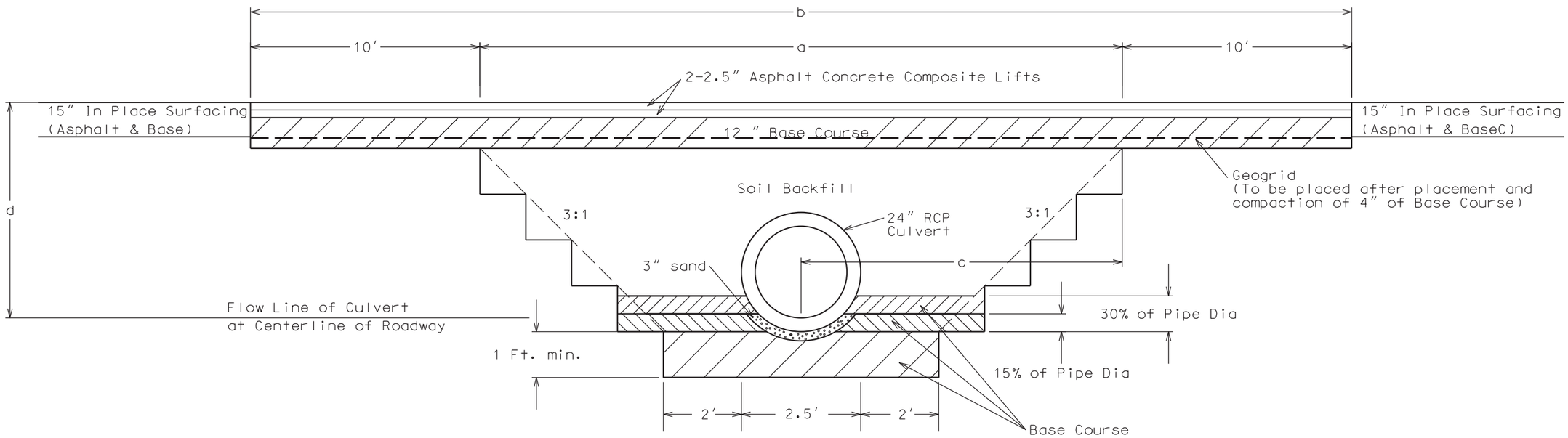

Station	a	b	c	d
5+49	41'	61'	20.5'	6.7'
12+45	47'	67'	23.5'	7.8'
28+28	43'	63'	21.5'	7.2'
178+59	48'	68'	24.0'	8.0'
195+16	46'	66'	23.0'	7.6'

PLOT SCALE - 1:1.2
PLOTTED FROM - TRAB17882
PLOT NAME - 34
FILE - ...\020K_CULVERT REPLACEMENT.DGN

TRANSITION DETAILS FOR PROJECT LIMITS

Begin and End of Project
See Table of Additional Quantities for Quantities

Detail shown in direction of increasing station

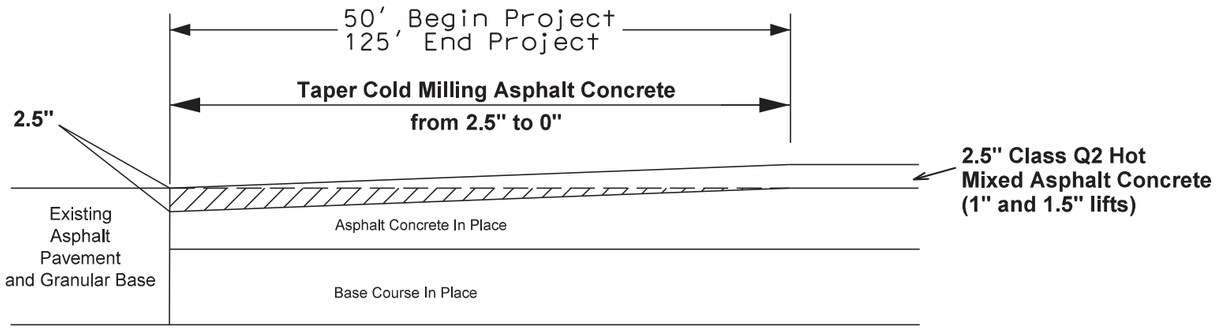

Note: Width of Cold Milling Asphalt Concrete at Project Limits shall match adjacent surfacing width.

TRANSITION SECTION FOR INTERSECTING ROADS

See Table of Additional Quantites
for Locations and Quantities

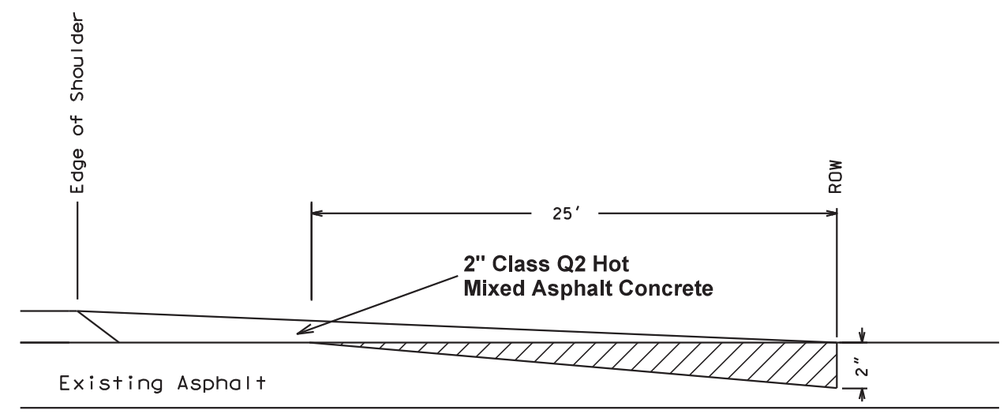

Cold Milling Asphalt Concrete

Note: Width of Cold Milling Asphalt Concrete at Intersecting Roads shall match adjacent surfacing width.

PLOT SCALE - 1:28000
PLOTTED FROM - TRAB17882
PLOT NAME - 35
FILE - ...\020K_COLD_MILLING.DGN

TRANSITION DETAILS FOR CITY OF BRYANT

STATE OF SOUTH DAKOTA	PROJECT	SHEET NO.	TOTAL SHEETS
	P 0028(32)319	80	135

Plotting Date: 10/23/2015

Detail shown in direction of increasing station

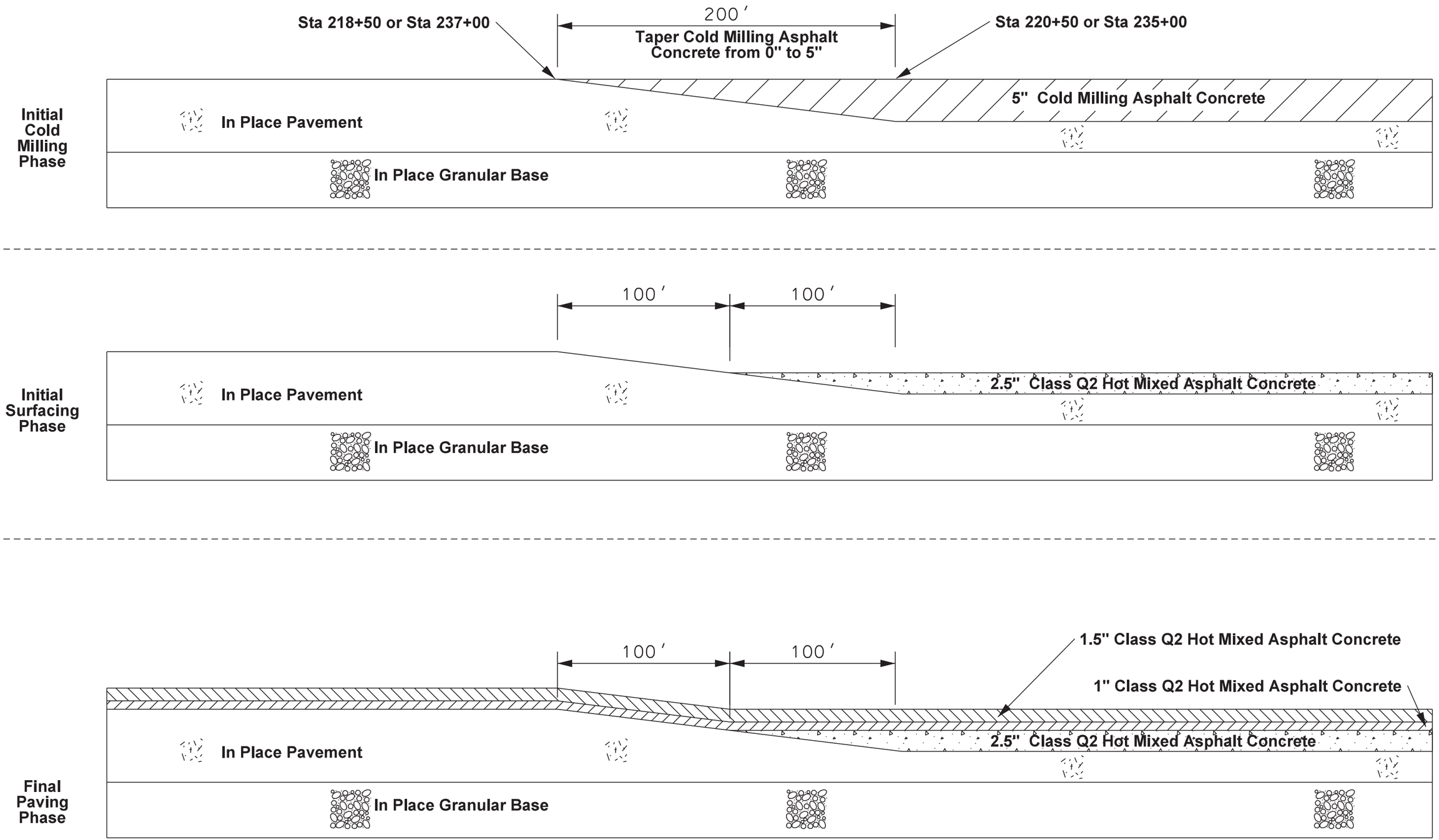

PLOT SCALE - 1:20000

PLOT NAME - 36

FILE - ...\020K_COLD_MILLING.DGN

PLOTTED FROM - TRAB17882

RECESSED RUMBLE STRIPS

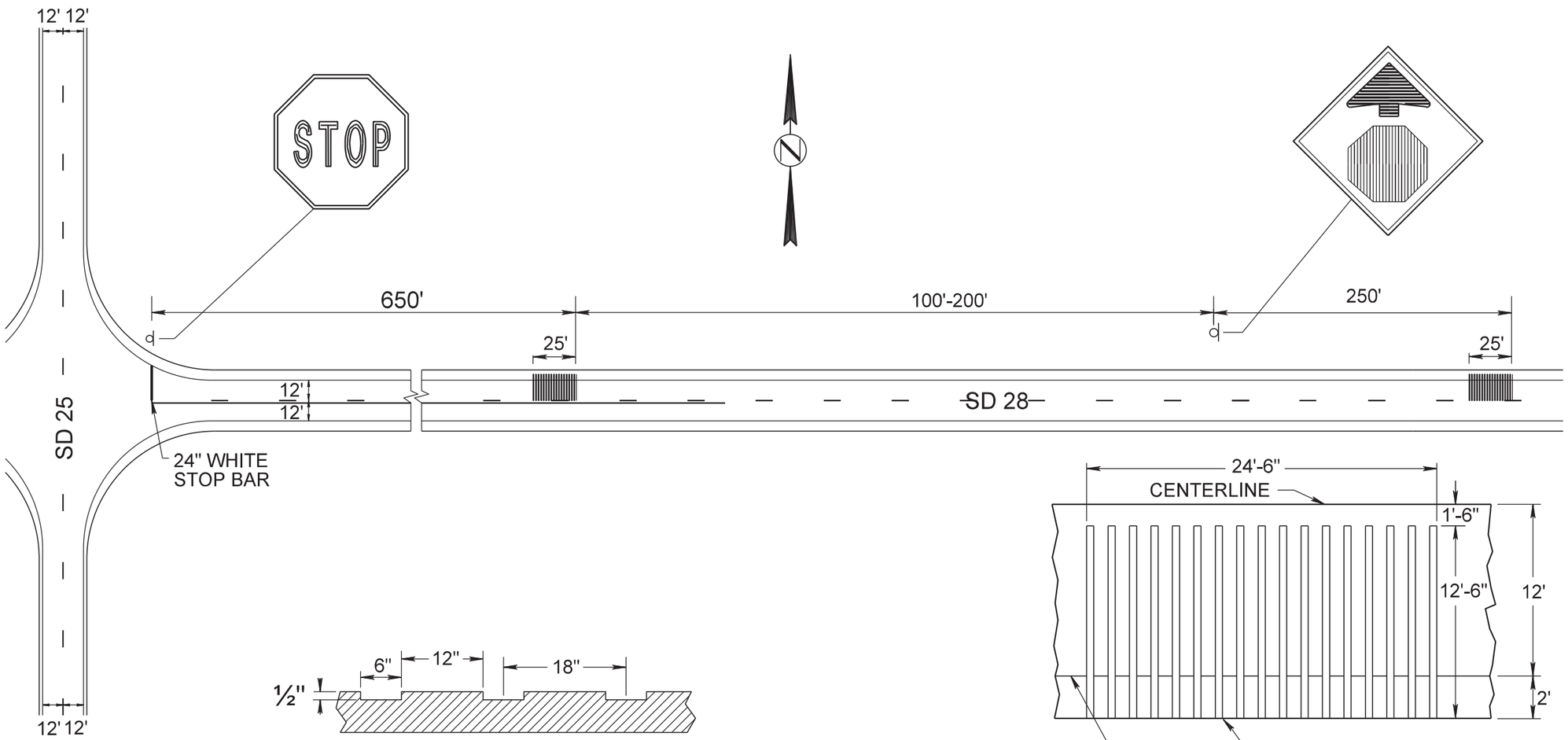

RUMBLE STRIP PROFILE (TYPICAL)

RUMBLE STRIP PLAN VIEW

THE RUMBLE STRIPS SHALL BE ROUTED OR CUT INTO THE ASPHALT CONCRETE SURFACE. THE RUMBLE STRIP CUTS SHOULD EXTEND PAST THE EDGE OF THE DRIVING LANE TO ALLOW FOR DRAINAGE.

PLOT SCALE - 1:70
PLOT NAME - 37
FILE - ...\020K RECESSED RUMBLE STRIPS.DGN
PLOTTED FROM - TRAB17892

INSTALLATION OF TYPE B DROP INLET

Sheet 1 of 1

GENERAL NOTE:

Top of grate elevation shall be 0.04' below theoretical elevation of gutter.

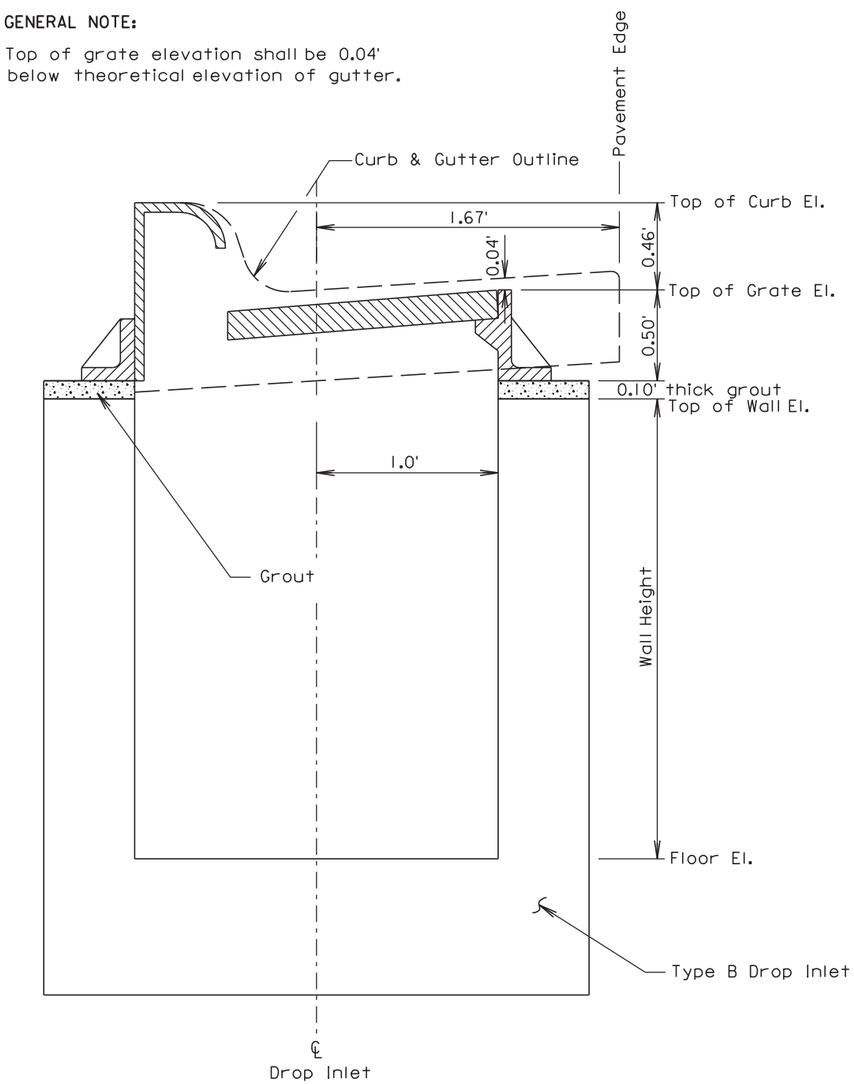

SPECIAL SIGN DESIGN

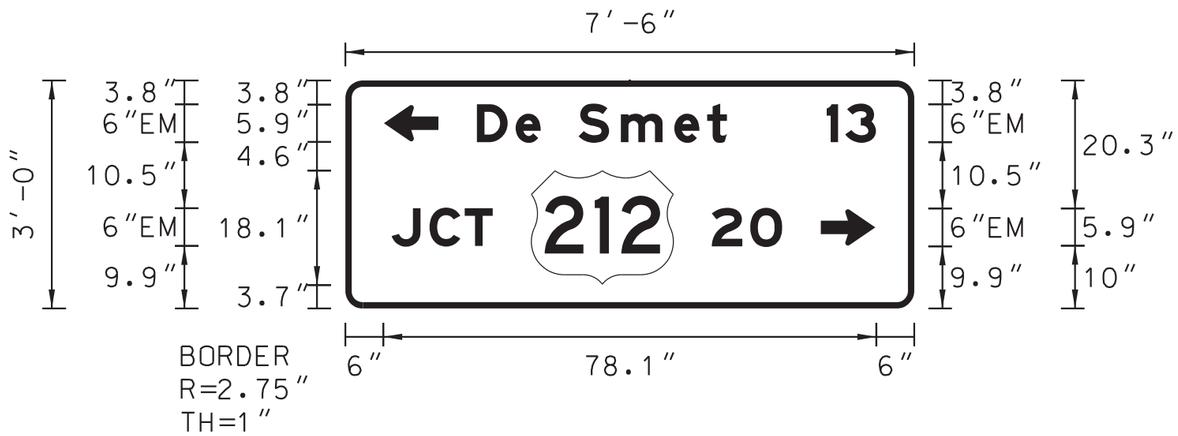

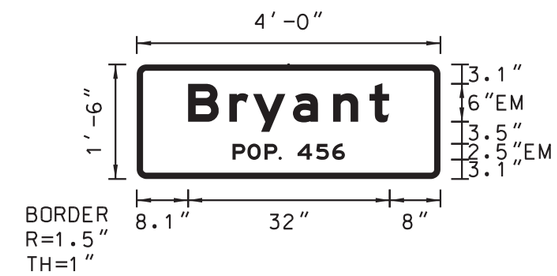

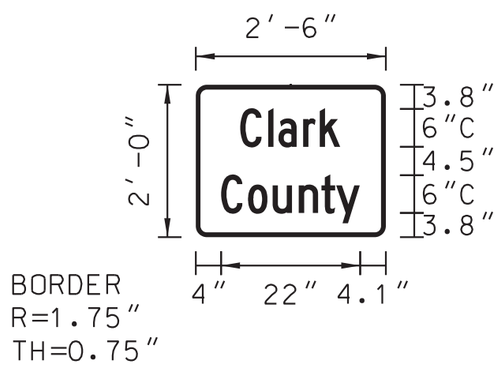

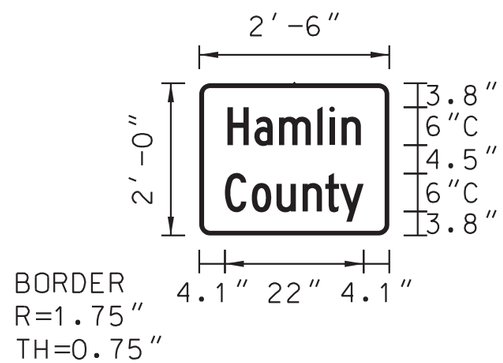

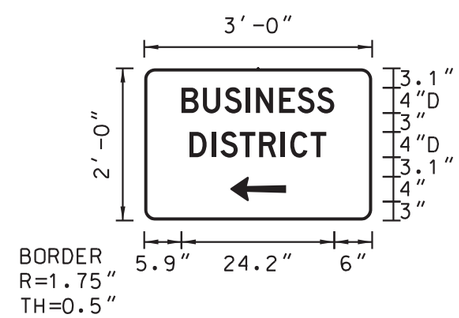

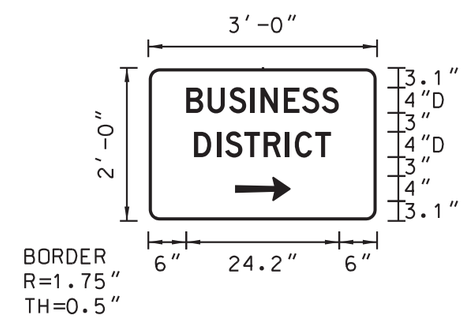

All signs on this sheet shall have a green backround with white legend and border

PLOT SCALE - 1:2
PLOTTED FROM - TRAB17982
PLOT NAME - 2
FILE -...\SPECIAL SIGN DESIGN.DGN

SPECIAL SIGN DESIGN

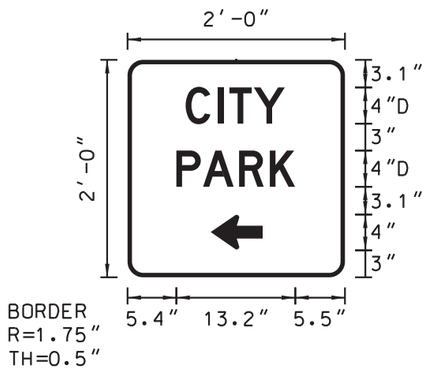

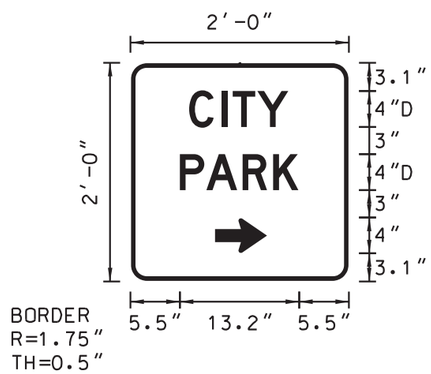

Above signs shall have a blue background with white legend and border

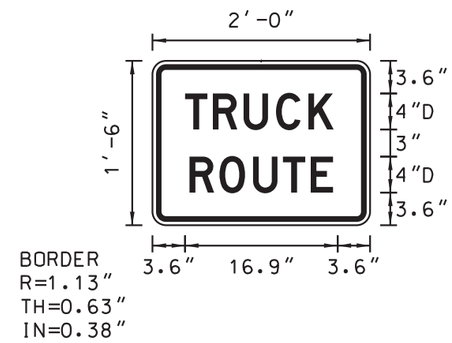

Above sign shall have a white background with black legend and border

PLOT SCALE - 1:1.4
PLOTTED FROM - TRAB17882
PLOT NAME - 1
FILE - ...\SPECIAL SIGN DESIGN.DGN

SQUARE TUBE
4 BLADE ANCHOR DETAIL

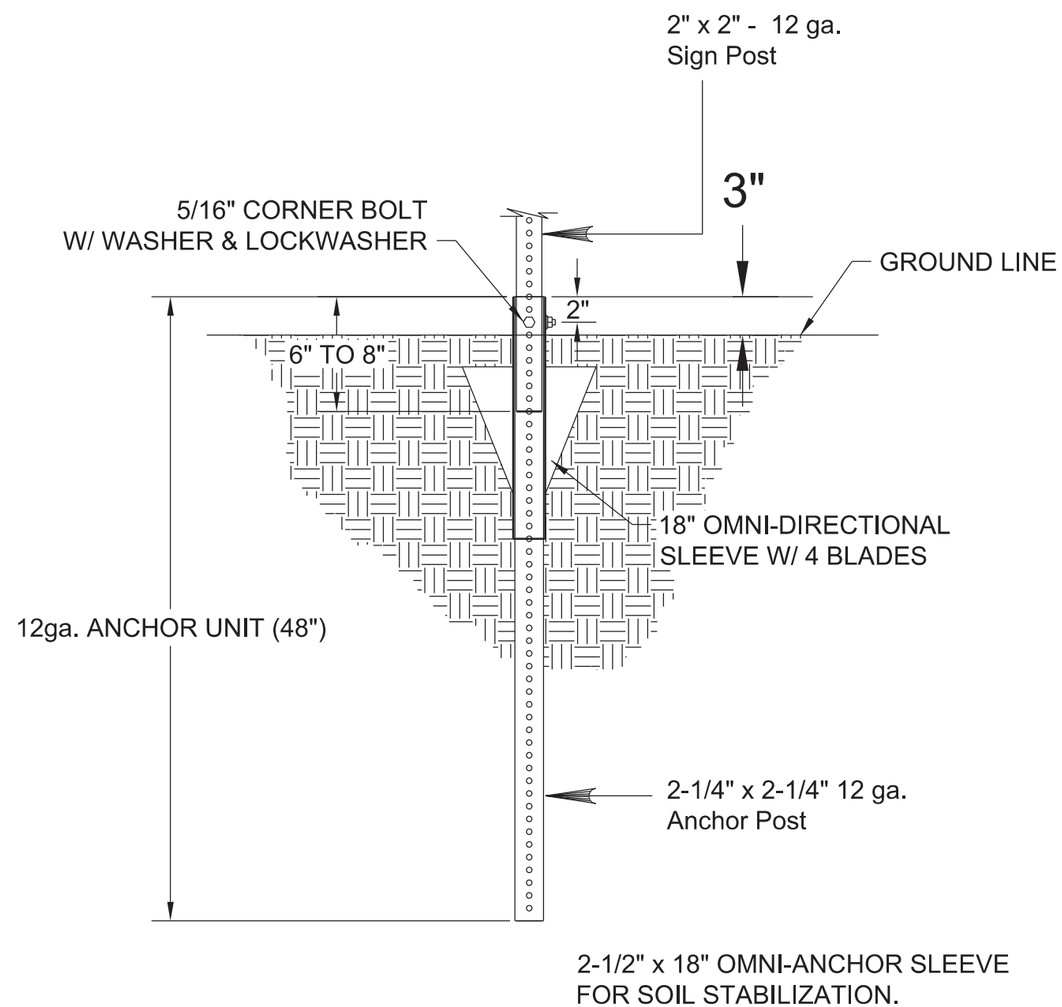

2-1/2" x 18" 12 ga. Omni-Sleeve

ANCHOR SLEEVE
TOP VIEW

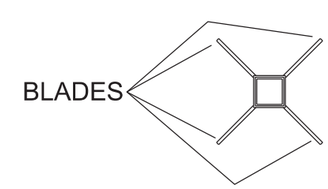

PLOT SCALE - 1:200
PLOTTED FROM - TRAB10100
PLOT NAME - 1
FILE - ...\SIGN POST INSTALL DETAILS.DGN

INSTALLATION DETAILS FOR MULTIPLE SIGN ASSEMBLIES

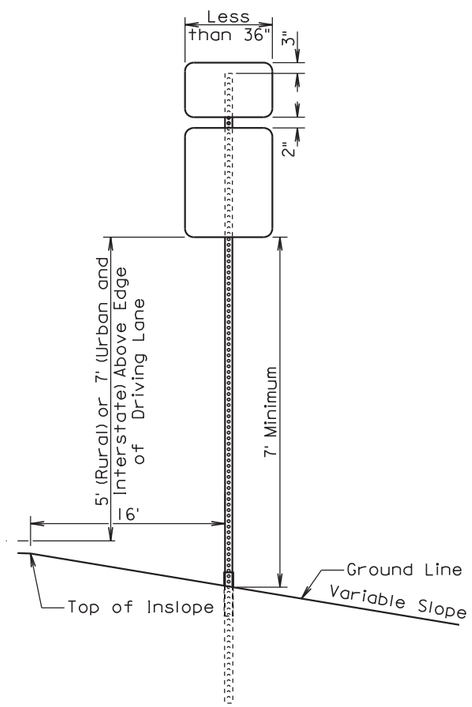

ELEVATION VIEW
(Single post assembly)

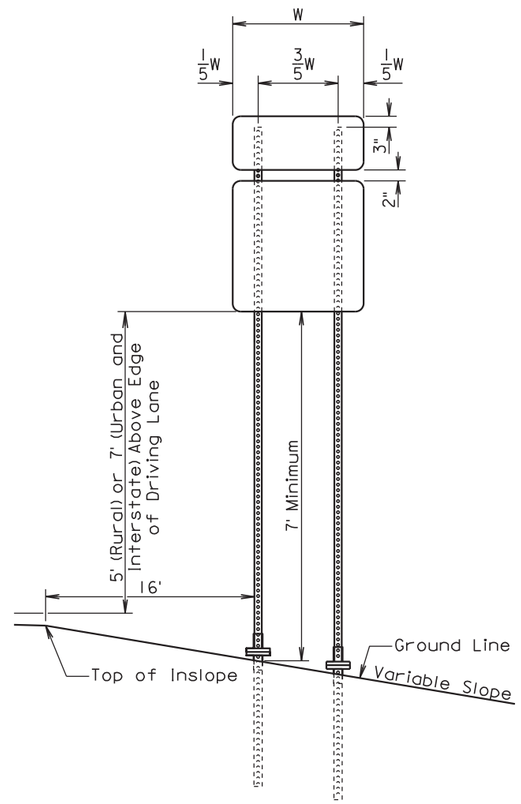

ELEVATION VIEW
(Double post assembly)

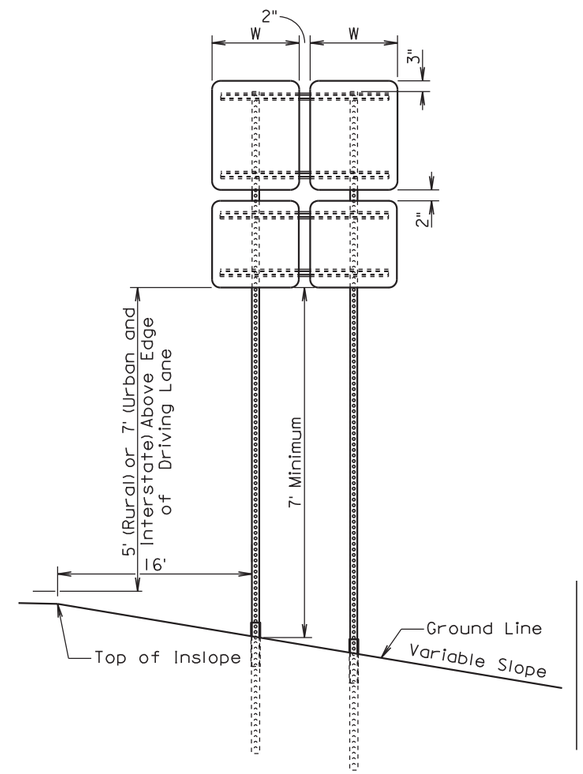

ELEVATION VIEW
(Double post assembly)

GENERAL NOTES:

The sign posts and bases shown are for illustrative purpose. The post type required shall be the type specified in the plans.

All breakaway sign supports shall comply with NCHRP 350 or MASH crash testing requirements and FHWA requirements. The Contractor shall provide post installation details at the preconstruction meeting for all breakaway sign support assemblies.

PLOT SCALE - 1:200
PLOTTED FROM - TRAB10100
PLOT NAME - 2
FILE - ...\SIGN POST INSTALL DETAILS.DGN

ONE POST BREAKAWAY SIGN SUPPORTS

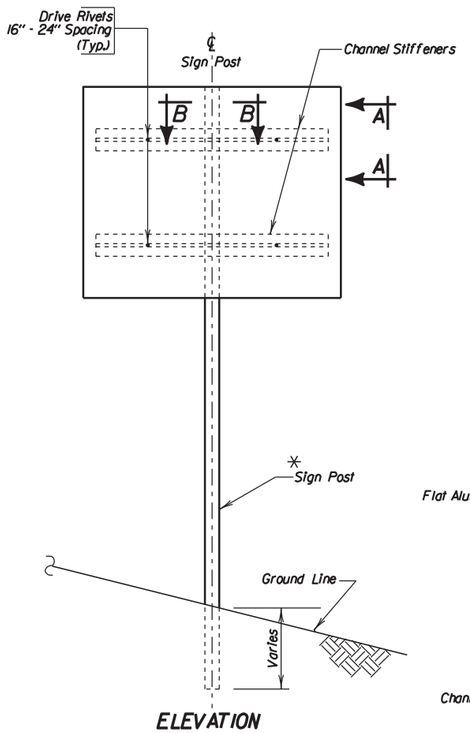

ELEVATION

Ø A plastic washer, as recommended by the sheeting manufacturer, shall be installed between the sign face and the metal washer shown.

Height and lateral distance as recommended by latest edition of MANUAL ON UNIFORM TRAFFIC CONTROL DEVICES.

* Single post installation shown. (See applicable Details or Standard Plates shown in these plans for multiple post spacing requirements.)

(Typical Sign and Stiffener Details)

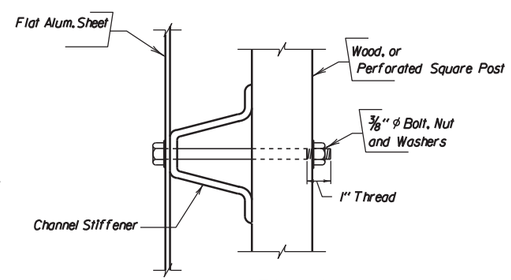

SEC. A-A

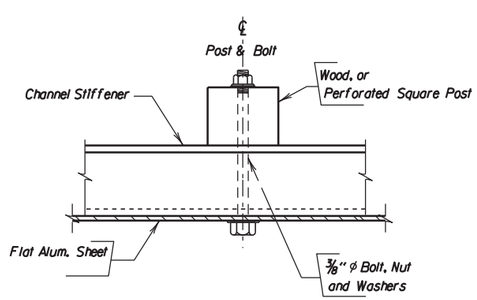

SEC. B-B

TWO POST BREAKAWAY SIGN SUPPORTS

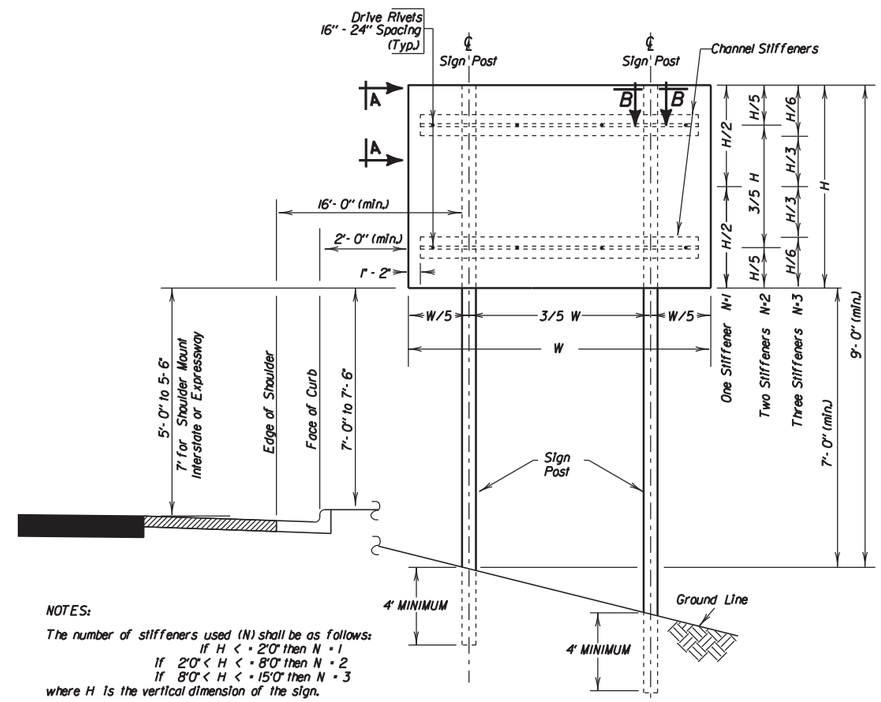

NOTES:

The number of stiffeners used (N) shall be as follows:

If H < = 2'0" then N = 1
If 2'0" < H < = 8'0" then N = 2
If 8'0" < H < = 15'0" then N = 3

where H is the vertical dimension of the sign.

A minimum of two bolts shall be required to fasten the sign to each post.

PLOT SCALE - 1:200
PLOTTED FROM - TRAB10100
PLOT NAME - 3
FILE - ...\SIGN POST INSTALL DETAILS.DGN

SIGN SUPPORTS
(Lateral Off–Sets)

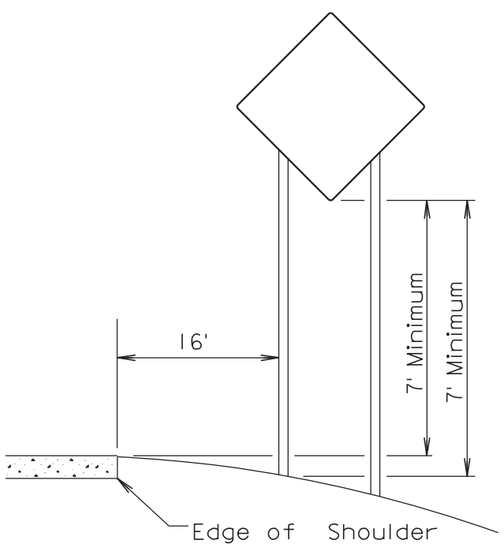

RURAL DISTRICT

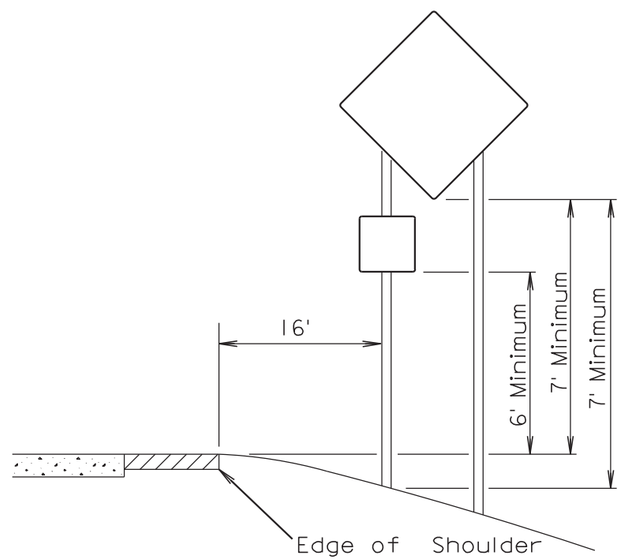

RURAL DISTRICT WITH SUPPLEMENTAL PLATE

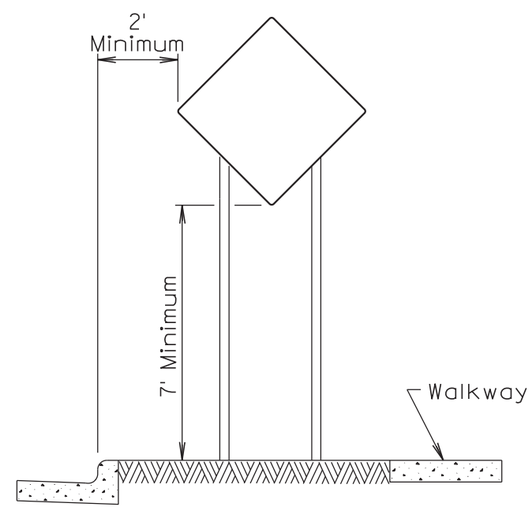

URBAN DISTRICT

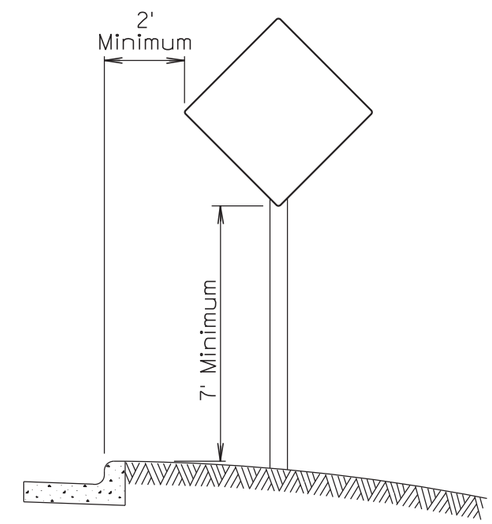

URBAN DISTRICT

PLOT SCALE - 1:200
PLOTTED FROM - TRAB10100
PLOT NAME - 4
FILE - ...\SIGN POST INSTALL DETAILS.DGN

INSTALLATION DETAILS FOR STOP SIGNS

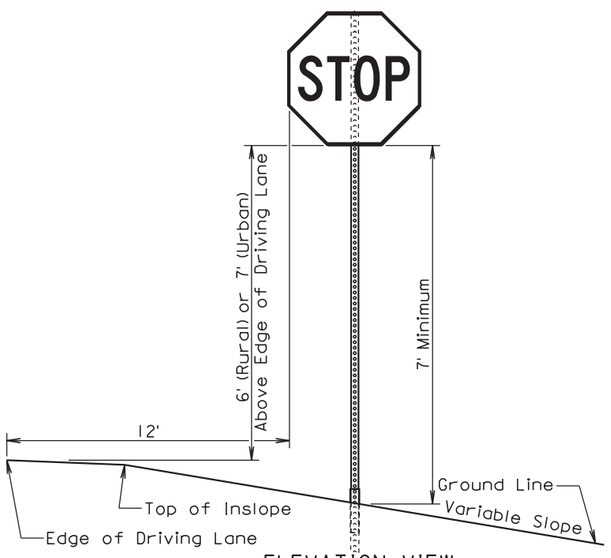

ELEVATION VIEW
(Single post assembly)

BREAKAWAY SUPPORT STUB CLEARANCE

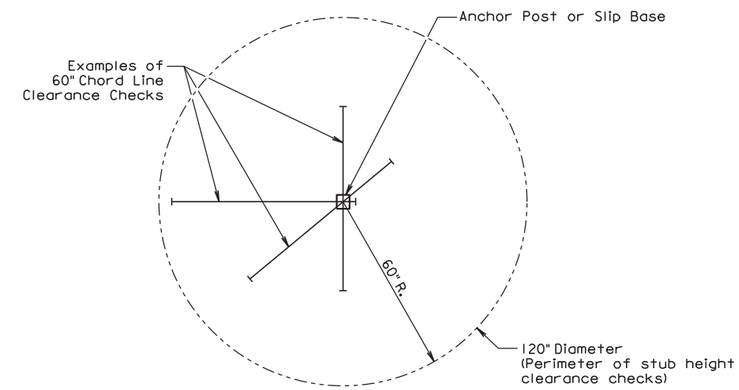

PLAN VIEW
(Examples of stub height clearance checks)

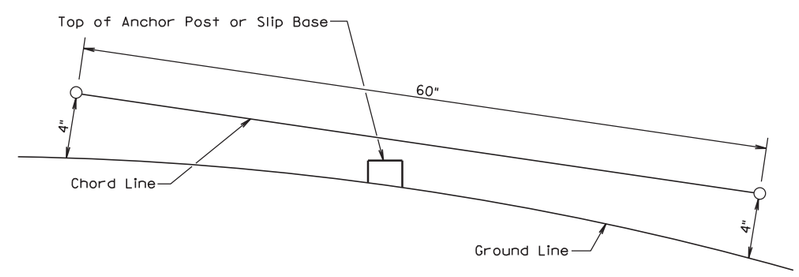

ELEVATION VIEW

GENERAL NOTES:

The top of anchor posts and slip bases SHALL NOT extend above a 60" chord line within a 120" diameter circle around the post with ends 4" above the ground.

At locations where there is curb and gutter adjacent to the breakaway sign support, the stub height shall be a maximum of 4" above the ground line at the localized area adjacent to the breakaway support stub.

PLOT SCALE - 1:200
PLOTTED FROM - TRAB10100
PLOT NAME - 5
FILE - ...\SIGN POST INSTALL DETAILS.DGN

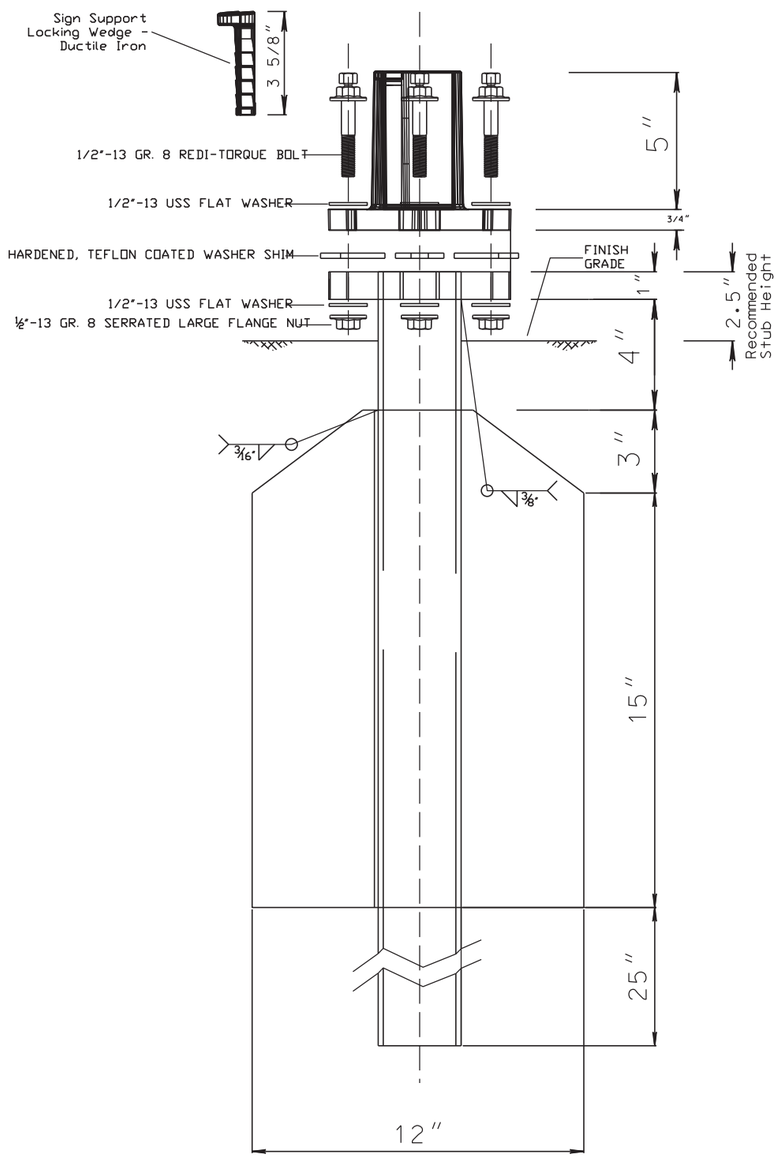

SLIP BASE

TOP POST RECEIVER for 2-½" SQUARE POST

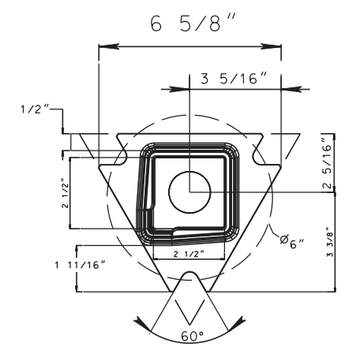

MATERIAL:
DUCTILE IRON CASTING, CLASS 65-45-12

TRAFFIC FLOW

BOTTOM UNIBASE SOIL STUB

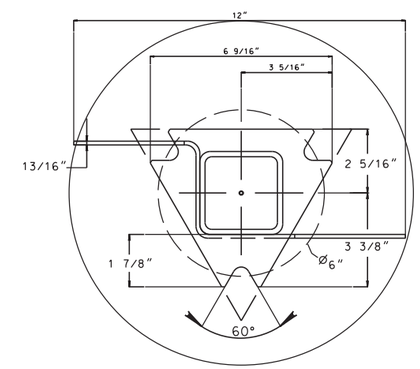

MATERIALS:
Tube - 3" x 3" x 7 ga. ASTM A500 Grade B tube
Stabilizing Wing - 7 ga. H.R.P.O. ASTM A 569
Plate - ASTM A572 grade 50

PLOT SCALE - 1:0.88
PLOTTED FROM - TRAB10100
PLOT NAME - 7
FILE ....\WINGED ANCHOR SLIP BASE 1-09.DGN

48" WINGED SLIP BASE

Post and Wind Load Information

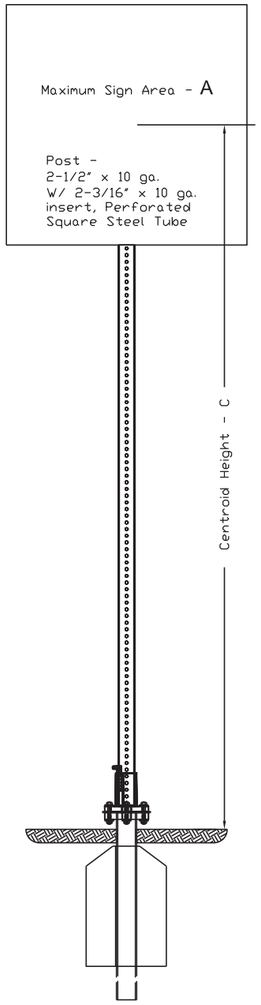

centroid - C	Maximum Sign Area - A
8 ft.	42 ft²
9 ft.	38 ft²
10 ft.	34 ft²
11 ft.	30 ft²
12 ft.	28 ft²
13 ft.	26 ft²
14 ft.	24 ft²
15 ft.	22 ft²
16 ft.	20 ft²

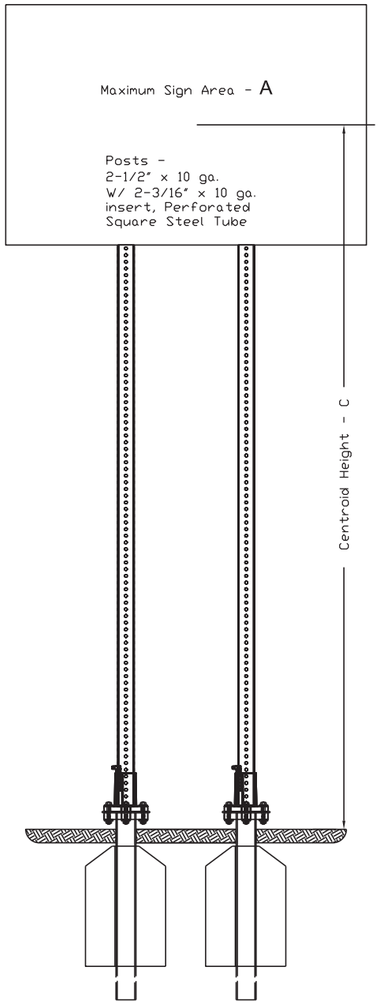

centroid - C	Maximum Sign Area - A
8 ft.	84 ft²
9 ft.	76 ft²
10 ft.	68 ft²
11 ft.	60 ft²
12 ft.	56 ft²
13 ft.	52 ft²
14 ft.	48 ft²
15 ft.	44 ft²
16 ft.	40 ft²

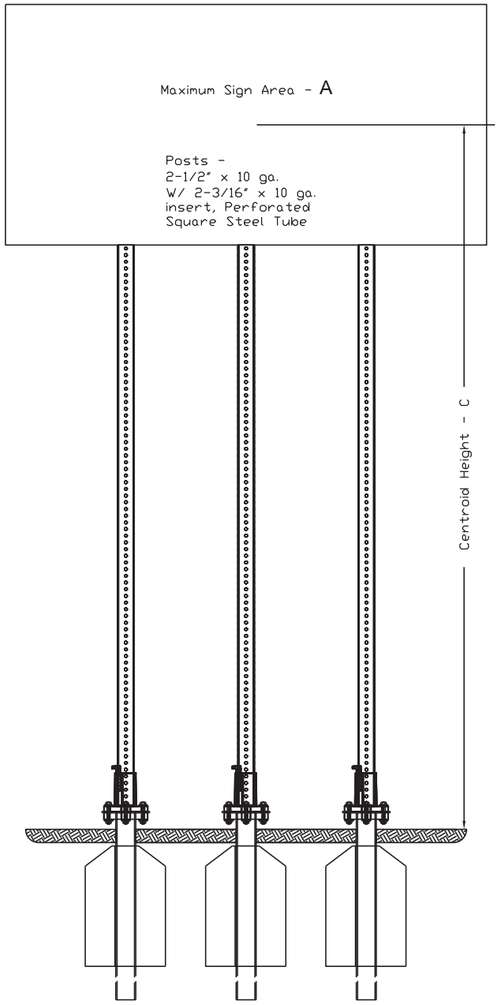

centroid - C	Maximum Sign Area - A
8 ft.	126 ft²
9 ft.	114 ft²
10 ft.	102 ft²
11 ft.	90 ft²
12 ft.	84 ft²
13 ft.	78 ft²
14 ft.	72 ft²
15 ft.	66 ft²
16 ft.	60 ft²

PLOT SCALE - 1:0.88
PLOTTED FROM - TRAB10100
PLOT NAME - 8
FILE - ...\WINGED ANCHOR SLIP BASE 1-09.DGN

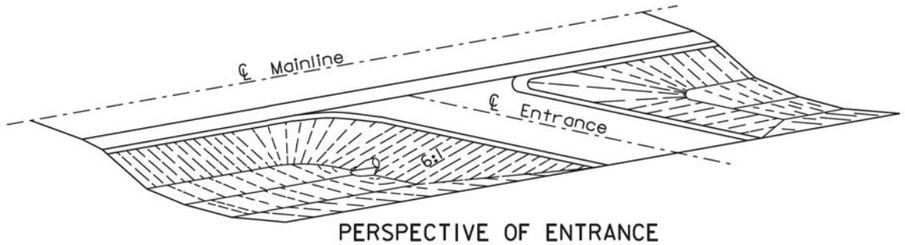

PERSPECTIVE OF ENTRANCE

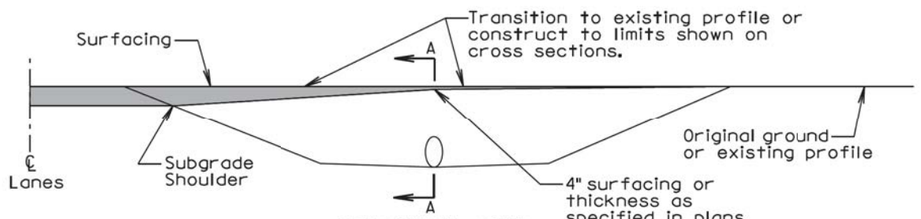

ELEVATION VIEW (ENTRANCE)

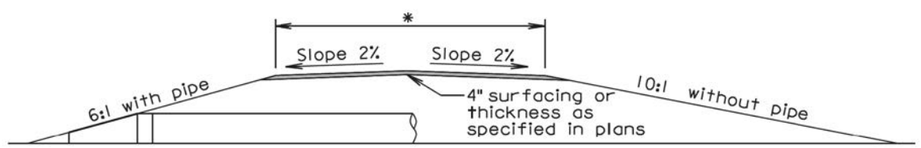

SECTION A-A (ENTRANCE)

*The finished surfacing width is stated elsewhere in the plans. The subgrade width is 4' wider than the finished surfacing width unless stated otherwise in the plans.

GENERAL NOTES:

The ditch section shown above in the perspective and elevation view is only for illustrative purposes.

A 6:1 inslope shall be constructed for an entrance when a pipe is required. A 10:1 inslope shall be constructed when a pipe is not required.

Pipe lengths shall be adjusted if necessary during construction to obtain the 6:1 slopes. For grading projects, the pipe lengths are estimated typically using a 4" thickness of surfacing directly over the subgrade above the pipe.

The transition area between the mainline inslope and the approach inslope for entrances shall be rounded to eliminate an abrupt transition.

The turning radii shall be 35' for intersecting roads and entrances unless stated otherwise in the plans.

September 6, 2013

Published Date: 3rd Qtr. 2015	SDDOT	INTERSECTING ROADS AND ENTRANCES	PLATE NUMBER 120.01
			Sheet 1 of 2

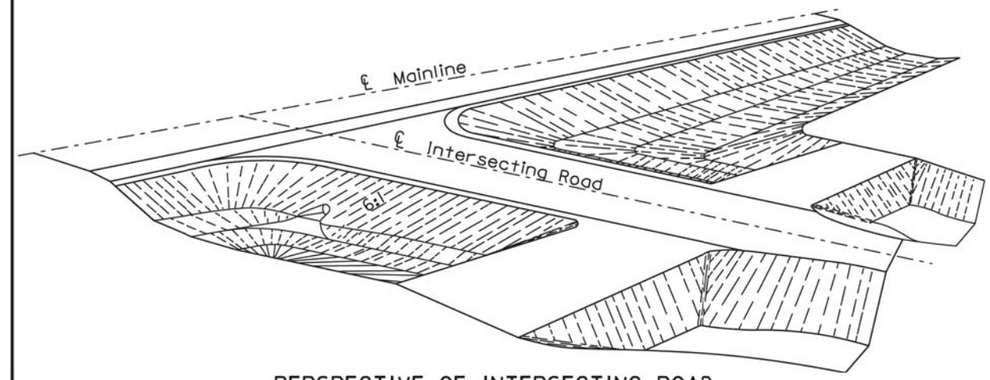

PERSPECTIVE OF INTERSECTING ROAD

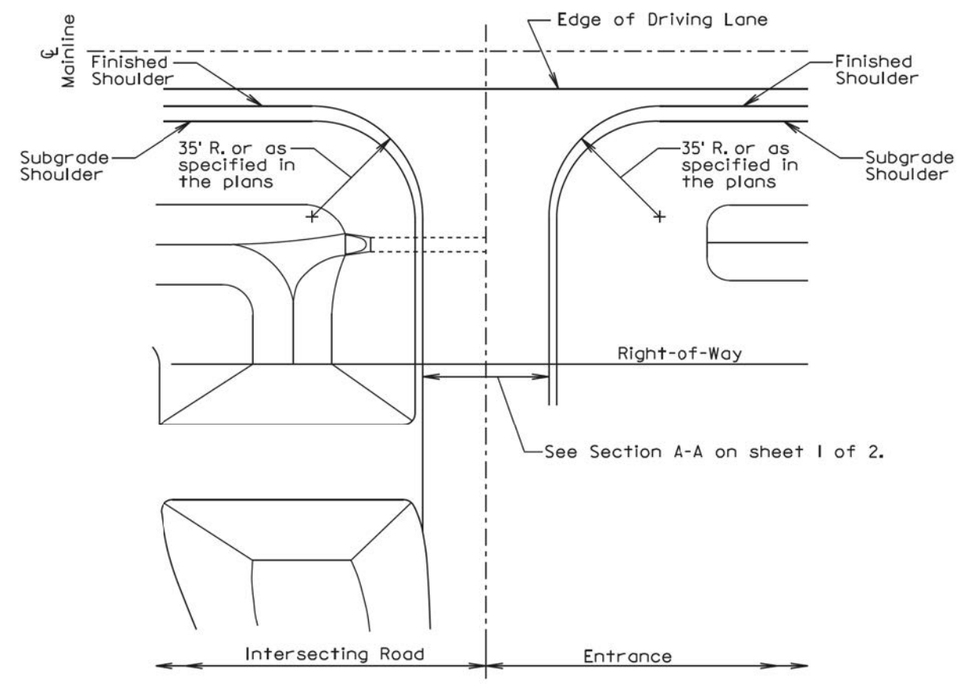

PLAN VIEW

September 6, 2013

Published Date: 3rd Qtr. 2015	SDDOT	INTERSECTING ROADS AND ENTRANCES	PLATE NUMBER 120.01
			Sheet 2 of 2

PLOT SCALE - 1:200
PLOT NAME - 5
FILE - ...\12001 & 12001.DGN
-PLOTTED FROM - TRAB17982

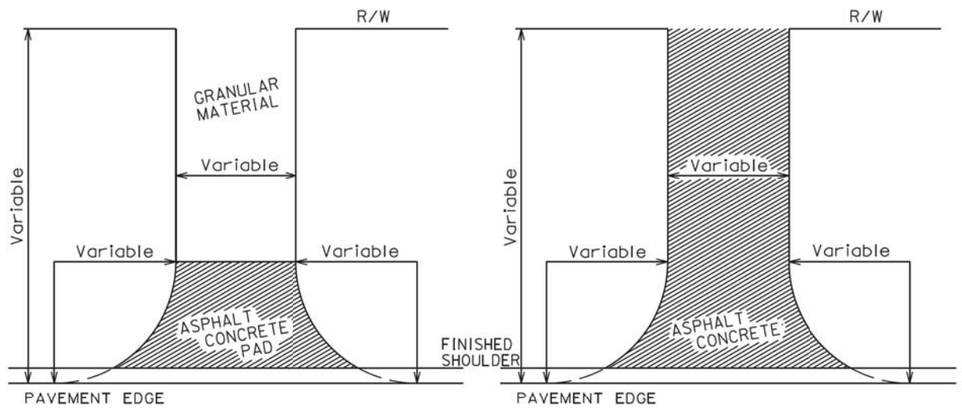

INTERSECTING ROAD
NO ASPHALT CONCRETE SURFACING
BEYOND R/W

INTERSECTING ROAD
ASPHALT CONCRETE SURFACING
BEYOND R/W

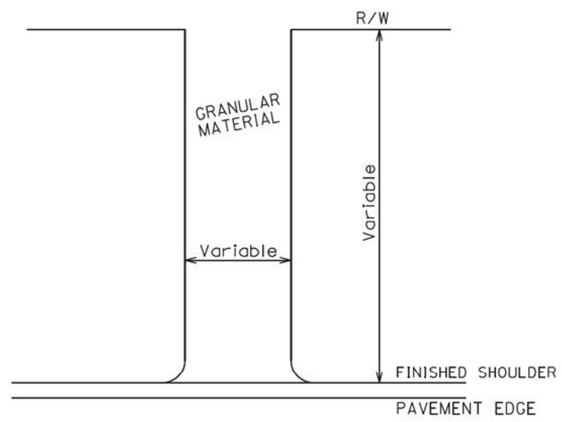

ENTRANCE

The surfacing details shown on this sheet are provided as a guide for surfacing these facilities. The precise construction limits for situations other than the standards shown will be determined by the Engineer, at the time of construction.

ROADWAY WITH SHOULDER

March 31, 2000

Published Date: 3rd Qtr. 2015	SDDOT	RESURFACING OF INTERSECTING ROADS AND ENTRANCES	PLATE NUMBER 320.11
			Sheet 1 of 1

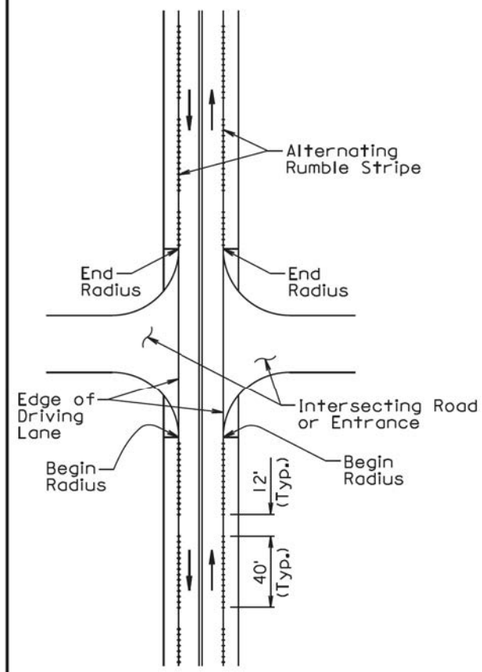

PLAN VIEW

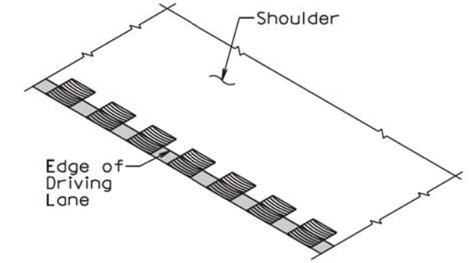

PERSPECTIVE OF TYPICAL
RUMBLE STRIPE IN ASPHALT CONCRETE

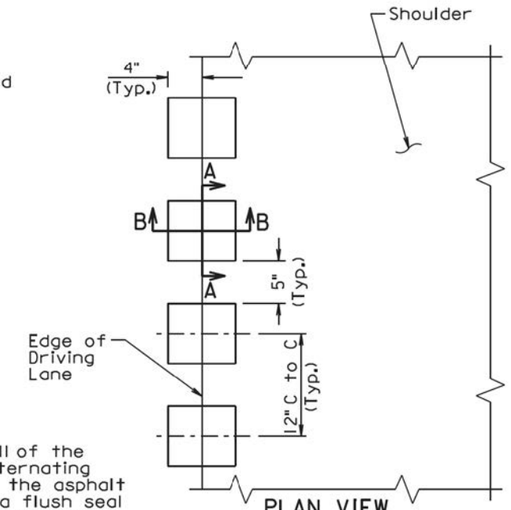

PLAN VIEW
TYPICAL RUMBLE STRIPE
IN ASPHALT CONCRETE

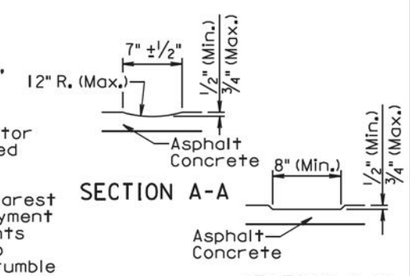

SECTION A-A

SECTION B-B

GENERAL NOTES:

A rumble stripe shall be constructed on all of the asphalt concrete shoulders by grinding alternating patterns of 40' continuous indentations in the asphalt concrete. The rumble stripe shall receive a flush seal with the shoulder flush sealing or asphalt surface treatment.

A rumble stripe shall not be constructed through intersecting roads, entrances, and turnouts. The lengths of the 40' segments with continuous indentations and the 12' segments without a rumble stripe adjacent to the intersecting roads, entrances, and turnouts shall be adjusted as approved by the Engineer.

Prior to constructing the rumble stripe the Contractor shall submit to the Engineer, for approval, the proposed method of constructing the rumble stripe.

Measurement of the rumble stripe shall be to the nearest 0.1 of a mile for each shoulder. Measurement and payment of the rumble stripe shall include the 12' long segments without rumble stripes and the segments adjacent to intersecting roads, entrances, and turnouts without rumble stripes. Payment for constructing the rumble stripe shall be at the contract unit price per mile for "Grind 8" Rumble Strip or Stripe in Asphalt Concrete".

June 26, 2011

Published Date: 3rd Qtr. 2015	SDDOT	8" RUMBLE STRIPE IN ASPHALT CONCRETE ON NONDIVIDED HIGHWAY SHOULDERS	PLATE NUMBER 320.20
			Sheet 1 of 1

PLOT SCALE - 1:200
PLOT NAME - 6
FILE - ...\32011 & 32020.DGN
-PLOTTED FROM - TRAB17892

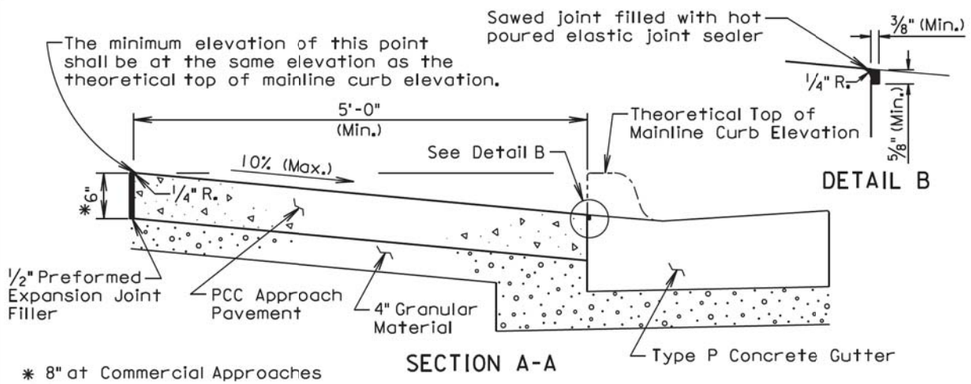

* 8" at Commercial Approaches

** Width for 6" high curb is 6' (See Standard Plate 650.35)

*** Within these areas, the surface of the type A PCC approach pavement shall be sloped transitionally as approved by the Engineer.

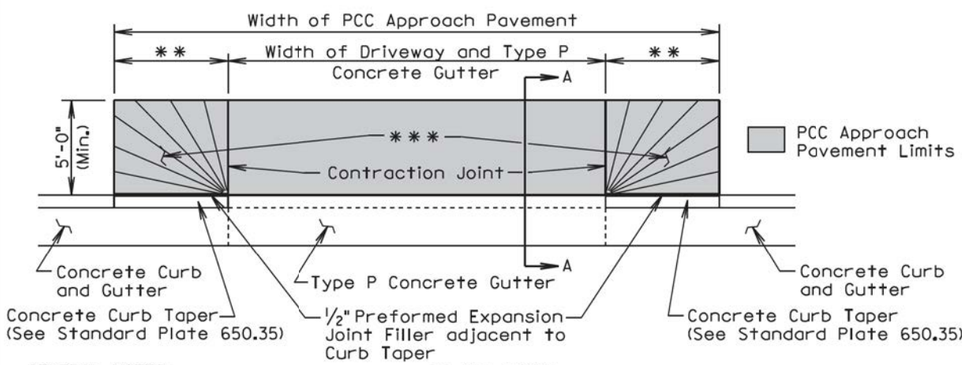

PLAN VIEW

GENERAL NOTES:

The concrete for the type A PCC approach pavement and adjacent driveway shall comply with the requirements of the Specifications for class M6 concrete unless otherwise stated in the plans.

Contraction joints in the type A PCC approach pavement shall be 1 1/2 inches deep if formed in the fresh concrete using a suitable grooving tool. If a saw is used to cut the contraction joints, then the depth of the joint shall be at least 1/4 the thickness of the approach pavement. Additional contraction joints not shown in the Plan View shall be spaced as follows:

One joint at the center of the approach for driveways 16' to 24' wide.
Two joints spaced at equal intervals for driveways greater than 24' to 40' wide.

All costs for furnishing and placing the type A PCC approach pavement and constructing the expansion and contraction joints including labor, equipment, and materials including the earthen backfill shall be incidental to the contract unit price per square yard for the corresponding PCC Approach Pavement bid item.

All costs for excavation required for placing the type A PCC approach pavement and granular material shall be incidental to the contract unit price per cubic yard for "Unclassified Excavation". All costs for furnishing and placing the granular material shall be incidental to the contract unit price per ton for the corresponding granular material bid item.

June 26, 2015

Published Date: 3rd Qtr. 2015	SDDOT	TYPE A PCC APPROACH PAVEMENT	PLATE NUMBER 380.40
			Sheet 1 of 1

TOLERANCES IN DIMENSIONS

Diameter: ±1.5% for 24" Dia. or less and ±1% or 3/8" whichever is more for 27" Dia. or greater.
Diameters at joints: ± 3/16" for 30" Dia. or less and ± 1/4" for 36" or greater.
Length of joint (J): ± 1/4".
Wall thickness (T): not less than design T by more than 5% or 3/16", whichever is greater.
Laying length: shall not underrun by more than 1/2".

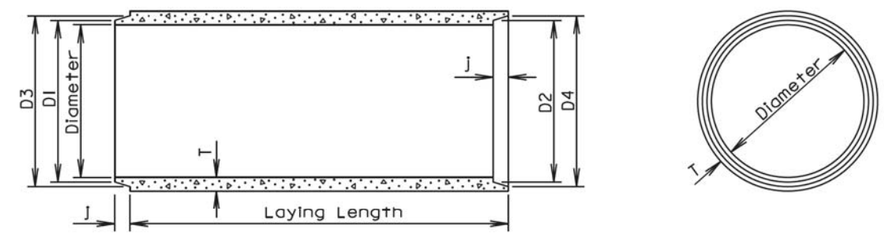

LONGITUDINAL SECTION

END VIEW

GENERAL NOTES:

Construction of R.C.P. shall conform to the requirements of Section 990 of the Specifications.

Not more than 2 four-foot sections shall be permitted near the ends of any culvert. Four-foot lengths shall be used only to secure the required length of culvert.

Diam. (in.)	Approx. Wt. /Ft. (lb.)	T (in.)	J (in.)	D1 (in.)	D2 (in.)	D3 (in.)	D4 (in.)
12	92	2	1 3/4	13 1/4	13 5/8	13 7/8	14 1/4
15	127	2 1/4	2	16 1/2	16 7/8	17 1/4	17 5/8
18	168	2 1/2	2 1/4	19 5/8	20	20 3/8	20 3/4
21	214	2 3/4	2 1/2	22 7/8	23 1/4	23 3/4	24 1/8
24	265	3	2 3/4	26	26 3/8	27	27 3/8
27	322	3 1/4	3	29 1/4	29 5/8	30 1/4	30 5/8
30	384	3 1/2	3 1/4	32 3/8	32 3/4	33 1/2	33 7/8
36	524	4	3 3/4	38 3/4	39 1/4	40	40 1/2
42	685	4 1/2	4	45 1/8	45 5/8	46 1/2	47
48	867	5	4 1/2	51 1/2	52	53	53 1/2
54	1070	5 1/2	4 1/2	57 7/8	58 3/8	59 3/8	59 7/8
60	1296	6	5	64 1/4	64 3/4	66	66 1/2
66	1542	6 1/2	5 1/2	70 5/8	71 1/8	72 1/2	73
72	1810	7	6	77	77 1/2	79	79 1/2
78	2098	7 1/2	6 1/2	83 3/8	83 7/8	85 5/8	86 1/8
84	2410	8	7	89 3/4	90 1/4	92 1/8	92 5/8
90	2740	8 1/2	7	95 3/4	96 1/4	98 1/8	98 5/8
96	2950	9	7	102 1/8	102 5/8	104 1/2	105
102	3075	9 1/2	7 1/2	109	109 1/2	111 1/2	112
108	3870	10	7 1/2	115 1/2	116	118	118 1/2

June 26, 2015

Published Date: 3rd Qtr. 2015	SDDOT	REINFORCED CONCRETE PIPE	PLATE NUMBER 450.01
			Sheet 1 of 1

PLOT SCALE - 1:200
PLOTTED FROM - TRAB17892
PLOT NAME - 7
FILE - ...\38040 & 45001.DGN

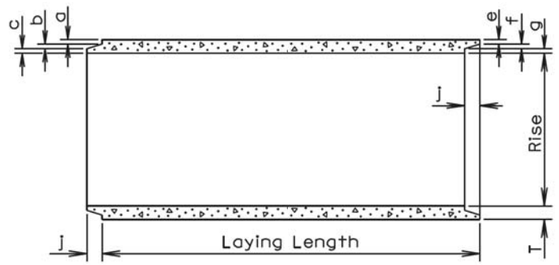

LONGITUDINAL SECTION

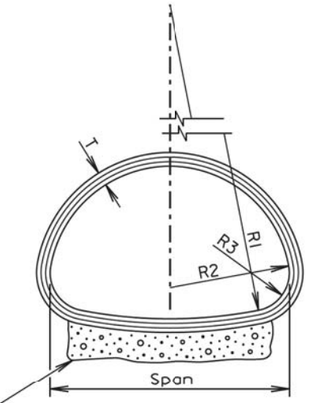

END VIEW

TOLERANCES IN DIMENSIONS

Radial dimensions at joints: ± 1/8" for 65" span or less and ± 1/4" for longer spans.
Rise and Span: ±2% of tabular values.
Length of Joint (J): ± 1/4".
Wall thickness (T): not less than design T by more than 5% or 3/16", whichever is greater.
Laying length: shall not underrun by more than 1/2".

Gravel Bedding Material shall be supplied for 102" to 169" spans. It shall be placed to a thickness of 6" (Min.) x 85% of the Span x Length of culvert and shall conform to the gradation requirements for gravel surfacing except material may be screened or may be plan provided material.

* Size (in.)	Approx. Wt./Ft. (lb.)	Rise (in.)	Span (in.)	T (in.)	a (in.)	b (in.)	c (in.)	j (in.)	e (in.)	f (in.)	g (in.)	R1 (in.)	R2 (in.)	R3 (in.)
18	170	13 1/2	22	2 1/2	1 3/8	3/8	3/4	2	1 1/8	3/8	1	27 1/2	13 3/4	5 1/4
24	320	18	28 1/2	3 1/2	1 5/8	1/2	1 3/8	3	1 3/8	1/2	1 5/8	40 11/16	14 3/4	4 5/8
30	450	22 1/2	36 1/4	4	1 13/16	5/8	1 9/16	3 1/2	1 9/16	5/8	1 13/16	51	18 3/4	6 1/8
36	600	26 5/8	43 3/4	4 1/2	2	3/4	1 3/4	4	1 3/4	3/4	2	62	22 1/2	6 1/2
42	740	31 5/16	51 1/8	4 1/2	2	3/4	1 3/4	4	1 3/4	3/4	2	73	26 1/4	7 3/4
48	890	36	58 1/2	5	2 1/4	3/4	2	5	2	3/4	2 1/4	84	30	8 7/8
54	1100	40	65	5 1/2	2 1/2	3/4	2 1/4	5	2 1/4	3/4	2 1/2	92 1/2	33 3/8	10
60	1400	45	73 1/2	6	3 5/16	3/4	1 15/16	5	2 3/4	3/4	2 1/2	105	37 1/2	11
72	1900	54	88	7	3 13/16	1	2 3/16	6	3 1/4	1	2 3/4	126	45	13 5/16
84	2500	62	102	8	4 1/8	1	2 7/8	6	3 1/2	1	3 1/2	162 1/2	52	14 1/2
96	3300	78	122 3/8	9	4 1/2	1	3 1/2	7	4	1	4	218	62	20
108	4200	88	138 1/2	10	5	1	4	7	4 1/2	1	4 1/2	269	70	22
120	5100	96 7/8	154	11	5 1/2	1	4 1/2	7	5	1	5	301 3/8	78	24
132	5100	106 1/2	168 3/4	10		1	4	7	4 1/2	1	4 1/2	329	85 5/8	26 7/8

* Equivalent Diameter of Circular R. C. P.

GENERAL NOTES:

Construction of R.C.P. Arch shall conform to the requirements of Section 990 of the Specifications. Not more than 2 four-foot sections shall be permitted near the ends of any culvert. Four-foot lengths shall be used only to secure the required length of culvert.

June 26, 2015

Published Date: 3rd Qtr. 2015	SDDOT	REINFORCED CONCRETE PIPE ARCH	PLATE NUMBER 450.02
			Sheet 1 of 1

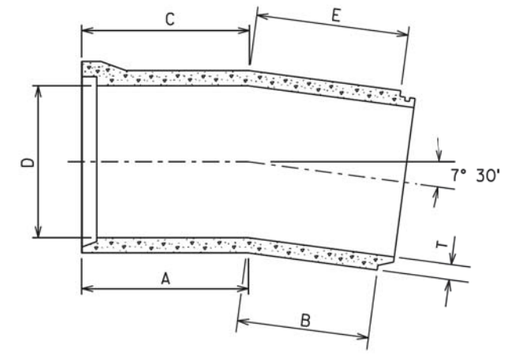

GENERAL NOTE:

Centerline laying length: 4'-0
Radius of Curve: 30.5'

D (in.)	T (in.)	A (in.)	B (in.)	C (in.)	E (in.)	Weight of Section (lbs.)
12	2	36 15/32	10 15/32	37 17/32	11 17/32	368
15	2 1/4	36 1/2	10 1/4	37 3/4	11 1/2	508
18	2 1/2	24 1/2	22	26	23 1/2	672
21	2 3/4	24 1/2	21 3/4	26 1/4	23 1/2	856
24	3	25 1/32	21 1/32	26 31/32	22 31/32	1060
27	3 1/4	25 1/32	20 25/32	27 7/32	22 31/32	1288
30	3 1/2	25 1/32	20 17/32	27 15/32	22 31/32	1536
33	3 3/4	24 15/16	20 7/16	27 9/16	23 1/16	1808
36	4	24 13/16	20 5/16	27 11/16	23 3/16	2096
42	4 1/2	24 27/32	19 27/32	28 5/32	23 5/32	2740
48	5	24 19/32	19 19/32	28 13/32	23 13/32	3468
54	5 1/2	24 5/8	19 1/8	29 11/32	23 3/8	4280
60	6	24 21/32	18 21/32	29 11/32	23 11/32	5184
66	6 1/2	24 11/16	18 3/16	29 13/16	23 5/16	6168
72	7	24 1/8	18 1/8	29 7/8	23 7/8	7240
84	8	24 1/4	17 1/4	30 3/4	23 3/4	9640
96	9	23 5/16	17 5/16	30 11/16	24 11/16	12400

March 31, 2000

Published Date: 3rd Qtr. 2015	SDDOT	REINFORCED CONCRETE PIPE LONG RADIUS BEND	PLATE NUMBER 450.04
			Sheet 1 of 1

PLOT SCALE - 1:200
PLOT NAME - 8
FILE - ...\45002 & 45004.DGN
-PLOTTED FROM - TRAB17882

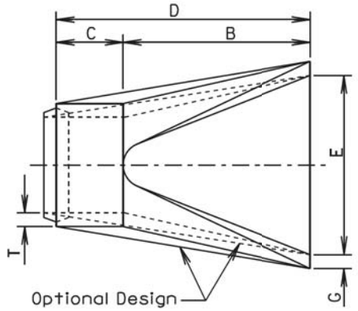

TOP VIEW

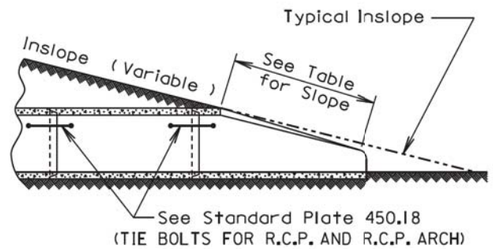

SLOPE DETAIL

GENERAL NOTES:

Lengths of concrete pipe shown on plan sheets are between flared ends only.

Construction of R.C.P. Flared End shall conform to the requirements of Section 990 of the Specifications.

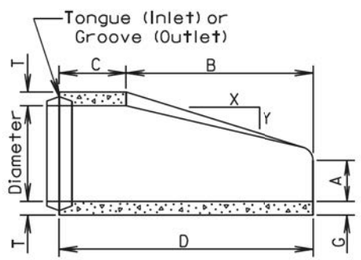

LONGITUDINAL SECTION

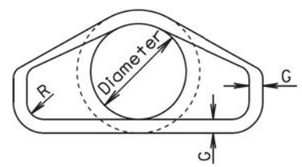

END VIEW

Dia. (in.)	Approx. Wt. of Section (lbs.)	Approx. Slope (X to Y)	T (in.)	A (in.)	B (in.)	C (in.)	D (in.)	E (in.)	G (in.)	R (in.)
12	530	2.4:1	2	4	24	48 7/8	72 7/8	24	2	1 1/2
15	740	2.4:1	2 1/4	6	27	46	73	30	2 1/4	1 1/2
18	990	2.3:1	2 1/2	9	27	46	73	36	2 1/2	1 1/2
21	1280	2.4:1	2 3/4	9	36	37 1/2	73 1/2	42	2 3/4	1 1/2
24	1520	2.5:1	3	9 1/2	43 1/2	30	73 1/2	48	3	1 1/2
27	1930	2.5:1	3 1/4	10 1/2	49 1/2	24	73 1/2	54	3 1/4	1 1/2
30	2190	2.5:1	3 1/2	12	54	19 3/4	73 3/4	60	3 1/2	1 1/2
36	4100	2.5:1	4	15	63	34 3/4	97 3/4	72	4	1 1/2
42	5380	2.5:1	4 1/2	21	63	35	98	78	4 1/2	1 1/2
48	6550	2.5:1	5	24	72	26	98	84	5	1 1/2
54	8240	2:1	5 1/2	27	65	33 1/4	98 1/4	90	5 1/2	1 1/2
60	8730	1.9:1	6	35	60	39	99	96	5	1 1/2
66	10710	1.7:1	6 1/2	30	72	27	99	102	5 1/2	1 1/2
72	12520	1.8:1	7	36	78	21	99	108	6	1 1/2
78	14770	1.8:1	7 1/2	36	90	21	111	114	6 1/2	1 1/2
84	18160	1.6:1	8	36	90 1/2	21	111 1/2	120	6 1/2	1 1/2
90	20900	1.5:1	8 1/2	41	87 1/2	24	111 1/2	132	6 1/2	6

June 26, 2015

Published Date: 3rd Qtr. 2015

SDDOT

R. C. P. FLARED ENDS

PLATE NUMBER 450.10

Sheet 1 of 1

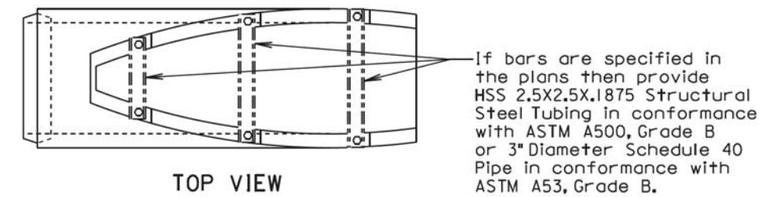

TOP VIEW

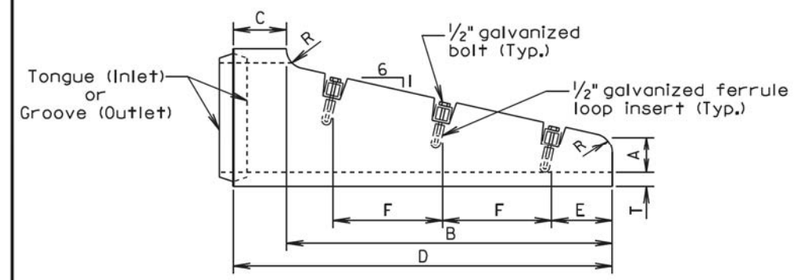

SIDE VIEW

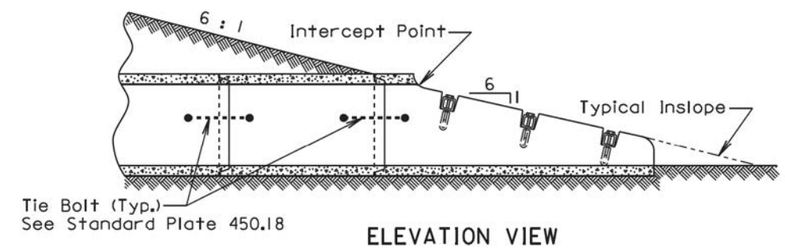

ELEVATION VIEW

Dia. (in.)	T (in.)	R (in.)	A (in.)	B (in.)	C (in.)	D (in.)	E (in.)	F (in.)	No. Sections	No. Bars
FOR CIRCULAR PIPE										
15	2 1/4	3	6	48	9	57	6	18	1	3
18	2 1/2	3	6	69	9	78	9	24	1	3
*24	3	3	6	111	9	120	6	24	1 or 2	5
FOR ARCH PIPE										
**18	2 1/2	1	6	39	33	72	6	24	1	2

*The use of 2 sections must be an approved design.
**Equivalent Diameter of Circular R. C. P.

GENERAL NOTES:

The length of concrete pipe shown on the plans is between safety ends.

Safety ends without bars are acceptable with or without the bar notches.

Bars shall be galvanized after fabrication in accordance with ASTM A123.

August 31, 2013

Published Date: 3rd Qtr. 2015

SDDOT

R. C. P. SAFETY ENDS WITH OR WITHOUT BARS

PLATE NUMBER 450.12

Sheet 1 of 1

PLOT SCALE - 1:200
PLOT NAME - 9
FILE - ...\45010 & 45012.DGN
PLOTTED FROM - TRAB17882

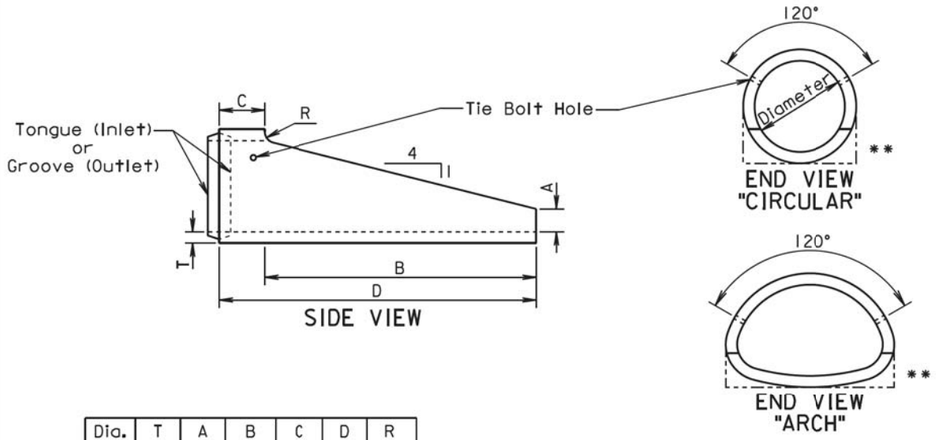

Dia. (in.)	T (in.)	A (in.)	B (in.)	C (in.)	D (in.)	R (in.)
FOR CIRCULAR PIPE						
24	3	6	72	12	84	3
30	3½	7½	90	12	102	3½
FOR ARCH PIPE						
* 24	3	6	48	12	60	3
* 30	3½	7½	60	12	72	3½
* 36	4½	8⅝	66	30	96	0
* 42	4½	10	77¼	18¾	96	0

ALTERNATE

Dia. (in.)	T (in.)	A (in.)	B (in.)	C (in.)	D (in.)	R (in.)
FOR CIRCULAR PIPE						
24	3	9	72	12	84	0
30	3½	11	90	12	102	0
FOR ARCH PIPE						
* 24	3	9	48	12	60	0
* 30	3½	11	60	12	72	0

* Equivalent Diameter of Circular R.C.P.

** Acceptable Flat Bottom Alternate.

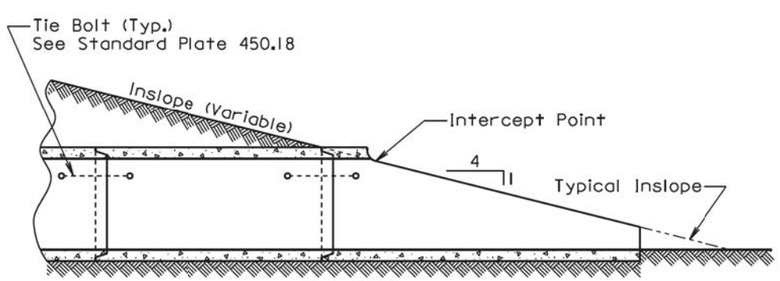

SECTION
(Along Centerline of Pipe)

GENERAL NOTE:

The length of concrete pipe shown in the construction plans is between sloped ends.

September 22, 2006

Published Date: 3rd Qtr. 2015	SDDOT	R. C. P. SLOPED ENDS	PLATE NUMBER 450.13 Sheet 1 of 1

Wall "t" (in.)	Rod Dia. (in.)	Pipe Sleeve Dia. (nominal)
≤ 3¼	⅝	¾
3½-6½	¾	1
≥ 7	1	1¼

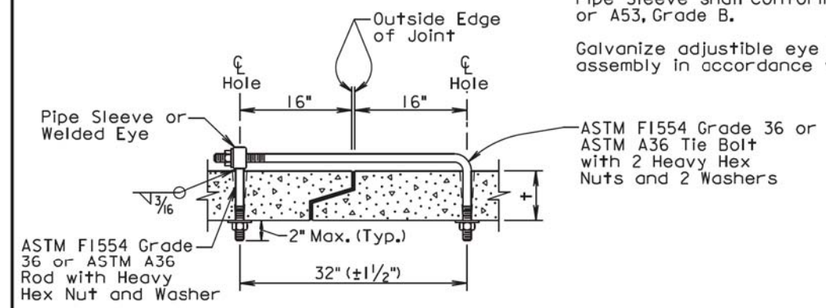

ADJUSTABLE EYE BOLT TIE

GENERAL NOTES:

Tie bolts shall conform to ASTM F1554 Grade 36 or ASTM A36. Nuts shall be heavy hex conforming to ASTM A563. Washers shall conform to ASTM F436.

Pipe Sleeve shall conform to ASTM A500 or A53, Grade B.

Galvanize adjustible eye bolt tie assembly in accordance with ASTM A153.

Pipe Dia. (in.)	"L" (in.)	Bolt Dia. (in.)
≤ 48	4	¾
> 48	6	1

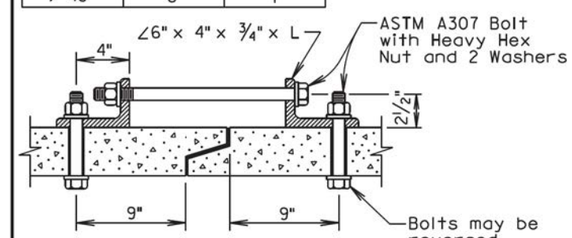

ANGLE AND BOLT TIE

GENERAL NOTES:

Angles shall conform to ASTM A36.

Bolts shall conform to ASTM A307. Nuts shall be heavy hex conforming to ASTM A563. Washers shall conform to ASTM F436.

Galvanize angles, bolts, nuts, and washers in accordance with ASTM A153.

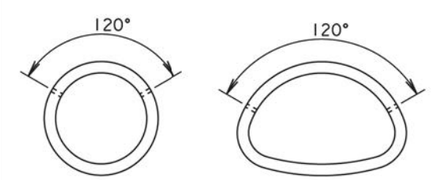

END VIEW "CIRCULAR" END VIEW "ARCH"

GENERAL NOTES:

In lieu of the tie bolts detailed above other types of tie bolt connections may be installed as approved by the Office of Bridge Design.

All pipe sections of R.C.P. and R.C.P. Arch shall be tied with tie bolts except for pipe located between drop inlets, manholes, and junction boxes. All pipe sections of pipes that only enter or exit drop inlets, manhole, and junction boxes shall be tied with tie bolts.

There will be no separate measurement or payment for the tie bolts. The cost for furnishing and installing the tie bolts shall be incidental to the contract unit price per foot for the corresponding bid item for R.C.P. or R.C.P. Arch.

February 28, 2013

Published Date: 3rd Qtr. 2015	SDDOT	TIE BOLTS FOR R.C.P. AND R.C.P. ARCH	PLATE NUMBER 450.18 Sheet 1 of 1

PLOT SCALE - 1:200

PLOT NAME - 10

FILE - ...\45013 & 45018.DGN

PLOTTED FROM - TRAB17882

* Dia. (in.)	2⅔"x ½" CORRUGATIONS S Span (in.)	H Rise (in.)	Area (Sq. Ft.)	3" X 1" CORRUGATIONS S Span (in.)	H Rise (in.)	Area (Sq. Ft.)
15	17	13	1.1			
18	21	15	1.6			
21	24	18	2.2			
24	28	20	2.8			
30	35	24	4.4			
36	42	29	6.4	40	31	7.0
42	49	33	8.7	46	36	9.4
48	57	38	11.4	53	41	12.3
54	64	43	14.3	60	46	15.6
60	71	47	17.6	66	51	19.3
66	77	52	21.3	73	55	23.2
72	83	57	25.3	81	59	27.4
78				87	63	32.1
84				95	67	37.0
90				103	71	42.4
96				112	75	48.0
102				117	79	54.2
108				128	83	60.8
114				137	87	67.4
120				142	91	74.5

* Equivalent diameter of circular C.M.P.

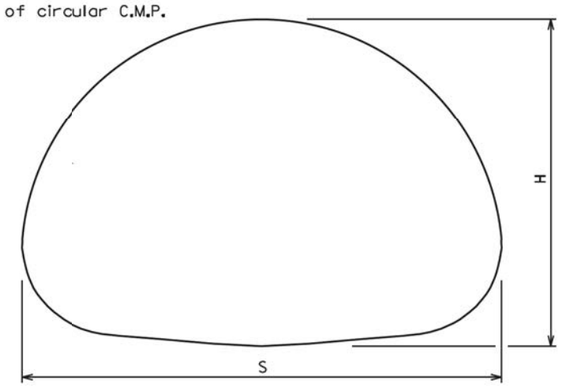

GENERAL NOTE:
All dimensions measured from inside crest.

March 31, 2000

Published Date: 3rd Qtr. 2015 | SDDOT | CORRUGATED METAL PIPE ARCH CULVERT | PLATE NUMBER 450.30 | Sheet 1 of 1

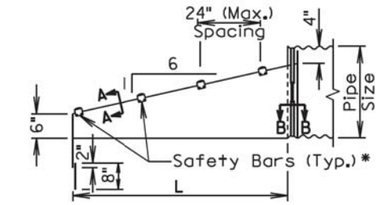

ELEVATION VIEW

* Number of bars required will vary depending on the length of the end section.

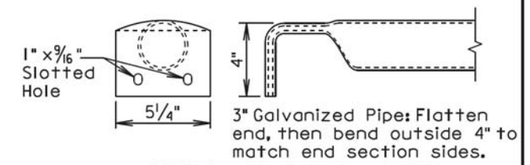

DETAIL OF SAFETY BARS

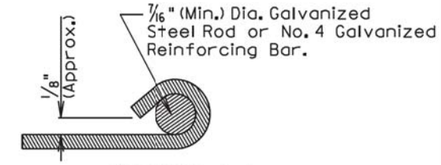

SECTION A-A

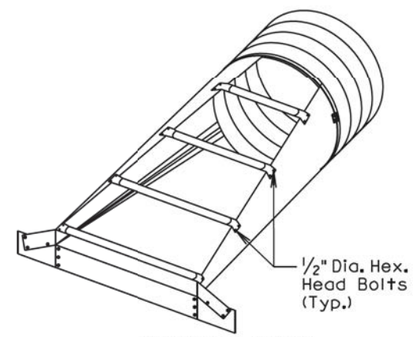

ISOMETRIC VIEW

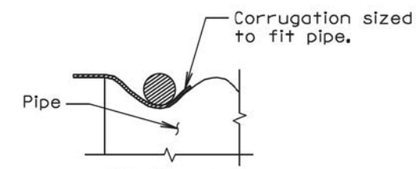

SECTION B-B

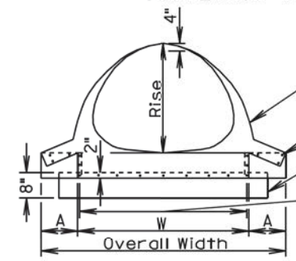

FRONT VIEW

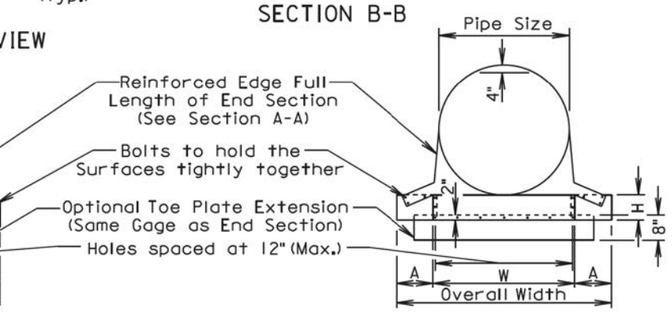

FRONT VIEW

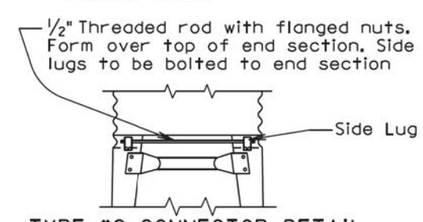

TYPE #2 CONNECTOR DETAIL
(For 30" and Larger)
(For 21" X 15" and Larger)

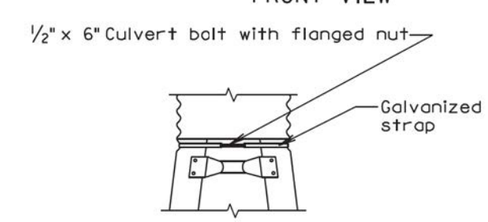

TYPE #1 CONNECTOR DETAIL
(For 15" Through 24")

June 26, 2015

Published Date: 3rd Qtr. 2015 | SDDOT | C. M. P. SAFETY ENDS | PLATE NUMBER 450.38 | Sheet 1 of 2

PLOT SCALE - 1:200
PLOTTED FROM - TRAB17882
PLOT NAME - 11
FILE - ...\45030 & 45038.DGN

ARCH C.M.P. SAFETY ENDS

Equv. Dia. (Inch)	(Inches) Span	Rise	Min. Thick. Inch	Gage	Dimensions (Inches) A	H	W	Overall Width	L Dimensions Slope	Length (Inch)
18	21	15	.064	16	8	6	27	43	6:1	30
21	24	18	.064	16	8	6	30	46	6:1	48
24	28	20	.064	16	8	6	34	50	6:1	60
30	35	24	.079	14	12	9	41	65	6:1	84
36	42	29	.109	12	12	9	48	72	6:1	114
42	49	33	.109	12	16	12	55	87	6:1	138
48	57	38	.109	12	16	12	63	95	6:1	168
54	64	43	.109	12	16	12	70	102	6:1	198
60	71	47	.109	12	16	12	77	109	6:1	222
72	83	57	.109	12	16	12	89	121	6:1	282

CIRCULAR C.M.P. SAFETY ENDS

Pipe Dia. (Inch)	Min. Thick. Inch	Gage	Dimensions (Inches) A	H	W	Overall Width	L Dimensions Slope	Length (Inch)
15	.064	16	8	6	21	37	6:1	30
18	.064	16	8	6	24	40	6:1	48
21	.064	16	8	6	27	43	6:1	66
24	.064	16	8	6	30	46	6:1	84
30	.109	12	12	9	36	60	6:1	120
36	.109	12	12	9	42	66	6:1	156
42	.109	12	16	12	48	80	6:1	192
48	.109	12	16	12	54	86	6:1	228
54	.109	12	16	12	60	92	6:1	264
60	.109	12	16	12	66	98	6:1	300

GENERAL NOTES:

Safety ends shall be fabricated from galvanized steel conforming to the requirements of the Specifications.

Safety bars shall be fabricated from steel schedule 40 pipe in conformance with ASTM A53, grade B or HSS 3.5X.216 in conformance with ASTM A500, grade B.

Slotted holes for safety bar attachment shall be provided for all end sections.

Attachment to circular pipes 15" through 24" diameter shall be made with Type #1 straps. All other sizes shall be attached with Type #2 rods and lugs.

When stated in the plans, optional toe plate extension shall be punched and bolted to end section apron lip with 3/8" diameter galvanized bolts. Steel for toe plate extension shall be same gauge as end section. Dimensions shall be overall width less 6" by 8" high.

Installation shall be performed in accordance with the Specifications.

Cost of all work and materials required for fabrication and installation of safety ends shall be incidental to the bid items for the various sizes of safety ends.

June 26, 2015

Published Date: 3rd Qtr. 2015	SDDOT	C. M. P. SAFETY ENDS	PLATE NUMBER 450.38
			Sheet 2 of 2

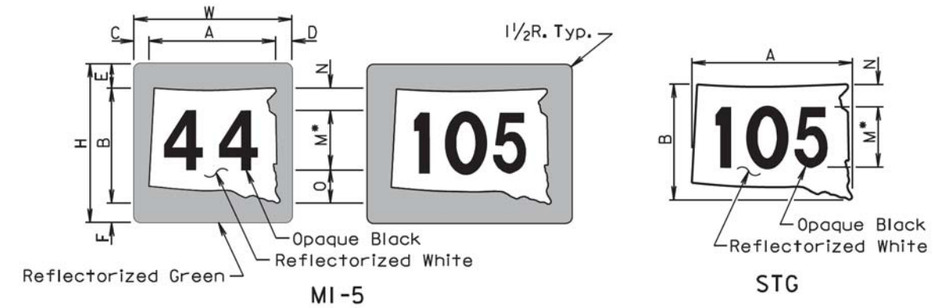

SIGN CODE	WxH	A	B	C	D	E	F	M*	N	O
MI-5	24x24	20½	18	2	1½	3½	2½	12D	2	4
MI-5**	30x24	24	18	2¼	1¾	3½	2½	12D	2	4
MI-5	30x30	25⅝	22½	2½	1⅞	4⅜	3⅛	15D	2½	5
MI-5	36x36	30¾	27	3	2¼	5¼	3¾	18D	3	6

SIGN CODE	AxB	M*	N
STG-24	24x18	10D	4
STG-32	32x24	12D	4¾
STG-48	48x36	18D	7
STG-64	64x48	24D	9½

*In the few cases where there is not enough space for the numerals, the standard "D" series font may be replaced with "C" series font if approved by the Engineer.

**3 Digits

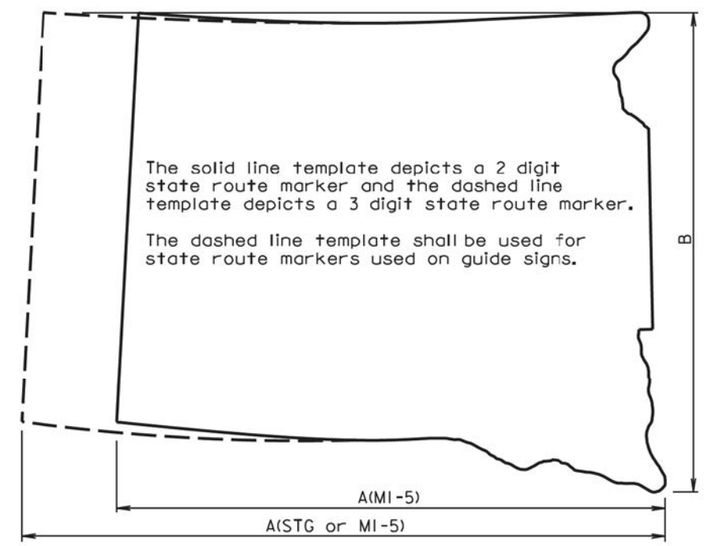

TEMPLATE FOR STATE ROUTE MARKER

GENERAL NOTES:

The unit for all dimensions shown is inches.

Numerals shall be "D" series font for all state route markers except as noted above.

December 23, 2003

Published Date: 3rd Qtr. 2015	SDDOT	STATE ROUTE MARKERS	PLATE NUMBER 632.20
			Sheet 1 of 1

PLOT SCALE - 1:200
PLOT NAME - 12
FILE - ...\450038 & 632220.DGN
PLOTTED FROM - TRAB17982

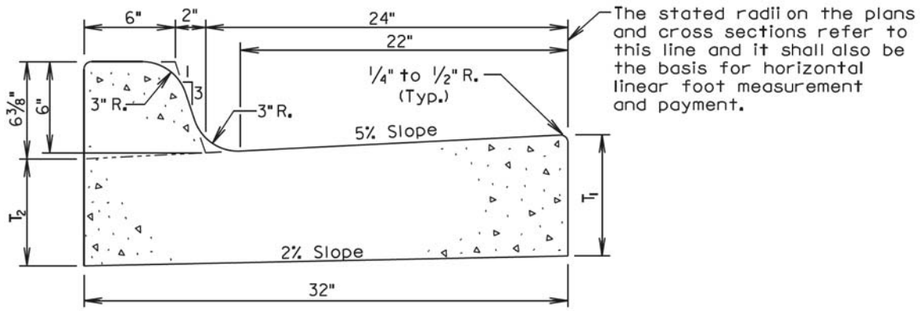

Type	T_1 (Inches)	T_2 (Inches)	Cu. Yd. Per Lin. Ft.	Lin. Ft. Per Cu. Yd.
B66	6	5 1/16	0.057	17.7
B67	7	6 1/16	0.065	15.4
B68	8	7 1/16	0.073	13.7
B68.5	8.5	7 9/16	0.077	13.0
B69	9	8 1/16	0.081	12.3
B69.5	9.5	8 9/16	0.085	11.7
B610	10	9 1/16	0.090	11.2
B610.5	10.5	9 9/16	0.094	10.7
B611	11	10 1/16	0.098	10.2
B611.5	11.5	10 9/16	0.102	9.8
B612	12	11 1/16	0.106	9.4

GENERAL NOTES:

When concrete curb and gutter longitudinally adjoins new concrete pavement, the method of attachment shall be by one of the methods shown on Standard Plate 380.11.

See Standard Plate 650.90 for expansion and contraction joints in the curb and gutter.

September 6, 2008

Published Date: 3rd Qtr. 2015	SDDOT	TYPE B CONCRETE CURB AND GUTTER	PLATE NUMBER 650.01
			Sheet 1 of 1

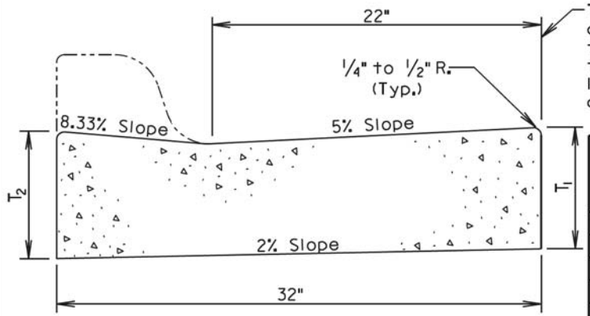

TRANSVERSE SECTION

Type	T_1 (Inches)	T_2 (Inches)	Cu. Yd. Per Lin. Ft.	Lin. Ft. Per Cu. Yd.
P6	6	6 3/8	0.047	21.2
P7	7	7 3/8	0.055	18.1
P8	8	8 3/8	0.064	15.7
P8.5	8.5	8 7/8	0.068	14.8
P9	9	9 3/8	0.072	13.9
P9.5	9.5	9 7/8	0.076	13.2
P10	10	10 3/8	0.080	12.5
P10.5	10.5	10 7/8	0.084	11.9
P11	11	11 3/8	0.088	11.3
P11.5	11.5	11 7/8	0.092	10.8
P12	12	12 3/8	0.096	10.4

Type P Concrete Gutter Limits

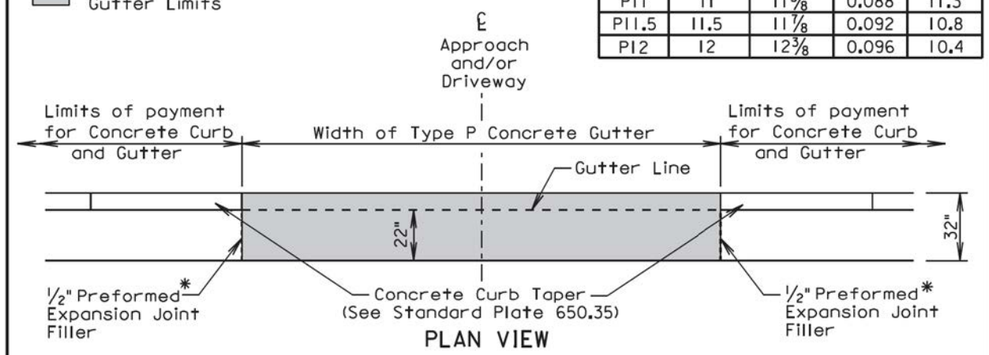

PLAN VIEW

* Joint will not be needed if concrete curb and gutter and type P concrete gutter is placed at the same time. If the 1/2" Preformed Expansion Joint Filler is provided, then the joint shall be sealed in accordance with Standard Plate 650.90.

GENERAL NOTES:

The concrete for the Type P Concrete Gutter shall comply with the requirements of the Specifications for Class M6 Concrete.

When concrete gutter longitudinally adjoins new concrete pavement, the method of attachment shall be by one of the methods shown on Standard Plate 380.11.

Transverse contraction joints shall be constructed at 10' intervals in the concrete gutter except when concrete gutter is constructed adjacent to mainline PCC pavement. When concrete gutter is constructed adjacent to mainline PCC pavement, a transverse contraction joint shall be constructed in the concrete gutter at each mainline PCC pavement transverse contraction joint location.

When concrete gutter is placed monolithically with mainline PCC pavement, the transverse contraction joints in the concrete gutter shall be sawed and sealed the same as the transverse contraction joints in the mainline PCC pavement.

When concrete gutter is not placed monolithically with the mainline PCC pavement and when the adjacent mainline surfacing is not PCC concrete, the transverse contraction joints in the concrete gutter shall be 1 1/2 inches deep if formed in the fresh concrete using a suitable grooving tool. If a saw is used to cut the contraction joints, then the depth of the joint shall be at least 1/4 the thickness of the concrete.

June 26, 2015

Published Date: 3rd Qtr. 2015	SDDOT	TYPE P CONCRETE GUTTER	PLATE NUMBER 650.30
			Sheet 1 of 1

PLOT SCALE - 1:200
PLOT NAME - 13
FILE - ...\65001 & 65030.DGN
PLOTTED FROM - TRAB17882

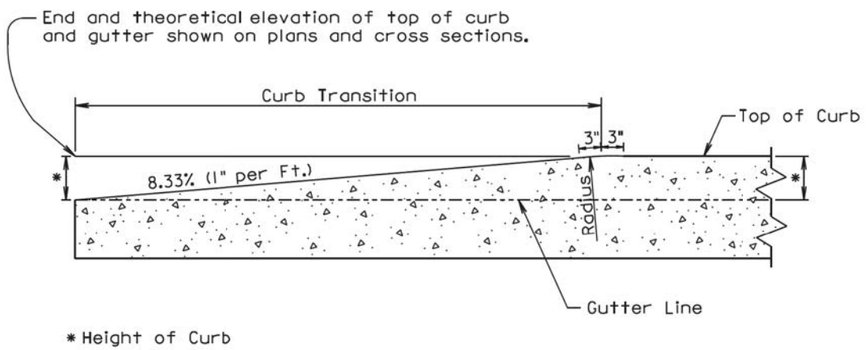

LONGITUDINAL SECTION OF CONCRETE CURB TAPER

September 14, 2005

Published Date: 3rd Qtr. 2015 | SDDOT | CONCRETE CURB TAPER | PLATE NUMBER 650.35 | Sheet 1 of 1

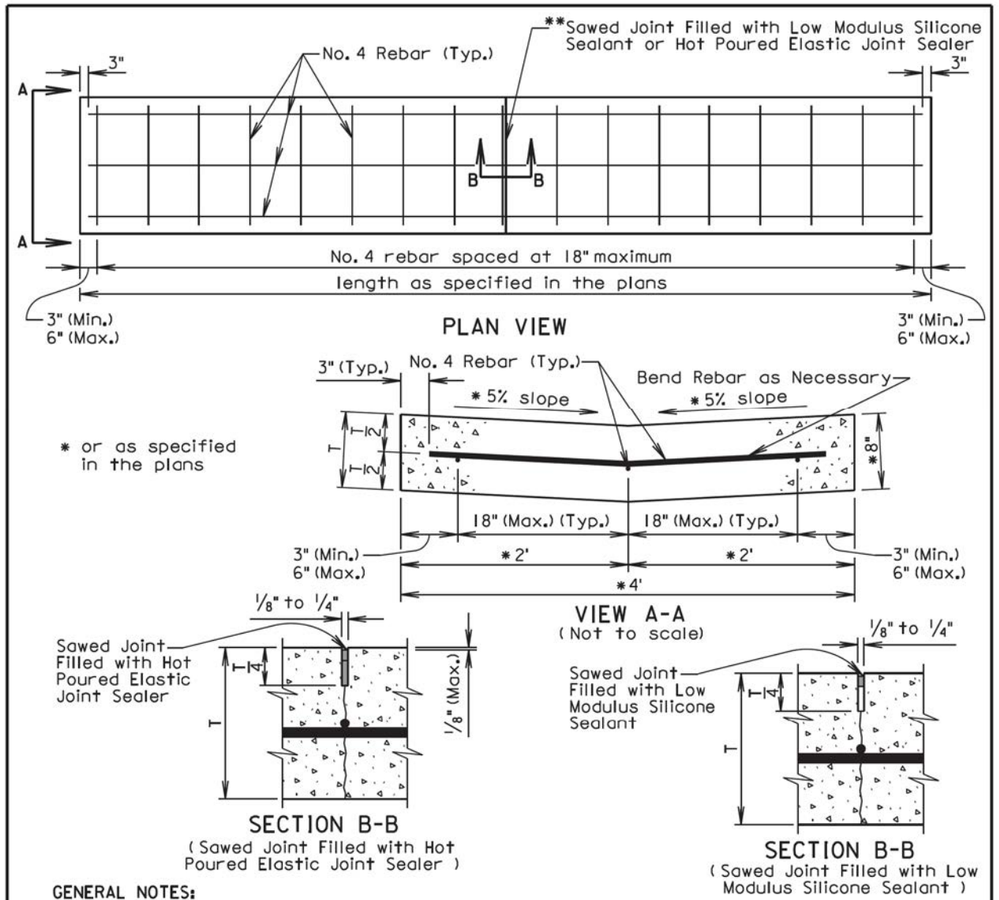

GENERAL NOTES:

The concrete shall comply with the Specifications for Class M6 concrete.

The reinforcing steel shall comply with the requirements of the Specification Sections 480 and 1010.

If a lap splice is provided the No. 4 rebar shall be lapped a minimum of 12".

** The sawed joints shall be spaced at 12'; however, when the length of the valley gutter is 12' to 24' there shall be a joint at the midpoint of the length. The saw cut to control cracking shall be a minimum of 1/4 the thickness of the pavement.

All hot poured elastic joint sealer material spilled on the surface of the concrete pavement shall be removed as soon as the material has cooled. The extent of removal of material shall be to the satisfaction of the Engineer. All costs for removal of the spilled joint sealer material shall be borne by the Contractor.

The silicone sealant shall be be bonded to the sides of a clean joint to completely seal the joint as approved by the Engineer.

All costs for furnishing and installing the valley gutter including materials, equipment, labor, and incidentals shall be included in the contract unit price per square yard for the corresponding Valley Gutter bid item.

February 10, 2014

Published Date: 3rd Qtr. 2015 | SDDOT | VALLEY GUTTER | PLATE NUMBER 650.40 | Sheet 1 of 1

PLOT SCALE - 1:200
PLOT NAME - 14
FILE - ...\65035 & 65040.DGN
PLOTTED FROM - TRAB17882

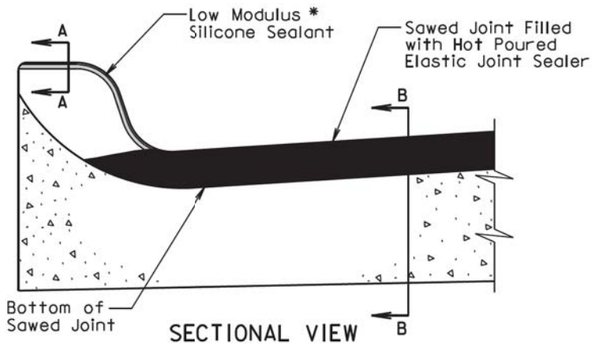

SECTIONAL VIEW

(Curb and Gutter Placed Monolithic with Adjacent Mainline PCC Pavement)

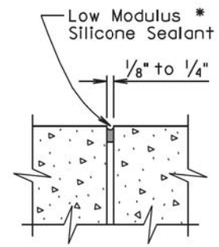

SECTION A-A

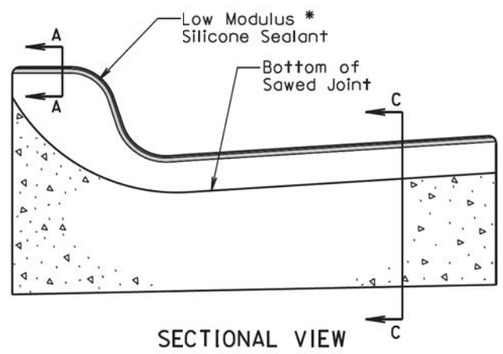

SECTIONAL VIEW

(Curb and Gutter not Placed Monolithic with Adjacent Mainline PCC Pavement or Mainline Surfacing is not PCC Pavement)

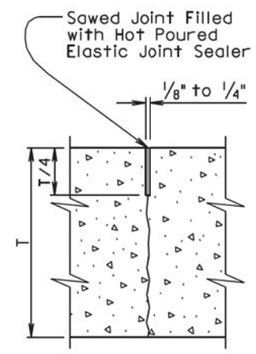

SECTION B-B

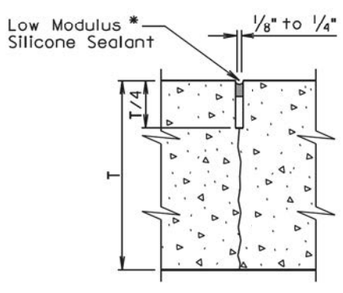

SECTION C-C

* The silicone sealant shall be placed such that it completely seals the joint and is bonded to the sides of the clean joint as approved by the Engineer.

September 6, 2013

Published Date: 3rd Qtr. 2015	SDDOT	JOINTS IN CONCRETE CURB AND GUTTER	PLATE NUMBER 650.90
			Sheet 1 of 2

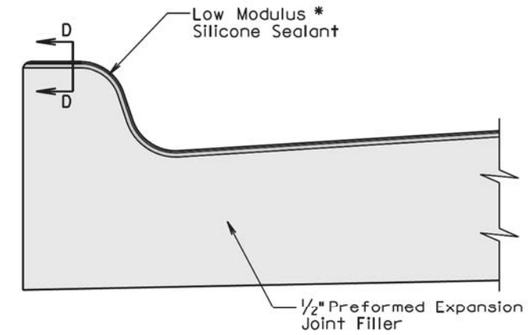

SECTIONAL VIEW

(Curb and Gutter at 1/2" Preformed Expansion Joint Filler Location)

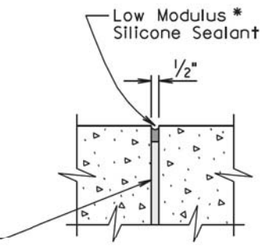

SECTION D-D

* The silicone sealant shall be placed such that it completely seals the joint and is bonded to the sides of the clean joint as approved by the Engineer.

GENERAL NOTES:

For illustrative reason, only the type B curb and gutter is shown.

** A 1/2" preformed expansion joint filler shall be placed transversely in the curb and gutter at the following locations:

1. At each junction between the radius return of curb and gutter and curb and gutter which is parallel to the project centerline.
2. At each junction between new curb and gutter and existing curb and gutter.

Transverse contraction joints shall be constructed at 10' intervals in the concrete curb and gutter except when the concrete curb and gutter is constructed adjacent to mainline PCC pavement. When concrete curb and gutter is constructed adjacent to mainline PCC pavement, a transverse contraction joint shall be constructed in the concrete curb and gutter at each mainline PCC pavement transverse contraction joint location.

When concrete curb and gutter is not placed monolithically with the mainline PCC pavement or when the adjacent mainline surfacing is not PCC concrete, the transverse contraction joints in the concrete curb and gutter shall be 1 1/2 inches deep if formed in the fresh concrete using a suitable grooving tool. If a saw is used to cut the contraction joints, then the depth of the joint shall be at least 1/4 the thickness of the concrete and the joint shall be sealed in accordance with the details shown above.

September 6, 2013

Published Date: 3rd Qtr. 2015	SDDOT	JOINTS IN CONCRETE CURB AND GUTTER	PLATE NUMBER 650.90
			Sheet 2 of 2

PLOT SCALE - 1:200
PLOT NAME - 15
FILE - ...\65090 & 65090.DGN
PLOTTED FROM - TRAB17882

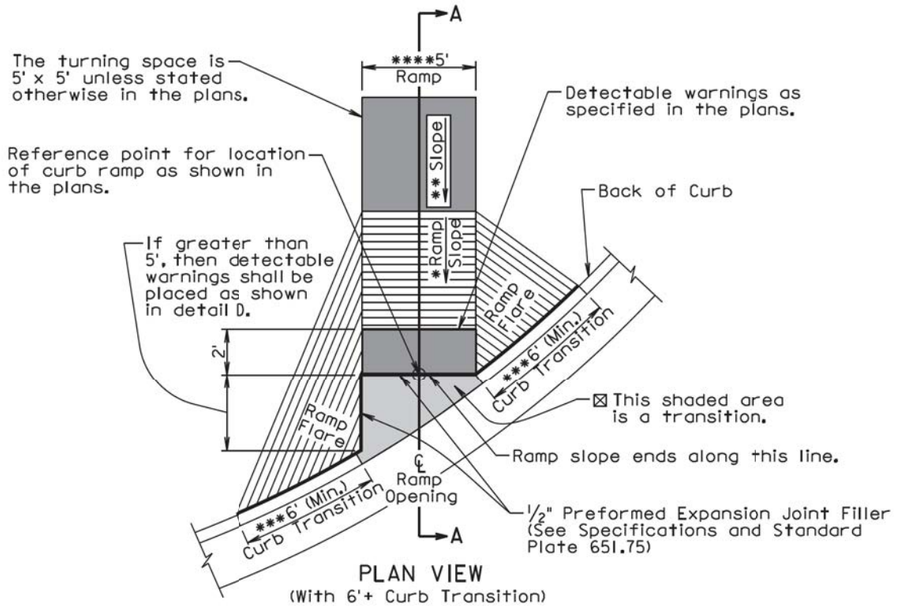

PLAN VIEW
(With 6'+ Curb Transition)

⊠ The slope within the transition area shall not be steeper than a 20:1 (5%). The concrete within the transition shall be placed monolithic with the curb and gutter or fillet section concrete. The concrete thickness within the transition shall be the same as the curb and gutter or fillet section concrete thickness.

*** The curb transition shall be a minimum of 6' long, a maximum of 10' long, and the curb transition slope shall not be steeper than a 10:1 (10%) unless stated otherwise in the plans.

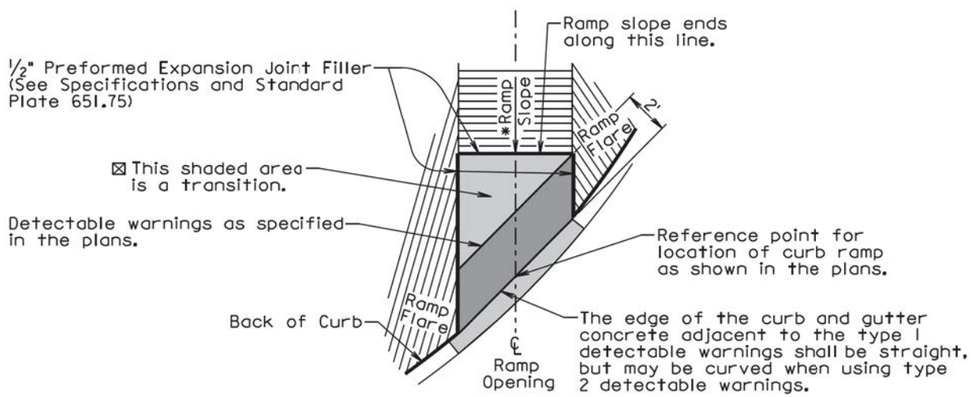

DETAIL D

June 26, 2015

Published Date: 3rd Qtr. 2015	SDDOT	TYPE 2 CURB RAMP (DIRECTIONAL CURB RAMP)	PLATE NUMBER 651.02
			Sheet 1 of 3

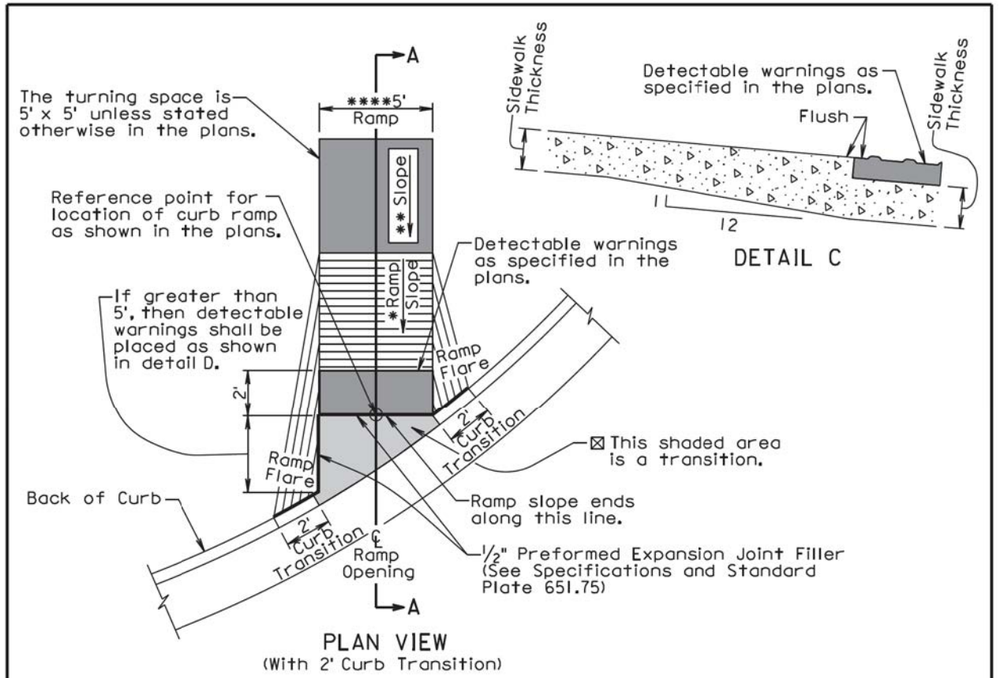

PLAN VIEW
(With 2' Curb Transition)

* The ramp slope shall be 12:1 (8.3%) maximum. The ramp length shall not exceed 15' unless stated otherwise in the plans. Ramp slopes are designed at 12:1 (8.3%) unless stated otherwise in the plans.

The cross slope of the ramp shall not be steeper than 50:1 (2%).

** The slope in the turning space shall not be steeper than a 50:1 (2%) in any direction of pedestrian travel.

**** The ramp width is 5' unless stated otherwise in the plans.

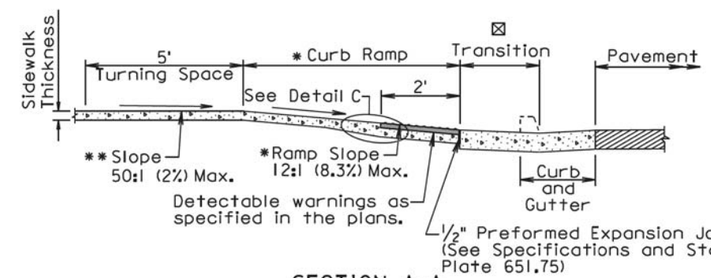

SECTION A-A

June 26, 2015

Published Date: 3rd Qtr. 2015	SDDOT	TYPE 2 CURB RAMP (DIRECTIONAL CURB RAMP)	PLATE NUMBER 651.02
			Sheet 2 of 3

PLOT SCALE - 1:200
PLOT NAME - 16
FILE - ...\65102 & 65102.DGN
PLOTTED FROM - TRAB17982

GENERAL NOTES:

For illustrative purpose only, type I detectable warnings are shown in the drawings.

The curb ramp depicted on this standard plate may be used with a PCC fillet section, with curved curb and gutter, or with straight curb and gutter. The curb ramp shall be placed at the location stated in the plans.

Sidewalk shall not be placed adjacent to the ramp flares when a 2' curb transition is used unless shown otherwise in the plans.

* Care shall be taken to ensure a uniform grade on the ramp, free of sags and short grade changes.

Surface texture of the ramp shall be obtained by coarse brooming transverse to the slope of the ramp.

The normal gutter line profile shall be maintained through the area of the ramp.

Joints shall be sawed or tooled into the concrete adjacent to the detectable warnings to alleviate possible corner cracking.

Care shall be taken to ensure that the surface of the detectable warnings are clean and maintains a uniform color.

The detectable warnings shall be cut as necessary to fit the plan specified limits of the detectable warnings. Cost for cutting the detectable warnings shall be incidental to the corresponding detectable warning bid item.

There will be no separate payment for curb ramps. The curb ramp shall be measured and paid for at the contract unit price per square foot for the corresponding concrete sidewalk bid item. The square foot area of the detectable warnings shall be included in the measured and paid for quantity of sidewalk.

The curb transitions and ramp opening shall be measured and paid for at the contract unit price per foot for the corresponding curb and gutter bid item when curb and gutter is used. The curb transitions and ramp opening shall be measured and paid for at the contract unit price per square yard for the corresponding PCC fillet section bid item when a PCC fillet section is used.

All costs for furnishing and installing the transition area at the base of the ramp shall be incidental to the contract unit price per foot for the corresponding curb and gutter bid item when curb and gutter is used and shall be incidental to the contract unit price per square yard for the corresponding PCC fillet section bid item when a PCC fillet section is used.

The type I detectable warnings shall be measured to the nearest square foot. All costs for furnishing and installing the type I detectable warnings including labor, equipment, materials, and incidentals shall be paid for at the contract unit price per square foot for "Type I Detectable Warnings".

The type 2 detectable warnings shall be measured to the nearest square foot. All costs for furnishing and installing the type 2 detectable warnings including labor, equipment, and materials, including adhesive, necessary sealant or grout, and necessary grinding shall be paid for at the contract unit price per square foot for "Type 2 Detectable Warnings".

June 26, 2015

Published Date: 3rd Qtr. 2015	SDDOT	TYPE 2 CURB RAMP (DIRECTIONAL CURB RAMP)	PLATE NUMBER 651.02
			Sheet 3 of 3

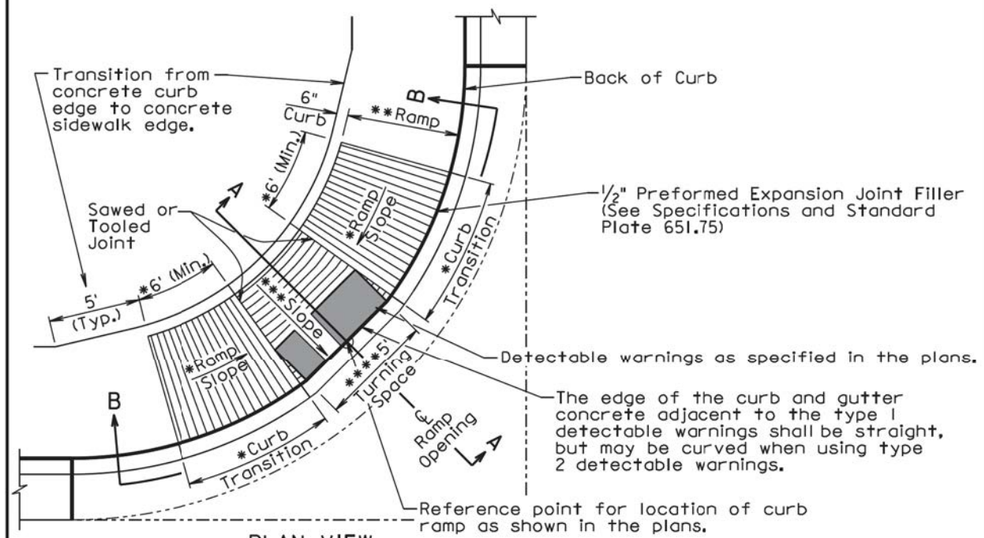

PLAN VIEW
(With Curved Curb and Gutter)

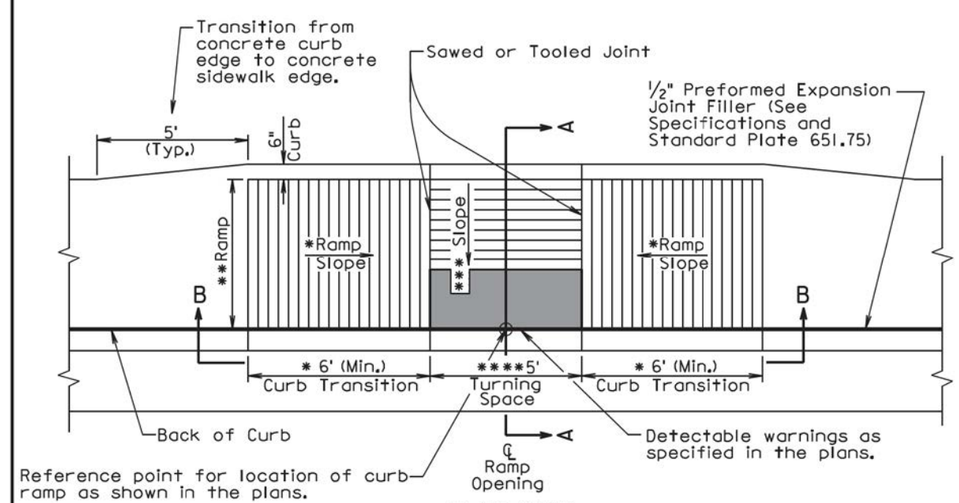

PLAN VIEW
(With Straight Curb and Gutter)

June 26, 2015

Published Date: 3rd Qtr. 2015	SDDOT	TYPE 3 CURB RAMP (PARALLEL CURB RAMP)	PLATE NUMBER 651.03
			Sheet 1 of 3

PLOT SCALE - 1:200
PLOT NAME - 17
FILE - ...\65102 & 65103.DGN
-PLOTTED FROM - TRAB17882

* The curb transition slope shall match the ramp slope. The ramp slope, at any location of the ramp, shall be 12:1 (8.3%) maximum. The ramp length shall not exceed 15' unless stated otherwise in the plans. Ramp slopes are designed at 12:1 (8.3%) unless stated otherwise in the plans. The minimum length of the curb transition shall be 6'.

** The ramp cross slope shall not be steeper than a 50:1 (2%) and the ramp width is 5' unless stated otherwise in the plans.

*** The slope in the turning space shall not be steeper than 50:1 (2%) in any direction of pedestrian travel.

**** The turning space is 5' x 5' unless stated otherwise in the plans.

☒ The curb height shall be 6" unless stated otherwise in the plans.

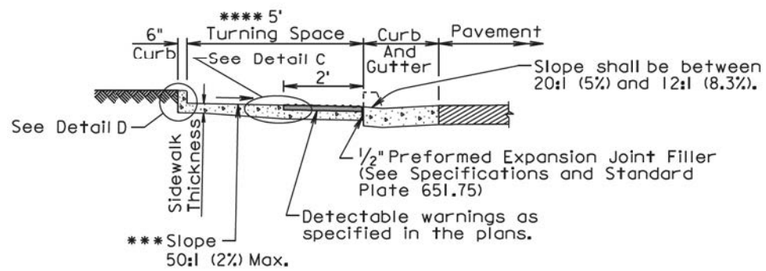

SECTION A-A

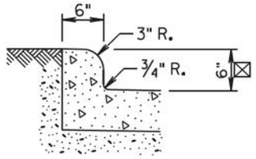

DETAIL D

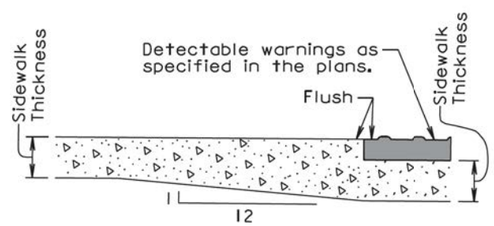

DETAIL C

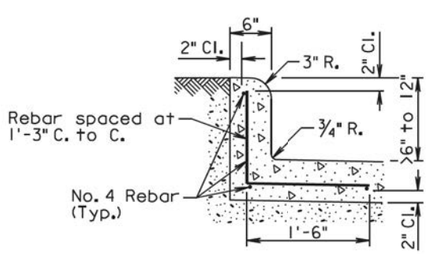

DETAIL D
(Use this detail when the curb height is greater than 6" and less than 12")

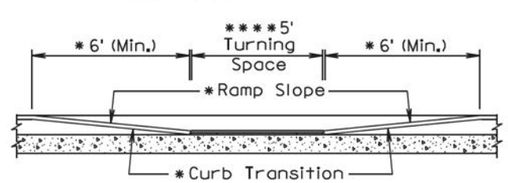

SECTIONAL VIEW B-B

June 26, 2015

Published Date: 3rd Qtr. 2015	SDDOT	TYPE 3 CURB RAMP (PARALLEL CURB RAMP)	PLATE NUMBER 651.03
			Sheet 2 of 3

GENERAL NOTES:

For illustrative purpose only, type 1 detectable warnings are shown in the drawings.

For illustrative purpose only, a PCC fillet section is shown in one of the drawings. The curb ramp depicted on this standard plate may be used with a PCC fillet section, with curved curb and gutter, or with straight curb and gutter.

The curb ramp shall be placed at the location stated in the plans.

Sidewalk adjacent to the curb ramp shall be as shown in the plans.

Care shall be taken to ensure a uniform grade on the ramp, free of sags and short grade changes.

Surface texture of the ramp shall be obtained by coarse brooming transverse to the slope of the ramp.

The normal gutter line profile shall be maintained through the area of the ramp.

Joints shall be sawed or tooled into the concrete adjacent to the detectable warnings to alleviate possible corner cracking (see plan view for joint location).

Care shall be taken to ensure that the surface of the detectable warnings are clean and maintains a uniform color.

The detectable warnings shall be cut as necessary to fit the plan specified limits of the detectable warnings. Cost for cutting the detectable warnings shall be incidental to the corresponding detectable warning bid item.

When curb height is greater than 6" and less than 12", reinforcing steel is required in accordance with the detail on sheet 2 of 3. The reinforcing steel shall conform to ASTM A615, Grade 60. Cost for furnishing and installing the reinforcing steel shall be incidental to the contract unit price per square foot for the corresponding concrete sidewalk bid item.

There will be no separate payment for curb ramps. The curb ramp shall be measured and paid for at the contract unit price per square foot for the corresponding concrete sidewalk bid item. The square foot area of the detectable warnings and the curb along the short radius shall be included in the measured and paid for quantity of sidewalk.

The curb transitions and ramp opening shall be measured and paid for at the contract unit price per foot for the corresponding curb and gutter bid item when curb and gutter is used. The curb transitions and ramp opening shall be measured and paid for at the contract unit price per square yard for the corresponding PCC fillet section bid item when a PCC fillet section is used.

The type 1 detectable warnings shall be measured to the nearest square foot. All costs for furnishing and installing the type 1 detectable warnings including labor, equipment, materials, and incidentals shall be paid for at the contract unit price per square foot for "Type 1 Detectable Warnings".

The type 2 detectable warnings shall be measured to the nearest square foot. All costs for furnishing and installing the type 2 detectable warnings including labor, equipment, and materials, including adhesive, necessary sealant or grout, and necessary grinding shall be paid for at the contract unit price per square foot for "Type 2 Detectable Warnings".

June 26, 2015

Published Date: 3rd Qtr. 2015	SDDOT	TYPE 3 CURB RAMP (PARALLEL CURB RAMP)	PLATE NUMBER 651.03
			Sheet 3 of 3

PLOT SCALE - 1:200
PLOT NAME - 18
FILE - ...\65103 & 65103.DGN
PLOTTED FROM - TRAB17882

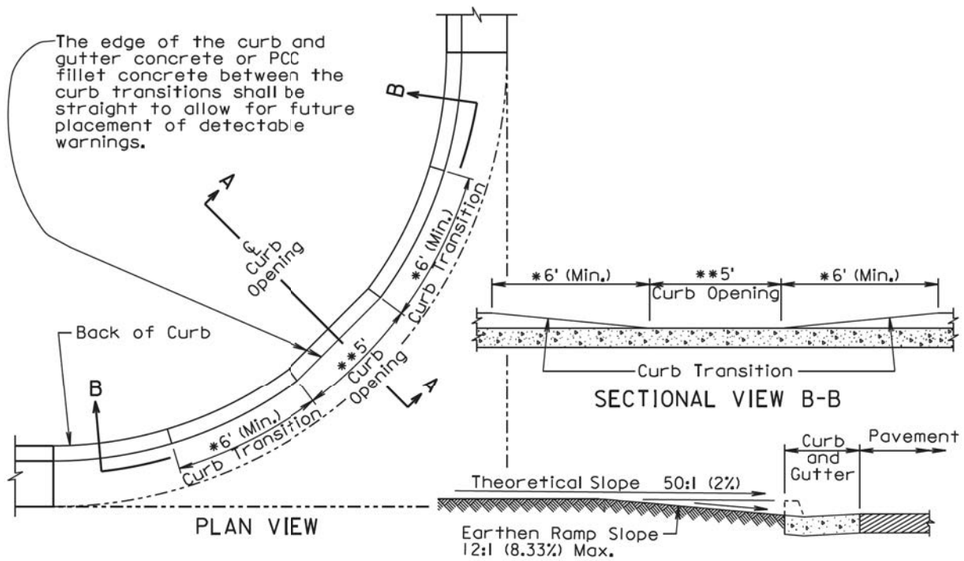

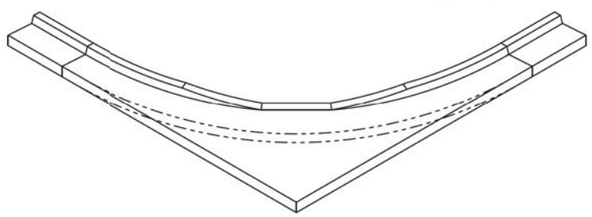

PERSPECTIVE VIEW

GENERAL NOTES:

For illustrative purpose only, the curb opening location is shown at the center of the fillet section. The curb opening shall be placed at the location(s) stated in the plans.

For illustrative purpose only, PCC fillet sections are shown in the above drawings. The curb opening depicted on this standard plate may be used with a PCC fillet section or with curb and gutter.

* The dimension shall be adjusted based on the curb type shown in the plans and the roadway geometrics. The curb transition shall be a minimum of 6' long and the curb transition slope shall not be steeper than a 10:1 (10%) unless stated otherwise in the plans.

** The curb opening width is 5' unless stated otherwise in the plans.

The normal gutter line profile shall be maintained through the area of the curb opening.

The curb transitions and opening shall be measured and paid for at the contract unit price per foot for the corresponding curb and gutter bid item when curb and gutter is used. The curb transitions and opening shall be measured and paid for at the contract unit price per square yard for the corresponding PCC fillet section bid item when a PCC fillet section is used.

September 6, 2008

Published Date: 3rd Qtr. 2015	SDDOT	CURB OPENING AND CURB TRANSITIONS IN CURB AND GUTTER FOR FUTURE CURB RAMP AND CURBSIDE SIDEWALK	PLATE NUMBER 651.15 Sheet 1 of 1

PLOT SCALE - 1:200
PLOT NAME - 19
FILE - ...\65115 & BLANK.DGN
PLOTTED FROM - TRAB17882

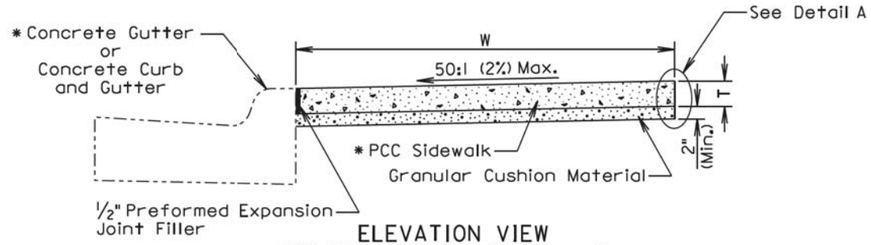

ELEVATION VIEW
(PCC Sidewalk without Boulevard)

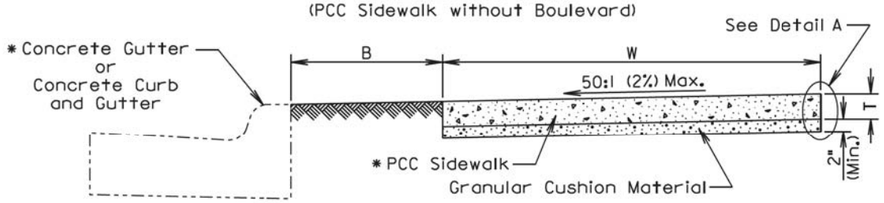

ELEVATION VIEW
(PCC Sidewalk with Boulevard)

B Width of boulevard as specified in the plans.
T Thickness of PCC sidewalk as specified in the plans.
W Width of PCC sidewalk as specified in the plans.
* Type as specified in the plans.

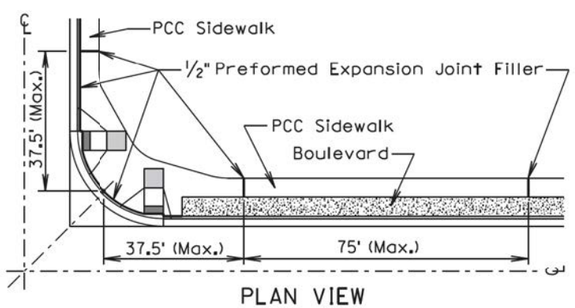

PLAN VIEW

GENERAL NOTES:

The PCC sidewalk shall be constructed in accordance with Section 651 of the Specifications.

The maximum length between expansion joints in PCC sidewalk is 75 feet.

PCC sidewalk placed adjacent to intersection of roadways shall have an expansion joint placed transversely a maximum of 37.5 feet from the intersection. See PLAN VIEW.

An expansion joint in PCC sidewalk shall consist of a 1/2 inch thick preformed expansion joint filler material placed full depth and width of the PCC sidewalk.

** Large areas of PCC pavement adjacent to PCC sidewalk may require a different joint treatment than shown in the detail. If a different joint detail is necessary, plans will contain the joint detail and the Contractor shall construct the joint treatment in accordance with the plans.

June 26, 2015

Published Date: 3rd Qtr. 2015	SDDOT	PCC SIDEWALK	PLATE NUMBER 651.75
			Sheet 1 of 2

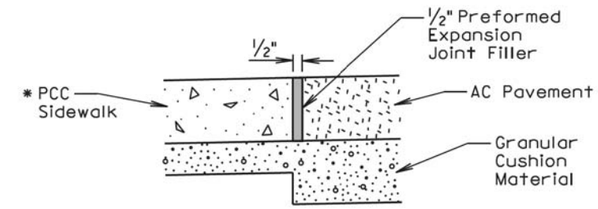

ELEVATION VIEW
(PCC sidewalk adjacent to asphalt concrete pavement)

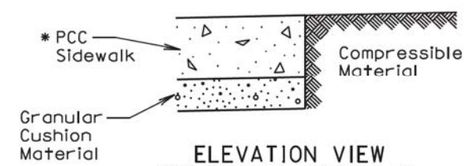

ELEVATION VIEW
(PCC sidewalk adjacent to earthen material, landscape rock, or other compressible materials)

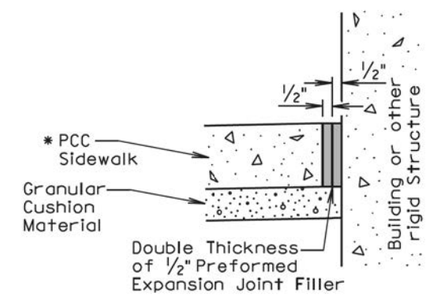

ELEVATION VIEW
(PCC sidewalk adjacent to building or other rigid structure)

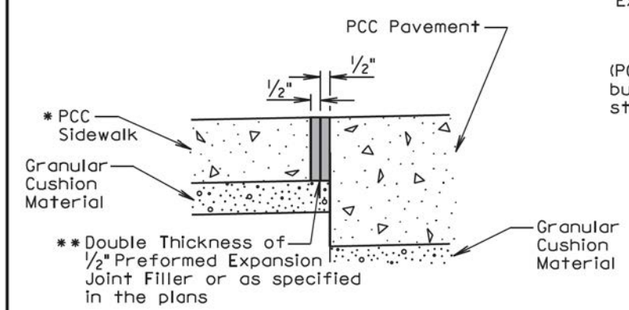

ELEVATION VIEW
(PCC sidewalk adjacent to PCC pavement)

Detail A
(Use Appropriate Detail(s))

June 26, 2015

Published Date: 3rd Qtr. 2015	SDDOT	PCC SIDEWALK	PLATE NUMBER 651.75
			Sheet 2 of 2

PLOT SCALE - 1:200
PLOT NAME - 20
FILE - ...\65175 & 65175.DGN
PLOTTED FROM - TRAB17882

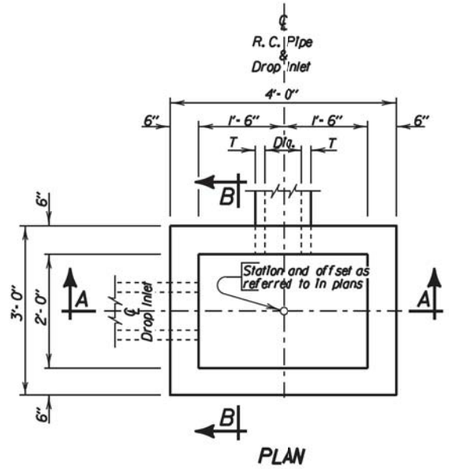

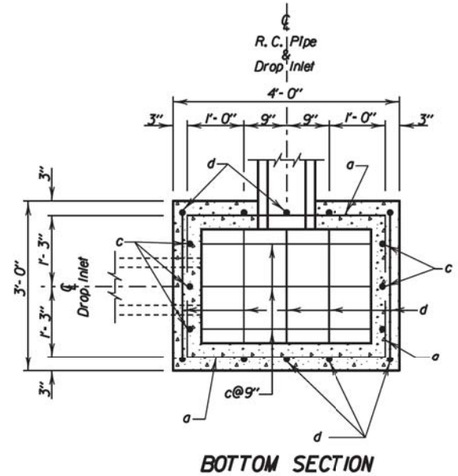

ESTIMATED QUANTITIES

ITEM	UNIT	CONSTANT QUANTITY	VARIABLE QUANTITY
✳ Class M6 Concrete	Cu Yd	0.26	0.22H
Reinforcing Steel	Lb	37	20.04H
Frame and Grate Assembly	Each	1	———

PIPE DISPLACEMENT REDUCTIONS

R.C. Pipe Diameter Inches	T Inches	Class M6 Concrete Cu Yd
12	2	0.03
15	2 1/4	0.04
18	2 1/2	0.05
24	3	0.09
27	3 1/4	0.11

DROP INLETS FOR 12" TO 27" DIAMETER PIPE

GENERAL NOTES:

✳ Reduce total quantities of concrete by the amount of concrete displaced by the pipe. The total quantity of concrete shall be computed to the nearest hundredth of a cubic yard. The total quantity of reinforcing steel shall be computed to the nearest pound.

Drop inlets shown may be modified by the addition or omission of connecting pipes as shown on the layouts.

Reinforcing steel shall conform to ASTM A615 Grade 60. The b bars shall be lapped 12 inches. Cut and bend reinforcing steel as required to place pipe(s) through the drop inlet wall.

Pipe shall not enter through a corner of the drop inlet.

Use 2" clear cover on all reinforcing steel unless otherwise noted.

Precasting of reinforced drop inlets will be permissible. Prior to precasting, the Contractor shall submit details to the Engineer for approval.

Maximum pipe diameter shall not exceed 18 inches on the 3 foot wide side and shall not exceed 27 inches on the 4 foot wide side of the drop inlet.

The dimension of H is in feet.

December 23, 2009

Published Date: 3rd Qtr. 2015 | SDDOT | 2'X 3' TYPE B REINFORCED CONCRETE DROP INLET | PLATE NUMBER 670.01 | Sheet 1 of 2

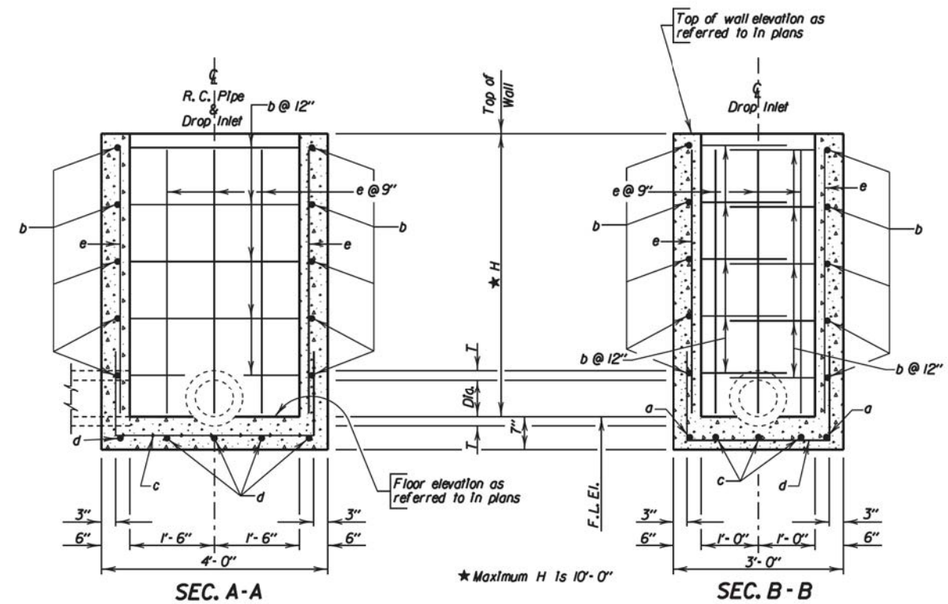

DROP INLETS FOR 12" TO 27" DIAMETER PIPE

REINFORCING SCHEDULE

MK.	No.	Size	Length	Type	Bending Details
a	2	4	5'-6"	17	
b	2H	4	7'-0"	17	
c	3	4	6'-6"	17	
d	5	4	5'-6"	17	
e	16	4	H - 2"	Str.	

NOTE:
All dimensions are out to out of bars.

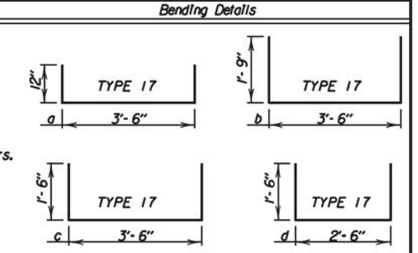

December 23, 2009

Published Date: 3rd Qtr. 2015 | SDDOT | 2'X 3' TYPE B REINFORCED CONCRETE DROP INLET | PLATE NUMBER 670.01 | Sheet 2 of 2

PLOT SCALE - 1:200
PLOT NAME - 21
FILE - ...\67001 & 67001.DGN
PLOTTED FROM - TRAB17882

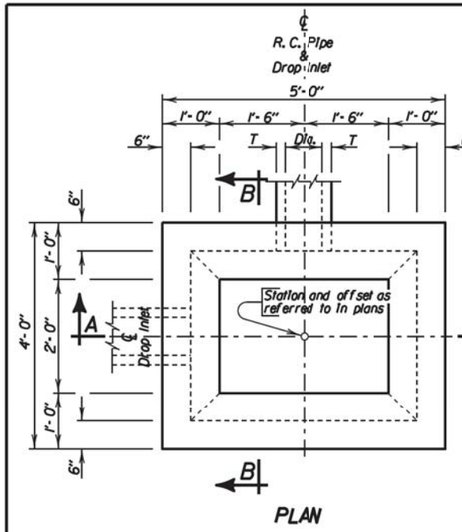

PLAN

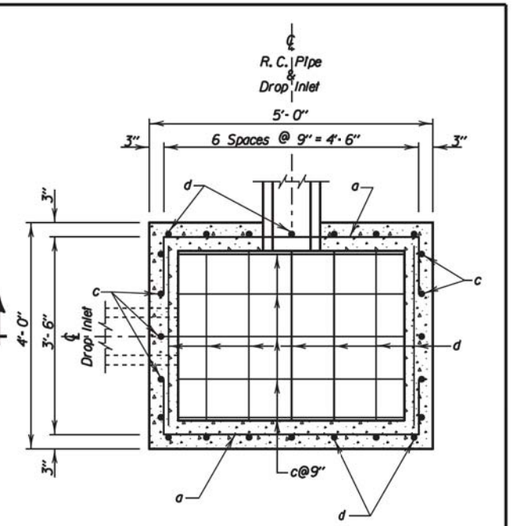

BOTTOM SECTION

PIPE DISPLACEMENT REDUCTIONS		
R.C. Pipe Diameter Inches	T Inches	Class M6 Concrete Cu'd
12	2	0.03
15	2 1/4	0.04
18	2 1/2	0.05
24	3	0.09
30	3 1/2	0.14
36	4	0.20

ESTIMATED QUANTITIES			
ITEM	UNIT	CONSTANT QUANTITY	VARIABLE QUANTITY
✳ Class M6 Concrete	Cu'd	0.72	0.30H
Reinforcing Steel	Lb	98	32.06H
Frame and Grate Assembly	Each	1	———

DROP INLETS FOR 12" TO 36" DIAMETER PIPE

GENERAL NOTES:

✳ Reduce total quantities of concrete by the amount of concrete displaced by the pipe. The total quantity of concrete shall be computed to the nearest hundredth of a cubic yard. The total quantity of reinforcing steel shall be computed to the nearest pound.

Drop Inlets shown may be modified by the addition or omission of connecting pipes as shown on the layouts.

Reinforcing steel shall conform to ASTM A615 Grade 60. The b and f bars shall be lapped 12 inches. Cut and bend reinforcing steel as required to place pipe(s) through the drop inlet wall.

Pipe shall not enter through a corner of the drop inlet.

Use 2" clear cover on all reinforcing steel unless otherwise noted.

Precasting of reinforced drop inlets will be permissible. Prior to precasting, the Contractor shall submit details to the Engineer for approval.

Maximum pipe diameter shall not exceed 27 inches on the 4 foot wide side and shall not exceed 36 inches on the 5 foot wide side of the drop inlet.

The dimension of H is in feet.

December 23, 2009

Published Date: 3rd Qtr. 2015 | SDDOT | 3'X 4' TYPE B REINFORCED CONCRETE DROP INLET | PLATE NUMBER 670.02 | Sheet 1 of 2

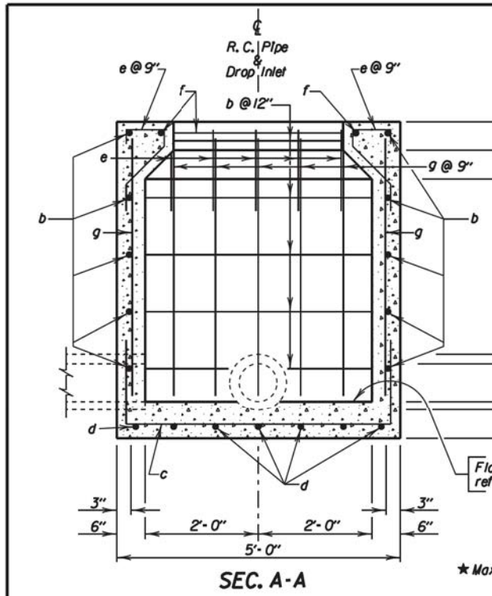

SEC. A-A

★ Maximum H is 10'-0"

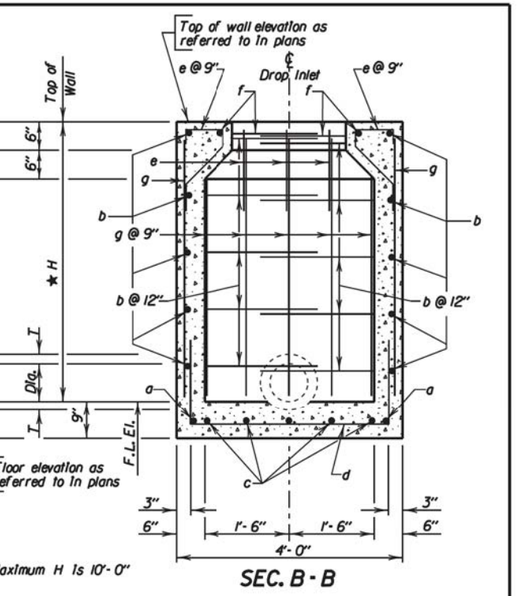

SEC. B-B

DROP INLETS FOR 12" TO 36" DIAMETER PIPE

REINFORCING SCHEDULE					
MK.	No.	Size	Length	Type	Bending Details
a	2	4	6'-6"	17	
b	2H	4	9'-0"	17	
c	5	4	7'-6"	17	
d	7	4	6'-6"	17	
e	16	4	2'-6"	16A	
f	2	4	7'-0"	17	
g	24	4	H - 2"	Str.	

NOTE:
All dimensions are out to out of bars.

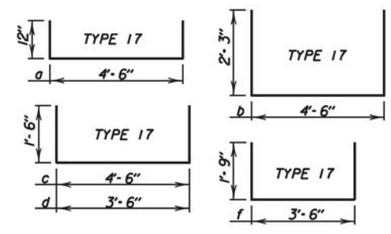

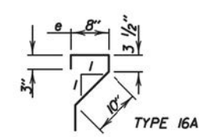

TYPE 16A

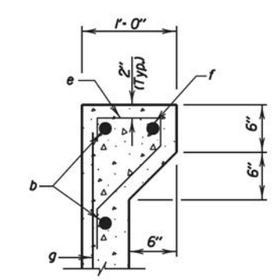

TYPICAL SEC. TOP OF WALL

December 23, 2009

Published Date: 3rd Qtr. 2015 | SDDOT | 3'X 4' TYPE B REINFORCED CONCRETE DROP INLET | PLATE NUMBER 670.02 | Sheet 2 of 2

PLOT SCALE - 1:200
PLOT NAME - 22
FILE - ...\67002 & 67002.DGN
PLOTTED FROM - TRAB17882

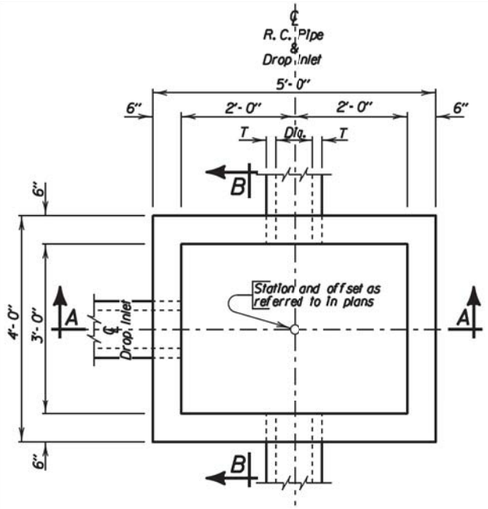

PLAN

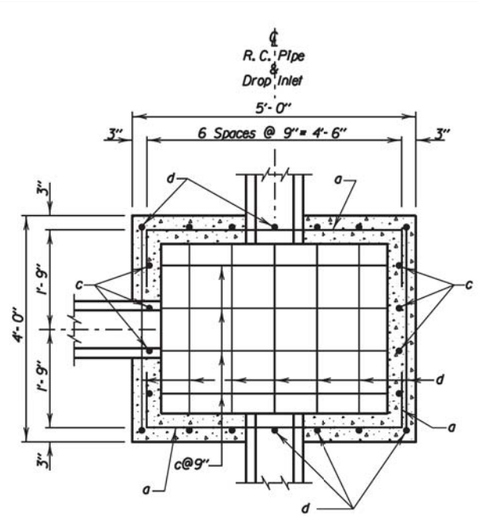

BOTTOM SECTION

PIPE DISPLACEMENT REDUCTIONS		
R.C. Pipe Diameter Inches	T Inches	Class M6 Concrete Cu'd
12	2	0.03
15	2 1/4	0.04
18	2 1/2	0.05
24	3	0.09
30	3 1/2	0.14
36	4	0.20

ESTIMATED QUANTITIES			
ITEM	UNIT	CONSTANT QUANTITY	VARIABLE QUANTITY
✳ Class M6 Concrete	Cu'd	0.43	0.29H
Reinforcing Steel	Lb	57	26.72H
Frame and Grate	Each	1	———

DROP INLETS FOR 12" TO 36" DIAMETER PIPE

GENERAL NOTES:

✳ Reduce total quantities of concrete by the amount of concrete displaced by the pipe. The total quantity of concrete shall be computed to the nearest hundredth of a cubic yard. The total quantity of reinforcing steel shall be computed to the nearest pound.

Drop inlets shown may be modified by the addition or omission of connecting pipes as shown on the layouts.

Reinforcing steel shall conform to ASTM A615 Grade 60. The b bars shall be lapped 12 inches. Cut and bend reinforcing steel as required to place pipe(s) through the drop inlet wall.

Pipe shall not enter through a corner of the drop inlet.

Use 2" clear cover on all reinforcing steel unless otherwise noted.

Precasting of reinforced drop inlets will be permissible. Prior to precasting, the Contractor shall submit details to the Engineer for approval.

Maximum pipe diameter shall not exceed 27 inches on the 4 foot wide side and shall not exceed 36 inches on the 5 foot wide side of the drop inlet.

The dimension of H is in feet.

December 23, 2009

Published Date: 3rd Qtr. 2015	SDDOT	3' X 4' TYPE C REINFORCED CONCRETE DROP INLET	PLATE NUMBER 670.10
			Sheet 1 of 2

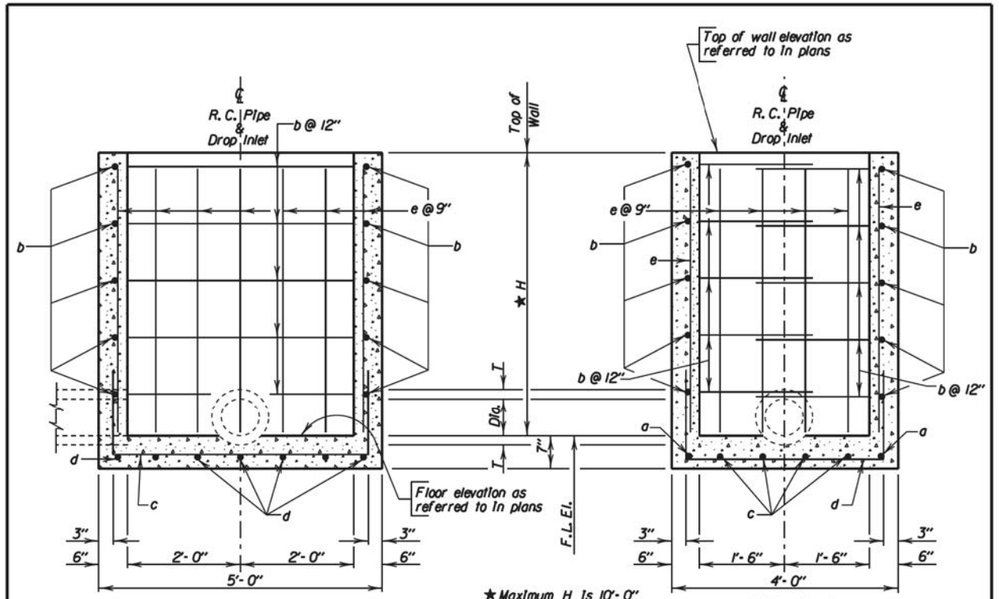

DROP INLETS FOR 12" TO 36" DIAMETER PIPE

REINFORCING SCHEDULE					
Mk.	No.	Size	Length	Type	Bending Details
a	2	4	6'-6"	17	
b	2H	4	9'-0"	17	
c	4	4	7'-6"	17	
d	7	4	6'-6"	17	
e	22	4	H - 2"	Str.	

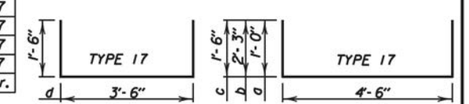

NOTE: All dimensions are out to out of bars.

December 23, 2009

Published Date: 3rd Qtr. 2015	SDDOT	3' X 4' TYPE C REINFORCED CONCRETE DROP INLET	PLATE NUMBER 670.10
			Sheet 2 of 2

PLOT SCALE - 1:200
PLOT NAME - 23
FILE - ...\67010 & 67010.DGN
-PLOTTED FROM - TRAB17882

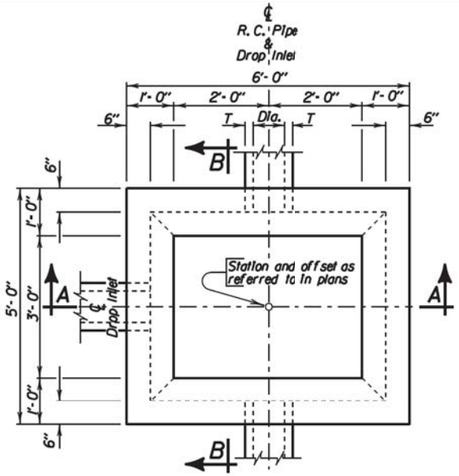

PLAN

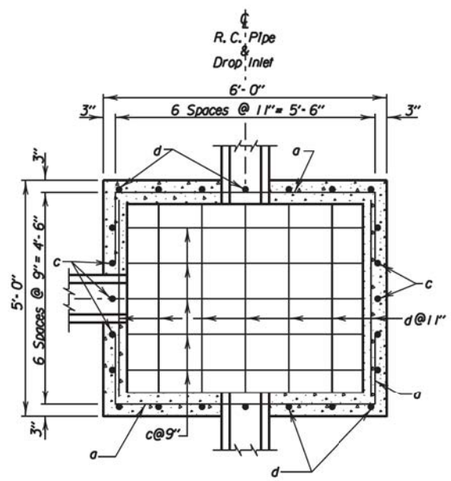

BOTTOM SECTION

PIPE DISPLACEMENT REDUCTIONS		
R.C. Pipe Diameter Inches	T Inches	Class M6 Concrete Cu Yd
12	2	0.03
15	2 1/4	0.04
18	2 1/2	0.05
24	3	0.09
30	3 1/2	0.14
36	4	0.20
42	4 1/2	0.26
48	5	0.34

ESTIMATED QUANTITIES			
ITEM	UNIT	CONSTANT QUANTITY	VARIABLE QUANTITY
✳ Class M6 Concrete	Cu Yd	1.06	0.37H
Reinforcing Steel	Lb	116	30.72H
Frame and Grate	Each	1	———

DROP INLETS FOR 12" TO 48" DIAMETER PIPE

GENERAL NOTES:

✳ Reduce total quantities of concrete by the amount of concrete displaced by the pipe. The total quantity of concrete shall be computed to the nearest hundredth of a cubic yard. The total quantity of reinforcing steel shall be computed to the nearest pound.

Drop inlets shown may be modified by the addition or omission of connecting pipes as shown on the layouts.

Reinforcing steel shall conform to ASTM A615 Grade 60. The b and f bars shall be lapped 12 inches. Cut and bend reinforcing steel as required to place pipe(s) through the drop inlet wall.

Pipe shall not enter through a corner of the drop inlet.

Use 2" clear cover on all reinforcing steel unless otherwise noted.

Precasting of reinforced drop inlets will be permissible. Prior to precasting, the Contractor shall submit details to the Engineer for approval.

Maximum pipe diameter shall not exceed 36 inches on the 5 foot wide side and shall not exceed 48 inches on the 6 foot wide side of the drop inlet.

The dimension of H is in feet.

December 23, 2009

Published Date: 3rd Qtr. 2015 | SDDOT | 4' X 5' TYPE C REINFORCED CONCRETE DROP INLET | PLATE NUMBER 670.11 | Sheet 1 of 2

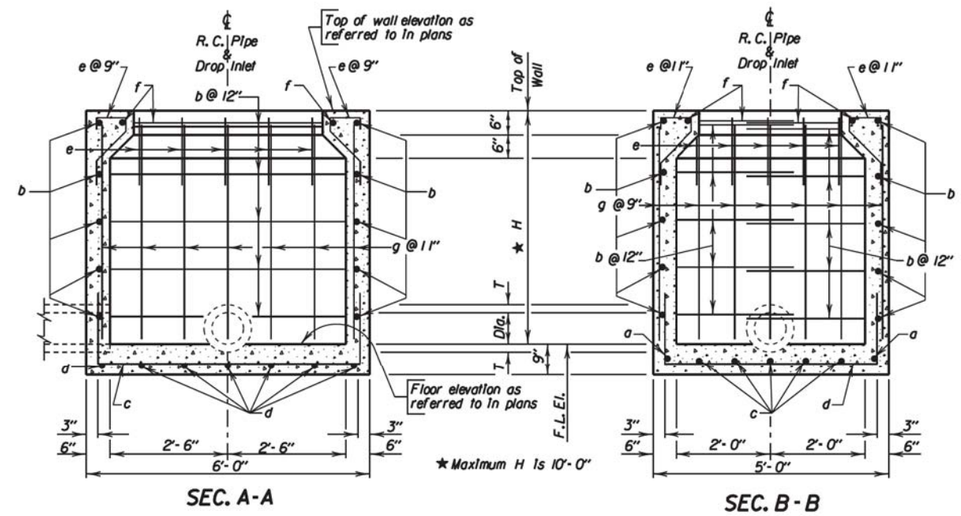

SEC. A-A

SEC. B-B

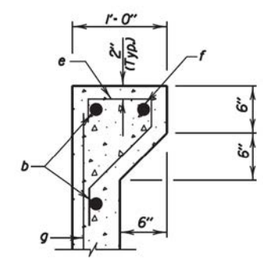

TYPICAL SEC. TOP OF WALL

DROP INLETS FOR 12" TO 48" DIAMETER PIPE

REINFORCING SCHEDULE

Mk.	No.	Size	Length	Type
a	2	4	7'-6"	17
b	2H	4	11'-0"	17
c	5	4	8'-6"	17
d	7	4	7'-6"	17
e	20	4	2'-6"	16A
f	2	4	9'-0"	17
g	24	4	H - 2"	Str.

Bending Details

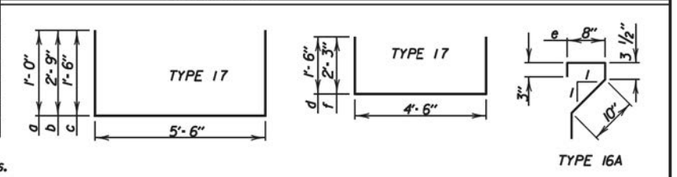

NOTE:
All dimensions are out to out of bars.

December 23, 2009

Published Date: 3rd Qtr. 2015 | SDDOT | 4' X 5' TYPE C REINFORCED CONCRETE DROP INLET | PLATE NUMBER 670.11 | Sheet 2 of 2

PLOT SCALE - 1:200
PLOT NAME - 24
FILE - ...\67011 & 67011.DGN
-PLOTTED FROM - TRAB17982

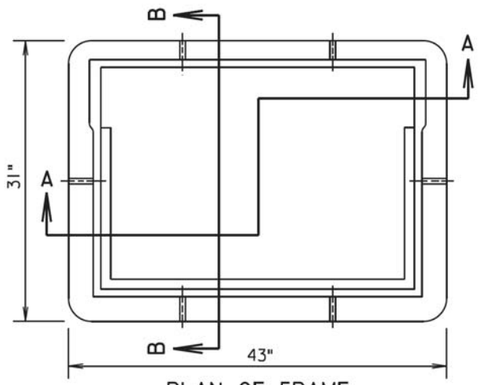

PLAN OF FRAME

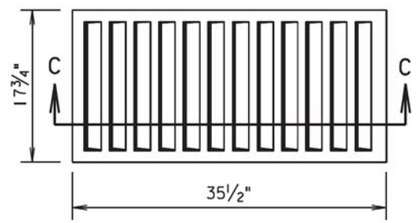

PLAN OF GRATE

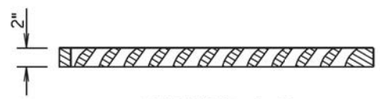

SECTION C-C

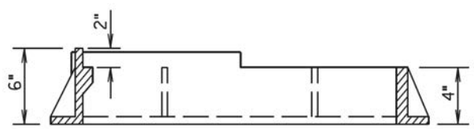

SECTION A-A

TOP VIEW OF CURB BOX

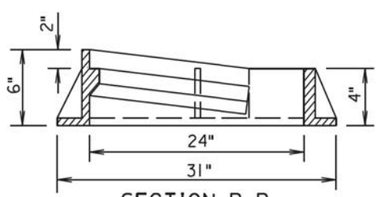

SECTION B-B

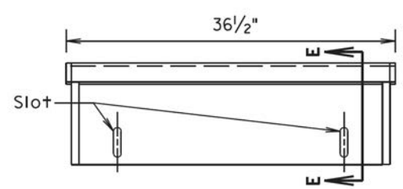

ELEVATION OF CURB BOX

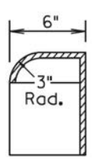

SECTION E-E

GENERAL NOTE:

Total weight of the assembly shall be 490 Lbs. minimum and the curb box shall be adjustable 6" to 9".

March 31, 2000

Published Date: 3rd Qtr. 2015	SDDOT	TYPE B FRAME AND GRATE ASSEMBLY	PLATE NUMBER 670.80
			Sheet 1 of 1

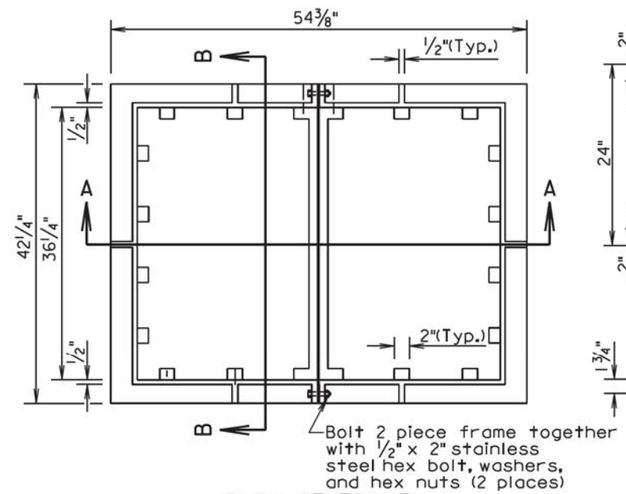

PLAN OF FRAME

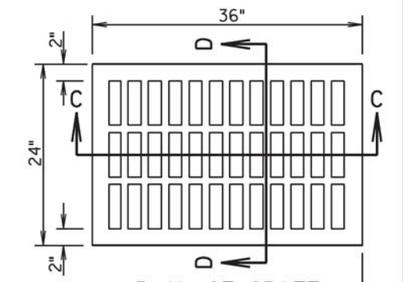

PLAN OF GRATE

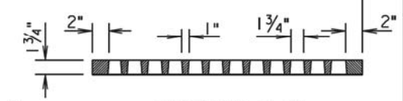

SECTION C-C

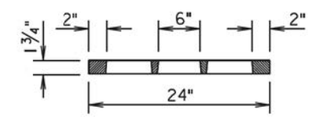

SECTION D-D

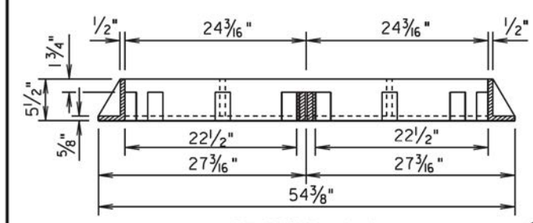

SECTION A-A

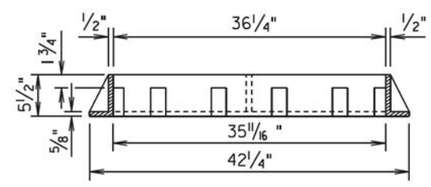

SECTION B-B

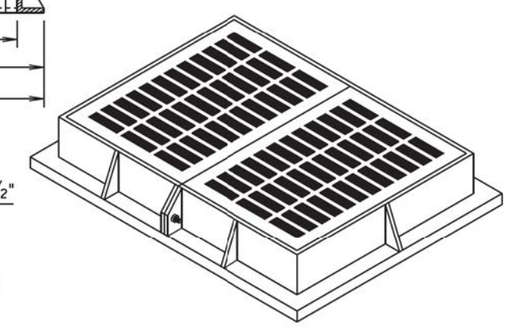

ASSEMBLED VIEW

GENERAL NOTE:

The total weight of the frame and grate shall be 850 pounds minimum.

March 31, 2000

Published Date: 3rd Qtr. 2015	SDDOT	TYPE C FRAME AND GRATE	PLATE NUMBER 670.82
			Sheet 1 of 1

PLOT SCALE - 1:200
PLOT NAME - 25
FILE - ...\67080 & 67082.DGN
PLOTTED FROM - TRAB17982

MANUAL HIGH FLOW SILT FENCE INSTALLATION

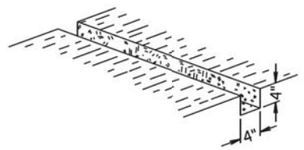

① EXCAVATE TRENCH

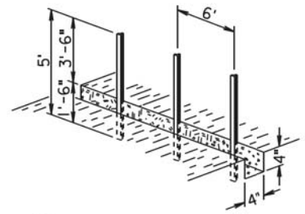

② DRIVE STEEL T FENCE POSTS

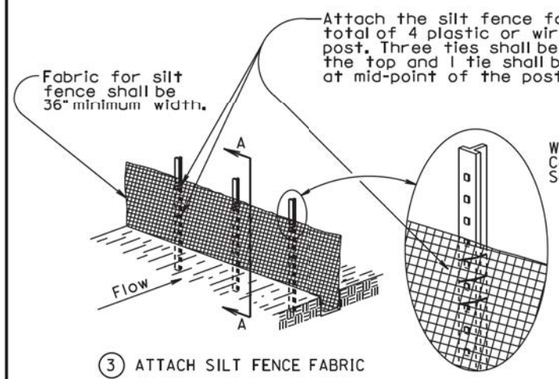

③ ATTACH SILT FENCE FABRIC

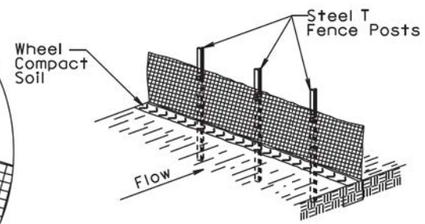

④ BACKFILL TRENCH AND WHEEL COMPACT SOIL

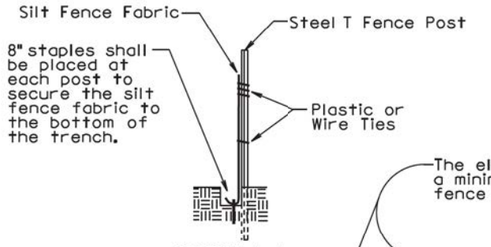

SECTION A-A

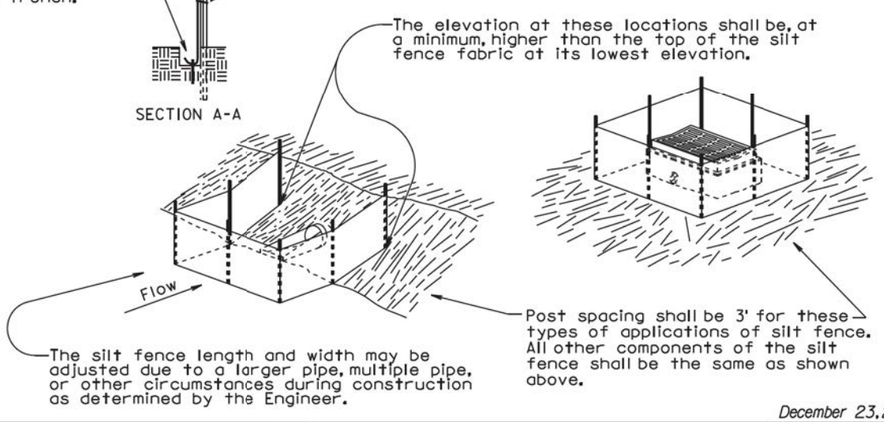

December 23, 2003

Published Date: 3rd Qtr. 2015	SDDOT	HIGH FLOW SILT FENCE	PLATE NUMBER 734.05
			Sheet 1 of 2

MACHINE SLICED HIGH FLOW SILT FENCE INSTALLATION

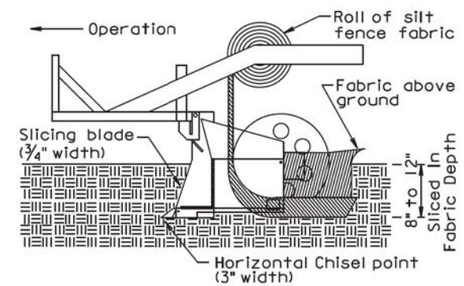

① INSTALL SILT FENCE FABRIC BY MACHINE SLICING METHOD.

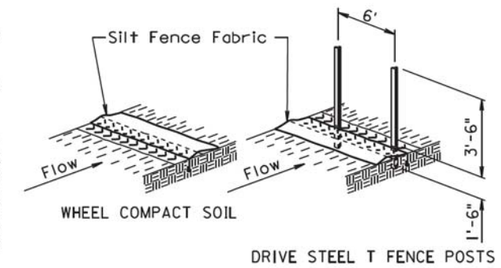

② WHEEL COMPACT SOIL ABOVE SLICED IN PORTION OF FABRIC AND THEN DRIVE STEEL T FENCE POSTS.

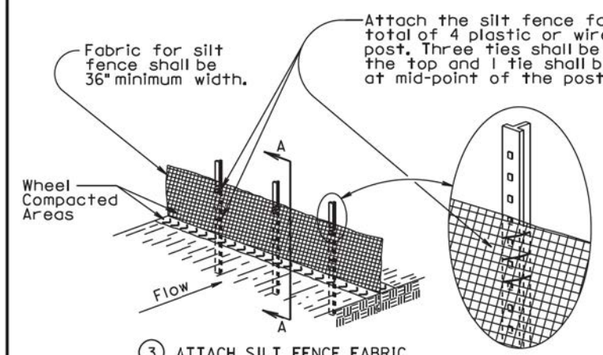

③ ATTACH SILT FENCE FABRIC

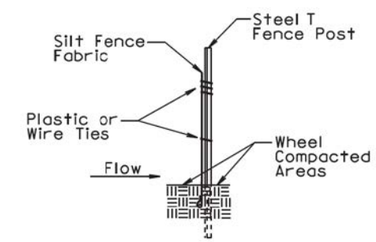

SECTION A-A

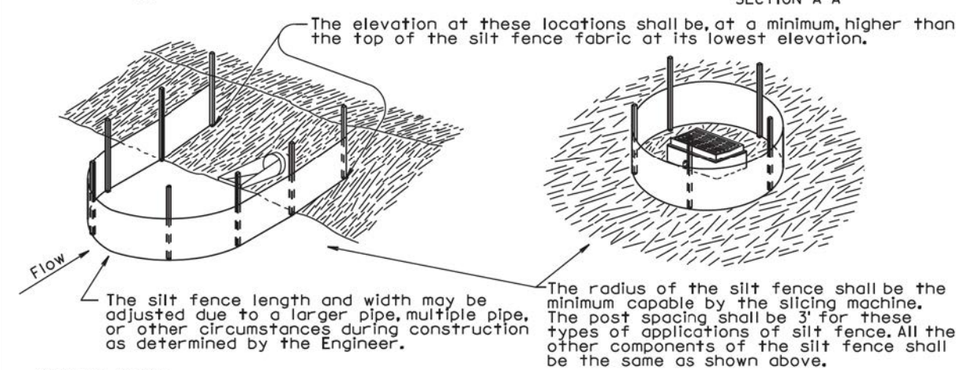

GENERAL NOTE:

If a trench can not be dug or the silt fence fabric can not be sliced in due to the type of earthen material (such as rock), then a row of 30 to 40 pound sandbags butted end to end shall be provided on top of the extra length of silt fence fabric to prevent underflow.

December 23, 2003

Published Date: 3rd Qtr. 2015	SDDOT	HIGH FLOW SILT FENCE	PLATE NUMBER 734.05
			Sheet 2 of 2

PLOT SCALE - 1:200
PLOT NAME - 26
FILE - ...\73405 &73405.DGN
PLOTTED FROM - TRAB17882

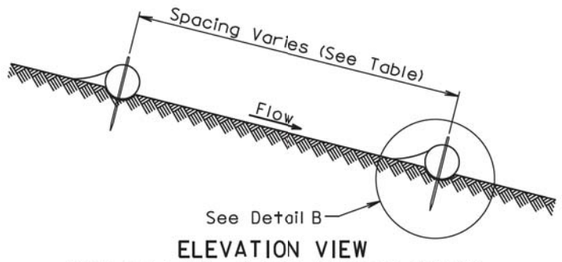

ELEVATION VIEW
CUT OR FILL SLOPE INSTALLATION

CUT OR FILL SLOPE INSTALLATION	
Slope	Spacing (Ft)
1:1	10
2:1	20
3:1	30
4:1	40

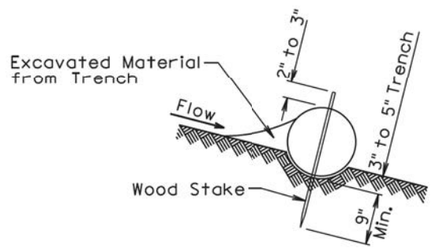

DETAIL B
(TYPICAL OF ALL INSTALLATIONS)

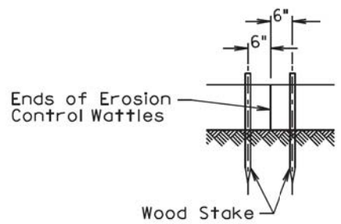

DETAIL C

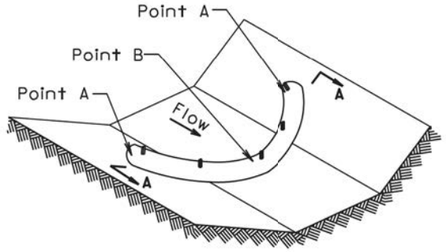

ISOMETRIC VIEW
DITCH INSTALLATION

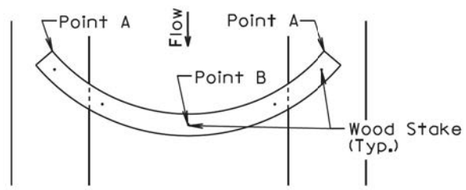

PLAN VIEW
DITCH INSTALLATION

DITCH INSTALLATION	
Grade	Spacing (Ft)
2%	150
3%	100
4%	75
5%	50

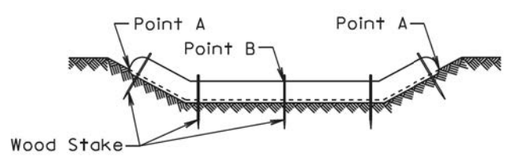

SECTION A-A

December 23, 2004

Published Date: 3rd Qtr. 2015

SDDOT

EROSION CONTROL WATTLE

PLATE NUMBER 734.06

Sheet 1 of 2

GENERAL NOTES:

At cut or fill slope installations, wattles shall be installed along the contour and perpendicular to the water flow.

At ditch installations, point A must be higher than point B to ensure that water flows over the wattle and not around the ends.

The Contractor shall dig a 3" to 5" trench, install the wattle tightly in the trench so that daylight can not be seen under the wattle, and then compact the soil excavated from the trench against the wattle on the uphill side. See Detail B.

The stakes shall be 1"x2" or 2"x2" wood stakes, however, other types of stakes such as rebar may be used only if approved by the Engineer. The stakes shall be placed 6" from the ends of the wattles and the spacing of the stakes along the wattles shall be 3' to 4'.

Where installing running lengths of wattles, the Contractor shall butt the second wattle tightly against the first and shall not overlap the ends. See Detail C.

The Contractor and Engineer shall inspect the erosion control wattles once every week and within 24 hours after every rainfall event greater than ½". The Contractor shall remove, dispose, or reshape the accumulated sediment when necessary as determined by the Engineer.

Sediment removal, disposal, or necessary shaping shall be as directed by the Engineer. All costs for removing accumulated sediment, disposal of sediment, and necessary shaping shall be incidental to the contract unit price per cubic yard for "Remove Sediment".

All costs for furnishing and installing the erosion control wattles including labor, equipment, and materials shall be incidental to the contract unit price per foot for the corresponding erosion control wattle bid item.

All costs for removing the erosion control wattle from the project including labor, equipment, and materials shall be incidental to the contract unit price per foot for "Remove Erosion Control Wattle".

December 23, 2004

Published Date: 3rd Qtr. 2015

SDDOT

EROSION CONTROL WATTLE

PLATE NUMBER 734.06

Sheet 2 of 2

PLOT SCALE - 1:200
PLOT NAME - 27
FILE - ...\73406 &73406.DGN
-PLOTTED FROM - TRAB17982

L = Length of Grate
W = Width of Grate

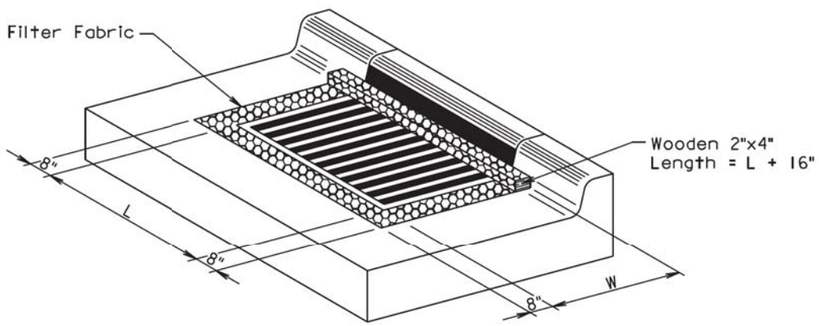

ISOMETRIC VIEW

GENERAL NOTES:

The grate and curb and gutter shown are for illustrative purposes only.

The sediment control at inlet with frame and grate shall be placed at locations stated in the plans or at locations determined by the Engineer.

The filter fabric shall be the type specified in the plans.

The filter fabric shall be placed in the inlet opening prior to placing the grate. Approximately 18 inches of excess filter fabric shall be wrapped around the 2"x4" and stapled securely to the 2"x4" after the grate has been placed.

The Contractor shall inspect and maintain the sediment control device once every week and within 24 hours after every rainfall event. The Contractor shall maintain the sediment control device by removing accumulated sediment and replacing torn filter fabric with new filter fabric.

The removed sediment shall be placed at a location away from the drop inlet where the sediment will not be washed back into the drop inlet or other storm sewer system.

All costs for furnishing, installing, inspecting, maintaining, removing, and replacing the sediment control device at the inlet including labor, equipment, and materials shall be incidental to the contract unit price per each for "Sediment Control at Inlet with Frame and Grate".

September 14, 2005

Published Date: 3rd Qtr. 2015	SDDOT	SEDIMENT CONTROL AT INLETS WITH FRAMES AND GRATES	PLATE NUMBER 734.10 Sheet 1 of 1

PLOT SCALE - 1:200
PLOT NAME - 28
FILE - ...\73410 & BLANK.DGN
-PLOTTED FROM - TRAB17882

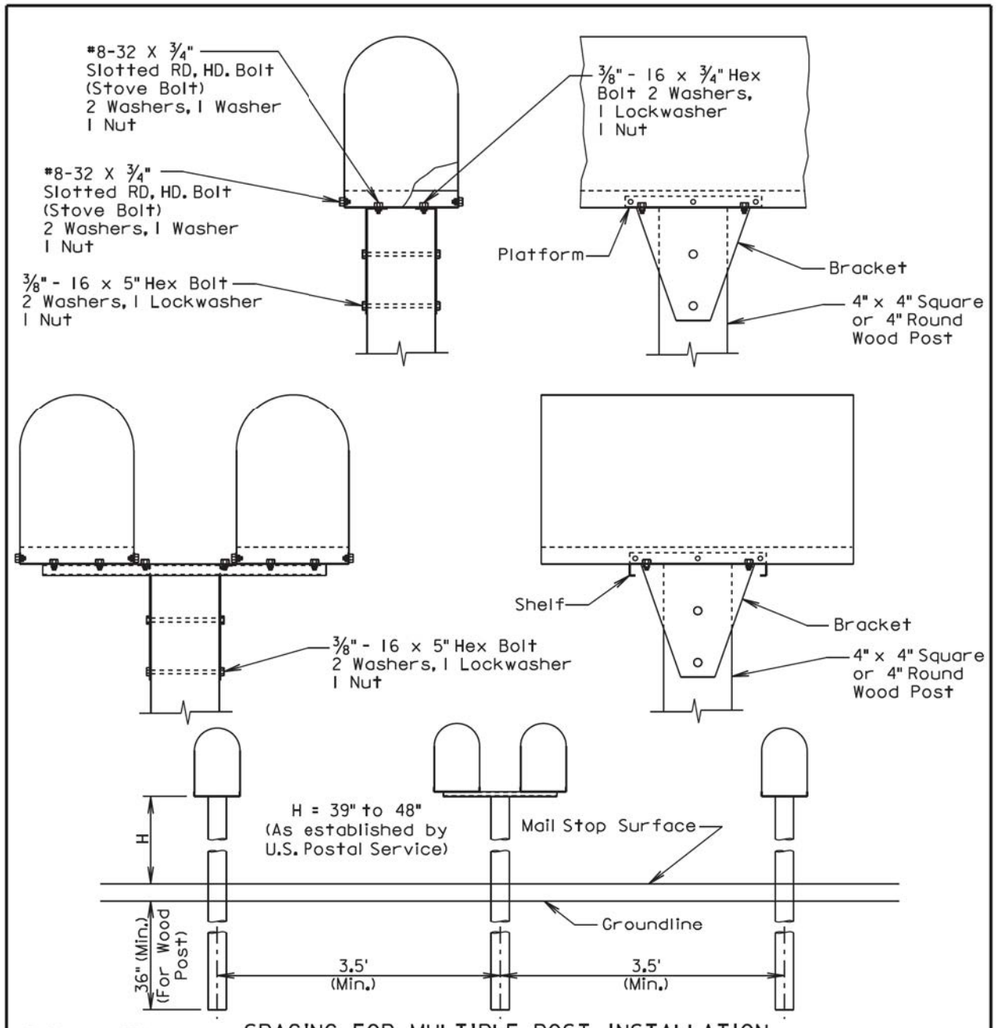

SPACING FOR MULTIPLE POST INSTALLATION

GENERAL NOTES:

The post support assemblies provided should be consistant throughout the project.

Single and double mailboxes may be in any sequence.

Post support assemblies shall be one from the approved products list, a 4"x4" or 4" round wood post, or an alternate post support assembly that meets the test level 3 crash testing requirements of NCHRP 350 or MASH.

Alternate mailbox support assemblies shall be approved by the Engineer prior to installation. The Contractor shall provide the Engineer written certification that the mailbox support assembly has met the crash testing requirements and will be installed in accordance with the manufacturer's installation instructions.

September 6, 2013

Published Date: 3rd Qtr. 2015	SDDOT	SINGLE AND DOUBLE MAILBOX ASSEMBLIES	PLATE NUMBER 900.02
			Sheet 1 of 1

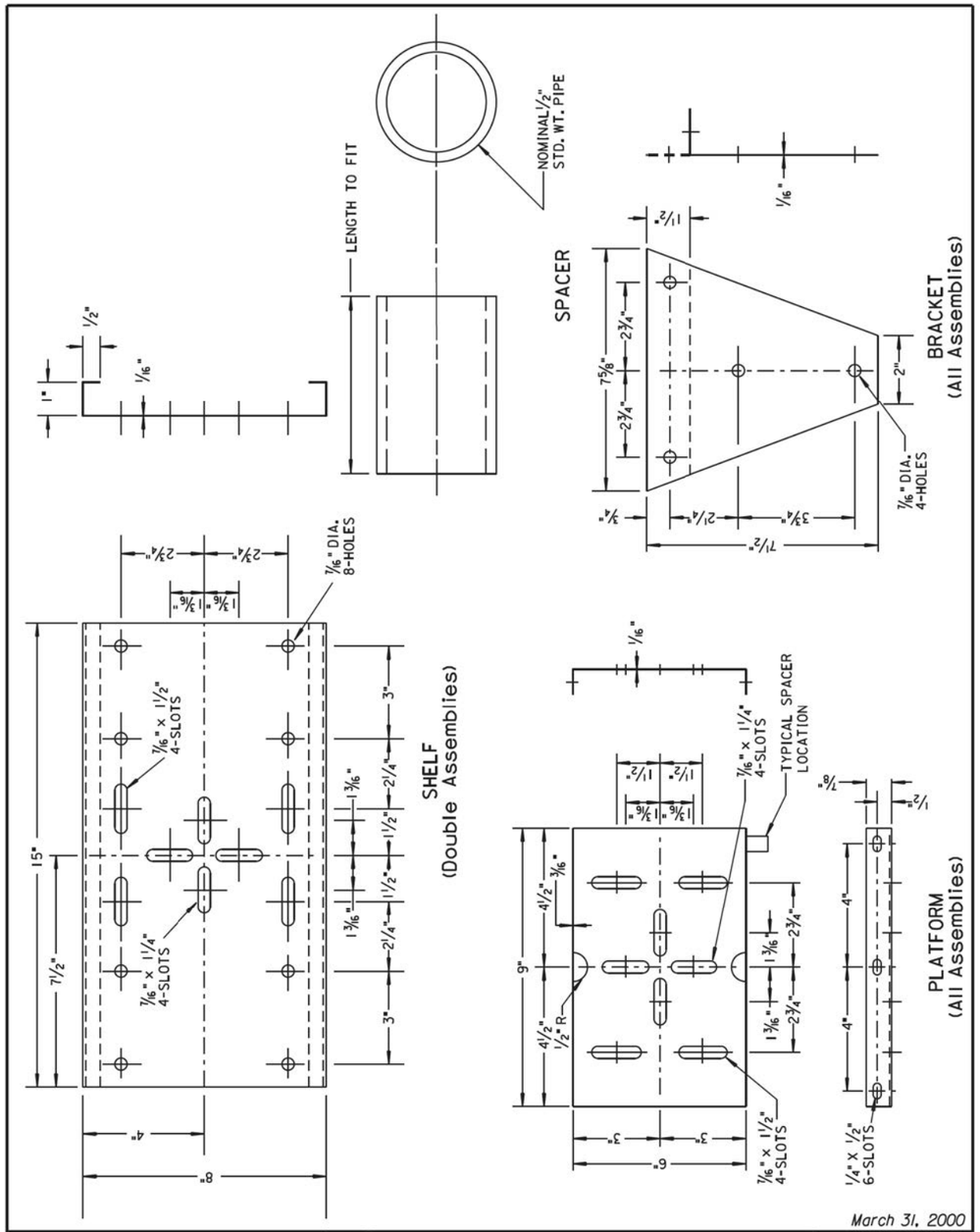

March 31, 2000

Published Date: 3rd Qtr. 2015	SDDOT	MAILBOX SUPPORT HARDWARE	PLATE NUMBER 900.03
			Sheet 1 of 1

PLOT SCALE - 1:200
PLOT NAME - 29
FILE - ...\90002 & 90003.DGN
-PLOTTED FROM - TRAB17882

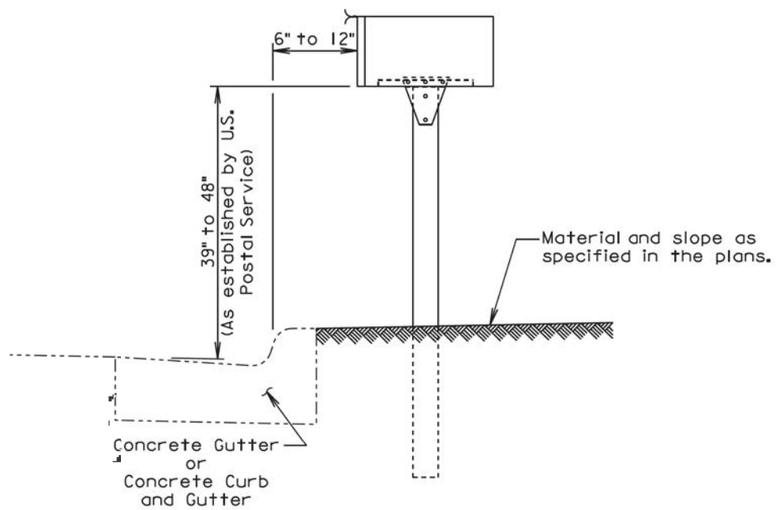

ELEVATION VIEW

GENERAL NOTES:

The post support assemblies provided should be consistant throughout the project.

Post support assemblies shall be one from the approved products list, a 4"x4" or 4" round wood post, or an alternate post support assembly that meets the test level 3 crash testing requirements of NCHRP 350 or MASH.

Alternate mailbox support assemblies shall be approved by the Engineer prior to installation. The Contractor shall provide the Engineer written certification that the mailbox support assembly has met the crash testing requirements and will be installed in accordance with the manufacturer's installation instructions.

February 10, 2014

Published Date: 3rd Qtr. 2015	SDDOT	***MAILBOX ADJACENT TO CONCRETE GUTTER OR CONCRETE CURB AND GUTTER***	*PLATE NUMBER* 900.05
			Sheet 1 of 1

PLOT SCALE - 1:200
PLOT NAME - 30
FILE - ...\900005 & BLANK.DGN
-PLOTTED FROM - TRAB17982

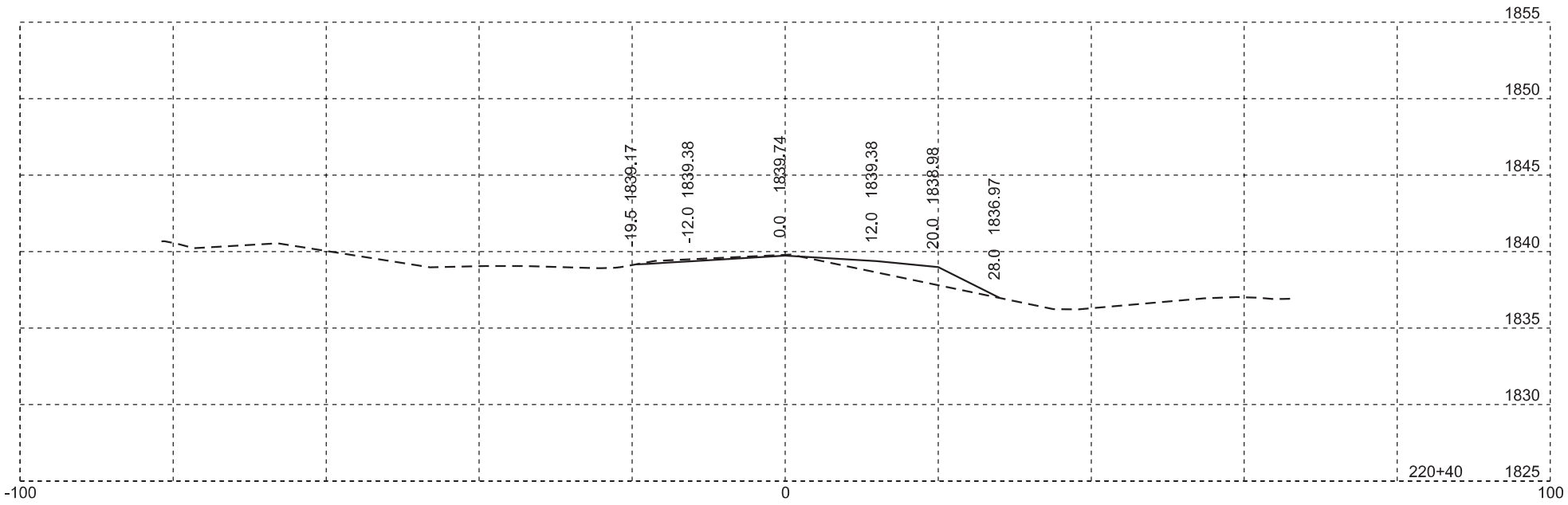

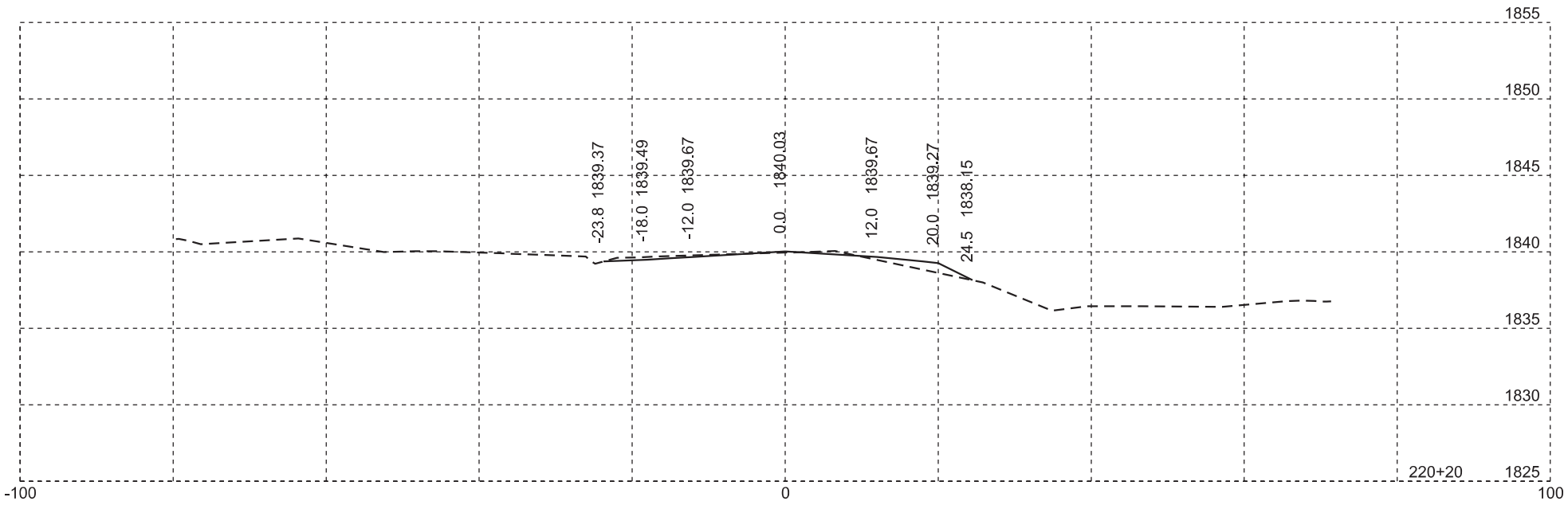

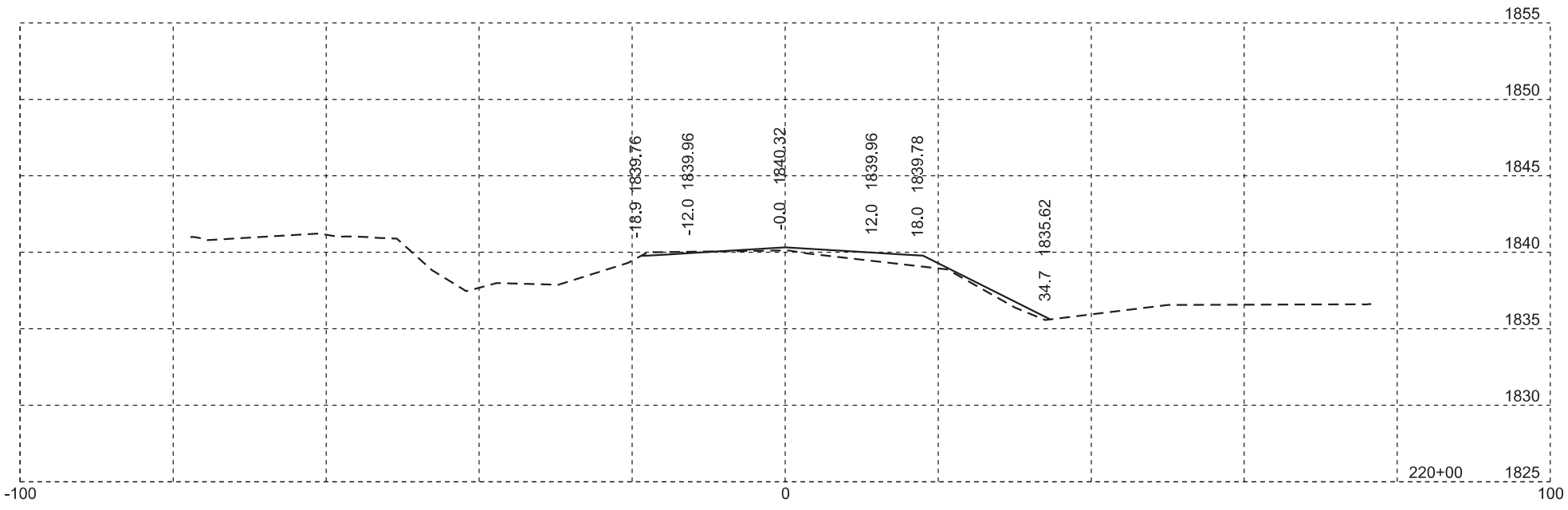

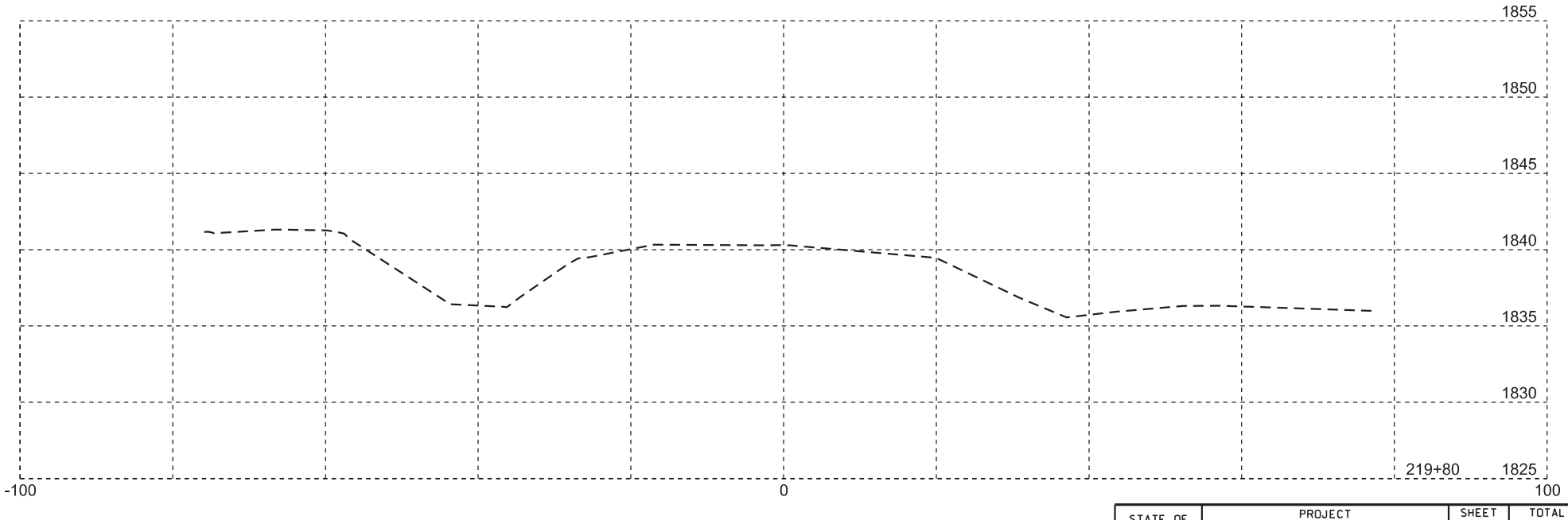

Plotting Date: 10/23/2015

STATE OF SOUTH DAKOTA	PROJECT	SHEET NO.	TOTAL SHEETS
	P 0028(32)319	118	135

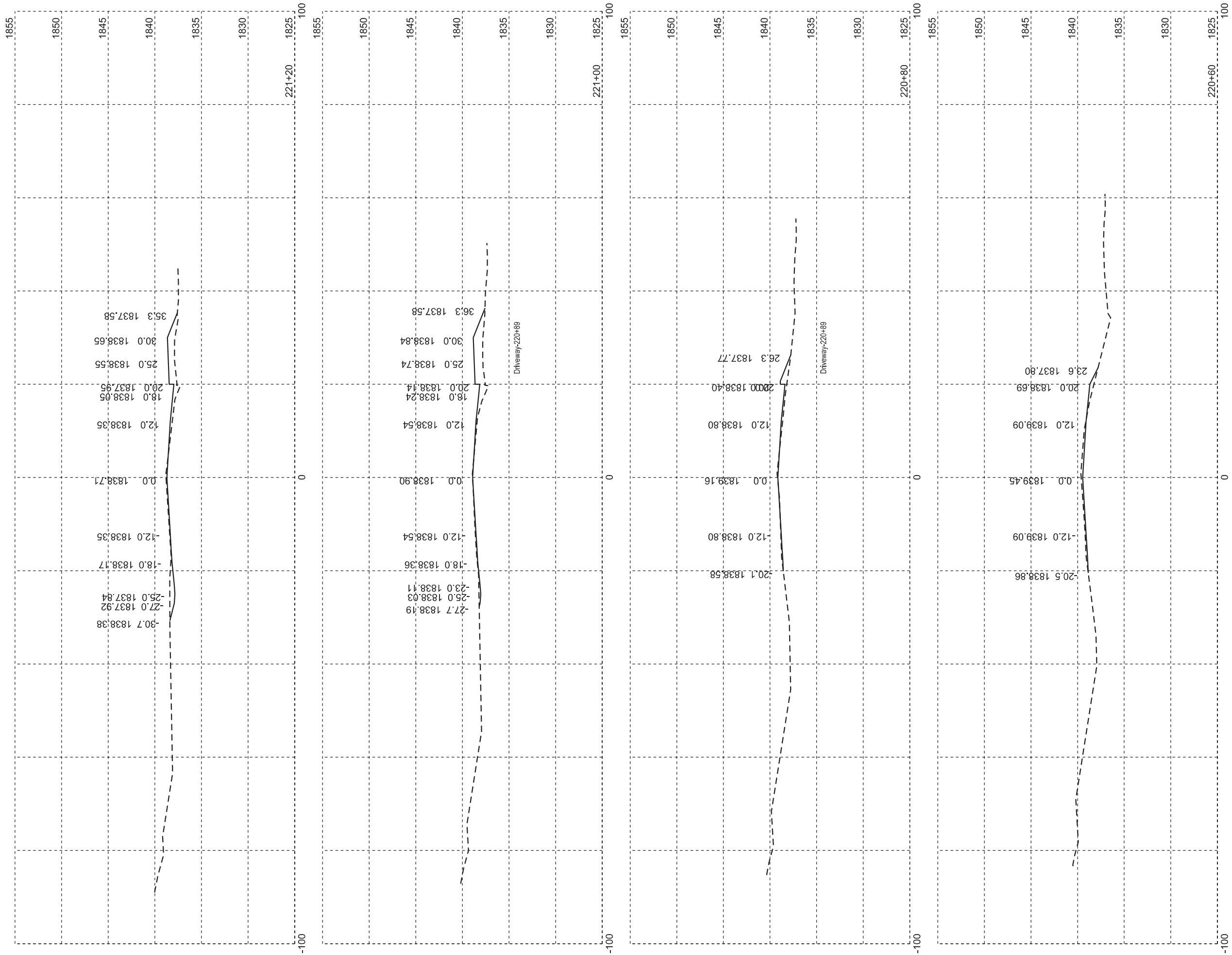

STATE OF SOUTH DAKOTA	PROJECT	SHEET NO.	TOTAL SHEETS
	P 0028(32)319	119	135

Plotting Date: 10/23/2015

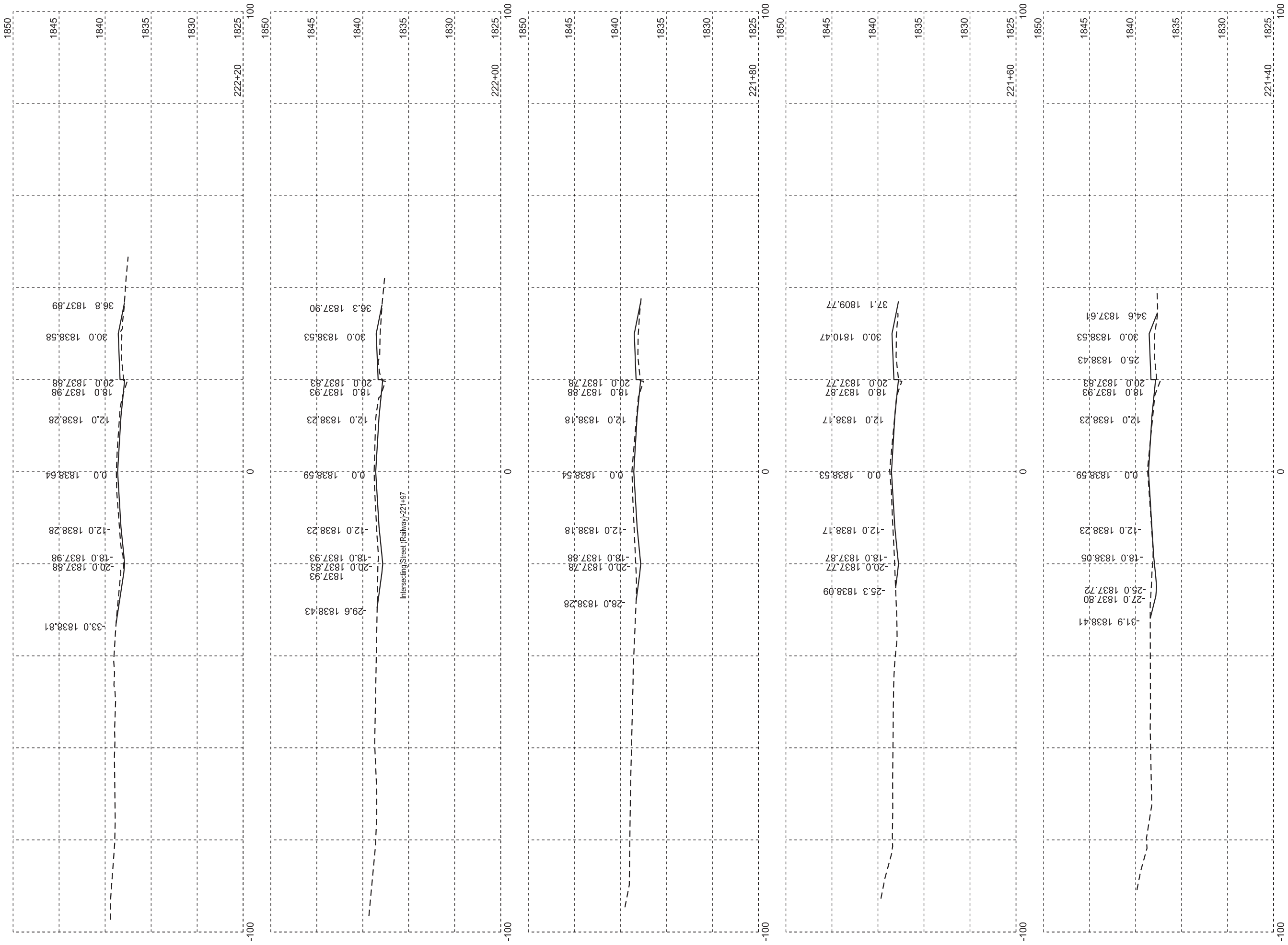

STATE OF SOUTH DAKOTA	PROJECT	SHEET NO.	TOTAL SHEETS
	P 0028(32)319	120	135

Plotting Date: 10/23/2015

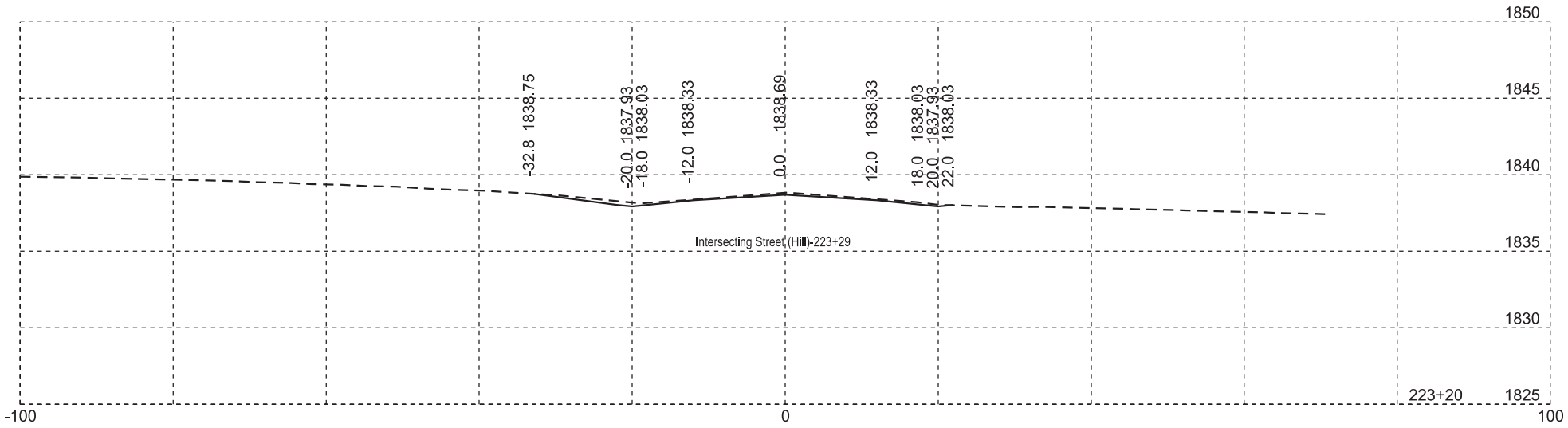

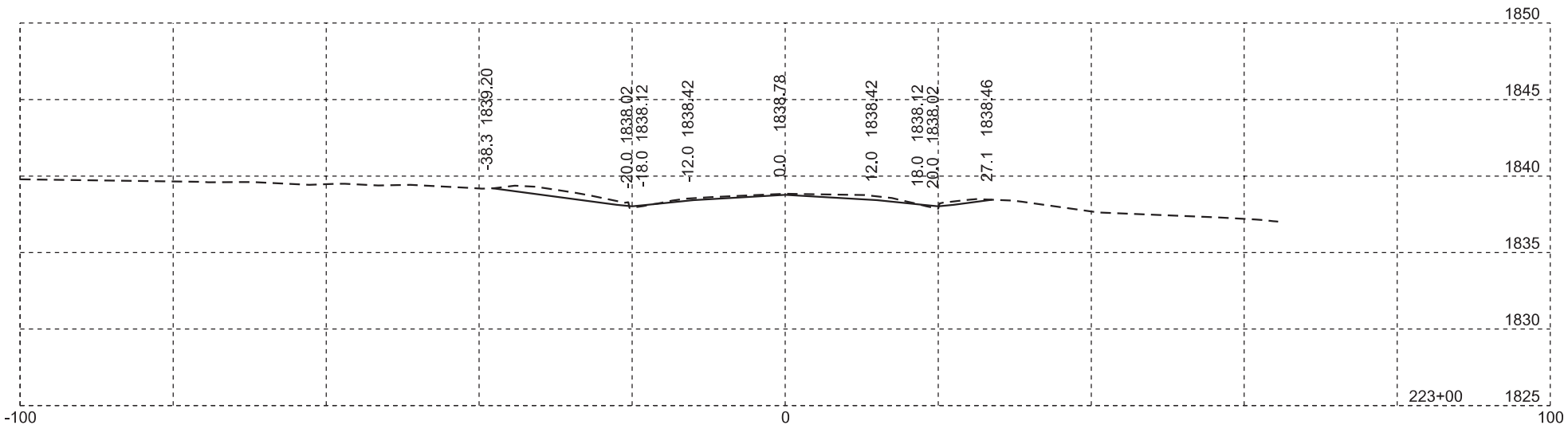

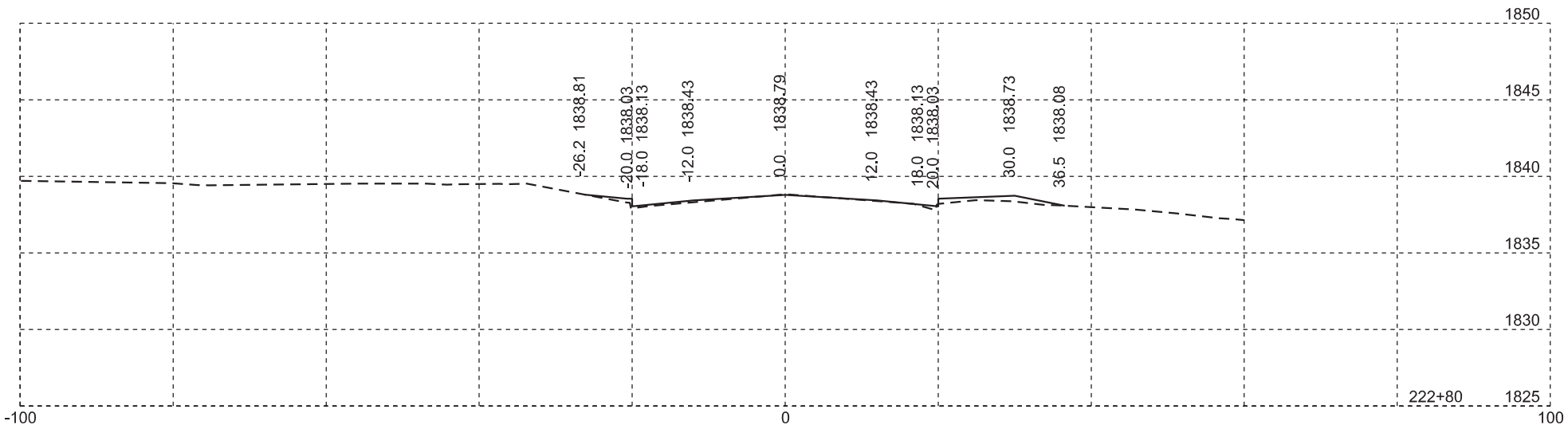

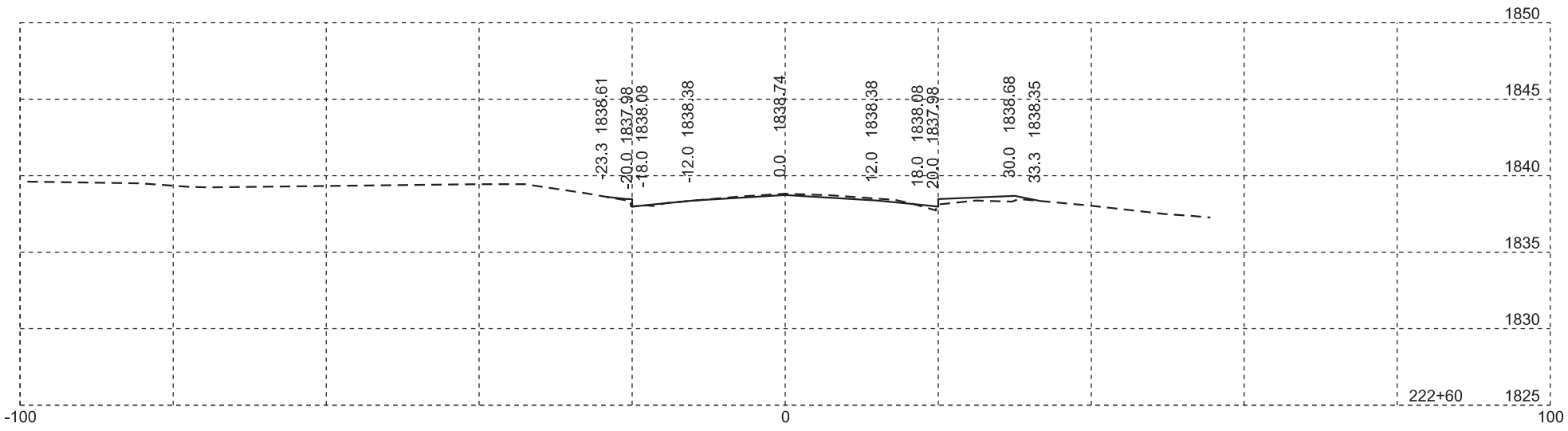

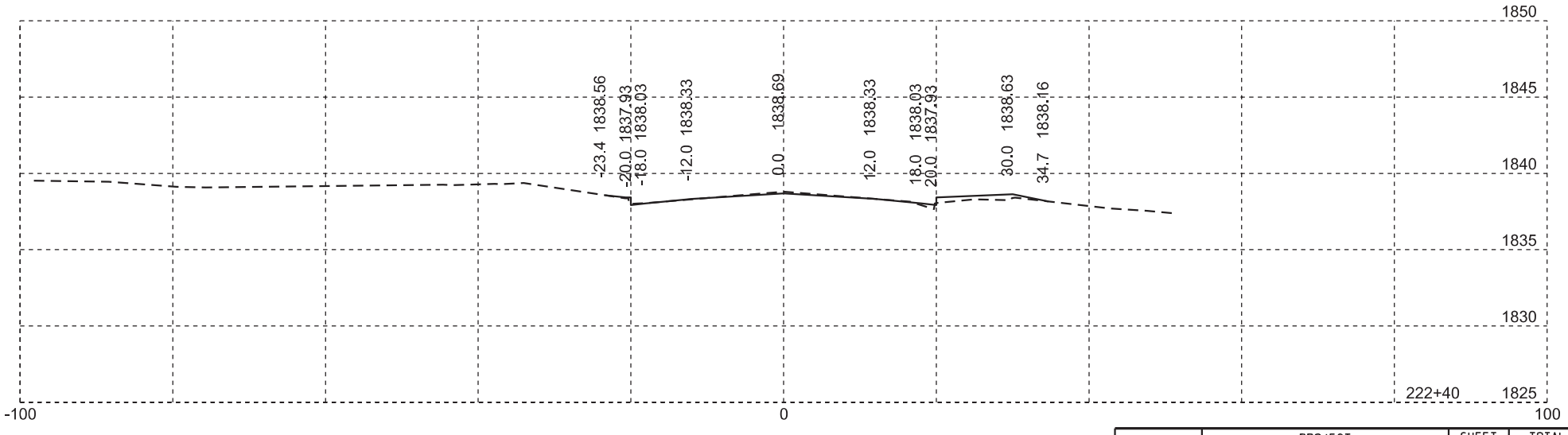

Plotting Date: 10/23/2015

STATE OF SOUTH DAKOTA	PROJECT	SHEET NO.	TOTAL SHEETS
	P 0028(32)319	121	135

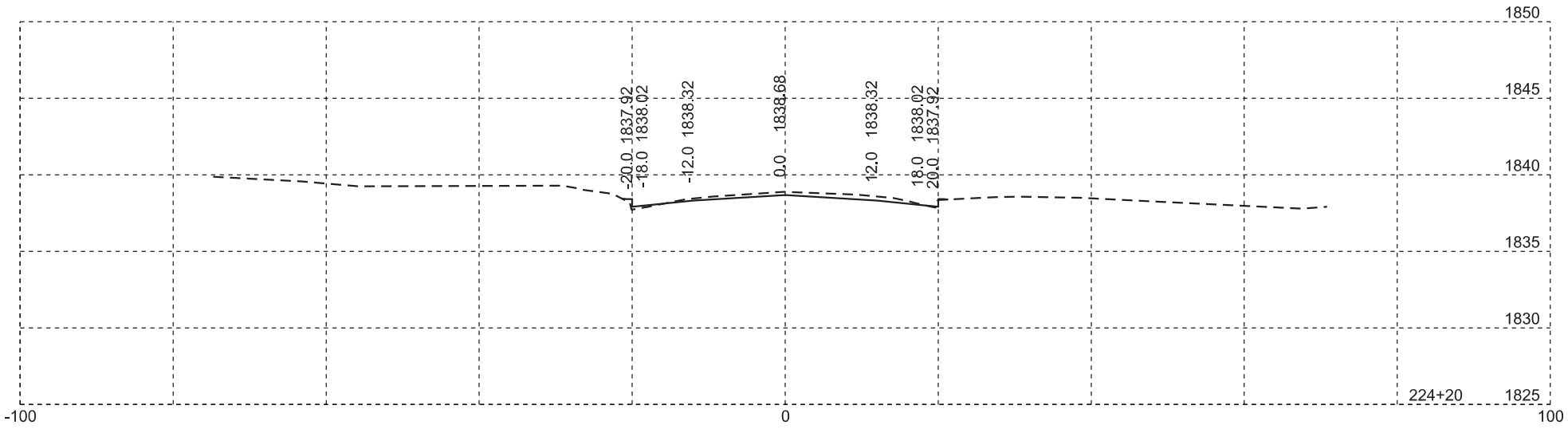

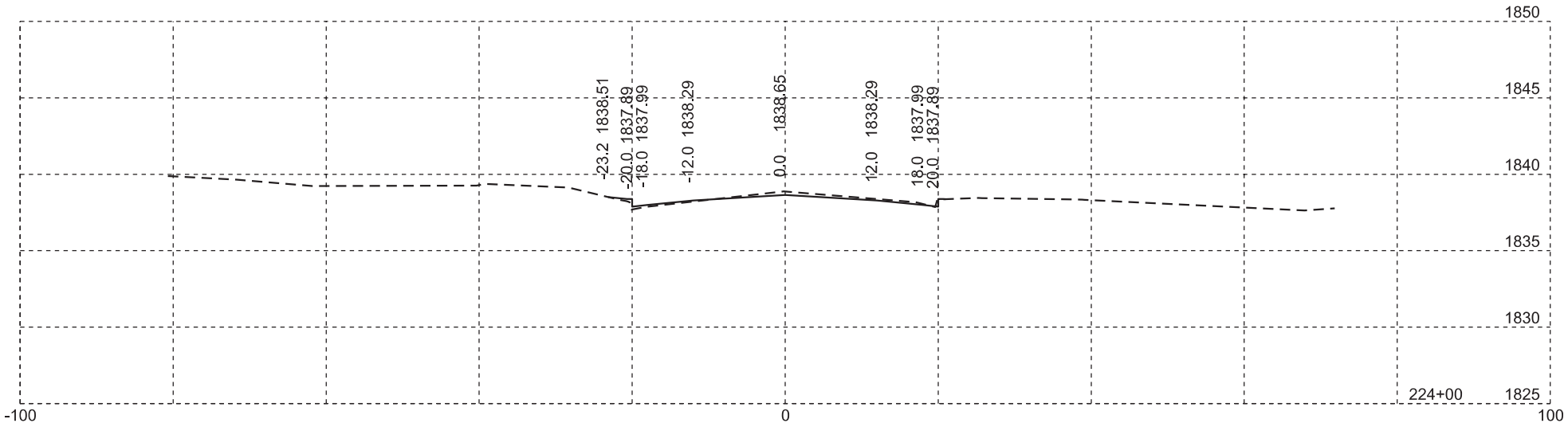

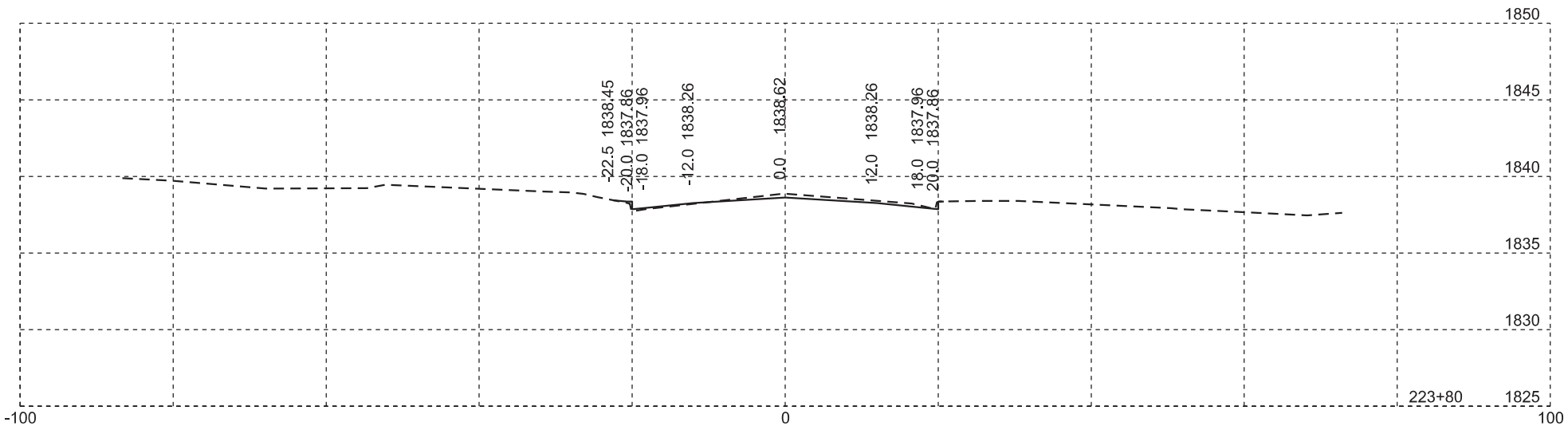

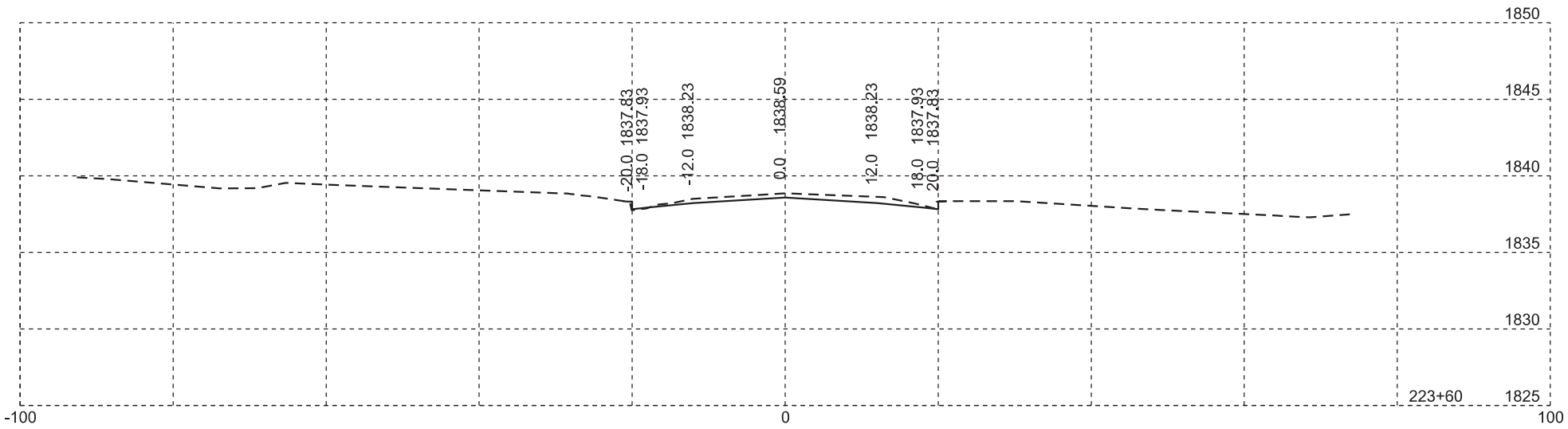

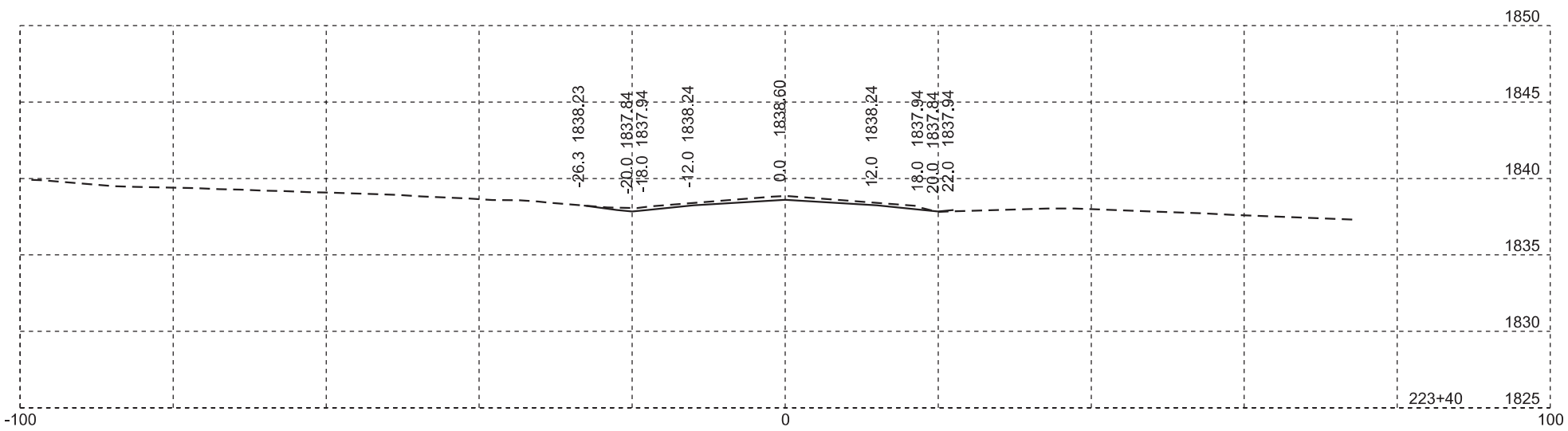

Plotting Date: 10/23/2015

STATE OF SOUTH DAKOTA	PROJECT	SHEET NO.	TOTAL SHEETS
	P 0028(32)319	122	135

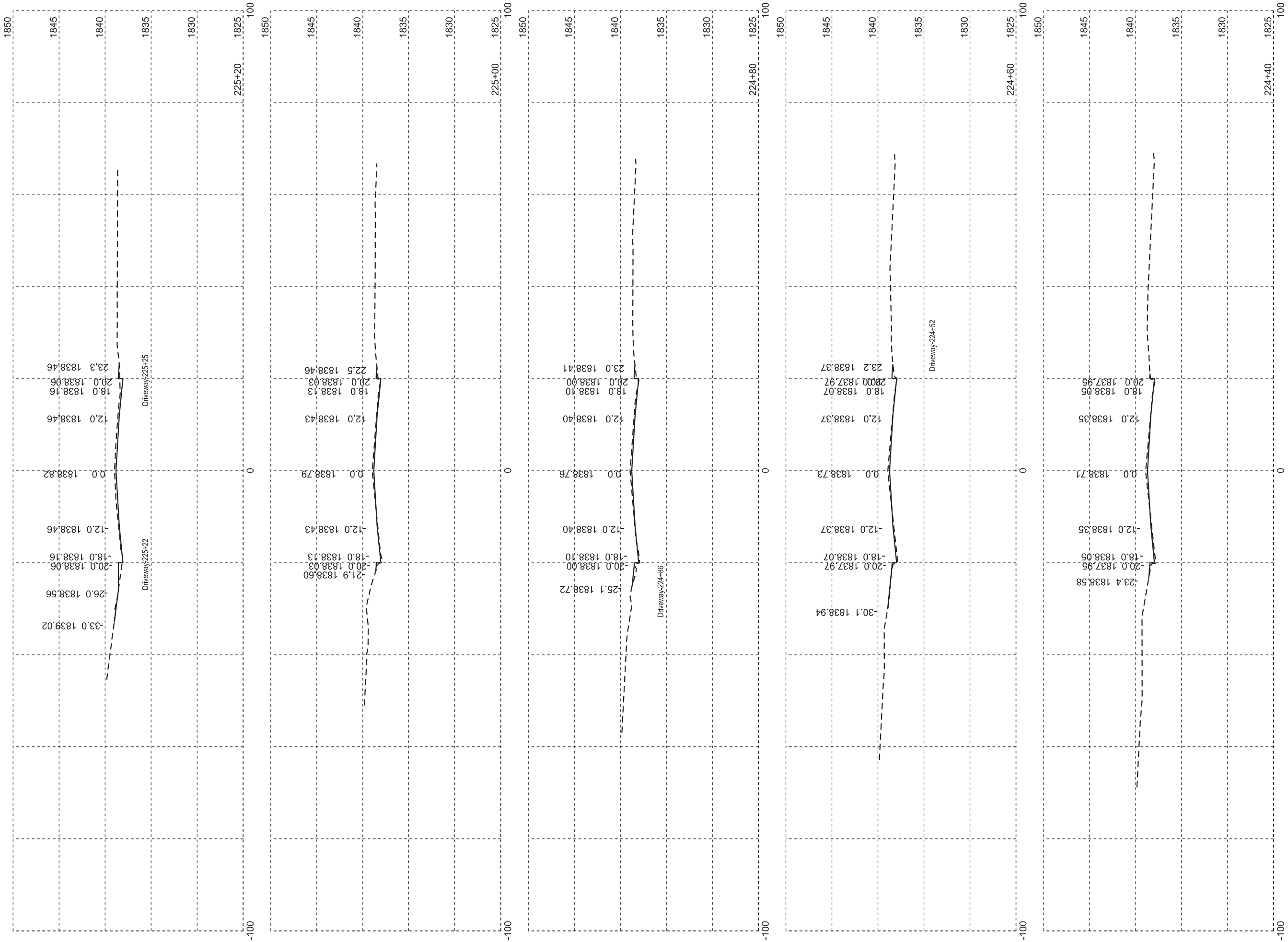

STATE OF SOUTH DAKOTA	PROJECT	SHEET NO.	TOTAL SHEETS
	P 0028(32)319	123	135

Plotting Date: 10/23/2015

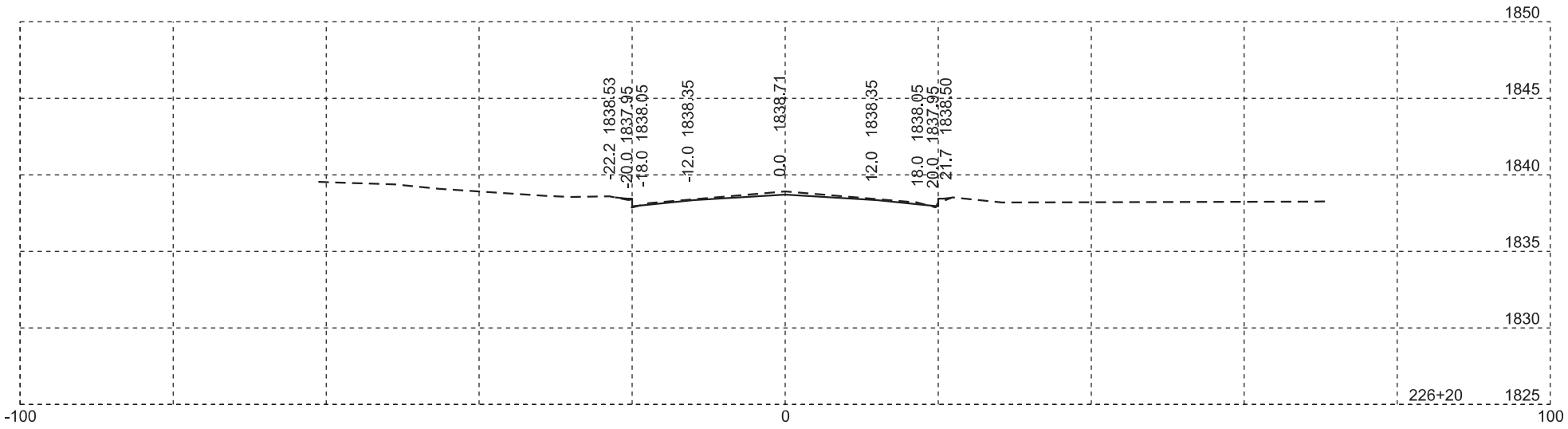

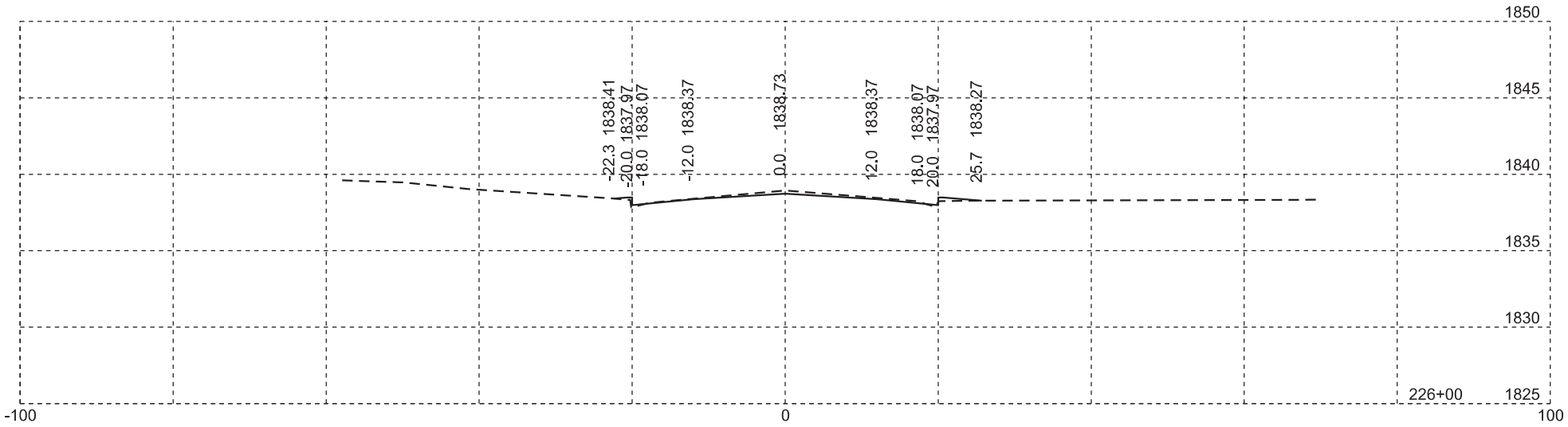

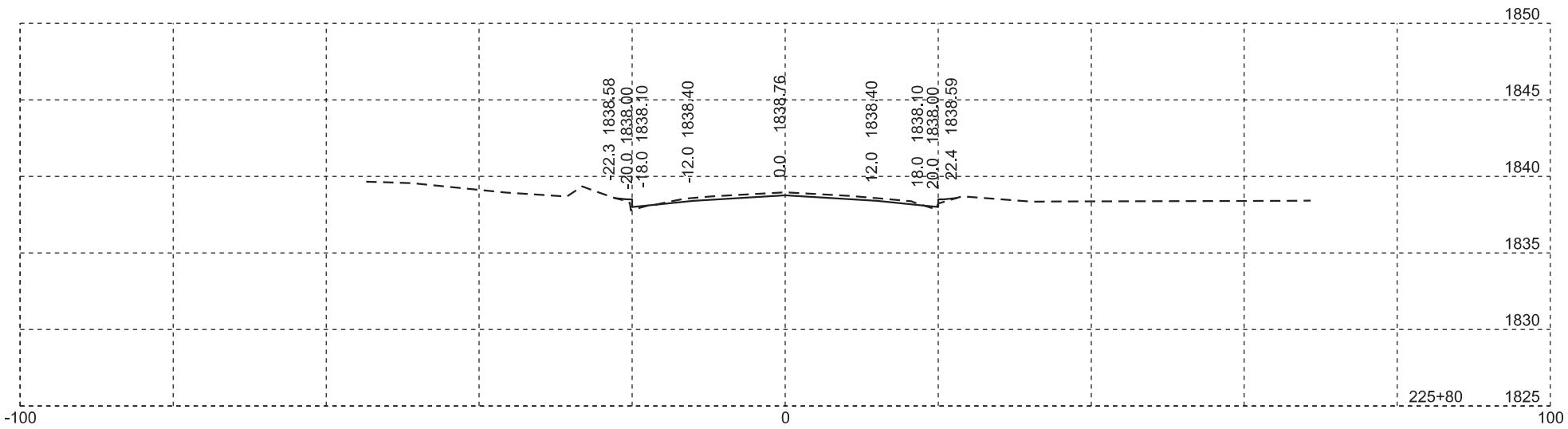

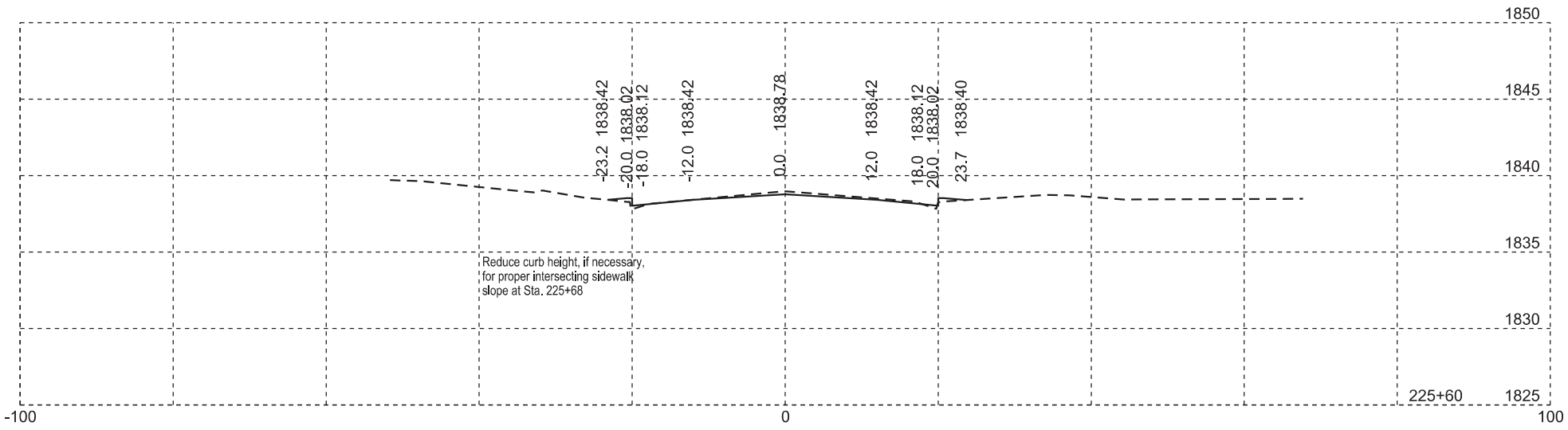

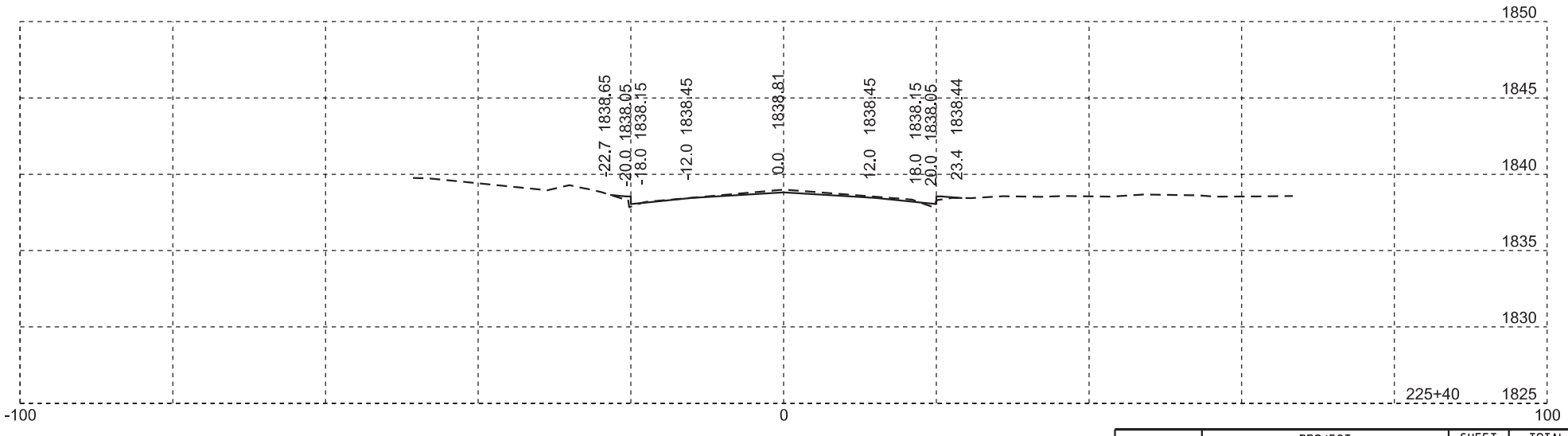

Plotting Date: 10/23/2015

STATE OF SOUTH DAKOTA	PROJECT	SHEET NO.	TOTAL SHEETS
	P 0028(32)319	124	135

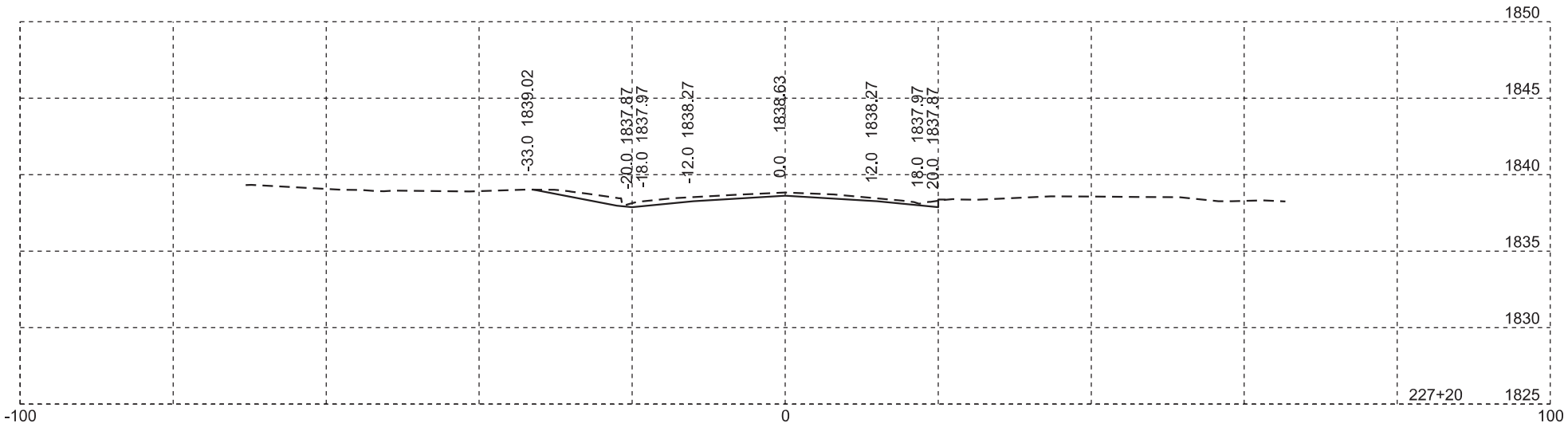

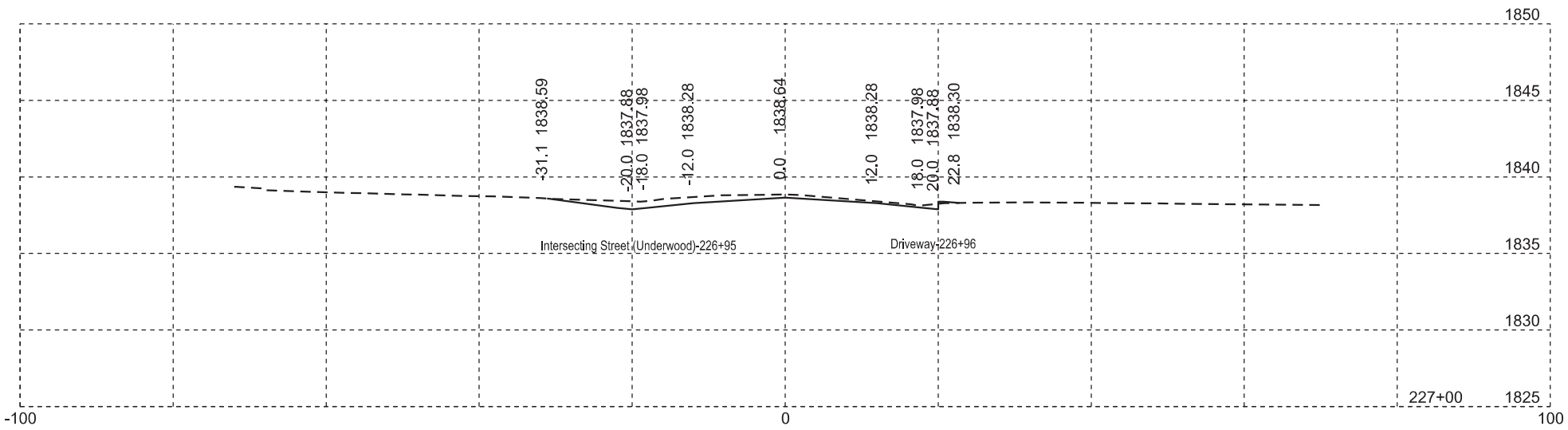

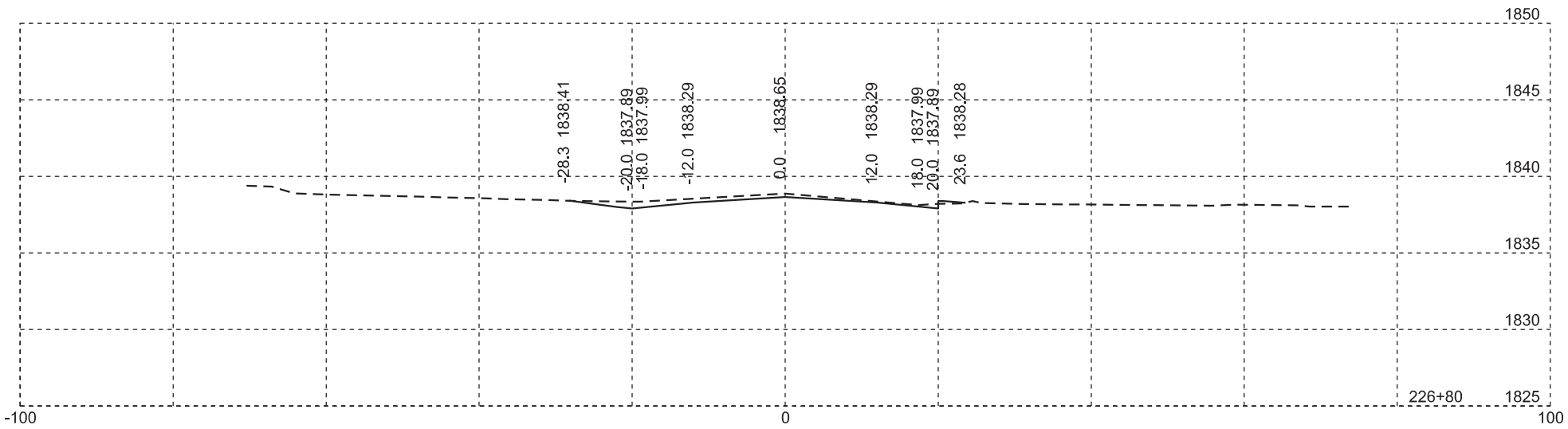

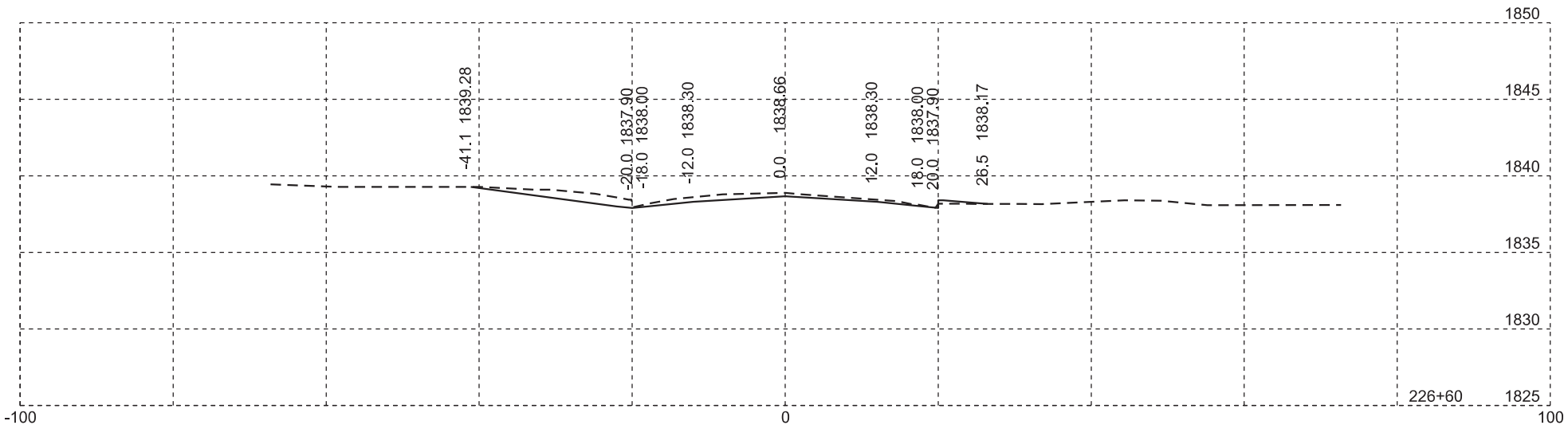

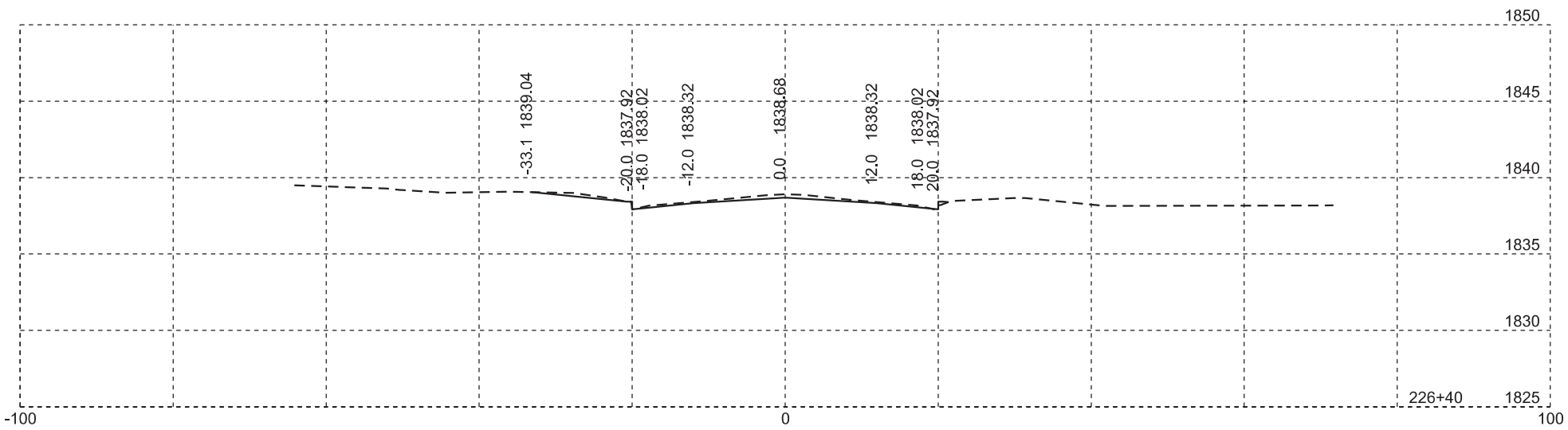

Plotting Date: 10/23/2015

STATE OF SOUTH DAKOTA	PROJECT	SHEET NO.	TOTAL SHEETS
	P 0028(32)319	125	135

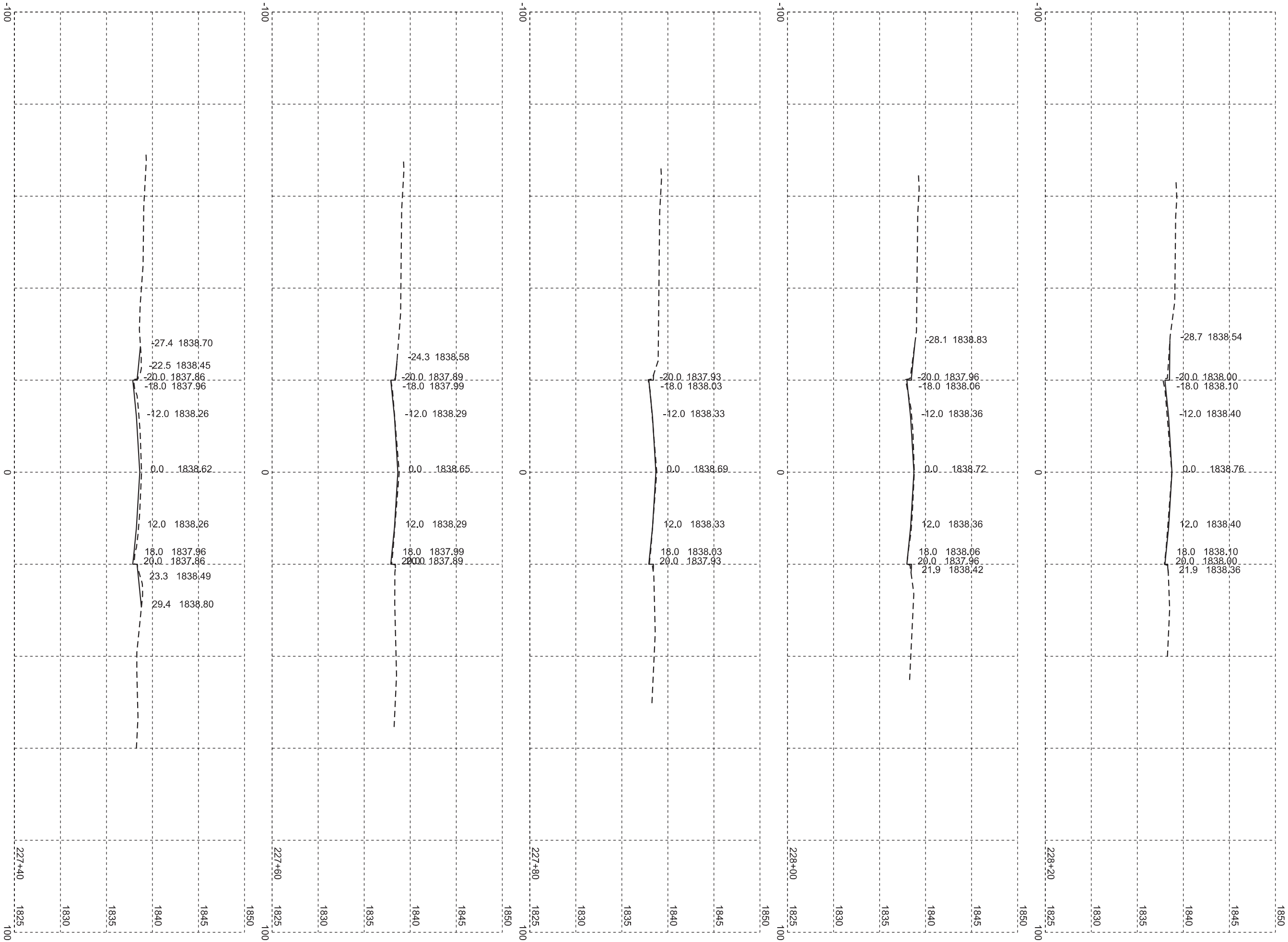

Plotting Date: 10/23/2015

STATE OF SOUTH DAKOTA	PROJECT	SHEET NO.	TOTAL SHEETS
	P 0028(32)319	126	135

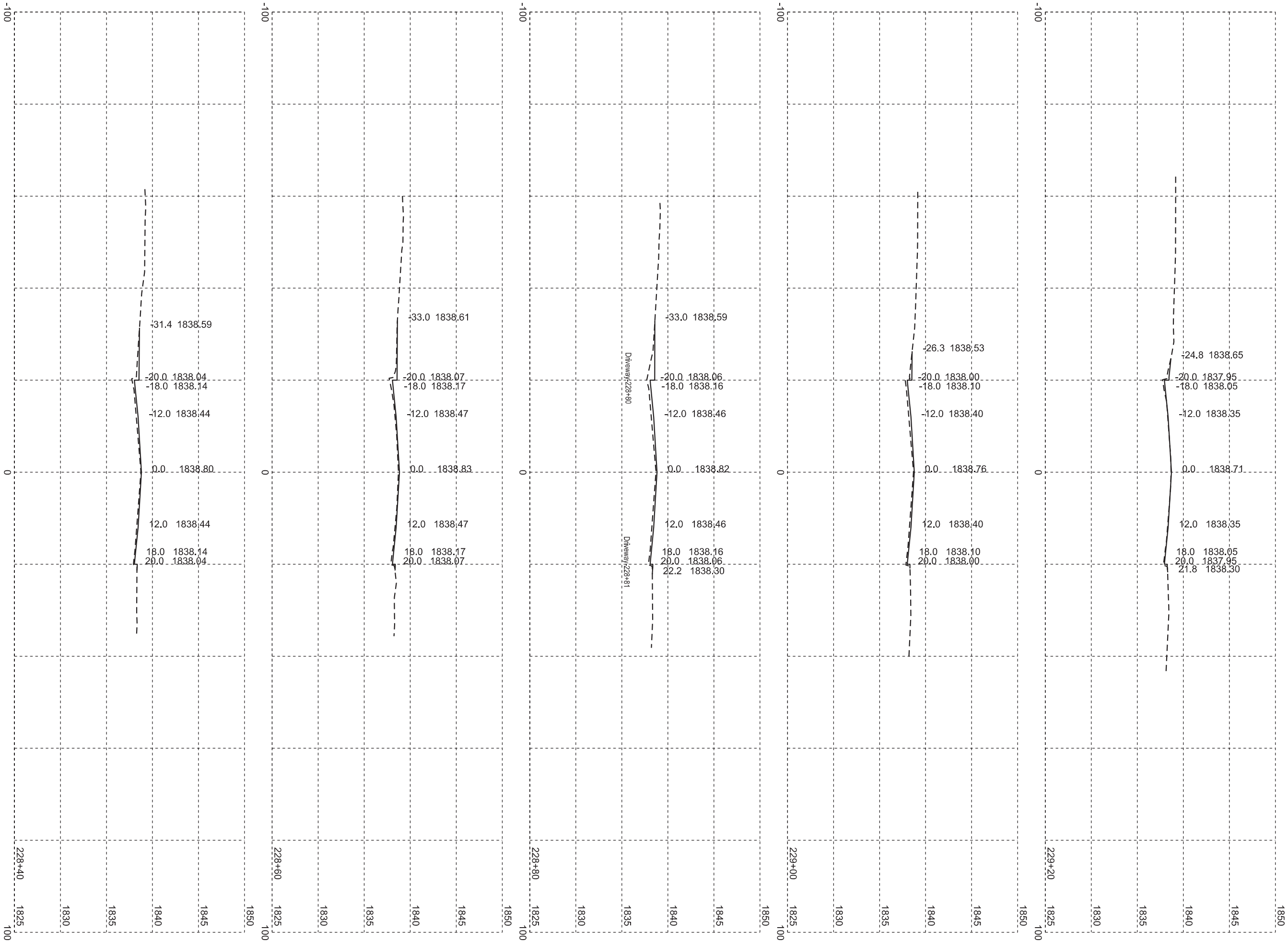

Plotting Date: 10/23/2015

STATE OF SOUTH DAKOTA	PROJECT	SHEET NO.	TOTAL SHEETS
	P 0028(32)319	127	135

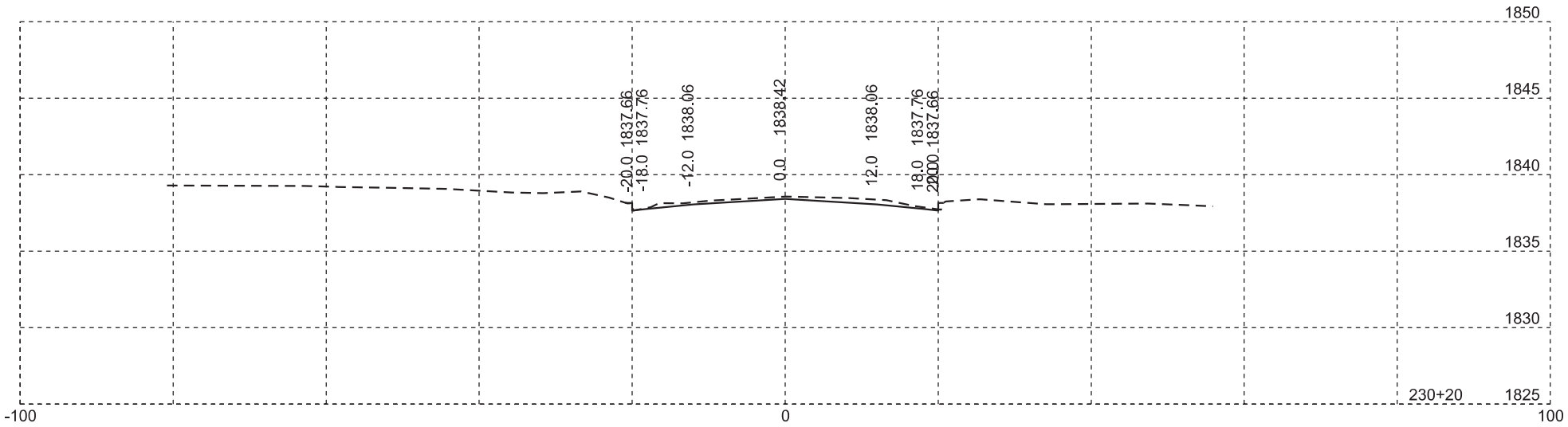

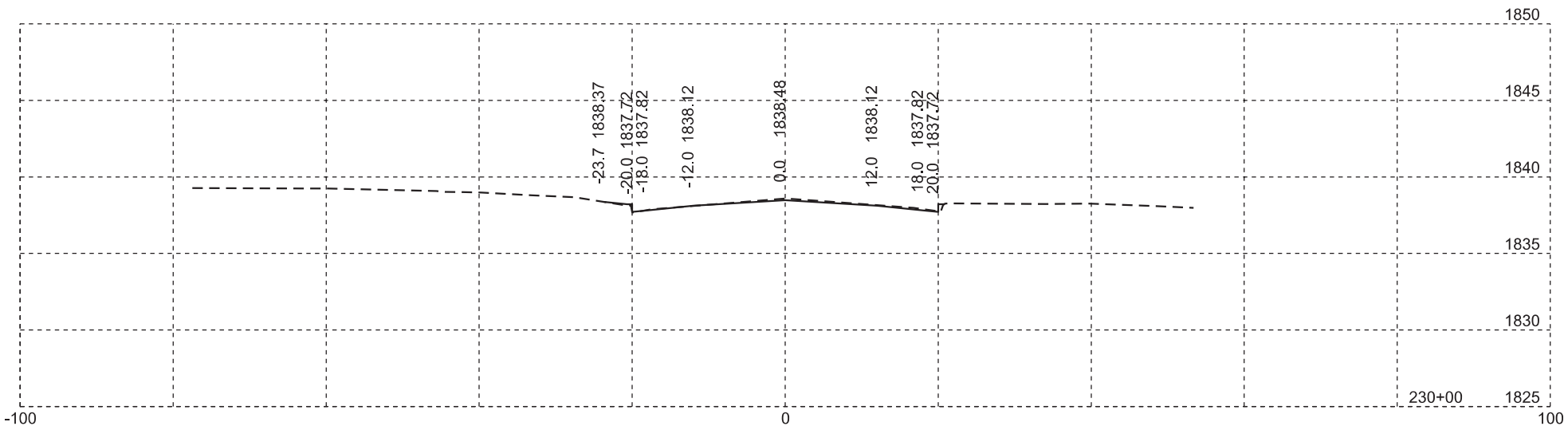

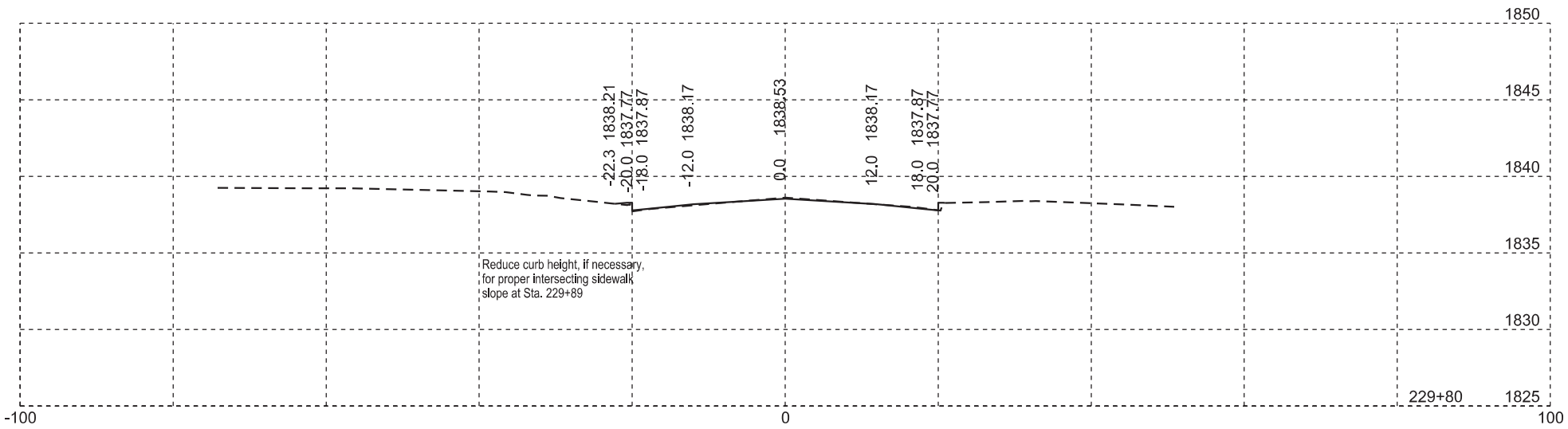

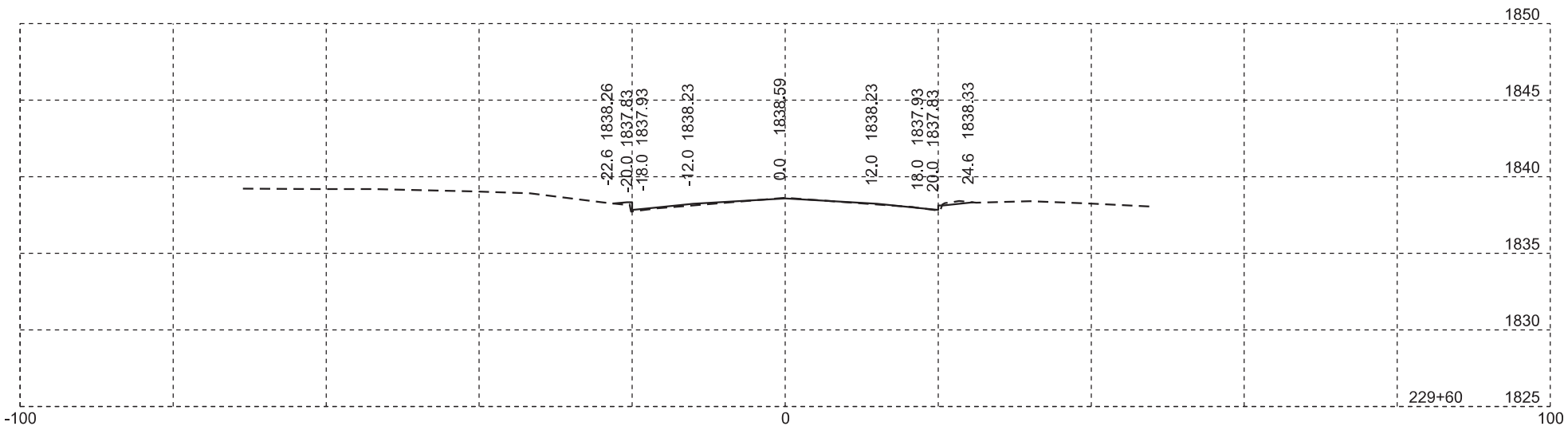

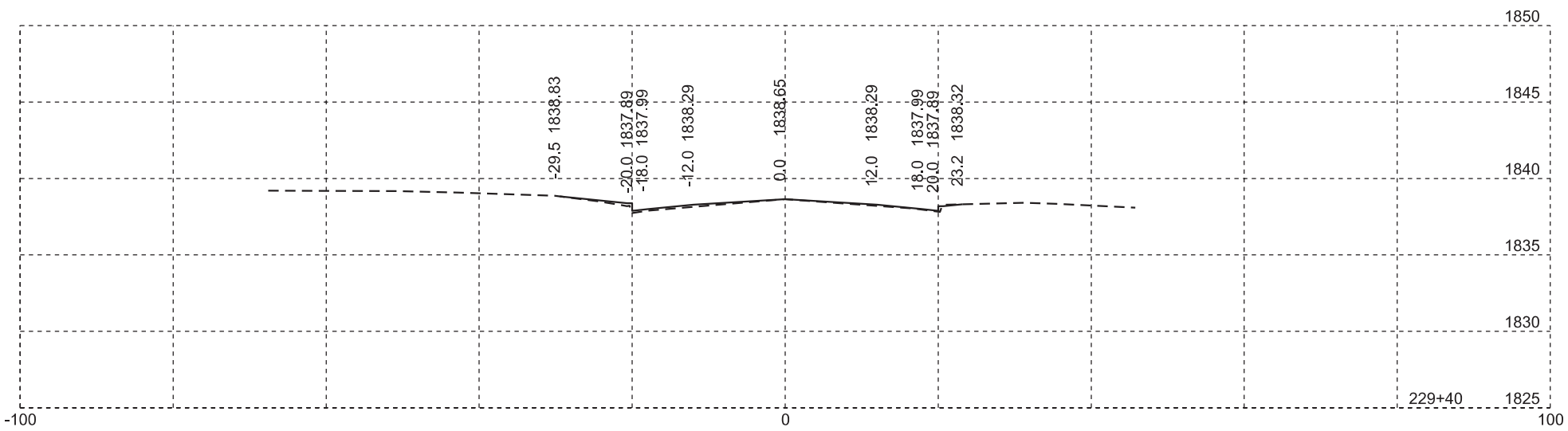

Plotting Date: 10/23/2015

STATE OF SOUTH DAKOTA	PROJECT	SHEET NO.	TOTAL SHEETS
	P 0028(32)319	128	135

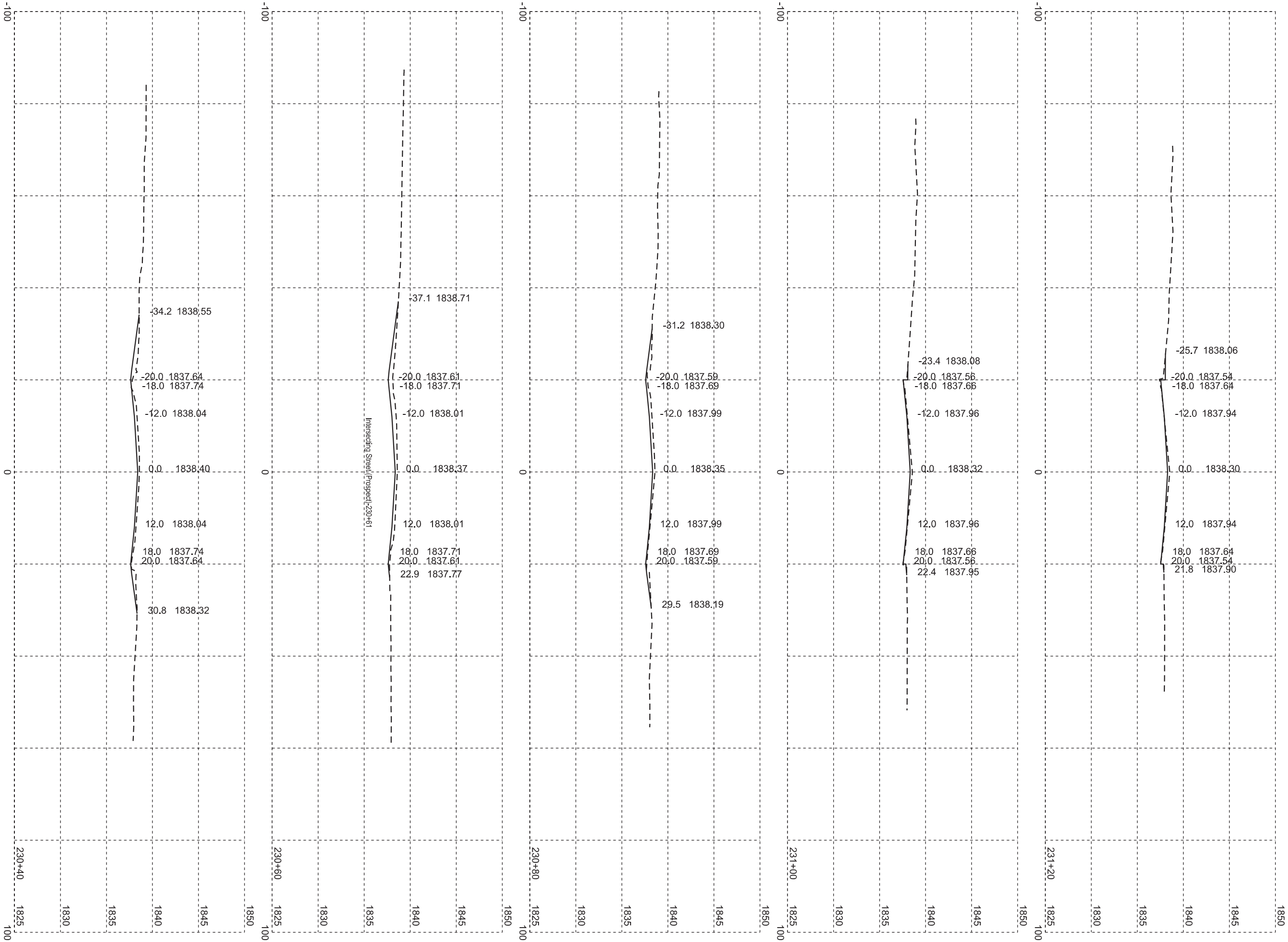

Plotting Date: 10/23/2015

STATE OF SOUTH DAKOTA	PROJECT	SHEET NO.	TOTAL SHEETS
	P 0028(32)319	129	135

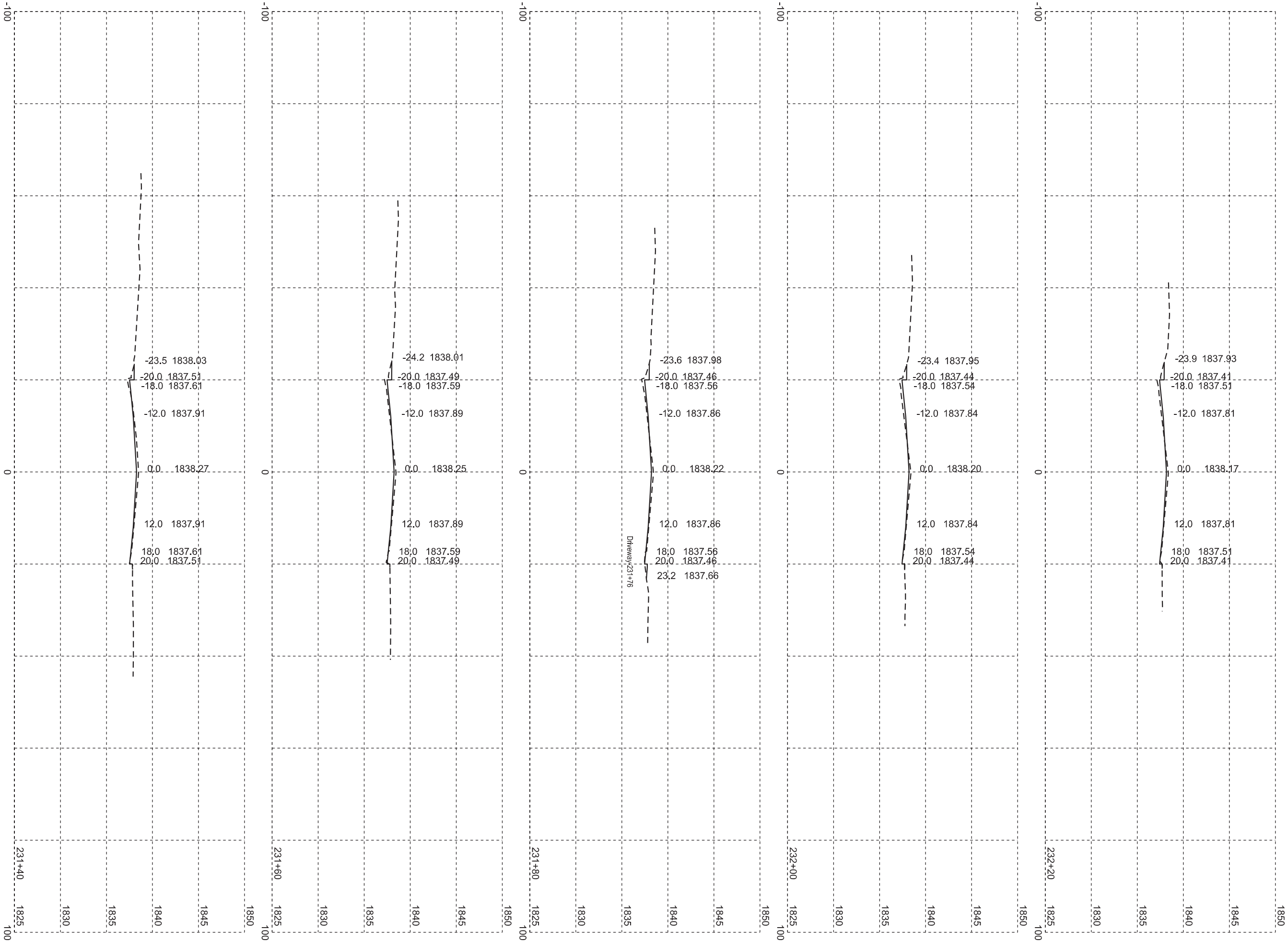

Plotting Date: 10/23/2015

STATE OF SOUTH DAKOTA	PROJECT	SHEET NO.	TOTAL SHEETS
	P 0028(32)319	130	135

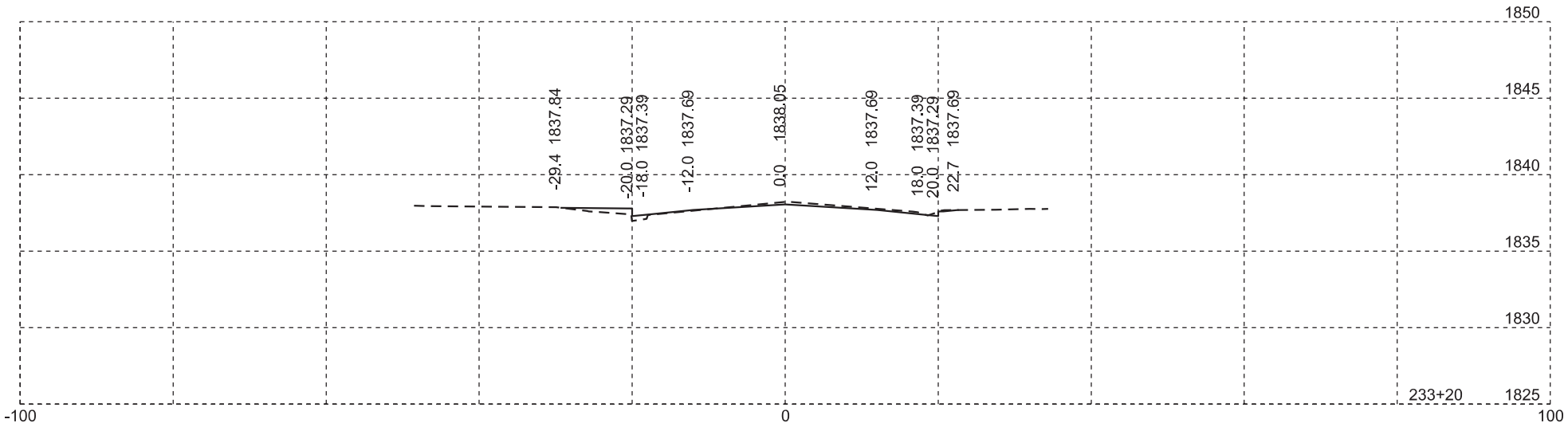

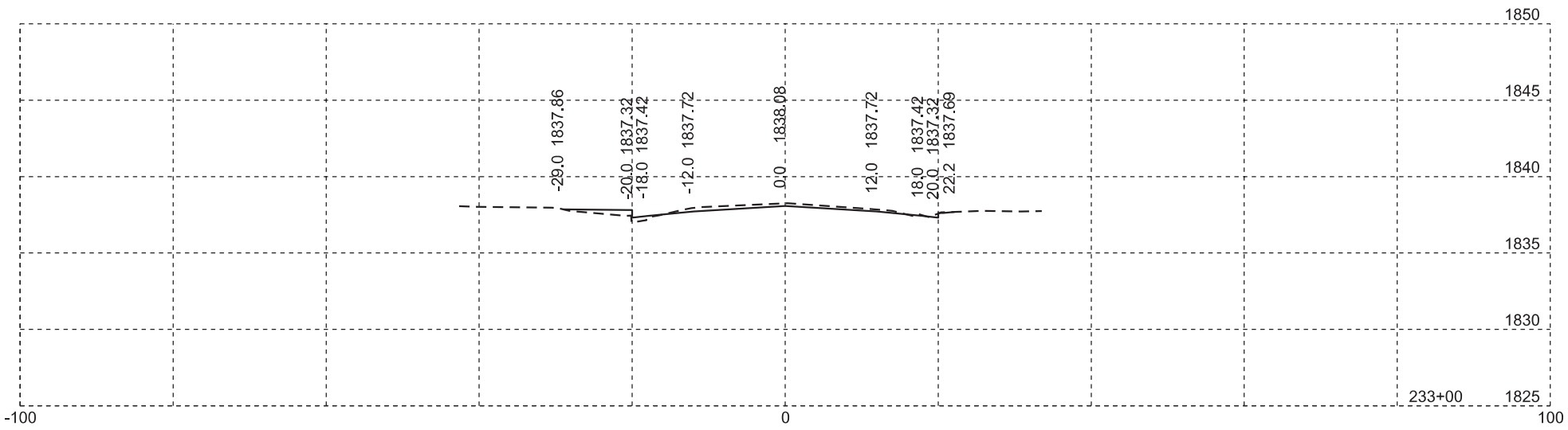

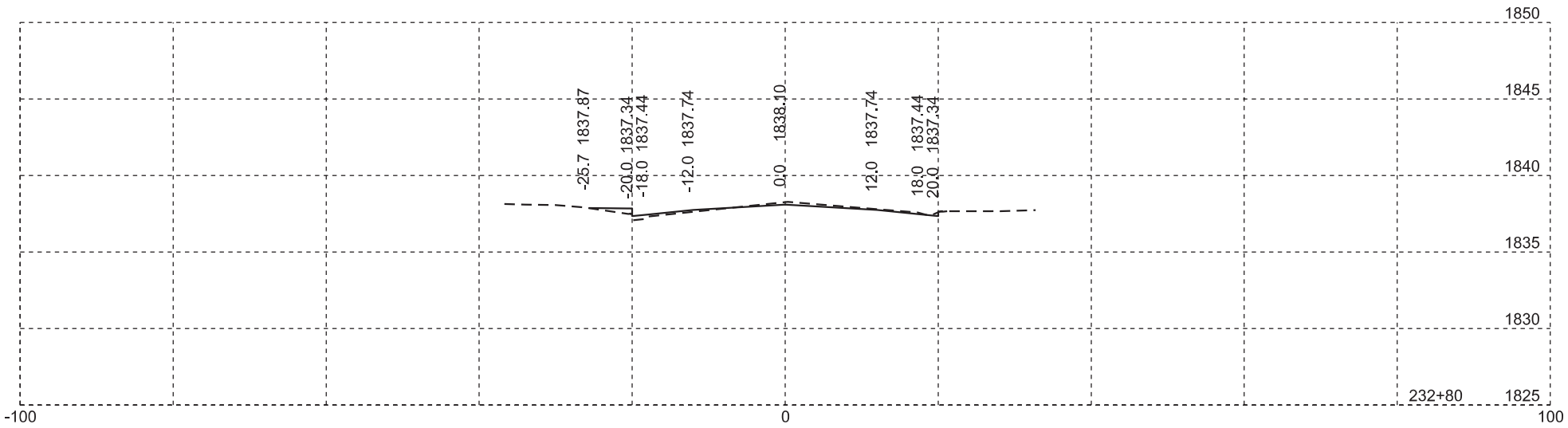

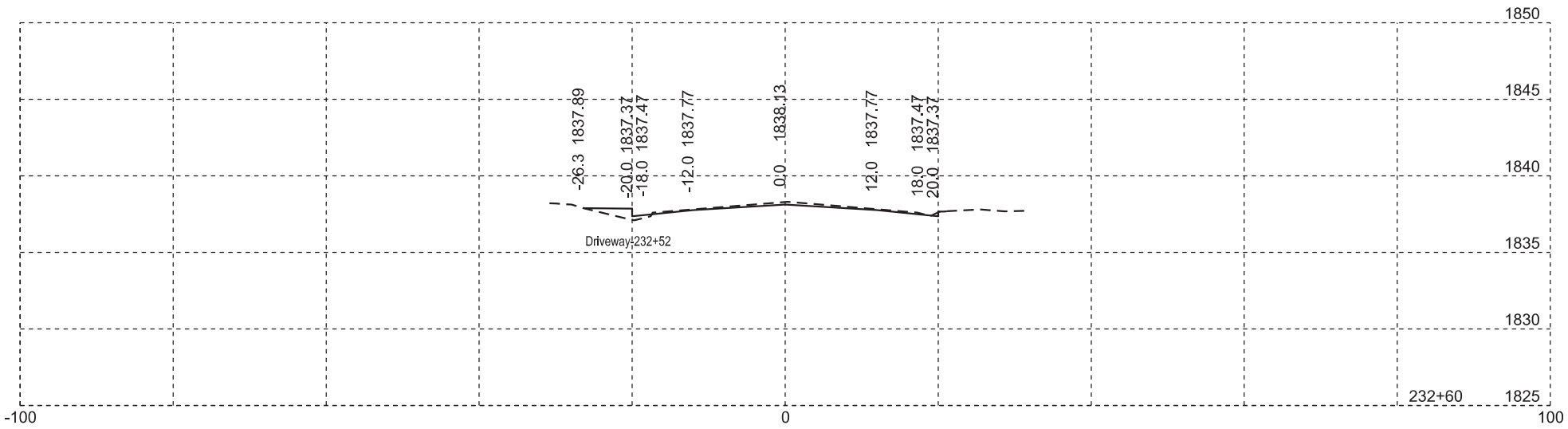

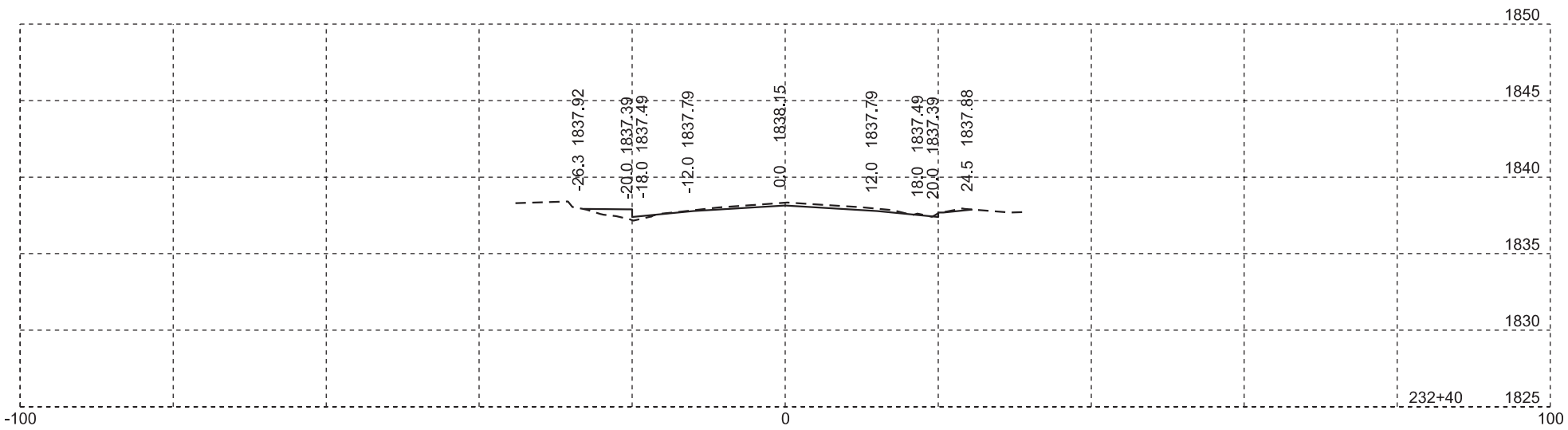

Plotting Date: 10/23/2015

STATE OF SOUTH DAKOTA	PROJECT	SHEET NO.	TOTAL SHEETS
	P 0028(32)319	131	135

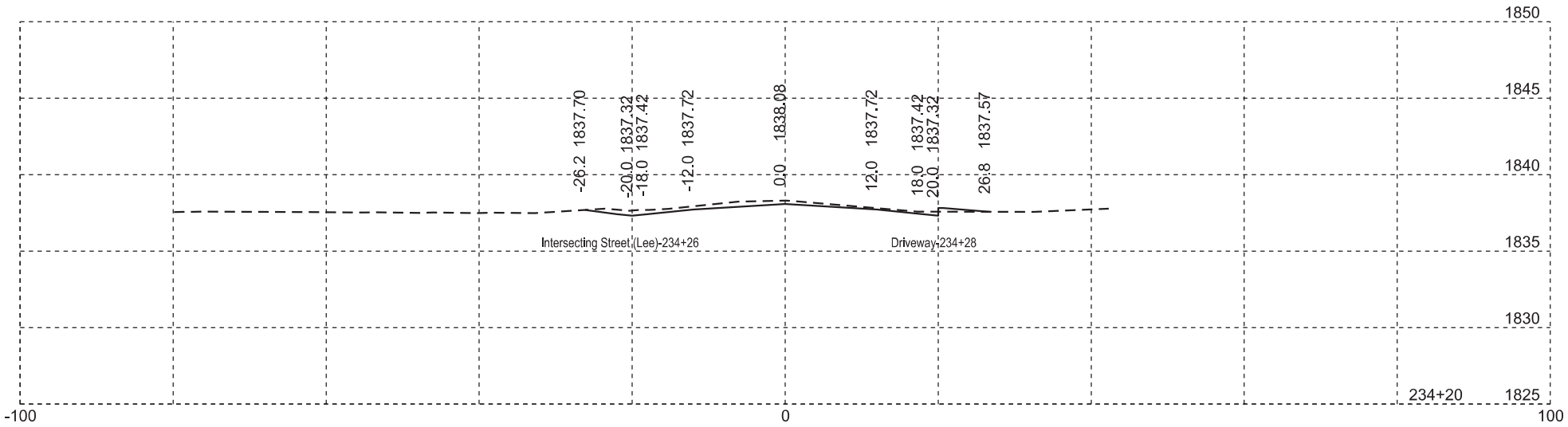

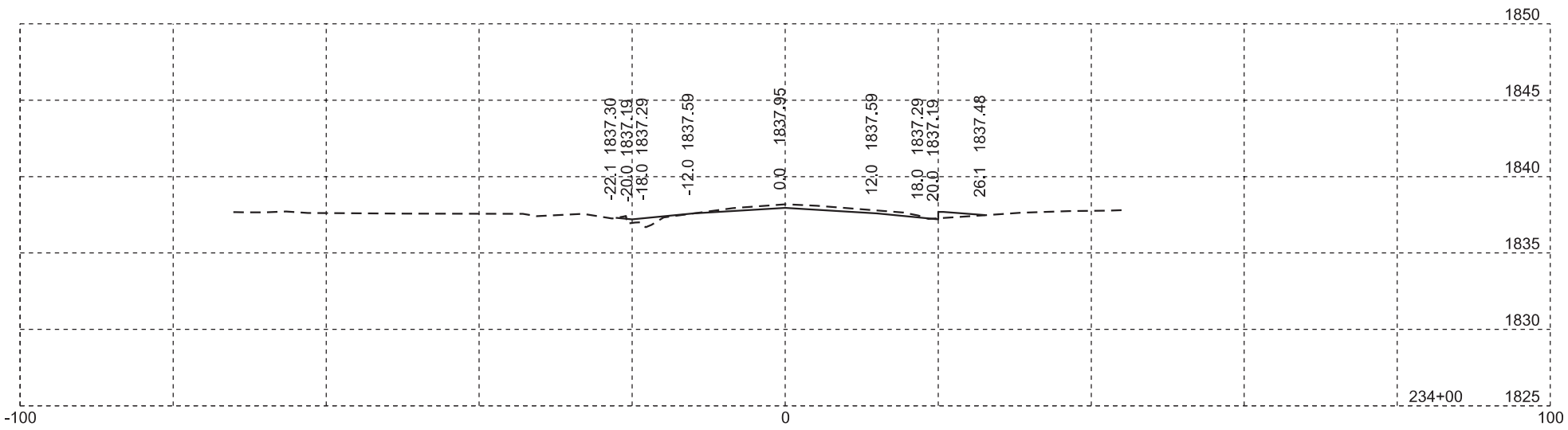

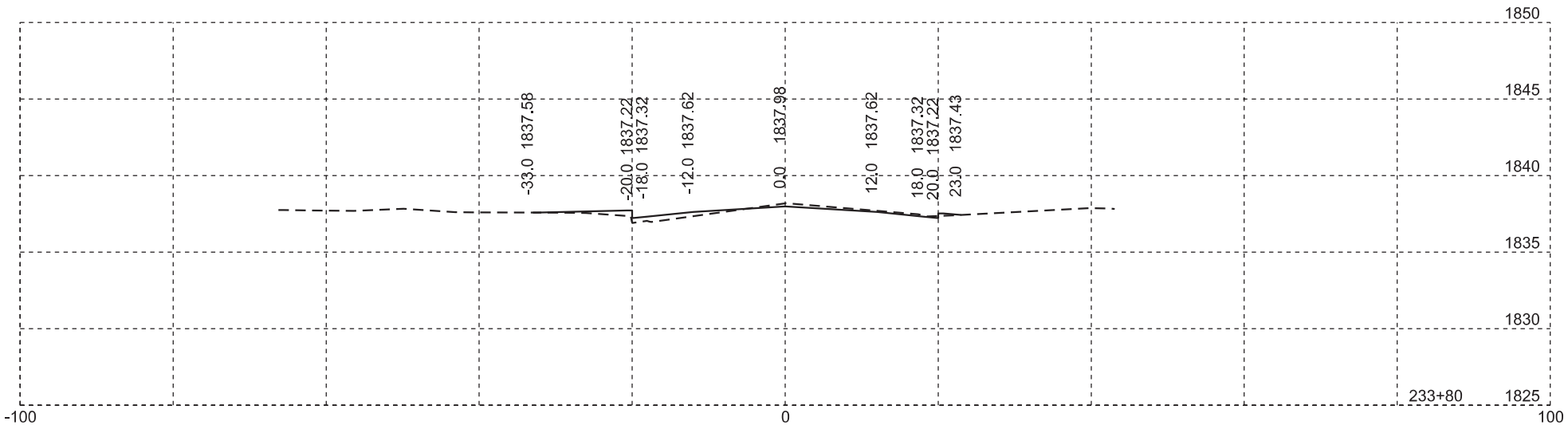

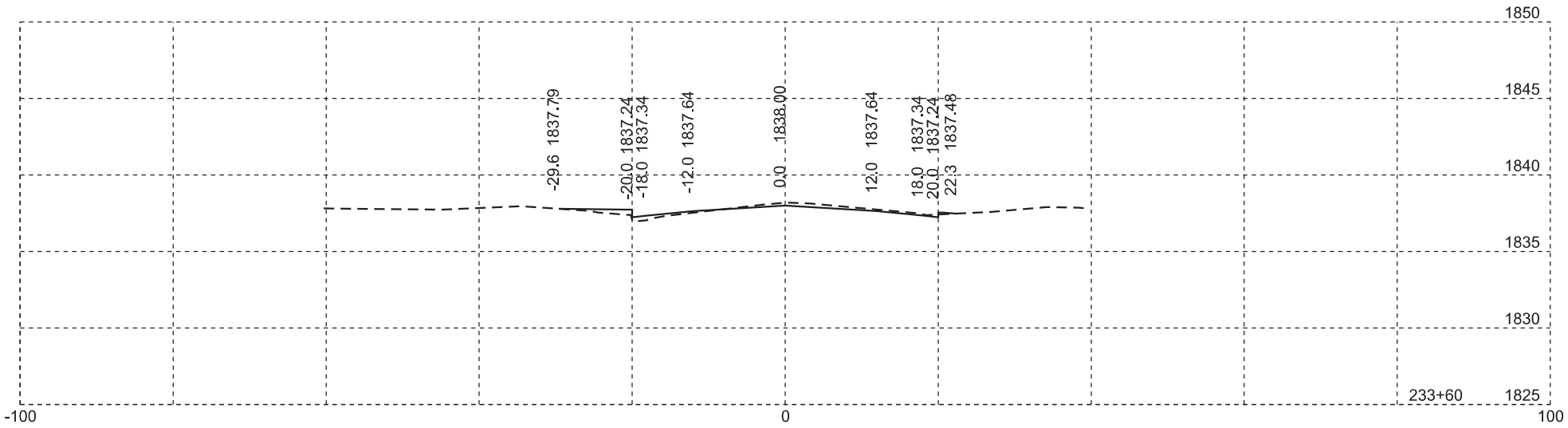

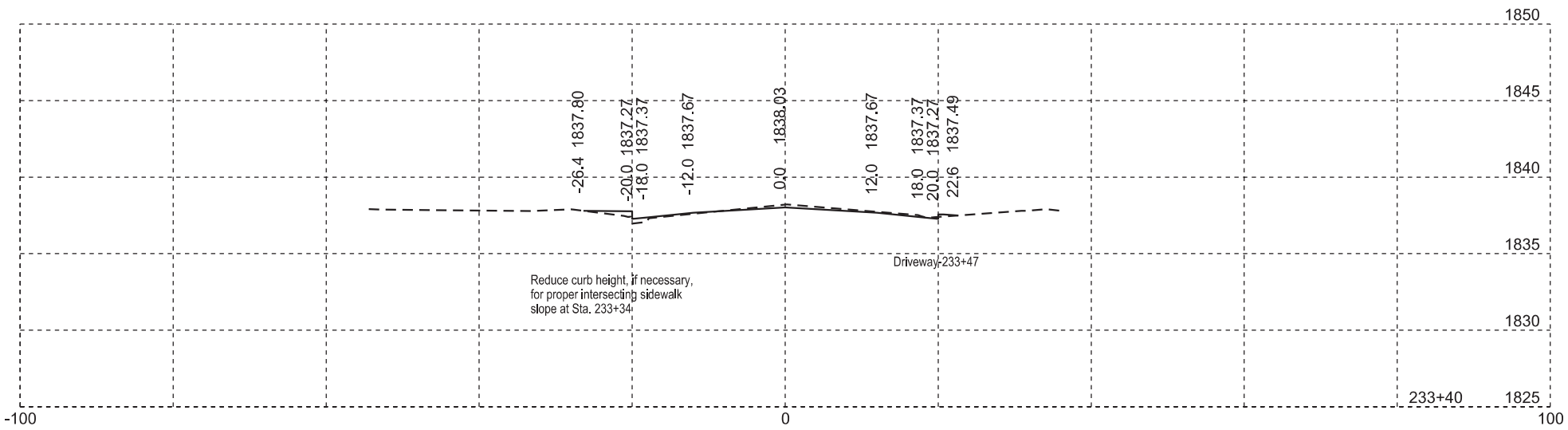

Plotting Date: 10/23/2015

STATE OF SOUTH DAKOTA	PROJECT	SHEET NO.	TOTAL SHEETS
	P 0028(32)319	132	135

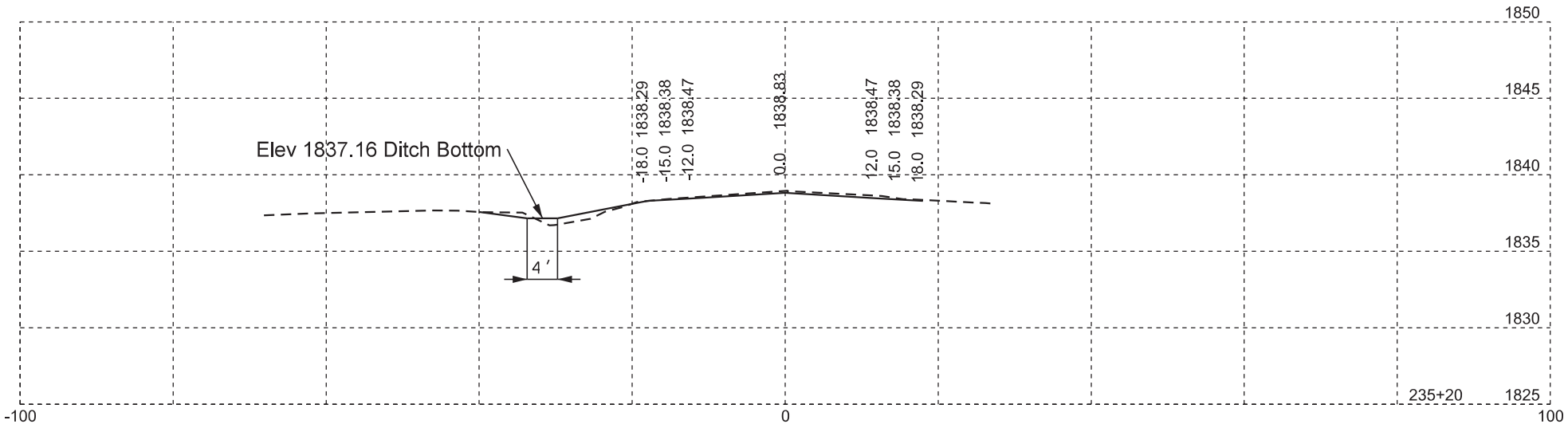

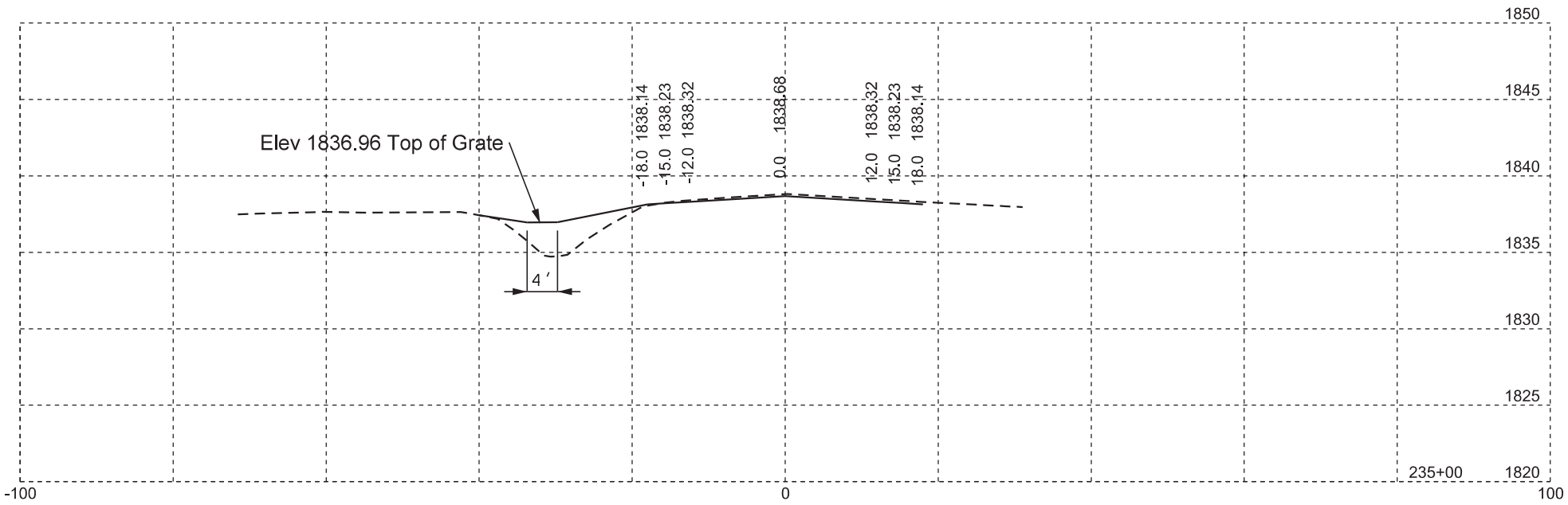

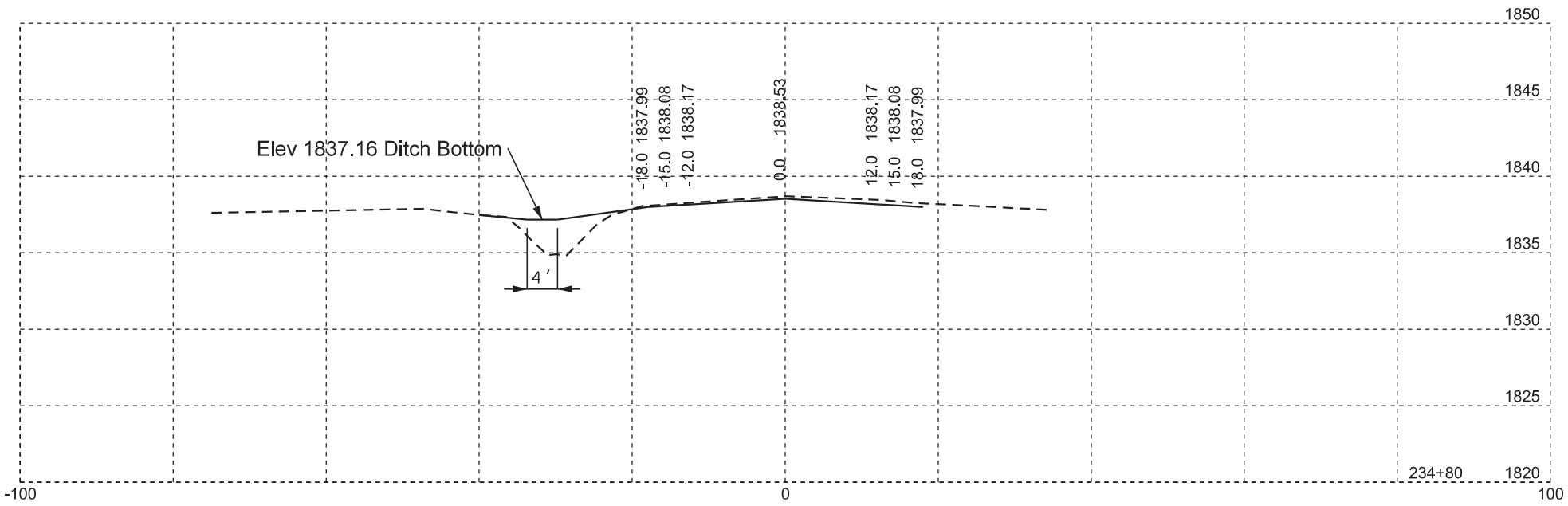

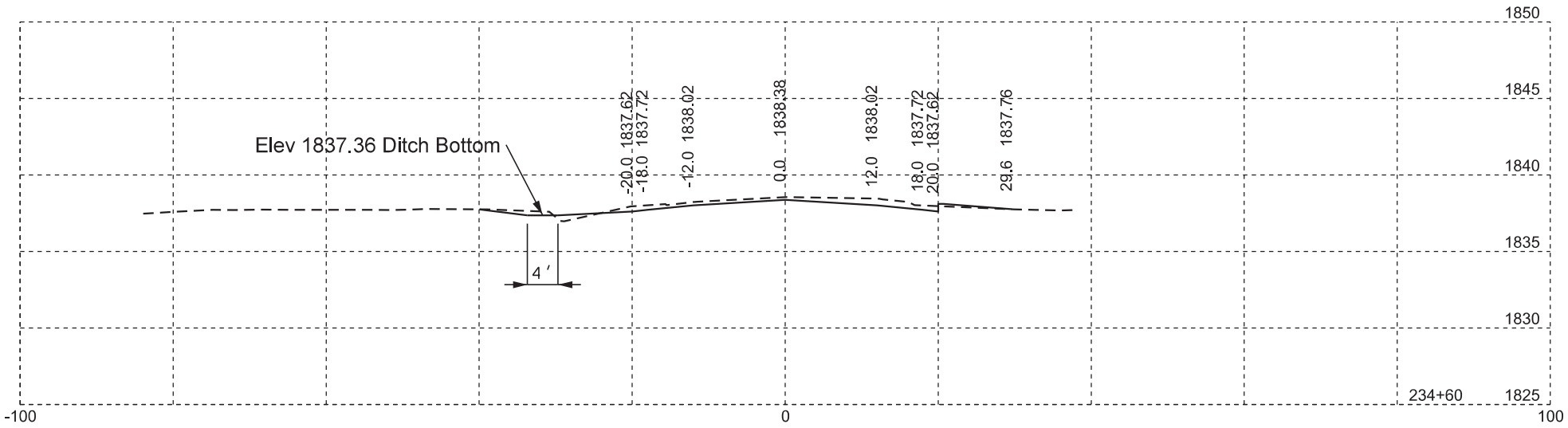

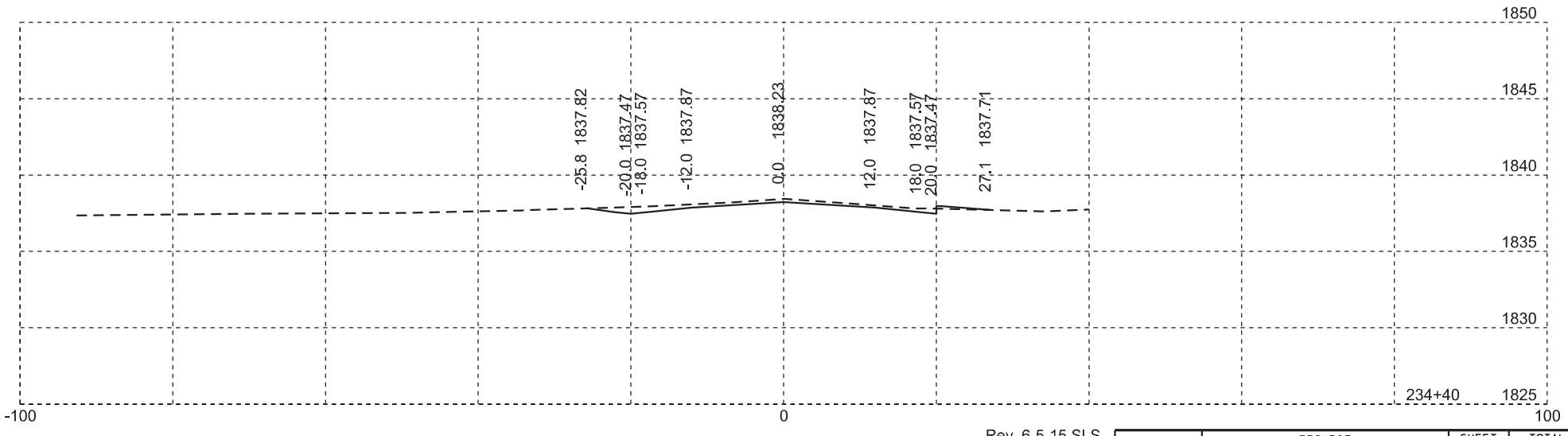

Rev. 6-5-15 SLS

Plotting Date: 10/23/2015

STATE OF SOUTH DAKOTA	PROJECT	SHEET NO.	TOTAL SHEETS
	P 0028(32)319	133	135

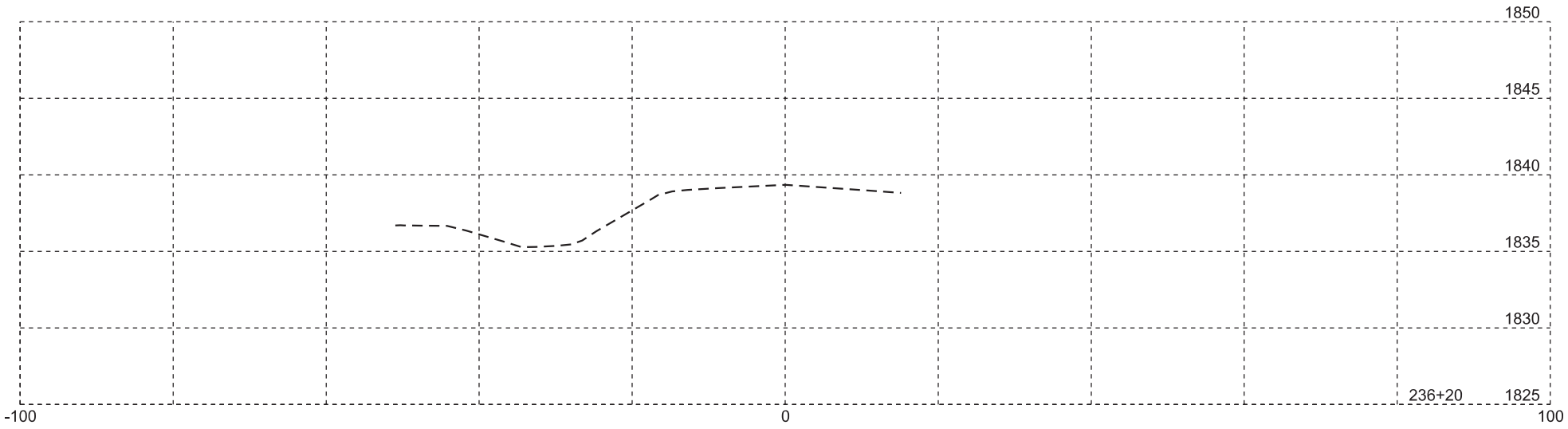

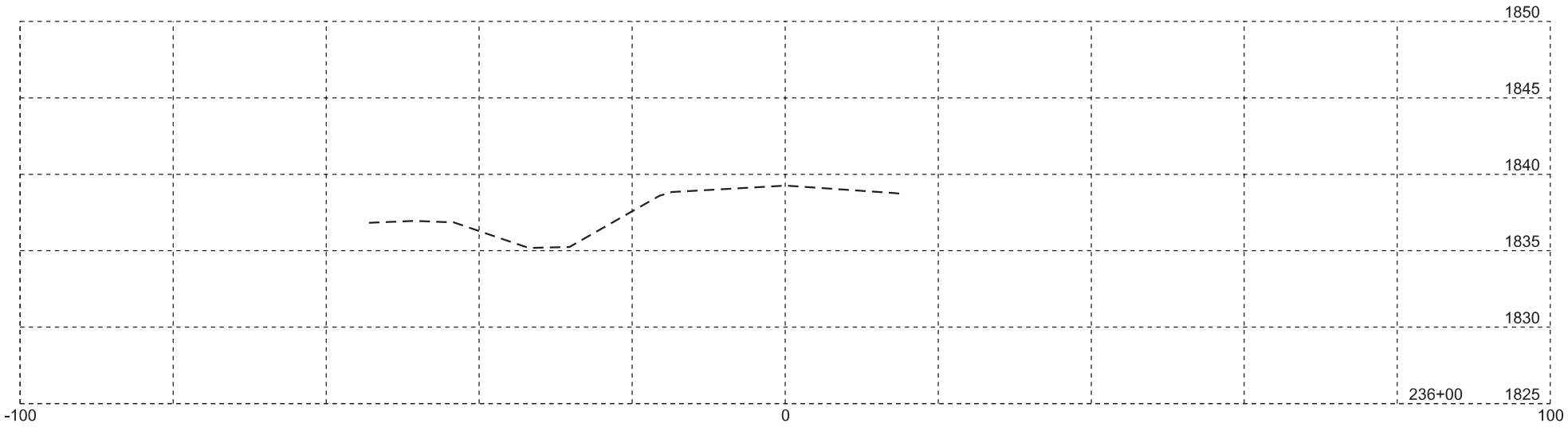

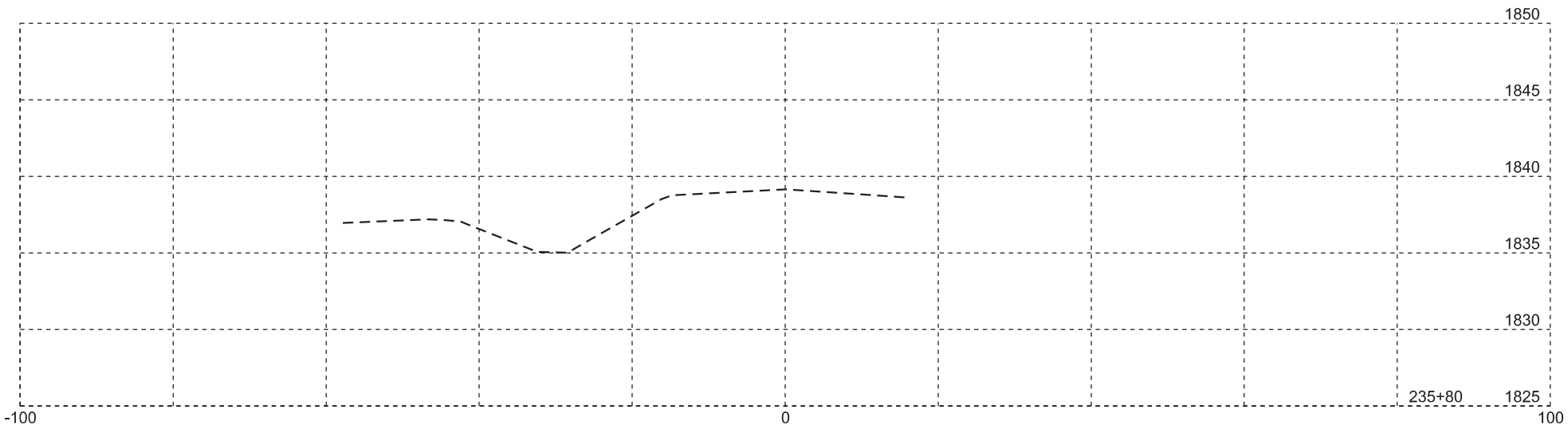

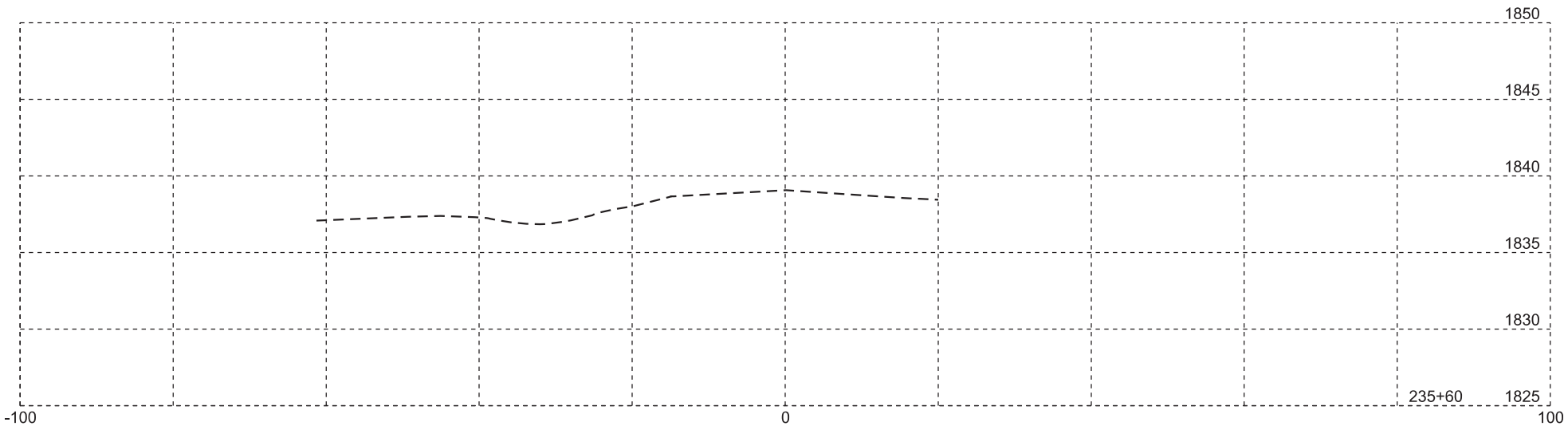

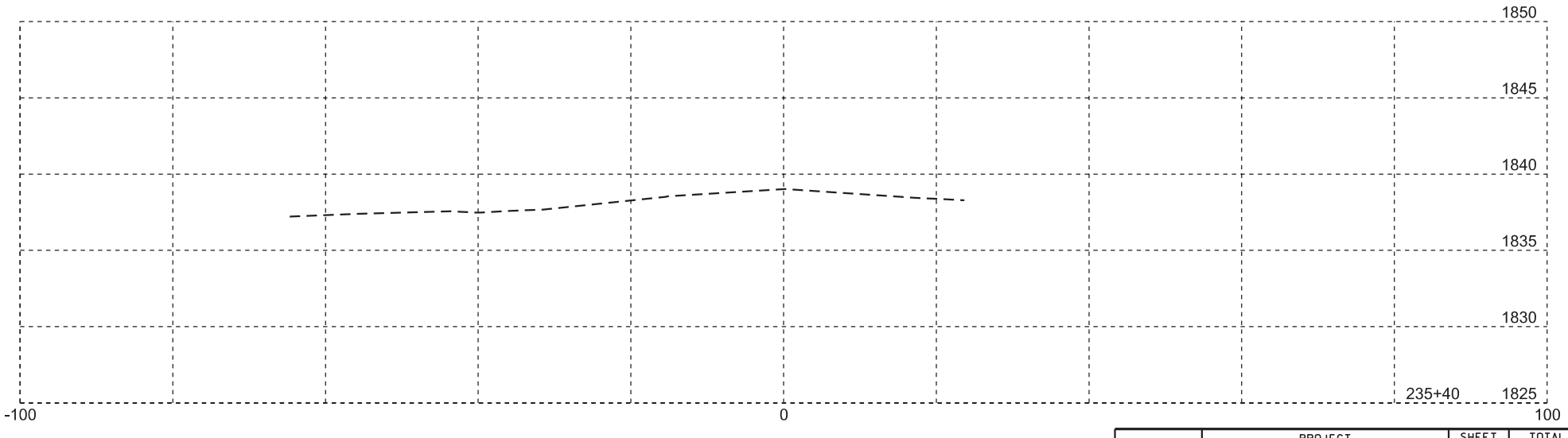

Plotting Date: 10/23/2015

STATE OF SOUTH DAKOTA	PROJECT	SHEET NO.	TOTAL SHEETS
	P 0028(32)319	134	135

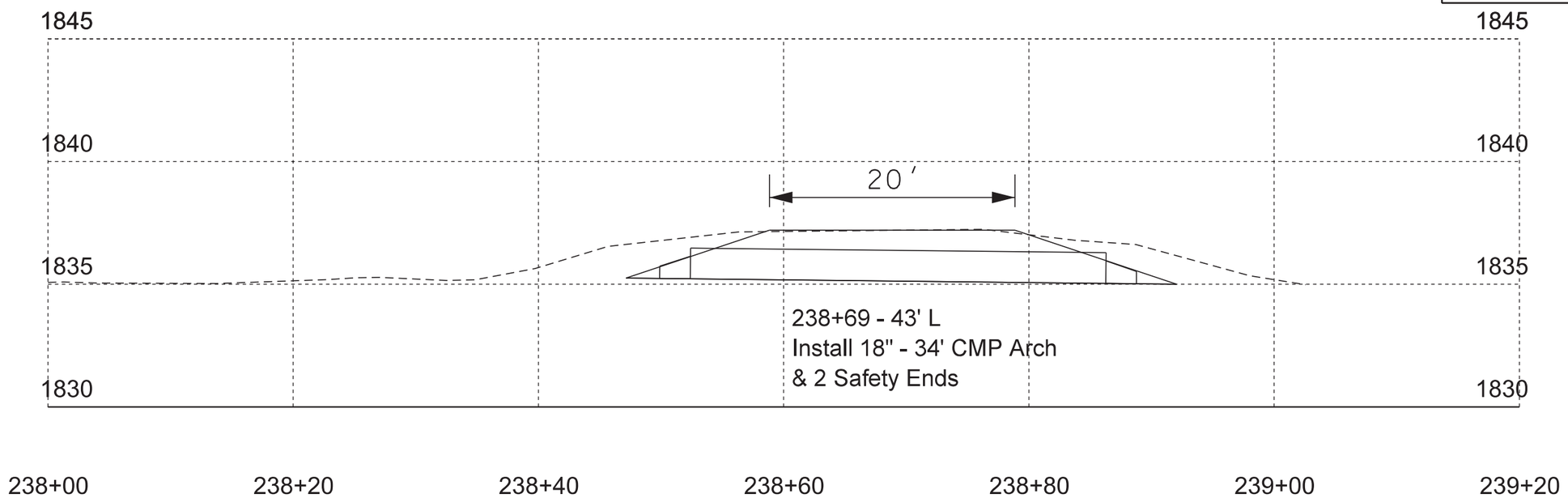

Verify storm sewer outlet elevation at Sta 234+78
and mainline cross pipe inlet elevation at Sta 239+03.
Adjust approach culvert flow line elevations as required
for constant ditch slope between Sta 237+78 and 239+03.

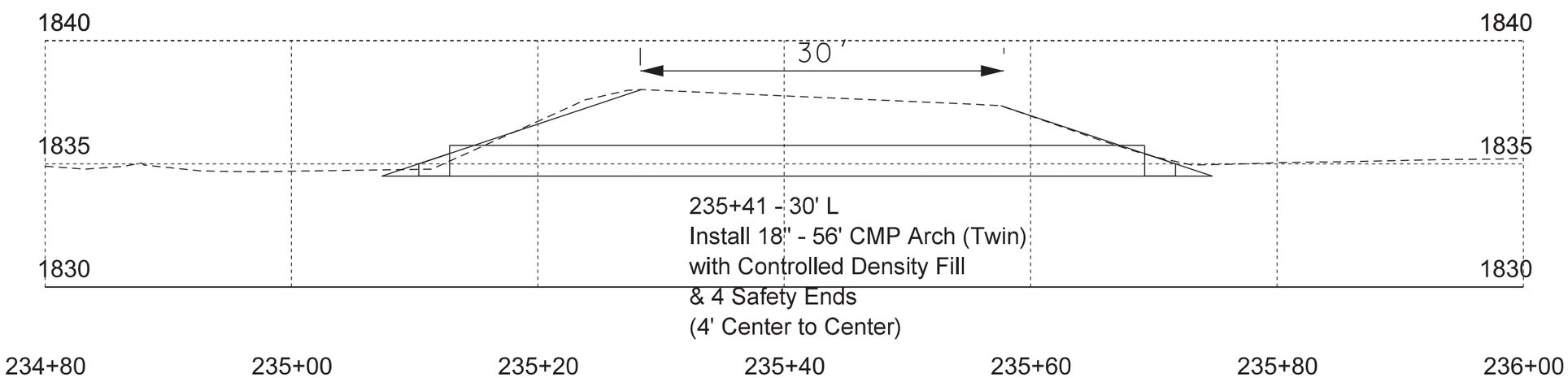

PLOT SCALE - 1:10
PLOT NAME - 23
FILE '...\REGIONDESIGN\X020K.DGN
PLOTTED FROM - TRAB17882