FOR BIDDING PURPOSES ONLY

STATE OF SOUTH DAKOTA	PROJECT	SHEET	TOTAL SHEETS
	NH 0034(160)386	B1	B133

Plotting Date: 12/4/2015

Section B: Grading Plans

INDEX OF SHEETS

B1	General Layout w/Index
B2-B12	Estimate w/General Notes & Tables
B13-B15	Table of Pipe Quantities
B16	Table of Fence Quanities
B17-19	Pavement, Curb & Gutter, Sidewalk Table
B20-B21	Typical Sections
B22	Horizontal Alignment Sheets
B23	Control Data
B24	Subsurface Utility Locations
B25	Topography Symbology & Legend
B26-B31	Landowner Tables
B32-B51	Plan & Profile Sheets
B52-B61	Pavement Removal Sheets
B62-B71	Curb & Gutter Sheets
B72-B86	Curb Ramp Layout
B87-B97	Retaining Wall Layout
B98-B103	Special Details
B104-B133	Standard Details

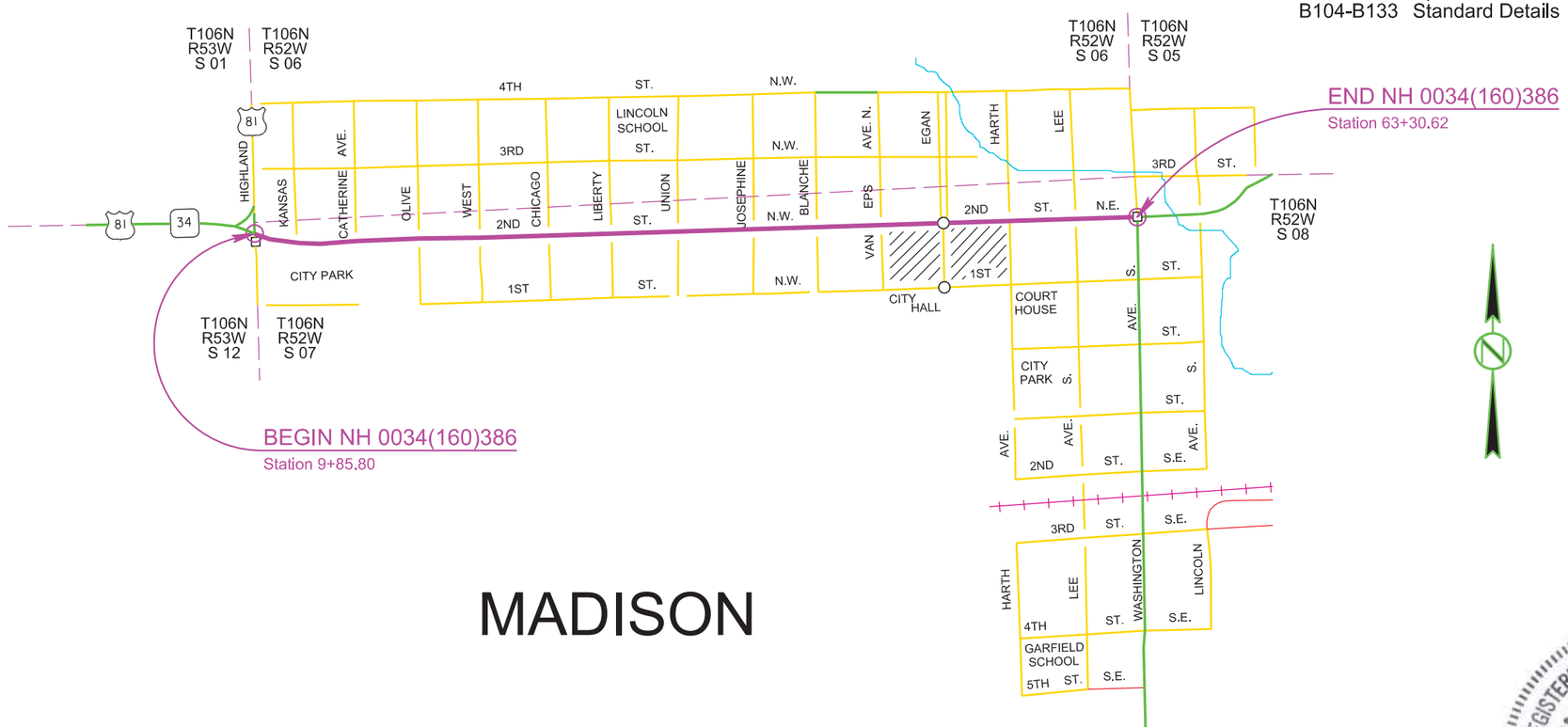

REGISTERED PROFESSIONAL ENGINEER
REG. NO. 9737
DAVID L. MAXWELL
SOUTH DAKOTA
12/4/15

Plot Scale - 1:200
Plotted From - kmay
File - ...\CAD\LAKE\02R6\Design\TitleB.dgn

SECTION B ESTIMATE OF QUANTITIES

BID ITEM NUMBER	ITEM	QUANTITY	UNIT
009E0010	Mobilization	Lump Sum	LS
009E3230	Grade Staking	5.159	Mile
009E3290	Structure Staking	10	Each
009E3300	Three Man Survey Crew	40.0	Hour
009E4300	Construction Schedule, Category III	Lump Sum	LS
100E0100	Clearing	Lump Sum	LS
110E0300	Remove Concrete Curb and Gutter	1,009	Ft
110E0310	Remove Concrete Curb	26	Ft
110E0320	Remove Concrete Gutter	86	Ft
110E0400	Remove Drop Inlet	47	Each
110E0460	Remove Manhole	12	Each
110E0605	Remove Chain Link Fence	117	Ft
110E1010	Remove Asphalt Concrete Pavement	2,801.0	SqYd
110E1100	Remove Concrete Pavement	38,017.1	SqYd
110E1110	Remove Concrete Approach Pavement	1,793.3	SqYd
110E1120	Remove Concrete Median Pavement	33.2	SqYd
110E1130	Remove Concrete Driveway Pavement	365.1	SqYd
110E1140	Remove Concrete Sidewalk	4,467.9	SqYd
110E1300	Remove Concrete Retaining Wall	1,151.8	Ft
110E5800	Salvage Fence	82	Ft
110E7802	Remove Fence for Reset	30	Ft
120E0010	Unclassified Excavation	34,022	CuYd
120E0900	Contaminated Material Excavation	100	CuYd
120E2000	Undercutting	26,470	CuYd
250E0020	Incidental Work, Grading	Lump Sum	LS
380E2564	4" Barrier Type Colored Median PCC Pavement	56.4	SqYd
380E3520	6" PCC Approach Pavement	338.5	SqYd
380E3540	8" PCC Approach Pavement	1,268.8	SqYd
380E4060	8.5" PCC Fillet Section	1,273.3	SqYd
450E0103	12" RCP Class 3, Furnish	124	Ft
450E0110	12" RCP, Install	124	Ft
450E0123	18" RCP Class 3, Furnish	2,990	Ft
450E0130	18" RCP, Install	2,990	Ft
450E0143	24" RCP Class 3, Furnish	890	Ft
450E0150	24" RCP, Install	890	Ft
450E0163	30" RCP Class 3, Furnish	280	Ft
450E0170	30" RCP, Install	280	Ft
450E0183	36" RCP Class 3, Furnish	742	Ft
450E0190	36" RCP, Install	742	Ft
450E3033	36" RCP Arch Class 3, Furnish	224	Ft
450E3040	36" RCP Arch, Install	224	Ft
450E3053	48" RCP Arch Class 3, Furnish	376	Ft
450E3060	48" RCP Arch, Install	376	Ft
450E3063	54" RCP Arch Class 3, Furnish	1,480	Ft
450E3070	54" RCP Arch, Install	1,480	Ft
450E3073	60" RCP Arch Class 3, Furnish	1,124	Ft
450E3080	60" RCP Arch, Install	1,124	Ft
450E7005	12" High Density Polyethylene Pipe, Furnish	12	Ft
450E7006	12" High Density Polyethylene Pipe, Install	12	Ft
460E0060	Class A45 Concrete, Self Consolidating	3.4	CuYd
460E0300	Breakout Structural Concrete	1.3	CuYd
460E0380	Install Dowel in Concrete	118	Each
462E0100	Class M6 Concrete	325.5	CuYd
470E0020	Pipe Handrail	113.0	Ft
480E0100	Reinforcing Steel	59,905	Lb
480E0200	Epoxy Coated Reinforcing Steel	1,224	Lb
530E0300	Type C Concrete Retaining Wall	695	SqFt
530E0310	Special Type C Concrete Retaining Wall	949	SqFt
530E0460	Gravity Segmental Block Wall	1,700	SqFt
600E0300	Type III Field Laboratory	1	Each
620E4100	Reset Fence	30	Ft
650E0085	Type B68.5 Concrete Curb and Gutter	8,148	Ft
650E0385	Type BL68.5 Concrete Curb and Gutter	374	Ft
650E4685	Type P8.5 Concrete Gutter	1,332	Ft
651E0040	4" Concrete Sidewalk	8,548	SqFt
651E0060	6" Concrete Sidewalk	35,154	SqFt
651E0160	6" Reinforced Concrete Sidewalk	3,881	SqFt
651E0540	4" Colored Concrete Sidewalk	2,896	SqFt
651E7000	Type 1 Detectable Warnings	1,170	SqFt
670E1200	Type B Frame and Grate Assembly	44	Each
670E5340	4' x 11' Precast Concrete Type S Drop Inlet Lid	23	Each
670E5342	4' x 6' Precast Concrete Type S Drop Inlet Lid	25	Each
670E5400	Precast Drop Inlet Collar	44	Each
671E5502	2" Adjusting Ring for Manhole	36	Each
671E6009	Type A9 Manhole Frame and Lid	17	Each
831E0300	Reinforcement Fabric (MSE)	3,961	SqYd
900E0900	Curb Stop	1	Each

CONDITION OF OLD/HISTORIC PROPERTIES

The contractor is encouraged to investigate old/historic properties that may be affected with construction of this project. If possible, take photos of the building structure (walls and foundation), and note any other existing conditions. These records would provide confirmation, as to the condition of the buildings prior to construction, in the case that damages are claimed following the construction of the project.

There are existing limestone stairs at Sta 51+17-42'L and Sta 51+66-42'L. The contractor shall take precautions to protect these stairs during construction.

GRADING OPERATIONS

Water for Embankment is estimated at the rate of 10 gallons of water per cubic yard of Embankment minus Waste. The estimated quantity of Water for Embankment is 1 MGal. No separate payment will be made for the Water for Embankment and all costs associated shall be incidental to the contract unit price per cubic yard of "Unclassified Excavation".

The estimated cubic yards of excavation and/or embankment required to construct outlet ditches, ditch blocks, and approaches are included in the earthwork balance notes on the profile sheets.

Special ditch grades and other sections of the roadway different than the typical sections shall be constructed to the limits shown on the cross sections. If significant changes to the cross sections are necessary during construction, the Engineer shall contact the Designer for the proposed change.

A copy of the soils profile is available for review at the Mitchell Region and Sioux Falls Area offices.

TYPE III FIELD LABORATORY

The lab shall be equipped with an internet connection such as DSL, cable modem, or other approved service. The internet connection shall be provided with a multi-port wireless router. The internet connection shall be a minimum speed of 512 Kb unless limited by job location and approved by the DOT. Prior to installing the wireless router the Contractor shall submit the wireless router's technical data to the Area Office to check for compatibility with the state's computer equipment. The internet connection is intended for state personnel usage only. The Contractor's personnel are prohibited from using the internet connection unless pre-approved by the Project Engineer.

The Contractor shall submit a copy of each monthly bill for calls charged to this phone at the end of each month. The Project Engineer will then audit the bills to ensure all calls are legitimate and then initiate a Construction Change Order (CCO) to reimburse the Contractor for the actual phone calls made, including local and long distance calls. Reimbursement will not be made for fees associated with the purchase, installation, disconnection, monthly line charges, and incidentals involved in the installation, maintenance, and disconnection of the phone (including attachments). These items shall be incidental to the contract unit price per each for "Type III Field Laboratory".

UTILITIES

The Contractor shall be aware that the existing utilities shown in the plans were surveyed prior to the design of this project and might have been relocated or replaced by a new utility facility prior to construction of this project, might be relocated or replaced by a new utility facility during the construction of this project, or might not require adjustment and may remain in its current location. The Contractor shall contact each utility owner and confirm the status of all existing and new utility facilities. The utility contact information is provided elsewhere in the plans or bidding documents.

Subsurface utility explorations were done for this project. The findings can be found in the SUBSURFACE UTILITY LOCATIONS table elsewhere in the plans. The table is provided to aid the Contractor during construction. All information in the table is approximate and shall be verified by the Contractor prior to construction in those areas.

REGISTERED PROFESSIONAL ENGINEER
REG. NO. 9737
DAVID E. MAXWELL
SOUTH DAKOTA
12/9/15

UTILITIES (CONT)

The following utility companies are known to have facilities on the project:

NorthWestern Energy Monte White PO Box 307 Madison, SD 57042 (605) 228-0920	Midcontinent Communications Preston Ragle 3507 S. Duluth Ave Sioux Falls, SD 57105 (605) 755-8330
Vast Broadband Shawn Anderson 29705 453rd Ave Irene, SD 57037 (605) 263-7206	Century Link Doug Wudel 125 S. Dakota Ave Sioux Falls, SD 57104 (605) 339-5307 (office) (605)254-3609 (cell)
SDN Communications Chris Haiar 2900 W 10th Street Sioux Falls, SD 57107 (605) 999-3969	City of Madison Power Brad Lawrence 412 S Union Ave Madison, SD 57042 (605) 480-5155
City of Madison Water and Sewer Kim Verhey 401 S Highland Ave PO Box 308 Madison, SD 57042 (605) 480-3374	

A description of existing utilities and anticipated work by others is as follows but not limited to:

- NORTHWESTERN ENERGY
  - Hwy 34 crossing on east side of Highland / US 81 (Sta 10+40); 8" steel.
  - Hwy 34 crossing at alley between Union and Josephine (Sta 37+30); 2" steel.
  - Hwy 34 crossing at alley between Josephine and Blanche (Sta 41+05); 2" steel.
  - Hwy 34 crossing at alley between Blanche and Van Eps (Sta 44+85); 2" steel.
  - Hwy 34 crossing at alley between Van Eps and Egan (Sta 48+55); 4" steel.
  - Hwy 34 crossing at alley between Egan and Harth (Sta 52+35); 4" steel.
  - Parallel line on north side of Hwy 34 between alley at Sta 52+35 and west side of Washington (Sta 61+40) where it turns north; 4" steel; 32" depth.
  - Hwy 34 crossing at alley between Harth and Lee (Sta 56+25); 2" steel.
  - Miscellaneous:
    - Steel crossings to be adjusted during construction at conflict locations.
    - A representative from NorthWestern Energy needs to be onsite when completing any work around the 4" gas lines.
    - Gas services can be adjusted at conflict locations.
- SDN COMMUNICATIONS
  - Vault on the southeast corner of Harth (Sta 54+60 RT).
  - Hwy 34 crossing on east side of Harth (Sta 54+60); 3 orange 1-1/4" innerduct.
  - Hwy 34 crossing on east side of Blanche (Sta 43+40); 3 orange 1-1/4" innerduct.
  - Parallel line on north side of Hwy 34 from east side of Blanche (Sta 43+40) to alley at Sta 48+60 where it turns north and ties into Great Western Bank. The line is approximately 42" deep and will be in conflict with the proposed water main.
  - Vault on the northeast corner of Blanche (Sta 43+40).
  - Vault on the northeast corner of alley at Sta 48+60.
- CENTURY LINK
  - Century Link does not have any facilities running longitudinally along Highway 34
  - Crossing on east side of West Avenue (Sta 23+75) is 300 pair copper
  - Crossing at alley between Union Ave and Josephine Ave (Sta 37+30) is 300 pair copper
  - Crossing at alley between Josephine Ave and Blanche Ave (Sta 41+00) is 200 pair copper
  - Crossing at alley between Van Eps Ave and Egan Ave (Sta 48+50) is in a joint trench with City Power and Midcontinent
  - Crossing at alley between Egan Ave and Harth Ave (Sta 52+50)
    - Significant crossing; includes 6-4" conduits, 3-1.5" innerducts, copper, and fiber optic lines
    - Unknown if it is encased in concrete
    - Joint trench with City Power and Midco
- MIDCONTINENT COMMUNICATIONS
  - Crossing on east side of Highland Ave (Sta 10+80) includes fiber and coax
  - Crossing in alley between Van Eps Ave and Egan Ave (Sta 48+50) includes fiber and coax. Joint trench with City Power and Century Link.
  - Crossing in alley between Egan Ave and Harth Ave (Sta 52+50) includes fiber and coax. Joint trench with City Power and Century Link.
- VAST BROADBAND
  - Hwy 34 crossings on west side of alley Sta 37+25. The line is 5'-6' deep and can be abandoned.
  - Hwy 34 crossings on east side of alley Sta 37+35. The line is 36" deep.
  - Hwy 34 crossing on west side of alley at Sta 52+40. The line is 100 pair copper with coaxial at 36" depth.
- CITY OF MADISON ELECTRIC
  - Crossing at Sta 10+60. The line is 36"-40" deep. Will remain in place.
  - Parallel line Sta 13+90 to Sta 50+00 behind curb for street lighting and flashing beacons. Will be terminated.
  - Crossing at Sta 41+09. Lower in place during construction.
  - Crossing at Sta 48+54. Adjust during construction as necessary.
  - Parallel line Sta 48+54 to Sta 52+39. The line is 36"-40" deep. Will remain in place.
  - Crossing at Sta 52+39. Adjust during construction.
  - Crossing at Sta 52+51. Adjust during construction as necessary.
  - Parallel line Sta 55+80 to Sta 58+60. Will be terminated.
  - Parallel line and crossing Sta 61+20 to Sta 62+20. Will be terminated.
  - Crossing 146' south of 2nd St centerline. Will be relocated further south.

CLEARING

Before clearing activities begin, the Contractor shall contact the Engineer to determine the limits of clearing for the project. If the trees or shrubs that are supposed to remain within the limits of work are damaged or destroyed by the Contractor, the Contract shall replace them with the same size and type at the Contractor's expense.

Included in this bid item are the following trees:

Station	Station	Station	Station
12+12-43'R	17+73-40'L	25+01-41'L	54+72-39'R
12+44-38'R	17+82.39'L	25+58-41'L	54+86-41'R
12+80-49'L	18+19-38'L	26+15-36'R	55+05-31'R
12+96-38'L	18+34-38'L	26+17-36'L	55+33-43'R
13+10-38'L	18+76-40'L	26+30-36'L	55+42-44'R
13+33-37'L	19+01-38'R	26+54-35'L	55+51-44'R
13+45-37'L	19+26-38'R	28+86-37'R	55+60-43'R
13+89-37'R	19+37-39'R	29+03-37'R	55+69-43'R
13+93-37'L	20+98-38'R	29+17-37'R	55+78-43'R
14+45-37'L	21+25-38'R	29+31-37'R	56+18-46'R
14+54-37'R	21+26-37'L	29+45-39'R	57+12-40'R
15+15-37'R	21+78-44'R	30+75-54'R	57+30-38'R
15+16-37'L	21+79-39'L	31+43-64'L	58+33-58'R
15+39-38'R	22+02-37'R	31+43-50'L	58+35-57'R
15+40-38'L	22+40-37'R	31+90-37'R	
15+65-38'L	22+65-38'R	32+05-37'R	
16+59-39'L	22+76-57'R	32+27-38'L	
16+74-39'L	22+78-37'R	32+97-56'L	
16+88-39'L	22+91-37'R	33+21-37'L	
17+02-39'L	23+11-49'L	33+33-37'L	
17+18-39'L	23+67-50'R	33+46-37'L	
17+27-39'L	23+67-64'L	33+55-38'R	
17+38-39'L	23+82-36'L	33+59-37'L	

The trees on Parcel 8 are to be cut into lengths of 4-8 feet and stacked outside the temporary easement limits for the landowner to haul away. All costs to complete this work shall be incidental to the contract lump sum price for "Clearing".

The tree at Sta 22+76-57'R shall be removed, but the landowner will be responsible for removing the stump.

The row of hedges on Parcel A34 are to removed and all costs to complete this work shall be incidental to the contract lump sum price for "Clearing".

REGISTERED PROFESSIONAL ENGINEER
REG. NO. 9737
DAVID P. MAXWELL
SOUTH DAKOTA
12/4/15

SHRINKAGE FACTOR: Embankment +20%

TABLE OF EXCAVATION QUANTITIES BY BALANCES

Station	Station	Excavation (CuYd)	* Undercut (CuYd)	Total Excavation (CuYd)	Waste (CuYd)
10+50	63+31	7082	26470	33552	6946

* The quantities for these items are in the Estimate of Quantities under their respective bid items.

TABLE OF UNCLASSIFIED EXCAVATION

	(CuYd)
Excavation	7082
Undercut	26470
Topsoil	470
Total	34022

REGISTERED PROFESSIONAL ENGINEER REG. NO. 9737 DAVID F. MAXWELL SOUTH DAKOTA 12/4/15

The Contractor shall waste the excess Unclassified Excavation material at a site approved by the Engineer. All costs to waste this material shall be incidental to the contract unit price per CY for Unclassified Excavation.

PROCEDURES FOR DETERMINING UNCLASSIFIED EXCAVATION QUANTITY

Plan quantities shall be used for payment, the Unclassified Excavation quantity shall be used for final payment.

The following paragraphs are general earthwork information and information in regards to computing the Unclassified Excavation quantity:

The Unstable Material Excavation quantity is included in the Excavation quantity listed in the Table of Unclassified Excavation. When finaling a project, the Unstable Material Excavation quantity shall be added to the Excavation quantity to compute the Unclassified Excavation quantity.

The Topsoil quantity in the Table of Unclassified Excavation is an estimate. When finaling a project, the total quantity of field measured Topsoil shall be used in place of the estimated Topsoil quantity. The quantity of Topsoil from the cuts will be paid for twice as Unclassified Excavation, as it will be in both the Excavation and Topsoil quantities. This will be full compensation for Excavation, which includes necessary undercutting to provide space for placement of topsoil.

The Excavation quantities from individual balances and the Table of Unclassified Excavation have been reduced by the volume of in place surfacing that will be removed and/or salvaged.

The volume of in place Concrete Surfacing removed will NOT be paid for as Unclassified Excavation.

UNDERCUTTING

In all cut sections the earthen subgrade shall be undercut 2 feet below the earthen subgrade surface. The undercut material or other suitable material, as directed by the Engineer, shall then be replaced and compacted to the density specified for the section being constructed.

Shallow embankment sections, fills less than 2 feet in height measured at the finished subgrade shoulders, shall be undercut to ensure a minimum 2 foot height of earth embankment for the entire width of roadbed.

The plan shown quantity will be the basis of payment. However, if there are additional areas of undercut other than what is shown in the plans, the Engineer shall direct removal of these areas and the additional areas will be measured according to the Engineer.

TABLE OF UNDERCUTTING

Station	to	Station	Quantity (CuYd)
10+50		63+31	26470
		Total:	26470

UNSTABLE SUBGRADE

Some areas of unstable subgrade may be exposed after the removal of the existing pavement. These areas should be undercut and recompacted with moisture and density control, using the existing soil or replacement soil. If, in the opinion of the Engineer, the area will not stabilize by this method, Reinforcement Fabric (MSE) and granular material may be used. Stabilizations will be accomplished by undercutting the subgrade to a depth of 1 foot and placing a layer of Reinforcement Fabric (MSE) at the bottom of the undercut. The undercut will then be backfilled with granular material and compacted. The undercut would paid for as additional unclassified excavation. Contact the Geotechnical Engineering Activity (605-773-3725) for assistance should the use of Fabric become necessary.

The estimated quantity of 3961 square yards of Reinforcement Fabric (MSE) have been included in the materials quantities for bidding purposes. This quantity is assumed to cover 3444 square yards of subgrade. The area would be 500 feet long by 62 feet wide. The bid quantity has been increased by 15% to account for overlaps. The estimate quantity of 2170 tons of granular material has been included in Gravel Cushion bid item for use as backfill. Refer to Section F for bid item quantities and specifications. These quantities can be adjusted or eliminated by CCO, depending on field conditions.

The top of the subgrade shall be prepared by smoothing the surface of the subgrade to minimize any ruts, ridges, and depressions. Any rocks or other protrusions that might damage the Fabric will be removed. The Fabric will be unrolled perpendicular to the centerline and overlapped a minimum of 2 feet.

The Fabric will be placed as taut as possible with minimal wrinkles. Placement will be done so that subsequent granular material does not shove, wrinkle or distort the in place Fabric. The overlaps will be shingled in a manner that assures granular material will not be forced under the Fabric during backfilling operations. The Fabric may be held in place with small piles of granular material or staples. No traffic will be allowed on the uncovered Fabric.

Granular material will be dumped at least 20 feet behind the leading edge of the backfill and pushed into place with a loader or dozer from the covered areas to the uncovered areas. The granular material will be placed in 8 inch lifts or as directed by the Engineer. The granular material will be compacted to 95% maximum dry density as determined by the Specified Density Method.

TABLE OF IN PLACE SURFACING AND GRANULAR MATERIAL

Station	Centerline Feet Lt	Centerline Feet Rt	Depth PCCP (Inches)	Depth Granular Base (Inches)
13+25		21.4	4	4
20+75	21.7		4	4.5
28+00	21.2		6	1
34+25		22.0	5	4
44+00	21.0		6	2.5
49+50		24.7	5	4
57+00	21.7		7	1.5
		Average:	5.3	3.1

Average width: 53.5 ft

Based on the above thicknesses the average amount of in place surfacing per station is as follows:

Station 10+13 to Station 63+30…….139 cu.yd./sta.

These quantities were used in calculating the total amount of unclassified excavation.

WATER LEVELS

Station	Offset	Boring Depth (ft.)	Initial Depth (ft.)	Final Depth (ft.)	Time Between Readings (hrs.)
13+35	21.4' Rt	15.0	Dry/Caved 14.5	Dry/Caved 14.3	20
20+75	21.7' Lt	15.0	Dry/Caved 14.4	Dry/Caved 14.3	14.5
28+00	21.2' Lt	15.0	Dry/Caved 14.5	Dry/Caved 14.4	15.5
34+25	22.0' Rt	15.0	Dry/Caved 14.5	Dry/Caved 11.5	19
44+00	22.0' Lt	15.0	Dry/Caved 10.6	Dry/Caved 10.4	16
49+50	24.7' Rt	15.0	Dry/Caved 11.9	Dry/Caved 11.8	17
57+00	21.7' Lt	15.0	Dry/Caved 13.9	Dry/Caved 13.5	16.5

Some of the soils on this project do not have much binder material. Therefore, steep trench slopes may not be stable in these soils. Proper protective measures will be required for the storm sewer construction. Seasonal changes may affect the groundwater elevations. Sumps and/or dewatering methods may also be required. All protective measures required to install the storm sewer shall be incidental to the contract unit prices per foot for the corresponding RCP install bid item.

INCIDENTAL WORK, GRADING

Station	L/R	Remarks
15+75 to 15+93	L	Take out 18" - 24' RCP
15+75 to 16+19	L/R	Take out 18" - 54' RCP
16+19 to 16+17	R	Take out 8" - 17' PVC
16+19 to 19+78	R	Take out 12" - 360' VCP
19+37 to 19+54	L	Take out 24" - 24' RCP
19+37 to 19+78	L/R	Take out 18" - 52' RCP
19+37 to 19+78	R	Take out 18" - 45' RCP
19+78 to 23+50	R	Take out 12" - 372' VCP
23+00 to 23+25	L	Take out 18" - 30' RCP
23+25 to 23+59	L	Take out 24" - 35' RCP
23+00 to 23+50	L/R	Take out 18" - 59' RCP
23+24 to 23+50	R	Take out 18" - 44' RCP
23+00 to 23+24	R	Take out 18" - 30' RCP
23+50 to 23+59	R	Take out 18" - 38' RCP
23+50 to 23+48	R	Take out 12" - 57' VCP
26+76 to 27+30	R	Take out 18" - 54' RCP
26+79 to 27+03	L	Take out 18" - 30' RCP
26+79 to 27+30	L/R	Take out 18" - 60' RCP
27+03 to 27+38	L	Take out 18" - 34' RCP
27+30 to 31+09	R	Take out 12" - 379' VCP
30+59 to 30+83	L	Take out 18" - 30' RCP
30+59 to 31+09	L/R	Take out 18" - 52' RCP
30+59 to 31+09	R	Take out 18" - 58' RCP
30+83 to 31+18	L	Take out 18" - 34' RCP
31+09 to 31+09	R	Take out 12" - 46' RCP
34+42 to 34+95	R	Take out 18" - 52' RCP
34+51 to 34+75	L	Take out 18" - 30' RCP
34+51 to 34+95	L/R	Take out 18" - 56' RCP
34+75 to 35+10	L	Take out 18" - 34' RCP
34+94 to 34+95	R	Take out 12" - 47" VCP
34+95 to 34+98	R/L	Take out 10" - 80' VCP
38+73 to 39+35	R	Take out 18" - 62' RCP
38+87 to 39+06	L	Take out 18" - 24' RCP
38+87 to 39+35	L/R	Take out 18" - 58' RCP
39+06 to 39+41	L	Take out 18" - 34' RCP
39+35 to 43+08	R	Take out 15" - 373' VCP
42+61 to 43+08	L/R	Take out 18" - 58' RCP
42+61 to 43+08	R	Take out 18" - 48' RCP
42+61 to 42+81	L	Take out 18" - 24' RCP
42+81 to 43+16	L	Take out 18" - 34' RCP
43+08 to 43+08	R	Take out 15" - 44' VCP
43+08 to 46+76	R	Take out 15" – 368' VCP
46+18 to 46+76	R	Take out 18" - 56' RCP
46+25 to 46+51	L	Take out 18" - 30" RCP
46+25 to 46+76	L/R	Take out 18" - 58' RCP
46+76 to 46+86	L	Take out 18" - 50' RCP
53+81 to 54+41	L/R	Take out 18" - 65' RCP
53+97 to 54+11	R	Take out 18" - 23' RCP
54+11 to 54+51	R	Take out 15" - 40' RCP
54+12 to 54+41	R	Take out 15" -52' RCP
54+41 to 54+42	R/L	Take out 10" - 62' VCP
57+66 to 57+90	R	Take out 21" - 30' RCP
57+90 to 58+08	R	Take out 15" - 52' RCP
58+08 to 58+08	L	Take out 12" -54' VCP
58+25 to 58+08	L	Take out 10" - 51' VCP
61+23 to 61+48	R	Take out 18" - 64' RCP
61+23 to 61+58	R	Take out 12" - 58' RCP
61+30 to 61+58	L/R	Take out 18" - 36' RCP
61+58 to 61+59	R/L	Take out 10" - 63' VCP
60+69 to 61+58	R	Take out 18" - 94' RCP

Station	L/R	Remarks
23+48	R	Plug existing storm sewer
31+09	R	Plug existing storm sewer
43+08	R	Plug existing storm sewer
54+42	L	Plug existing storm sewer
58+08	L	Plug existing storm sewer
61+59	L	Plug existing storm sewer

REMOVAL OF EXISTING CONCRETE PAVEMENT

Existing asphalt concrete and/or existing asphalt concrete patch work that was placed above the existing concrete pavement is included in the quantity for "Remove Concrete Pavement". The Contractor shall dispose of the concrete pavement and asphalt concrete at a site approved by the Engineer.

The existing P.C.C. Pavement is on average 5" thick and 53.5 feet wide.

The existing contraction joints are spaced at approximately 15 feet.

The aggregate in the existing P.C.C. pavement is quartzite.

TABLE OF CONCRETE PAVEMENT REMOVAL

Station	to	Station	Offset	Description	Quantity (SqYd)
9+87		63+31	L & R	4 Lane PCC	37269.8
41+15		41+43	L	PCC Parking Lot	88.5
41+84		42+64	L	PCC Parking Lot	191.0
44+98		46+30	L		128.0
47+51		48+41	L		25.7
49+19		49+25	L		4.0
52+29		52+35	L		3.1
40+95		40+97	R		1.9
41+97		41+35	R		15.9
43+56		44+32	R		28.6
44+65		44+94	R		13.3
45+22		46+32	R		51.9
47+07		48+59	R		155.2
52+08		52+44	R		33.8
53+26		53+33	R		6.4
				Total:	38017.1

TABLE OF ASPHALT CONCRETE PAVEMENT REMOVAL

Station	to	Station	L/R	Quantity (SqYd)
9+98		12+18	L	194.8
12+30		12+66	L	78.9
15+94		16+27	L	46.9
19+55		19+88	L	55.7
23+26		23+58	L	57.9
27+04		27+36	L	73.1
30+85		31+17	L	68.7
34+77		35+09	L	67.6
39+08		39+40	L	72.0
39+57		39+69	L	24.0
41+08		41+15	L	5.7
41+43		41+48	L	14.5
42+83		43+15	L	78.3
43+38		43+90	L	113.8
46+53		46+85	L	81.5
48+41		48+62	L	14.4
48+83		49+21	L	34.5
50+14		50+81	L	101.4
52+35		53+85	L	84.4
57+81		58+13	L	49.7
60+35		61+55	L	65.3
61+58		62+02	L	41.0
62+11		62+40	L	26.4
10+72		10+84	R	15.3
19+54		19+86	R	43.4
23+26		23+57	R	50.2
27+04		27+36	R	84.2
30+85		31+17	R	44.7
34+66		34+98	R	52.4
37+42		38+17	R	54.7
38+99		39+31	R	46.3
42+82		43+14	R	50.5
46+44		46+90	R	73.2
50+12		50+78	R	51.8
52+44		52+61	R	16.5
52+67		53+26	R	55.8
53+71		53+82	R	12.2
53+98		54+49	R	94.1
56+17		56+31	R	14.6
57+92		58+24	R	62.5
60+01		60+60	R	70.4
61+15		61+34	R	58.9
62+08		63+41	R	398.8
			Total:	2801.0

TABLE OF CONCRETE MEDIAN PAVEMENT REMOVAL

Station	to	Station	L/R	Quantity (SqYd)
9+28		9+57	L	29.3
10+49		10+59	R	3.9
			Total:	33.2

TABLE OF CONCRETE CURB AND GUTTER REMOVAL

Station	to	Station	L/R	Quantity (Ft)
9+03		9+15	L	16.2
9+26		9+34	L	12.9
9+41		9+55	L	13.5
9+57		9+62	L	13.5
12+29		12+30	L	20.6
12+68		12+70	L	23.6
15+93		15+94	L	13.2
16+27		16+28	L	12.9
19+53		19+54	L	15.5
19+88		19+90	L	15.6
23+23		23+24	L	16.4
23+59		23+60	L	15.8
27+02		27+04	L	19.7
27+36		27+39	L	20.7
30+83		30+85	L	18.7
31+18		31+20	L	19.5
34+75		34+76	L	18.8
35+09		35+10	L	18.9
39+06		39+08	L	18.6
39+57		39+68	L	14.8
39+57		39+65	L	11.9
41+08		41+14	L	7.5
41+43		41+48	L	5.9
42+82		42+83	L	22.5
43+15		43+18	L	21.8
46+86		46+86	L	8.2
48+84		48+89	L	13.1
50+12		50+12	L	15.8
50+42		50+50	L	38.9
57+78		57+80	L	14.2
58+14		58+14	L	13.6
61+56		61+57	L	10.0
62+03		62+03	L	7.9
9+58		10+07	R	60.9
10+82		10+86	R	11.1
19+54		19+54	R	12.2
19+87		19+89	R	12.2
23+25		23+26	R	13.9
23+58		23+59	R	14.3
27+02		27+04	R	23.3
27+36		27+39	R	24.4
30+83		30+85	R	12.3
31+18		31+20	R	12.9
34+63		34+66	R	14.8
34+98		34+99	R	14.7
38+97		38+98	R	12.8
39+32		39+33	R	13.1
42+80		42+81	R	9.8
43+15		43+16	R	18.6
46+42		46+43	R	14.1
50+10		50+12	R	7.3
50+79		50+79	R	8.1
53+96		54+12	R	32.3
54+50		54+51	R	20.4
57+90		57+92	R	21.3
58+24		58+25	R	17.8
60+08		60+23	R	29.4
60+61		60+61	R	9.5
61+21		61+34	R	22.2
61+22		61+33	R	13.9
			Total:	1008.3

TABLE OF CONCRETE GUTTER REMOVAL

Station	to	Station	L/R	Quantity (Ft)
39+41		39+42	L	40.2
46+52		46+53	L	45.2
			Total:	85.4

TABLE OF CONCRETE CURB REMOVAL

Station	to	Station	L/R	Quantity (Ft)
46+87		46+97	L	11.4
50+81		50+82	L	14.5
			Total:	25.9

TABLE OF CONCRETE DRIVEWAY PAVEMENT REMOVAL

Station	to	Station	L/R	Quantity (SqYd)
25+12		25+28	L	24.1
25+80		25+99	L	33.6
28+71		28+91	L	21.5
29+11		29+27	L	33.8
31+99		32+15	L	19.0
32+78		32+90	L	17.7
56+20		56+44	L	18.4
56+56		56+94	L	13.4
21+27		21+76	R	132.9
25+32		25+54	R	13.6
55+93		56+17	R	24.7
56+30		56+44	R	12.4
			Total:	365.1

REGISTERED PROFESSIONAL ENGINEER
REG. NO. 9737
DAVID P. MAXWELL
SOUTH DAKOTA
12/4/15

TABLE OF CONCRETE APPROACH PAVEMENT REMOVAL

Station	to	Station	L/R	Quantity (SqYd)
13+58		13+81	L	24.9
14+25		14+49	L	23.1
16+99		17+23	L	23.7
17+86		18+09	L	13.5
21+48		21+71	L	13.2
25+10		25+48	L	39.7
25+75		25+99	L	25.6
28+71		28+91	L	17.1
29+11		29+30	L	17.1
31+95		32+19	L	21.7
32+71		32+96	L	19.7
37+18		37+43	L	22.1
39+42		39+43	L	39.1
41+03		41+53	L	51.8
41+73		42+52	L	87.7
43+52		43+88	L	22.8
44+74		45+31	L	73.3
45+79		46+22	L	57.0
46+35		46+51	L	42.4
47+69		48.07	L	37.6
48+41		48+62	L	14.6
48+91		49+23	L	22.5
52+35		52+48	L	10.4
52+94		53+18	L	16.3
56+18		56+36	L	19.0
56+61		56+94	L	41.2
58+69		59+16	L	69.0
60+21		60+67	L	37.8
60+85		61+26	L	35.5
21+30		21+68	R	30.4
25+28		25+52	R	20.4
28+58		28+84	R	23.2
33+70		33+97	R	29.4
35+32		35+94	R	71.5
37+17		37+42	R	29.3
37+50		37+78	R	35.7
40+76		41+34	R	74.3
43+56		43+88	R	48.2
44+13		44+33	R	28.4
44+65		44+95	R	41.0
45+21		45+49	R	38.5
45+85		46+14	R	40.8
47+10		47+49	R	32.4
48+04		48+63	R	33.6
52+26		52+58	R	16.6
52+81		53+11	R	16.7
53+68		53+87	R	15.7
55+89		56+44	R	38.9
59+78		60+02	R	15.2
60+19		60+67	R	54.4
61+38		61+46	R	24.3
61+95		62+00	R	23.9
61+98		62+07	R	22.9
62+26		62+54	R	19.0
62+80		63+23	R	29.2
			Total:	1793.3

TABLE OF SIDEWALK REMOVAL

Station	to	Station	L/R	Quantity (SqYd)
12+18		12+26	L	53.1
12+71		13+57	L	49.4
13+81		14+25	L	21.1
14+49		15+90	L	67.9
16+30		16+99	L	34.8
17+23		19+51	L	137.8
19+90		23+22	L	189.2
23+61		25+12	L	95.9
25+46		25+75	L	17.6
25+99		27+00	L	64.9
27+40		28+71	L	98.8
28+87		29+11	L	18.3
29+27		30+81	L	109.2
31+21		31+95	L	61.6
32+19		32+72	L	28.3
32+96		34+72	L	100.6
35+14		37+19	L	108.8
37+43		39+04	L	100.6
39+42		41+16	L	106.8
41+43		41+79	L	17.9
42+47		42+79	L	36.7
43+18		44+77	L	100.3
45+27		45+79	L	25.3
46+18		46+49	L	22.8
46+88		47+71	L	56.3
48+07		48+41	L	26.2
48+62		48+91	L	21.1
49+19		50+11	L	89.4
50+82		52+35	L	131.7
52+48		52+94	L	31.0
53+14		54+07	L	62.0
54+39		56+21	L	117.0
56+34		56+66	L	16.3
56+94		57+78	L	63.6
58+16		58+72	L	53.2
59+16		60+21	L	59.2
60+66		60+85	L	15.7
61+26		61+55	L	24.8
62+04		62+41	L	43.4
9+57		10+06	R	32.0
10+86		10+95	R	4.4
18+28		19+50	R	71.3
19+90		21+30	R	73.4
21+66		23+21	R	88.4
23+62		25+28	R	86.4
25+52		27+00	R	92.1
27+41		28+58	R	66.4
28+83		30+81	R	124.8
31+21		33+70	R	137.1
33+97		34+63	R	50.0
35+01		35+32	R	27.4
35+94		37+18	R	64.4
37+42		37+50	R	3.8
37+79		38+96	R	73.2
39+34		40+76	R	88.8
41+34		42+79	R	91.3
43+17		43+56	R	36.7
44+94		45+22	R	38.1
45+49		45+85	R	49.0
46+13		46+41	R	37.3
46+94		47+10	R	22.4
47+48		48+04	R	39.9
48+58		50+09	R	118.2
50+80		54+10	R	209.8
54+52		54+57	R	18.2
57+68		57+73	R	17.6
58+35		58+44	R	18.3
60+02		60+19	R	8.6
60+67		61+39	R	92.4
61+98		62+26	R	84.7
62+54		62+80	R	18.2
63+23		63+31	R	4.7
			Total	4467.9

TABLE OF MANHOLE REMOVAL

Station	L/R	Quantity (Each)
16+19	R	1
19+78	R	1
23+50	R	1
27+30	R	1
31+09	R	1
34+95	R	1
39+35	R	1
43+08	R	1
46+76	R	1
54+41	R	1
58+08	L	1
61+58	R	1
Total:		12

TABLE OF RETAINING WALL REMOVAL

Station	L/R	Quantity (Ft)
12+71 to 13+57	L	90.1
26+50 to 26+81	L	42.9
27+60 to 30+00	L	306.0
30+00 to 30+61	L	74.0
31+42 to 34+50	L	298.7
35+14 to 36+00	L	82.7
36+00 to 37+09	L	104.7
37+43 to 38+91	L	152.7
	Total:	1151.8

TABLE OF DROP INLET REMOVAL

All costs for removal of the frame and grate assembly shall be incidental to the contract unit price per each for “Remove Drop Inlet”.

Station	L/R	Quantity (Each)
15+75	L	1
15+93	L	1
16+17	R	1
19+37	L	1
19+37	R	1
19+54	L	1
23+00	R	1
23+00	L	1
23+24	R	1
23+25	L	1
23+59	L	1
23+59	R	1
26+79	L	1
27+03	L	1
27+38	L	1
26+76	R	1
30+60	L	1
30+60	R	1
30+83	L	1
31+19	L	1
34+51	L	1
34+42	R	1
34+75	L	1
35+11	L	1
38+74	R	1
38+87	L	1
39+06	L	1
39+41	L	1
42+61	L	1
42+61	R	1
42+81	L	1
43+16	L	1
46+18	R	1
46+25	L	1
46+51	L	1
46+86	L	1
53+81	L	1
53+97	R	1
54+12	R	1
54+51	R	1
57+66	R	1
57+90	R	1
58+25	R	1
60+69	R	1
61+23	R	1
61+30	L	1
61+48	R	1
Total:		47

REGISTERED PROFESSIONAL ENGINEER
REG. NO. 9737
DAVID P. MAXWELL
SOUTH DAKOTA
12/4/15

CONCRETE PIPE CONNECTIONS

Pipe connections to existing pipes, manholes, junction boxes, and drop inlets shall be done by breaking a hole into the existing structure and inserting the pipe. A concrete collar shall then be poured around the pipe in the area of the connection.

When it is not possible to use a normal pipe joint (male-female ends), connections to existing pipe shall be made by placing a 2' wide by 6" thick M6 concrete collar around the outside of the connection. The concrete collar shall be reinforced with 6x6 W2.9 x W2.9 wire mesh.

All costs for constructing the concrete collars including materials and labor shall be incidental to the contract unit price per foot for the corresponding pipe bid item.

STORM SEWER

Reinforced concrete pipe may be either bell and spigot or tongue and groove. The pipe sections shall be adjoined such that the ends are fully entered and the inner surfaces are reasonably flush and even.

Lift holes in the reinforced concrete pipe shall be plugged with grout.

Watertight joints are required for reinforced concrete pipe, drop inlets, manholes, and junction boxes where storm sewers run parallel to and within 10 feet horizontally from existing or proposed water mains.

Watertight joints are required where reinforced concrete pipes, drop inlets, manholes, or junction boxes cross water mains and are separated a distance of 18 inches or less, above or below, the water main.

If watertight joints are required then the watertight joints shall extend for a distance of 10 feet beyond the water main. This measurement shall be from the sealed concrete joint to the outer most surface of the water main.

Watertight joint seals shall conform to the following requirements:

1. Reinforced Concrete Pipe (Circular): Gasketed pipe shall conform to the requirements of ASTM C443. Non-gasketed concrete pipe shall be sealed with a mastic joint seal conforming to the requirements of ASTM C990 and encased with a minimum 2' wide by 6" thick M6 concrete collar reinforced with 6x6 W2.9 x W2.9 wire mesh.

2. Reinforced Concrete Pipe (Arch): Joints shall be sealed with a waterstop seal meeting the requirements of ASTM C990. Waterstop seals shall consist of hydrophilic compounds such as Waterstop-RX or ConSeal CS-231.

3. Drop Inlets, Manholes, and Junction Boxes: Joints shall be sealed with a waterstop seal or seal wrap meeting the requirements of ASTM C990 or encased with a minimum 2' wide by 6" thick M6 concrete collar reinforced with 6x6 W2.9 x W2.9 wire mesh. Waterstop seal shall contain hydrophilic compounds such as Waterstop-RX or ConSeal CS-231. Seal wrap shall be a self adhesive external joint wrap such as ConWrap CS-217 or Mar Mac Seal Wrap.

Gaskets and seals (mastic, waterstop, and seal wraps) shall be installed in accordance with the manufacturer's recommendations.

The cost for furnishing and installing all gaskets, mastic joint seal, waterstop seal, seal wrap, concrete collars, and for plugging the lift holes shall be incidental to the contract unit price per foot for the corresponding pipe bid item.

DROP INLETS

Where drop inlets are constructed within areas of curb and gutter, the Contractor shall construct weep holes of at least 3 inches in diameter in the drop inlet walls. The weep holes shall be constructed at the same elevation as the adjacent top of the earthen subgrade and shall be maintained clean and open at all times until the permanent surfacing is placed. The drop inlets shall be covered throughout construction operations as necessary with an Engineer approved cover to provide safe travel for motorists and to prevent materials from entering the storm sewer system. After the permanent surfacing has been placed, the Contractor shall seal the weep holes with grout and remove all debris from the drop inlet. All costs involved with the coverings, weep holes, and removing debris from the drop inlets shall be incidental to the contract unit prices for the components of the drop inlets.

The plan shown quantities of the drop inlet components such as Class M6 Concrete, Reinforcing Steel, Type B Frame and Grate Assembly, Precast Drop Inlet Collar, and Precast Concrete Type S Drop Inlet Lid will be the basis of payment for these items.

If additions or reductions to the number of drop inlets are ordered by the Engineer, payment for the components required to construct the drop inlets will be made at the contract unit prices for the components of the drop inlets.

REGISTERED PROFESSIONAL ENGINEER
REG. NO. 9737
MAXWELL
SOUTH DAKOTA
12/4/15

FOR BIDDING PURPOSES ONLY

TABLE OF DROP INLETS AND QUANTITIES

Station	L/R	Drop Inlet Size	Drop Inlet Type	Class M6 Concrete (CuYd)	Reinf. Steel (Lb)	Conc. Collar (Each)	Frame and Grate/Lid Type
15+63.79	L	4' X 11'	S	3.77	651.93		S
15+92.64	L	4' X 3'	B	1.43	170.04	1	B
16+16.54	R	2' X 3'	B	0.96	109.54	1	B
16+27.98	L	2' X 3'	B	0.69	81.09	1	B
19+13.04	L *	4' X 11'	S	3.45	609.85		S
19+16.54	R	3' X 4'	B	1.7	208.48	1	B
19+52.52	R	2' X 3'	B	0.89	98.72	1	B
19+53.49	L	2' X 3'	B	1.13	121.17	1	B
20+18.41	R	3' X 4'	B	1.76	212.69	1	B
20+19.41	L	4' X 6'	S	2.15	399.19		S
22+90.34	L	4' X 11'	S	3.37	606.51		S
22+97.31	R	4' X 6'	S	2.6	477.28		S
23+21.60	L	4' X 11'	S	2.69	524.35		S
23+23.81	R	4' X 3'	B	1.68	211.81	1	B
23+59.11	R	2' X 3'	B	0.86	96.32	1	B
23+59.32	L *	4' X 3'	B	1.31	166.29	1	B
23+88.60	R	4' X 3'	B	1.52	218.55	1	B
23+90.10	L	4' X 6'	S	1.7	348.23		S
25+57.00	L	2' X 3'	B	0.85	90.71	1	B
25+61.00	L	2' X 3'	B	0.85	90.71	1	B
25+65.00	L	2' X 3'	B	0.8	90.71	1	B
25+66.70	R	4' X 3'	B	1.54	220.47	1	B
26+71.31	L	4' X 6'	S	2.1	398.73		S
26+72.81	R	5.5' X 3'	B	2.59	649.8	1	B
27+02.65	L	4' X 3'	B	1.74	206.68	1	B
27+02.69	L	4' X 3'	B	1.64	206.68	1	B
27+37.80	L	4' X 3'	B	1.6	202.52	1	B
27+67.17	L	4' X 3'	B	1.23	157.95	1	B
28+98.90	R *	5.5' X 3'	B	2.98	722.4	1	B
28+98.90	L *	2' X 3'	B	0.7	81.69	1	B
30+50.45	L	4' X11'	S	3.77	660.62		S
30+53.96	R	2' X 3'	B	0.81	91.51	1	B
30+81.18	L	4' X 6'	S	2.12	401.06		S
31+18.63	L	2' X 3'	B	0.7	81.29	1	B
31+18.65	L	2' X 3'	B	0.75	81.29	1	B
32+30.08	L *	4' X11'	S	3.54	620.54		S
33+04.99	L	4' X11'	S	3.3	599.16		S
33+05.00	R *	2' X 3'	B	0.84	94.72	1	B
33+61.75	L	4' X11'	S	2.88	545.05		S
34+34.93	R	2' X 3'	B	0.83	93.11	1	B
34+39.92	L	4' X 6'	S	1.84	374.41		S
34+72.37	L	4' X 6'	S	2.09	392.65		S
35+13.97	L	4' X 6'	S	1.98	374.41		S
35+95.38	L	4' X 6'	S	2.51	435.67		S
36+70.37	L	4' X 11'	S	3.86	661.95		S
37+53.91	L	4' X 6'	S	2.48	437.07		S
38+63.91	L	4' X11'	S	3.82	651.93		S
38+67.90	R	2' X 3'	B	0.94	103.33	1	B
39+03.06	L *	4' X 6'	S	2.06	384.23		S
39+43.67	L	4' X 6'	S	2.58	448.76		S
39+70.41	L	4' X 3'	B	1.53	202.2	1	B
40+93.88	L	4' X 6'	S	2.53	437.54		S
41+58.87	R	4' X 6'	S	2.32	413.22		S
41+60.38	L	4' X 11'	S	3.88	664.63		S
42+46.99	L	4' X11'	S	3.46	621.21		S
42+50.98	R	2' X 3'	B	0.86	96.12	1	B
42+81.57	L	4' X 3'	B	1.73	206.04	1	B
42+81.50	L	4' X 3'	B	1.73	206.04	1	B
42+81.44	L	4' X 3'	B	1.63	206.04	1	B
43+16.34	L	4' X 3'	B	1.48	190.33	1	B
43+44.14	L	4' X 6'	S	1.83	357.11		S
44+63.80	L *	4' X 11'	S	3.62	629.22		S
44+57.00	R	2' X 3'	B	0.87	96.72	1	B
45+57.89	L	2' X 3'	B	0.94	103.93	1	B
46+11.33	R	4' X 6'	S	2.21	400.6		S
46+12.84	L	4' X 11'	S	3.67	655.27		S
46+51.52	L	2' X 3'	B	0.77	95.92	1	B
46+86.31	L *	2' X 3'	B	0.62	79.08	1	B
47+18.60	L	4' X 6'	S	1.63	335.13		S
49+75.53	L	4' X 11'	S	3.73	641.25		S
49+51.52	R	4' X 11'	S	3.6	626.55		S
52+14.34	R	4' X 11'	S	3.73	641.91		S
52+67.10	R	4' X 11'	S	3.71	644.59		S
52+72.10	L	4' X 11'	S	3.02	561.09		S
53+26.21	L	2' X 3'	B	0.62	74.47	1	B
53+74.86	L	4' X 11'	S	2.93	557.08		S
53+85.72	R	4' X 3'	B	1.9	239.06	1	B
54+08.58	R *	4' X 11'	S	3.97	673.98		S
54+55.95	R	4' X 6'	S	2.37	425.38		S
54+79.85	R	4' X 11'	S	3.48	613.19		S
55+87.06	R	2' X 3'	B	0.95	104.33	1	B
56+54.56	R	4' X 6'	S	2.33	420.7		S
57+48.79	R	4' X 6'	S	2.44	443.62		S
57+50.29	L	4' X 6'	S	1.9	365.06		S
57+86.90	R	4' X 6'	S	2.72	464.19		S
58+25.01	R	4' X 3'	B	1.86	230.41	1	B
58+56.02	R	4' X 6'	S	2.08	385.63		S
60+60.80	R	4' X 3'	B	1.91	230.73	1	B
60+79.48	R	4' X 11'	S	3.79	654.61		S
61+20.57	L	4' X 6'	S	2.31	412.29		S
61+41.53	R	4' X 6'	S	2.65	456.71		S
61+98.34	R	2' X 3'	B	0.94	103.73	1	B
		Totals:		192.23	32123	44	

Total Type B Frame and Grate Assembly 44

Total 4'x6' Precast Concrete Type S Drop Inlet Lid 25

Total 4'x11' Precast Concrete Type S Drop Inlet Lid 23

* Drop inlet requires watertight joints in accordance with the STORM SEWER notes.

TABLE OF JUNCTION BOXES AND QUANTITIES

Station	L/R	Size L'XW'XH'	Frame and Lid (Type)	Adjusting Rings	Class M6 Concrete (CuYd)	Reinforcing Steel (lb)
30+53.96	R	6'x6'x5.5'	A9	2-2"	5.59	1316
33+05.00	R *	6'x6'x4.0'	A9	2-2"	4.61	1186
34+41.13	R	7'x7'x4.0'	A9	1-2"	6.02	1506
34+93.76	R	3'x3'x8.5'	A9	2-2"	2.70	257
34+98.11	L	3'x3'x10.0'	A9	2-2"	3.20	296
37+56.41	R	7'x7'x4.0'	A9	2-2"	6.03	1506
38+67.90	R	7'x7'x4.0'	A9	2-2"	5.97	1506
39+70.41	R	7'x7'x4.0'	A9	2-2"	5.98	1506
41+60.37	R	7'x7'x4.0'	A9	2-2"	5.97	1506
42+50.98	R	7'x7'x5.0'	A9	2-2"	6.58	1622
44+67.80	R	7'x7'x5.5'	A9	2-2"	6.96	1657
46+12.84	R	7'x7'x6.0'	A9	2-2"	7.23	1692
49+71.53	R	7'x7'x6.5'	A9	2-2"	7.50	1773
52+67.10	R	7'x7'x5.5'	A9	3-2"	6.74	1657
53+85.72	R	7'x7'x5.0'	A9	3-2"	6.36	1622
57+49.79	R	7'x7'x5.5'	A9	3-2"	6.69	1657
61+22.07	R	10'x18.5'x5.0'	A9	2-2"	27.80	5498
					121.93	27763

Total Type A9 Manhole Frame and Lid 17

* Junction boxes require watertight joints in accordance with the STORM SEWER notes.

REGISTERED PROFESSIONAL ENGINEER
REG. NO. 9737
DAVID R. MAXWELL
SOUTH DAKOTA
12/4/15

TYPE 1 DETECTABLE WARNINGS

Detectable warnings shall be in compliance with the Americans with Disabilities Act regulations.

The detectable warnings shall be installed according to the manufacturer's installation instructions.

A concrete thickness equal to the adjacent concrete sidewalk thickness and 2 inches of granular cushion material shall be placed below the Type 1 Detectable Warnings. When concrete is placed below the detectable warnings then the concrete thickness shall be transitioned at the rate of 1" per foot to match the adjacent concrete sidewalk thickness.

The detectable warnings shall be a brick red color for application in concrete curb ramps. Cast iron plates may be a natural patina (weathered steel).

When Type 1 Detectable Warnings are specified, the Contractor shall furnish and install only one of the products listed in the Type 1 Detectable Warnings table.

Type 1 Detectable Warnings

Product	Manufacturer
Detectable Warning Plate Cast Iron Plate	Neenah Foundry Company Neenah, WI 800-558-5075 http://www.neenahfoundry.com/
Detectable Warning Plate Cast Iron Plate	Deeter Foundry Lincoln, NE 800-234-7466 http://www.deeter.com/
Detectable Warning Plate Cast Iron Plate(No Coating)	East Jordan Iron Works, Inc. 301 Spring Street East Jordan, MI 49727 800-626-4653 http://www.ejiw.com

COLORED CONCRETE SIDEWALK IN BOULEVARDS

The 4" Colored Concrete Sidewalk shall be integrally colored per manufacturer recommendations. The color noted on the Curb and Gutter Layout Sheets shall be Solomon 417 – Rose or equivalent. The Contractor shall submit a sample piece of colored concrete to the Field Engineer for approval before placing the colored sidewalk for the boulevard. All costs for coloring shall be incidental to the contract unit price per square foot for 4" Colored Concrete Sidewalk.

Two coats of non-yellowing acrylic curing and sealing compound shall be applied to the surface of the colored concrete. The curing and sealing compound shall be the product listed below or an equal approved by the Engineer.

DECRA-SEAL
W.R. Meadows, Inc.
1-800-342-5976
www.wrmeadows.com

All cost for furnishing, handling, and applying the curing and sealing compound, including the materials, equipment, labor and incidentals necessary shall be incidental to the contract unit price per square foot for 4" Colored Concrete Sidewalk.

SLIP RESISTANT COATING FOR CONCRETE STAIRWAY

Curing compounds shall not be utilized on concrete stairway treads during the concrete curing process. Curing shall be accomplished with a double layer of burlap mats and polyethylene sheeting.

The Contractor shall apply a 2" wide slip resistant coating at the front of each stairway tread for the full width of the tread.

The slip resistant coating shall be a red, tile red, or brick red color. The coating shall be a single component epoxy and have a minimum coefficient of friction value of 0.9 for dry and 0.9 for wet as determined by ASTM F 609.

The slip resistant coating shall be applied in accordance with the manufacturer's recommendations.

All cost for furnishing and applying the slip resistant epoxy coating including equipment, labor, and materials shall be incidental to various contract items.

8.5" PCC FILLET SECTIONS

Payment for "8.5" PCC Fillet Section" shall be based on plans quantity. If additions or reductions to the area of PCC fillet sections are ordered by the Engineer, payment will be made in accordance with the contract unit price per square yard for "8.5" PCC Fillet Section".

PRECAST CONCRETE CURB STOP

Precast concrete curb stop is to be installed on Parcel A20 behind the retaining wall.

REGISTERED PROFESSIONAL ENGINEER
REG. NO. 9737
DAVID F. MAXWELL
SOUTH DAKOTA
12/9/15

TABLE OF CONCRETE STAIRWAYS IN RETAINING WALLS

Station	L/R	Top Landing Elev.	Bottom Landing Elev.	No. of Steps (w)	Class M6 Concrete (CuYd)	Epoxy Coated Reinf. Steel (Lb)	*Structure Exc. (CuYd)	Pipe Handrail (Ft)
28+19	L	1692.58	1690.6	3	1.22	89	1.95	12.94
29+00	L	1692.13	1690.02	3	1.22	89	1.95	12.94
29+40	L	1691.55	1689.55	3	1.22	89	1.95	12.94
29+83	L	1690.95	1689.01	3	1.22	89	1.95	12.94
31+80	L	1687.7	1686.54	1	0.88	66	1.33	8.46
35+53	L	1684.91	1684.54	0	0.71	55	1.02	6.22
35+67	L	1684.91	1684.49	0	0.71	55	1.02	6.22
36+02	L	1684.93	1684.38	0	0.71	55	1.02	6.22
36+59	L	1685	1684.2	1	0.88	66	1.33	8.46
37+07	L	1685.04	1684.04	1	0.88	66	1.33	8.46
37+69	L	1684.76	1683.84	1	0.88	66	1.33	8.46
38+21	L	1684.53	1683.68	1	0.88	66	1.33	8.46
				Totals:	11.41	851	17.51	112.72

* The quantities for structure excavation are for informational purposes only. Payment for all work necessary for structure excavation shall be incidental to the various contract unit prices for the items listed in the above table.

TABLE OF GRAVITY SEGMENTAL BLOCK RETAINING WALLS

Station	L/R	Quantity (SqFt)
27+59.31 to 30+62.01	L	1240
31+41.65 to 31+98.52	L	192
36+00.30 to 37+20.37	L	268
	Total:	1700

TABLE OF TYPE C CONCRETE RETAINING WALLS

Type C retaining wall shall be built as shown on the curb and gutter layout sheets. Elevations for the top of the wall will be variable with the surrounding surface and shall allow water to drain towards the highway. Final elevations shall be set in the field as approved by the field engineer. All costs to cut reinforcing steel shall be incidental to the contract unit price per square foot for “Type C Concrete Retaining Wall”. All other costs shall be incidental to “Type C Concrete Retaining Wall” as shown on the standard plate 530.01 located elsewhere in the plans.

Station	L/R	Quantity (SqFt)
35+29.75 to 35+73.65	L	70
37+44.37 to 38+91.41	L	242
39+56.57 to 41+84.08	L	383
	Total:	695

Concrete Sidewalk Quantity provided for information only. All concrete material shall be included in the cost of the Retaining Wall.

Station	L/R	Approx. Concrete Sidewalk Quantity (SqFt)
35+34.54 to 35+73.65	L	307
37+44.37 to 38+91.41	L	843
39+64.60 to 42+58.05	L	1038
54+74.35 to 57+66.59	R	521
58+23.22 to 58+48.45	R	106
58+48.45 to 60+86.25	R	1027
	Total:	4515

TABLE OF SPECIAL TYPE C CONCRETE RETAINING WALLS

Station	L/R	Quantity (SqFt)
56+45.06 to 57+68.30	R	305
58+43.89 to 59+79.03	R	467
60+51.42 to 61+34.30	R	177
	Total:	949

REGISTERED PROFESSIONAL ENGINEER
REG. NO. 9737
DAVID P. MAXWELL
SOUTH DAKOTA
12/4/15

TABLE OF SUPERELEVATION

Station	to	Station		Description
10+30.37		12+50.00	-	495.5' Radius Curve Left 0.020'/' Superelevation Rate Point of Rotation at 5.25' Right of Centerline
12+50.00		13+67.00	-	Superelevation Transition
13+67.00		60+86.25	-	Normal Crown Section

TABLE OF CONSTRUCTION STAKING FOR PROJECT NH 0034(160)386

(See Special Provision for Contractor Staking)

						Grade Staking				
Roadway and Description	Begin Station	End Station	Offset	Number of Lanes	Length (Ft)	Length (Mile)	Lane Factor	*Sets of Stakes	**Grade Staking Quantity (Mile)	Structure Staking Quantity (Each)
SD 34 (6 Lanes PCCP)	9+86	15+00		6	514	0.097	3	2	0.584	
SD 34 (5 Lanes PCCP)	15+00	63+31		5	4831	0.915	2.5	2	4.575	
Retaining Wall (Gravity Segmental Block Wall)	27+59	30+62	L							1
Retaining Wall (Gravity Segmental Block Wall)	31+42	31+99	L							1
Retaining Wall (Type C)	35+30	35+74	L							1
Retaining Wall (Gravity Segmental Block Wall)	35+74	37+20	L							1
Retaining Wall (Type C)	37+44	38+91	L							1
Retaining Wall (Type C)	39+57	41+12	L							1
Retaining Wall (Type C)	41+51	41+84	L							1
Retaining Wall (Special Type C)	56+45	57+68	R							1
Retaining Wall (Special Type C)	58+44	59+79	R							1
Retaining Wall (Special Type C)	60+51	61+34	R							1
								Totals:	5.159	10

* 1 = Blue Top Stakes Only (Asphalt Concrete Pavement)
2 = Blue Top and Paving Hub Stakes (PCC Pavement)

** Grade Staking Quantity = (Length) x (Lane Factor) x (Sets of Stakes)

REGISTERED PROFESSIONAL ENGINEER
REG. NO. 9737
DAVID P. MAXWELL
SOUTH DAKOTA
12/4/15

FOR BIDDING PURPOSES ONLY

TABLE OF PIPE QUANTITIES

STATE OF SOUTH DAKOTA	PROJECT	SHEET	TOTAL SHEETS
	NH 0034(160)386	B13	B133

Station	Offset (L/R)	Reinforced Concrete Circular 12" Cl. 3 Ft	18" Cl. 3 Ft	24" Cl. 3 Ft	30" Cl. 3 Ft	36" Cl. 3 Ft	Reinforced Concrete Arch 36" Cl. 3 Ft	48" Cl. 3 Ft	54" Cl. 3 Ft	60" Cl. 3 Ft	HDPE Circular 12" Ft
15+94.70	55.25'L to 16+26.98 55.11'L *		32								
15+69.29	31.54'L to 15+92.63 53.08'L *		32								
15+62.79	29.92'L to 16+16.54 27.92'R *		80								
16+18.04	28.92'R to 19+14.54 28.92'R *		298								
19+16.54	29.92'L to 19+16.54 27.42'R *		58								
19+16.83	30.46'R to 19+51.53 59.05'R *		46								
19+18.54	28.92'R to 20+16.41 28.92'R *			98							
19+54.49	58.02'L to 20+16.41 31.92'L *		68								
20+18.41	29.92'L to 20+18.41 27.42'R *		58								
20+20.41	28.92'R to 22+94.31 31.92'R *			274							
22+95.84	31.92'L to 23+21.22 53.08'L		34								
22+94.33	29.92'L to 22+97.31 29.92'R *		60								
22+97.74	33.92'R to 23+23.81 56.69'R		36								
23+25.81	58.19'R to 23+58.11 58.60'R		34								
23+00.31	31.92'R to 23+87.10 28.92'R *			88							
23+59.31	56.29'L to 23+87.10 31.92'L *		38								
23+88.60	29.92'L to 23+88.60 26.92'R *		58								
23+90.10	28.92'R to 25+65.20 28.92'R *				176						
25+65.00	27.92'L to 25+66.70 26.92'R *		56								
25+68.20	28.92'R to 26+71.31 28.92'R				104						
26+72.81	29.93'L to 26+72.81 26.92'R *			58							
27+02.64	56.42'L to 26+74.31 31.94'L		38								
27+04.65	57.90'L to 27+35.80 58.31'L		32								
27+37.81	56.82'L to 27+65.67 28.92'L *		40								
26+74.31	28.92'R to 28+97.40 28.92'R *						224				
28+98.90	27.92'L to 28+98.90 26.92'R *		56								
29+00.04	28.92'R to 30+50.96 10.75'R *					152					
30+53.96	29.91'L to 30+53.96 7.75'R *			38							
30+53.96	27.92'R to 30+53.96 13.75'R		16								
30+55.95	31.92'L to 30+81.08 53.68'L			34							
30+83.20	58.11'L to 31+17.65 58.10'L		36								
30+56.96	10.75'R to 33+02.00 10.75'R *							246			
32+35.58	31.92'L to 32+99.49 31.92'L *		64								
33+05.00	29.94'L to 33+05.00 7.75'R *		38								
33+05.00	27.92'R to 33+05.00 13.75'R *		16								
33+08.00	10.75'R to 34+37.63 10.75'R *							130			
33+67.25	31.92'L to 34+36.92 31.92'L		70								
34+41.13	29.93'L to 34+41.13 7.22'R *			38							
34+34.93	27.92'R to 34+41.13 14.22'R		16								
34+74.36	58.84'L to 35+11.93 28.32'L *		38								
34+42.92	31.94'L to 34+72.30 56.38'L		40								
34+44.63	10.72'R to 37+52.91 10.75'R *								310		
34+98.07	63.55'L to 34+93.80 58.44'R *	124									
35+98.38	31.90'L to 36+64.87 31.92'L *		68								
36+75.87	31.85'L to 37+50.91 31.85'L *		76								
37+55.51	29.90'L to 37+55.51 7.25'R *		38								
37+59.91	10.75'R to 38+64.40 10.75'R *								106		
Subtotal:		124	1670	628	280	152	224	376	416	0	0

Pipes denoted with an asterisk(*) indicate that the entire length or a portion of the pipe requires watertight joints in accordance with the STORM SEWER plan note.

REGISTERED PROFESSIONAL ENGINEER
REG. NO. 9737
D. M. MAXWELL
SOUTH DAKOTA
12/4/15

FOR BIDDING PURPOSES ONLY

TABLE OF PIPE QUANTITIES

STATE OF SOUTH DAKOTA	PROJECT	SHEET	TOTAL SHEETS
	NH 0034(160)386	B14	B133

Station	Offset (L/R)	Reinforced Concrete Circular 12" Cl. 3 Ft	18" Cl. 3 Ft	24" Cl. 3 Ft	30" Cl. 3 Ft	36" Cl. 3 Ft	Reinforced Concrete Arch 36" Cl. 3 Ft	48" Cl. 3 Ft	54" Cl. 3 Ft	60" Cl. 3 Ft	HDPE Circular 12" Ft
38+67.90	28.92'R to 38+67.90-14.25'R		14								
38+67.90	29.93'L to 38+67.90-7.25'R *		38								
38+71.40	10.75'R to 39+66.91-10.75'R								96		
39+05.06	54.44'L to 39+43.67-55.71'L *		38								
39+43.61	52.71'L to 39+68.91-28.92'L *		36								
39+66.60	40.73'L to 39+70.41-30.92'L										12
39+70.41	26.92'L to 39+70.41-7.25'R *			36							
39+73.91	10.75'R to 41+56.87-10.75'R *								184		
40+96.88	31.92'L to 41+54.88-31.92'L		58								
41+60.37	29.92'R to 41+60.37-14.25'R		16								
41+60.37	29.90'L to 41+60.37-7.25'R *		38								
41+63.87	10.75'R to 42+47.48-10.75'R *								84		
42+50.98	27.92'R to 42+50.98-14.25'R		14								
42+50.98	7.25'R to 42+50.98-29.93'L *			38							
42+52.49	31.92'L to 42+81.41-53.72'L *			38							
42+54.48	10.75'R to 44+64.30-11.00'R								210		
42+83.50	59.18'L to 43+14.34-58.81'L		32								
43+16.31	57.26'L to 43+40.98-32.18'L *		36								
44+57.00	28.17'R to 44+67.80-14.50'R		18								
44+67.80	30.17'L to 44+67.80-7.50'R *		38								
44+71.30	11.00'R to 46+09.34-11.00'R								138		
45+57.85	29.17'L to 46+07.34-32.17'L *		48								
46+12.84	30.17'L to 46+12.84-7.50'R *			38							
46+12.84	30.16'R to 46+12.84-14.50'R		16								
46+18.34	32.35'L to 46+50.52-53.59'L *			40							
46+52.52	53.51'L to 46+85.31-54.09'L		34								
46+87.31	53.98'L to 47+15.60-32.17'L *		36								
46+16.34	11.00'R to 49+68.03-11.00'R *								352		
49+57.02	32.17'R to 49+71.53-14.50'R		24								
49+71.53	30.17'L to 49+71.53-7.50'R *		38								
49+75.03	11.00'R to 52+63.60-11.00'R *									290	
52+19.84	32.17'R to 52+61.60-32.17'R		42								
52+67.10	30.17'R to 52+67.10-14.50'R		16								
52+67.10	30.17'L to 52+67.10-7.50'R *		38								
52+70.60	11.00'R to 53+82.22-11.00'R									112	
53+27.71	29.16'L to 53+69.36-31.77'L		42								
53+78.48	30.17'L to 53+85.72-7.50'R *		40								
53+85.72	14.50'R to 53+85.72-27.17'R			14							
53+89.22	11.00'R to 57+46.29-11.00'R *									358	
53+87.22	29.17'R to 54+08.68-51.98'R		32								
54+10.62	55.11'R to 54+51.95-54.91'R *		42								
54+55.95	54.81'R to 54+76.94-34.17'R		30								
55+88.56	29.17'R to 56+51.56-32.17'R		64								
56+57.56	32.17'R to 57+45.79-32.17'R		90								
57+49.79	30.17'L to 57+49.79-7.50'R *		38								
57+49.79	30.17'R to 57+49-79-14.50'R			16							
Subtotal:		1046	220	0	0		0	0	1064	760	12

REGISTERED PROFESSIONAL ENGINEER
REG. NO. 9737
DAVID P. MAXWELL
SOUTH DAKOTA
12/4/15

FOR BIDDING PURPOSES ONLY

TABLE OF PIPE QUANTITIES

STATE OF SOUTH DAKOTA	PROJECT	SHEET	TOTAL SHEETS
	NH 0034(160)386	B15	B133

Station Offset (L/R)	Reinforced Concrete Circular 12" Cl. 3 Ft	18" Cl. 3 Ft	24" Cl. 3 Ft	30" Cl. 3 Ft	36" Cl. 3 Ft	Reinforced Concrete Arch 36" Cl. 3 Ft	48" Cl. 3 Ft	54" Cl. 3 Ft	60" Cl. 3 Ft	HDPE Circular 12" Ft
57+51.79-32.11'R to 57+84.90-55.91'R *			42							
57+88.88-57.88'R to 58+23.02-58.47'R		36								
58+27.02-58.52'R to 58+53.02-32.17'R		38								
57+53.29-11.00'R to 61+17.07-11.00'R *									364	
60+84.98-32.17'R to 61+19.57-22.00'R		34								
61+22.07-30.17'L to 61+22.07-6.00'R *		38								
61+22.07-24.50'R to 61+41.56-89.20'R		68								
61+43.55-90.68'R to 61+97.34-92.59'R		60								
61+27.07-8.83'R to 63+16.10-10.60'R *					192					
61+27.07-15.25'R to 63+20.55-17.03'R *					196					
61+27.07-21.67'R to 63+25.67-23.46'R *					202					
Subtotal:	0	274	42	0	590	0	0	0	364	0
Total:	124	2990	890	280	742	224	376	1480	1124	12

REGISTERED PROFESSIONAL ENGINEER
REG. NO. 9737
DAVID P. MAXWELL
SOUTH DAKOTA
12/4/15

TABLE OF FENCE QUANTITIES

FOR BIDDING PURPOSES ONLY

STATE OF SOUTH DAKOTA	PROJECT	SHEET	TOTAL SHEETS
	NH 0034(160)386	B16	B133

Station to Station		Side (L/R)	Remove Chain Link Fence (Ft)	Salvage Fence (Ft)	Remove Fence for Reset (Ft)	Reset Fence (Ft)
10+88	11+60	R	117			
18+42	18+72	R			30	30
55+06	55+88	R		82		
		TOTALS:	117	82	30	30

REGISTERED PROFESSIONAL ENGINEER
REG. NO. 9737
DAVID P. MAXWELL
SOUTH DAKOTA
12/4/15

FOR BIDDING PURPOSES ONLY

TABLE OF PAVEMENT, CURB AND GUTTER, AND SIDEWALK QUANTITIES

STATE OF SOUTH DAKOTA	PROJECT	SHEET	TOTAL SHEETS
	NH0034(160)386	B17	B133

Station to Station		PCC Fillet Section	Concrete Curb & Gutter		Concrete Gutter	PCC Approach Pavement		Colored Concrete Median Pavement		Concrete Sidewalk			Detectable Warning
			Type B	Type BL	Type P	Type B					Reinforced	Colored	Type 1
		8.5"	68.5	68.5	8.5	6"	8"	4"	4"	6"	6"	4"	
		SqYd	Ft	Ft	Ft	SqYd	SqYd	SqYd	SqFt	SqFt	SqFt	SqFt	SqFt
NW Quadrant of Highland Ave													
9+04.81-57.35'L	9+14.70-69.30'L		16.4							84.5			10.0
NW Curb Island													
9+04.11-19.09'L	9+62.98-25.14'L			40.1						262.6			30.0
SW Quadrant of Highland Ave													
9+58.72-41.11'R	10+08.75-76.40'R		61.9							289.6			20.0
NE Quadrant of Highland Ave													
9+95.55-62.10'L	10+50.02-27.25'L		68.3							392.2			20.0
SD Highway 34 - Median													
10+50.02-5.25'R	11+63.92-5.25'R			112.6				50.2					
10+50.02-14.59'R	11+63.92-14.59'R			114.0									
SE Curb Island													
10+50.11-46.25'R	10+70.11-44.96'R			61.9						86.3		70.8	30.0
SE Quadrant of Highland Ave													
10+85.55-144.87'R	11+34.25-36.59'R		146.0						294.7	710.6			10.0
SD Highway 34 - Highland Ave to Kansas Ave													
10+50.02-27.25'L	12+03.04-27.25'L		144.7							860.6			
SD Highway 34 - Highland Ave to Olive Ave													
11+34.25-36.59'R	19+29.22-27.25'R		805.9										
NW Quadrant of Kansas Ave													
12+03.04-27.25'L	12+30.07-64.77'L	31.1	10.0							323.4			10.0
NE Quadrant of Kansas Ave													
12+66.47-66.09'L	12+92.30-27.25'L	26.0	13.8							231.0			10.0
SD Highway 34 - Kansas Ave to Catherine Ave													
12+92.30-27.25'L	15+69.29-27.25'L		221.0		56.0	53.3			76.0	1082.9	47.3		
NW Quadrant of Catherine Ave													
15+69.29-27.25'L	15+94.54-62.11'L	24.9	10.5							191.4	32.0		10.0
NE Quadrant of Catherine Ave													
16+26.25-61.94'L	16+51.34-27.25'L	25.6	9.9							226.7			10.0
SD Highway 34 - Catherine Ave to Olive Ave													
16+51.34-27.25'L	19+30.08-27.25'L		254.7		24.0	24.0			103.2	1327.1	78.3		
NW Quadrant of Olive Ave													
19+30.08-27.25'L	19+55.25-65.01'L	25.4	13.1							296.2			20.0
SW Quadrant of Olive Ave													
19+29.22-27.25'R	19+54.20-62.45'R	26.0	10.1						102.8	806.5			20.0
NE Quadrant of Olive Ave													
19+87.00-64.92'L	20+11.96-27.25'L	26.1	12.6							242.1			20.0
SE Quadrant of Olive Ave													
19+86.12-62.76'R	20+11.22-27.25'R	25.5	10.8							248.0			20.0
SD Highway 34 - Olive Ave to West Ave													
20+11.96-27.25'L	23+01.04-27.25'L		265.1		24.0	24.0			37.4	1292.6	154.0		
20+11.22-27.25'R	23+00.31-27.25'R		249.1		40.0	34.7			39.3	1356.5	91.7		
21+68.62-35.92'R	21+76.38-56.94'R				22.2								
NW Quadrant of West Ave													
23+01.04-27.25'L	23+26.07-65.26'L	25.2	13.4							309.6			20.0
SW Quadrant of West Ave													
23+00.31-27.25'R	23+25.49-65.19'R	26.0	13.0						13.5	257.6			20.0
NE Quadrant of West Ave													
23+57.68-64.80'L	23+82.63-27.25'L	26.1	12.4							287.8			20.0
SE Quadrant of West Ave													
23+57.52-51.93'R	23+82.52-27.25'R	25.4	13.7							216.9			20.0
SD Highway 34 - West Ave to Chicago Ave													
23+82.63-27.25'L	26+79.26-27.25'L		248.6		48.0	48.0			161.1	1153.3	147.7		
23+82.52-27.25'R	26+79.48-27.25'R		269.0		28.0	26.7			45.0	1544.5			
NW Quadrant of Chicago Ave													
26+79.26-27.25'L	27+04.43-69.63'L	25.5	22.4							322.8			20.0
SW Quadrant of Chicago Ave													
26+79.48-27.25'R	27+04.47-60.81'R	26.0	18.7							329.6			20.0
NE Quadrant of Chicago Ave													
27+36.08-69.31'L	27+61.15-27.25'L	25.8	22.2						65.6	173.3			20.0
Subtotal:		390.6	2957.3	328.6	242.2	210.7	0.0	50.2	938.6	14906.2	551.0	70.8	380.0

REGISTERED PROFESSIONAL ENGINEER
REG. NO. 9737
DAVID R. MAXWELL
SOUTH DAKOTA
12/4/15

FOR BIDDING PURPOSES ONLY

TABLE OF PAVEMENT, CURB AND GUTTER, AND SIDEWALK QUANTITIES

STATE OF SOUTH DAKOTA	PROJECT	SHEET	TOTAL SHEETS
	NH0034(160)386	B18	B133

Station to Station		PCC Fillet Section	Concrete Curb & Gutter		Concrete Gutter	PCC Approach Pavement		Colored Concrete Median Pavement		Concrete Sidewalk			Detectable Warning
			Type B	Type BL	Type P	Type B					Reinforced	Colored	Type 1
		8.5"	68.5	68.5	8.5	6"	8"	4"	4"	6"	6"	4"	
		SqYd	Ft	Ft	Ft	SqYd	SqYd	SqYd	SqFt	SqFt	SqFt	SqFt	SqFt
SE Quadrant of Chicago Ave													
27+36.06-61.17'R	27+61.16-27.25'R	25.5	19.0							216.9			20.0
SD Highway 34 - Chicago Ave to Liberty Ave													
27+61.15-27.25'L	30+60.10-28.25'L		266.9		32.0	37.3				1441.9	80.0		
27+61.16-27.25'R	30+60.08-27.25'R		298.9						65.9	1796.3			
NW Quadrant of Liberty Ave													
30+60.10-28.25'L	30+85.37-69.11'L	25.3	17.3							409.7			20.0
SW Quadrant of Liberty Ave													
30+60.08-27.25'R	30+85.25-61.82'R	25.2	10.0							265.4			20.0
NE Quadrant of Liberty Ave													
31+16.91-69.11'L	31+42.02-27.25'L	25.7	17.0							265.4			20.0
SE Quadrant of Liberty Ave													
31+17.18-52.09'R	31+42.18-27.25'R	25.8	9.9							216.9			20.0
SD Highway 34 - Liberty Ave to Union Ave													
31+42.02-27.25'L	34+51.87-27.25'L		261.9		48.0	42.2			81.9	866.0	304.2		
31+42.18-27.25'R	34+40.99-27.25'R		274.8		24.0	24.0			58.5	1579.6			
NW Quadrant of Union Ave													
34+51.87-27.25'L	34+77.27-69.80'L	25.0	18.1							306.6			20.0
SW Quadrant of Union Ave													
34+40.99-27.25'R	34+66.10-62.27'R	25.5	10.3							327.1			20.0
NE Quadrant of Union Ave													
35+09.34-69.36'L	35+34.54-27.25'L	26.6	16.9							151.7			20.0
SE Quadrant of Union Ave													
34+98.28-62.30'R	35+23.24-27.29'R	25.7	10.0							321.6			20.0
SD Highway 34 - Union Ave to Josephine Ave													
35+34.54-27.25'L	38+82.61-27.25'L		324.1		24.0	24.3				673.0	376.4		
35+23.24-27.29'R	38+74.13-27.25'R		287.1		64.0		58.7		35.5	1581.4			
NW Quadrant of Josephine Ave													
38+82.61-27.25'L	39+08.39-68.41'L	24.1	17.3						70.9	145.1			20.0
SW Quadrant of Josephine Ave													
38+74.13-27.25'R	38+99.05-62.24'R	26.2	9.8							334.4			20.0
NE Quadrant of Josephine Ave													
39+40.42-89.84'L	39+64.60-27.25'L	26.9	10.0		20.0		21.1		207.1	66.3			20.0
39+58.10-60.20'L	39+65.93-52.15'L		10.8										
39+57.02-79.47'L	39+69.16-87.21'L		14.2										
SE Quadrant of Josephine Ave													
39+30.69-62.83'R	39+55.91-27.25'R	25.1	11.1							342.8			20.0
SD Highway 34 - Josephine Ave to Blanche Ave													
39+64.60-27.25'L	42+58.05-27.25'L		217.4		76.0		63.5				227.7	648.0	
39+55.91-27.25'R	42+56.93-27.25'R		261.0		40.0		34.7			1394.9	70.5		
NW Quadrant of Blanche Ave													
42+58.05-27.25'L	42+83.36-70.19'L	25.2	18.4							314.3			20.0
SW Quadrant of Blanche Ave													
42+56.93-27.25'R	42+81.90-62.18'R	26.1	9.8							306.6			20.0
NE Quadrant of Blanche Ave													
43+14.90-69.49'L	43+39.67-27.49'L	27.0	16.5							292.8			20.0
SE Quadrant of Blanche Ave													
43+13.95-62.29'R	43+38.91-27.51'R	25.4	10.0							323.9			20.0
SD Highway 34 - Blanche Ave to Van Eps Ave													
43+39.67-27.49'L	46+28.13-27.50'L		224.3		64.0		89.1	6.2	714.1	40.8	373.9		
43+38.91-27.51'R	46+18.79-27.50'R		208.0		72.0		114.0		463.7	317.0	73.3	707.6	
NW Van Eps Ave													
46+28.13-27.50'L	46+53.98-93.29'L	24.3	17.8		24.0		61.2			464.6			20.0
SW Van Eps Ave													
46+18.79-27.50'R	46+43.64-62.17'R	26.4	12.4							241.9			20.0
NE Van Eps Ave													
46+84.58-55.78'L	47+09.67-27.50'L	25.3	6.5							247.3			20.0
Subtotal:		512.3	2917.5	0.0	488.0	127.8	442.3		1697.6	15252.2	1506.0	1355.6	400.0

REGISTERED PROFESSIONAL ENGINEER
REG. NO. 9737
PAUL F. MAXWELL
SOUTH DAKOTA
12/4/15

FOR BIDDING PURPOSES ONLY

TABLE OF PAVEMENT, CURB AND GUTTER, AND SIDEWALK QUANTITIES

STATE OF SOUTH DAKOTA	PROJECT	SHEET	TOTAL SHEETS
	NH0034(160)386	B19	B133

Station to Station		PCC Fillet Section	Concrete Curb & Gutter		Concrete Gutter	PCC Approach Pavement		Colored Concrete Median Pavement	Concrete Sidewalk				Detectable Warning
			Type B	Type BL	Type P	Type B				Reinforced	Colored		Type 1
		8.5"	68.5	68.5	8.5	6"	8"	4"	4"	6"	6"	4"	
		SqYd	Ft	Ft	Ft	SqYd	SqYd	SqYd	SqFt	SqFt	SqFt	SqFt	SqFt
SE Van Eps Ave													
46+91.63-65.74'R	47+16.76-27.50'R	25.5	10.0							277.5			20.0
SD Highway 34 - Van Eps Ave to Egan Ave													
47+09.67-27.50'L	49+88.53-27.50'L		190.9		88.0		130.9		567.0		239.9	337.7	
47+16.76-27.50'R	49+97.08-27.50'R		210.3		70.0		82.9		630.8	225.1	73.9	181.5	
NW Quadrant of Egan Ave													
49+88.53-27.50'L	50+13.70-64.61'L	25.4	12.5							264.4			30.0
SW Quadrant of Egan Ave													
49+97.08-27.50'R	50+11.72-60.77'R	12.1	18.0							235.0			10.0
NE Quadrant of Egan Ave including Median													
50+79.31-64.91'L	51+04.11-27.50'L	26.60		45.7				6.2		309.6			30.0
SE Quadrant of Egan Ave													
50+77.52-62.05'R	51+02.69-27.50'R	25.20	10.0						79.3	237.3			30.0
SD Highway 34 - Egan Ave to Harth Ave													
51+04.11-27.50'L	53+84.98-27.50'L		226.9		54.0		77.1		897.5		287.5		
51+02.69-27.50'R	53+88.35-27.50'R		221.7		64.0		97.2		737.8		287.5	750.7	
NW Quadrant of Harth Ave													
53+84.98-27.50'L	54+10.23-63.41'L	25.0	11.5							350.6			20.0
SW Quadrant of Harth Ave													
53+88.35-27.50'R	53+97.73-68.32'R	26.3	30.4							228.4			20.0
NE Quadrant of Harth Ave													
54+36.13-62.83'L	54+60.99-27.50'L	26.5	10.0							357.5			20.0
SE Quadrant of Harth Ave													
54+58.90-69.21'R	54+74.35-27.50'R	24.9	17.4						29.3	186.2	136.7		20.0
SD Highway 34 - Harth Ave to Lee Ave													
54+60.99-27.50'L	57+55.96-27.50'L		247.0		48.0		76.0		1091.2	61.3	108.1		
54+74.35-27.50'R	57+66.59-27.50'R		242.2		50.0		57.0		491.0		316.2		
NW Quadrant of Lee Ave													
57+55.96-27.50'L	57+81.00-62.47'L	25.7	10.1							294.6			20.0
SW Quadrant of Lee Ave													
57+66.59-27.50'R	57+91.46-69.98'R	26.2	17.3						54.9	179.1			20.0
NE Quadrant of Lee Ave													
58+12.71-62.28'L	58+37.74-27.50'L	25.8	9.9							322.6			20.0
SE Quadrant of Lee Ave													
58+23.22-66.01'R	58+48.45-27.50'R	25.2	13.9						57.5	145			20.0
SD Highway 34 - Lee Ave to Washington Ave													
58+37.74-27.50'L	61+32.65-27.50'L		214.9		80.0		109.8		906.0		83.7	199.3	
58+48.45-27.50'R	60+86.25-27.50'R		296.4		44.0		68.0		41.2		205.8		
NW Quadrant of Washington Ave													
61+32.65-27.50'L	61+58.09-65.82'L	24.6	14.1							287.5			20.0
SW Quadrant of Washington Ave													
60+86.25-27.50'R	61+46.25-88.21'R												30.0
NE Quadrant of Washington Ave													
62+02.04-63.08'L	62+40.95-26.10'L	25.4	9.9						70.4	272.8			30.0
SE Quadrant of Washington Ave													
61+97.16-84.61'R	62+59.85-25.76'R									555.8			30.0
Washington Ave													
61+46.25-88.21'R	61+48.47-199.50'R		120.0		24.0		38.0		47.2	95.1	85.0		
61+97.16-84.61'R	61+86.52-201.29'R		77.2		40.0		54.9		211.1				
SD Highway 34 - Washington Ave to End													
62+59.85-25.76'R	63+30.62-24.26'R		30.7		40.0		34.7			110.5			
Subtotal:		370.4	2273.2	45.7	602.0	0.0	826.5	6.2	5912.2	4995.9	1824.3	1469.2	390.0
Total:		**1273.3**	**8148.0**	**374.3**	**1332.2**	**338.5**	**1268.8**	**56.4**	**8548.4**	**35154.3**	**3881.3**	**2895.6**	**1170.0**

REGISTERED PROFESSIONAL ENGINEER
REG. NO. 9737
DAVID P. MAXWELL
SOUTH DAKOTA
12/4/15

STATE OF SOUTH DAKOTA	PROJECT	SHEET	TOTAL SHEETS
	NH 0034(160)386	B20	B133

Plotting Date: 12/4/2015

FOR BIDDING PURPOSES ONLY

TYPICAL GRADING SECTIONS

9+85.80 to 15+00

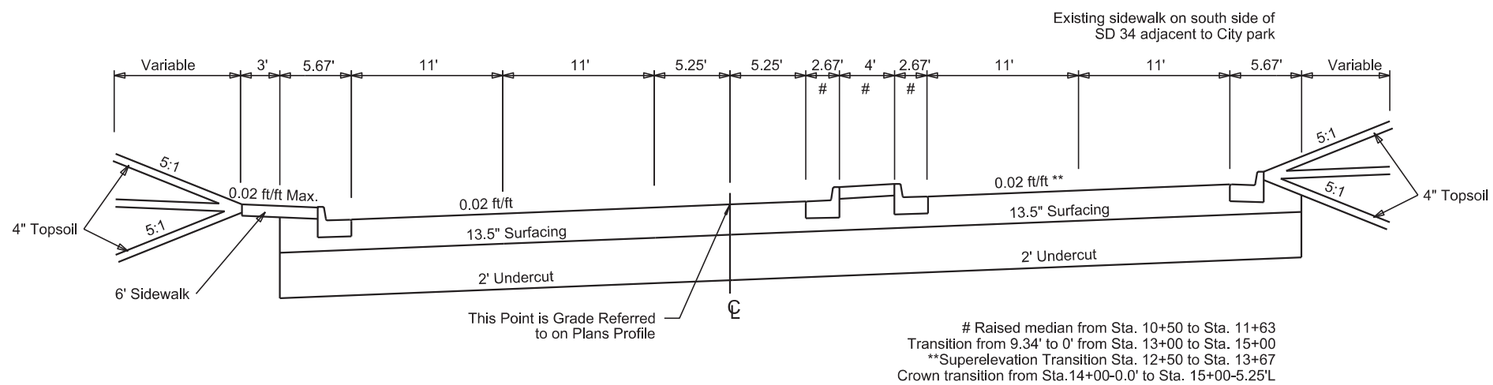

Raised median from Sta. 10+50 to Sta. 11+63
Transition from 9.34' to 0' from Sta. 13+00 to Sta. 15+00
**Superelevation Transition Sta. 12+50 to Sta. 13+67
Crown transition from Sta.14+00-0.0' to Sta. 15+00-5.25'L

15+00 to 19+75

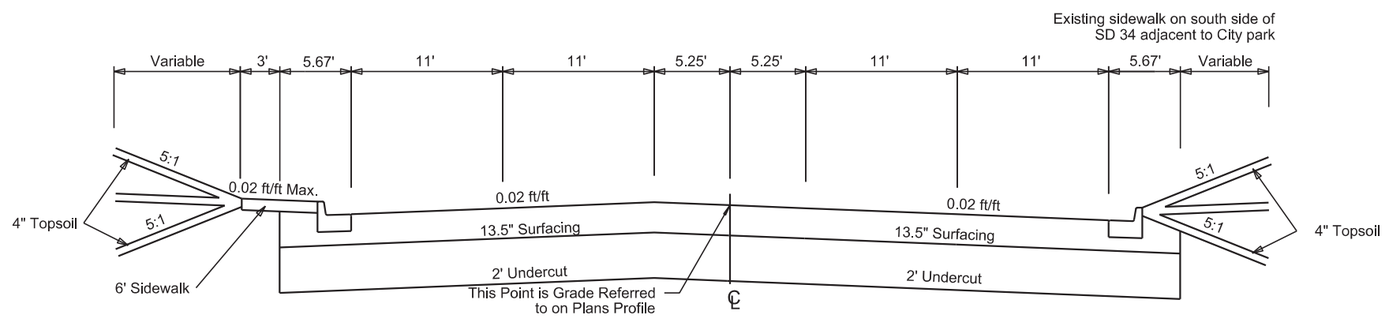

19+75 to 42+56.93

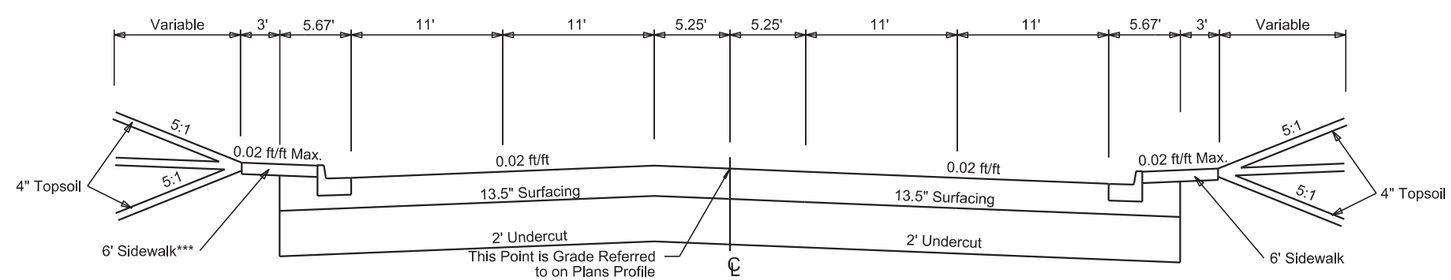

*** Sidewalk will extend to front face of retaining walls

Plot Scale - 1:200

Plotted From - kmay

File - ...\CAD\LAKE02R6\Design\typ.dgn

STATE OF SOUTH DAKOTA	PROJECT	SHEET	TOTAL SHEETS
	NH 0034(160)386	B21	B133

Plotting Date: 12/4/2015

FOR BIDDING PURPOSES ONLY

TYPICAL GRADING SECTIONS

42+56.93 to 54+74.35

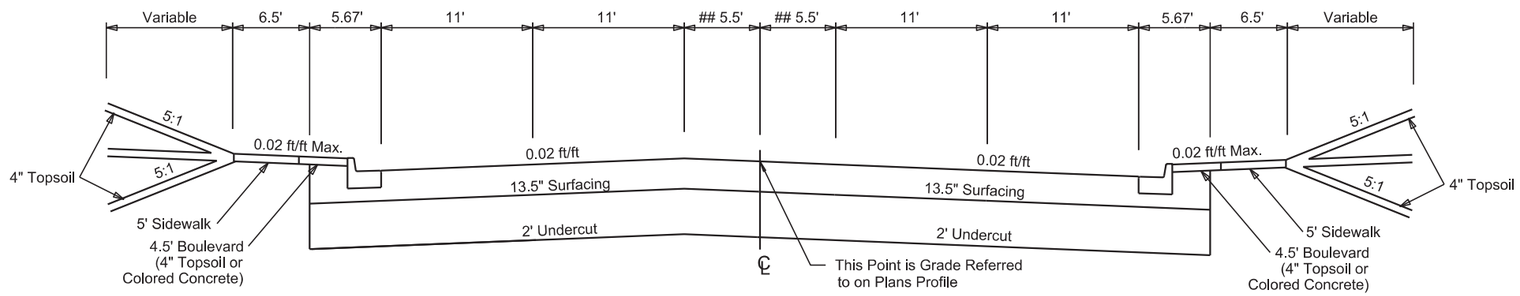

42+56.93 to 43+39.66 Transition 5.25' to 5.5'

54+74.35 to 61+56.85

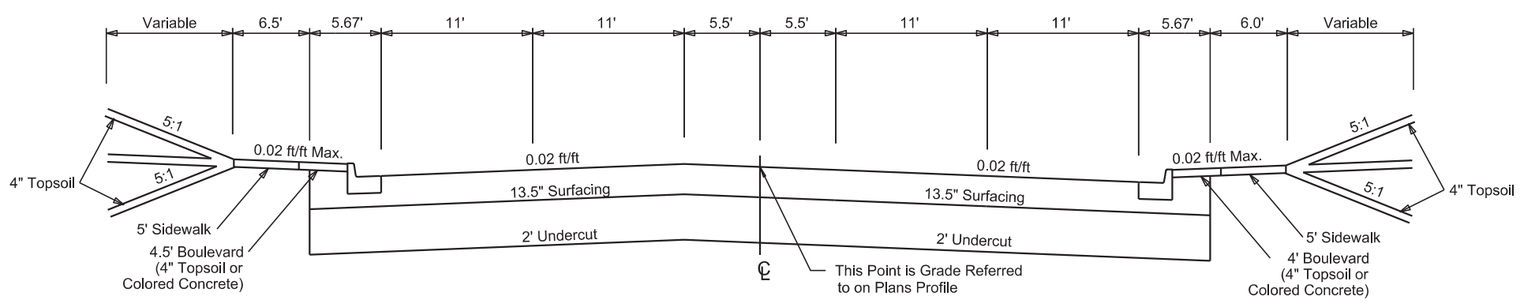

Plot Scale - 1:200

Plotted From - kmay

File - ...\CAD\LAKE02R6\Design\typ2.dgn

FOR BIDDING PURPOSES ONLY

HORIZONTAL ALIGNMENT DATA

MAINLINE

Type	Station			Northing	Easting
POB	4+76.59			626,405.341	2,810,725.322
		TL = 293.01	N 88°10'32" E		
PC	7+69.60			626,414.670	2,811,018.188
PI	8+71.19	R = 477.46	Delta = 24°01'201" R	626,417.904	2,811,119.721
PT	9+69.79			626,379.524	2,811,213.777
		TL = 88.93	S 67°48'07" E		
PC	10+58.72			626,345.924	2,811,296.120
PI	11+67.57	R = 495.50	Delta = 24°46'42" L	626,304.802	2,811,396.897
PT	12+73.01			626,309.702	2,811,505.631
		TL = 1028.69	N 87°25'11" E		
PI	23+01.70			626,356.013	2,812,533.281
		TL = 1227.83	N 87°36'17" E		
PI	35+29.53			626,407.329	2,813,760.039
		TL = 812.11	N 87°13'10" E		
PI	43+41.64			626,446.724	2,814,571.196
		TL = 1833.15	N 86°56'01" E		
PI	61+74.79			626,544.783	2,816,401.718
		TL = 30.56	N 84°06'11" E		
PI	62+05.35			626,547.923	2,816,432.114
		TL = 224.33	N 86°48'56" E		
POE	64+29.68			626,560.384	2,816,656.097

REGISTERED PROFESSIONAL ENGINEER
REG. NO. 9737
DAVID P. MAXWELL
SOUTH DAKOTA
12/4/15

The coordinates shown on this sheet are based on the South Dakota State Plane Coordinate System. South Zone (NAD 83/07); Geoid 09: SF = 0.9998528030

CONTROL DATA

FOR BIDDING PURPOSES ONLY

STATE OF SOUTH DAKOTA	PROJECT	SHEET	TOTAL SHEETS
	NH 0034 (160) 386	B23	B133

HORIZONTAL AND VERTICAL CONTROL POINTS					
POINT	STATION	OFFSET	NORTHING	EASTING	ELEVATION
CP1	6+69	37' R	626374.8650	2810918.5970	1722.1650
CP2	9+69	125' L	626495.0270	2811260.4410	1718.5120
CP3	12+27	67' L	626377.0000	2811462.8720	1713.9870
CP4	16+29	66' L	626391.1680	2811858.0600	1707.0980
CP5	20+45	26' L	626370.2060	2812276.1000	1699.9350
CP6	23+23	118' R	626239.3530	2812559.2100	1694.9470
CP7	27+39	85' L	626458.8570	2812966.4140	1692.4240
CP8	30+83	59' L	626447.7030	2813311.2970	1687.5330
CP9	34+64	64' R	626340.2020	2813697.0420	1683.1080
CP10	39+44	103' L	626530.5450	2814168.9700	1684.9250
CP11	43+17	62' L	626507.6480	2814543.9390	1681.7220
CP12	46+41	67' R	626395.8330	2814873.8670	1679.4900
CP13	50+84	170' L	626655.9440	2815302.9560	1677.4710
CP14	51+50	30' R	626459.9140	2815379.8150	1676.7380
CP15	54+08	68' L	262572.0680	2815632.1080	1673.3740
CP16	57+79	60' L	626583.7900	2816002.7680	1671.2180
CP17	61+46	261' L	262803.9400	2816359.2360	1668.3540
CP18	63+56	32' R	626524.5280	2816584.7530	1667.8990
CP19	61+31	401' R	626142.1440	2816379.7830	1675.1130

The coordinates shown on this sheet are based on the South Dakota State Plane Coordinate System.
South Zone (NAD 83/07); Geoid 09; SF = 0.9998528030
The elevations shown on this sheet are based on NAVD 88.

REGISTERED PROFESSIONAL ENGINEER
REG. NO. 9737
DAVID P. MAXWELL
SOUTH DAKOTA
12/4/15

SUBSURFACE UTILITY LOCATIONS

FOR BIDDING PURPOSES ONLY

Subsurface utility explorations were done at the following locations. The information below states what was located in the specified areas. This table is provided to aid the Contractor during construction and does not substitute or replace the requirements of SD One Call. All information is approximate and the Contractor shall verify all utility locations before construction in those areas as mandated in SDCL 49-7A.

SUBSURFACE UTILITY LOCATIONS

POINT	STATION	OFFSET	FINDING	NORTHING	EASTING	ELEVATION
1	23+67	38' R	Found 2" Fiber Telecommunications at 3.55' deep - 1690.8	626320.9350	2812599.7870	1694.4
2	37+23	2' L	Found 2-2" Fiber Telecommunications at 4.06' deep - 1679.1	626418.8200	2813952.8080	1683.2
3	37+30	2' L	Found 2" Gas at 4.35' deep - 1678.9	626419.1510	2813960.6170	1683.2
4	40+99	3' R	Found 2-2" Fiber Telecommunications at 3.95' deep - 1678.0	626432.5690	2814328.8400	1681.9
5	41+04	3' R	Found 2" Gas at 2.95' deep - 1678.9	626431.9440	2814334.2630	1681.8
6	41+09	2' R	Found 3-2" Electric at 4.4' deep - 1677.4	626433.3940	2814338.9050	1681.8
7	43+32	4' R	Found 3" Fiber Telecommunications at 3.15' deep - 1677.9	626442.6780	2814561.6690	1681.0
8	44+85	2' R	Found 2" Gas at 3.05' deep - 1677.4	626452.7090	2814714.8100	1680.4
9a	48+44	CL	Found 2-2" Fiber Telecommunications at 4.15' deep - 1674.7	626473.5850	2815072.7470	1678.8
9b	48+49	CL	Found 2" Gas at 3.25' deep - 1675.5	626473.9630	2815077.8510	1678.7
10	48+54	CL	Found 3-2" Electric at 2.1' deep - 1676.6	626473.9950	2815083.3100	1678.7
11	48+59	CL	Found 2-2" Fiber Telecommunications at 3.15' deep - 1675.6	626474.3020	2815087.5440	1678.7
12	52+36	1' L	Found 4-2" Fiber Telecommunications at 2.35' deep - 1673.3	626495.7780	2815464.1730	1675.6
13a	52+39	2' L	Found 2-2" Fiber Telecommunications and 3-1" Electric at 2.4' deep - 1673.2	626496.4760	2815466.7300	1675.6
13b	52+39	3' L	Found 2" Gas at 2.5' deep - 1673.1	626497.9730	2845466.7050	1675.6
14	52+51	3' L	Found 2-2" Fiber Telecommunications and 3-1" Electric at 2.95' deep - 1672.5	626498.3850	2815479.1150	1675.4
15	54+56	2' L	Found 2" Fiber Telecommunications at 3.1' deep - 1670.3	626507.9520	2815683.4600	1673.4
16	56+26	2' L	Found 2" Gas at 3.25' deep - 1669.5	626516.9390	2815854.1130	1672.7

REGISTERED PROFESSIONAL ENGINEER
REG. NO. 9737
DAVID P. MAXWELL
SOUTH DAKOTA
12/4/15

The coordinates shown on this sheet are based on the South Dakota State Plane Coordinate System. South Zone (NAD 83/07); Geoid 09; SF = 0.9998528030

FOR BIDDING PURPOSES ONLY

STATE OF SOUTH DAKOTA	PROJECT	SHEET	TOTAL SHEETS
	NH 0034(160)386	B25	B133

Plotting Date: 12/4/2015

EXISTING TOPOGRAPHY SYMBOLOGY AND LEGEND

Anchor
Antenna
Approach
Assumed Corner
Azimuth Marker
Bbq Grill/ Fireplace
Bearing Tree
Bench Mark
Box Culvert
Bridge
Brush
Buildings
Bulk Tank
Cattle Guard
Cemetery
Centerline
Cistern
Clothes Line
Commercial Sign Double Face
Commercial Sign One Post
Commercial Sign Overhead
Commercial Sign Two Post
Concrete Symbol
Creek Edge
Curb/Gutter
Curb
Dam Grade/Dike/Levee
Ditch Block
Drainage Profile
Drop Inlet
Edge Of Asphalt
Edge Of Concrete
Edge Of Gravel
Edge Of Other
Edge Of Shoulder
Elec. Trans./Power Jct. Box
Fence Barbwire
Fence Chainlink
Fence Electric
Fence Misc.
Fence Rock
Fence Snow
Fence Wood
Fence Woven
Fire Hydrant
Flag Pole
Flower Bed
Gas Valve Or Meter
Gas Pump Island
Grain Bin
Guardrail
Gutter
Guy Pole
Haystack
Hedge
Highway R.O.W. Marker

Information Sign One Post
Information Sign Two Post
Interstate Close Gate
Iron Pin
Irrigation Ditch
Lake Edge
Lawn Sprinkler
Mailbox
Manhole Electric
Manhole Gas
Manhole Misc
Manhole Sanitary Sewer
Manhole Storm Sewer
Manhole Telephone
Manhole Water
Merry-Go-Round
Microwave Radio Tower
Misc. Property Corner
Misc. Post
Overhang Or Encroachment
Overhead Utility Line — OH —
Parking Meter
Pipe With End Section
Pipe With Headwall
Pipe Without End Section
Playground Slide
Playground Swing
Power And Light Pole
Power And Telephone Pole
Power Meter
Power Pole
Power Pole And Transformer
Power Tower Structure
Propane Tank
Property Pipe
Property Pipe With Cap
Property Stone
Public Telephone
Railroad Crossing Signal
Railroad Milepost Marker
Railroad Profile
Railroad R.O.W. Marker
Railroad Signs
Railroad Switch
Railroad Track
Railroad Trestle
Rebar
Rebar With Cap
Reference Mark
Retaining Wall
Riprap
River Edge
Rock And Wire Baskets
Rockpiles
Route Sign One Post
Route Sign Two Post

Satellite Dish
Septic Tank
Shrub Tree
Sidewalk
Sign Face
Sign Post
Slough Or Marsh
Spring
Stream Gauge
Street Marker
Telephone Fiber Optics — T/F —
Telephone Junction Box
Telephone Pole
Television Cable Jct Box
Television Tower
Test Wells/Bore Holes
Traffic Signal
Trash Barrel
Tree Belt
Tree Coniferous
Tree Deciduous
Tree Stumps
Triangulation Station
Underground Electric Line — P —
Underground Gas Line — G —
Underground Sanitary Sewer — S —
Underground Storm Sewer — S —
Underground Tank
Underground Telephone Line — T —
Underground Television Cable — TV —
Underground Water Line — W —
Warning Sign One Post
Warning Sign Two Post
Water Fountain
Water Hydrant
Water Meter
Water Tower
Water Valve
Water Well
Weir Rock
Windmill
Wingwall
Witness Corner

State and National Line
County Line
Section Line
Quarter Line
Sixteenth Line
Property Line
Construction Line
R. O. W. Line
New R. O. W. Line
Cut and Fill Limits
Control of Access
New Control of Access

Plot Scale - 1:200
Plotted From - kmay
File - ...\LAKE02R6\Design\toposymb.dgn

RIGHT OF WAY AND EASEMENT OWNERSHIP TABLE

FOR BIDDING PURPOSES ONLY

Parcel No.	Station (Begin)		Station (End)	Side	Type	Purpose	Area	Property Owner	Property Description
1A	NOT NEEDED								
1	11+12.64	to	12+11.85	LT	TEMP	Cut, Fill	1193 Sq.Ft.	Todd M. Jorgenson and Heidi R. Jorgenson	Lot 1 except the North 10 Feet thereof in Block 4 of Henkin's Second Addition to Madison, Lake County, South Dakota
1	PLAT			LT	PERM	R/W	654 Sq.Ft.	Todd M. Jorgenson and Heidi R. Jorgenson	Lot 1 except the North 10 Feet thereof in Block 4 of Henkin's Second Addition to Madison, Lake County, South Dakota
1B	EXHIBIT			LT	PERM	Sign	6 Sq.Ft.	Todd M. Jorgenson and Heidi R. Jorgenson	Lot 1 except the North 10 Feet thereof in Block 4 of Henkin's Second Addition to Madison, Lake County, South Dakota
2	10+93.15	to	11+37.10	RT	TEMP	Cut, Fill, Sidewalk	6281 Sq.Ft.	City of Madison	Lot 10 in Block 5 of Henkin's Second Addition to Madison, Lake County, South Dakota
2	PLAT			RT	PERM	R/W	517 Sq.Ft.	City of Madison	Lot 10 in Block 5 of Henkin's Second Addition to Madison, Lake County, South Dakota
3	12+81.27	to	13+56.16	LT	TEMP	Cut, Fill	845 Sq.Ft.	Carsten M. Bergheim and Karen E. Bergheim	Lot 4 in Block 3 of Henkin's Second Addition to Madison, Lake County, South Dakota
3	PLAT			LT	PERM	R/W	33 Sq.Ft.	Carsten M. Bergheim and Karen E. Bergheim	Lot 4 in Block 3 of Henkin's Second Addition to Madison, Lake County, South Dakota
A1	13+56.16	to	14+30.77	LT	TEMP	Cut, Fill, Driveway	1436 Sq.Ft.	Eric Carlson	Lot 3 in Block 3 of Henkin's Second Addition to Madison, Lake County, South Dakota
4	14+44.77	to	15+12.50	LT	TEMP	Cut, Fill, Driveway	662 Sq.Ft.	Frank M. Beesley	Lot 2 in Block 3 of Henkin's Second Addition to Madison, Lake County, South Dakota
4	EXHIBIT			LT	PERM	Lighting	15 Sq.Ft.	Frank M. Beesley	Lot 2 in Block 3 of Henkin's Second Addition to Madison, Lake County, South Dakota
5	15+12.50	to	15+80.28	LT	TEMP	Cut, Fill	723 Sq.Ft.	Sarah A. Nordstrom	Lot 1 in Block 3 of Henkin's Second Addition to Madison, Lake County, South Dakota
5	PLAT			LT	PERM	R/W	35 Sq.Ft.	Sarah A. Nordstrom	Lot 1 in Block 3 of Henkin's Second Addition to Madison, Lake County, South Dakota
6	11+41.61	to	15+79.75	RT	TEMP	Cut, Fill	20,695 Sq.Ft.	City of Madison	Lot 9, Lot 8, Lot 7, Lot 6, Lot 5, Lot 4, Lot 3, Lot 2, and Lot 1, all in Block 5 of Henkin's Second Addition to Madison, Lake County, South Dakota
6	PLAT			RT	PERM	R/W	840 Sq.Ft.	City of Madison	Lot 8, Lot 7, Lot 6, Lot 5, all in Block 5 of Henkin's Second Addition to Madison, Lake County, South Dakota
6A	EXHIBIT			RT	PERM	Sign	12 Sq.Ft.	City of Madison	Lot 6 in Block 5 of Henkin's Second Addition to Madison, Lake County, South Dakota
7	16+40.28	to	17+15.48	LT	TEMP	Cut, Fill	930 Sq.Ft.	Buffalo Properties, LLC	Lot 4 in Block 2 of Henkin's Second Addition to Madison, Lake County, South Dakota
7	PLAT			LT	PERM	R/W	33 Sq.Ft.	Buffalo Properties, LLC	Lot 4 in Block 2 of Henkin's Second Addition to Madison, Lake County, South Dakota
7A	EXHIBIT			LT	PERM	Sign	5 Sq.Ft.	Buffalo Properties, LLC	Lot 4 in Block 2 of Henkin's Second Addition to Madison, Lake County, South Dakota
A2	17+15.48	to	17+90.82	LT	TEMP	Cut, Fill	1116 Sq.Ft.	James Heidelberger and Ruth Heidelberger	Lot 3 in Block 2 of Henkin's Second Addition to Madison, Lake County, South Dakota
8	18+04.82	to	18+72.94	LT	TEMP	Cut, Fill	1099 Sq.Ft.	Callahan Rentals, LLC	Lot 2 in Block 2 of Henkin's Second Addition to Madison, Lake County, South Dakota
8	EXHIBIT			LT	PERM	Lighting	15 Sq.Ft.	Callahan Rentals, LLC	Lot 2 in Block 2 of Henkin's Second Addition to Madison, Lake County, South Dakota
9	18+72.94	to	19+41.27	LT	TEMP	Cut, Fill	959 Sq.Ft.	Matthew W. Groce and Penni L. Groce	Lot 1 in Block 2 of Henkin's Second Addition to Madison, Lake County, South Dakota
9	PLAT			LT	PERM	R/W	60 Sq.Ft.	Matthew W. Groce and Penni L. Groce	Lot 1 in Block 2 of Henkin's Second Addition to Madison, Lake County, South Dakota
9A	EXHIBIT			LT	PERM	Sign	3 Sq.Ft.	Matthew W. Groce and Penni L. Groce	Lot 1 in Block 2 of Henkin's Second Addition to Madison, Lake County, South Dakota
A3	18+15.27	to	18+40.39	RT	TEMP	Cut, Fill	1098 Sq.Ft.	City of Madison	Lot 3 in Block 6 of Henkin's Second Addition to Madison, Lake County, South Dakota
10	18+40.39	to	19+40.57	RT	TEMP	Cut, Fill	1065 Sq.Ft.	Gregory R. Pulford	The North half of Lot 2 and the North half of Lot 1 in Block 6 of Henkin's Second Addition to Madison, Lake County, South Dakota
10	PLAT			RT	PERM	R/W	160 Sq.Ft.	Gregory R. Pulford	The North half of Lot 1 in Block 6 of Henkin's Second Addition to Madison, Lake County, South Dakota
11	20+01.19	to	20+76.36	LT	TEMP	Cut, Fill	892 Sq.Ft.	Karen Bauer	Lot 4 in Block 1 of Henkin's Second Addition to Madison, Lake County, South Dakota

RIGHT OF WAY AND EASEMENT OWNERSHIP TABLE

FOR BIDDING PURPOSES ONLY

Parcel No.	Station (Begin)		Station (End)	Side	Type	Purpose	Area	Property Owner	Property Description
11	PLAT			LT	PERM	R/W	60 Sq.Ft.	Karen Bauer	Lot 4 in Block 1 of Henkin's Second Addition to Madison, Lake County, South Dakota
A4	20+76.41	to	21+51.72	LT	TEMP	Cut, Fill	1667 Sq.Ft.	Charles J. Skluzacek and Patti L. Skluzacek	Lot 3 in Block 1 of Henkin's Second Addition to Madison, Lake County, South Dakota
12	21+65.72	to	23+01.87	LT	TEMP	Cut, Fill	2102 Sq.Ft.	Marie S. Johnson	Lot 2 in Block 1 of Henkin's Second Addition to Madison, Lake County, South Dakota
12	EXHIBIT			LT	PERM	Lighting	15 Sq.Ft.	Marie S. Johnson	Lot 2 in Block 1 of Henkin's Second Addition to Madison, Lake County, South Dakota
12	PLAT			LT	PERM	R/W	6 Sq.Ft.	Marie S. Johnson	Lot 2 in Block 1 of Henkin's Second Addition to Madison, Lake County, South Dakota
13	20+00.65	to	20+60.68	RT	TEMP	Cut, Fill	565 Sq.Ft.	Chris D. Maher and Amanda Jo Maher	The West 60 Feet of Lot 2 in Block 7 of Henkin's Second Addition to Madison, Lake County, South Dakota
13	EXHIBIT			RT	PERM	Lighting	15 Sq.Ft.	Chris D. Maher and Amanda Jo Maher	The West 60 Feet of Lot 2 in Block 7 of Henkin's Second Addition to Madison, Lake County, South Dakota
13	PLAT			RT	PERM	R/W	60 Sq.Ft.	Chris D. Maher and Amanda Jo Maher	The West 60 Feet of Lot 2 in Block 7 of Henkin's Second Addition to Madison, Lake County, South Dakota
A5	20+60.68	to	21+50.72	RT	TEMP	Cut, Fill, Driveway	1462 Sq.Ft.	Joseph Neal Holman	The East 90 Feet of Lot 2 in Block 7 of Henkin's Second Addition to Madison, Lake County, South Dakota
14	21+50.72	to	23+01.05	RT	TEMP	Cut, Fill, Driveway	2207 Sq.Ft.	David L. Halverson and Carol M. Halverson	Lot 1 in Block 7 of Henkin's Second Addition to Madison, Lake County, South Dakota
14	PLAT			RT	PERM	R/W	6 Sq.Ft.	David L. Halverson and Carol M. Halverson	Lot 1 in Block 7 of Henkin's Second Addition to Madison, Lake County, South Dakota
15	23+81.88	to	24+56.19	LT	TEMP	Cut, Fill	918 Sq.Ft.	Carol S. Pulford	The West half of Lot 5 and all of Lot 6 in Block 3 of Clark & McKinnon's Addition to Madison, Lake County, South Dakota
15	PLAT			LT	PERM	R/W	6 Sq.Ft.	Carol S. Pulford	Lot 6 in Block 3 of Clark & McKinnon's Addition to Madison, Lake County, South Dakota
A6	24+56.20	to	25+30.89	LT	TEMP	Cut, Fill, Driveway	1263 Sq.Ft.	Gordon J. Johnson and Henrietta Johnson	Lot 4 and the East half of Lot 5 in Block 3 of Clark & McKinnon's Addition to Madison, Lake County, South Dakota
A7	25+30.89	to	26+05.58	LT	TEMP	Cut, Fill, Driveway	1254 Sq.Ft.	Lucas T. Muller and Amber R. Muller	The West half of Lot 2 and all of Lot 3 in Block 3 of Clark & McKinnon's Addition to Madison, Lake County, South Dakota
16	26+05.58	to	26+80.31	LT	TEMP	Cut, Fill, Driveway	1369 Sq.Ft.	Robin L. Kember and Christine E. Riedel	Lot 1 and the East half of Lot 2 in Block 3 of Clark & McKinnon's Addition to Madison, Lake County, South Dakota
16	EXHIBIT			LT	PERM	Lighting	15 Sq.Ft.	Robin L. Kember and Christine E. Riedel	Lot 1 in Block 3 of Clark & McKinnon's Addition to Madison, Lake County, South Dakota
16	PLAT			LT	PERM	R/W	6 Sq.Ft.	Robin L. Kember and Christine E. Riedel	Lot 1 in Block 3 of Clark & McKinnon's Addition to Madison, Lake County, South Dakota
17	23+81.25	to	24+30.95	RT	TEMP	Cut, Fill	670 Sq.Ft.	Ryan W. Hoff	Lot 6 in Block 4 of Clark & McKinnon's Addition to Madison, Lake County, South Dakota
17	PLAT			RT	PERM	R/W	6 Sq.Ft.	Ryan W. Hoff	Lot 6 in Block 4 of Clark & McKinnon's Addition to Madison, Lake County, South Dakota
18	24+30.95	to	24+80.82	RT	TEMP	Cut, Fill	484 Sq.Ft.	Francis J. Fitzgerald and Barbara J. Fitzgerald	Lot 5 in Block 4 of Clark & McKinnon's Addition to Madison, Lake County, South Dakota
18	EXHIBIT			RT	PERM	Lighting	15 Sq.Ft.	Francis J. Fitzgerald and Barbara J. Fitzgerald	Lot 5 in Block 4 of Clark & McKinnon's Addition to Madison, Lake County, South Dakota
A8	24+80.82	to	25+30.68	RT	TEMP	Cut, Fill, Driveway	499 Sq.Ft.	Kenneth C. Ferber and Sandra J. Ferber	Lot 4 in Block 4 of Clark & McKinnon's Addition to Madison, Lake County, South Dakota
19	25+30.68	to	26+80.27	RT	TEMP	Cut, Fill, Driveway	1660 Sq.Ft.	Gayle R. Cole	The North half of Lot 3, Lot 2, and Lot 1 in Block 4 of Clark & McKinnon's Addition to Madison, Lake County, South Dakota
19	PLAT			RT	PERM	R/W	6 Sq.Ft.	Gayle R. Cole	The North half of Lot 1 in Block 4 of Clark & McKinnon's Addition to Madison, Lake County, South Dakota
20	27+60.31	to	28+60.87	LT	TEMP	Cut, Fill	1190 Sq.Ft.	Norma J. Goth	Lot 5 and Lot 6 in Block 2 of Clark & McKinnon's Addition to Madison, Lake County, South Dakota
20	PLAT			LT	PERM	R/W	6 Sq.Ft.	Norma J. Goth	Lot 6 in Block 2 of Clark & McKinnon's Addition to Madison, Lake County, South Dakota
A9	28+60.88	to	29+11.16	LT	TEMP	Cut, Fill, Driveway	1257 Sq.Ft.	Jeremey Fedeler and Melinda Fedeler	Lot 4 in Block 2 of Clark & McKinnon's Addition to Madison, Lake County, South Dakota
A10	29+11.16	to	29+61.44	LT	TEMP	Cut, Fill, Driveway	953 Sq.Ft.	Helen Schrader	Lot 3 in Block 2 of Clark & McKinnon's Addition to Madison, Lake County, South Dakota

RIGHT OF WAY AND EASEMENT OWNERSHIP TABLE

FOR BIDDING PURPOSES ONLY

Parcel No.	Station (Begin)		Station (End)	Side	Type	Purpose	Area	Property Owner	Property Description
21	29+61.44	to	30+62.02	LT	TEMP	Cut, Fill	1171 Sq.Ft.	Sean Hughes and LeAnn Mentele Hughes	Lot 1 and Lot 2 in Block 2 of Clark & McKinnon's Addition to Madison, Lake County, South Dakota
21	EXHIBIT			LT	PERM	Lighting	15 Sq.Ft.	Sean Hughes and LeAnn Mentele Hughes	Lot 1 in Block 2 of Clark & McKinnon's Addition to Madison, Lake County, South Dakota
21	PLAT			LT	PERM	R/W	10 Sq.Ft.	Sean Hughes and LeAnn Mentele Hughes	Lot 1 in Block 2 of Clark & McKinnon's Addition to Madison, Lake County, South Dakota
22	27+60.27	to	28+10.55	RT	TEMP	Cut, Fill	697 Sq.Ft.	The Insurance and Real Estate Market, Inc., a South Dakota Corporation	Lot 6 in Block 5 of Clark & McKinnon's Addition to Madison, Lake County, South Dakota
22	PLAT			RT	PERM	R/W	6 Sq.Ft.	The Insurance and Real Estate Market, Inc., a South Dakota Corporation	Lot 6 in Block 5 of Clark & McKinnon's Addition to Madison, Lake County, South Dakota
23	28+10.55	to	28+60.82	RT	TEMP	Cut, Fill	488 Sq.Ft.	David Meehan and Amy Meehan and Russell C. Beldin	Lot 5 in Block 5 of Clark & McKinnon's Addition to Madison, Lake County, South Dakota
23	EXHIBIT			RT	PERM	Lighting	15 Sq.Ft.	David Meehan and Amy Meehan and Russell C. Beldin	Lot 5 in Block 5 of Clark & McKinnon's Addition to Madison, Lake County, South Dakota
A11	28+60.82	to	29+11.09	RT	TEMP	Cut, Fill	503 Sq.Ft.	Lois J. Zerfas and David W. Zerfas	Lot 4 in Block 5 of Clark & McKinnon's Addition to Madison, Lake County, South Dakota
A12	29+11.09	to	29+61.37	RT	TEMP	Cut, Fill	503 Sq.Ft.	Daniel J. Zerfas and Terry L. Zerfas	Lot 3 of Block 5 of Clark & McKinnon's Addition to Madison, Lake County, South Dakota
24	29+61.37	to	30+61.89	RT	TEMP	Cut, Fill	1205 Sq.Ft.	John P. Eaker and Elvira M. Eaker	Lot 2 and Lot 1 in Block 5 of Clark & McKinnon's Addition to Madison, Lake County, South Dakota
24	PLAT			RT	PERM	R/W	10 Sq.Ft.	John P. Eaker and Elvira M. Eaker	Lot 1 in Block 5 of Clark & McKinnon's Addition to Madison, Lake County, South Dakota
25	31+42.03	to	32+17.25	LT	TEMP	Cut, Fill, Driveway	1221 Sq.Ft.	Mary E. Treloar	The West half of Lot 5 and all of Lot 6 in Block 1 of Clark & McKinnon's Addition to Madison, Lake County, South Dakota
25	PLAT			LT	PERM	R/W	2 Sq.Ft.	Mary E. Treloar	Lot 6 in Block 1 of Clark & McKinnon's Addition to Madison, Lake County, South Dakota
A13	32+17.25	to	32+92.51	LT	TEMP	Cut, Fill, Driveway	1505 Sq.Ft.	Myron Downs, Clara Downs, Mary Ann Downs, Stephanie M. Downs and Mark H. Downs	Lot 4 and the East half of Lot 5 in Block 1 of Clark & McKinnon's Addition to Madison, Lake County, South Dakota
A14	32+92.51	to	33+67.76	LT	TEMP	Cut, Fill	1129 Sq.Ft.	Kenneth E. Wede Revocable Trust	The West half of Lot 2 and all of Lot 3 in Block 1 of Clark & McKinnon's Addition to Madison, Lake County, South Dakota
26	33+67.76	to	34+43.01	LT	TEMP	Cut, Fill	1114 Sq.Ft.	Glen W. Griffin and Eunice F. Griffin	The South 90 Feet of Lot 1 and the South 90 Feet of the East half of Lot 2 in Block 1 of Clark & McKinnon's Addition to Madison, Lake County, South Dakota
26	EXHIBIT			RT	PERM	Lighting	15 Sq.Ft.	Glen W. Griffin and Eunice F. Griffin	The South 90 Feet of Lot 1 in Block 1 of Clark & McKinnon's Addition to Madison, Lake County, South Dakota
27	31+41.90	to	32+17.20	RT	TEMP	Cut, Fill	910 Sq.Ft.	Jeremy Eichmann	Lot 6 and the West half of Lot 5 in Block 6 of Clark & McKinnon's Addition to Madison, Lake County, South Dakota
27	PLAT			RT	PERM	R/W	3 Sq.Ft.	Jeremy Eichmann	Lot 6 in Block 6 of Clark & McKinnon's Addition to Madison, Lake County, South Dakota
28	32+17.20	to	32+92.49	RT	TEMP	Cut, Fill	738 Sq.Ft.	Lorin L. Larsen	The East half of Lot 5 and Lot 4 in Block 6 of Clark & McKinnon's Addition to Madison, Lake County, South Dakota
28	EXHIBIT			RT	PERM	Lighting	15 Sq.Ft.	Lorin L. Larsen	The East half of Lot 5 in Block 6 of Clark & McKinnon's Addition to Madison, Lake County, South Dakota
A15	32+92.49	to	33+42.69	RT	TEMP	Cut, Fill	502 Sq.Ft.	S & N Rentals, LLC	Lot 3 in Block 6 of Clark & McKinnon's Addition to Madison, Lake County, South Dakota
29	33+42.69	to	34+43.09	RT	TEMP	Cut, Fill, Driveway	1194 Sq.Ft.	James R. Heidelberger and Ruth A. Heidelberger	Lot 2 except the South 55 Feet thereof, and Lot 1 except the South 55 Feet thereof, in Block 6 of Clark & McKinnon's Addition to Madison, Lake County, South Dakota
29	PLAT			RT	PERM	R/W	10 Sq.Ft.	James R. Heidelberger and Ruth A. Heidelberger	Lot 1 except the South 55 Feet thereof, in Block 6 of Clark & McKinnon's Addition to Madison, Lake County, South Dakota
30	35+34.03	to	35+73.60	LT	TEMP	Cut, Fill	392 Sq.Ft.	Amert Family Living Trust	Lot 32 in Block 3 of Town Proprietor's First Addition to Madison, Lake County, South Dakota
30	PLAT			LT	PERM	R/W	5 Sq.Ft.	Amert Family Living Trust	Lot 32 in Block 3 of Town Proprietor's First Addition to Madison, Lake County, South Dakota
A16	35+73.60	to	36+23.82	LT	TEMP	Cut, Fill	502 Sq.Ft.	Vernon L. Haugaard and Karen K. Haugaard	Lot 31 in Block 3 of Town Proprietor's First Addition to Madison, Lake County, South Dakota
A17	36+23.82	to	36+74.05	LT	TEMP	Cut, Fill	502 Sq.Ft.	Joshua D. Carpenter	Lot 30 in Block 3 of Town Proprietor's First Addition to Madison, Lake County, South Dakota
A18	36+74.05	to	37+24.55	LT	TEMP	Cut, Fill	703 Sq.Ft.	Russell C. Beldin Grantor Trust	Lot 29 in Block 3 of Town Proprietor's First Addition to Madison, Lake County, South Dakota

RIGHT OF WAY AND EASEMENT OWNERSHIP TABLE

FOR BIDDING PURPOSES ONLY

Parcel No.	Station (Begin)		Station (End)	Side	Type	Purpose	Area		Property Owner	Property Description
A19	37+40.63	to	37+96.72	LT	TEMP	Cut, Fill	762	Sq.Ft.	Terrance G. Timmer and Beverley S. Timmer	The South 90 Feet of the West 5 Feet of Lot 27, and the South 90 Feet of Lot 28, all in Block 3 of Town Proprietor's First Addition to Madison, Lake County, South Dakota
31	37+96.72	to	38+91.04	LT	TEMP	Cut, Fill	1043	Sq.Ft.	Amert Family Living Trust	The South 90 Feet of Lot 26 except the East 3.3 Feet thereof, and the South 90 Feet of Lot 27 except the West 5 Feet thereof, all in Block 3 of Town Proprietor's First Addition to Madison, Lake County, South Dakota
31	EXHIBIT			LT	PERM	Lighting	10	Sq.Ft.	Amert Family Living Trust	The South 90 Feet of Lot 27 except the West 5 Feet thereof in Block 3 of Town Proprietor's First Addition to Madison, Lake County, South Dakota
31	PLAT			LT	PERM	Roadway	59	Sq.Ft.	Amert Family Living Trust	The South 90 Feet of Lot 26 except the East 3.3 Feet thereof in Block 3 of Town Proprietor's First Addition to Madison, Lake County, South Dakota
32	35+23.29	to	35+73.20	RT	TEMP	Cut, Fill, Driveway	881	Sq.Ft.	E. Eugene Carr and Carolyn J. Carr	Lot 14 in Block 11 of Town Proprietor's First Addition to Madison, Lake County, South Dakota
32	PLAT			RT	PERM	R/W	2	Sq.Ft.	E. Eugene Carr and Carolyn J. Carr	Lot 14 in Block 11 of Town Proprietor's First Addition to Madison, Lake County, South Dakota
33	35+73.20	to	37+23.91	RT	TEMP	Cut, Fill, Driveway	2084	Sq.Ft.	Marlon K. Wiebe	Lot 13, Lot 12 and Lot 11 in Block 11 of Town Proprietor's First Addition to Madison, Lake County, South Dakota
33	EXHIBIT			RT	PERM	Lighting	15	Sq.Ft.	Marlon K. Wiebe	Lot 13 and Lot 12 in Block 11 of Town Proprietor's First Addition to Madison, Lake County, South Dakota
34	37+37.86	to	38+74.74	RT	TEMP	Cut, Fill, Driveway	2387	Sq.Ft.	KaRy, LLC, a South Dakota Limited Liability Company	Lot 1 in Block 11 of Town Proprietor's First Addition to Madison, Lake County, South Dakota
34	PLAT			LT	PERM	R/W	2	Sq.Ft.	KaRy, LLC, a South Dakota Limited Liability Company	Lot 1 in Block 11 of Town Proprietor's First Addition to Madison, Lake County, South Dakota
35	39+56.89	to	41+65.46	LT	TEMP	Cut, Fill, Driveway	4120	Sq.Ft.	McDonald's Corporation, a Delaware corporation	Lot 21, Lot 22, Lot 23, and Lot 24 except the West 12.3 Feet thereof, and vacated alley between Lot 21 and Lot 22, all in Block 3 of Town Proprietor's First Addition to Madison, Lake County, South Dakota
35	PLAT			LT	PERM	R/W	18	Sq.Ft.	McDonald's Corporation, a Delaware corporation	Lot 24 except the West 12.3 Feet thereof in Block 3 of Town Proprietor's First Addition to Madison, Lake County, South Dakota
A20	41+65.46	to	42+55.51	LT	TEMP	Cut, Fill, Driveway	2701	Sq.Ft.	Donna J. Visser	Lot 19 except the East 14 Feet thereof, and Lot 20, all in Block 3 of Town Proprietor's First Addition to Madison, Lake County, South Dakota
36	39+54.74	to	40+97.63	RT	TEMP	Cut, Fill	1645	Sq.Ft.	Terrance G. Timmer and Beverley S. Timmer	Lot 12 in Block 4 of Town Proprietor's First Addition to Madison, Lake County, South Dakota
36	PLAT			RT	PERM	R/W	2	Sq.Ft.	Terrance G. Timmer and Beverley S. Timmer	Lot 12 in Block 4 of Town Proprietor's First Addition to Madison, Lake County, South Dakota
A21	41+11.64	to	42+54.36	RT	TEMP	Cut, Fill, Driveway	1299	Sq.Ft.	Lindsey K. Herr	Lot 1 in Block 4 of Town Proprietor's First Addition to Madison, Lake County, South Dakota
37	43+21.54	to	44+25.78	LT	TEMP	Cut, Fill, Driveway	2440	Sq.Ft.	Realty Income Corporation	Lot 16 and Lot 17 in Block 3 of Town Proprietor's First Addition to Madison, Lake County, South Dakota
37	PLAT			LT	PERM	R/W	113	Sq.Ft.	Realty Income Corporation	Lot 17 in Block 3 of Town Proprietor's First Addition to Madison, Lake County, South Dakota
A22	44+25.61	to	44+77.90	LT	TEMP	Cut, Fill	913	Sq.Ft.	Kenneth Wede and Chris Wede	Lot 15 in Block 3 of Town Proprietor's First Addition to Madison, Lake County, South Dakota
38	44+93.91	to	46+29.66	LT	TEMP	Cut, Fill, Driveway	2465	Sq.Ft.	Kenneth Wede Revocable Trust	Lot 12 except the East 14 Feet thereof, Lot 13, and Lot 14, all in Block 3 of Town Proprietor's First Addition to Madison, Lake County, South Dakota
38	PLAT			LT	PERM	R/W	5	Sq.Ft.	Kenneth Wede Revocable Trust	Lot 12 except the East 14 Feet thereof in Block 3 of Town Proprietor's First Addition to Madison, Lake County, South Dakota
A23	43+40.82	to	46+27.32	RT	TEMP	Cut, Fill, Driveway	3720	Sq.Ft.	Roemen Properties, LLC	Lot 12 and Lot 1 and Vacated Alley between said Lots in Block 6 of the Original Plat of Madison, Lake County, South Dakota
39	47+05.44	to	47+42.53	LT	TEMP	Cut, Fill	177	Sq.Ft.	Douglas J. Caron	Lot 10 except the West 14.45 Feet thereof, in Block 3 of Town Proprietor's First Addition to Madison, Lake County, South Dakota
39	PLAT			LT	PERM	R/W	62	Sq.Ft.	Douglas J. Caron	Lot 10 except the West 14.45 Feet thereof, in Block 3 of Town Proprietor's First Addition to Madison, Lake County, South Dakota
A24	47+42.65	to	48+48.86	LT	TEMP	Cut, Fill, Driveway	1284	Sq.Ft.	Rodney W. Goth and Norma J. Goth	Lot 8 and Lot 9 in Block 3 of Town Proprietor's First Addition to Madison, Lake County, South Dakota
40	48+62.65	to	49+97.57	LT	TEMP	Cut, Fill, Driveway	1483	Sq.Ft.	Great Western Bank	Lot 1 in Block 3 of Town Proprietor's First Addition to Madison, Lake County, South Dakota
40	PLAT			LT	PERM	R/W	27	Sq.Ft.	Great Western Bank	Lot 1 in Block 3 of Town Proprietor's First Addition to Madison, Lake County, South Dakota
A25	47+07.33	to	48+44.43	RT	TEMP	Cut, Fill, Driveway	1519	Sq.Ft.	Thy Til Enterprises, LLC	Lot 18 in Block 5 of the Original Plat of Madison, Lake County, South Dakota
A26	48+58.43	to	49+95.32	RT	TEMP	Cut, Fill	320	Sq.Ft.	The Insurance and Real Estate Market, Inc., a South Dakota Corporation	Lot 1 in Block 5 of the Original Plat of Madison, Lake County, South Dakota

RIGHT OF WAY AND EASEMENT OWNERSHIP TABLE

FOR BIDDING PURPOSES ONLY

Parcel No.	Station (Begin)		Station (End)	Side	Type	Purpose	Area	Property Owner	Property Description
41	50+97.68	to	52+33.28	LT	TEMP	Cut, Fill, Driveway	1900 Sq.Ft.	Madison United Methodist Church	Lot 5 except the North 60 Feet thereof and except the East 14 Feet thereof, Lot 6 except the North 60 Feet thereof, and all of Lot 7, all in Block 2 of Town Proprietor's First Addition to Madison, Lake County, South Dakota
41	52+47.31	to	53+83.48	LT	TEMP	Cut, Fill, Driveway	2160 Sq.Ft.	Madison United Methodist Church	Lot 8 and Lot 9 in Block 2 of Town Proprietor's First Addition to Madison, Lake County, South Dakota
41	PLAT			LT	PERM	R/W	3 Sq.Ft.	Madison United Methodist Church	Lot 8 in Block 2 of Town Proprietor's First Addition to Madison, Lake County, South Dakota
42	50+95.05	to	52+31.82	RT	TEMP	Cut, Fill	1761 Sq.Ft.	DeLon Mork	Lot 18 in Block 4 of the Original Plat of Madison, Lake County, South Dakota
42	PLAT			RT	PERM	R/W	9 Sq.Ft.	DeLon Mork	Lot 18 in Block 4 of the Original Plat of Madison, Lake County, South Dakota
A27	52+45.77	to	53+81.80	RT	TEMP	Cut, Fill, Driveway	1782 Sq.Ft.	DeLon A. Mork - Trustee	Lot 1 in Block 4 of the Original Plat of Madison, Lake County, South Dakota
43	54+62.44	to	56+17.27	LT	TEMP	Cut, Fill	2077 Sq.Ft.	Michael S. Brooke and Artyce M. Brooke	The West 20 Feet of Normal Street vacated by the City of Madison contiguous to Lot 1, all of Lot 1, and the South 115 Feet of Lot 2, and the South 115 Feet of Lot 3 except the West 15 Feet thereof, all in Block 2 of Town Proprietor's First Addition to Madison, Lake County, South Dakota
43	PLAT			LT	PERM	R/W	10 Sq.Ft.	Michael S. Brooke and Artyce M. Brooke	The South 115 Feet of Lot 3 except the West 15 Feet thereof in Block 2 of Town Proprietor's First Addition to Madison, Lake County, South Dakota
A28	56+17.29	to	56+77.29	LT	TEMP	Cut, Fill, Driveway	840 Sq.Ft.	Duane R. Pierce and Donna J. Pierce	The East 60 Feet of Normal Street vacated by the City of Madison, between Block 1 and Block 2 of Town Proprietor's First Addition to Madison, Lake County, South Dakota, sometimes described as commencing at the Southwest corner of Lot 9, Block 1 of Town Proprietor's First Addition to Madison, Lake County, South Dakota; thence due West 60 Feet; thence due North 167 Feet; thence due East 60 Feet; thence due South along the West line of said Lot 9 to the place of beginning.
44	56+77.29	to	57+65.50	LT	TEMP	Cut, Fill, Driveway	1344 Sq.Ft.	Leroy E. Tunender	The South 118.33 Feet of the West 30 Feet of Lot 8 and the South 117.5 Feet of Lot 9, all in Block 1 of Town Proprietor's First Addition to Madison, Lake County, South Dakota
44	PLAT			LT	PERM	R/W	48 Sq.Ft.	Leroy E. Tunender	The South 118.33 Feet of the West 30 Feet of Lot 8 in Block 1 of Town Proprietor's First Addition to Madison, Lake County, South Dakota
A29	54+81.93	to	56+17.93	RT	TEMP	Cut, Fill, Driveway	1088 Sq.Ft.	Jodi M. Graham	Lot 12 in Block 3 of the Original Plat of Madison, Lake County, South Dakota
45	56+32.01	to	57+67.63	RT	TEMP	Cut, Fill, Driveway	768 Sq.Ft.	Eric D. Sheppard and Courtney J. Sheppard	Lot 1 in Block 3 of the Original Plat of Madison, Lake County, South Dakota
45	PLAT			RT	PERM	R/W	24 Sq.Ft.	Eric D. Sheppard and Courtney J. Sheppard	Lot 1 in Block 3 of the Original Plat of Madison, Lake County, South Dakota
46	58+35.44	to	59+35.24	LT	TEMP	Cut, Fill, Driveway	1244 Sq.Ft.	Rear View Mirror, LLC	Lot 5 and Lot 6 in Block 1 of Town Proprietor's First Addition to Madison, Lake County, South Dakota
46	PLAT			LT	PERM	R/W	6 Sq.Ft.	Rear View Mirror, LLC	Lot 6 in Block 1 of Town Proprietor's First Addition to Madison, Lake County, South Dakota
A30	59+35.24	to	59+85.24	LT	TEMP	Cut, Fill	550 Sq.Ft.	Richard L. Kessler	Lot 4 in Block 1 of Town Proprietor's First Addition to Madison, Lake County, South Dakota
A31	59+85.24	to	60+35.24	LT	TEMP	Cut, Fill, Driveway	550 Sq.Ft.	Rodney W. Goth Living Trust	Lot 3 in Block 1 of Town Proprietor's First Addition to Madison, Lake County, South Dakota
A32	60+35.24	to	60+85.24	LT	TEMP	Cut, Fill, Driveway	550 Sq.Ft.	Cole's Petroleum Products, Inc., a South Dakota Corporation	The South 125 Feet of Lot 2 in Block 1 of Town Proprietor's First Addition to Madison, Lake County, South Dakota
A33	60+85.24	to	61+17.01	LT	TEMP	Cut, Fill	241 Sq.Ft.	Cole's Petroleum Products, Inc., a South Dakota Corporation	The South 125 Feet of Cole's Subdivision of Lot 1, Block 1, Town Proprietor's First Addition to Madison, Lake County, South Dakota
A34	58+47.68	to	59+83.54	RT	TEMP	Cut, Fill, Driveway	1934 Sq.Ft.	Justin L. Blessinger and Christina M. Blessinger	Lot 12 in Block 2 of the Plat of Kennedy's Subdivision of Block 2 of the Original Plat of Madison, Lake County, South Dakota
A35	59+97.54	to	61+33.03	RT	TEMP	Cut, Fill, Driveway	5794 Sq.Ft.	Dakota State University Foundation	Lot 1, Lot 2 and Lot 3 in Block 2 of the Plat of Kennedy's Subdivision of Block 2 of the Original Plat of Madison, Lake County, South Dakota, except Lot H-1 of Lot 1 thereof
47	62+15.68	to	62+51.36	LT	TEMP	Cut, Fill	454 Sq.Ft.	Drew T. Skinner and Carol M. Skinner	Lot 6, except the North 89 Feet thereof, in Block 5 of Town Proprietor's Second Addition to the City of Madison, Lake County, South Dakota
47	PLAT			LT	PERM	R/W	3 Sq.Ft.	Drew T. Skinner and Carol M. Skinner	Lot 6, except the North 89 Feet thereof, in Block 5 of Town Proprietor's Second Addition to the City of Madison, Lake County, South Dakota
48	62+12.91	to	63+40.86	RT	TEMP	Cut, Fill, Driveway	3308 Sq.Ft.	Roy J. Lindsay, Jr. and Kathleen M. Lindsay	Lots 11 and 12, in Block One of the Original Plat of Madison, Lake County, South Dakota
48	PLAT			RT	PERM	R/W	364 Sq.Ft.	Roy J. Lindsay, Jr. and Kathleen M. Lindsay	Lot 12, in Block One of the Original Plat of Madison, Lake County, South Dakota
A36	62+12.72	to	62+32.60	RT	TEMP	Cut, Fill	252 Sq.Ft.	Mary Kimberly Ebson	Lot 10 in Block One of the Original Plat of Madison, Lake County, South Dakota

RIGHT OF WAY AND EASEMENT OWNERSHIP TABLE

FOR BIDDING PURPOSES ONLY

Parcel No.	Station (Begin)		Station (End)	Side	Type	Purpose	Area	Property Owner	Property Description
49	59+97.54	to	61+33.03	LT	TEMP	Cut, Fill	219 Sq.Ft.	Cole's Petroleum Products, Inc., a South Dakota Corporation	Lot 2 of Cole's Subdivision of Lot 1, Block 1, Town Proprietor's First Addition to Madison, Lake County, South Dakota
49	EXHIBIT			LT	PERM	Highway Purposes	87 Sq.Ft.	Cole's Petroleum Products, Inc., a South Dakota Corporation	Lot 2 of Cole's Subdivision of Lot 1, Block 1, Town Proprietor's First Addition to Madison, Lake County, South Dakota

FOR BIDDING PURPOSES ONLY

STATE OF SOUTH DAKOTA	PROJECT	SHEET	TOTAL SHEETS
	NH 0034(160)386	B32	B133

Plotting Date: 12/4/2015

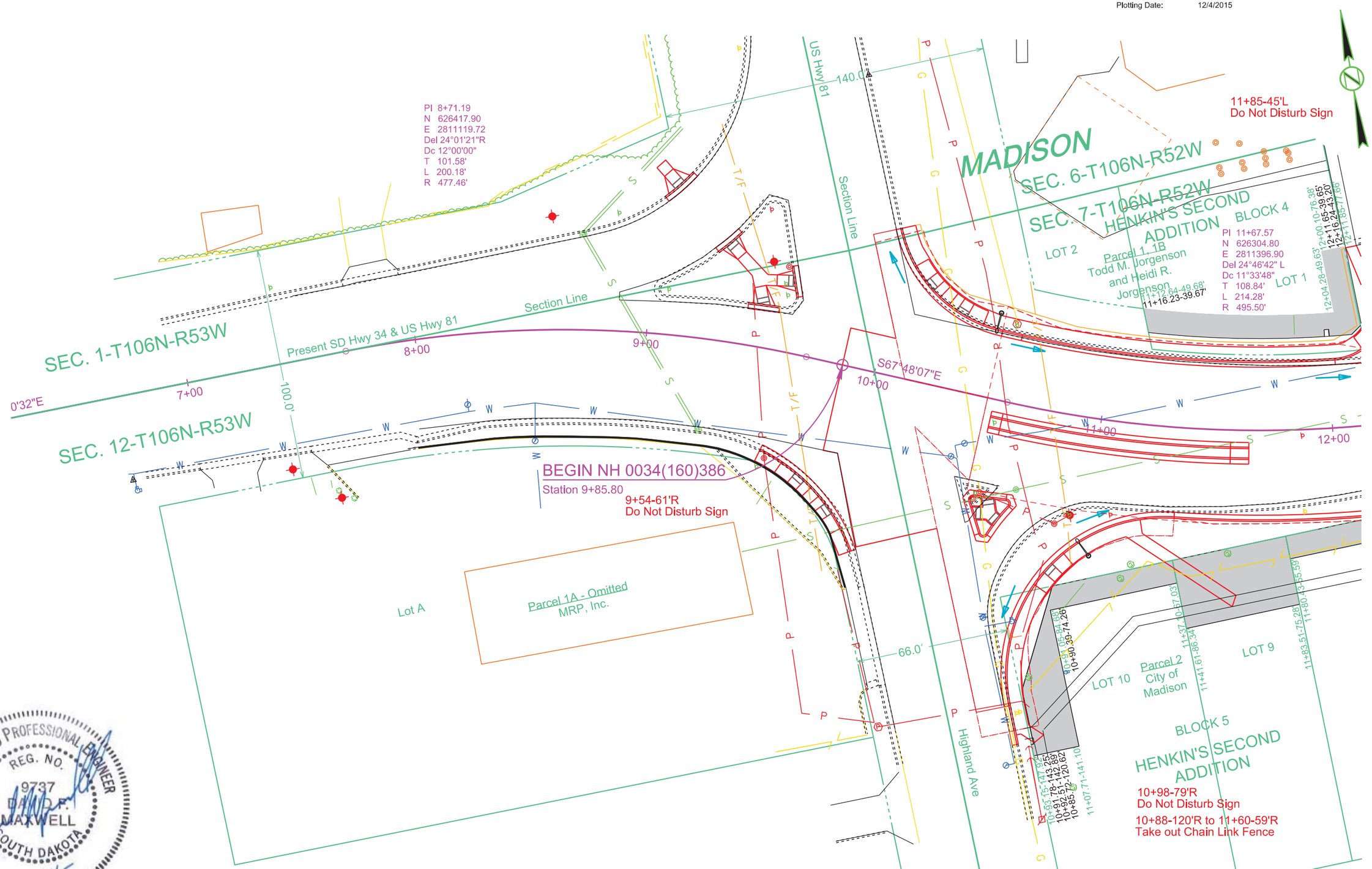

REGISTERED PROFESSIONAL ENGINEER
REG. NO. 9737
DAVID P. MAXWELL
SOUTH DAKOTA
12/4/15

STATE OF SOUTH DAKOTA	PROJECT	SHEET	TOTAL SHEETS
	NH 0034(160)386	B33	B133

FOR BIDDING PURPOSES ONLY

Plotting Date: 12/4/2015

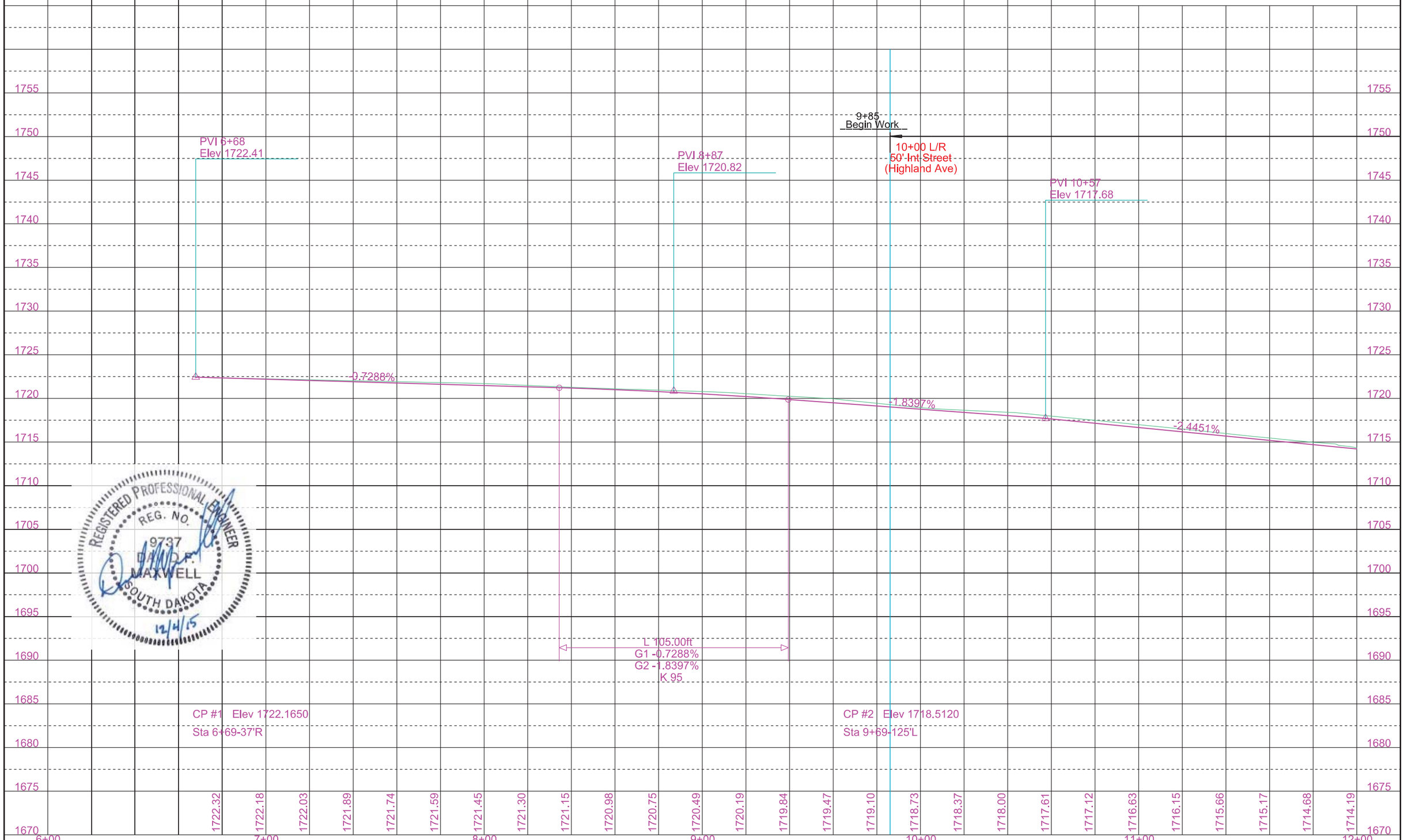

REGISTERED PROFESSIONAL ENGINEER
REG. NO. 9737
DAVID P. MAXWELL
SOUTH DAKOTA
12/4/15

STATE OF SOUTH DAKOTA	PROJECT	SHEET	TOTAL SHEETS
	NH 0034(160)386	B34	B133

Plotting Date: 12/4/2015

FOR BIDDING PURPOSES ONLY

Take out Drop Inlets
with Frame and Grate
at the following locations:
15+75-25'L
15+93-41'L
16+17-25'R

12+71-36'L to 13+57-35'L
Take out Retaining Wall

15+75-25'L to 16+19-8'R
Take out 18" - 24' RCP
(Incidental Work, Grading)

15+75-25'L to 16+19-8'R
Take out 18" - 54' RCP
(Incidental Work, Grading)

16+19-8'R to 19+78-8'R
Take out 8" - 17' PVC
(Incidental Work, Grading)

16+19-8'R to 19+78-8'R
Take out 12" - 360' VCP
(Incidental Work, Grading)

16+19-8'R
Take out Manhole with
Frame and Cover

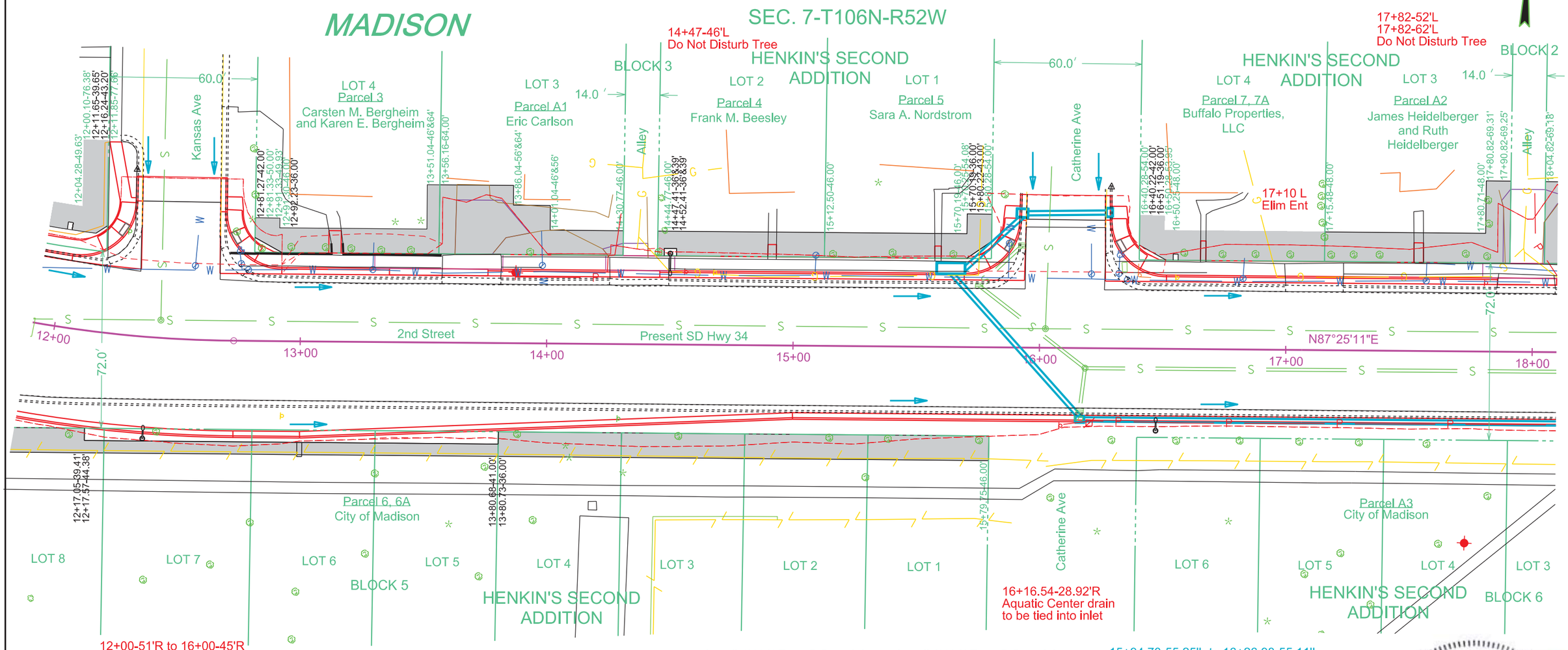

12+00-51'R to 16+00-45'R
Do Not Disturb Fence

Install 4' X 3' Type B Drop Inlet
with Type B Frame & Grate and
6" Concrete Collar
at the following location:
15+92.67-54.58'L

Install 2' X 3' Type B Drop Inlet
with Type B Frame & Grate and
6" Concrete Collar
at the following locations:
16+16.54-28.92'R
16+27.98-55.12'L

Install 4' x 11' Type S Drop Inlet
Base and Type S Precast Lid
at the following location:
15+63.79-31.38'L

15+94.70-55.25'L to 16+26.98-55.11'L
Install 18" - 32' RCP
(Between Drop Inlets)

15+69.29-31.54'L to 15+92.63-53.08'L
Install 18" - 32' RCP
(Between Drop Inlets)

15+62.79-29.92'L to 16+16.54-27.92'R
Install 18" - 80' RCP
(Between Drop Inlets)

16+18.04-28.92'R to 19+14.54-28.92'R
Install 18" - 298' RCP
(Between Drop Inlets)

REGISTERED PROFESSIONAL ENGINEER
REG. NO. 9737
DAVID P. MAXWELL
SOUTH DAKOTA
12/4/15

STATE OF SOUTH DAKOTA	PROJECT	SHEET	TOTAL SHEETS
	NH 0034(160)386	B35	B133

FOR BIDDING PURPOSES ONLY

Plotting Date: 12/4/2015

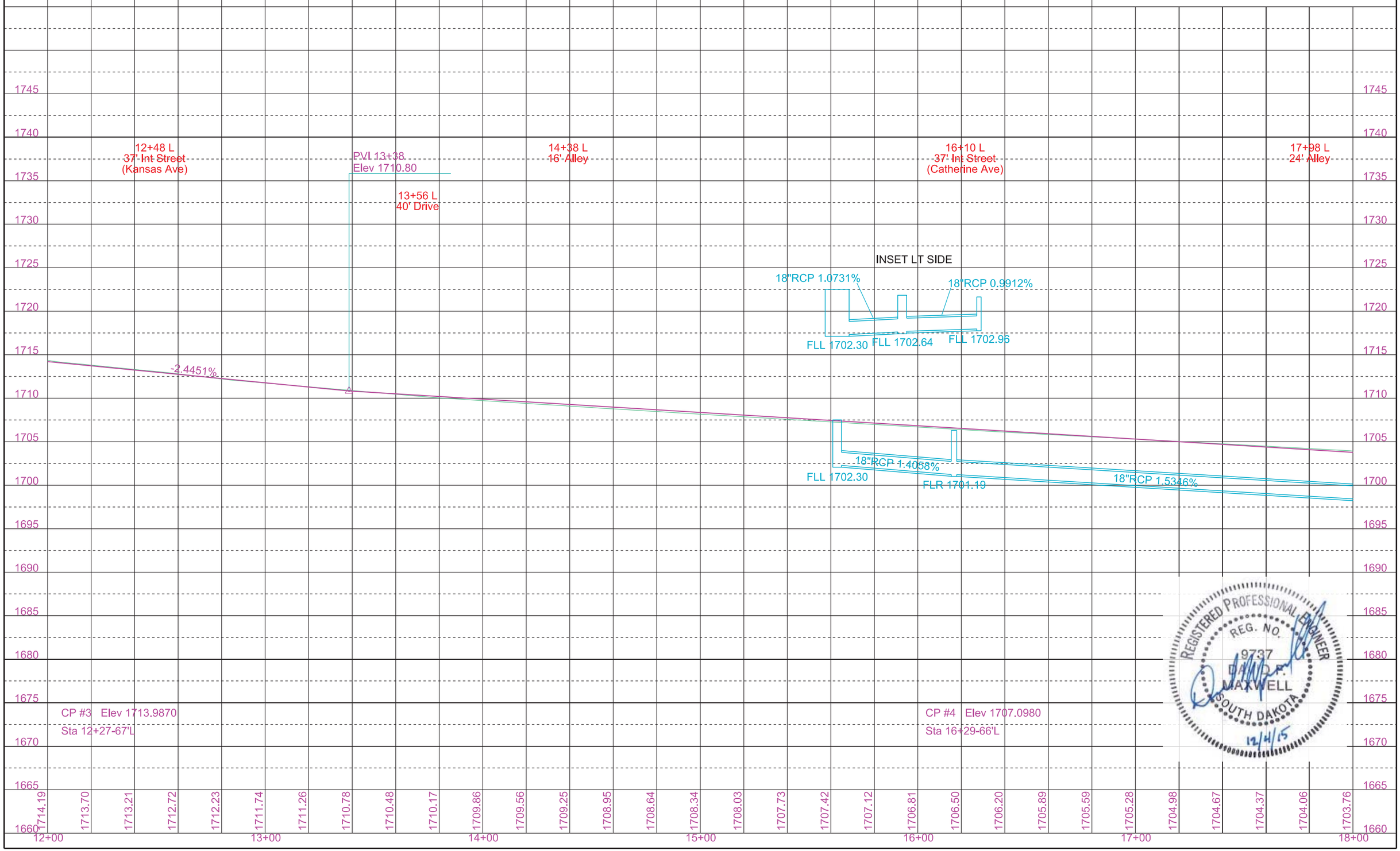

STATE OF SOUTH DAKOTA	PROJECT	SHEET	TOTAL SHEETS
	NH 0034(160)386	B36	B133

Plotting Date: 12/4/2015

FOR BIDDING PURPOSES ONLY

REGISTERED PROFESSIONAL ENGINEER REG. NO. 9737 DAVID R. MAXWELL SOUTH DAKOTA 12/4/15

MADISON

Take out Drop Inlets
with Frame and Grate
at the following locations:
19+37-25'L
19+54-42'L
19+37-26'R
23+00-27'R
23+00-25'L
23+24-43'R
23+25-42'L
23+59-42'L
23+59-44'R

19+37-25'L to 19+54-42'L
Take out 24" - 24' RCP
(Incidental Work, Grading)

19+37-25'L to 19+78-8'R
Take out 18" - 52' RCP
(Incidental Work, Grading)

19+37-26'R to 19+78-8'R
Take out 18" - 45' RCP
(Incidental Work, Grading)

18+73-51'L
19+27-52'L
Do Not Disturb Tree

19+78-8'R to 23+50-7'R
Take out 12" - 372' VCP
(Incidental Work, Grading)

19+78-8'R
Take out Manhole with
Frame and Cover

20+02-53'L to 20+01-65'L
Do Not Disturb Shrubs

20+78-53'L
Do Not Disturb Tree

20+78-45'L to 20+87-44'L
Do Not Disturb Landscaping and Flag Pole

23+00-25'L to 23+25-42'L
Take out 18" - 30' RCP
(Incidental Work, Grading)

23+25-42'L to 23+59-42'L
Take out 24" - 35' RCP
(Incidental Work, Grading)

23+00-25'L to 23+50-7'R
Take out 18" - 59' RCP
(Incidental Work, Grading)

23+24-43'R to 23+50-12'R
Take out 18" - 44' RCP
(Incidental Work, Grading)

23+00-27'R to 23+24-43'R
Take out 18" - 30' RCP
(Incidental Work, Grading)

23+50-7'R to 23+59-44'R
Take out 18" - 38' RCP
(Incidental Work, Grading)

23+50-12'R to 23+48-64'R
Take out 12" - 57' VCP
(Incidental Work, Grading)

23+50-7'R
Take out Manhole with
Frame and Cover

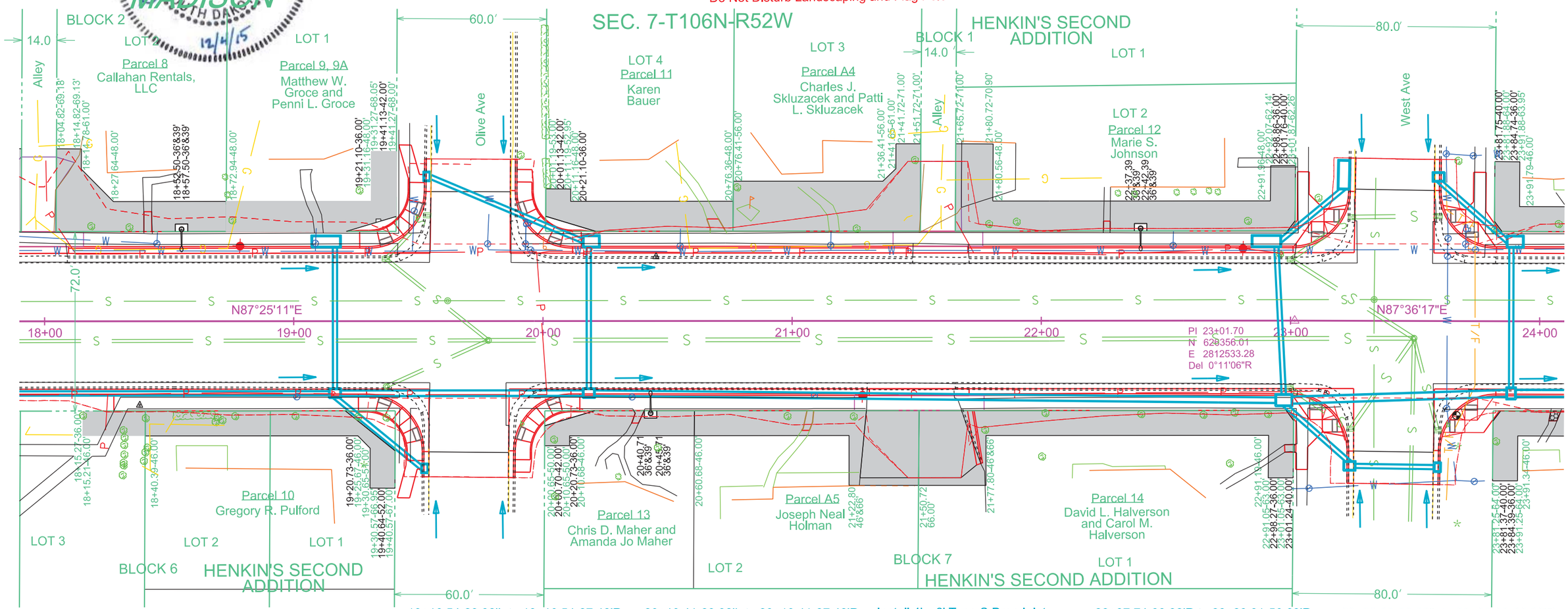

18+42-41'R to 18+72-42'R
Remove & Reset Vinyl Fence

Install 2' x 3' Type B Drop Inlet
with Type B Frame & Grate with
6" Concrete Collar
at the following locations:
19+52.53-59.06'R
19+53.49-58.04'L
23+59.11-58.61'R

Install 3' x 4' Type B Drop Inlet
with Type B Frame & Grate with
6" Concrete Collar
at the following locations:
19+16.54-28.92'R
20+18.41-28.92'R

Install 4' x 3' Type B Drop Inlet
with Type B Frame & Grate with
6" Concrete Collar
at the following locations:
23+23.81-58.19'R
23+59.32-57.79'L
23+88.60-28.92'R

19+16.54-29.92'L to 19+16.54-27.42'R
Install 18" - 58' RCP
(Between Drop Inlets)

19+16.83-30.46'R to 19+51.53-59.05'R
Install 18" - 46' RCP
(Between Drop Inlets)

19+18.54-28.92'R to 20+16.41-28.92'R
Install 24" - 98' RCP
(Between Drop Inlets)

19+54.49-58.02'L to 20+16.41-31.92'L
Install 18" - 68' RCP
(Between Drop Inlets)

20+18.41-29.92'L to 20+18.41-27.42'R
Install 18" - 58' RCP
(Between Drop Inlets)

20+20.41-28.92'R to 22+94.31-31.92'R
Install 24" - 274' RCP
(Between Drop Inlets)

22+95.84-31.92'L to 23+21.22-53.08'L
Install 18" - 34' RCP
(Between Drop Inlets)

22+94.33-29.92'L to 22+97.31-29.92'R
Install 18" - 60' RCP
(Between Drop Inlets)

Install 4' x 6' Type S Drop Inlet
Base and Type S Precast Lid
at the following locations:
20+19.41-31.38'L
22+97.31-31.38'R
23+90.10-31.38'L

Install 4' x 11' Type S Drop Inlet
Base and Type S Precast Lid
at the following locations:
19+13.04-31.38'L
22+90.34-31.38'L
23+21.85-58.58'L

22+97.74-33.92'R to 23+23.81-56.69'R
Install 18" - 36' RCP
(Between Drop Inlets)

23+25.81-58.19'R to 23+58.11-58.60'R
Install 18" - 34' RCP
(Between Drop Inlets)

23+00.31-31.92'R to 23+87.10-28.92'R
Install 24" - 88' RCP
(Between Drop Inlets)

23+59.31-56.29'L to 23+87.10-31.92'L
Install 18" - 38' RCP
(Between Drop Inlets)

23+88.60-29.92'L to 23+88.60-26.92'R
Install 18" - 58' RCP
(Between Drop Inlets)

23+90.10-28.92'R to 25+65.20-28.92'R
Install 30" - 176' RCP
(Between Drop Inlets)

STATE OF SOUTH DAKOTA	PROJECT	SHEET	TOTAL SHEETS
	NH 0034(160)386	B37	B133

FOR BIDDING PURPOSES ONLY

Plotting Date: 12/4/2015

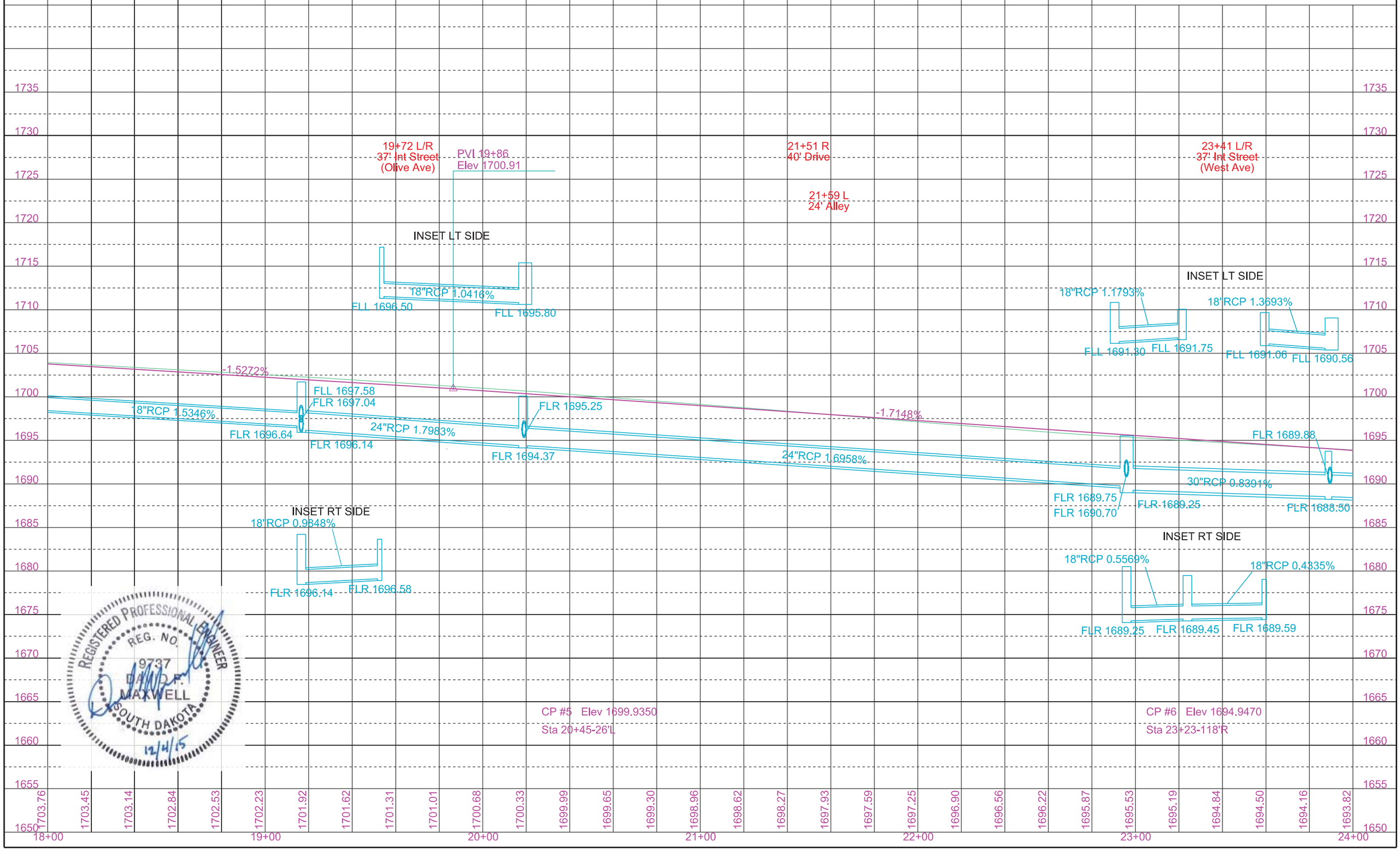

REGISTERED PROFESSIONAL ENGINEER
REG. NO. 9737
DAVID P. MAXWELL
SOUTH DAKOTA
12/4/15

STATE OF SOUTH DAKOTA	PROJECT	SHEET	TOTAL SHEETS
	NH 0034(160)386	B38	B133

FOR BIDDING PURPOSES ONLY

Plotting Date: 12/4/2015

REGISTERED PROFESSIONAL ENGINEER REG. NO. 9737 DAVID P. MAXWELL SOUTH DAKOTA 12/4/15

Take out Drop Inlets
with Frame and Grate
at the following locations:
26+79-25'L
27+03-43'L
27+38-44'L
26+76-26'R

26+76-26'R to 27+30-7'R
Take out 18" - 54' RCP
(Incidental Work, Grading)

26+79-25'L to 27+03-43'L
Take out 18" - 30' RCP
(Incidental Work, Grading)

26+79-25'L to 27+30-7'R
Take out 18" - 60' RCP
(Incidental Work, Grading)

27+03-43'L to 27+38-44'L
Take out 18" - 34' RCP
(Incidental Work, Grading)

26+50-35'L to 26+81-46'L
Take out Retaining Wall

27+30-7'R to 31+05-9'R
Take out 12" - 379' VCP
(Incidental Work, Grading)

27+30-7'R
Take out Manhole with
Frame and Cover

27+60-48'L to 30+00-36'L
Take out Retaining Wall

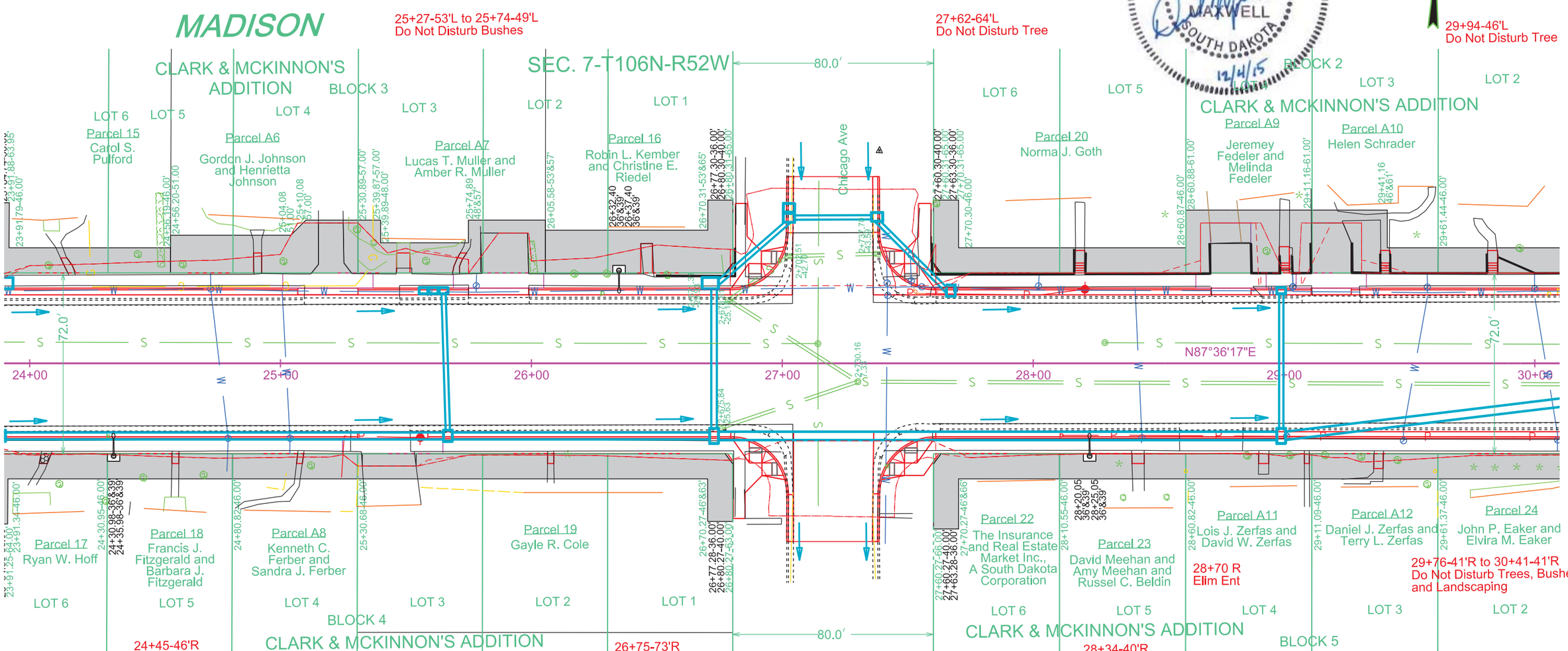

Install 2' X 3' Type B Drop Inlet
with Type B Frame & Grate and
6" Concrete Collar
at the following locations:
25+57.00-28.92'L
25+61.00-28.92'L
25+65.00-28.92'L
28+98.90-28.92'L

Install 4' x 6' Type S Drop Inlet
Base with Type S Precast Lid
at the following locations:
26+71.31-31.38'L

Install 4' X 3' Type B Drop Inlet
with Type B Frame & Grate and
6" Concrete Collar
at the following locations:
25+66.70-28.92'R
27+02.65-57.92'L
27+02.69-61.92'L
27+37.80-58.32'L
27+67.17-28.92'L

25+65.00-27.92'L to 25+66.70-26.92'R
Install 18" - 56' RCP
(Between Drop Inlets)

25+68.20-28.92'R to 26+71.31-28.92'R
Install 30" - 104' RCP
(Between Drop Inlets)

26+72.81-29.93'L to 26+72.81-26.92'R
Install 24" - 58' RCP
(Between Drop Inlets)

27+02.64-56.42'L to 26+74.31-31.94'L
Install 18" - 38' RCP
(Between Drop Inlets)

27+04.65-57.90'L to 27+35.80-58.31'L
Install 18" - 32' RCP
(Between Drop Inlets)

27+37.81-56.82'L to 27+65.67-28.92'L
Install 18" - 40' RCP
(Between Drop Inlets)

26+74.31-28.92'R to 28+97.40-28.92'R
Install 36" - 224' Arch RCP
(Between Drop Inlets)

27+59.31'L to 30+00.00'L
Install Gravity Segmental Block Wall

Install 5.5' X 3' Type B Drop Inlet
with Type B Frame & Grate and
6" Concrete Collar
at the following locations:
26+72.81-28.92'R
28+98.90-28.92'R

28+98.90-27.92'L to 28+98.90-26.92'R
Install 18" - 56' RCP
(Between Drop Inlets)

29+00.04-28.92'R to 30+50.96-10.75'R
Install 36" - 152' RCP
(Between Drop Inlet and Junction Box)

Connect double inlet with 36" RCP opening.

Connect triple inlet with 18" RCP opening.

STATE OF SOUTH DAKOTA	PROJECT	SHEET	TOTAL SHEETS
	NH 0034(160)386	B39	B133

FOR BIDDING PURPOSES ONLY

Plotting Date: 12/4/2015

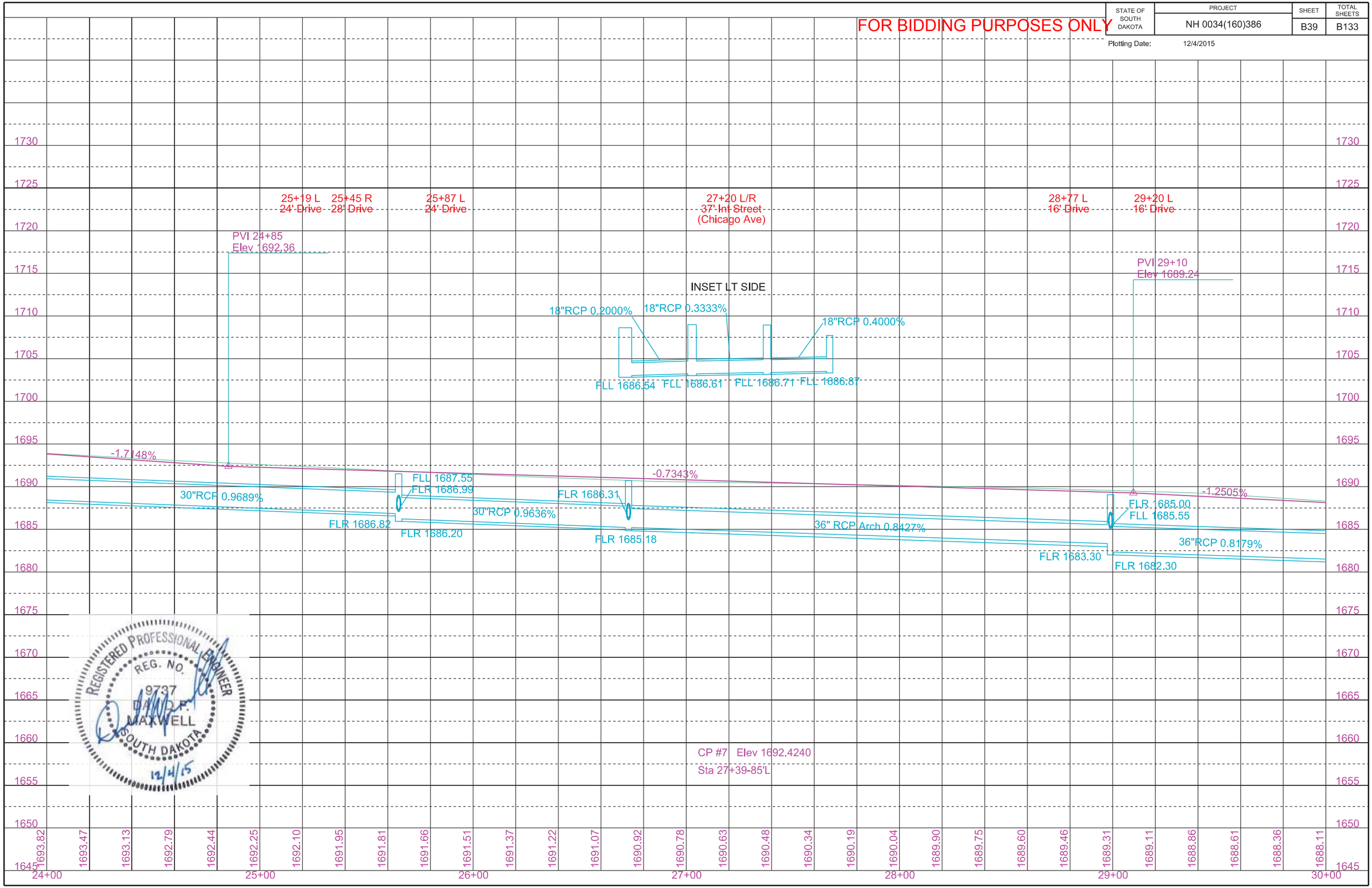

REGISTERED PROFESSIONAL ENGINEER
REG. NO. 9737
DAVID P. MAXWELL
SOUTH DAKOTA
12/4/15

STATE OF SOUTH DAKOTA	PROJECT	SHEET	TOTAL SHEETS
	NH 0034(160)386	B40	B133

Plotting Date: 12/4/2015

FOR BIDDING PURPOSES ONLY

REGISTERED PROFESSIONAL ENGINEER REG. NO. 9737 SOUTH DAKOTA 12/4/15

Take out Drop Inlets with Frame and Grate at the following locations:
30+59-26'L
30+59-25'R
30+83-43'L
31+18-43'L
34+51-27'L
34+42-24'R
34+75-44'L
35+10-45'L

30+59-26'L to 30+83-43'L
Take out 18" - 30' RCP
(Incidental Work, Grading)

30+59-26'L to 31+09-9'R
Take out 18" - 52' RCP
(Incidental Work, Grading)

30+59-25'R to 31+09-9'R
Take out 18" - 58' RCP
(Incidental Work, Grading)

30+83-43'L to 31+18-43'L
Take out 18" - 34' RCP
(Incidental Work, Grading)

31+09-9'R to 31+09-60'R
Take out 12" - 46' RCP
(Incidental Work, Grading)

31+09-9'R
Take out Manhole with Frame and Cover

30+00-36'L to 30+61-50'L
Take out Retaining Wall

31+43-50'L
31+43-64'L
Do Not Disturb Tree

31+42-49'L to 34+50-35'L
Take out Retaining Wall

30+00.00'L to 30+62.01'L
Install Gravity Segmental Block Retaining Wall

31+41.65'L to 31+98.52'L
Install Gravity Segmental Block Retaining Wall

35+29.70'L to 35+73.65'L
Install Type C Concrete Retaining Wall

35+73.65'L to 36+00.30'L
Install Gravity Segmental Block Retaining Wall

34+42-224'R to 34+95-13'R
Take out 18" - 32' RCP
(Incidental Work, Grading)

34+51-27'L to 34+75-44'L
Take out 18" - 30' RCP
(Incidental Work, Grading)

34+51-27'L to 34+95-13'R
Take out 18" - 56' RCP
(Incidental Work, Grading)

34+75-44'L to 35+10-45'L
Take out 18" - 34' RCP
(Incidental Work, Grading)

34+94-60'R to 34+95-13'R
Take out 12" - 47' RCP
(Incidental Work, Grading)

34+95-13'R to 34+98-67'L
Take out 10" - 80' VCP
(Incidental Work, Grading)

34+95-13'R
Take out Manhole with Frame and Cover

35+14-35'L to 36+00-37'L
Take out Retaining Wall

33+97-47'L
Do Not Disturb Windmill & Landscaping

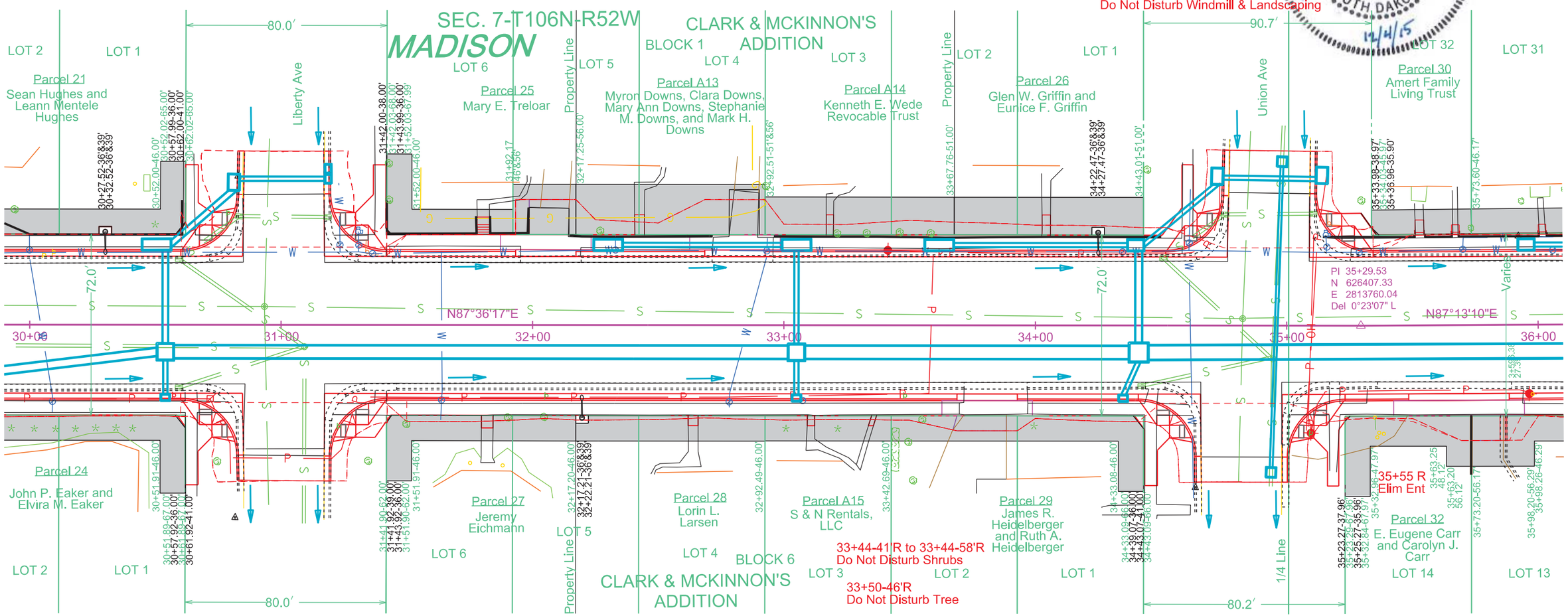

Install 2' X 3' Type B Drop Inlet with Type B Frame & Grate and 6" Concrete Collar at the following locations:
30+53.96-28.92'R
31+18.63-62.11'L
31+18.65-58.11'L
33+05.00-28.92'R
34+34.93-28.92'R

Install 6'x6' Junction Box with Type A9 Manhole Frame & Lid at the following locations:
30+53.96-10.75'R
33+05.00-10.75'R

Install Special 3'x3' Junction Box with Type A9 Manhole Frame & Lid at the following locations:
34+98.14-65.22'L
34+93.80-58.39'R

Install 7'x7' Junction Box with Type A9 Manhole Frame & Lid at the following locations:
34+41.13-10.72'R

34+98.07-63.55'L to 34+93.80-58.44'R
Install 12" - 124' RCP
(Between Junction Boxes)

Connect double inlet with 18" RCP opening.

30+83.20-58.11'L to 31+17.65-58.10'L
Install 18" - 36' RCP
(Between Drop Inlets)

30+55.95-31.92'L to 30+81.08-53.68'L
Install 24" - 34' RCP
(Between Drop Inlets)

30+53.96-29.91'L to 30+53.96-7.75'R
Install 24" - 38' RCP
(Between Drop Inlet and Junction Box)

30+53.96-27.92'R to 30+53.96-13.75'R
Install 18" - 16' RCP
(Between Drop Inlet and Junction Box)

30+56.96-10.75'R to 33+02.00-10.75'R
Install 48" - 246' Arch RCP
(Between Junction Boxes)

32+35.58-31.92'L to 32+99.49-31.92'L
Install 18" - 64' RCP
(Between Drop Inlets)

33+05.00-29.94'L to 33+05.00-7.75'R
Install 18" - 38' RCP
(Between Drop Inlet and Junction Box)

33+05.00-27.92'R to 33+05.00-13.75'R
Install 18" - 16' RCP
(Between Drop Inlet and Junction Box)

Install 4' X 6' Type S Drop Inlet Base with Type S Precast Lid at the following locations:
30+81.05-56.68'L
34+39.92-31.38'L
34+72.91-59.37'L
35+13.38-59.80'L
35+95.38-31.38'L

Install 4' X11' Type S Drop Inlet Base with Type S Precast Lid at the following locations:
30+50.45-31.38'L
32+30.08-31.38'L
33+04.99-31.38'L
33+61.75-31.38'L

33+08.00-10.75'R to 34+37.63-10.75'R
Install 48" - 130' Arch RCP
(Between Junction Boxes)

33+67.25-31.92'L to 34+36.92-31.92'L
Install 18" - 70' RCP
(Between Drop Inlets)

34+41.13-29.93'L to 34+41.13-7.22'R
Install 24" - 38' RCP
(Between Drop Inlet and Junction Box)

34+34.93-27.92'R to 34+41.13-14.22'R
Install 18" - 16' RCP
(Between Drop Inlet and Junction Box)

34+74.36-58.84'L to 35+11.93-58.32'L
Install 18" - 38' RCP
(Between Drop Inlets)

34+42.92-31.94'L to 34+72.30-56.38'L
Install 18" - 40' RCP
(Between Drop Inlets)

34+44.63-10.72'R to 37+52.91-10.75'R
Install 54" - 310' Arch RCP
(Between Junction Boxes)

35+98.38-31.90'L to 36+64.87-31.92'L
Install 18" - 68' RCP
(Between Drop Inlets)

STATE OF SOUTH DAKOTA	PROJECT	SHEET	TOTAL SHEETS
	NH 0034(160)386	B41	B133

FOR BIDDING PURPOSES ONLY

Plotting Date: 12/4/2015

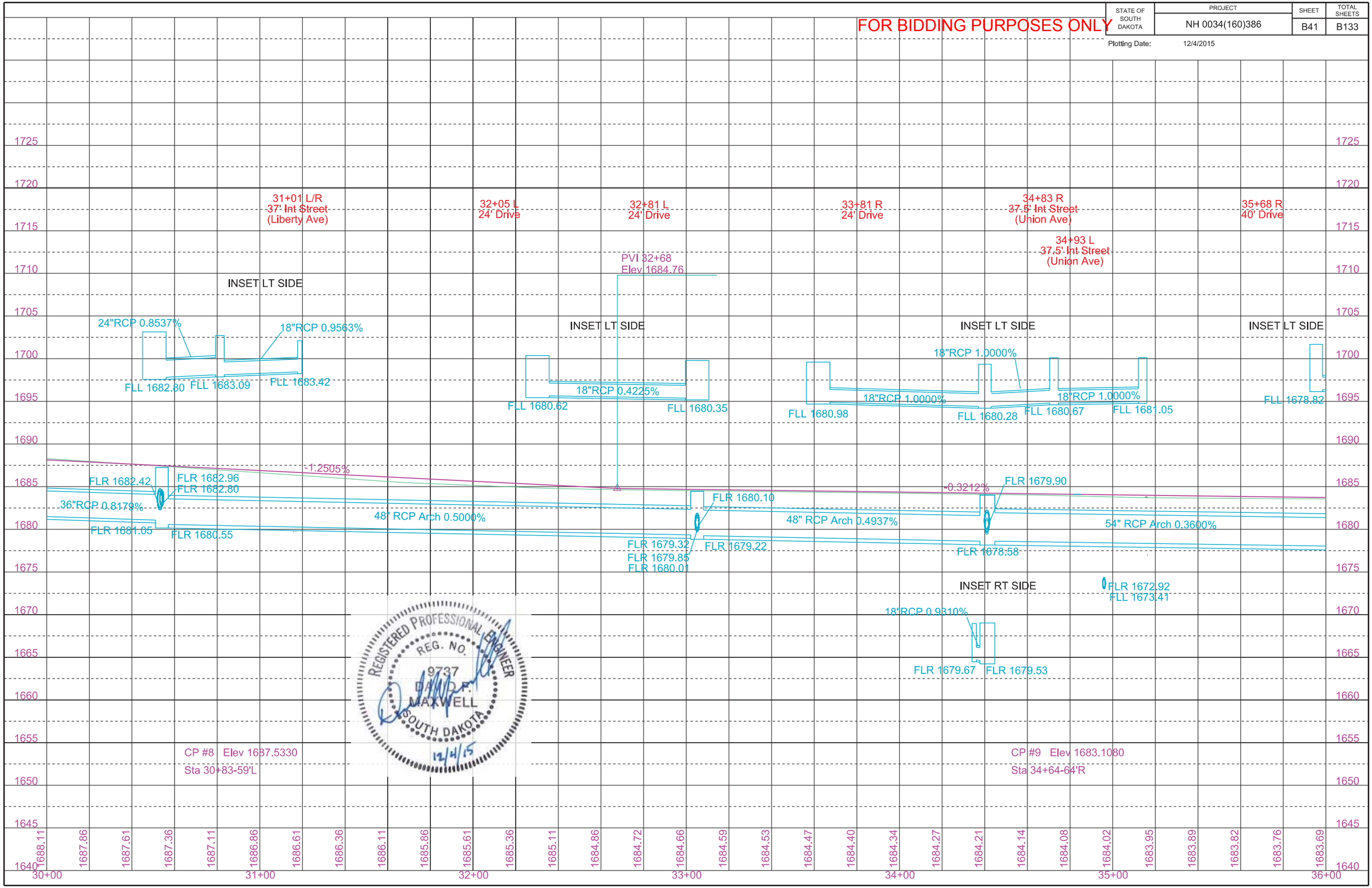

STATE OF SOUTH DAKOTA	PROJECT	SHEET	TOTAL SHEETS
	NH 0034(160)386	B42	B133

Plotting Date: 12/4/2015

FOR BIDDING PURPOSES ONLY

REGISTERED PROFESSIONAL ENGINEER REG. NO. 9737 DAVID A. MAXWELL SOUTH DAKOTA 12/4/15

Take out Drop Inlets with Frame and Grate at the following locations:
38+73-26'R
38+87-26'L
39+06-43'L
39+41-43'L

36+00-37'L to 37+09-37'L
Take out Retaining Wall

37+43-36'L to 38+91-47'L
Take out Retaining Wall

36+03.30'L to 37+20.37'L
Install Gravity Segmental Block Retaining Wall

37+44.37'L to 38+91.41'L
Install Type C Concrete Retaining Wall

39+56.57'L to 41+12.08'L
Install Type C Concrete Retaining Wall

41+50.72'L to 41+84.08'L
Install Type C Concrete Retaining Wall

38+73-26'R to 39+35-10'R
Take out 18" - 62' RCP
(Incidental Work, Grading)

38+87-26'L to 39+06-43'L
Take out 18" - 24' RCP
(Incidental Work, Grading)

38+87-26'L to 39+35-10'R
Take out 18" - 58' RCP
(Incidental Work, Grading)

39+06-43'L to 39+41-43'L
Take out 18" - 34' RCP
(Incidental Work, Grading)

39+35-10'R to 43+08-11'R
Take out 15" - 373' VCP
(Incidental Work, Grading)

39+35-10'R
Take out Manhole with Frame and Cover

36+48-43'L
Do Not Disturb Tree

39+60-49'L
Do Not Disturb Sign

39+63-57'L to 41+14-40'L
Do Not Disturb Curb and Gutter

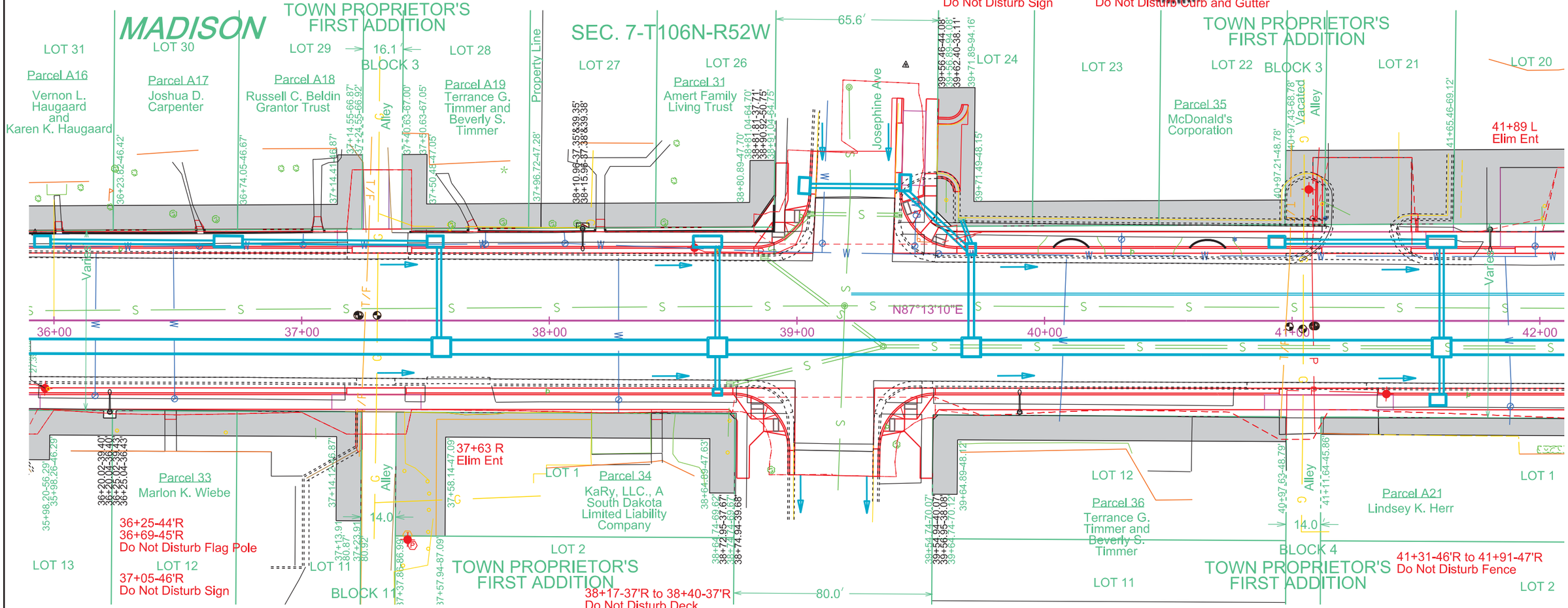

36+75.87-31.85'L to 37+50.91-31.85'L
Install 18"-76' RCP
(Between Drop Inlets)

37+55.51-29.90'L to 37+55.51-7.25'R
Install 18" - 38' RCP
(Between Drop Inlet and Junction Box)

37+59.91-10.75'R to 38+64.40-10.75'R
Install 54" - 106' Arch RCP
(Between Junction Boxes)

38+67.90-27.92'R to 38+67.90-14.25'R
Install 18" - 14' RCP
(Between Drop Inlet and Junction Box)

38+67.90-29.93'L to 38+67.90-7.25'R
Install 18" - 38' RCP
(Between Drop Inlet and Junction Box)

38+71.40-10.75'R to 39+66.91-10.75'R
Install 54" - 96' Arch RCP
(Between Junction Boxes)

39+05.06-54.44'L to 39+43.67-55.71'L
Install 18" - 38' RCP
(Between Drop Inlets)

39+43.61-52.71'L to 39+68.91-28.92'L
Install 18" - 36' RCP
(Between Drop Inlets)

Install 2' X 3' Type B Drop Inlet with Type B Frame & Grate and 6" Concrete Collar
at the following location:
38+67.90-28.92'R

Install 4' X 6' Type S Drop Inlet Base with Type S Precast Lid
at the following locations:
37+53.91-31.38'L
39+03.61-54.51'L
39+43.80-55.70'L
40+93.88-31.38'L
41+58.87-31.38'R

Install 4' X 11' Type S Drop Inlet Base with Type S Precast Lid
at the following locations:
36+70.37-31.38'L
38+63.91-31.38'L
41+60.38-31.38'L

39+66.60-40.73'L to 39+70.41-30.92'L
Install 12"-12' HDPE
(Between Existing Drop Inlet and Drop Inlet)

39+70.41-26.92'L to 39+70.41-7.25'R
Install 24" - 36' RCP
(Between Drop Inlet and Junction Box)

39+73.91-10.75'R to 41+56.87-10.75'R
Install 54" - 184' RCP Arch
(Between Junction Boxes)

41+60.37-29.92'R to 41+60.37-14.25'R
Install 18" - 16' RCP
(Between Drop Inlet and Junction Box)

Install 7'x7' Junction Box with Type A9 Manhole Frame & Lid
at the following locations:
37+56.41-10.75'R
38+67.90-10.75'R
39+70.41-10.75'R
41+60.37-10.75'R

Install 4' X 3' Type B Drop Inlet with Type B Frame & Grate and 6" Concrete Collar
at the following locations:
39+70.41-28.92'L

40+96.88-31.92'L to 41+54.88-31.92'L
Install 18" - 58' RCP
(Between Drop Inlets)

41+60.37-29.90'L to 41+60.37-7.25'R
Install 18" - 38' RCP
(Between Drop Inlet and Junction Box)

41+63.87-10.75'R to 42+47.48-10.75'R
Install 54" - 84' Arch RCP
(Between Junction Boxes)

STATE OF SOUTH DAKOTA	PROJECT	SHEET	TOTAL SHEETS
	NH 0034(160)386	B43	B133

FOR BIDDING PURPOSES ONLY

Plotting Date: 12/4/2015

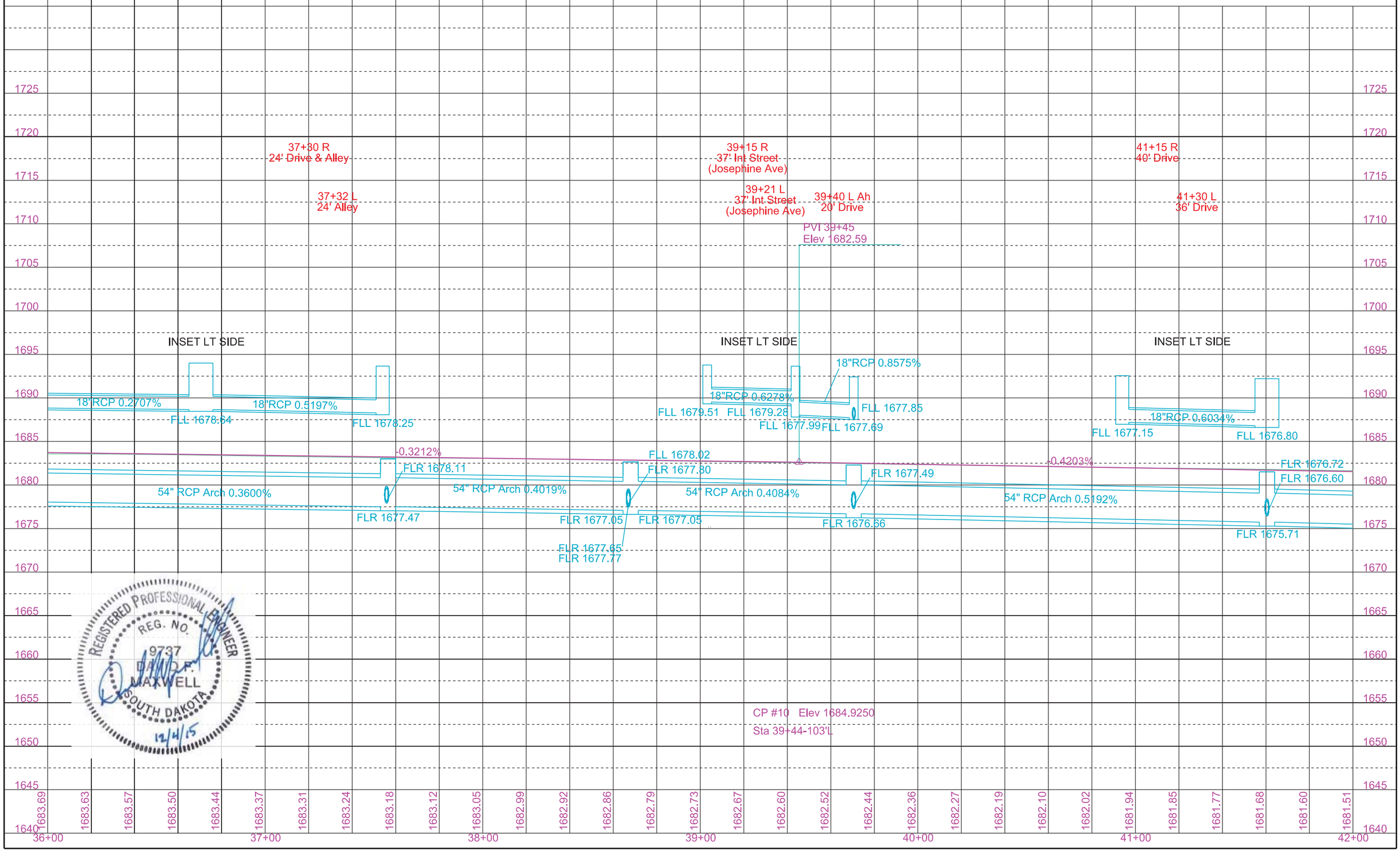

STATE OF SOUTH DAKOTA	PROJECT	SHEET	TOTAL SHEETS
	NH 0034(160)386	B44	B133

FOR BIDDING PURPOSES ONLY

Plotting Date: 12/4/2015

Take out Drop Inlets with Frame and Grate at the following locations:
42+61-24'L
42+61-27'R
42+81-42'L
43+16-42'L
46+18-27'R
46+25-24'L
46+51-42'L
46+86-42'L

42+61-24'L to 43+08-11'R
Take out 18" - 58' RCP
(Incidental Work, Grading)

42+61-27'R to 43+08-11'R
Take out 18" - 48' RCP
(Incidental Work, Grading)

42+61-24'L to 42+81-42'L
Take out 18" - 24' RCP
(Incidental Work, Grading)

42+81-42'L to 43+16-42'L
Take out 18" - 34' RCP
(Incidental Work, Grading)

43+08-11'R to 43+08-60'R
Take out 15" - 44' VCP
(Incidental Work, Grading)

43+08-11'R to 46+76-9'R
Take out 15" - 368' VCP
(Incidental Work, Grading)

43+08-11'R
Take out Manhole with Frame and Cover

REGISTERED PROFESSIONAL ENGINEER
REG. NO. 9737
DAVID R. MAXWELL
SOUTH DAKOTA
12/4/15

46+18-27'R to 46+76-9'R
Take out 18" - 56' RCP
(Incidental Work, Grading)

46+25-24'L to 46+51-42'L
Take out 18" - 30' RCP
(Incidental Work, Grading)

46+25-24'L to 46+76-9'R
Take out 18" - 58' RCP
(Incidental Work, Grading)

46+76-9'R to 46+86-42'L
Take out 18" - 50' RCP
(Incidental Work, Grading)

46+76-9'R
Take out Manhole with Frame and Cover

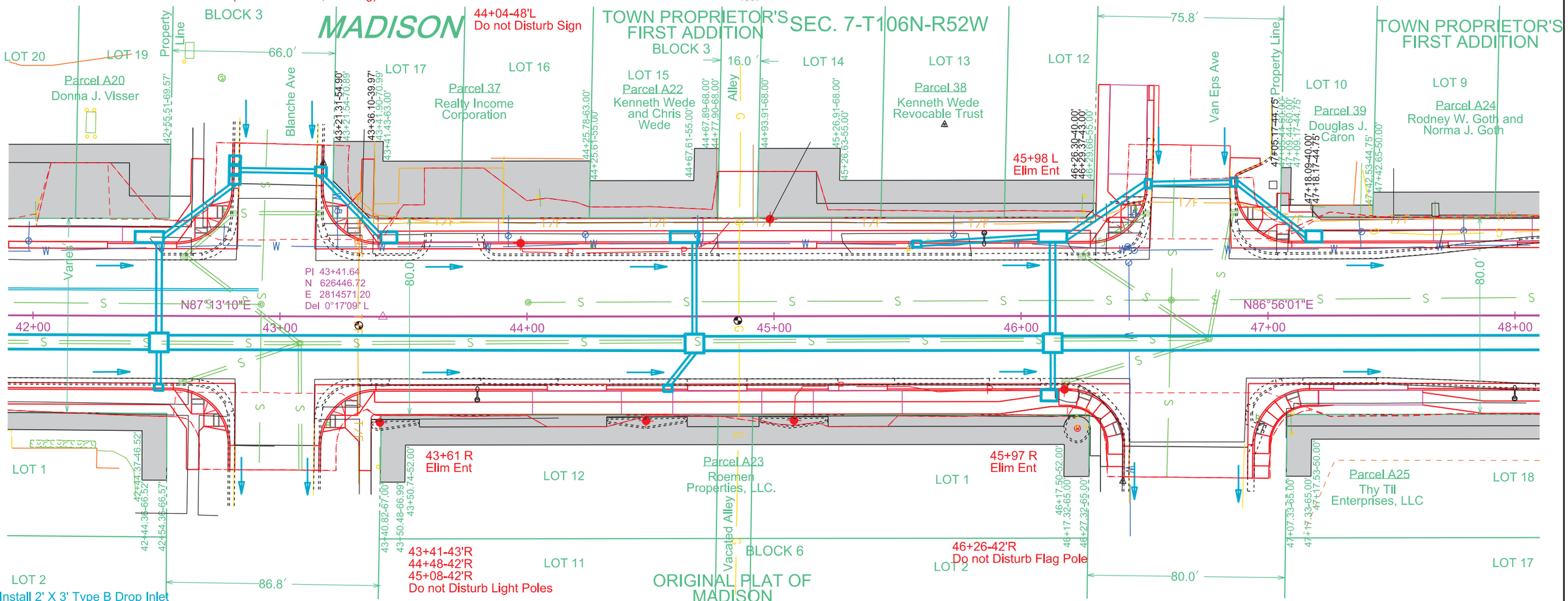

Install 2' X 3' Type B Drop Inlet with Type B Frame & Grate and 6" Concrete Collar at the following locations:
42+50.98-28.92'R
44+57.00-29.17'R
45+57.86-29.17'L
46+51.52-53.55'L
46+86.31-54.10'L

Install 4' X 3' Type B Drop Inlet with Type B Frame & Grate and 6" Concrete Collar at the following locations:
42+81.57-63.22'L
42+81.50-59.22'L
42+81.44-55.22'L
43+16.34-58.76'L

42+50.98-27.92'R to 42+50.98-14.25'R
Install 18" - 14' RCP
(Between Drop Inlet and Junction Box)

42+50.98-7.25'R to 42+50.98-29.93'L
Install 24" - 38' RCP
(Between Drop Inlet and Junction Box)

42+52.49-31.92'L to 42+81.41-53.72'L
Install 24" - 38' RCP
(Between Drop Inlets)

42+83.50-59.18'L to 43+14.34-58.81'L
Install 18" - 32' RCP
(Between Drop Inlets)

43+16.31-57.26'L to 43+40.98-32.18'L
Install 18" - 36' RCP
(Between Drop Inlets)

42+54.48-10.75'R to 44+64.30-11.00'R
Install 54" - 210' Arch RCP
(Between Junction Boxes)

44+57.00-28.17'R to 44+67.80-14.50'R
Install 18" - 18' RCP
(Between Drop Inlet and Junction Box)

44+67.80-30.17'L to 44+67.80-7.50'R
Install 18" - 38' RCP
(Between Drop Inlet and Junction Box)

Install 7'x7' Junction Box with Type A9 Manhole Frame & Lid at the following locations:
42+50.98-10.75'R
44+67.80-11.00'R
46+12.84-11.00'R

Install 4' X 6' Type S Drop Inlet Base with Type S Precast Lid at the following locations:
43+44.14-31.63'L
46+11.33-31.63'R
47+18.60-31.63'L

Install 4' X 11' Type S Drop Inlet Base with Type S Precast Lid at the following locations:
42+46.99-31.38'L
44+63.80-31.63'L
46+12.84-31.63'L

44+71.30-11.00'R to 46+09.34-11.00'R
Install 54" - 138' Arch RCP
(Between Junction Boxes)

45+57.85-29.17'L to 46+07.34-32.17'L
Install 18" - 48' RCP
(Between Drop Inlets)

46+12.84-30.17'L to 46+12.84-7.50'R
Install 24" - 38' RCP
(Between Drop Inlet and Junction Box)

46+12.84-30.16'R to 46+12.84-14.50'R
Install 18" - 16' RCP
(Between Drop Inlet and Junction Box)

46+18.34-32.35'L to 46+50.52-53.59'L
Install 24" - 40' RCP
(Between Drop Inlets)

46+52.52-53.51'L to 46+85.31-54.09'L
Install 18" - 34' RCP
(Between Drop Inlets)

46+87.31-53.98'L to 47+15.60-32.17'L
Install 18" - 36' RCP
(Between Drop Inlets)

46+16.34-11.00'R to 49+68.03-11.00'R
Install 54" - 352' Arch RCP
(Between Junction Boxes)

STATE OF SOUTH DAKOTA	PROJECT	SHEET	TOTAL SHEETS
	NH 0034(160)386	B45	B133

FOR BIDDING PURPOSES ONLY

Plotting Date: 12/4/2015

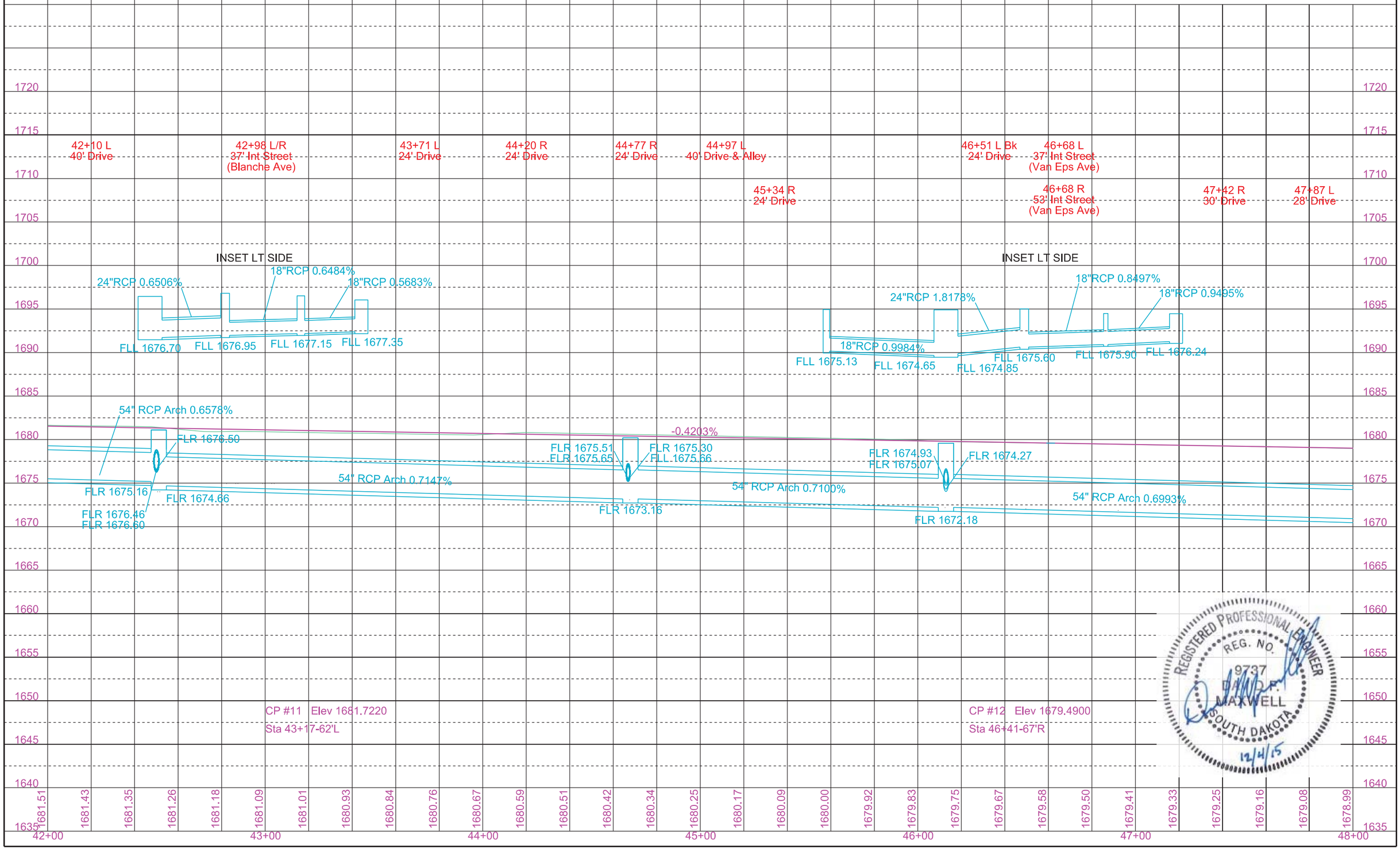

REGISTERED PROFESSIONAL ENGINEER
REG. NO. 9737
MAXWELL
SOUTH DAKOTA
12/4/15

STATE OF SOUTH DAKOTA	PROJECT	SHEET	TOTAL SHEETS
	NH 0034(160)386	B46	B133

Plotting Date: 12/4/2015

FOR BIDDING PURPOSES ONLY

Take out Drop Inlets
with Frame and Grate
at the following locations:
53+81-25'L
53+97-26'R

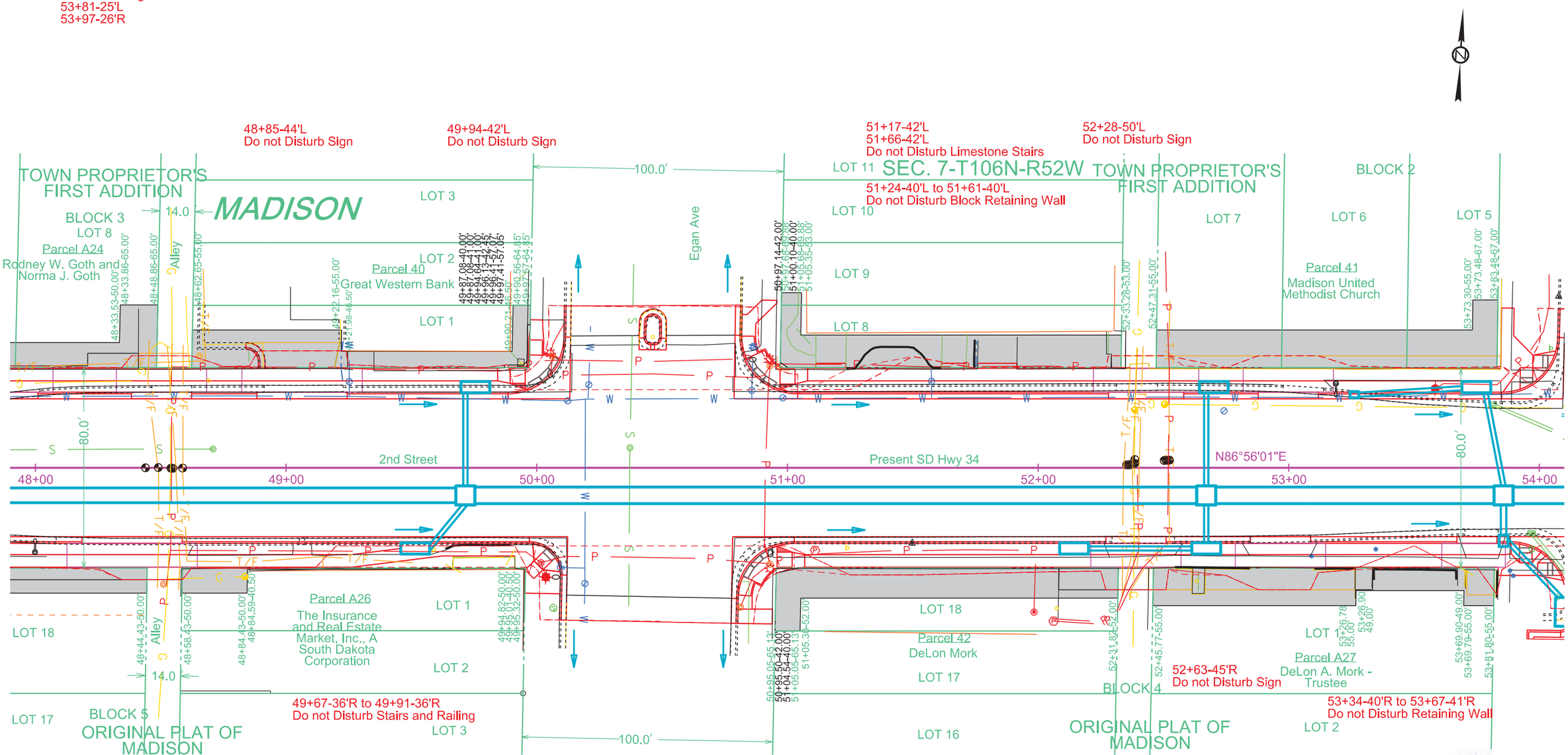

Install 2' X 3' Type B Drop Inlet
with Type B Frame & Grate and
6" Concrete Collar
at the following locations:
53+26.21-29.17'L

Install 4' X 3' Type B Drop Inlet
with Type B Frame & Grate and
6" Concrete Collar
at the following locations:
53+85.72-29.17'R

Install 7'x7' Junction Box with
Type A9 Manhole Frame & Lid
at the following locations:
49+71.53-11.00'R
52+67.10-11.00'R
53+85.72-11.00'R

Install 4' X 11' Type S Drop Inlet
Base and Type S Precast Lid
at the following locations:
49+75.53-31.63'L
49+51.52-31.63'R
52+14.34-31.63'R
52+67.10-31.63'R
52+70.10-31.63'L
53+74.86-31.63'L

49+57.02-32.17'R to 49+71.53-14.50'R
Install 18" - 24' RCP
(Between Drop Inlet and Junction Box)

49+71.53-30.17'L to 49+71.53-7.50'R
Install 18" - 38' RCP
(Between Drop Inlet and Junction Box)

49+75.03-11.00'R to 52+63.60-11.00'R
Install 60" - 290' Arch RCP
(Between Junction Boxes)

52+19.84-32.17'R to 52+61.60-32.17'R
Install 18" - 42' RCP
(Between Drop Inlets)

52+67.10-30.17'R to 52+67.10-14.50'R
Install 18" - 16' RCP
(Between Drop Inlet and Junction Box)

52+67.10-30.17'L to 52+67.10-7.50'R
Install 18" - 38' RCP
(Between Drop Inlet and Junction Box)

52+70.60-11.00'R to 53+82.22-11.00'R
Install 60" - 112' Arch RCP
(Between Junction Boxes)

53+27.71-29.16'L to 53+69.36-31.77'L
Install 18" - 42' RCP
(Between Drop Inlets)

53+78.48-30.17'L to 53+85.72-7.50'R
Install 18" - 40' RCP
(Between Drop Inlet and Junction Box)

53+85.72-14.50'R to 53+85.72-27.17'R
Install 24" - 14' RCP
(Between Drop Inlet and Junction Box)

53+89.22-11.00'R to 57+46.29-11.00'R
Install 60" - 358' Arch RCP
(Between Junction Boxes)

53+87.22-29.17'R to 54+08.68-51.98'R
Install 18" - 32' RCP
(Between Drop Inlets)

REGISTERED PROFESSIONAL ENGINEER
REG. NO. 9737
DAVID R. MAXWELL
SOUTH DAKOTA
12/4/15

STATE OF SOUTH DAKOTA	PROJECT	SHEET	TOTAL SHEETS
	NH 0034(160)386	B47	B133

FOR BIDDING PURPOSES ONLY

Plotting Date: 12/4/2015

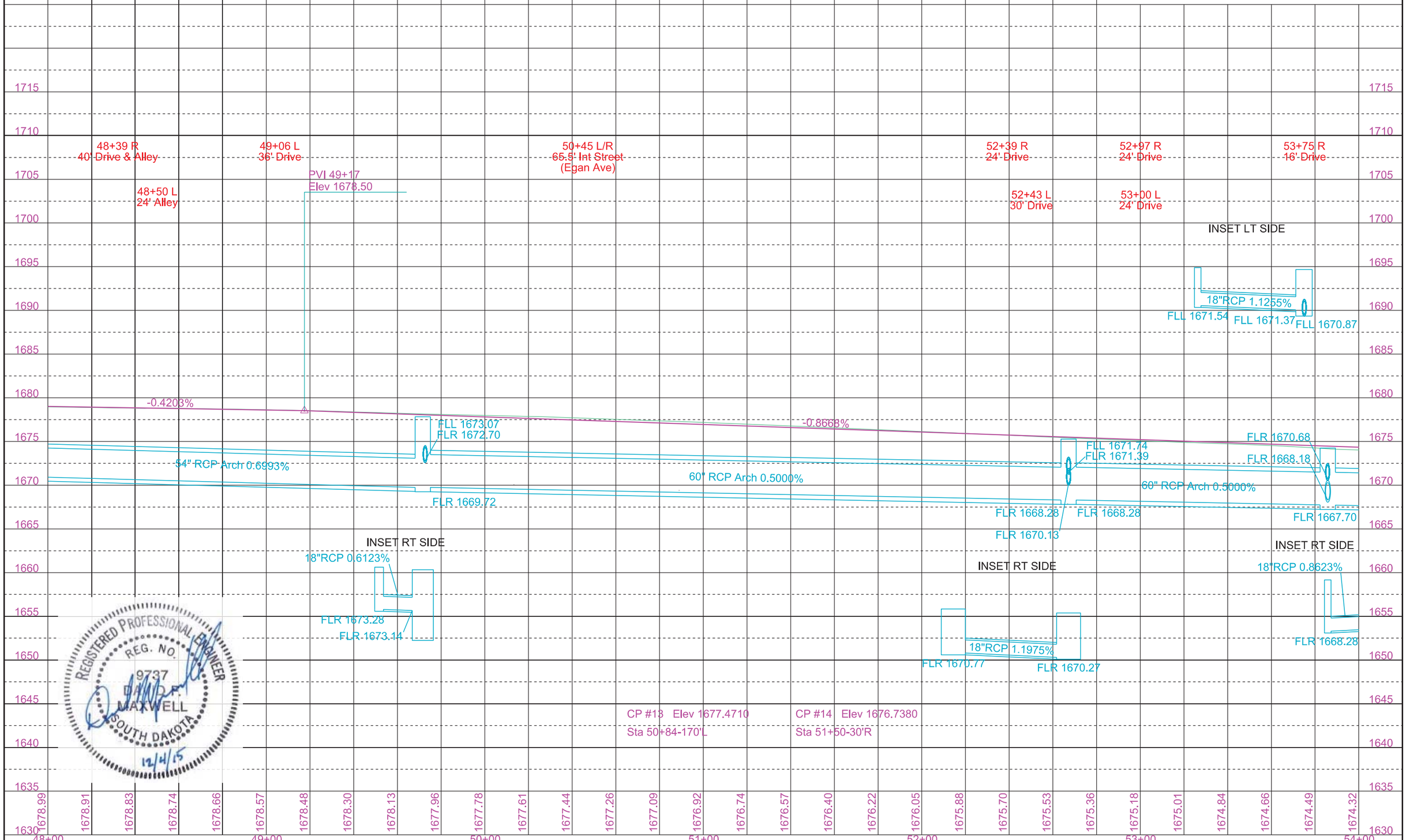

REGISTERED PROFESSIONAL ENGINEER
REG. NO. 9737
DAVID P. MAXWELL
SOUTH DAKOTA
12/4/15

STATE OF SOUTH DAKOTA	PROJECT	SHEET	TOTAL SHEETS
	NH 0034(160)386	B48	B133

Plotting Date: 12/4/2015

FOR BIDDING PURPOSES ONLY

Take out Drop Inlets with Frame and Grate at the following locations:
54+11-43'R
54+51-43'R
57+66-26'R
57+90-43'R
58+25-43'R

53+81-25'L to 54+41-0'R
Take out 12" - 65' RCP
(Incidental Work, Grading)

53+97-26'R to 54+11-43'R
Take out 15" - 23' RCP
(Incidental Work, Grading)

54+11-43'R to 54+51-43'R
Take out 15" - 40' RCP
(Incidental Work, Grading)

54+12-49' R to 54+41-0'R
Take out 15" - 52' RCP
(Incidental Work, Grading)

54+41-0'R
Take out Manhole with Frame and Cover

54+41-0'R to 54+42-62'L
Take out 10" - 62' VCP
(Incidental Work, Grading)

57+66-26'R to 57+90-43'R
Take out 21" - 30' RCP
(Incidental Work, Grading)

57+90-43'R to 58+08-6'L
Take out 15" - 52' RCP
(Incidental Work, Grading)

58+25-43'R to 58+08-6'L
Take out 10" - 51' RCP
(Incidental Work, Grading)

58+08-6'L to 58+36-48'R
Take out 12" - 54' VCP
(Incidental Work, Grading)

58+08-6'L
Take out Manhole with Frame and Cover

54+64-60'L
Do not Disturb Tree

54+81-48'L
Do not Disturb Sign

54+68-53'L to 55+31-53'L
Do not Disturb Curb & Gutter

56+05-43'L
Do not Disturb Tree

56+50-45'L
Do not Disturb Light Pole

56+76-44'L
Do not Disturb Rose Bushes

57+51-45'L
Do not Disturb Sign

58+36-48'L
Do not Disturb Sign

59+29-44'L
Do not Disturb Light Pole

58+36-56'L to 59+26-56'L
Do not Disturb Curb & Gutter

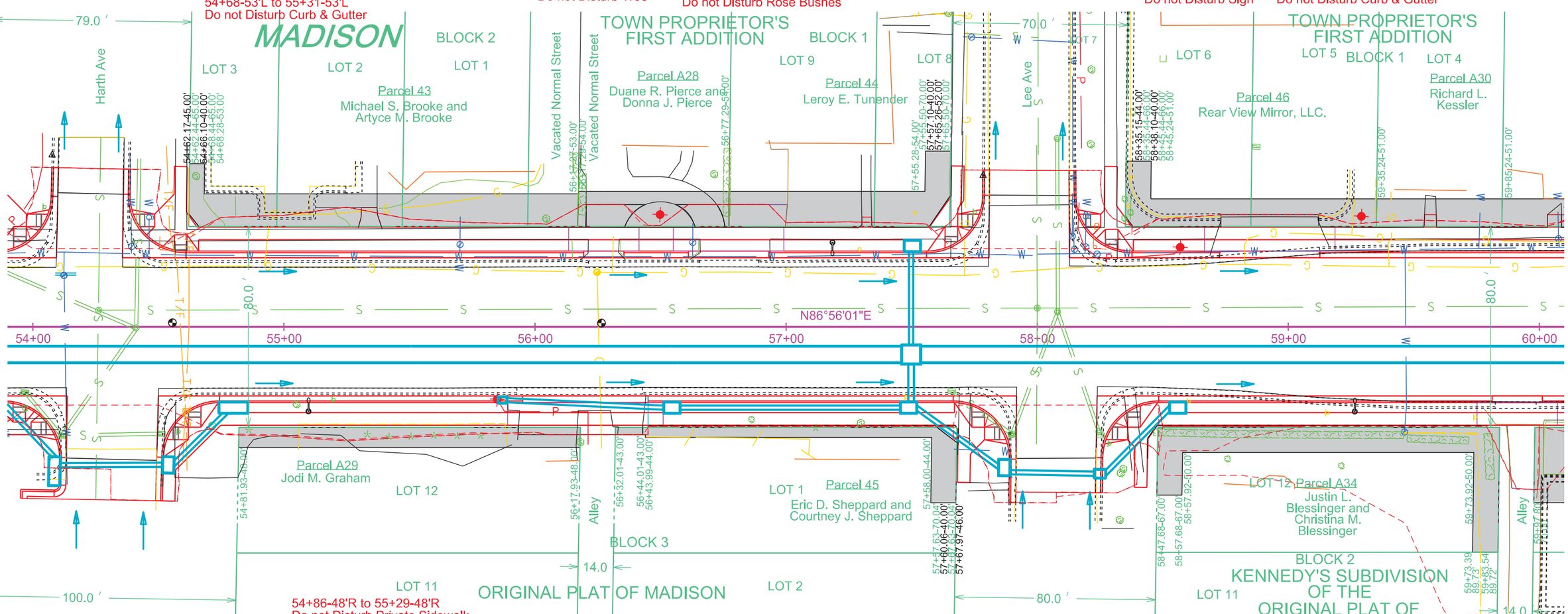

54+86-48'R to 55+29-48'R
Do not Disturb Private Sidewalk

55+06-39'R to 55+88-39'R
Salvage Fence (to Owner)

Install 4'x3' Type B Drop Inlet with Type B Frame & Grate and 6" Concrete Collar at the following locations:
58+25.01-59.04'R

Install 2'x3' Type B Drop Inlet with Type B Frame & Grate and 6" Concrete Collar at the following locations:
55+87.06-29.17'R

Install 7'x7' Junction Box with Type A9 Manhole Frame & Lid at the following locations:
57+49.79-11.00'R

Install 4' X 6' Type S Drop Inlet with Type S Precast Lid at the following locations:
54+53.41-54.95'R
56+54.56-31.63'R
57+48.79-31.63'R
57+50.29-31.63'L
57+87.44-56.02'R
58+56.02-31.63'R

Install 4' X 11' Type S Drop Inlet with Type S Precast Lid at the following locations:
54+09.12-57.49'R
54+79.85-31.63'R

54+10.62-55.11'R to 54+51.95-54.91'R
Install 18" - 42' RCP
(Between Drop Inlets)

54+55.95-54.81'R to 54+76.94-34.17'R
Install 18" - 30' RCP
(Between Drop Inlets)

55+88.56-29.17'R to 56+51.56-32.17'R
Install 18" - 64' RCP
(Between Drop Inlets)

56+57.56-32.17'R to 57+45.79-32.17'R
Install 18" - 90' RCP
(Between Drop Inlets)

57+49.79-30.17'L to 57+49.79-7.50'R
Install 18" - 38' RCP
(Between Drop Inlet and Junction Box)

57+49.79-30.17'R to 57+49.79-14.50'R
Install 24" - 16' RCP
(Between Drop Inlet and Junction Box)

57+51.79-32.11'R to 57+84.90-55.91'R
Install 24" - 42' RCP
(Between Drop Inlets)

57+88.88-57.88'R to 58+23.02-58.47'R
Install 18" - 36' RCP
(Between Drop Inlets)

58+27.02-58.52'R to 58+53.02-32.17'R
Install 18" - 38' RCP
(Between Drop Inlets)

57+53.29-11.00'R to 61+17.07-11.00'R
Install 60" - 364' Arch RCP
(Between Junction Boxes)

56+45.06'R to 57+68.30'R
Install Special Type C Concrete Retaining Wall

58+43.89'R to 59+79.03'R
Install Special Type C Concrete Retaining Wall

REGISTERED PROFESSIONAL ENGINEER
REG. NO. 9737
DAVID R. MAXWELL
SOUTH DAKOTA
12/4/15

STATE OF SOUTH DAKOTA	PROJECT	SHEET	TOTAL SHEETS
	NH 0034(160)386	B49	B133

FOR BIDDING PURPOSES ONLY

Plotting Date: 12/4/2015

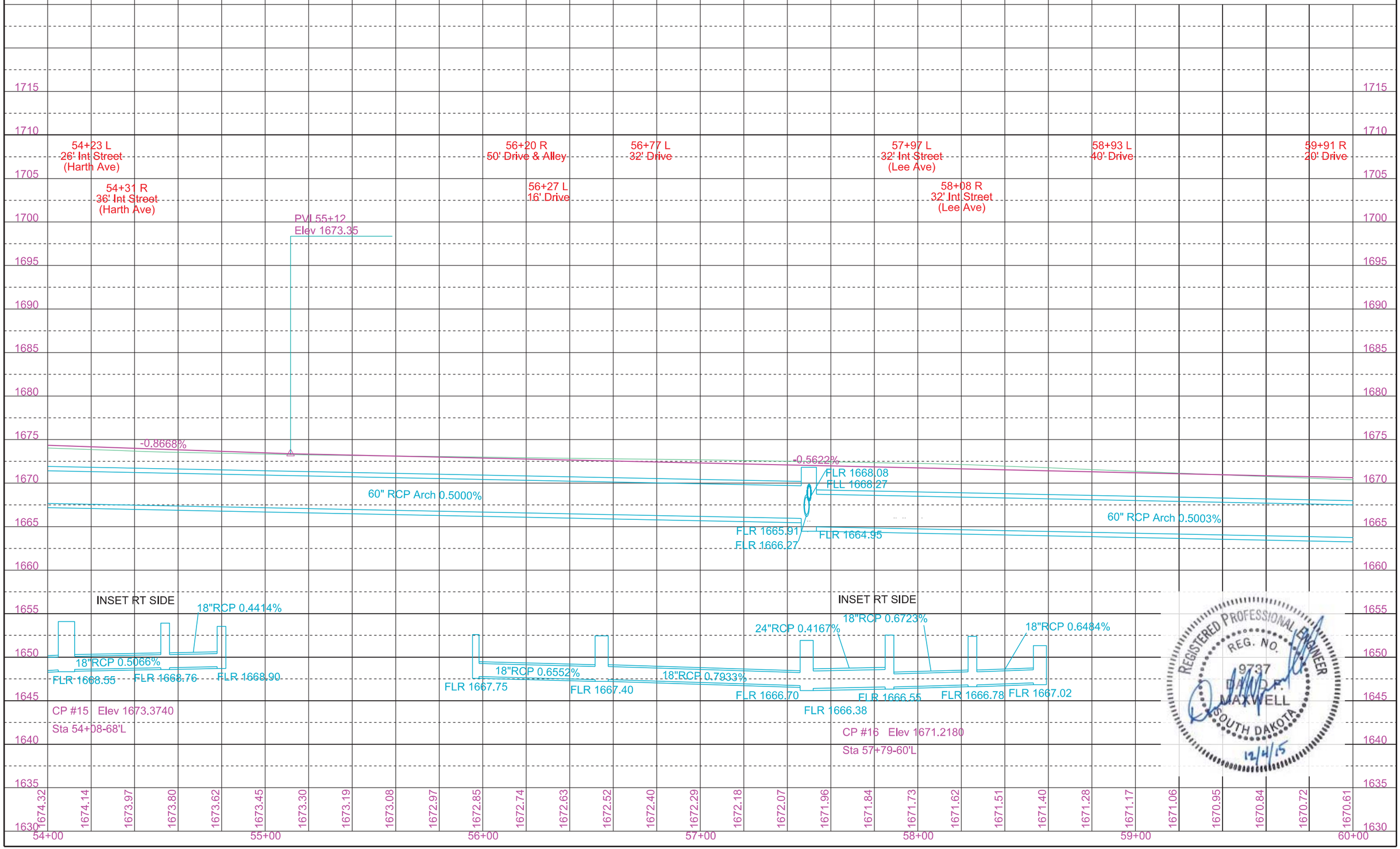

REGISTERED PROFESSIONAL ENGINEER
REG. NO. 9737
DAVID P. MAXWELL
SOUTH DAKOTA
12/4/15

STATE OF SOUTH DAKOTA	PROJECT	SHEET	TOTAL SHEETS
	NH 0034(160)386	B50	B133

Plotting Date: 12/4/2015

FOR BIDDING PURPOSES ONLY

Take out Drop Inlets with Frame and Grate at the following locations:
60+69-31'R
61+23-43'R
61+30-33'L
61+48-101'R

61+23-43'R to 61+48-101'R
Take out 18" - 64' RCP
(Incidental Work, Grading)

61+23-43'R to 61+58-3'R
Take out 12" - 58' RCP
(Incidental Work, Grading)

61+30-33'L to 61+58-3'R
Take out 18" - 36' RCP
(Incidental Work, Grading)

61+58-3'R
Take out Manhole with Frame and Cover

61+58-3'R to 61+59-66'L
Take out 10" - 63' VCP
(Incidental Work, Grading)

60+69-31'R to 61+58-3'R
Take out 18" - 94' RCP
(Incidental Work, Grading)

61+09-41'R to 61+34-72'R
Take out Retaining Wall

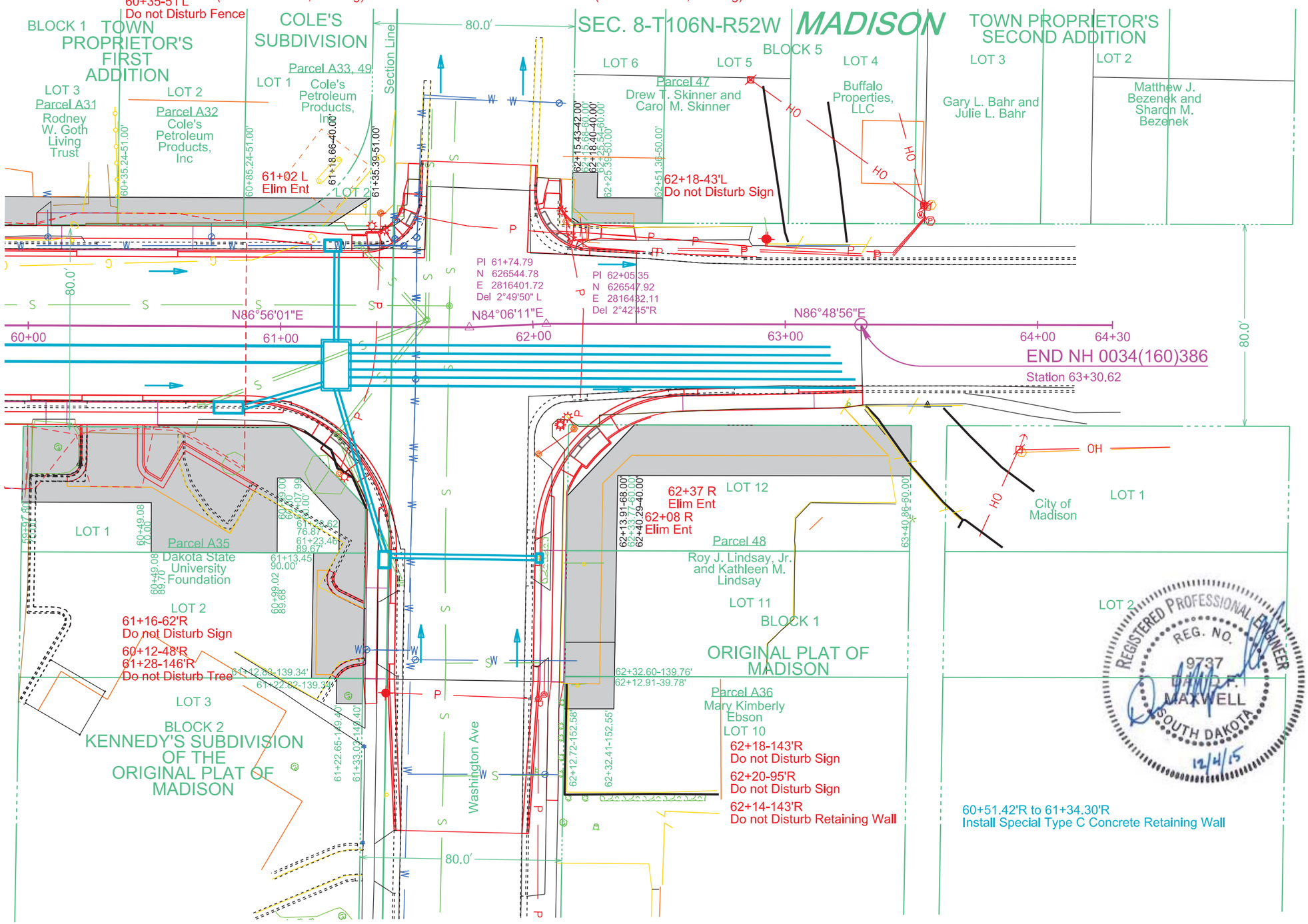

60+51.42'R to 61+34.30'R
Install Special Type C Concrete Retaining Wall

Install 2' X 3' Type B Drop Inlet with Type B Frame & Grate and 6" Concrete Collar at the following locations:
61+98.34-92.65'R

Install 4' X 3' Type B Drop Inlet with Type B Frame & Grate and 6" Concrete Collar at the following locations:
60+60.80-43.68'R

Install 4' X 6' Type S Drop Inlet Base with Type S Precast Lid at the following locations:
61+42.07-92.21'R
61+20.57-31.63'L

Install 4' X 11' Type S Drop Inlet Base with Type S Precast Lid at the following locations:
60+79.48-31.63'R

Install 10' X 18.5' Junction Box (Special) with Type A9 Manhole Frame & Lid at the following locations:
61+22.07-15.25'R

60+84.98-32.17'R to 61+19.57-22.00'R
Install 18" - 34' RCP
(Between Drop Inlet and Junction Box)

61+22.07-30.17'L to 61+22.07-6.00'R
Install 18" - 38' RCP
(Between Drop Inlet and Junction Box)

61+22.07-24.50'R to 61+41.56-89.20'R
Install 18" - 68' RCP
(Between Junction Box and Drop Inlet)

61+43.55-90.68'R to 61+97.34-92.59'R
Install 18" - 60' RCP
(Between Drop Inlets)

61+27.07-8.83'R to 63+16.10-10.60'R
Install 36" - 192' RCP
(Between Junction Box and Box Culvert)

61+27.07-15.25'R to 63+20.55-17.03'R
Install 36" - 196' RCP
(Between Junction Box and Box Culvert)

61+27.07-21.67'R to 63+25.67-23.46'R
Install 36" - 202' RCP
(Between Junction Box and Box Culvert)

Connect to Existing Manhole
63+18.52-10.61'R
63+22.71-15.28'R
63+27.33-19.96'R

STATE OF SOUTH DAKOTA	PROJECT	SHEET	TOTAL SHEETS
	NH 0034(160)386	B51	B133

FOR BIDDING PURPOSES ONLY

Plotting Date: 12/4/2015

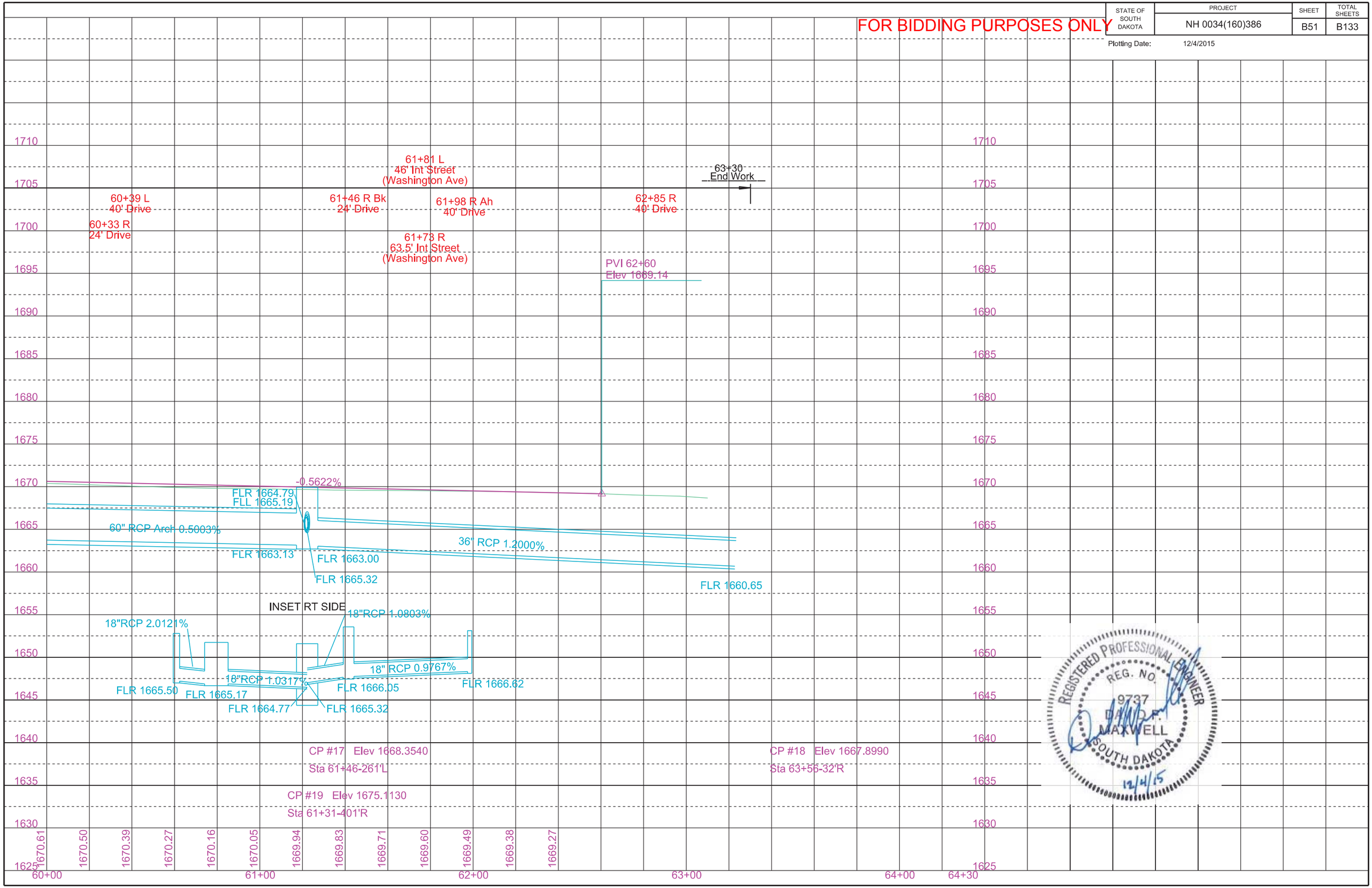

REGISTERED PROFESSIONAL ENGINEER
REG. NO. 9737
DAVID A. MAXWELL
SOUTH DAKOTA
12/4/15

PAVEMENT REMOVAL LAYOUT

FOR BIDDING PURPOSES ONLY

STATE OF SOUTH DAKOTA	PROJECT	SHEET	TOTAL SHEETS
	NH 0034(160)386	B52	B133

Plotting Date: 12/4/2015

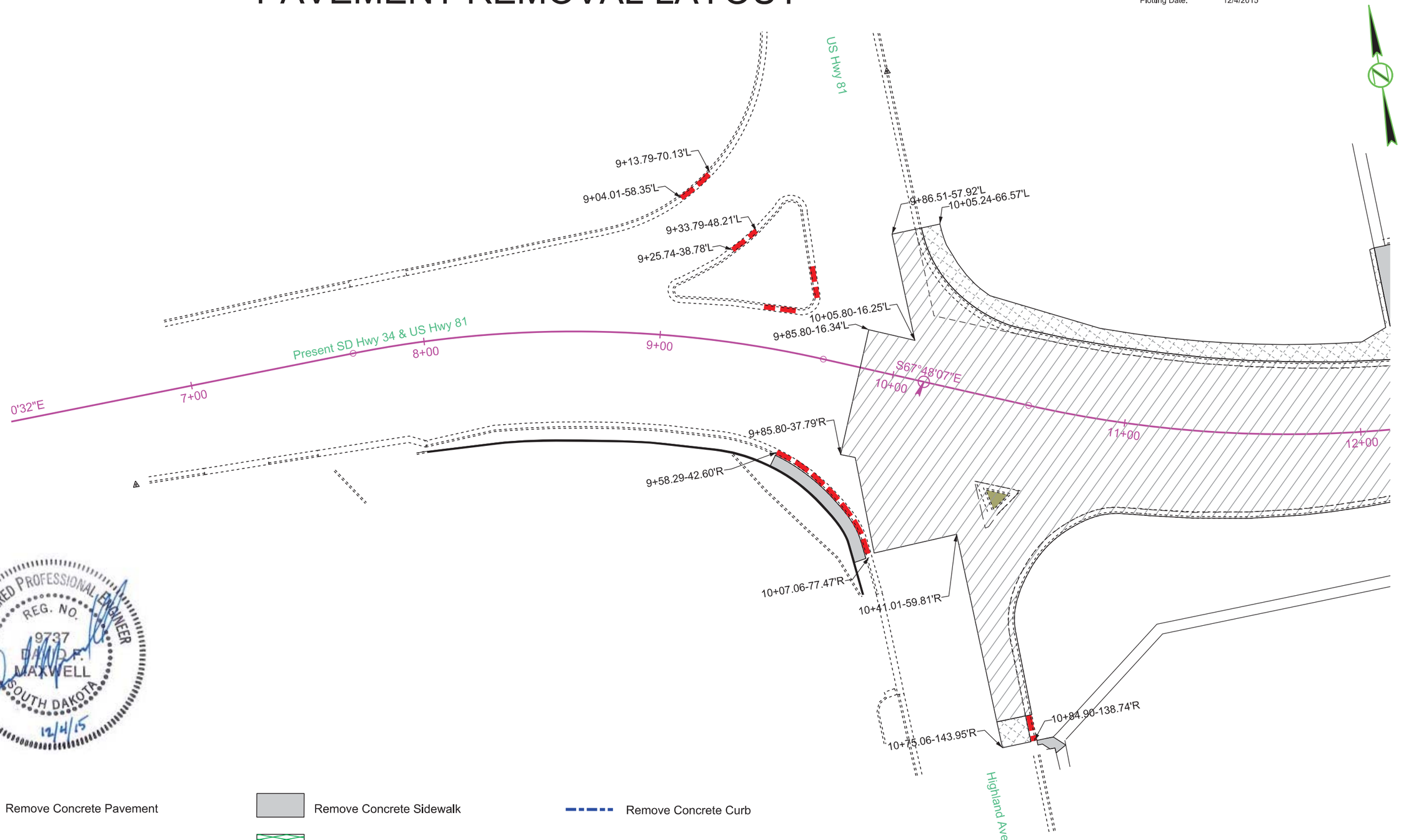

REGISTERED PROFESSIONAL ENGINEER
REG. NO. 9737
DAVID P. MAXWELL
SOUTH DAKOTA
12/4/15

PAVEMENT REMOVAL LAYOUT

FOR BIDDING PURPOSES ONLY

STATE OF SOUTH DAKOTA	PROJECT	SHEET	TOTAL SHEETS
	NH 0034(160)386	B53	B133

Plotting Date: 12/4/2015

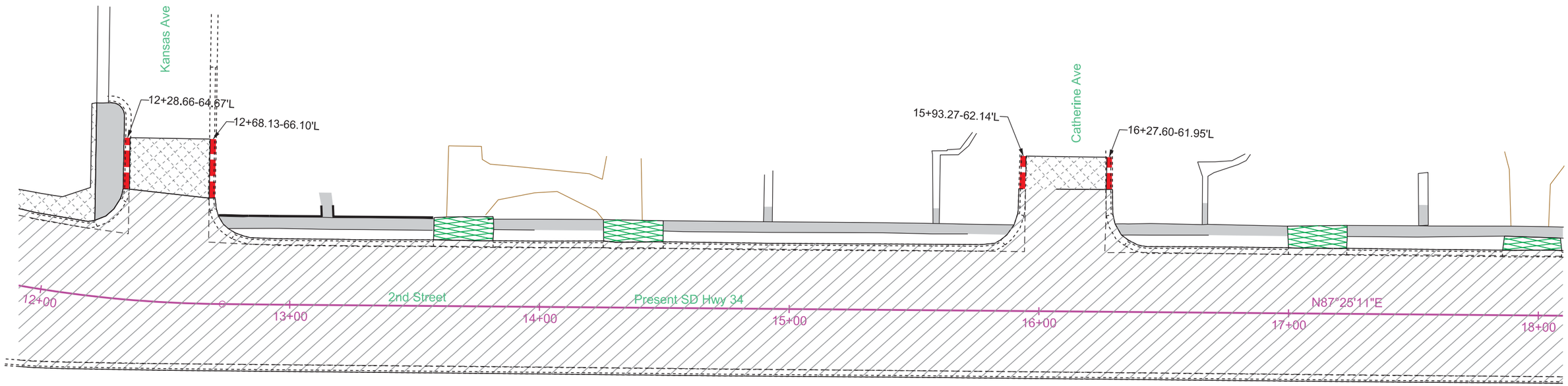

Remove Concrete Pavement

Remove Concrete Driveway Pavement

Remove Asphalt Concrete Pavement

Remove Concrete Sidewalk

Remove Concrete Approach Pavement

Remove Concrete Median Pavement

Remove Concrete Curb

Remove Concrete Curb and Gutter

Remove Concrete Gutter

REGISTERED PROFESSIONAL ENGINEER
REG. NO. 9737
DAVID P. MAXWELL
SOUTH DAKOTA
12/4/15

PAVEMENT REMOVAL LAYOUT

FOR BIDDING PURPOSES ONLY

STATE OF SOUTH DAKOTA	PROJECT	SHEET	TOTAL SHEETS
	NH 0034(160)386	B54	B133

Plotting Date: 12/4/2015

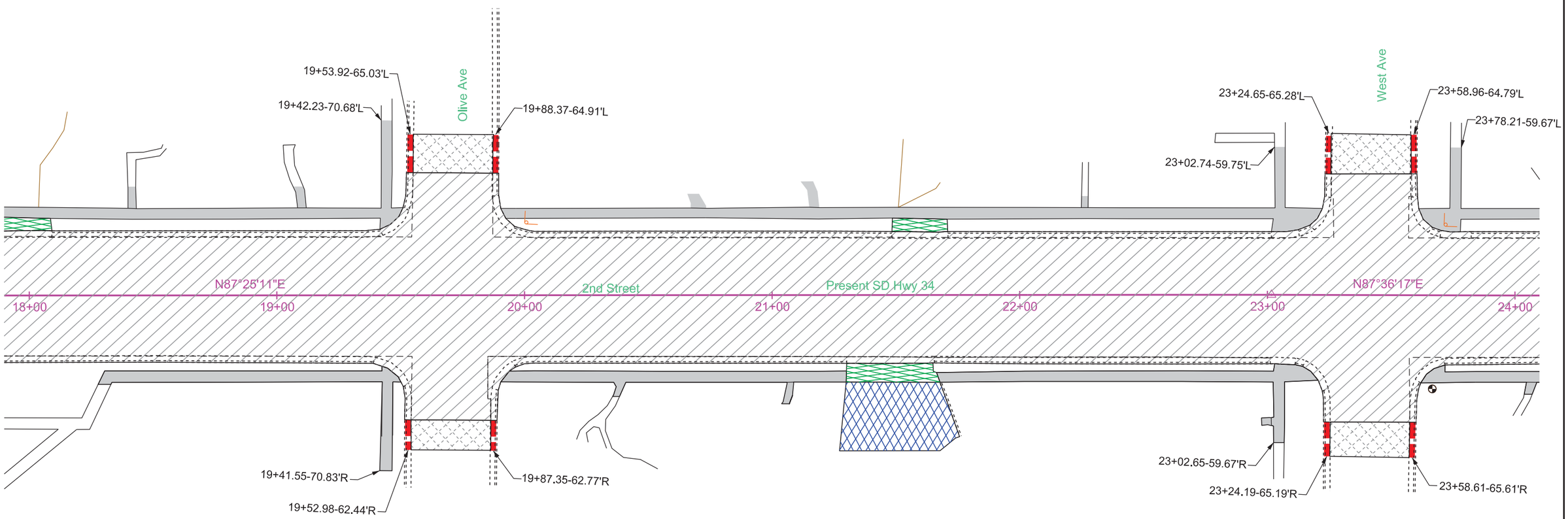

Remove Concrete Pavement

Remove Concrete Driveway Pavement

Remove Asphalt Concrete Pavement

Remove Concrete Sidewalk

Remove Concrete Approach Pavement

Remove Concrete Median Pavement

Remove Concrete Curb

Remove Concrete Curb and Gutter

Remove Concrete Gutter

PAVEMENT REMOVAL LAYOUT

FOR BIDDING PURPOSES ONLY

STATE OF SOUTH DAKOTA	PROJECT	SHEET	TOTAL SHEETS
	NH 0034(160)386	B55	B133

Plotting Date: 12/4/2015

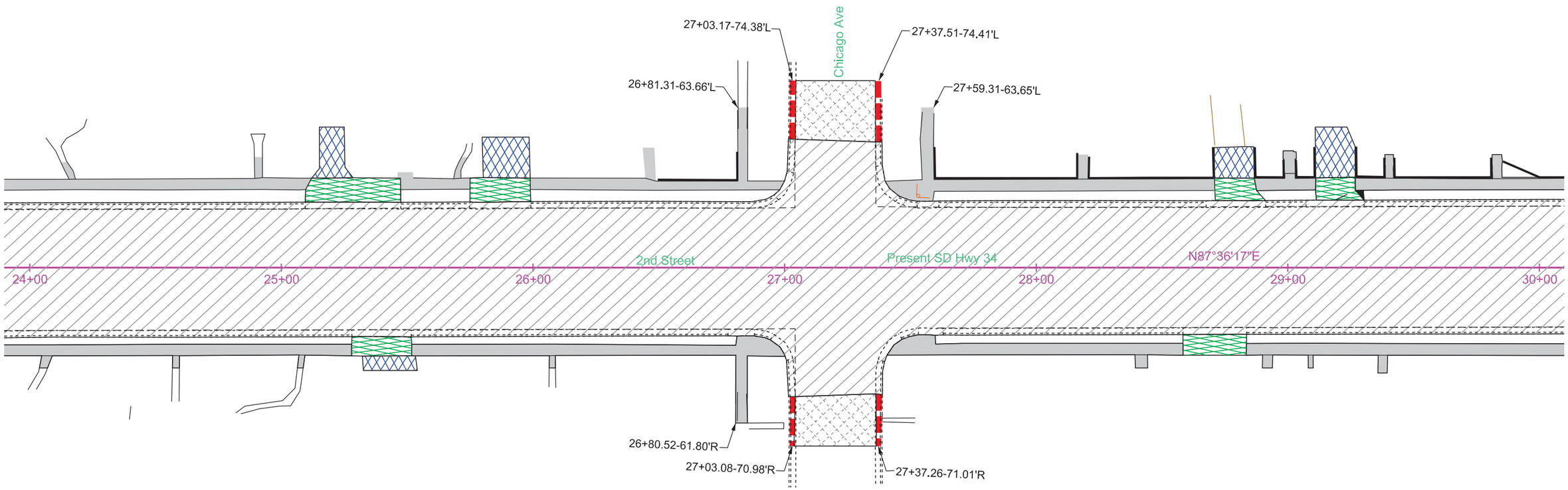

Remove Concrete Pavement

Remove Concrete Driveway Pavement

Remove Asphalt Concrete Pavement

Remove Concrete Sidewalk

Remove Concrete Approach Pavement

Remove Concrete Median Pavement

Remove Concrete Curb

Remove Concrete Curb and Gutter

Remove Concrete Gutter

REGISTERED PROFESSIONAL ENGINEER
REG. NO. 9737
DAVID J. MAXWELL
SOUTH DAKOTA
12/4/15

PAVEMENT REMOVAL LAYOUT

FOR BIDDING PURPOSES ONLY

STATE OF SOUTH DAKOTA	PROJECT	SHEET	TOTAL SHEETS
	NH 0034(160)386	B56	B133

Plotting Date: 12/4/2015

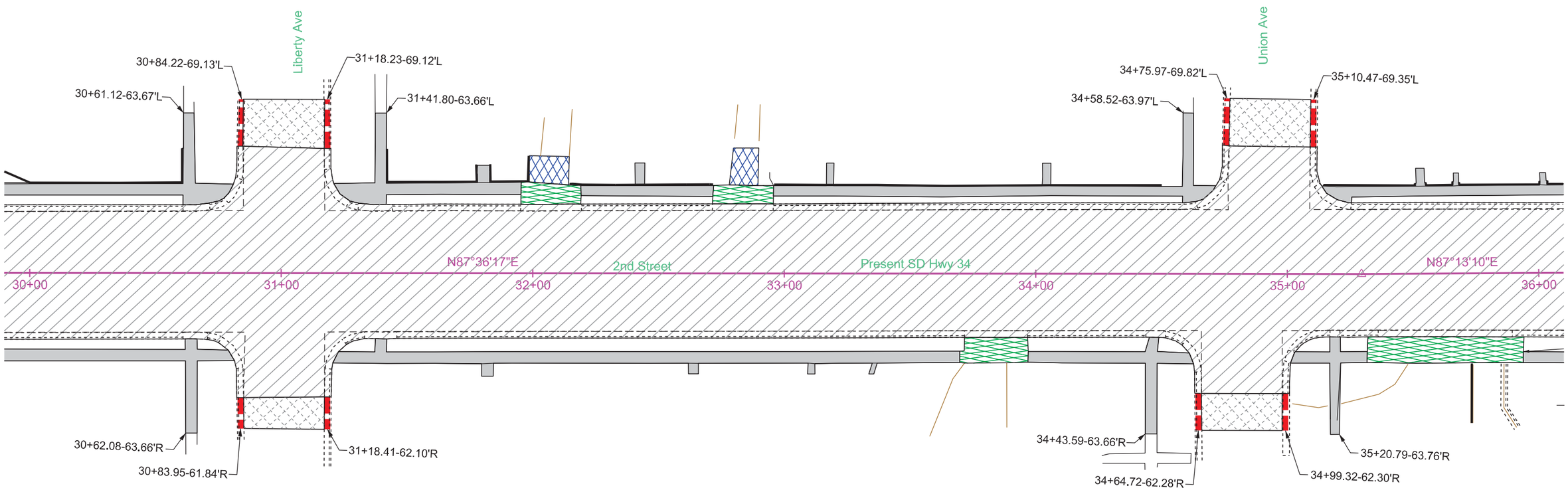

Remove Concrete Pavement

Remove Concrete Driveway Pavement

Remove Asphalt Concrete Pavement

Remove Concrete Sidewalk

Remove Concrete Approach Pavement

Remove Concrete Median Pavement

Remove Concrete Curb

Remove Concrete Curb and Gutter

Remove Concrete Gutter

REGISTERED PROFESSIONAL ENGINEER
REG. NO. 9737
DAVID P. MAXWELL
SOUTH DAKOTA
12/4/15

PAVEMENT REMOVAL LAYOUT

FOR BIDDING PURPOSES ONLY

STATE OF SOUTH DAKOTA	PROJECT	SHEET	TOTAL SHEETS
	NH 0034(160)386	B57	B133

Plotting Date: 12/4/2015

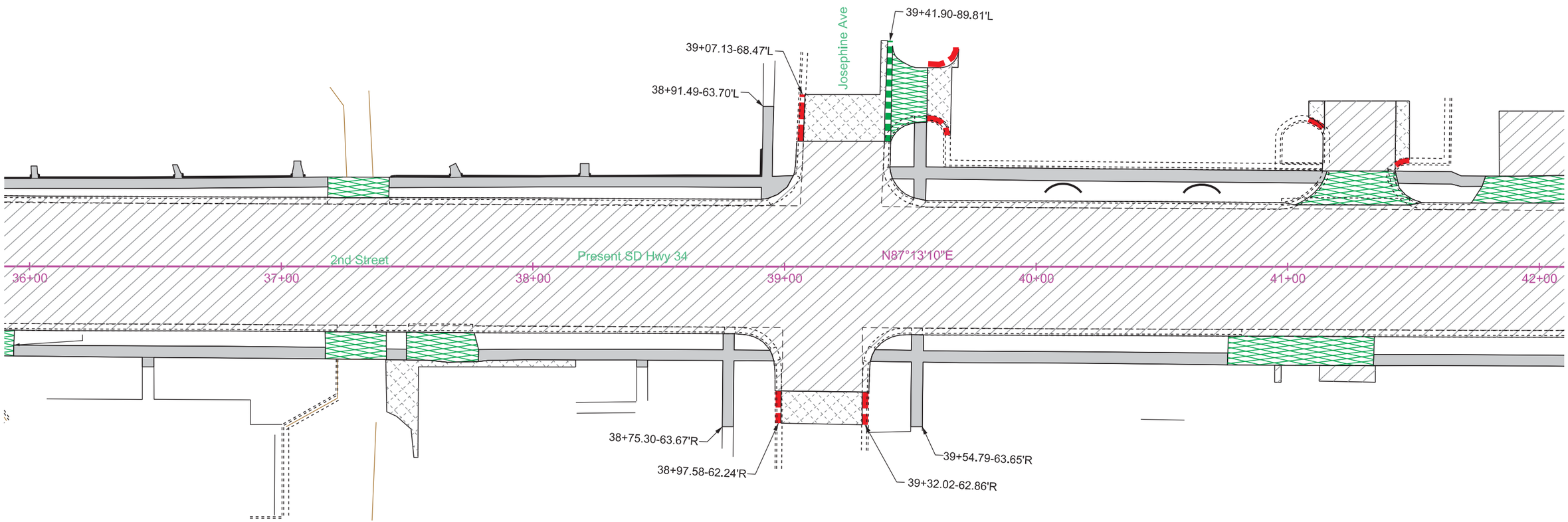

Remove Concrete Pavement

Remove Concrete Driveway Pavement

Remove Asphalt Concrete Pavement

Remove Concrete Sidewalk

Remove Concrete Approach Pavement

Remove Concrete Median Pavement

Remove Concrete Curb

Remove Concrete Curb and Gutter

Remove Concrete Gutter

REGISTERED PROFESSIONAL ENGINEER
REG. NO. 9737
DAVID P. MAXWELL
SOUTH DAKOTA
12/4/15

PAVEMENT REMOVAL LAYOUT

FOR BIDDING PURPOSES ONLY

STATE OF SOUTH DAKOTA	PROJECT	SHEET	TOTAL SHEETS
	NH 0034(160)386	B58	B133

Plotting Date: 12/4/2015

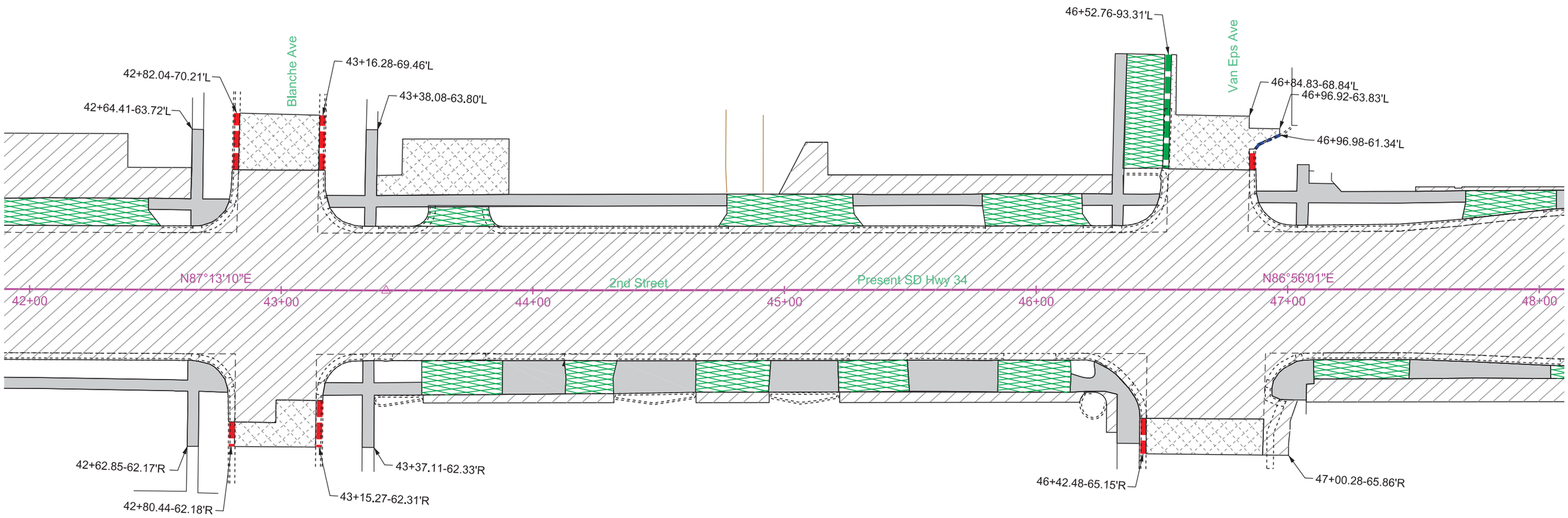

Remove Concrete Pavement

Remove Concrete Driveway Pavement

Remove Asphalt Concrete Pavement

Remove Concrete Sidewalk

Remove Concrete Approach Pavement

Remove Concrete Median Pavement

Remove Concrete Curb

Remove Concrete Curb and Gutter

Remove Concrete Gutter

REGISTERED PROFESSIONAL ENGINEER
REG. NO. 9737
DAVID P. MAXWELL
SOUTH DAKOTA
12/4/15

PAVEMENT REMOVAL LAYOUT

FOR BIDDING PURPOSES ONLY

STATE OF SOUTH DAKOTA	PROJECT	SHEET	TOTAL SHEETS
	NH 0034(160)386	B59	B133

Plotting Date: 12/4/2015

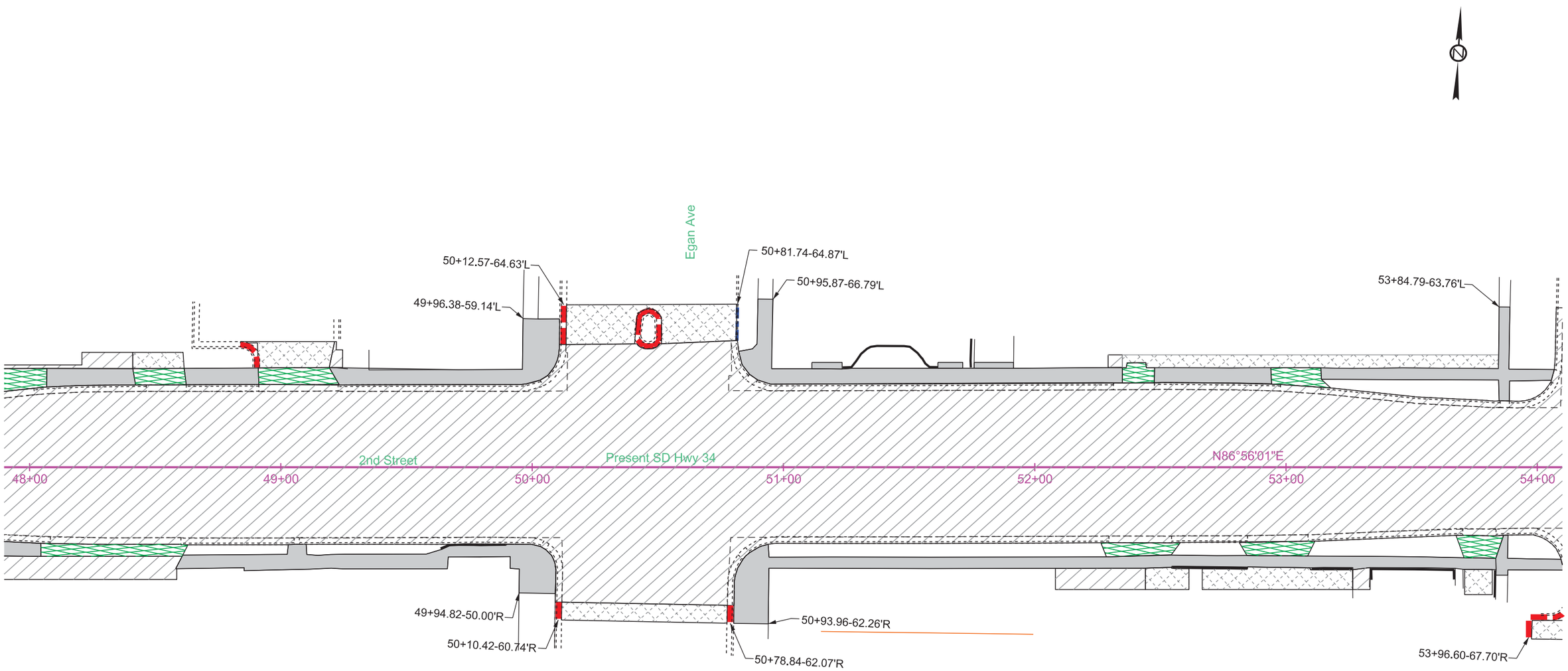

Remove Concrete Pavement

Remove Concrete Driveway Pavement

Remove Asphalt Concrete Pavement

Remove Concrete Sidewalk

Remove Concrete Approach Pavement

Remove Concrete Median Pavement

Remove Concrete Curb

Remove Concrete Curb and Gutter

Remove Concrete Gutter

REGISTERED PROFESSIONAL ENGINEER
REG. NO. 9737
DAVID P. MAXWELL
SOUTH DAKOTA
12/4/15

PAVEMENT REMOVAL LAYOUT

FOR BIDDING PURPOSES ONLY

STATE OF SOUTH DAKOTA	PROJECT	SHEET	TOTAL SHEETS
	NH 0034(160)386	B60	B133

Plotting Date: 12/4/2015

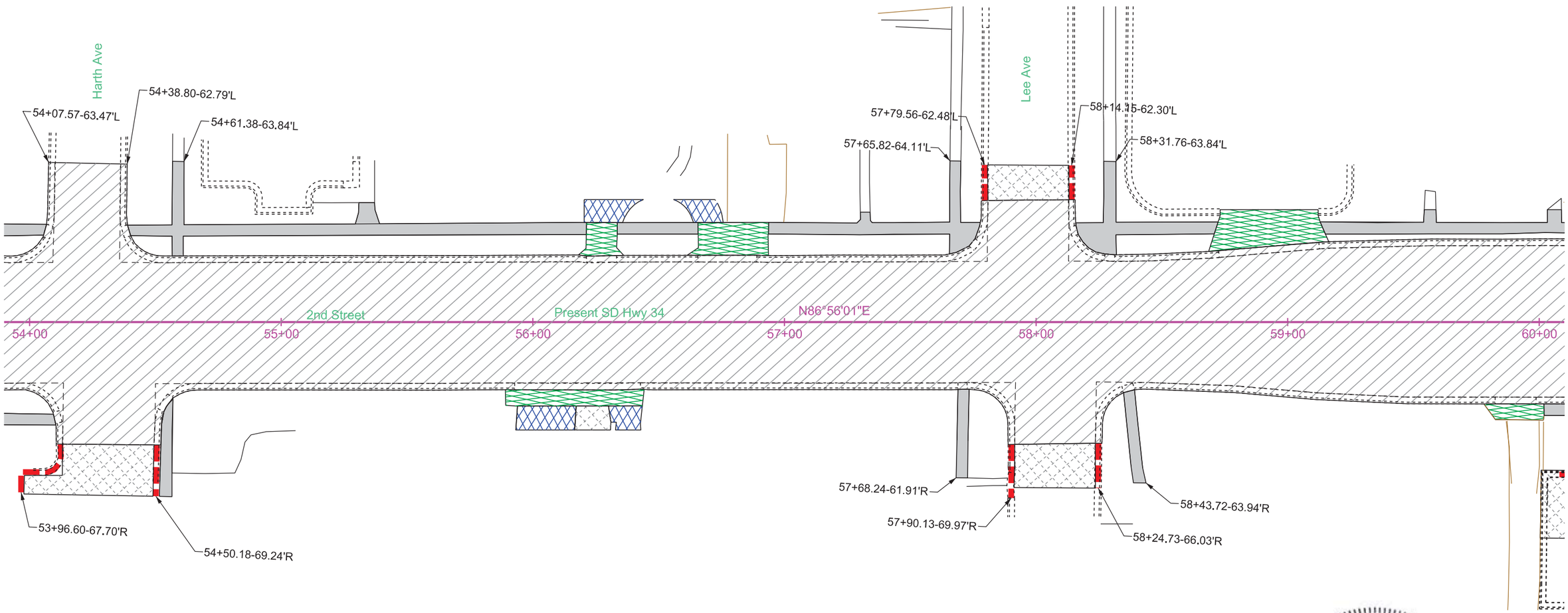

Remove Concrete Pavement

Remove Concrete Driveway Pavement

Remove Asphalt Concrete Pavement

Remove Concrete Sidewalk

Remove Concrete Approach Pavement

Remove Concrete Median Pavement

Remove Concrete Curb

Remove Concrete Curb and Gutter

Remove Concrete Gutter

REGISTERED PROFESSIONAL ENGINEER
REG. NO. 9737
DALE F. MAXWELL
SOUTH DAKOTA
12/4/15

PAVEMENT REMOVAL LAYOUT

FOR BIDDING PURPOSES ONLY

STATE OF SOUTH DAKOTA	PROJECT	SHEET	TOTAL SHEETS
	NH 0034(160)386	B61	B133

Plotting Date: 12/4/2015

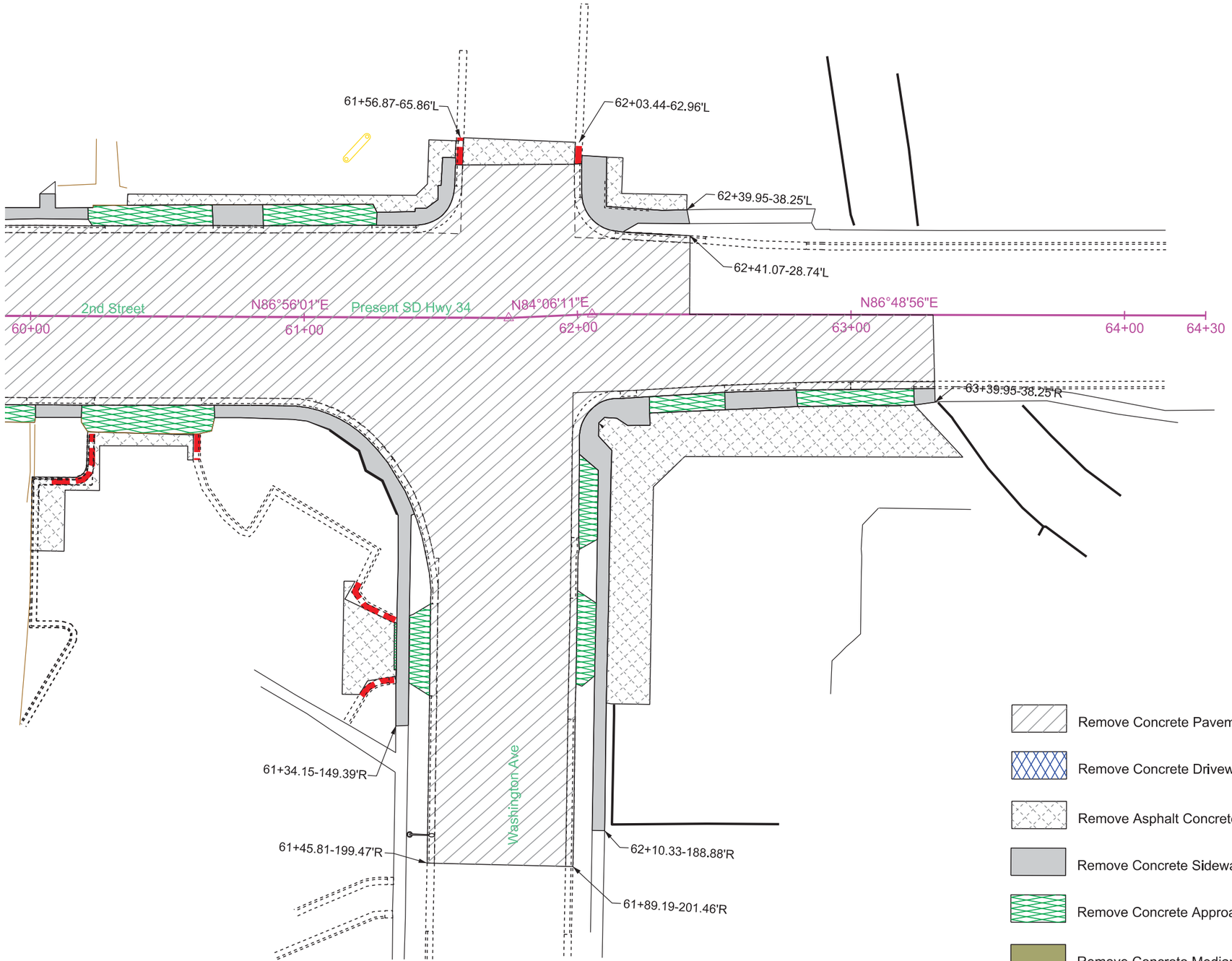

Remove Concrete Pavement

Remove Concrete Driveway Pavement

Remove Asphalt Concrete Pavement

Remove Concrete Sidewalk

Remove Concrete Approach Pavement

Remove Concrete Median Pavement

Remove Concrete Curb

Remove Concrete Curb and Gutter

Remove Concrete Gutter

REGISTERED PROFESSIONAL ENGINEER
REG. NO. 9737
DAVID P. MAXWELL
SOUTH DAKOTA
12/4/15

STATE OF SOUTH DAKOTA	PROJECT	SHEET	TOTAL SHEETS
	NH 0034(160)386	B62	B133

FOR BIDDING PURPOSES ONLY

Plotting Date: 12/4/2015

CURB & GUTTER LAYOUT

Note: All Curb & Gutter shown on this sheet is Type B68.5 unless noted.
All Type P Gutter is Type P8.5 unless noted.
All sidewalk is 5' wide unless noted.
All sidewalk is 6" thick unless noted.
All boulevards are grass unless noted.

1 9+04.81-57.35'L
Begin 75' Rad C & G
TC El (Match Existing)

2 9+14.70-69.30'L
End 75' Rad C & G
TC El (Match Existing)

3 9+24.95-39.66'L
Begin 72' Rad BL68.5 C & G
TC El (Match Existing)

4 9+32.88-49.04'L
End 72' Rad BL68.5 C & G
TC El (Match Existing)

5 9+41.50-15.66'L
Begin Str BL68.5 C & G
TC El (Match Existing)

6 9+54.58-16.26'L
End Str BL68.5 C & G
TC El (Match Existing)

7 9+62.98-25.14'L
Begin Str BL68.5 C & G
TC El (Match Existing)

8 9+58.62-37.85'L
End Str BL68.5 C & G
TC El (Match Existing)

9 9+95.55-62.10'L
Begin 60' Rad C & G
TC El (Match Existing)

10 10+50.02-27.25'L
End 60' Rad C & G
Begin Str C & G
TC El 1717.27

11 10+58.72-27.25'L
End Str C & G
Begin 468' Rad C & G
TC El 1717.07

12 10+53.02-5.25'R
Begin Str Taper BL68.5 C & G
TC El 1717.92 (Theor.)

13 10+58.02-5.25'R
End Str Taper BL68.5 C & G
Begin 501' Rad BL68.5 C & G
TC El 1717.74

14 10+53.02-14.59'R
Begin Str Taper BL68.5 C & G
TC El 1718.11 (Theor.)

15 10+58.02-14.59'R
End Str Taper BL68.5 C & G
Begin 510' Rad BL68.5 C & G
TC El 1717.93

16 11+56.07-5.25'R
End 501' Rad BL68.5 C & G
Begin 501' Rad Taper BL68.5 C & G
TC El 1715.37

17 11+63.92-5.25'R
End 501' Rad Taper BL68.5 C & G
TC El 1715.19 (Theor.)

18 11+56.07-14.59'R
End 510' Rad BL68.5 C & G
Begin 510' Rad Taper BL68.5 C & G
TC El 1715.56

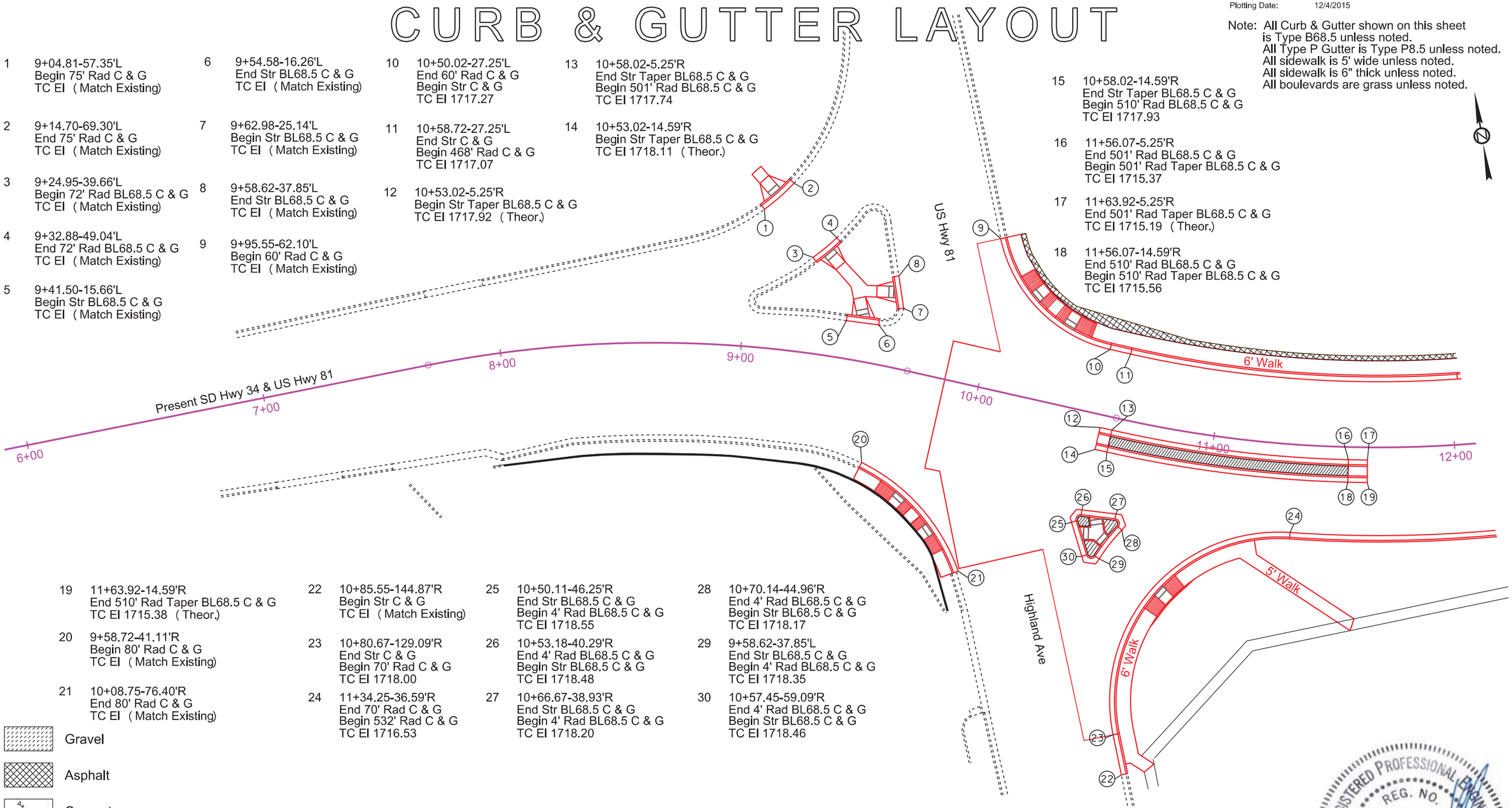

19 11+63.92-14.59'R
End 510' Rad Taper BL68.5 C & G
TC El 1715.38 (Theor.)

20 9+58.72-41.11'R
Begin 80' Rad C & G
TC El (Match Existing)

21 10+08.75-76.40'R
End 80' Rad C & G
TC El (Match Existing)

22 10+85.55-144.87'R
Begin Str C & G
TC El (Match Existing)

23 10+80.67-129.09'R
End Str C & G
Begin 70' Rad C & G
TC El 1718.00

24 11+34.25-36.59'R
End 70' Rad C & G
Begin 532' Rad C & G
TC El 1716.53

25 10+50.11-46.25'R
End Str BL68.5 C & G
Begin 4' Rad BL68.5 C & G
TC El 1718.55

26 10+53.18-40.29'R
End 4' Rad BL68.5 C & G
Begin Str BL68.5 C & G
TC El 1718.48

27 10+66.67-38.93'R
End Str BL68.5 C & G
Begin 4' Rad BL68.5 C & G
TC El 1718.20

28 10+70.14-44.96'R
End 4' Rad BL68.5 C & G
Begin Str BL68.5 C & G
TC El 1718.17

29 9+58.62-37.85'L
End Str BL68.5 C & G
Begin 4' Rad BL68.5 C & G
TC El 1718.35

30 10+57.45-59.09'R
End 4' Rad BL68.5 C & G
Begin Str BL68.5 C & G
TC El 1718.46

Gravel

Asphalt

Concrete

4" Colored Concrete Sidewalk

4" Concrete Sidewalk

6" Reinforced Concrete Sidewalk

REGISTERED PROFESSIONAL ENGINEER
REG. NO. 9737
DAVID P. MAXWELL
SOUTH DAKOTA
12/4/15

FOR BIDDING PURPOSES ONLY

STATE OF SOUTH DAKOTA	PROJECT	SHEET	TOTAL SHEETS
	NH 0034(160)386	B63	B133

Plotting Date: 12/4/2015

CURB & GUTTER LAYOUT

Note: All Curb & Gutter is Type B68.5 and all Type P Gutter is Type P8.5 except as noted.

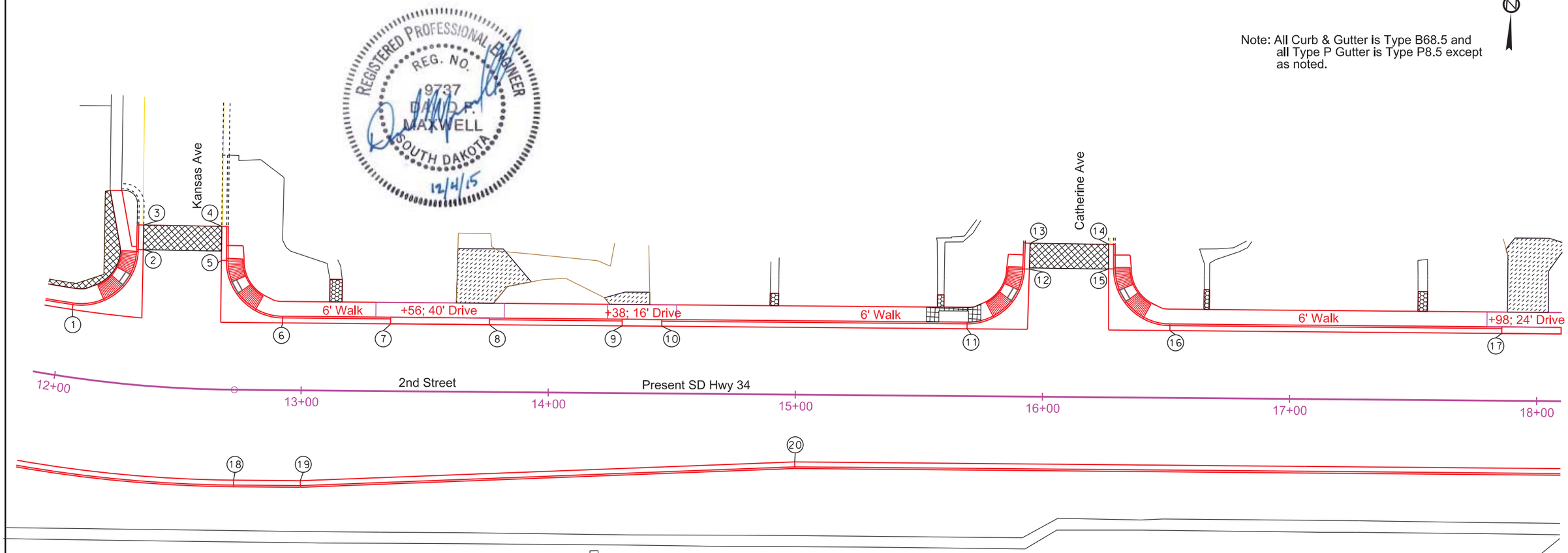

Gravel

Asphalt

Concrete

4" Colored Concrete Sidewalk

4" Concrete Sidewalk

6" Reinforced Concrete Sidewalk

1	12+03.04-27.25'L End 468' Rad C & G Begin 25' Rad Fillet TC El 1713.57	5	12+66.63-52.28'L End Str C & G Begin 25' Rad Fillet TC El 1712.57	9	14+29.71-27.25'L End Str C & G Begin Str Type P Gutter TC El 1708.93 (Theor.)	13	15+94.54-62.11'L End Str C & G TC El (Match Existing)	17	17+85.66-27.25'L End Str C & G Begin Str Type P Gutter TC El 1703.64 (Theor.)
2	12+30.92-54.80'L End 25' Rad Fillet Begin Str C & G TC El 1713.49	6	12+92.30-27.25'L End 25' Rad Fillet Begin Str C & G TC El 1711.39	10	14+45.71-27.25'L End Str Type P Gutter Begin Str C & G TC El 1708.72 (Theor.)	14	16+26.25-61.94'L Begin Str C & G TC El (Match Existing)	18	12+73.01-36.59'R End 532' Rad C & G Begin Str C & G TC El 1712.89
3	12+30.07-64.77'L End Str C & G TC El (Match Existing)	7	13+35.97-27.25'L End Str C & G Begin Str Type P Gutter TC El 1710.37 (Theor.)	11	15+69.29-27.25'L End Str C & G Begin 25' Rad Fillet TC El 1706.94	15	16+26.34-52.02'L End Str C & G Begin 25' Rad Fillet TC El 1706.31	19	13+00.00-36.59'R End Str C & G Begin Str C & G TC El 1711.94
4	12+66.47-66.09'L Begin Str C & G TC El (Match Existing)	8	13+75.97-27.25'L End Str Type P Gutter Begin Str C & G TC El 1709.69 (Theor.)	12	15+94.28-51.64'L End 25' Rad Fillet Begin Str C & G TC El 1706.60	16	16+51.34-27.25'L End 25' Rad Fillet Begin Str C & G TC El 1705.70	20	15+00.00-27.25'R End Str C & G Begin Str C & G TC El 1707.79

FOR BIDDING PURPOSES ONLY

STATE OF SOUTH DAKOTA	PROJECT	SHEET	TOTAL SHEETS
	NH 0034(160)386	B64	B133

Plotting Date: 12/4/2015

CURB & GUTTER LAYOUT

1 18+09.66-27.25'L
End Str Type P Gutter
Begin Str C & G
TC El 1703.27 (Theor.)

2 19+30.08-27.25'L
End Str C & G
Begin 25' Rad Fillet
TC El 1701.43

3 19+55.08-51.96'L
End 25' Rad Fillet
Begin Str C & G
TC El 1701.83

4 19+55.25-65.01'L
End Str C & G
TC El (Match Existing)

5 19+87.00-64.92'L
Begin Str C & G
TC El (Match Existing)

6 19+86.96-52.33'L
End Str C & G
Begin 25' Rad Fillet
TC El 1701.08

7 20+11.96-27.25'L
End 25' Rad Fillet
Begin Str C & G
TC El 1700.14

8 21+46.52-27.25'L
End Str C & G
Begin Str Type P Gutter
TC El 1697.83 (Theor.)

9 21+70.52-27.25'L
End Str Type P Gutter
Begin Str C & G
TC El 1697.42 (Theor)

10 23+01.04-27.25'L
End Str C & G
Begin 25' Rad Fillet
TC El 1695.18

11 23+25.87-51.88'L
End 25' Rad Fillet
Begin Str C & G
TC El 1694.63

12 23+26.07-65.26'L
End Str C & G
TC El (Match Existing)

13 23+57.68-64.80'L
Begin Str C & G
TC El (Match Existing)

14 23+57.63-52.35'L
End Str C & G
Begin 25' Rad Fillet
TC El 1694.32

15 23+82.63-27.25'L
End 25' Rad Fillet
Begin Str C & G
TC El 1693.78

Note: All Curb & Gutter is Type B68.5 and all Type P Gutter is Type P8.5 except as noted.

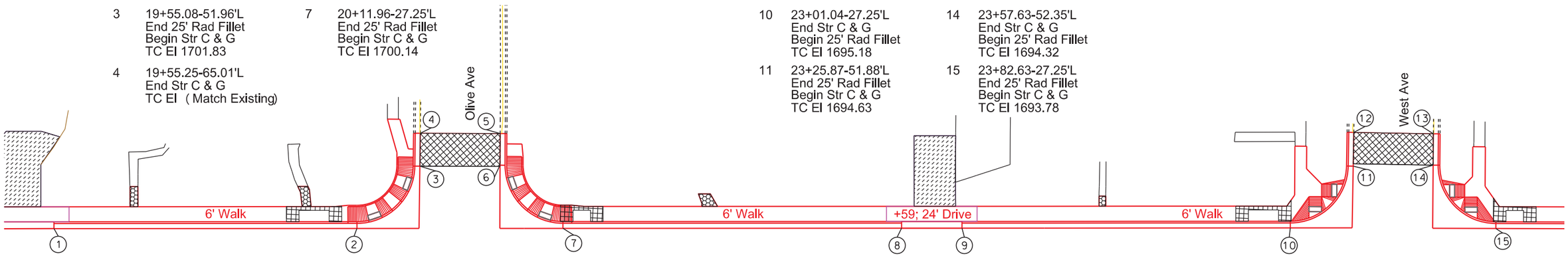

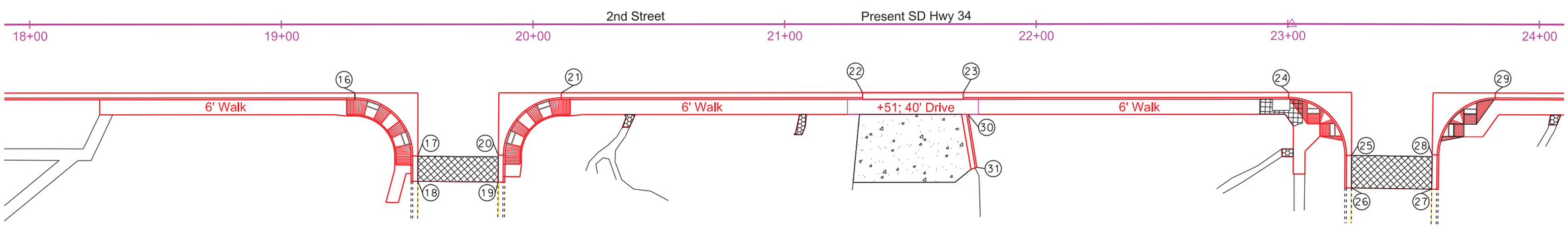

16 19+29.22-27.25'R
End Str C & G
Begin 25' Rad Fillet
TC El 1701.24

17 19+54.22-52.31'R
End 25' Rad Fillet
Begin Str C & G
TC El 1700.92

18 19+54.20-62.45'R
End Str C & G
TC El (Match Existing)

19 19+86.12-62.76'R
Begin Str C & G
TC El (Match Existing)

20 19+86.22-52.01'R
End Str C & G
Begin 25' Rad Fillet
TC El 1700.29

21 20+11.22-27.25'R
End 25' Rad Fillet
Begin Str C & G
TC El 1699.94

22 21+31.00-27.25'R
End Str C & G
Begin Str Type P Gutter
TC El 1697.88 (Theor.)

23 21+71.00-27.25'R
End Str Type P Gutter
Begin Str C & G
TC El 1697.20 (Theor.)

24 23+00.31-27.25'R
End Str C & G
Begin 25' Rad Fillet
TC El 1694.99

25 23+25.48-52.22'R
End 25' Rad Fillet
Begin Str C & G
TC El 1694.28

26 23+25.49-65.19'R
End Str C & G
TC El (Match Existing)

27 23+57.35-65.59'R
Begin Str C & G
TC El (Match Existing)

28 23+57.52-51.93'R
End Str C & G
Begin 25' Rad Fillet
TC El 1693.72

29 23+82.52-27.25'R
End 25' Rad Fillet
Begin Str C & G
TC El 1693.57

30 21+68.62-35.92'R
Begin Str Type P6 Gutter
TC El 1697.69

31 21+76.38-56.94'R
End Str Type P6 Gutter
TC El (Match Existing)

Gravel

Asphalt

Concrete

4" Colored Concrete Sidewalk

4" Concrete Sidewalk

6" Reinforced Concrete Sidewalk

REGISTERED PROFESSIONAL ENGINEER
REG. NO. 9737
DAVID P. MAXWELL
SOUTH DAKOTA
12/4/15

FOR BIDDING PURPOSES ONLY

STATE OF SOUTH DAKOTA	PROJECT	SHEET	TOTAL SHEETS
	NH 0034(160)386	B65	B133

Plotting Date: 12/4/2015

CURB & GUTTER LAYOUT

1	25+06.87-27.25'L End Str C & G Begin Str Type P Gutter TC El 1691.86 (Theor.)	6	27+04.25-52.00'L End 25' Rad Fillet Begin Str C & G TC El 1691.12	11	28+70.87-27.25'L End Str C & G Begin Str Type P Gutter TC El 1689.19 (Theor.)
2	25+30.87-27.25'L End Str Type P Gutter Begin Str C & G TC El 1691.69 (Theor.)	7	27+04.48-74.35'L End Str C & G TC El (Match Existing)	12	28+86.87-27.25'L End Str Type P Gutter Begin Str C & G TC El 1689.07 (Theor.)
3	25+74.88-27.25'L End Str C & G Begin Str Type P Gutter TC El 1691.36 (Theor.)	8	27+36.06-74.37'L Begin Str C & G TC El (Match Existing)	13	29+10.85-27.25'L End Str C & G Begin Str Type P Gutter TC El 1688.88 (Theor.)
4	25+98.88-27.25'L End Str Type P Gutter Begin Str C & G TC El 1691.19 (Theor.)	9	27+36.15-52.15'L End Str C & G Begin 25' Rad Fillet TC El 1691.00	14	29+26.85-27.25'L End Str Type P Gutter Begin Str C & G TC El 1688.69 (Theor.)
5	26+79.26-27.25'L End Str C & G Begin 25' Rad Fillet TC El 1690.59	10	27+61.15-27.25'L End 25' Rad Fillet Begin Str C & G TC El 1690.00	15	25+30.70-27.25'R End Str C & G Begin Str Type P Gutter TC El 1691.48 (Theor.)

Note: All Curb & Gutter is Type B68.5 and all Type P Gutter is Type P8.5 except as noted.

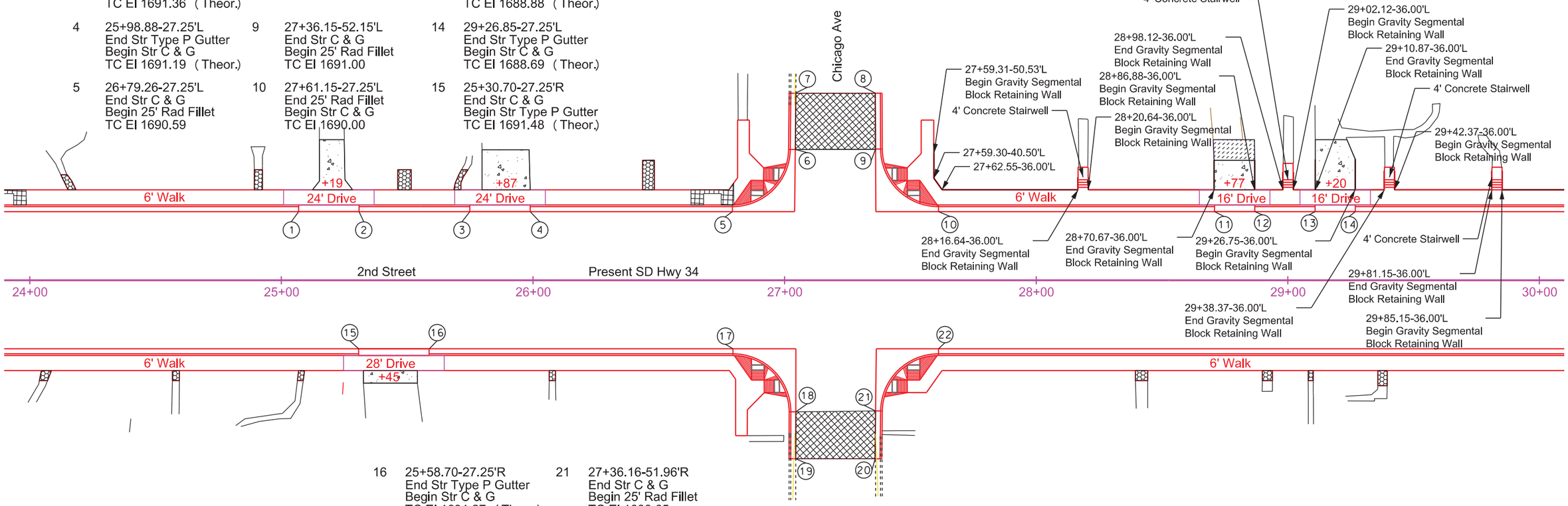

16	25+58.70-27.25'R End Str Type P Gutter Begin Str C & G TC El 1691.27 (Theor.)	21	27+36.16-51.96'R End Str C & G Begin 25' Rad Fillet TC El 1688.65
17	26+79.48-27.25'R End Str C & G Begin 25' Rad Fillet TC El 1690.39	22	27+61.16-27.25'R End 25' Rad Fillet Begin Str C & G TC El 1689.78
18	27+04.48-52.28'R End 25' Rad Fillet Begin Str C & G TC El 1688.74		
19	27+04.45-71.00'R End Str C & G TC El (Match Existing)		
20	27+35.94-71.00'R Begin Str C & G TC El (Match Existing)		

- Gravel
- Asphalt
- Concrete
- 4" Colored Concrete Sidewalk
- 4" Concrete Sidewalk
- 6" Reinforced Concrete Sidewalk

REGISTERED PROFESSIONAL ENGINEER
REG. NO. 9737
DAVID P. MAXWELL
SOUTH DAKOTA
12/4/15

FOR BIDDING PURPOSES ONLY

STATE OF SOUTH DAKOTA	PROJECT	SHEET	TOTAL SHEETS
	NH 0034(160)386	B66	B133

Plotting Date: 12/4/2015

CURB & GUTTER LAYOUT

1	30+60.10-28.25'L End Str C & G Begin 25' Rad Fillet TC El 1687.02	4	31+16.91-69.11'L Begin Str C & G TC El (Match Existing)	7	31+93.25-27.25'L End Str C & G Begin Str Type P Gutter TC El 1685.36 (Theor)	10	32+92.51-27.25'L End Str Type P Gutter Begin Str C & G TC El 1684.35 (Theor)	13	34+77.27-69.80'L End Str C & G TC El (Match Existing)		
2	30+85.10-51.85'L End 25' Rad Fillet Begin Str C & G TC El 1687.24	5	31+17.02-52.09'L End Str C & G Begin 25' Rad Fillet TC El 1686.71	8	32+17.25-27.25'L End Str Type P Gutter Begin Str C & G TC El 1685.06 (Theor)	11	34+51.87-27.25'L End Str C & G Begin 25' Rad Fillet TC El 1683.83	14	35+09.34-69.36'L Begin Str C & G TC El (Match Existing)		
3	30+85.37-69.11'L End Str C & G TC El (Match Existing)	6	31+42.02-27.25'L End 25' Rad Fillet Begin Str C & G TC El 1686.00	9	32+68.51-27.25'L End Str C & G Begin Str Type P Gutter TC El 1684.42 (Theor)	12	34+76.87-51.70'L End 25' Rad Fillet Begin Str C & G TC El 1684.50	15	35+09.19-52.50'L End Str C & G Begin 25' Rad Fillet TC El 1684.46		
								16	35+34.54-27.25'L End 25' Rad Fillet Begin Str C & G TC El 1683.58		

Note: All Curb & Gutter is Type B68.5 and all Type P Gutter is Type P8.5 except as noted.

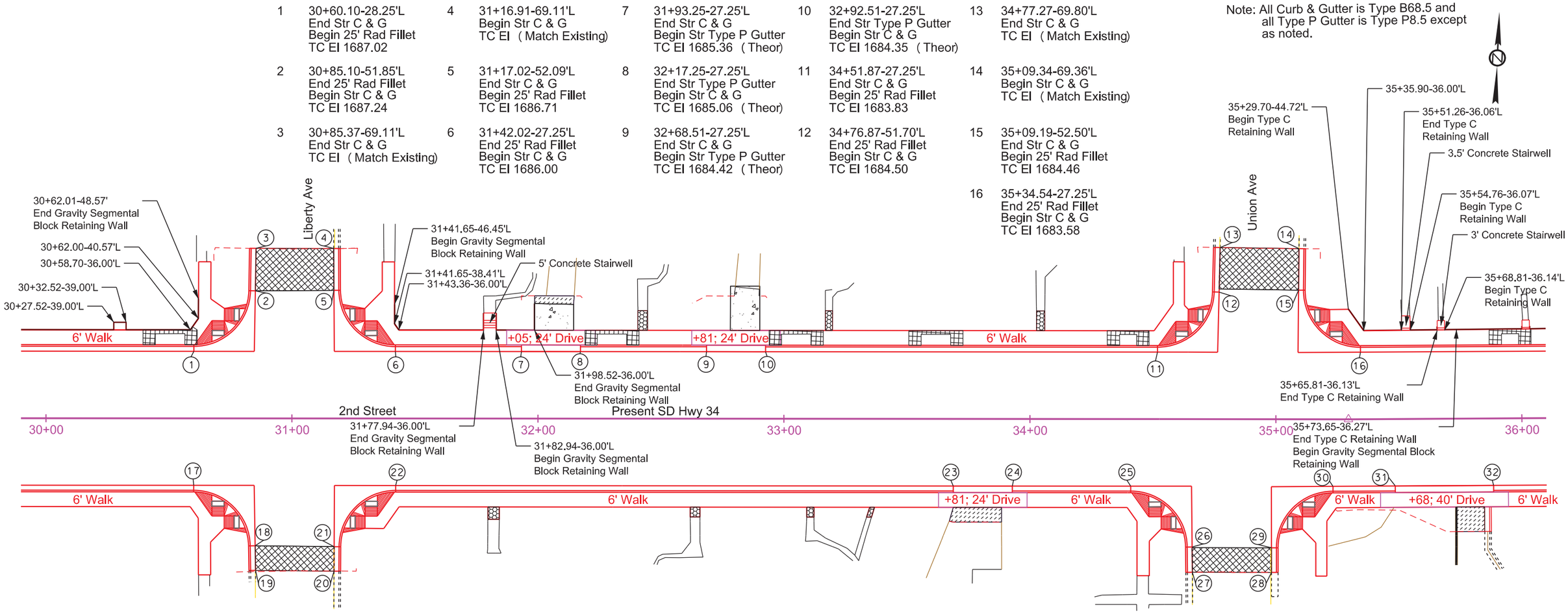

17	30+60.08-27.25'R End Str C & G Begin 25' Rad Fillet TC El 1686.82	20	31+17.14-62.09'R Begin Str C & G TC El (Match Existing)	23	33+68.88-27.25'R End Str C & G Begin Str Type P Gutter TC El 1683.89 (Theor)	26	34+65.99-51.98'R End 25' Rad Fillet Begin Str C & G TC El 1682.95	29	34+98.26-52.30'R End Str C & G Begin 25' Rad Fillet TC El 1682.65	32	35+88.37-27.25'R End Str Type P Gutter Begin Str C & G TC El 1683.19 (Theor.)
18	30+85.08-51.81'R End 25' Rad Fillet Begin Str C & G TC El 1685.43	21	31+17.18-52.09'R End Str C & G Begin 25' Rad Fillet TC El 1685.01	24	33+92.88-27.25'R End Str Type P Gutter Begin Str C & G TC El 1683.82 (Theor)	27	34+66.10-62.27'R End Str C & G TC El (Match Existing)	30	35+23.24-27.29'R End 25' Rad Fillet Begin Str C & G TC El 1683.40		
19	30+85.25-61.82'R End Str C & G TC El (Match Existing)	22	31+42.18-27.25'R End 25' Rad Fillet Begin Str C & G TC El 1685.78	25	34+40.99-27.25'R End Str C & G Begin 25' Rad Fillet TC El 1683.66	28	34+98.28-62.30'R Begin Str C & G TC El (Match Existing)	31	35+48.37-27.25'R End Str C & G Begin Str Type P Gutter TC El 1683.32 (Theor.)		

- Gravel
- Asphalt
- Concrete
- 4" Colored Concrete Sidewalk
- 4" Concrete Sidewalk
- 6" Reinforced Concrete Sidewalk

REGISTERED PROFESSIONAL ENGINEER
REG. NO. 9737
DAVID P. MAXWELL
SOUTH DAKOTA
12/4/15

FOR BIDDING PURPOSES ONLY

STATE OF SOUTH DAKOTA	PROJECT	SHEET	TOTAL SHEETS
	NH 0034(160)386	B67	B133

Plotting Date: 12/4/2015

CURB & GUTTER LAYOUT

REGISTERED PROFESSIONAL ENGINEER
REG. NO. 9737
DAVID P. MAXWELL
SOUTH DAKOTA
12/4/15

Note: All Curb & Gutter is Type B68.5 and all Type P Gutter is Type P8.5 except as noted.

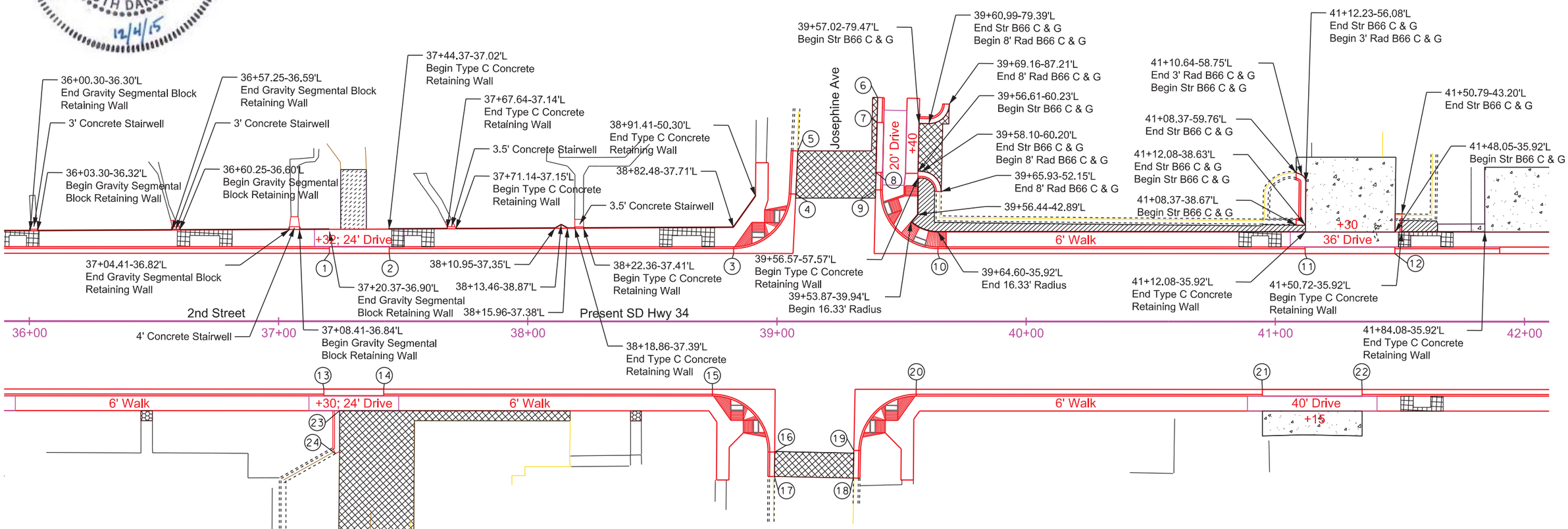

Gravel

Asphalt

Concrete

4" Colored Concrete Sidewalk

4" Concrete Sidewalk

6" Reinforced Concrete Sidewalk

1	37+20.41-27.25'L End Str C & G Begin Str Type P Gutter TC El 1682.97 (Theor)	5	39+08.39-68.41'L End Str C & G TC El (Match Existing)	9	39+39.61-52.79'L End Str C & G Begin 25' Rad Fillet TC El 1683.11	13	37+18.19-27.25'R End Str C & G Begin Str Type P Gutter TC El 1682.77 (Theor)	17	38+99.05-62.24'R End Str C & G TC El (Match Existing)	21	40+94.83-27.25'R End Str C & G Begin Str Type P Gutter TC El 1681.41 (Theor)
2	37+44.41-27.25'L End Str Type P Gutter Begin Str C & G TC El 1682.90 (Theor)	6	39+40.42-89.84'L Begin Str C & G TC El (Match Existing)	10	39+64.60-27.25'L End 25' Rad Fillet Begin Str C & G TC El 1682.17	14	37+42.19-27.25'R End Str Type P Gutter Begin Str C & G TC El 1682.69 (Theor)	18	39+30.69-62.83'R Begin Str C & G TC El (Match Existing)	22	41+34.83-27.25'R End Str Type P Gutter Begin Str C & G TC El 1681.24 (Theor)
3	38+82.61-27.25'L End Str C & G Begin 25' Rad Fillet TC El 1682.45	7	39+40.20-79.81'L End Str C & G Begin Str Type P Gutter TC El 1683.82 (Theor)	11	41+12.00-27.25'L End Str C & G Begin Str Type P Gutter TC El 1681.55 (Theor)	15	38+74.13-27.25'R End Str C & G Begin 25' Rad Fillet TC El 1682.27	19	39+30.89-51.80'R End Str C & G Begin 25' Rad Fillet TC El 1681.33	23	37+24.48-35.92'R Begin Str B66 C & G TC El 1682.85
4	39+07.59-51.09'L End 25' Rad Fillet Begin Str C & G TC El 1683.24	8	39+39.76-59.81'L End Str Type P Gutter Begin Str C & G TC El 1683.29 (Theor)	12	41+48.00-27.25'L End Str Type P Gutter Begin Str C & G TC El 1681.40 (Theor)	16	38+99.13-52.43'R End 25' Rad Fillet Begin Str C & G TC El 1681.61	20	39+55.91-27.25'R End 25' Rad Fillet Begin Str C & G TC El 1682.00	24	37+22.84-53.16'R End Str B66 C & G TC El (Match Existing)

FOR BIDDING PURPOSES ONLY

STATE OF SOUTH DAKOTA	PROJECT	SHEET	TOTAL SHEETS
	NH 0034(160)386	B68	B133

Plotting Date: 12/4/2015

CURB & GUTTER LAYOUT

Note: All Curb & Gutter is Type B68.5 and all Type P Gutter is Type P8.5 except as noted.

1 41+90.08-27.25'L
End Str C & G
Begin Str Type P Gutter
TC El 1681.22 (Theor)

2 42+30.08-27.25'L
End Str Type P Gutter
Begin Str C & G
TC El 1681.05 (Theor)

3 42+58.05-27.25'L
End Str C & G
Begin 25' Rad Fillet
TC El 1680.94

4 42+83.05-51.83'L
End 25' Rad Fillet
Begin Str C & G
TC El 1681.42

5 42+83.36-70.19'L
End Str C & G
TC El (Match Existing)

6 43+14.90-69.49'L
Begin Str C & G
TC El (Match Existing)

7 43+14.55-53.02'L
End Str C & G
Begin 25' Rad Fillet
TC El 1681.14

8 43+39.67-27.49'L
End 25' Rad Fillet
Begin Str C & G
TC El 1680.59

9 43+58.52-27.50'L
End Str C & G
Begin Str Type P Gutter
TC El 1680.52 (Theor)

10 43+82.52-27.50'L
End Str Type P Gutter
Begin Str C & G
TC El 1680.42 (Theor)

11 44+77.30-27.50'L
End Str C & G
Begin Str Type P Gutter
TC El 1680.02 (Theor)

12 45+17.30-27.50'L
End Str Type P Gutter
Begin Str C & G
TC El 1679.85 (Theor)

13 46+28.13-27.50'L
End Str C & G
Begin 25' Rad Fillet
TC El 1679.39

14 46+53.11-51.47'L
End 25' Rad Fillet
Begin Str C & G
TC El 1679.51

15 46+53.59-63.30'L
End Str C & G
Begin Str Type P Gutter
TC El 1679.56 (Theor)

16 46+53.90-87.30'L
End Str Type P Gutter
Begin Str C & G
TC El 1679.64 (Theor)

17 46+53.98-93.29'L
End Str C & G
TC El (Match Existing)

18 46+84.58-55.78'L
End 2' Rad Fillet
Begin Str C & G
TC El 1679.62

19 46+84.64-52.08'L
End Str C & G
Begin 25' Rad Fillet
TC El 1679.20

20 47+09.67-27.50'L
End 25' Rad Fillet
Begin Str C & G
TC El 1679.05

21 47+73.00-27.50'L
End Str C & G
Begin Str Type P Gutter
TC El 1678.78 (Theor)

22 48+01.00-27.50'L
End Str Type P Gutter
Begin Str C & G
TC El 1678.66 (Theor)

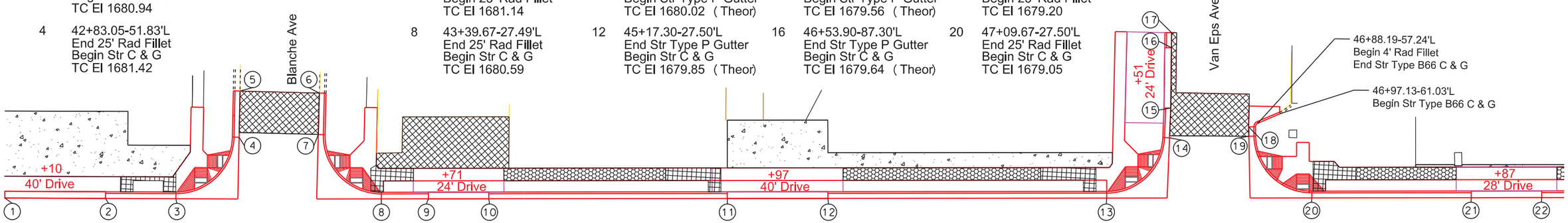

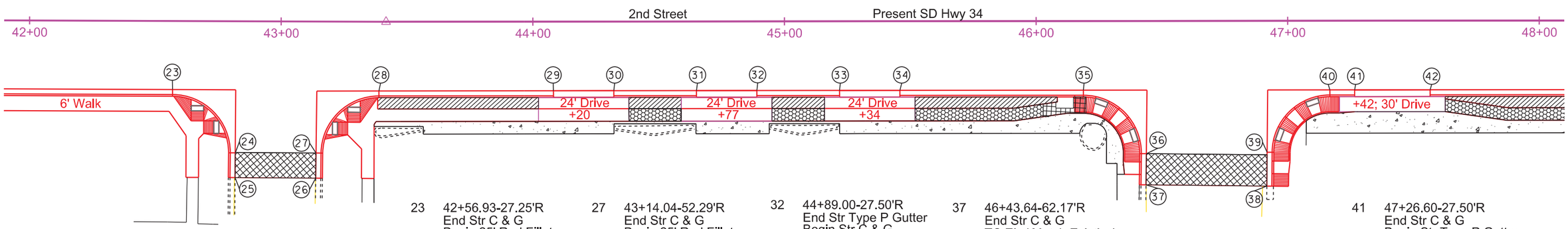

23 42+56.93-27.25'R
End Str C & G
Begin 25' Rad Fillet
TC El 1670.74

24 42+81.93-52.34'R
End 25' Rad Fillet
Begin Str C & G
TC El 1680.36

25 42+81.90-62.18'R
End Str C & G
TC El (Match Existing)

26 43+13.95-62.29'R
Begin Str C & G
TC El (Match Existing)

27 43+14.04-52.29'R
End Str C & G
Begin 25' Rad Fillet
TC El 1680.21

28 43+38.91-27.51'R
End 25' Rad Fillet
Begin Str C & G
TC El 1680.38

29 44+08.18-27.50'R
End Str C & G
Begin Str Type P Gutter
TC El 1680.09 (Theor)

30 44+32.18-27.50'R
End Str Type P Gutter
Begin Str C & G
TC El 1679.99 (Theor)

31 44+65.00-27.50'R
End Str C & G
Begin Str Type P Gutter
TC El 1679.85 (Theor)

32 44+89.00-27.50'R
End Str Type P Gutter
Begin Str C & G
TC El 1679.75 (Theor)

33 45+21.88-27.50'R
End Str C & G
Begin Str Type P Gutter
TC El 1679.61 (Theor)

34 45+45.88-27.50'R
End Str Type P Gutter
Begin Str C & G
TC El 1679.51 (Theor)

35 46+18.79-27.50'R
End Str C & G
Begin 25' Rad Fillet
TC El 1679.21

36 46+43.79-52.80'R
End 25' Rad Fillet
Begin Str C & G
TC El 1679.35

37 46+43.64-62.17'R
End Str C & G
TC El (Match Existing)

38 46+91.63-65.74'R
Begin Str C & G
TC El (Match Existing)

39 46+91.76-52.25'R
End Str C & G
Begin 25' Rad Fillet
TC El 1678.73

40 47+16.76-27.50'R
End 25' Rad Fillet
Begin Str C & G
TC El 1678.79

41 47+26.60-27.50'R
End Str C & G
Begin Str Type P Gutter
TC El 1678.75 (Theor)

42 47+56.60-27.50'R
End Str Type P Gutter
Begin Str C & G
TC El 1678.63 (Theor)

Gravel

Asphalt

Concrete

4" Colored Concrete Sidewalk

4" Concrete Sidewalk

6" Reinforced Concrete Sidewalk

REGISTERED PROFESSIONAL ENGINEER
REG. NO. 9737
DAVID P. MAXWELL
SOUTH DAKOTA
12/4/15

STATE OF SOUTH DAKOTA	PROJECT	SHEET	TOTAL SHEETS
	NH 0034(160)386	B69	B133

FOR BIDDING PURPOSES ONLY

Plotting Date: 12/4/2015

CURB & GUTTER LAYOUT

Note: All Curb & Gutter is Type B68.5 and all Type P Gutter is Type P8.5 except as noted.

1 48+38.33-27.50'L
End Str C & G
Begin Str Type P Gutter
TC El 1678.50 (Theor)

2 48+62.33-27.50'L
End Str Type P Gutter
Begin Str C & G
TC El 1678.40 (Theor)

3 48+91.60-39.67'L
Begin Str B66 C & G
TC El 1678.81

4 48+91.60-42.31'L
End Str B66 C & G
Begin 8' Rad B66 C & G
TC El 1678.87

5 48+83.90-49.98'L
End 8' Rad B66 C & G
TC El (Match Existing)

6 48+88.87-27.50'L
End Str C & G
Begin Str Type P Gutter
TC El 1678.29 (Theor)

7 49+23.87-27.50'L
End Str Type P Gutter
Begin Str C & G
TC El 1678.11 (Theor)

8 49+88.53-27.50'L
End Str C & G
Begin 25' Rad Fillet
TC El 1677.55

9 50+13.53-52.15'L
End 25' Rad Fillet
Begin Str C & G
TC El 1677.31

10 50+13.70-64.61'L
End Str C & G
TC El (Match Existing)

11 50+45.46-47.09'L
End Str BL68.5 C & G
Begin 5' Rad BL68.5 Fillet
TC El 1677.55

12 50+40.86-51.82'L
End 5' Rad BL68.5 Fillet
Begin Str BL68.5 C & G
TC El 1677.52

13 50+40.94-58.07'L
End Str C & G
Begin 5' Rad CL68.5 C & G
TC El 1677.60

14 50+46.44-63.42'L
Midpt 5' Rad BL68.5 C & G
TC El 1677.77

15 50+51.78-57.92'L
End 5' Rad BL68.5 C & G
Begin Str BL68.5 C & G
TC El 1677.63

16 50+51.70-51.67'L
End Str C & G
Begin 5' Rad BL68.5 Fillet
TC El 1677.51

17 50+46.96-47.07'L
End 5' Rad BL68.5 Fillet
Begin Str BL68.5 C & G
TC El 1677.46

18 50+79.31-64.91'L
Begin Str C & G
TC El (Match Existing)

19 50+79.11-52.91'L
End Str C & G
Begin 25' Rad Fillet
TC El 1676.91

20 51+04.11-27.50'L
End 25' Rad Fillet
Begin Str C & G
TC El 1676.56

21 52+28.10-27.50'L
End Str C & G
Begin Str Type P Gutter
TC El 1675.48 (Theor)

22 52+58.10-27.50'L
End Str Type P Gutter
Begin Str C & G
TC El 1675.27 (Theor)

23 52+87.84-27.50'L
End Str C & G
Begin Str Type P Gutter
TC El 1674.96 (Theor)

24 53+11.84-27.50'L
End Str Type P Gutter
Begin Str C & G
TC El 1674.75 (Theor)

25 53+84.98-27.50'L
End Str C & G
Begin 25' Rad Fillet
TC El 1674.12

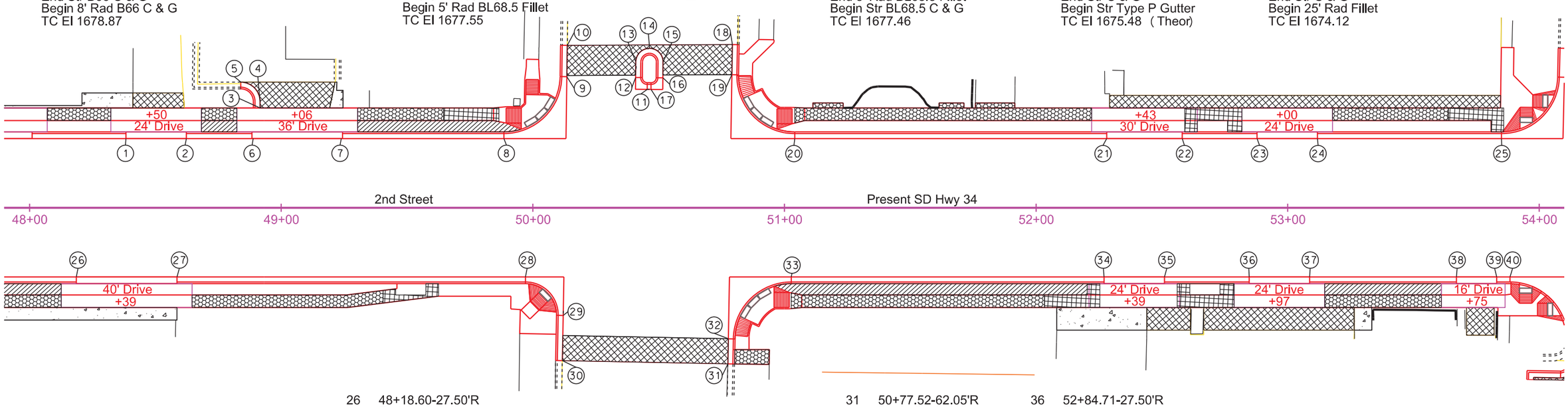

26 48+18.60-27.50'R
End Str C & G
Begin Str Type P Gutter
TC El 1678.36 (Theor)

27 48+58.60-27.50'R
End Str Type P Gutter
Begin Str C & G
TC El 1678.20 (Theor)

28 49+97.08-27.50'R
End Str C & G
Begin 15' Rad Fillet
TC El 1677.26

29 50+12.06-42.80'R
End 15' Rad Fillet
Begin Str C & G
TC El 1677.19

30 50+11.72-60.77'R
End Str C & G
TC El (Match Existing)

31 50+77.52-62.05'R
Begin Str C & G
TC El (Match Existing)

32 50+77.70-52.10'R
End Str C & G
Begin 25' Rad Fillet
TC El 1677.03

33 51+02.69-27.50'R
End 25' Rad Fillet
Begin Str C & G
TC El 1676.34

34 52+27.06-27.50'R
End Str C & G
Begin Str Type P Gutter
TC El 1675.27 (Theor)

35 52+51.06-27.50'R
End Str Type P Gutter
Begin Str C & G
TC El 1675.06 (Theor)

36 52+84.71-27.50'R
End Str C & G
Begin Str Type P Gutter
TC El 1674.77 (Theor)

37 53+08.71-27.50'R
End Str Type P Gutter
Begin Str C & G
TC El 1674.56 (Theor)

38 53+67.09-27.50'R
End Str C & G
Begin Str Type P Gutter
TC El 1674.05 (Theor)

39 53+83.09-27.50'R
End Str Type P Gutter
Begin Str C & G
TC El 1673.91 (Theor)

40 53+88.35-27.50'R
End Str C & G
Begin 25' Rad Fillet
TC El 1673.87

Gravel

Asphalt

Concrete

4" Colored Concrete Sidewalk

4" Concrete Sidewalk

6" Reinforced Concrete Sidewalk

REGISTERED PROFESSIONAL ENGINEER
REG. NO. 9737
DAVID R. MAXWELL
SOUTH DAKOTA
12/4/15

FOR BIDDING PURPOSES ONLY

STATE OF SOUTH DAKOTA	PROJECT	SHEET	TOTAL SHEETS
	NH 0034(160)386	B70	B133

Plotting Date: 12/4/2015

CURB & GUTTER LAYOUT

1	54+09.97-51.93'L End 25' Rad Fillet Begin Str C & G TC El 1673.33	5	54+60.99-27.50'L End 25' Rad Fillet Begin Str C & G TC El 1673.46	9	56+93.10-27.50'L End Str Type P Gutter Begin Str C & G TC El 1672.00	13	58+12.71-62.28'L Begin Str C & G TC El (Match Existing)
2	54+10.23-63.41'L End Str C & G TC El (Match Existing)	6	56+19.40-27.50'L End Str C & G Begin Str Type P Gutter TC El 1672.41 (Theor)	10	57+55.96-27.50'L EndStr C & G Begin 25' Rad Fillet TC El 1671.64	14	58+12.74-52.42'L End Str C & G Begin 25' Rad Fillet TC El 1670.82
3	54+36.13-62.83'L Begin Str C & G TC El (Match Existing)	7	56+35.40-27.50'L End Str Type P Gutter Begin Str C & G TC El 1672.32	11	57+80.96-52.39'L End 25' Rad Fillet Begin Str C & G TC El 1670.98	15	58+37.74-27.50'L End 25' Rad Fillet Begin Str C & G TC El 1671.19
4	54+36.00-52.83'L End Str C & G Begin 25' Rad Fillet TC El 1673.06	8	56+61.10-27.50'L End Str C & G Begin Str Type P Gutter TC El 1672.18	12	57+81.00-62.47'L End Str C & G TC El (Match Existing)		

Note: All Curb & Gutter is Type B68.5 and all Type P Gutter is Type P8.5 except as noted.

16	58+73.14-27.50'L End Str C & G Begin Str Type P Gutter TC El 1670.99 (Theor)
17	59+12.14-27.50'L End Str Type P Gutter Begin Str C & G TC El 1670.77 (Theor)

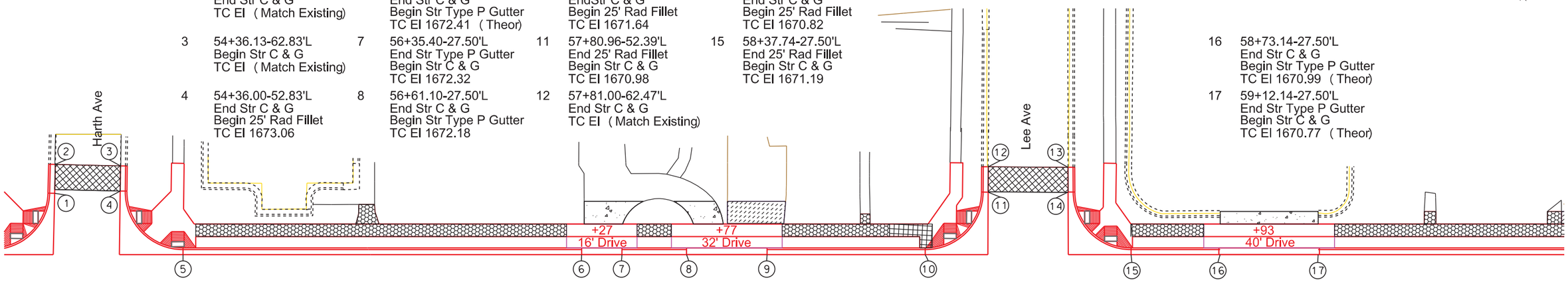

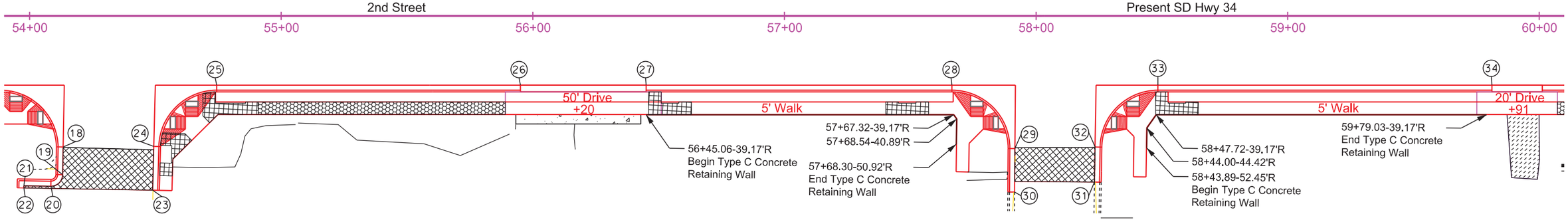

18	54+13.34-52.06'R End 25' Rad C & G Begin Str C & G TC El 1673.58	22	53+97.73-68.32'R End Str C & G TC El (Match Existing)	26	55+95.06-27.50'R End Str C & G Begin Str Type P Gutter TC El 1672.33 (Theor)	30	57+91.46-69.98'R End Str C & G TC El (Match Existing)
19	54+13.15-63.06'R End Str C & G Begin 5' Rad C & G TC El 1674.61	23	54+58.90-69.21'R Begin Str C & G TC El (Match Existing)	27	56+45.06-27.50'R End Str Type P Gutter Begin Str C & G TC El 1672.05 (Theor)	31	58+23.22-66.01'R Begin Str C & G TC El (Match Existing)
20	54+08.52-67.65'R End 5' Rad Fillet Begin Str C & G TC El 1674.48	24	54+59.36-51.84'R End Str C & G Begin 25' Rad Fillet TC El 1673.41	28	57+66.59-27.50'R End Str C & G Begin 25' Rad Fillet TC El 1671.37	32	58+23.46-52.09'R End Str C & G Begin 25' Rad Fillet TC El 1671.93
21	53+97.74-67.46'R End Str C & G Begin Str C & G TC El 1674.59	25	54+74.35-27.50'R End 25' Rad Fillet Begin Str C & G TC El 1673.12	29	57+91.59-52.68'R End 25' Rad Fillet Begin Str C & G TC El 1672.01	33	58+48.45-27.50'R End 25' Rad Fillet Begin Str C & G TC El 1670.90

34	59+81.19-27.50'R End Str C & G Begin Str Type P Gutter TC El 1670.16

Gravel

Asphalt

Concrete

4" Colored Concrete Sidewalk

4" Concrete Sidewalk

6" Reinforced Concrete Sidewalk

REGISTERED PROFESSIONAL ENGINEER
REG. NO. 9737
DAVID P. MAXWELL
SOUTH DAKOTA
12/4/15

FOR BIDDING PURPOSES ONLY

STATE OF SOUTH DAKOTA	PROJECT	SHEET	TOTAL SHEETS
	NH 0034(160)386	B71	B133

Plotting Date: 12/4/2015

CURB & GUTTER LAYOUT

1 60+19.10-27.50'L
End Str C & G
Begin Str Type P Gutter
TC El 1670.17 (Theor)

2 60+59.10-27.50'L
End Str Type P Gutter
Begin Str C & G
TC El 1669.94 (Theor)

3 61+32.65-27.50'L
End Str C & G
Begin 25' Rad Fillet
TC El 1669.51

4 61+57.64-51.69'L
End 25' Rad Fillet
Begin Str C & G
TC El 1668.90

5 61+58.09-65.82'L
End Str C & G
TC El (Match Existing)

6 62+02.04-63.08'L
Begin Str C & G
TC El (Match Existing)

7 62+01.19-53.23'L
End Str C & G
Begin 25' Rad Fillet
TC El 1668.73

8 62+22.38-27.05'L
End 25' Rad Fillet
Begin Str C & G
TC El 1668.86

9 62+40.95-26.10'L
End Str C & G
TC El (Match Existing)

10 60+01.19-27.50'R
End Str Type P Gutter
Begin Str C & G
TC 1670.05 (Theor)

11 60+21.42-27.50'R
End Str C & G
Begin Str Type P Gutter
TC El 1669.94 (Theor)

12 60+45.42-27.50'R
End Str Type P Gutter
Begin Str C & G
TC El 1669.80 (Theor)

13 60+86.25-27.50'R
End Str C & G
Begin 60' Rad C & G
TC El 1669.57

14 61+46.25-88.21'R
End 60' Rad C & G
Begin Str C & G
TC El 1671.30

15 61+46.00-109.56'R
End Str C & G
Begin Str Type P Gutter
TC El 1671.86 (Theor)

Note: All Curb & Gutter is Type B68.5 and all Type P Gutter is Type P8.5 except as noted.

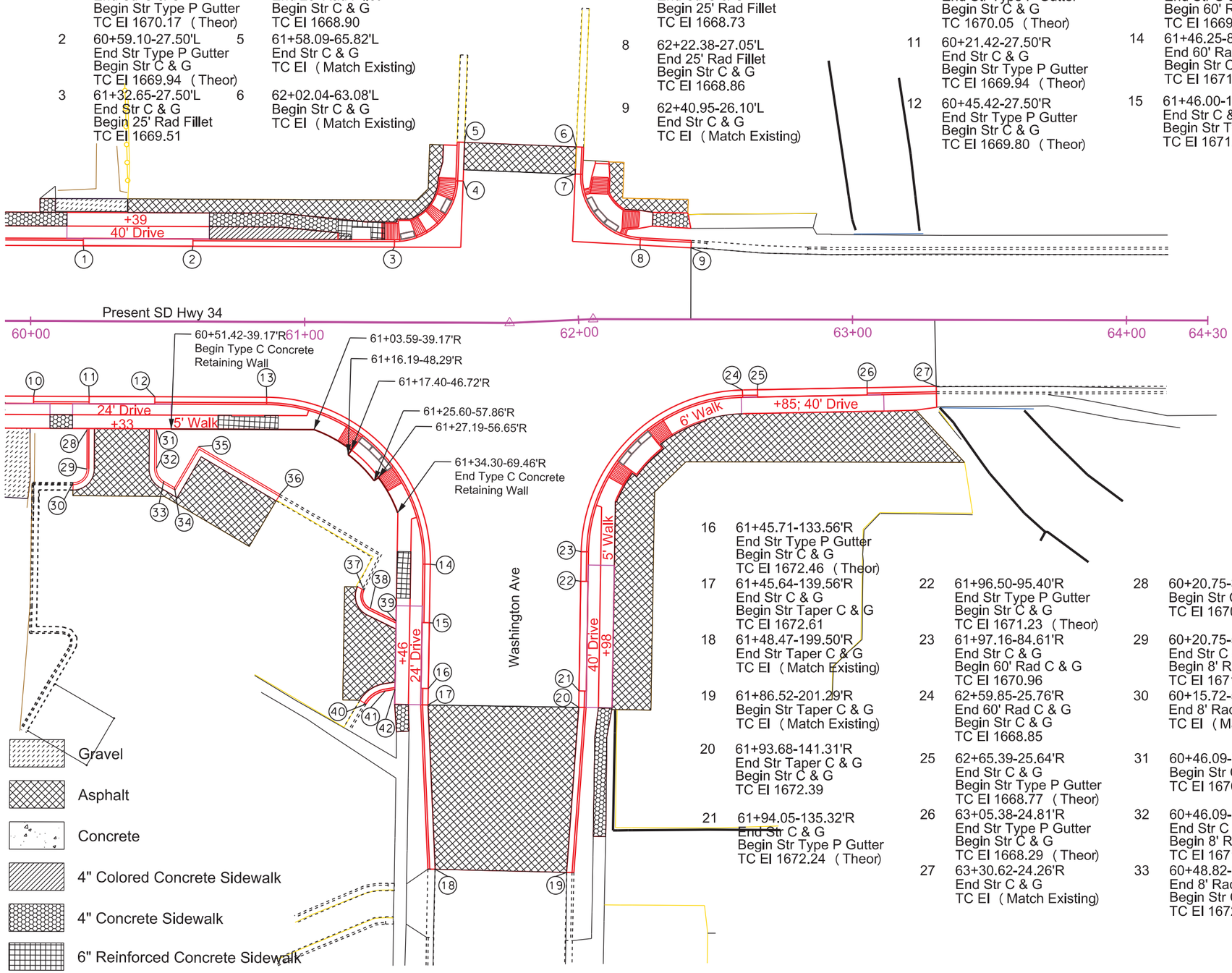

16 61+45.71-133.56'R
End Str Type P Gutter
Begin Str C & G
TC El 1672.46 (Theor)

17 61+45.64-139.56'R
End Str C & G
Begin Str Taper C & G
TC El 1672.61

18 61+48.47-199.50'R
End Str Taper C & G
TC El (Match Existing)

19 61+86.52-201.29'R
Begin Str Taper C & G
TC El (Match Existing)

20 61+93.68-141.31'R
End Str Taper C & G
Begin Str C & G
TC El 1672.39

21 61+94.05-135.32'R
End Str C & G
Begin Str Type P Gutter
TC El 1672.24 (Theor)

22 61+96.50-95.40'R
End Str Type P Gutter
Begin Str C & G
TC El 1671.23 (Theor)

23 61+97.16-84.61'R
End Str C & G
Begin 60' Rad C & G
TC El 1670.96

24 62+59.85-25.76'R
End 60' Rad C & G
Begin Str C & G
TC El 1668.85

25 62+65.39-25.64'R
End Str C & G
Begin Str Type P Gutter
TC El 1668.77 (Theor)

26 63+05.38-24.81'R
End Str Type P Gutter
Begin Str C & G
TC El 1668.29 (Theor)

27 63+30.62-24.26'R
End Str C & G
TC El (Match Existing)

28 60+20.75-39.68'R
Begin Str C & G
TC El 1670.52

29 60+20.75-54.01'R
End Str C & G
Begin 8' Rad C & G
TC El 1671.91

30 60+15.72-59.01'R
End 8' Rad C & G
TC El (Match Existing)

31 60+46.09-39.68'R
Begin Str C & G
TC El 1670.38

32 60+46.09-53.61'R
End Str C & G
Begin 8' Rad C & G
TC El 1671.79

33 60+48.82-58.36'R
End 8' Rad C & G
Begin Str C & G
TC El 1672.21

34 60+52.74-60.65'R
Point Str C & G
TC El 1672.51

35 60+61.46-45.69'R
Point Str C & G
TC El 1673.07

36 60+91.19-63.02'R
End Str C & G
TC El (Match Existing)

37 61+22.07-97.75'R
Begin 8' Rad C & G
TC El (Match Existing)

38 61+24.38-104.44'R
End 8' Rad C & G
Begin Str C & G
TC El 1673.39

39 61+33.83-109.00'R
End Str C & G
TC El 1672.44

40 61+23.02-139.31'R
Begin 13' Rad C & G
TC El (Match Existing)

41 61+30.06-134.52'R
End 13' Rad C & G
Begin Str C & G
TC El 1673.60

42 61+33.54-133.96'R
End Str C & G
TC El 1673.01

REGISTERED PROFESSIONAL ENGINEER
REG. NO. 9737
DAVID P. MAXWELL
SOUTH DAKOTA
12/4/15

STATE OF SOUTH DAKOTA	PROJECT	SHEET	TOTAL SHEETS
	NH 0034(160)386	B72	B133

FOR BIDDING PURPOSES ONLY

Plotting Date: 12/4/2015

CURB RAMP LAYOUT

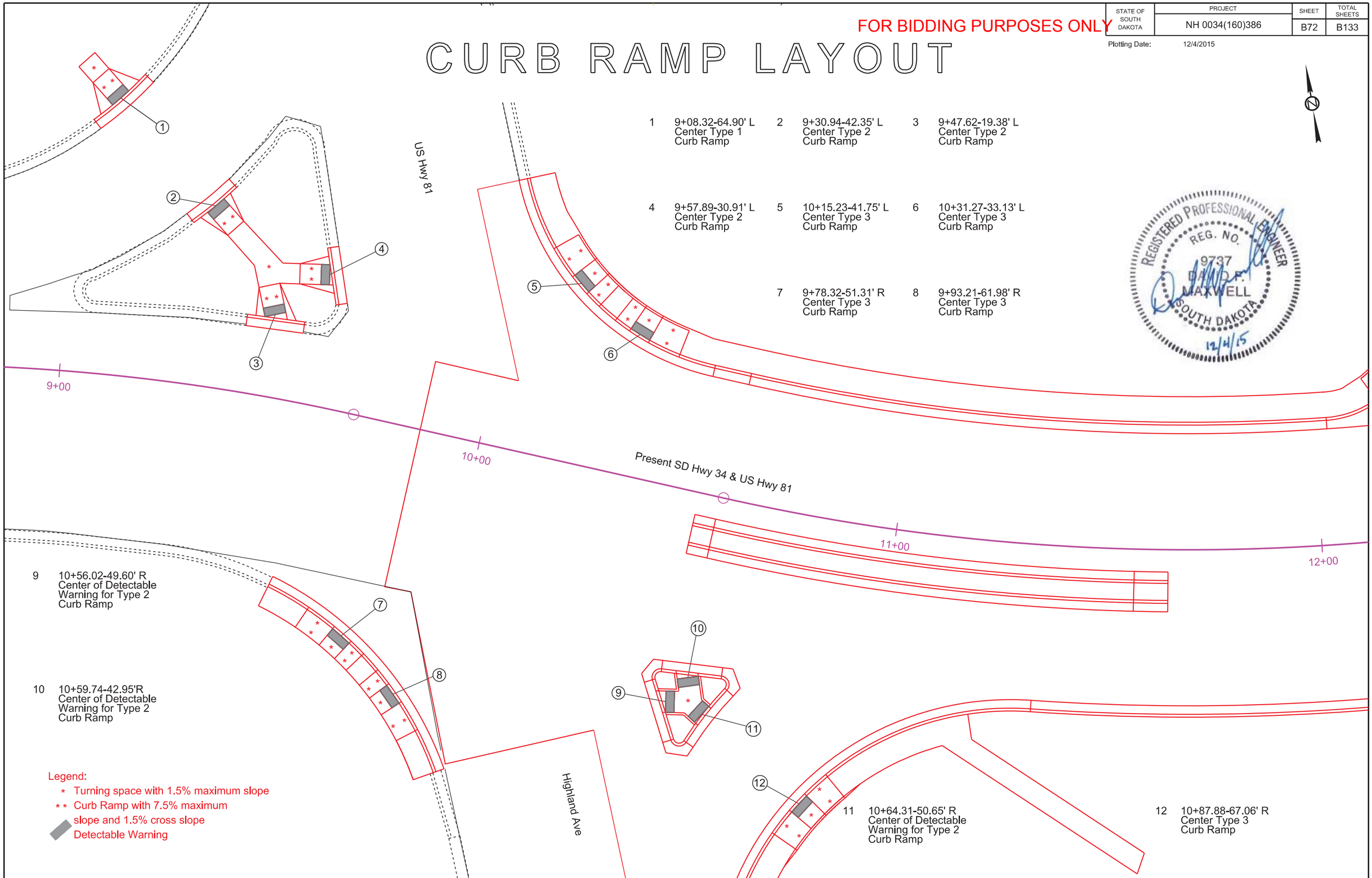

1	9+08.32-64.90' L Center Type 1 Curb Ramp	2	9+30.94-42.35' L Center Type 2 Curb Ramp	3	9+47.62-19.38' L Center Type 2 Curb Ramp
4	9+57.89-30.91' L Center Type 2 Curb Ramp	5	10+15.23-41.75' L Center Type 3 Curb Ramp	6	10+31.27-33.13' L Center Type 3 Curb Ramp
		7	9+78.32-51.31' R Center Type 3 Curb Ramp	8	9+93.21-61.98' R Center Type 3 Curb Ramp

REGISTERED PROFESSIONAL ENGINEER
REG. NO. 9737
DAVID P. MAXWELL
SOUTH DAKOTA
12/4/15

9 10+56.02-49.60' R
Center of Detectable
Warning for Type 2
Curb Ramp

10 10+59.74-42.95'R
Center of Detectable
Warning for Type 2
Curb Ramp

11 10+64.31-50.65' R
Center of Detectable
Warning for Type 2
Curb Ramp

12 10+87.88-67.06' R
Center Type 3
Curb Ramp

Legend:
* Turning space with 1.5% maximum slope
** Curb Ramp with 7.5% maximum slope and 1.5% cross slope
Detectable Warning

FOR BIDDING PURPOSES ONLY

STATE OF SOUTH DAKOTA	PROJECT	SHEET	TOTAL SHEETS
	NH 0034(160)386	B73	B133

Plotting Date: 12/4/2015

CURB RAMP LAYOUT

1 12+24.84-42.07' L
Center Type 3
Curb Ramp

2 12+72.90-41.43' L
Center Type 3
Curb Ramp

REGISTERED PROFESSIONAL ENGINEER
REG. NO. 9737
DAVID P. MAXWELL
SOUTH DAKOTA
12/4/15

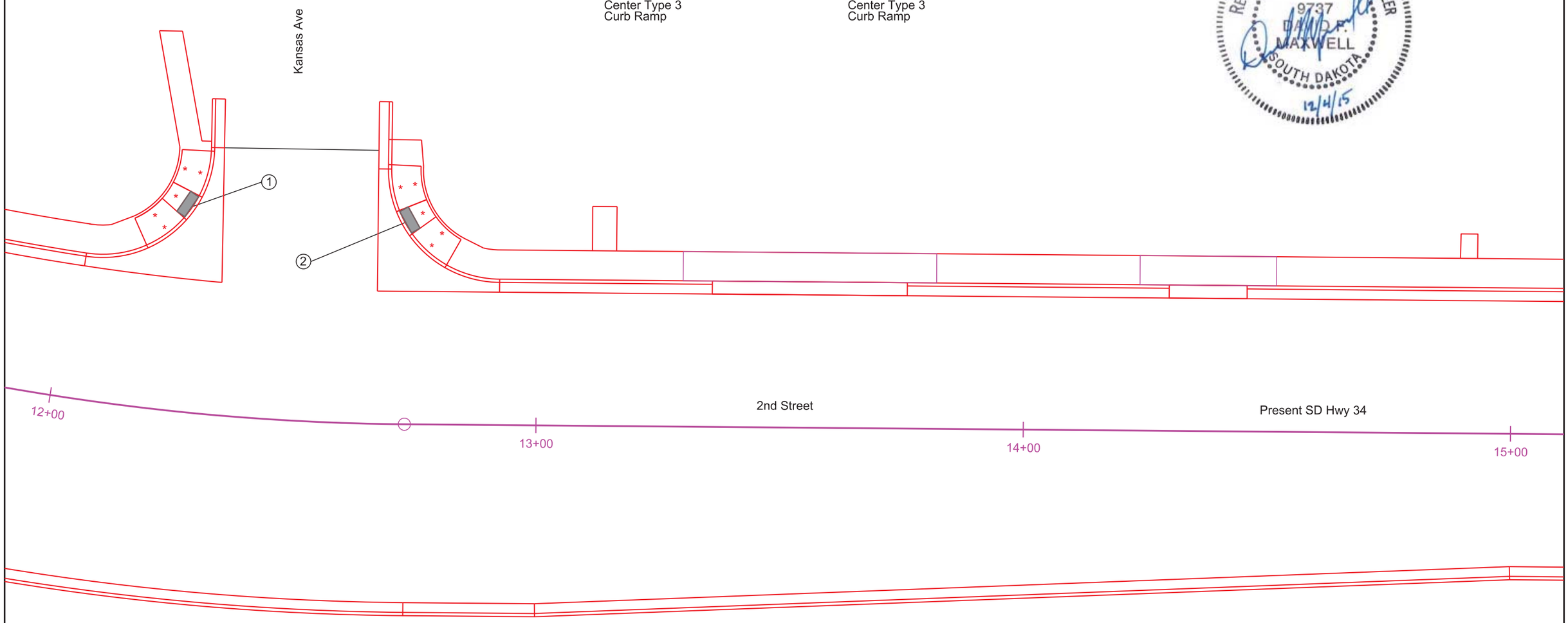

Legend:
* Turning space with 1.5% maximum slope
* * Curb Ramp with 7.5% maximum slope and 1.5% cross slope
Detectable Warning

STATE OF SOUTH DAKOTA	PROJECT	SHEET	TOTAL SHEETS
	NH 0034(160)386	B74	B133

FOR BIDDING PURPOSES ONLY

Plotting Date: 12/4/2015

CURB RAMP LAYOUT

1 15+88.42-41.00' L
Center Type 3
Curb Ramp

2 16+32.12-41.15' L
Center Type 3
Curb Ramp

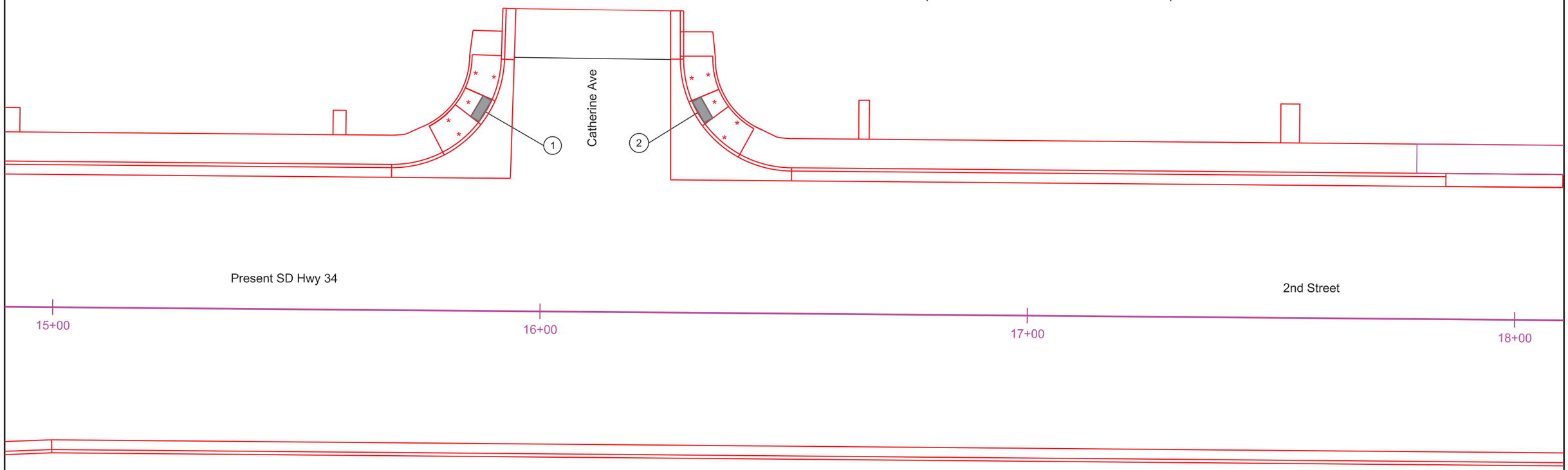

REGISTERED PROFESSIONAL ENGINEER
REG. NO. 9737
DAVID P. MAXWELL
SOUTH DAKOTA
12/4/15

Legend:
* Turning space with 1.5% maximum slope
* * Curb Ramp with 7.5% maximum slope and 1.5% cross slope
Detectable Warning

STATE OF SOUTH DAKOTA	PROJECT	SHEET	TOTAL SHEETS
	NH 0034(160)386	B75	B133

FOR BIDDING PURPOSES ONLY

Plotting Date: 12/4/2015

CURB RAMP LAYOUT

1 19+37.32-31.27' L
Center Type 3
Curb Ramp

2 19+50.96-44.74' L
Center Type 3
Curb Ramp

3 19+91.01-44.91' L
Center Type 3
Curb Ramp

4 20+04.55-31.33' L
Center Type 3
Curb Ramp

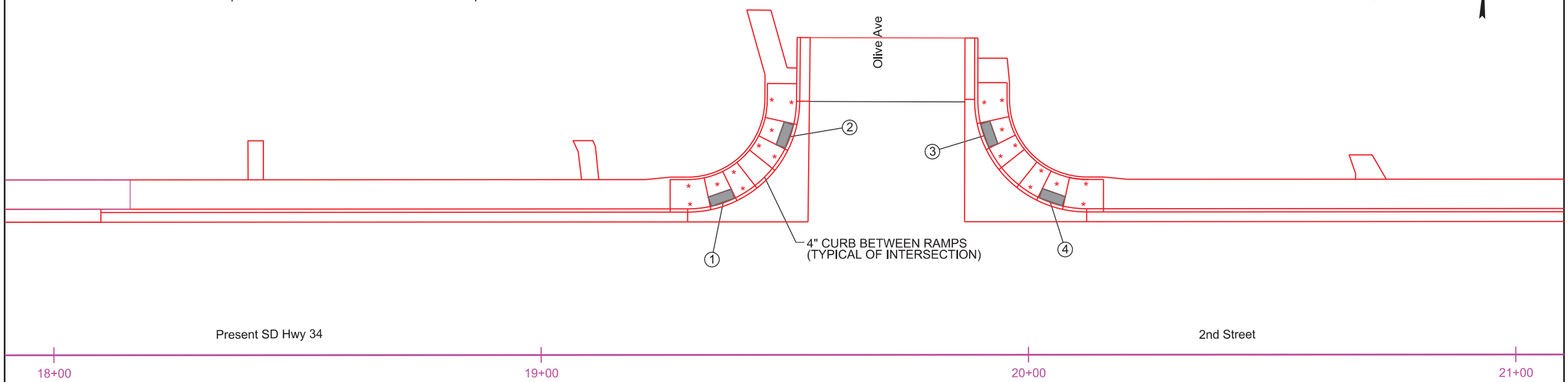

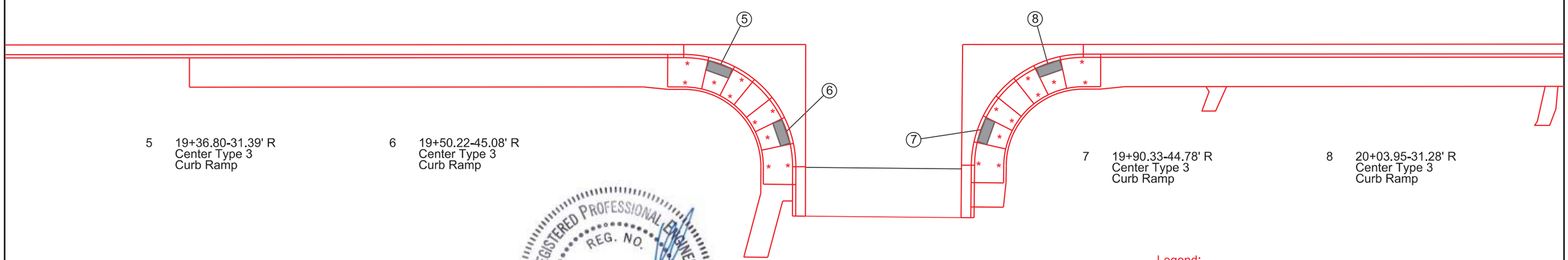

5 19+36.80-31.39' R
Center Type 3
Curb Ramp

6 19+50.22-45.08' R
Center Type 3
Curb Ramp

7 19+90.33-44.78' R
Center Type 3
Curb Ramp

8 20+03.95-31.28' R
Center Type 3
Curb Ramp

REGISTERED PROFESSIONAL ENGINEER
REG. NO. 9737
DAVID P. MAXWELL
SOUTH DAKOTA
12/4/15

Legend:
* Turning space with 1.5% maximum slope
* * Curb Ramp with 7.5% maximum slope and 1.5% cross slope
Detectable Warning

STATE OF SOUTH DAKOTA	PROJECT	SHEET	TOTAL SHEETS
	NH 0034(160)386	B76	B133

FOR BIDDING PURPOSES ONLY

Plotting Date: 12/4/2015

CURB RAMP LAYOUT

REGISTERED PROFESSIONAL ENGINEER
REG. NO. 9737
DAVID F. MAXWELL
SOUTH DAKOTA
12/4/15

1	23+10.81-33.72' L Center Type 2 Curb Ramp	2	23+19.34-42.19' L Center Type 2 Curb Ramp
3	23+64.20-42.13' L Center Type 2 Curb Ramp	4	23+72.75-33.69' L Center Type 2 Curb Ramp

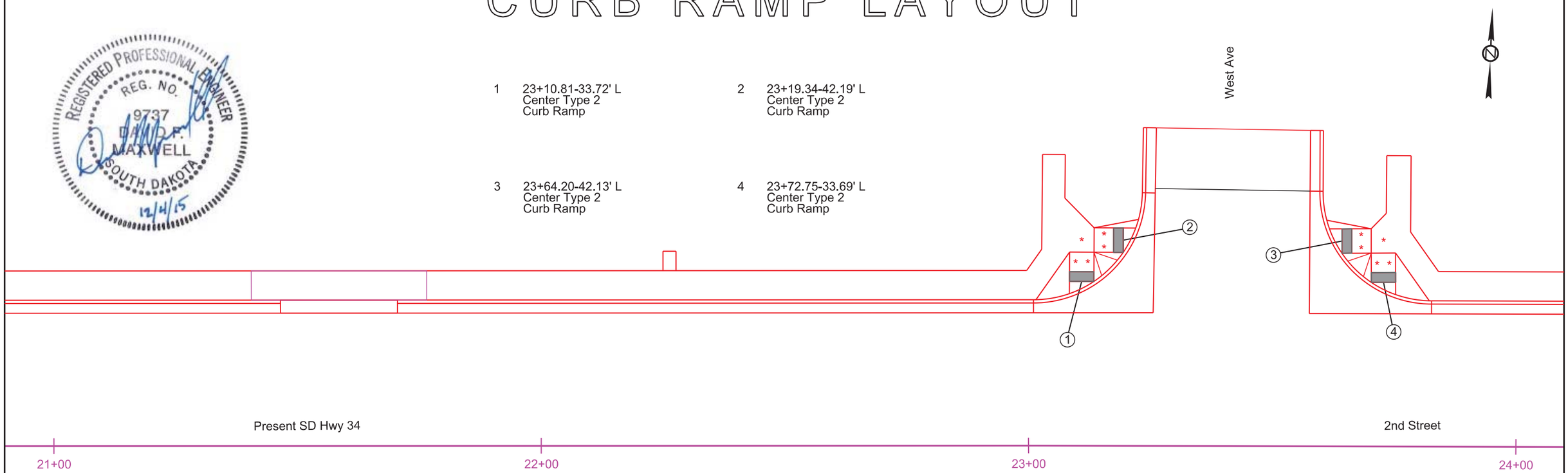

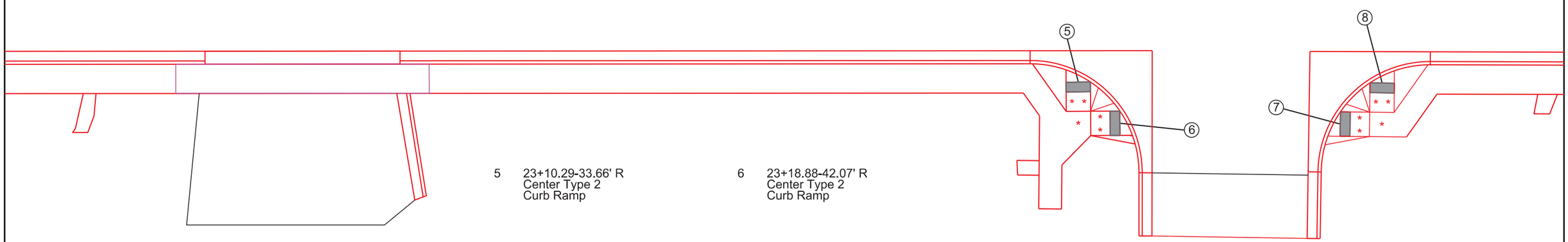

5	23+10.29-33.66' R Center Type 2 Curb Ramp	6	23+18.88-42.07' R Center Type 2 Curb Ramp
7	23+64.09-42.13' R Center Type 2 Curb Ramp	8	23+72.65-33.69' R Center Type 2 Curb Ramp

Legend:
- * Turning space with 1.5% maximum slope
- ** Curb Ramp with 7.5% maximum slope and 1.5% cross slope
- Detectable Warning

STATE OF SOUTH DAKOTA	PROJECT	SHEET	TOTAL SHEETS
	NH 0034(160)386	B77	B133

FOR BIDDING PURPOSES ONLY

Plotting Date: 12/4/2015

CURB RAMP LAYOUT

1 26+89.14-33.69' L
Center Type 2
Curb Ramp

2 26+97.69-42.13' L
Center Type 2
Curb Ramp

3 27+42.72-42.13' L
Center Type 2
Curb Ramp

4 27+51.28-33.69' L
Center Type 2
Curb Ramp

REGISTERED PROFESSIONAL ENGINEER
REG. NO. 9737
DAVID F. MAXWELL
SOUTH DAKOTA
12/4/15

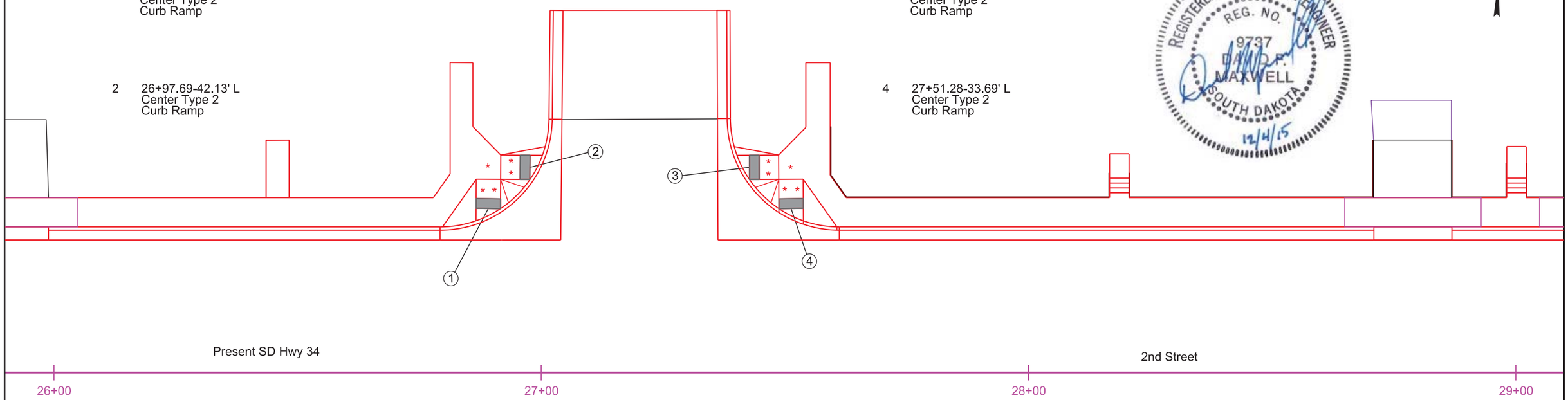

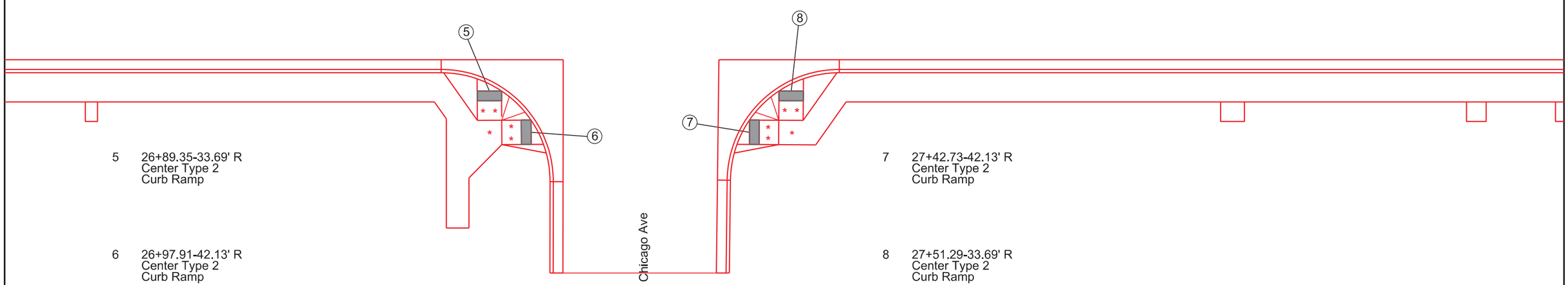

5 26+89.35-33.69' R
Center Type 2
Curb Ramp

6 26+97.91-42.13' R
Center Type 2
Curb Ramp

7 27+42.73-42.13' R
Center Type 2
Curb Ramp

8 27+51.29-33.69' R
Center Type 2
Curb Ramp

Legend:
- * Turning space with 1.5% maximum slope
- ** Curb Ramp with 7.5% maximum slope and 1.5% cross slope
- Detectable Warning

FOR BIDDING PURPOSES ONLY

STATE OF SOUTH DAKOTA	PROJECT	SHEET	TOTAL SHEETS
	NH 0034(160)386	B78	B133

Plotting Date: 12/4/2015

CURB RAMP LAYOUT

1 30+69.98-33.69' L
Center Type 2
Curb Ramp

2 30+78.53-42.13' L
Center Type 2
Curb Ramp

3 31+23.59-42.13' L
Center Type 2
Curb Ramp

4 31+32.15-33.69' L
Center Type 2
Curb Ramp

REGISTERED PROFESSIONAL ENGINEER
REG. NO. 9737
DAVID P. MAXWELL
SOUTH DAKOTA
12/4/15

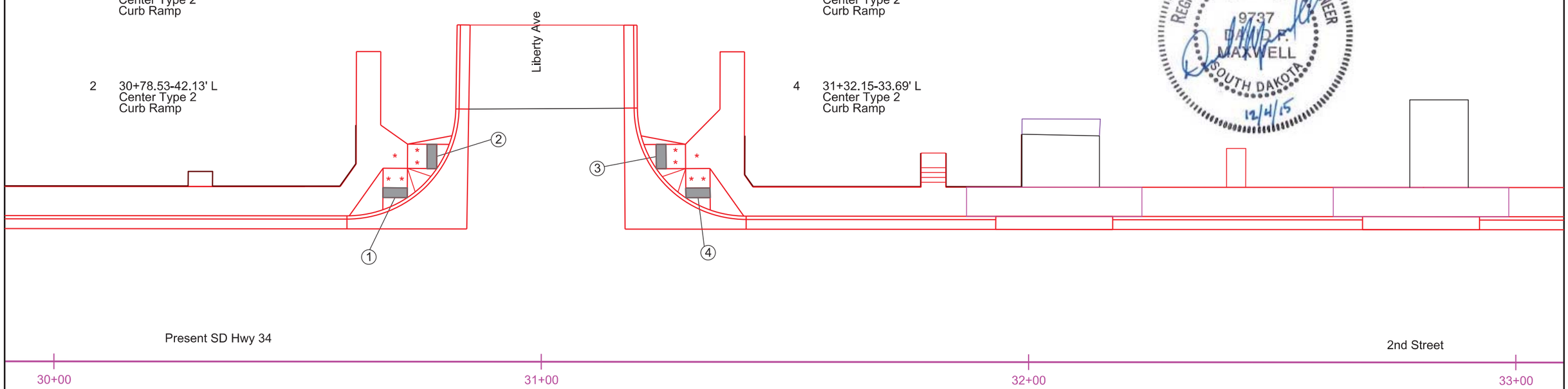

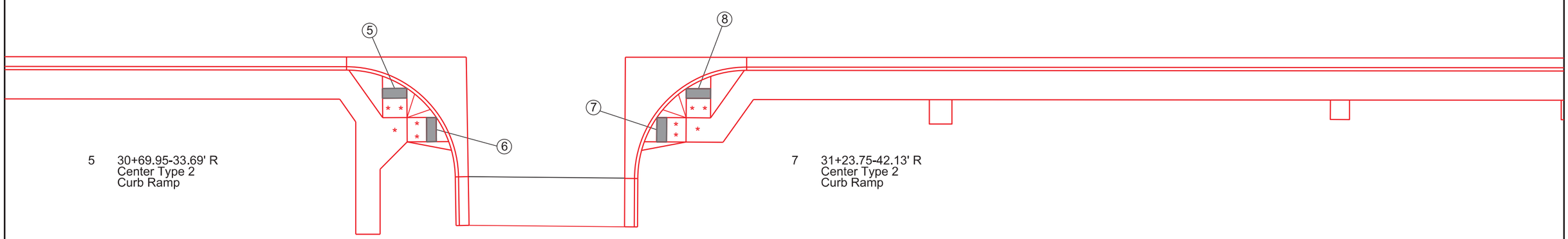

5 30+69.95-33.69' R
Center Type 2
Curb Ramp

6 30+78.51-42.13' R
Center Type 2
Curb Ramp

7 31+23.75-42.13' R
Center Type 2
Curb Ramp

8 31+32.31-33.69' R
Center Type 2
Curb Ramp

Legend:
* Turning space with 1.5% maximum slope
** Curb Ramp with 7.5% maximum slope and 1.5% cross slope
Detectable Warning

STATE OF SOUTH DAKOTA	PROJECT	SHEET	TOTAL SHEETS
	NH 0034(160)386	B79	B133

FOR BIDDING PURPOSES ONLY

Plotting Date: 12/4/2015

CURB RAMP LAYOUT

REGISTERED PROFESSIONAL ENGINEER
REG. NO. 9737
DAVID P. MAXWELL
SOUTH DAKOTA
12/4/15

1 34+61.75-33.69' L
Center Type 2
Curb Ramp

2 34+70.30-42.13' L
Center Type 2
Curb Ramp

3 35+15.83-42.04' L
Center Type 2
Curb Ramp

4 35+24.44-33.65' L
Center Type 2
Curb Ramp

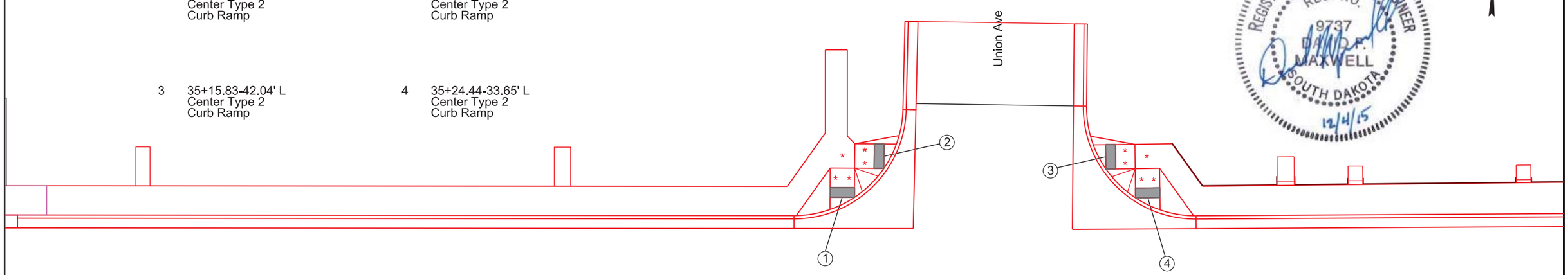

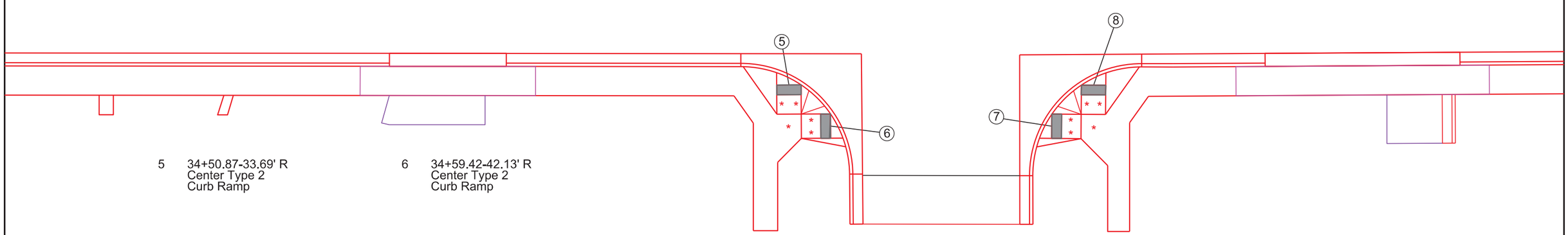

5 34+50.87-33.69' R
Center Type 2
Curb Ramp

6 34+59.42-42.13' R
Center Type 2
Curb Ramp

7 35+04.83-42.13' R
Center Type 2
Curb Ramp

8 35+13.38-33.69' R
Center Type 2
Curb Ramp

Legend:
* Turning space with 1.5% maximum slope
** Curb Ramp with 7.5% maximum slope and 1.5% cross slope
Detectable Warning

STATE OF SOUTH DAKOTA	PROJECT	SHEET	TOTAL SHEETS
	NH 0034(160)386	B80	B133

FOR BIDDING PURPOSES ONLY

Plotting Date: 12/4/2015

CURB RAMP LAYOUT

1 38+92.49-33.69' L
Center Type 2
Curb Ramp

2 39+01.04-42.13' L
Center Type 2
Curb Ramp

3 39+43.59-45.11' L
Center Type 1
Curb Ramp

4 39+57.00-31.40' L
Center Type 3
Curb Ramp

5 39+42.79-47.47' L
Beginning of Curb Ramp,
Adjacent Curb

6 39+48.47-49.40' L
Back of Curb Ramp

REGISTERED PROFESSIONAL ENGINEER
REG. NO. 9737
DAVID P. MAXWELL
SOUTH DAKOTA
12/4/15

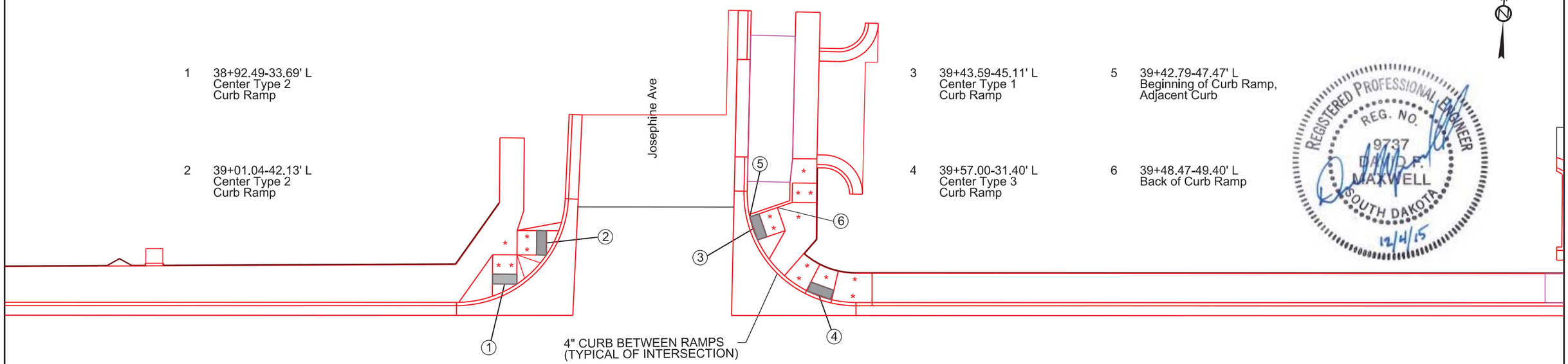

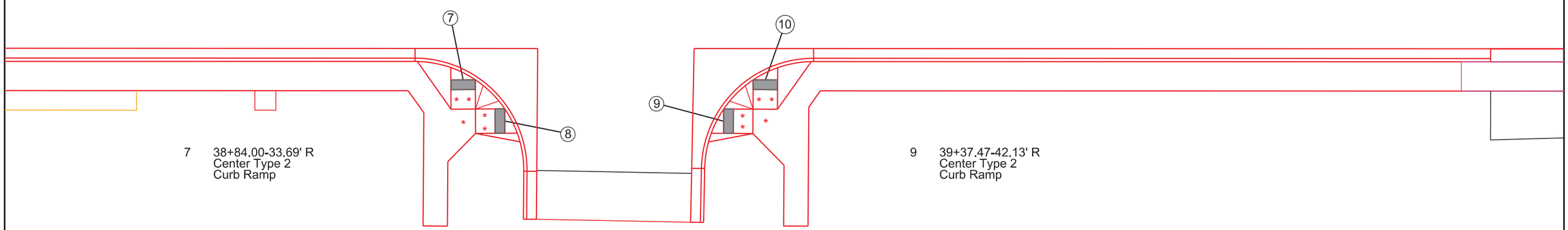

7 38+84.00-33.69' R
Center Type 2
Curb Ramp

8 38+92.56-42.13' R
Center Type 2
Curb Ramp

9 39+37.47-42.13' R
Center Type 2
Curb Ramp

10 9+46.03-33.69' R
Center Type 2
Curb Ramp

Legend:
- * Turning space with 1.5% maximum slope
- ** Curb Ramp with 7.5% maximum slope and 1.5% cross slope
- Detectable Warning

STATE OF SOUTH DAKOTA	PROJECT	SHEET	TOTAL SHEETS
	NH 0034(160)386	B81	B133

FOR BIDDING PURPOSES ONLY

Plotting Date: 12/4/2015

CURB RAMP LAYOUT

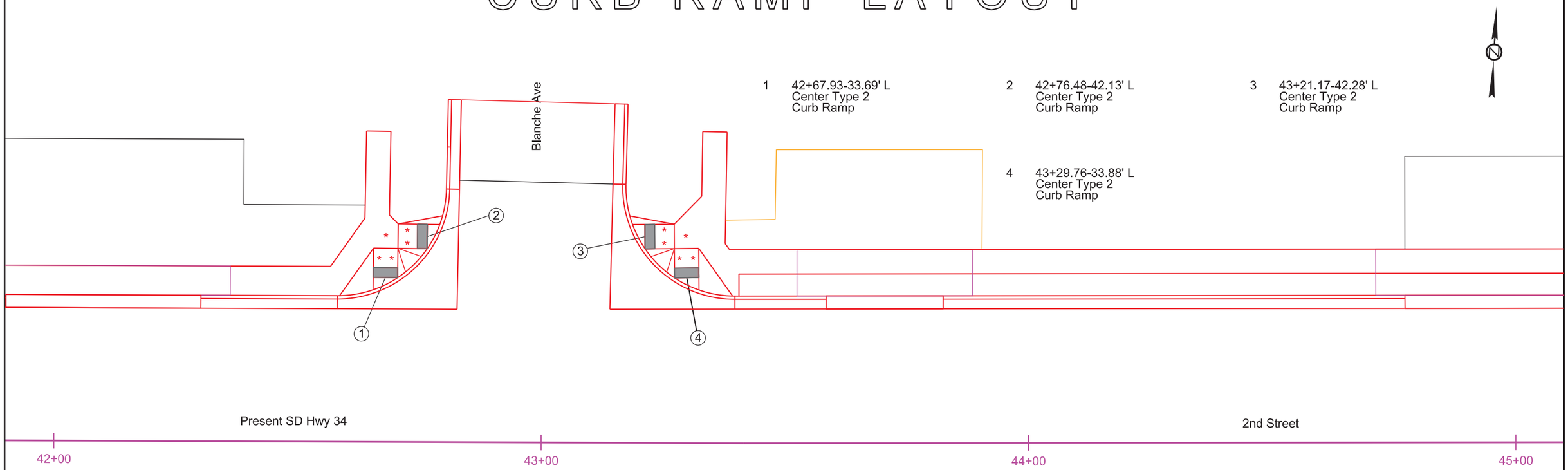

1 42+67.93-33.69' L
Center Type 2
Curb Ramp

2 42+76.48-42.13' L
Center Type 2
Curb Ramp

3 43+21.17-42.28' L
Center Type 2
Curb Ramp

4 43+29.76-33.88' L
Center Type 2
Curb Ramp

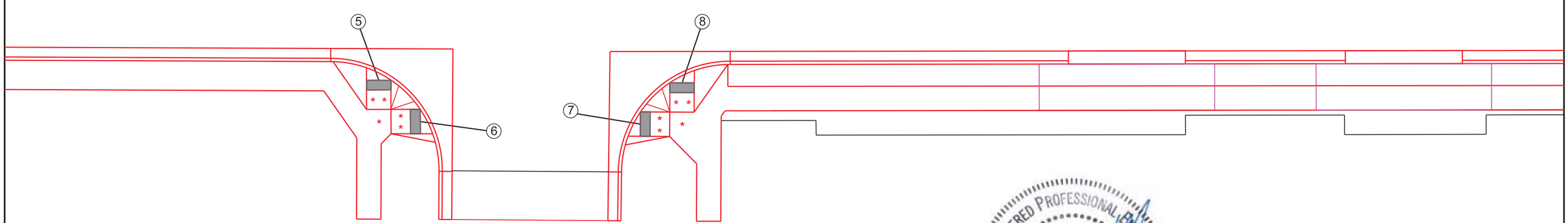

5 42+66.81-33.69' R
Center Type 2
Curb Ramp

6 42+75.36-42.13' R
Center Type 2
Curb Ramp

7 43+20.56-42.49' R
Center Type 2
Curb Ramp

8 43+29.07-34.00' R
Center Type 2
Curb Ramp

REGISTERED PROFESSIONAL ENGINEER
REG. NO. 9737
DAVID P. MAXWELL
SOUTH DAKOTA
12/4/15

Legend:
- • Turning space with 1.5% maximum slope
- •• Curb Ramp with 7.5% maximum slope and 1.5% cross slope
- Detectable Warning

FOR BIDDING PURPOSES ONLY

STATE OF SOUTH DAKOTA	PROJECT	SHEET	TOTAL SHEETS
	NH 0034(160)386	B82	B133

Plotting Date: 12/4/2015

CURB RAMP LAYOUT

REGISTERED PROFESSIONAL ENGINEER
REG. NO. 9737
DAVID P. MAXWELL
SOUTH DAKOTA
12/4/15

1 46+38.00-33.94' L
Center Type 2
Curb Ramp

2 46+46.56-42.38' L
Center Type 2
Curb Ramp

3 46+91.87-41.51' L
Center Type 2
Curb Ramp

4 47+06.09-31.01' L
Center Type 2
Curb Ramp

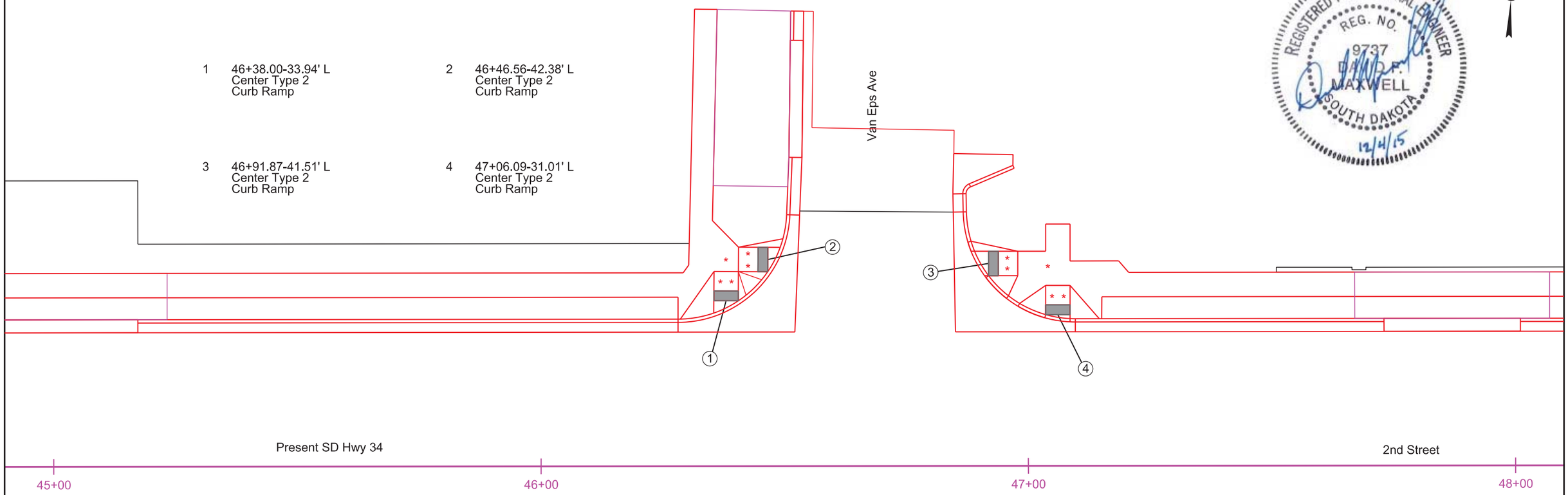

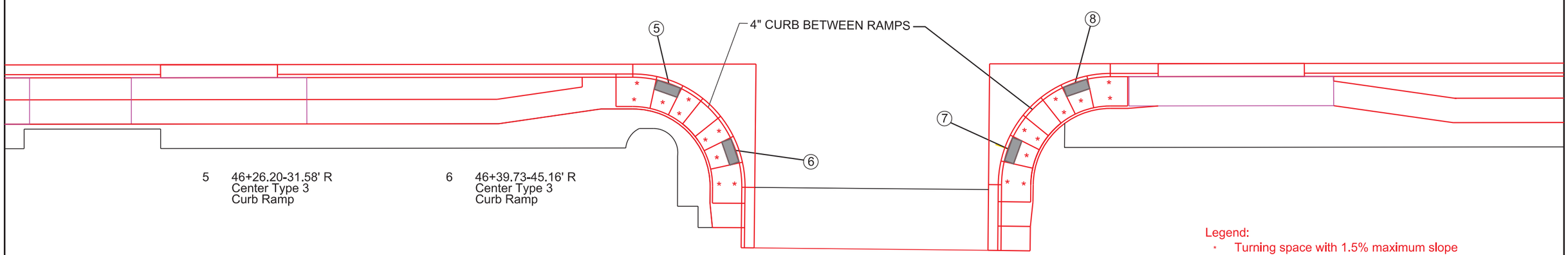

5 46+26.20-31.58' R
Center Type 3
Curb Ramp

6 46+39.73-45.16' R
Center Type 3
Curb Ramp

7 46+95.88-44.98' R
Center Type 3
Curb Ramp

8 47+09.53-31.52' R
Center Type 3
Curb Ramp

Legend:
* Turning space with 1.5% maximum slope
** Curb Ramp with 7.5% maximum slope and 1.5% cross slope
Detectable Warning

STATE OF SOUTH DAKOTA	PROJECT	SHEET	TOTAL SHEETS
	NH 0034(160)386	B83	B133

FOR BIDDING PURPOSES ONLY

Plotting Date: 12/4/2015

CURB RAMP LAYOUT

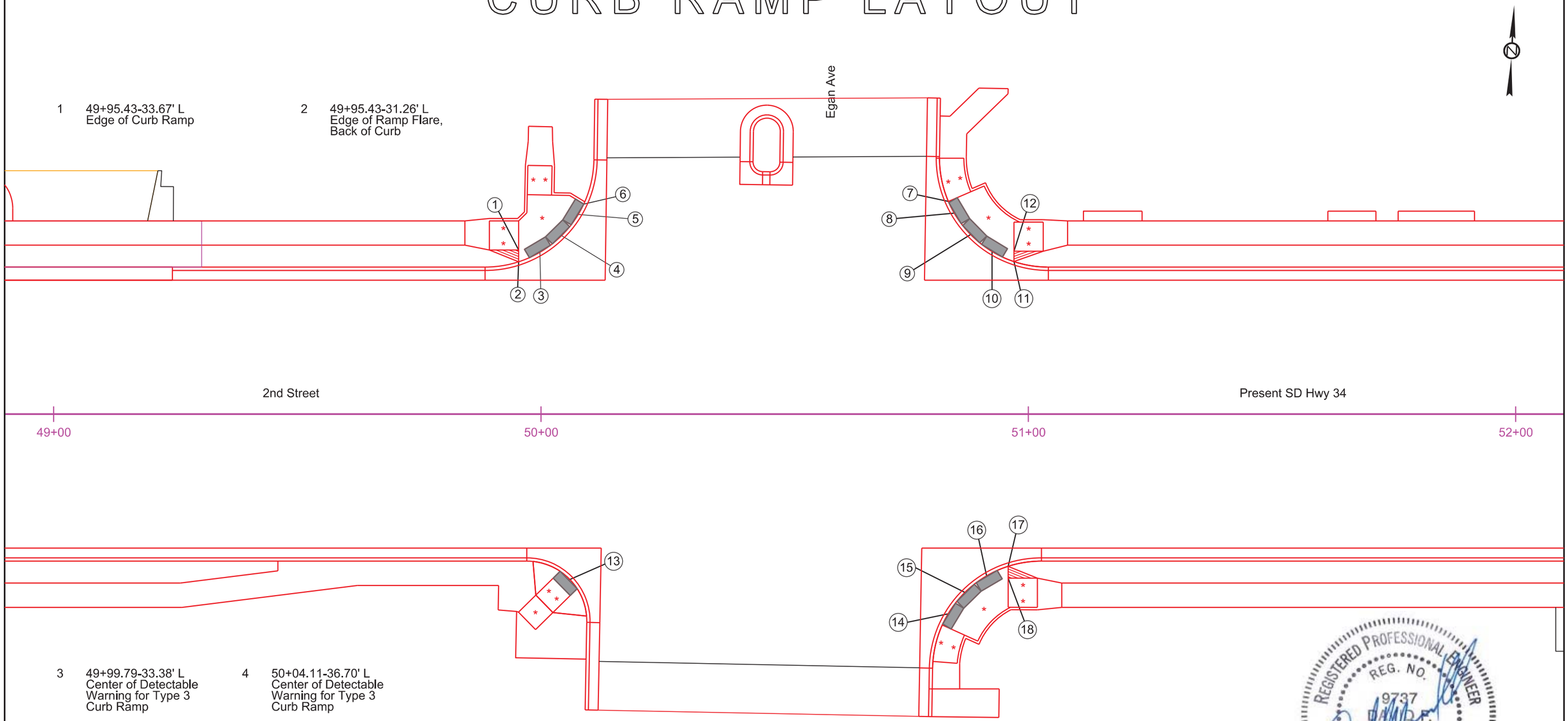

1 49+95.43-33.67' L Edge of Curb Ramp

2 49+95.43-31.26' L Edge of Ramp Flare, Back of Curb

3 49+99.79-33.38' L Center of Detectable Warning for Type 3 Curb Ramp

4 50+04.11-36.70' L Center of Detectable Warning for Type 3 Curb Ramp

5 50+07.50-40.98' L Center of Detectable Warning for Type 3 Curb Ramp

6 50+08.79-43.11' L Edge of Type 3 Curb Ramp

7 50+83.61-43.65' L Edge of Type 3 Curb Ramp

8 50+84.97-41.27' L Center of Detectable Warning for Type 3 Curb Ramp

9 50+88.29-36.94' L Center of Detectable Warning for Type 3 Curb Ramp

10 50+92.56-33.55' L Center of Detectable Warning for Type 3 Curb Ramp

11 50+97.06-31.31' L Edge of Ramp Flare, Back of Curb

12 50+97.06-33.42' L Edge Curb Ramp

13 50+05.68-34.05' R Center of Type 1 Curb Ramp

14 50+83.75-40.94' R Center of Detectable Warning for Type 3 Curb Ramp

15 50+87.14-36.67' R Center of Detectable Warning for Type 3 Curb Ramp

16 50+91.47-33.36' R Center of Detectable Warning for Type 3 Curb Ramp

17 50+95.86-31.24' R Edge of Ramp Flare, Back of Curb

18 50+95.86-33.67' R Edge Curb Ramp

REGISTERED PROFESSIONAL ENGINEER
REG. NO. 9737
DAVID P. MAXWELL
SOUTH DAKOTA
12/4/15

Legend:

- * Turning space with 1.5% maximum slope
- ** Curb Ramp with 7.5% maximum slope and 1.5% cross slope
- Detectable Warning

STATE OF SOUTH DAKOTA	PROJECT	SHEET	TOTAL SHEETS
	NH 0034(160)386	B84	B133

FOR BIDDING PURPOSES ONLY

Plotting Date: 12/4/2015

CURB RAMP LAYOUT

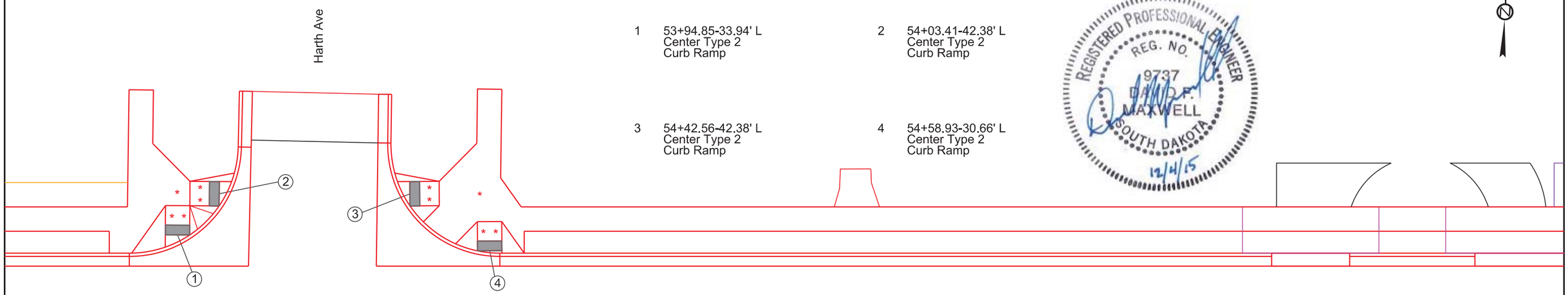

1 53+94.85-33.94' L
Center Type 2
Curb Ramp

2 54+03.41-42.38' L
Center Type 2
Curb Ramp

3 54+42.56-42.38' L
Center Type 2
Curb Ramp

4 54+58.93-30.66' L
Center Type 2
Curb Ramp

REGISTERED PROFESSIONAL ENGINEER
REG. NO. 9737
DAVID P. MAXWELL
SOUTH DAKOTA
12/4/15

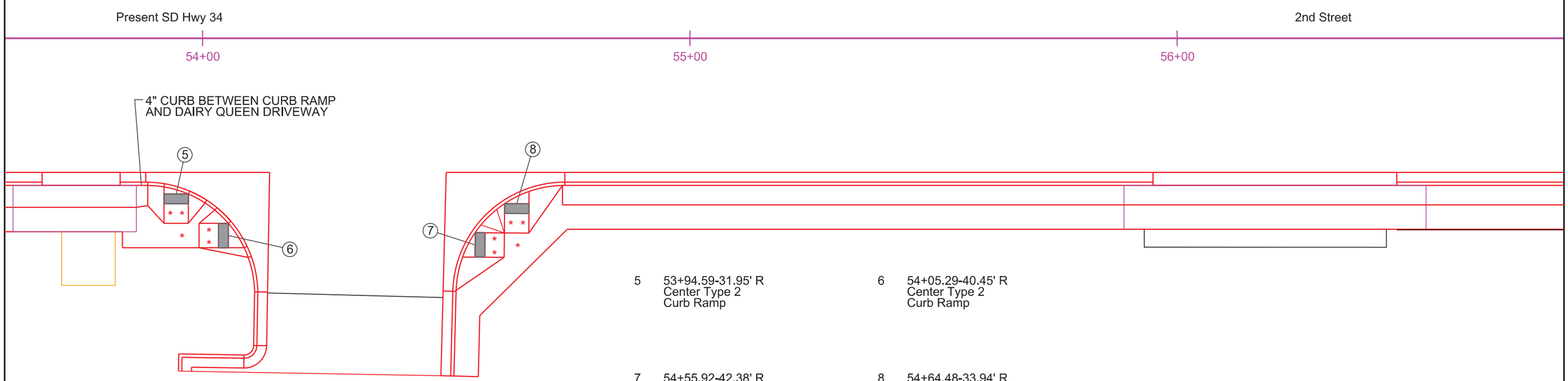

5 53+94.59-31.95' R
Center Type 2
Curb Ramp

6 54+05.29-40.45' R
Center Type 2
Curb Ramp

7 54+55.92-42.38' R
Center Type 2
Curb Ramp

8 54+64.48-33.94' R
Center Type 2
Curb Ramp

Legend:
* Turning space with 1.5% maximum slope
** Curb Ramp with 7.5% maximum slope and 1.5% cross slope
Detectable Warning

STATE OF SOUTH DAKOTA	PROJECT	SHEET	TOTAL SHEETS
	NH 0034(160)386	B85	B133

FOR BIDDING PURPOSES ONLY

Plotting Date: 12/4/2015

CURB RAMP LAYOUT

1 57+65.83-33.94' L
Center Type 2
Curb Ramp

2 57+74.39-42.38' L
Center Type 2
Curb Ramp

3 58+19.31-42.38' L
Center Type 2
Curb Ramp

4 58+29.69-32.84' L
Center Type 2
Curb Ramp

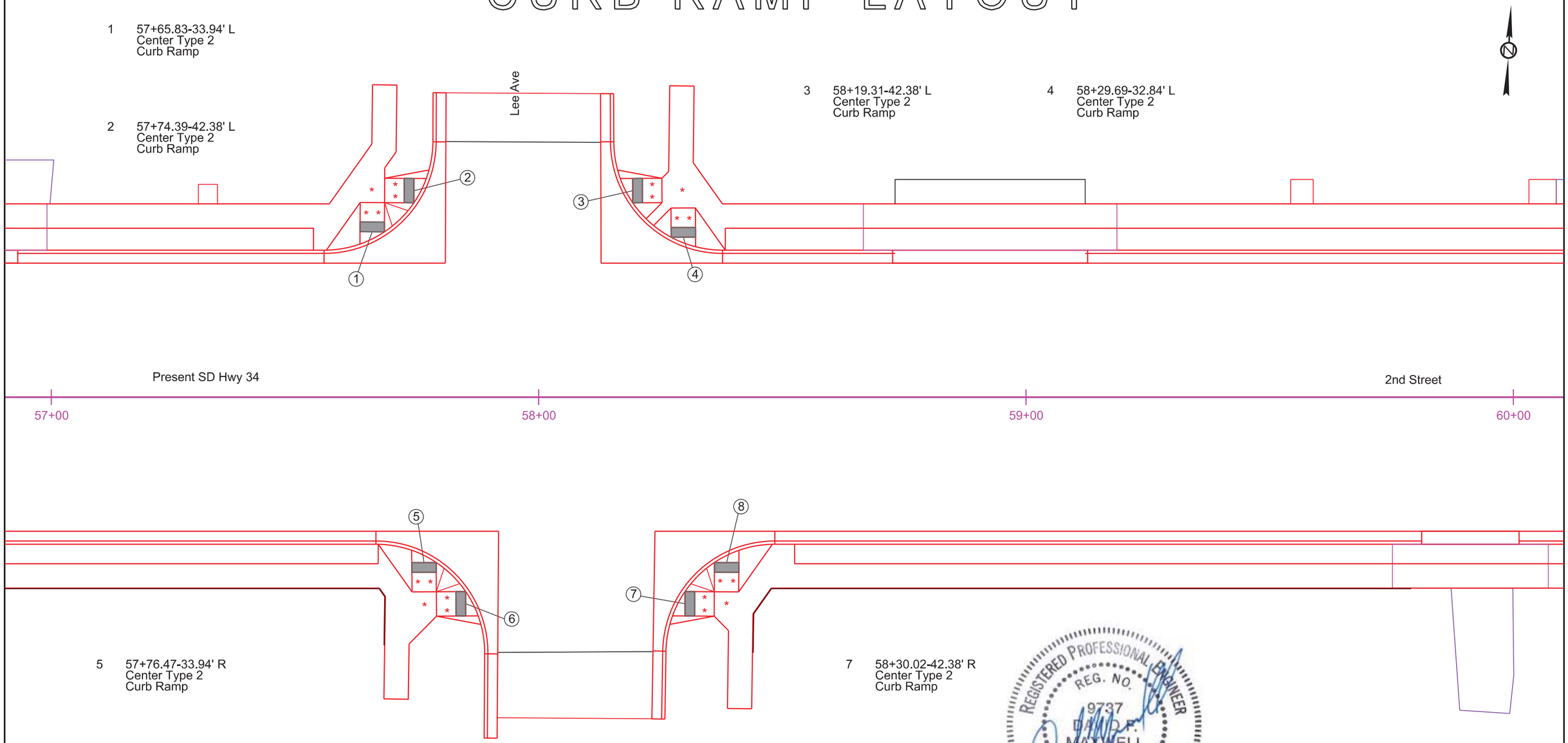

5 57+76.47-33.94' R
Center Type 2
Curb Ramp

6 57+85.02-42.38' R
Center Type 2
Curb Ramp

7 58+30.02-42.38' R
Center Type 2
Curb Ramp

8 58+38.58-33.94' R
Center Type 2
Curb Ramp

REGISTERED PROFESSIONAL ENGINEER
REG. NO. 9737
DAVID P. MAXWELL
SOUTH DAKOTA
12/4/15

Legend:
- * Turning space with 1.5% maximum slope
- ** Curb Ramp with 7.5% maximum slope and 1.5% cross slope
- Detectable Warning

STATE OF SOUTH DAKOTA	PROJECT	SHEET	TOTAL SHEETS
	NH 0034(160)386	B86	B133

FOR BIDDING PURPOSES ONLY

Plotting Date: 12/4/2015

CURB RAMP LAYOUT

1 61+37.60-30.87' L
Center Type 3
Curb Ramp

2 61+52.31-42.20' L
Center Type 3
Curb Ramp

3 61+28.06-36.17' L
Begin Type 3 Curb Ramp

4 61+34.06-36.23' L
Begin Curb Ramp Slope

5 61+34.06-37.23' L
Back of Type 3
Curb Ramp

6 61+38.45-37.23' L
Begin Curb Ramp Slope

7 61+47.00-52.88' L
Begin Type 3 Curb Ramp

8 62+04.07-47.48' L
Edge of Curb Ramp

9 62+04.50-45.43' L
Begin Curb Ramp Slope

10 62+06.10-41.54' L
Center of Detectable
Warning for Type 3
Curb Ramp

11 62+07.28-37.04' L
Center of Detectable
Warning for Type 3
Curb Ramp

12 62+11.43-33.50' L
Center of Detectable
Warning for Type 3
Curb Ramp

13 62+15.10-31.39' L
Begin Curb Ramp Slope

14 62+17.08-30.68' L
Edge of Curb Ramp

15 62+10.58-45.61' L
Begin Curb Ramp Slope

16 62+16.15-39.56' L
Begin Curb Ramp Slope

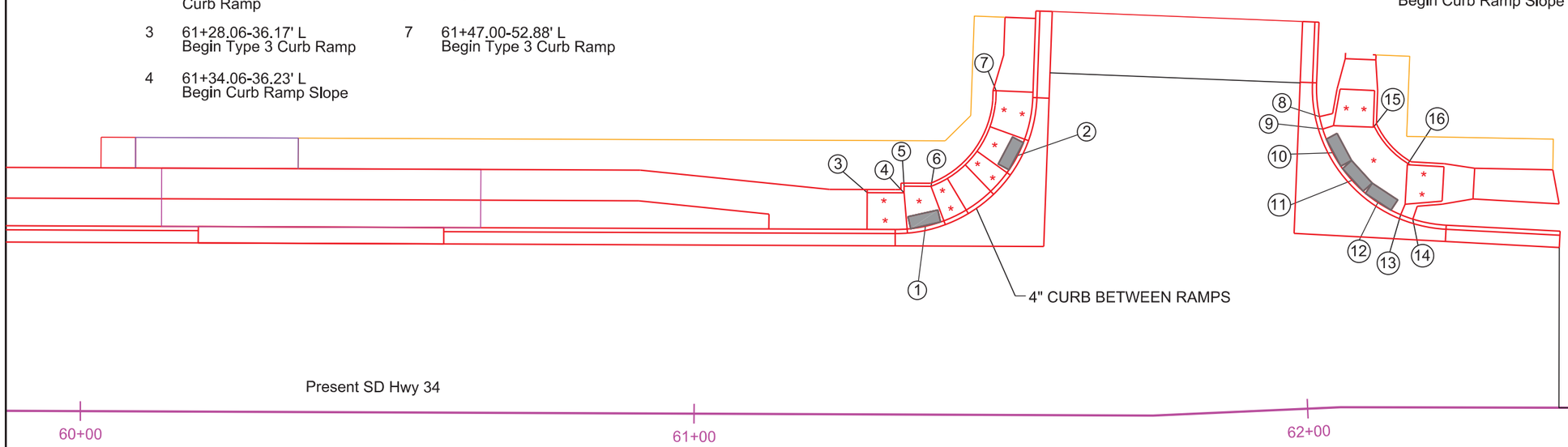

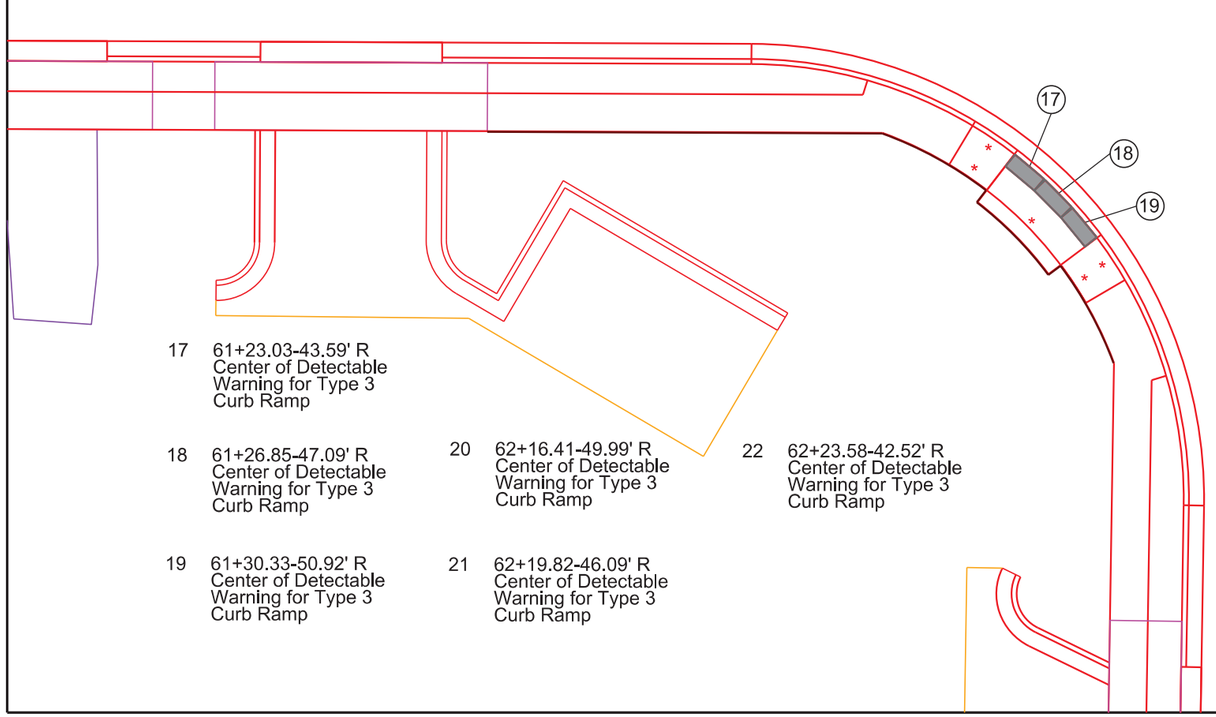

17 61+23.03-43.59' R
Center of Detectable
Warning for Type 3
Curb Ramp

18 61+26.85-47.09' R
Center of Detectable
Warning for Type 3
Curb Ramp

19 61+30.33-50.92' R
Center of Detectable
Warning for Type 3
Curb Ramp

20 62+16.41-49.99' R
Center of Detectable
Warning for Type 3
Curb Ramp

21 62+19.82-46.09' R
Center of Detectable
Warning for Type 3
Curb Ramp

22 62+23.58-42.52' R
Center of Detectable
Warning for Type 3
Curb Ramp

REGISTERED PROFESSIONAL ENGINEER
REG. NO. 9737
DAVID E. MAXWELL
SOUTH DAKOTA
12/4/15

Washington Ave

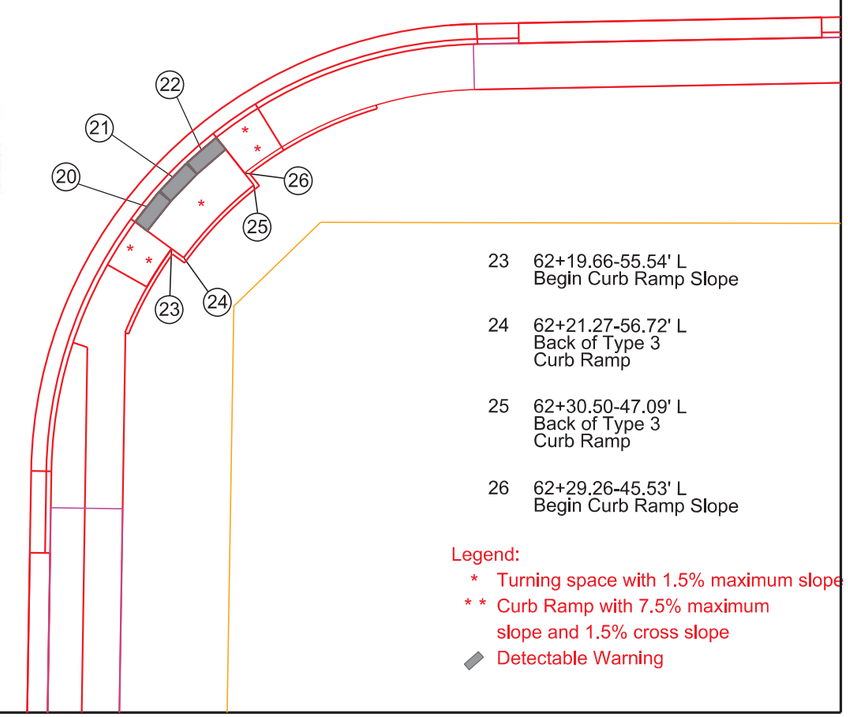

23 62+19.66-55.54' L
Begin Curb Ramp Slope

24 62+21.27-56.72' L
Back of Type 3
Curb Ramp

25 62+30.50-47.09' L
Back of Type 3
Curb Ramp

26 62+29.26-45.53' L
Begin Curb Ramp Slope

Legend:
* Turning space with 1.5% maximum slope
* * Curb Ramp with 7.5% maximum slope and 1.5% cross slope
Detectable Warning

STATE OF SOUTH DAKOTA	PROJECT	SHEET	TOTAL SHEETS
	NH 0034(160)386	B87	B133

Plotting Date: 12/4/2015

FOR BIDDING PURPOSES ONLY

GRAVITY SEGMENTAL BLOCK RETAINING WALL LAYOUT

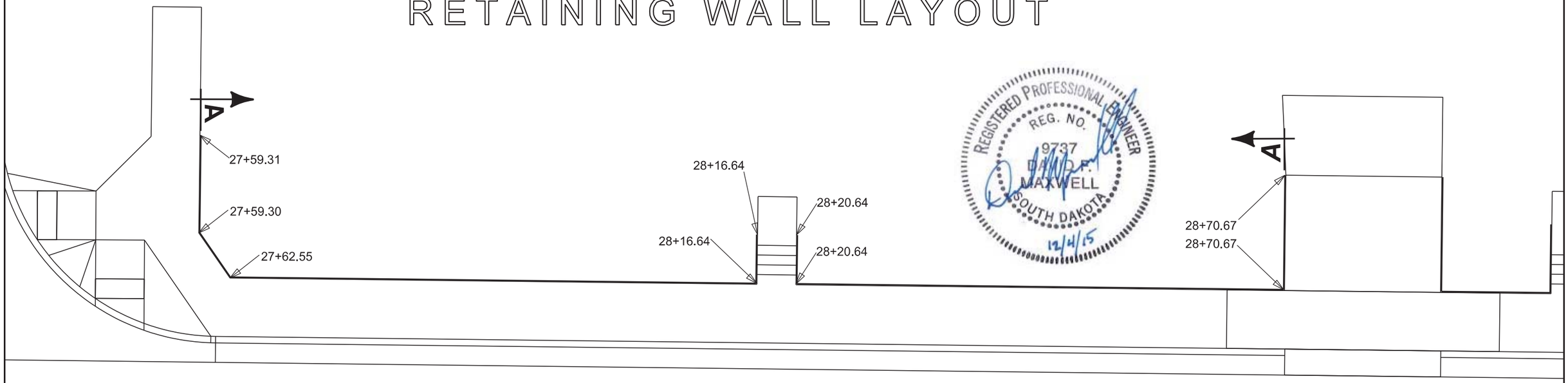

REGISTERED PROFESSIONAL ENGINEER
REG. NO. 9737
DAVID P. MAXWELL
SOUTH DAKOTA
12/4/15

PLAN

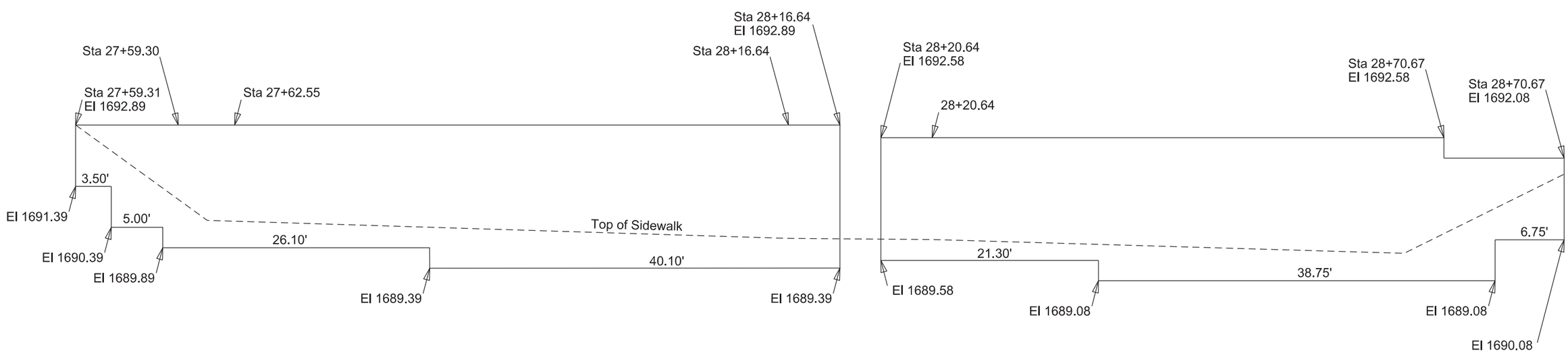

ELEVATION
SEC. A-A

STATE OF SOUTH DAKOTA	PROJECT	SHEET	TOTAL SHEETS
	NH 0034(160)386	B88	B133

FOR BIDDING PURPOSES ONLY

Plotting Date: 12/4/2015

GRAVITY SEGMENTAL BLOCK RETAINING WALL LAYOUT

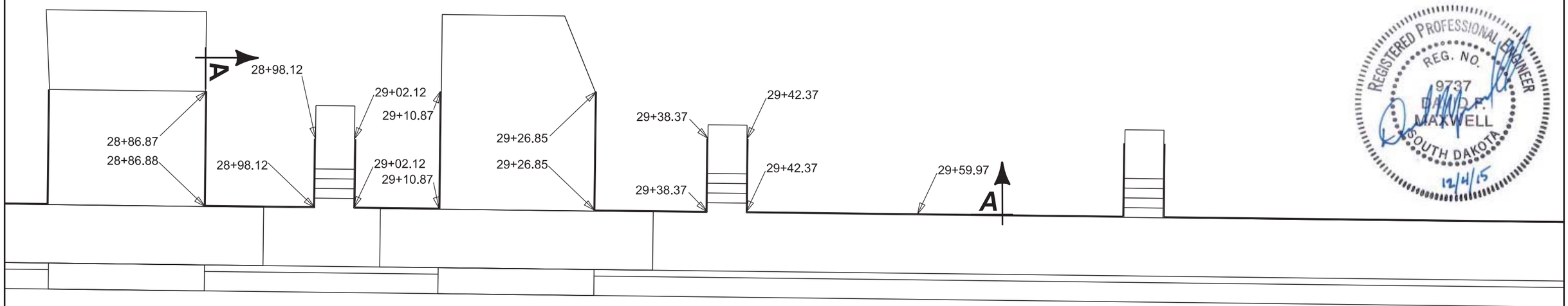

REGISTERED PROFESSIONAL ENGINEER
REG. NO. 9737
DAVID P. MAXWELL
SOUTH DAKOTA
12/4/15

PLAN

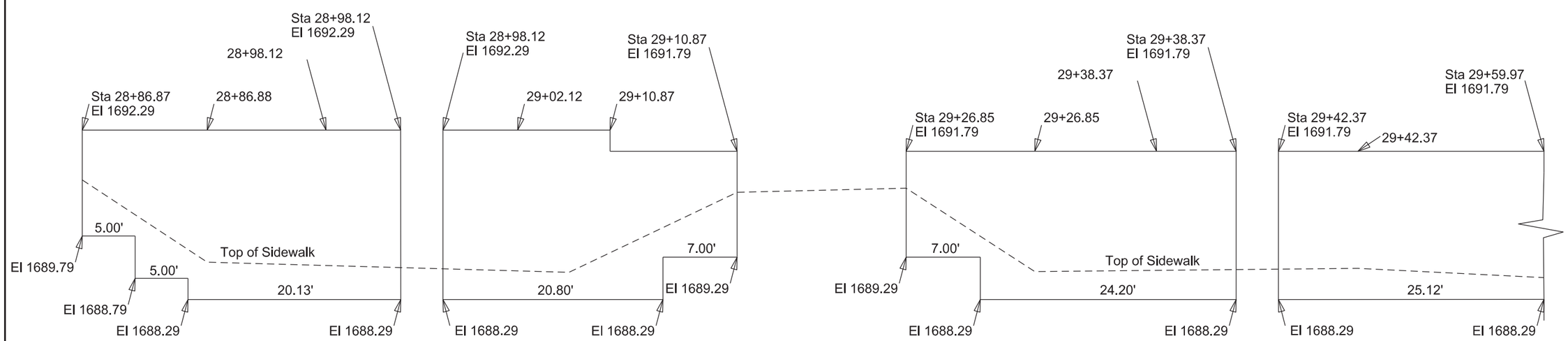

ELEVATION
SEC. A-A

STATE OF SOUTH DAKOTA	PROJECT	SHEET	TOTAL SHEETS
	NH 0034(160)386	B89	B133

Plotting Date: 12/4/2015

FOR BIDDING PURPOSES ONLY

GRAVITY SEGMENTAL BLOCK RETAINING WALL LAYOUT

REGISTERED PROFESSIONAL ENGINEER
REG. NO. 9737
DAVID P. MAXWELL
SOUTH DAKOTA
12/4/15

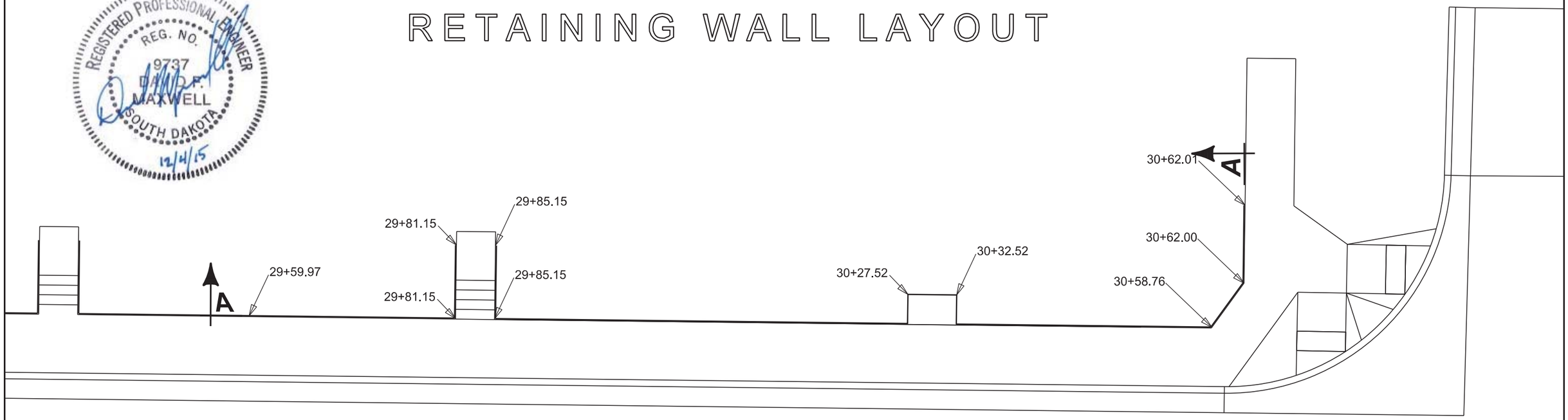

PLAN

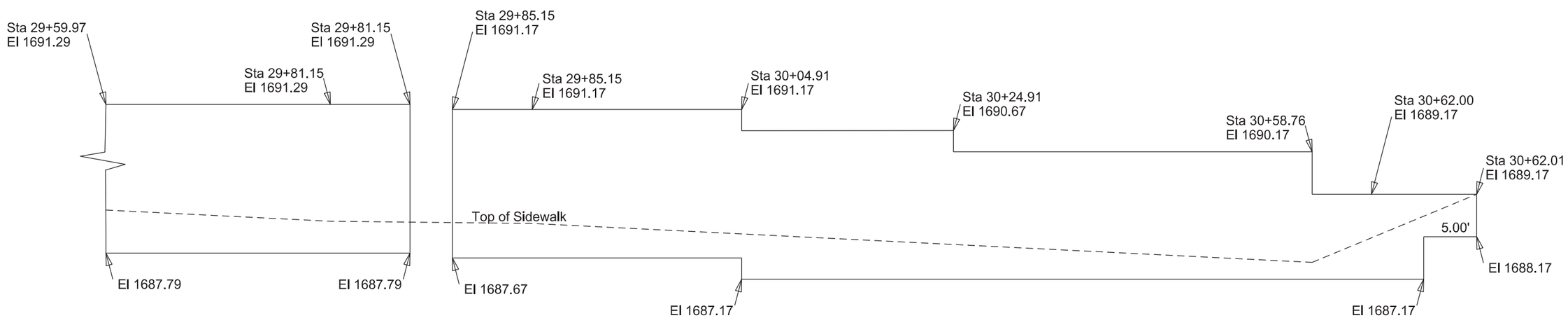

ELEVATION
SEC. A-A

STATE OF SOUTH DAKOTA	PROJECT	SHEET	TOTAL SHEETS
	NH 0034(160)386	B90	B133

Plotting Date: 12/4/2015

FOR BIDDING PURPOSES ONLY

GRAVITY SEGMENTAL BLOCK RETAINING WALL LAYOUT

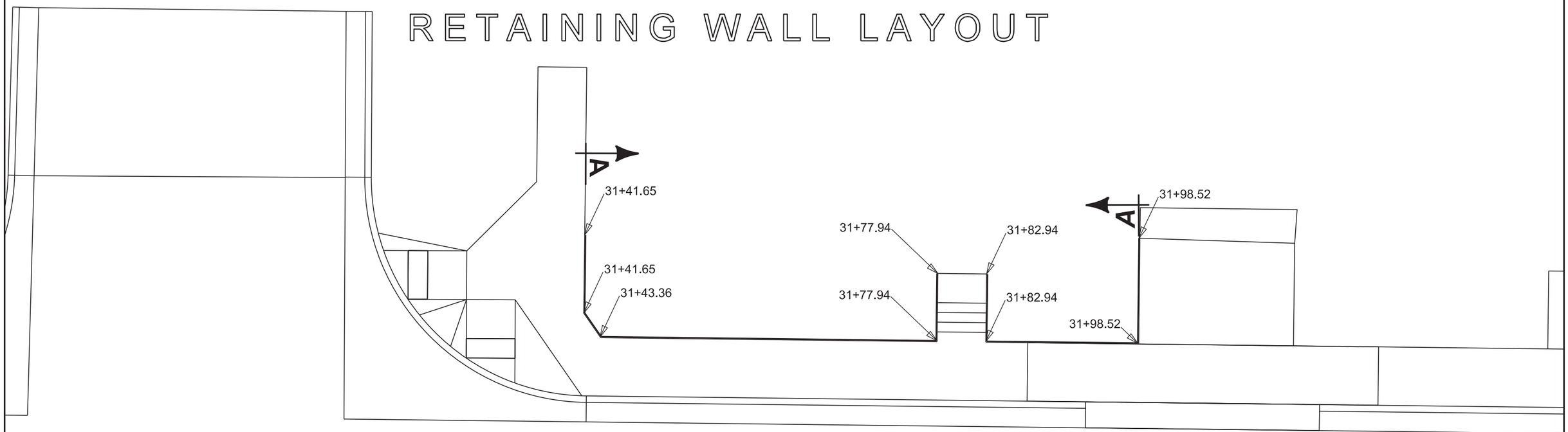

PLAN

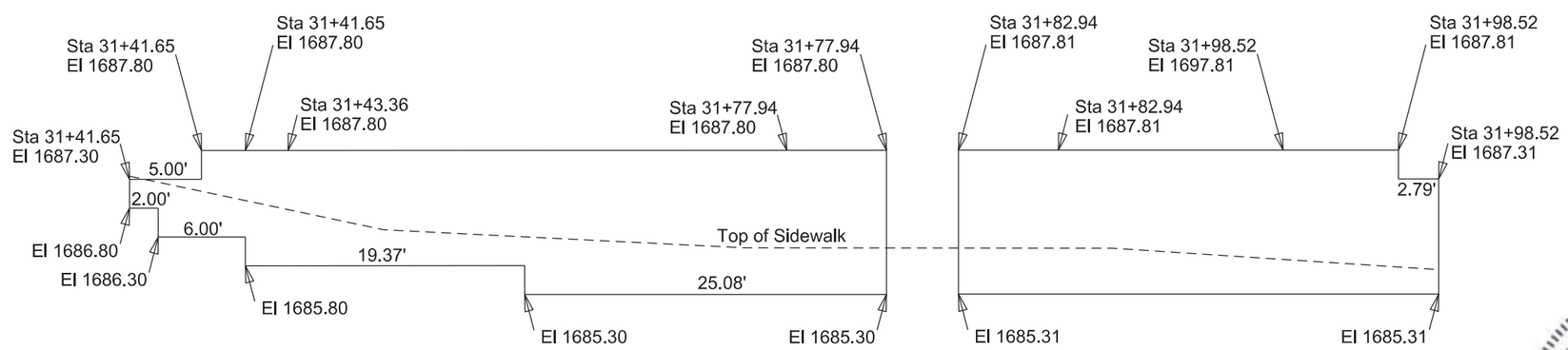

ELEVATION
SEC. A-A

STATE OF SOUTH DAKOTA	PROJECT	SHEET	TOTAL SHEETS
	NH 0034(160)386	B91	B133

Plotting Date: 12/4/2015

FOR BIDDING PURPOSES ONLY

RETAINING WALL LAYOUT

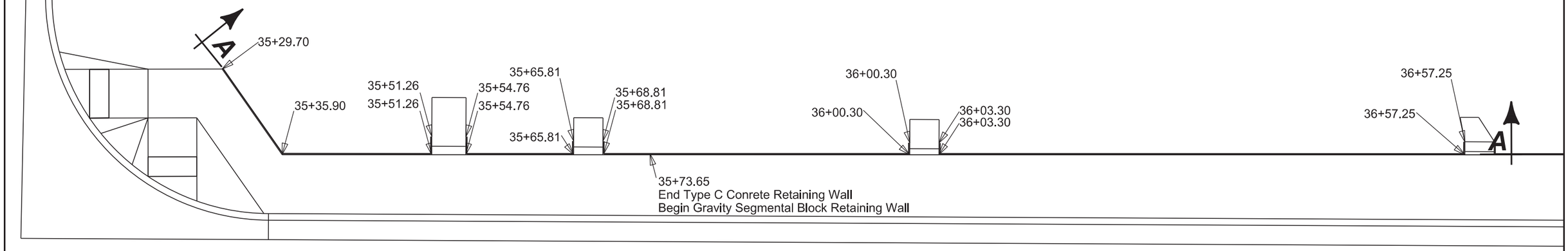

PLAN

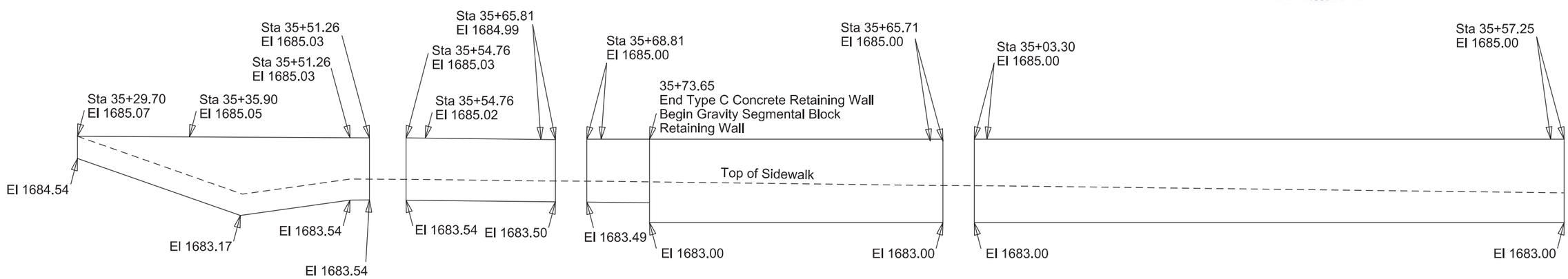

ELEVATION
SEC. A-A

STATE OF SOUTH DAKOTA	PROJECT	SHEET	TOTAL SHEETS
	NH 0034(160)386	B92	B133

Plotting Date: 12/4/2015

FOR BIDDING PURPOSES ONLY

GRAVITY SEGMENTAL BLOCK RETAINING WALL LAYOUT

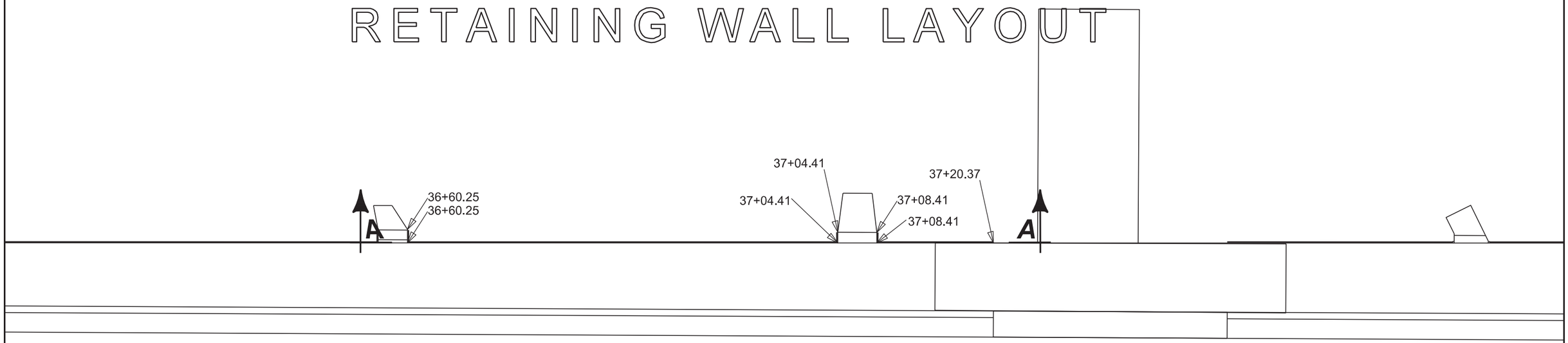

PLAN

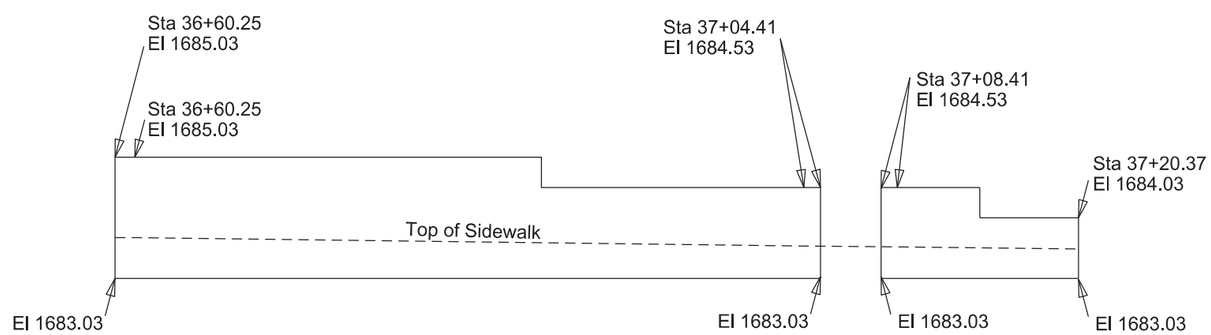

ELEVATION
SEC. A-A

STATE OF SOUTH DAKOTA	PROJECT	SHEET	TOTAL SHEETS
	NH 0034(160)386	B93	B133

Plotting Date: 12/4/2015

FOR BIDDING PURPOSES ONLY

TYPE C RETAINING WALL LAYOUT

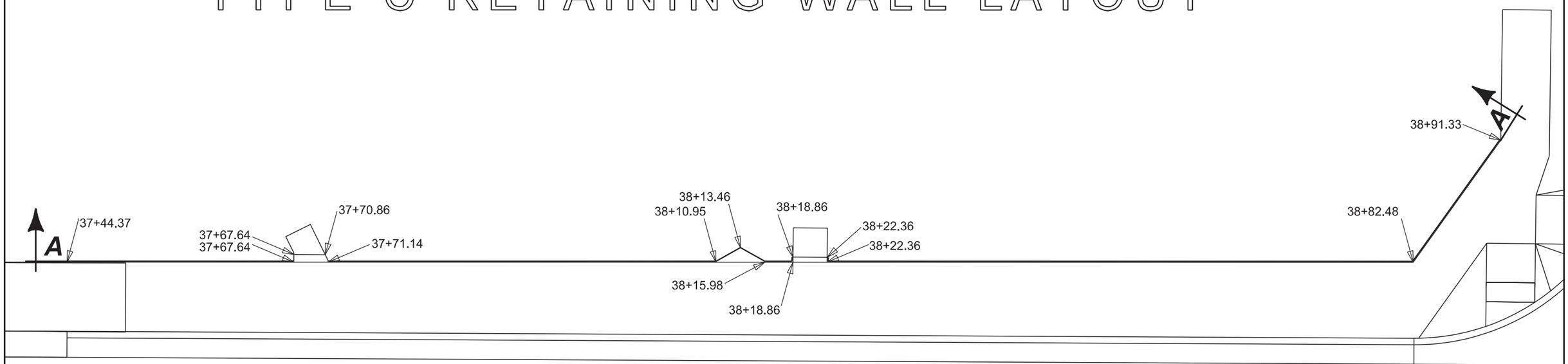

PLAN

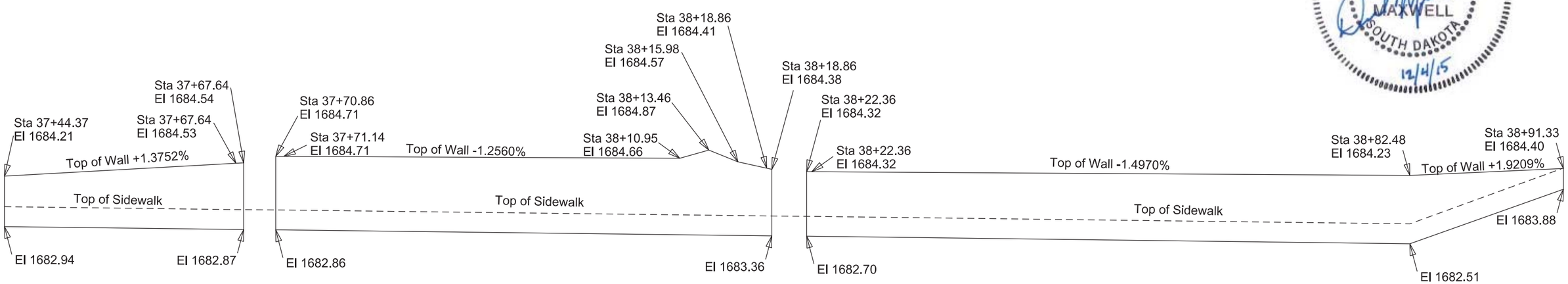

ELEVATION
SEC. A-A

TYPE C CONCRETE RETAINING WALL LAYOUT

FOR BIDDING PURPOSES ONLY

STATE OF SOUTH DAKOTA	PROJECT	SHEET	TOTAL SHEETS
	NH 0034(160)386	B94	B133

Plotting Date: 12/4/2015

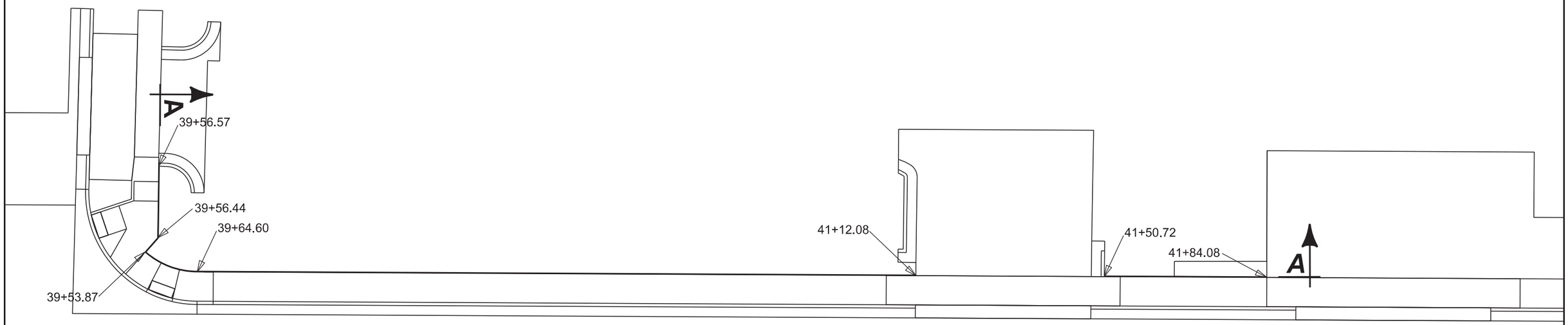

PLAN

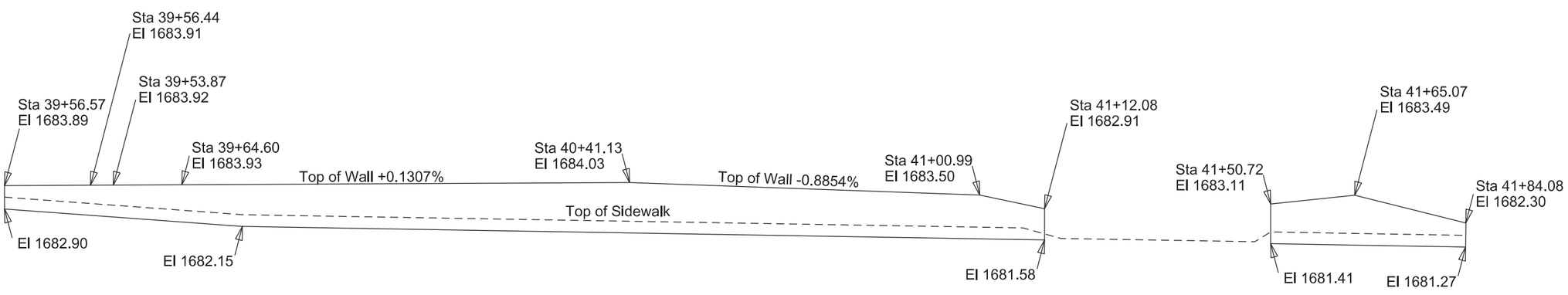

ELEVATION
SEC. A-A

REGISTERED PROFESSIONAL ENGINEER
REG. NO. 9737
DAVID P. MAXWELL
SOUTH DAKOTA
12/4/15

SPECIAL TYPE C RETAINING WALL LAYOUT

FOR BIDDING PURPOSES ONLY

STATE OF SOUTH DAKOTA	PROJECT	SHEET	TOTAL SHEETS
	NH 0034(160)386	B95	B133

Plotting Date: 12/4/2015

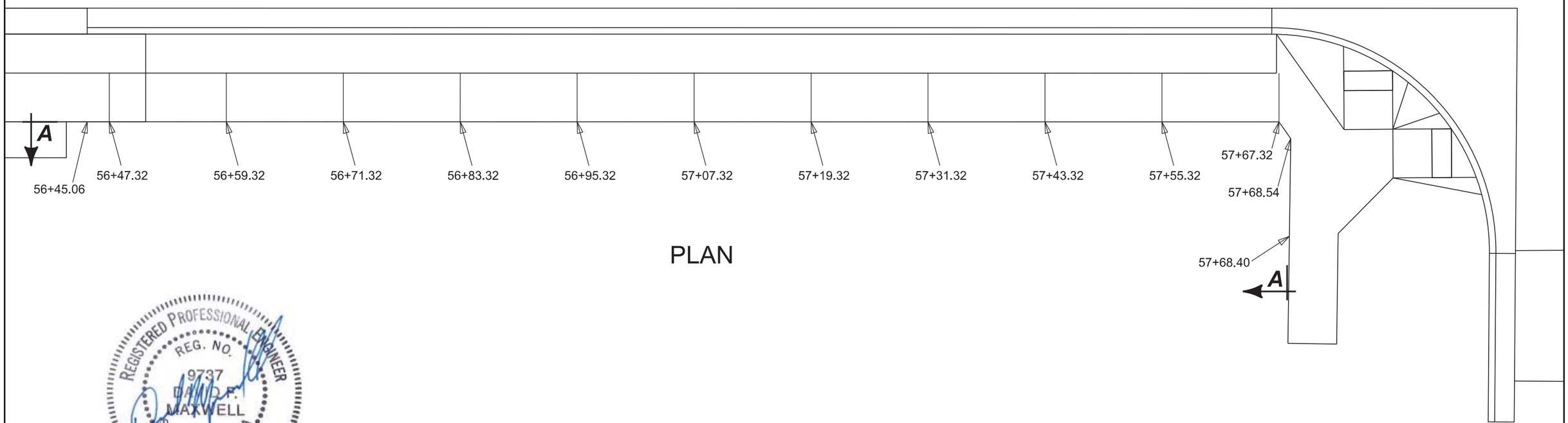

PLAN

REGISTERED PROFESSIONAL ENGINEER
REG. NO. 9737
DAVID F. MAXWELL
SOUTH DAKOTA
12/4/15

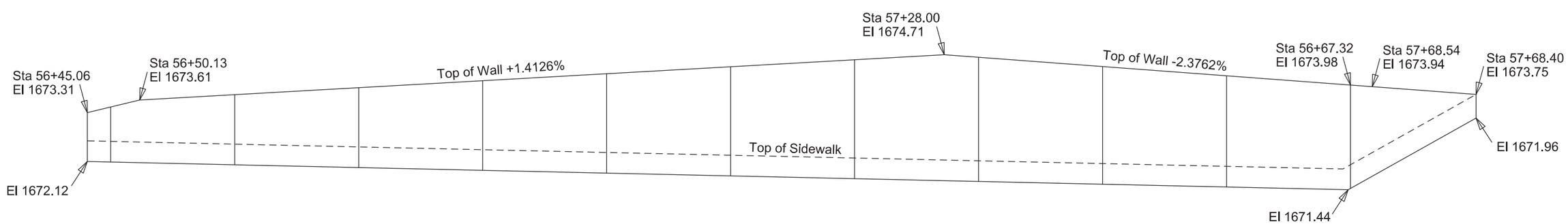

ELEVATION
SEC. A-A

SPECIAL TYPE C RETAINING WALL LAYOUT

FOR BIDDING PURPOSES ONLY

STATE OF SOUTH DAKOTA	PROJECT	SHEET	TOTAL SHEETS
	NH 0034(160)386	B96	B133

Plotting Date: 12/4/2015

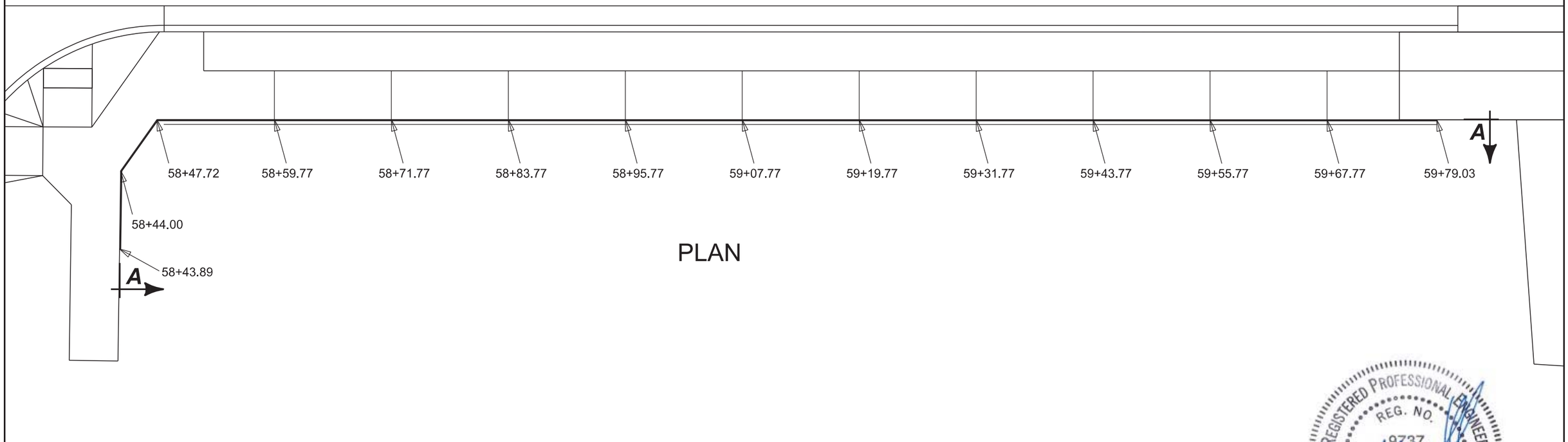

PLAN

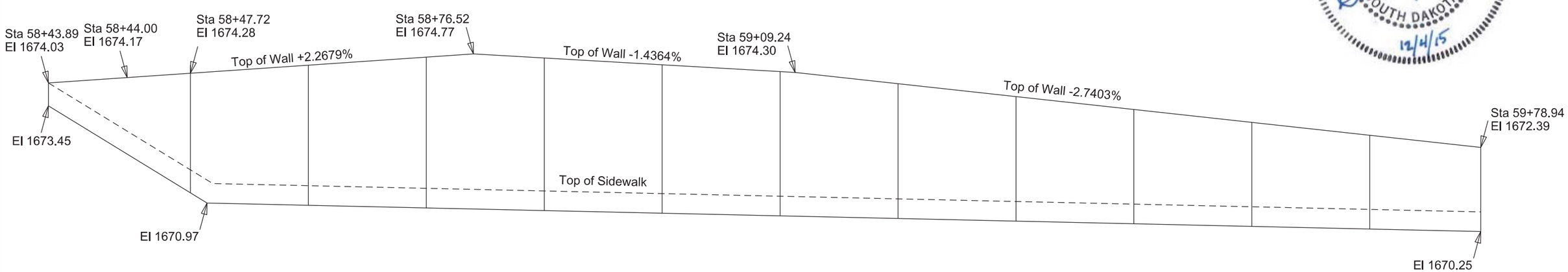

ELEVATION
SEC. A-A

REGISTERED PROFESSIONAL ENGINEER
REG. NO. 9737
DAVID P. MAXWELL
SOUTH DAKOTA
12/4/15

SPECIAL TYPE C RETAINING WALL LAYOUT

FOR BIDDING PURPOSES ONLY

STATE OF SOUTH DAKOTA	PROJECT	SHEET	TOTAL SHEETS
	NH 0034(160)386	B97	B133

Plotting Date: 12/4/2015

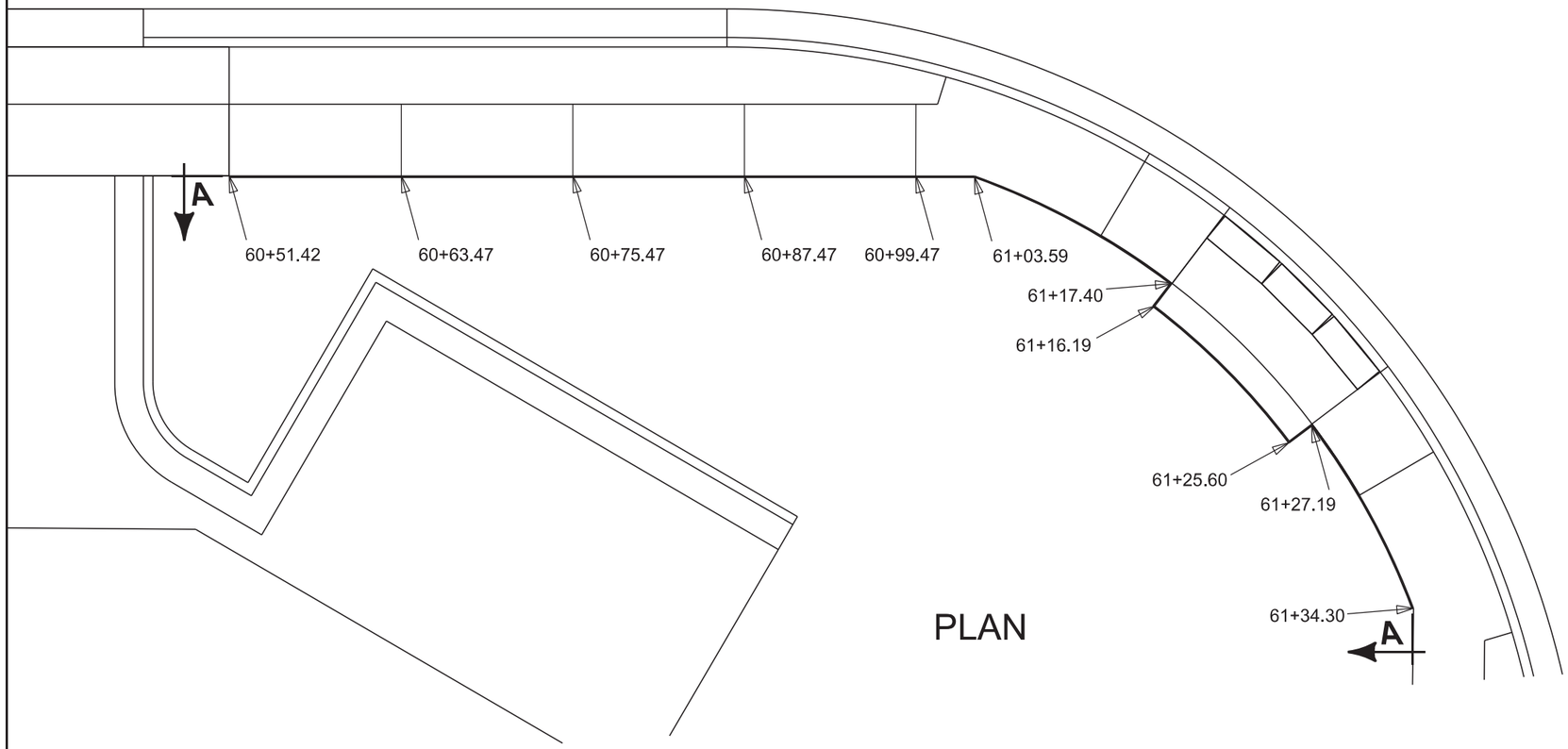

PLAN

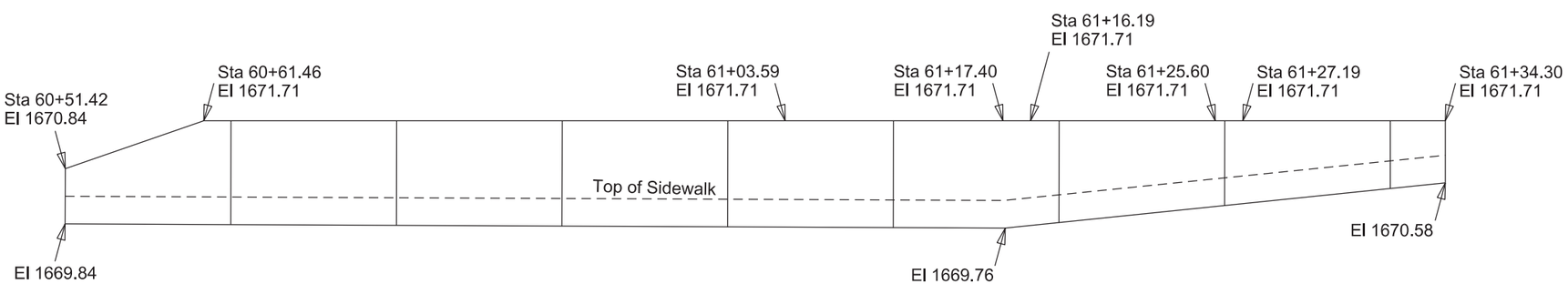

ELEVATION
SEC. A-A

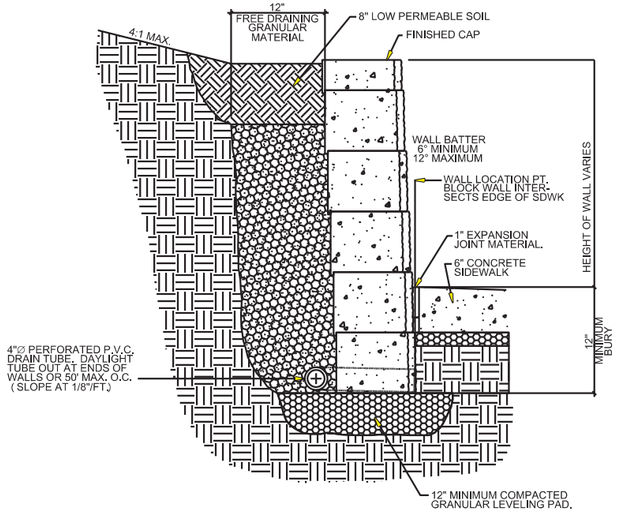

GRAVITY SEGMENTAL BLOCK WALL - AT SIDEWALK

SPECIFICATIONS

1. Design Specifications: AASHTO LRFD Bridge Design Specifications, 2014 Edition with 2015 Interims.

2. Construction Specifications: South Dakota Standard Specifications for Roads and Bridges, 2015 Edition and Required Provisions, Supplemental Specifications, and Special Provisions as included in the Proposal.

RETAINING WALL

1. The Gravity Segmental Block Retaining Wall shall be on the current approved products list located at the following website address http://apps.sd.gov/HC60ApprovedProducts/main.aspx.

2. The segmental blocks shall be a commercially available block intended to simulate a natural rock wall. Blocks shall be colored to blend with the surrounding landscape. Color may be achieved by the use of colored concrete or surface staining. A minimum of 3 colors shall be used to prevent a uniform appearance. Submit block pattern, colors, and method of achieving colors to the Engineer for approval a minimum of 2 weeks prior to fabrication.

3. The Contractor shall consult with an approved wall manufacturer to obtain construction plans and all the necessary instructions and specifications needed to install the Gravity Segmental Block Retaining Wall. The construction plans shall be forwarded to the Bridge Construction Engineer a minimum of 2 weeks in advance of construction for approval. Construction plans shall include plan and elevation views, typical cross sections, and the quantity of blocks required.

4. After the required excavation has been completed to the leveling pad elevation, the foundation material shall be compacted to provide an adequate foundation for the wall system. Any voids encountered shall be filled and brought up to grade with compacted granular material conforming to the specifications for Base Course in Section 882 of the Specifications.

5. A granular leveling pad is required for the gravity segmental block retaining wall system. The minimum embedment depth to the top of the leveling pad shall be 1 foot. The leveling pad shall be constructed using granular material conforming to the specifications for Base Course in Section 882 of the Specifications.

6. Drainage fill material for the gravity segmental block wall shall be granular material meeting the criteria as set by the wall block manufacturer.

7. All costs associated with furnishing and installing the wall complete in-place including the construction plans, leveling pad, concrete blocks, granular drainage material, granular material to bring the site up to grade, all excavation, drain tube, materials, tools, labor, and any other incidentals necessary to build the wall as determined by the wall manufacturer shall be incidental to the contract unit price per square foot for Gravity Segmental Block Wall.

8. Caps shall be adhered to the wall using concrete adhesive. Caps may be placed with a 1/2" to 3/4" overhand of top course. When splitting cap unit for wall end, do not use a cap section less than 6" wide. Do not overhang the cap at end of course more than 1".

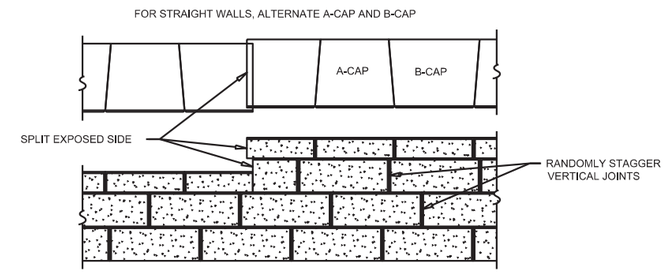

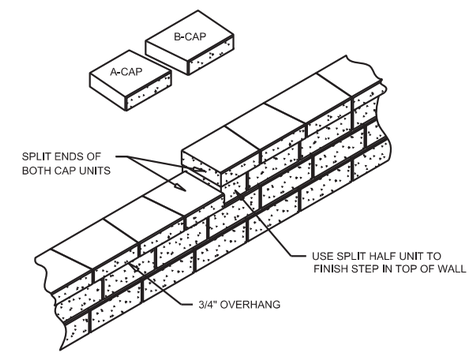

CAPPING DETAIL - PROFILE

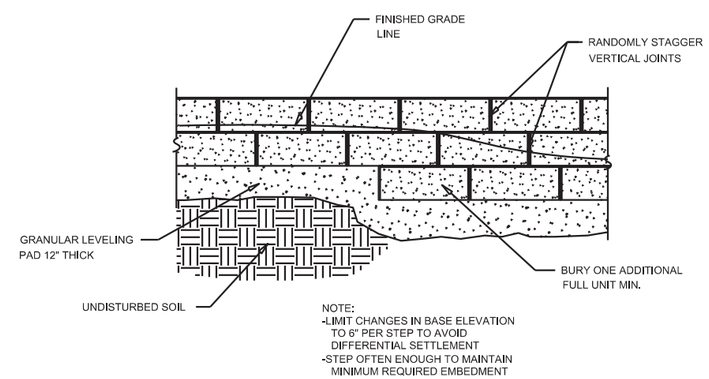

STEPPING BASE DETAIL

FOR BIDDING PURPOSES ONLY

SPECIAL TYPE C RETAINING WALL DETAILS

STATION 56+45 to 57+68 R
STATION 58+44 to 59+79 R
STATION 60+51 to 61+34 R

Use No. 4 bars for all reinforcement steel unless specified otherwise.

BAR BENDING DETAILS

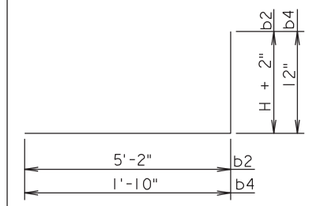

All dimensions are out to out of bars.

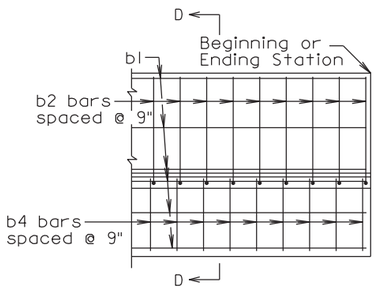

ELEVATION VIEW SPECIAL TYPE C CONCRETE RETAINING WALL

REGISTERED PROFESSIONAL ENGINEER
REG. NO. 9737
DAVID P. MAXWELL
SOUTH DAKOTA
12/4/15

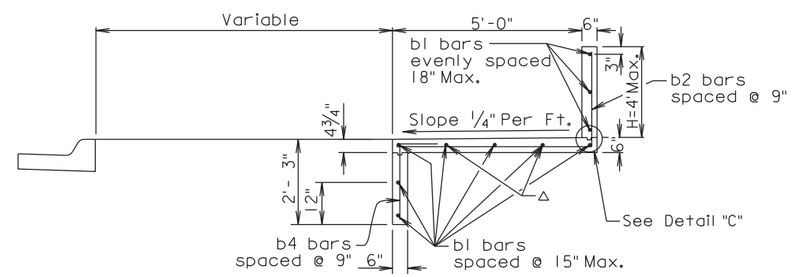

SECTION D-D

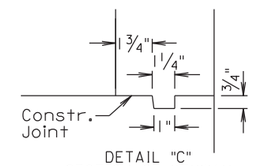

DETAIL "C"
SECTION OF KEYWAY SHOWING CONSTRUCTION JOINT BETWEEN WALL AND FOOTING

△ No. 5 smooth bar
2 required per joint
Align with b1 bars as shown
See Section D-D

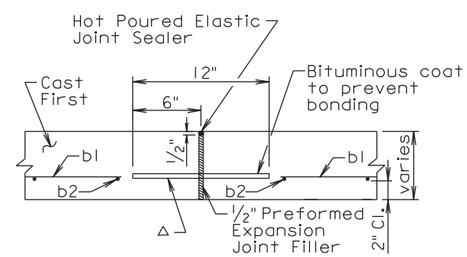

ELEVATION VIEW
EXPANSION JOINT FOR FOOTING

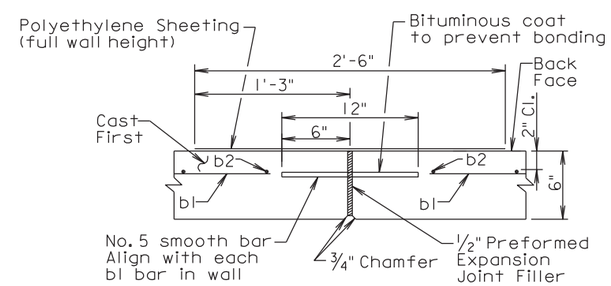

DETAIL "A"
PLAN VIEW
EXPANSION JOINT FOR WALL

GENERAL NOTES:

In the areas where the retaining wall footing is to be placed, a 2 inch thickness of cushion material shall be placed and compacted. The cushion material shall conform to Section 651.2 C. of the Specifications.

All concrete shall be Class M6 and conform to Section 462 of the Specifications.

All reinforcing steel shall be epoxy coated and shall conform to ASTM A615, Grade 60. The epoxy coating shall conform to AASHTO M284.

For variable height walls, the top b1 bar shall be placed parallel to the top of the wall.

The b1 bars shall be lapped a minimum of 12 inches.

A ¾ inch chamfer shall be provided on all exposed retaining wall edges.

The maximum expansion joint spacing shall be 90 feet and the maximum contraction joint spacing shall be 30 feet. The contraction and expansion joints shall be placed to match pavement or curb joints where possible.

The exposed retaining wall surfaces shall receive a finish in accordance with 460.3 M. of the Standard Specifications. The exposed surface of the retaining wall footing, when used as a sidewalk, shall receive a broom finish.

The Special Type C Concrete Retaining Wall shall be measured to the nearest square foot of front face area.

All costs for excavation, furnishing and placing backfill and cushion material, labor, equipment, preformed expansion joint filler, all reinforcing steel including the No. 5 smooth bars, and all concrete, shall be incidental to the contract unit price per square foot for "Special Type C Concrete Retaining Wall".

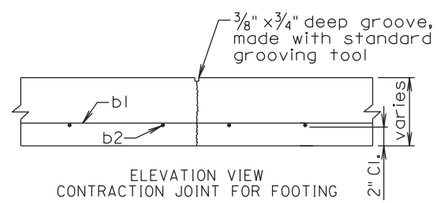

ELEVATION VIEW
CONTRACTION JOINT FOR FOOTING

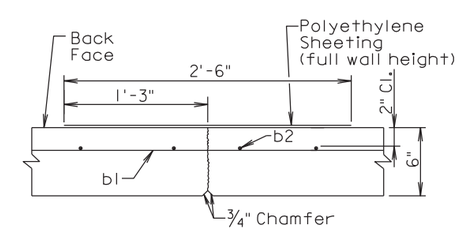

PLAN VIEW
CONTRACTION JOINT FOR WALL

PLOT SCALE - 1:0.166666
PLOT NAME - 1
FILE - ...\02R6_SPECIALTYPECWALL.DGN
PLOTTED FROM - KMAY

STATE OF SOUTH DAKOTA	PROJECT	SHEET	TOTAL SHEETS
	NH 0034(160)386	B100	B133

FOR BIDDING PURPOSES ONLY

Plotting Date: 12/4/2015

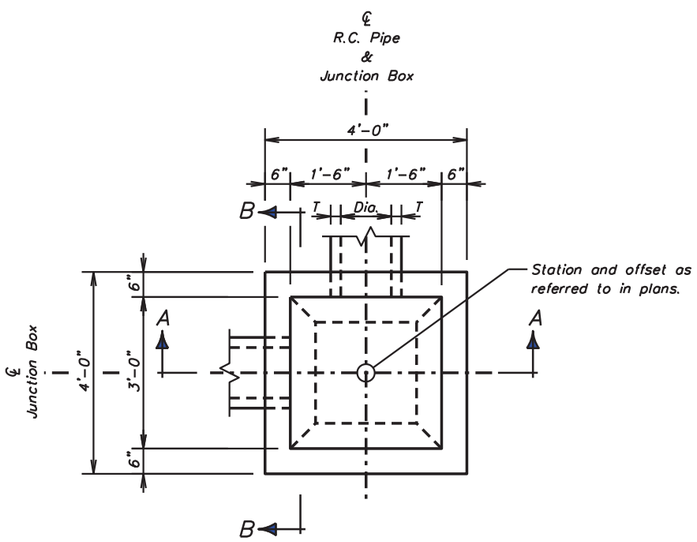

PLAN

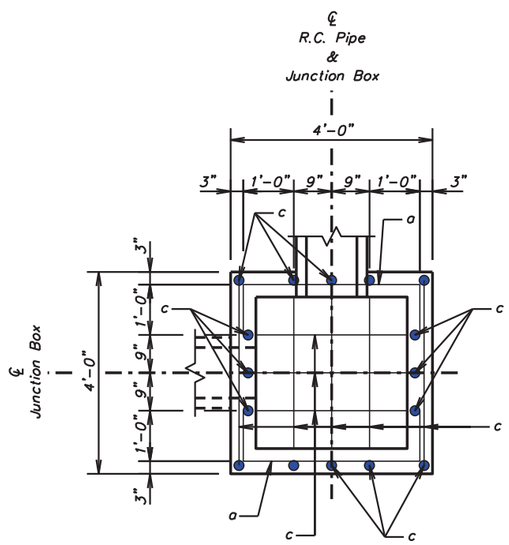

BOTTOM SECTION

PIPE DISPLACEMENT REDUCTIONS		
R.C. Pipe Diameter Inches	T Inches	Class M6 Concrete CuYd
12	2	0.03
15	2 1/4	0.04
18	2 1/2	0.05
24	3	0.09
27	3 1/4	0.11

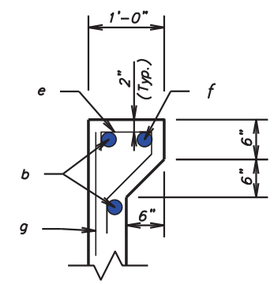

TYPICAL SEC. TOP OF WALL

SPECIFICATIONS:

1. Design Specifications: AASHTO LRFD Bridge Design Specification, 2014 Edition with 2015 interims.
2. Construction Specifications: South Dakota Standard Specifications for Roads and Bridges, 2015 Edition and required Provisions, Supplemental Specifications and Special Provisions as included in the Proposal.

DESIGN MIX OF CONCRETE:

1. Mix shall be designed to produce a concrete having a minimum compressive strength of 4000 p.s.i. at 28 days.
2. Type II Cement is required.

GENERAL NOTES:

1. Design Live Load: None
2. The design of the junction box is based on a maximum fill over the junction box of 1'-0".
3. Unit Stresses: Concrete f'c=4 k.s.i.
   Reinforcing Steel fy = 60 k.s.i.
4. All reinforcing steel shall conform to ASTM A615 Grade 60. The b and f bars shall be lapped 12 inches.
5. All exposed edges shall be chamfered ¾".
6. Use 2" clear cover on all reinforcing steel except as shown.
7. Payment for all materials and labor associated with construction of the Special 3'x3' Junction Box shall be incidental to the bid items "Class M6 Concrete", "Reinforcing Steel" and "Frame and Grate Assembly".
8. The cost of furnishing and installing the manhole steps shall be incidental to the contract unit price per Lb. for "Reinforcing Steel".
9. Reinforcing steel shall be cut and bent in field as necessary to fit pipe and manhole openings. (Pipe openings are shown for information only) Actual number, size and location of pipes entering junction box are shown elsewhere on plan sheets.
10. Pipe(s) shall not enter through a corner of the junction chamber.
11. Floor of junction box to be finished in such a manner to ensure uninterrupted flow thru the box.
12. Maximum pipe diameter shall not exceed 27 inches.

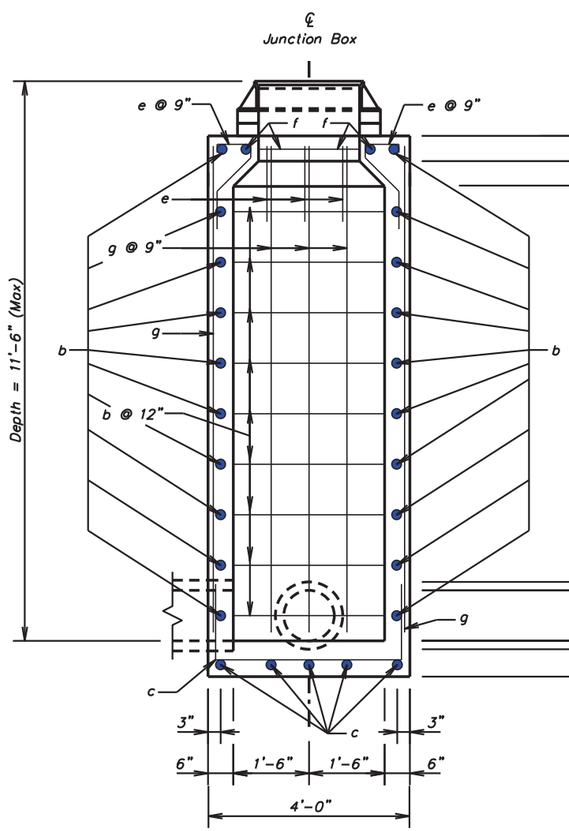

SEC. A–A

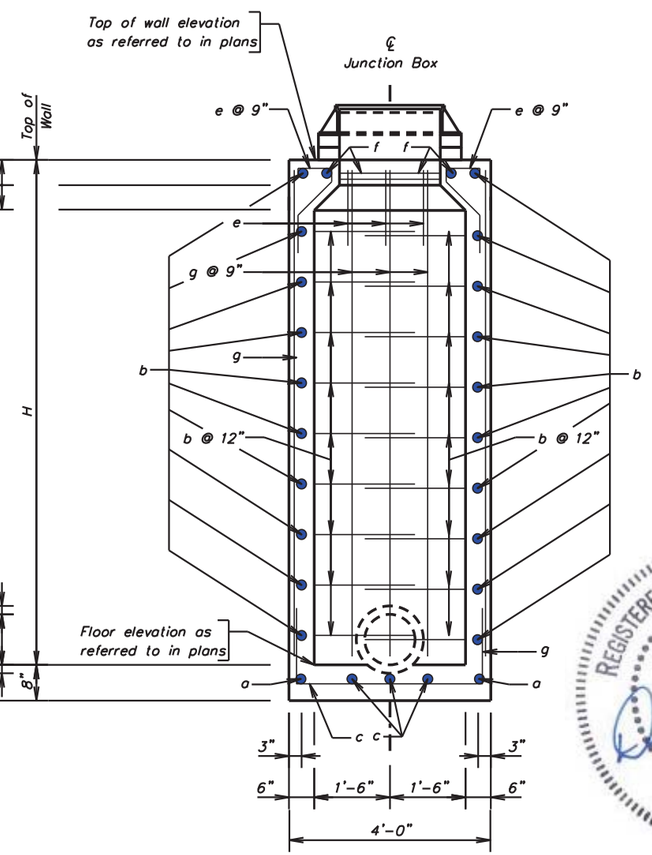

SEC. B–B

REINFORCING SCHEDULE

Mk.	No.	Size	Length	Type
φa2	H–2	–	——	–
a	2	4	5'-6"	17
b	2H	4	8'-0"	17
c	8	4	6'-10"	17
e	12	4	2'-6"	16A
f	2	4	6'-0"	17
g	16	4	H – 2"	Str

Bending Details

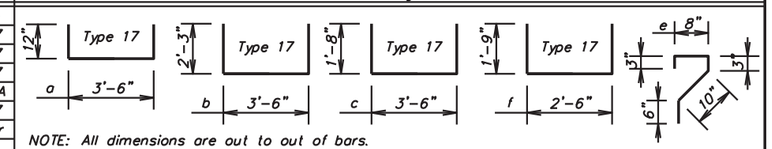

NOTE: All dimensions are out to out of bars.

Φ Cast Iron Manhole Steps (R-1980-C) from Neenah Foundry or equivalent. No. rounded to nearest whole number.

ESTIMATED QUANTITIES

Item	*M6 Concrete	Reinforcing Steel	Frame and Grate Assembly
Unit	Cu. Yd.	Lb.	Ea.
Special 3'x3' Junction Box @ 34+98.11, 67.55' L, H=10.26'	3.2	296	1
Special 3'x3' Junction Box @ 34+93.76, 59.44' R, H=8.70'	2.7	257	1

* Reduce total quantities of concrete by the amount of concrete displaced by the pipe. The total quantity of concrete shall be computed to the nearest hundredth of a cubic yard.

REGISTERED PROFESSIONAL ENGINEER REG. NO. 9737 DAVID P. MAXWELL SOUTH DAKOTA 12/4/15

SPECIAL 3' X 3' JUNCTION BOX

HRGreen	DESIGNED BY	DRAWN BY	CHECKED BY	
	JRM	JRM	KJB	BRIDGE ENGINEER

STATE OF SOUTH DAKOTA	PROJECT	SHEET	TOTAL SHEETS
	NH 0034(160)386	B101	B133

Plotting Date: 12/4/2015

FOR BIDDING PURPOSES ONLY

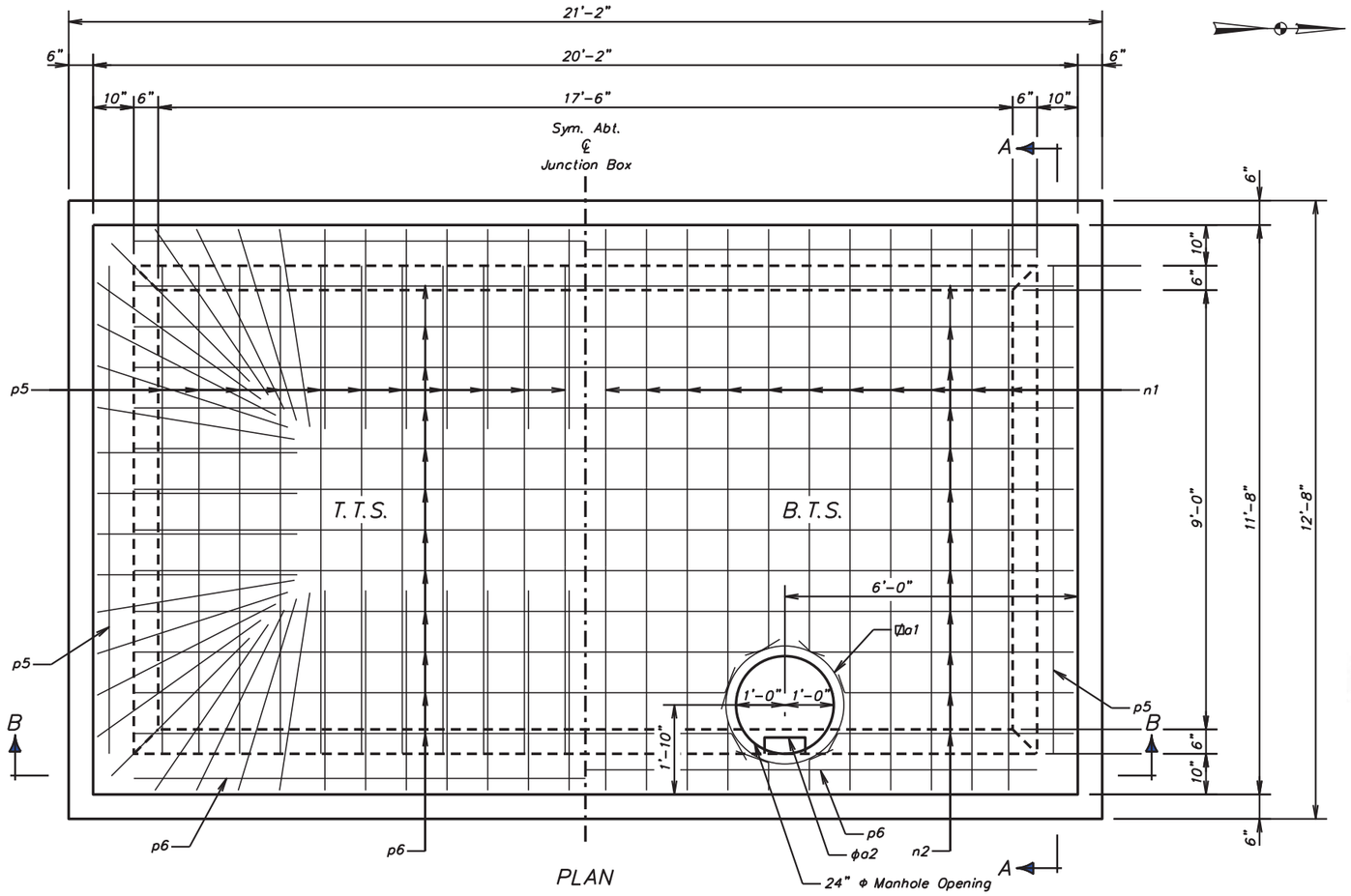

PLAN

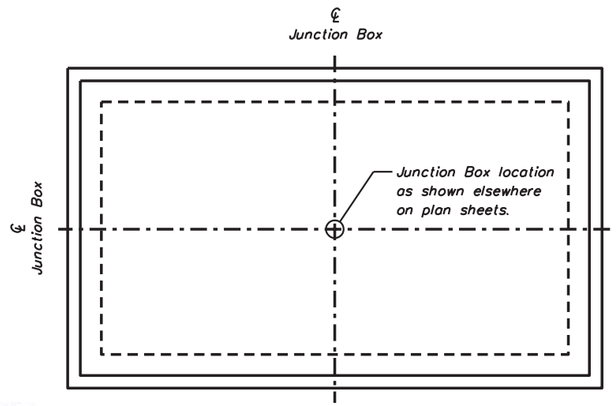

PLAN

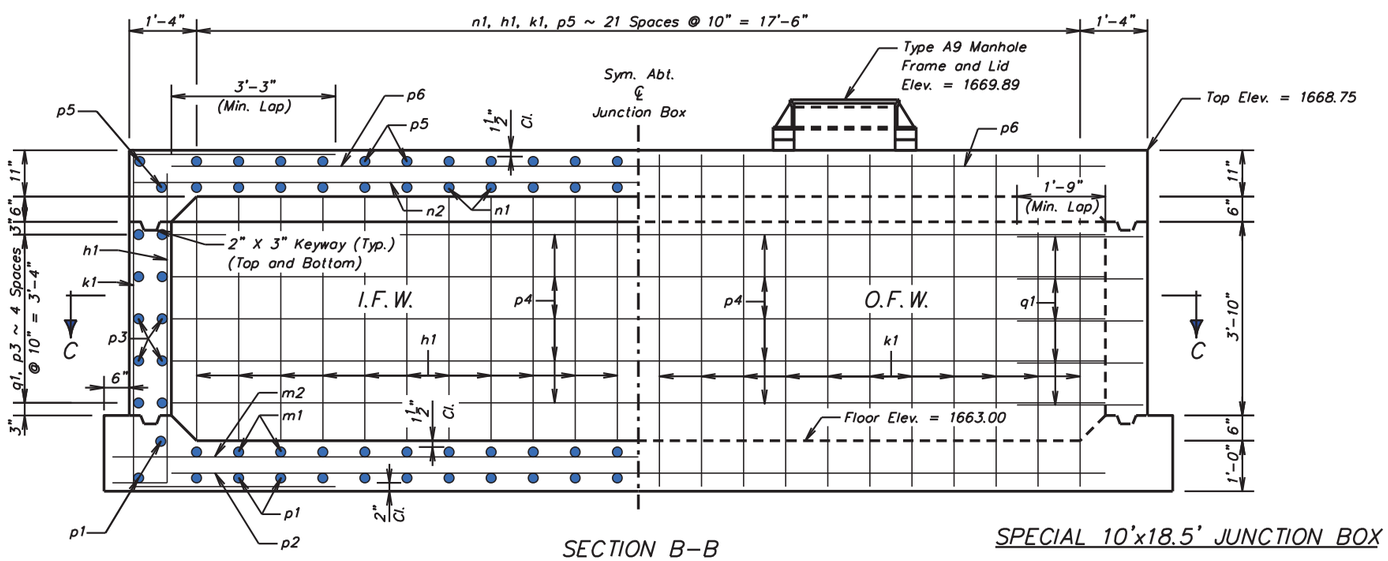

SECTION B-B

SPECIAL 10'x18.5' JUNCTION BOX

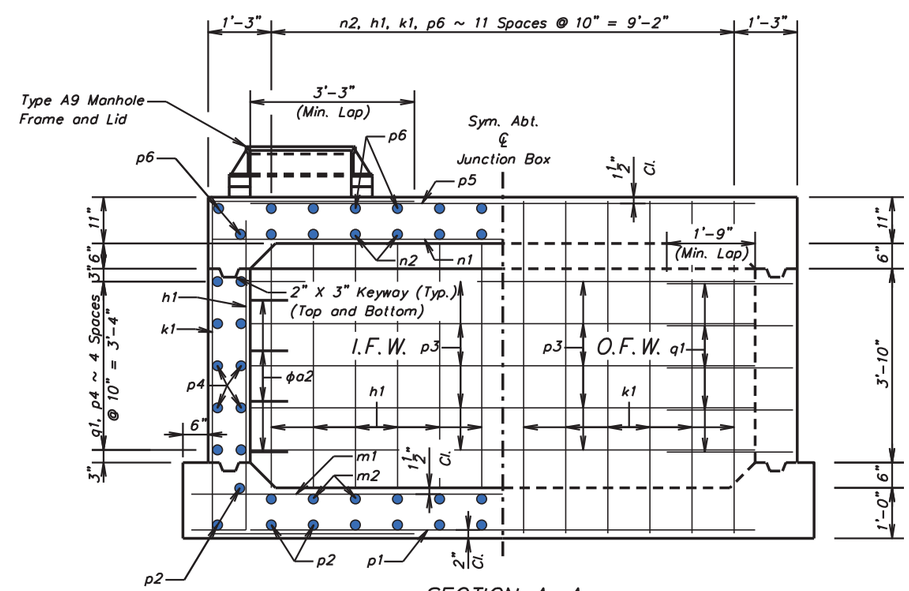

SECTION A-A

REGISTERED PROFESSIONAL ENGINEER
REG. NO. 9737
DAVID R. MAXWELL
SOUTH DAKOTA
12/4/15

PLANS BY: HRGreen

DESIGNED BY	DRAWN BY	CHECKED BY	
JRM	JRM	KJB	BRIDGE ENGINEER

FOR BIDDING PURPOSES ONLY

STATE OF SOUTH DAKOTA	PROJECT	SHEET	TOTAL SHEETS
	NH 0034(160)386	B102	B133

Plotting Date: 12/4/2015

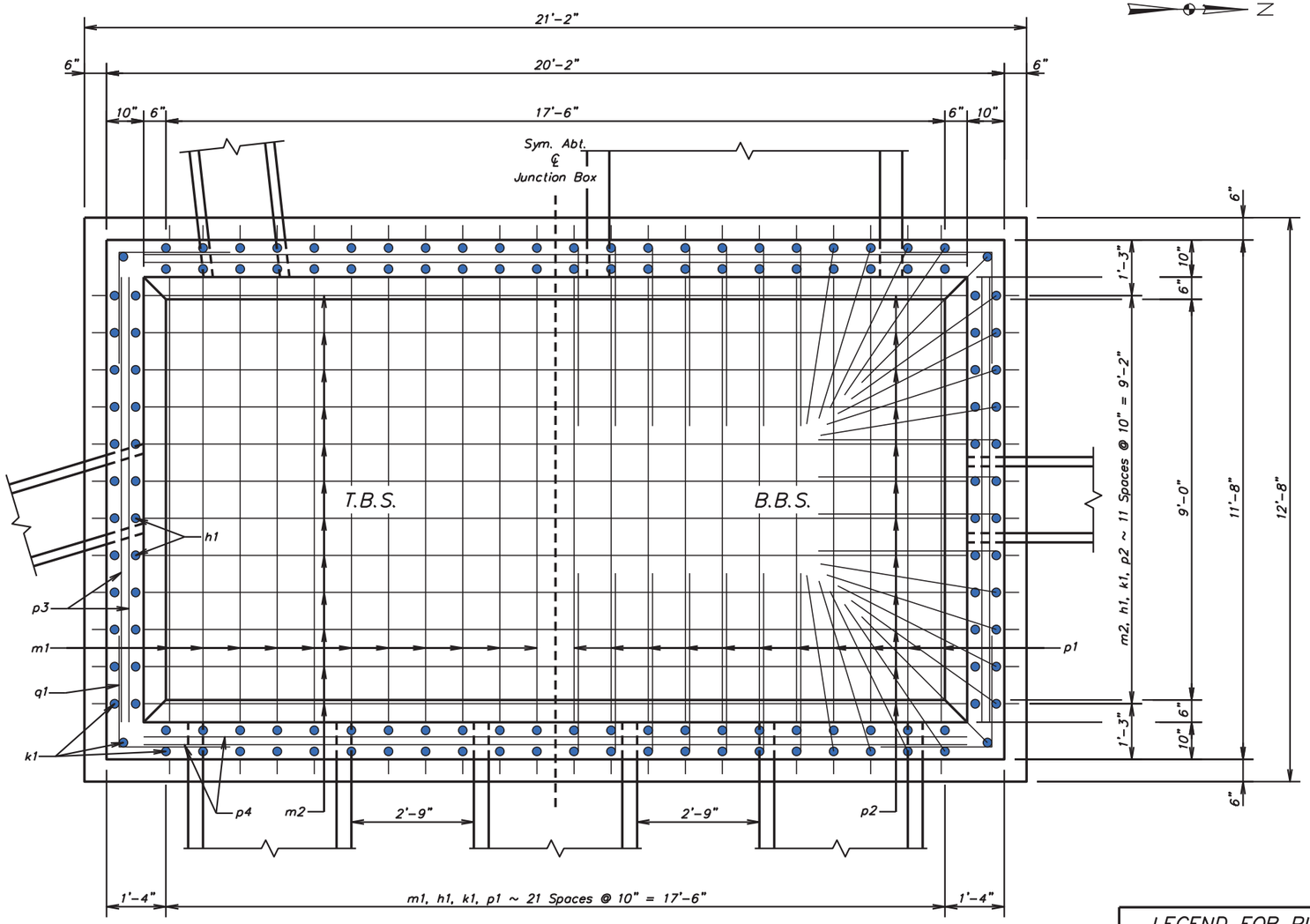

SECTION C-C

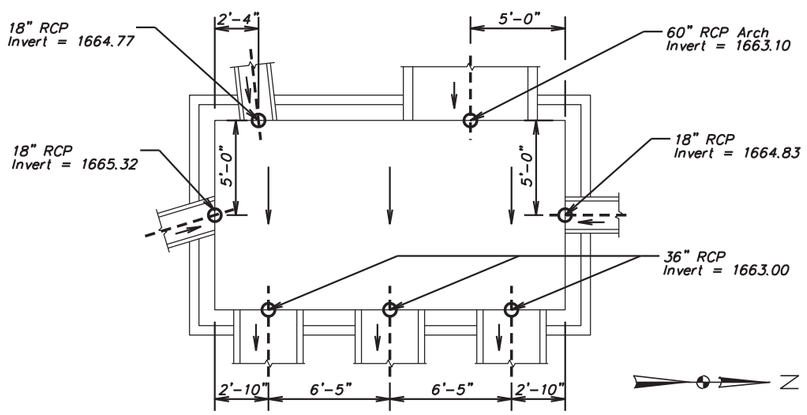

PLAN

SPECIFICATIONS:

1. Design Specifications: AASHTO LRFD Bridge Design Specification, 2014 Edition with 2015 interims.
2. Construction Specifications: South Dakota Standard Specifications for Roads and Bridges, 2015 Edition and required Provisions, Supplemental Specifications and Special Provisions as included in the Proposal.

DESIGN MIX OF CONCRETE:

1. Mix shall be designed to produce a concrete having a minimum compressive strength of 4000 p.s.i. at 28 days.
2. Type II Cement is required.

GENERAL NOTES:

1. Design Live Load: HL-93 Loading; No construction loading in excess of legal load was considered.
2. Unit Stresses: Concrete f'c=4 k.s.i.
   Reinforcing Steel fy = 60 k.s.i.
3. All reinforcing steel shall conform to ASTM A615 Grade 60.
4. All exposed edges shall be chamfered ¾".
5. Use 1" clear cover on all reinforcing steel except as shown.
6. Payment for all materials and labor associated with construction of the Special 10'x18.5' Junction Box shall be incidental to the bid items "Class M6 Concrete" and "Reinforcing Steel".
7. The cost of furnishing and installing the manhole steps shall be incidental to the contract unit price per Lb. for "Reinforcing Steel".
8. Reinforcing steel shall be cut and bent in field as necessary to fit pipe and manhole openings.
9. All pipes entering the junction box must fit between the inside faces of the walls.
10. Floor of junction box to be finished in such a manner to ensure uninterrupted flow thru the box.

REINFORCING SCHEDULE

Mk.	No.	Size	Length	Type
▽a1	2	6	9'-0"	T3
ϕa2	6	–	——	–
h1	68	4	7'-3"	17A
k1	72	7	14'-6"	17
m1	22	6	12'-4"	Str.
m2	12	4	20'-10"	Str.
n1	22	6	11'-2"	Str.
n2	12	4	19'-8"	Str.
p1	26	7	10'-0	Str.
p2	16	4	18'-6"	Str.
p3	20	4	10'-0"	Str.
p4	20	4	18'-6"	Str.
p5	26	7	10'-0"	Str.
p6	16	4	18'-6"	Str.
q1	20	4	5'-0"	17A

Bending Details

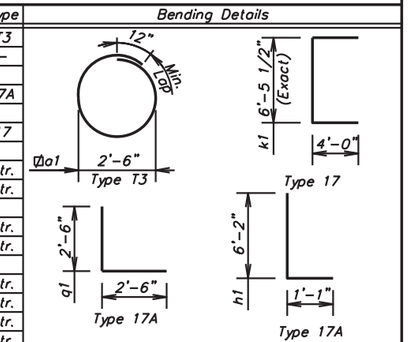

NOTE: All dimensions are out to out of bars.
▽ Locate with top and bottom reinforcement of top slab with 3" clearance at manhole opening.
ϕ Cast Iron Manhole Steps (R-1980-C) from Neenah Foundry or equivalent.

LEGEND FOR PLACING RE-STEEL

T.T.S.	– Top of Top Slab
B.T.S.	– Bottom of Top Slab
T.B.S.	– Top of Bottom Slab
B.B.S.	– Bottom of Bottom Slab
O.F.W.	– Outside Face of Wall
I.F.W.	– Inside Face of Wall

ESTIMATED QUANTITIES

Item	M6 Concrete	Reinforcing Steel
Unit	Cu. Yd.	Lb.
10'x18.5' Junction Box	27.8	5498

REGISTERED PROFESSIONAL ENGINEER
REG. NO. 9737
DAVID P. MAXWELL
SOUTH DAKOTA
12/4/15

SPECIAL 10'x18.5' JUNCTION BOX

PLANS BY: HRGreen

DESIGNED BY	DRAWN BY	CHECKED BY	
JRM	JRM	KJB	BRIDGE ENGINEER

STATE OF SOUTH DAKOTA	PROJECT	SHEET	TOTAL SHEETS
	NH 0034(160)386	B103	B133

FOR BIDDING PURPOSES ONLY

Plotting Date: 12/4/2015

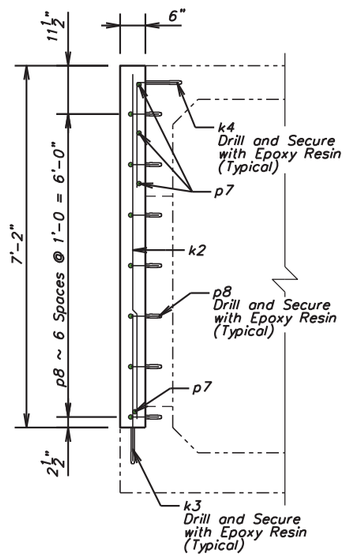

SECTION A–A

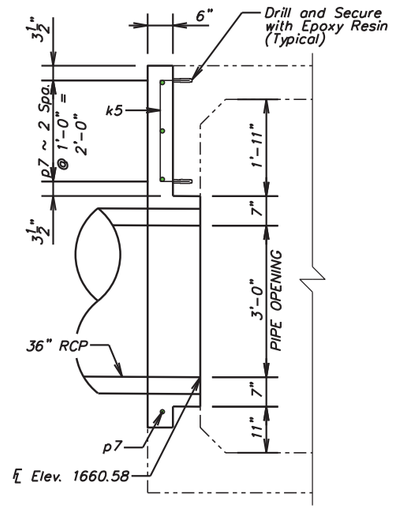

SECTION B–B

REINFORCING SCHEDULE

Mk.	No.	Size	Length	Type
k2	16	5	6'-10"	Str.
k3	16	5	2'-11"	Str.
k4	16	5	3'-0"	17A
k5	15	4	3'-2"	17
p7	4	4	25'-10"	Str.
p8	28	4	3'-2"	17

Bending Details

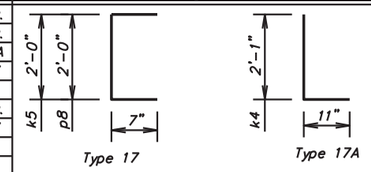

NOTE: All dimensions are out to out of bars.

ESTIMATED QUANTITIES

Item	Unit	Quantity
Class A45 Concrete, Self Consolidating	Cu. Yd.	3.4
Breakout Structural Concrete	Cu. Yd.	1.3
Install Dowel in Concrete	Each	118
Epoxy Coated Reinforcing Steel	Lb.	373

SPECIFICATIONS:

1. Design Specifications: AASHTO Standard Specifications for Highway Bridges, 2002 Edition (Service Load).
2. Construction Specifications: South Dakota Standard Specifications for Roads and Bridges, 2015 Edition and required Provisions, Supplemental Specifications, and Special Provisions as included in the Proposal.

GENERAL NOTES:

1. Unit Stresses: Concrete fc = 1.6 k.s.i.
   Reinforcing Steel fs = 24 k.s.i.
2. All concrete shall be self consolidating class A45 conforming to section 460.
3. All reinforcing stee shall comform to ASTM A615 Grade 60.
4. Use 1 inch clear cover on all reinforcing steel EXCEPT as shown.
5. Compaction of earth embankment and box culvert backfill material shall be governed by the Ordinary Compaction method.
6. Payment for all materials and labor associated with connecting 3 – 36" RCP's to existing box culvert, shall be incidental to the bid items listed in the Estimated Quantities box on this sheet.

DIMENSIONS OF EXISTING BOX CULVERT

1. All details and dimensions of the Existing Box Culvert, contained in these plans, are provided as information only. It is the Contractor's responsibility to inspect and verify the actual field conditions and any necessary dimensions affecting the satisfactory completion of the work required for this project. Original construction plans can be obtained from the Office of Bridge Design.

BREAKOUT STRUCTURAL CONCRETE

1. This works shall consist of breaking out and disposing of structural concrete. All broken out concrete and other discarded material shall be disposed of in accordance with the WASTE DISPOSAL SITE notes in Section A.
2. Define the breakout limits with 3/4 inch deep saw cuts.
3. Salvage resteel in the walls and use in new construction. Care shall be taken not to damage the existing reinforcing steel during the breakout operations. These reinforcing bars and all concrete surfaces in the breakout area on which new concrete is to be cast shall be thoroughly cleaned by sandblasting to the satisfaction of the Engineer prior to placement of the new concrete.
4. Any additional breakout required due to spalling or cracking of the existing structure will be determined by the Engineer. Where additional breakout in the barrel sectin of the existing structure is required, care shall be taken not to damage any of the existing reinforcing steel. All steel will be left in place and thoroughly cleaned by sandblasting.
5. Plans quantity payment will be full compensation for this item regardless of the quantity actually broken out, unless measurement is ordered by the Engineer. If the Engineer orders breakout beyond the limits shown, this additional breakout will be paid for at the contract unit price per cubic yard for Breakout Structural Concrete. If additional breakout is caused by the Contractor's operations, no additional payment will be made.
6. Breakout Structural Concrete will be paid for at the contract unit price per cubic yard. This payment shall be full compensation for furnishing all materials, labor, tools and equipment necessary or incidental to breaking out the structural concrete. Payment includes, but is not limited to, excavation required to perform the required breakout, saw cutting, breaking out concrete, cleaning and sandblasting reinforcing steel and concrete surfaces, and removing and disposing of all waste materials to satisfactorily complete the work.

REGISTERED PROFESSIONAL ENGINEER REG. NO. 9737 DAVID R. MAXWELL SOUTH DAKOTA 12/4/15

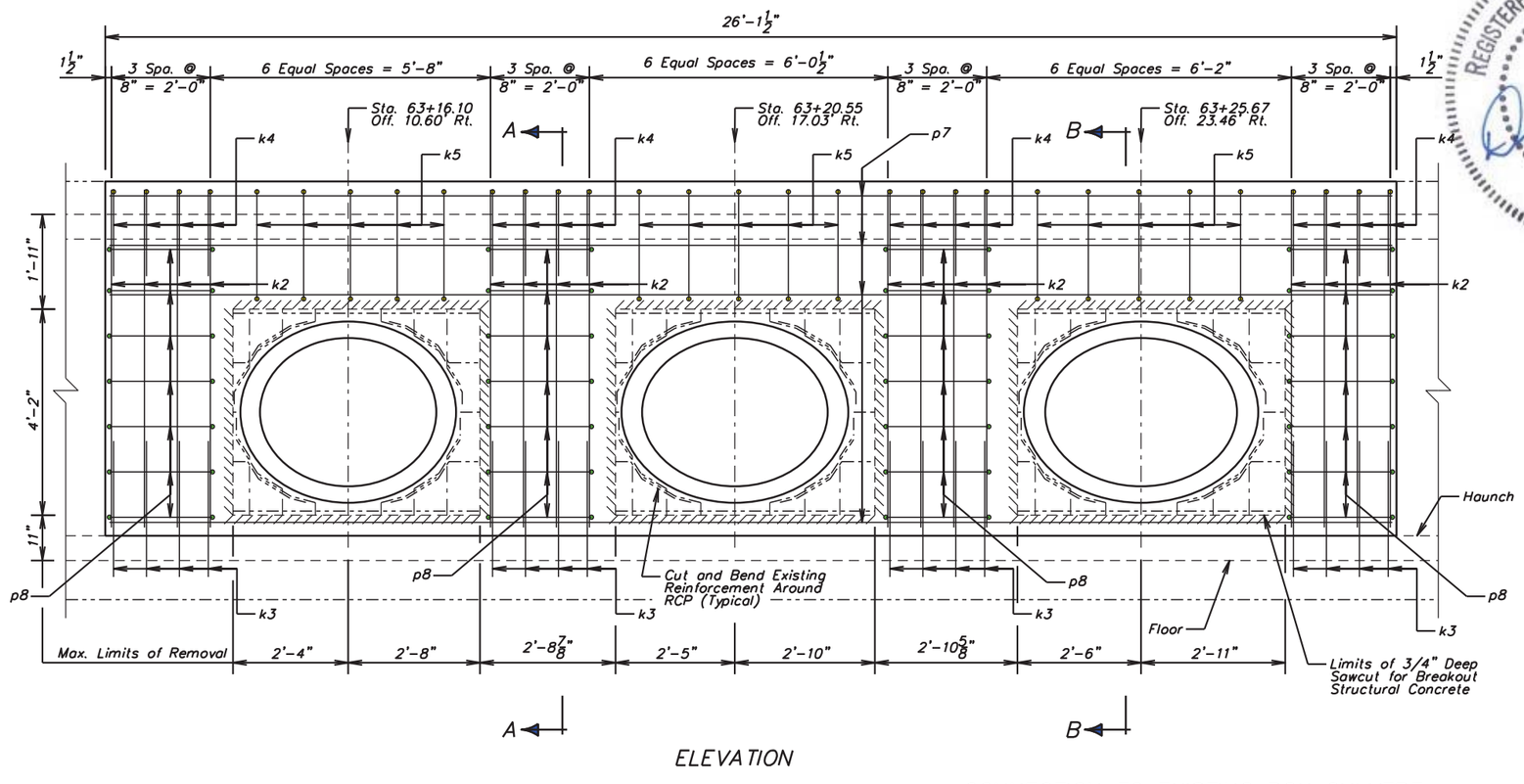

ELEVATION

CONNECTION TO EXISTING BOX CULVERT

INSTALLING REINFORCING STEEL IN CONCRETE

1. The epoxy resin mixture shall be of a type for bonding steel to hardened concrete and shall conform to AASHTO M235 Type IV, Grade 3 (Equivalent to ASTM C881 Type IV, Grade 3).
2. The diameter of the drilled holes shall not be less than 1/8 inch greater, nor more than 3/8 greater than the diameter of the reinforcing steel or as per Manufacturer's recommendations. Holes shall not be drilled using core bits. The drilled holes shall be blown out with compressed air using a device that will reach the back of the hole to ensure that all debris or loose material has been removed prior to epoxy injection.
3. Mix epoxy resin as recommended by the Manufacturer and apply by an injection method as approved by the Engineer. Beginning at the back of the drilled holes, fill the holes 1/3 to 1/2 full of epoxy, or as recommended by the Manufacturer, prior to insertion of the steel bar. Care shall be taken to prevent epoxy from running out of the horizontal holes prior to steel bar insertion. Rotate the steel bar during installation to eliminate voids and ensure complete bonding of the bar. Insertion of the bars by the dipping or painting methods will not be allowed.
4. No loads shall be applied to the epoxy grouted reinforcing steel bars until the epoxy resin has had sufficient time to cure as specified by the epoxy resin manufacturer.
5. Embed reinforcing steel as recommended by the manufacturer.
6. The cost of drilling holes, epoxy resin, installation and other incidental items shall be included in the contract unit price per each for Install Dowel in Concrete.

PLANS BY: HRGreen

DESIGNED BY	DRAWN BY	CHECKED BY	
CTH	CTH	KJB	BRIDGE ENGINEER

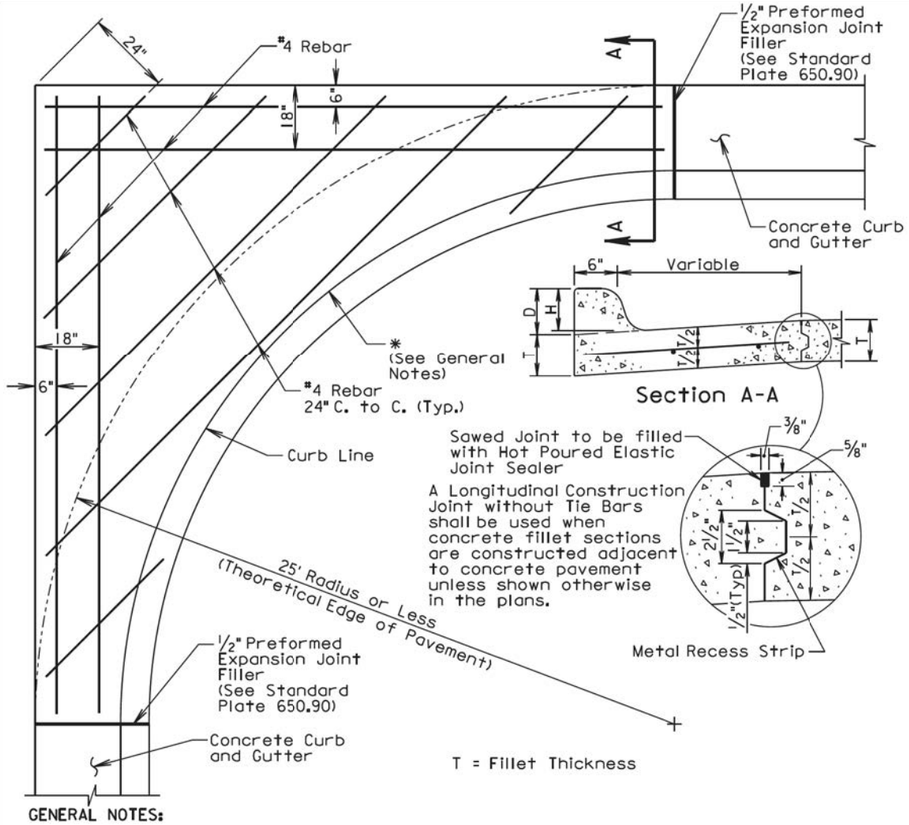

GENERAL NOTES:

* If a curb ramp is constructed adjacent to a PCC fillet section, the curb will need to be modified. Refer to the corresponding curb ramp standard plate or other special details in the plans for modification of the PCC fillet section.

Dimensions D, H, and T shall conform to those shown on the appropriate curb and gutter standard plate.

All rebar shall be in conformance with Sections 480 and 1010 of the Specifications. All rebar shall have a minimum of 3" clear cover.

Class M6 Concrete shall be used in construction of the fillets.

The concrete curb shall be monolithic with the concrete fillet. No separate payment for this curb will be made as the curb is considered a part of the fillet.

Joints shall be constructed at 10' intervals except when fillets are constructed adjacent to PCC Pavement. If there is adjacent PCC Pavement the joints shall be extended from edge of pavement through the fillet section as directed by the Engineer.

The cost for all materials, labor, and incidentals necessary to construct the PCC fillet section with curb and gutter shall be incidental to the contract unit price per square yard for the corresponding PCC fillet section bid item.

June 26, 2015

Published Date: 4th Qtr. 2015	SDDOT	PCC FILLET SECTION WITH TYPE B CURB AND GUTTER	PLATE NUMBER 380.16
			Sheet 1 of 1

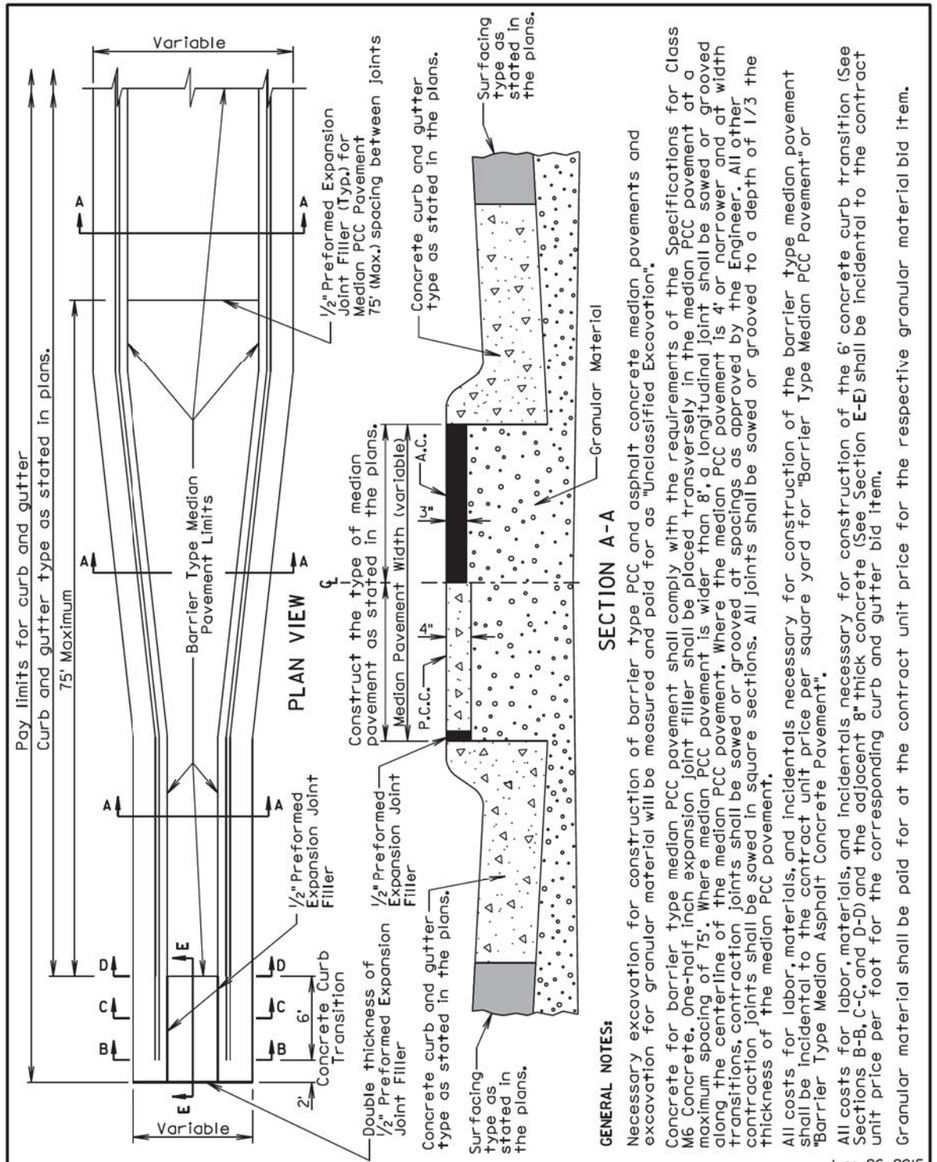

GENERAL NOTES:

Necessary excavation for construction of barrier type PCC and asphalt concrete median pavements and excavation for granular material will be measured and paid for as "Unclassified Excavation".

Concrete for barrier type median PCC pavement shall comply with the requirements of the Specifications for Class M6 Concrete. One-half inch expansion joint filler shall be placed transversely in the median PCC pavement at a maximum spacing of 75'. Where median PCC pavement is wider than 8', a longitudinal joint shall be sawed or grooved along the centerline of the median PCC pavement. Where the median PCC pavement is 4' or narrower and at width transitions, contraction joints shall be sawed or grooved at spacings as approved by the Engineer. All other contraction joints shall be sawed in square sections. All joints shall be sawed or grooved to a depth of 1/3 the thickness of the median PCC pavement.

All costs for labor, materials, and incidentals necessary for construction of the barrier type median pavement shall be incidental to the contract unit price per square yard for "Barrier Type Median PCC Pavement" or "Barrier Type Median Asphalt Concrete Pavement".

All costs for labor, materials, and incidentals necessary for construction of the 6' concrete curb transition (See Sections B-B, C-C, and D-D) and the adjacent 8" thick concrete (See Section E-E) shall be incidental to the contract unit price per foot for the corresponding curb and gutter bid item.

Granular material shall be paid for at the contract unit price for the respective granular material bid item.

June 26, 2015

Published Date: 4th Qtr. 2015	SDDOT	BARRIER TYPE MEDIAN PAVEMENT	PLATE NUMBER 380.22
			Sheet 1 of 2

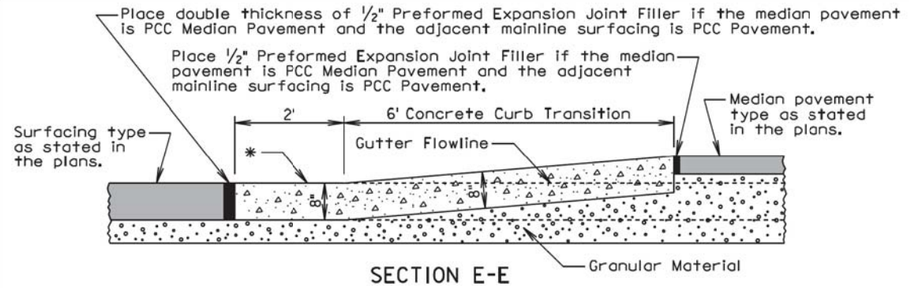

SECTION E-E

* The slope shall be as shown on the standard plate for the corresponding curb and gutter type, on the typical sections, or on the cross sections. The slope shall be modified when necessary at locations that would hold or pond water as determined by the Engineer.

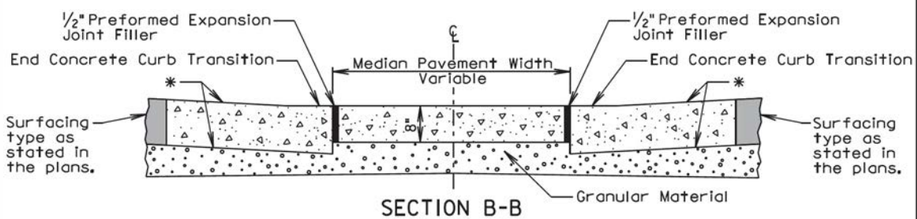

SECTION B-B

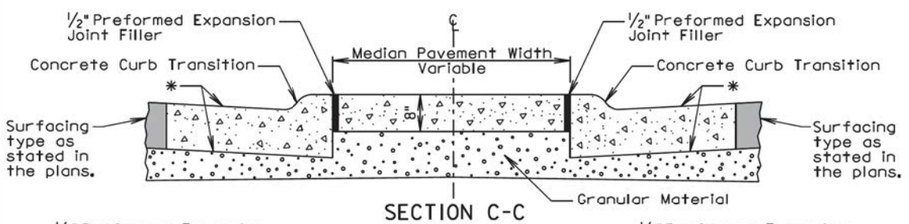

SECTION C-C

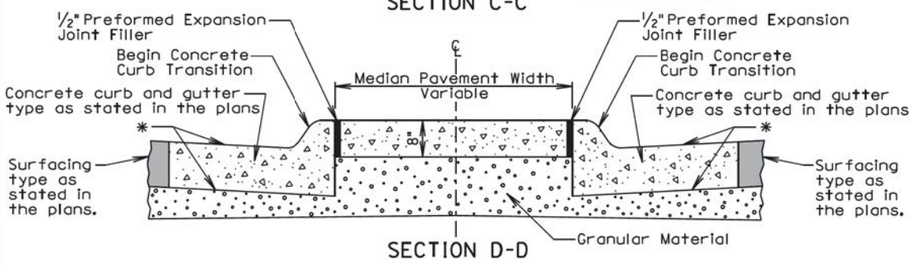

SECTION D-D

June 26, 2015

Published Date: 4th Qtr. 2015	SDDOT	BARRIER TYPE MEDIAN PAVEMENT	PLATE NUMBER 380.22
			Sheet 2 of 2

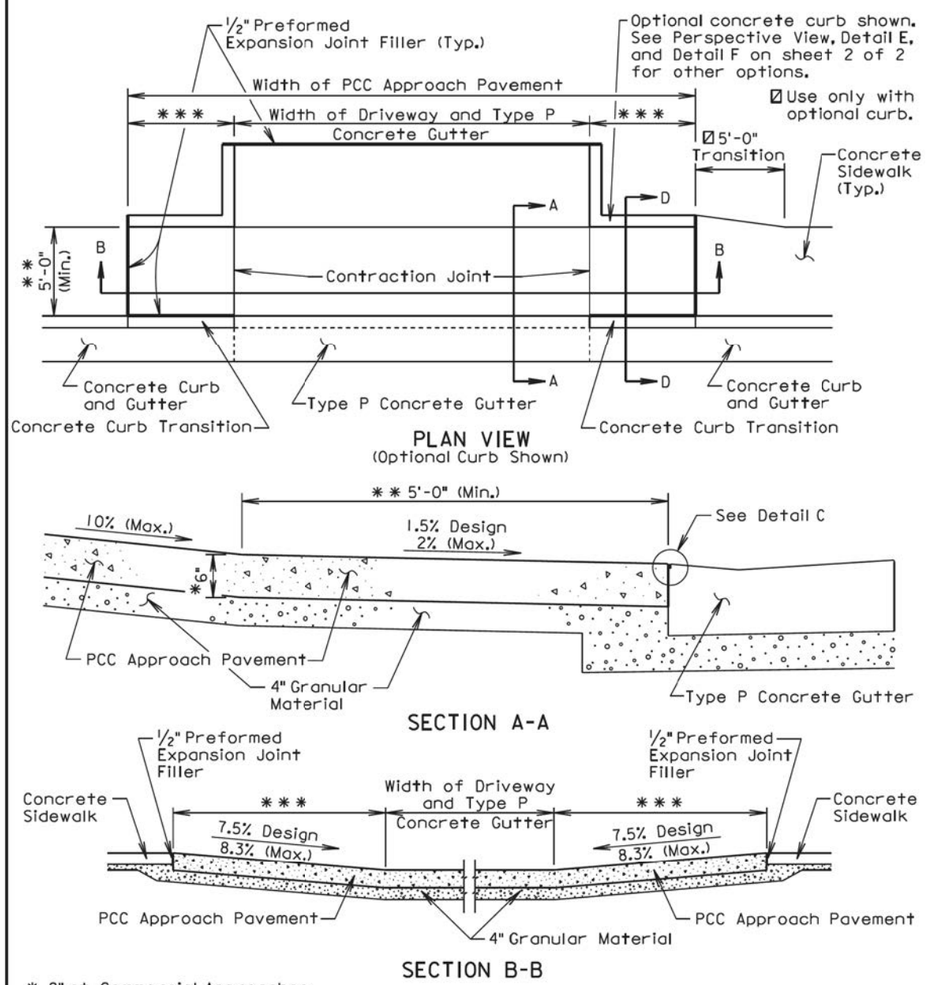

✱ 8" at Commercial Approaches

✱✱ Sidewalk width is 5' unless specified otherwise in the plans. The cross slope of the sidewalk is designed at 1.5% and shall not be steeper than 2% unless specified otherwise in the plans.

✱✱✱ The slope of the type B PCC approach pavement in these areas shall match the slope of the concrete curb transition and the length shall not be longer than 15'. The slope is designed at 7.5% and shall not be steeper than 8.3% unless specified otherwise in the plans.

September 6, 2015

Published Date: 4th Qtr. 2015	SDDOT	TYPE B PCC APPROACH PAVEMENT	PLATE NUMBER 380.41 Sheet 1 of 2

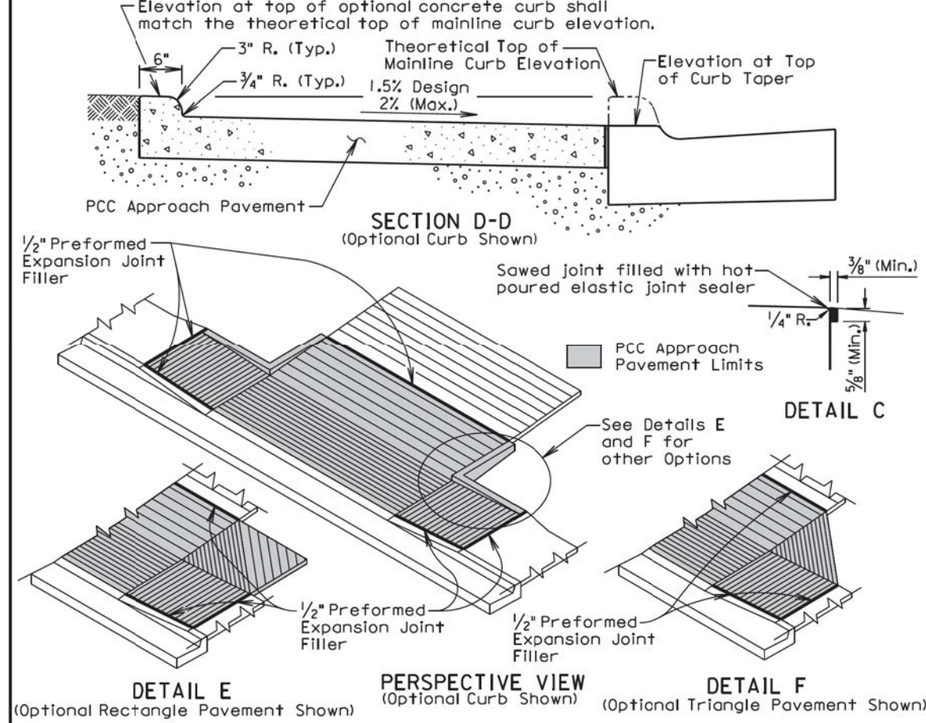

GENERAL NOTES:

Use the plan specified option for the pavement adjacent to the driveway and sidewalk. The options are shown above in the Perspective View, Detail E, and Detail F.

The concrete for the type B PCC approach pavement and adjacent driveway shall comply with the requirements of the Specifications for class M6 concrete unless otherwise stated in the plans.

Contraction joints in the type B PCC approach pavement shall be 1½ inches deep if formed in the fresh concrete using a suitable grooving tool. If a saw is used to cut the contraction joints, then the depth of the joint shall be at least ¼ the thickness of the approach pavement. Additional contraction joints not shown in the Plan View shall be spaced as follows:

One joint at the center of the approach for driveways 16' to 24' wide.
Two joints spaced at equal intervals for driveways greater than 24' to 40' wide.

All costs for furnishing and placing the type B PCC approach pavement and constructing the expansion and contraction joints including labor, equipment, and materials including the earthen backfill shall be incidental to the contract unit price per square yard for the corresponding PCC Approach Pavement bid item.

All costs for excavation required for placing the type B PCC approach pavement and granular material shall be incidental to the contract unit price per cubic yard for "Unclassified Excavation". All costs for furnishing and placing the granular material shall be incidental to the contract unit price per ton for the corresponding granular material bid item.

September 6, 2015

Published Date: 4th Qtr. 2015	SDDOT	TYPE B PCC APPROACH PAVEMENT	PLATE NUMBER 380.41 Sheet 2 of 2

TOLERANCES IN DIMENSIONS

Diameter: ±1.5% for 24" Dia. or less and ±1% or 3/8" whichever is more for 27" Dia. or greater.
Diameters at joints: ± 3/16" for 30" Dia. or less and ± 1/4" for 36" or greater.
Length of joint (j): ± 1/4".
Wall thickness (T): not less than design T by more than 5% or 3/16", whichever is greater.
Laying length: shall not underrun by more than 1/2".

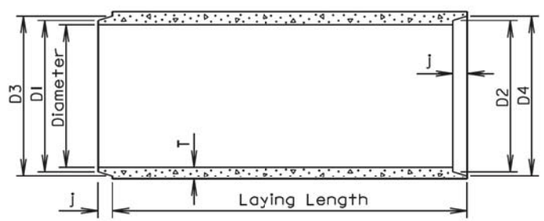

LONGITUDINAL SECTION

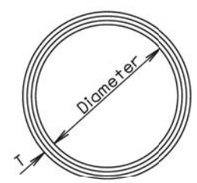

END VIEW

GENERAL NOTES:

Construction of R. C. P. shall conform to the requirements of Section 990 of the Specifications.

Not more than 2 four-foot sections shall be permitted near the ends of any culvert. Four-foot lengths shall be used only to secure the required length of culvert.

Diam. (in.)	Approx. Wt. /Ft. (lb.)	T (in.)	J (in.)	D1 (in.)	D2 (in.)	D3 (in.)	D4 (in.)
12	92	2	1 3/4	13 1/4	13 5/8	13 7/8	14 1/4
15	127	2 1/4	2	16 1/2	16 7/8	17 1/4	17 5/8
18	168	2 1/2	2 1/4	19 5/8	20	20 3/8	20 3/4
21	214	2 3/4	2 1/2	22 7/8	23 1/4	23 3/4	24 1/8
24	265	3	2 3/4	26	26 3/8	27	27 3/8
27	322	3 1/4	3	29 1/4	29 5/8	30 1/4	30 5/8
30	384	3 1/2	3 1/4	32 3/8	32 3/4	33 1/2	33 7/8
36	524	4	3 3/4	38 3/4	39 1/4	40	40 1/2
42	685	4 1/2	4	45 1/8	45 5/8	46 1/2	47
48	867	5	4 1/2	51 1/2	52	53	53 1/2
54	1070	5 1/2	4 1/2	57 7/8	58 3/8	59 3/8	59 7/8
60	1296	6	5	64 1/4	64 3/4	66	66 1/2
66	1542	6 1/2	5 1/2	70 5/8	71 1/8	72 1/2	73
72	1810	7	6	77	77 1/2	79	79 1/2
78	2098	7 1/2	6 1/2	83 3/8	83 7/8	85 5/8	86 1/8
84	2410	8	7	89 3/4	90 1/4	92 1/8	92 5/8
90	2740	8 1/2	7	95 3/4	96 1/4	98 1/8	98 5/8
96	2950	9	7	102 1/8	102 5/8	104 1/2	105
102	3075	9 1/2	7 1/2	109	109 1/2	111 1/2	112
108	3870	10	7 1/2	115 1/2	116	118	118 1/2

June 26, 2015

Published Date: 4th Qtr. 2015

SDDOT

REINFORCED CONCRETE PIPE

PLATE NUMBER 450.01

Sheet 1 of 1

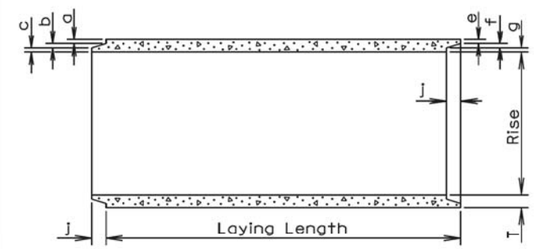

LONGITUDINAL SECTION

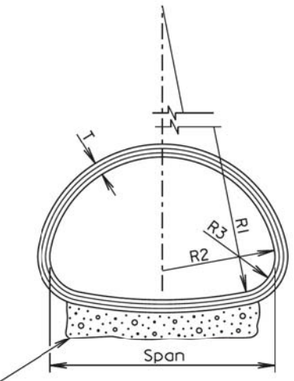

END VIEW

TOLERANCES IN DIMENSIONS

Radial dimensions at joints: ± 1/8" for 65" span or less and ± 1/4" for longer spans.
Rise and Span: ±2% of tabular values.
Length of Joint (J): ± 1/4".
Wall thickness (T): not less than design T by more than 5% or 3/16", whichever is greater.
Laying length: shall not underrun by more than 1/2".

Gravel Bedding Material shall be supplied for 102" to 169" spans. It shall be placed to a thickness of 6" (Min.) x 85% of the Span x Length of culvert and shall conform to the gradation requirements for gravel surfacing except material may be screened or may be plan provided material.

* Size (in.)	Approx. Wt./Ft. (lb.)	Rise (in.)	Span (in.)	T (in.)	a (in.)	b (in.)	c (in.)	j (in.)	e (in.)	f (in.)	g (in.)	R1 (in.)	R2 (in.)	R3 (in.)
18	170	13 1/2	22	2 1/2	1 3/8	3/8	3/4	2	1 1/8	3/8	1	27 1/2	13 3/4	5 1/4
24	320	18	28 1/2	3 1/2	1 5/8	1/2	1 3/8	3	1 3/8	1/2	1 5/8	40 11/16	14 3/4	4 5/8
30	450	22 1/2	36 1/4	4	1 13/16	5/8	1 9/16	3 1/2	1 9/16	5/8	1 13/16	51	18 3/4	6 1/8
36	600	26 5/8	43 3/4	4 1/2	2	3/4	1 3/4	4	1 3/4	3/4	2	62	22 1/2	6 1/2
42	740	31 5/16	51 1/8	4 1/2	2	3/4	1 3/4	4	1 3/4	3/4	2	73	26 1/4	7 3/4
48	890	36	58 1/2	5	2 1/4	3/4	2	5	2	3/4	2 1/4	84	30	8 7/8
54	1100	40	65	5 1/2	2 1/2	3/4	2 1/4	5	2 1/4	3/4	2 1/2	92 1/2	33 3/8	10
60	1400	45	73 1/2	6	3 5/16	3/4	1 15/16	5	2 3/4	3/4	2 1/2	105	37 1/2	11
72	1900	54	88	7	3 13/16	1	2 3/16	6	3 1/4	1	2 3/4	126	45	13 5/16
84	2500	62	102	8	4 1/8	1	2 7/8	6	3 1/2	1	3 1/2	162 1/2	52	14 1/2
96	3300	78	122 3/8	9	4 1/2	1	3 1/2	7	4	1	4	218	62	20
108	4200	88	138 1/2	10	5	1	4	7	4 1/2	1	4 1/2	269	70	22
120	5100	96 7/8	154	11	5 1/2	1	4 1/2	7	5	1	5	301 3/8	78	24
132	5100	106 1/2	168 3/4	10		1	4	7	4 1/2	1	4 1/2	329	85 5/8	26 7/8

* Equivalent Diameter of Circular R. C. P.

GENERAL NOTES:

Construction of R.C.P. Arch shall conform to the requirements of Section 990 of the Specifications. Not more than 2 four-foot sections shall be permitted near the ends of any culvert. Four-foot lengths shall be used only to secure the required length of culvert.

June 26, 2015

Published Date: 4th Qtr. 2015

SDDOT

REINFORCED CONCRETE PIPE ARCH

PLATE NUMBER 450.02

Sheet 1 of 1

GENERAL NOTES:

1. All concrete shall be Class M6 in accordance with Section 462.
2. All reinforcing steel shall be epoxy coated and shall conform to ASTM A615, Grade 60. Epoxy coating shall conform to ASTM A775.
3. Use 2 inch clear cover on all reinforcing steel except as shown.
4. All concrete shall be thoroughly tamped and spaded against forms to leave a smooth surface without honeycomb. Finish of step treads to be steel troweled and then brush finished with brush strokes on treads at right angles to width. All exposed edges shall be chamfered 3/4 inch except as shown.
5. Place concrete on undisturbed soil. If backfilling is necessary, compact with mechanical tampers to the satisfaction of the Engineer.
6. The concrete sidewalk shall be constructed in accordance with Section 651.
7. Cost of the double thickness of ½ inch Preformed Expansion Joint Filler shall be incidental to the contract unit price per cubic yard for "Class M6 Concrete".

SPECIAL NOTE:

Details for construction of the concrete stairway and handrails shown on sheet 2 of 2 are typical only, and are not intended to depict specific installations. Adjust the length of the stairway as required to fit specific site requirements. Use the formulas given on this sheet to adjust the unit price bid quantities to the required length of the stairway. Refer to project plans for requirements of individual locations. Alternate design details may be submitted through proper channels to the Office of Bridge Design for approval, including aluminum handrail installation.

REINFORCING SCHEDULE

Mk.	△No.	Size	△Length	Type
b1	★	4	2h + 5	Str.
b2	6	4	h + 1.67	17A
b3	⌖	4	h + 4.67	17A
e	7	4	5' - 8"	S12
g1	7	4	1.12w + 2.0	19B
g2	2	4	1.12w + 3.7	19B
p	2w + 7	4	6' - 2"	Str.

Bending Details

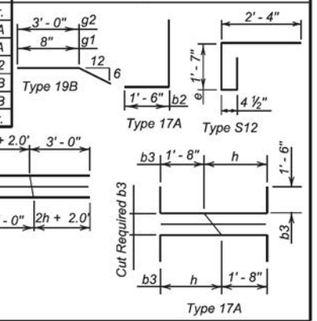

★2 bars for h = 0 - 2.0'
3 bars for h = 2.1' - 3.5'
4 bars for h = 3.6' - 5.0'

⌖ 2.67h - 3.33

ESTIMATED QUANTITIES

ITEM	UNIT	△QUANTITY
Class M6 Concrete	Cu. Yd.	$0.87 + 0.23w + 0.04h^2$
Structure Excavation, Miscellaneous	Cu. Yd.	$1.79 + 0.59w + 0.15h^2$
Epoxy Coated Reinforcing Steel	Lb.	⌀
Pipe Handrail	Ft.	6.22 + 2.24w
Sidewalk	Sq. Ft.	33

⌀ $72.62 + 14.97w + 1.78h^2 + 12.78h$ for h = 0 - 2.0'
$75.96 + 14.97w + 1.78h^2 + 14.12h$ for h = 2.1' - 3. 5'
$79.30 + 14.97w + 1.78h^2 + 15.46h$ for h = 3.6' - 5.0'

△ w = Number of steps NOT including landings (i. e. w = 9 in Sec. A - A).

August 8, 2014

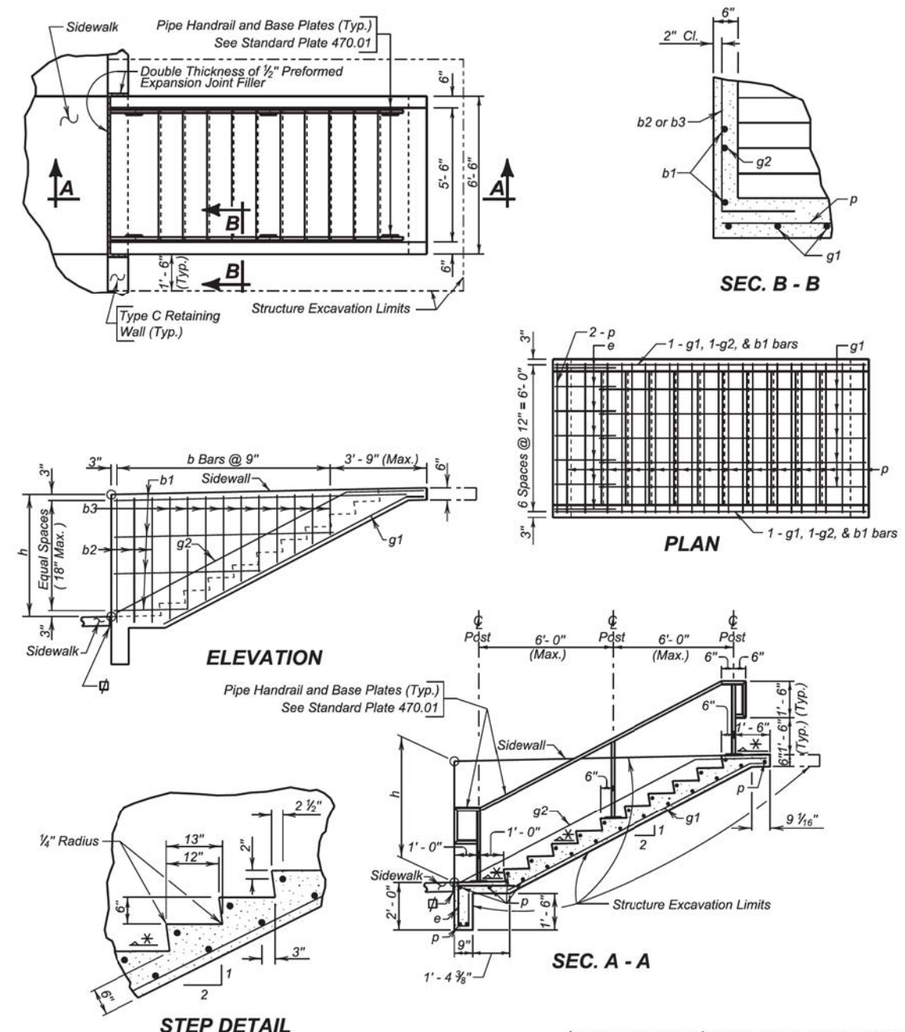

⌀ Double Thickness of ½" Preformed Expansion Joint Filler
✳ Slope ¼" per foot.

August 8, 2014

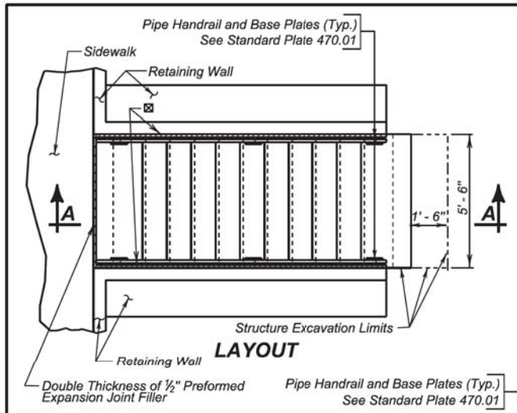

LAYOUT

✳ Slope ¼" per foot.

⊠ ½" Preformed Expansion Joint Filler or Double Thickness of ½" Preformed Expansion Joint Filler

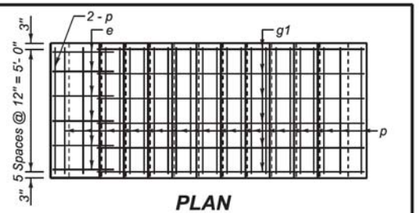

PLAN

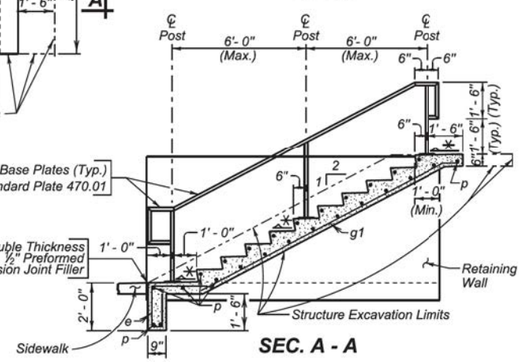

SEC. A - A

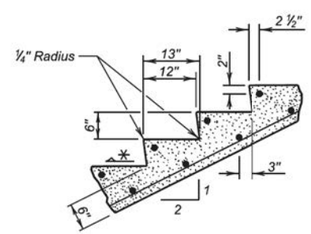

STEP DETAIL

REINFORCING SCHEDULE

MK.	△No.	Size	△Length	Type
e	6	4	5' - 8"	S12
g1	6	4	1.12w + 2.0	19B
p	2w + 7	4	5' - 2"	Str.

Bending Details

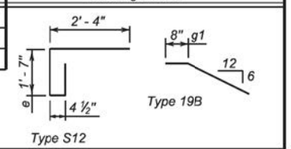

Type S12

Type 19B

ESTIMATED QUANTITIES

ITEM	UNIT	△QUANTITY
Class M6 Concrete	Cu. Yd.	0.71 + 0.17w
Structure Excavation (Misc.)	Cu. Yd.	1.02 + 0.31w
Epoxy Coated Reinforcing Steel	Lb.	54.89 + 11.39w
Pipe Handrail	Ft.	6.22 + 2.24w

△ w = Number of steps NOT including landings (i. e. w = 9 in Sec. A-A).

GENERAL NOTES:

1. All concrete shall be Class M6 in accordance with Section 462.
2. All reinforcing steel shall be epoxy coated and shall conform to ASTM A615, Grade 60. Epoxy coating shall conform to ASTM A775.
3. Use 2 inch clear cover on all reinforcing steel except as shown.
4. All concrete shall be thoroughly tamped and spaded against forms to leave a smooth surface without honeycomb. Finish of step treads to be steel troweled and then brush finished with brush strokes on treads at right angles to width. All exposed edges shall be chamfered ¾ inch except as shown.
5. Place concrete on undisturbed soil. If backfilling is necessary, compact with mechanical tampers to the satisfaction of the Engineer.
6. The concrete sidewalk shall be constructed in accordance with Section 651.
7. Cost of the ½ inch Preformed Expansion Joint Filler shall be incidental to the contract unit price per cubic yard for "Class M6 Concrete".
8. ⊠ Use double thickness of ½ inch Preformed Expansion Joint Filler if retaining wall parallel to sidewalk is longer than 75 feet.

SPECIAL NOTE:

Details for construction of the concrete stairway and handrails shown on this sheet are typical only, and are not intended to depict specific installations. Adjust the length of the stairway as required to fit specific site requirements. Use the formulas given on this sheet to adjust the unit price bid quantities to the required length of the stairway. Refer to project plans for requirements of individual locations. Alternate design details may be submitted through proper channels to the Office of Bridge Design for approval, including aluminum handrail installation.

August 8, 2014

Published Date: 4th Qtr. 2015 | SDDOT | CONCRETE STAIRWAY IN RETAINING WALL | PLATE NUMBER 460.30 | Sheet 1 of 1

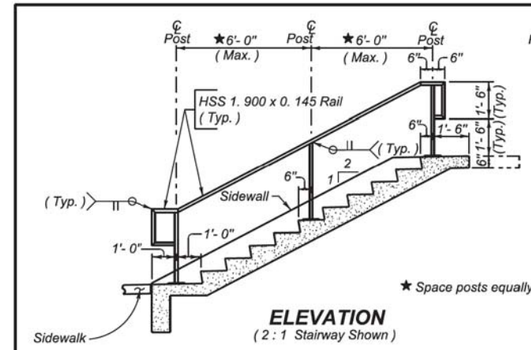

★ Space posts equally.

ELEVATION
(2 : 1 Stairway Shown)

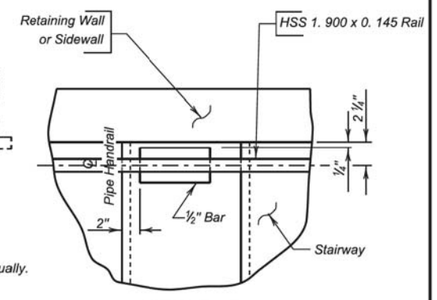

VIEW F - F

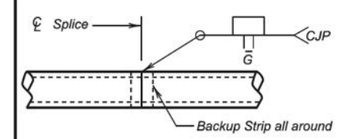

RAIL SPLICE DETAILS

GENERAL NOTES:

1. All rail posts shall be built vertical.
2. Steel pipe for railing and posts shall conform to ASTM A500, Grade B. Railpost base plates shall conform to ASTM A709, Grade 36.
3. Anchor Bolts and nuts shall conform to ASTM A307. Washers shall be in accordance with ASTM F436. Hardware shall be galvanized in accordance with ASTM F2329. Bolts shall be hex head Structural type with heavy hex lock nuts and round washers.
4. All anchor bolts shall be tightened to a Torque of 120 ft-lbs (approximated without the use of a calibrated torque wrench).
5. Painting of steel railing shall be done in accordance with Section 411 of the Specifications. The finish color shall be Federal Standard 595B, color 27038 (semi-gloss black) unless stated otherwise in the plans.
6. Welding and weld inspection shall be done in accordance with AWS D1. 1-(Current Year) Structural Welding Code - Steel.
7. The cost of structural steel, anchor bolts, painting, galvanizing, fabrication and installation of the Pipe Handrail shall be incidental to welding, weld inspection and that which is incidental to the the contract unit price per foot for "Pipe Handrail".
8. Alternate rail designs, including aluminum rail, may be submitted through proper channels to the Office of Bridge Design for approval.

SHOP PLANS

The fabricator shall submit shop drawings in accordance with the Specifications.

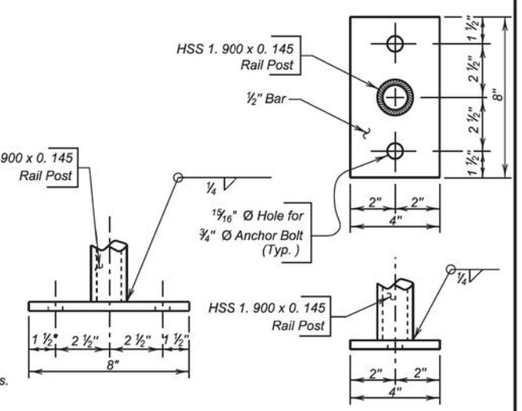

BASE PLATE DETAILS

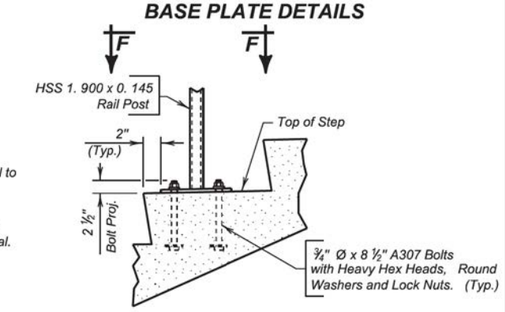

ANCHOR BOLT DETAIL

June 26, 2015

Published Date: 4th Qtr. 2015 | SDDOT | STAIRWAY HANDRAIL | PLATE NUMBER 470.01 | Sheet 1 of 1

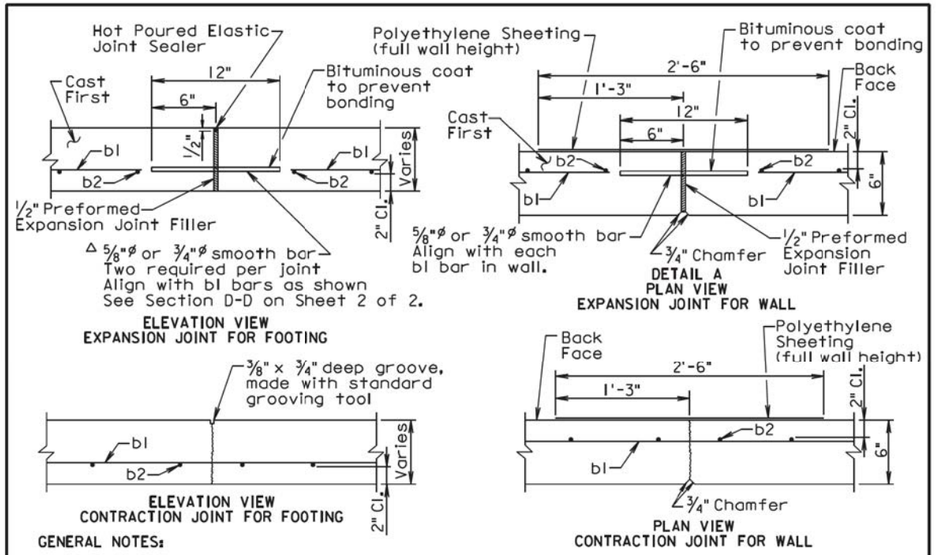

GENERAL NOTES:

The Type C Concrete Retaining Wall shall be placed adjacent to pavement or curb and gutter as shown in Section D-D on sheet 2 of 2.

* The sidewalk width of the Type C Concrete Retaining Wall shall not be wider than 8 feet or narrower than 5 feet. See plans for specified width.

In the areas where the retaining wall footing is to be placed, a 2 inch thickness of cushion material shall be placed and compacted. The cushion material shall conform to Section 651.2 C. of the Specifications.

All concrete shall be Class M6 and conform to Section 462 of the Specifications.

All reinforcing steel shall be epoxy coated and shall conform to ASTM A615, Grade 60. The smooth bar may conform to ASTM A615, Grade 40. The epoxy coating shall conform to ASTM A775.

For variable height walls, the top b1 bar shall be placed parallel to the top of the wall.

The b1 bars shall be lapped a minimum of 12 inches.

A 3/4 inch chamfer shall be provided on all exposed retaining wall edges.

Use Detail B on sheet 2 of 2 for constructing corners in the retaining wall.

The maximum expansion joint spacing shall be 90 feet and the maximum contraction joint spacing shall be 30 feet. The contraction and expansion joints shall be placed to match pavement or curb joints where possible.

The exposed retaining wall surfaces shall receive a finish in accordance with 460.3 L. of the Specifications. The exposed surface of the retaining wall footing, when used as a sidewalk, shall receive a broom finish.

The Type C Concrete Retaining Wall shall be measured to the nearest square foot of front face area.

All costs for excavation, furnishing and placing backfill and cushion material, labor, equipment, preformed expansion joint filler, all reinforcing steel including the smooth bars, and all concrete except in the areas of PCC driveway and approach pavement, shall be incidental to the contract unit price per square foot for "Type C Concrete Retaining Wall".

The concrete used for the retaining wall footing that extends into the approach and/or driveway pavement shall be paid for at the contract unit price per square yard for the corresponding "PCC Approach Pavement" and/or "PCC Driveway Pavement" bid items. June 26, 2015

Published Date: 4th Qtr. 2015	SDDOT	TYPE C CONCRETE RETAINING WALL	PLATE NUMBER 530.01
			Sheet 1 of 2

Use No. 4 bars for all reinforcing steel unless specified otherwise.

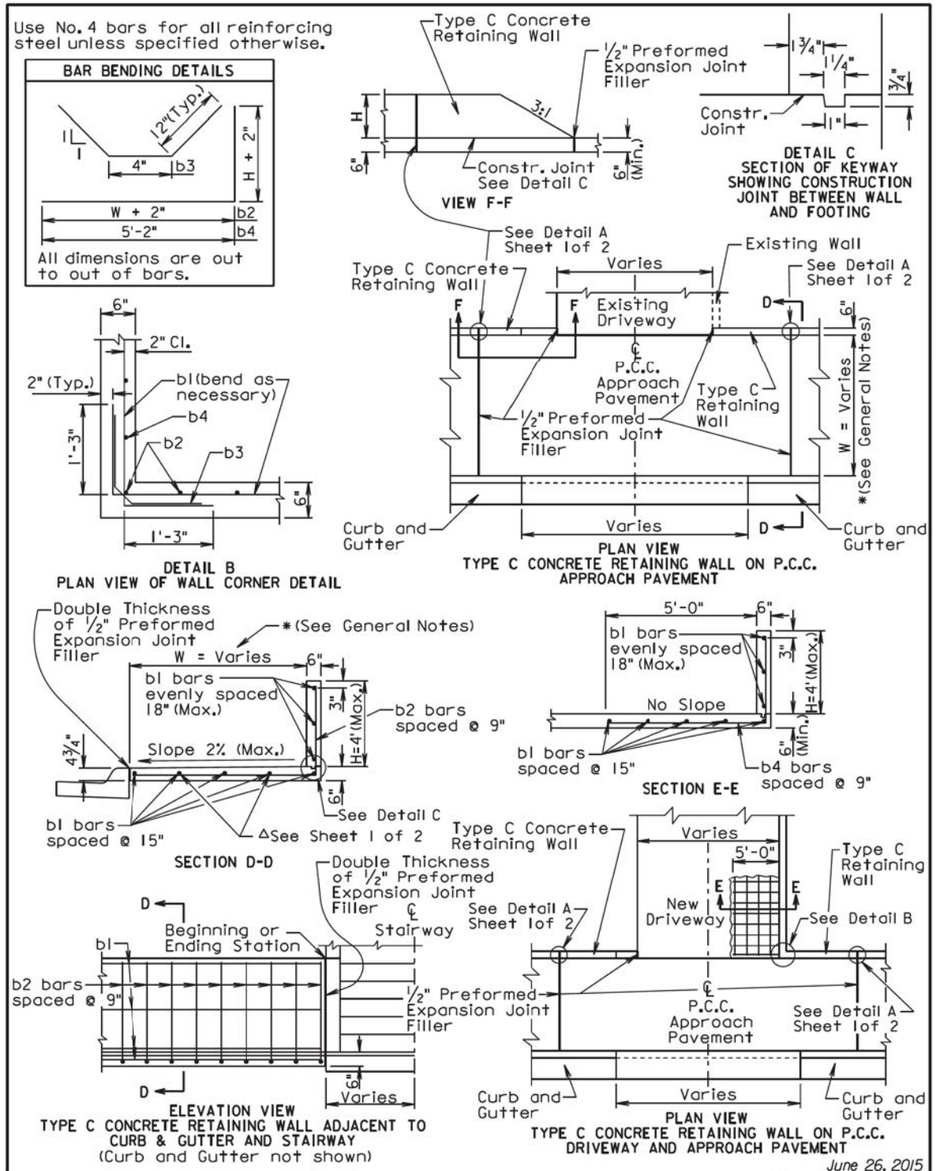

June 26, 2015

Published Date: 4th Qtr. 2015	SDDOT	TYPE C CONCRETE RETAINING WALL	PLATE NUMBER 530.01
			Sheet 2 of 2

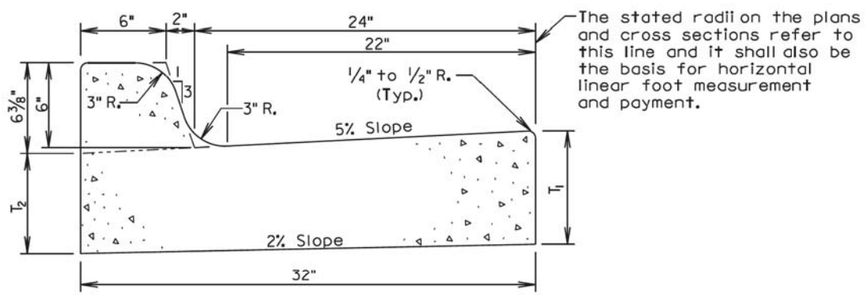

Type	T_1 (Inches)	T_2 (Inches)	Cu. Yd. Per Lin. Ft.	Lin. Ft. Per Cu. Yd.
B66	6	5 1/16	0.057	17.7
B67	7	6 1/16	0.065	15.4
B68	8	7 1/16	0.073	13.7
B68.5	8.5	7 9/16	0.077	13.0
B69	9	8 1/16	0.081	12.3
B69.5	9.5	8 9/16	0.085	11.7
B610	10	9 1/16	0.090	11.2
B610.5	10.5	9 9/16	0.094	10.7
B611	11	10 1/16	0.098	10.2
B611.5	11.5	10 9/16	0.102	9.8
B612	12	11 1/16	0.106	9.4

GENERAL NOTES:

When concrete curb and gutter longitudinally adjoins new concrete pavement, the method of attachment shall be by one of the methods shown on Standard Plate 380.11.

See Standard Plate 650.90 for expansion and contraction joints in the curb and gutter.

September 6, 2008

Published Date: 4th Qtr. 2015

SDDOT

TYPE B CONCRETE CURB AND GUTTER

PLATE NUMBER 650.01

Sheet 1 of 1

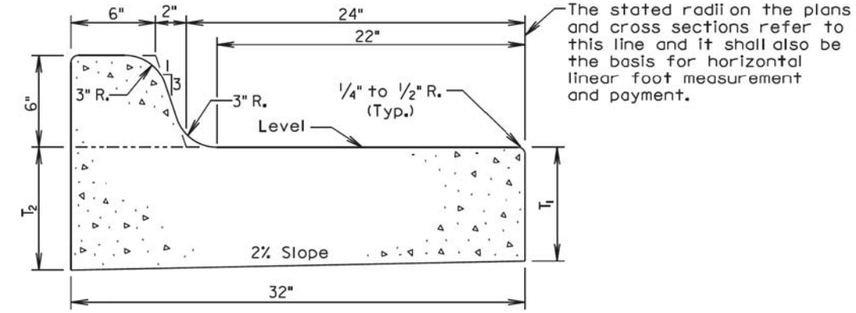

Type	T_1 (Inches)	T_2 (Inches)	Cu. Yd. Per Lin. Ft.	Lin. Ft. Per Cu. Yd.
BL66	6	6 5/8	0.063	15.9
BL67	7	7 5/8	0.071	14.1
BL68	8	8 5/8	0.080	12.5
BL68.5	8.5	9 1/8	0.084	11.9
BL69	9	9 5/8	0.088	11.4
BL69.5	9.5	10 1/8	0.092	10.9
BL610	10	10 5/8	0.096	10.4
BL610.5	10.5	11 1/8	0.100	10.0
BL611	11	11 5/8	0.104	9.6
BL611.5	11.5	12 1/8	0.108	9.3
BL612	12	12 5/8	0.112	8.9

GENERAL NOTES:

When concrete curb and gutter longitudinally adjoins new concrete pavement, the method of attachment shall be by one of the methods shown on Standard Plate 380.11.

See Standard Plate 650.90 for expansion and contraction joints in the curb and gutter.

September 6, 2006

Published Date: 4th Qtr. 2015

SDDOT

TYPE BL CONCRETE CURB AND GUTTER

PLATE NUMBER 650.05

Sheet 1 of 1

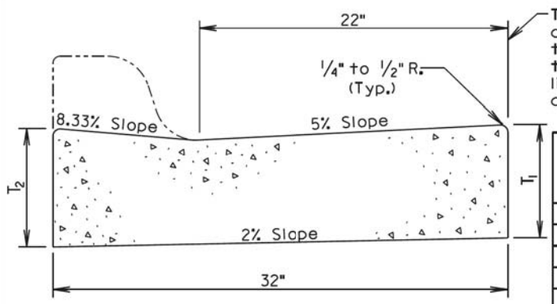

The stated radii on the plans and cross sections refer to this line and it shall also be the basis for horizontal linear foot measurement and payment.

Type	T_1 (Inches)	T_2 (Inches)	Cu. Yd. Per Lin. Ft.	Lin. Ft. Per Cu. Yd.
P6	6	6 3/8	0.047	21.2
P7	7	7 3/8	0.055	18.1
P8	8	8 3/8	0.064	15.7
P8.5	8.5	8 7/8	0.068	14.8
P9	9	9 3/8	0.072	13.9
P9.5	9.5	9 7/8	0.076	13.2
P10	10	10 3/8	0.080	12.5
P10.5	10.5	10 7/8	0.084	11.9
P11	11	11 3/8	0.088	11.3
P11.5	11.5	11 7/8	0.092	10.8
P12	12	12 3/8	0.096	10.4

TRANSVERSE SECTION

Type P Concrete Gutter Limits

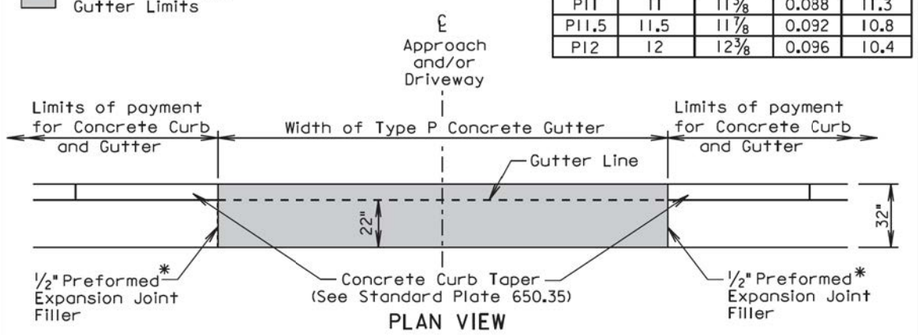

PLAN VIEW

* Joint will not be needed if concrete curb and gutter and type P concrete gutter is placed at the same time. If the 1/2" Preformed Expansion Joint Filler is provided, then the joint shall be sealed in accordance with Standard Plate 650.90.

GENERAL NOTES:

The concrete for the Type P Concrete Gutter shall comply with the requirements of the Specifications for Class M6 Concrete.

When concrete gutter longitudinally adjoins new concrete pavement, the method of attachment shall be by one of the methods shown on Standard Plate 380.11.

Transverse contraction joints shall be constructed at 10' intervals in the concrete gutter except when concrete gutter is constructed adjacent to mainline PCC pavement. When concrete gutter is constructed adjacent to mainline PCC pavement, a transverse contraction joint shall be constructed in the concrete gutter at each mainline PCC pavement transverse contraction joint location.

When concrete gutter is placed monolithically with mainline PCC pavement, the transverse contraction joints in the concrete gutter shall be sawed and sealed the same as the transverse contraction joints in the mainline PCC pavement.

When concrete gutter is not placed monolithically with the mainline PCC pavement and when the adjacent mainline surfacing is not PCC concrete, the transverse contraction joints in the concrete gutter shall be 1 1/2 inches deep if formed in the fresh concrete using a suitable grooving tool. If a saw is used to cut the contraction joints, then the depth of the joint shall be at least 1/4 the thickness of the concrete.

June 26, 2015

Published Date: 4th Qtr. 2015	SDDOT	TYPE P CONCRETE GUTTER	PLATE NUMBER 650.30
			Sheet 1 of 1

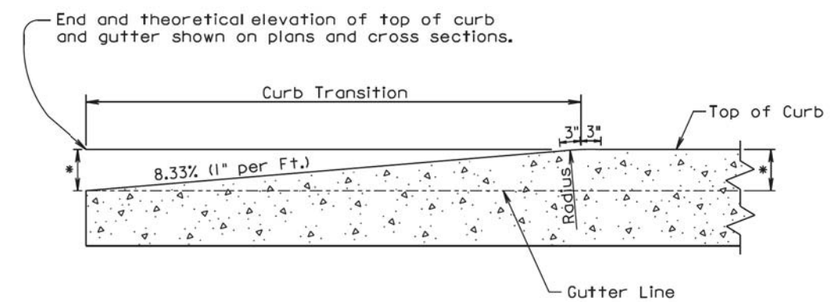

* Height of Curb

LONGITUDINAL SECTION OF CONCRETE CURB TAPER

September 14, 2005

Published Date: 4th Qtr. 2015	SDDOT	CONCRETE CURB TAPER	PLATE NUMBER 650.35
			Sheet 1 of 1

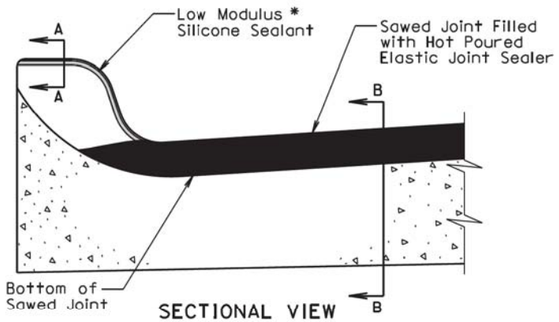

SECTIONAL VIEW

(Curb and Gutter Placed Monolithic with Adjacent Mainline PCC Pavement)

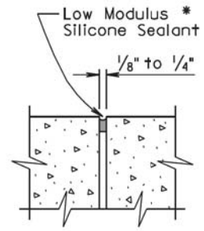

SECTION A-A

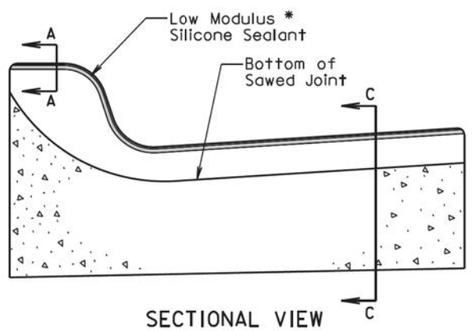

SECTIONAL VIEW

(Curb and Gutter not Placed Monolithic with Adjacent Mainline PCC Pavement or Mainline Surfacing is not PCC Pavement)

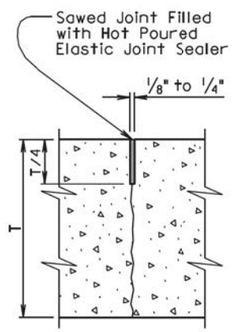

SECTION B-B

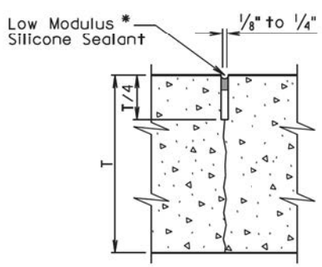

SECTION C-C

* The silicone sealant shall be placed such that it completely seals the joint and is bonded to the sides of the clean joint as approved by the Engineer.

September 6, 2013

Published Date: 4th Qtr. 2015

SDDOT

JOINTS IN CONCRETE CURB AND GUTTER

PLATE NUMBER 650.90

Sheet 1 of 2

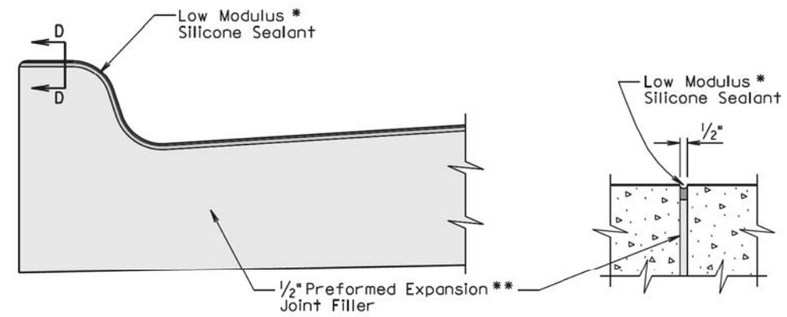

SECTIONAL VIEW

(Curb and Gutter at 1/2" Preformed Expansion Joint Filler Location)

SECTION D-D

* The silicone sealant shall be placed such that it completely seals the joint and is bonded to the sides of the clean joint as approved by the Engineer.

GENERAL NOTES:

For illustrative reason, only the type B curb and gutter is shown.

** A 1/2" preformed expansion joint filler shall be placed transversely in the curb and gutter at the following locations:

1. At each junction between the radius return of curb and gutter and curb and gutter which is parallel to the project centerline.
2. At each junction between new curb and gutter and existing curb and gutter.

Transverse contraction joints shall be constructed at 10' intervals in the concrete curb and gutter except when the concrete curb and gutter is constructed adjacent to mainline PCC pavement. When concrete curb and gutter is constructed adjacent to mainline PCC pavement, a transverse contraction joint shall be constructed in the concrete curb and gutter at each mainline PCC pavement transverse contraction joint location.

When concrete curb and gutter is not placed monolithically with the mainline PCC pavement or when the adjacent mainline surfacing is not PCC concrete, the transverse contraction joints in the concrete curb and gutter shall be 1 1/2 inches deep if formed in the fresh concrete using a suitable grooving tool. If a saw is used to cut the contraction joints, then the depth of the joint shall be at least 1/4 the thickness of the concrete and the joint shall be sealed in accordance with the details shown above.

September 6, 2013

Published Date: 4th Qtr. 2015

SDDOT

JOINTS IN CONCRETE CURB AND GUTTER

PLATE NUMBER 650.90

Sheet 2 of 2

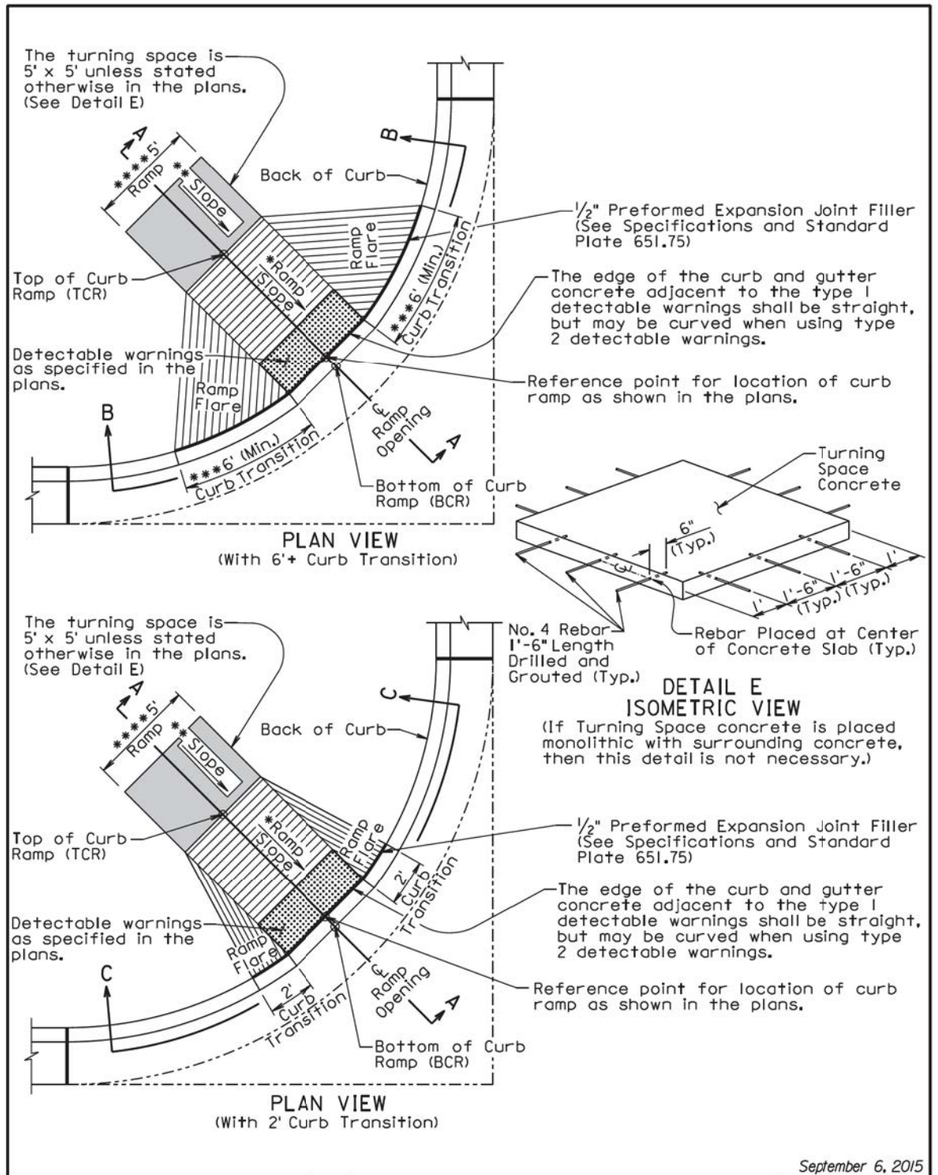

September 6, 2015

Published Date: 4th Qtr. 2015	SDDOT	TYPE 1 CURB RAMP (PERPENDICULAR CURB RAMP)	PLATE NUMBER 651.01
			Sheet 1 of 3

* Curb ramp slopes are designed at 7.5% unless stated otherwise in the plans. The curb ramp may have a maximum slope of 8.3% and shall not exceed 15' in length unless stated otherwise in the plans.

The curb ramp length may be computed based on the intersection of a continuous 1.5% theoretical slope from theoretical top of curb (TTOC) with the curb ramp using a continuous 7.5% curb ramp slope. The elevation of point TCR shall always be higher than the elevation of point TTOC unless specified otherwise in the plans. The curb ramp length dimension as shown in the plans shall be adjusted as necessary to meet all slope and length requirements based on field geometrics.

The cross slope of the ramp shall not be steeper than 2%. Plans are designed using a 1.5% slope unless stated otherwise in the plans.

** The slope in the turning space shall not be steeper than 2% in any direction of pedestrian travel. Plans are designed using a 1.5% slope unless stated otherwise in the plans.

*** The curb transition shall be a minimum of 6' long, a maximum of 10' long, and the curb transition slope shall not be steeper than 10% unless stated otherwise in the plans. The curb transition length shall be adjusted as necessary to meet slope and length requirements based on field geometrics.

**** The ramp width is 5' unless stated otherwise in the plans.

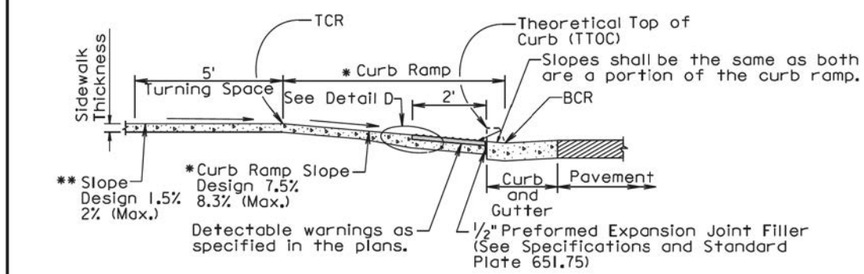

SECTION A-A

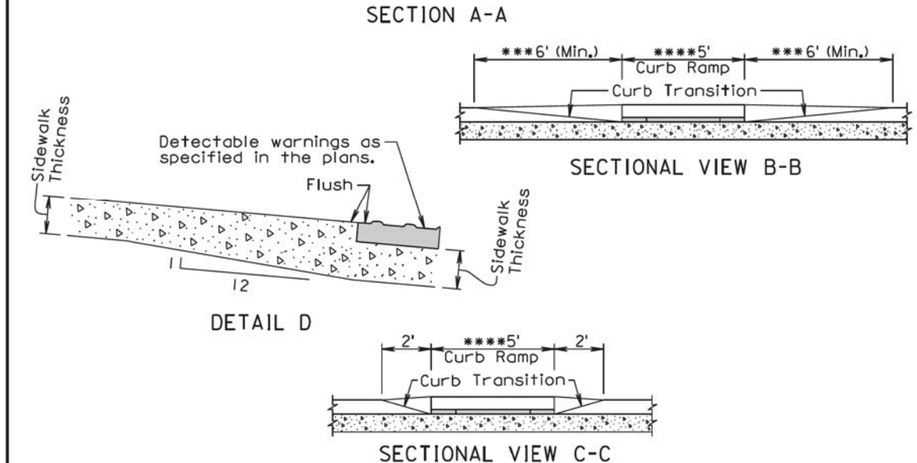

September 6, 2015

Published Date: 4th Qtr. 2015	SDDOT	TYPE 1 CURB RAMP (PERPENDICULAR CURB RAMP)	PLATE NUMBER 651.01
			Sheet 2 of 3

GENERAL NOTES:

For illustrative purpose only, type 1 detectable warnings are shown in the drawings.

For illustrative purpose only, PCC fillet sections are shown in the drawings. The curb ramp depicted on this standard plate may be used with a PCC fillet section or curb and gutter.

For illustrative purpose only, the curb ramp location is shown at the center of a PCC fillet section. The curb ramp shall be placed at the location stated in the plans.

Sidewalk shall not be placed adjacent to the curb ramp flares when a 2' curb transition is used unless shown otherwise in the plans.

* Care shall be taken to ensure a uniform grade on the curb ramp, free of sags and short grade changes.

Surface texture of the curb ramp shall be obtained by coarse brooming transverse to the slope of the curb ramp.

The normal gutter line profile shall be maintained through the area of the ramp opening.

Joints shall be sawed or tooled into the concrete adjacent to the detectable warnings to alleviate possible corner cracking.

Care shall be taken to ensure that the surface of the detectable warnings are clean and maintains a uniform color.

The detectable warnings shall be cut as necessary to fit the plan specified limits of the detectable warnings. Cost for cutting the detectable warnings shall be incidental to the corresponding detectable warning bid item.

There will be no separate payment for curb ramps. The curb ramp shall be measured and paid for at the contract unit price per square foot for the corresponding concrete sidewalk bid item. The square foot area of the detectable warnings shall be included in the measured and paid for quantity of sidewalk.

If rebar is placed in the Turning Space as depicted in DETAIL E, the cost of the materials, labor, and equipment to furnish and install the rebar shall be incidental to the contract unit price per square foot for the corresponding concrete sidewalk bid item.

The curb transitions and ramp opening shall be measured and paid for at the contract unit price per foot for the corresponding curb and gutter bid item when curb and gutter is used. The curb transitions and ramp opening shall be measured and paid for at the contract unit price per square yard for the corresponding PCC fillet section bid item when a PCC fillet section is used.

The type 1 detectable warnings shall be measured to the nearest square foot. All costs for furnishing and installing the type 1 detectable warnings including labor, equipment, materials, and incidentals shall be paid for at the contract unit price per square foot for "Type 1 Detectable Warnings".

The type 2 detectable warnings shall be measured to the nearest square foot. All costs for furnishing and installing the type 2 detectable warnings including labor, equipment, and materials, including adhesive, necessary sealant or grout, and necessary grinding shall be paid for at the contract unit price per square foot for "Type 2 Detectable Warnings".

September 6, 2015

Published Date: 4th Qtr. 2015	SDDOT	TYPE 1 CURB RAMP (PERPENDICULAR CURB RAMP)	PLATE NUMBER 651.01
			Sheet 3 of 3

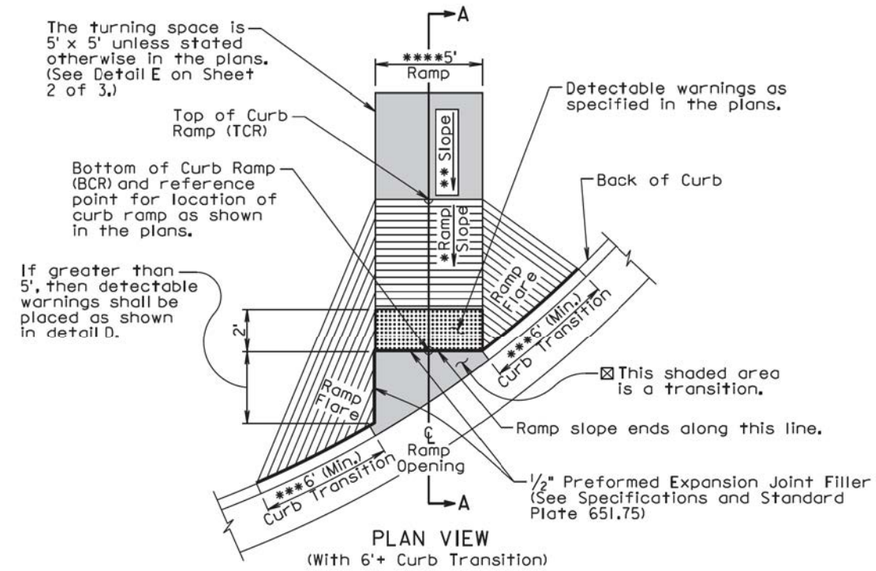

PLAN VIEW
(With 6'+ Curb Transition)

⊠ The slope within the transition area shall not be steeper than 5%. The concrete within the transition shall be placed monolithic with the curb and gutter or fillet section concrete. The concrete thickness within the transition shall be the same as the curb and gutter or fillet section concrete thickness.

*** The curb transition shall be a minimum of 6' long, a maximum of 10' long, and the curb transition slope shall not be steeper than 10% unless stated otherwise in the plans. The curb transition length shall be adjusted as necessary to meet slope and length requirements based on field geometrics.

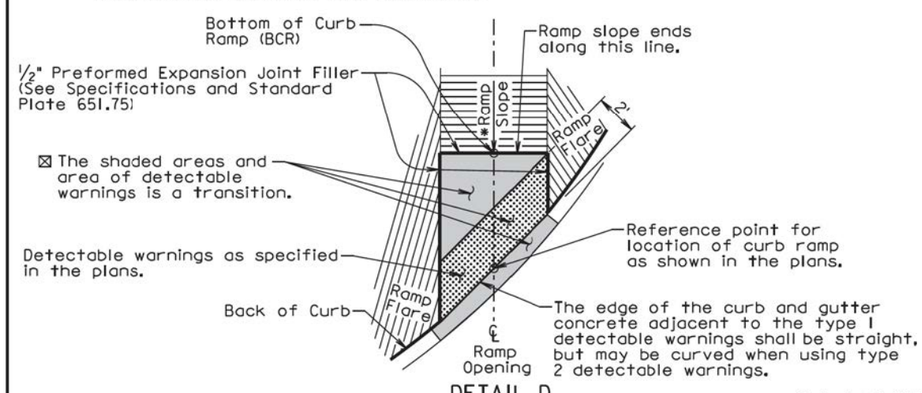

DETAIL D

September 6, 2015

Published Date: 4th Qtr. 2015	SDDOT	TYPE 2 CURB RAMP (DIRECTIONAL CURB RAMP)	PLATE NUMBER 651.02
			Sheet 1 of 3

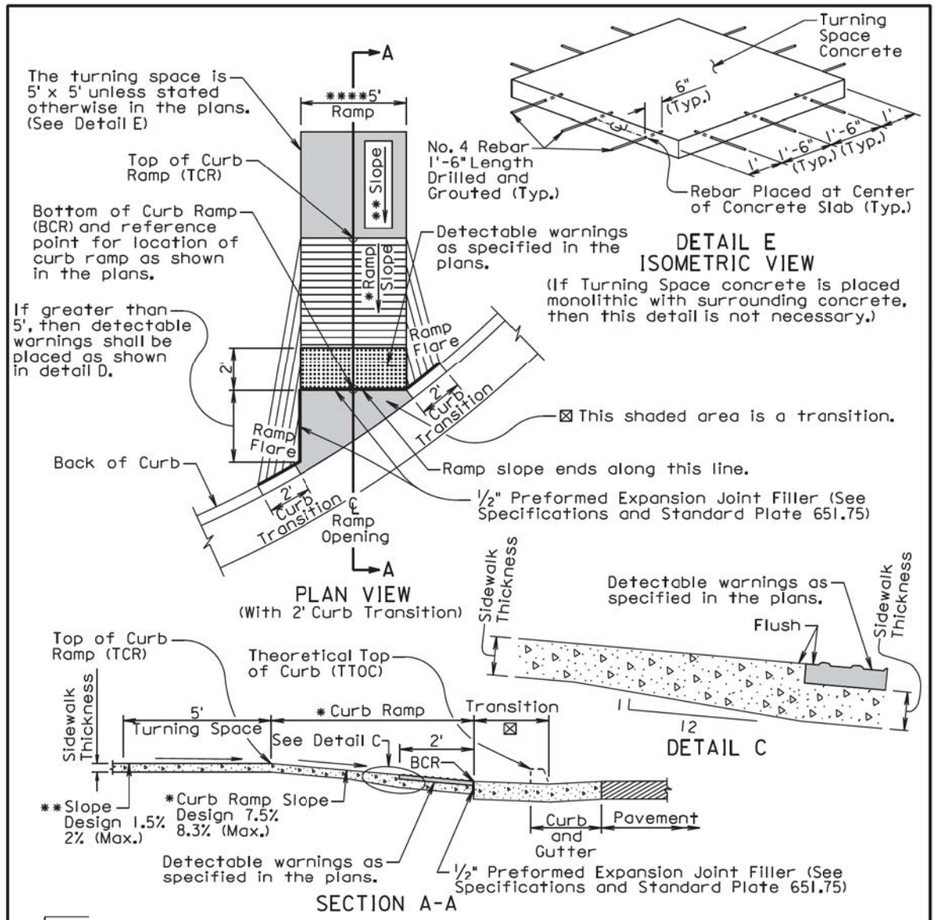

Curb ramp slopes are designed at 7.5% unless stated otherwise in the plans. The curb ramp may have a maximum slope of 8.3% and shall not exceed 15' in length unless stated otherwise in the plans.

* The elevation of point TCR shall always be higher than the elevation of point TTOC unless specified otherwise in the plans. The curb ramp length dimension as shown in the plans shall be adjusted as necessary to meet all slope and length requirements based on field geometrics.

The cross slope of the ramp shall not be steeper than 2%. Plans are designed using a 1.5% slope unless stated otherwise in the plans.

** The slope in the turning space shall not be steeper than 2% in any direction of pedestrian travel. Plans are designed using a 1.5% slope unless stated otherwise in the plans.

**** The ramp width is 5' unless stated otherwise in the plans.

September 6, 2015

Published Date: 4th Qtr. 2015	SDDOT	TYPE 2 CURB RAMP (DIRECTIONAL CURB RAMP)	PLATE NUMBER 651.02
			Sheet 2 of 3

GENERAL NOTES:

For illustrative purpose only, type I detectable warnings are shown in the drawings.

The curb ramp depicted on this standard plate may be used with a PCC fillet section or curb and gutter. The curb ramp shall be placed at the location stated in the plans.

Sidewalk shall not be placed adjacent to the curb ramp flares when a 2' curb transition is used unless shown otherwise in the plans.

* Care shall be taken to ensure a uniform grade on the curb ramp, free of sags and short grade changes.

Surface texture of the curb ramp shall be obtained by coarse brooming transverse to the slope of the curb ramp.

The normal gutter line profile shall be maintained through the area of the ramp opening.

Joints shall be sawed or tooled into the concrete adjacent to the detectable warnings to alleviate possible corner cracking.

Care shall be taken to ensure that the surface of the detectable warnings are clean and maintains a uniform color.

The detectable warnings shall be cut as necessary to fit the plan specified limits of the detectable warnings. Cost for cutting the detectable warnings shall be incidental to the corresponding detectable warning bid item.

There will be no separate payment for curb ramps. The curb ramp shall be measured and paid for at the contract unit price per square foot for the corresponding concrete sidewalk bid item. The square foot area of the detectable warnings shall be included in the measured and paid for quantity of sidewalk.

If rebar is placed in the Turning Space as depicted in DETAIL E, the cost of the materials, labor, and equipment to furnish and install the rebar shall be incidental to the contract unit price per square foot for the corresponding concrete sidewalk bid item.

The curb transitions and ramp opening shall be measured and paid for at the contract unit price per foot for the corresponding curb and gutter bid item when curb and gutter is used. The curb transitions and ramp opening shall be measured and paid for at the contract unit price per square yard for the corresponding PCC fillet section bid item when a PCC fillet section is used.

All costs for furnishing and installing the transition area at the base of the curb ramp shall be incidental to the contract unit price per foot for the corresponding curb and gutter bid item when curb and gutter is used and shall be incidental to the contract unit price per square yard for the corresponding PCC fillet section bid item when a PCC fillet section is used.

The type I detectable warnings shall be measured to the nearest square foot. All costs for furnishing and installing the type I detectable warnings including labor, equipment, materials, and incidentals shall be paid for at the contract unit price per square foot for "Type I Detectable Warnings".

The type 2 detectable warnings shall be measured to the nearest square foot. All costs for furnishing and installing the type 2 detectable warnings including labor, equipment, and materials, including adhesive, necessary sealant or grout, and necessary grinding shall be paid for at the contract unit price per square foot for "Type 2 Detectable Warnings".

September 6, 2015

Published Date: 4th Qtr. 2015	SDDOT	TYPE 2 CURB RAMP (DIRECTIONAL CURB RAMP)	PLATE NUMBER 651.02
			Sheet 3 of 3

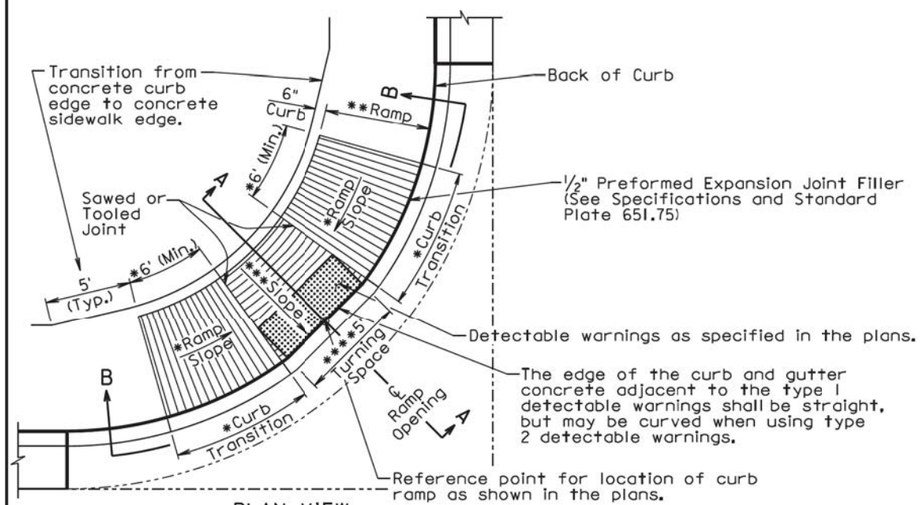

PLAN VIEW
(With Curved Curb and Gutter)

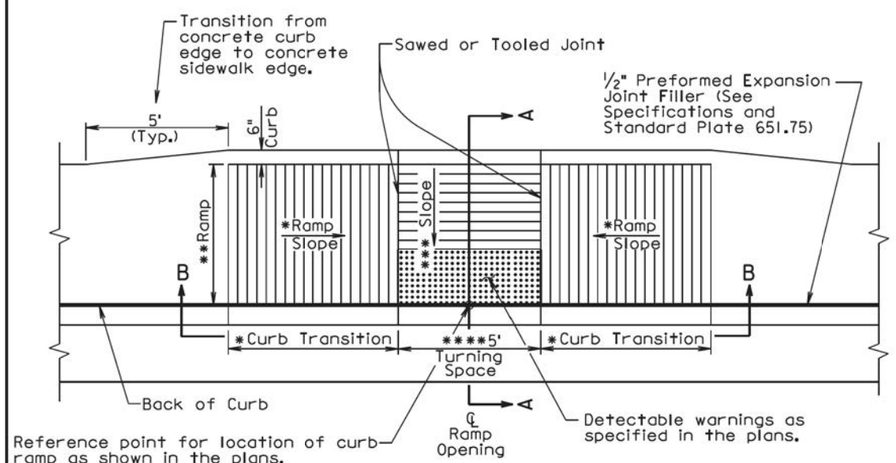

PLAN VIEW
(With Straight Curb and Gutter)

September 6, 2015

Published Date: 4th Qtr. 2015	SDDOT	TYPE 3 CURB RAMP (PARALLEL CURB RAMP)	PLATE NUMBER 651.03
			Sheet 1 of 3

* The curb transition slope shall match the curb ramp slope. Curb ramp slopes are designed at 7.5% unless stated otherwise in the plans. The curb ramp may have a maximum slope of 8.3% at any location of the curb ramp and shall not exceed 15' in length unless stated otherwise in the plans. The curb transitions and curb ramp lengths shall be adjusted as necessary to meet all slope and length requirements based on field geometrics.

** The cross slope of the ramp shall not be steeper than 2% and the ramp width is 5' unless stated otherwise in the plans. Plans are designed using a 1.5% cross slope for the ramp unless stated otherwise in the plans.

*** The slope in the turning space shall not be steeper than 2% in any direction of pedestrian travel. Plans are designed using a 1.5% slope unless stated otherwise in the plans.

**** The turning space is 5' x 5' unless stated otherwise in the plans.

☒ The curb height shall be 6" unless stated otherwise in the plans.

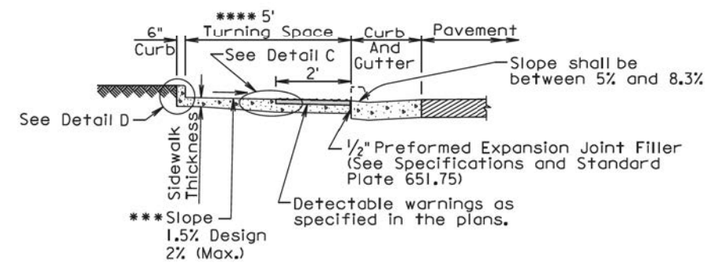

SECTION A-A

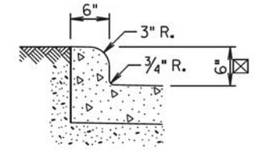

DETAIL D

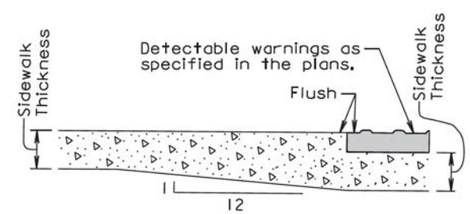

DETAIL C

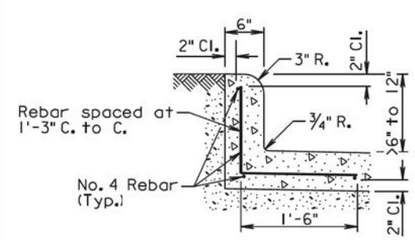

DETAIL D
(Use this detail when the curb height is greater than 6" and less than 12")

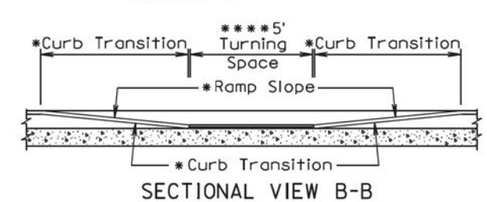

SECTIONAL VIEW B-B

September 6, 2015

Published Date: 4th Qtr. 2015	SDDOT	TYPE 3 CURB RAMP (PARALLEL CURB RAMP)	PLATE NUMBER 651.03
			Sheet 2 of 3

GENERAL NOTES:

For illustrative purpose only, type I detectable warnings are shown in the drawings.

For illustrative purpose only, a PCC fillet section is shown in one of the drawings. The curb ramp depicted on this standard plate may be used with a PCC fillet section or with curb and gutter.

The curb ramp shall be placed at the location stated in the plans.

Sidewalk adjacent to the curb ramp shall be as shown in the plans.

Care shall be taken to ensure a uniform grade on the curb ramp, free of sags and short grade changes.

Surface texture of the curb ramp shall be obtained by coarse brooming transverse to the slope of the curb ramp.

The normal gutter line profile shall be maintained through the area of the ramp opening.

Joints shall be sawed or tooled into the concrete adjacent to the detectable warnings to alleviate possible corner cracking (see plan view for joint location).

Care shall be taken to ensure that the surface of the detectable warnings are clean and maintains a uniform color.

The detectable warnings shall be cut as necessary to fit the plan specified limits of the detectable warnings. Cost for cutting the detectable warnings shall be incidental to the corresponding detectable warning bid item.

When curb height is greater than 6" and less than 12", reinforcing steel is required in accordance with the detail on sheet 2 of 3. The reinforcing steel shall conform to ASTM A615, Grade 60. Cost for furnishing and installing the reinforcing steel shall be incidental to the contract unit price per square foot for the corresponding concrete sidewalk bid item.

There will be no separate payment for curb ramps. The curb ramp shall be measured and paid for at the contract unit price per square foot for the corresponding concrete sidewalk bid item. The square foot area of the detectable warnings and the curb along the short radius shall be included in the measured and paid for quantity of sidewalk.

The curb transitions and ramp opening shall be measured and paid for at the contract unit price per foot for the corresponding curb and gutter bid item when curb and gutter is used. The curb transitions and ramp opening shall be measured and paid for at the contract unit price per square yard for the corresponding PCC fillet section bid item when a PCC fillet section is used.

The type I detectable warnings shall be measured to the nearest square foot. All costs for furnishing and installing the type I detectable warnings including labor, equipment, materials, and incidentals shall be paid for at the contract unit price per square foot for "Type I Detectable Warnings".

The type 2 detectable warnings shall be measured to the nearest square foot. All costs for furnishing and installing the type 2 detectable warnings including labor, equipment, and materials, including adhesive, necessary sealant or grout, and necessary grinding shall be paid for at the contract unit price per square foot for "Type 2 Detectable Warnings".

September 6, 2015

Published Date: 4th Qtr. 2015	SDDOT	TYPE 3 CURB RAMP (PARALLEL CURB RAMP)	PLATE NUMBER 651.03
			Sheet 3 of 3

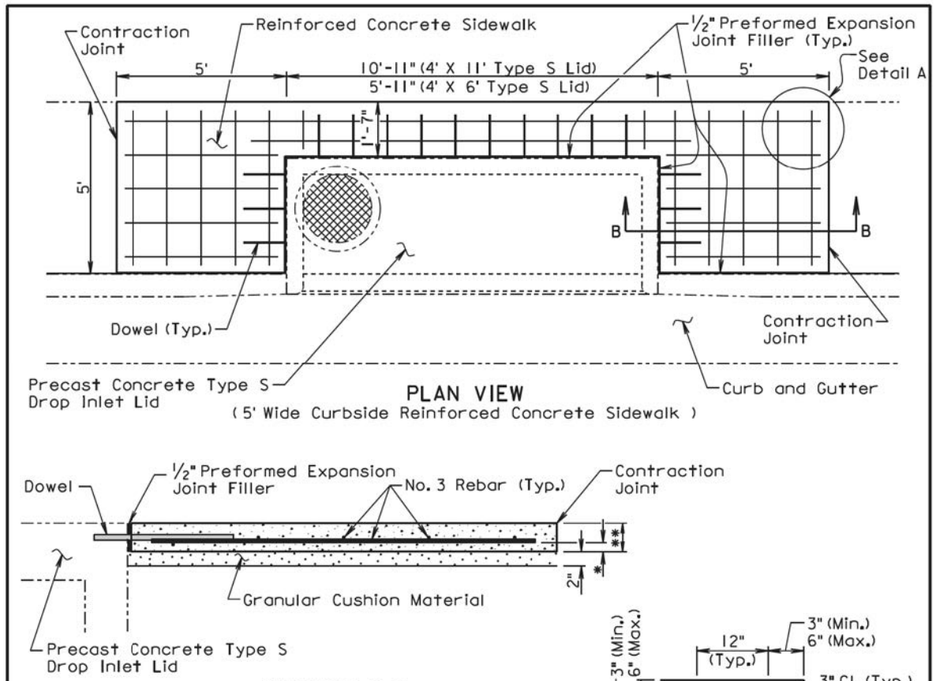

** 4", 5", or 6" as specified elsewhere in the plans.

* 1 5/8" for 4" sidewalk, 2 1/8" for 5" sidewalk, and 2 5/8" for 6" sidewalk.

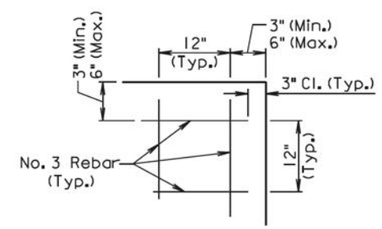

DETAIL A

GENERAL NOTES:

The precast concrete Type S lids shown are 4' X 11' for illustrative purpose.

The cross slope of the sidewalk and precast concrete type S drop inlet lid shall be as specified elsewhere in the plans.

The reinforcing steel shall conform to Section 1010 of the Specifications. The Contractor shall be in conformance with the construction requirements of Section 480.3 of the Specifications.

When lapping of reinforcing steel is necessary, the No. 3 rebar shall be lapped 12".

The reinforced concrete sidewalk shall conform to the requirements of Section 651 of the Specifications.

All costs for constructing the reinforced concrete sidewalk including labor, equipment, tools, backfilling, furnishing and placing materials, including granular cushion, reinforcing steel, preformed expansion joint filler, and incidentals shall be included in the contract unit price per square foot for the corresponding reinforced concrete sidewalk bid item.

June 26, 2015

Published Date: 4th Qtr. 2015	SDDOT	REINFORCED CONCRETE SIDEWALK ADJACENT TO PRECAST CONCRETE TYPE S DROP INLET LID	PLATE NUMBER 651.70
			Sheet 1 of 2

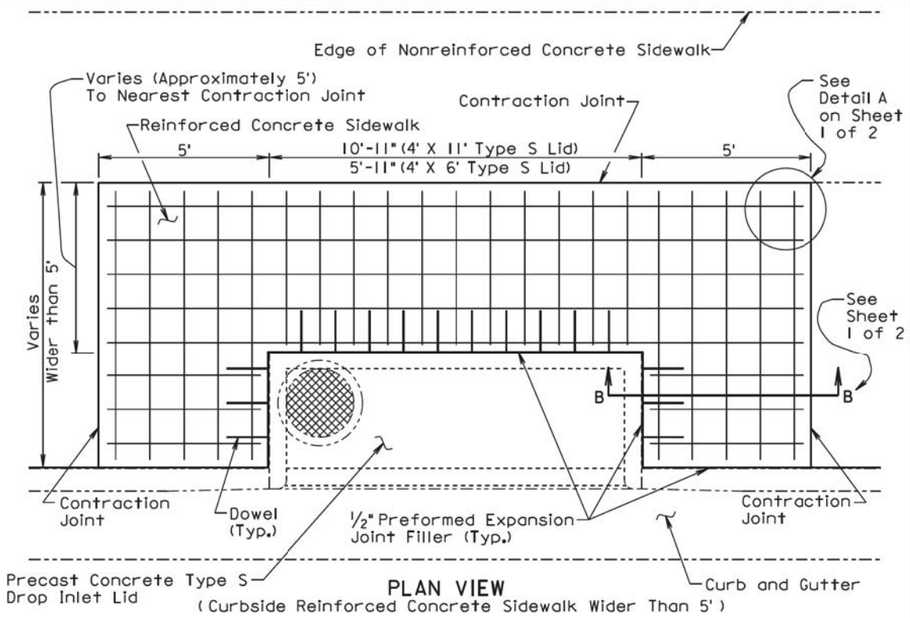

PLAN VIEW
(Curbside Reinforced Concrete Sidewalk Wider Than 5')

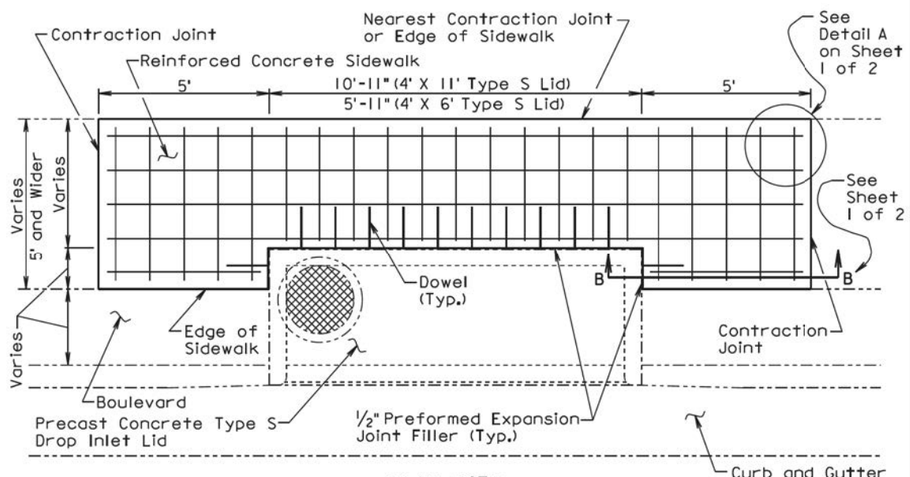

PLAN VIEW
(Reinforced Concrete Sidewalk With Boulevard)

June 26, 2015

Published Date: 4th Qtr. 2015	SDDOT	REINFORCED CONCRETE SIDEWALK ADJACENT TO PRECAST CONCRETE TYPE S DROP INLET LID	PLATE NUMBER 651.70 / Sheet 2 of 2

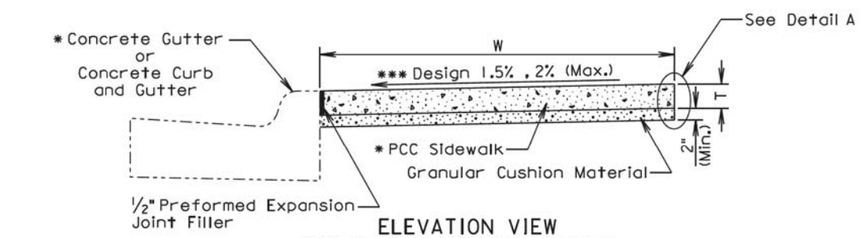

ELEVATION VIEW
(PCC Sidewalk without Boulevard)

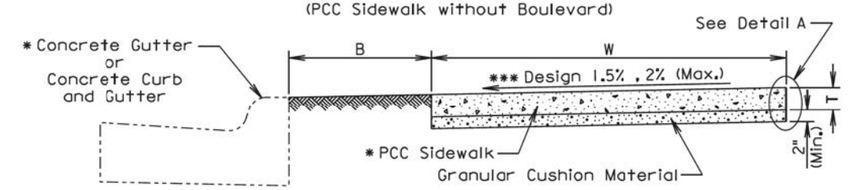

ELEVATION VIEW
(PCC Sidewalk with Boulevard)

B Width of boulevard as specified in the plans.
T Thickness of PCC sidewalk as specified in the plans.
W Width of PCC sidewalk as specified in the plans.
* Type as specified in the plans.

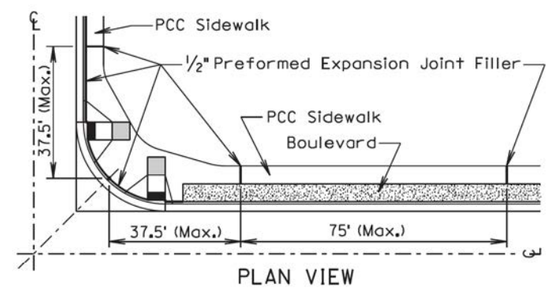

PLAN VIEW

GENERAL NOTES:

The PCC sidewalk shall be constructed in accordance with Section 651 of the Specifications.

*** The cross slope of the sidewalk is designed at 1.5% and the maximum slope allowed is 2% unless specified otherwise in the plans.

The maximum length between expansion joints in PCC sidewalk is 75 feet.

PCC sidewalk placed adjacent to intersection of roadways shall have an expansion joint placed transversely a maximum of 37.5 feet from the intersection. See PLAN VIEW.

An expansion joint in PCC sidewalk shall consist of a 1/2 inch thick preformed expansion joint filler material placed full depth and width of the PCC sidewalk.

** Large areas of PCC pavement adjacent to PCC sidewalk may require a different joint treatment than shown in the detail. If a different joint detail is necessary, plans will contain the joint detail and the Contractor shall construct the joint treatment in accordance with the plans.

September 6, 2015

Published Date: 4th Qtr. 2015	SDDOT	PCC SIDEWALK	PLATE NUMBER 651.75 / Sheet 1 of 2

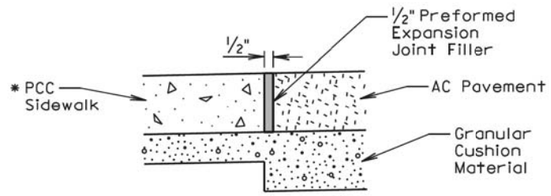

ELEVATION VIEW
(PCC sidewalk adjacent to asphalt concrete pavement)

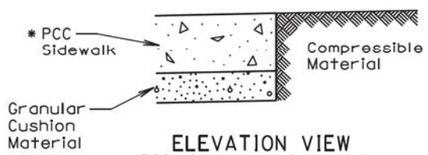

ELEVATION VIEW
(PCC sidewalk adjacent to earthen material, landscape rock, or other compressible materials)

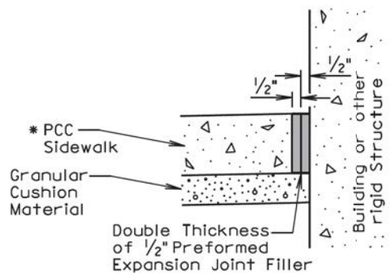

ELEVATION VIEW
(PCC sidewalk adjacent to building or other rigid structure)

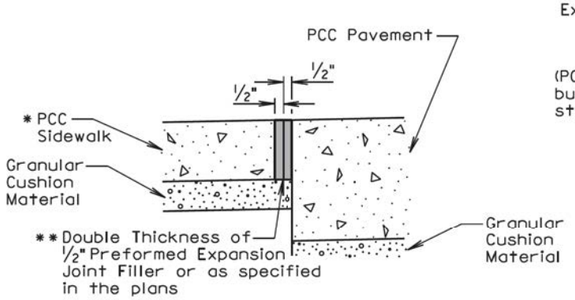

ELEVATION VIEW
(PCC sidewalk adjacent to PCC pavement)

Detail A
(Use Appropriate Detail(s))

September 6, 2015

Published Date: 4th Qtr. 2015	SDDOT	PCC SIDEWALK	PLATE NUMBER 651.75
			Sheet 2 of 2

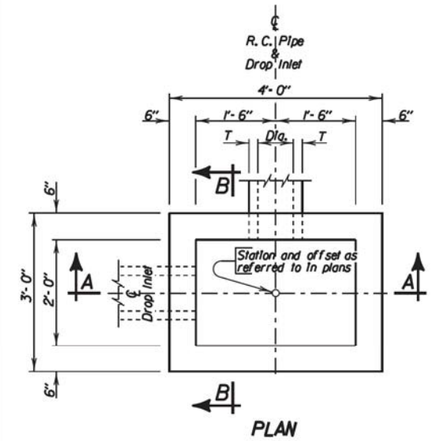

PLAN

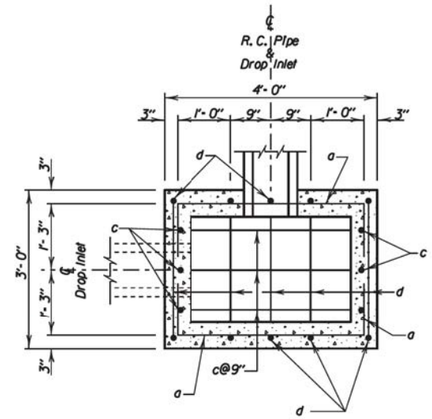

BOTTOM SECTION

PIPE DISPLACEMENT REDUCTIONS

R.C. Pipe Diameter Inches	T Inches	Class M6 Concrete Cu'd
12	2	0.03
15	2 1/4	0.04
18	2 1/2	0.05
24	3	0.09
27	3 1/4	0.11

ESTIMATED QUANTITIES

ITEM	UNIT	CONSTANT QUANTITY	VARIABLE QUANTITY
* Class M6 Concrete	Cu'd	0.26	0.22H
Reinforcing Steel	Lb	37	20.04H
Frame and Grate Assembly	Each	1	———

DROP INLETS FOR 12" TO 27" DIAMETER PIPE

GENERAL NOTES:

* Reduce total quantities of concrete by the amount of concrete displaced by the pipe. The total quantity of concrete shall be computed to the nearest hundredth of a cubic yard. The total quantity of reinforcing steel shall be computed to the nearest pound.

Drop inlets shown may be modified by the addition or omission of connecting pipes as shown on the layouts.

Reinforcing steel shall conform to ASTM A615 Grade 60. The b bars shall be lapped 12 inches. Cut and bend reinforcing steel as required to place pipe(s) through the drop inlet wall.

Pipe shall not enter through a corner of the drop inlet.

Use 2" clear cover on all reinforcing steel unless otherwise noted.

Precasting of reinforced drop inlets will be permissible. Prior to precasting, the Contractor shall submit details to the Engineer for approval.

Maximum pipe diameter shall not exceed 18 inches on the 3 foot wide side and shall not exceed 27 inches on the 4 foot wide side of the drop inlet.

The dimension of H is in feet.

December 23, 2009

Published Date: 4th Qtr. 2015	SDDOT	2'X 3' TYPE B REINFORCED CONCRETE DROP INLET	PLATE NUMBER 670.01
			Sheet 1 of 2

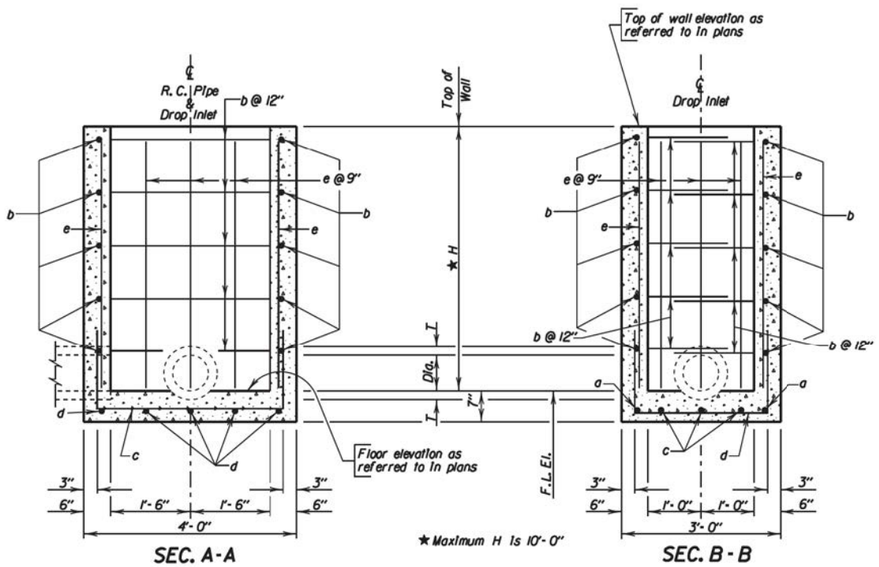

DROP INLETS FOR 12" TO 27" DIAMETER PIPE

REINFORCING SCHEDULE

MK.	No.	Size	Length	Type
a	2	4	5'-6"	17
b	2H	4	7'-0"	17
c	3	4	6'-6"	17
d	5	4	5'-6"	17
e	16	4	H - 2"	Str.

Bending Details

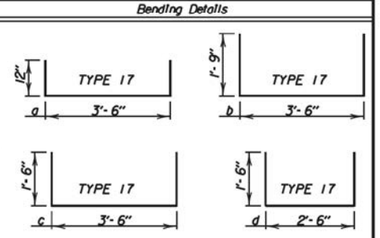

NOTE:
All dimensions are out to out of bars.

December 23, 2009

Published Date: 4th Qtr. 2015

SDDOT

2' X 3' TYPE B
REINFORCED CONCRETE DROP INLET

PLATE NUMBER
670.01

Sheet 2 of 2

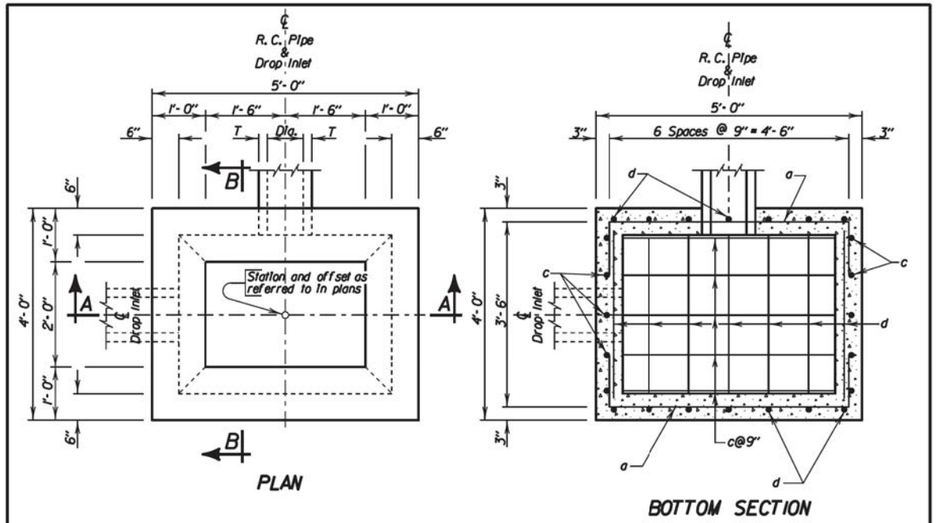

PIPE DISPLACEMENT REDUCTIONS

R.C. Pipe Diameter Inches	T Inches	Class M6 Concrete Cu'd
12	2	0.03
15	2 1/4	0.04
18	2 1/2	0.05
24	3	0.09
30	3 1/2	0.14
36	4	0.20

ESTIMATED QUANTITIES

ITEM	UNIT	CONSTANT QUANTITY	VARIABLE QUANTITY
✳ Class M6 Concrete	Cu'd	0.72	0.30H
Reinforcing Steel	Lb	98	32.06H
Frame and Grate Assembly	Each	1	——

DROP INLETS FOR 12" TO 36" DIAMETER PIPE

GENERAL NOTES:

✳ Reduce total quantities of concrete by the amount of concrete displaced by the pipe. The total quantity of concrete shall be computed to the nearest hundredth of a cubic yard. The total quantity of reinforcing steel shall be computed to the nearest pound.

Drop Inlets shown may be modified by the addition or omission of connecting pipes as shown on the layouts.

Reinforcing steel shall conform to ASTM A615 Grade 60. The b and f bars shall be lapped 12 inches. Cut and bend reinforcing steel as required to place pipe(s) through the drop inlet wall.

Pipe shall not enter through a corner of the drop inlet.

Use 2" clear cover on all reinforcing steel unless otherwise noted.

Precasting of reinforced drop inlets will be permissible. Prior to precasting, the Contractor shall submit details to the Engineer for approval.

Maximum pipe diameter shall not exceed 27 inches on the 4 foot wide side and shall not exceed 36 inches on the 5 foot wide side of the drop inlet.

The dimension of H is in feet.

December 23, 2009

Published Date: 4th Qtr. 2015

SDDOT

3' X 4' TYPE B
REINFORCED CONCRETE DROP INLET

PLATE NUMBER
670.02

Sheet 1 of 2

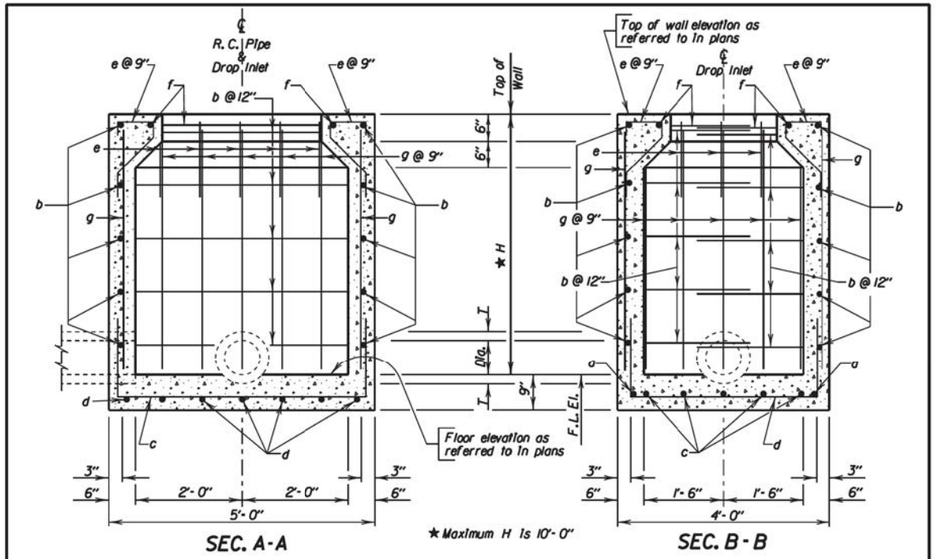

DROP INLETS FOR 12" TO 36" DIAMETER PIPE

REINFORCING SCHEDULE

MK.	No.	Size	Length	Type
a	2	4	6'- 6"	17
b	2H	4	9'- 0"	17
c	5	4	7'- 6"	17
d	7	4	6'- 6"	17
e	16	4	2'- 6"	16A
f	2	4	7'- 0"	17
g	24	4	H - 2"	Str.

Bending Details

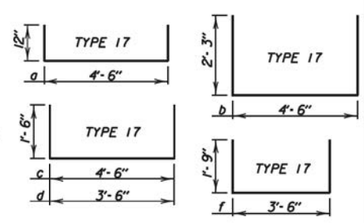

NOTE:
All dimensions are out to out of bars.

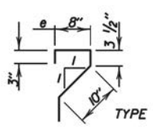

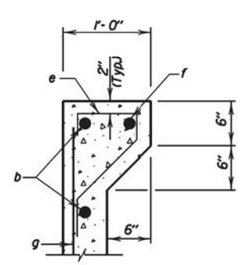

TYPICAL SEC. TOP OF WALL

December 23, 2009

Published Date: 4th Qtr. 2015

SDDOT

3' X 4' TYPE B
REINFORCED CONCRETE DROP INLET

PLATE NUMBER
670.02

Sheet 2 of 2

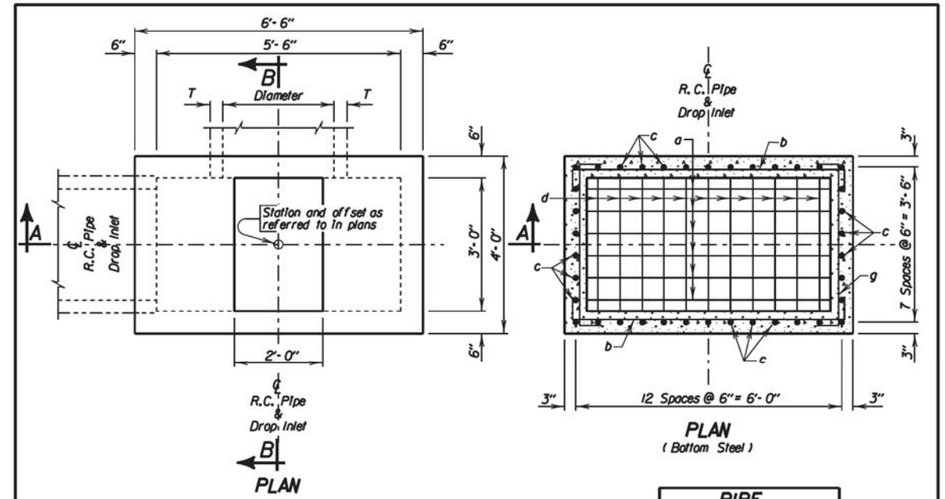

PIPE DISPLACEMENT REDUCTIONS

R. C. Pipe Diameter Inches	T Inches	Class M6 Concrete Cu'd
12	2	0.03
15	2 1/4	0.04
18	2 1/2	0.05
24	3	0.09
27	3 1/4	0.11
30	3 1/2	0.14
36	4	0.20
42	4 1/2	0.26
48	5	0.34
54	5 1/2	0.43

ESTIMATED QUANTITIES

ITEM	UNIT	CONSTANT QUANTITY	VARIABLE QUANTITY
✳ Class M6 Concrete	Cu'd	1.01	0.35H
Reinforcing Steel	Lb	329	55.00H
Frame and Grate Assembly	Each	1	———

DROP INLETS FOR 12" TO 54" DIAMETER PIPE

GENERAL NOTES:

✳ Reduce total quantities of concrete by the amount of concrete displaced by the pipe. The total quantity of concrete shall be computed to the nearest hundredth of a cubic yard. The total quantity of reinforcing steel shall be computed to the nearest pound.

Drop inlets shown may be modified by the addition or omission of connecting pipes as shown on the layouts.

Reinforcing steel shall conform to ASTM A615 Grade 60. Cut and bend reinforcing steel as required to place pipe(s) through the drop inlet wall.

Pipe shall not enter through a corner of the drop inlet.

Use 2" clear cover on all reinforcing steel unless otherwise noted.

Precasting of reinforced drop inlets will be permissible. Prior to precasting, the Contractor shall submit details to the Engineer for approval.

Maximum pipe diameter shall not exceed 27 inches on the 4 foot wide side and shall not exceed 54 inches on the 6.5 foot wide side of the drop inlet.

The dimension of H is in feet.

December 23, 2009

Published Date: 4th Qtr. 2015

SDDOT

5.5' X 3' TYPE B
REINFORCED CONCRETE DROP INLET

PLATE NUMBER
670.05

Sheet 1 of 2

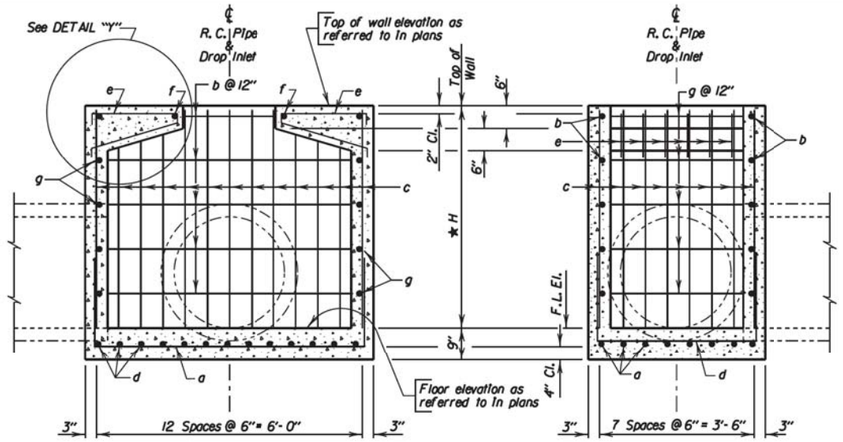

SEC. A-A

*Maximum H is 10'-0"

SEC. B-B

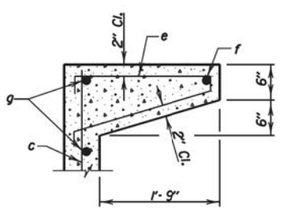

DETAIL "Y"

DROP INLETS FOR 12" TO 54" DIAMETER PIPE

REINFORCING SCHEDULE

Mk.	No.	Size	Length	Type
a	8	6	10'-0"	17
b	2H	4	7'-0"	17
c	38	5	H-2"	Str.
d	13	6	7'-6"	17
e	12	5	4'-9"	16A
f	2	5	4'-6"	17
g	2H	4	4'-6"	17

Bending Details

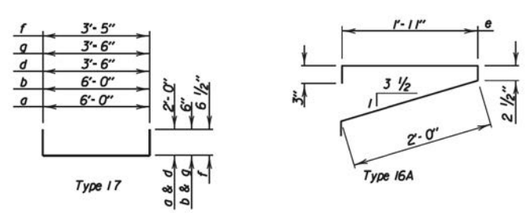

NOTE: All dimensions are out to out of bars.

December 23, 2009

Published Date: 4th Qtr. 2015

SDDOT

5.5' X 3' TYPE B
REINFORCED CONCRETE DROP INLET

PLATE NUMBER 670.05

Sheet 2 of 2

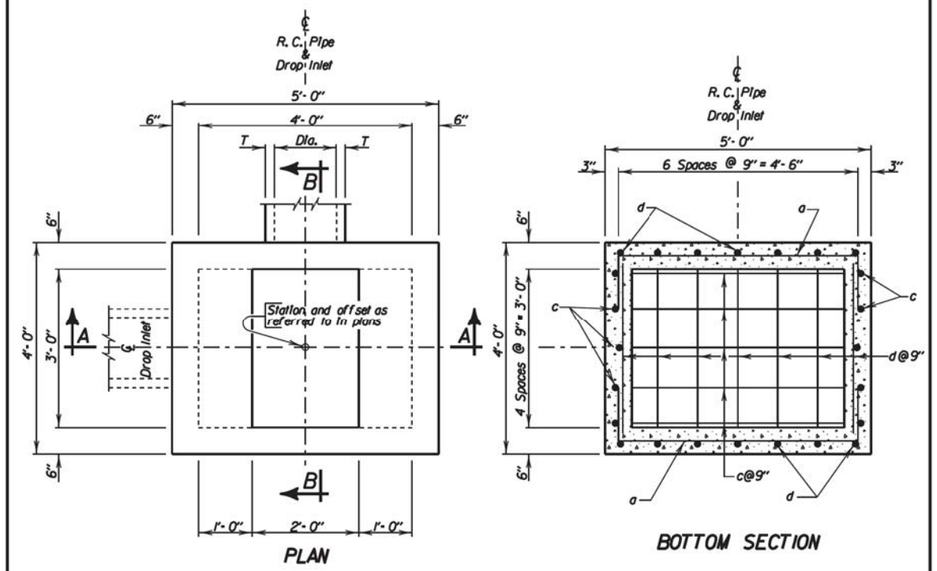

PLAN

BOTTOM SECTION

ESTIMATED QUANTITIES

ITEM	UNIT	CONSTANT QUANTITY	VARIABLE QUANTITY
* Class M6 Concrete	Cu Yd	0.72	0.30H
Reinforcing Steel	Lb	94	28.06H
Frame and Grate Assembly	Each	1	———

DROP INLETS FOR 12" TO 36" DIAMETER PIPE

GENERAL NOTES:

* Reduce total quantities of concrete by the amount of concrete displaced by the pipe. The total quantity of concrete shall be computed to the nearest hundredth of a cubic yard. The total quantity of reinforcing steel shall be computed to the nearest pound.

Drop inlets shown may be modified by the addition or omission of connecting pipes as shown on the layouts.

Reinforcing steel shall conform to ASTM A615 Grade 60. The b and f bars shall be lapped 12 inches. Cut and bend reinforcing steel as required to place pipe(s) through the drop inlet wall.

Pipe shall not enter through a corner of the drop inlet.

Use 2" clear cover on all reinforcing steel unless otherwise noted.

Precasting of reinforced drop inlets will be permissible. Prior to precasting, the Contractor shall submit details to the Engineer for approval.

Maximum pipe diameter shall not exceed 27 inches on the 4 foot wide side and shall not exceed 36 inches on the 5 foot wide side of the drop inlet.

The dimension of H is in feet.

PIPE DISPLACEMENT REDUCTIONS

R.C. Pipe Diameter Inches	T Inches	Class M6 Concrete Cu Yd
12	2	0.03
15	2 1/4	0.04
18	2 1/2	0.05
24	3	0.09
30	3 1/2	0.14
36	4	0.20

December 23, 2009

Published Date: 4th Qtr. 2015

SDDOT

4' X 3' TYPE B
REINFORCED CONCRETE DROP INLET

PLATE NUMBER 670.07

Sheet 1 of 2

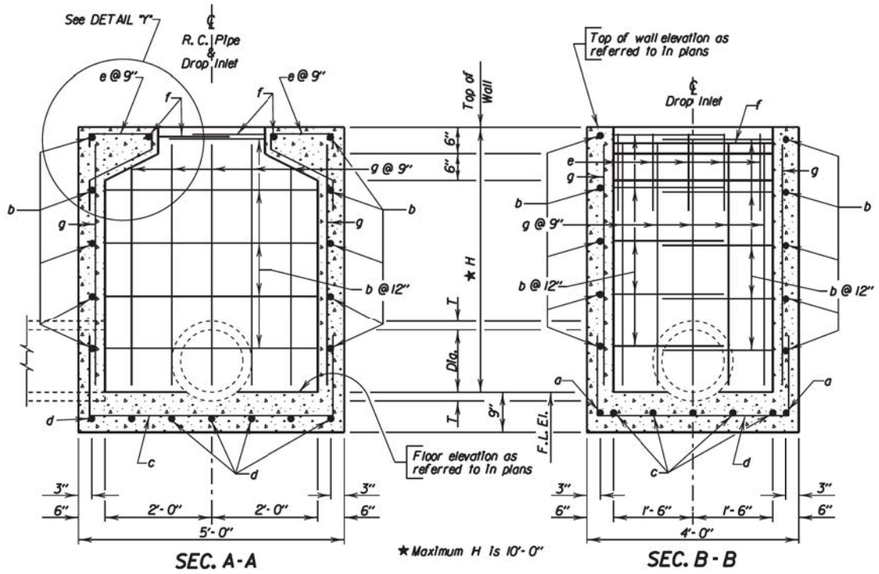

SEC. A-A

SEC. B-B

DROP INLETS FOR 12" TO 36" DIAMETER PIPE

REINFORCING SCHEDULE

MK.	No.	Size	Length	Type
a	2	4	6'-6"	17
b	2H	4	9'-0"	17
c	5	4	7'-6"	17
d	7	4	6'-6"	17
e	10	4	3'-6"	16A
f	2	4	7'-0"	17
g	24	4	H -2"	Str.

Bending Details

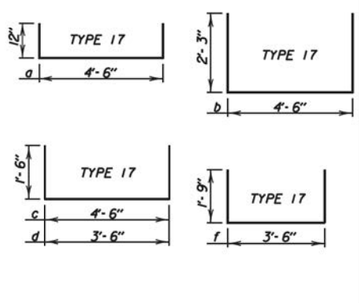

NOTE:
All dimensions are out to out of bars.

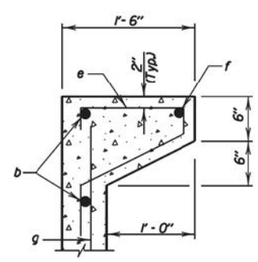

DETAIL "Y"

December 23, 2009

Published Date: 4th Qtr. 2015

SDDOT

4'X 3' TYPE B
REINFORCED CONCRETE DROP INLET

PLATE NUMBER
670.07

Sheet 2 of 2

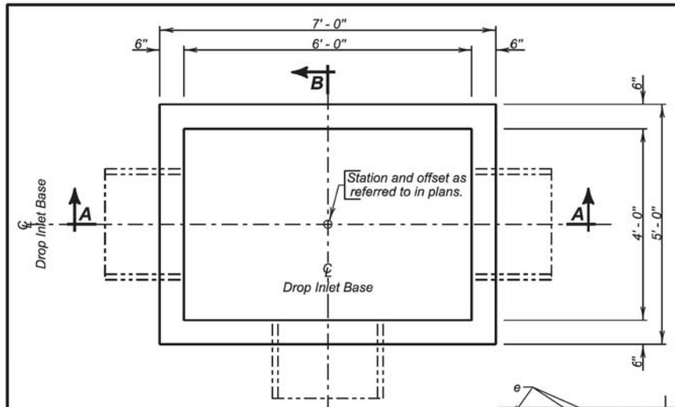

PLAN

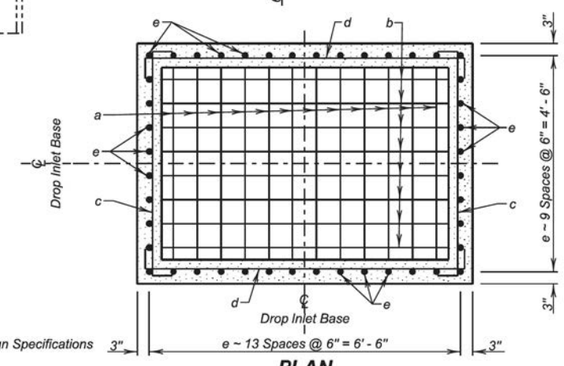

PLAN
(Bottom Steel)
(Pipe Not Shown)

SPECIFICATIONS:

1. Design Specifications: AASHTO LRFD Bridge Design Specifications 2012 Edition.
2. Construction Specifications: South Dakota Standard Specifications for Roads and Bridges, Current Edition and required Provisions, Supplemental Specifications, and Special Provisions as included in the Proposal.

GENERAL NOTES:

1. Design Live Load: HL-93 loading. No construction loading in excess of legal load was considered.
2. Base is intended for use with a Precast Concrete Type S Drop Inlet Lid, Standard Plate 670.38. Base may be precast. If precast base used, and details differ from that shown, the precast base must be on the current approved list. The current approved list is available through proper channels from the SDDOT Office of Bridge Design.
3. To qualify for addition to the approved list, submit a checked design, by South Dakota Registered Professional Engineers and shop plans to the Office of Bridge Design for approval. Design shall be in accordance with the current edition of the AASHTO LRFD Bridge Design Specifications.
4. ✳ Reduce total quantities of concrete by the amount of concrete displaced by the pipe. The total quantity of concrete shall be computed to the nearest hundredth of a cubic yard. The total quantity of reinforcing steel shall be computed to the nearest pound.
5. Inlets shown may be modified by the addition or omission of connecting pipes as shown on the layouts. Connecting pipes shall not enter the inlet through the corners.
6. Maximum R.C.P. diameter shall not exceed 36 inches (30 inches for R.C. Arch) on the 4-foot wide side and shall not exceed 54 inches (48 inches for R.C. Arch) on the 6-foot wide side of the Drop Inlet.
7. Reinforcing steel shall conform to ASTM A615 Grade 60. Cut and bend reinforcing steel as required to place pipe(s) through the inlet wall.
8. Use 1 inch clear cover on all reinforcing steel unless otherwise noted.
9. The dimension of H is in feet. Maximum H is 8 feet.

June 26, 2015

Published Date: 4th Qtr. 2015

SDDOT

4'X 6' TYPE S DROP INLET BASE

PLATE NUMBER
670.30

Sheet 1 of 2

PIPE DISPLACEMENT REDUCTIONS

	Diameter (Inches)	Wall T (Inches)	Class M6 Concrete (Cu. Yd.)
R.C.P.	12	2	0.03
	15	2 ¼	0.04
	18	2 ½	0.05
	24	3	0.09
	30	3 ½	0.14
	36	4	0.20
	42	4 ½	0.26
	48	5	0.34
	54	5 ½	0.43
R.C. ARCH	18	2 ½	0.05
	24	3 ½	0.09
	30	4	0.14
	36	4 ½	0.19
	42	4 ½	0.24
	48	5	0.32

REINFORCING SCHEDULE

Mk.	No.	Size	Length	Type
a	14	5	9' - 6"	17
b	10	5	11' - 6"	17
c	2H	4	5' - 6"	17
d	2H	4	7' - 6"	17
e	44	4	H - 2"	Str.

Bending Details

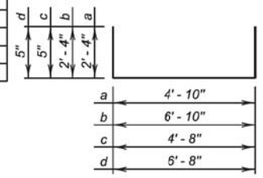

Type 17

NOTE:
All dimensions are out to out of bars

ESTIMATED QUANTITIES

ITEM	UNIT	CONSTANT QUANTITY	VARIABLE QUANTITY
✳ Class M6 Concrete	Cu.Yd.	0.97	0.41H
Reinforcing Steel	Lb.	253.77	46.76H

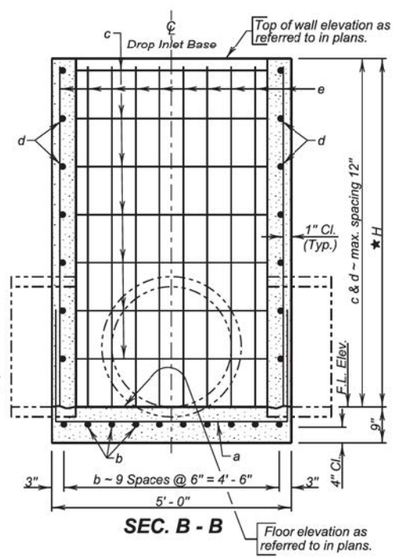

SEC. B - B

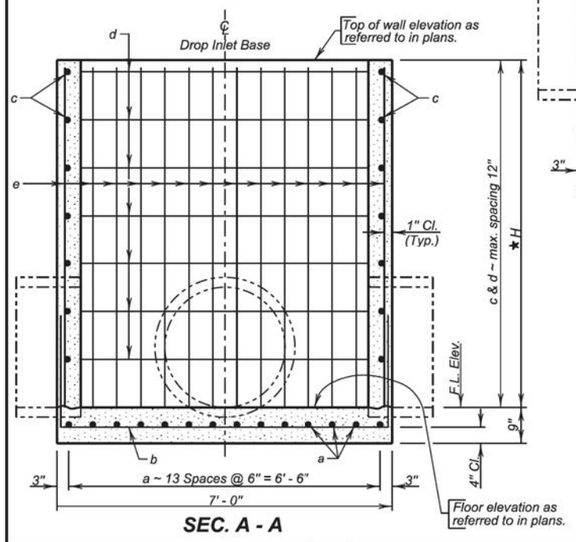

SEC. A - A

★ Maximum H is 8' - 0"

June 26, 2015

Published Date: 4th Qtr. 2015

SDDOT

4' X 6' TYPE S DROP INLET BASE

PLATE NUMBER 670.30

Sheet 2 of 2

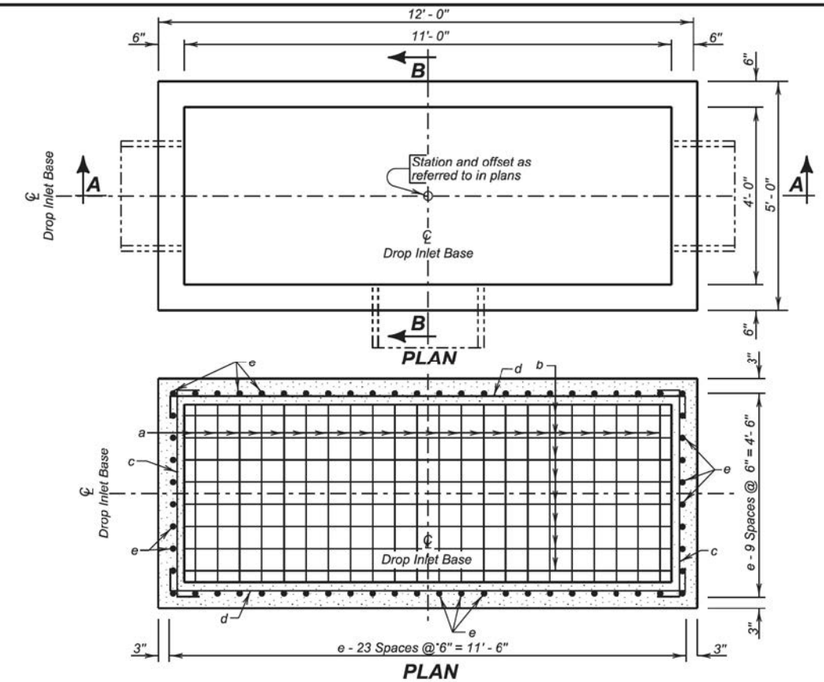

PLAN
(Bottom Steel)
(Pipe Not Shown)

SPECIFICATIONS:

1. Design Specifications: AASHTO LRFD Bridge Design Specifications 2012 Edition.
2. Construction Specifications: South Dakota Standard Specifications for Roads and Bridges, Current Edition and required Provisions, Supplemental Specifications, and Special Provisions as included in the Proposal.

GENERAL NOTES:

1. Design Live Load: HL-93 loading. No construction loading in excess of legal load was considered.
2. Base is intended for use with a Precast Concrete Type S Drop Inlet Lid, Standard Plate 670.40. Base may be precast. If precast base used, and details differ from that shown, the precast base must be on the current approved list. The current approved list is available through proper channels from the SDDOT Office of Bridge Design.
3. To qualify for addition to the approved list, submit a checked design, by South Dakota Registered Professional Engineers and shop plans to the Office of Bridge Design for approval. Design shall be in accordance with the current edition of the AASHTO LRFD Bridge Design Specifications.
4. ✳ Reduce total quantities of concrete by the amount of concrete displaced by the pipe. The total quantity of concrete shall be computed to the nearest hundredth of a cubic yard. The total quantity of reinforcing steel shall be computed to the nearest pound.
5. Inlets shown may be modified by the addition or omission of connecting pipes as shown on the layouts. Connecting pipes shall not enter the inlet through the corners.
6. Maximum R.C.P. diameter shall not exceed 36 inches (30 inches for R.C. Arch) on the 4-foot wide side of the Drop Inlet.
7. Reinforcing steel shall conform to ASTM A615 Grade 60. Cut and bend reinforcing steel as required to place pipe(s) through the inlet wall.
8. Use 1 inch clear cover on all reinforcing steel unless otherwise noted.
9. The dimension of H is in feet. Maximum H is 8 feet.

June 26, 2015

Published Date: 4th Qtr. 2015

SDDOT

4' X 11' TYPE S DROP INLET BASE

PLATE NUMBER 670.32

Sheet 1 of 2

PIPE DISPLACEMENT REDUCTIONS

	Diameter (Inches)	Wall T (Inches)	Class M6 Concrete (Cu. Yd.)
R.C.P.	12	2	0.03
	15	2 ¼	0.04
	18	2 ½	0.05
	24	3	0.09
	30	3 ½	0.14
	36	4	0.20
	42	4 ½	0.26
	48	5	0.34
	54	5 ½	0.43
	60	6	0.52
R.C. ARCH	18	2 ½	0.05
	24	3 ½	0.09
	30	4	0.14
	36	4 ½	0.19
	42	4 ½	0.24
	48	5	0.32
	54	5 ½	0.39
	60	6	0.49
	72	7	0.70
	84	8	0.93

REINFORCING SCHEDULE

Mk.	No.	Size	Length	Type
a	24	5	9' - 6"	17
b	10	5	16' - 6"	17
c	2H	4	5' - 6"	17
d	2H	4	12' - 6"	17
e	64	4	H - 2"	Str.

Bending Details

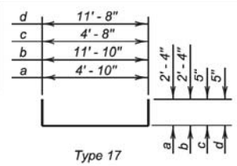

Type 17

NOTE:
All dimensions are out to out of bars.

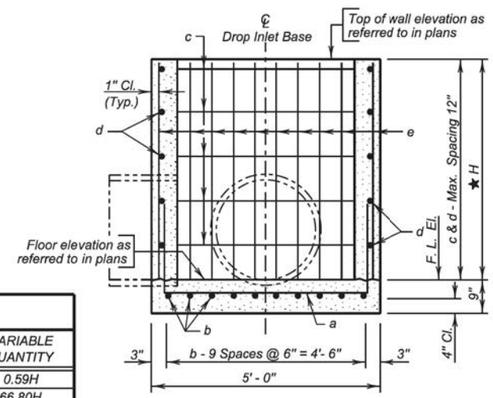

SEC. B - B

ESTIMATED QUANTITIES

ITEM	UNIT	CONSTANT QUANTITY	VARIABLE QUANTITY
✱ Class M6 Concrete	Cu. Yd.	1.67	0.59H
Reinforcing Steel	Lb.	402.77	66.80H

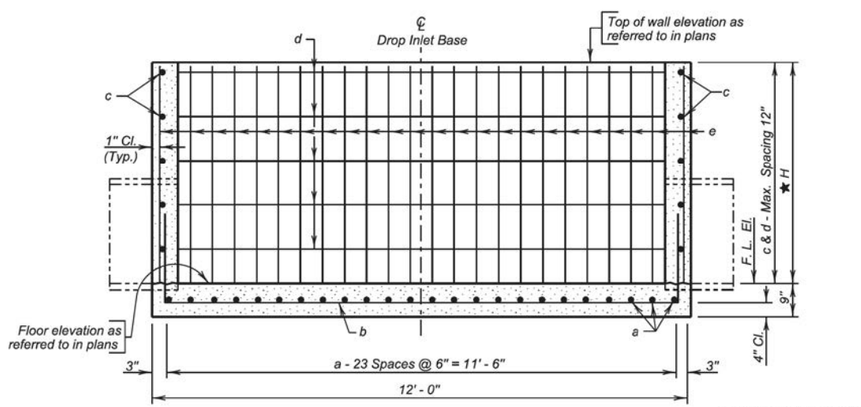

SEC. A - A

★ Maximum H is 8' - 0"

June 26, 2015

Published Date: 4th Qtr. 2015

SDDOT

4' X 11' TYPE S DROP INLET BASE

PLATE NUMBER 670.32

Sheet 2 of 2

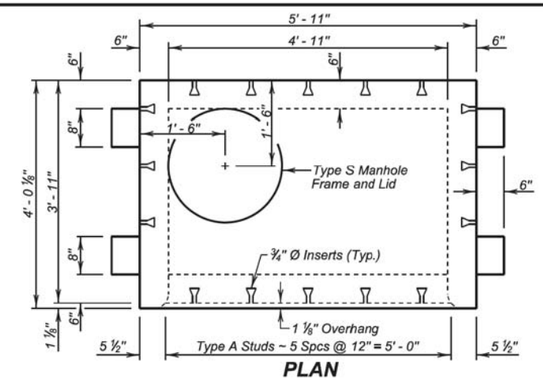

PLAN

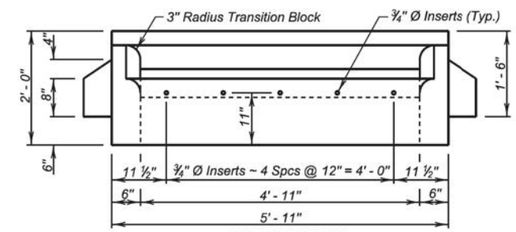

ELEVATION

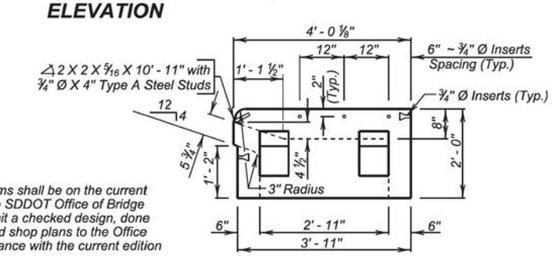

SIDE VIEW
(With Sidewalk Inserts)

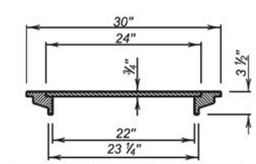

TYPICAL SECTION THROUGH TYPE S MANHOLE FRAME AND LID
(Weight 140 Lbs.)

GENERAL NOTES:

1. The Precast Concrete Type S Drop Inlet Lid and the shims shall be on the current approved list available through proper channels from the SDDOT Office of Bridge Design. To qualify for addition to the approved list, submit a checked design, done by South Dakota Registered Professional Engineers, and shop plans to the Office of Bridge Design for approval. Design shall be in accordance with the current edition of the AASHTO LRFD Bridge Design Specifications.
2. Design Live Load shall be HL - 93.
3. Concrete mix shall be as per fabricators design, however, minimum compressive strength shall not be less than 4500 psi. Type II Cement is required.
4. The Type S Manhole Frame and Lid shall conform to AASHTO M105, Class 30.
5. Structural Steel shall conform to ASTM A36. The ¾ inch diameter Headed Type A Steel Studs shall comform to Section 7 of the current edition of AWS DI. I Structural Steel Welding Code.
6. The ¾ inch diameter Concrete Inserts shall be galvanized or made of a corrosion resistant material. Provide ¾ inch diameter x 1' - 6" long dowels conforming to ASTM A615, Gr. 60 threaded to fit Inserts with each lid.
7. All costs associated with furnishing and installing the Precast Concrete Type S Drop Inlet Lid including the type S manhole frame and lid, shims, inserts, and dowels shall be included in the contract unit price per each for " 4' x 6' Precast Concrete Type S Drop Inlet Lid ".

December 23, 2012

Published Date: 4th Qtr. 2015

SDDOT

4' X 6' PRECAST CONCRETE TYPE S DROP INLET LID

PLATE NUMBER 670.38

Sheet 1 of 1

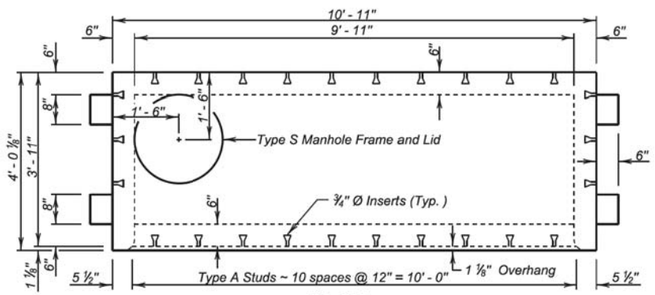

PLAN

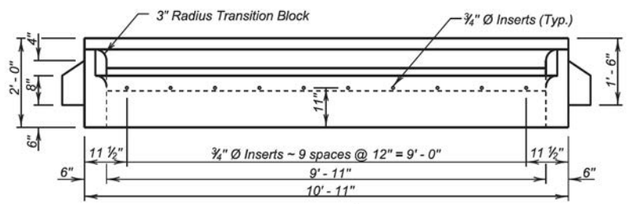

ELEVATION

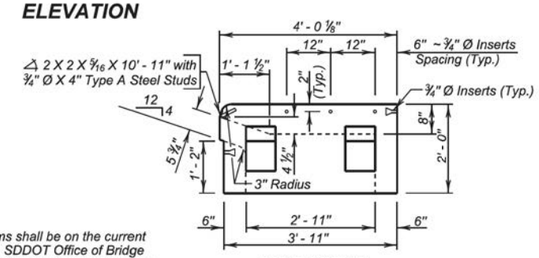

SIDE VIEW
(With Sidewalk Inserts)

GENERAL NOTES:

1. The Precast Concrete Type S Drop Inlet Lid and the shims shall be on the current approved list available through proper channels from the SDDOT Office of Bridge Design. To qualify for addition to the approved list, submit a checked design, done by South Dakota Registered Professional Engineers, and shop plans to the Office of Bridge Design for approval. Design shall be in accordance with the current edition of the AASHTO LRFD Bridge Design Specifications.
2. Design Live Load shall be HL - 93.
3. Concrete mix shall be as per fabricators design, however, minimum compressive strength shall not be less than 4500 psi. Type II Cement is required.
4. The Type S Manhole Frame and Lid shall conform to AASHTO M105, Class 30.
5. Structural Steel shall conform to ASTM A36. The ¾ inch diameter Headed Type A Steel Studs shall conform to Section 7 of the current edition of AWS D1. 1 Structural Steel Welding Code.
6. The ¾ inch diameter Concrete Inserts shall be galvanized or made of a corrosion resistant material. Provide ¾ inch diameter x 1' - 6" long dowels conforming to ASTM A615, Gr. 60 threaded to fit inserts with each lid.
7. All costs associated with furnishing and installing the Precast Concrete Type S Drop Inlet Lid including the type S manhole frame and lid, shims, inserts, and dowels shall be included in the contract unit price per each for " 4' x 11' Precast Concrete Type S Drop Inlet Lid ".

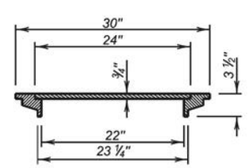

TYPICAL SECTION THROUGH TYPE S MANHOLE FRAME AND LID
(Weight 140 Lbs.)

December 23, 2012

Published Date: 4th Qtr. 2015	SDDOT	4' X 11' PRECAST CONCRETE TYPE S DROP INLET LID	PLATE NUMBER 670.40 Sheet 1 of 1

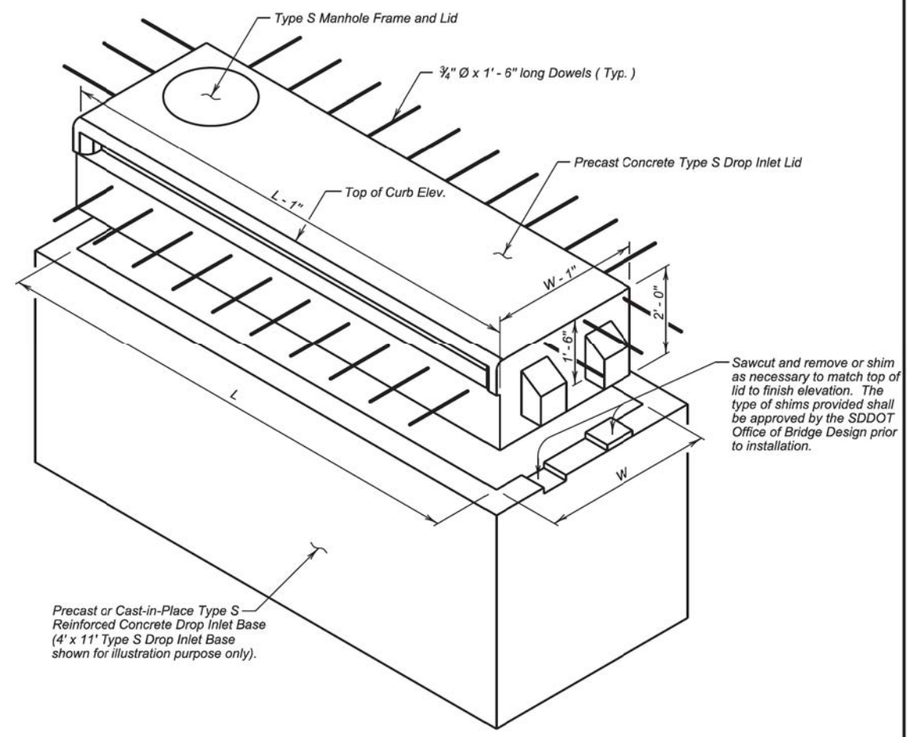

TYPE S DROP INLET

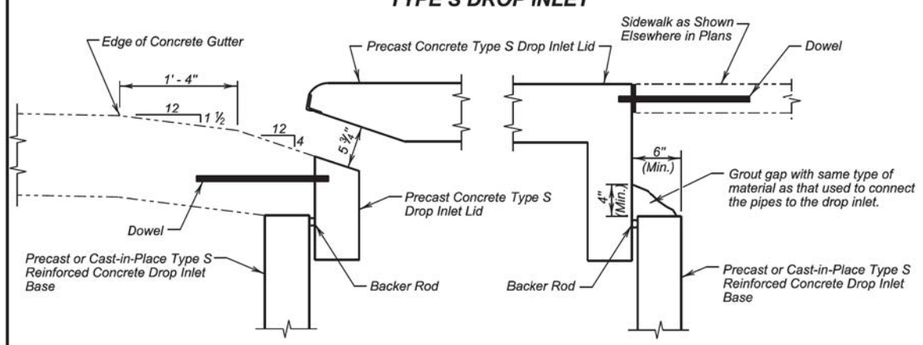

CONCRETE GUTTER DETAIL

GROUTING DETAIL
(Sides and Back, Adjacent to Sidewalk)

December 23, 2012

Published Date: 4th Qtr. 2015	SDDOT	INSTALLATION DETAILS FOR PRECAST CONCRETE TYPE S DROP INLET LID	PLATE NUMBER 670.45 Sheet 1 of 2

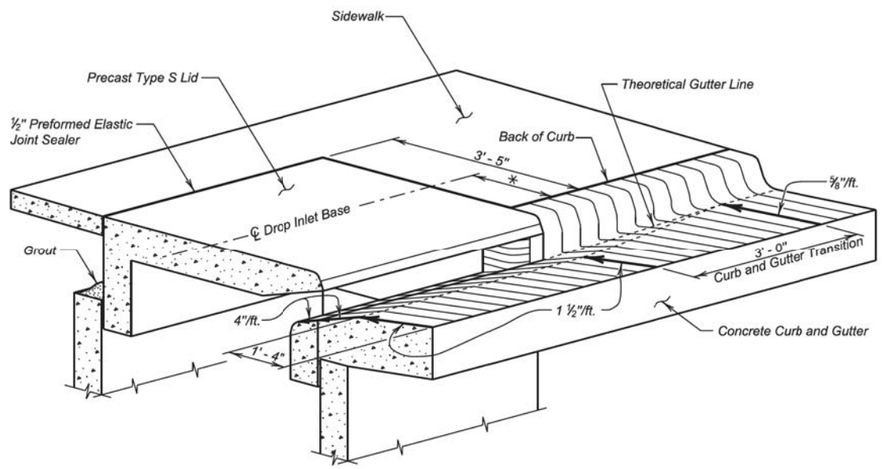

CURB AND GUTTER TRANSITION DETAILS

Drop Inlet Base Unit Size	* Distance
4' x 6'	1' - 5 ½"
4' x 11'	1' - 5 ½"
7' x 11'	2' - 11 ½"

GENERAL NOTES:

1. Dowels shall be used to anchor the precast concrete Type S drop inlet lid to the concrete gutter. See Standard Plate 670.38 or 670.40 as applicable. If there is sidewalk adjacent dowels shall be used to anchor the precast concrete Type S drop inlet lid to the sidewalk. If there is sidewalk adjacent to the drop inlet, the precast lid shall match the finish elevations and cross slopes of the sidewalk.
2. The sidewalk shall be steel reinforced when the sidewalk adjoins the precast lid. Refer to Standard Plate 651.70 for reinforced concrete sidewalk details.

December 23, 2012

Published Date: 4th Qtr. 2015	SDDOT	INSTALLATION DETAILS FOR PRECAST CONCRETE TYPE S DROP INLET LID	PLATE NUMBER 670.45
			Sheet 2 of 2

GENERAL NOTE:

Top of grate elevation shall be 0.04' below theoretical elevation of gutter.

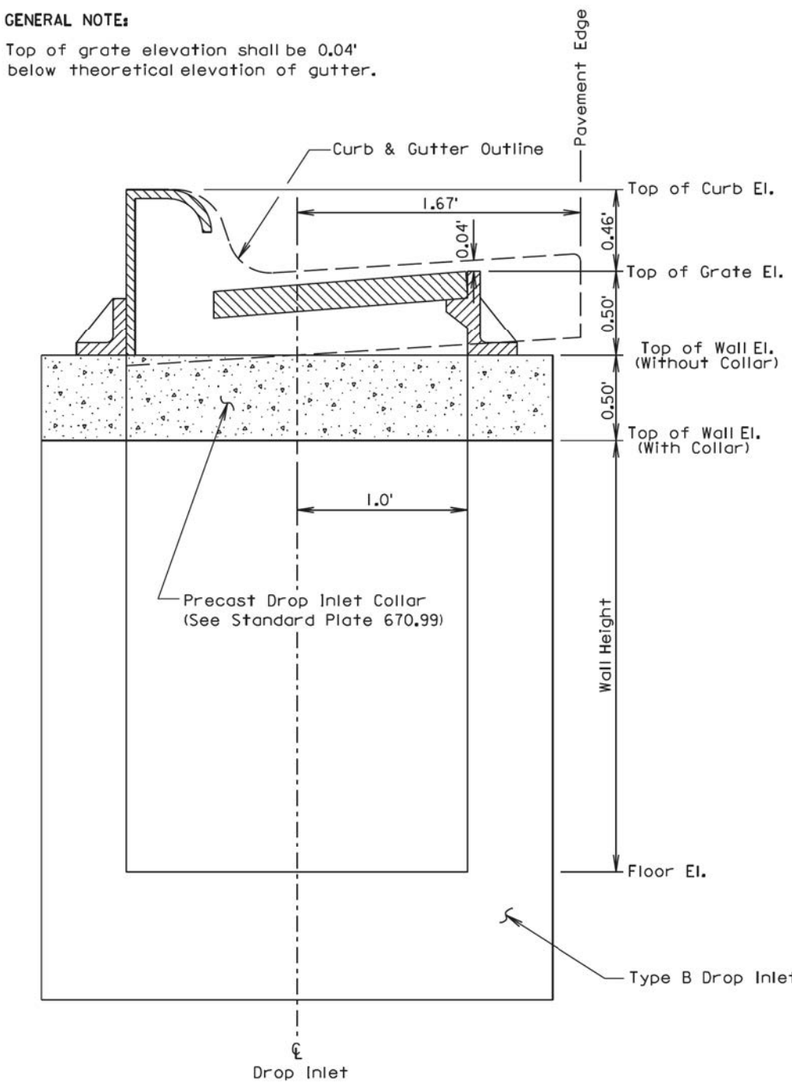

June 26, 2011

Published Date: 4th Qtr. 2015	SDDOT	INSTALLATION OF TYPE B DROP INLET	PLATE NUMBER 670.75
			Sheet 1 of 1

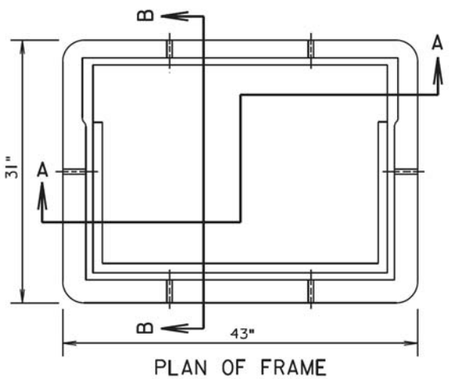

PLAN OF FRAME

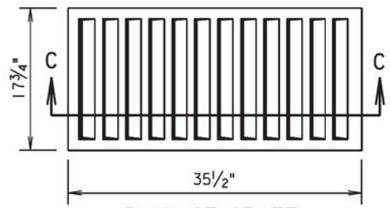

PLAN OF GRATE

SECTION C-C

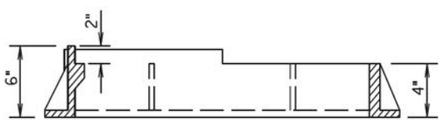

SECTION A-A

TOP VIEW OF CURB BOX

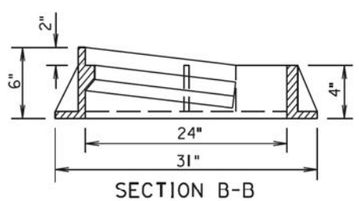

SECTION B-B

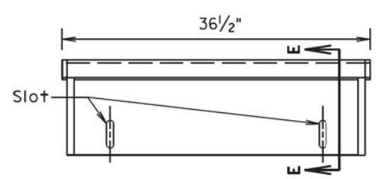

ELEVATION OF CURB BOX

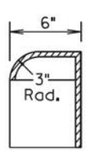

SECTION E-E

GENERAL NOTE:

Total weight of the assembly shall be 490 Lbs. minimum and the curb box shall be adjustable 6" to 9".

March 31, 2000

Published Date: 4th Qtr. 2015	SDDOT	TYPE B FRAME AND GRATE ASSEMBLY	PLATE NUMBER 670.80
			Sheet 1 of 1

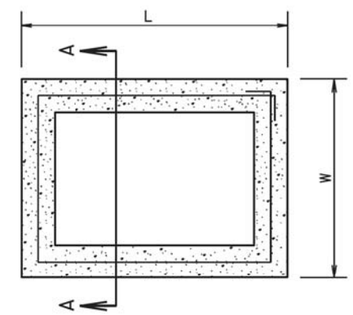

PLAN VIEW

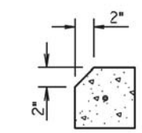

For Type D Drop Inlets only:
Use Precast Drop Inlet Collar with 2" chamfer on L sides only.

DETAIL B

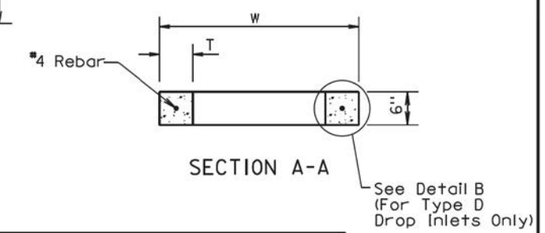

SECTION A-A

INFORMATIONAL QUANTITIES					
FRAME AND GRATE TYPE	L Ft-In	W Ft-In	T In	CLASS M6 CONCRETE CuYd	REINFORCING STEEL Lb
TYPE B	4'-0"	3'-0"	6	0.11	9
TYPE C	5'-0"	4'-0"	6	0.15	11
TYPE D	4'-0"	2'-6"	6	0.10	8

GENERAL NOTES:

All reinforcing steel shall conform to ASTM A615, Grade 60.

The ½" diameter bar shall lap 6" ± and shall be centered in the concrete.

The cost of furnishing and installing Precast Drop Inlet Collars, including labor, materials, and incidentals shall be incidental to the contract unit price per Each for "Precast Drop Inlet Collar".

March 31, 2000

Published Date: 4th Qtr. 2015	SDDOT	PRECAST DROP INLET COLLAR	PLATE NUMBER 670.99
			Sheet 1 of 1

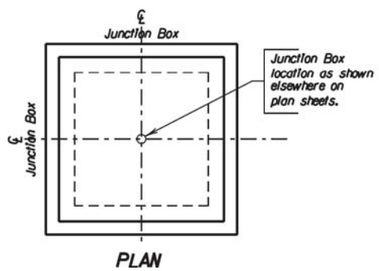

PLAN

SPECIFICATIONS

1. Design Specifications: AASHTO Specifications for Highway Bridges, 1996 Edition (Service Load).
2. Construction Specifications: South Dakota Standard Specifications for Roads and Bridges, Current Edition and required Provisions, Supplemental Specifications and/or Special Provisions as included in the Proposal.

DESIGN MIX OF CONCRETE

1. Mix shall be designed to produce a concrete having a minimum compressive strength of 4000 p.s.i. at 28 days.
2. Type II Cement is required.

GENERAL NOTES

1. Design Live Load: HS 20-44 and Alternate Loading. No construction loading in excess of legal Load was considered.
2. The design of the junction box is based on a maximum fill over the junction box of 5 feet.
3. Unit Stresses: Concrete f'c = 1600 p.s.i.
   Reinforcing Steel fs = 24000 p.s.i.
4. All reinforcing steel shall conform to ASTM A615 Grade 60.
5. All exposed edges shall be chamfered ¾".
6. Use 1" clear cover on all reinforcing steel except as shown.
7. The cost of furnishing and installing the manhole steps shall be incidental to the contract unit price per Lb. for "Reinforcing steel".
8. Reinforcing steel shall be cut and bent in field as necessary to fit pipe and manhole openings. (Pipe openings are not shown in these details.) Number, size and location of pipes entering junction box are shown elsewhere on plan sheets.
9. All pipes entering the junction box must fit between the inside faces of the walls.

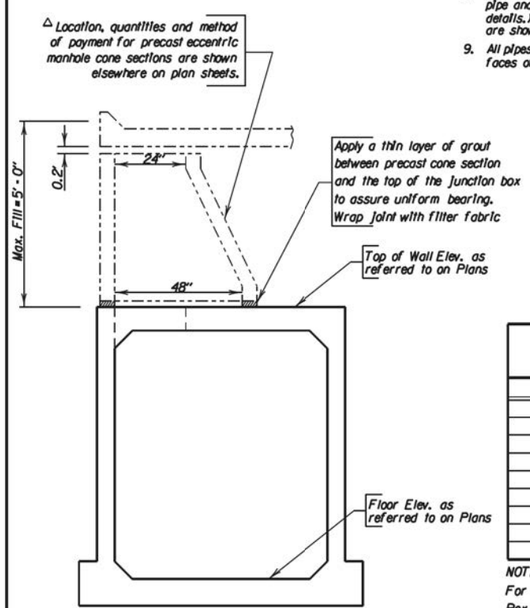

△ DETAIL OF CONNECTION BETWEEN PRECAST ECCENTRIC MANHOLE CONE SECTION AND JUNCTION BOX

ITEM	Class M6 Concrete	Reinforcing Steel
UNIT	Cu. Yd.	Lb.
H = 4' - 0"	5.53	1186
H = 4' - 6"	5.82	1215
H = 5' - 0"	6.10	1286
H = 5' - 6"	6.39	1316
H = 6' - 0"	6.67	1345
H = 6' - 6"	6.96	1416
H = 7' - 0"	7.24	1445
H = 7' - 6"	7.52	1475
H = 8' - 0"	7.81	1545

NOTE:
For informational purposes only, the estimated quantities for Junction Box height H are shown above. These quantities do not include quantity reduction for pipe openings, but do include the reduction for the 24" diameter manhole opening.

March 31, 2000

REINFORCING SCHEDULE

	Mk.	No.	Size	Length	Type
H = 4' - 0"	Ø a1	1	6	9'- 0"	T3
	Ø a2	4	-	——	-
	h14	32	4	5'- 9"	17A
	k14	56	4	8'- 9"	17
	m2	22	6	7'- 9"	Str.
	n2	22	6	6'- 9"	Str.
	p2	56	4	6'- 0"	Str.
	q1	8	4	3'- 6"	17A
H = 4' - 6"	Ø a1	1	6	9'- 0"	T3
	Ø a2	4	-	——	-
	h15	32	4	6'- 3"	17A
	k15	56	4	9'- 3"	17
	m2	22	6	7'- 9"	Str.
	n2	22	6	6'- 9"	Str.
	p2	56	4	6'- 0"	Str.
	q1	8	4	3'- 6"	17A
H = 5' - 0"	Ø a1	1	6	9'- 0"	T3
	Ø a2	5	-	——	-
	h16	32	4	6'- 9"	17A
	k16	56	4	9'- 9"	17
	m2	22	6	7'- 9"	Str.
	n2	22	6	6'- 9"	Str.
	p2	64	4	6'- 0"	Str.
	q1	12	4	3'- 6"	17A
H = 5' - 6"	Ø a1	1	6	9'- 0"	T3
	Ø a2	5	-	——	-
	h17	32	4	7'- 3"	17A
	k17	56	4	10'- 3"	17
	m2	22	6	7'- 9"	Str.
	n2	22	6	6'- 9"	Str.
	p2	64	4	6'- 0"	Str.
	q1	12	4	3'- 6"	17A
H = 6' - 0"	Ø a1	1	6	9'- 0"	T3
	Ø a2	6	-	——	-
	h18	32	4	7'- 9"	17A
	k18	56	4	10'- 9"	17
	m2	22	6	7'- 9"	Str.
	n2	22	6	6'- 9"	Str.
	p2	64	4	6'- 0"	Str.
	q1	12	4	3'- 6"	17A
H = 6' - 6"	Ø a1	1	6	9'- 0"	T3
	Ø a2	6	-	——	-
	h19	32	4	8'- 3"	17A
	k19	56	4	11'- 3"	17
	m2	22	6	7'- 9"	Str.
	n2	22	6	6'- 9"	Str.
	p2	72	4	6'- 0"	Str.
	q1	16	4	3'- 6"	17A
H = 7' - 0"	Ø a1	1	6	9'- 0"	T3
	Ø a2	7	-	——	-
	h20	32	4	8'- 9"	17A
	k20	56	4	11'- 9"	17
	m2	22	6	7'- 9"	Str.
	n2	22	6	6'- 9"	Str.
	p2	72	4	6'- 0"	Str.
	q1	16	4	3'- 6"	17A

Bending Details

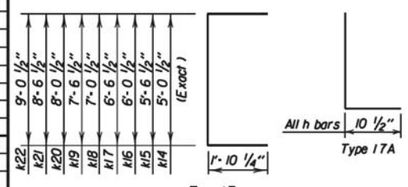

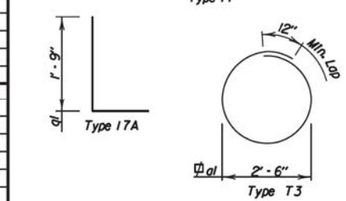

	Mk.	No.	Size	Length	Type
H = 7' - 6"	Ø a1	1	6	9'- 0"	T3
	Ø a2	7	-	——	-
	h21	32	4	9'- 3"	17A
	k21	56	4	12'- 3"	17
	m2	22	6	7'- 9"	Str.
	n2	22	6	6'- 9"	Str.
	p2	72	4	6'- 0"	Str.
	q1	16	4	3'- 6"	17A
H = 8' - 0"	Ø a1	1	6	9'- 0"	T3
	Ø a2	8	-	——	-
	h22	32	4	9'- 9"	17A
	k22	56	4	12'- 9"	17
	m2	22	6	7'- 9"	Str.
	n2	22	6	6'- 9"	Str.
	p2	80	4	6'- 0"	Str.
	q1	20	4	3'- 6"	17A

NOTE:
Ø Cast Iron Manhole Steps (R - 1980 - C) from Neenah Foundry or equivalent.
Φ Locate in center of top slab with 3" clearance at manhole opening.
All dimensions are out to out of bars.

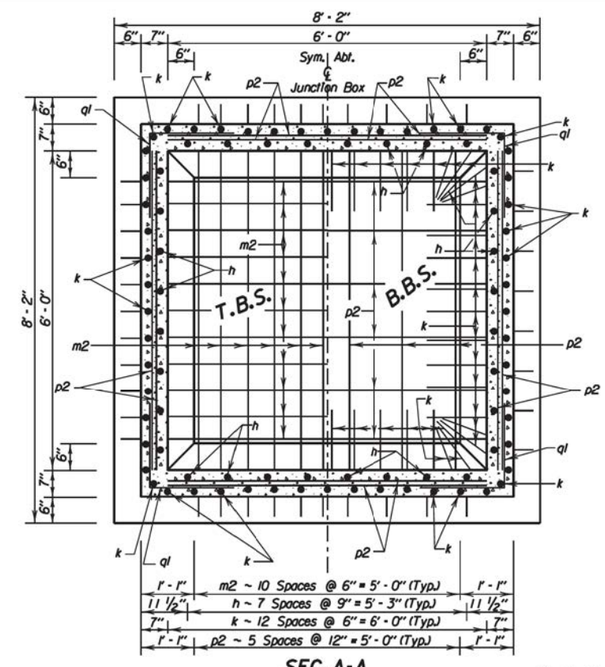

SEC. A-A

March 31, 2000

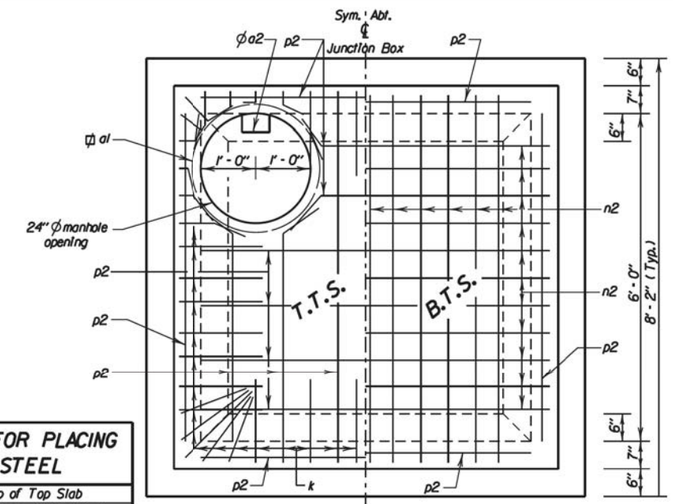

PLAN

LEGEND FOR PLACING RE-STEEL
T. T. S. - Top of Top Slab
B. T. S. - Bottom of Top Slab
T. B. S. - Top of Bottom Slab
B. B. S. - Bottom of Bottom Slab
O. F. W. - Outside Face of Wall
I. F. W. - Inside Face of Wall

1' - 1" n2 ~ 10 Spaces @ 6" = 5' - 0" (Typ.) 1' - 1"
11 1/2" h ~ 7 Spaces @ 9" = 5' - 3" (Typ.) 11 1/2"
7" k ~ 12 Spaces @ 6" = 6' - 0" (Typ.) 7"
1' - 1" p2 ~ 5 Spaces @ 12" = 5' - 0" (Typ.) 1' - 1"

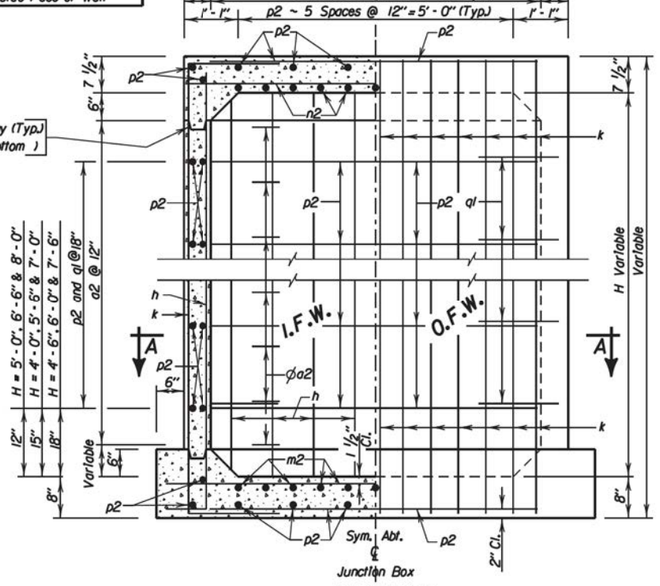

ELEVATION

March 31, 2000

Published Date: 4th Qtr. 2015 | SDDOT | 6' X 6' JUNCTION BOX | PLATE NUMBER 671.02 | Sheet 3 of 3

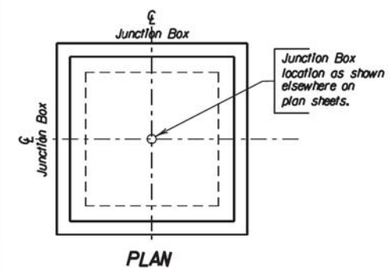

PLAN

SPECIFICATIONS

1. Design Specifications: AASHTO Specifications for Highway Bridges, 1996 Edition (Service Load).
2. Construction Specifications: South Dakota Standard Specifications for Roads and Bridges, Current Edition and required Provisions, Supplemental Specifications and/or Special Provisions as included in the Proposal.

DESIGN MIX OF CONCRETE

1. Mix shall be designed to produce a concrete having a minimum compressive strength of 4000 p.s.i. at 28 days.
2. Type II Cement is required.

GENERAL NOTES

1. Design Live Load: HS 20-44 and Alternate Loading. No construction loading in excess of legal Load was considered.
2. The design of the junction box is based on a maximum fill over the junction box of 5 feet.
3. Unit Stresses: Concrete fc = 1600 p.s.i.
   Reinforcing Steel fs = 24000 p.s.i.
4. All reinforcing steel shall conform to ASTM A615 Grade 60.
5. All exposed edges shall be chamfered ¾".
6. Use 1" clear cover on all reinforcing steel except as shown.
7. The cost of furnishing and installing the manhole steps shall be incidental to the contract unit price per Lb. for "Reinforcing steel".
8. Reinforcing steel shall be cut and bent in field as necessary to fit pipe and manhole openings. (Pipe openings are not shown in these details.) Number, size and location of pipes entering junction box are shown elsewhere on plan sheets.
9. All pipes entering the junction box must fit between the inside faces of the walls.

△ Location, quantities and method of payment for precast eccentric manhole cone sections are shown elsewhere on plan sheets.

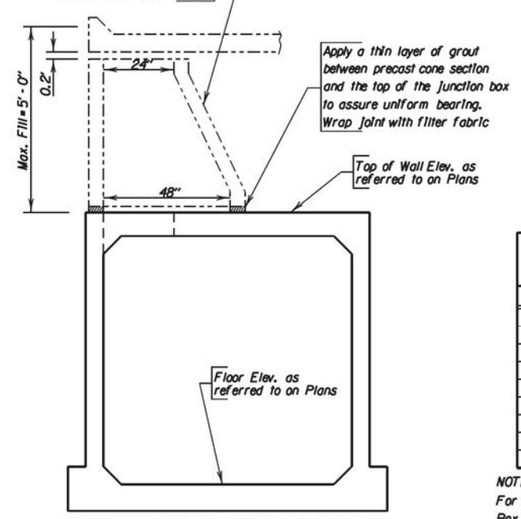

△DETAIL OF CONNECTION BETWEEN PRECAST ECCENTRIC MANHOLE CONE SECTION AND JUNCTION BOX

ITEM	Class M6 Concrete	Reinforcing Steel
UNIT	Cu. Yd.	Lb.
H = 4' - 0"	7.09	1506
H = 4' - 6"	7.42	1541
H = 5' - 0"	7.75	1622
H = 5' - 6"	8.08	1657
H = 6' - 0"	8.40	1692
H = 6' - 6"	8.73	1773
H = 7' - 0"	9.06	1808
H = 7' - 6"	9.39	1843
H = 8' - 0"	9.71	1924

NOTE:
For informational purposes only, the estimated quantities for Junction Box height H are shown above. These quantities do not include quantity reduction for pipe openings, but do include the reduction for the 24" diameter manhole opening.

March 31, 2000

Published Date: 4th Qtr. 2015 | SDDOT | 7' X 7' JUNCTION BOX | PLATE NUMBER 671.03 | Sheet 1 of 3

REINFORCING SCHEDULE

	Mk.	No.	Size	Length	Type
H = 4'-0"	Φa1	1	6	9'-0"	T3
	Φa2	4	-	——	-
	h25	40	4	5'-9"	17A
	k25	64	4	9'-3"	17
	m3	26	6	8'-9"	Str.
	n3	26	6	7'-9"	Str.
	p3	60	4	7'-0"	Str.
	q1	8	4	3'-6"	17A
H = 4'-6"	Φa1	1	6	9'-0"	T3
	Φa2	4	-	——	-
	h26	40	4	6'-3"	17A
	k26	64	4	9'-9"	17
	m3	26	6	8'-9"	Str.
	n3	26	6	7'-9"	Str.
	p3	60	4	7'-0"	Str.
	q1	8	4	3'-6"	17A
H = 5'-0"	Φa1	1	6	9'-0"	T3
	Φa2	5	-	——	-
	h27	40	4	6'-9"	17A
	k27	64	4	10'-3"	17
	m3	26	6	8'-9"	Str.
	n3	26	6	7'-9"	Str.
	p3	68	4	7'-0"	Str.
	q1	12	4	3'-6"	17A
H = 5'-6"	Φa1	1	6	9'-0"	T3
	Φa2	5	-	——	-
	h28	40	4	7'-3"	17A
	k28	64	4	10'-9"	17
	m3	26	6	8'-9"	Str.
	n3	26	6	7'-9"	Str.
	p3	68	4	7'-0"	Str.
	q1	12	4	3'-6"	17A
H = 6'-0"	Φa1	1	6	9'-0"	T3
	Φa2	6	-	——	-
	h29	40	4	7'-9"	17A
	k29	64	4	11'-3"	17
	m3	26	6	8'-9"	Str.
	n3	26	6	7'-9"	Str.
	p3	68	4	7'-0"	Str.
	q1	12	4	3'-6"	17A
H = 6'-6"	Φa1	1	6	9'-0"	T3
	Φa2	6	-	——	-
	h30	40	4	8'-3"	17A
	k30	64	4	11'-9"	17
	m3	26	6	8'-9"	Str.
	n3	26	6	7'-9"	Str.
	p3	76	4	7'-0"	Str.
	q1	16	4	3'-6"	17A
H = 7'-0"	Φa1	1	6	9'-0"	T3
	Φa2	7	-	——	-
	h31	40	4	8'-9"	17A
	k31	64	4	12'-3"	17
	m3	26	6	8'-9"	Str.
	n3	26	6	7'-9"	Str.
	p3	76	4	7'-0"	Str.
	q1	16	4	3'-6"	17A

Bending Details

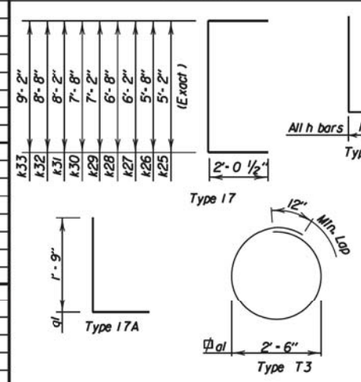

	Mk.	No.	Size	Length	Type
H = 7'-6"	Φa1	1	6	9'-0"	T3
	Φa2	7	-	——	-
	h32	40	4	9'-3"	17A
	k32	64	4	12'-9"	17
	m3	26	6	8'-9"	Str.
	n3	26	6	7'-9"	Str.
	p3	76	4	7'-0"	Str.
	q1	16	4	3'-6"	17A
H = 8'-0"	Φa1	1	6	9'-0"	T3
	Φa2	8	-	——	-
	h33	40	4	9'-9"	17A
	k33	64	4	13'-3"	17
	m3	26	6	8'-9"	Str.
	n3	26	6	7'-9"	Str.
	p3	84	4	7'-0"	Str.
	q1	20	4	3'-6"	17A

NOTE:
Φ Cast Iron Manhole Steps (R - 1980 - C) from Neenah Foundry or equivalent.
Φ Locate in center of top slab with 3" clearance at manhole opening.
All dimensions are out to out of bars.

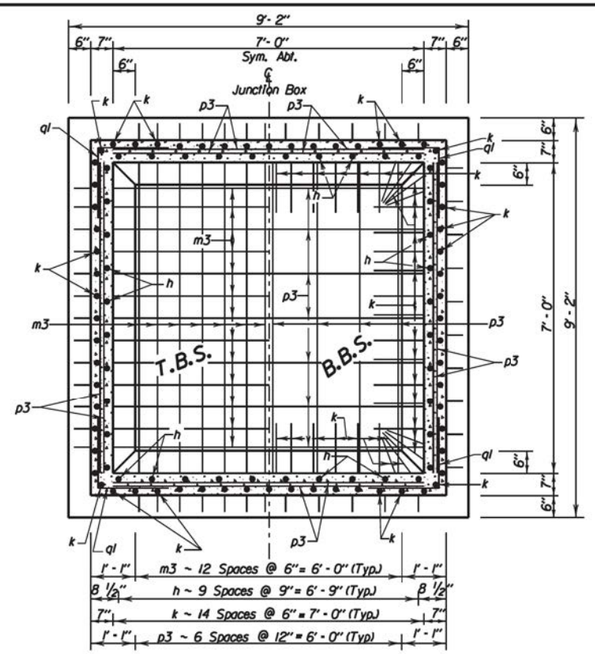

SEC. A-A

March 31, 2000

Published Date: 4th Qtr. 2015

SDDOT

7'X 7' JUNCTION BOX

PLATE NUMBER 671.03

Sheet 2 of 3

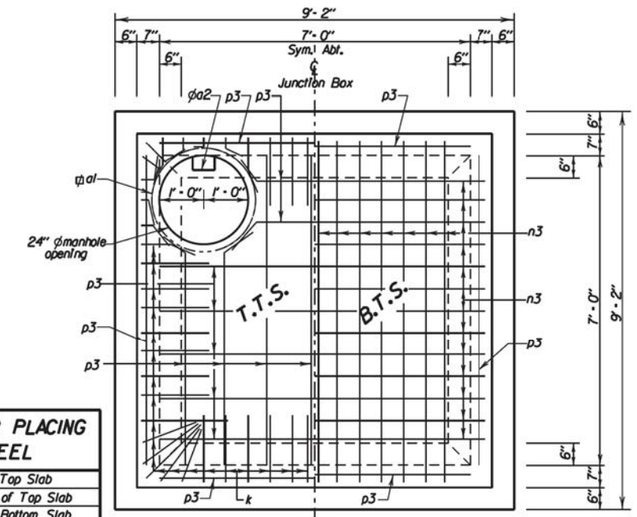

PLAN

LEGEND FOR PLACING RE-STEEL
T. T. S. - Top of Top Slab
B. T. S. - Bottom of Top Slab
T. B. S. - Top of Bottom Slab
B. B. S. - Bottom of Bottom Slab
O. F. W. - Outside Face of Wall
I. F. W. - Inside Face of Wall

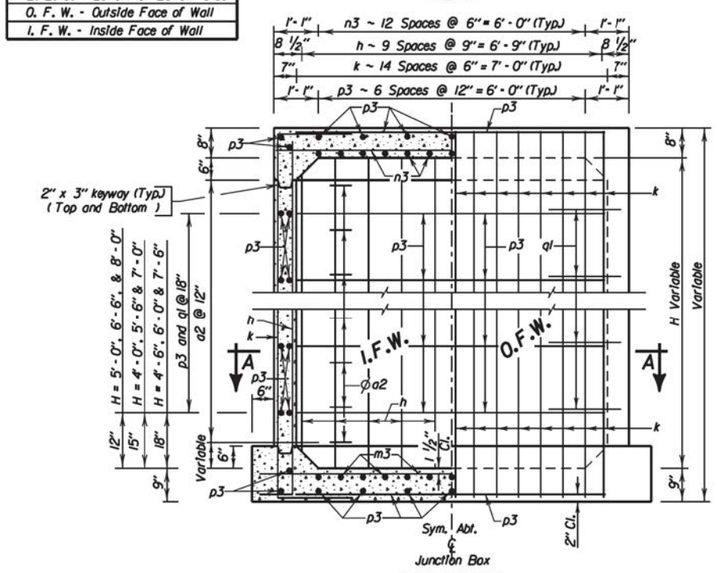

ELEVATION

March 31, 2000

Published Date: 4th Qtr. 2015

SDDOT

7'X 7' JUNCTION BOX

PLATE NUMBER 671.03

Sheet 3 of 3

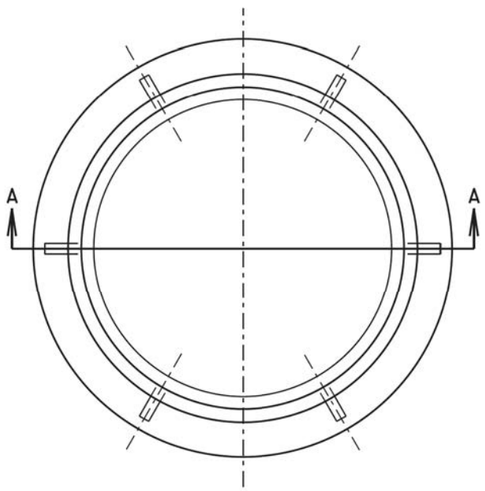

PLAN OF FRAME

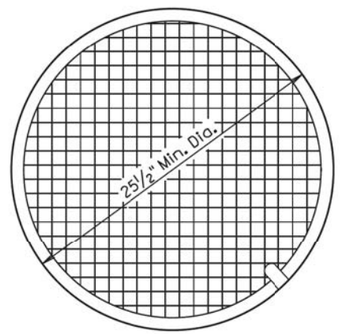

PLAN OF LID

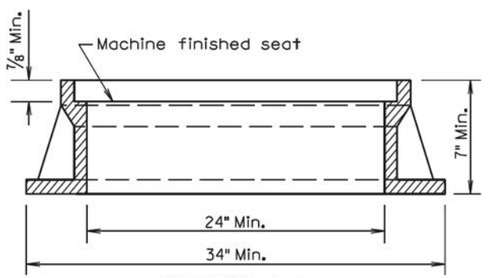

SECTION A-A

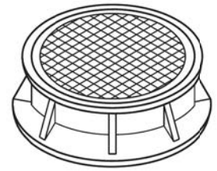

ASSEMBLED VIEW

TYPE	HEIGHT	MIN. WEIGHT
A7	7"	400Lbs.
A8	8"	440Lbs.
A9	9"	470Lbs.
A10	10"	480Lbs.

GENERAL NOTE:

Geometric pattern on top of lid other than that shown shall be approved by the Engineer.

March 31, 2000

Published Date: 4th Qtr. 2015 | SDDOT | TYPE A MANHOLE FRAME AND LID | PLATE NUMBER 671.10 | Sheet 1 of 1

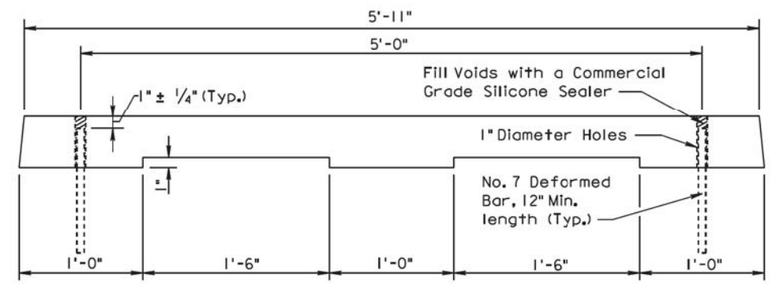

SIDE VIEW

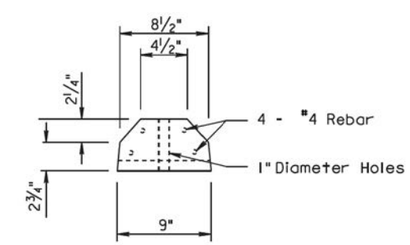

END VIEW

GENERAL NOTES:

Concrete shall be Class M6.

Reinforcing Steel shall conform to ASTM AG615, Grade 60.

Maintain 1" clearance on reinforcing steel.

The weight of the Curb Stop shall be 220 lbs. ±10 lbs.

March 31, 2000

Published Date: 4th Qtr. 2015 | SDDOT | PRECAST CONCRETE CURB STOP | PLATE NUMBER 900.10 | Sheet 1 of 1