Section B: Grading Plans

STATE OF SOUTH DAKOTA	PROJECT	SHEET	TOTAL SHEETS
	P 0020(117)254	B1	B98

Plotting Date: 01/23/2015

INDEX OF SHEETS

B1	General Layout W/Index
B2-B9	Estimate With General Notes & Tables
B10-B11	Table of Pipe Quantities
B12-B13	Table of Pavement, Curb & Gutter, & Sidewalk
B14-B16	Typical Sections
B17	Horizontal Alignment Sheet
B18	Control Data Sheet
B19	Topography Symbology & Legend
B20-B45	Plan & Profile Sheets
B46-B52	Curb & Gutter Layout
B53-B65	Curb Ramp Details
B66	Intersection Layout
B67	Shallow Pipe Replacement Detail
B68-B98	Standard Plates

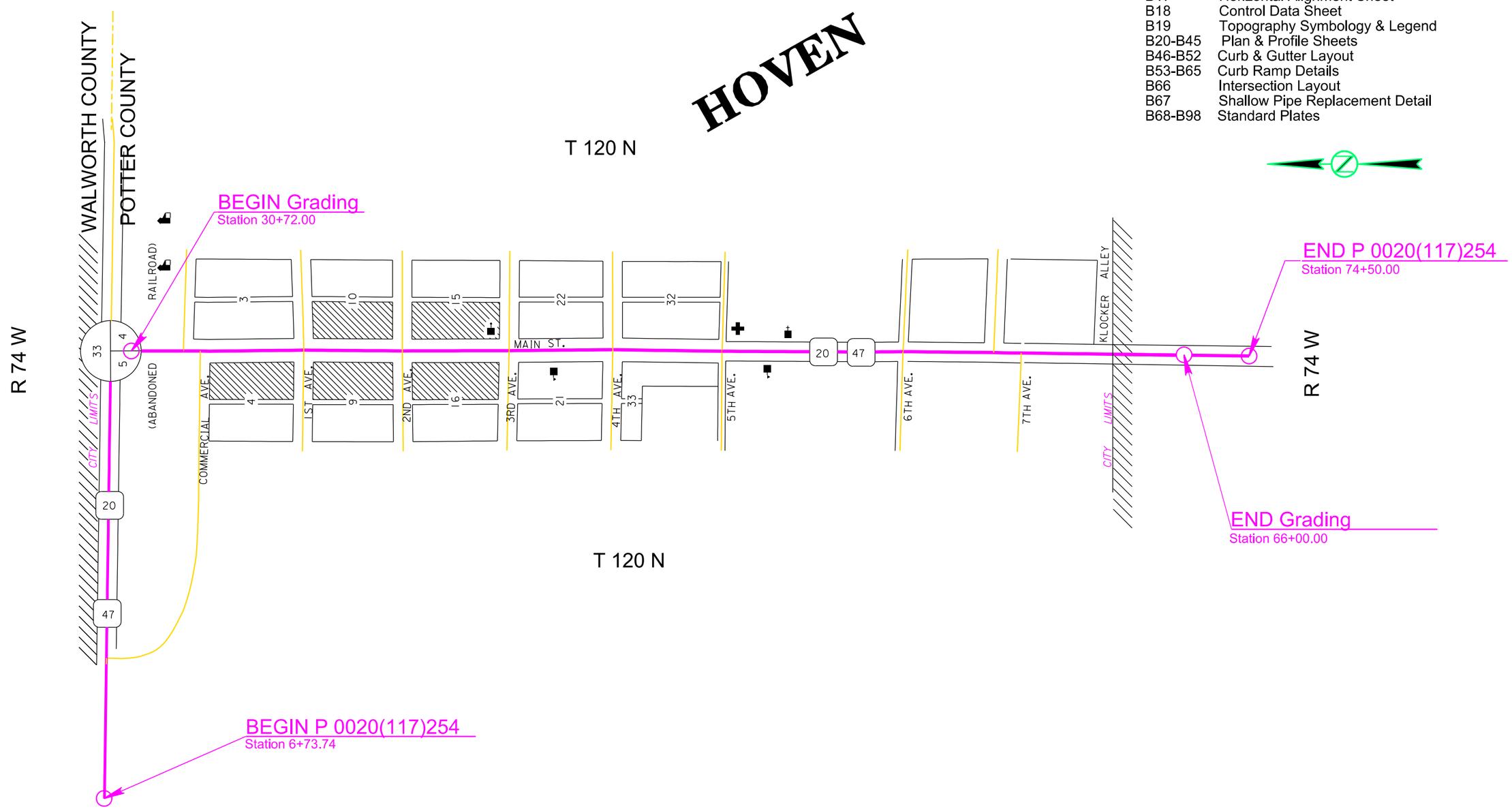

Plot Scale - 1:200
Plotted From - tpp17190
Plot Name - 1
File - U:\rd\prj\pott\02R9\TitleB.dgn

Revised 7/15/15 TJD

SECTION B ESTIMATE OF QUANTITIES

Bid Item Number	Item	Quantity	Unit
009E0010	Mobilization	Lump Sum	LS
009E3230	Grade Staking	1.336	Mile
009E3250	Miscellaneous Staking	1.316	Mile
009E3280	Slope Staking	1.316	Mile
009E3300	Three Man Survey Crew	40.0	Hour
009E4300	Construction Schedule, Category III	Lump Sum	LS
100E0100	Clearing	Lump Sum	LS
110E0300	Remove Concrete Curb and Gutter	5,567	Ft
110E0400	Remove Drop Inlet	1	Each
110E0600	Remove Fence	429	Ft
110E1130	Remove Concrete Driveway Pavement	640.3	SqYd
110E1140	Remove Concrete Sidewalk	3,849.9	SqYd
120E0010	Unclassified Excavation	44,047	CuYd
120E0900	Contaminated Material Excavation	60	CuYd
120E2000	Undercutting	14,849	CuYd
120E6100	Water for Embankment	236.1	MGal
250E0020	Incidental Work, Grading	Lump Sum	LS
270E0040	Salvage and Stockpile Asphalt Mix and Granular Base Material	16,537.5	Ton
380E1030	8" Miscellaneous PCC Pavement	30.0	SqYd
380E3520	6" PCC Approach Pavement	479.3	SqYd
380E3540	8" PCC Approach Pavement	170.8	SqYd
380E4050	8" PCC Fillet Section	637.6	SqYd
421E0100	Pipe Culvert Undercut	580	CuYd
450E0122	18" RCP Class 2, Furnish	1,570	Ft
450E0130	18" RCP, Install	1,570	Ft
450E0142	24" RCP Class 2, Furnish	776	Ft
450E0150	24" RCP, Install	776	Ft
450E0162	30" RCP Class 2, Furnish	1,354	Ft
450E0170	30" RCP, Install	1,354	Ft
450E0182	36" RCP Class 2, Furnish	390	Ft
450E0190	36" RCP, Install	390	Ft
450E0408	18" RCP Bend, Furnish	19	Each
450E0409	18" RCP Bend, Install	19	Each
450E2208	36" RCP Sloped End, Furnish	1	Each
450E2209	36" RCP Sloped End, Install	1	Each
450E3032	36" RCP Arch Class 2, Furnish	66	Ft
450E3040	36" RCP Arch, Install	66	Ft
450E3042	42" RCP Arch Class 2, Furnish	504	Ft
450E3050	42" RCP Arch, Install	504	Ft
450E3052	48" RCP Arch Class 2, Furnish	450	Ft
450E3060	48" RCP Arch, Install	450	Ft
450E3328	42" RCP Arch Bend, Furnish	1	Each
450E3329	42" RCP Arch Bend, Install	1	Each
450E4520	48" RCP Arch Flared End, Furnish	12	Each
450E4521	48" RCP Arch Flared End, Install	12	Each
450E4606	36" RCP Arch Sloped End, Furnish	2	Each
450E4607	36" RCP Arch Sloped End, Install	2	Each
450E4608	42" RCP Arch Sloped End, Furnish	7	Each
450E4609	42" RCP Arch Sloped End, Install	7	Each
450E4769	24" CMP 16 Gauge, Furnish	58	Ft
450E4770	24" CMP, Install	58	Ft
450E4779	30" CMP 16 Gauge, Furnish	74	Ft
450E4780	30" CMP, Install	74	Ft
450E5410	24" CMP Safety End, Furnish	2	Each
450E5411	24" CMP Safety End, Install	2	Each
450E5414	30" CMP Safety End, Furnish	2	Each
450E5417	30" CMP Safety End, Install	2	Each
462E0100	Class M6 Concrete	102.1	CuYd
462E0200	Controlled Density Fill	34.9	CuYd
470E0020	Pipe Handrail	8.5	Ft
480E0100	Reinforcing Steel	17,076	Lb
480E0200	Epoxy Coated Reinforcing Steel	85	Lb

SECTION B ESTIMATE OF QUANTITIES (CONTINUED)

Bid Item Number	Item	Quantity	Unit
600E0200	Type II Field Laboratory	1	Each
650E0080	Type B68 Concrete Curb and Gutter	5,169	Ft
650E1080	Type F68 Concrete Curb and Gutter	99	Ft
650E4380	Type D48 Concrete Curb and Gutter	16	Ft
650E4680	Type P8 Concrete Gutter	544	Ft
650E6280	8" Concrete Valley Gutter	175.8	SqYd
651E0040	4" Concrete Sidewalk	42,406	SqFt
651E0060	6" Concrete Sidewalk	5,105	SqFt
651E0080	8" Concrete Sidewalk	1,505	SqFt
651E0140	4" Reinforced Concrete Sidewalk	248	SqFt
651E0160	6" Reinforced Concrete Sidewalk	241	SqFt
651E5000	Sidewalk Drain	14.7	Ft
651E7000	Type 1 Detectable Warnings	767	SqFt
670E1200	Type B Frame and Grate Assembly	51	Each
670E2200	Type C Frame and Grate	3	Each
670E5340	4' x 11' Precast Concrete Type S Drop Inlet Lid	1	Each
670E5342	4' x 6' Precast Concrete Type S Drop Inlet Lid	3	Each
670E5400	Precast Drop Inlet Collar	54	Each

GRADING OPERATIONS

Water for Embankment is estimated at the rate of 10 gallons of water per cubic yard of Embankment minus Waste.

The estimated cubic yards of excavation and/or embankment required to construct outlet ditches, ditch blocks, and approaches are included in the earthwork balance notes on the profile sheets.

Special ditch grades and other sections of the roadway different than the typical sections shall be constructed to the limits shown on the cross sections. If significant changes to the cross sections are necessary during construction, the Engineer shall contact the Designer for the proposed change.

Generally, all shallow inlet and outlet ditches as noted on the plan sheets shall be cut with a 10-foot wide bottom with 5:1 backslopes. However, the Engineer may direct the Contractor to adjust the ditch width for proper alignment with the drainage structure.

Temporary fence and/or permanent fence shall be placed ahead of the grading operation unless otherwise directed by the Engineer.

A copy of the subgrade investigation report is available for review at the Pierre Region and Pierre Area offices.

TYPE II FIELD LABORATORY

The lab shall be equipped with an internet connection such as DSL, cable modem, or other approved service. The internet connection shall be provided with a multi-port wireless router. The internet connection shall be a minimum speed of 512 Kb unless limited by job location and approved by the DOT. Prior to installing the wireless router the Contractor shall submit the wireless router's technical data to the Area Office to check for compatibility with the state's computer equipment. The internet connection is intended for state personnel usage only. The Contractor's personnel are prohibited from using the internet connection unless pre-approved by the Project Engineer.

The Contractor shall submit a copy of each monthly bill for calls charged to this phone at the end of each month. The Project Engineer will then audit the bills to ensure all calls are legitimate and then initiate a Construction Change Order (CCO) to reimburse the Contractor for the actual phone calls made, including local and long distance calls. Reimbursement will not be made for fees associated with the purchase, installation, disconnection, monthly line charges, and incidentals involved in the installation, maintenance, and disconnection of the phone (including attachments). These items shall be incidental to the contract unit price per each for "Type II Field Laboratory".

The field lab shall be set up adjacent to the asphalt plant during asphalt paving operations. Separate payment will not be made for moving the lab from one location to another during construction of the project. If the Contractor's sequence of operations or asphalt plant location warrants multiple field labs on the project, no separate payment will be made.

UTILITIES

The Contractor shall be aware that the existing utilities shown in the plans were surveyed prior to the design of this project and might have been relocated or replaced by a new utility facility prior to construction of this project, might be relocated or replaced by a new utility facility during the construction of this project, or might not require adjustment and may remain in its current location. The Contractor shall contact each utility owner and confirm the status of all existing and new utility facilities. The utility contact information is provided elsewhere in the plans or bidding documents.

CLEARING

Before clearing activities begin, the Contractor shall contact the Engineer to determine the limits of clearing for the project. If the trees or shrubs that are supposed to remain within the limits of work are damaged or destroyed by the Contractor, the Contractor shall replace them with the same size and type at the Contractor's expense.

Plot Scale - 1:200
Plotted From - tmpr17192
File - ...\pr\pot02R9\NotesSectionB.dgn

Revised 7/15/15 TJD

SHRINKAGE FACTOR: Embankment +20%

TABLE OF EXCAVATION QUANTITIES BY BALANCES

Station to	Station	Excavation (CuYd)	* Undercut (CuYd)	Total Excavation (CuYd)	** Waste (CuYd)
6+73	74+50	17572	14849	32421	8808
	Totals:	17572	14849	32421	8808

* The quantities for these items are in the Estimate of Quantities under their respective bid items.
** The quantities for these items are for information only.

TABLE OF UNCLASSIFIED EXCAVATION

Excavation	17572
Undercut	14849
Topsoil	2876
Salvaged Asphalt Mix and Granular Base Material (from cut sections)	8750
Total	44047

PROCEDURES FOR DETERMINING UNCLASSIFIED EXCAVATION QUANTITY

When plan quantities are used for payment, the Unclassified Excavation quantity shall be used for final payment.

The following paragraphs are general earthwork information and information in regards to computing the Unclassified Excavation quantity when final cross sections are taken in the field:

The Unstable Material Excavation quantity is included in the Excavation quantity listed in the Table of Unclassified Excavation. When finaling a project, the Unstable Material Excavation quantity shall be added to the Excavation quantity to compute the Unclassified Excavation quantity.

The Topsoil quantity in the Table of Unclassified Excavation is an estimate. When finaling a project, the total quantity of field measured Topsoil shall be used in place of the estimated Topsoil quantity. The quantity of Topsoil from the cuts will be paid for twice as Unclassified Excavation, as it will be in both the Excavation and Topsoil quantities. This will be full compensation for Excavation, which includes necessary undercutting to provide space for placement of topsoil.

The Excavation quantities from individual balances and the Table of Unclassified Excavation have been reduced by the volume of in place surfacing that will be removed.

UNDERCUTTING

In all cut sections the earthen subgrade shall be undercut 2 feet below the earthen subgrade surface. The undercut material or other suitable material, as directed by the Engineer, shall then be replaced and compacted to the density specified for the section being constructed.

Shallow embankment sections, fills less than 2 feet in height measured at the finished subgrade shoulders, shall be undercut to ensure a minimum 2 foot height of earth embankment for the entire width of roadbed. The upper 6 inches of undercut material that consists of topsoil with a high humus content shall be used as topsoil, placed in the fill slopes outside the shoulders of the earthen subgrade, or placed in the lower portion (below 4 foot depth) in fills which are greater than 4 feet in height. The remaining undercut soil and soil obtained from adjacent excavation (excluding the upper 6 inches) shall then be replaced and compacted to the density specified for the section being constructed.

The plan shown quantity will be the basis of payment. However, if there are additional areas of undercut other than what is shown in the plans, the Engineer shall direct removal of these areas and the additional areas will be measured according to the Engineer.

TABLE OF UNDERCUTTING

Station	to	Station	Quantity (CuYd)
30+72		48+00	7089
48+00		66+00	6996
For Sidewalk		See table Below	764
		Total:	14849

UNDERCUTTING FOR SIDEWALK

Sidewalk placed adjacent to buildings at the locations in the following table shall be undercut 2 feet below the bottom of the proposed sidewalk granular cushion material. Limits of this undercut are from the outside edge of the roadway undercut to the outside edge of the sidewalk (edge of building). The undercut material or other suitable material, as directed by the Engineer, shall then be replaced and compacted to the density specified for the adjacent roadway undercut. Undercutting for sidewalk shall meet the requirements for Undercutting and the quantity is included in the quantity of Undercutting.

The Contractor shall be responsible to determine the condition of the adjacent building foundations and determine construction methods that will not damage the buildings. The Contractor shall be responsible for any damage to the buildings resulting from highway construction activities.

Station	to	Station	L/R	Quantity (CuYd)
35+65		36+37	R	56
38+05		39+18	R	92
38+45		39+50	L	101
40+55		43+46	L	280
40+57		43+46	R	235
			Total:	764

SALVAGE AND STOCKPILE ASPHALT MIX AND GRANULAR BASE MATERIAL

An estimated 16537.5 tons (8750 Cubic Yards) of asphalt mix and granular base material shall be salvaged from the entire length of the existing highway and stockpiled at a site furnished by the Contractor and satisfactory to the Engineer.

The quantity of salvage asphalt mix and granular base material may vary from the plans. No adjustment will be made to the contract unit price for variations of the quantity of "Salvage and Stockpile Asphalt Mix and Granular Base Material."

It is estimated that there are 248 cubic yards of salvageable material per station. This rate was used to compute the unclassified excavation quantities. The rate of salvageable material is based on a 47.3 foot width.

The following table is furnished for information only.

Station	Distance from Centerline (Feet) Lt.	Rt.	Thickness of Asphalt Mix Material (Inches)	Thickness of Granular Material (Inches)
32+00	5.4		12	6
35+50	6.6		10	4
43+58	7.0		10	8
46+00	5.6		12	6
50+00	6.0		11	6
56+00	6.2		12	4
61+00	6.8		12	8
66+00	6.7		12	5
	Average Thickness:		11.4	5.9

Plot Scale - 1:200
Plotted From - tmpr17192
File - ...\prj\pott02R9\NotesSectionB.dgn

TABLE OF PIPE CULVERT UNDERCUT

The Table of Pipe Culvert Undercut is intended to be used to establish an estimated quantity of Pipe Culvert Undercut for bidding purposes only. The table includes undercut for 36 inch and larger pipe culverts. The depth of undercut is an estimate and the actual depth necessary shall be determined during construction. The pipes shown in the table will require 2 feet of undercut as shown in the "Shallow Pipe Replacement Detail". Other pipes not shown in the table may require undercutting. The Engineer will determine which pipe shall be undercut in accordance with Section 421 of the Specifications.

Station	Undercut Depth (Ft)	Quantity (CuYd)
XR30-40+30 and XR30-40+61	2	580
	Total:	580

The table contains the rate of pipe culvert undercut per foot of pipe length and should be used as an aid in determining the actual amount of undercut to be performed during construction. The table is derived from the drawing below and conforms to the Standard Specifications. When calculating pipe culvert undercut, the length of pipe ends should be included in the overall pipe length.

Storm sewer and approach pipes do not require undercutting unless specified otherwise in these plans.

TABLE OF PIPE CULVERT UNDERCUT (CONTINUED)

Pipe Diameter (In)	Round Pipe Undercut Rate for 1' Depth (CuYd/Ft)	Arch Pipe Undercut Rate for 1' Depth (CuYd/Ft)
24	0.2407	0.2577
30	0.2623	0.2847
36	0.2840	0.3110
42	0.3056	0.3337
48	0.3272	0.3596
54	0.3488	0.3827
60	0.3704	0.4105
66	0.3920	---
72	0.4136	0.4630
78	0.4352	---
84	0.4568	0.5123
90	0.4784	---

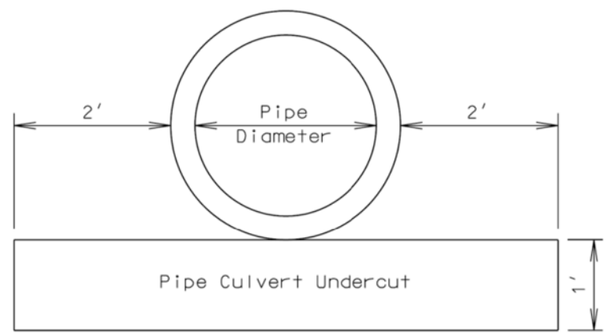

SHALLOW PIPE REPLACEMENT

Pipe culverts at depths of less than 10' (measured from the flow line to the lowest elevation of either the existing ground line, undercut line, or bottom of removed or salvaged surfacing) as shown in the "Table of Shallow Mainline Pipe Installation" shall be installed in accordance with the following note and as shown on the "Shallow Pipe Replacement Detail".

This work shall be completed prior to the commencement of cold milling operations on the project.

After the existing pipe has been removed, the new pipe culvert shall be undercut to a minimum depth of 2 feet and backfilled with base course. The depth of undercut is an estimate and the actual depth necessary shall be determined during construction. The Engineer will determine how much undercut shall be done in accordance with Section 421 of the Specifications, but will not reduce the undercut to less than 2 feet in depth. Compaction of the undercut backfill will be in accordance with Section 421.3A.

SHALLOW PIPE REPLACEMENT (CONTINUED)

The undercut depth at the multiple pipe installation has been increased to alleviate potential frost action. Because the pipes are within close proximity of each other, there is an increased area for frost to penetrate into the foundation soil.

The culvert bedding shall be base course material and shall be thoroughly compacted to provide a firm uniform foundation. The foundation shall then be shaped (cradled) to fit the lower part of the pipe, and the pipe shall be laid on a three inch thick layer of sand. The Contractor shall ensure that the cradle is constructed at an elevation such that after placing the three inches of sand in the cradle, the flowline elevation of the pipe is correct. Base course shall then be placed in 6 inch layers and compacted with mechanical tampers, to at least the height of the spring line of the arch pipe.

The remainder of the pipe culvert excavation shall be backfilled with soils taken from the pipe removal excavation or other suitable material as approved by the Engineer. The backfill will be benched into the 2:1 excavation slope. Compaction of the backfill material shall be governed by the Specified Density Method.

The minimum testing as shown in M.S.T.R Section 4.1.E.3.a.1 will be required.

After the new pipe has been backfilled to the top of the subgrade, surfacing shall be placed as detailed in Section F.

All costs to remove the asphalt concrete pavement, including full depth saw cutting of the asphalt concrete pavement shall be incidental to the contract unit price per square yard for "Remove Asphalt Concrete Pavement". Base Course for pipe undercut backfill and bedding shall be paid for at the contract unit price per ton for "Base Course" in Section F. Pipe Culvert Undercut shall be paid for at the contract unit price per cubic yard for "Pipe Culvert Undercut". Excavation necessary for shallow mainline pipe installation and the bedding sand shall be incidental to the contract unit price per foot for the corresponding pipe installation bid items.

TABLE OF SHALLOW PIPE INSTALLATION

Station	Arch Pipe Size (Inches)
XR30-40+30	48
XR30-40+61	48

Plot Scale - 1:200
Plotted From - tmpr17192
File - ...\prj\pott02R9\NotesSectionB.dgn

INCIDENTAL WORK, GRADING

Station		L/R	Remarks
9+50		L	Take out 18”-50’ CMP and 2 Flared Ends
19+56		R	Take out 36”-48’ RCP Arch and 2 End Sections
20+75		L	Take out 30”-48’ and 2 Flared Ends
27+21		R	Take out 36”-43’ CMP and 2 End Sections
30+05		L	Take out 18”-41’ RCP and 1 End Section
30+96			Take out 36”-64’
32+58		L	Take out 18”-50’ RCP
42+95		L	Remove and Reset Mailbox
45+76		L	Take out Concrete Footing
45+78	to	L	Take out Concrete Curb
46+99			
65+46		R	Take out 24”-74’ CMP and 2 End Sections
65+43		L	Take out 24”-74’ CMP and 2 End Sections
66+76		R	Take out 18”-59’ RCP and 2 End Sections

TABLE OF CONCRETE CURB AND GUTTER REMOVAL

The Table of Concrete Curb and Gutter Removal includes the removal of curb and gutter, gutter, and curb. The curb and gutter in several locations may be covered by existing asphalt concrete.

Station	to	Station	L/R	Quantity (Ft)
31+69		32+04	R	44.6
32+13		32+47	R	41.7
32+56		33+15	R	95.2
32+94		33+20	L	37.4
33+30		34+08	L	88.6
33+43		34+35	R	121.2
34+45		35+54	R	113.9
34+96		35+80	L	84.0
35+60		36+45	R	93.3
36+23		36+45	L	38.3
36+95		36+95	L	16.8
37+05		37+96	L	91.4
36+06		43+45	R	638.4
38+29		39+39	L	109.7
40+49		43+44	L	302.8
43+99		44+26	R	32.4
44+10		44+88	L	82.9
44+80		47+00	R	224.8
44+91		47+12	L	253.3
47+12		47+12	R	17.2
47+52		47+52	R	11.3
47+52		48+43	L	103.4
47+58		48+32	R	79.8
48+37		49+77	R	149.0
48+52		48+93	L	50.6
48+09		50+84	L	185.9
51+10		52+04	L	100.8
51+32		55+04	R	376.7
52+11		53+03	L	94.2
53+21		57+04	L	387.0
55+18		57+02	R	188.7
57+36		62+27	R	561.7
57+46		59+13	L	201.8
59+29		59+59	L	37.6
59+68		60+16	L	54.6
60+54		61+61	L	107.2
62+33		63+80	R	153.3
63+89		65+71	R	195.7
			Total:	5567.2

TABLE OF CONCRETE DRIVEWAY PAVEMENT REMOVAL

Station	to	Station	L/R	Quantity (SqYd)
31+96		32+21	R	30.6
32+39		32+64	R	14.6
33+13		33+39	L	20.2
33+45		33+51	R	4.7
34+08		34+96	L	122.2
34+27		34+50	R	11.2
35+48		35+67	R	8.0
35+80		36+24	L	62.0
37+96		38+29	L	18.3
39+39		39+81	L	43.2
39+96		40+03	L	11.7
44+01		44+87	R	147.6
44+82		44+96	L	5.2
45+48		45+77	L	13.2
48+25		48+44	R	6.8
48+36		48+59	L	9.7
48+87		49+14	L	15.0
49+70		49+90	R	7.4
52+98		53+26	L	16.3
54+99		55+24	R	12.1
57+99		58+16	L	20.9
59+07		59+36	L	13.8
59+58		59+76	L	8.2
62+19		62+41	R	9.3
63+76		63+93	R	8.1
			Total:	640.3

Plot Scale - 1:200
Plotted From - trgt17192
File - ...\pr\jpott02R9\NotesSectionB.dgn

TABLE OF SIDEWALK REMOVAL

Station	to	Station	L/R	Quantity (SqYd)
31+71		31+01	R	15.4
32+15		32+44	R	14.5
32+58		33+12	R	42.8
33+46		34+33	R	46.2
34+47		35+52	R	59.1
34+96		35+80	L	95.0
35+62		36+43	R	88.2
36+23		36+45	L	29.1
36+98		39+49	L	282.3
36+98		39+97	R	338.7
40+51		43+52	L	344.3
40+52		43+53	R	331.5
44+02		47+09	L	265.4
44+78		47+11	R	213.7
47+53		50+83	R	235.0
47+55		50+82	L	266.9
51+13		57+08	L	442.4
51+30		57+00	R	348.5
57+37		59+15	R	85.9
57+48		58+00	L	22.9
58+14		60+13	L	85.0
59+27		59+85	R	24.7
59+98		61+15	R	53.1
61+45		63+32	R	82.2
63+95		64+75	R	37.1
			Total:	3849.9

TABLE OF DROP INLET REMOVAL

All costs for removal of the frame and grate assembly shall be incidental to the contract unit price per each for “Remove Drop Inlet”.

Station	L/R	Quantity (Each)
65+52	R	1
	Total:	1

CORRUGATED METAL PIPE

Corrugated metal pipes shall have 2 ⅔-inch X ½-inch corrugations for 42-inch and smaller round pipe and 48-inch and smaller arch pipe unless otherwise stated in the plans. Corrugated metal pipes shall have 3-inch X 1-inch or 5-inch X 1-inch corrugations for 48-inch and larger round pipe and 54-inch and larger arch pipe unless otherwise stated in the plans.

The gauge of the corrugated metal ends shall match the thickest gauge of corrugated metal pipe it is connected to.

PIPE FOR APPROACHES AND INTERSECTING ROADS

Class II reinforced concrete pipe, high density polyethylene pipe, corrugated polypropylene pipe, or steel reinforced polyethylene pipe may be substituted for corrugated metal pipe at approaches and intersecting roads at no additional cost to the State.

If corrugated metal pipes are provided, the pipes shall be as specified in the CORRUGATED METAL PIPE note.

If high density polyethylene pipe, corrugated polypropylene pipe, or steel reinforced polyethylene pipe are provided, then the end sections shall be metal, be compatible, and conform to the type of end section as shown in the plans.

CONTROLLED DENSITY FILL FOR PIPE

Controlled density fill shall be in conformance with Section 464 of the Specifications.

The controlled density fill shall be placed between the pipes from the base of pipe elevation to the haunch of the pipes.

TABLE OF CONTROLLED DENSITY FILL FOR PIPE

Station	L/R	Quantity (CuYd)	Fill Height (between pipes) (ft)
9+50	L	7.54	1.23
20+71	L	6.28	1.23
SD20-40+30		21.04	1.23
SD20-40+61			
	Total:	34.9	

CONCRETE PIPE CONNECTIONS

Pipe connections to existing pipes, manholes, junction boxes, and drop inlets shall be done by breaking a hole into the existing structure and inserting the pipe. A concrete collar shall then be poured around the pipe in the area of the connection.

When it is not possible to use a normal pipe joint (male-female ends), connections to existing pipe shall be made by placing a 2’ wide by 6" thick M6 concrete collar around the outside of the connection. The concrete collar shall be reinforced with 6x6 W2.9 x W2.9 wire mesh.

All costs for constructing the concrete collars including materials and labor shall be incidental to the contract unit price per foot for the corresponding pipe bid item.

STORM SEWER

Reinforced concrete pipe may be either bell and spigot or tongue and groove. The pipe sections shall be adjoined such that the ends are fully entered and the inner surfaces are reasonably flush and even.

Lift holes in the reinforced concrete pipe shall be plugged with grout.

Watertight joints are required for reinforced concrete pipe, drop inlets, manholes, and junction boxes where storm sewers run parallel to and within 10 feet horizontally from existing or proposed water mains.

Watertight joints are required where reinforced concrete pipes, drop inlets, manholes, or junction boxes cross water mains and are separated a distance of 18 inches or less, above or below, the water main.

If watertight joints are required then the watertight joints shall extend for a distance of 10 feet beyond the water main. This measurement shall be from the sealed concrete joint to the outer most surface of the water main.

Watertight joint seals shall conform to the following requirements:

1. Reinforced Concrete Pipe (Circular): Gasketed pipe shall conform to the requirements of ASTM C443. Non-gasketed concrete pipe shall be sealed with a mastic joint seal conforming to the requirements of ASTM C990 and encased with a minimum 2’ wide by 6” thick M6 concrete collar reinforced with 6x6 W2.9 x W2.9 wire mesh.

2. Reinforced Concrete Pipe (Arch): Joints shall be sealed with a waterstop seal meeting the requirements of ASTM C990. Waterstop seals shall consist of hydrophilic compounds such as Waterstop-RX or ConSeal CS-231.

3. Drop Inlets, Manholes, and Junction Boxes: Joints shall be sealed with a waterstop seal or seal wrap meeting the requirements of ASTM C990 or encased with a minimum 2’ wide by 6” thick M6 concrete collar reinforced with 6x6 W2.9 x W2.9 wire mesh. Waterstop seal shall contain hydrophilic compounds such as Waterstop-RX or ConSeal CS-231. Seal wrap shall be a self adhesive external joint wrap such as ConWrap CS-217 or Mar Mac Seal Wrap.

Gaskets and seals (mastic, waterstop, and seal wraps) shall be installed in accordance with the manufacturer’s recommendations.

The cost for furnishing and installing all gaskets, mastic joint seal, waterstop seal, seal wrap, concrete collars, and for plugging the lift holes shall be incidental to the contract unit price per foot for the corresponding pipe bid item.

Plot Scale - 1:200
Plotted From - tmpr17192
File - ...\prj\pott02R9\NotesSectionB.dgn

DROP INLETS

Where drop inlets are constructed within areas of curb and gutter, the Contractor shall construct weep holes of at least 3 inches in diameter in the drop inlet walls. The weep holes shall be constructed at the same elevation as the adjacent top of the earthen subgrade and shall be maintained clean and open at all times until the permanent surfacing is placed. The drop inlets shall be covered throughout construction operations as necessary with an Engineer approved cover to provide safe travel for motorists and to prevent materials from entering the storm sewer system. After the permanent surfacing has been placed, the Contractor shall seal the weep holes with grout and remove all debris from the drop inlet. All costs involved with the coverings, weep holes, and removing debris from the drop inlets shall be incidental to the contract unit prices for the components of the drop inlets.

The plan shown quantities of the drop inlet components such as Class M6 Concrete, Reinforcing Steel, Type B Frame and Grate Assembly, Type C Frame and Grate, Precast Drop Inlet Collar, and Precast Concrete Type S Drop Inlet Lid will be the basis of payment for these items.

If additions or reductions to the number of drop inlets are ordered by the Engineer, payment for the components required to construct the drop inlets will be made at the contract unit prices for the components of the drop inlets.

The Department has permitted St. Anthony Catholic Church of Hoven, SD to place 1 - 8” storm sewer line into the east side of the drop inlets at station 54+14.6-25.67’ L and 55+53.3-25.67’ L respectively. The Contractor shall coordinate his work with the permittee, represented by Vern Rausch; phone number (605) 948-2375.

TABLE OF DROP INLETS AND QUANTITIES

Station	L / R	Drop Inlet Size	Drop Inlet Type	Class M6 Concrete (CuYd)	Reinf. Steel (Lb)	Concrete Collar (Each)	Frame and Grate/Lid Type
30+97.7	R	5.5x5.5	B	5.13	1555	1	B
32+10.0	R	7x11	S	4.39	765	0	S
32+84.3	R	5.5x5.5	B	3.90	1301	1	B
32+84.9	L	3x4	C	1.16	129	1	C
33+05.1	L	5.5x5.5	B	3.84	1286	1	B
33+75.8	L	3x4	B	1.79	255	1	B
33+75.8	R	2x3	B	0.96	105	1	B
35+15.3	L	3x4	B	1.77	253	1	B
36+20.3	L	4x4	B	2.15	416	1	B
36+46.1	L	2x3	B	1.01	114	1	B
36+96.7	L	2x3	B	0.98	107	1	B
37+22.6	L	3x4	B	1.84	253	1	B
37+24.9	R	2x3	B	0.92	102	1	B
38+32.3	L	3x4	B	1.87	251	1	B
39+55.3	L	4x4	B	2.28	426	1	B
39+83.1	L	2x3	B	0.95	109	1	B
40+52.4	L	4x6	S	3.90	661	0	S
40+75.5	L	3x4	B	2.00	270	1	B
40+75.9	R	2x3	B	0.93	103	1	B

TABLE OF DROP INLETS AND QUANTITIES (CONTINUED)

41+62.4	L	3x4	B	2.04	269	1	B
42+49.5	L	3x4	B	1.93	257	1	B
43+34.7	L	4x4	B	2.28	426	1	B
43+53.2	L	2x3	B	0.91	106	1	B
44+00.4	L	2x3	B	0.92	101	1	B
44+29.7	L	4x6	S	3.84	680	0	S
44+29.7	R	4x6	S	3.42	607	0	S
44+75.0	L	3x4	B	1.73	225	1	B
45+80.5	L	3x4	B	1.58	214	1	B
45+80.5	R	2x3	B	0.87	97	1	B
46+85.5	L	3x4	B	1.57	214	1	B
47+10.3	L	2x3	B	0.93	102	1	B
47+53.5	L	2x3	B	0.97	106	1	B
47+78.3	L	3x4	B	1.54	211	1	B
47+78.4	R	2x3	B	0.85	96	1	B
48+83.6	L	2x3	B	0.82	101	1	B
48+83.6	R	2x3	B	0.87	97	1	B
49+62.7	L	2x3	B	0.89	99	1	B
50+82.9	L	2x3	B	0.98	107	1	B
51+11.6	L	2x3	B	1.00	114	1	B
51+40.4	L	2x3	B	0.90	104	1	B
52+78.5	L	2x3	B	0.90	104	1	B
54+14.6	L	3x4	B	1.65	213	1	B
55+53.3	L	3x4	B	1.67	219	1	B
56+72.7	R	2x3	B	0.89	99	1	B
56+86.8	L	3x4	B	1.60	222	1	B
57+15.7	L	2x3	B	0.86	101	1	B
57+48.3	L	2x3	B	0.89	99	1	B
59+03.8	L	3x4	B	1.64	216	1	B
60+03.5	L	4x4	B	2.06	389	1	B
60+18.4	L	3x4	C	1.43	158	1	C
60+51.2	L	2x3	B	0.88	102	1	B
60+63.4	L	3x4	C	1.31	147	1	C
60+90.5	R	2x3	B	0.99	108	1	B
61+24.6	L	4x4	B	2.06	395	1	B
62+51.9	L	4x4	B	2.31	423	1	B
64+00.0	L	4x4	B	2.32	424	1	B
64+00.0	R	4x4	B	2.39	433	1	B
65+46.1	R	4x4	B	2.31	430	1	B
			Totals:	100.77	17076	54	

Total Type B Frame and Grate Assembly	51
Total Type C Frame and Grate	3
Total 4’x6’ Precast Concrete Type S Drop Inlet Lid	3
Total 7’x11’ Precast Concrete Type S Drop Inlet Lid	1

8” PCC FILLET SECTIONS

Payment for “8” PCC Fillet Section” shall be based on plans quantity. If additions or reductions to the area of PCC fillet sections are ordered by the Engineer, payment will be made in accordance with the contract unit price per square yard for “8” PCC Fillet Section”.

TYPE 1 DETECTABLE WARNINGS

Detectable warnings shall be in compliance with the Americans with Disability Act regulations.

The detectable warnings shall be installed according to the manufacturer’s installation instructions.

A concrete thickness equal to the adjacent concrete sidewalk thickness and 2 inches of granular cushion material shall be placed below the Type 1 Detectable Warnings. When concrete is placed below the detectable warnings then the concrete thickness shall be transitioned at the rate of 1” per foot to match the adjacent concrete sidewalk thickness.

The detectable warnings shall be a brick red color for application in concrete curb ramps. Cast iron plates may be a natural patina (weathered steel).

When Type 1 Detectable Warnings are specified, the Contractor shall furnish and install only one of the products listed in the Type 1 Detectable Warnings table.

Type 1 Detectable Warnings

Product	Manufacturer
Detectable Warning Plate Cast Iron Plate	Neenah Foundry Company Neenah, WI 800-558-5075 http://www.neenahfoundry.com/
Detectable Warning Plate Cast Iron Plate	Deeter Foundry Lincoln, NE 800-234-7466 http://www.deeter.com/
Detectable Warning Plate Cast Iron Plate(No Coating)	East Jordan Iron Works, Inc. 301 Spring Street East Jordan, MI 49727 800-626-4653 http://www.ejiw.com

Type 1 Detectable Warnings shall be installed along a radius at the locations as shown in the plans. The radius necessary shall be as shown in the plans. Payment for the radius detectable warnings shall be at the contract unit price per square foot for “Type 1 Detectable Warnings”.

Plot Scale - 1:200
Plotted From - tnpr17192
File - ...\prj\pott02R9\NotesSectionB.dgn

TYPE 1 DETECTABLE WARNINGS (CONTINUED)

When Type 1 Detectable Warnings with a radius are specified, the Contractor shall furnish and install an appropriately sized product listed in the following Type 1 Detectable Warnings (Radius) table.

Type 1 Detectable Warnings (Radius)

Product	Manufacturer
Detectable Warning Plate Cast Iron Plate 20' Radius	Neenah Foundry Company Neenah, WI 800-558-5075 http://www.neenahfoundry.com/
Detectable Warning Plate Cast Iron Plate (No Coating) 10' and 20' Radius	East Jordan Iron Works, Inc. 301 Spring Street East Jordan, MI 49727 800-626-4653 http://www.ejiw.com

STEEPENED SIDEWALK

Steepened sidewalk has a cross slope greater than 2%. Steepened sidewalk is provided between the back of curb and the minimum 5 ft wide pedestrian access route. The locations and limits of the steepened sidewalk may need to be adjusted during construction. All costs associated with steepened sidewalk shall be incidental to the contract unit price per square foot for the corresponding concrete sidewalk bid item.

SIDEWALK DRAINS

At the locations noted in the Table of Sidewalk Drains, drainage from the adjacent parking lot will be carried through the sidewalk to the gutter. The sidewalk drains shall be constructed in accordance with the details shown on Standard Plate 651.50.

TABLE OF SIDEWALK DRAINS

Station	L/R	Length (Ft)
39+58	L	14.7
	Totals:	14.7

Plot Scale - 1:200
Plotted From - tmpr17192
File - ...\prj\pott02R9\NotesSectionB.dgn

TABLE OF CONSTRUCTION STAKING

(See Special Provision for Contractor Staking)

Roadway and Description	Begin Station	End Station	Number of Lanes	Length (Ft)	Grade Staking: Length (Mile)	Grade Staking: Lane Factor	Grade Staking: *Sets of Stakes	Grade Staking: **Grade Staking Quantity (Mile)	Miscellaneous Staking Quantity (Mile)	Slope Staking Quantity (Mile)
SD 20/47 (Ditch Grading)	6+73	30+72	0	2399	0.454	0	0	0	0.454	0.454
SD 20/47 (2 Lanes AC Pavement)	30+72	66+00	2	3528	0.668	1	2	1.336	0.668	0.668
SD 20/47 (Ditch Grading)	66+00	74+50	0	850	0.161	0	0	0	0.161	0.161
XR30 (Ditch Grading)	40+24	42+00	0	176	0.033	0	0	0	0.033	0.033
							Totals:	1.336	1.316	1.316

* 2 = Blue Top (Subgrade and Base Course)

** Grade Staking Quantity = (Length) x (Lane Factor) x (Sets of Stakes)

SLIP RESISTANT COATING FOR CONCRETE STAIRWAY

Curing compounds shall not be utilized on concrete stairway treads during the concrete curing process. Curing shall be accomplished with a double layer of burlap mats and polyethylene sheeting.

The Contractor shall apply a 2" wide slip resistant coating at the front of each stairway tread for the full width of the tread.

The slip resistant coating shall be a red, tile red, or brick red color. The coating shall be a single component epoxy and have a minimum coefficient of friction value of 0.9 for dry and 0.9 for wet as determined by ASTM F 609.

The slip resistant coating shall be applied in accordance with the manufacturer's recommendations.

All cost for furnishing and applying the slip resistant epoxy coating including equipment, labor, and materials shall be incidental to various contract items.

TABLE OF CONCRETE STAIRWAYS

Station	L/R	Top Landing Elev.	Bottom Landing Elev.	No. of Steps (w)	Class M6 Concrete (CuYd)	Epoxy Coated Reinf. Steel (Lb)	* Structure Exc. (CuYd)	Pipe Handrail (Ft)
50+35	R	1909.84	1908.61	2	1.10	85	2.38	8.46
				Totals:	1.10	85	2.38	8.46

* The quantities for structure excavation are for informational purposes only. Payment for all work necessary for structure excavation shall be incidental to the various contract unit prices for the items listed in the above table.

Plot Scale - 1:200
Plotted From - tnpt17192
File - ...\pr\pott02R9\NotesSectionB.dgn

TABLE OF PIPE QUANTITIES

STATE OF SOUTH DAKOTA	PROJECT	SHEET	TOTAL SHEETS
	P 0020(117)254	B10	B98

Plotting Date: 07/06/2015

	Corrugated Metal Pipe				Reinforced Concrete Pipe																				
	CMP		Safety End		RCP				Sloped Ends		RCP Arch			Sloped Ends Arch		Flared Ends Arch		Bend (All bends were designed with a 4' laying length)							
	24" 16 Ga	30" 16 Ga	24"	30"	18" Cl. 2	24" Cl. 2	30" Cl. 2	36" Cl. 2		36"	36" Cl. 2	42" Cl. 2	48" Cl. 2	36"	42"		48"	18" 30°	18" 40°	18" 45°	18" 50°	18" 55°	18" 58°	18" 60°	42" Arch 26°
Station Offset (L/R)	Ft	Ft	Each	Each	Ft	Ft	Ft	Ft		Each	Ft	Ft	Ft	Each	Each		Each	Each	Each	Each	Each	Each	Each	Each	Each
9+50 - 50' L													96				4								
19+57 - 52' R												58			2										
20+71 - 50.15' L													80				4								
24+09 - 50' R												90			2										
27+19 - 54.5' R												98			2										
30+24 - 48' L		74		2																					
65+47 - 49' L	58		2																						
71+50 - 56.5' R											66			2											
29+54.4 - 63.05'R to 30+97.7 - 25.64'R												44			1										
30+97.7 - 25.64'R to 32+10.0 - 29.60'R												104													
32+10.0 - 29.60'R to 32+84.3 - 25.64'R												66													
32+84.9-59.15'L to 32+84.9-47.06					24																1				
32+84.9 - 47.06'L to 33+05.1 - 25.70'L					8																1				
32+84.3 - 25.64'R to 33+05.1 - 25.70'L *												44													2
32+84.3- 25.64'R to 33+75.8 - 25.65'R *					88																				
33+05.1 - 25.70'L to 33+75.8 - 25.69'L								68																	
33+75.8 - 25.69'L to 35+15.3 - 25.69'L								138																	
35+15.3 - 25.69'L to 36+20.3 - 25.69'L								102																	
36+20.3 -25.69'L to 36+46.1 - 49.52'L					28														1		1				
36+20.3 - 25.69'L to 37+22.6 - 25.69'L							100																		
36+46.1 - 49.52'L to 36+96.7 - 47.68'L					48																				
37+22.6 - 25.69'L to 38+32.3 - 25.68'L							108																		
37+22.6 - 25.69'L to 37+24.9 - 25.65'R *					50																				
38+32.3 - 25.68'L to 39+55.3 - 25.68'L							120																		
39+55.3 - 25.68'L to 40+75.5- 25.68'L							118																		
39+55.3 - 25.68'L to 39+83.1 - 44.20'L					26													1						1	
39+83.1 - 44.20'L to 40+52.4 - 61.74'L					70																				
40+75.5 - 25.68'L to 40+75.9- 25.66'R *					50																				
40+75.5 - 25.68'L to 41+62.4 - 25.68'L							84																		
41+62.4 - 25.68'L to 42+49.5- 25.67'L							84																		
42+49.5 - 25.67'L to 43+34.7 - 25.67'L							82																		
43+53.2 - 44.72'L to 44+00.4 - 40.50'L					46																				
43+34.7 - 25.67'L to 43+53.2 - 44.72'L					18																		2		
43+34.7 - 25.67'L to 44+29.7 - 28.13'L							90																		
44+29.7 - 28.13'L to 44+75.0 - 25.67'L						42																			
44+75.0 - 25.67'L to 45+80.5 - 25.67'L						102																			
44+29.7 - 28.13'L to 44+29.7 - 28.13'R *					54																				
45+80.5 - 25.67'L to 45+80.5 - 25.67'R *					50																				
45+80.5 - 25.67'L to 46+85.5 - 25.67'L						102																			
46+85.5 - 25.67'L to 47+78.3 - 25.67'L *						90																			
46+85.5 - 25.67'L to 47+10.3 - 50.63'L					28																	2			
47+53.5 - 50.50'L to 47+78.3 - 25.67'L					28																	2			
Subtotal:	58	74	2	2	616	336	786	308		0	66	504	176	2	7		8	1	1	0	3	4	2	1	2

Pipes denoted with an asterisk(*) indicate that the entire length or a portion of the pipe requires watertight joints in accordance with the STORM SEWER plan note.

Plot Scale - 1:200

Plotted From - tnpr17192

File - ...trd\prj\pottt02R9\Tablepipe.dgn

TABLE OF PIPE QUANTITIES

STATE OF SOUTH DAKOTA	PROJECT	SHEET	TOTAL SHEETS
	P 0020(117)254	B11	B98

Plotting Date: 07/06/2015

Station Offset (L/R)	Corrugated Metal Pipe				Reinforced Concrete Pipe																				
	CMP		Safety End		RCP				Sloped Ends		RCP Arch			Sloped Ends Arch		Flared Ends Arch		Bend (All bends were designed with a 4' laying length)							
	24" 16 Ga	30" 16 Ga	24"	30"	18" Cl. 2	24" Cl. 2	30" Cl. 2	36" Cl. 2		36"	36" Cl. 2	42" Cl. 2	48" Cl. 2	36"	42"		48"	18" 30°	18" 40°	18" 45°	18" 50°	18" 55°	18" 58°	18" 60°	42" Arch 26°
	Ft	Ft	Each	Each	Ft	Ft	Ft	Ft		Each	Ft	Ft	Ft	Each	Each		Each	Each	Each	Each	Each	Each	Each	Each	Each
47+78.3 - 25.67'L to 48+83.6- 25.67'L					102																				
47+78.3 - 25.67'L to 47+78.4 - 21.67'R *					46																				
48+83.6 - 25.67'L to 49+62.7 - 25.67'L					76																				
48+83.6 - 25.67'L to 48+83.6 -21.67'R *					46																				
50+82.9 - 50.50'L to 51+11.6 - 50.50'L					28																				
51+11.6 - 50.50'L to 51+40.4 - 25.67'L					30														1		1				
51+40.4 - 25.67'L to 52+78.5 - 25.67'L					136																				
52+78.5 - 25.67'L to 54+14.6 - 25.67'L					134																				
54+14.6 - 25.67'L to 55+53.3 - 25.67'L					136																				
55+53.3 - 25.67'L to 56+86.8 - 25.67'L						130																			
56+86.8 - 25.67'L to 57+15.7 - 50.50'L					30																		2		
56+72.7 - 25.67'R to 56+86.8 - 25.67'L *					52																				
56+86.8 - 25.67'L to 59+03.8 - 25.67'L *						214																			
57+15.7 - 50.50'L to 57+48.3 - 56.50'L *					32																				
59+03.8 - 25.67'L to 60+03.5 - 25.67'L						96																			
60+03.5 - 25.67'L to 60+16.4 - 41.03'L					16																1				
60+03.5 - 25.67'L to 61+24.6 - 21.67'L							118																		
60+18.4- 41.03'L to 60+51.2 - 46.56'L					32																				
60+51.2 - 46.56'L to 60+63.4 - 50.99'L					12																				
60+90.5 - 21.67'R to 61+24.6 - 21.67'L *					46															2					
61+24.6- 21.67'L to 62+51.9 - 21.67'L							124																		
62+51.9 - 21.67'L to 64+00.0 - 21.67'L							144																		
64+00.0 - 21.67'L to 65+46.1 - 21.67'R *							40																		
64+02.0 - 21.67'R to 65+44.0 - 21.67'R							142																		
65+46.1 - 21.67'R to 66+25.8 - 43.53'R								82		1															
XR30 - 40+30													134				2								
XR30 - 40+61													140				2								
Subtotal:	0	0	0	0	954	440	568	82		1	0	0	274	0	0		4	0	1	2	2	0	2	0	0
Total:	58	74	2	2	1570	776	1354	390		1	66	504	450	2	7		12	1	2	2	5	4	4	1	2

Pipes denoted with an asterisk(*) indicate that the entire length or a portion of the pipe requires watertight joints in accordance with the STORM SEWER plan note.

Plot Scale - 1:200
Plotted From - trgr17192
File - ...\rd\prj\pott02R9\Tablepipe.dgn

PAVEMENT, CURB AND GUTTER, AND SIDEWALK QUANTITIES

STATE OF SOUTH DAKOTA	PROJECT	SHEET	TOTAL SHEETS
	P 0020(117)254	B12	B98

Plotting Date: 07/16/2015

Station	to Station	PCC Fillet Section	Concrete Curb and Gutter			Concrete Gutter		PCC Approach Pavement				Concrete Sidewalk			Miscellaneous PCC	Reinf. Concrete		Detectable Warning	Revised by TJD 7/15/15
			Type B	Type D	Type F	Type P	Valley	Type A		Type B					Pavement	Sidewalk		Type 1	
		8"	68	48	68	8	8"	6"	8"	6"	8"	4"	6"	8"	8"	4"	6"		
		SqYd	Ft	Ft	Ft	Ft	SqYd	SqYd	SqYd	SqYd	SqYd	SqFt	SqFt	SqFt	SqYd	SqFt	SqFt	SqFt	
29+70.13-14.01' L	30+10.08-55.30' L		66.3									307.9			30.0			12.0	
32+33.74-31.56' L	34+60.06-23.99' L	26.2	76.7		45.8	40.0	21.3		28.9			802.5		521.9				20.0	
34+60.06-23.99' L	36+12.79-23.98' L		85.2		27.5	40.0			28.9				1507.6	520.4					
36+12.79-23.98' L	36+47.79-57.48' L	11.8	38.5										452.9					20.0	
36+47.79-23.99' L	38+24.79-23.98' L	11.8	107.0			24.0	21.0		20			1404.4		323.1				20.0	
38+24.79-23.98' L	39+56.78-23.98' L		132.0									1602.0							
39+56.78-23.98' L	39+84.78-51.67' L	11.8			25.7								359.1					20.0	
39+84.78-23.98' L	43+54.84-53.17' L	21.1	340.2				24.6					3805.5				76.6		45.8	
43+54.84-23.97' L	44+98.52-23.97' L	11.8	78.8			16.0	19.5	22.5				773.5	153.1			171.3		20.0	
44+98.52-23.97' L	45+73.02-23.97' L		54.5			20.0		25.8				261.1	164.6						
45+73.02-23.97' L	47+11.95-55.11' L	26.4	120.0									861.2						20.0	
47+12.12-23.97' L	48+52.37-23.97' L	26.1	69.6			16.0	17.6		22.6				953.3	139.8				20.0	
48+52.37-23.97' L	49+11.12-23.97' L		38.8			20.0		25.8				133.3	160.3						
49+11.12-23.97' L	50+84.58-57.97' L	26.1	148.5									969.8						20.0	
51+09.94-57.97' L	53+23.23-23.97' L	26.0	184.0			22.0		18.3				2039.1						34.0	
53+23.23-23.97' L	57+17.32-57.97' L	26.1	378.1									4176.7	164.6					34.0	
57+17.32-23.97' L	58+15.45-23.97' L	26.1	36.9	16.0		16.0	13.0			28.0		511.6						20.0	
58+15.45-23.97' L	59+31.24-23.97' L		95.8			20.0				49.0		503.3							
59+31.24-23.97' L	60+19.90-43.00' L	11.8	73.7									494.2						24.4	
60+19.95-23.97' L	61+72.08-19.97' L	26.1	70.7			40.0	13.2			52.7		678.5						20.0	
61+72.08-19.97' L	64+07.47-19.97' L		205.5			30.0				49.8		878.8						10.0	
	Subtotal:	289.2	2400.8	16.0	99.0	304.0	130.2	92.4	100.4	179.5	0.0	20203.4	3915.5	1505.2	30.0	247.9	0.0	360.2	

Plot Scale - 1:200
Plotted From - tpp17192
File - U:\rdprj\pott02R9\TableCtg.dgn

PAVEMENT, CURB AND GUTTER, AND SIDEWALK QUANTITIES

STATE OF SOUTH DAKOTA	PROJECT	SHEET	TOTAL SHEETS
	P 0020(117)254	B13	B98

Plotting Date: 07/16/2015

Station	to Station	PCC Fillet Section	Concrete Curb and Gutter			Concrete Gutter		PCC Approach Pavement				Concrete Sidewalk			Miscellaneous PCC	Reinf. Concrete		Detectable Warning	Revised by TJD 7/15/15
			Type B	Type D	Type F	Type P	Valley	Type A		Type B					Pavement	Sidewalk		Type 1	
		8"	68	48	68	8	8"	6"	8"	6"	8"	4"	6"	8"	8"	4"	6"		
		SqYd	Ft	Ft	Ft	Ft	SqYd	SqYd	SqYd	SqYd	SqYd	SqFt	SqFt	SqFt	SqYd	SqFt	SqFt	SqFt	
29+57.07-18.45' R	33+14.49-57.67' R	22.3	216.5			64.0					70.4	1195.2					89.1	37.4	
33+43.23-55.01' R	34+47.34-24.01' R	26.1	42.1			16.0		15.6				610.0	140.3					20.0	
34+47.34-24.01' R	36+45.62-55.32' R	11.8	183.5			16.0		15.6				1334.2	149.1					20.0	
36+95.20-54.73' R	39+99.76-51.02' R	23.6	302.3									3485.3						40.0	
39+99.76-24.02' R	43+54.32-44.97' R	18.4	307.7				21.6					3415.3						45.1	
43+98.72-45.03' R	44+78.62-24.03' R	11.8	30.9			40.0		26.1				255.9	282.4				151.4	24.0	
44+78.62-24.03' R	47+12.36-49.03' R	26.1	208.7									1588.3						24.0	
47+51.85-49.12' R	48+42.92-20.03' R	25.8	54.3			16.0		15.6				575.5	168.2					20.0	
48+42.92-20.03' R	50+87.79-51.19' R	26.4	209.9			16.0		15.6				1439.4	168.5					20.0	
51+20.76-54.87' R	56+99.16-55.19' R	52.1	540.4									3919.3						76.0	
56+99.36-24.03' R	59+28.75-20.03' R	25.9	166.1			16.0	12.8	12.4				1205.2	140.2					20.0	
59+28.75-20.03' R	61+16.86-51.04' R	26.1	153.1			16.0		12.4				836.4	141.2					20.0	
61+16.86-20.03' R	62+46.16-20.06' R	26.1	61.0			24.0	11.2			53.7		582.2						20.0	
62+46.16-20.06' R	65+72.56-50.92' R	25.9	291.3			16.0				40.4		1760.3						20.0	
Subtotal:		348.4	2767.8	0.0	0.0	240.0	45.6	113.3	0.0	94.1	70.4	22202.5	1189.9	0.0	0.0	0.0	240.5	406.5	
Total:		637.6	5168.6	16.0	99.0	544.0	175.8	205.7	100.4	273.6	70.4	42405.9	5105.4	1505.2	30.0	247.9	240.5	766.7	

Plot Scale - 1:200
Plotted From - tqpr17192
File - U:\rdprj\pott02R9\Table\CG.dgn

STATE OF SOUTH DAKOTA	PROJECT	SHEET	TOTAL SHEETS
	P 0020(117)254	B14	B98

Plotting Date: 01/08/2015

TYPICAL GRADING SECTION

32+50 to 36+71

44+28 to 64+07

* 47+52 to 50+88 - 8'
* 57+28 to 64+07 - 8'
** 60+50 to 64+07 - 8'

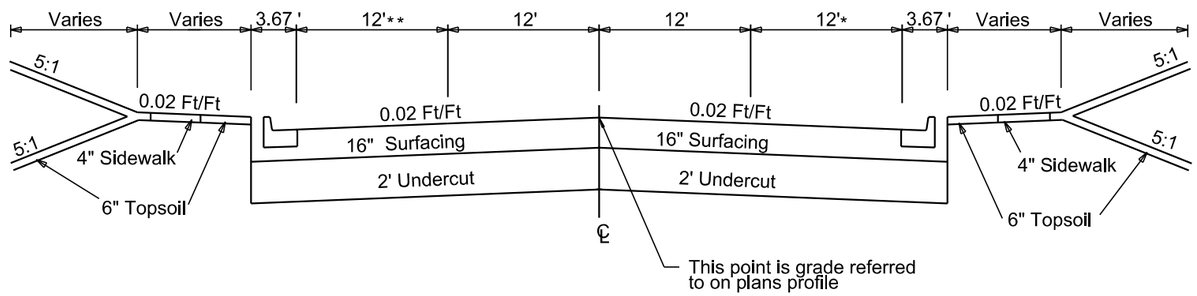

See Curb and Gutter Layout sheets for sidewalk layout

30+72 to 32+50

64+07 to 66+00

* 64+07 to 66+00 - 8'

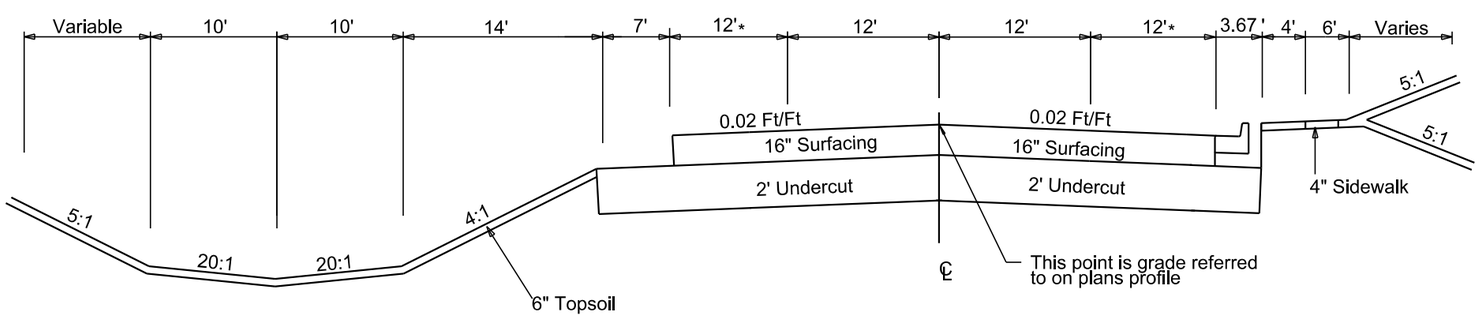

Plot Scale - 1:200

Plotted From - tnpr17192

File - U:\rdi\prj\pott02R9\typ.dgn

STATE OF SOUTH DAKOTA	PROJECT	SHEET	TOTAL SHEETS
	P 0020(117)254	B15	B98

Plotting Date: 01/08/2015

TYPICAL GRADING SECTION

36+71 to 38+00

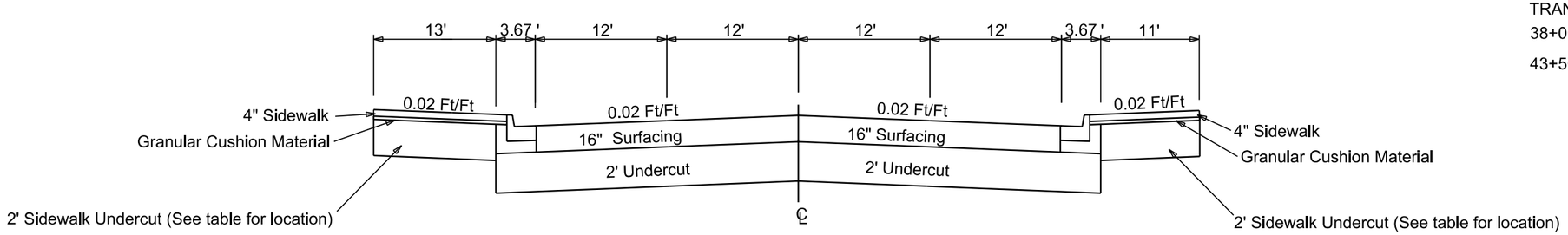

TRANSITIONS:
38+00 to 38+78
43+50 to 44+28

38+78 to 43+50

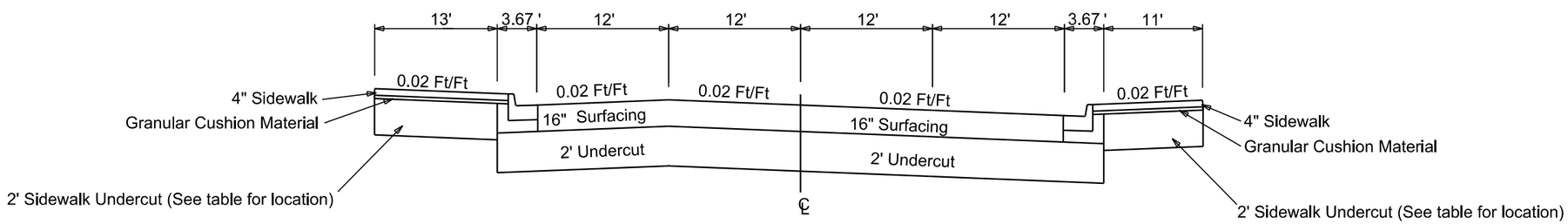

Plot Scale - 1:200

Plotted From - trpr17192

File - U:\rdprj\pott02R9\typ.dgn

STATE OF SOUTH DAKOTA	PROJECT	SHEET	TOTAL SHEETS
	P 0020(117)254	B16	B98

Plotting Date: 01/08/2015

TYPICAL GRADING SECTION

* TRANSITIONS:

26+00 to 26+50 - 4:1 to 3.5:1

26+50 to 27+50 - 3.5:1 to 4:1

Left Special Ditch
Mainline - 24+00 to 30+24.57
XR30 - 40+24.57 to 41+57.17

Right Special Ditch
Mainline - 18+22.19 to 29+72.12

** TRANSITION:

18+22.19 to 23+22.27 - 25' to 10'

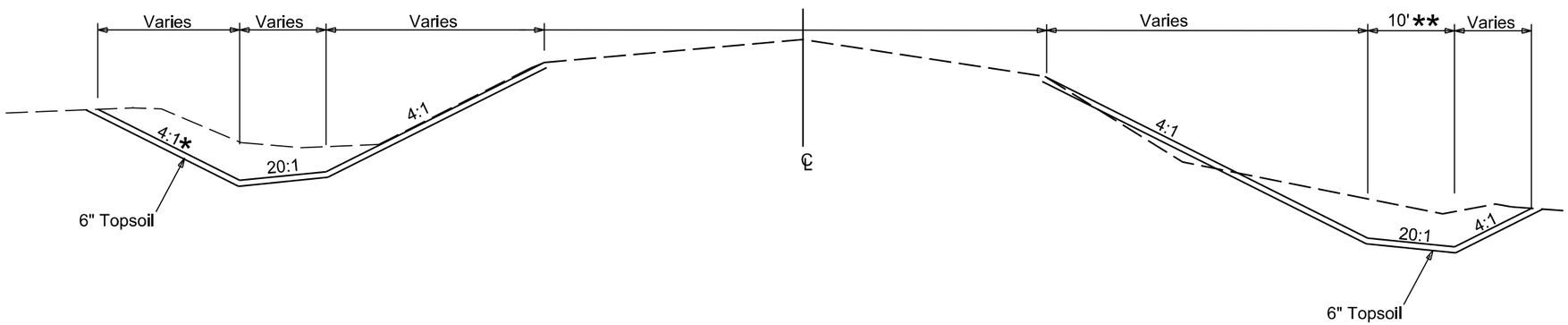

dr100L
6+74 to 23+00

dr6700R
66+00 to 74+50

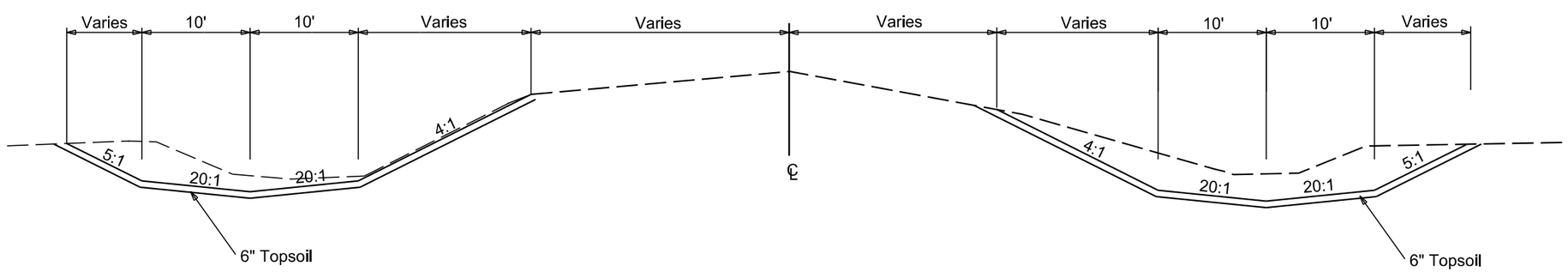

Plot Scale - 1:200

Plotted From - tnpr17192

File - U:\rdprj\pott02R9\typ.dgn

HORIZONTAL ALIGNMENT DATA

STATE OF SOUTH DAKOTA	PROJECT	SHEET	TOTAL SHEETS
	P 0020(117)254	B17	B98

Plotting Date: 01/08/2015

MAINLINE

Type	Station			Northing	Easting
POB	0+00.00			515105.527	2022862.036
		TL= 3024.57	S 89°56'27" E		
PI	30+24.57			515102.408	2025886.605
		TL= 1352.47	S 0°31'10" E		
PI	43+77.04			513749.995	2025898.864
		TL= 1392.03	S 0°21'51" E		
PC	57+69.07			512357.990	2025907.711
PI	60+34.90	R = 55000.00	Delta = 0°33'14" R	512092.164	2025909.401
PT	63+00.73			511826.333	2025908.520
		TL= 299.27	S 0°11'23" W		
PI	66+00.00			511527.066	2025907.530
		TL= 1999.98	S 0°03'52" E		
POE	85+99.98			509527.087	2025909.781

XR30

Type	Station			Northing	Easting
P0B	40+24.57			515102.408	2025886.605
		TL= 1000.00	S 89°59'14" E		
POE	50+24.57			515102.184	2026886.604

The coordinates shown on this sheet are based on the South Dakota State Plane Coordinate System North Zone (NAD 83/2011)Geoid 12A SF = 0.999944565

Plot Scale - 1:200

Plotted From - tnpr17192

File - ...\rd\prj\pot\02R9\Datahoriz.dgn

CONTROL DATA

STATE OF SOUTH DAKOTA	PROJECT	SHEET	TOTAL SHEETS
	P 0020(117)254	B18	B98

Plotting Date: 01/08/2015

HORIZONTAL AND VERTICAL CONTROL POINTS						
POINT	STATION	OFFSET	DESCRIPTION	NORTHING	EASTING	ELEVATION
CP1	29+49	75' L	5/8" Rebar W/ Yellow Plastic Cap	515177.104	2025810.939	1899.32
CP2	29+48	1.4' L	5/8" Rebar W/ Yellow Plastic Cap	515103.885	2025810.440	1901.02
CP3	34+86	2' R	5/8" Rebar W/ Yellow Plastic Cap	514640.955	2025892.403	1901.12
CP4	30+29	491'R	5/8" Rebar W/ Yellow Plastic Cap	515102.068	2026377.160	1903.99

The coordinates shown on this sheet are based on the South Dakota State Plane Coordinate System.
North Zone (NAD 83/2011) SF = 0.9999444565
The elevations shown on this sheet are based on NAVD 88.

Plot Scale - 1:200
Plotted From - tnpr17192
File - ...\prj\pott02R9\Datacontrol.dgn

STATE OF SOUTH DAKOTA	PROJECT	SHEET	TOTAL SHEETS
	P 0020(117)254	B19	B98

Plotting Date: 01/08/2015

EXISTING TOPOGRAPHY SYMBOLOGY AND LEGEND

Anchor
Antenna
Approach
Assumed Corner
Azimuth Marker
BBQ Grill/ Fireplace
Bearing Tree
Bench Mark
Box Culvert
Bridge
Brush
Buildings
Bulk Tank
Cattle Guard
Cemetery
Centerline
Cistern
Clothes Line
Commercial Sign Double Face
Commercial Sign One Post
Commercial Sign Overhead
Commercial Sign Two Post
Concrete Symbol
Creek Edge
Curb/Gutter
Curb
Dam Grade/Dike/Levee
Deck Edge
Ditch Block
Doorway Threshold
Drainage Profile
Drop Inlet
Edge Of Asphalt
Edge Of Concrete
Edge Of Gravel
Edge Of Other
Edge Of Shoulder
Elec. Trans./Power Jct. Box
Fence Barbwire
Fence Chainlink
Fence Electric
Fence Misc.
Fence Rock
Fence Snow
Fence Wood
Fence Woven
Fire Hydrant
Flag Pole
Flower Bed
Gas Valve Or Meter
Gas Pump Island
Grain Bin
Guardrail
Guide Sign One Post
Guide Sign Two Post
Gutter
Guy Pole
Haystack

Hedge
Highway R.O.W. Marker
Interstate Close Gate
Iron Pin
Irrigation Ditch
Lake Edge
Lawn Sprinkler
Mailbox
Manhole Electric
Manhole Gas
Manhole Misc
Manhole Sanitary Sewer
Manhole Storm Sewer
Manhole Telephone
Manhole Water
Merry-Go-Round
Microwave Radio Tower
Misc. Line
Misc. Property Corner
Misc. Post
Overhang Or Encroachment
Overhead Utility Line — OH —
Parking Meter
Pipe With End Section
Pipe With Headwall
Pipe Without End Section
Playground Slide
Playground Swing
Power And Light Pole
Power And Telephone Pole
Power Meter
Power Pole
Power Pole And Transformer
Power Tower Structure
Propane Tank
Property Pipe
Property Pipe With Cap
Property Stone
Public Telephone
Railroad Crossing Signal
Railroad Milepost Marker
Railroad Profile
Railroad R.O.W. Marker
Railroad Signs
Railroad Switch
Railroad Track
Railroad Trestle
Rebar
Rebar With Cap
Reference Mark
Regulatory Sign One Post
Regulatory Sign Two Post
Retaining Wall
Riprap
River Edge
Rock And Wire Baskets
Rockpiles
Satellite Dish
Septic Tank

Shrub Tree
Sidewalk
Sign Face
Sign Post
Slough Or Marsh
Spring
Stream Gauge
Street Marker
Subsurface Utility Exploration Test Hole
Telephone Fiber Optics — T/F —
Telephone Junction Box
Telephone Pole
Television Cable Jct Box
Television Tower
Test Wells/Bore Holes
Traffic Signal
Trash Barrel
Tree Belt
Tree Coniferous
Tree Deciduous
Tree Stumps
Triangulation Station
Underground Electric Line — P —
Underground Gas Line — G —
Underground High Pressure Gas Line — HG —
Underground Sanitary Sewer — S —
Underground Storm Sewer — S —
Underground Tank
Underground Telephone Line — T —
Underground Television Cable — TV —
Underground Water Line — W —
Warning Sign One Post
Warning Sign Two Post
Water Fountain
Water Hydrant
Water Meter
Water Tower
Water Valve
Water Well
Weir Rock
Windmill
Wingwall
Witness Corner

State and National Line
County Line
Section Line
Quarter Line
Sixteenth Line
Property Line
Construction Line
R. O. W. Line
New R. O. W. Line
Cut and Fill Limits
Control of Access
New Control of Access
Proposed ROW (After Property Disposal)

Plot Scale - 1:200
Plotted From - tmpr17192
File - U:\radprj\pott02R9\topog.dgn

STATE OF SOUTH DAKOTA	PROJECT	SHEET	TOTAL SHEETS
	P 0020(117)254	B20	B98

Plotting Date: 01/08/2015

9+50 - 53' L
Take out 18"- 50' CMP
& 2 Flared Ends
(Incidental Work, Grading)

9+50-50' L (115 ac)
Install Twin 48" - 48' RCP Arch
& 4 Flared Ends
(Spaced 7.8' C to C
Controlled Density Fill)

POB 0+00.00
N 515105.527
E 2022862.036

Arnold J. Thuente
Parcel A1

Sec. 33 - T121N - R74W

Begin P 0020(117)254
Station 6+73.74

9+10.00
76.05' & 95'

9+90.00
82' & 95'

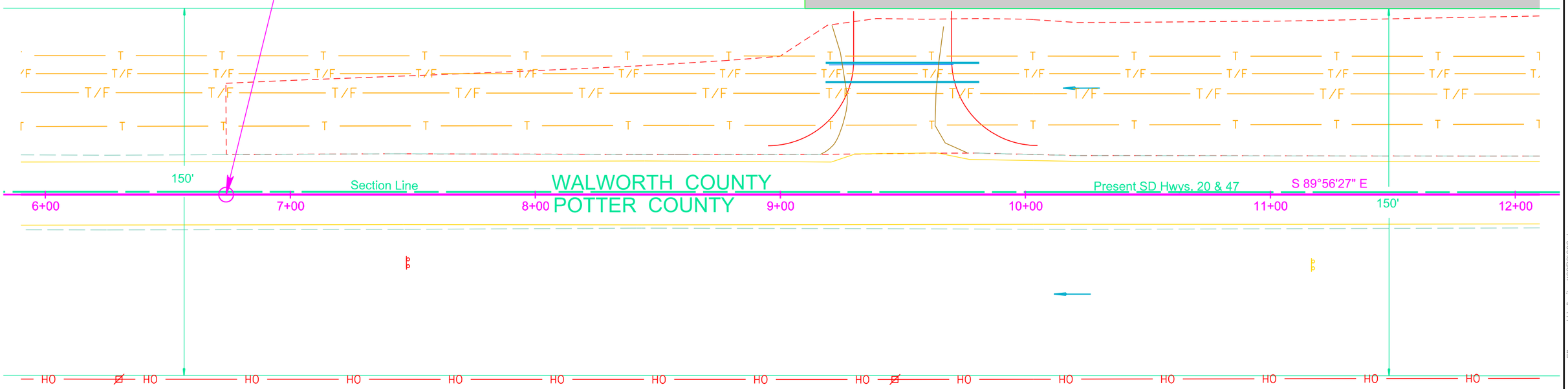

Parcel A1
9+10.00 to 12+82.55 L
Temporary Easement for
Ditch & Entrance containing
(0.08 ac, 3572 sq ft.) more or less

Plot Scale - 1:40
Plotted From - tgp17192
File - U:\rdi\prj\pott\02R9\006.dgn

STATE OF SOUTH DAKOTA	PROJECT	SHEET	TOTAL SHEETS
	P 0020(117)254	B21	B98

Plotting Date: 01/08/2015

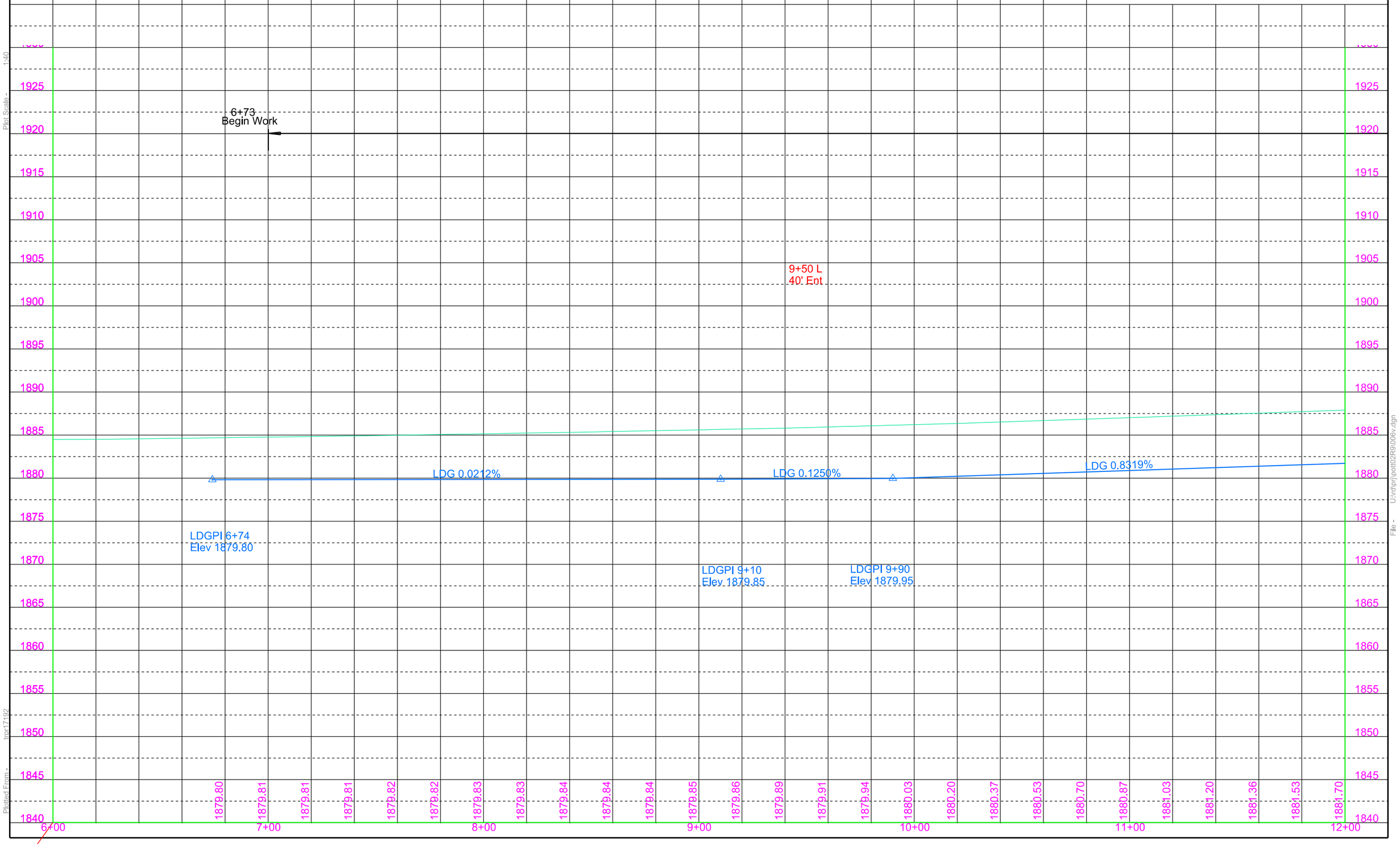

Plot Scale - 1:40

Plotted From - tpp17192

File - U:\drlprj\pott02R9\06v.dgn

STATE OF SOUTH DAKOTA	PROJECT	SHEET	TOTAL SHEETS
	P 0020(117)254	B22	B98

Plotting Date: 07/06/2015

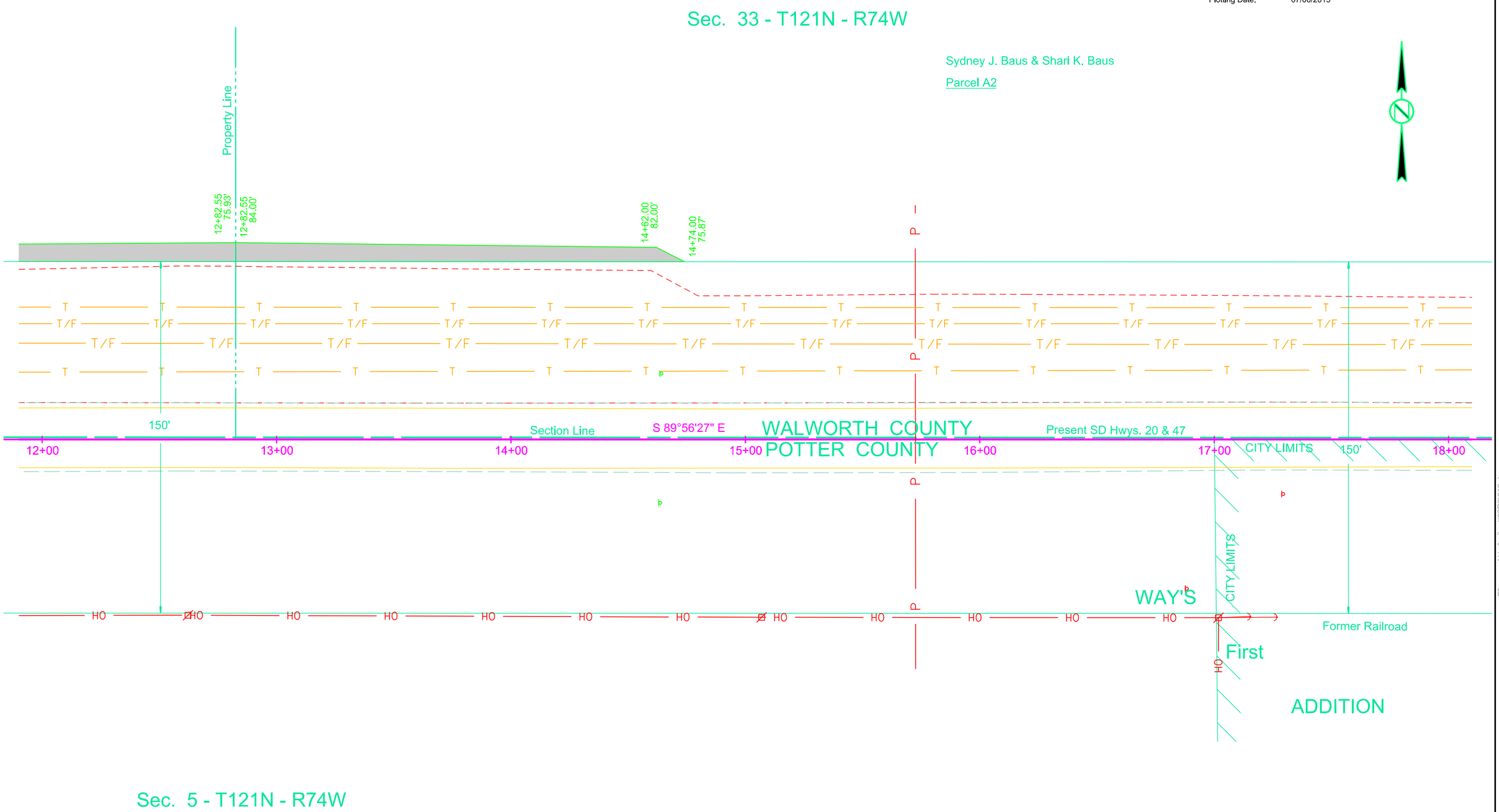

Parcel A2
12+82.55 to 14+74.00 L
Temporary Easement for
Ditch containing
(0.03 ac,1311 sq ft.) more or less

Plot Scale - 1:40
Plotted From - tnpr17192
File - U:\rdi\prj\pott02R9\0112.dgn

STATE OF SOUTH DAKOTA	PROJECT	SHEET	TOTAL SHEETS
	P 0020(117)254	B23	B98

Plotting Date: 01/08/2015

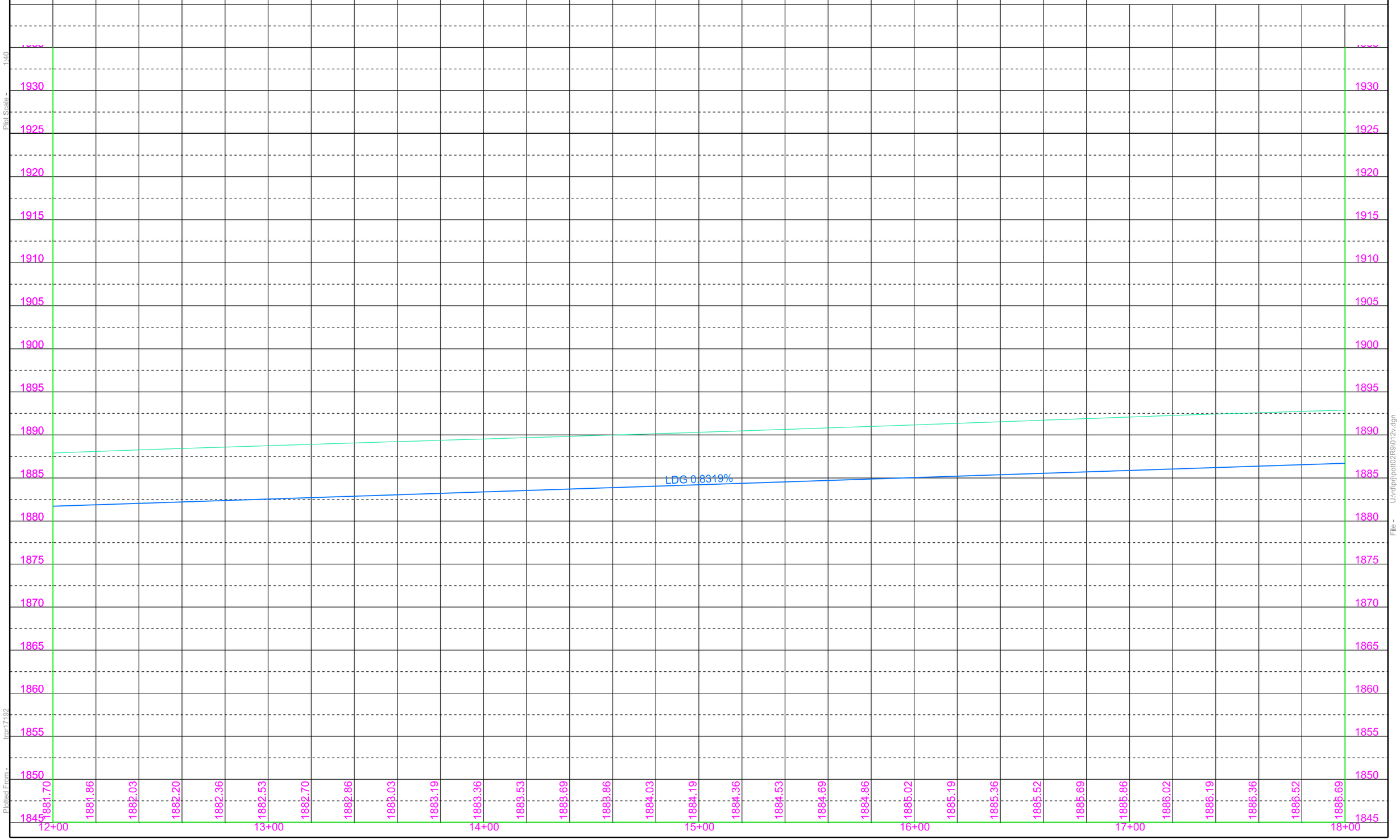

Plot Scale - 1:40

Plotted From - tpr17192

File - U:\rdep\pott02R9\012v.dgn

STATE OF SOUTH DAKOTA	PROJECT	SHEET	TOTAL SHEETS
	P 0020(117)254	B24	B98

Plotting Date: 01/08/2015

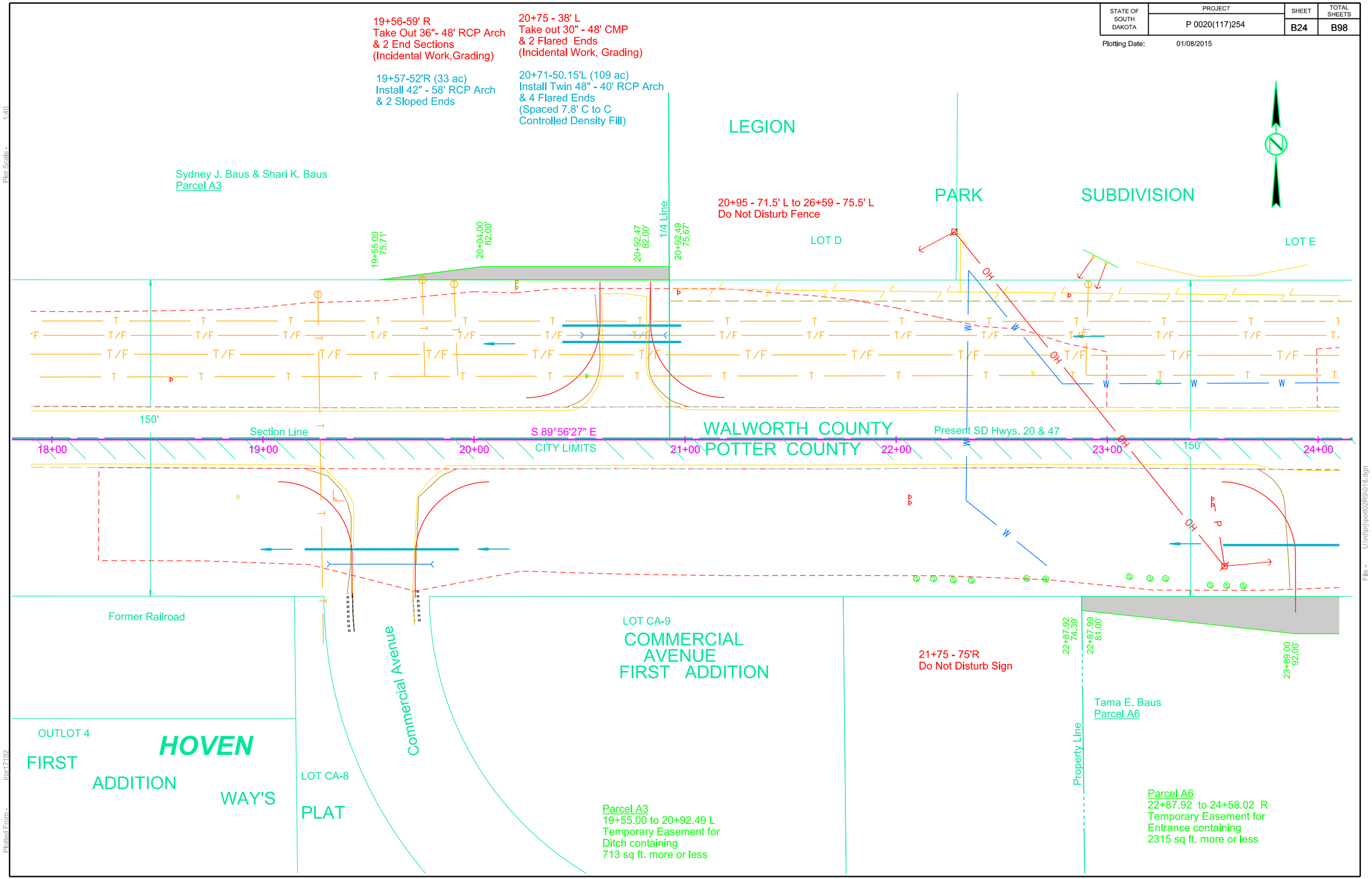

Plot Scale - 1:40

Plotted From- tpr17192

File - U:\rdprj\pott\02R91018.dgn

STATE OF SOUTH DAKOTA	PROJECT	SHEET	TOTAL SHEETS
	P 0020(117)254	B25	B98

Plotting Date: 01/08/2015

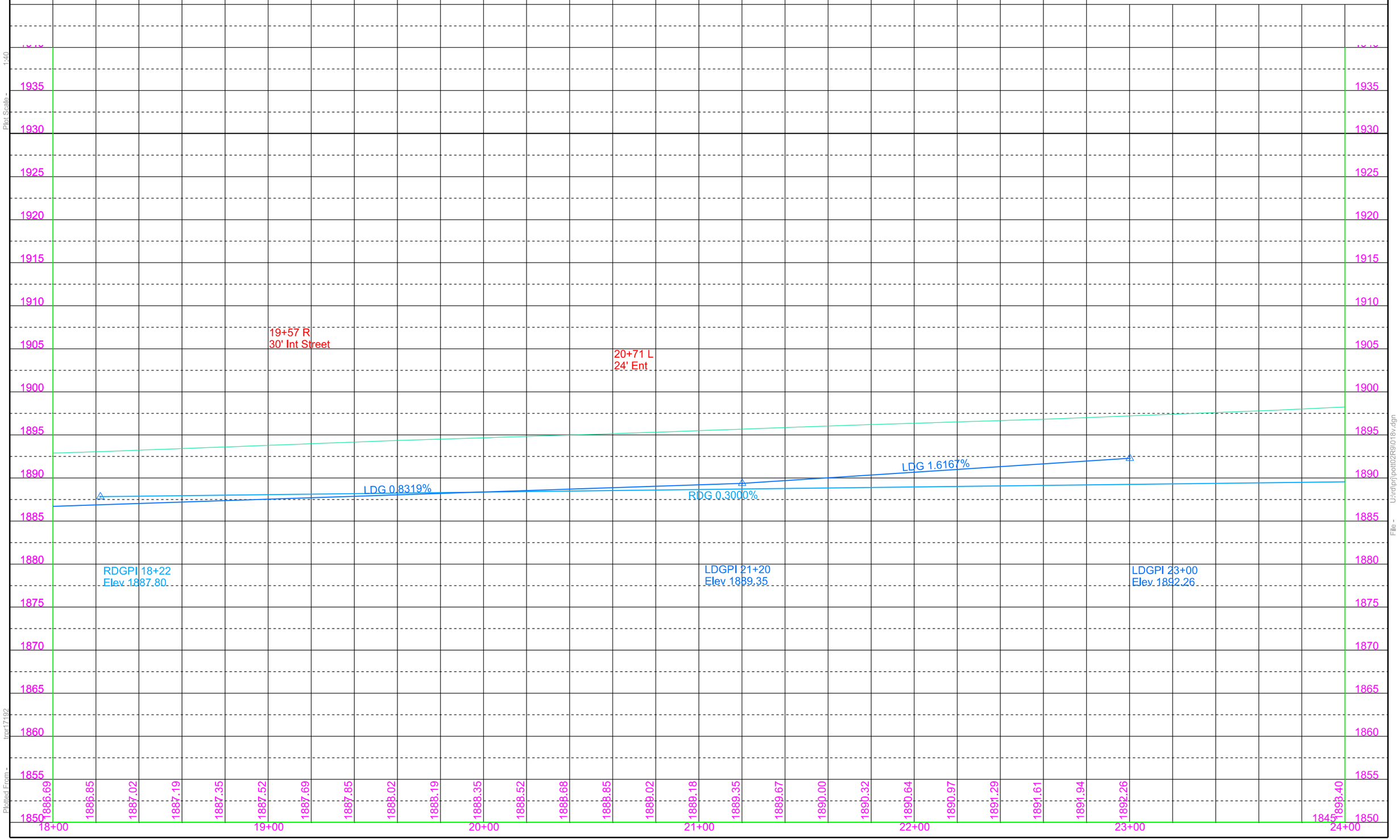

Plot Scale - 1:40

Plotted From - tpr17192

File - U:\rdphj\pott02R9\018v.dgn

STATE OF SOUTH DAKOTA	PROJECT	SHEET	TOTAL SHEETS
	P 0020(117)254	B26	B98

Plotting Date: 01/08/2015

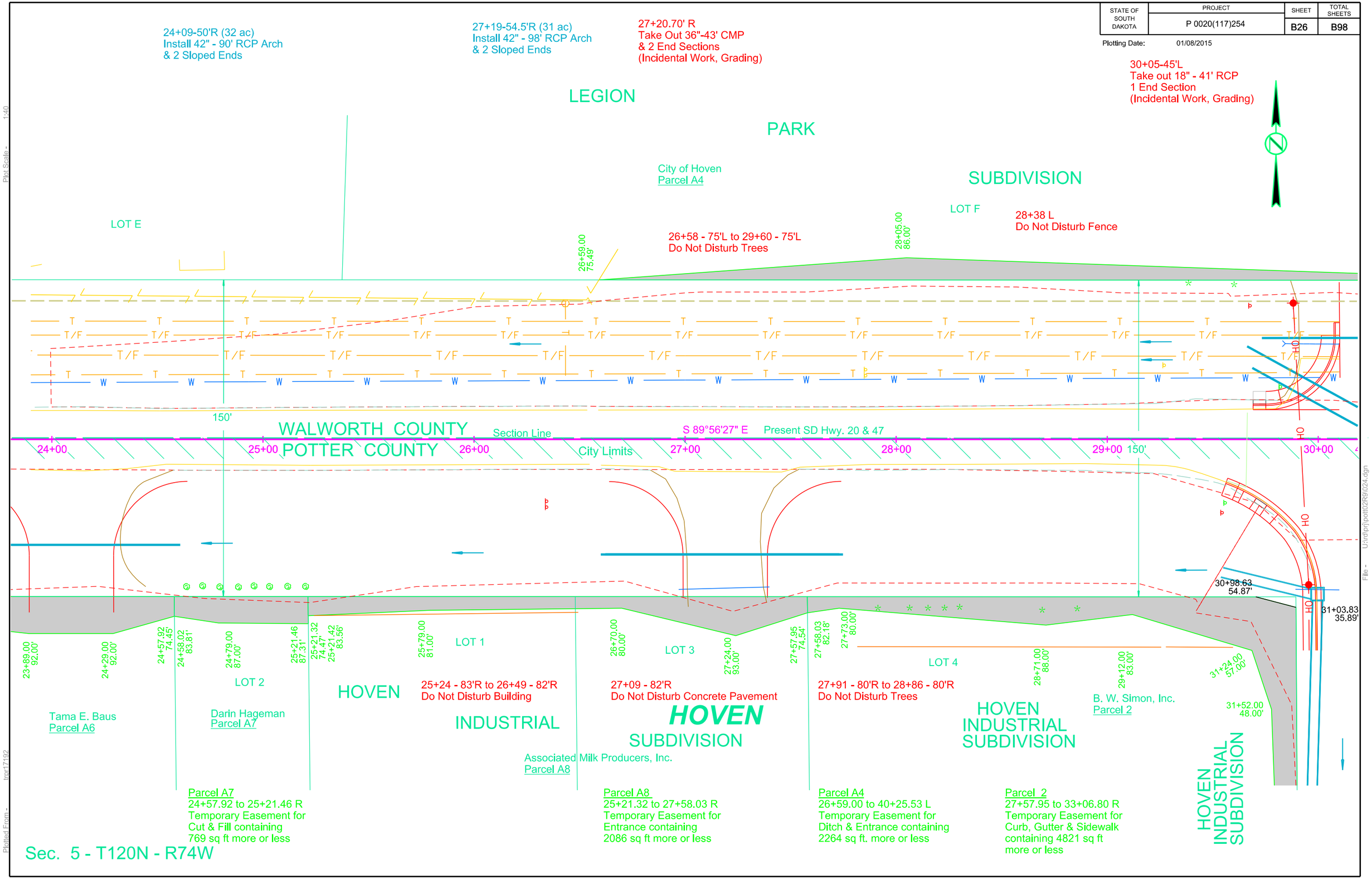

STATE OF SOUTH DAKOTA	PROJECT	SHEET	TOTAL SHEETS
	P 0020(117)254	B27	B98

Plotting Date: 01/08/2015

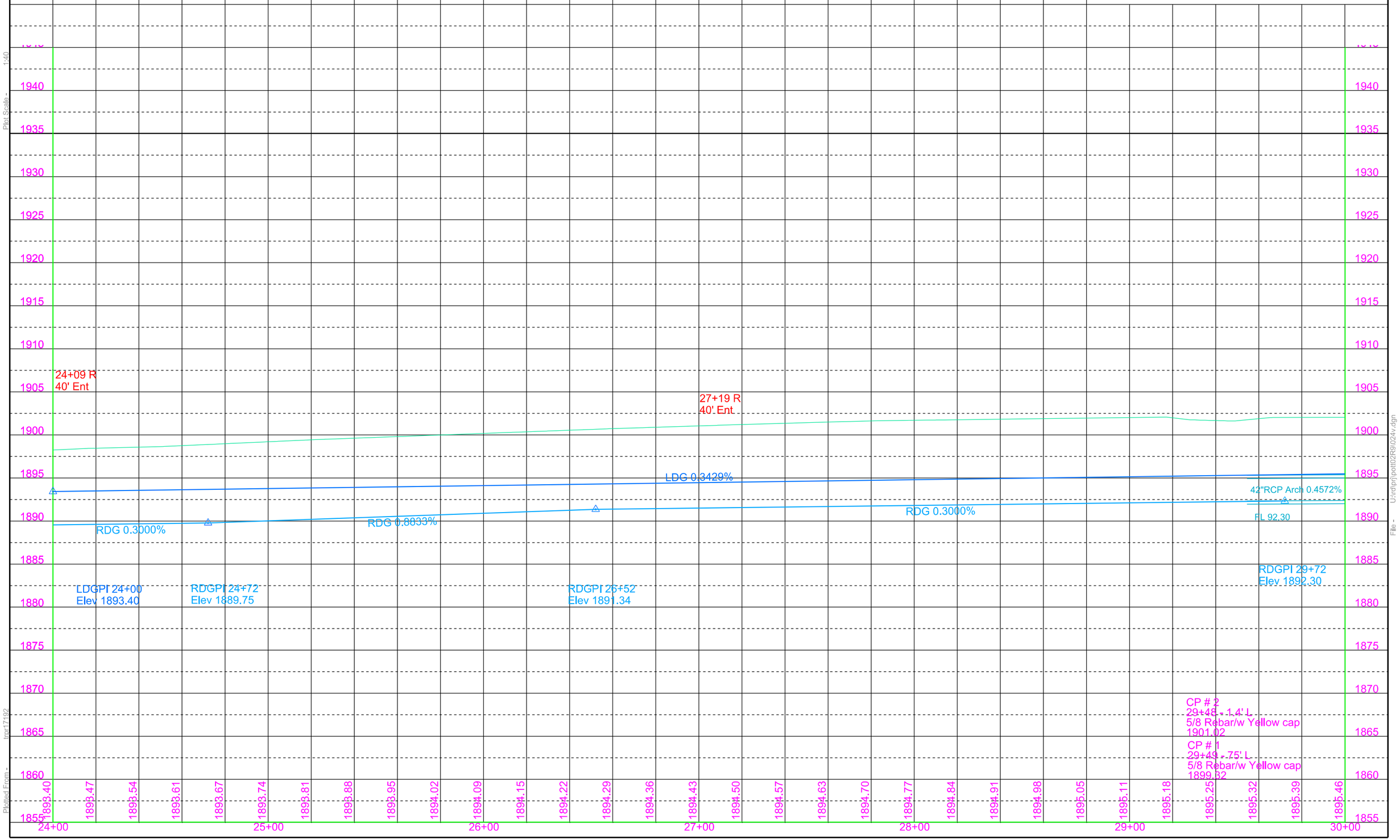

Plot Scale - 1:40

Plotted From - tpp17192

File - U:\drlp\hjpolt02R9\024v.dgn

STATE OF SOUTH DAKOTA	PROJECT	SHEET	TOTAL SHEETS
	P 0020(117)254	B28	B98

Plotting Date: 01/08/2015

30+24-48'L (14 ac)
Install 30" - 74' CMP
& 2 Safety Ends

XR30-40+30 (Skew 61° RHF) (91 ac)
Install 48" - 134' RCP Arch
& 2 Flared Ends
(Spaced 7.8' C to C
Controlled Density Fill)

XR30-40+61 (Skew 61° RHF) (91 ac)
Install 48" - 140' RCP Arch
& 2 Flared Ends
(Spaced 7.8' C to C
Controlled Density Fill)

42+00 L (xr30)
Retain Entrance

XR30

Hoven Co-op Service
Parcel A5

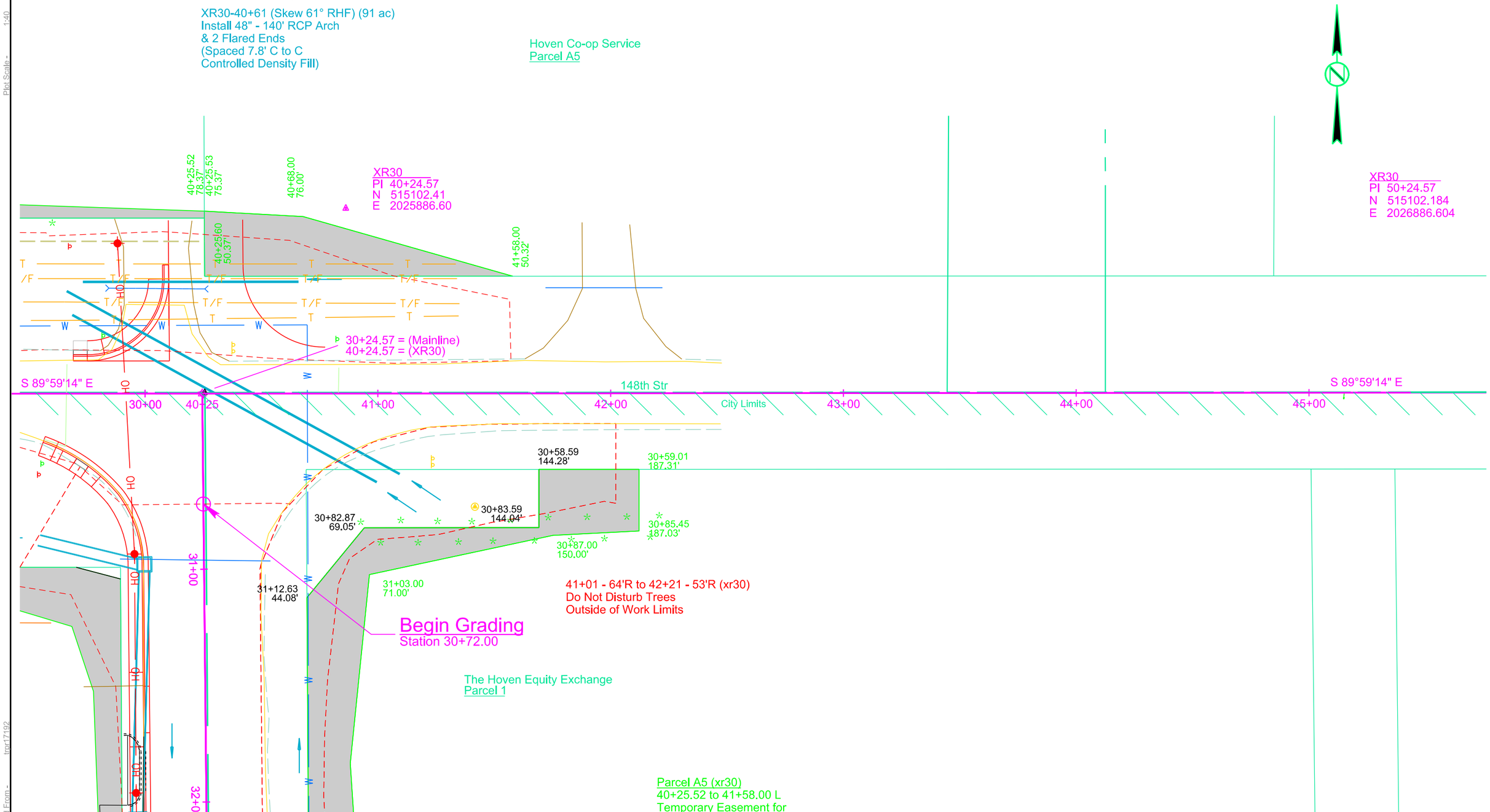

Plot Scale - 1:40
Plotted From - tmpr17192
File - U:\rdeprj\pott02R9\040.dgn

STATE OF SOUTH DAKOTA	PROJECT	SHEET	TOTAL SHEETS
	P 0020(117)254	B29	B98

Plotting Date: 01/08/2015

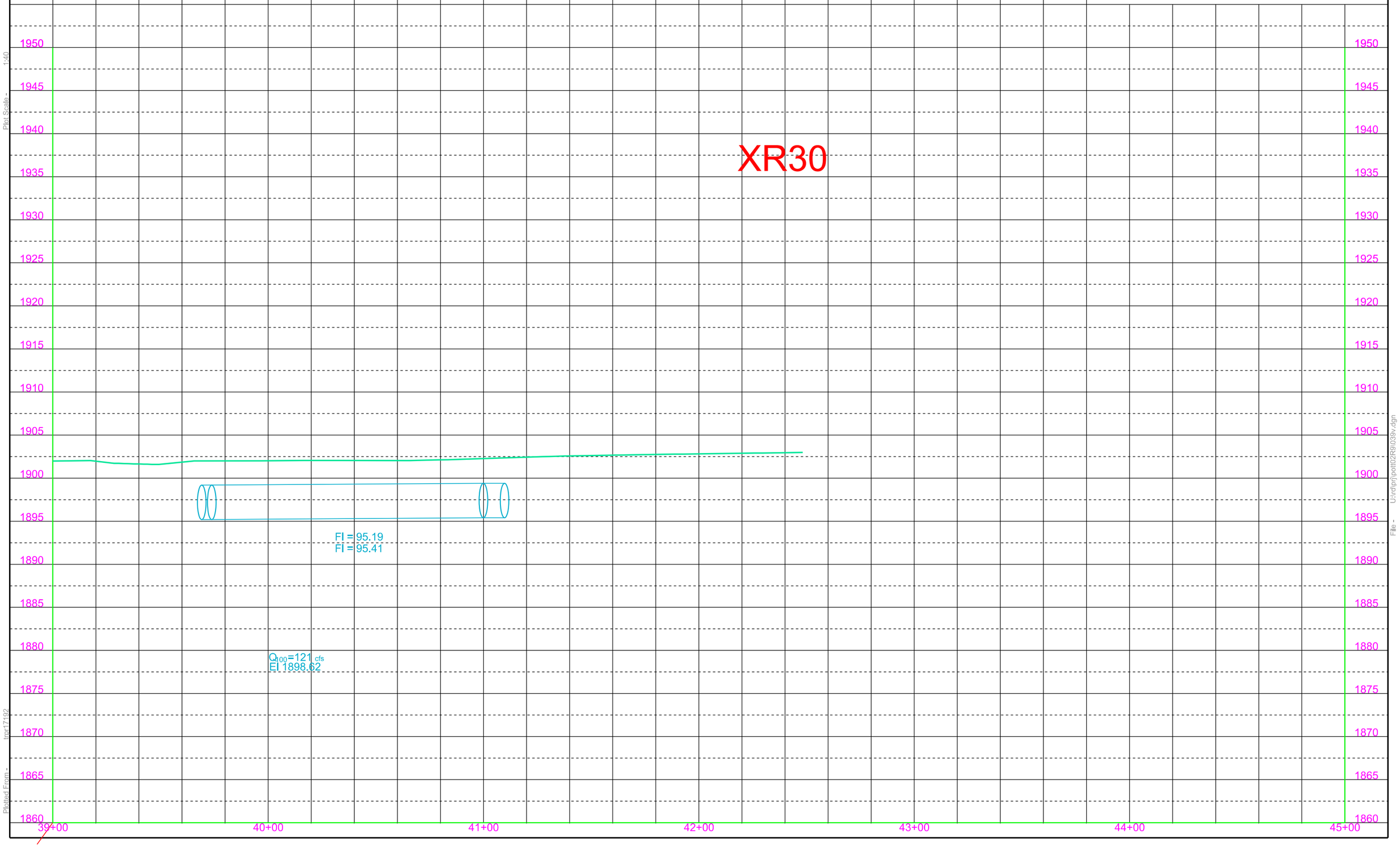

Plot Scale - 1:40

Plotted From - tpgr17192

File - U:\rdlprj\pdt02R9\039v.dgn

STATE OF SOUTH DAKOTA	PROJECT	SHEET	TOTAL SHEETS
	P 0020(117)254	B30	B98

Plotting Date: 01/08/2015

30+96
Take out 36" - 64' RCP
(Incidental Work, Grading)

29+54.4-63.05' R to 30+97.7-25.64' R
Install 42" - 44' RCP Arch
& 1 Sloped End
(Between Drop Inlet and Outlet)

30+97.7-25.64' R
Install 5.5'X5.5' Type B
Drop Inlet with 6" Concrete Collar
and Type B Frame and Grate

39+97.7-25.64' R to 32+10.0-29.60' R
Install 42" - 104' RCP Arch
(Between Drop Inlets)

32+10.0-29.60' R
Install 7'X11' Type S Drop Inlet
and Precast Type S Lid

32+10.0-29.60' R to 32+84.3-25.64' R
Install 42" - 66' RCP Arch
(Between Drop Inlets)

32+84.3-25.64' R
Install 5.5'X5.5' Type B
Drop Inlet with 6" Concrete Collar
and Type B Frame and Grate

32+58 - 31' L
Take out 18" - 50' RCP
(Incidental Work, Grading)

32+84.9-59.15' L
Install 3'X4' Type C
Drop Inlet with 6" Concrete Collar
and Type C Frame and Grate

32+85.9-59.15' L to 32+84.9-47.06' L
Install 18" - 24' RCP
& 1-50° RCP Bend
(Between Drop Inlet and Bend)

32+84.9-47.06' L to 33+05.1-25.70' L
Install 18" - 8' RCP
& 1-50° RCP Bend
(Between Bend and Drop Inlet)

32+84.3-25.64' R to 33+05.1-25.70' L
Install 42" - 44' RCP Arch
& 2-26° RCP Bends
(Between Drop Inlets)

32+84.3-25.64' R to 33+75.8-25.65' R
Install 18" - 88' RCP
(Between Drop Inlets)

33+05.1-25.70' L
Install 5.5'X5.5' Type B
Drop Inlet with 6" Concrete Collar
and Type B Frame and Grate

33+05.1-25.70' L to 33+75.8-25.69' L
Install 36" - 68' RCP
(Between Drop Inlets)

33+75.8-25.65' L
Install 3'X4' Type B
Drop Inlet with 6" Concrete Collar
and Type B Frame and Grate

33+75.8-25.69' L to 35+15.3-25.69' L
Install 36" - 138' RCP
(Between Drop Inlets)

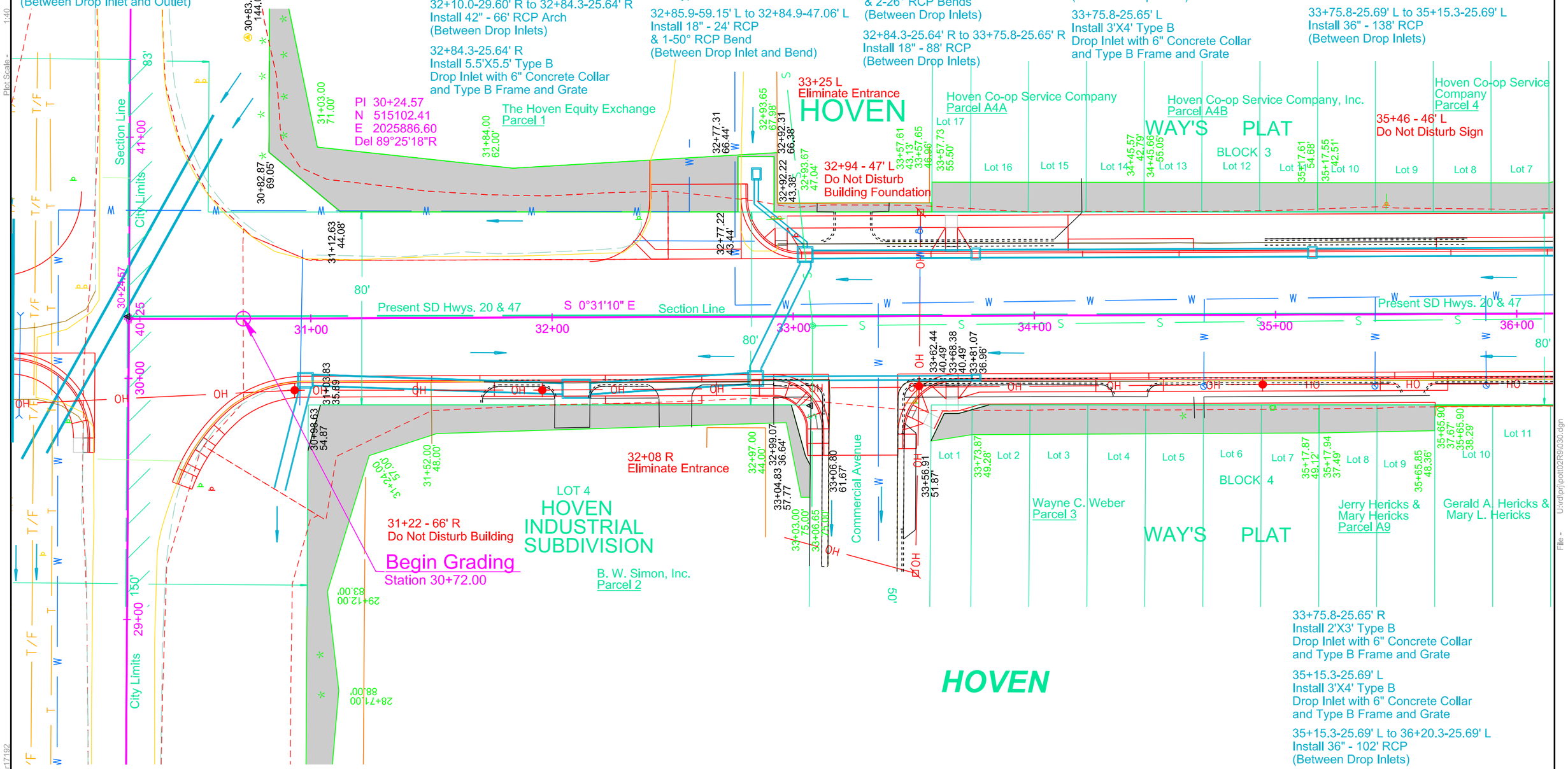

33+75.8-25.65' R
Install 2'X3' Type B
Drop Inlet with 6" Concrete Collar
and Type B Frame and Grate

35+15.3-25.69' L
Install 3'X4' Type B
Drop Inlet with 6" Concrete Collar
and Type B Frame and Grate

35+15.3-25.69' L to 36+20.3-25.69' L
Install 36" - 102' RCP
(Between Drop Inlets)

Parcel 1
30+58.59 to 33+57.65 L
Temporary Easement for
Ditch, Curb & Gutter
containing 6329 sq ft
more or less

Parcel 3
33+56.91 to 35+17.94 R
Temporary Easement for
Sidewalk containing
1865 sq ft more or less

Parcel A4A
33+57.61 to 34+45.66 L
Temporary Easement for
Sidewalk containing
1083 sq ft more or less

Parcel A4B
34+45.57 to 35+17.61 L
Temporary Easement for
Sidewalk containing
879 sq ft more or less

Parcel 4
35+17.55 to 36+37.53 L
Temporary Easement for
Sidewalk containing
1474 sq ft more or less

Parcel A9
35+17.87 to 35+65.90 R
Temporary Easement for
Sidewalk containing
535 sq ft more or less

Plot Scale - 1:40
Plotted From - trpr17192
File - U:\rdprj\pott02\R9\030.dgn

STATE OF SOUTH DAKOTA	PROJECT	SHEET	TOTAL SHEETS
	P 0020(117)254	B31	B98

Plotting Date: 07/06/2015

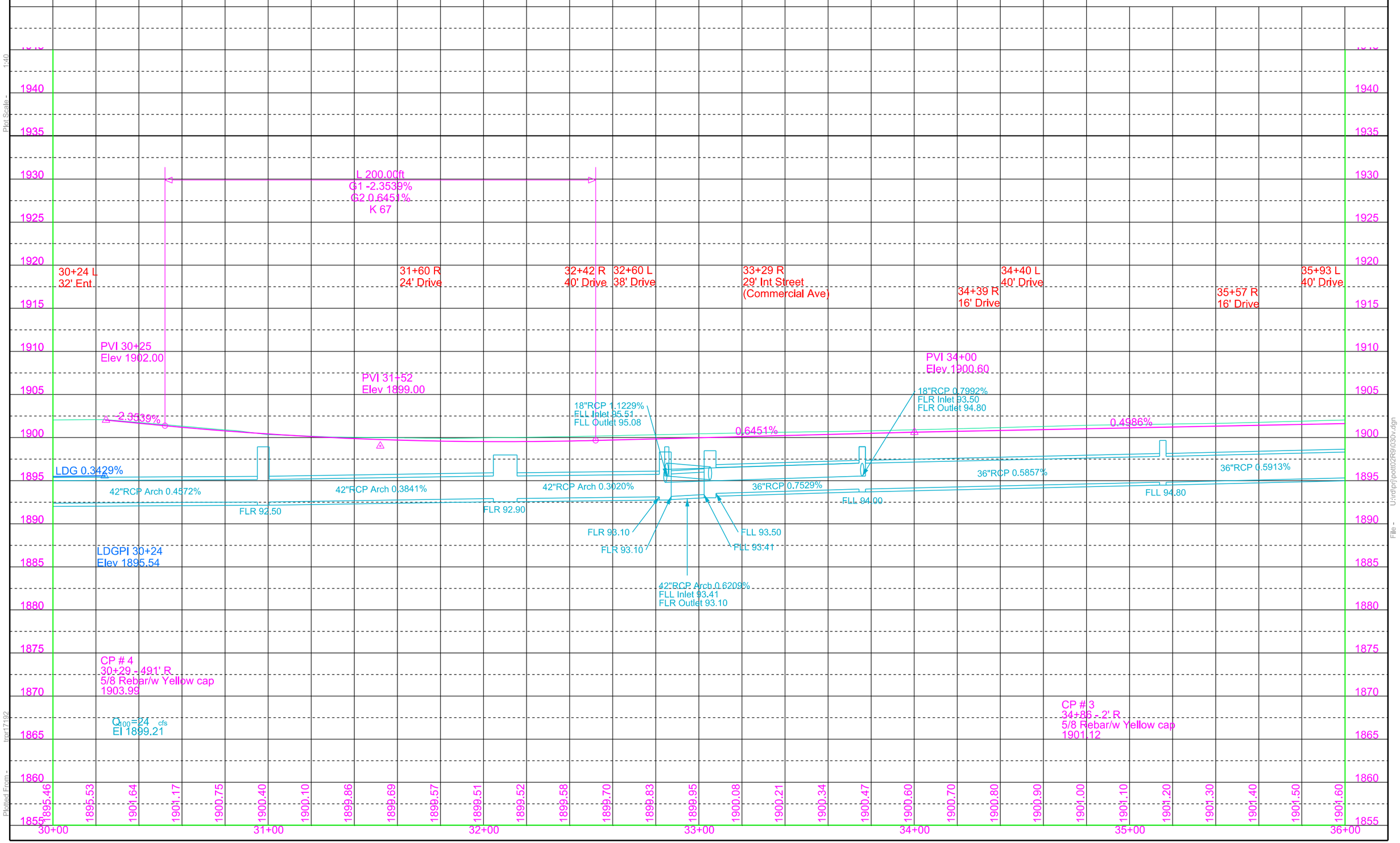

Plot Scale - 1:40

Plotted From - tpr17192

File - U:\rdprj\pott02\R9030v.dgn

STATE OF SOUTH DAKOTA	PROJECT	SHEET	TOTAL SHEETS
	P 0020(117)254	B32	B98

Plotting Date: 07/06/2015

36+20.3-25.69' L
Install 4'X4' Type B
Drop Inlet with 6" Concrete Collar
and Type B Frame and Grate

36+20.3-25.69' L to 36+46.1-49.52' L
Install 18" - 28' RCP
& 1-50° RCP Bend
& 1-40° RCP Bend
(Between Drop Inlets)

36+20.3-25.69' L to 37+22.6-25.69' L
Install 30" - 100' RCP
(Between Drop Inlets)

36+46.1-49.52' L
Install 2'X3' Type B
Drop Inlet with 6" Concrete Collar
and Type B Frame and Grate

36+46.1-49.52' L to 36+96.7-47.68' L
Install 18" - 48' RCP
(Between Drop Inlets)

36+96.7-47.68' L
Install 2'X3' Type B
Drop Inlet with 6" Concrete Collar
and Type B Frame and Grate

37+22.6-25.69' L
Install 3'X4' Type B
Drop Inlet with 6" Concrete Collar
and Type B Frame and Grate

37+24.9-25.65' R
Install 2'X3' Type B
Drop Inlet with 6" Concrete Collar
and Type B Frame and Grate

37+22.6-25.69' L to 38+32.3-25.68' L
Install 30" - 108' RCP
(Between Drop Inlets)

37+22.6-25.69' L to 37+24.9-25.65' R
Install 18" - 50' RCP
(Between Drop Inlets)

38+32.3-25.68' L
Install 3'X4' Type B
Drop Inlet with 6" Concrete Collar
and Type B Frame and Grate

38+32.3-25.68' L to 39+55.3-25.68' L
Install 30" - 120' RCP
(Between Drop Inlets)

39+55.3-25.68' L
Install 4'X4' Type B
Drop Inlet with 6" Concrete Collar
and Type B Frame and Grate

39+83.1-44.20' L
Install 2'X3' Type B
Drop Inlet with 6" Concrete Collar
and Type B Frame and Grate

39+55.3-25.68' L to 40+75.5-25.68' L
Install 30" - 118' RCP
(Between Drop Inlets)

39+55.3-25.68' L to 39+83.1-44.20' L
Install 18" - 26' RCP
& 1-60° RCP Bend
& 1-30° RCP Bend
(Between Drop Inlets)

39+83.1-44.20' L to 40+52.4-61.74' L
Install 18" - 70' RCP
(Between Drop Inlets)

40+52.4-61.74' L
Install 4'X6' Type S Drop Inlet
and Precast Type S Lid

40+75.5-25.68' L
Install 3'X4' Type B
Drop Inlet with 6" Concrete Collar
and Type B Frame and Grate

40+75.9-25.66' R
Install 2'X3' Type B
Drop Inlet with 6" Concrete Collar
and Type B Frame and Grate

40+75.5-25.68' L to 40+75.9-25.66' R
Install 18" - 50' RCP
(Between Drop Inlets)

40+75.5-25.68' L to 41+62.4-25.68' L
Install 30" - 84' RCP
(Between Drop Inlets)

41+62.4-25.68' L
Install 3'X4' Type B
Drop Inlet with 6" Concrete Collar
and Type B Frame and Grate

41+62.4-25.68' L to 42+49.5-25.67' L
Install 30" - 84' RCP
(Between Drop Inlets)

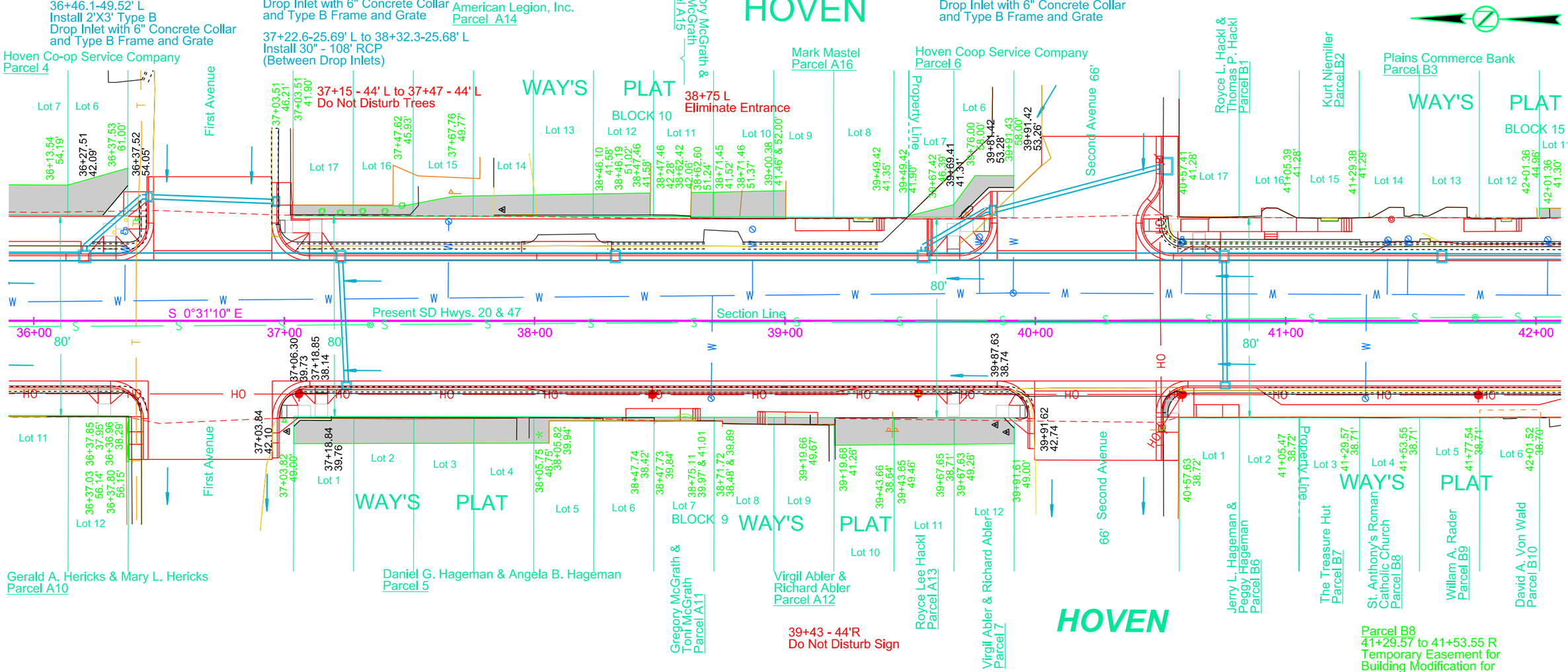

Parcel A10
35+65.90 to 36+37.85 R
Temporary Easement for
Sidewalk 48 sq ft
more or less

Parcel 5
37+03.82 to 38+47.74 R
Temporary Easement for
Sidewalk containing
1125 sq ft.more or less

Parcel A11
38+47.73 to 38+71.72 R
Temporary Easement for
Sidewalk containing
34 sq ft more or less

Parcel A12
38+71.72 to 39+43.66 R
Temporary Easement for
Sidewalk containing
381 sq ft more or less

Parcel A13
39+43.65 to 39+67.65 R
Temporary Easement for
Sidewalk containing
255 sq ft more or less

Parcel A14
37+03.51 to 38+46.19 L
Temporary Easement for
Sidewalk containing
993 sq ft more or less

Parcel 6
39+49.42 to 39+91.43 L
Temporary Easement for
Sidewalk containing
210 sq ft more or less

Parcel 7
39+67.63 to 39+91.62 R
Temporary Easement for
Sidewalk containing
242 sq ft more or less

Parcel A15
38+47.46 to 38+71.46 L
Temporary Easement for
Sidewalk containing
97 sq ft more or less

Parcel A16
38+71.45 to 39+00.38 L
Temporary Easement for
Sidewalk containing
295 sq ft more or less

Parcel B1
40+57.41 to 41+05.39 L
Temporary Easement for
Building Modification for
Sidewalk

Parcel B2
41+05.39 to 41+29.38 L
Temporary Easement for
Building Modification for
Sidewalk

Parcel B3
41+29.38 to 42+01.36 L
Temporary Easement for
Building Modification for
Sidewalk

Parcel B6
40+57.63 to 41+05.47 R
Temporary Easement for
Building Modification for
Sidewalk

Parcel B7
41+05.47 to 41+29.57 R
Temporary Easement for
Building Modification for
Sidewalk

Parcel B8
41+29.57 to 41+53.55 R
Temporary Easement for
Building Modification for
Sidewalk

Parcel B9
41+53.55 to 41+77.54 R
Temporary Easement for
Building Modification for
Sidewalk

Parcel B10
41+77.54 to 42+01.52 R
Temporary Easement for
Building Modification for
Sidewalk

Plot Scale - 1:40
Plotted From - tpgr17192
File - U:\tr\prj\pot\02\R9\U36.dgn

STATE OF SOUTH DAKOTA	PROJECT	SHEET	TOTAL SHEETS
	P 0020(117)254	B33	B98

Plotting Date: 07/06/2015

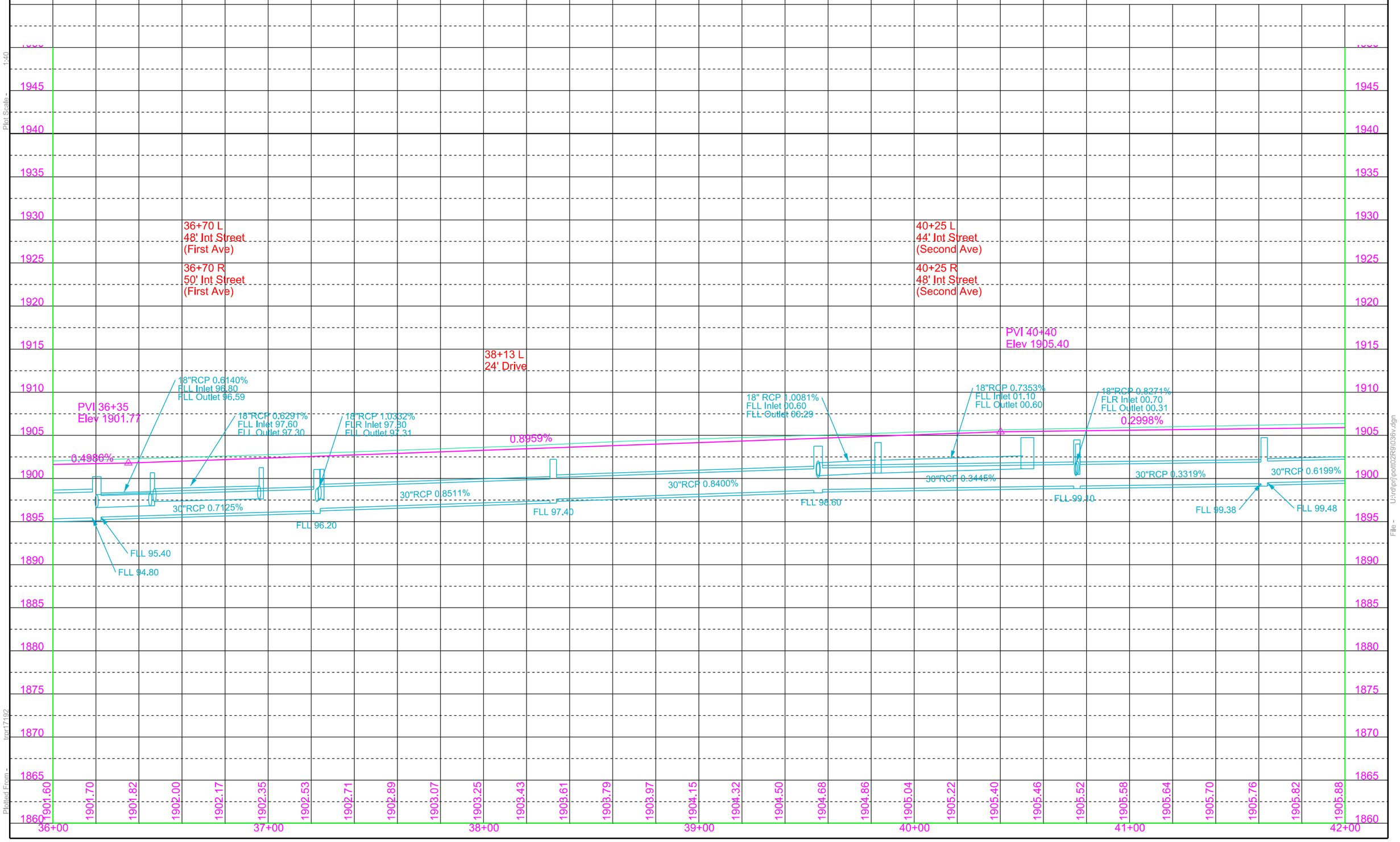

Plot Scale - 1:40

Plotted From - tpp17192

File - U:\rdproj\pat\02R9\036v.dgn

STATE OF SOUTH DAKOTA	PROJECT	SHEET	TOTAL SHEETS
	P 0020(117)254	B34	B98

Plotting Date: 07/06/2015

42+49.5-25.67' L
Install 3'X4' Type B
Drop Inlet with 6" Concrete Collar
and Type B Frame and Grate

42+49.5-25.67' L to 43+34.7-25.67' L
Install 30" - 82' RCP
(Between Drop Inlets)

43+34.7-25.67' L
Install 4'X4' Type B
Drop Inlet with 6" Concrete Collar
and Type B Frame and Grate

43+53.2-44.72' L
Install 2'X3' Type B
Drop Inlet with 6" Concrete Collar
and Type B Frame and Grate

43+53.2-44.72' L to 44+00.4-40.50' L
Install 18" - 46' RCP
(Between Drop Inlets)

43+34.7-25.67' L to 43+53.2-44.72' L
Install 18" - 18' RCP
& 2-58° RCP Bends
(Between Drop Inlets)

43+34.7-25.67' L to 44+29.7-28.13' L
Install 30" - 90' RCP
(Between Drop Inlets)

44+00.4-40.50' L
Install 2'X3' Type B
Drop Inlet with 6" Concrete Collar
and Type B Frame and Grate

44+29.7-28.13' L
Install 4'X6' Type S Drop Inlet
and Precast Type S Lid

42+95 - 39'L
Remove & Reset Mailbox
(Incidental Work, Grading)

44+29.7-28.13' R
Install 4'X6' Type S Drop Inlet
and Precast Type S Lid

44+29.7-28.13' L to 44+75.0-25.67' L
Install 24" - 42' RCP
(Between Drop Inlets)

44+75.0-25.67' L
Install 3'X4' Type B
Drop Inlet with 6" Concrete Collar
and Type B Frame and Grate

44+29.7-28.13' L to 44+29.7-26.13' R
Install 18" - 54' RCP
(Between Drop Inlets)

44+75.0-25.67' L to 45+80.5-25.67' L
Install 24" - 102' RCP
(Between Drop Inlets)

45+80.5-25.67' L
Install 3'X4' Type B
Drop Inlet with 6" Concrete Collar
and Type B Frame and Grate

45+80.5-25.67' L to 45+80.5-25.67' R
Install 18" - 50' RCP
(Between Drop Inlets)

45+80.5-25.67' R
Install 2'X3' Type B
Drop Inlet with 6" Concrete Collar
and Type B Frame and Grate

45+76-33' L
Take Out Concrete Footing
(Incidental Work, Grading)

45+80.5-25.67' L to 46+85.5-25.67' L
Install 24" - 102' RCP
(Between Drop Inlets)

46+85.5-25.67' L
Install 3'X4' Type B
Drop Inlet with 6" Concrete Collar
and Type B Frame and Grate

46+85.5-25.67' L to 47+78.3-25.67' L
Install 24" - 90' RCP
(Between Drop Inlets)

46+85.5-27.17' L to 47+10.3-50.63' L
Install 18" - 28' RCP
& 2- 55° RCP Bends
(Between Drop Inlets)

45+78-42'L to 46+99 - 54'L
Take Out Concrete Curb
(Incidental Work, Grading)

47+53.5-50.50' L
Install 2'X3' Type B
Drop Inlet with 6" Concrete Collar
and Type B Frame and Grate

47+78.3-25.67' L
Install 3'X4' Type B
Drop Inlet with 6" Concrete Collar
and Type B Frame and Grate

47+78.4-21.67' L
Install 2'X3' Type B
Drop Inlet with 6" Concrete Collar
and Type B Frame and Grate

47+53.5-50.50' L to 47+78.3-25.67' L
Install 18" - 28' RCP
& 2-55° RCP Bends
(Between Drop Inlets)

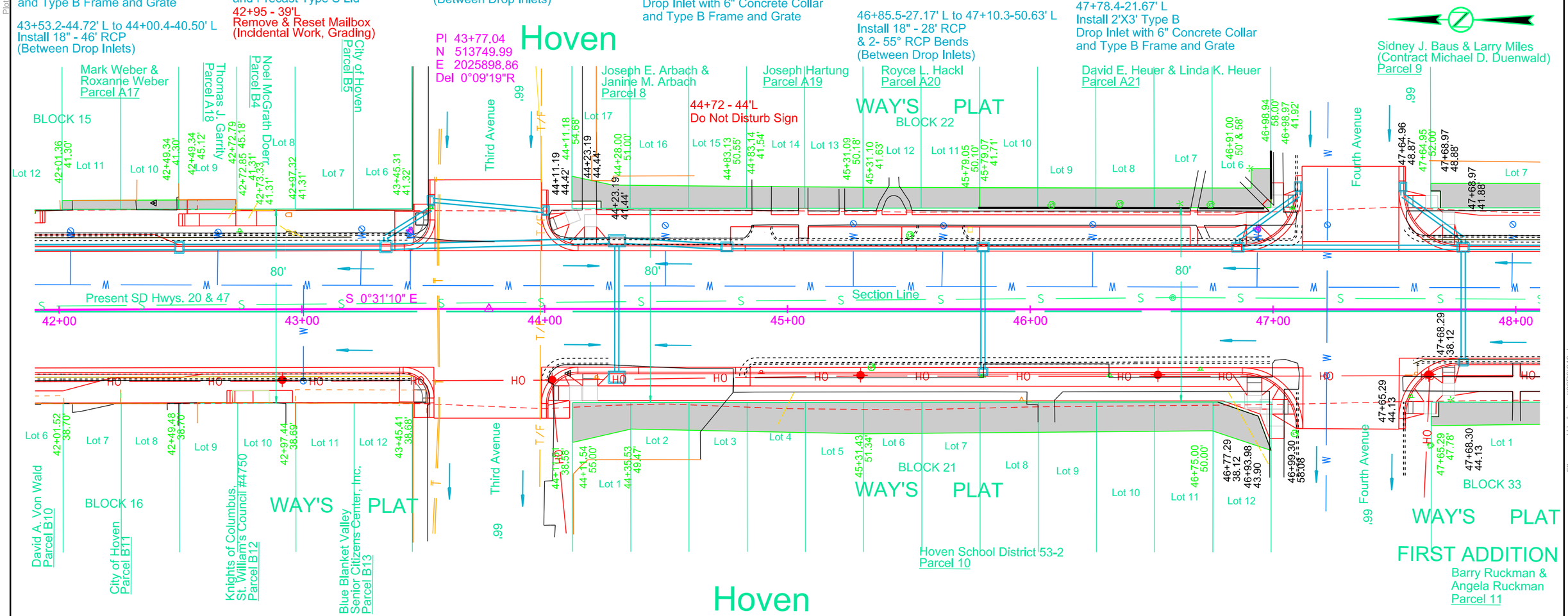

Parcel B11
42+01.52 to 42+49.48 R
Temporary Easement for
Building Modification for
Sidewalk

Parcel B12
42+49.48 to 42+97.44 R
Temporary Easement for
Building Modification for
Sidewalk

Parcel B4
42+73.33 to 42+97.32 L
Temporary Easement for
Building Modification for
Sidewalk

Parcel B5
42+97.32 to 43+45.31 L
Temporary Easement for
Building Modification for
Sidewalk

Parcel A17
42+01.36 to 42+49.34 L
Temporary Easement
for Sidewalk containing
180 sq ft more or less

Parcel B13
42+97.44 to 43+45.41 R
Temporary Easement for
Building Modification for
Sidewalk

Parcel A18
42+49.34 to 42+72.85 L
Temporary Easement for
Sidewalk containing
90 sq ft more or less

Parcel A19
44+83.13 to 45+31.10 L
Temporary Easement for
Sidewalk containing
421 sq ft more or less

Parcel 8
44+11.18 to 44+83.14 L
Temporary Easement for
Sidewalk containing
667 sq ft more or less

Parcel 10
44+11.51 to 46+99.30 R
Temporary Easement for
Sidewalk containing
3528 sq ft more or less

Parcel A20
45+31.09 to 45+79.07 L
Temporary Easement for
Sidewalk containing
406 sq ft more or less

Parcel A21
45+79.05 to 46+98.97 L
Temporary Easement for
Sidewalk containing
1051 sq ft more or less

47+78.4-21.67' R
Install 2'X3' Type B
Drop Inlet with 6" Concrete Collar
and Type B Frame and Grate

47+78.3-25.67' L to 48+83.6-25.67' L
Install 18" - 102' RCP
(Between Drop Inlets)

47+78.3-25.67' L to 47+78.4-21.67' R
Install 18" - 46' RCP
(Between Drop Inlets)

Plot Scale - 1:40
Plotted From - trgt17192
File - U:\rdp\pjpott02R9\042.dgn

STATE OF SOUTH DAKOTA	PROJECT	SHEET	TOTAL SHEETS
	P 0020(117)254	B35	B98

Plotting Date: 07/06/2015

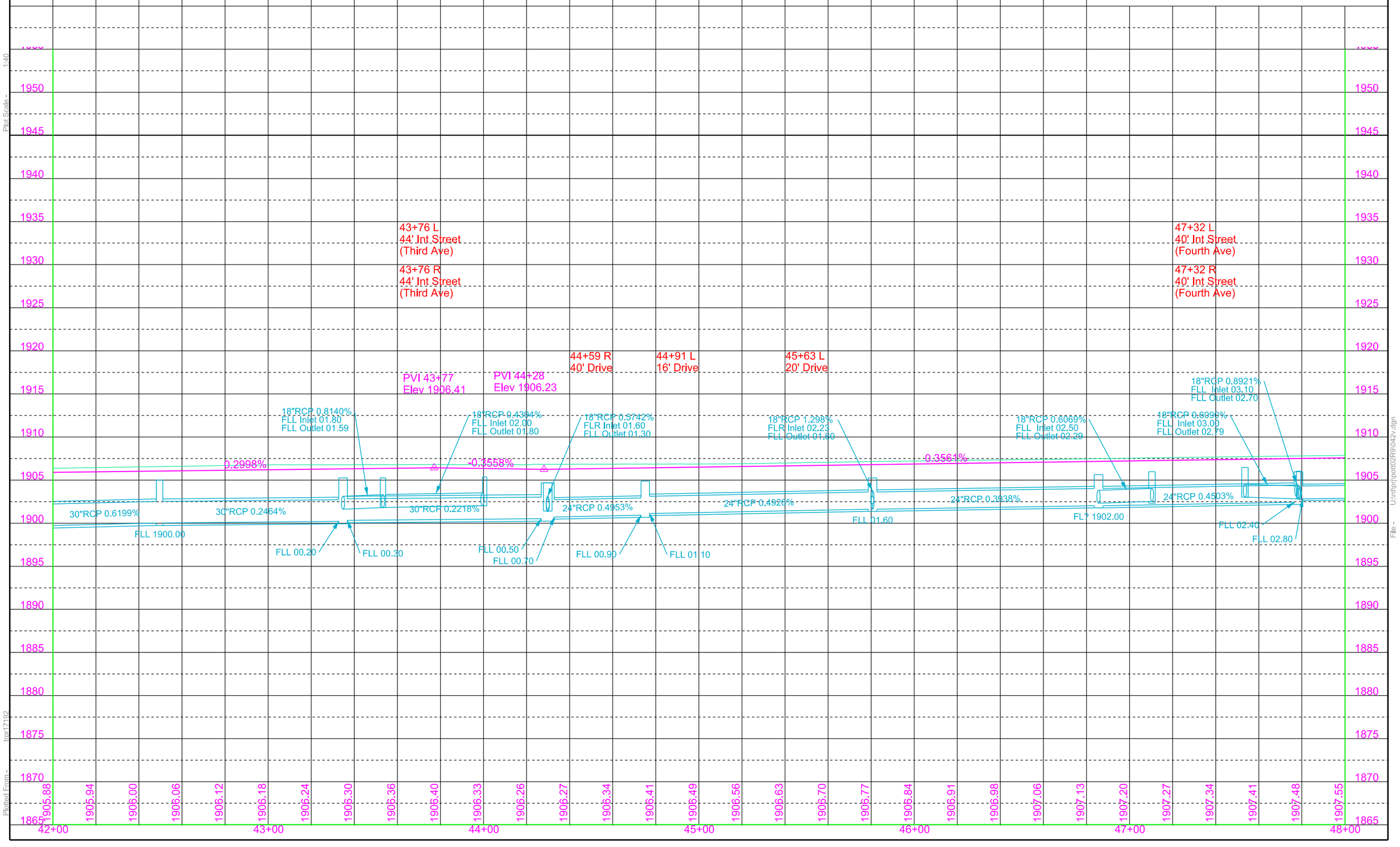

Plot Scale - 1:40

Plotted From - tpp17192

File - U:\rdphj\pott02R9\042v.dgn

STATE OF SOUTH DAKOTA	PROJECT	SHEET	TOTAL SHEETS
	P 0020(117)254	B36	B98

Plotting Date: 07/06/2015

48+83.6-25.67' L
Install 2'X3' Type B
Drop Inlet with 6" Concrete Collar
and Type B Frame and Grate

48+83.6-25.67' L to 49+62.7-25.67' L
Install 18" - 76' RCP
(Between Drop Inlets)

48+83.6-25.67' L to 48+83.6-21.67' R
Install 18" - 46' RCP
(Between Drop Inlets)

48+83.6-21.67' R
Install 2'X3' Type B
Drop Inlet with 6" Concrete Collar
and Type B Frame and Grate

49+62.7-25.67' L
Install 2'X3' Type B
Drop Inlet with 6" Concrete Collar
and Type B Frame and Grate

Do Not Disturb Trees at:
48+86-41' L, 49+16-48' L
49+30-48' L, 49+44-47' L
49+72-51' L, 50+25-45' L
50+35-45' L, 50+54-43' L

50+82.9-50.50' L
Install 2'X3' Type B
Drop Inlet with 6" Concrete Collar
and Type B Frame and Grate

50+82.9-50.50' L to 51+11.6-50.50' L
Install 18" - 28' RCP
(Between Drop Inlets)

51+11.6-50.50' L
Install 2'X3' Type B
Drop Inlet with 6" Concrete Collar
and Type B Frame and Grate

51+11.6-50.50' L to 51+40.4-25.67' L
Install 18" - 30' RCP
& 1-40° RCP Bend
& 1-50° RCP Bend
(Between Drop Inlets)

51+40.4-25.67' L
Install 2'X3' Type B
Drop Inlet with 6" Concrete Collar
and Type B Frame and Grate

51+40.4-25.67' L to 52+78.5-25.67' L
Install 18" - 136' RCP
(Between Drop Inlets)

52+78.5-25.67' L
Install 2'X3' Type B
Drop Inlet with 6" Concrete Collar
and Type B Frame and Grate

52+78.5-25.67' L to 54+14.6-25.67' L
Install 18" - 134' RCP
(Between Drop Inlets)

53+00 to 57+02 L
Remove Trees from
Temporary Easement
(Clearing)

Do Not Disturb Trees at:
51+29-48' L, 51+49-46' L
51+69-47' L, 51+89-47' L
52+86-46' L

Do Not Disturb Monument at:
54+00-45' L

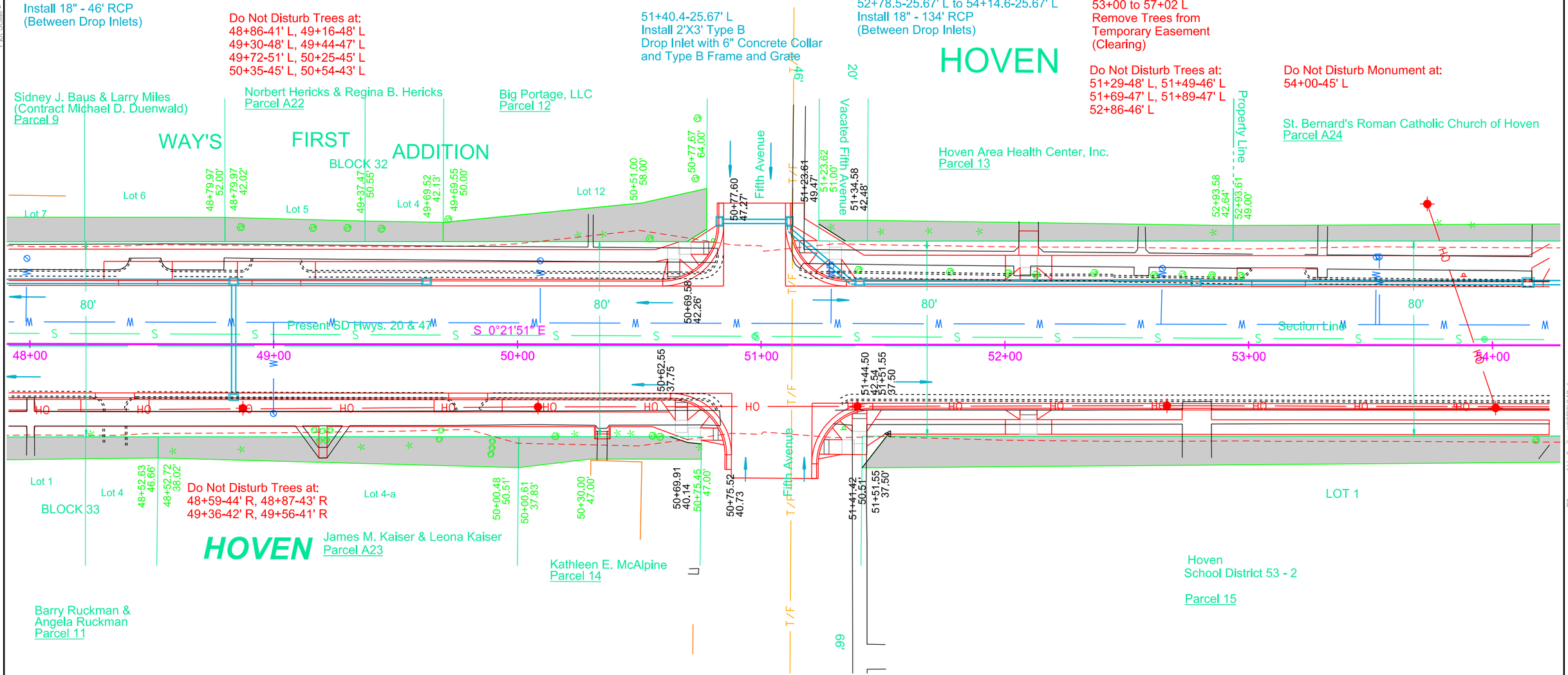

Parcel 9
47+64.95 to 48+97.97 L
Temporary Easement for
Sidewalk containing
1129 sq ft more or less

Parcel 11
47+65.29 to 48+52.72 R
Temporary Easement for
Sidewalk containing
781 sq ft more or less

Parcel A22
48+79.97 to 49+69.55 L
Temporary Easement for
Sidewalk containing
792 sq ft more or less

Parcel A23
48+52.63 to 50+00.61 R
Temporary Easement for
Sidewalk containing
1577 sq ft more or less

Parcel 12
49+69.52 to 50+77.67 L
Temporary Easement for
Sidewalk containing
1442 sq ft more or less

Parcel 14
50+00.48 to 50+75.52 R
Temporary Easement for
Sidewalk containing
719 sq ft more or less

Parcel 13
51+23.61 to 52+93.61 L
Temporary Easement for
Sidewalk containing
1244 sq ft more or less

Parcel A24
52+93.58 to 57+02.40 L
Temporary Easement for
Sidewalk containing
2950 sq ft more or less

Parcel 15
51+41.42 to 56+65.27 R
Temporary Easement for
Sidewalk containing
5841 sq ft more or less

Plot Scale - 1:40
Plotted From - tpr17192
File - U:\rdprj\pott02\R9\u48.dgn

STATE OF SOUTH DAKOTA	PROJECT	SHEET	TOTAL SHEETS
	P 0020(117)254	B37	B98

Plotting Date: 07/06/2015

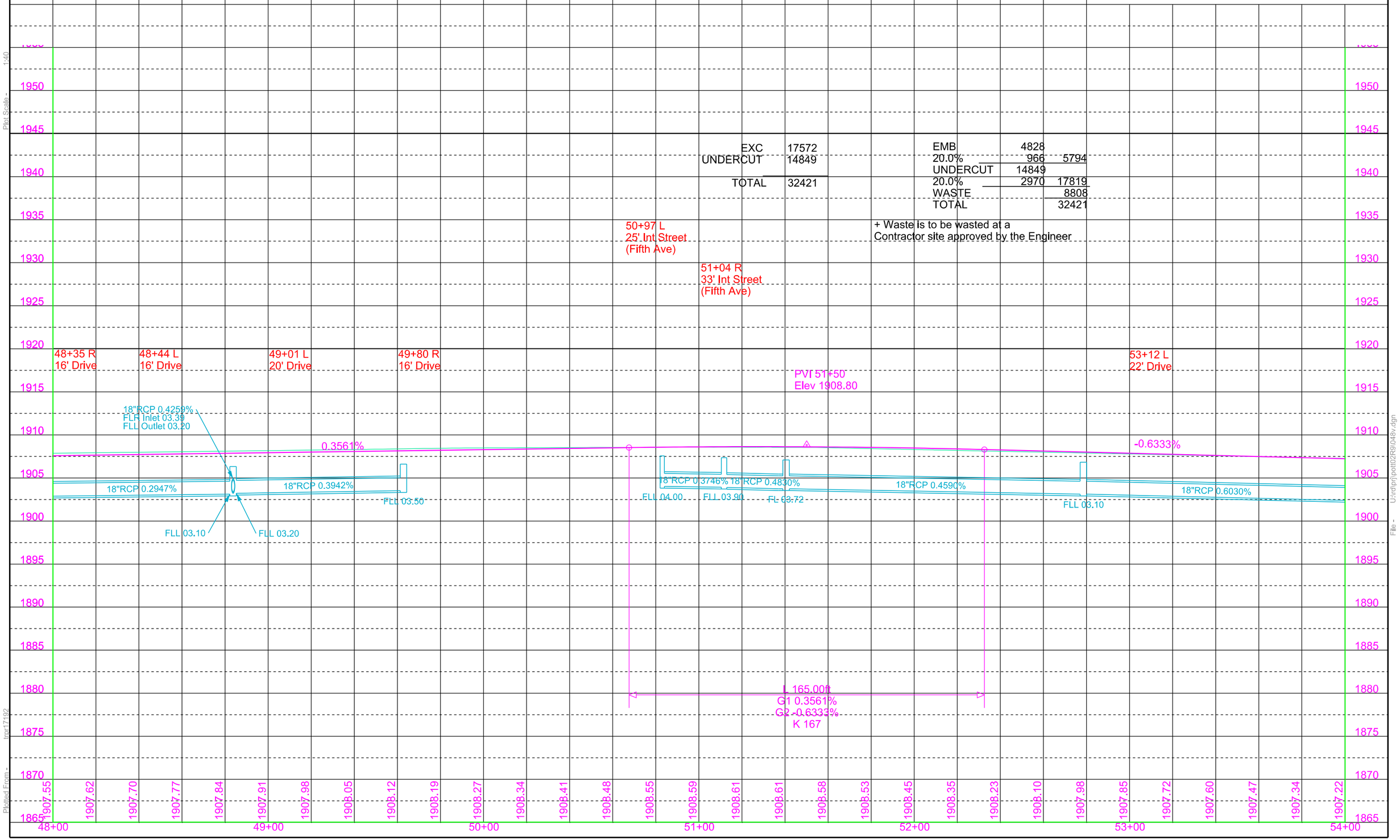

STATE OF SOUTH DAKOTA	PROJECT	SHEET	TOTAL SHEETS
	P 0020(117)254	B38	B98

Plotting Date: 07/06/2015

54+14.6-25.67' L
Install 3'X4' Type B
Drop Inlet with 6" Concrete Collar
and Type B Frame and Grate

54+14.6-25.67' L to 55+53.3-25.67' L
Install 24" - 136' RCP
(Between Drop Inlets)

55+53.3-25.67' L
Install 3'X4' Type B
Drop Inlet with 6" Concrete Collar
and Type B Frame and Grate

55+53.3-25.67' L to 56+86.8-25.67' L
Install 24" - 130' RCP
(Between Drop Inlets)

56+72.7-25.67' R
Install 2'X3' Type B
Drop Inlet with 6" Concrete Collar
and Type B Frame and Grate

56+86.8-25.67' L
Install 3'X4' Type B
Drop Inlet with 6" Concrete Collar
and Type B Frame and Grate

56+86.8-25.67' L to 57+15.7-50.50' L
Install 18" - 30' RCP
& 2-58° RCP Bends
(Between Drop Inlets)

56+72.7-25.67' R to 56+86.8-25.67' L
Install 18" - 52' RCP
(Between Drop Inlets)

56+86.8-25.67' L to 59+03.8-25.67' L
Install 24" - 214' RCP
(Between Drop Inlets)

57+15.7-50.50' L
Install 2'X3' Type B
Drop Inlet with 6" Concrete Collar
and Type B Frame and Grate

57+15.7-50.50' L to 57+48.3-56.50' L
Install 18" - 32' RCP
(Between Drop Inlets)

57+48.3-56.50' L
Install 2'X3' Type B
Drop Inlet with 6" Concrete Collar
and Type B Frame and Grate

59+03.8-25.67' L
Install 3'X4' Type B
Drop Inlet with 6" Concrete Collar
and Type B Frame and Grate

59+03.8-25.67' L to 60+03.5-25.67' L
Install 24" - 96' RCP
(Between Drop Inlets)

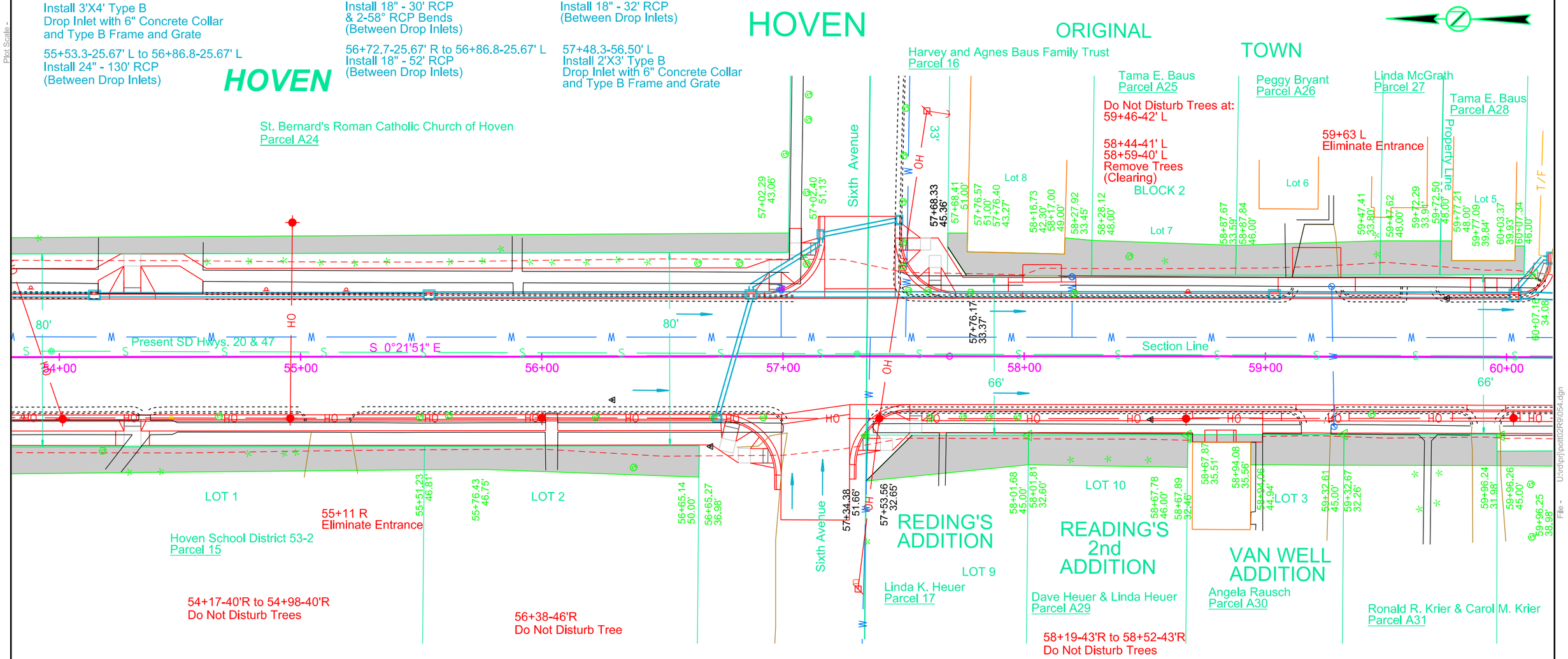

Parcel 16
57+68.33 to 58+28.12 L
Temporary Easement for
Sidewalk containing
644 sq ft more or less

Parcel 17
57+34.38 to 58+01.81 R
Temporary Easement for
Sidewalk containing
875 sq ft more or less

Parcel A25
58+27.92 to 58+87.84 L
Temporary Easement for
Sidewalk containing
806 sq ft more or less

Parcel A29
58+01.68 to 58+67.89 R
Temporary Easement for
Sidewalk containing
857 sq ft more or less

Parcel A26
58+87.67 to 59+47.62 L
Temporary Easement for
Sidewalk containing
795 sq ft more or less

Parcel A30
58+67.87 to 59+32.67 R
Temporary Easement for
Sidewalk containing
568 sq ft more or less

Parcel A27
58+47.41 to 59+72.50 L
Temporary Easement for
Sidewalk containing
352 sq ft more or less

Parcel A31
58+32.61 to 59+96.26 R
Temporary Easement for
Sidewalk containing
819 sq ft more or less

Parcel A28
59+72.29 to 60+07.34 L
Temporary Easement for
Sidewalk containing
268 sq ft more or less

Plot Scale - 1:40
Plotted From - tnpr17192
File - U:\ralph\plotto2R9\054.dgn

STATE OF SOUTH DAKOTA	PROJECT	SHEET	TOTAL SHEETS
	P 0020(117)254	B39	B98

Plotting Date: 07/06/2015

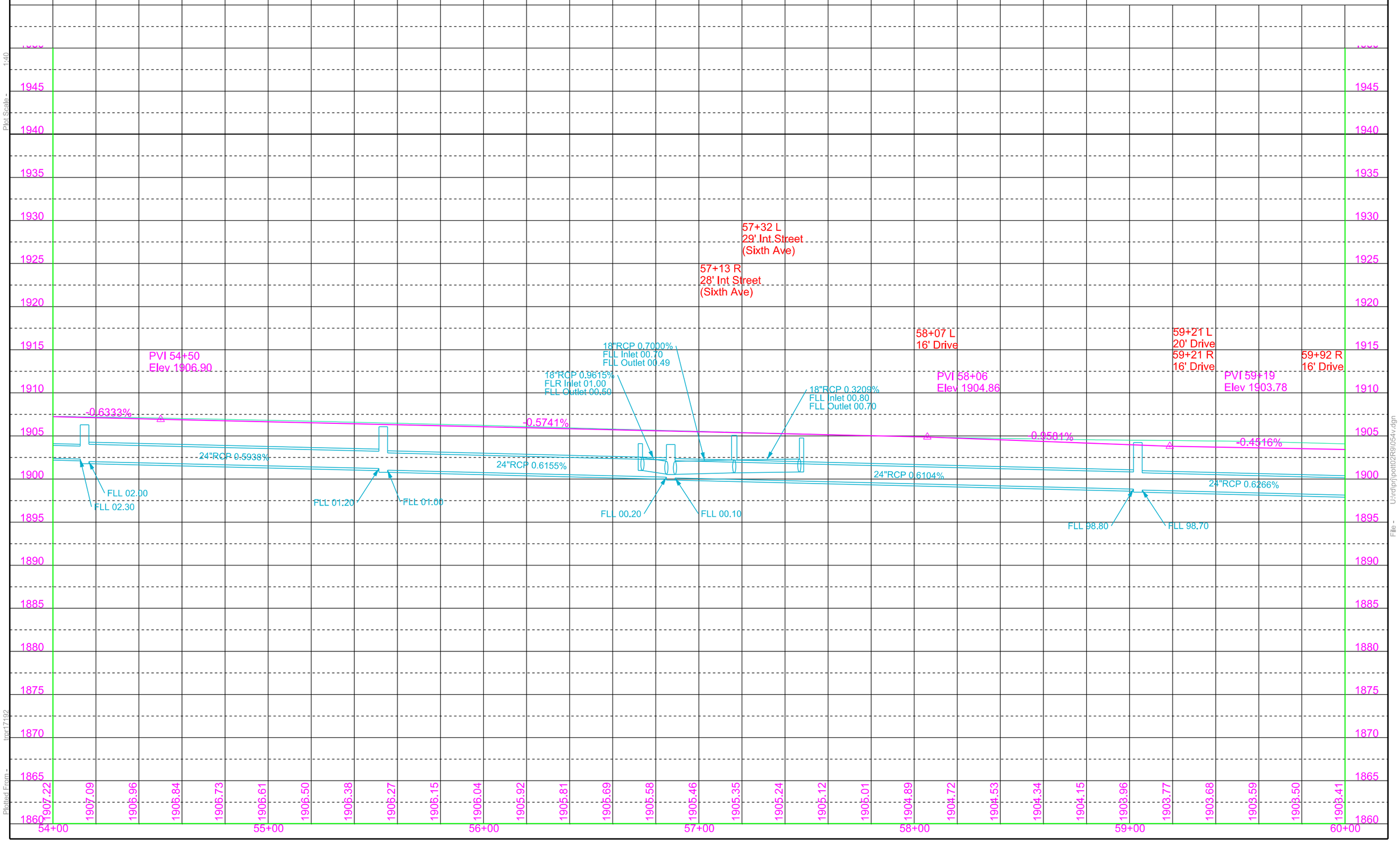

Plot Scale - 1:40

Plotted From - tpp17192

File - U:\rdproj\pottt02R91054v.dgn

STATE OF SOUTH DAKOTA	PROJECT	SHEET	TOTAL SHEETS
	P 0020(117)254	B40	B98

Plotting Date: 07/06/2015

60+03.5-25.67' L
Install 4'X4' Type B
Drop Inlet with 6" Concrete Collar
and Type B Frame and Grate

60+03.5-25.67' L to 60+18.4-41.03' L
Install 18" - 16' RCP
&1-50° RCP Bend
(Between Drop Inlets)

60+03.5-25.67' L to 61+24.6-21.67' L
Install 30" - 118' RCP
(Between Drop Inlets)

60+18.4-41.03' L
Install 3'X4' Type C
Drop Inlet with 6" Concrete Collar
and Type C Frame and Grate

60+18.4-41.03' L to 60+51.2-46.56' L
Install 18" - 32' RCP
(Between Drop Inlets)

60+51.2-46.56' L
Install 2'X3' Type B
Drop Inlet with 6" Concrete Collar
and Type B Frame and Grate

60+63.4-50.99' L
Install 3'X4' Type C
Drop Inlet with 6" Concrete Collar
and Type C Frame and Grate

60+51.2-46.56' L to 60+63.4-50.99' L
Install 18" - 12' RCP
(Between Drop Inlets)

60+51.2-46.56' R
Install 2'X3' Type B
Drop Inlet with 6" Concrete Collar
and Type B Frame and Grate

60+90.5-21.67' R to 61+24.6-21.67' L
Install 18" - 46' RCP
& 2-45° RCP Bends
(Between Drop Inlets)

60+90.5-21.67' R
Install 2'X3' Type B
Drop Inlet with 6" Concrete Collar
and Type B Frame and Grate

65+46 R
Take out 24" - 74' CMP
& 2 End Sections
(Incidental Work, Grading)

61+24.6-21.67' L
Install 4'X4' Type B
Drop Inlet with 6" Concrete Collar
and Type B Frame and Grate

61+24.6-21.67' L to 62+51.9-21.67' L
Install 30" - 124' RCP
(Between Drop Inlets)

65+52 - 18' R
Take out Drop Inlet
w/ Frame and Grate

62+51.9-21.67' L
Install 4'X4' Type B
Drop Inlet with 6" Concrete Collar
and Type B Frame and Grate

62+51.9-21.67' L to 64+00.0-21.67' L
Install 30" - 144' RCP
(Between Drop Inlets)

64+00.0-21.67' L
Install 4'X4' Type B
Drop Inlet with 6" Concrete Collar
and Type B Frame and Grate

65+43-42' L
Take Out 24"- 74' CMP &
2 End Sections

64+00.0-21.67' L to 64+00.0-21.67' R
Install 30" - 40' RCP
(Between Drop Inlet and Outlet)

64+00.0-21.67' R
Install 4'X4' Type B
Drop Inlet with 6" Concrete Collar
and Type B Frame and Grate

64+00.0-21.67' R to 65+46.1-21.67' R
Install 30" - 142' RCP
(Between Drop Inlet and Outlet)

65+46.1-21.67' R
Install 4'X4' Type B
Drop Inlet with 6" Concrete Collar
and Type B Frame and Grate

65+46.1-21.67' R to 66+25.8-43.53' R
Install 36" - 82' RCP
& 1 Sloped End
(Between Drop Inlet and Outlet)

65+47 - 49' L
Install 24" - 58' CMP
& 2 Safety Ends

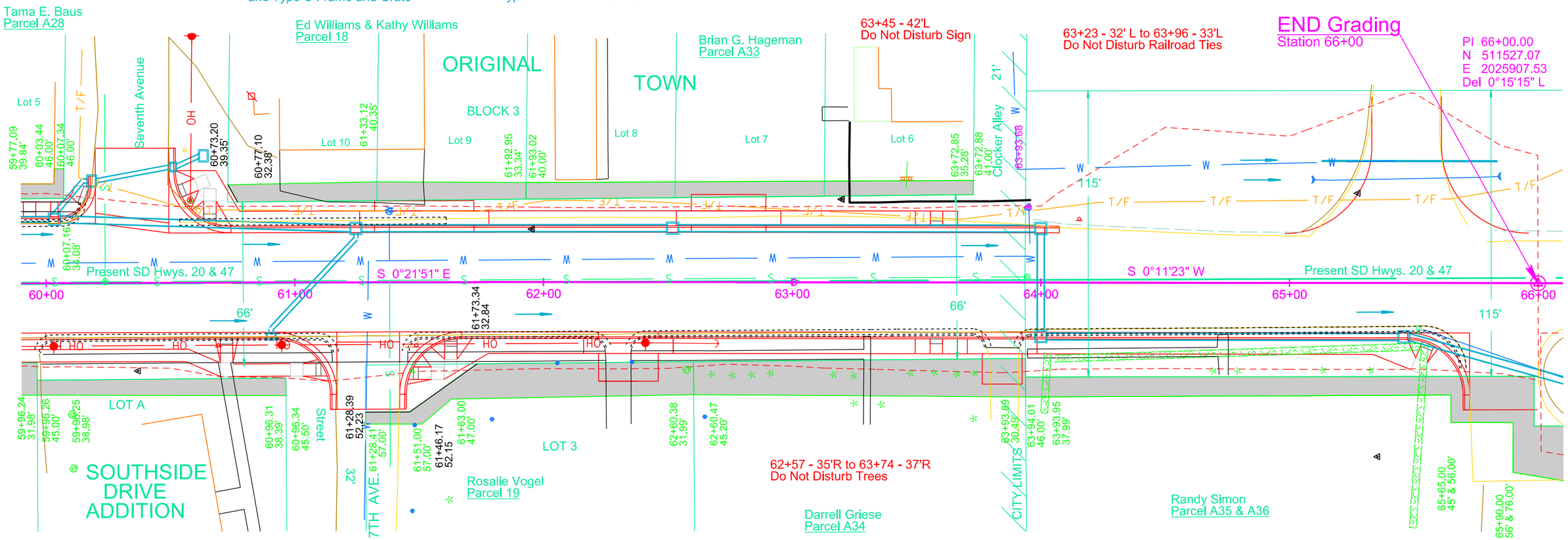

PI 60+34.90
N 512092.16
E 2025909.40
Del 0°33'14"R
Dc 0°06'15"
T 265.83'
L 531.66'
R 55000.00'

Sec. 5 - T120N - R74W

Parcel A32
59+96.24 to 60+96.34 R
Temporary Easement for
Sidewalk containing
656 sq ft more or less

Parcel 18
60+73.20 to 61+93.02 L
Temporary Easement for
Sidewalk containing
847 sq ft more or less

Parcel 19
61+28.39 to 62+60.47 R
Temporary Easement for
Sidewalk containing
1498 sq ft more or less

Parcel A33
61+92.95 to 63+72.88 L
Temporary Easement for
Sidewalk containing
1114 sq ft more or less

Parcel A34
62+60.38 to 63+94.01 R
Temporary Easement for
Sidewalk containing
1918 sq ft more or less

Parcel A35
63+93.95 to 67+79.24 R
Temporary Easement for
Sidewalk containing
6141 sq ft more or less

Plot Scale - 1:40
Plotted From - tpp17192
File - U:\radrp\pplt\02R9\060.dgn

STATE OF SOUTH DAKOTA	PROJECT	SHEET	TOTAL SHEETS
	P 0020(117)254	B41	B98

Plotting Date: 07/06/2015

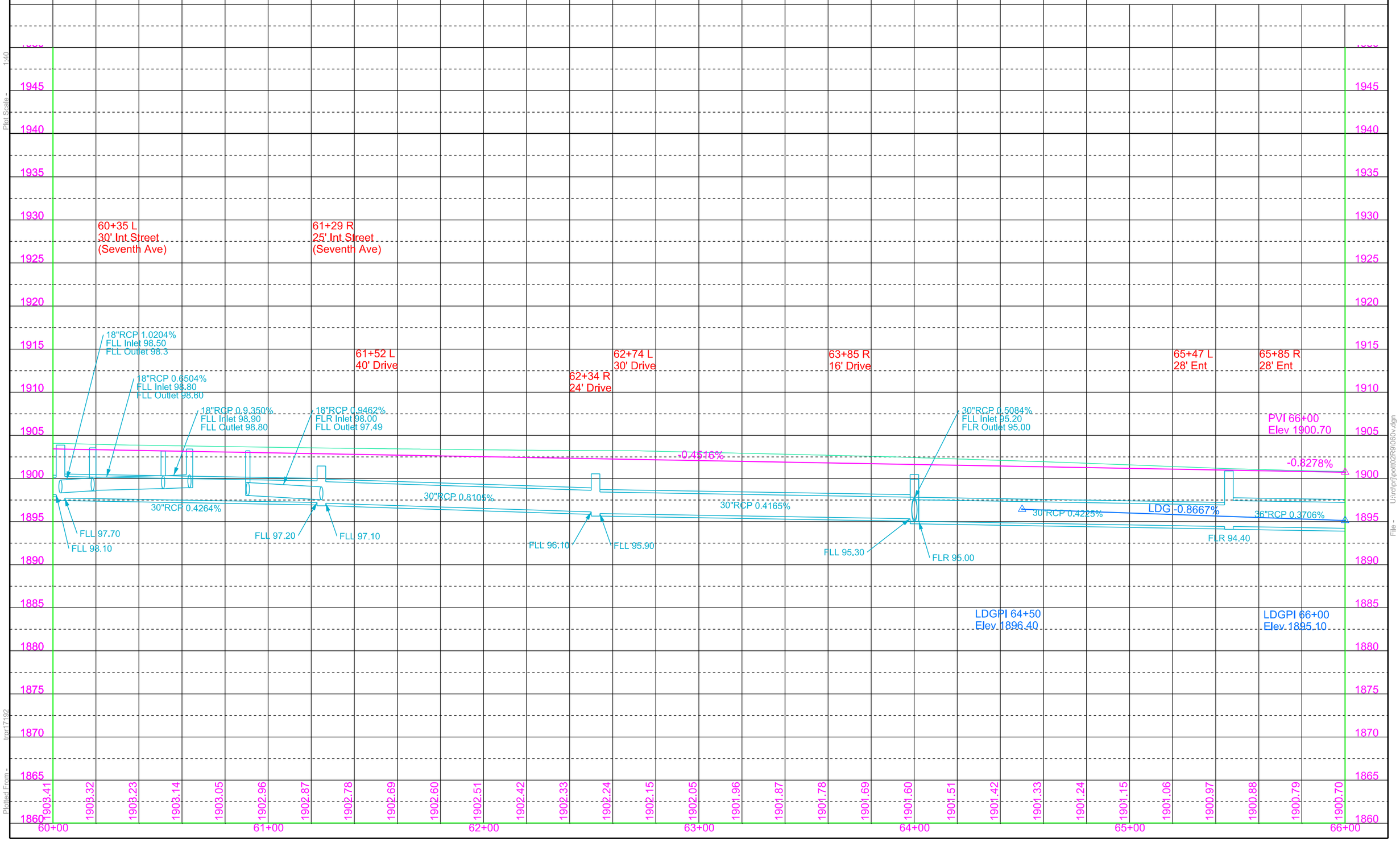

Plot Scale - 1:40

Plotted From - tpr17192

File - U:\rdproj\pott02\R9\060v.dgn

STATE OF SOUTH DAKOTA	PROJECT	SHEET	TOTAL SHEETS
	P 0020(117)254	B42	B98

Plotting Date: 07/06/2015

66+76-49' R
Take out 18" - 59' RCP
& 2 End Sections
(Incidental Work, Grading)

71+50-56.5' R (13 ac)
Install 36" - 66' RCP Arch
& 2 Sloped Ends

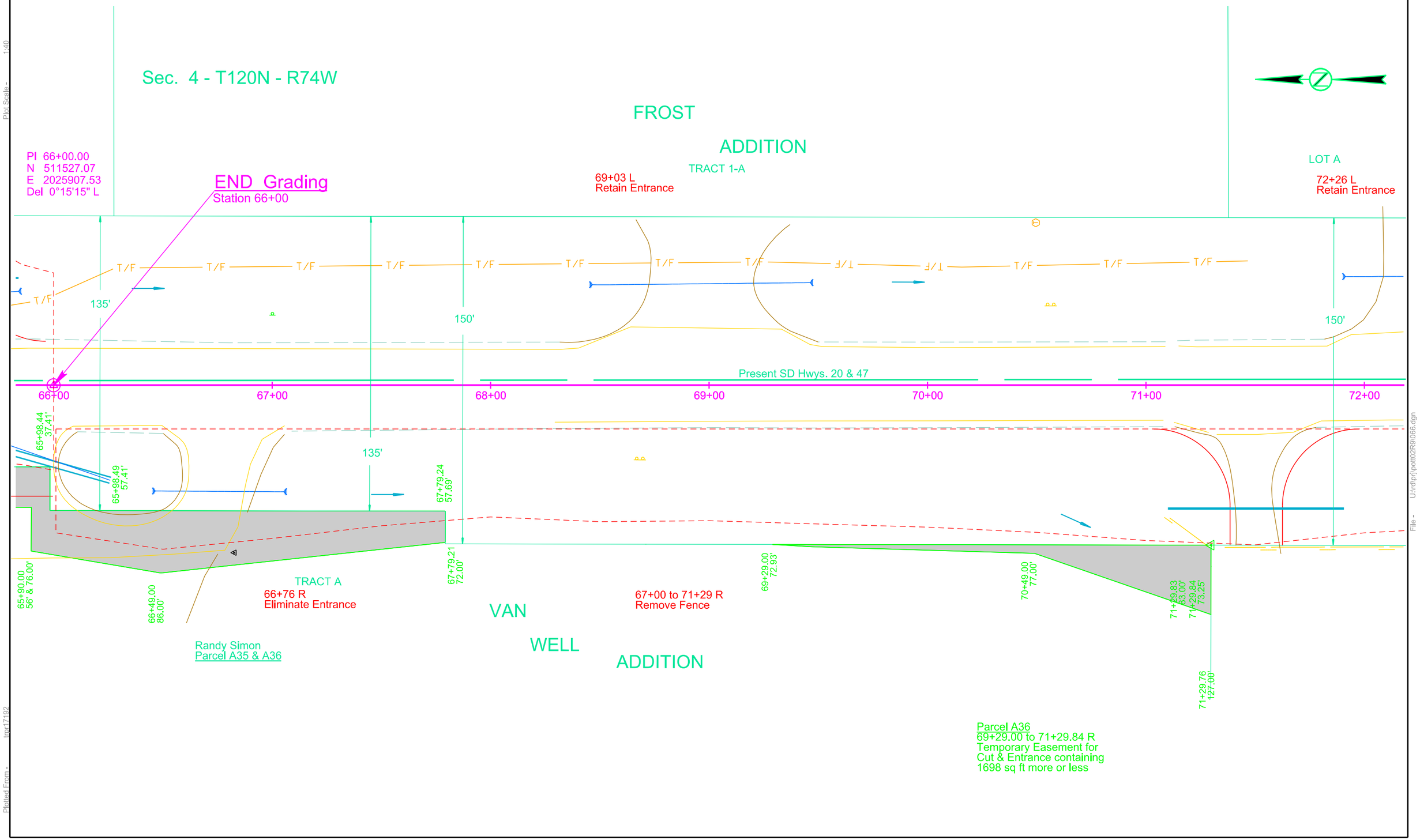

Plot Scale - 1:40
Plotted From - tqp17192
File - U:\rdph\pdt\02R9\066.dgn

STATE OF SOUTH DAKOTA	PROJECT	SHEET	TOTAL SHEETS
	P 0020(117)254	B43	B98

Plotting Date: 01/08/2015

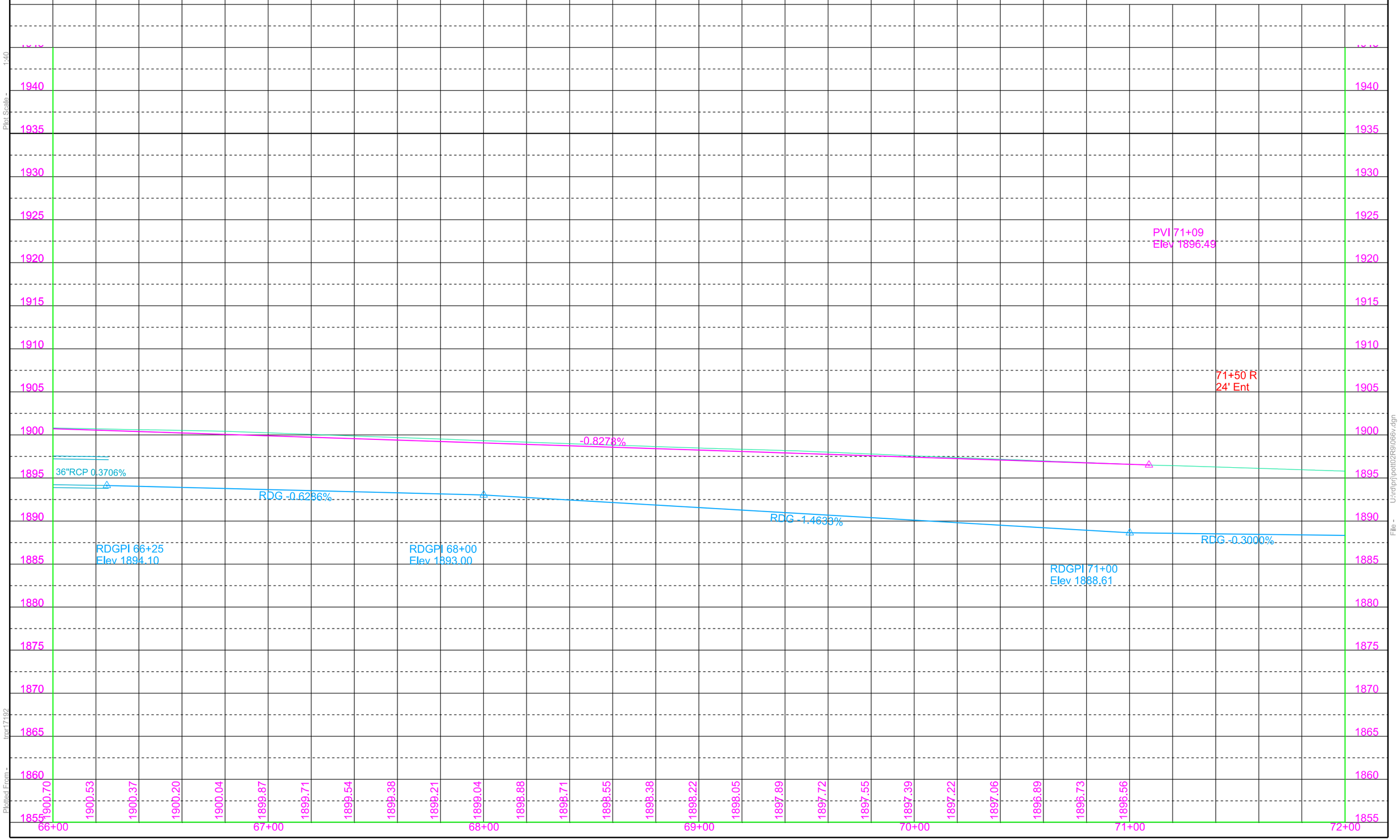

Plot Scale - 1:40

Plotted From - tpr17192

File - U:\drlpr\pott02R9\065v.dgn

STATE OF SOUTH DAKOTA	PROJECT	SHEET	TOTAL SHEETS
	P 0020(117)254	B44	B98

Plotting Date: 07/06/2015

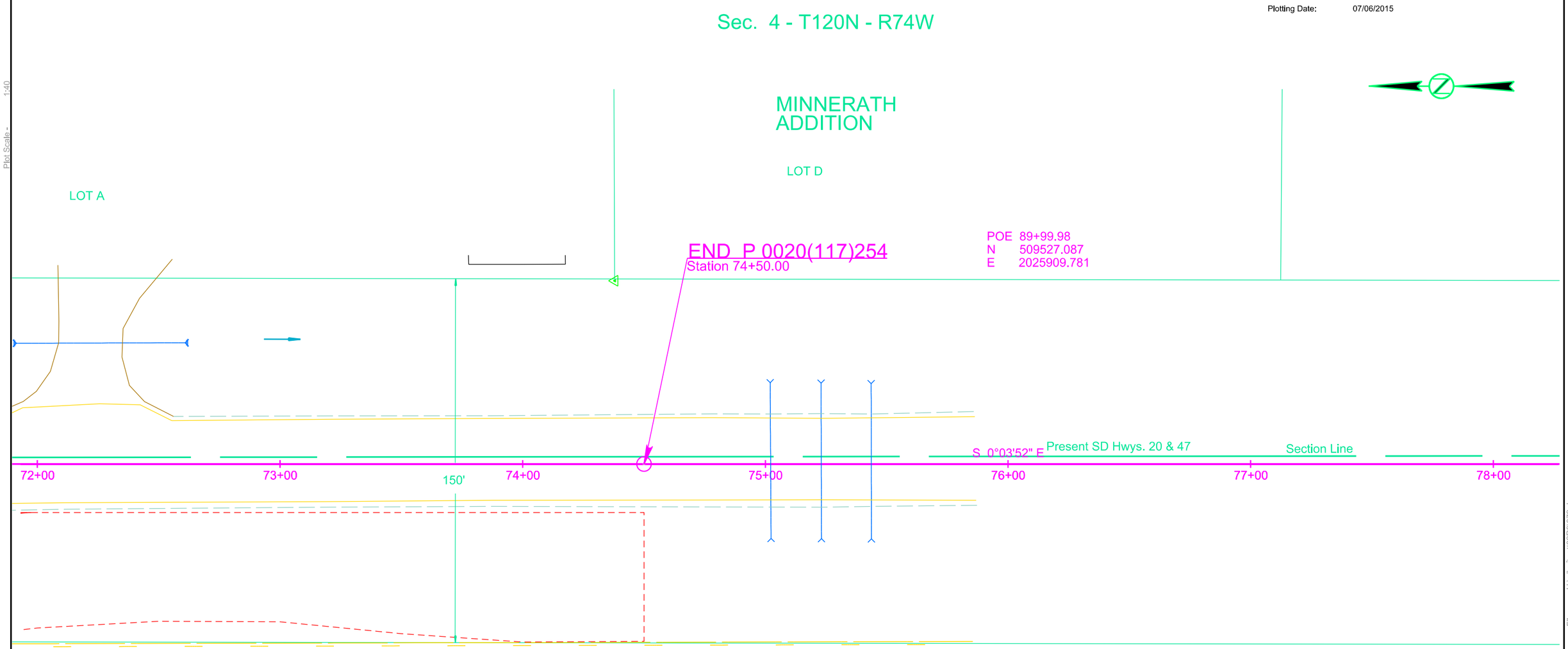

Hageman Real Estate Limited Partnership

Parcel A37
Omitted

71+82 - 74' R to 74+50 - 74' R
Do Not Disturb Fence

Sec. 5 - T120N - R74W

Plot Scale - 1:40

Plotted From - tgp17192

File - U:\rdlpn\pott02R91072.dgn

STATE OF SOUTH DAKOTA	PROJECT	SHEET	TOTAL SHEETS
	P 0020(117)254	B45	B98

Plotting Date: 01/08/2015

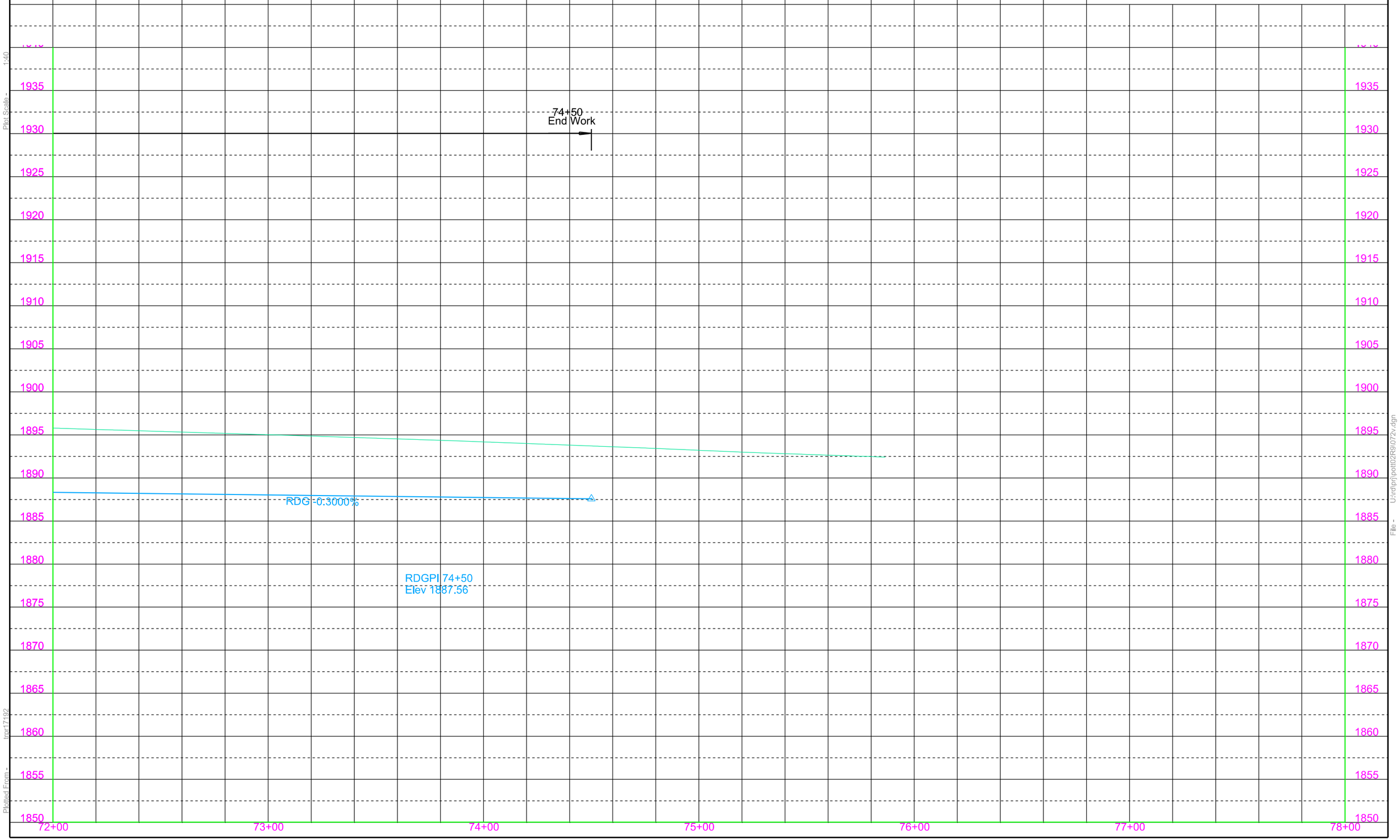

Plot Scale - 1:40

Plotted From - tpgr17192

File - U:\rdeprj\pott02R9072v.dgn

STATE OF SOUTH DAKOTA	PROJECT	SHEET	TOTAL SHEETS
	P 0020(117)254	B46	B98

Plotting Date: 07/06/2015

CURB & GUTTER LAYOUT

Note: All Curb & Gutter shown on this sheet is Type B68 and all P gutter is Type P8 except as noted.
All curbside sidewalk is 6' wide and all boulevard sidewalk is 5' wide except as noted.

1
29+69.17-14.00' L
Begin Str C & G
TC Elev Match Existing

2
29+75.13 - 14.00' L
End Str C & G
Begin 35' Rad C & G
TC Elev 1902.14 (Theor)

3
30+10.13-49.30' L
End 35' Rad Fillet
Begin Curb Taper
TC Elev 1901.23

4
30+10.08 - 55.30'L
End Curb Taper
TC Elev Match Existing

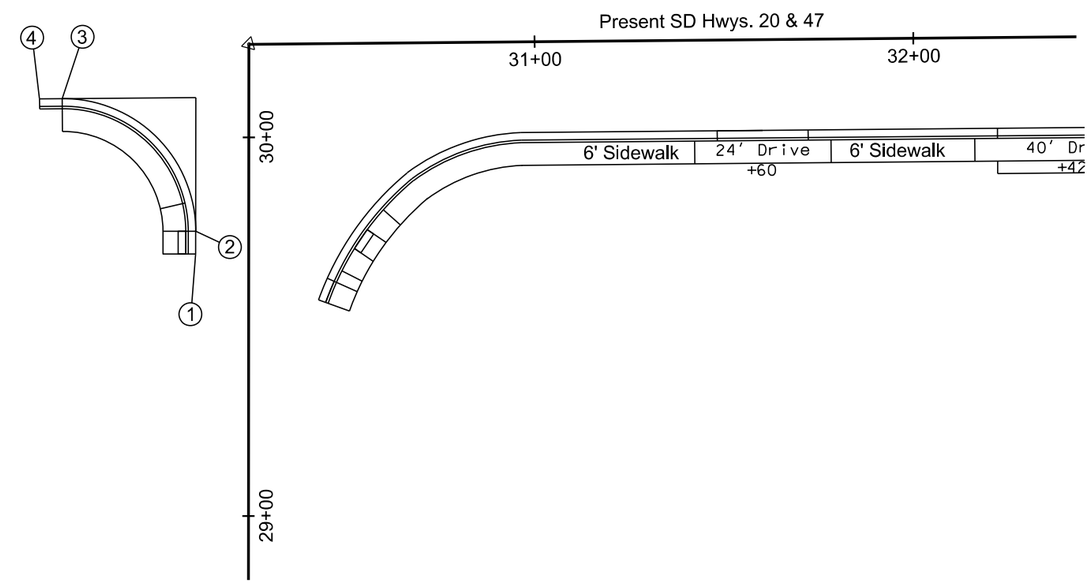

Plot Scale - 1:40

Plotted From - trpr17192

File - U:\rdprj\pott02R9\029cg.dgn

STATE OF SOUTH DAKOTA	PROJECT	SHEET	TOTAL SHEETS
	P 0020(117)254	B47	B98

Plotting Date: 07/06/2015

CURB & GUTTER LAYOUT

Note: All Curb & Gutter shown on this sheet is Type B68 and all P gutter is Type P8 except as noted.
All curbside sidewalk is 6' wide and all boulevard sidewalk is 5' wide except as noted.

1
32+78.59-55.03' L
Begin Curb Taper
TC Elev Match Existing

2
32+78.59 - 49.03'L
End Curb Taper
Begin 25' Rad Fillet
TC Elev 1900.15

3
33+03.59 - 24.03' L
End 25' Rad Fillet
Begin Type B Str C & G
TC Elev 1899.90

4
33+74.25 24.02' L
End Type B Str C & G
Begin Type F Str C & G
TC Elev 1900.35

5
34+20.08 - 24.02' L
End Type F68 Str C & G
Begin Type P Gutter
TC Elev 1900.62 (Theor)

6
34+60.08 - 24.02' L
End Type F68 Str C & G
Begin Type B Str C & G
TC Elev 1900.82 (Theor)

7
34+87.58 - 24.02' L
End Type F68 Str C & G
Begin Type B Str C & G
TC Elev 1900.95

8
35+72.80 - 24.02' L
End Str C & G
Begin Type P Gutter
TC Elev 1901.38 (Theor)

9
36+12.80 - 24.02' L
End Type P Gutter
Begin Str C & G
TC Elev 1901.58 (Theor)

10
36+32.80 - 24.02' L
End Str C & G
Begin 15' Rad Fillet
TC Elev 1901.68 (Theor)

11
36+47.80 - 39.02' L
End 15' Rad Fillet
Begin Str C & G
TC Elev 1901.94 (Theor)

12
36+47.80 - 51.52' L
End Str C & G
Begin Curb Taper
TC Elev 1902.03

13
36+47.80 - 57.52' L
End Curb Taper
TC Elev Match Existing

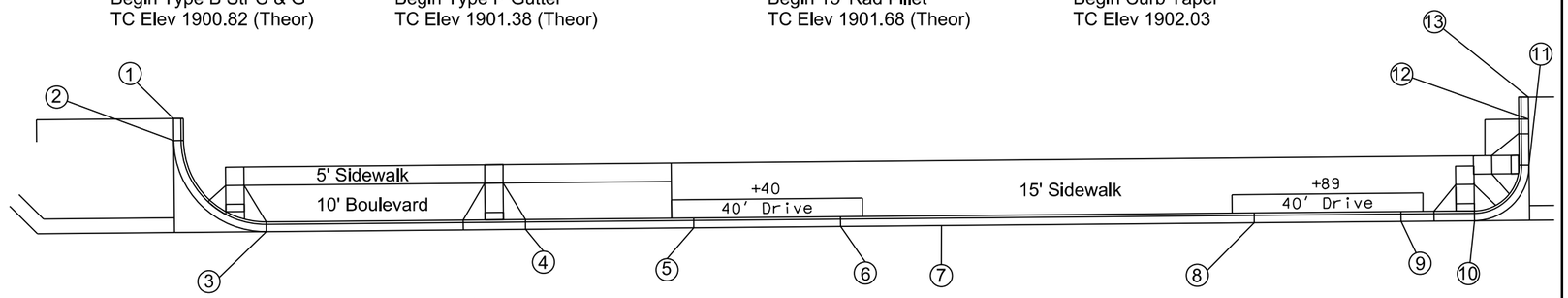

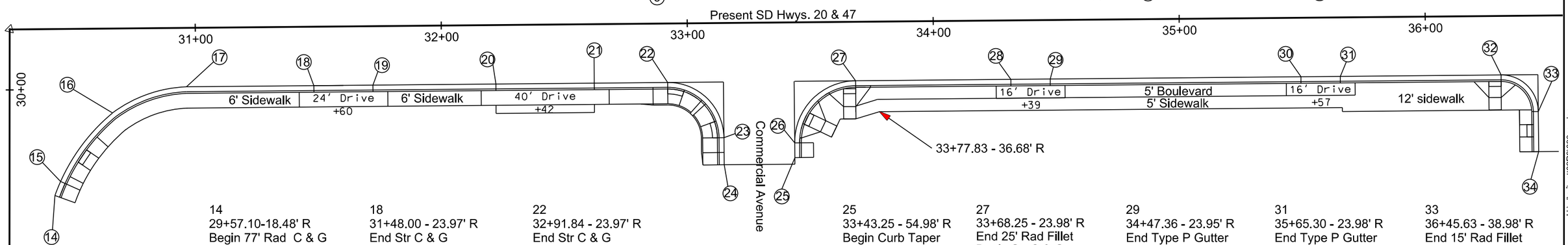

14
29+57.10-18.48' R
Begin 77' Rad C & G
Begin Curb Taper
TC Elev Match Existing

15
29+62.81-20.73' R
Begin 77' Rad C & G
End Curb Taper
TC Elev 1901.60

16
30+66.01-34.33' R
End 77' Rad C & G
Begin 54' Rad C & G
TC Elev 1901.20

17
30+96.17-23.97' R
End 54' Rad C & G
Begin Str C & G
TC Elev 1900.38

18
31+48.00 - 23.97' R
End Str C & G
Begin Type P Gutter
TC Elev 1899.70 (Theor)

19
31+72.00 - 23.97' R
End Type P Gutter
Begin Str C & G
TC Elev 1899.53 (Theor)

20
32+21.98 - 23.97' R
End Str C & G
Begin Type P Gutter
TC Elev 1899.44 (Theor)

21
32+61.98 - 23.97' R
End Type P Gutter
Begin Str C & G
TC Elev 1899.63 (Theor)

22
32+91.84 - 23.97' R
End Str C & G
Begin 22.67' Rad C & G
TC Elev 1899.82 (Theor)

23
33+14.50 - 46.64' R
End 22.67' Rad C & G
Begin Str C & G
TC Elev 1899.78 (Theor)

24
33+14.50 - 57.64' R
End Str C & G
TC Elev Match Existing

25
33+43.25 - 54.98' R
Begin Curb Taper
TC Elev Match Existing

26
33+43.25 - 54.98' R
End Curb Taper
Begin 25' Rad Fillet
TC Elev 1899.80

27
33+68.25 - 23.98' R
End 25' Rad Fillet
Begin Str C & G
TC Elev 1900.32 (Theor)

28
34+31.36 - 23.98' R
End Str C & G
Begin Type P Gutter
TC Elev 1900.68 (Theor)

29
34+47.36 - 23.95' R
End Type P Gutter
Begin Str C & G
TC Elev 1900.76 (Theor)

30
35+49.30 - 23.98' R
End Str C & G
Begin Type P Gutter
TC Elev 1901.26 (Theor)

31
35+65.30 - 23.98' R
End Type P Gutter
Begin Str C & G
TC Elev 1901.34 (Theor)

32
36+30.63 - 23.98' R
End Str C & G
Begin 15' Rad Fillet
TC Elev 1901.67 (Theor)

33
36+45.63 - 38.98' R
End 15' Rad Fillet
Begin Str C & G
TC Elev 1901.84 (Theor)

34
36+45.63 - 55.29' R
End Str C & G
TC Elev Match Existing

Plot Scale - 1:40
Plotted From - tnpr17192
File - U:\rdprj\pott\02R9\030cg.dgn

STATE OF SOUTH DAKOTA	PROJECT	SHEET	TOTAL SHEETS
	P 0020(117)254	B48	B98

Plotting Date: 07/06/2015

CURB & GUTTER LAYOUT

Note: All Curb & Gutter shown on this sheet is Type B68. and all P gutter is Type P8 except as noted
All curbside sidewalk is 6' wide and all boulevard sidewalk is 5' wide except as noted.

1
36+95.05 - 55.18' L
Begin Str C & G
TC Elev Match Existing

2
36+95.05 - 39.07' L
End Str C & G
Begin 15' Rad Fillet
TC Elev 1902.42 (Theor)

3
37+10.05 - 24.00' L
End 15' Rad Fillet
Begin Str C & G
TC Elev 1902.36 (Theor)

4
38+00.08 - 24.00' L
End Str C & G
Begin Type P Gutter
TC Elev 1903.17 (Theor)

5
38+24.80 - 24.00' L
End Type P Gutter
Begin Str C & G
TC Elev 1903.54 (Theor)

6
39+04.16 - 35.96' L
Begin Ramp C
(See Section E)

7
39+39.66 - 36.08' L
End Ramp C
(See Section E)

7A
39+57.79 - 26.01' L
End Type B Str C & G
Begin Type F68 Str C & G
Begin Sidewalk Drain

7B
39+57.79 - 40.68' L
End Sidewalk Drain

8
39+69.78 - 24.00' L
End Type F68 Str C & G
Begin 15' Rad Fillet
Type F68 C & G
TC Elev 1905.17 (Theor)

9
39+84.78 - 38.98' L
End 15' Rad Fillet
Type F68 C & G
Begin Type F68 Str C & G
TC Elev 1905.54 (Theor)

10
39+84.78 - 45.67' L
End Type F68 Str C & G
Begin Type F68 Curb Taper
TC Elev 1905.68

11
39+84.78 - 51.67' L
End Type F68 Curb Taper
TC Elev Match Existing

12
40+48.31 - 73.64' L
Begin Str C & G
TC Elev Match Existing

13
40+48.30 - 58.71' L
End Str C & G
Begin 15' Rad C & G
TC Elev 1906.42

14
40+44.60 - 48.84' L
End 15' Rad C & G
Begin 15' Rad C & G
TC Elev 1906.24

15
40+40.24 - 38.98' L
End 15' Rad C & G
Begin 15' Rad Fillet
TC Elev 1906.01 (Theor)

16
40+55.24 - 24.00' L
End 15' Rad Fillet
Begin Str C & G
TC Elev 1905.85

17
40+58.11 - 35.64' L
Begin Ramp E
(See Section E)

18
41+26.36 - 35.64' L
End Ramp E
(See Section E)

19
41+33.37 - 26.67' L
Begin Steepened Sidewalk
TC Elev 1906.08

20
41+71.20 - 35.63' L
Begin Ramp F
(See Section E)

21
41+94.20 - 35.83' L
End Ramp F
(See Section E)

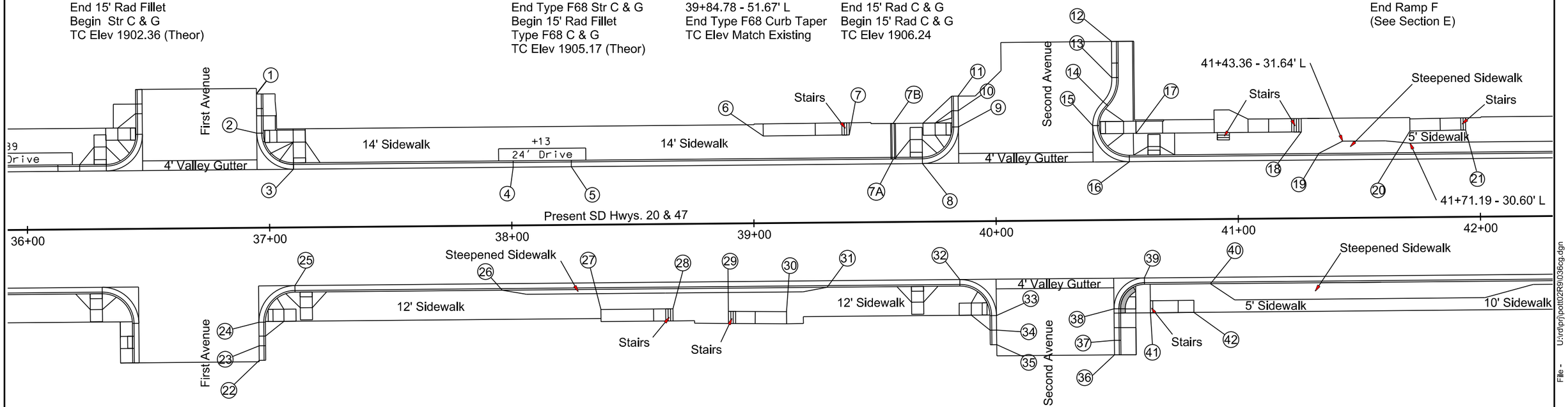

22
36+95.21 - 54.70' R
Begin Curb Taper
TC Elev Match Existing

23
36+95.21 - 48.70' R
End Curb Taper
Begin Str C & G
TC Elev 1901.81

24
36+95.21 - 38.98' R
End Str C & G
Begin 15' Rad Fillet
TC Elev 1901.96 (Theor)

25
37+10.22 - 24.00' R
End 15' Rad Fillet
Begin Str C & G
TC Elev 1902.37 (Theor)

26
37+95.82 - 26.67' R
Begin Steepened Sidewalk
TC Elev 1903.13

27
38+36.49 - 35.00' R
Begin Ramp A
(See Section E)

28
38+66.24 - 35.00' R
End Ramp A
(See Section E)

29
38+89.12 - 36.24' R
Begin Ramp B
(See Section E)

30
39+13.12 - 36.57' R
End Ramp B
(See Section E)

31
39+29.96 - 26.67' R
End Steepened Sidewalk
TC Elev 1904.33

32
39+84.78 - 24.00' R
End Str C & G
Begin 15' Rad Fillet
TC Elev 1904.83 (Theor)

33
39+99.77 - 38.99' R
End 15' Rad Fillet
Begin Str C & G
TC Elev 1905.22 (Theor)

34
39+99.77 - 44.99' R
Begin Curb Taper
TC Elev 1905.14

35
39+99.77 - 50.99' R
End Curb Taper
TC Elev Match Existing

36
40+48.35 - 55.65' R
Begin Curb Taper
TC Elev Match Existing

37
40+48.35 - 36.66' R
End Curb Taper
Begin Str C & G
TC Elev 1905.20

38
40+48.35 - 36.66' R
End Str C & G
Begin 12.67' Rad Fillet
TC Elev 1905.28 (Theor)

39
40+61.02 - 24.00' R
End 12.67' Rad Fillet
Begin Str C & G
TC Elev 1905.38 (Theor)

40
40+88.26 - 26.71' R
Begin Steepened Sidewalk
TC Elev 1905.46

41
40+63.34 - 33.42' R
Begin Ramp D
(See Section E)

42
40+81.34 - 33.42' R
End Ramp D
(See Section E)

Plot Scale - 1:40
Plotted From - trpr17192
File - U:\rdj\prj\pot02R9\036cg.dgn

STATE OF SOUTH DAKOTA	PROJECT	SHEET	TOTAL SHEETS
	P 0020(117)254	B49	B98

Plotting Date: 01/08/2015

CURB & GUTTER LAYOUT

Note: All Curb & Gutter shown on this sheet is Type B68. and all P gutter is Type P8 except as noted
All curbside sidewalk is 6' wide and all boulevard sidewalk is 5' wide except as noted.

1
42+49.35 - 34.40' L
Begin Ramp G
(See Section E)

2
42+89.60 - 34.40' L
End Ramp G
(See Section E)

3
42+49.44 - 26.67' L
End Steepened Sidewalk
TC Elev 1906.43

4
43+42.18 - 24.00' L
End Str C & G
Begin 12.67' Rad Fillet
TC Elev 1906.71 (Theor)

5
43+54.85 - 36.67' L
End 12.67' Rad Fillet
Begin Str C & G
TC Elev 1906.73 (Theor)

6
43+54.85 - 53.20' L
End Str C & G
TC Elev Match Existing

7
43+98.73 - 49.00' L
Begin Curb Taper
TC Elev Match Existing

8
43+98.73- 43.00' L
End Curb Taper
Begin Str C & G
TC Elev 1906.95

9
43+98.73- 39.00' L
End Str C & G
Begin 15' Rad Fillet
TC Elev 1906.54

10
44+13.73 - 24.00' L
End 15' Rad Fillet
Begin Str C & G
TC Elev 1906.29 (Theor)

11
44+82.54 - 24.00' L
End Str C & G
Begin Type P Gutter
TC Elev 1906.34 (Theor)

12
44+98.54 - 24.00' L
End Type P Gutter
Begin Str C & G
TC Elev 1906.40 (Theor)

13
45+53.04 - 24.00' L
End Str C & G
Begin Type P Gutter
TC Elev 1906.59 (Theor)

14
45+73.04 - 24.00' L
End Type P Gutter
Begin Str C & G
TC Elev 1906.67 (Theor)

15
46+86.99 - 24.00' L
End Str C & G
Begin 25' Rad Fillet
TC Elev 1907.07

16
47+11.99 - 49.14' L
End 25' Rad Fillet
Begin Str C & G
TC Elev 1907.22

17
47+11.96 - 55.14' L
End Str C & G
TC Elev Match Existing

18
47+51.83 - 59.00' L
Begin Curb Taper
TC Elev Match Existing

19
47+51.83 - 53.00' L
End Curb Taper
TC Elev 1908.03

20
47+51.83 - 49.00' L
End Str C & G
Begin 25' Rad Fillet
TC Elev 1907.91

21
47+76.83 - 24.00' L
End 25' Rad Fillet
Begin Str C & G
TC Elev 1907.39

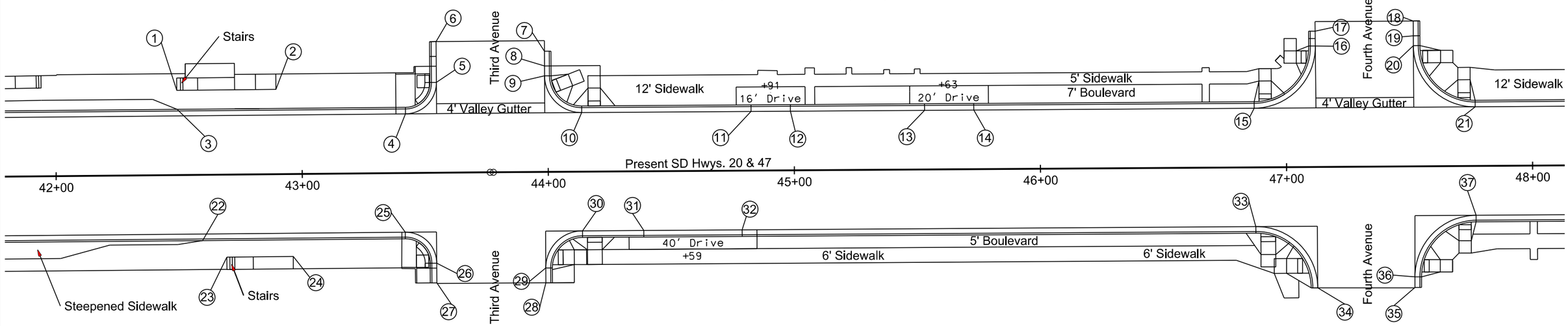

22
42+59.27 - 26.66' R
End Steepened Sidewalk
TC Elev 1905.98

23
42+69.05 - 33.46' R
Begin Ramp H
(See Section E)

24
42+96.05 - 33.46' R
End Ramp H
(See Section E)

25
43+41.67 - 24.00' R
End Str C & G
Begin 12.67' Rad Fillet
TC Elev 1906.22 (Theor)

26
43+54.34 - 36.67' R
End 12.67' Rad Fillet
Begin Str C & G
TC Elev 1906.27 (Theor)

27
43+54.34 - 44.69' R
End Str C & G
TC Elev Match Existing

28
43+98.73 - 45.00' R
Begin Curb Taper
TC Elev Match Existing

29
43+98.73 - 39.00' R
End Curb Taper
Begin 15' Rad Fillet
TC Elev 1906.17 (Theor)

30
44+13.73 - 24.00' R
End 15' Rad Fillet
Begin Str C & G
TC Elev 1906.20 (Theor)

31
44+38.64 - 24.00' R
End Str C & G
Begin Type P Gutter
TC Elev 1906.19 (Theor)

32
44+78.64 - 24.00' R
End Type P Gutter
Begin Str C & G
TC Elev 1906.33 (Theor)

33
46+87.37 - 24.00' R
End Str C & G
Begin 25' Rad Fillet
TC Elev 1907.07 (Theor)

34
47+12.37 - 49.00' R
End 25' Rad Fillet
TC Elev Match Existing

35
39+99.77 - 50.99' R
Begin Str C & G
TC Elev Match Existing

36
47+51.89 - 44.84' R
End Str C & G
Begin 25' Rad Fillet
TC Elev 1907.35

37
47+76.89 - 20.00' R
End 25' Rad Fillet
Begin Str C & G
TC Elev 1907.47

Plot Scale - 1:40
Plotted From - trpr17192
File - U:\rdprj\pott02R9\042cg.dgn

STATE OF SOUTH DAKOTA	PROJECT	SHEET	TOTAL SHEETS
	P 0020(117)254	B50	B98

Plotting Date: 01/08/2015

CURB & GUTTER LAYOUT

Note: All Curb & Gutter shown on this sheet is Type B68 and all P gutter is Type P8 except as noted
All curbside sidewalk is 6' wide and all boulevard sidewalk is 5' wide except as noted.

1
48+36.38 - 24.00' L
End Str C & G
Begin Type P Gutter
TC Elev 1907.60 (Theor)

2
48+52.38 - 24.00' L
End Type P Gutter
Begin Str C & G
TC Elev 1907.66 (Theor)

3
48+91.13 - 24.00' L
End Str C & G
Begin Type P Gutter
TC Elev 1907.80 (Theor)

4
49+11.13 - 24.00' L
End Type P Gutter
Begin Str C & G
TC Elev 1907.87 (Theor)

5
50+59.59 - 24.00' L
End Str C & G
Begin 25' Rad Fillet
TC Elev 1908.40

6
50+84.59 - 49.00' L
End 25' Rad Fillet
Begin Str C & G
TC Elev 1908.95

7
50+84.59 - 52.00' L
End Str C & G
TC Elev 1909.03

8
50+84.59 - 58.00' L
End Str C & G
TC Elev Match Existing

9
51+09.95 - 58.00' L
Begin Str C & G
TC Elev Match Existing

10
51+09.95 - 49.00' L
End Str C & G
Begin 25' Rad Fillet
TC Elev 1909.20

11
51+34.95 - 24.00' L
End 25' Rad Fillet
Begin Str C & G
TC Elev 1908.53

12
53+01.25 - 24.00' L
End Str C & G
Begin Type P Gutter
TC Elev 1907.76 (Theor)

13
53+23.25 - 24.00' L
End Type P Gutter
Begin Str C & G
TC Elev 1907.62 (Theor)

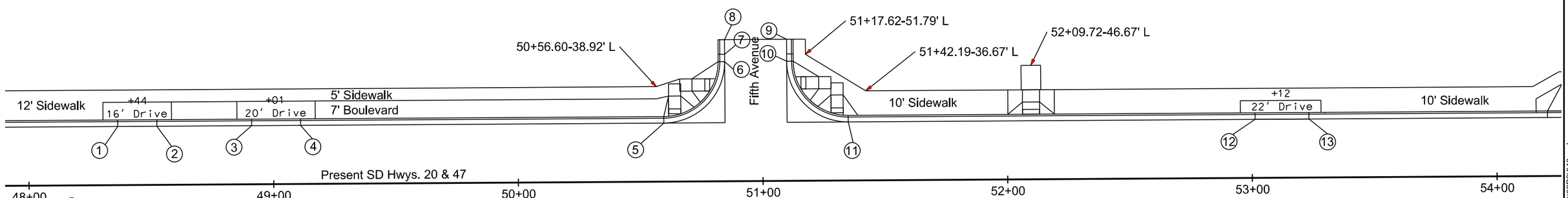

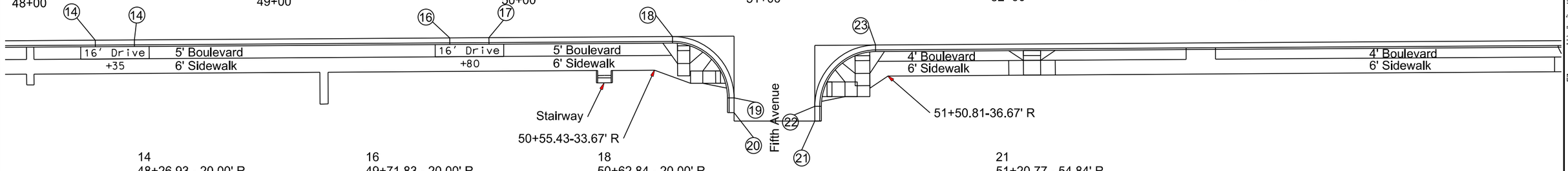

14
48+26.93 - 20.00' R
End Str C & G
Begin Type P Gutter
TC Elev 1907.65 (Theor)

15
48+42.93 - 20.00' R
End Type P Gutter
Begin Str C & G
TC Elev 1907.71 (Theor)

16
49+71.83 - 20.00' R
End Str C & G
Begin Type P Gutter
TC Elev 1908.17 (Theor)

17
49+87.83 - 20.00' R
End Type P Gutter
Begin Str C & G
TC Elev 1908.22 (Theor)

18
50+62.84 - 20.00' R
End Str C & G
Begin 25' Rad Fillet
TC Elev 1908.49 (Theor)

19
50+87.84 - 45.16' R
End 25' Rad Fillet
Begin Curb Taper
TC Elev 1908.52

20
50+87.80 - 51.16' R
End Curb Taper
TC Elev Match Existing

21
51+20.77 - 54.84' R
Begin Curb Taper
TC Elev Match Existing

22
51+20.81 - 48.84' R
End Curb Taper
Begin 25' Rad Fillet
TC Elev 1908.90

23
51+45.81 - 24.00' R
End 25' Rad Fillet
Begin Str C & G
TC Elev 1908.52 (Theor)

Plot Scale - 1:40
Plotted From - trpr17192
File - U:\rdprj\pott02R9\048cg.dgn

STATE OF SOUTH DAKOTA	PROJECT	SHEET	TOTAL SHEETS
	P 0020(117)254	B51	B98

CURB & GUTTER LAYOUT

Note: All Curb & Gutter shown on this sheet is Type B68. and all P gutter is Type P8 except as noted
All curbside sidewalk is 6' wide and all boulevard sidewalk is 5' wide except as noted.

1
56+92.33 - 24.00' L
End Str C & G
Begin 25' Rad Fillet
TC Elev 1905.43

2
57+17.33 - 49.00' L
End 25' Rad Fillet
Begin Str C & G
TC Elev 1905.33

3
57+17.33 - 52.00' L
End Str C & G
Begin Curb Taper
TC Elev 1905.39

4
57+17.33 - 58.00' L
End Curb Taper
TC Elev Match Existing

5
57+46.58 - 58.00' L
Begin Str C & G
TC Elev Match Existing

6
57+46.58- 49.00' L
End Str C & G
Begin 25' Rad Fillet
TC Elev 1905.23 (Theor)

7
57+71.58 - 24.00' L
End 25' Rad Fillet
Begin Str C & G
TC Elev 1904.97

8
57+99.47 - 24.00' L
End Str C & G
Begin Type D48 Str C & G
TC Elev 1904.81 (Theor)

9
58+15.46 - 24.00' L
End Type D48 Str C & G
Begin Str C & G
TC Elev 1904.69 (Theor)

10
59+11.26 - 24.00' L
End Str C & G
Begin Type P Gutter
TC Elev 1903.77 (Theor)

11
59+31.25 - 24.00' L
End Type P Gutter
Begin Str C & G
TC Elev 1903.64 (Theor)

12
60+04.97- 24.00' L
End Str C & G
Begin 25' Rad Fillet
TC Elev 1903.31

13
60+19.93 - 39.03' L
End 25' Rad Fillet
Begin Str C & G
TC Elev 1903.19 (Theor)

14
60+19.92 - 42.03' L
End Str C & G
TC Elev Match Existing

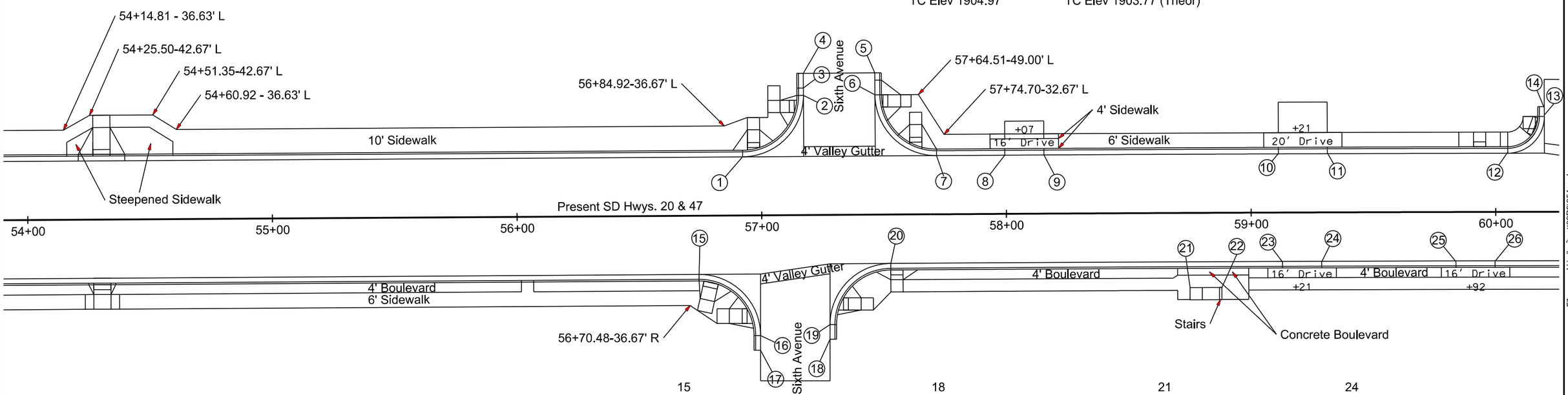

15
56+74.21 - 24.00' R
End Str C & G
Begin 25' Rad Fillet
TC Elev 1905.53

16
56+99.21 - 49.16' R
End 25' Rad Fillet
Begin Curb Taper
TC Elev 1905.54

17
56+99.17 - 55.16' R
End Curb Taper
TC Elev Match Existing

18
57+27.56 - 50.84' R
Begin Curb Taper
TC Elev Match Existing

19
57+27.59 - 44.84' R
End Curb Taper
Begin 25' Rad Fillet
TC Elev 1905.52

20
57+52.59 - 20.00' R
End 25' Rad Fillet
Begin Str C & G
TC Elev 1905.16 (Theor)

21
58+74.93 - 30.55' R
Begin Ramp I
(See Section E)

22
58+87.93 - 30.55' R
End Ramp I
(See Section E)

23
59+12.76 - 20.00' R
End Str C & G
Begin Type P Gutter
TC Elev 1903.83 (Theor)

24
59+28.77 - 20.00' R
End Type P Gutter
Begin Str C & G
TC Elev 1903.73 (Theor)

25
59+83.68 - 20.00' R
End Str C & G
Begin Type P Gutter
TC Elev 1903.48 (Theor)

26
59+99.69 - 20.00' R
End Type P Gutter
Begin Str C & G
TC Elev 1903.41 (Theor)

Plot Scale - 1:40
Plotted From - tnpr17192
File - U:\rdprj\pott02R9\054cg.dgn

STATE OF SOUTH DAKOTA	PROJECT	SHEET	TOTAL SHEETS
	P 0020(117)254	B52	B98

Plotting Date: 07/06/2015

CURB & GUTTER LAYOUT

Note: All Curb & Gutter shown on this sheet is Type B68 and all P gutter is Type P8 except as noted
All curbside sidewalk is 6' wide and all boulevard sidewalk is 5' wide except as noted.

1
60+49.50 - 54.00' L
Begin Str C & G
TC Elev Match Existing

2
60+49.47- 45.00' L
End Str C & G
Begin 25' Rad Fillet
TC Elev 1903.51

3
60+74.39 - 20.00' L
End 25' Rad Fillet
Begin Str C & G
TC Elev 1903.07

4
61+32.11 - 20.00' L
End Str C & G
Begin Type P Gutter
TC Elev 1902.81 (Theor)

5
61+72.09 - 20.00' L
End Type P Gutter
Begin Str C & G
TC Elev 1902.63 (Theor)

6
62+59.43 - 20.00' L
End Str C & G
Begin Type P Gutter
TC Elev 1902.24 (Theor)

7
62+89.42 - 20.00' L
End Type P Gutter
Begin Str C & G
TC Elev 1902.10 (Theor)

8
64+01.48 - 20.00' L
End Str C & G
Begin Curb Taper
TC Elev 1901.60

9
64+07.48 - 20.00' L
End Curb Taper
TC Elev 1901.57 (Theor)

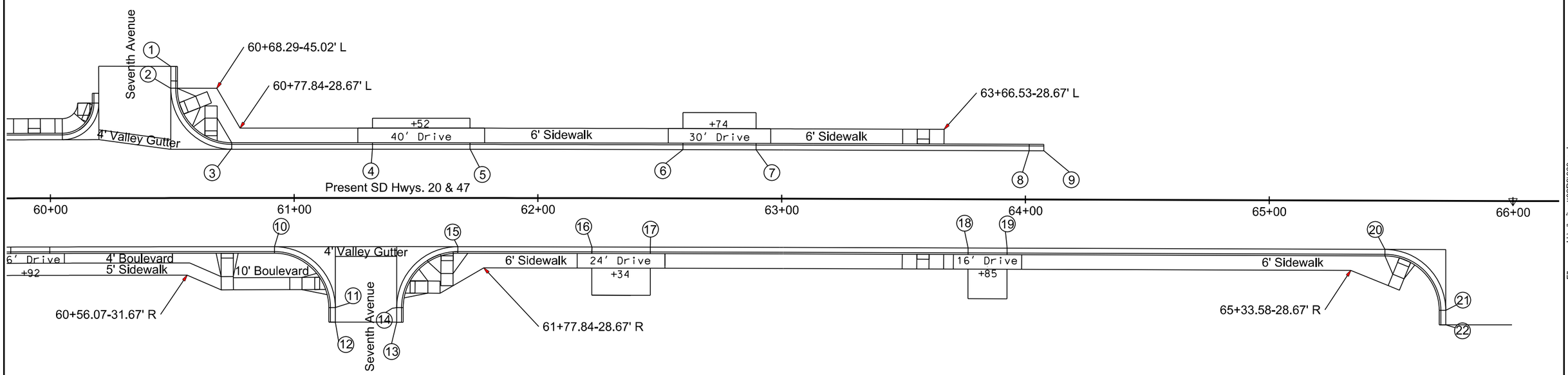

10
60+91.95 - 20.00' R
End Str C & G
Begin 25' Rad Fillet
TC Elev 1902.99

11
61+16.88 - 45.00' R
End 25' Rad Fillet
Begin Curb Taper
TC Elev 1903.28

12
61+16.88 - 51.00' R
End Curb Taper
TC Elev Match Existing

13
61+42.11 - 51.00' R
Begin Curb Taper
TC Elev Match Existing

14
61+42.11 - 45.00' R
End Curb Taper
Begin 25' Rad Fillet
TC Elev 1903.41

15
61+67.18 - 20.00' R
End 25' Rad Fillet
Begin Str C & G
TC Elev 1902.65 (Theor)

16
62+22.16 - 20.00' R
End Str C & G
Begin Type P Gutter
TC Elev 1902.41 (Theor)

17
62+46.17 - 20.00' R
End Type P Gutter
Begin Str C & G
TC Elev 1902.30 (Theor)

18
63+76.53 - 20.00' R
End Str C & G
Begin Type P Gutter
TC Elev 1901.71 (Theor)

19
63+92.53 - 20.00' R
End Type P Gutter
Begin Str C & G
TC Elev 1901.64 (Theor)

20
65+47.55 - 20.00' R
End Str C & G
Begin 25' Rad Fillet
TC Elev 1900.94

21
65+72.55 - 44.92' R
End 25' Rad Fillet
Begin Curb Taper
TC Elev 1901.05

22
65+72.57 - 50.89' R
End Curb Taper
TC Elev Match Existing

Plot Scale - 1:40
Plotted From - tpr17192
File - U:\rdprj\pot02R9\060cg.dgn

CURB RAMP DETAILS

STATE OF SOUTH DAKOTA	PROJECT	SHEET	TOTAL SHEETS
	P 0020(117)254	B53	B98

Plotting Date: 01/08/2015

1
29+72.17-16.67' L
Center Mod Type 3
Curb Ramp

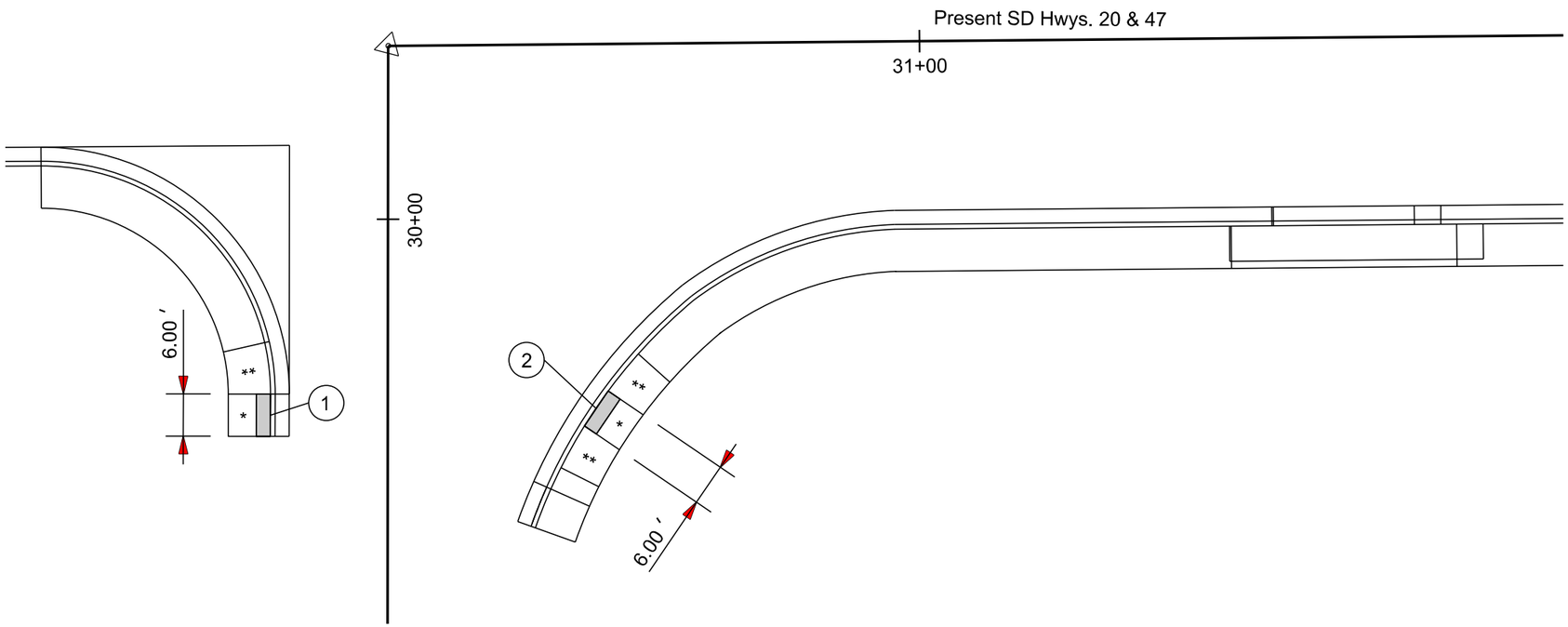

2
29+73.16-29.59' R
Center Type 3
Curb Ramp

LEGEND:
* Landing with 2% maximum slope
** Curb ramp with 8.3% maximum slope and 2% cross slope
Detectable Warning

Plot Scale - 1:20
Plotted From - tnpr17192
File - U:\rdi\prj\pott02R9\030cr.dgn

CURB RAMP DETAILS

STATE OF SOUTH DAKOTA	PROJECT	SHEET	TOTAL SHEETS
	P 0020(117)254	B54	B98

Plotting Date: 01/08/2015

1
32+95.15-29.56' L
Center Type 2
Curb Ramp
Begin Ramp Slope

2
32+95.15-36.69' L
End Ramp Slope

3
33+65.75-26.69' L
Center Type 1
Curb Ramp
Begin Ramp Slope

4
33+65.75-36.69' L
End Ramp Slope

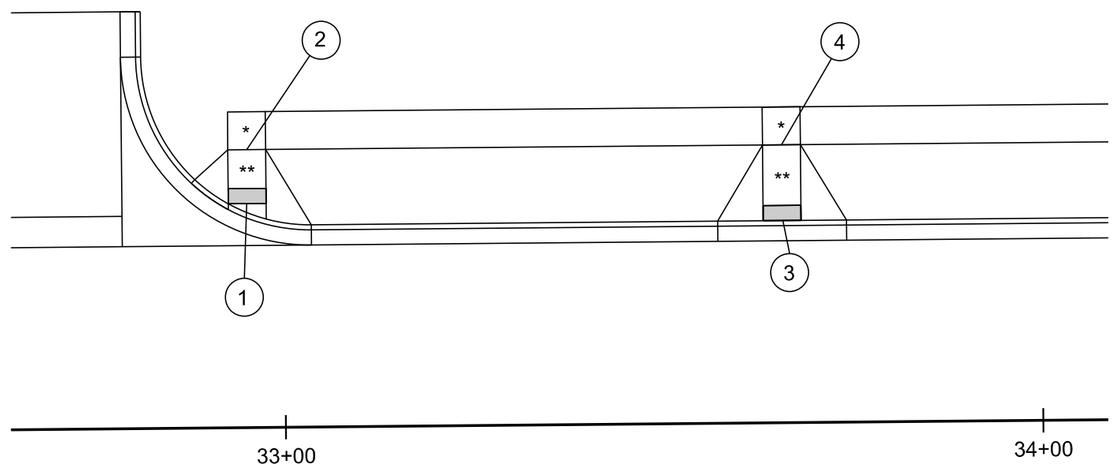

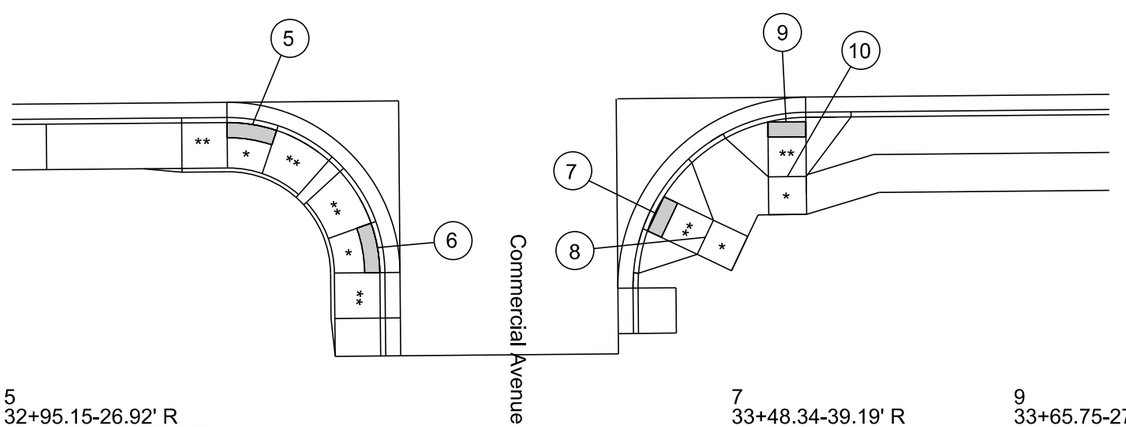

5
32+95.15-26.92' R
Center Type 3 Curb Ramp
& 20' Radial Detectable Warning

6
33+11.55-43.33' R
Center Type 3 Curb Ramp &
20' Radial Detectable Warning

7
33+48.34-39.19' R
Center Type 1
Curb Ramp
Begin Ramp Slope

8
33+54.86-42.36' R
End Ramp Slope

9
33+65.75-27.21' R
Center Type 2
Curb Ramp
Begin Ramp Slope

10
33+65.75-34.46' R
End Ramp Slope

LEGEND:
* Landing with 2% maximum slope
** Curb ramp with 8.3% maximum slope and 2% cross slope
Detectable Warning

Plot Scale - 1:20
Plotted From - trpt17192
File - U:\rdprj\pott02R9\033cr.dgn

CURB RAMP DETAILS

STATE OF SOUTH DAKOTA	PROJECT	SHEET	TOTAL SHEETS
	P 0020(117)254	B55	B98

Plotting Date: 01/08/2015

1
36+30.30-26.68' L
Center Type 1
Curb Ramp
Begin Ramp Slope

2
36+30.30-33.93' L
End Ramp Slope

3
36+44.91-39.18' L
Center Type 2
Curb Ramp
Begin Ramp Slope

4
36+37.66-39.18' L
End Ramp Slope

5
36+98.33-37.68' L
Center Mod Type 1
Curb Ramp

6
37+03.33-37.68' L
Begin Ramp Slope

7
37+10.05-37.68' L
End Ramp Slope

8
37+12.54-26.65' L
Center Type 1
Curb Ramp
Begin Ramp Slope

9
37+12.55-35.18' L
End Ramp Slope

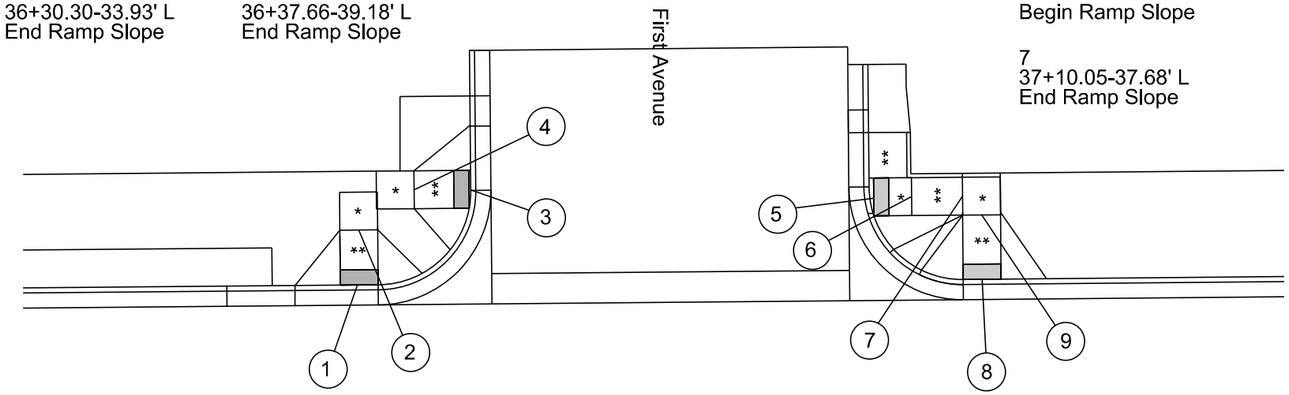

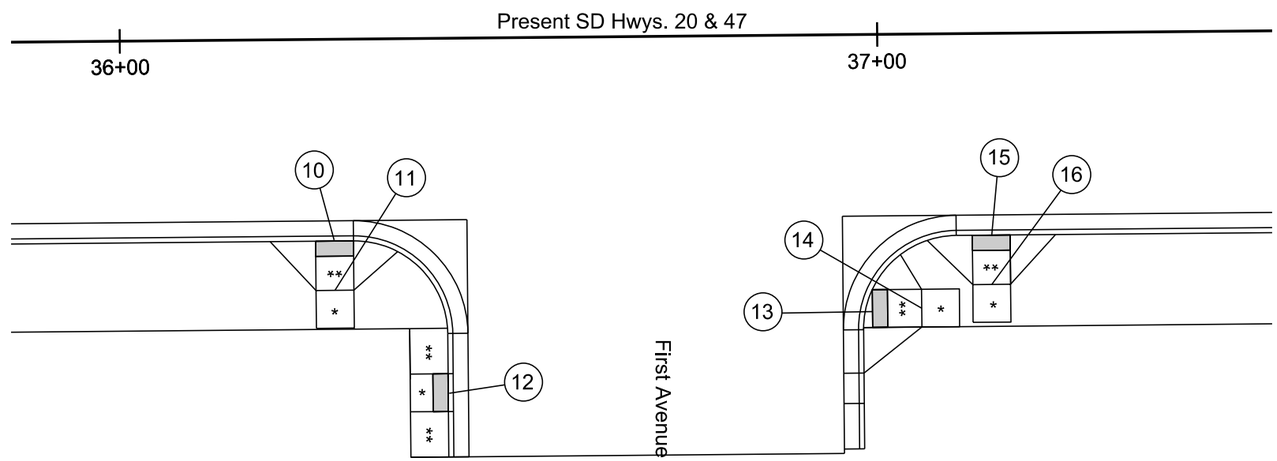

10
36+28.13-26.65' R
Center Type 1
Curb Ramp
Begin Ramp Slope

11
36+28.13-33.15' R
End Ramp Slope

12
36+42.96-46.79' R
Center Type 3
Curb Ramp

13
36+99.08-36.19' R
Center Type 2
Curb Ramp
Begin Ramp Slope

14
37+05.57-36.20' R
End Ramp Slope

15
37+14.84-26.66' R
Center Type 1
Curb Ramp
Begin Ramp Slope

16
37+14.85-33.15' R
End Ramp Slope

LEGEND:
* Landing with 2% maximum slope
** Curb ramp with 8.3% maximum slope and 2% cross slope
Detectable Warning

Plot Scale - 1:20
Plotted From - tnpr17192
File - U:\rdprj\pott02R9\036cr.dgn

CURB RAMP DETAILS

STATE OF SOUTH DAKOTA	PROJECT	SHEET	TOTAL SHEETS
	P 0020(117)254	B56	B98

Plotting Date: 07/06/2015

1
39+67.28-26.64' L
Center Type 1
Curb Ramp
Begin Ramp Slope

2
39+67.28-33.89' L
End Ramp Slope

3
39+81.65-38.14' L
Center Type 2
Curb Ramp
Begin Ramp Slope

4
39+75.15-38.14' L
End Ramp Slope

5
40+43.48-38.17' L
Center Type 2
Curb Ramp
Begin Ramp Slope

6
40+52.98-38.17' L
End Ramp Slope

7
40+65.48-26.67' L
Center Mod Type 1
Curb Ramp
Begin Ramp Slope

8
40+65.48-30.17' L
End Ramp Slope

9
40+62.98-32.67' L
Begin Ramp Slope

10
40+56.98-31.16' L
End Ramp Slope

11
40+67.98-32.67' L
Begin Ramp Slope

12
40+73+98-31.16' L
End Ramp Slope

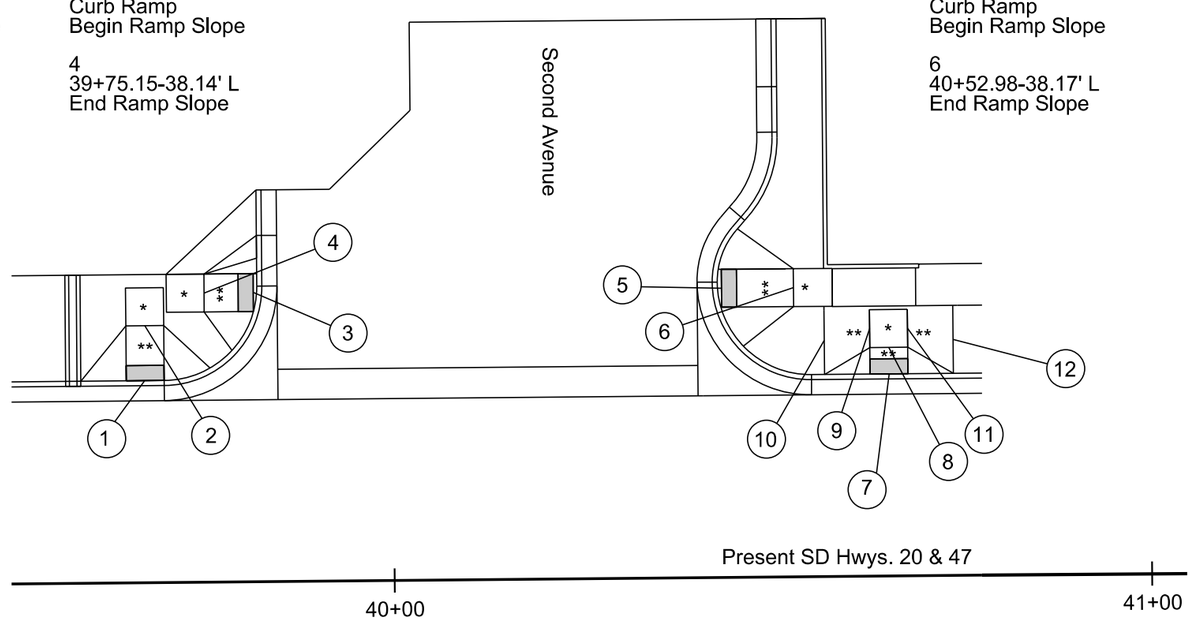

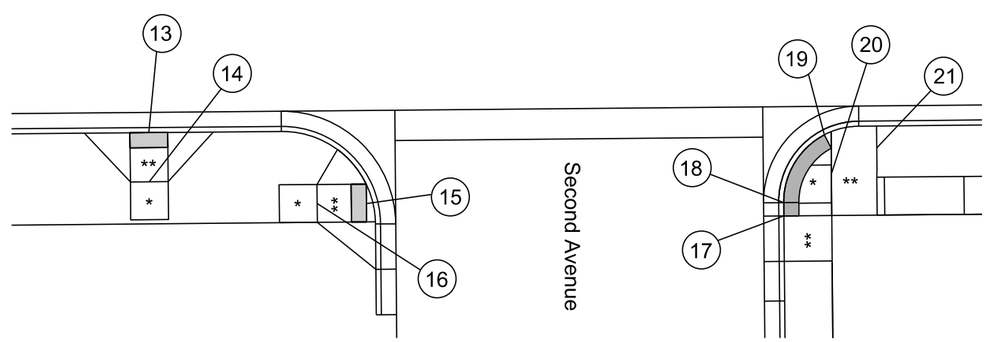

13
39+67.29-26.66' R
Center Type 1
Curb Ramp
Begin Ramp Slope

14
39+67.29-33.16' R
End Ramp Slope

15
39+95.92-36.21' R
Center Type 2
Curb Ramp
Begin Ramp Slope

16
39+89.42-36.21' R
End Ramp Slope

17
40+51.02-38.42' R
Begin Str Detectable Warning

18
40+51.02-36.66' R
End Str Detectable Warning
Begin 10' Radial Detectable Warning
Mod Type 3 Curb Ramp

19
40+56.46-27.76' R
End 10' Radial
Detectable Warning

20
40+57.36-32.88' R
Begin Ramp Slope

21
40+63.37-29.54' R
End Ramp Slope

LEGEND:
* Landing with 2% maximum slope
** Curb ramp with 8.3% maximum slope and 2% cross slope
Detectable Warning

Plot Scale - 1:20
Plotted From - trpr17192
File - U:\rdlprj\pott02R9\040cr.dgn

STATE OF SOUTH DAKOTA	PROJECT	SHEET	TOTAL SHEETS
	P 0020(117)254	B57	B98

Plotting Date: 01/08/2015

CURB RAMP DETAILS

1
43+38.33-33.42' L
Begin Ramp Slope

2
43+46.19-33.82' L
End Ramp Slope

3
43+47.26-28.05' L
Begin 10' Radial
Detectable Warning

4
43+52.18-36.67' L
End 10' Radial Detectable Warning
Begin Str Detectable Warning
Mod Type 3 Curb Ramp

5
43+52.19-40.17' L
End Str Detectable Warning

6
43+49.22-40.17' L
Begin Ramp Slope

7
43+49.23-32.20' L
End Ramp Slope

8
44+02.46-34.67' L
Center Type 1
Curb Ramp
Begin Ramp Slope

9
44+09.23-37.27' L
Center Type 1
Curb Ramp
End Ramp Slope

10
44+18.83-26.67' L
Center Type 1
Curb Ramp
Begin Ramp Slope

11
44+18.83-33.92' L
Center Type 1
Curb Ramp
End Ramp Slope

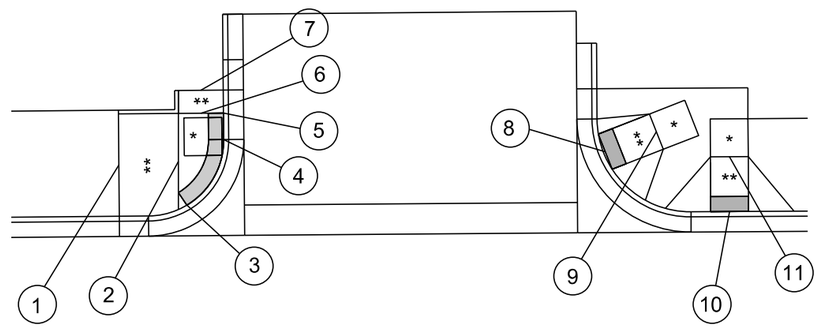

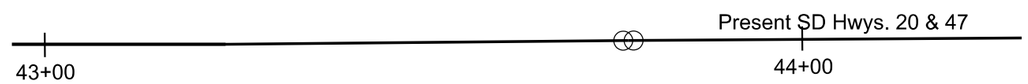

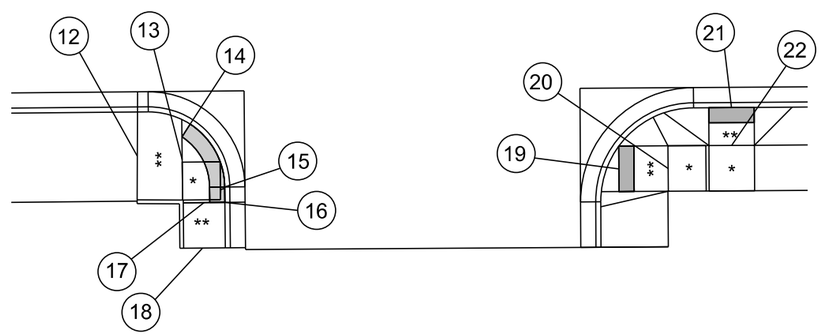

12
43+40.15-32.46' R
Begin Ramp Slope

13
43+46.08-33.01' R
End Ramp Slope

14
43+47.18-28.32' R
Begin 10' Radial
Detectable Warning

15
43+51.67-36.67' R
End 10' Radial Detectable Warning
Begin Str Detectable Warning
Mod Type 3 Curb Ramp

16
43+51.67-38.69' R
End Str Detectable Warning

17
43+48.92-38.69' R
Begin Ramp Slope

18
43+48.67-44.69' R
End Ramp Slope

19
44+03.82-34.67' R
Center Type 2
Curb Ramp
Begin Ramp Slope

20
44+10.35-34.67' R
End Ramp Slope

21
44+18.73-26.67' R
Center Type 1
Curb Ramp
Begin Ramp Slope

22
44+18.73-31.67' R
End Ramp Slope

LEGEND:
* Landing with 2% maximum slope
** Curb ramp with 8.3% maximum slope and 2% cross slope
Detectable Warning

Plot Scale - 1:20
Plotted From - trpr17192
File - U:\rdtprj\pott02R9\043cr.dgn

CURB RAMP DETAILS

STATE OF SOUTH DAKOTA	PROJECT	SHEET	TOTAL SHEETS
	P 0020(117)254	B58	B98

Plotting Date: 01/08/2015

1
46+91.49-27.79' L
Center Type 2
Curb Ramp
Begin Ramp Slope

2
46+91.48-35.01' L
End Ramp Slope

3
47+08.25-44.63' L
Center Type 2
Curb Ramp
Begin Ramp Slope

4
47+04.22-44.63' L
End Ramp Slope

5
47+01.74-47.14' L
Begin Ramp Slope

6
47+01.77-52.14' L
End Ramp Slope

7
47+55.62-44.50' L
Center Type 2
Curb Ramp
Begin Ramp Slope

8
47+62.85-44.47' L
End Ramp Slope

9
47+72.33-27.79' L
Center Type 2
Curb Ramp
Begin Ramp Slope

10
47+72.31-35.01' L
End Ramp Slope

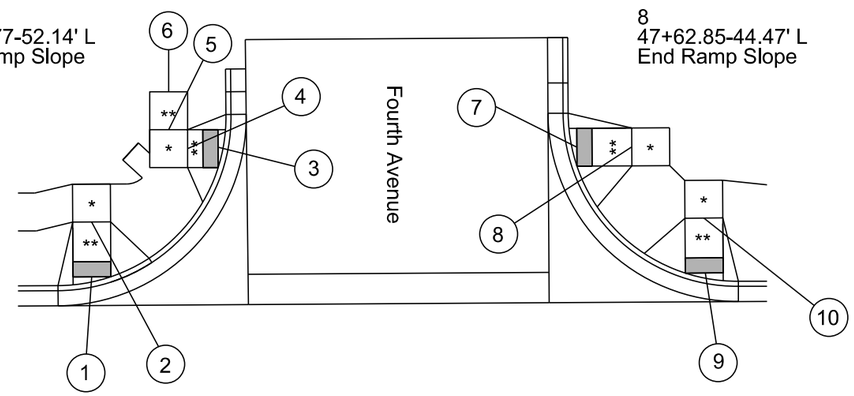

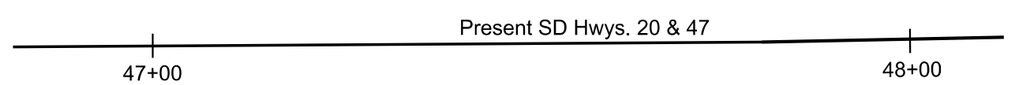

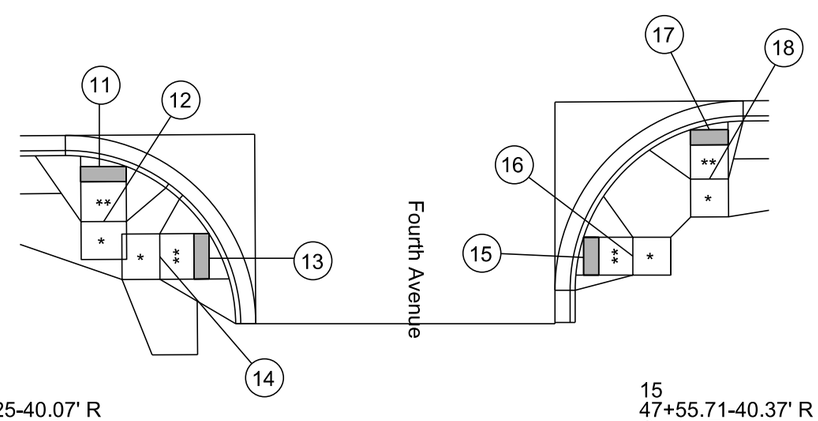

11
46+92.37-28.15' R
Center Type 2
Curb Ramp
Begin Ramp Slope

12
46+92.36-35.43' R
End Ramp slope

13
47+06.25-40.07' R
Center Type 2
Curb Ramp
Begin Ramp Slope

14
46+99.74-40.10' R
End Ramp Slope

15
47+55.71-40.37' R
Center Type 2
Curb Ramp
Begin Ramp Slope

16
47+62.19-40.44' R
End Ramp Slope

17
47+72.39-23.79' R
Center Type 2
Curb Ramp
Begin Ramp Slope

18
47+72.37-30.32' R
End Ramp Slope

LEGEND:
* Landing with 2% maximum slope
** Curb ramp with 8.3% maximum slope and 2% cross slope
Detectable Warning

Plot Scale - 1:20
Plotted From - tnpr17192
File - U:\rdpn\pott02R9\047cr.dgn

CURB RAMP DETAILS

STATE OF SOUTH DAKOTA	PROJECT	SHEET	TOTAL SHEETS
	P 0020(117)254	B59	B98

Plotting Date: 01/08/2015

1
50+64.09-27.79' L
Center Type 2
Curb Ramp
Begin Ramp Slope

2
50+64.08-35.01' L
End Ramp Slope

3
50+78.43-39.51' L
Center Type 2
Curb Ramp
Begin Ramp Slope

4
50+71.17-39.41' L
End Ramp Slope

5
51+15.73-40.12' L
Center Type 2
Curb Ramp
Begin Ramp Slope

6
51+22.97-40.08' L
End Ramp Slope

7
51+30.45-27.79' L
Center Type 2
Curb Ramp
Begin Ramp Slope

8
51+30.44-35.01' L
End Ramp Slope

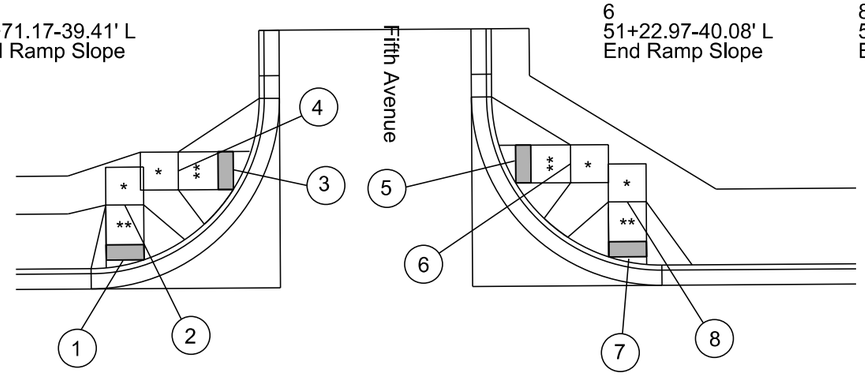

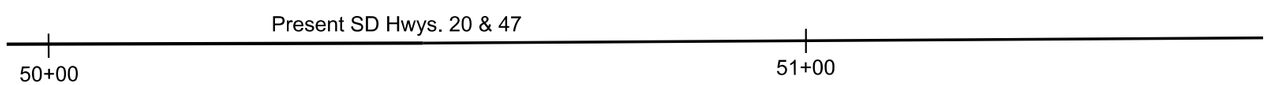

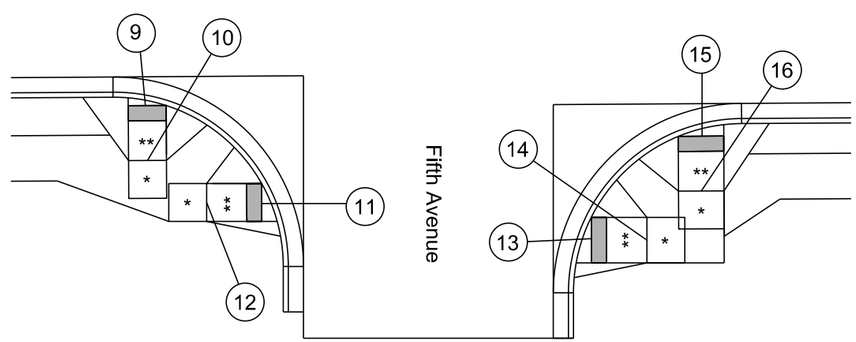

9
50+67.34-23.79' R
Center Type 2
Curb Ramp
Begin Ramp Slope

10
50+67.33-31.07' R
End Ramp Slope

11
50+82.39-36.69' R
Center Type 2
Curb Ramp
Begin Ramp Slope

12
50+75.11-36.68' R
End Ramp Slope

13
51+25.86-41.93' R
Center Type 2
Curb Ramp
Begin Ramp Slope

14
51+33.19-42.00' R
End Ramp Slope

15
51+40.43-28.30' R
Center Type 2
Curb Ramp
Begin Ramp Slope

16
51+40.41-35.58' R
End Ramp Slope

LEGEND:
* Landing with 2% maximum slope
** Curb ramp with 8.3% maximum slope and 2% cross slope
Detectable Warning

Plot Scale - 1:20
Plotted From - tmpr17192
File - U:\rdtprj\pott02R9\050cr.dgn

CURB RAMP DETAILS

STATE OF SOUTH DAKOTA	PROJECT	SHEET	TOTAL SHEETS
	P 0020(117)254	B60	B98

Plotting Date: 01/08/2015

1
52+09.71-26.63' L
Center Mod Type 1
Curb Ramp
Begin Ramp Slope

2
52+09.71-31.63' L
End Ramp Slope

3
52+06.21-34.13' L
Begin Ramp Slope

4
52+00.21-31.63' L
End Ramp Slope

5
52+13.21-34.13' L
Begin Ramp Slope

6
52+19.21-31.63' L
End Ramp Slope

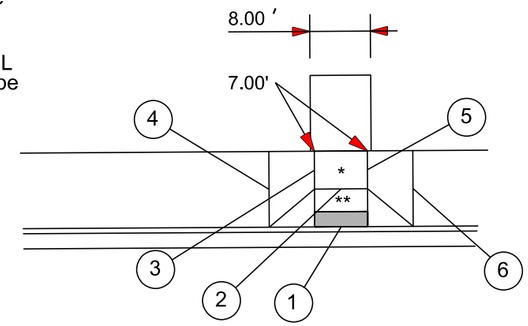

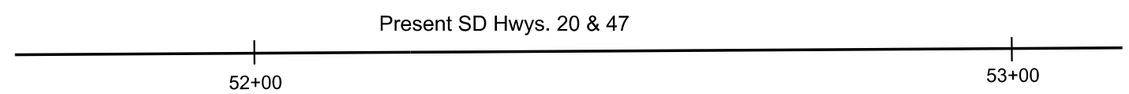

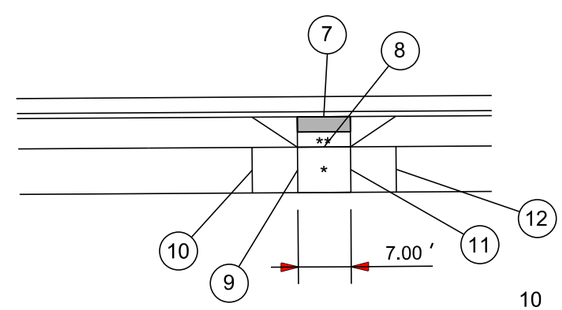

7
54+09.71-26.70' R
Center Mod Type 1
Curb Ramp
Begin Ramp Slope

8
52+09.71-30.70' R
End Ramp Slope

9
52+06.21-33.70' R
Begin Ramp Slope

10
52+00.21-33.70' R
End Ramp Slope

11
52+13.21-33.70' R
Begin Ramp Slope

12
52+19.21-33.70' R
End Ramp Slope

LEGEND:
* Landing with 2% maximum slope
** Curb ramp with 8.3% maximum slope and 2% cross slope
Detectable Warning

Plot Scale - 1:20
Plotted From - trpr17192
File - U:\rdpr\jpott02R9\052cr.dgn

CURB RAMP DETAILS

STATE OF SOUTH DAKOTA	PROJECT	SHEET	TOTAL SHEETS
	P 0020(117)254	B61	B98

Plotting Date: 01/08/2015

1
54+30.31-26.67' L
Center Type 1
Curb Ramp
Begin Ramp Slope

2
54+30.31-37.67' L
End Ramp Slope

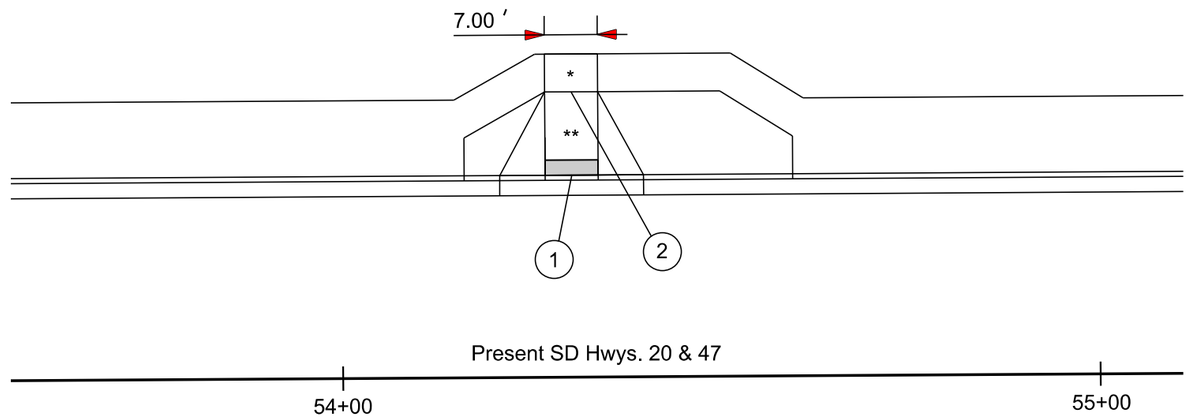

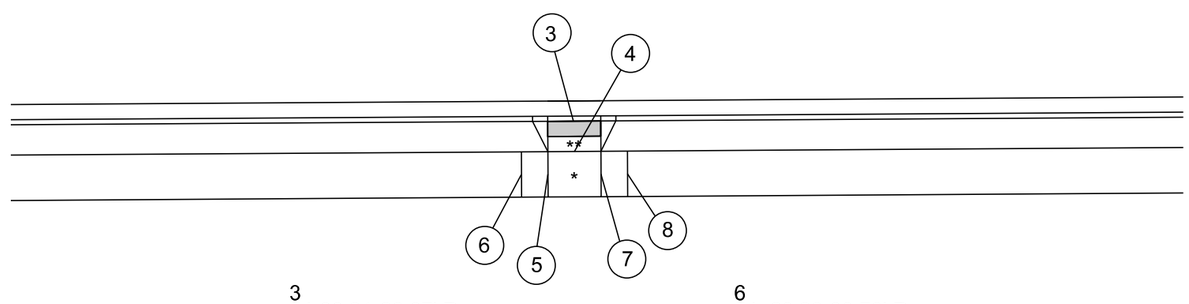

3
54-30.31-26.67' R
Center Mod Type 1
Curb Ramp
Begin Ramp Slope

4
54+30.30-30.70' R
End Ramp Slope

5
54+26.80-33.70' R
Begin Ramp Slope

6
54+23.30-33.70' R
End Ramp Slope

7
54+33.80-33.70' R
Begin Ramp Slope

8
54+37.30-33.70' R
End Ramp Slope

LEGEND:
* Landing with 2% maximum slope
** Curb ramp with 8.3% maximum slope and 2% cross slope
Detectable Warning

Plot Scale - 1:20
Plotted From - tnpr17192
File - U:\rdprj\pott02R9\054cr.dgn

CURB RAMP DETAILS

STATE OF SOUTH DAKOTA	PROJECT	SHEET	TOTAL SHEETS
	P 0020(117)254	B62	B98

Plotting Date: 01/08/2015

1
56+96.83-27.79' L
Center Type 2
Curb Ramp
Begin Ramp Slope

2
56+96.82-35.01' L
End Ramp Slope

3
57+13.54-44.50' L
Center Type 2
Curb Ramp
Begin Ramp Slope

4
57+07.75-44.47' L
End Ramp Slope

5
57+05.27-47.00' L
Begin Ramp Slope

6
57+05.27-53.00' L
End Ramp Slope

7
57+49.81-46.50' L
Center Type 2
Curb Ramp
Begin Ramp Slope

8
57+57.05-46.47' L
End Ramp Slope

9
57+63.13-29.53' L
Center Type 2
Curb Ramp
Begin Ramp Slope

10
57+63.12-36.75' L
End Ramp Slope

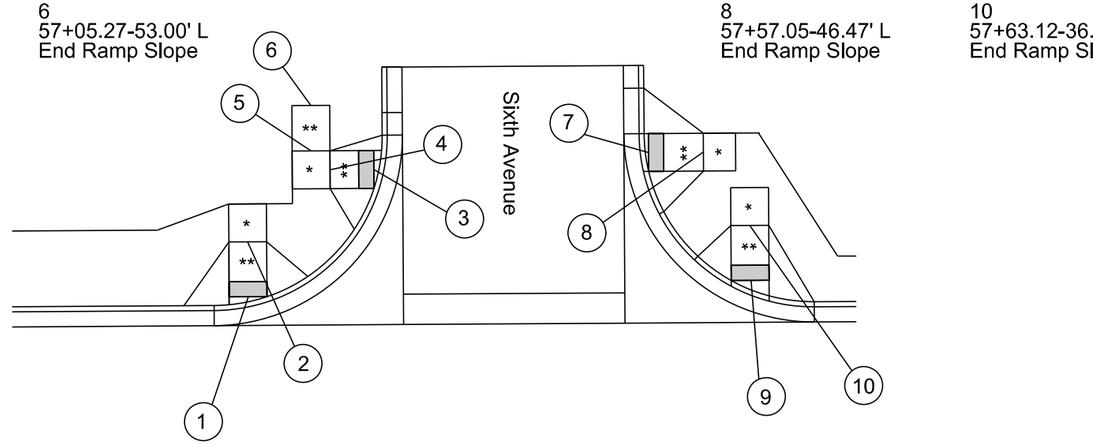

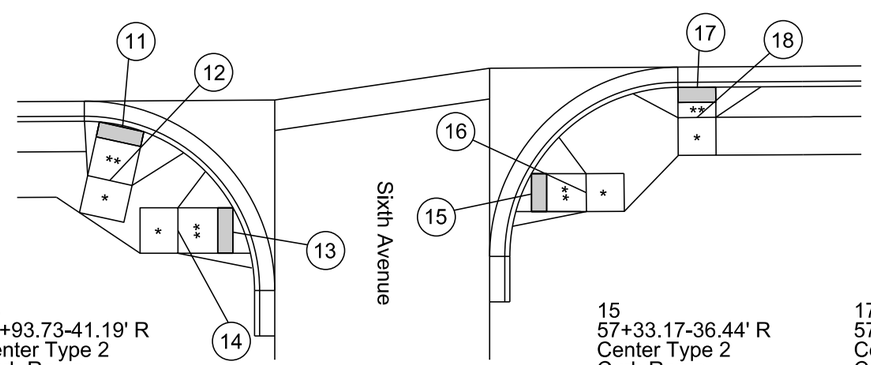

11
56+79.13-27.43' R
Center Type 1
Curb Ramp
Begin Ramp Slope

12
56+77.51-34.53' R
End Ramp Slope

13
56+93.73-41.19' R
Center Type 2
Curb Ramp
Begin Ramp Slope

14
56+86.47-41.18' R
End Ramp Slope

15
57+33.17-36.44' R
Center Type 2
Curb Ramp
Begin Ramp Slope

16
57+40.40-36.52' R
End Ramp Slope

17
57+55.09-22.67' R
Center Type 1
Curb Ramp
Begin Ramp Slope

18
57+55.08-26.70' R
End Ramp Slope

LEGEND:
* Landing with 2% maximum slope
** Curb ramp with 8.3% maximum slope and 2% cross slope
Detectable Warning

Plot Scale - 1:20
Plotted From - tnpr17192
File - U:\rdprj\pott\02R9\057cr.dgn

CURB RAMP DETAILS

STATE OF SOUTH DAKOTA	PROJECT	SHEET	TOTAL SHEETS
	P 0020(117)254	B63	B98

Plotting Date: 01/08/2015

1
59+93.47-26.67' L
Center Type 3
Curb Ramp

2
60+16.00-34.94' L
Center Mod Type 3
Curb Ramp

3
60+53.85-36.72' L
Center Type 1
Curb Ramp
Begin Ramp Slope

4
60+60.57-39.44' L
End Ramp Slope

5
60+65.96-25.49' L
Center Type 2
Curb Ramp
Begin Ramp Slope

6
60+65.97-32.77' L
End Ramp Slope

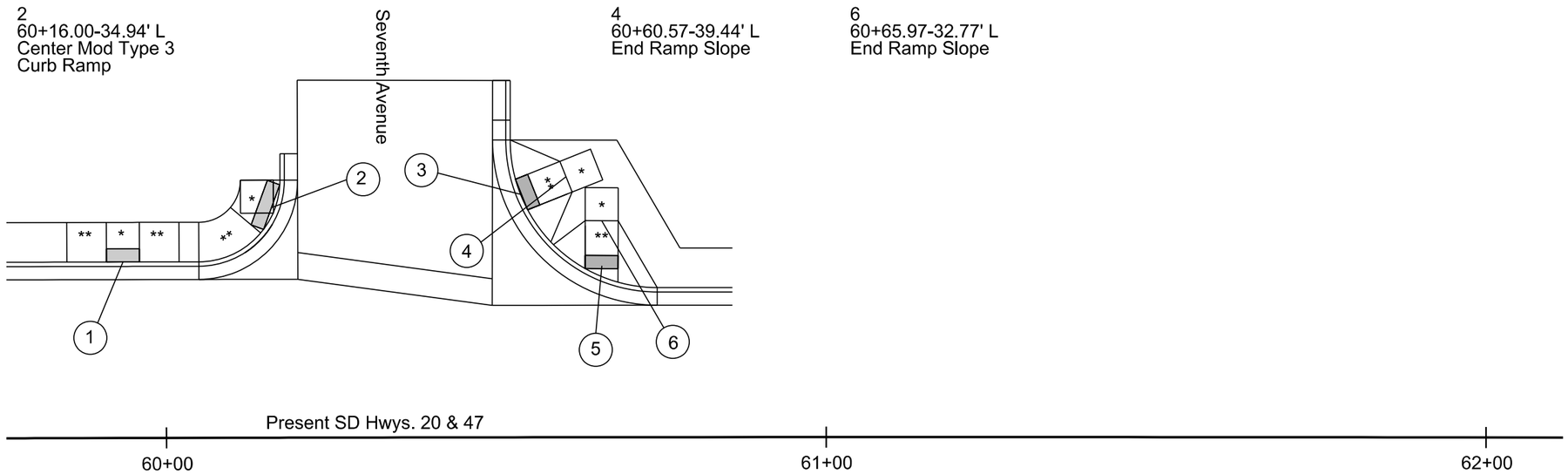

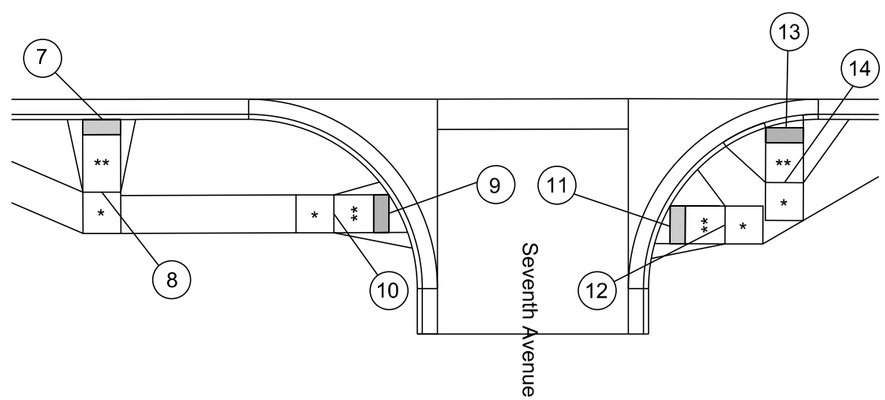

7
60+72.51-22.67' R
Center Type 1
Curb Ramp
Begin Ramp Slope

8
60+72.52-32.29' R
End Ramp Slope

9
61+10.46-35.11' R
Center Type 2
Curb Ramp
Begin Ramp Slope

10
61+03.19-35.16' R
End Ramp Slope

11
61+47.62-36.58' R
Center Type 2
Curb Ramp
Begin Ramp Slope

12
61+54.86-36.63' R
End Ramp Slope

13
61+62.74-23.75' R
Center Type 2
Curb Ramp
Begin Ramp Slope

14
61+62.71-31.03' R
End Ramp Slope

LEGEND:
* Landing with 2% maximum slope
** Curb ramp with 8.3% maximum slope and 2% cross slope
Detectable Warning

Plot Scale - 1:20
Plotted From - tnpr17192
File - U:\rdrj\pjplot\02R9\060cr.dgn

CURB RAMP DETAILS

STATE OF SOUTH DAKOTA	PROJECT	SHEET	TOTAL SHEETS
	P 0020(117)254	B64	B98

Plotting Date: 07/06/2015

1
63+58.03-22.67' L
Center Type 3
Curb Ramp

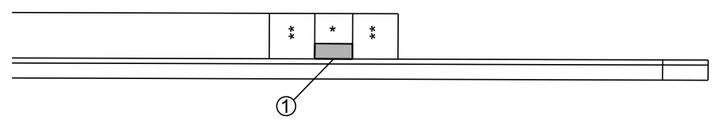

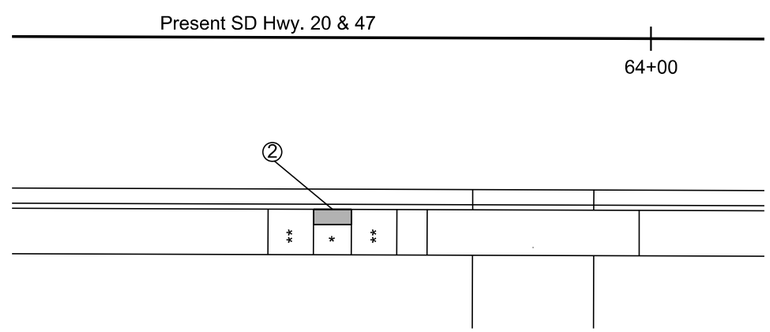

2
63+58.03-22.67' R
Center Type 3
Curb Ramp

LEGEND:
* Landing with 2% maximum slope
** Curb ramp with 8.3% maximum slope and 2% cross slope
Detectable Warning

Plot Scale - 1:20
Plotted From - tnpr17192
File - U:\rdprj\pott02R9\064cr.dgn

CURB RAMP DETAILS

STATE OF SOUTH DAKOTA	PROJECT	SHEET	TOTAL SHEETS
	P 0020(117)254	B65	B98

Plotting Date: 01/08/2015

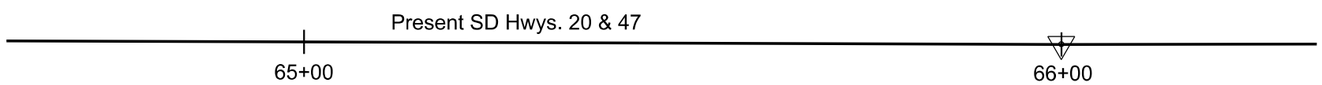

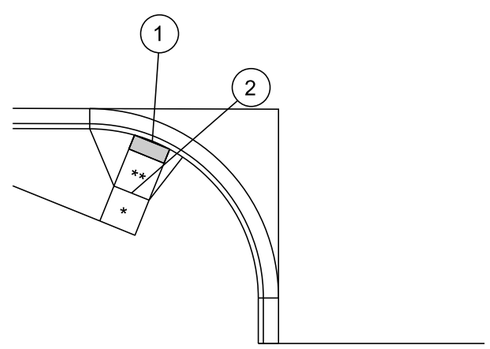

1
65+55.80-24.43' R
Center of Type 1
Curb Ramp
Begin Ramp Slope

2
65+53.10-31.16' R
End Ramp Slope

LEGEND:
* Landing with 2% maximum slope
** Curb ramp with 8.3% maximum slope and 2% cross slope
Detectable Warning

Plot Scale - 1:20
Plotted From - tpr17192
File - U:\rd\prj\pott02R9\065cr.dgn

STATE OF SOUTH DAKOTA	PROJECT	SHEET	TOTAL SHEETS
	P 0020(117)254	B66	B98

Plotting Date: 07/06/2015

INTERSECTION LAYOUT

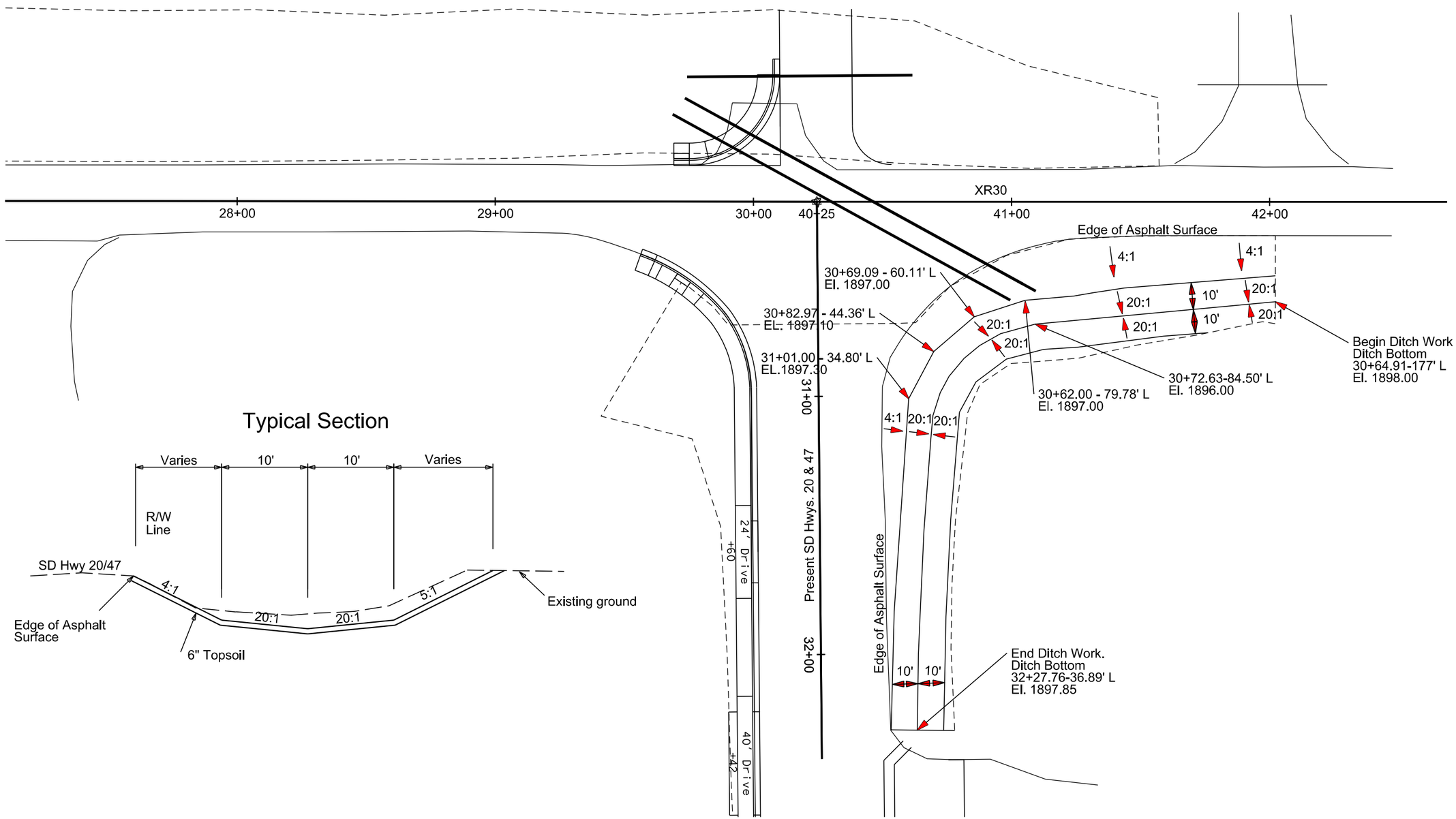

Typical Section

Plot Scale - 1:40

Plotted From - trpr17192

File - ...\pott02R9IntersecLayout.dgn

STATE OF SOUTH DAKOTA	PROJECT	SHEET	TOTAL SHEETS
	P 0020(117)254	B67	B98

Plotting Date: 01/08/2015

SHALLOW PIPE REPLACEMENT DETAIL

(See Shallow Pipe Replacement Notes for Additional Information)

Note: Not to Scale

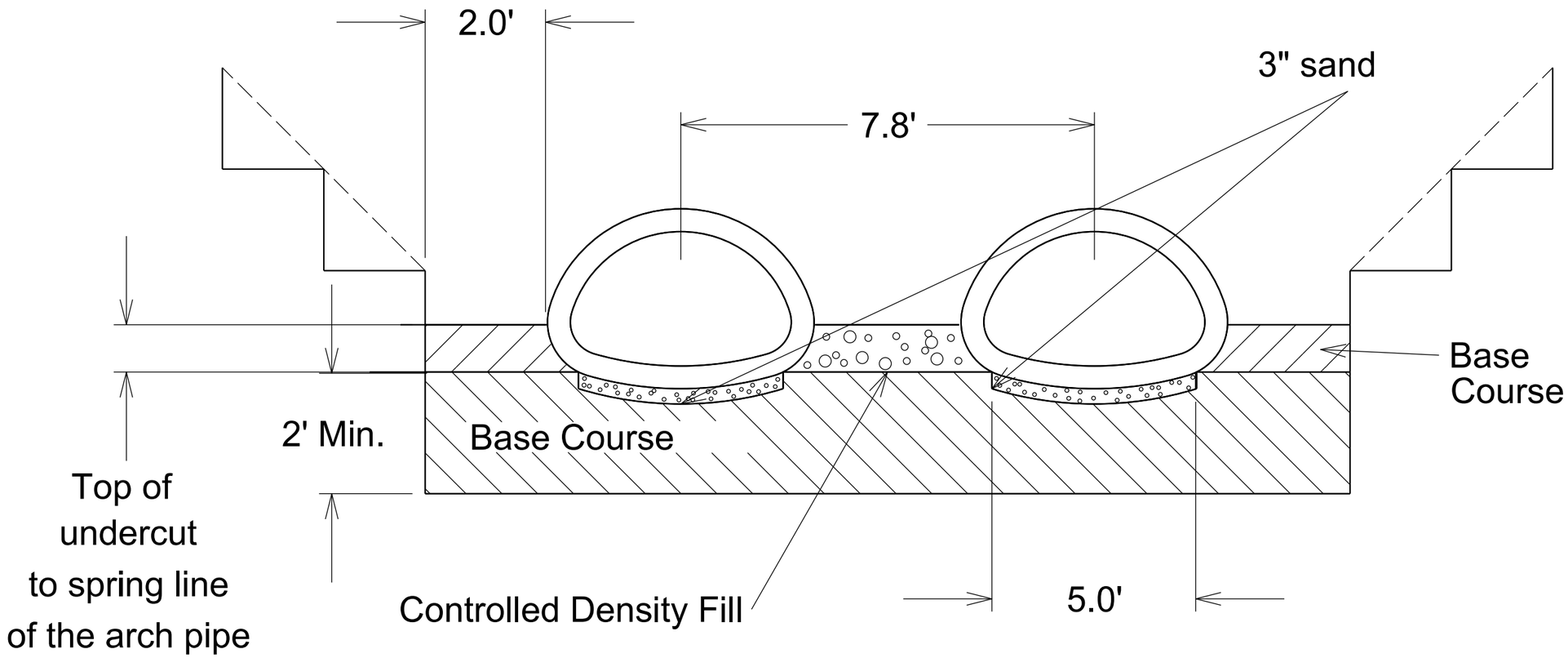

Multiple 48" Arch Pipe Installation

Plot Scale - 1:8

Plotted From - trpr17192

File - ...\prj\pott02R9\multiexslope.dgn

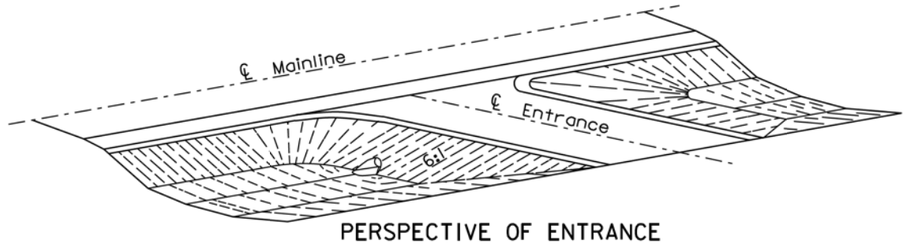

PERSPECTIVE OF ENTRANCE

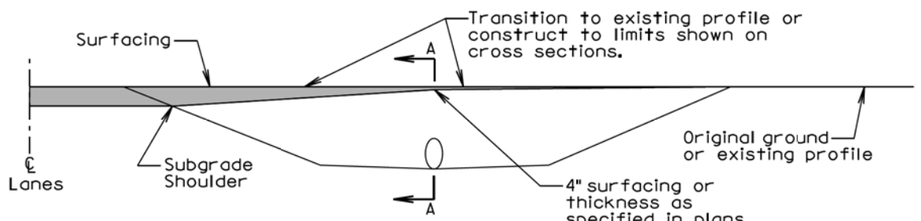

ELEVATION VIEW (ENTRANCE)

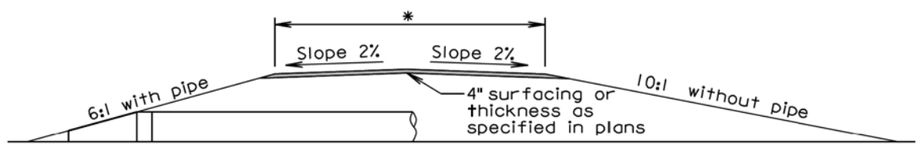

SECTION A-A (ENTRANCE)

*The finished surfacing width is stated elsewhere in the plans. The subgrade width is 4' wider than the finished surfacing width unless stated otherwise in the plans.

GENERAL NOTES:

The ditch section shown above in the perspective and elevation view is only for illustrative purposes.

A 6:1 inslope shall be constructed for an entrance when a pipe is required. A 10:1 inslope shall be constructed when a pipe is not required.

Pipe lengths shall be adjusted if necessary during construction to obtain the 6:1 slopes. For grading projects, the pipe lengths are estimated typically using a 4" thickness of surfacing directly over the subgrade above the pipe.

The transition area between the mainline inslope and the approach inslope for entrances shall be rounded to eliminate an abrupt transition.

The turning radii shall be 35' for intersecting roads and entrances unless stated otherwise in the plans.

September 6, 2013

Published Date: 2nd Qtr. 2015	SDDOT	INTERSECTING ROADS AND ENTRANCES	PLATE NUMBER 120.01
			Sheet 1 of 2

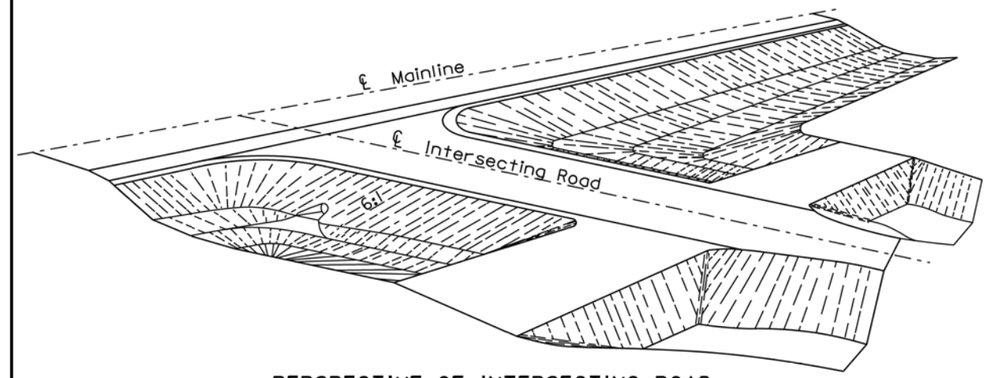

PERSPECTIVE OF INTERSECTING ROAD

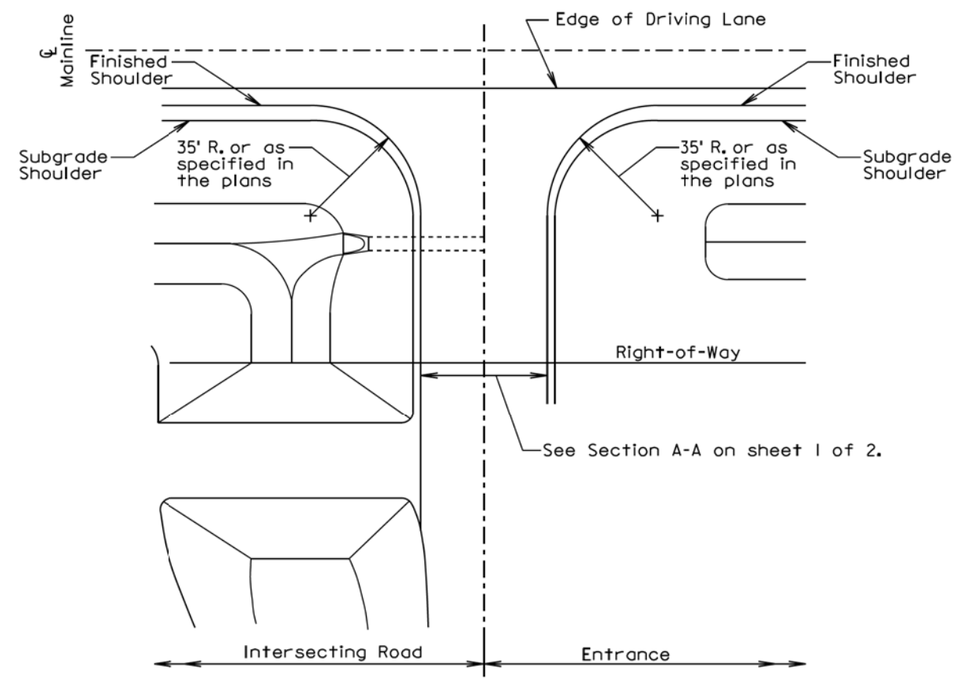

PLAN VIEW

September 6, 2013

Published Date: 2nd Qtr. 2015	SDDOT	INTERSECTING ROADS AND ENTRANCES	PLATE NUMBER 120.01
			Sheet 2 of 2

Plot Scale - 1:200
- Plotted From - tnpr17192
File - ...\pplt02R9\s12001_1s12001_2.dgn

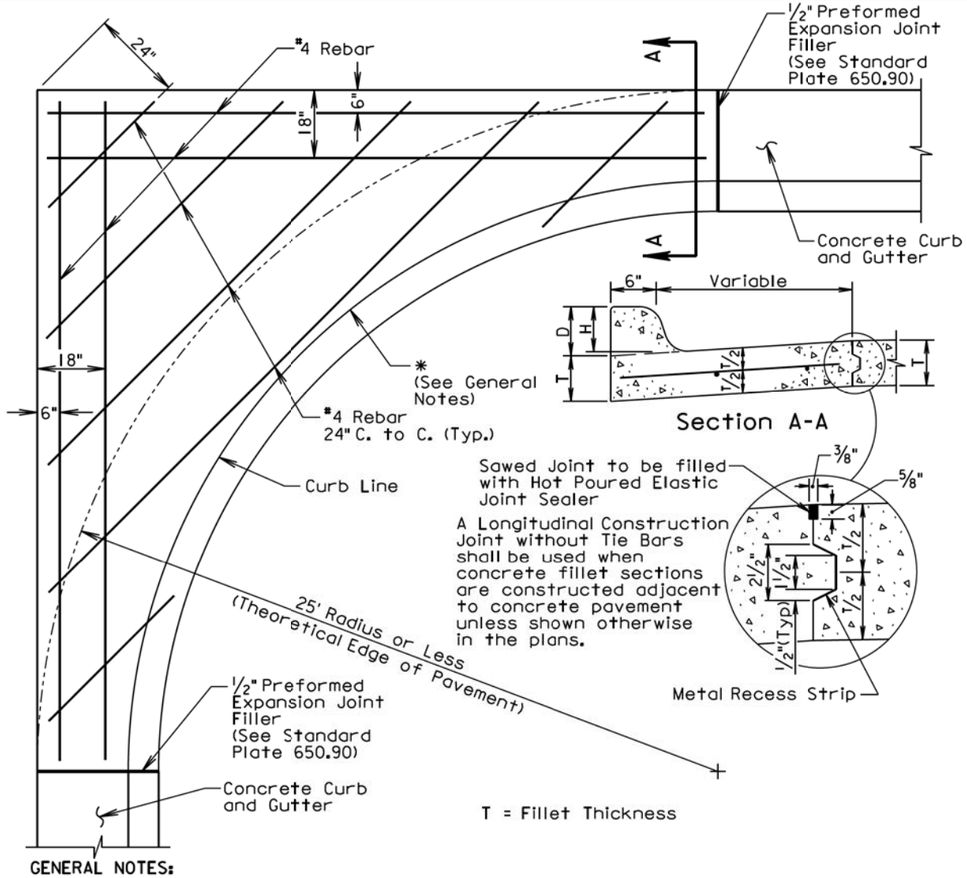

GENERAL NOTES:

* If a curb ramp is constructed adjacent to a PCC fillet section, the curb will need to be modified. Refer to the corresponding curb ramp standard plate or other special details in the plans for modification of the PCC fillet section.

Dimensions D, H, and T shall conform to those shown on the appropriate curb and gutter standard plate.

All rebar shall conform to A.S.T.M. A615 Grade 60 and the Standard Specificctions Sections 480 and 1010. All rebar shall have a minimum of 3" clear cover.

Class M6 Concrete shall be used in construction of the fillets.

The concrete curb shall be monolithic with the concrete fillet. No separate payment for this curb will be made as the curb is considered a part of the fillet.

Joints shall be constructed at 10' intervals except when fillets are constructed adjacent to PCC Pavement. If there is adjacent PCC Pavement the joints shall be extended from edge of pavement through the fillet section as directed by the Engineer.

The cost for all materials, labor, and incidentals necessary to construct the PCC fillet section with curb and gutter shall be incidental to the contract unit price per square yard for the corresponding PCC fillet section bid item.

September 6, 2013

Published Date: 2nd Qtr. 2015	SDDOT	PCC FILLET SECTION WITH TYPE B CURB AND GUTTER	PLATE NUMBER 380.16
			Sheet 1 of 1

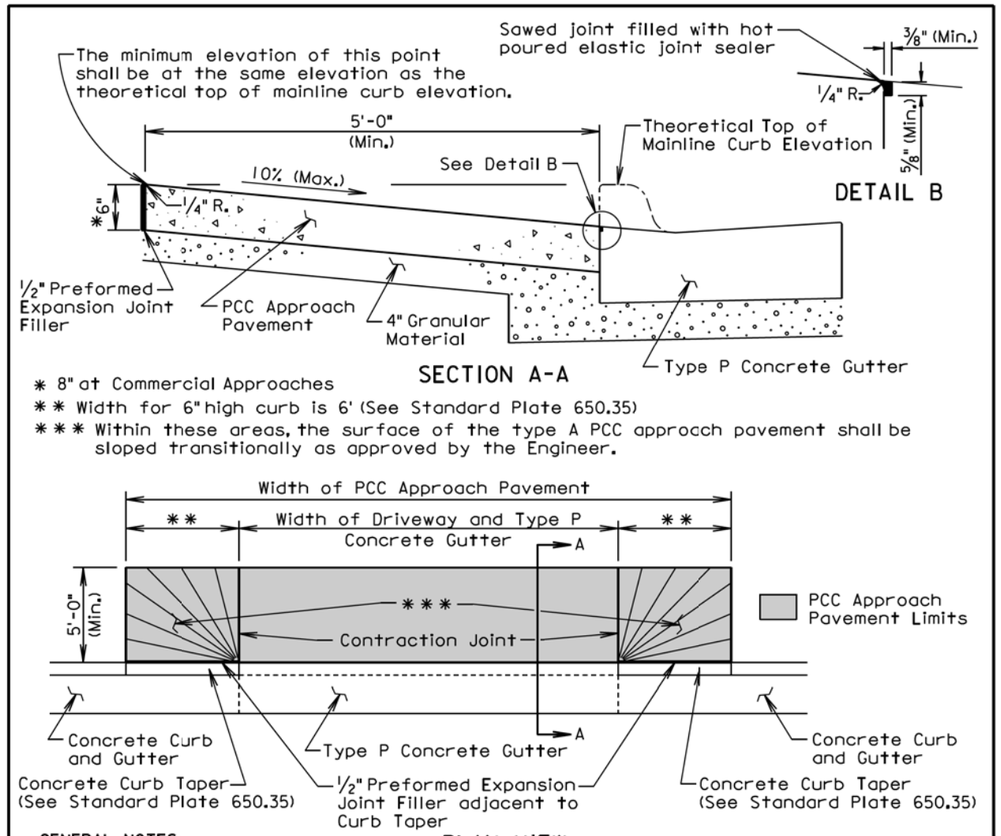

* 8" at Commercial Approaches

** Width for 6" high curb is 6' (See Standard Plate 650.35)

*** Within these areas, the surface of the type A PCC approcch pavement shall be sloped transitionally as approved by the Engineer.

GENERAL NOTES:

The concrete for the type A PCC approach pavement and adjacent driveway shall comply with the requirements of the Standard Specifications for class M6 concrete unless otherwise stated in the plans.

Contraction joints in the type A PCC approach pavement shall be 1 1/2 inches deep if formed in the fresh concrete using a suitable grooving tool. If a saw is used to cut the contraction joints, then the depth of the joint shall be at least 1/4 the thickness of the approach pavement. Additional contraction joints not shown in the Plan View shall be spaced as follows:

One joint at the center of the approach for driveways 16' to 24' wide.
Two joints spaced at equal intervals for driveways greater than 24' to 40' wide.

All costs for furnishing and placing the type A PCC approach pavement and constructing the expansion and contraction joints including labor, equipment, and materials including the earthen backfill shall be incidental to the contract unit price per square yard for the corresponding PCC Approach Pavement bid item.

All costs for excavation required for placing the type A PCC approach pavement and granular material shall be incidental to the contract unit price per cubic yard for "Unclassified Excavation". All costs for furnishing and placing the granular material shall be incidental to the contract unit price per ton for the corresponding granular material bid item.

September 6, 2013

Published Date: 2nd Qtr. 2015	SDDOT	TYPE A PCC APPROACH PAVEMENT	PLATE NUMBER 380.40
			Sheet 1 of 1

Plot Scale - 1:200
- Plotted From - trpr17192
File - ...\prj\pott02R9\s38016s38040.dgn

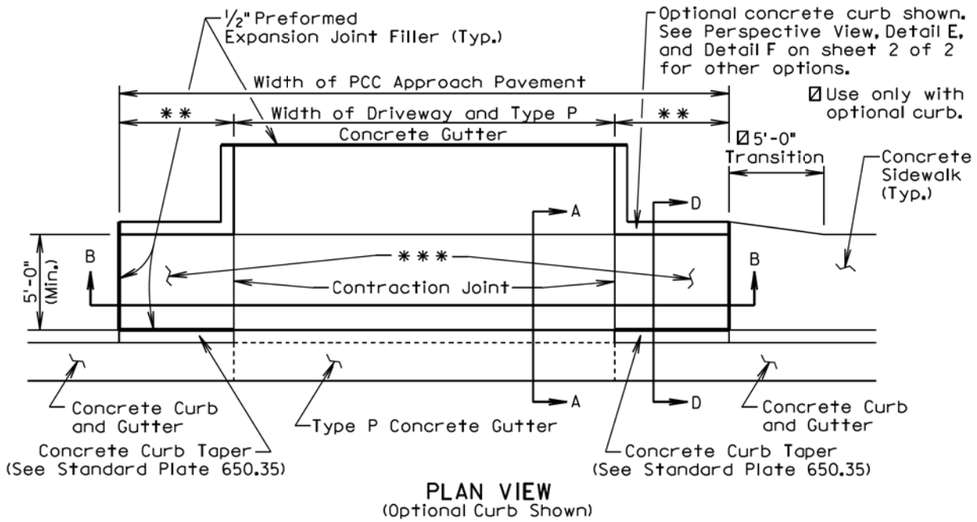

PLAN VIEW
(Optional Curb Shown)

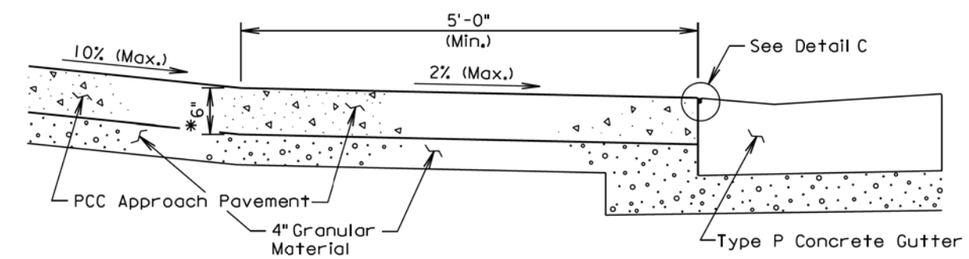

SECTION A-A

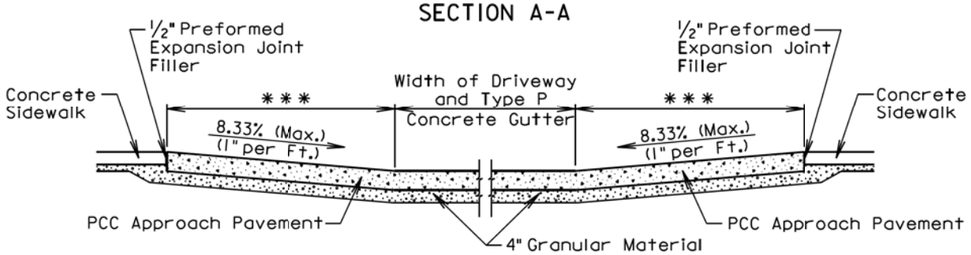

SECTION B-B

* 8" at Commercial Approaches

** Width for 6" high curb is 6' (See Standard Plate 650.35)

*** The slope of the type B PCC approach pavement in these areas shall match the slope of the concrete curb taper. The slope shall not be steeper than a 1" per foot slope.

September 6, 2013

Published Date: 2nd Qtr. 2015	SDDOT	TYPE B PCC APPROACH PAVEMENT	PLATE NUMBER 380.41 Sheet 1 of 2

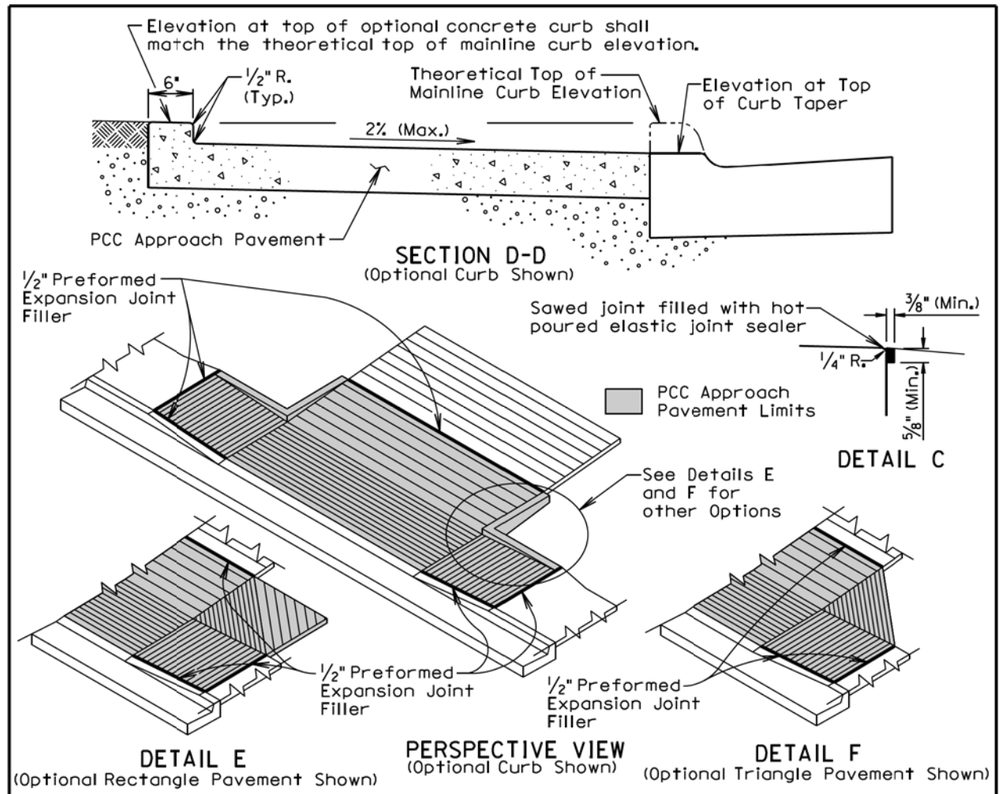

GENERAL NOTES:

Use the plan specified option for the pavement adjacent to the driveway and sidewalk. The options are shown above in the Perspective View, Detail E, and Detail F.

The concrete for the type B PCC approach pavement and adjacent driveway shall comply with the requirements of the Standard Specifications for class M6 concrete unless otherwise stated in the plans.

Contraction joints in the type B PCC approach pavement shall be 1½ inches deep if formed in the fresh concrete using a suitable grooving tool. If a saw is used to cut the contraction joints, then the depth of the joint shall be at least ¼ the thickness of the approach pavement. Additional contraction joints not shown in the Plan View shall be spaced as follows:

One joint at the center of the approach for driveways 16' to 24' wide.
Two joints spaced at equal intervals for driveways greater than 24' to 40' wide.

All costs for furnishing and placing the type B PCC approach pavement and constructing the expansion and contraction joints including labor, equipment, and materials including the earthen backfill shall be incidental to the contract unit price per square yard for the corresponding PCC Approach Pavement bid item.

All costs for excavation required for placing the type B PCC approach pavement and granular material shall be incidental to the contract unit price per cubic yard for "Unclassified Excavation". All costs for furnishing and placing the granular material shall be incidental to the contract unit price per ton for the corresponding granular material bid item.

September 6, 2013

Published Date: 2nd Qtr. 2015	SDDOT	TYPE B PCC APPROACH PAVEMENT	PLATE NUMBER 380.41 Sheet 2 of 2

Plot Scale - 1:200
Plotted From - tpr17192
File - ...\pott02R9\s38041_1s38041_2.dgn

TOLERANCES IN DIMENSIONS

Diameter: ±1.5% for 24" Dia. or less and ±1% or 3/8" whichever is more for 27" Dia. or greater.
Diameters at Joints: ±3/16" for 30" Dia. or less and ±1/4" for 36" or greater.
Length of joint (j): ±1/4".
Wall thickness (T): not less than design T by more than 5% or 3/16", whichever is greater.
Laying length: shall not underrun by more than 1/2".

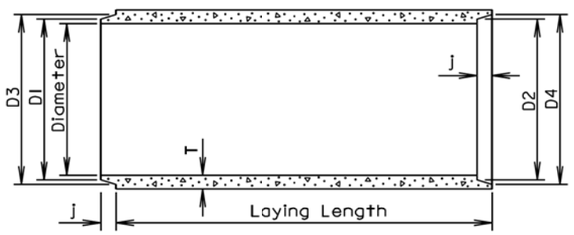

LONGITUDINAL SECTION

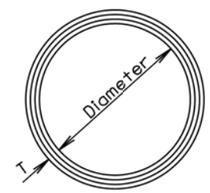

END VIEW

GENERAL NOTES:

Construction of R. C. P. shall conform to the requirements of Section 990 of the Standard Specifications for Roads and Bridges.

Not more than 2 four foot sections shall be permitted near the ends of any culvert. Four foot lengths shall be used only to secure the required length of culvert.

Diam. (in.)	Approx. Wt. /Ft. (lb.)	T (in.)	J (in.)	D1 (in.)	D2 (in.)	D3 (in.)	D4 (in.)
12	92	2	1 3/4	13 1/4	13 5/8	13 7/8	14 1/4
15	127	2 1/4	2	16 1/2	16 7/8	17 1/4	17 5/8
18	168	2 1/2	2 1/4	19 5/8	20	20 3/8	20 3/4
21	214	2 3/4	2 1/2	22 7/8	23 1/4	23 3/4	24 1/8
24	265	3	2 3/4	26	26 3/8	27	27 3/8
27	322	3 1/4	3	29 1/4	29 5/8	30 1/4	30 5/8
30	384	3 1/2	3 1/4	32 3/8	32 3/4	33 1/2	33 7/8
36	524	4	3 3/4	38 3/4	39 1/4	40	40 1/2
42	685	4 1/2	4	45 1/8	45 5/8	46 1/2	47
48	867	5	4 1/2	51 1/2	52	53	53 1/2
54	1070	5 1/2	4 1/2	57 7/8	58 3/8	59 3/8	59 7/8
60	1296	6	5	64 1/4	64 3/4	66	66 1/2
66	1542	6 1/2	5 1/2	70 5/8	71 1/8	72 1/2	73
72	1810	7	6	77	77 1/2	79	79 1/2
78	2098	7 1/2	6 1/2	83 3/8	83 7/8	85 5/8	86 1/8
84	2410	8	7	89 3/4	90 1/4	92 1/8	92 5/8
90	2740	8 1/2	7	95 3/4	96 1/4	98 1/8	98 5/8
96	2950	9	7	102 1/8	102 5/8	104 1/2	105
102	3075	9 1/2	7 1/2	109	109 1/2	111 1/2	112
108	3870	10	7 1/2	115 1/2	116	118	118 1/2

March 31, 2000

Published Date: 2nd Qtr. 2015 | SDDOT | **REINFORCED CONCRETE PIPE** | PLATE NUMBER 450.01 | Sheet 1 of 1

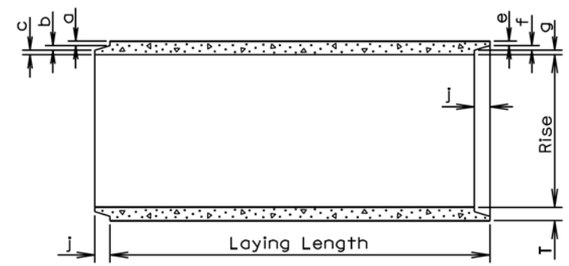

LONGITUDINAL SECTION

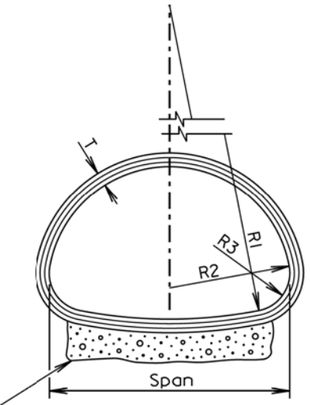

END VIEW

TOLERANCES IN DIMENSIONS

Radial dimensions at joints: ±1/8" for 65" span or less and ±1/4" for longer spans.
Rise and Span: ±2% of tabular values.
Length of Joint (J): ±1/4".
Wall thickness (T): not less than design T by more than 5% or 3/16", whichever is greater.
Laying length: shall not underrun by more than 1/2".

Gravel Bedding Material shall be supplied for 102" to 169" spans. It shall be placed to a thickness of 6" (min.) x 85% of the Span x Length of culvert and shall conform to the gradation requirements for gravel surfacing except material may be screened or may be plan provided material.

* Size (in.)	Approx. Wt./Ft. (lb.)	Rise (in.)	Span (in.)	T (in.)	a (in.)	b (in.)	c (in.)	j (in.)	e (in.)	f (in.)	g (in.)	R1 (in.)	R2 (in.)	R3 (in.)
18	170	13 1/2	22	2 1/2	1 3/8	3/8	3/4	2	1 1/8	3/8	1	27 1/2	13 3/4	5 1/4
24	320	18	28 1/2	3 1/2	1 5/8	1/2	1 3/8	3	1 3/8	1/2	1 5/8	40 11/16	14 3/4	4 5/8
30	450	22 1/2	36 1/4	4	1 13/16	5/8	1 9/16	3 1/2	1 9/16	5/8	1 13/16	51	18 3/4	6 1/8
36	600	26 5/8	43 3/4	4 1/2	2	3/4	1 3/4	4	1 3/4	3/4	2	62	22 1/2	6 1/2
42	740	31 5/16	51 1/8	4 1/2	2	3/4	1 3/4	4	1 3/4	3/4	2	73	26 1/4	7 3/4
48	890	36	58 1/2	5	2 1/4	3/4	2	5	2	3/4	2 1/4	84	30	8 7/8
54	1100	40	65	5 1/2	2 1/2	3/4	2 1/4	5	2 1/4	3/4	2 1/2	92 1/2	33 3/8	10
60	1400	45	73 1/2	6	3 5/16	3/4	1 15/16	5	2 3/4	3/4	2 1/2	105	37 1/2	11
72	1900	54	88	7	3 13/16	1	2 3/16	6	3 1/4	1	2 3/4	126	45	13 5/16
84	2500	62	102	8	4 1/8	1	2 7/8	6	3 1/2	1	3 1/2	162 1/2	52	14 1/2
96	3300	78	122 3/8	9	4 1/2	1	3 1/2	7	4	1	4	218	62	20
108	4200	88	138 1/2	10	5	1	4	7	4 1/2	1	4 1/2	269	70	22
120	5100	96 7/8	154	11	5 1/2	1	4 1/2	7	5	1	5	301 3/8	78	24
132	5100	106 1/2	168 3/4	10		1	4	7	4 1/2	1	4 1/2	329	85 5/8	26 7/8

* Equivalent Diameter of Circular R. C. P.

GENERAL NOTES:

Construction of R.C.P. Arch shall conform to the requirements of Section 990 of the Standard Specifications for Roads and Bridges. Not more than 2 four foot sections shall be permitted near the ends of any culvert. Four foot lengths shall be used only to secure the required length of culvert.

March 31, 2000

Published Date: 2nd Qtr. 2015 | SDDOT | **REINFORCED CONCRETE PIPE ARCH** | PLATE NUMBER 450.02 | Sheet 1 of 1

Plot Scale - 1:200
- Plotted From - trpr17192
File - ...\pr\jpott02R9\s45001s45002.dgn

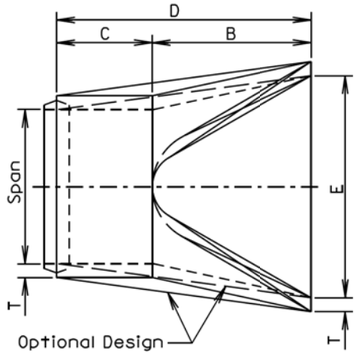

TOP VIEW

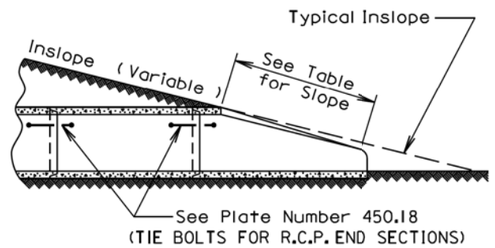

SLOPE DETAIL

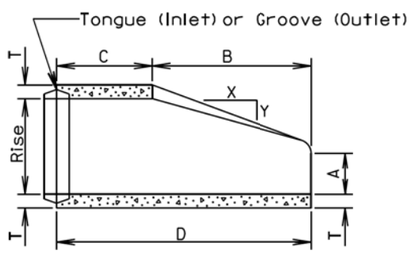

LONGITUDINAL SECTION

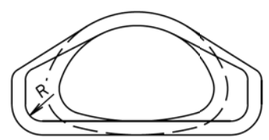

END VIEW

GENERAL NOTES:

Lengths of concrete pipe shown on Plan Sheets are between Flared Ends only.

Construction of R. C. P. Arch Flared End shall conform to the requirements of Section 990 of the Standard Specifications for Roads and Bridges.

* Size (in.)	Approximate Weight of Section (lbs.)	Rise (in.)	Span (in.)	Slope (X:Y)	T (in.)	A (in.)	B (in.)	C (in.)	D (in.)	E (in.)	R (in.)
18	1100	13 1/2	22	3:1	2 1/2	7	27	45	72	36	2
24	1750	18	28 1/2	3:1	3 1/2	8 1/2	39	33	72	48	3
30	3300	22 1/2	36 1/4	3:1	4	9 1/2	50	46	96	60	3
36	4350	26 5/8	43 3/4	3:1	4 1/2	1 1 1/8	60	36	96	72	6
42	5250	31 5/16	51 1/8	3:1	4 1/2	15 13/16	60	36	96	78	6
48	6400	36	58 1/2	3:1	5	21	60	36	96	84	6
54	7850	40	65	3:1	5 1/2	25 1/2	60	36	96	90	6
60	9500	45	73 1/2	3:1	6	31	60	36	96	96	6
72	13550	54	88	2:1	7	31	60	39	99	120	6
84	17950	62	102	2:1	8	28 1/2	83	19	102	144	6

*Equivalent Diameter of Circular R. C. P.

March 31, 2000

Published Date: 2nd Qtr. 2015

SDDOT

R. C. P. ARCH FLARED ENDS

PLATE NUMBER 450.11

Sheet 1 of 1

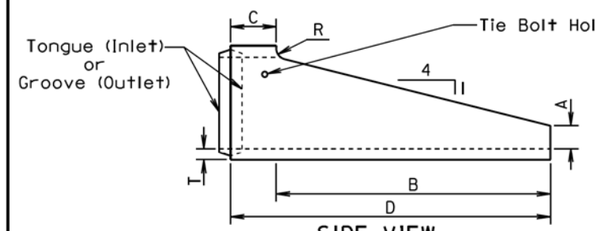

SIDE VIEW

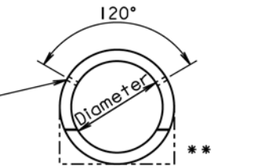

END VIEW "CIRCULAR"

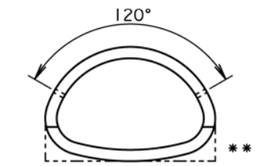

END VIEW "ARCH"

Dia. (in.)	T (in.)	A (in.)	B (in.)	C (in.)	D (in.)	R (in.)
FOR CIRCULAR PIPE						
24	3	6	72	12	84	3
30	3 1/2	7 1/2	90	12	102	3 1/2
FOR ARCH PIPE						
* 24	3	6	48	12	60	3
* 30	3 1/2	7 1/2	60	12	72	3 1/2
* 36	4 1/2	8 5/8	66	30	96	0
* 42	4 1/2	10	77 1/4	18 3/4	96	0

ALTERNATE

Dia. (in.)	T (in.)	A (in.)	B (in.)	C (in.)	D (in.)	R (in.)
FOR CIRCULAR PIPE						
24	3	9	72	12	84	0
30	3 1/2	11	90	12	102	0
FOR ARCH PIPE						
* 24	3	9	48	12	60	0
* 30	3 1/2	11	60	12	72	0

* Equivalent Diameter of Circular R.C.P.

** Acceptable Flat Bottom Alternate.

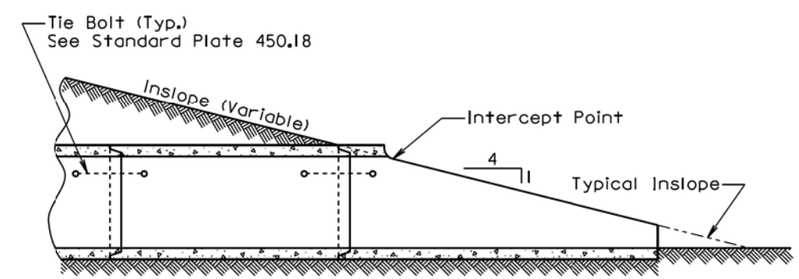

SECTION
(Along Centerline of Pipe)

GENERAL NOTE:

The length of concrete pipe shown in the construction plans is between sloped ends.

September 22, 2006

Published Date: 2nd Qtr. 2015

SDDOT

R. C. P. SLOPED ENDS

PLATE NUMBER 450.13

Sheet 1 of 1

Plot Scale - 1:200
- Plotted From - trpr17192
File - ...\prj\pott02R9\s450113s450113.dgn

Wall "t" (in.)	Rod Dia. (in.)	Pipe Sleeve Dia. (nominal)
≤ 3¼	⅝	¾
3½-6½	¾	1
≥ 7	1	1¼

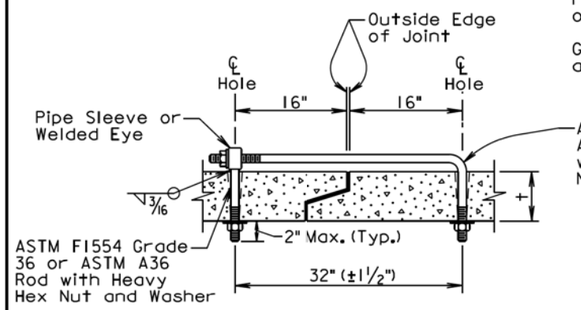

ADJUSTABLE EYE BOLT TIE

GENERAL NOTES:

Tie bolts shall conform to ASTM F1554 Grade 36 or ASTM A36. Nuts shall be heavy hex conforming to ASTM A563. Washers shall conform to ASTM F436.

Pipe Sleeve shall conform to ASTM A500 or A53, Grade B.

Galvanize adjustible eye bolt tie assembly in accordance with ASTM A153.

Pipe Dia. (in.)	"L" (in.)	Bolt Dia. (in.)
≤ 48	4	¾
> 48	6	1

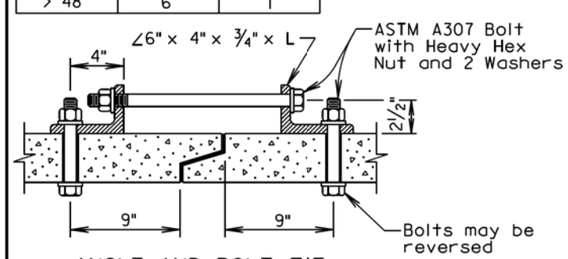

ANGLE AND BOLT TIE

GENERAL NOTES:

Angles shall conform to ASTM A36.

Bolts shall conform to ASTM A307. Nuts shall be heavy hex conforming to ASTM A563. Washers shall conform to ASTM F436.

Galvanize angles, bolts, nuts, and washers in accordance with ASTM A153.

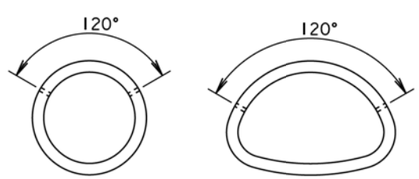

END VIEW "CIRCULAR"

END VIEW "ARCH"

GENERAL NOTES:

In lieu of the tie bolts detailed above other types of tie bolt connections may be installed as approved by the Office of Bridge Design.

All pipe sections of R.C.P. and R.C.P. Arch shall be tied with tie bolts except for pipe located between drop inlets, manholes, and junction boxes. All pipe sections of pipes that only enter or exit drop inlets, manhole, and junction boxes shall be tied with tie bolts.

There will be no separate measurement or payment for the tie bolts. The cost for furnishing and installing the tie bolts shall be incidental to the contract unit price per foot for the corresponding bid item for R.C.P. or R.C.P. Arch.

February 28, 2013

Published Date: 2nd Qtr. 2015	SDDOT	TIE BOLTS FOR R.C.P. AND R.C.P. ARCH	PLATE NUMBER 450.18
			Sheet 1 of 1

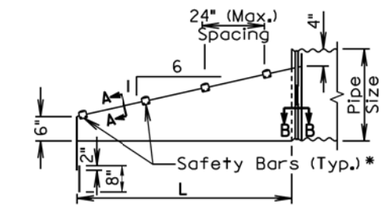

ELEVATION VIEW

*Number of bars required will vary depending on the length of the end section.

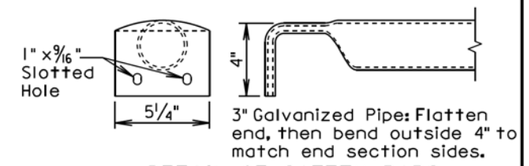

3" Galvanized Pipe: Flatten end, then bend outside 4" to match end section sides.

DETAIL OF SAFETY BARS

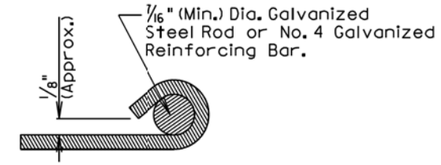

SECTION A-A

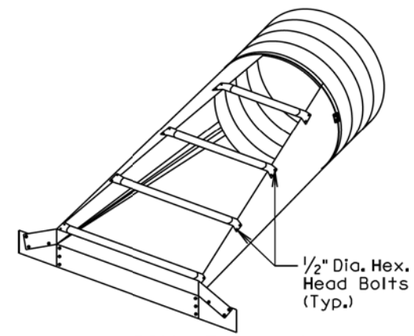

ISOMETRIC VIEW

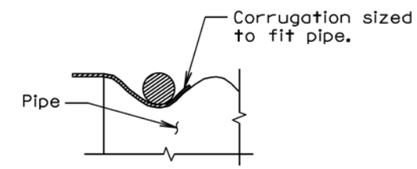

SECTION B-B

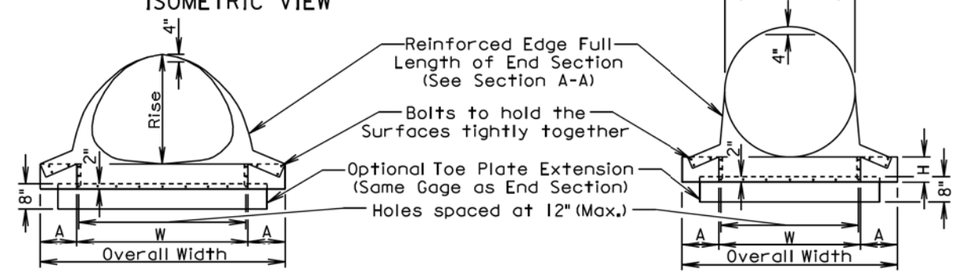

FRONT VIEW

FRONT VIEW

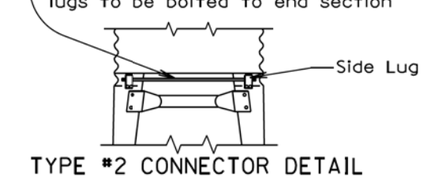

TYPE #2 CONNECTOR DETAIL
(For 30" and Larger)
(For 21" X 15" and Larger)

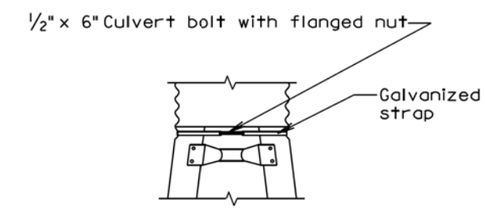

TYPE #1 CONNECTOR DETAIL
(For 15" Through 24")

August 31, 2013

Published Date: 2nd Qtr. 2015	SDDOT	C. M. P. SAFETY ENDS	PLATE NUMBER 450.38
			Sheet 1 of 2

Plot Scale - 1:200
- Plotted From - trpr17192
File - ...\pott02R9\s45018s45038_1.dgn

ARCH C.M.P. SAFETY ENDS										
Equv. Dia. (Inch)	(Inches)		Min. Thick.		Dimensions (Inches)				L Dimensions	
	Span	Rise	Inch	Gage	A	H	W	Overall Width	Slope	Length (Inch)
18	21	15	.064	16	8	6	27	43	6:1	30
21	24	18	.064	16	8	6	30	46	6:1	48
24	28	20	.064	16	8	6	34	50	6:1	60
30	35	24	.079	14	12	9	41	65	6:1	84
36	42	29	.109	12	12	9	48	72	6:1	114
42	49	33	.109	12	16	12	55	87	6:1	138
48	57	38	.109	12	16	12	63	95	6:1	168
54	64	43	.109	12	16	12	70	102	6:1	198
60	71	47	.109	12	16	12	77	109	6:1	222
72	83	57	.109	12	16	12	89	121	6:1	282

CIRCULAR C.M.P. SAFETY ENDS								
Pipe Dia. (Inch)	Min. Thick.		Dimensions (Inches)				L Dimensions	
	Inch	Gage	A	H	W	Overall Width	Slope	Length (Inch)
15	.064	16	8	6	21	37	6:1	30
18	.064	16	8	6	24	40	6:1	48
21	.064	16	8	6	27	43	6:1	66
24	.064	16	8	6	30	46	6:1	84
30	.109	12	12	9	36	60	6:1	120
36	.109	12	12	9	42	66	6:1	156
42	.109	12	16	12	48	80	6:1	192
48	.109	12	16	12	54	86	6:1	228
54	.109	12	16	12	60	92	6:1	264
60	.109	12	16	12	66	98	6:1	300

GENERAL NOTES:

Safety ends shall be fabricated from galvanized steel conforming to the requirements of the Standard Specifications.

Safety bars shall be fabricated from steel schedule 40 pipe in conformance with ASTM A53, grade B or HSS 3.5X.216 in conformance with ASTM A500, grade B.

Slotted holes for safety bar attachment shall be provided for all end sections.

Attachment to circular pipes 15" through 24" diameter shall be made with Type #1 straps. All other sizes shall be attached with Type #2 rods and lugs.

When stated in the plans, optional toe plate extension shall be punched and bolted to end section apron lip with 3/8" diameter galvanized bolts. Steel for toe plate extension shall be same gauge as end section. Dimensions shall be overall width less 6" by 8" high.

Installation shall be performed in accordance with the Standard Specifications.

Cost of all work and materials required for fabrication and installation of safety ends shall be incidental to the bid items for the various sizes of safety ends.

August 31, 2013

Published Date: 2nd Qtr. 2015 | SDDOT | C. M. P. SAFETY ENDS | PLATE NUMBER 450.38 | Sheet 2 of 2

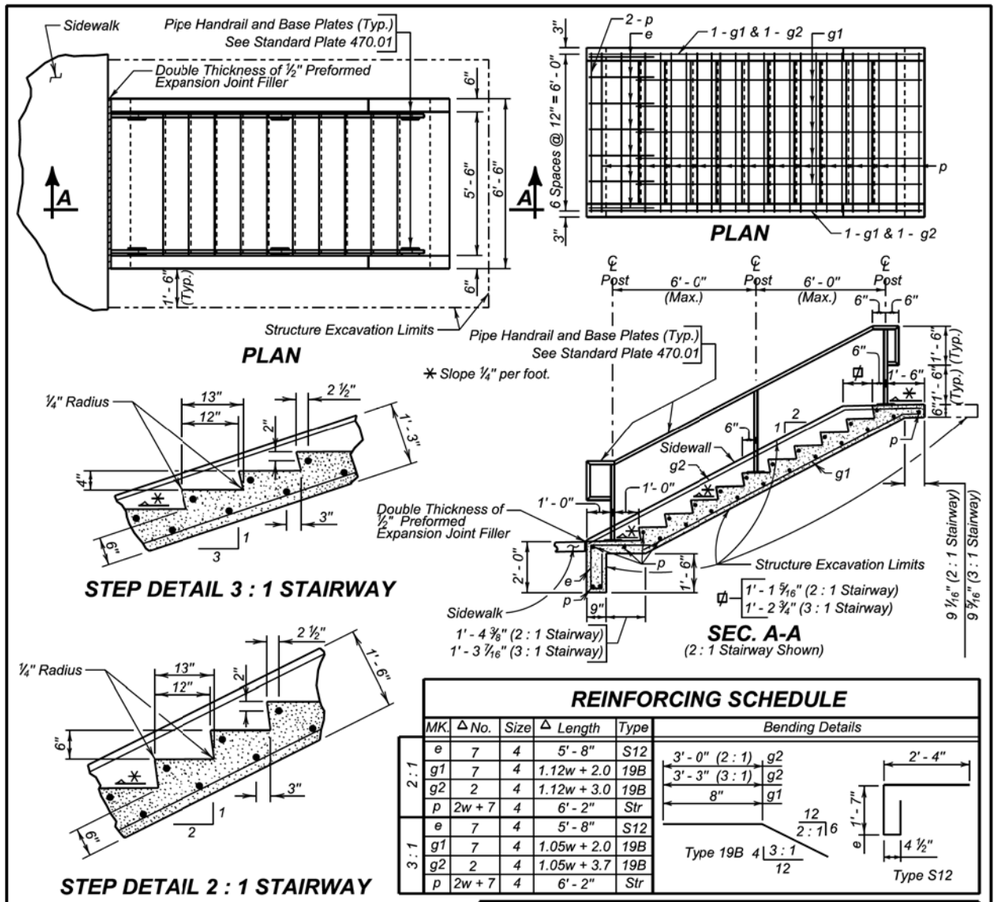

REINFORCING SCHEDULE

	MK	△ No.	Size	△ Length	Type
2 : 1	e	7	4	5' - 8"	S12
	g1	7	4	1.12w + 2.0	19B
	g2	2	4	1.12w + 3.0	19B
	p	2w + 7	4	6' - 2"	Str
3 : 1	e	7	4	5' - 8"	S12
	g1	7	4	1.05w + 2.0	19B
	g2	2	4	1.05w + 3.7	19B
	p	2w + 7	4	6' - 2"	Str

Bending Details

ESTIMATED QUANTITIES

ITEM	UNIT	△ QUANTITY	
		2 : 1 STAIRWAY	3 : 1 STAIRWAY
Class M6 Concrete	Cu. Yd.	0.87 + 0.23w	0.83 + 0.19w
Structure Excavation (Misc.)	Cu. Yd.	1.79 + 0.59w	1.65 + 0.46w
Epoxy Coated Reinforcing Steel	Lb.	69.63 + 14.97w	69.63 + 14.55w
Pipe Handrail	Ft.	6.22 + 2.24w	6.10 + 2.10w

△ w = Number of steps NOT including landings (i. e. w = 9 in Sec. A-A).

GENERAL NOTES:

1. All concrete shall be Class M6 in accordance with Section 462.
2. All reinforcing steel shall be epoxy coated and shall conform to ASTM A615, Grade 60. Epoxy coating shall conform to ASTM A775.
3. Use 2 inch clear cover on all reinforcing steel except as shown.
4. All concrete shall be thoroughly tamped and spaded against forms to leave a smooth surface without honeycomb. Finish of step treads to be steel troweled and then brush finished with brush strokes on treads at right angles to width. All exposed edges shall be chamfered ¾ inch except as shown.
5. Place concrete on undisturbed soil. If backfilling is necessary, compact with mechanical tampers to the satisfaction of the Engineer.
6. The concrete sidewalk shall be constructed in accordance with Section 651.
7. Cost of the ½ inch Preformed Expansion Joint Filler shall be incidental to the contract unit price per cubic yard for "Class M6 Concrete".

SPECIAL NOTE:

Details for construction of the concrete stairway and handrails shown on this sheet are typical only, and are not intended to depict specific installations. Adjust the length of the stairway as required to fit specific site requirements. Use the formulas given on this sheet to adjust the unit price bid quantities to the required length of the stairway. Refer to project plans for requirements of individual locations. Alternate design details may be submitted through proper channels to the Office of Bridge Design for approval, including aluminum handrail installation.

August 8, 2014

Published Date: 2nd Qtr. 2015 | SDDOT | CONCRETE STAIRWAY | PLATE NUMBER 460.31 | Sheet 1 of 1

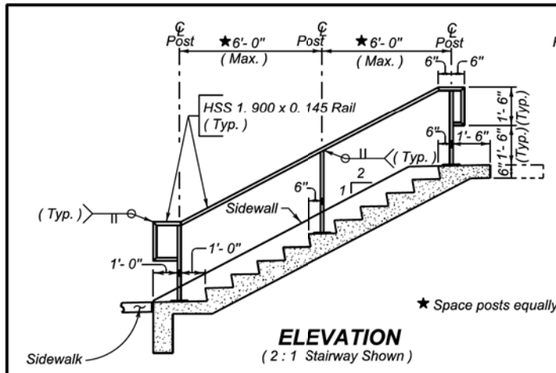

ELEVATION
(2 : 1 Stairway Shown)

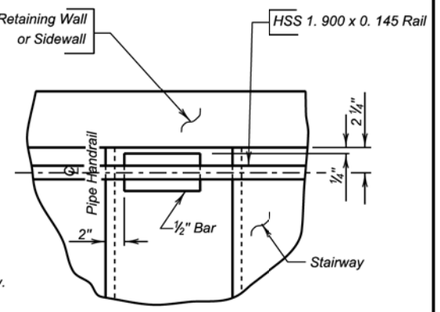

VIEW F - F

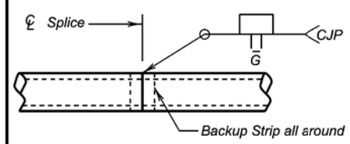

RAIL SPLICE DETAILS

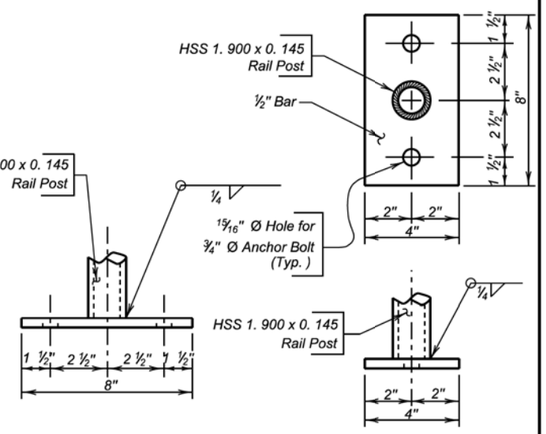

BASE PLATE DETAILS

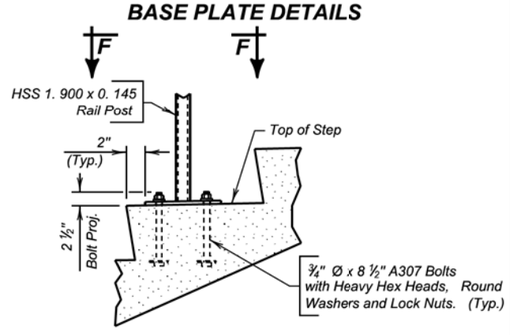

ANCHOR BOLT DETAIL

GENERAL NOTES:

1. All rail posts shall be built vertical.
2. Steel pipe for railing and posts shall conform to ASTM A500, Grade B. Railpost base plates shall conform to ASTM A709, Grade 36.
3. Anchor Bolts and nuts shall conform to ASTM A307. Washers shall be in accordance with ASTM F436. Hardware shall be galvanized in accordance with ASTM F2329. Bolts shall be hex head Structural type with heavy hex lock nuts and round washers.
4. All anchor bolts shall be tightened to a Torque of 120 ft-lbs (approximated without the use of a calibrated torque wrench).
5. Painting of steel railing shall be done in accordance with Section 411 of the Standard Specifications. The finish color shall be Federal Standard 595B, color 27038 (semi-gloss black) unless stated otherwise in the plans.
6. Welding and weld inspection shall be done in accordance with AWS D1. 1-(Current Year) Structural Welding Code - Steel.
7. The cost of structural steel, anchor bolts, painting, galvanizing, fabrication and installation of the Pipe Handrail shall be incidental to welding, weld inspection and that which is incidental to the the contract unit price per foot for "Pipe Handrail".
8. Alternate rail designs, including aluminum rail, may be submitted through proper channels to the Office of Bridge Design for approval.

SHOP PLANS

The fabricator shall submit shop drawings in accordance with the Standard Specifications.

December 23, 2013

Published Date: 2nd Qtr. 2015 | SDDOT | STAIRWAY HANDRAIL | PLATE NUMBER 470.01 | Sheet 1 of 1

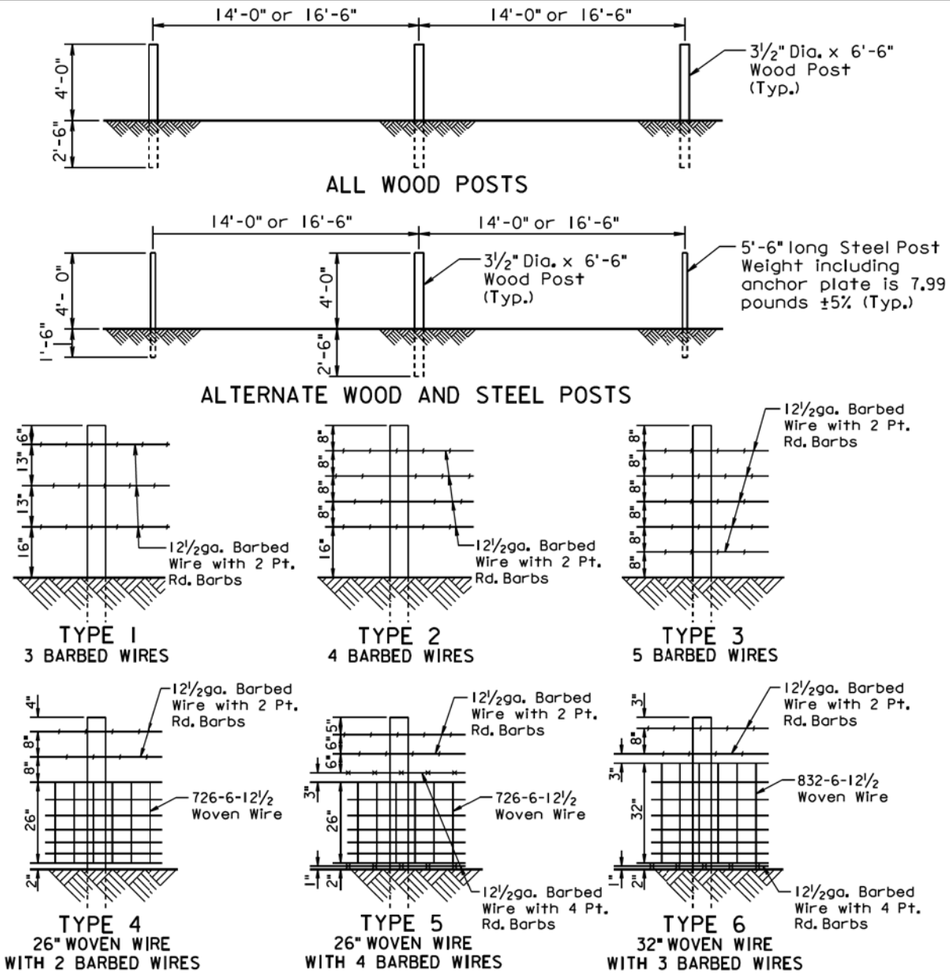

TYPE OF FENCE		LINE POST SPACING	BARBED WIRE		WOVEN WIRE
TYPE	DESCRIPTION		WIRE GAGE	NUMBER AND SHAPE OF BARBS	STYLE OR DESIGN NO.
1	3 Barbed Wires	16'-6"	12½	2 Point Round	—
2	4 Barbed Wires	16'-6"	12½	2 Point Round	—
3	5 Barbed Wires	16'-6"	12½	2 Point Round	—
4	26" Woven Wire with 2 Barbed Wires	14'-0"	12½	2 Point Round	726-6-12½
5	26" Woven Wire with 4 Barbed Wires	14'-0"	12½	2 wires with 2 Pt. Rd. 2 wires with 4 Pt. Rd.	726-6-12½
6	32" Woven Wire with 3 Barbed Wires	14'-0"	12½	2 wires with 2 Pt. Rd. 1 wire with 4 Pt. Rd.	832-6-12½

GENERAL NOTES:

Fence types designated on the plans that are followed by the letter S shall have smooth (barbless) wires.

When type 5S or 6S is designated the bottom wire may be barbed, smooth, or left off.

All degrees of curvature stated for fence are at centerline of roadway.

September 14, 2009

Published Date: 2nd Qtr. 2015 | SDDOT | RIGHT-OF-WAY FENCE | PLATE NUMBER 620.01 | Sheet 1 of 1

Plot Scale - 1:200
Plotted From - tpr17192
File - ...\prj\pott02R9\s47001s62001.dgn

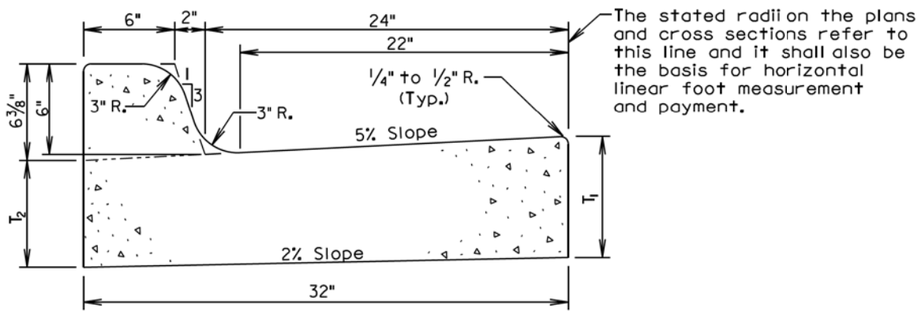

Type	T_1 (Inches)	T_2 (Inches)	Cu. Yd. Per Lin. Ft.	Lin. Ft. Per Cu. Yd.
B66	6	5 1/16	0.057	17.7
B67	7	6 1/16	0.065	15.4
B68	8	7 1/16	0.073	13.7
B68.5	8.5	7 9/16	0.077	13.0
B69	9	8 1/16	0.081	12.3
B69.5	9.5	8 9/16	0.085	11.7
B610	10	9 1/16	0.090	11.2
B610.5	10.5	9 9/16	0.094	10.7
B611	11	10 1/16	0.098	10.2
B611.5	11.5	10 9/16	0.102	9.8
B612	12	11 1/16	0.106	9.4

GENERAL NOTES:

When concrete curb and gutter longitudinally adjoins new concrete pavement, the method of attachment shall be by one of the methods shown on Standard Plate 380.11.

See Standard Plate 650.90 for expansion and contraction joints in the curb and gutter.

September 6, 2008

Published Date: 2nd Qtr. 2015

SDDOT

TYPE B CONCRETE CURB AND GUTTER

PLATE NUMBER 650.01

Sheet 1 of 1

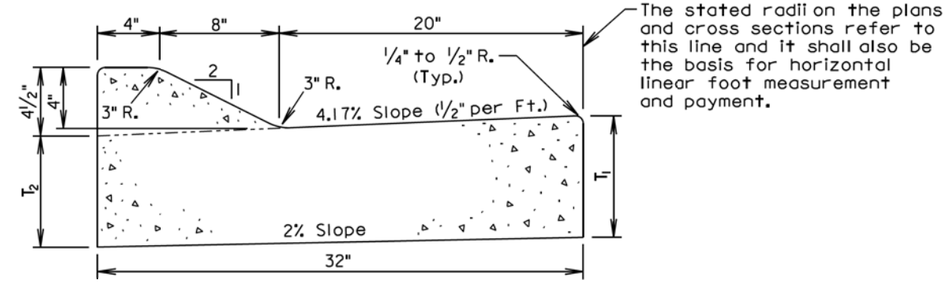

Type	T_1 (Inches)	T_2 (Inches)	Cu. Yd. Per Lin. Ft.	Lin. Ft. Per Cu. Yd.
D46	6	5 5/16	0.056	18.0
D47	7	6 5/16	0.064	15.7
D48	8	7 5/16	0.072	13.9
D48.5	8.5	7 13/16	0.076	13.1
D49	9	8 5/16	0.080	12.5
D49.5	9.5	8 13/16	0.084	11.9
D410	10	9 5/16	0.088	11.3
D410.5	10.5	9 13/16	0.093	10.8
D411	11	10 5/16	0.097	10.3
D411.5	11.5	10 13/16	0.101	9.9
D412	12	11 5/16	0.105	9.5

GENERAL NOTES:

When concrete curb and gutter longitudinally adjoins new concrete pavement, the method of attachment shall be by one of the methods shown on Standard Plate 380.11.

See Standard Plate 650.90 for expansion and contraction joints in the curb and gutter.

September 6, 2006

Published Date: 2nd Qtr. 2015

SDDOT

TYPE D CONCRETE CURB AND GUTTER

PLATE NUMBER 650.15

Sheet 1 of 1

Plot Scale - 1:200

- Plotted From - trpr17192

File - ...\pr\pott02R9\s65001s65015.dgn

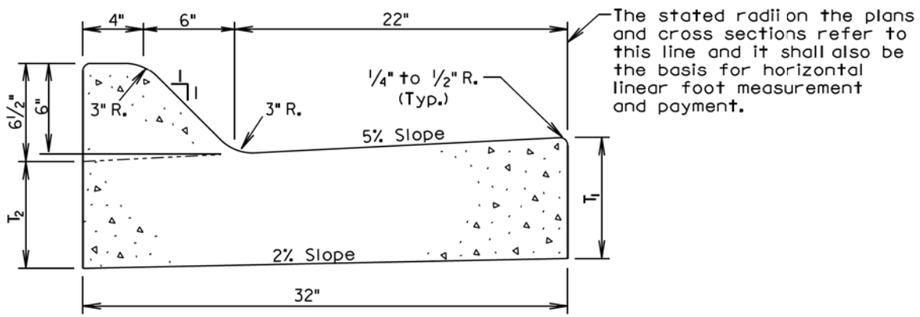

Type	T_1 (Inches)	T_2 (Inches)	Cu. Yd. Per Lin. Ft.	Lin. Ft. Per Cu. Yd.
F66	6	5 1/16	0.057	17.6
F67	7	6 1/16	0.065	15.4
F68	8	7 1/16	0.073	13.6
F68.5	8.5	7 9/16	0.077	12.9
F69	9	8 1/16	0.082	12.3
F69.5	9.5	8 9/16	0.086	11.7
F610	10	9 1/16	0.090	11.1
F610.5	10.5	9 9/16	0.094	10.7
F611	11	10 1/16	0.098	10.2
F611.5	11.5	10 9/16	0.102	9.8
F612	12	11 1/16	0.106	9.4

GENERAL NOTES:

When concrete curb and gutter longitudinally adjoins new concrete pavement, the method of attachment shall be by one of the methods shown on Standard Plate 380.11.

See Standard Plate 650.90 for expansion and contraction joints in the curb and gutter.

September 6, 2008

Published Date: 2nd Qtr. 2015	SDDOT	TYPE F CONCRETE CURB AND GUTTER	PLATE NUMBER 650.20
			Sheet 1 of 1

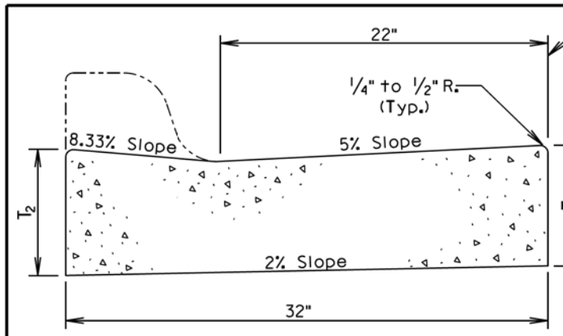

TRANSVERSE SECTION

Type	T_1 (Inches)	T_2 (Inches)	Cu. Yd. Per Lin. Ft.	Lin. Ft. Per Cu. Yd.
P6	6	6 3/8	0.047	21.2
P7	7	7 3/8	0.055	18.1
P8	8	8 3/8	0.064	15.7
P8.5	8.5	8 7/8	0.068	14.8
P9	9	9 3/8	0.072	13.9
P9.5	9.5	9 7/8	0.076	13.2
P10	10	10 3/8	0.080	12.5
P10.5	10.5	10 7/8	0.084	11.9
P11	11	11 3/8	0.088	11.3
P11.5	11.5	11 7/8	0.092	10.8
P12	12	12 3/8	0.096	10.4

Type P Concrete Gutter Limits

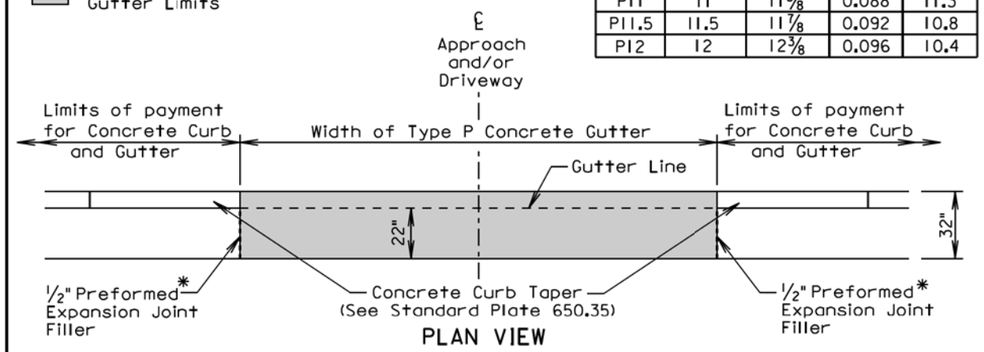

PLAN VIEW

* Joint will not be needed if concrete curb and gutter and type P concrete gutter is placed at the same time. If the ½" Preformed Expansion Joint Filler is provided, then the joint shall be sealed in accordance with standard plate 650.90.

GENERAL NOTES:

The concrete for the Type P Concrete Gutter shall comply with the requirements of the Standard Specifications for Class M6 Concrete.

When concrete gutter longitudinally adjoins new concrete pavement, the method of attachment shall be by one of the methods shown on Standard Plate 380.11.

Transverse contraction joints shall be constructed at 10' intervals in the concrete gutter except when concrete gutter is constructed adjacent to mainline PCC pavement. When concrete gutter is constructed adjacent to mainline PCC pavement, a transverse contraction joint shall be constructed in the concrete gutter at each mainline PCC pavement transverse contraction joint location.

When concrete gutter is placed monolithically with mainline PCC pavement, the transverse contraction joints in the concrete gutter shall be sawed and sealed the same as the transverse contraction joints in the mainline PCC pavement.

When concrete gutter is not placed monolithically with the mainline PCC pavement and when the adjacent mainline surfacing is not PCC concrete, the transverse contraction joints in the concrete gutter shall be 1½ inches deep if formed in the fresh concrete using a suitable grooving tool. If a saw is used to cut the contraction joints, then the depth of the joint shall be at least ¼ the thickness of the concrete.

September 6, 2013

Published Date: 2nd Qtr. 2015	SDDOT	TYPE P CONCRETE GUTTER	PLATE NUMBER 650.30
			Sheet 1 of 1

Plot Scale - 1:200
Plotted From - trpr17192
File - ...\prj\pott02R9\s650\20s65030.dgn

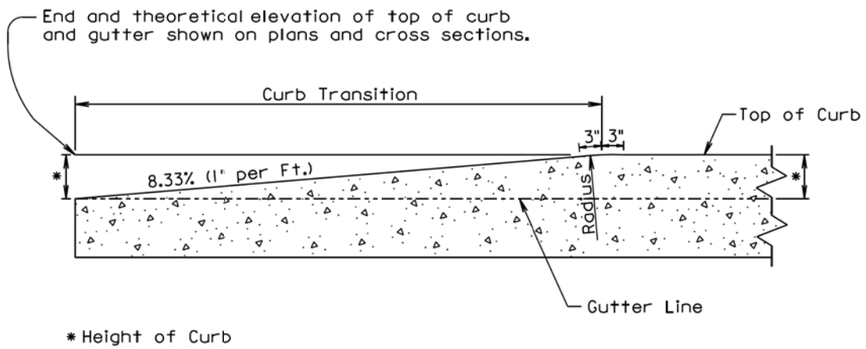

LONGITUDINAL SECTION OF CONCRETE CURB TAPER

September 14, 2005

Published Date: 2nd Qtr. 2015	SDDOT	CONCRETE CURB TAPER	PLATE NUMBER 650.35
			Sheet 1 of 1

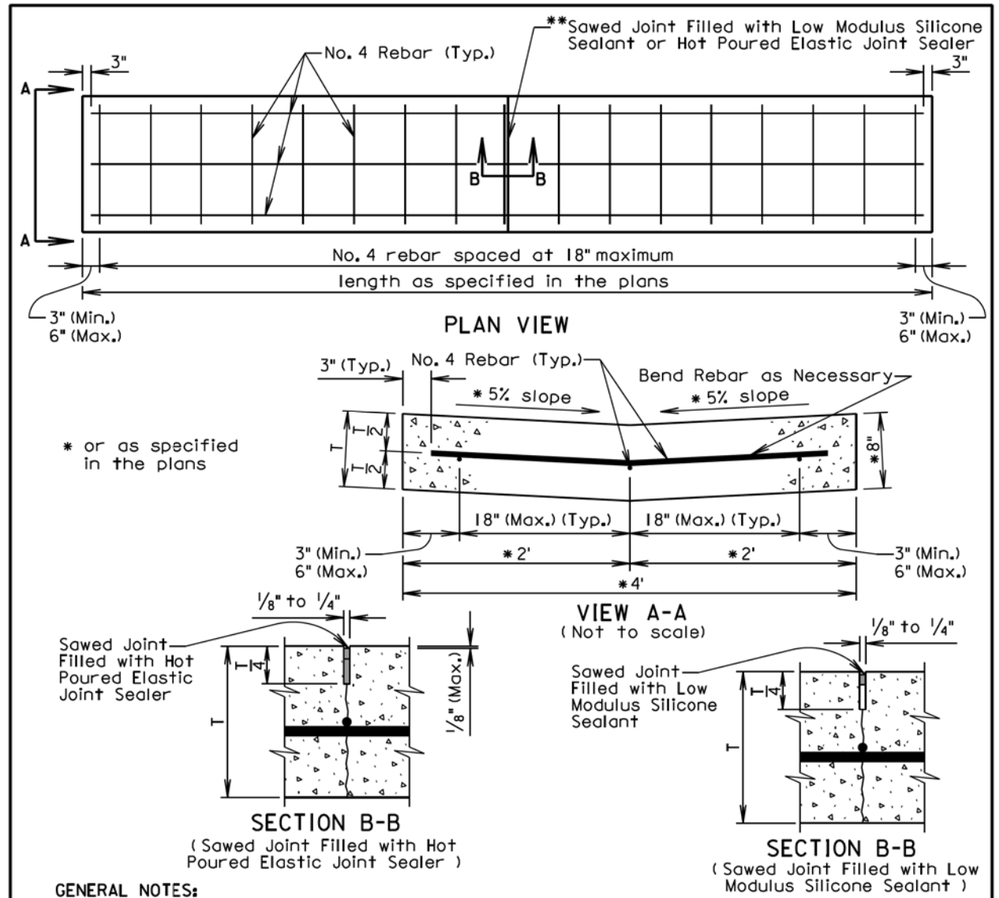

GENERAL NOTES:

The concrete shall comply with the Specifications for Class M6 concrete.

The reinforcing steel shall comply with the requirements of the Specification Sections 480 and 1010.

If a lap splice is provided the No. 4 rebar shall be lapped a minimum of 12".

** The sawed joints shall be spaced at 12'; however, when the length of the valley gutter is 12' to 24' there shall be a joint at the midpoint of the length. The saw cut to control cracking shall be a minimum of 1/4 the thickness of the pavement.

All hot poured elastic joint sealer material spilled on the surface of the concrete pavement shall be removed as soon as the material has cooled. The extent of removal of material shall be to the satisfaction of the Engineer. All costs for removal of the spilled joint sealer material shall be borne by the Contractor.

The silicone sealant shall be be bonded to the sides of a clean joint to completely seal the joint as approved by the Engineer.

All costs for furnishing and installing the valley gutter including materials, equipment, labor, and incidentals shall be included in the contract unit price per square yard for the corresponding Valley Gutter bid item.

February 10, 2014

Published Date: 2nd Qtr. 2015	SDDOT	VALLEY GUTTER	PLATE NUMBER 650.40
			Sheet 1 of 1

Plot Scale - 1:200
- Plotted From - trpr17192
File - ...\prj\pott02R9\s65035s65040.dgn

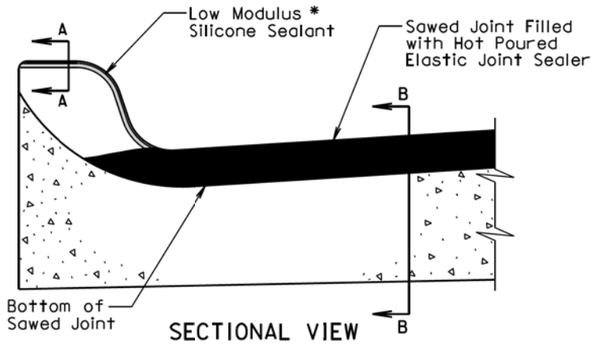

SECTIONAL VIEW
(Curb and Gutter Placed Monolithic with Adjacent Mainline PCC Pavement)

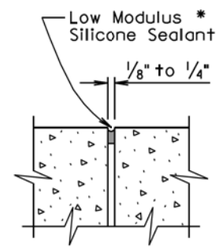

SECTION A-A

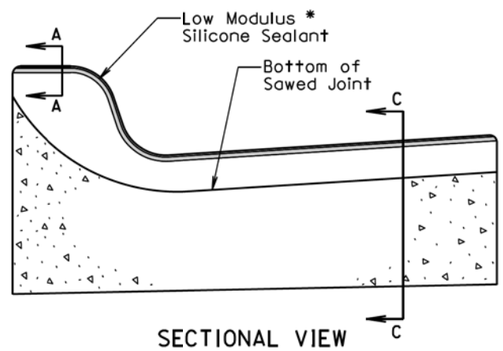

SECTIONAL VIEW
(Curb and Gutter not Placed Monolithic with Adjacent Mainline PCC Pavement or Mainline Surfacing is not PCC Pavement)

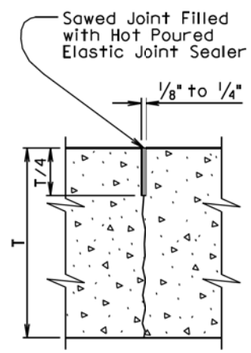

SECTION B-B

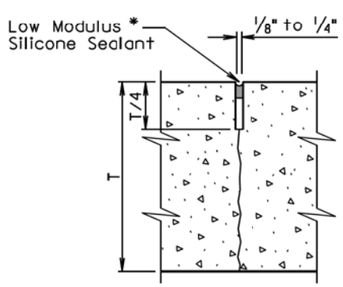

SECTION C-C

* The silicone sealant shall be placed such that it completely seals the joint and is bonded to the sides of the clean joint as approved by the Engineer.

September 6, 2013

Published Date: 2nd Qtr. 2015	SDDOT	JOINTS IN CONCRETE CURB AND GUTTER	PLATE NUMBER 650.90
			Sheet 1 of 2

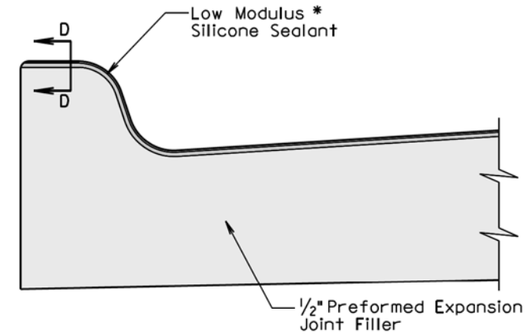

SECTIONAL VIEW
(Curb and Gutter at 1/2" Preformed Expansion Joint Filler Location)

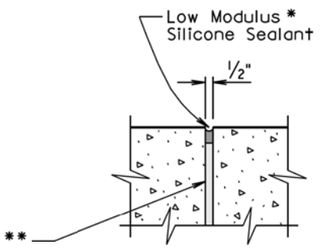

SECTION D-D

* The silicone sealant shall be placed such that it completely seals the joint and is bonded to the sides of the clean joint as approved by the Engineer.

GENERAL NOTES:

For illustrative reason, only the type B curb and gutter is shown.

** A 1/2" preformed expansion joint filler shall be placed transversely in the curb and gutter at the following locations:

1. At each junction between the radius return of curb and gutter and curb and gutter which is parallel to the project centerline.
2. At each junction between new curb and gutter and existing curb and gutter.

Transverse contraction joints shall be constructed at 10' intervals in the concrete curb and gutter except when the concrete curb and gutter is constructed adjacent to mainline PCC pavement. When concrete curb and gutter is constructed adjacent to mainline PCC pavement, a transverse contraction joint shall be constructed in the concrete curb and gutter at each mainline PCC pavement transverse contraction joint location.

When concrete curb and gutter is not placed monolithically with the mainline PCC pavement or when the adjacent mainline surfacing is not PCC concrete, the transverse contraction joints in the concrete curb and gutter shall be 1 1/2 inches deep if formed in the fresh concrete using a suitable grooving tool. If a saw is used to cut the contraction joints, then the depth of the joint shall be at least 1/4 the thickness of the concrete and the joint shall be sealed in accordance with the details shown above.

September 6, 2013

Published Date: 2nd Qtr. 2015	SDDOT	JOINTS IN CONCRETE CURB AND GUTTER	PLATE NUMBER 650.90
			Sheet 2 of 2

Plot Scale - 1:200
- Plotted From - tnpr17192
File - ...\polt02R9\s650\90_1s650\90_2.dgn

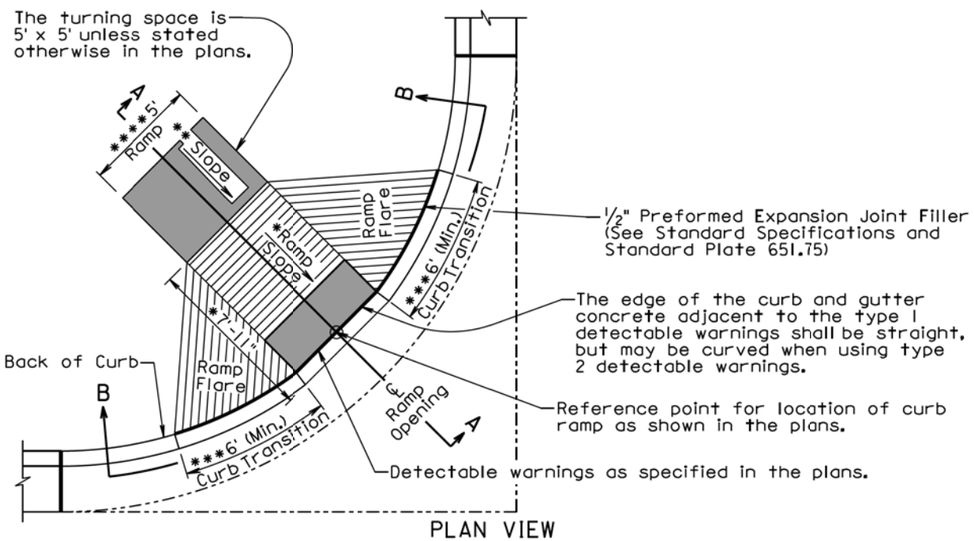

PLAN VIEW
(With 6'+ Curb Transition)

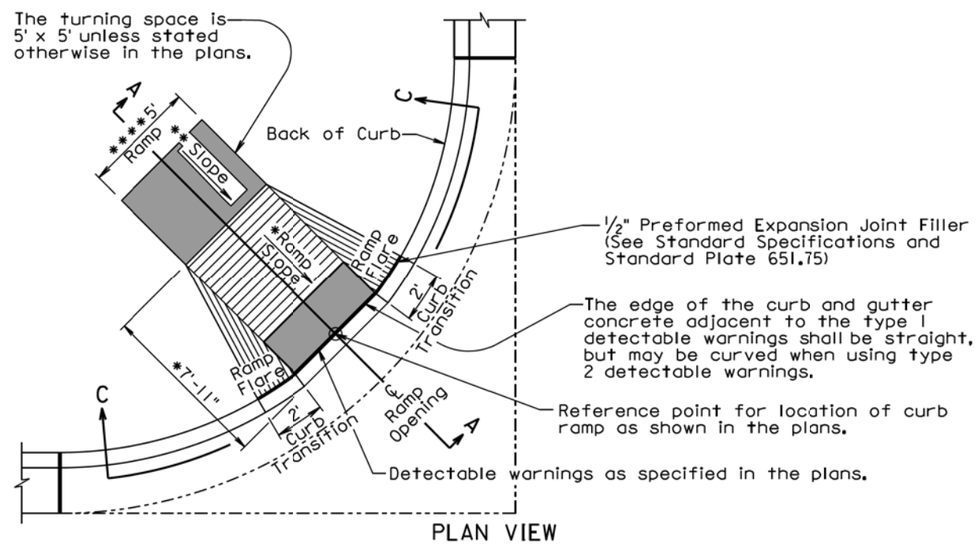

PLAN VIEW
(With 2' Curb Transition)

September 6, 2013

Published Date: 2nd Qtr. 2015	SDDOT	TYPE 1 CURB RAMP (PERPENDICULAR CURB RAMP)	PLATE NUMBER 651.01
			Sheet 1 of 3

The ramp slope shall be 12:1 (8.3%) maximum. The ramp length shall not exceed 15' unless stated otherwise in the plans. Ramp slopes are designed at 12:1 (8.3%) unless stated otherwise in the plans.

* The cross slope of the ramp shall not be steeper than 50:1 (2%).

The 7'-11" dimension was computed based on a flat roadway profile, a continuous 2% theoretical slope from top of theoretical curb to the top of ramp, and a 6" high curb. The dimension shall be adjusted based on the curb type shown in the plans, the roadway geometrics, and the sidewalk geometrics.

** The slope in the turning space shall not be steeper than 50:1 (2%) in any direction of pedestrian travel.

*** The curb transition shall be a minimum of 6' long, a maximum of 10' long, and the curb transition slope shall not be steeper than 10:1 (10%) unless stated otherwise in the plans.

**** The ramp width is 5' unless stated otherwise in the plans.

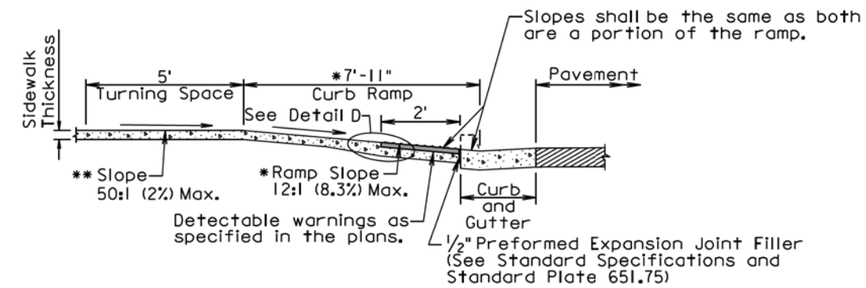

SECTION A-A

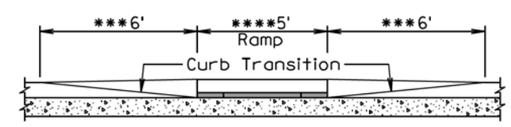

SECTIONAL VIEW B-B

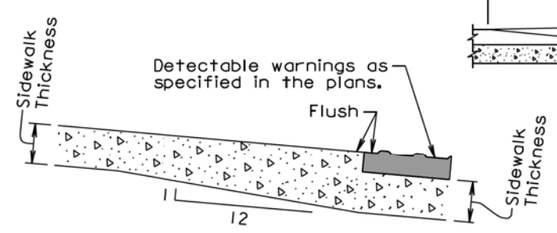

DETAIL D

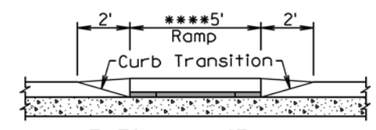

SECTIONAL VIEW C-C

September 6, 2013

Published Date: 2nd Qtr. 2015	SDDOT	TYPE 1 CURB RAMP (PERPENDICULAR CURB RAMP)	PLATE NUMBER 651.01
			Sheet 2 of 3

Plot Scale - 1:200
Plotted From - tnpr17192
File - ...\pott02R9\s65101_1\s65101_2.dgn

GENERAL NOTES:

For illustrative purpose only, type I detectable warnings are shown in the drawings.

For illustrative purpose only, PCC fillet sections are shown in the drawings. The curb ramp depicted on this standard plate may be used with a PCC fillet section, with curved curb and gutter, or with straight curb and gutter.

For illustrative purpose only, the curb ramp location is shown at the center of a PCC fillet section. The curb ramp shall be placed at the location stated in the plans.

Sidewalk shall not be placed adjacent to the ramp flares when a 2' curb transition is used unless shown otherwise in the plans.

* Care shall be taken to ensure a uniform grade on the ramp, free of sags and short grade changes.

Surface texture of the ramp shall be obtained by coarse brooming transverse to the slope of the ramp.

The normal gutter line profile shall be maintained through the area of the ramp.

Joints shall be sawed or tooled into the concrete adjacent to the detectable warnings to alleviate possible corner cracking.

Care shall be taken to ensure that the surface of the detectable warnings are clean and maintains a uniform color.

The detectable warnings shall be cut as necessary to fit the plan specified limits of the detectable warnings. Cost for cutting the detectable warnings shall be incidental to the corresponding detectable warning bid item.

There will be no separate payment for curb ramps. The curb ramp shall be measured and paid for at the contract unit price per square foot for the corresponding concrete sidewalk bid item. The square foot area of the detectable warnings shall be included in the measured and paid for quantity of sidewalk.

The curb transitions and ramp opening shall be measured and paid for at the contract unit price per foot for the corresponding curb and gutter bid item when curb and gutter is used. The curb transitions and ramp opening shall be measured and paid for at the contract unit price per square yard for the corresponding PCC fillet section bid item when a PCC fillet section is used.

The type I detectable warnings shall be measured to the nearest square foot. All costs for furnishing and installing the type I detectable warnings including labor, equipment, materials, and incidentals shall be paid for at the contract unit price per square foot for "Type I Detectable Warnings".

The type 2 detectable warnings shall be measured to the nearest square foot. All costs for furnishing and installing the type 2 detectable warnings including labor, equipment, and materials, including adhesive, necessary sealant or grout, and necessary grinding shall be paid for at the contract unit price per square foot for "Type 2 Detectable Warnings".

September 6, 2013

Published Date: 2nd Qtr. 2015	SDDOT	TYPE 1 CURB RAMP (PERPENDICULAR CURB RAMP)	PLATE NUMBER 651.01
			Sheet 3 of 3

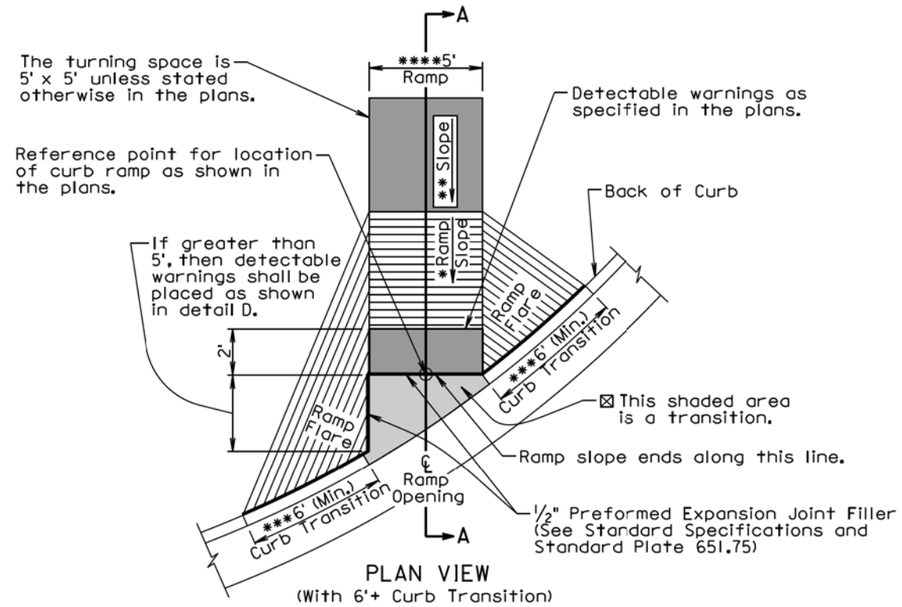

PLAN VIEW
(With 6'+ Curb Transition)

⊠ The slope within the transition area shall not be steeper than a 20:1 (5%). The concrete within the transition shall be placed monolithic with the curb and gutter or fillet section concrete. The concrete thickness within the transition shall be the same as the curb and gutter or fillet section concrete thickness.

*** The curb transition shall be a minimum of 6' long, a maximum of 10' long, and the curb transition slope shall not be steeper than a 10:1 (10%) unless stated otherwise in the plans.

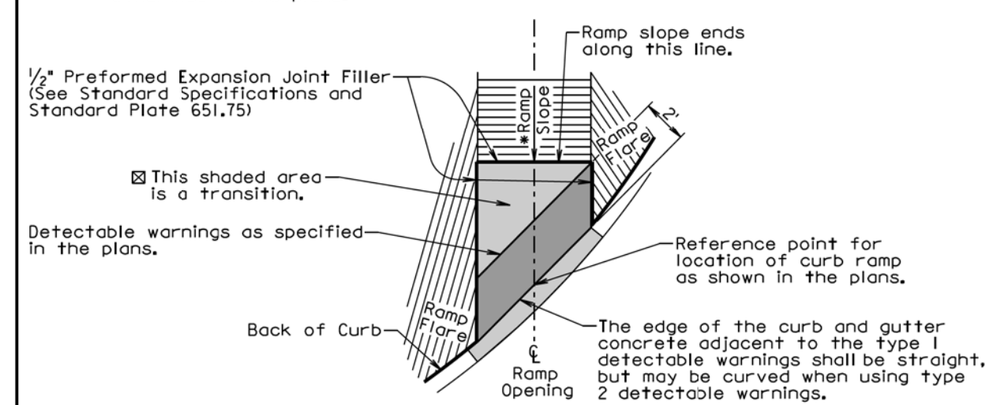

DETAIL D

September 6, 2013

Published Date: 2nd Qtr. 2015	SDDOT	TYPE 2 CURB RAMP (DIRECTIONAL CURB RAMP)	PLATE NUMBER 651.02
			Sheet 1 of 3

Plot Scale - 1:200
- Plotted From - tpri17192
File - ...\pott02R9\s65101_3s65102_1.dgn

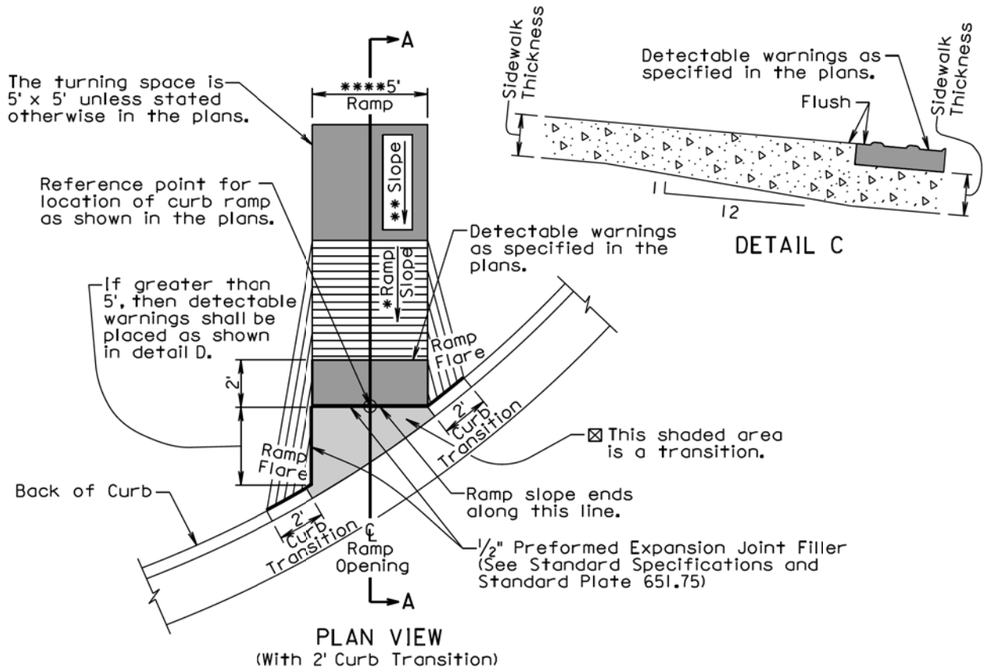

PLAN VIEW
(With 2' Curb Transition)

DETAIL C

* The ramp slope shall be 12:1 (8.3%) maximum. The ramp length shall not exceed 15' unless stated otherwise in the plans. Ramp slopes are designed at 12:1 (8.3%) unless stated otherwise in the plans.

The cross slope of the ramp shall not be steeper than 50:1 (2%).

** The slope in the turning space shall not be steeper than a 50:1 (2%) in any direction of pedestrian travel.

**** The ramp width is 5' unless stated otherwise in the plans.

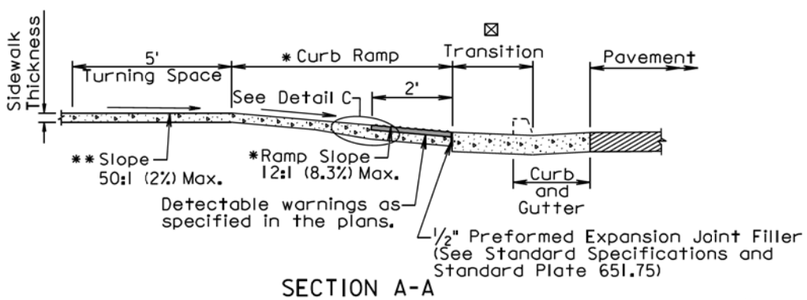

SECTION A-A

September 6, 2013

Published Date: 2nd Qtr. 2015	SDDOT	TYPE 2 CURB RAMP (DIRECTIONAL CURB RAMP)	PLATE NUMBER 651.02
			Sheet 2 of 3

GENERAL NOTES:

For illustrative purpose only, type 1 detectable warnings are shown in the drawings.

The curb ramp depicted on this standard plate may be used with a PCC fillet section, with curved curb and gutter, or with straight curb and gutter. The curb ramp shall be placed at the location stated in the plans.

Sidewalk shall not be placed adjacent to the ramp flares when a 2' curb transition is used unless shown otherwise in the plans.

* Care shall be taken to ensure a uniform grade on the ramp, free of sags and short grade changes.

Surface texture of the ramp shall be obtained by coarse brooming transverse to the slope of the ramp.

The normal gutter line profile shall be maintained through the area of the ramp.

Joints shall be sawed or tooled into the concrete adjacent to the detectable warnings to alleviate possible corner cracking.

Care shall be taken to ensure that the surface of the detectable warnings are clean and maintains a uniform color.

The detectable warnings shall be cut as necessary to fit the plan specified limits of the detectable warnings. Cost for cutting the detectable warnings shall be incidental to the corresponding detectable warning bid item.

There will be no separate payment for curb ramps. The curb ramp shall be measured and paid for at the contract unit price per square foot for the corresponding concrete sidewalk bid item. The square foot area of the detectable warnings shall be included in the measured and paid for quantity of sidewalk.

The curb transitions and ramp opening shall be measured and paid for at the contract unit price per foot for the corresponding curb and gutter bid item when curb and gutter is used. The curb transitions and ramp opening shall be measured and paid for at the contract unit price per square yard for the corresponding PCC fillet section bid item when a PCC fillet section is used.

All costs for furnishing and installing the transition area at the base of the ramp shall be incidental to the contract unit price per foot for the corresponding curb and gutter bid item when curb and gutter is used and shall be incidental to the contract unit price per square yard for the corresponding PCC fillet section bid item when a PCC fillet section is used.

The type 1 detectable warnings shall be measured to the nearest square foot. All costs for furnishing and installing the type 1 detectable warnings including labor, equipment, materials, and incidentals shall be paid for at the contract unit price per square foot for "Type 1 Detectable Warnings".

The type 2 detectable warnings shall be measured to the nearest square foot. All costs for furnishing and installing the type 2 detectable warnings including labor, equipment, and materials, including adhesive, necessary sealant or grout, and necessary grinding shall be paid for at the contract unit price per square foot for "Type 2 Detectable Warnings".

September 6, 2013

Published Date: 2nd Qtr. 2015	SDDOT	TYPE 2 CURB RAMP (DIRECTIONAL CURB RAMP)	PLATE NUMBER 651.02
			Sheet 3 of 3

Plot Scale - 1:200
- Plotted From - trpr17192
File - ...\pott02R9\s65102_2s65102_3.dgn

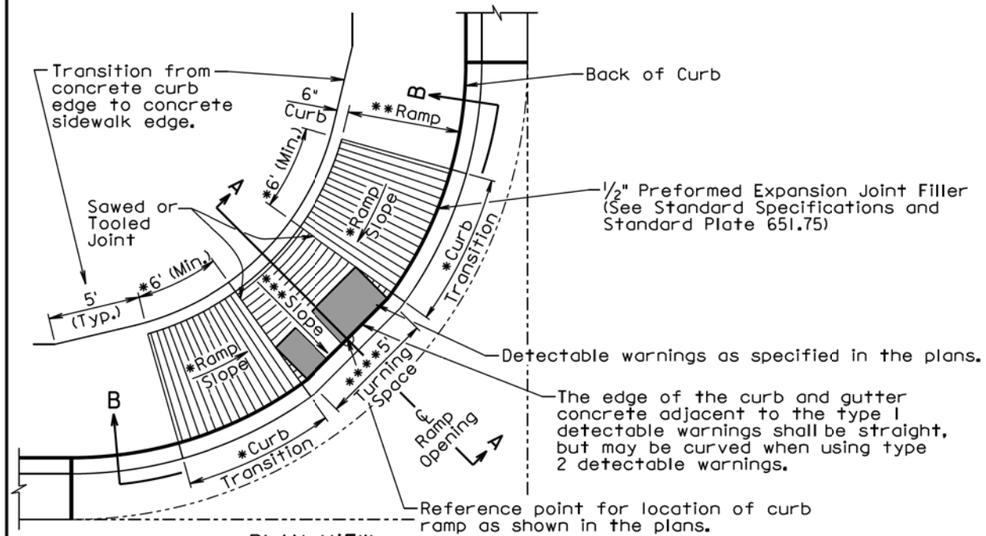

PLAN VIEW
(With Curved Curb and Gutter)

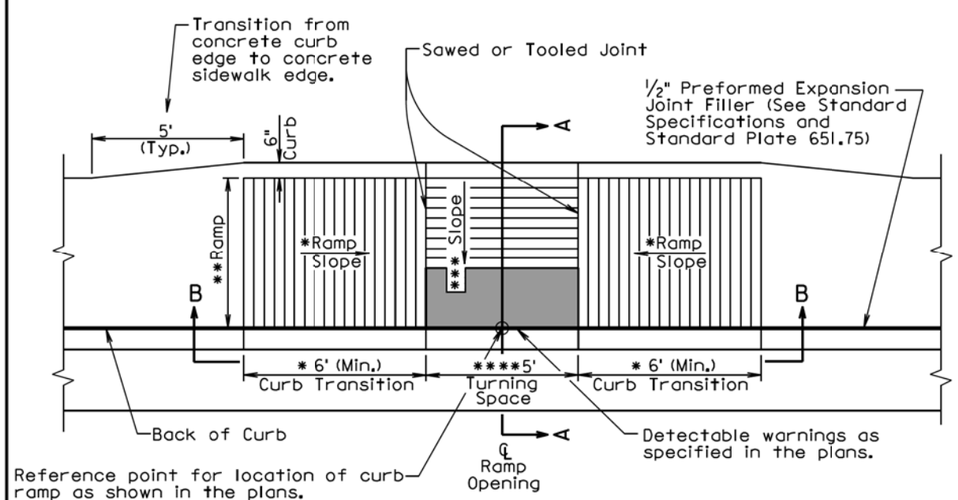

PLAN VIEW
(With Straight Curb and Gutter)

September 6, 2013

Published Date: 2nd Qtr. 2015	SDDOT	TYPE 3 CURB RAMP (PARALLEL CURB RAMP)	PLATE NUMBER 651.03
			Sheet 1 of 3

* The curb transition slope shall match the ramp slope. The ramp slope, at any location of the ramp, shall be 12:1 (8.3%) maximum. The ramp length shall not exceed 15' unless stated otherwise in the plans. Ramp slopes are designed at 12:1 (8.3%) unless stated otherwise in the plans. The minimum length of the curb transition shall be 6'.

** The ramp cross slope shall not be steeper than a 50:1 (2%) and the ramp width is 5' unless stated otherwise in the plans.

*** The slope in the turning space shall not be steeper than 50:1 (2%) in any direction of pedestrian travel.

**** The turning space is 5' x 5' unless stated otherwise in the plans.

☒ The curb height shall be 6" unless stated otherwise in the plans.

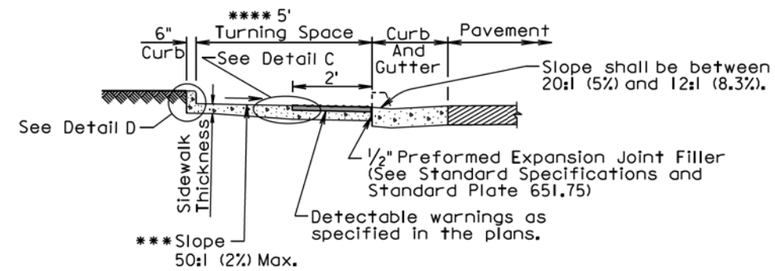

SECTION A-A

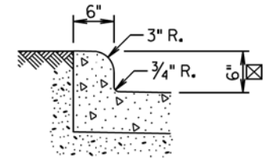

DETAIL D

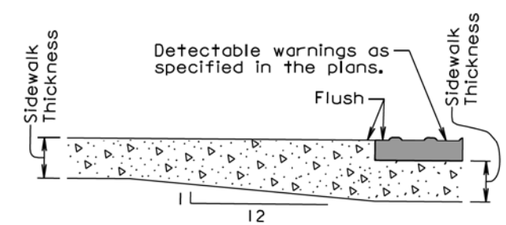

DETAIL C

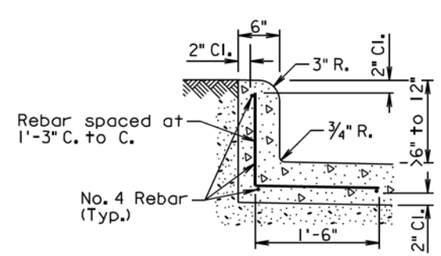

DETAIL D
(Use this detail when the curb height is greater than 6" and less than 12")

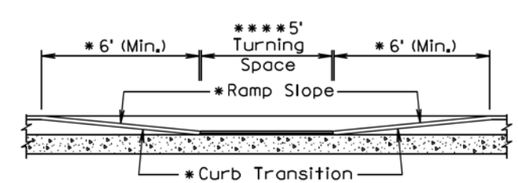

SECTIONAL VIEW B-B

September 6, 2013

Published Date: 2nd Qtr. 2015	SDDOT	TYPE 3 CURB RAMP (PARALLEL CURB RAMP)	PLATE NUMBER 651.03
			Sheet 2 of 3

Plot Scale - 1:200
- Plotted From - tnpr17192
File - ...\pdot02R9\s65103_1s65103_2.dgn

GENERAL NOTES:

For illustrative purpose only, type I detectable warnings are shown in the drawings.

For illustrative purpose only, a PCC fillet section is shown in one of the drawings. The curb ramp depicted on this standard plate may be used with a PCC fillet section, with curved curb and gutter, or with straight curb and gutter.

The curb ramp shall be placed at the location stated in the plans.

Sidewalk adjacent to the curb ramp shall be as shown in the plans.

Care shall be taken to ensure a uniform grade on the ramp, free of sags and short grade changes.

Surface texture of the ramp shall be obtained by coarse brooming transverse to the slope of the ramp.

The normal gutter line profile shall be maintained through the area of the ramp.

Joints shall be sawed or tooled into the concrete adjacent to the detectable warnings to alleviate possible corner cracking (see plan view for joint location).

Care shall be taken to ensure that the surface of the detectable warnings are clean and maintains a uniform color.

The detectable warnings shall be cut as necessary to fit the plan specified limits of the detectable warnings. Cost for cutting the detectable warnings shall be incidental to the corresponding detectable warning bid item.

When curb height is greater than 6" and less than 12", reinforcing steel is required in accordance with the detail on sheet 2 of 3. The reinforcing steel shall conform to ASTM A615, Grade 60. Cost for furnishing and installing the reinforcing steel shall be incidental to the contract unit price per square foot for the corresponding concrete sidewalk bid item.

There will be no separate payment for curb ramps. The curb ramp shall be measured and paid for at the contract unit price per square foot for the corresponding concrete sidewalk bid item. The square foot area of the detectable warnings and the curb along the short radius shall be included in the measured and paid for quantity of sidewalk.

The curb transitions and ramp opening shall be measured and paid for at the contract unit price per foot for the corresponding curb and gutter bid item when curb and gutter is used. The curb transitions and ramp opening shall be measured and paid for at the contract unit price per square yard for the corresponding PCC fillet section bid item when a PCC fillet section is used.

The type I detectable warnings shall be measured to the nearest square foot. All costs for furnishing and installing the type I detectable warnings including labor, equipment, materials, and incidentals shall be paid for at the contract unit price per square foot for "Type I Detectable Warnings".

The type 2 detectable warnings shall be measured to the nearest square foot. All costs for furnishing and installing the type 2 detectable warnings including labor, equipment, and materials, including adhesive, necessary sealant or grout, and necessary grinding shall be paid for at the contract unit price per square foot for "Type 2 Detectable Warnings".

September 6, 2013

Published Date: 2nd Qtr. 2015	SDDOT	TYPE 3 CURB RAMP (PARALLEL CURB RAMP)	PLATE NUMBER 651.03
			Sheet 3 of 3

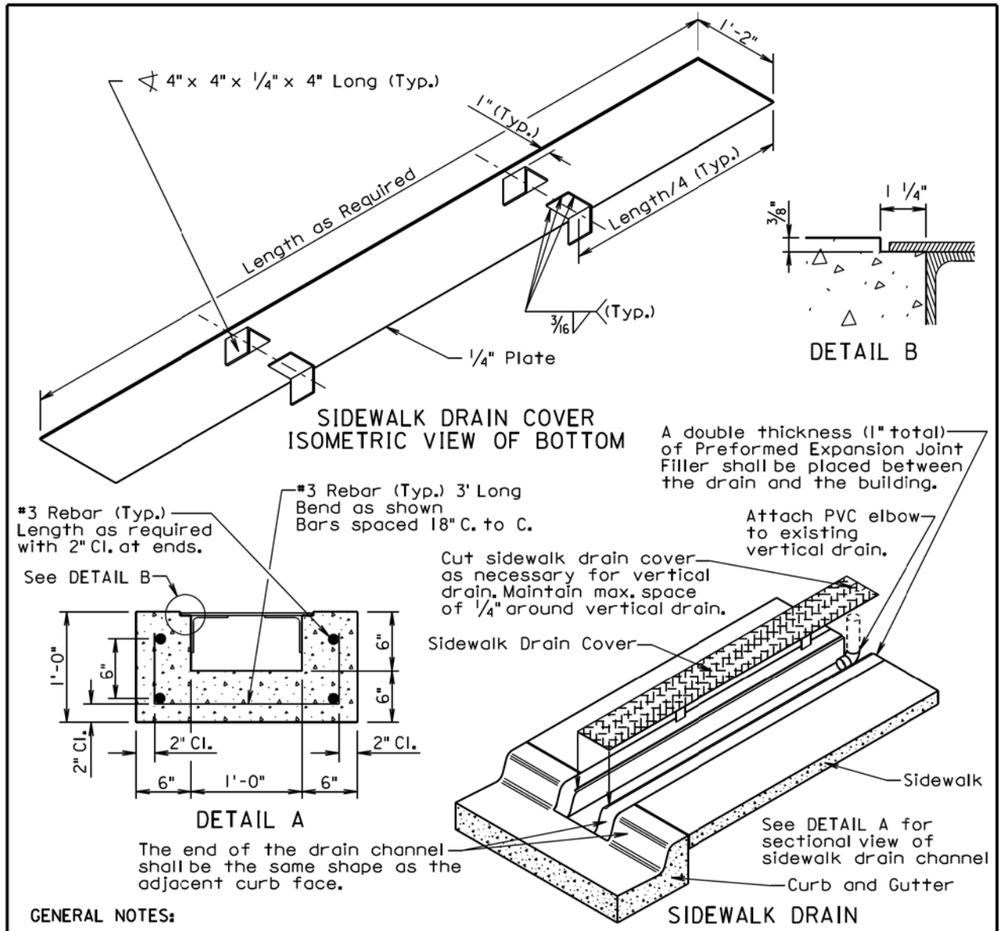

GENERAL NOTES:

Concrete shall be Class M6 in accordance with Section 462 of the Standard Specifications.

Reinforcing steel shall conform to ASTM A615, Grade 60.

Structural Steel shall conform to ASTM A36. The sidewalk drain cover shall conform to ASTM A786.

Welding and weld inspection shall be in conformance with the current edition of the AWS D1.1 Structural Welding Code-Steel.

The cover plate assembly shall be galvanized after fabrication. Galvanizing shall be in accordance with ASTM 123.

All costs associated for providing the required curb cut shall be incidental to the contract unit price per foot for the corresponding curb and gutter bid item.

The sidewalk drain shall be measured and paid for to the nearest tenth of a foot. The length of the drain shall be measured from the gutter to the necessary end location adjacent to the building. All costs associated with furnishing and installing the sidewalk drain channel cnd cover including the attachment to the vertical drain shall be incidental to the contract unit price per foot for "Sidewalk Drain".

June 26, 2013

Published Date: 2nd Qtr. 2015	SDDOT	SIDEWALK DRAIN	PLATE NUMBER 651.50
			Sheet 1 of 1

Plot Scale - 1:200
- Plotted From - trpr17192
File - ...\pott02R9\s65103_3s65150.dgn

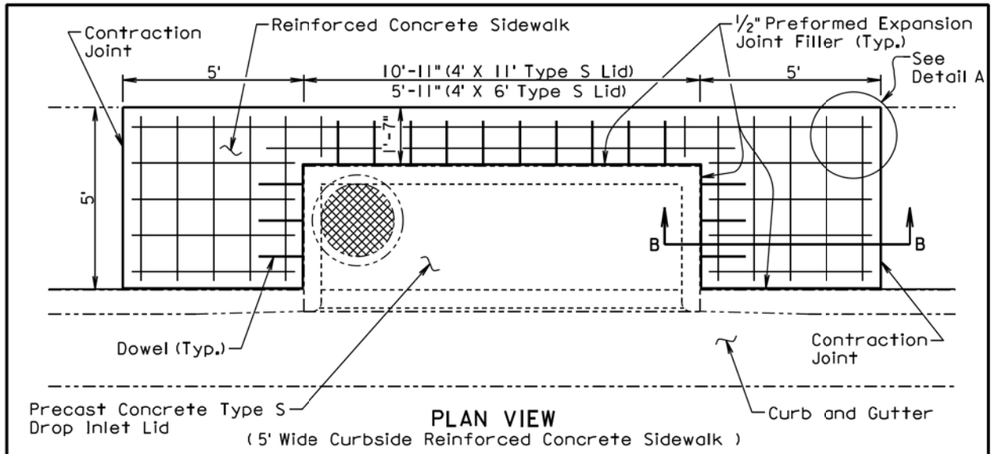

PLAN VIEW
(5' Wide Curbside Reinforced Concrete Sidewalk)

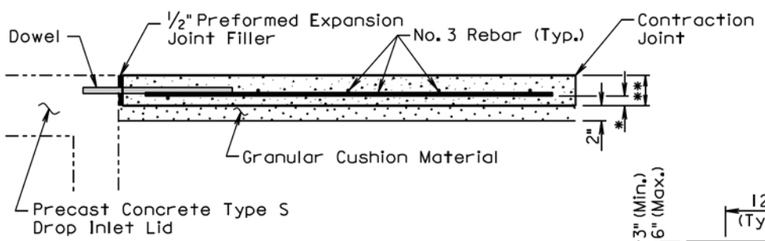

SECTION B-B

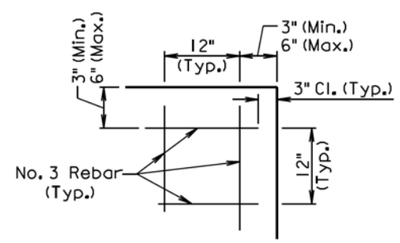

DETAIL A

** 4", 5", or 6" as specified elsewhere in the plans.

* 1 5/8" for 4" sidewalk, 2 1/8" for 5" sidewalk, and 2 5/8" for 6" sidewalk.

GENERAL NOTES:

The precast concrete Type S lids shown are 4' X 11' for illustrative purpose.

The cross slope of the sidewalk and precast concrete type S drop inlet lid shall be as specified elsewhere in the plans.

The reinforcing steel shall conform to Section 1010 of the Standard Specifications. The Contractor shall be in conformance with the construction requirements of Section 480.3 of the Standard Specifications.

When lapping of reinforcing steel is necessary, the No. 3 rebar shall be lapped 12".

The reinforced concrete sidewalk shall conform to the requirements of Section 651 of the Standard Specifications.

All costs for constructing the reinforced concrete sidewalk including labor, equipment, tools, backfilling, furnishing and placing materials, including granular cushion, reinforcing steel, preformed expansion joint filler, and incidentals shall be included in the contract unit price per square foot for the corresponding reinforced concrete sidewalk bid item.

September 6, 2013

Published Date: 2nd Qtr. 2015	SDDOT	REINFORCED CONCRETE SIDEWALK ADJACENT TO PRECAST CONCRETE TYPE S DROP INLET LID	PLATE NUMBER 651.70
			Sheet 1 of 2

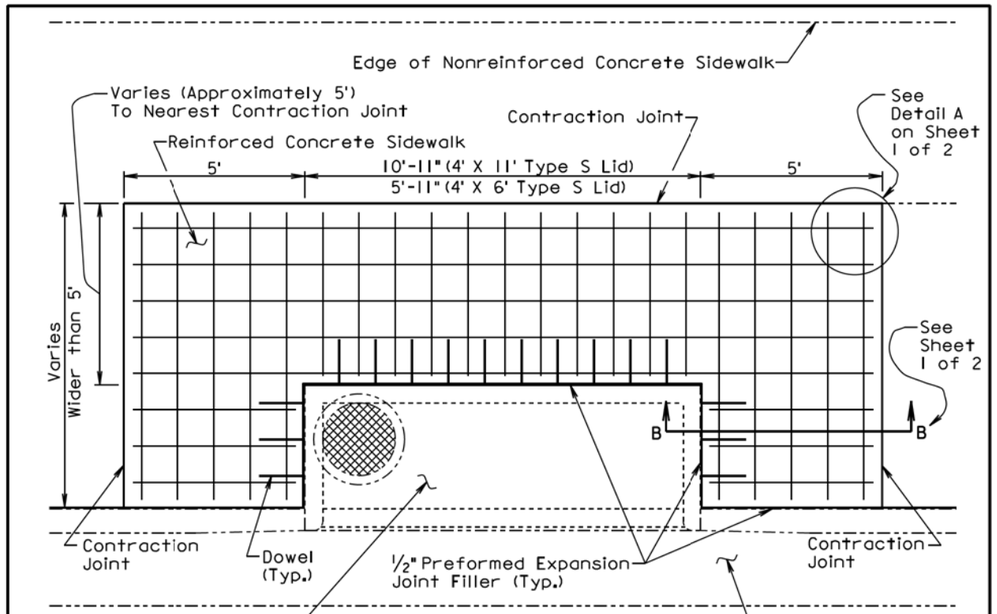

PLAN VIEW
(Curbside Reinforced Concrete Sidewalk Wider Than 5')

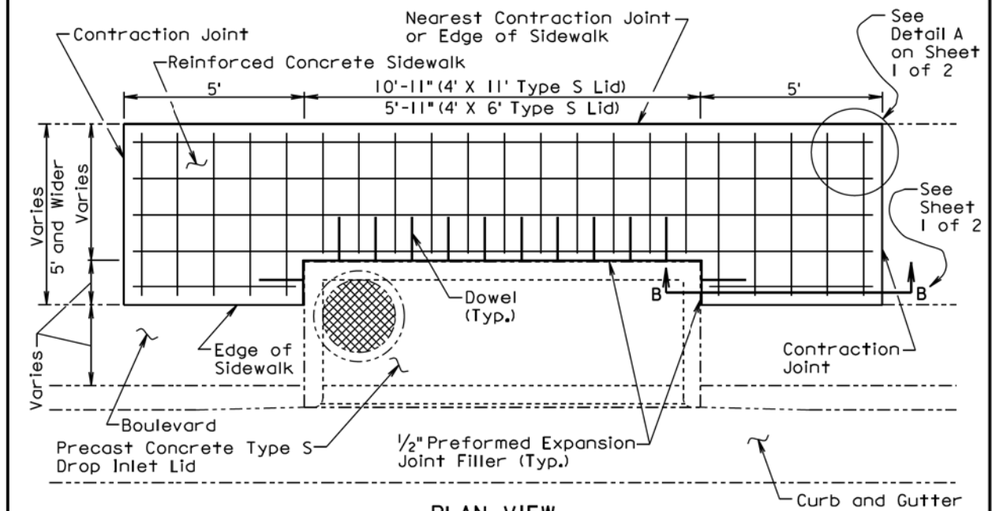

PLAN VIEW
(Reinforced Concrete Sidewalk With Boulevard)

September 6, 2013

Published Date: 2nd Qtr. 2015	SDDOT	REINFORCED CONCRETE SIDEWALK ADJACENT TO PRECAST CONCRETE TYPE S DROP INLET LID	PLATE NUMBER 651.70
			Sheet 2 of 2

Plot Scale - 1:200
- Plotted From - trpr17192
File - ...\pott02R9\s65170_1s65170_2.dgn

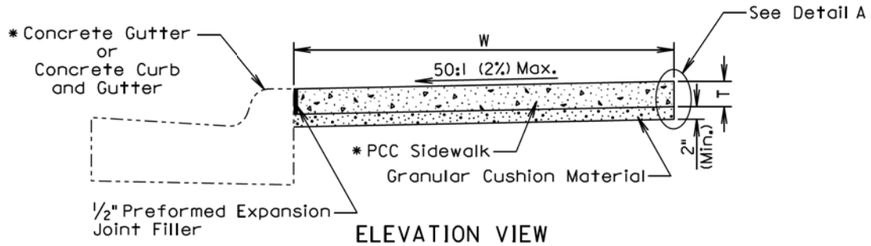

ELEVATION VIEW
(PCC Sidewalk without Boulevard)

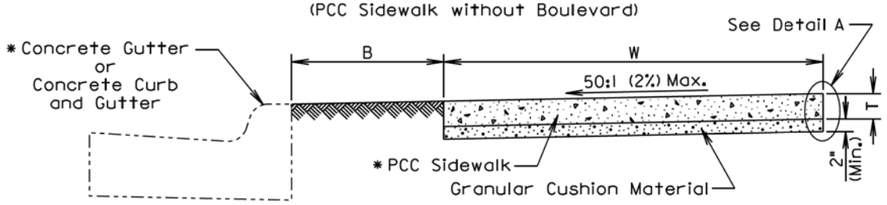

ELEVATION VIEW
(PCC Sidewalk with Boulevard)

B Width of boulevard as specified in the plans.
T Thickness of PCC sidewalk as specified in the plans.
W Width of PCC sidewalk as specified in the plans.
* Type as specified in the plans.

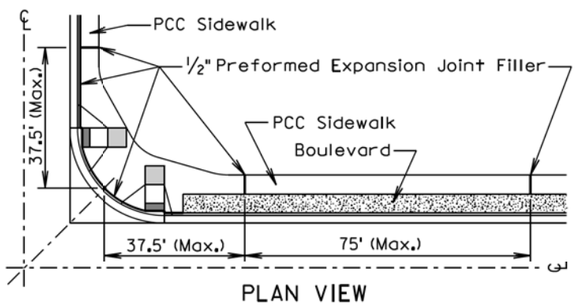

PLAN VIEW

GENERAL NOTES:

The PCC sidewalk shall be constructed in accordance with Section 651 of the Standard Specifications.

The maximum length between expansion joints in PCC sidewalk is 75 feet.

PCC sidewalk placed adjacent to intersection of roadways shall have an expansion joint placed transversely a maximum of 37.5 feet from the intersection. See PLAN VIEW.

An expansion joint in PCC sidewalk shall consist of a ½ inch thick preformed expansion joint filler material placed full depth and width of the PCC sidewalk.

** Large areas of PCC pavement adjacent to PCC sidewalk may require a different joint treatment than shown in the detail. If a different joint detail is necessary, plans will contain the joint detail and the Contractor shall construct the joint treatment in accordance with the plans.

August 31, 2013

Published Date: 2nd Qtr. 2015	SDDOT	PCC SIDEWALK	PLATE NUMBER 651.75
			Sheet 1 of 2

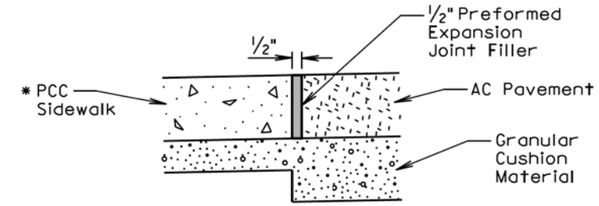

ELEVATION VIEW
(PCC sidewalk adjacent to asphalt concrete pavement)

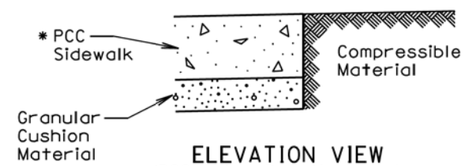

ELEVATION VIEW
(PCC sidewalk adjacent to earthen material, landscape rock, or other compressible materials)

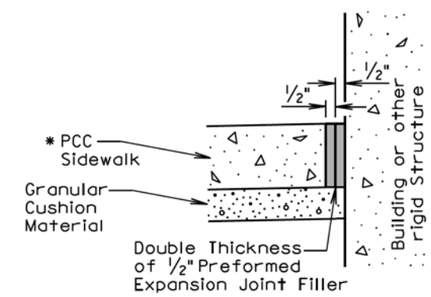

ELEVATION VIEW
(PCC sidewalk adjacent to building or other rigid structure)

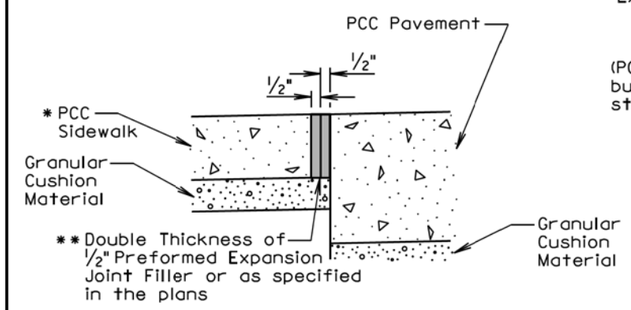

ELEVATION VIEW
(PCC sidewalk adjacent to PCC pavement)

Detail A
(Use Appropriate Detail(s))

August 31, 2013

Published Date: 2nd Qtr. 2015	SDDOT	PCC SIDEWALK	PLATE NUMBER 651.75
			Sheet 2 of 2

Plot Scale - 1:200
Plotted From - tpr17192
File - ...\pplt02R9\s65175_1\s65175_2.dgn

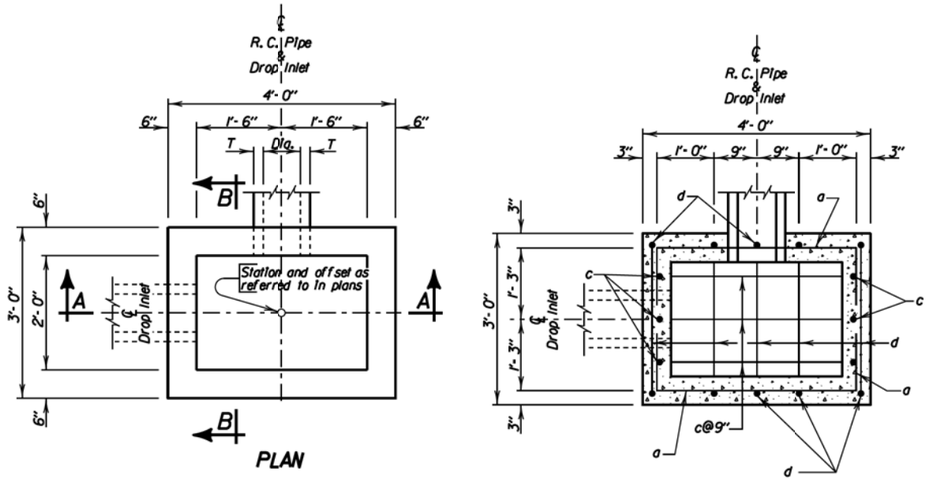

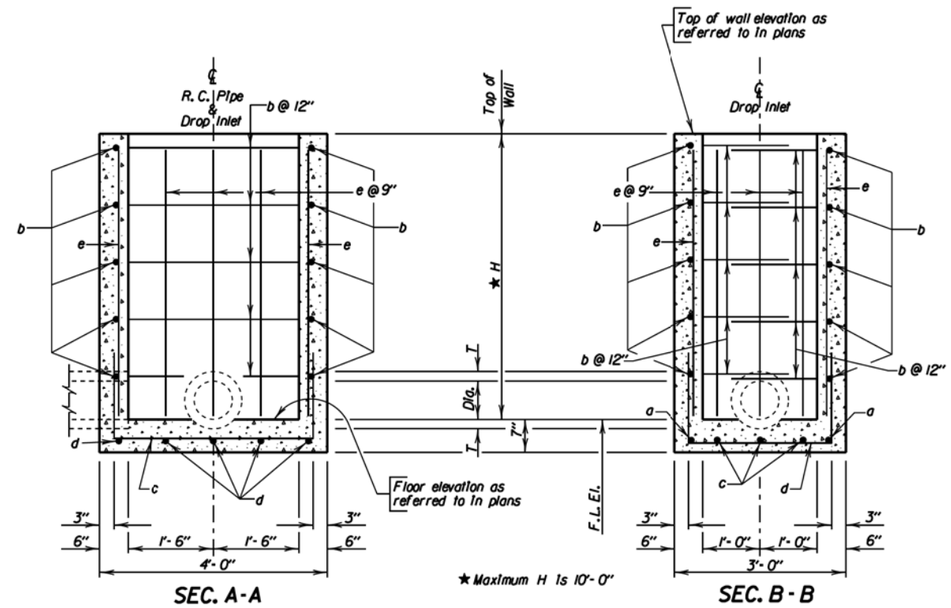

PIPE DISPLACEMENT REDUCTIONS

R.C. Pipe Diameter Inches	T Inches	Class M6 Concrete Cu Yd
12	2	0.03
15	2 1/4	0.04
18	2 1/2	0.05
24	3	0.09
27	3 1/4	0.11

ESTIMATED QUANTITIES

ITEM	UNIT	CONSTANT QUANTITY	VARIABLE QUANTITY
✳ Class M6 Concrete	Cu Yd	0.26	0.22H
Reinforcing Steel	Lb	37	20.04H
Frame and Grate Assembly	Each	1	———

DROP INLETS FOR 12" TO 27" DIAMETER PIPE

GENERAL NOTES:

✳ Reduce total quantities of concrete by the amount of concrete displaced by the pipe. The total quantity of concrete shall be computed to the nearest hundredth of a cubic yard. The total quantity of reinforcing steel shall be computed to the nearest pound.

Drop inlets shown may be modified by the addition or omission of connecting pipes as shown on the layouts.

Reinforcing steel shall conform to ASTM A615 Grade 60. The b bars shall be lapped 12 inches. Cut and bend reinforcing steel as required to place pipe(s) through the drop inlet wall.

Pipe shall not enter through a corner of the drop inlet.

Use 2" clear cover on all reinforcing steel unless otherwise noted.

Precasting of reinforced drop inlets will be permissible. Prior to precasting, the Contractor shall submit details to the Engineer for approval.

Maximum pipe diameter shall not exceed 18 inches on the 3 foot wide side and shall not exceed 27 inches on the 4 foot wide side of the drop inlet.

The dimension of H is in feet.

December 23, 2009

Published Date: 2nd Qtr. 2015 | SDDOT | 2' X 3' TYPE B REINFORCED CONCRETE DROP INLET | PLATE NUMBER 670.01 | Sheet 1 of 2

DROP INLETS FOR 12" TO 27" DIAMETER PIPE

REINFORCING SCHEDULE

MK.	No.	Size	Length	Type
a	2	4	5'- 6"	17
b	2H	4	7'- 0"	17
c	3	4	6'- 6"	17
d	5	4	5'- 6"	17
e	16	4	H - 2"	Str.

Bending Details

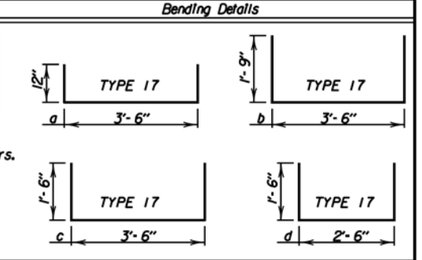

NOTE:
All dimensions are out to out of bars.

December 23, 2009

Published Date: 2nd Qtr. 2015 | SDDOT | 2' X 3' TYPE B REINFORCED CONCRETE DROP INLET | PLATE NUMBER 670.01 | Sheet 2 of 2

Plot Scale - 1:200
- Plotted From - trpr17192
File - ...\pot02R9\s67001_1s67001_2.dgn

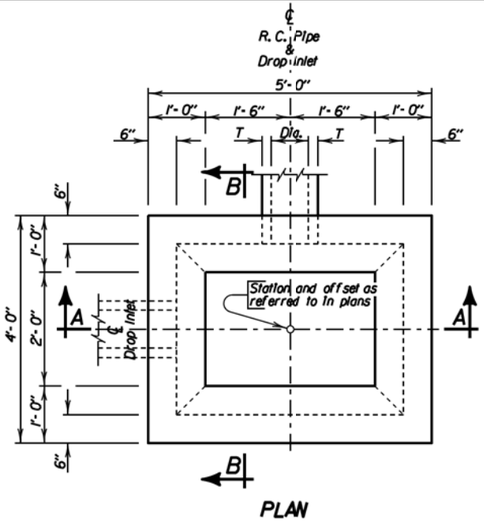

PLAN

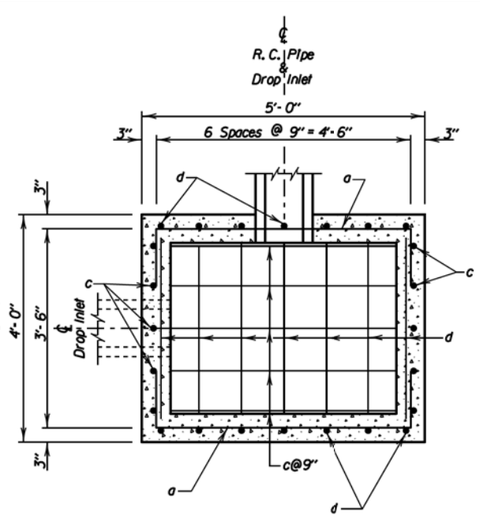

BOTTOM SECTION

PIPE DISPLACEMENT REDUCTIONS

R.C. Pipe Diameter Inches	T Inches	Class M6 Concrete Cu'd
12	2	0.03
15	2 1/4	0.04
18	2 1/2	0.05
24	3	0.09
30	3 1/2	0.14
36	4	0.20

ESTIMATED QUANTITIES

ITEM	UNIT	CONSTANT QUANTITY	VARIABLE QUANTITY
✳ Class M6 Concrete	Cu'd	0.72	0.30H
Reinforcing Steel	Lb	98	32.06H
Frame and Grate Assembly	Each	1	———

DROP INLETS FOR 12" TO 36" DIAMETER PIPE

GENERAL NOTES:

✳ Reduce total quantities of concrete by the amount of concrete displaced by the pipe. The total quantity of concrete shall be computed to the nearest hundredth of a cubic yard. The total quantity of reinforcing steel shall be computed to the nearest pound.

Drop inlets shown may be modified by the addition or omission of connecting pipes as shown on the layouts.

Reinforcing steel shall conform to ASTM A615 Grade 60. The b and f bars shall be lapped 12 inches. Cut and bend reinforcing steel as required to place pipe(s) through the drop inlet wall.

Pipe shall not enter through a corner of the drop inlet.

Use 2" clear cover on all reinforcing steel unless otherwise noted.

Precasting of reinforced drop inlets will be permissible. Prior to precasting, the Contractor shall submit details to the Engineer for approval.

Maximum pipe diameter shall not exceed 27 inches on the 4 foot wide side and shall not exceed 36 inches on the 5 foot wide side of the drop inlet.

The dimension of H is in feet.

December 23, 2009

Published Date: 2nd Qtr. 2015	SDDOT	3' X 4' TYPE B REINFORCED CONCRETE DROP INLET	PLATE NUMBER 670.02
			Sheet 1 of 2

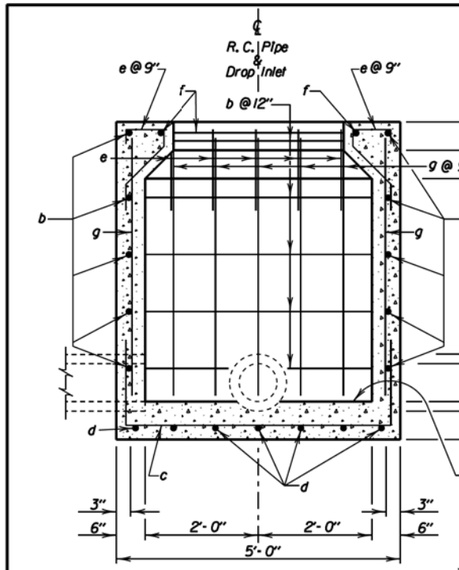

SEC. A-A

★ Maximum H is 10'- 0"

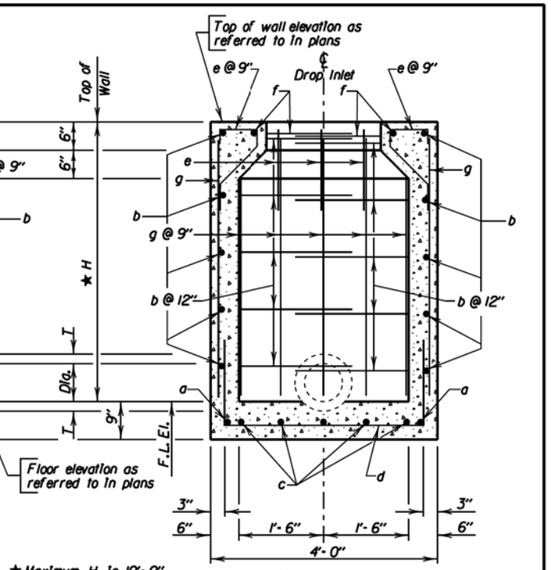

SEC. B-B

DROP INLETS FOR 12" TO 36" DIAMETER PIPE

REINFORCING SCHEDULE

MK.	No.	Size	Length	Type
a	2	4	6'- 6"	17
b	2H	4	9'- 0"	17
c	5	4	7'- 6"	17
d	7	4	6'- 6"	17
e	16	4	2'- 6"	16A
f	2	4	7'- 0"	17
g	24	4	H - 2"	Str.

Bending Details

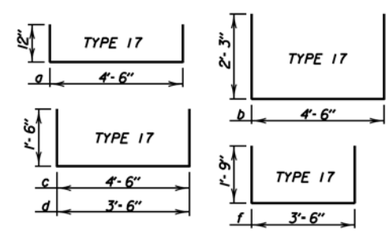

NOTE:
All dimensions are out to out of bars.

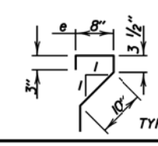

TYPE 16A

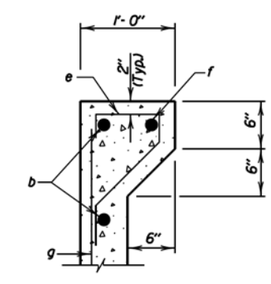

TYPICAL SEC. TOP OF WALL

December 23, 2009

Published Date: 2nd Qtr. 2015	SDDOT	3' X 4' TYPE B REINFORCED CONCRETE DROP INLET	PLATE NUMBER 670.02
			Sheet 2 of 2

Plot Scale - 1:200
- Plotted From - trpr17192
File - ...\pott02R9\s67002_1s67002_2.dgn

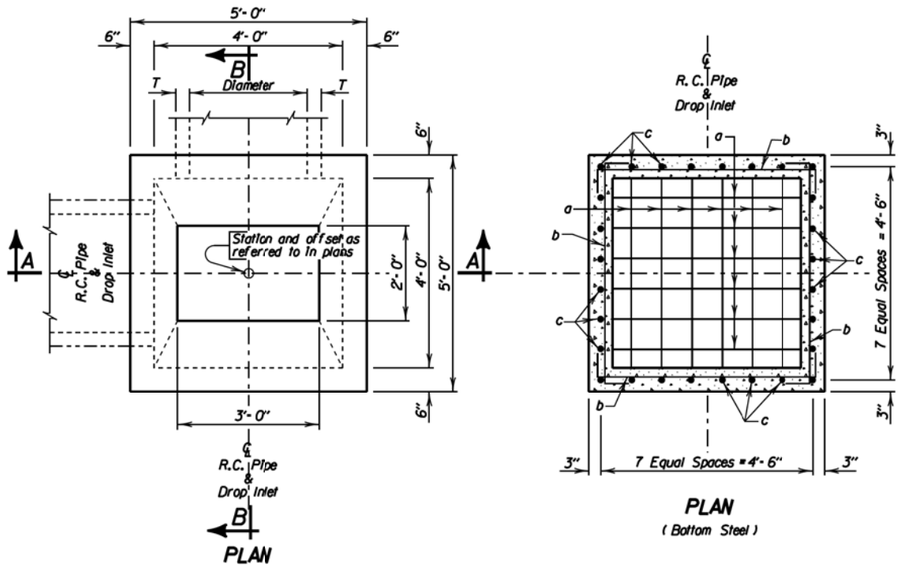

PIPE DISPLACEMENT REDUCTIONS		
R.C. Pipe Diameter Inches	T Inches	Class M6 Concrete Cu'd
12	2	0.03
15	2 1/4	0.04
18	2 1/2	0.05
24	3	0.09
30	3 1/2	0.14
36	4	0.20

ESTIMATED QUANTITIES			
ITEM	UNIT	CONSTANT QUANTITY	VARIABLE QUANTITY
* Class M6 Concrete	Cu'd	0.97	0.33H
Reinforcing Steel	Lb	207	43.90H
Frame and Grate Assembly	Each	1	———

DROP INLETS FOR 12" TO 36" DIAMETER PIPE

GENERAL NOTES:

* Reduce total quantities of concrete by the amount of concrete displaced by the pipe. The total quantity of concrete shall be computed to the nearest hundredth of a cubic yard. The total quantity of reinforcing steel shall be computed to the nearest pound.

Drop inlets shown may be modified by the addition or omission of connecting pipes as shown on the layouts.

Reinforcing steel shall conform to ASTM A615 Grade 60. Cut and bend reinforcing steel as required to place pipe(s) through the drop inlet wall.

Pipe shall not enter through a corner of the drop inlet.

Use 2" clear cover on all reinforcing steel unless otherwise noted.

Precasting of reinforced drop inlets will be permissible. Prior to precasting, the Contractor shall submit details to the Engineer for approval.

Maximum pipe diameter shall not exceed 36 inches.

The dimension of H is in feet.

December 23, 2009

Published Date: 2nd Qtr. 2015 | SDDOT | 4' X 4' TYPE B REINFORCED CONCRETE DROP INLET | PLATE NUMBER 670.04 | Sheet 1 of 2

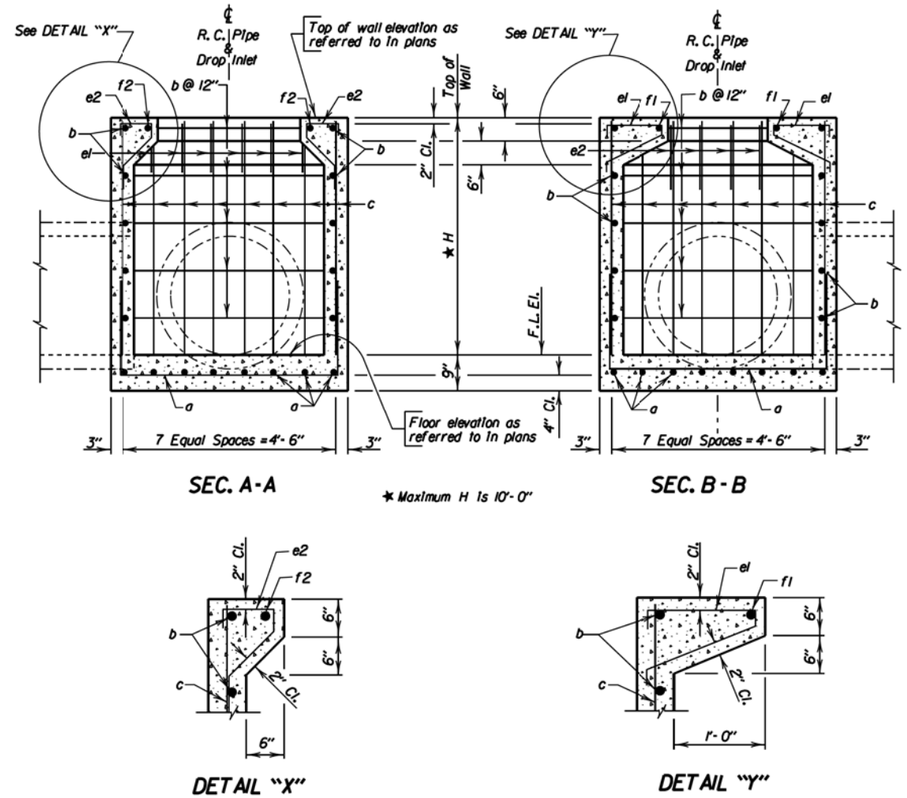

DROP INLETS FOR 12" TO 36" DIAMETER PIPE

REINFORCING SCHEDULE

Mk.	No.	Size	Length	Type
a	16	5	8'-0"	17
b	4H	4	5'-6"	17
c	28	5	H-2"	Str.
e1	12	5	3'-3"	16A
e2	8	5	2'-6"	16A
f1	2	5	4'-6"	17
f2	2	5	3'-6"	17

Bending Details

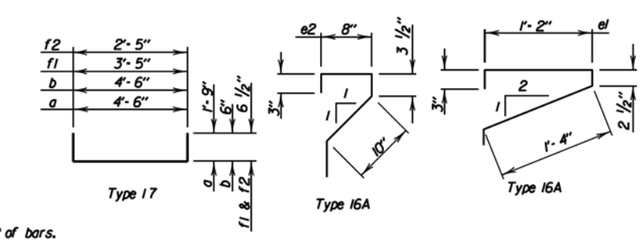

NOTE: All dimensions are out to out of bars.

December 23, 2009

Published Date: 2nd Qtr. 2015 | SDDOT | 4' X 4' TYPE B REINFORCED CONCRETE DROP INLET | PLATE NUMBER 670.04 | Sheet 2 of 2

Plot Scale - 1:200
- Plotted From - tpri17192
File - ...\pott02R9\s67004_1s67004_2.dgn

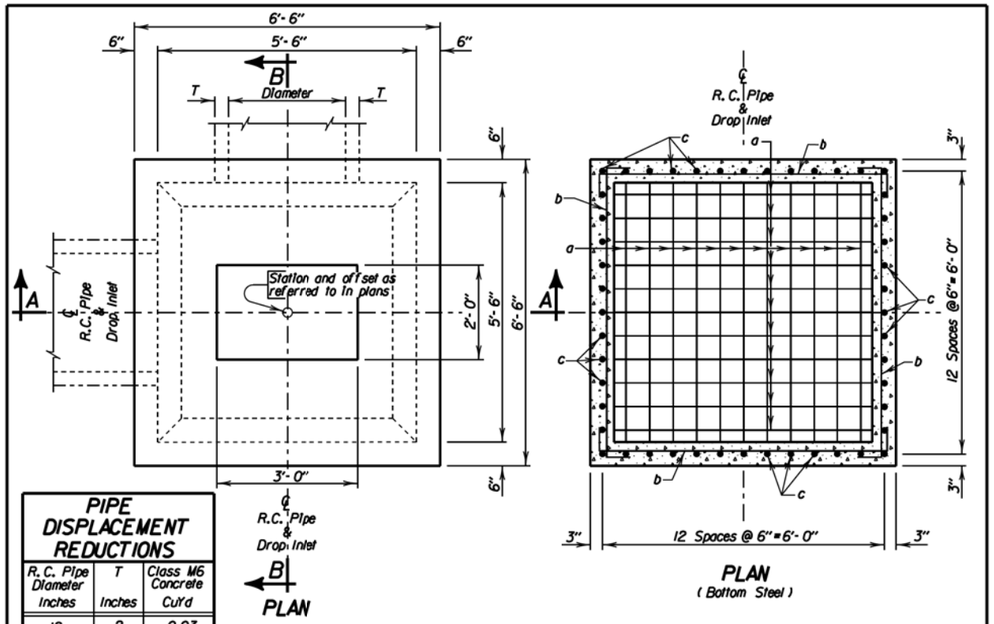

PIPE DISPLACEMENT REDUCTIONS

R.C. Pipe Diameter Inches	T Inches	Class M6 Concrete Cu Yd
12	2	0.03
15	2 1/4	0.04
18	2 1/2	0.05
24	3	0.09
30	3 1/2	0.14
36	4	0.20
42	4 1/2	0.26
48	5	0.34
54	5 1/2	0.43

DROP INLETS FOR 12" TO 54" DIAMETER PIPE

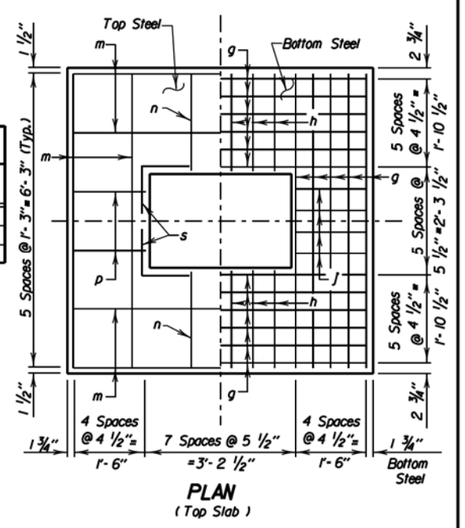

ESTIMATED QUANTITIES

ITEM	UNIT	CONSTANT QUANTITY	VARIABLE QUANTITY
* Class M6 Concrete	Cu Yd	2.13	0.44H
Reinforcing Steel	Lb	828	90.80H
Frame and Grate Assembly	Each	1	——

GENERAL NOTES:

* Reduce total quantities of concrete by the amount of concrete displaced by the pipe. The total quantity of concrete shall be computed to the nearest hundredth of a cubic yard. The total quantity of reinforcing steel shall be computed to the nearest pound.

Drop inlets shown may be modified by the addition or omission of connecting pipes as shown on the layouts.

Reinforcing steel shall conform to ASTM A615 Grade 60. Cut and bend reinforcing steel as required to place pipe(s) through the drop inlet wall.

Pipe shall not enter through a corner of the drop inlet.

Use 2" clear cover on all reinforcing steel unless otherwise noted.

Precasting of reinforced drop inlets will be permissible. Prior to precasting, the Contractor shall submit details to the Engineer for approval.

Maximum pipe diameter shall not exceed 54 inches.

Before the top slab is placed, grout shall be applied to all bearing surfaces.

The dimension of H is in feet.

December 23, 2009

Published Date: 2nd Qtr. 2015

SDDOT

5.5' X 5.5' TYPE B REINFORCED CONCRETE DROP INLET

PLATE NUMBER 670.06

Sheet 1 of 2

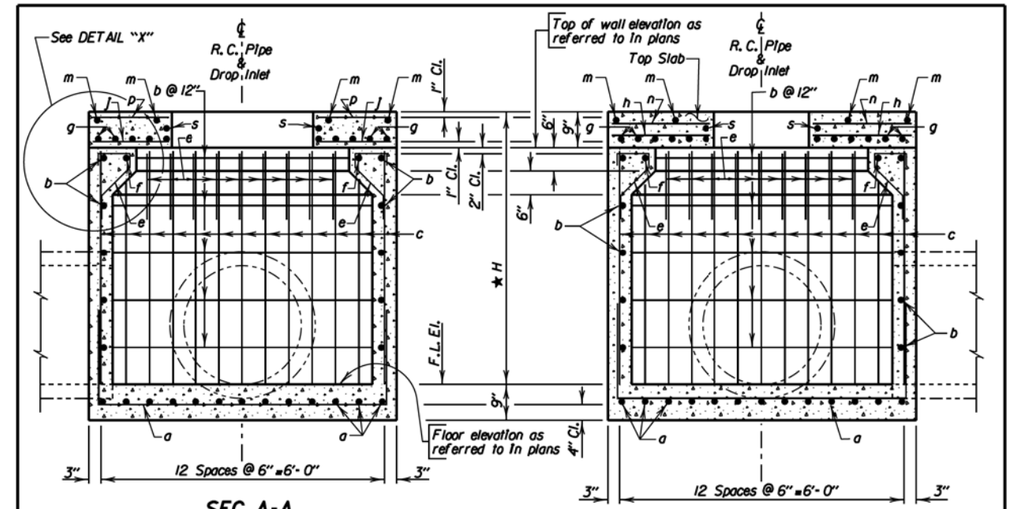

* Maximum H is 10'-0"

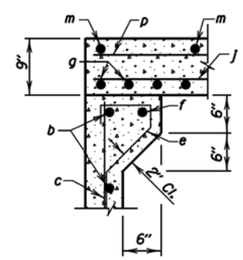

DROP INLETS FOR 12" TO 54" DIAMETER PIPE

REINFORCING SCHEDULE

Mk.	No.	Size	Length	Type
a	26	6	10'-0"	17
b	4(H-1)	4	7'-0"	17
c	48	6	H-11"	Str.
e	36	5	2'-6"	16A
f	4	5	6'-0"	17
g	22	7	6'-3"	Str.
h	12	7	2'-0"	Str.
j	8	7	1'-6"	Str.
m	8	4	6'-3"	Str.
n	4	4	2'-0"	Str.
p	4	4	1'-6"	Str.
s	4	4	2'-0"	17A

Bending Details

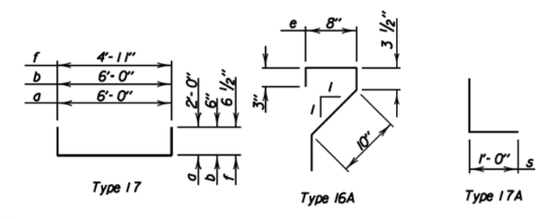

NOTE: All dimensions are out to out of bars.

December 23, 2009

Published Date: 2nd Qtr. 2015

SDDOT

5.5' X 5.5' TYPE B REINFORCED CONCRETE DROP INLET

PLATE NUMBER 670.06

Sheet 2 of 2

Plot Scale - 1:200
- Plotted From - tnpr17192
File - ...\pott02R9\ts67006_1\s67006_2.dgn

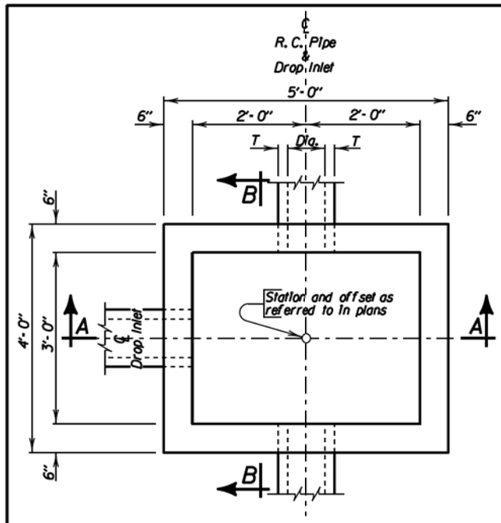

PLAN

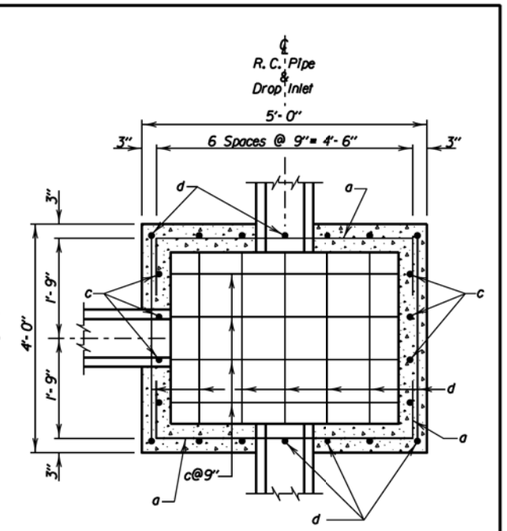

BOTTOM SECTION

PIPE DISPLACEMENT REDUCTIONS		
R.C. Pipe Diameter Inches	T Inches	Class M6 Concrete Cu'd
12	2	0.03
15	2 1/4	0.04
18	2 1/2	0.05
24	3	0.09
30	3 1/2	0.14
36	4	0.20

ESTIMATED QUANTITIES			
ITEM	UNIT	CONSTANT QUANTITY	VARIABLE QUANTITY
✳ Class M6 Concrete	Cu'd	0.43	0.29H
Reinforcing Steel	Lb	57	26.72H
Frame and Grate	Each	1	———

DROP INLETS FOR 12" TO 36" DIAMETER PIPE

GENERAL NOTES:

✳ Reduce total quantities of concrete by the amount of concrete displaced by the pipe. The total quantity of concrete shall be computed to the nearest hundredth of a cubic yard. The total quantity of reinforcing steel shall be computed to the nearest pound.

Drop inlets shown may be modified by the addition or omission of connecting pipes as shown on the layouts.

Reinforcing steel shall conform to ASTM A615 Grade 60. The b bars shall be lapped 12 inches. Cut and bend reinforcing steel as required to place pipe(s) through the drop inlet wall.

Pipe shall not enter through a corner of the drop inlet.

Use 2" clear cover on all reinforcing steel unless otherwise noted.

Precasting of reinforced drop inlets will be permissible. Prior to precasting, the Contractor shall submit details to the Engineer for approval.

Maximum pipe diameter shall not exceed 27 inches on the 4 foot wide side and shall not exceed 36 inches on the 5 foot wide side of the drop inlet.

The dimension of H is in feet.

December 23, 2009

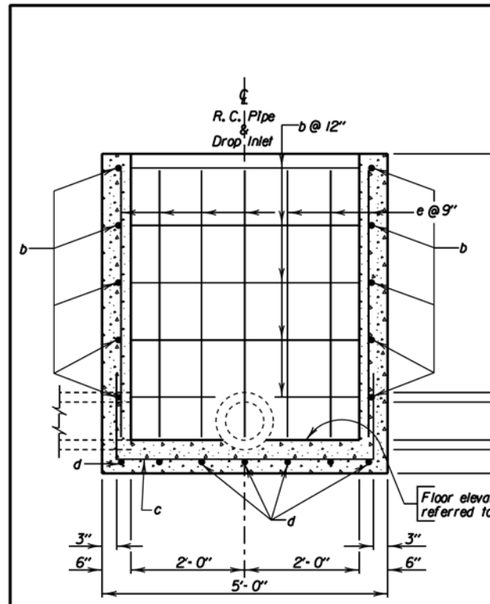

SEC. A-A

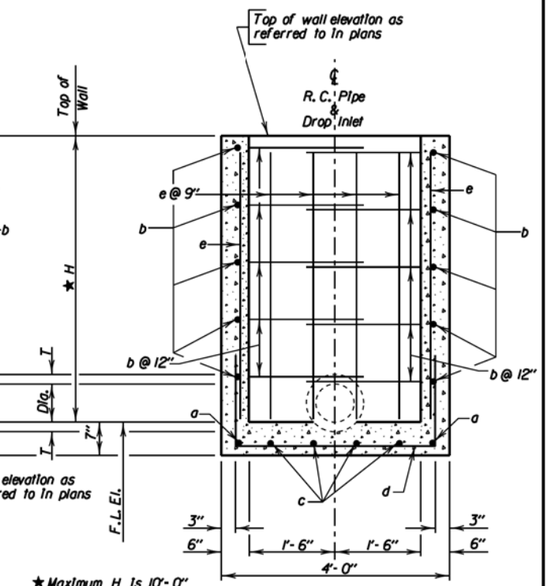

★ Maximum H is 10'-0"

SEC. B-B

DROP INLETS FOR 12" TO 36" DIAMETER PIPE

REINFORCING SCHEDULE					
Mk.	No.	Size	Length	Type	Bending Details
a	2	4	6'-6"	17	
b	2H	4	9'-0"	17	
c	4	4	7'-6"	17	
d	7	4	6'-6"	17	
e	22	4	H - 2"	Str.	

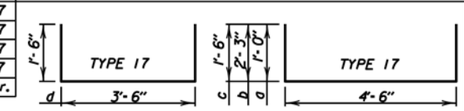

NOTE: All dimensions are out to out of bars.

December 23, 2009

Plot Scale - 1:200
- Plotted From - tnpr17192
File - ...\pott02R9\s67010_1s67010_2.dgn

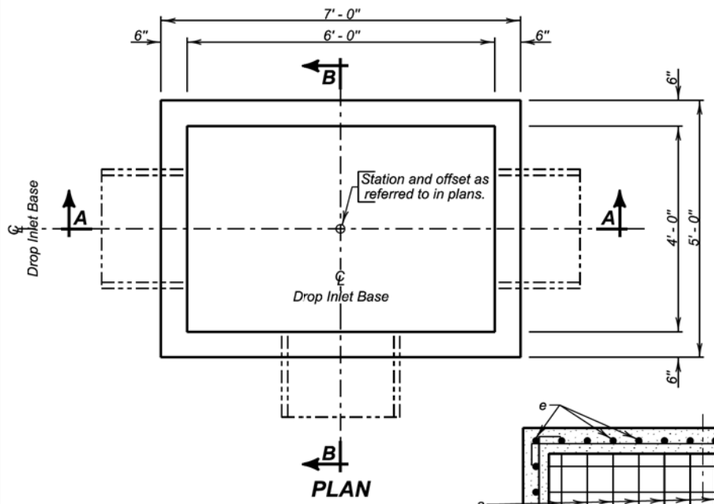

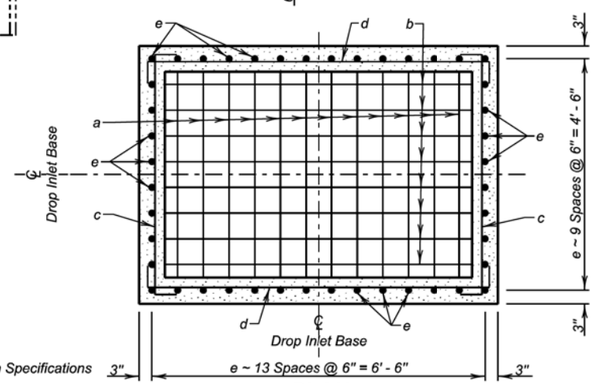

PLAN
(Bottom Steel)
(Pipe Not Shown)

SPECIFICATIONS:

1. Design Specifications: AASHTO LRFD Bridge Design Specifications 2012 Edition.
2. Construction Specifications: South Dakota Standard Specifications for Roads and Bridges, 2004 Edition and required Provisions, Supplemental Specifications and/or Special Provisions.

GENERAL NOTES:

1. Design Live Load: HL-93 loading. No construction loading in excess of legal load was considered.
2. Base is intended for use with a Precast Concrete Type S Drop Inlet Lid, Standard Plate 670.38. Base may be precast. If precast base used, and details differ from that shown, the precast base must be on the current approved list. The current approved list is available through proper channels from the SDDOT Office of Bridge Design.
3. To qualify for addition to the approved lisi, submit a checked design, by South Dakota Registered Professional Engineers and shop plans to the Office of Bridge Design for approval. Design shall be in accordance with the current edition of the AASHTO LRFD Bridge Design Specifications.
4. ✳ Reduce total quantities of concrete by the amount of concrete displaced by the pipe. The total quantity of concrete shall be computed to the nearest hundredth of a cubic yard. The total quantity of reinforcing steel shall be computed to the nearest pound.
5. Inlets shown may be modified by the addition or omission of connecting pipes as shown on the layouts. Connecting pipes shall not enter the inlet through the corners.
6. Maximum R.C.P. diameter shall not exceed 36 inches (30 inches for R.C. Arch) on the 4-foot wide side and shall not exceed 54 inches (48 inches for R.C. Arch) on the 6-foot wide side of the Drop Inlet.
7. Reinforcing steel shall conform to ASTM A615 Grade 60. Cut and bend reinforcing steel as required to place pipe(s) through the inlet wall.
8. Use 1 inch clear cover on all reinforcing steel unless otherwise noted.
9. The dimension of H is in feet. Maximum H is 8 feet.

December 23, 2012

Published Date: 2nd Qtr. 2015

SDDOT

4' X 6' TYPE S DROP INLET BASE

PLATE NUMBER 670.30

Sheet 1 of 2

PIPE DISPLACEMENT REDUCTIONS

	Diameter (Inches)	Wall T (Inches)	Class M6 Concrete (Cu. Yd.)
R.C.P.	12	2	0.03
	15	2 ¼	0.04
	18	2 ½	0.05
	24	3	0.09
	30	3 ½	0.14
	36	4	0.20
	42	4 ½	0.26
	48	5	0.34
	54	5 ½	0.43
R.C. ARCH	18	2 ½	0.05
	24	3 ½	0.09
	30	4	0.14
	36	4 ½	0.19
	42	4 ½	0.24
	48	5	0.32

REINFORCING SCHEDULE

Mk.	No.	Size	Length	Type
a	14	5	9' - 6"	17
b	10	5	11' - 6"	17
c	2H	4	5' - 6"	17
d	2H	4	7' - 6"	17
e	44	4	H - 2"	Str.

Bending Details

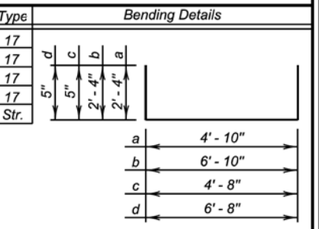

Type 17

NOTE:
All dimensions are out to out of bars

ESTIMATED QUANTITIES

ITEM	UNIT	CONSTANT QUANTITY	VARIABLE QUANTITY
✳ Class M6 Concrete	Cu.Yd.	0.97	0.41H
Reinforcing Steel	Lb.	253.77	46.76H

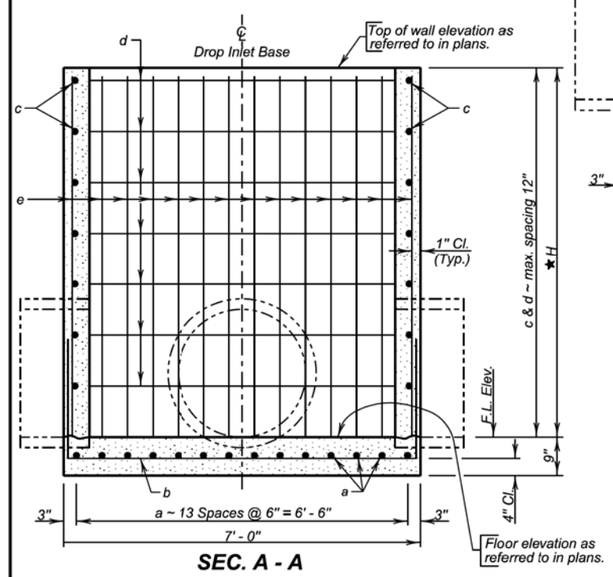

SEC. A - A

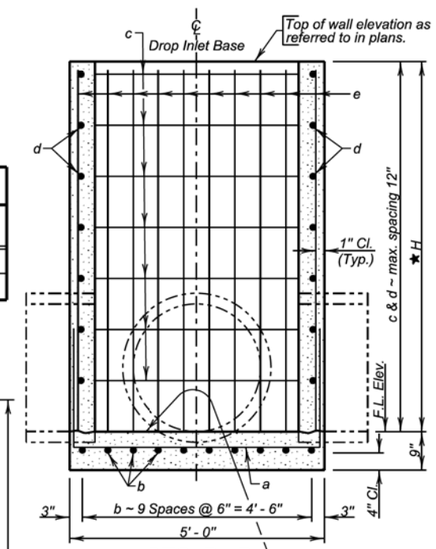

SEC. B - B

★ Maximum H is 8' - 0"

December 23, 2012

Published Date: 2nd Qtr. 2015

SDDOT

4' X 6' TYPE S DROP INLET BASE

PLATE NUMBER 670.30

Sheet 2 of 2

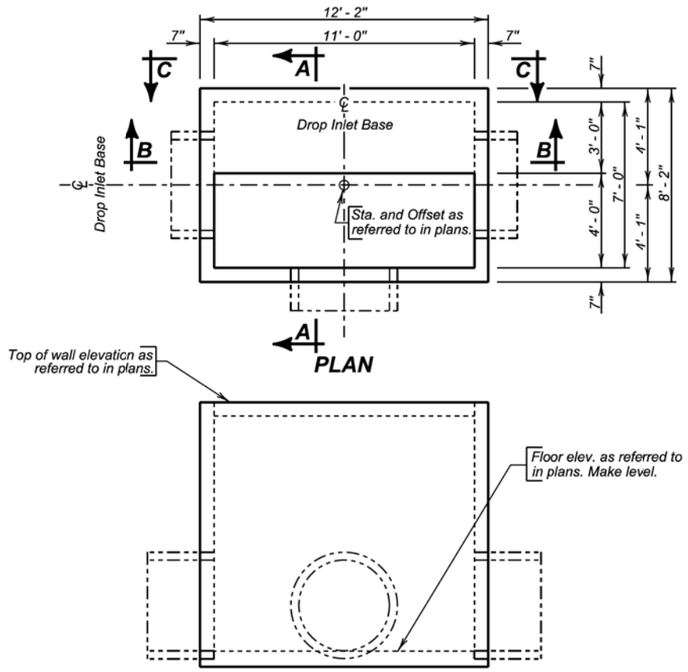

SPECIFICATIONS:

1. Design Specifications: AASHTO LRFD Bridge Design Specifications, 2012 Edition.
2. Construction Specifications: South Dakota Standard Specifications for Roads and Bridges, 2004 Edition and required Provisions, Supplemental Specifications and/or Special Provisions.

GENERAL NOTES:

1. Design Live Load: HL-93 loading. No construction loading in excess of legal load was considered.
2. Base is intended for use with a Precast Concrete Type S Drop Inlet Lid, Standard Plate 670.40. Base may be precast. If precast base used, and details differ from that shown, the precast base must be on the current approved list. The current approved list is available through proper channels from the SDDOT Office of Bridge Design.
3. To qualify for addition to the approved list, submit a checked design, by South Dakota Registered Professional Engineers and shop plans to the Office of Bridge Design for approval. Design shall be in accordance with the current edition of the AASHTO LRFD Bridge Design Specifications.
4. ∗ Reduce total quantities of concrete by the amount of concrete displaced by the pipe. The total quantity of concrete shall be computed to the nearest hundredth of a cubic yard. The total quantity of reinforcing steel shall be computed to the nearest pound.
5. Inlets shown may be modified by the addition or omission of connecting pipes as shown on the layouts. Connecting pipes shall not enter the inlet through the corners.
6. Maximum R.C.P. diameter shall not exceed 66 inches (54 inches for R.C. Arch) on the 7-foot wide side of the Drop Inlet.
7. Reinforcing steel shall conform to ASTM A615 Grade 60. Cut and bend reinforcing steel as required to place pipe(s) through the inlet wall.
8. Use 1 inch clear cover on all reinforcing steel unless otherwise noted.
9. The dimension of H is in feet. Maximum H is 10 feet.

December 23, 2012

Published Date: 2nd Qtr. 2015 | SDDOT | 7' X 11' TYPE S DROP INLET BASE | PLATE NUMBER 670.34 | Sheet 1 of 4

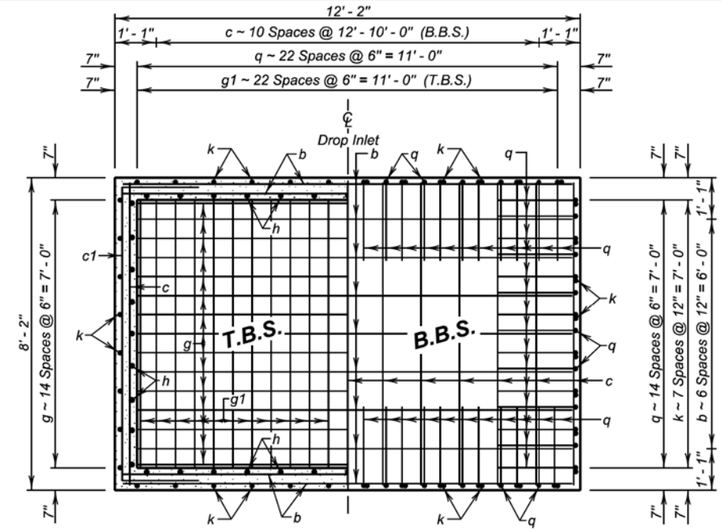

PLAN
(Bottom Slab)
(Pipe Not Shown)

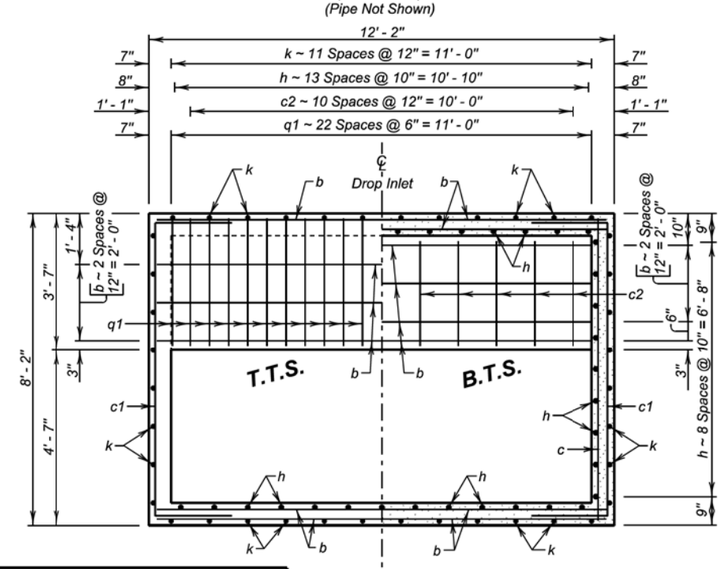

PLAN
(Top Slab)
(Pipe Not Shown)

LEGEND FOR PLACING RE-STEEL
T.T.S. - Top of Top Slab
B.T.S. - Bottom of Top Slab
T.B.S. - Top of Bottom Slab
B.B.S. - Bottom of Bottom Slab

December 23, 2012

Published Date: 2nd Qtr. 2015 | SDDOT | 7' X 11' TYPE S DROP INLET BASE | PLATE NUMBER 670.34 | Sheet 2 of 4

Plot Scale - 1:200
- Plotted From - trpr17192
File - ...\pdt02R9\s67034_1\s67034_2.dgn

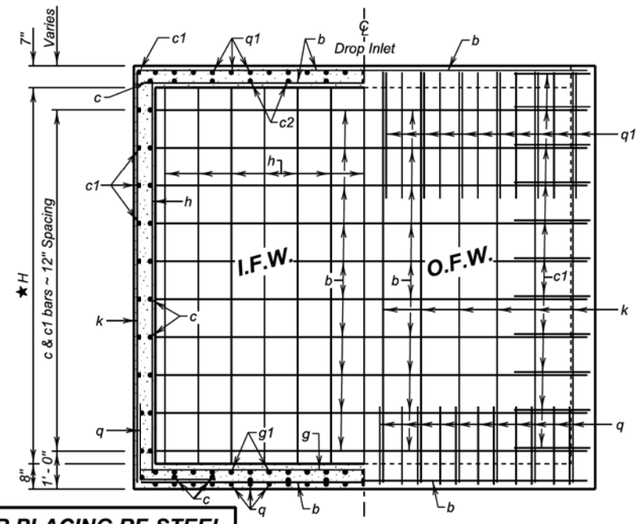

LEGEND FOR PLACING RE-STEEL

O.F.W. - Outside Face of Wall
I.F.W. - Inside Face of Wall

VIEW C - C
(Pipe Not Shown)

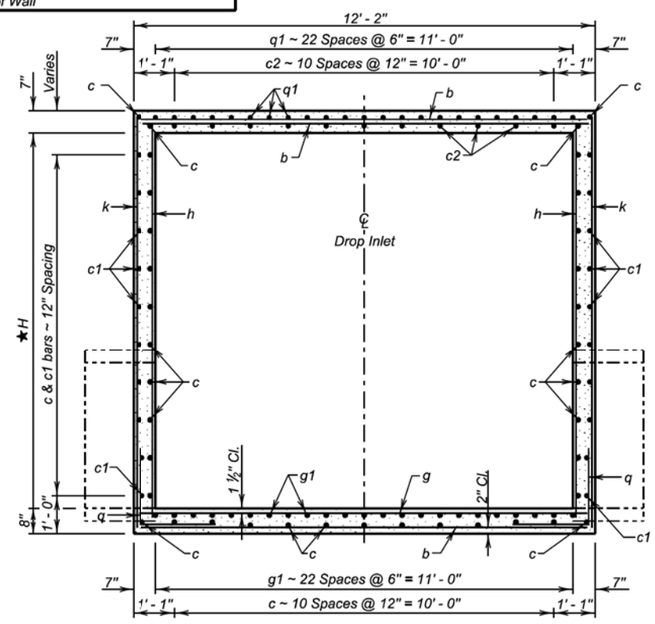

SEC. B - B

★ Maximum H is 10' - 0"

December 23, 2012

Published Date: 2nd Qtr. 2015	SDDOT	7' X 11' TYPE S DROP INLET BASE	PLATE NUMBER 670.34
			Sheet 3 of 4

REINFORCING SCHEDULE

Mk.	No.	Size	Length	Type
b	19 + 4H	4	11' - 9"	Str.
c	15 + 2H	4	7' - 9"	Str.
c1	2 + 2H	4	11' - 10"	17
c2	11	4	2' - 10"	Str.
g	15	5	11' - 9"	Str.
g1	23	5	7' - 9"	Str.
h	46	5	H + 5"	Str.
k	40	5	H + 5"	Str.
q	76	5	5' - 6"	17A
q1	23	5	6' - 8"	17A

Bending Details

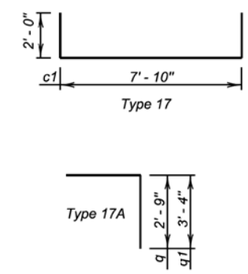

NOTE:
All dimensions are out to out of bars

ESTIMATED QUANTITIES

ITEM	UNIT	CONSTANT QUANTITY	VARIABLE QUANTITY
★ Class M6 Concrete	Cu.Yd.	3.65	0.83H
Reinforcing Steel	Lb.	1266	147.26H

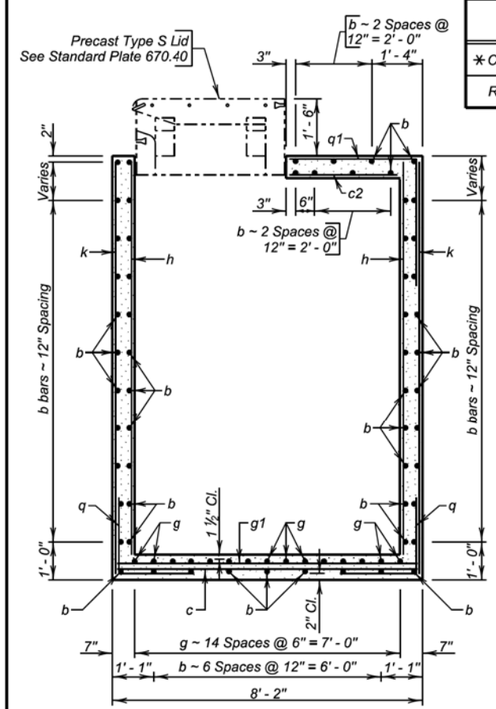

SEC. A - A
(Pipe Not Shown)

PIPE DISPLACEMENT REDUCTIONS

	Diameter (Inches)	Wall T (Inches)	Class M6 Concrete (Cu. Yd.)
R.C.P.	12	2	0.03
	15	2 ¼	0.04
	18	2 ½	0.06
	24	3	0.11
	30	3 ½	0.16
	36	4	0.23
	42	4 ½	0.31
	48	5	0.40
	54	5 ½	0.50
	60	6	0.61
R.C. ARCH	18	2 ½	0.06
	24	3 ½	0.11
	30	4	0.16
	36	4 ½	0.22
	42	4 ½	0.29
	48	5	0.37
	54	5 ½	0.46
	60	6	0.57
	72	7	0.82
	84	8	1.09

December 23, 2012

Published Date: 2nd Qtr. 2015	SDDOT	7' X 11' TYPE S DROP INLET BASE	PLATE NUMBER 670.34
			Sheet 4 of 4

Plot Scale - 1:200
- Plotted From - trpr17192
File - ...\pollt02R9\s67034_3s67034_4.dgn

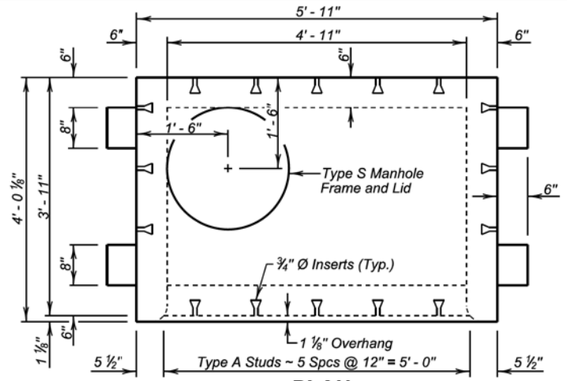

PLAN

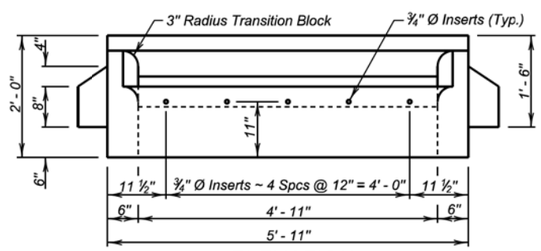

ELEVATION

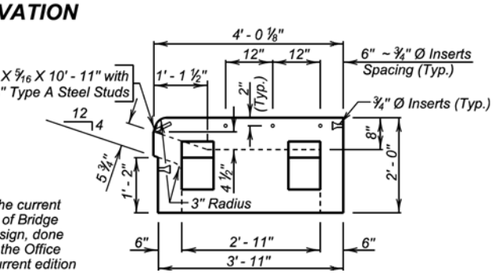

SIDE VIEW
(With Sidewalk Inserts)

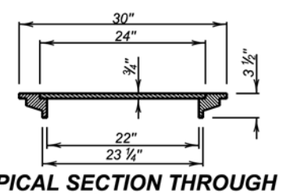

TYPICAL SECTION THROUGH TYPE S MANHOLE FRAME AND LID
(Weight 140 Lbs.)

GENERAL NOTES:

1. The Precast Concrete Type S Drop Inlet Lid and the shims shall be on the current approved list available through proper channels from the SDDOT Office of Bridge Design. To qualify for addition to the approved list, submit a checked design, done by South Dakota Registered Professional Engineers, and shop plans to the Office of Bridge Design for approval. Design shall be in accordance with the current edition of the AASHTO LRFD Bridge Design Specifications.
2. Design Live Load shall be HL - 93.
3. Concrete mix shall be as per fabricators design, however, minimum compressive strength shall not be less than 4500 psi. Type II Cement is required.
4. The Type S Manhole Frame and Lid shall conform to AASHTO M105, Class 30.
5. Structural Steel shall conform to ASTM A36. The ¾ inch diameter Headed Type A Steel Studs shall comform to Section 7 of the current edition of AWS DI. I Structural Steel Welding Code.
6. The ¾ inch diameter Concrete Inserts shall be galvanized or made of a corrosion resistant material. Provide ¾ inch diameter x 1' - 6" long dowels conforming to ASTM A615, Gr. 60 threaded to fit Inserts with each lid.
7. All costs associated with furnishing and installing the Precast Concrete Type S Drop Inlet Lid including the type S manhole frame and lid, shims, inserts, and dowels shall be included in the contract unit price per each for " 4' x 6' Precast Concrete Type S Drop Inlet Lid ".

December 23, 2012

Published Date: 2nd Qtr. 2015	SDDOT	4' X 6' PRECAST CONCRETE TYPE S DROP INLET LID	PLATE NUMBER 670.38
			Sheet 1 of 1

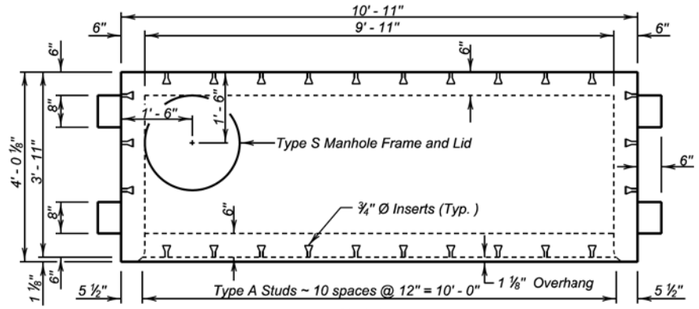

PLAN

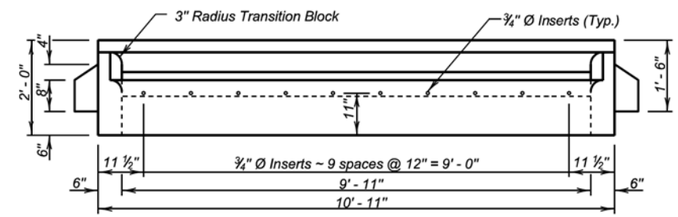

ELEVATION

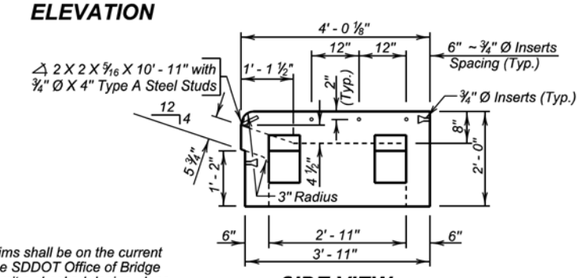

SIDE VIEW
(With Sidewalk Inserts)

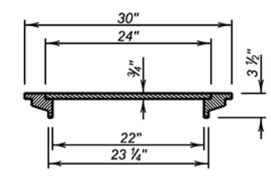

TYPICAL SECTION THROUGH TYPE S MANHOLE FRAME AND LID
(Weight 140 Lbs.)

GENERAL NOTES:

1. The Precast Concrete Type S Drop Inlet Lid and the shims shall be on the current approved list available through proper channels from the SDDOT Office of Bridge Design. To qualify for addition to the approved list, submit a checked design, done by South Dakota Registered Professional Engineers, and shop plans to the Office of Bridge Design for approval. Design shall be in accordance with the current edition of the AASHTO LRFD Bridge Design Specifications.
2. Design Live Load shall be HL - 93.
3. Concrete mix shall be as per fabricators design, however, minimum compressive strength shall not be less than 4500 psi. Type II Cement is required.
4. The Type S Manhole Frame and Lid shall conform to AASHTO M105, Class 30.
5. Structural Steel shall conform to ASTM A36. The ¾ inch diameter Headed Type A Steel Studs shall conform to Section 7 of the current edition of AWS D1. 1 Structural Steel Welding Code.
6. The ¾ inch diameter Concrete Inserts shall be galvanized or made of a corrosion resistant material. Provide ¾ inch diameter x 1' - 6" long dowels conforming to ASTM A615, Gr. 60 threaded to fit inserts with each lid.
7. All costs associated with furnishing and installing the Precast Concrete Type S Drop Inlet Lid including the type S manhole frame and lid, shims, inserts, and dowels shall be included in the contract unit price per each for " 4' x 11' Precast Concrete Type S Drop Inlet Lid ".

December 23, 2012

Published Date: 2nd Qtr. 2015	SDDOT	4' X 11' PRECAST CONCRETE TYPE S DROP INLET LID	PLATE NUMBER 670.40
			Sheet 1 of 1

Plot Scale - 1:200
- Plotted From - trpr17192
File - ...\prj\pott02R9\s67038s670040.dgn

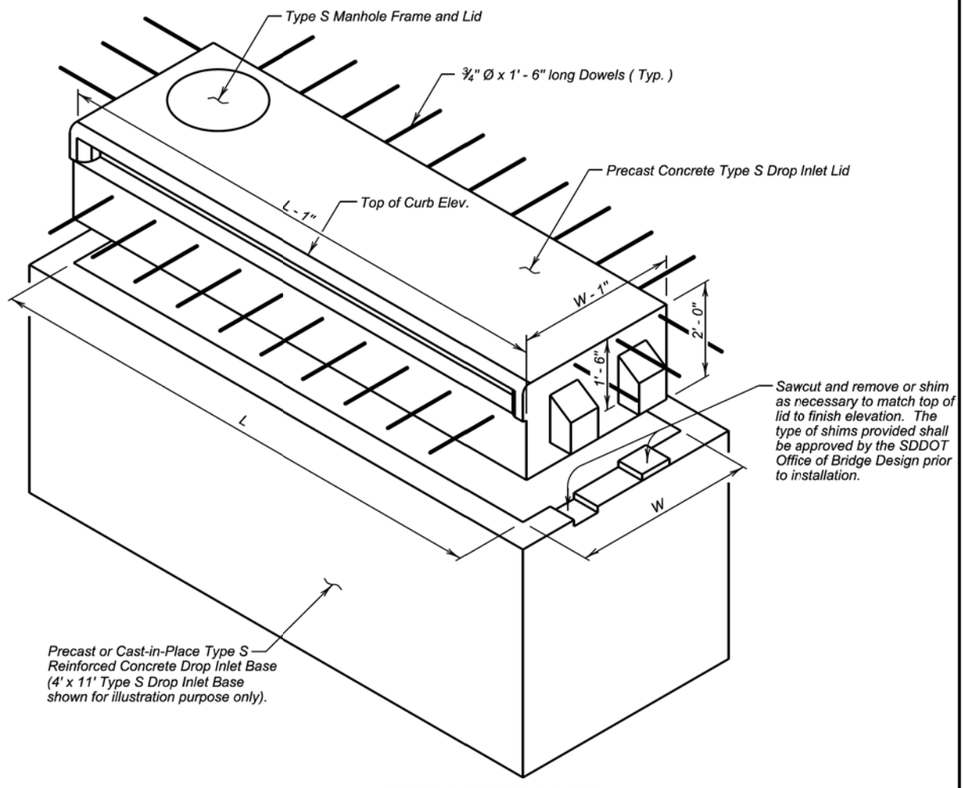

TYPE S DROP INLET

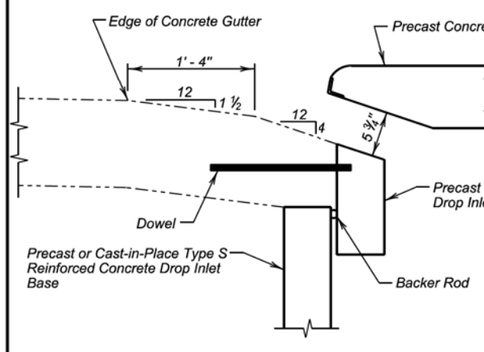

CONCRETE GUTTER DETAIL

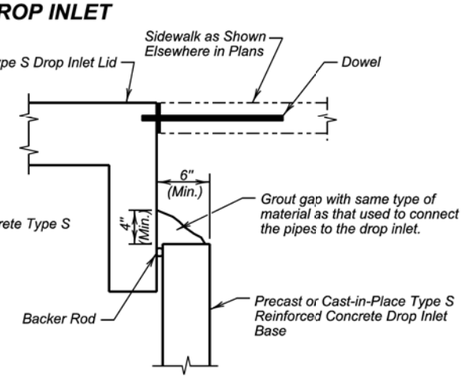

GROUTING DETAIL
(Sides and Back, Adjacent to Sidewalk)

December 23, 2012

Published Date: 2nd Qtr. 2015	SDDOT	INSTALLATION DETAILS FOR PRECAST CONCRETE TYPE S DROP INLET LID	PLATE NUMBER 670.45
			Sheet 1 of 2

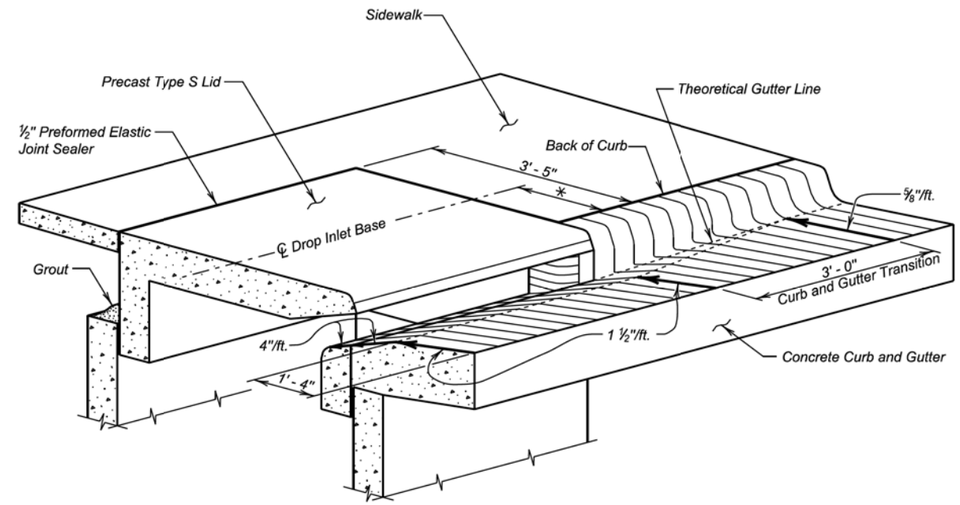

CURB AND GUTTER TRANSITION DETAILS

Drop Inlet Base Unit Size	* Distance
4' x 6'	1' - 5 ½"
4' x 11'	1' - 5 ½"
7' x 11'	2' - 11 ½"

GENERAL NOTES:

1. Dowels shall be used to anchor the precast concrete Type S drop inlet lid to the concrete gutter. See Standard Plate 670.38 or 670.40 as applicable. If there is sidewalk adjacent dowels shall be used to anchor the precast concrete Type S drop inlet lid to the sidewalk. If there is sidewalk adjacent to the drop inlet, the precast lid shall match the finish elevations and cross slopes of the sidewalk.
2. The sidewalk shall be steel reinforced when the sidewalk adjoins the precast lid. Refer to Standard Plate 651.70 for reinforced concrete sidewalk details.

December 23, 2012

Published Date: 2nd Qtr. 2015	SDDOT	INSTALLATION DETAILS FOR PRECAST CONCRETE TYPE S DROP INLET LID	PLATE NUMBER 670.45
			Sheet 2 of 2

Plot Scale - 1:200
- Plotted From - trpr17192
File - ...\pot\02R9\s67045_1s67045_2.dgn

GENERAL NOTE:

Top of grate elevation shall be 0.04' below theoretical elevation of gutter.

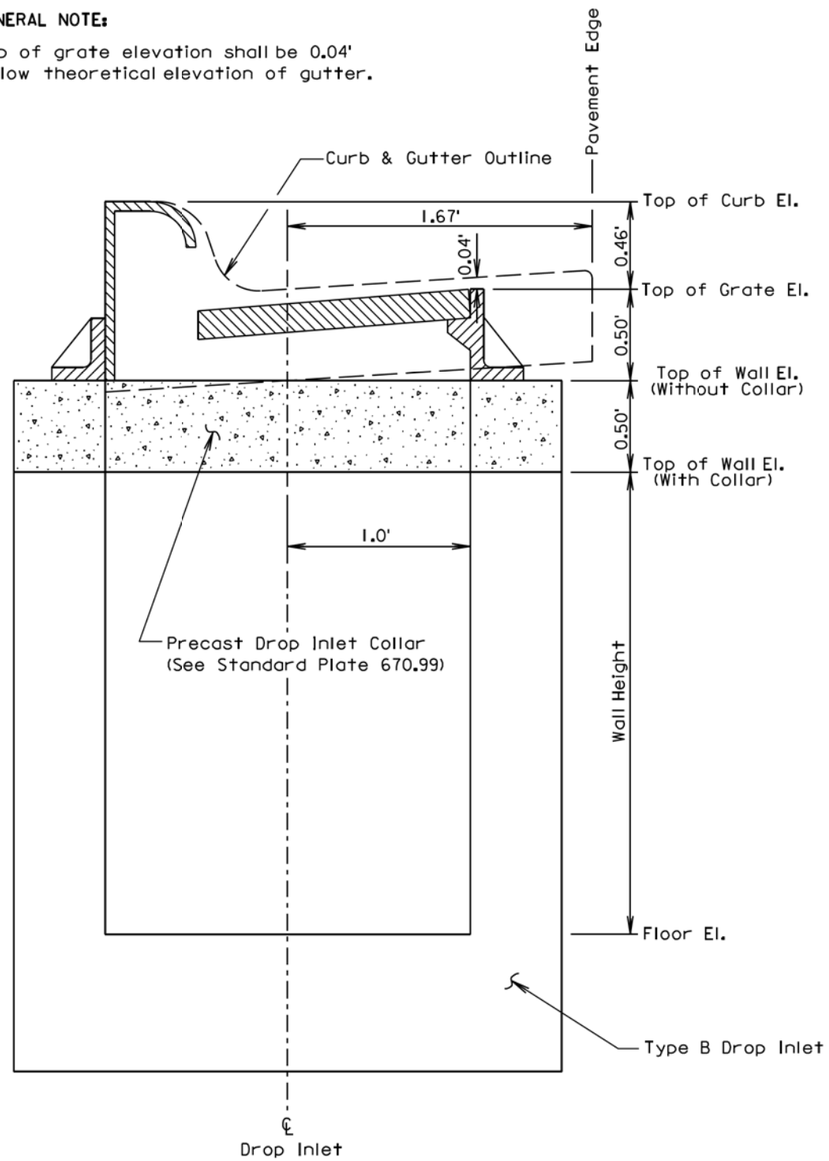

June 26, 2011

Published Date: 2nd Qtr. 2015	SDDOT	INSTALLATION OF TYPE B DROP INLET	PLATE NUMBER 670.75
			Sheet 1 of 1

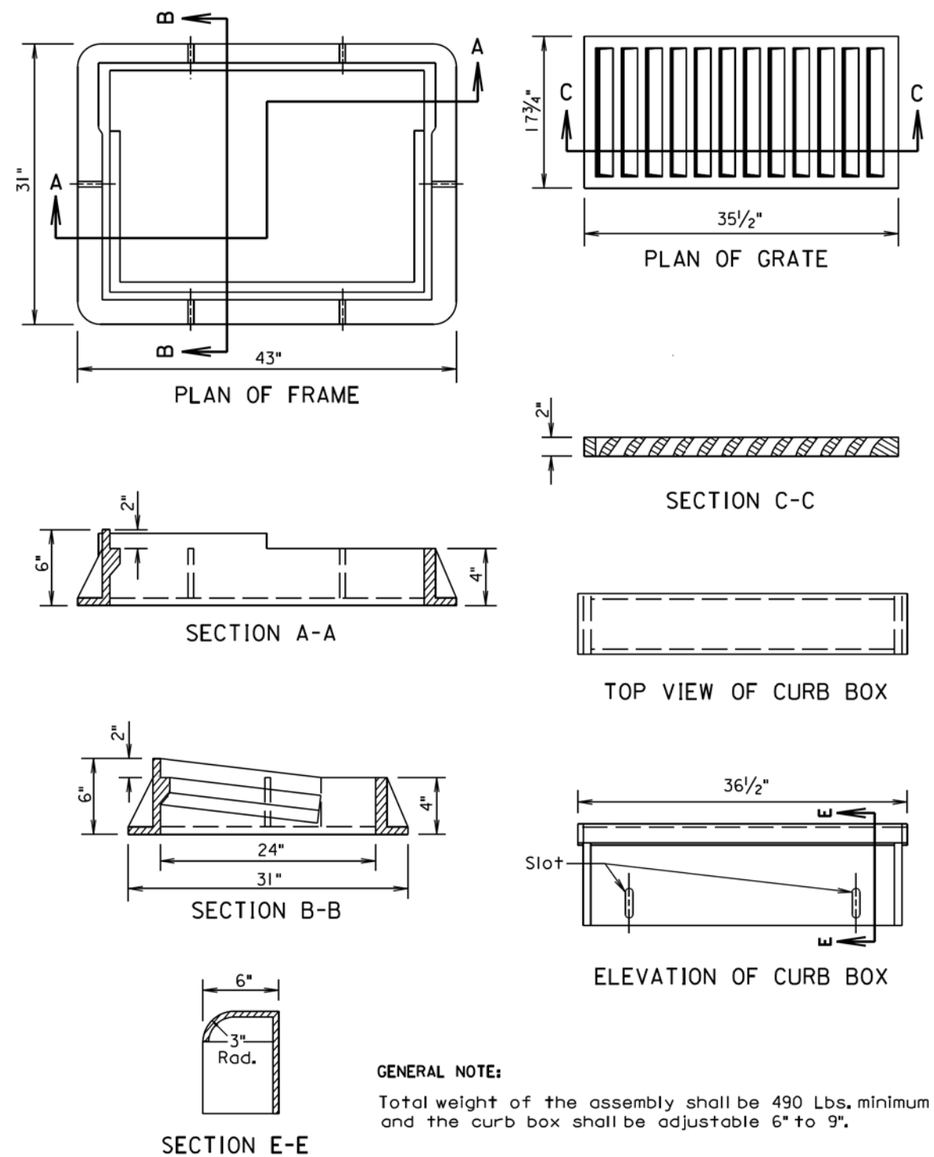

GENERAL NOTE:

Total weight of the assembly shall be 490 Lbs. minimum and the curb box shall be adjustable 6" to 9".

March 31, 2000

Published Date: 2nd Qtr. 2015	SDDOT	TYPE B FRAME AND GRATE ASSEMBLY	PLATE NUMBER 670.80
			Sheet 1 of 1

Plot Scale - 1:200
- Plotted From - trpr17192
File - ...\pr\pcttl02R9\s67075s67080.dgn

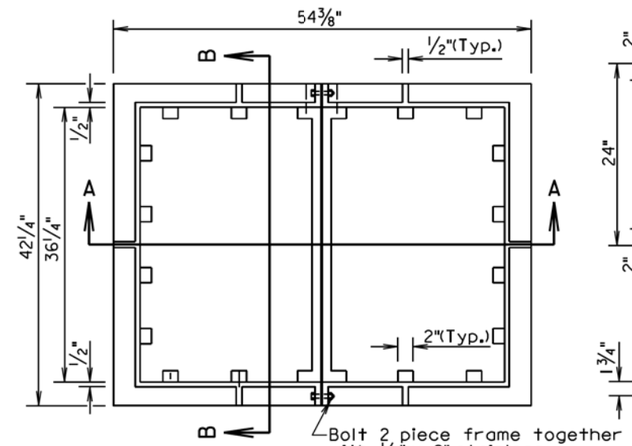

PLAN OF FRAME

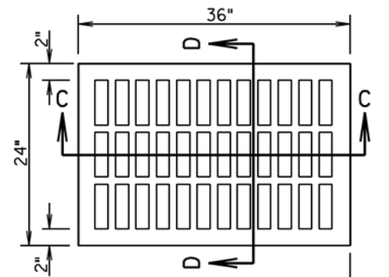

PLAN OF GRATE

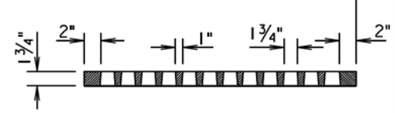

SECTION C-C

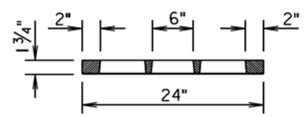

SECTION D-D

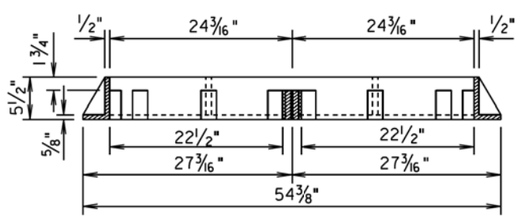

SECTION A-A

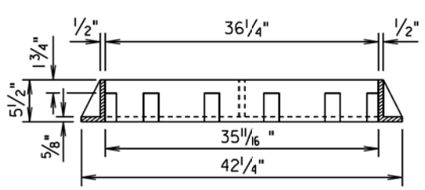

SECTION B-B

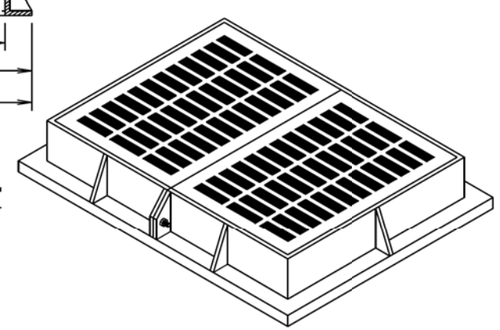

ASSEMBLED VIEW

GENERAL NOTE:

The total weight of the frame and grate shall be 850 pounds minimum.

March 31, 2000

Published Date: 2nd Qtr. 2015	SDDOT	TYPE C FRAME AND GRATE	PLATE NUMBER 670.82
			Sheet 1 of 1

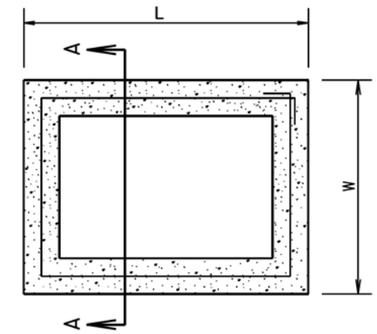

PLAN VIEW

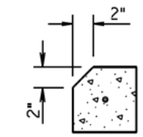

For Type D Drop Inlets only:
Use Precast Drop Inlet Collar with 2" chamfer on L sides only.

DETAIL B

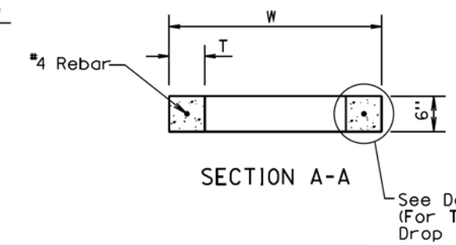

SECTION A-A

INFORMATIONAL QUANTITIES

FRAME AND GRATE TYPE	L Ft-In	W Ft-In	T In	CLASS M6 CONCRETE CuYd	REINFORCING STEEL Lb
TYPE B	4'-0"	3'-0"	6	0.11	9
TYPE C	5'-0"	4'-0"	6	0.15	11
TYPE D	4'-0"	2'-6"	6	0.10	8

GENERAL NOTES:

All reinforcing steel shall conform to ASTM A615, Grade 60.

The 1/2" diameter bar shall lap 6" ± and shall be centered in the concrete.

The cost of furnishing and installing Precast Drop Inlet Collars, including labor, materials, and incidentals shall be incidental to the contract unit price per Each for "Precast Drop Inlet Collar".

March 31, 2000

Published Date: 2nd Qtr. 2015	SDDOT	PRECAST DROP INLET COLLAR	PLATE NUMBER 670.99
			Sheet 1 of 1

Plot Scale - 1:200
- Plotted From - tpr17192
File - ...\prj\pott02R9\s67082\s67099.dgn