Section X: Cross Sections

STATE OF SOUTH DAKOTA	PROJECT	SHEET	TOTAL SHEETS
	P 0020(117)254	X1	X38

Plotting Date: 01/07/2015

INDEX OF SHEETS

X1 General Layout W/Index
X2-X38 Mainline Cross Sections

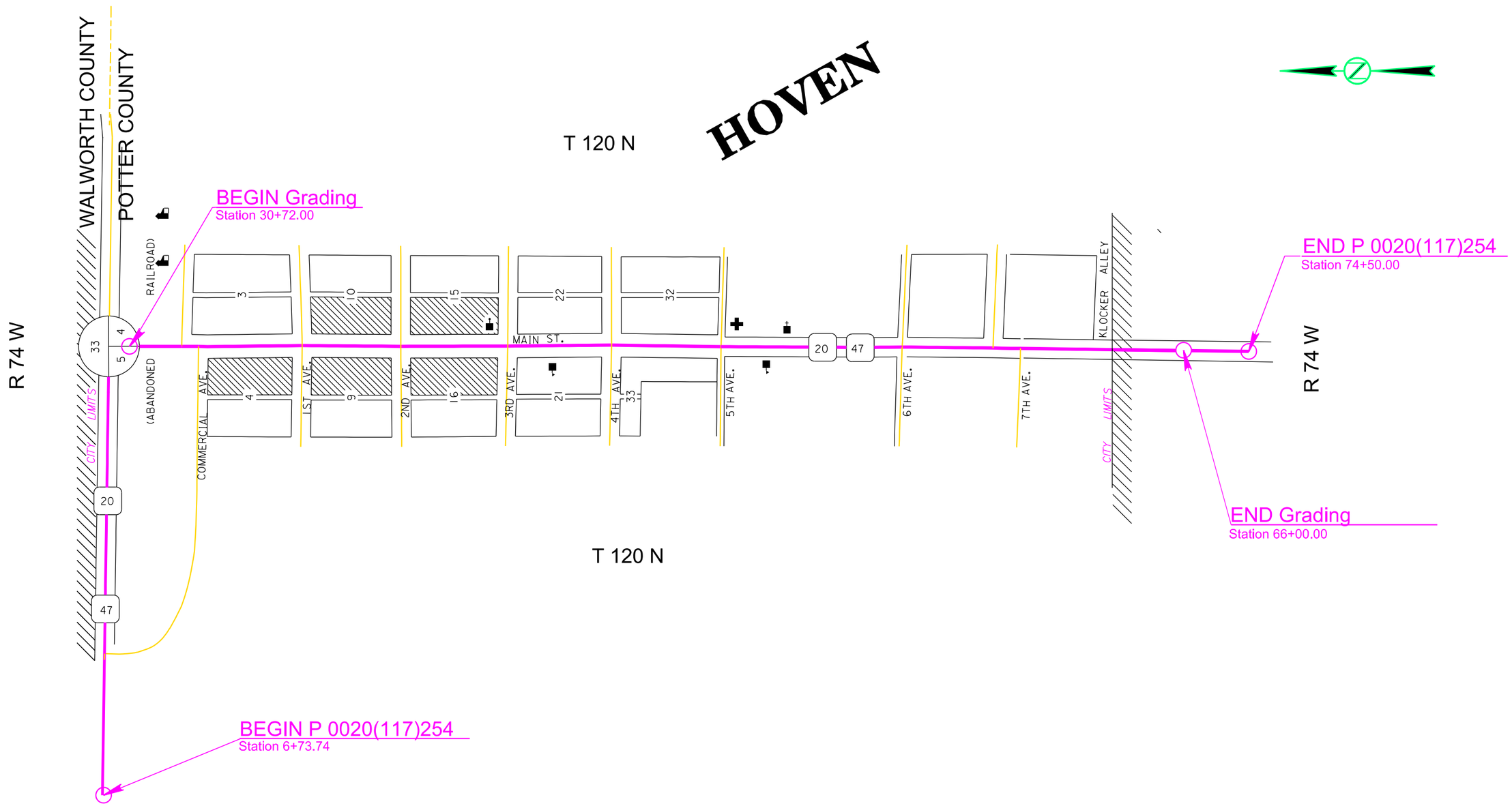

STATE OF SOUTH DAKOTA	PROJECT	SHEET NO.	TOTAL SHEETS
	P 0020(117)254	X2	X38

Plotting Date: 01/07/2015

STATE OF SOUTH DAKOTA	PROJECT	SHEET NO.	TOTAL SHEETS
	P 0020(117)254	X3	X38

Plotting Date: 01/07/2015

Revised on 1/23/15 by TJD

STATE OF SOUTH DAKOTA	PROJECT	SHEET NO.	TOTAL SHEETS
	P 0020(117)254	X4	X38

Plotting Date: 01/23/2015

STATE OF SOUTH DAKOTA	PROJECT	SHEET NO.	TOTAL SHEETS
	P 0020(117)254	X5	X38

Plotting Date: 01/07/2015

STATE OF SOUTH DAKOTA	PROJECT	SHEET NO.	TOTAL SHEETS
	P 0020(117)254	X6	X38

Plotting Date: 01/07/2015

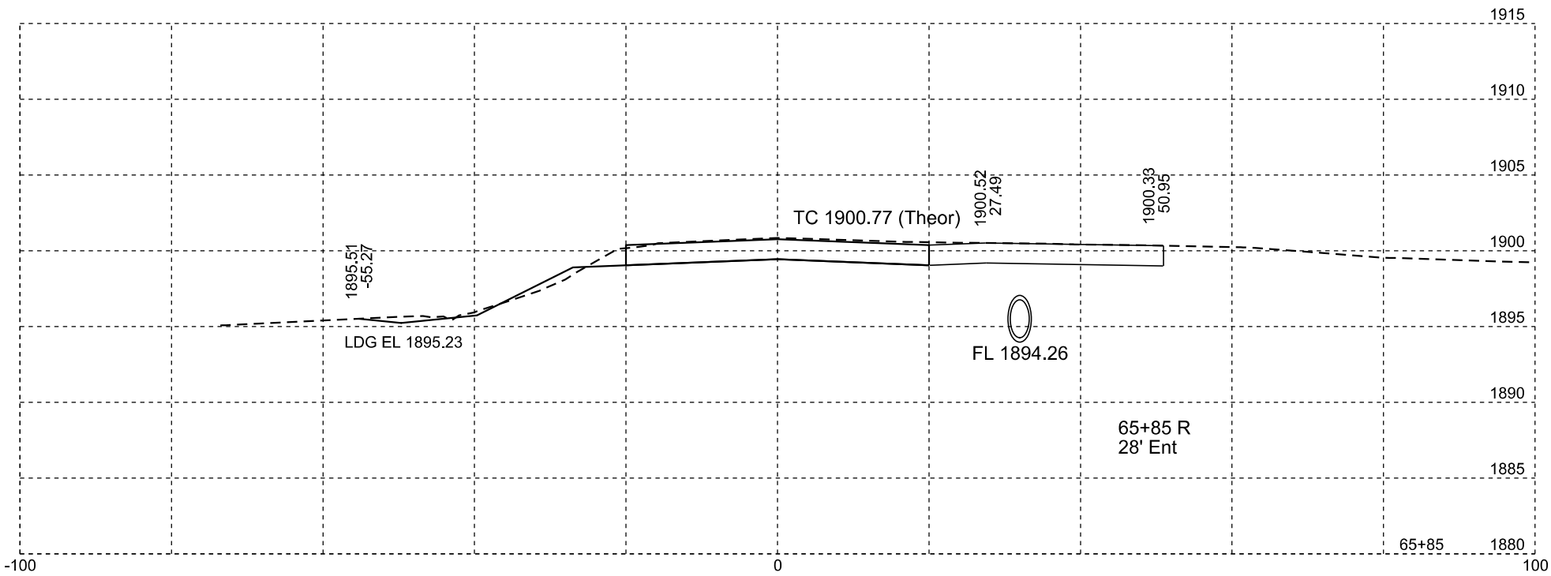

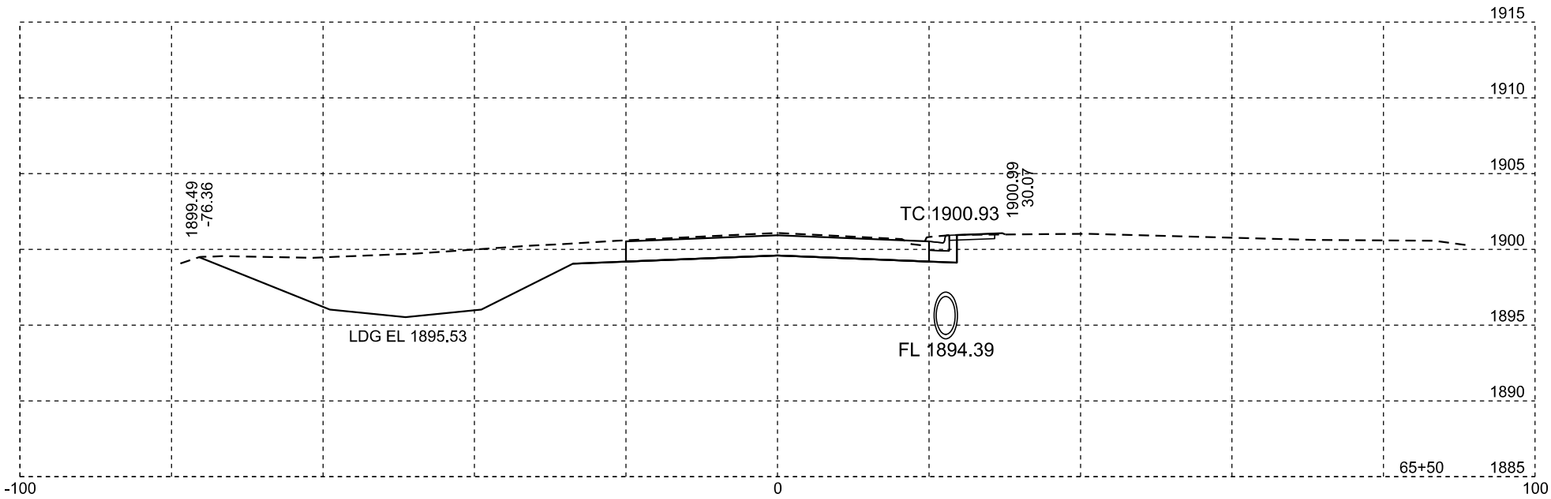

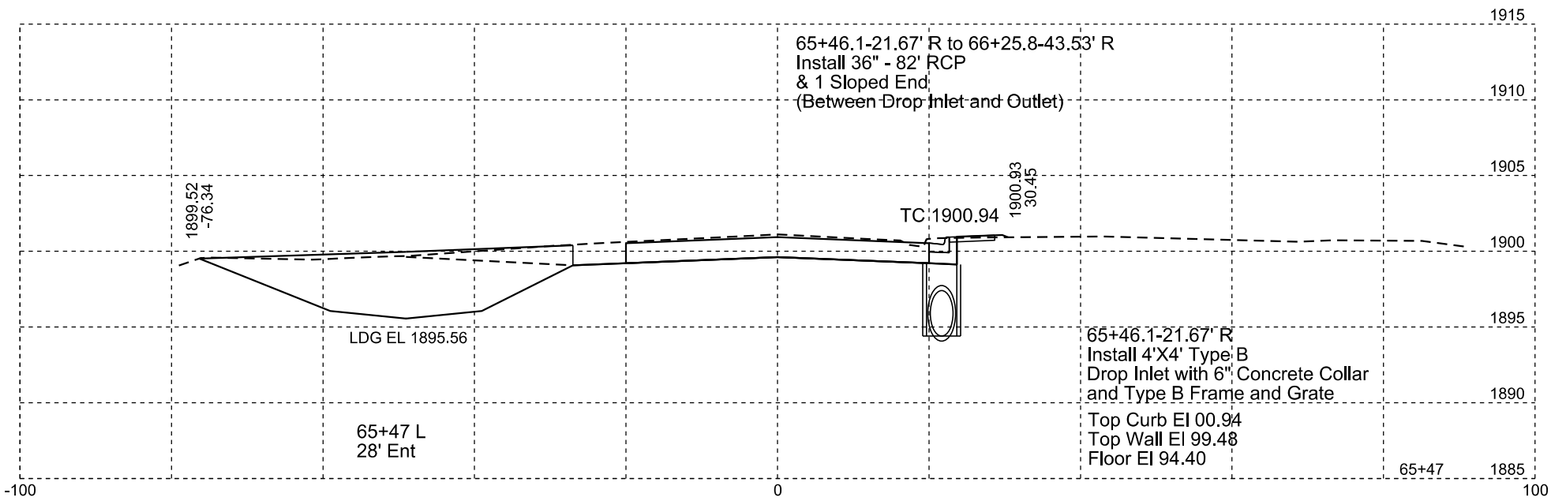

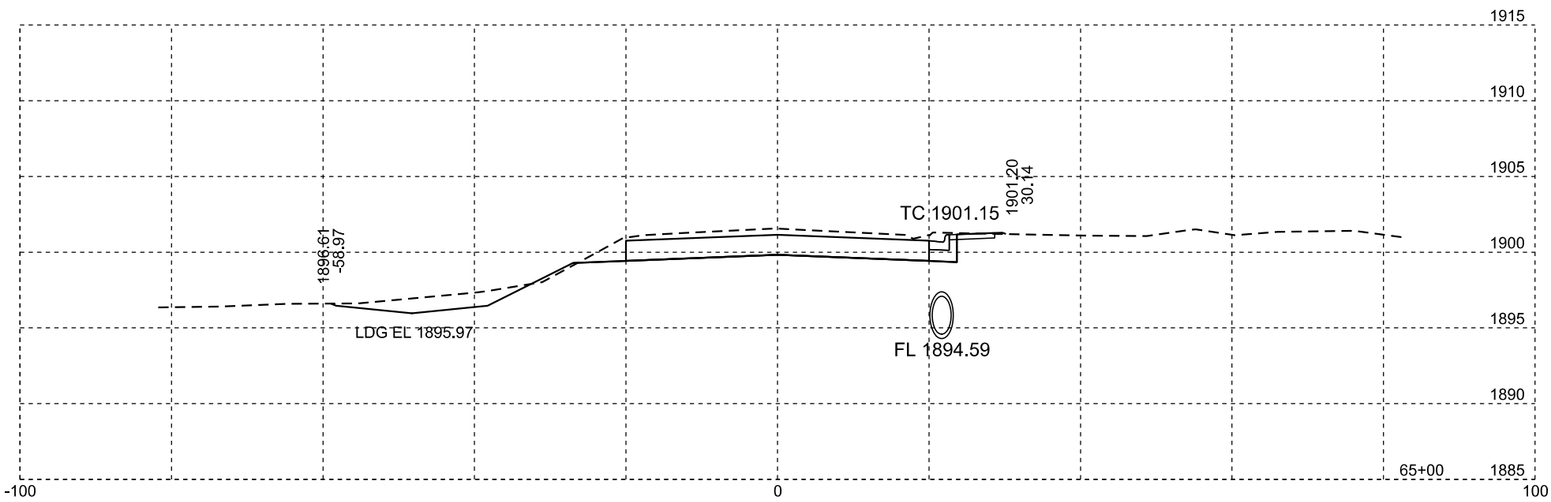

Plotting Date: 01/07/2015

STATE OF SOUTH DAKOTA	PROJECT	SHEET NO.	TOTAL SHEETS
	P 0020(117)254	X7	X38

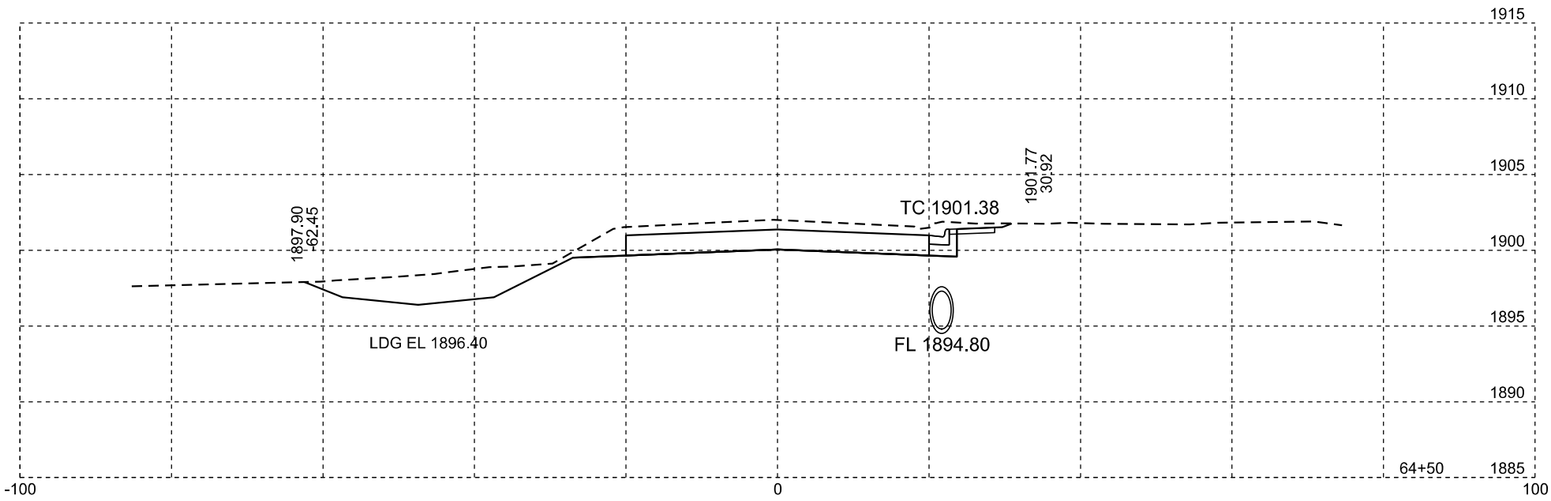

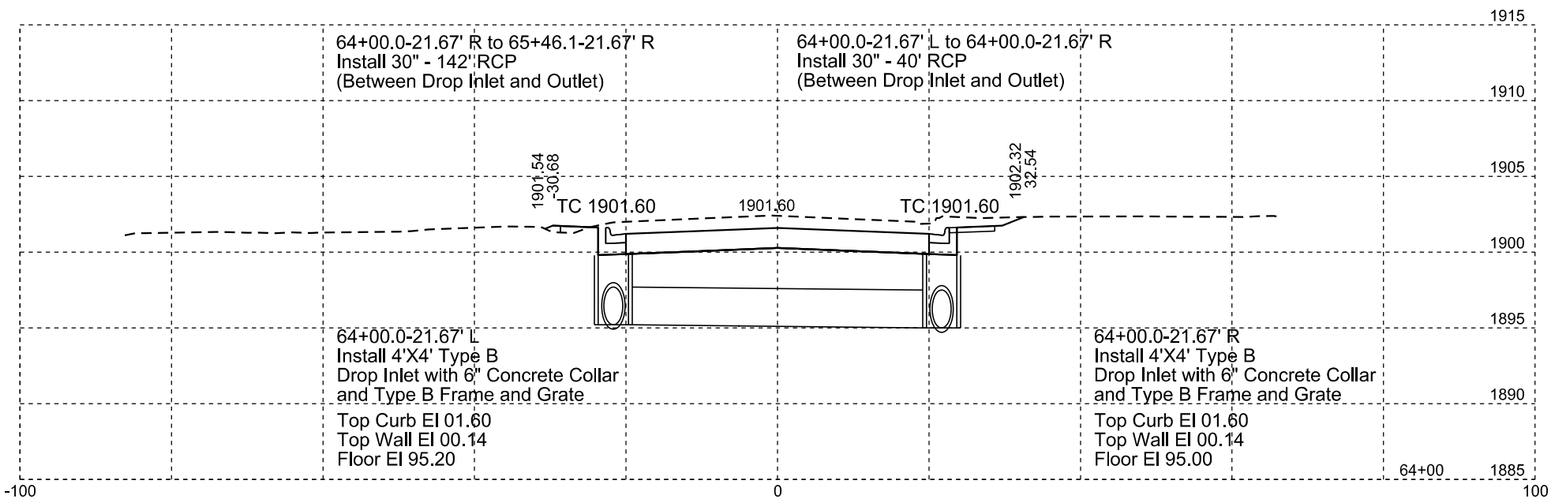

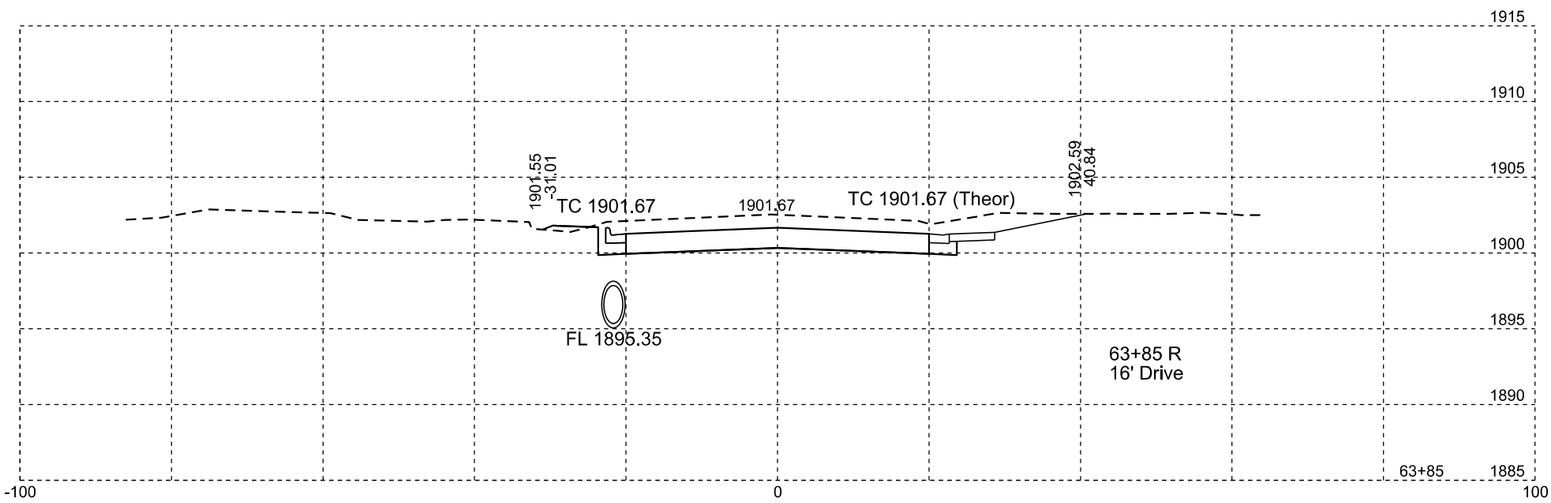

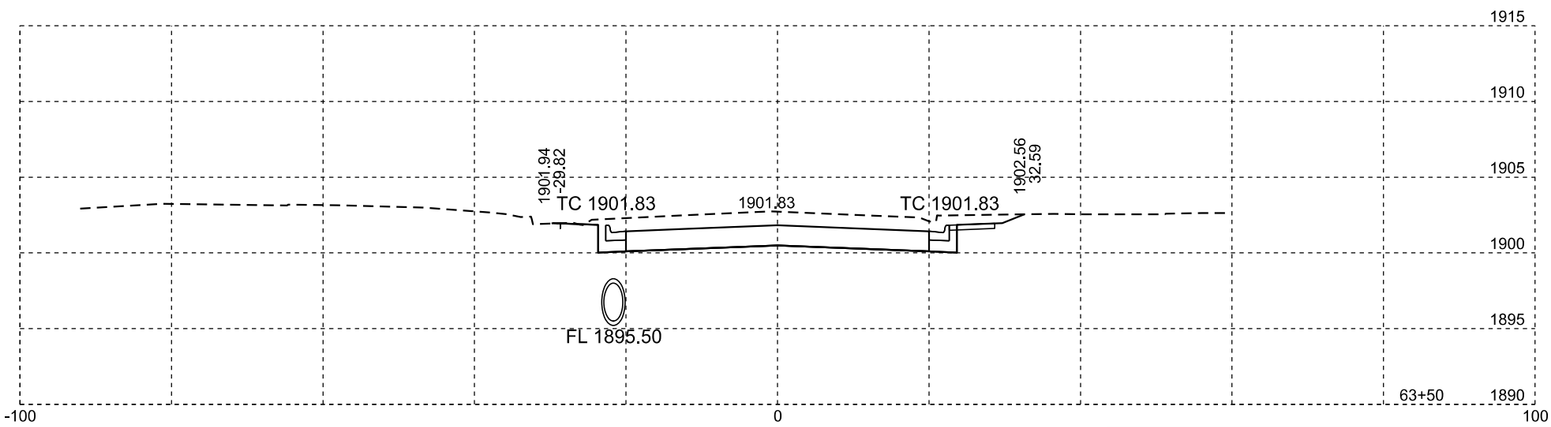

Plotting Date: 01/07/2015

STATE OF SOUTH DAKOTA	PROJECT	SHEET NO.	TOTAL SHEETS
	P 0020(117)254	X8	X38

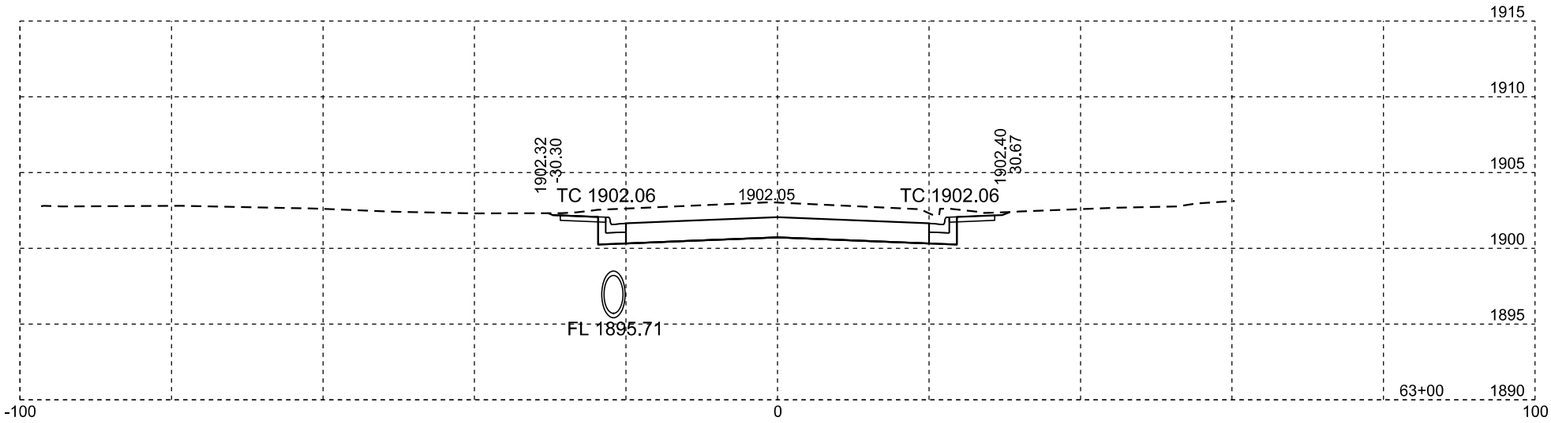

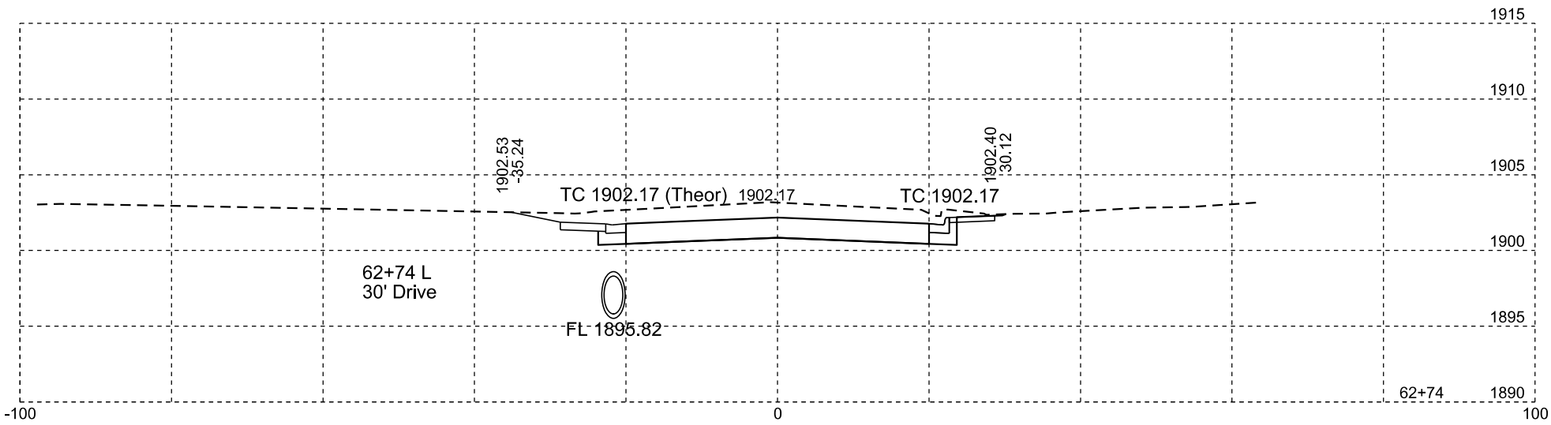

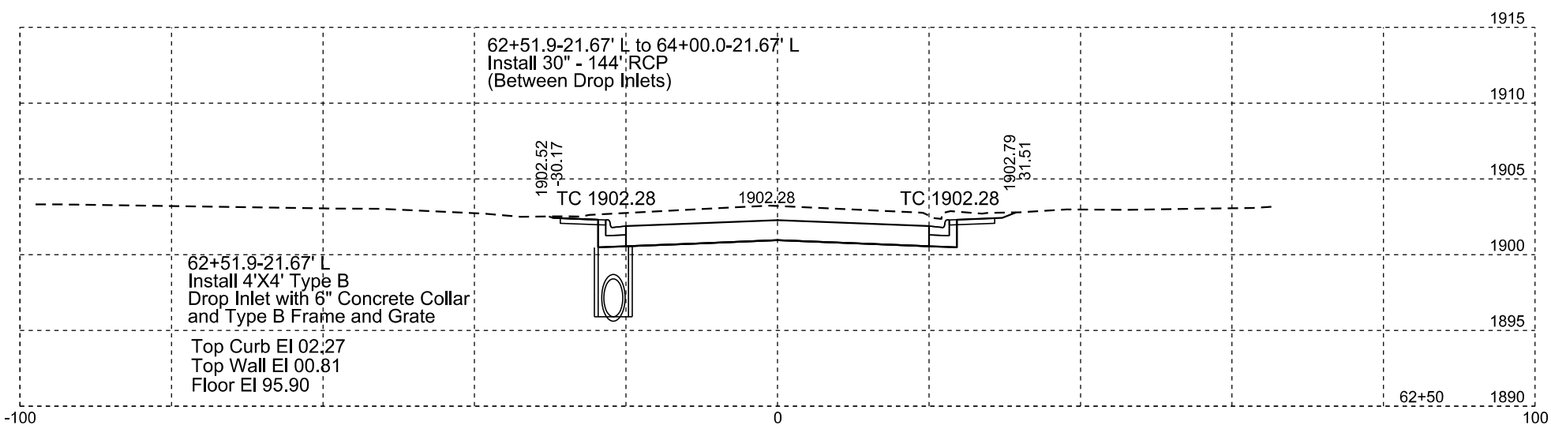

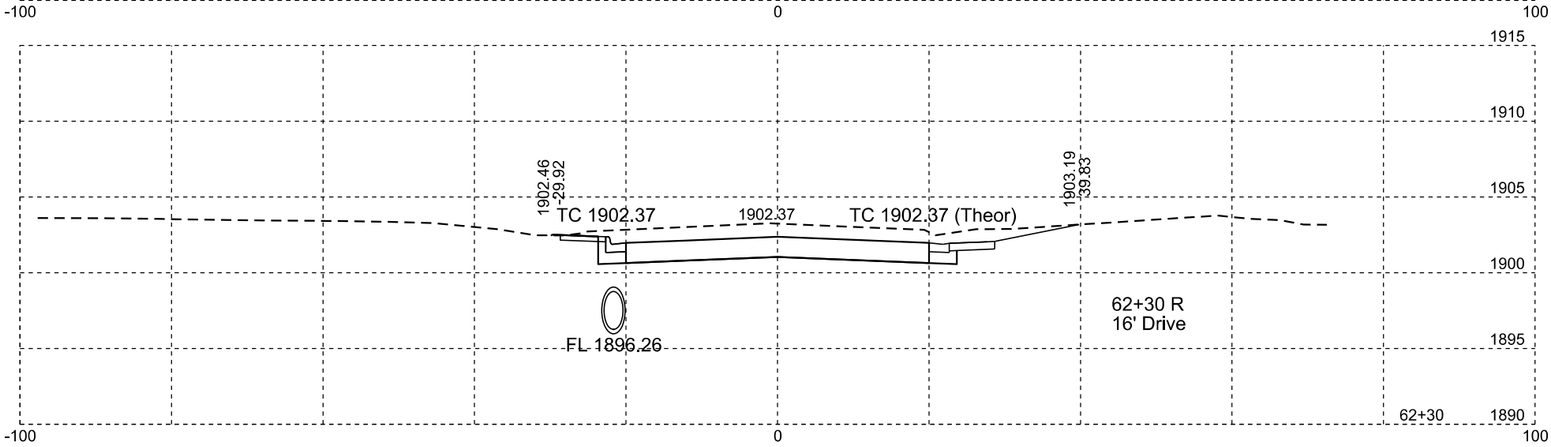

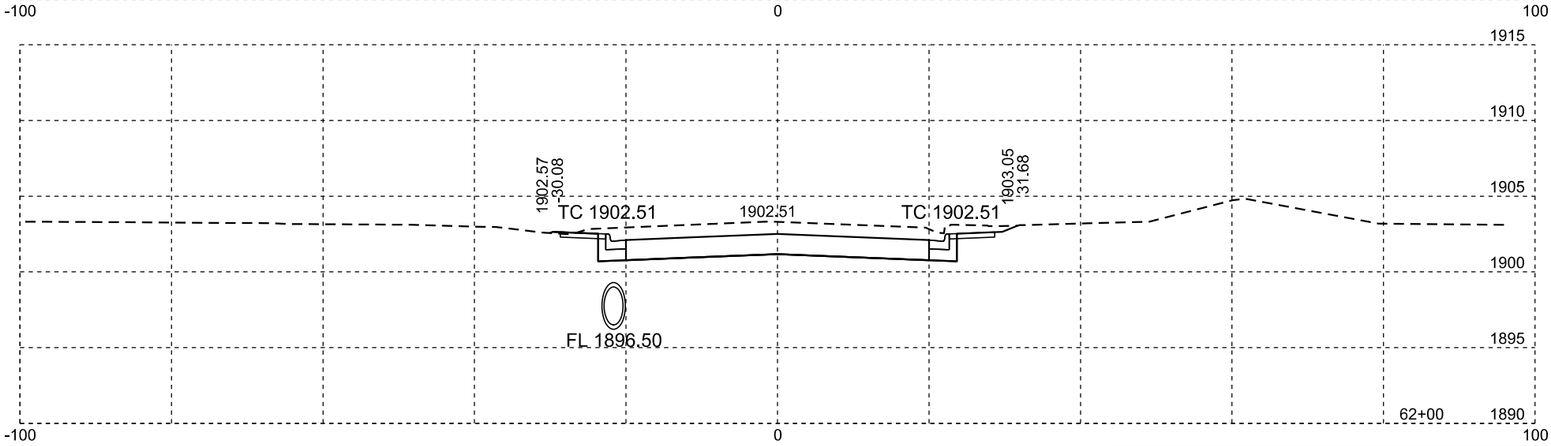

Plotting Date: 01/07/2015

STATE OF SOUTH DAKOTA	PROJECT	SHEET NO.	TOTAL SHEETS
	P 0020(117)254	X9	X38

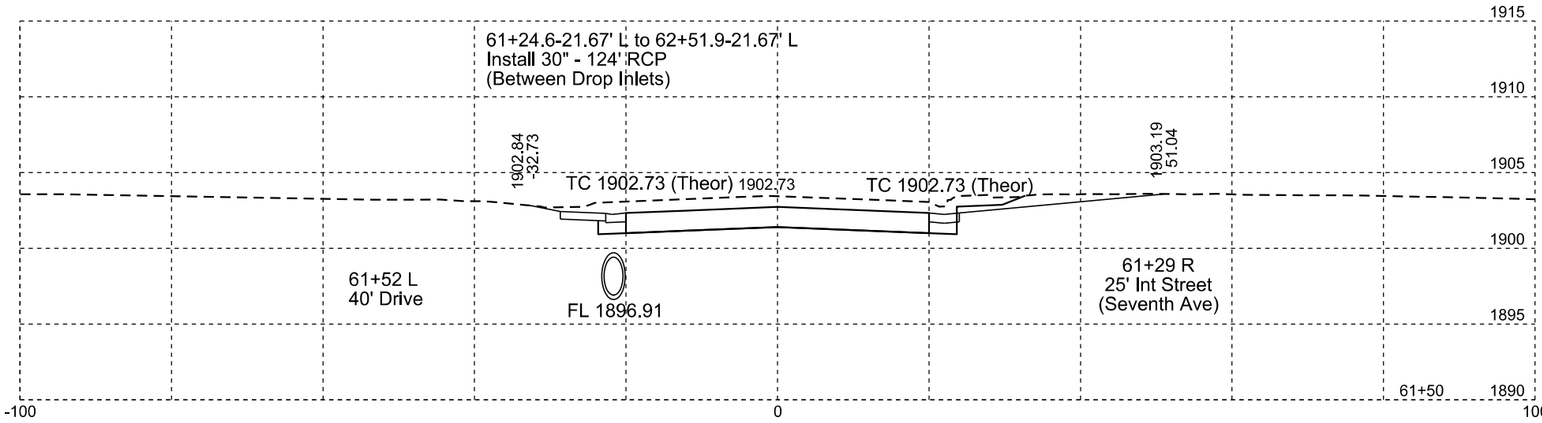

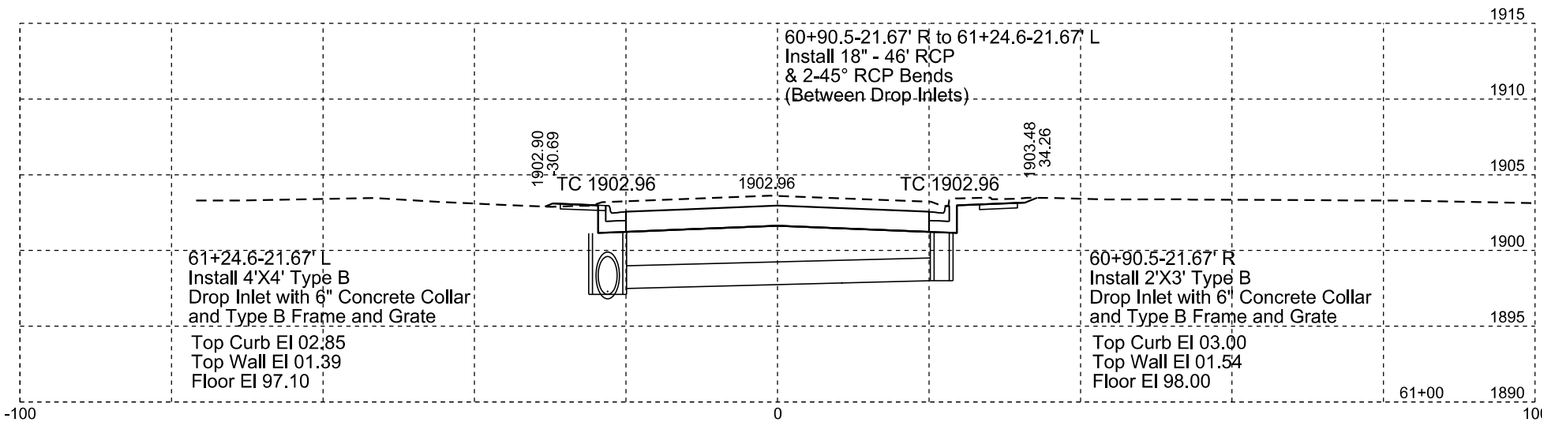

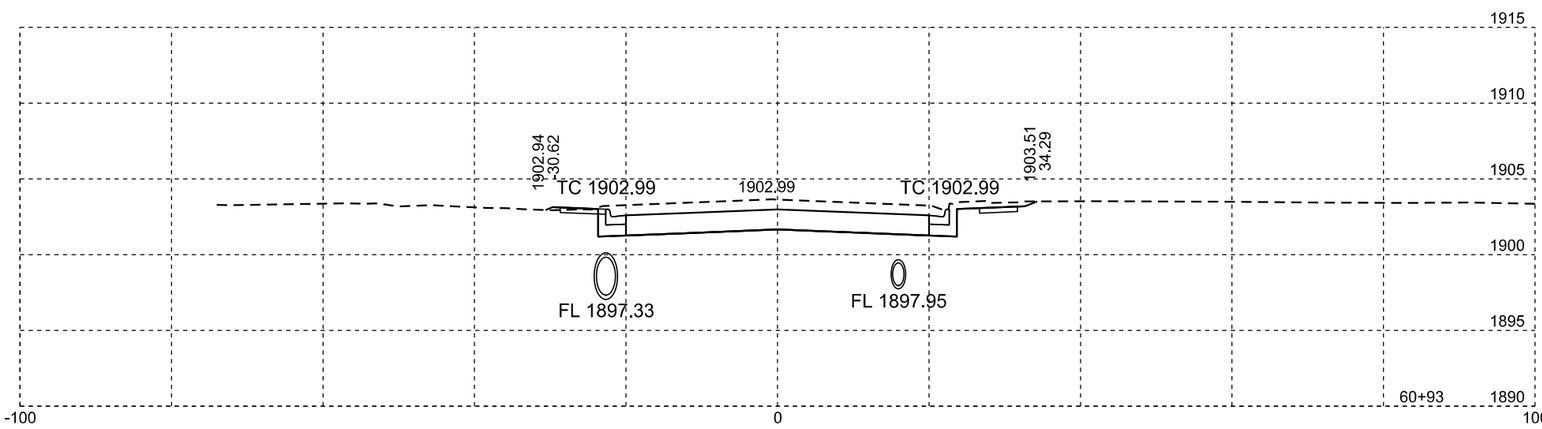

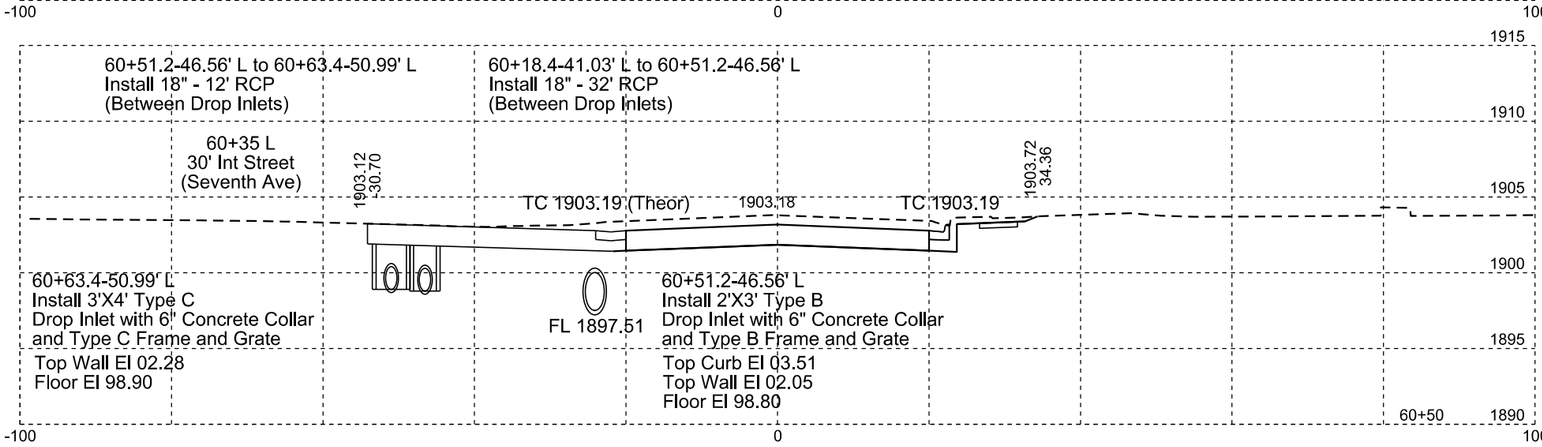

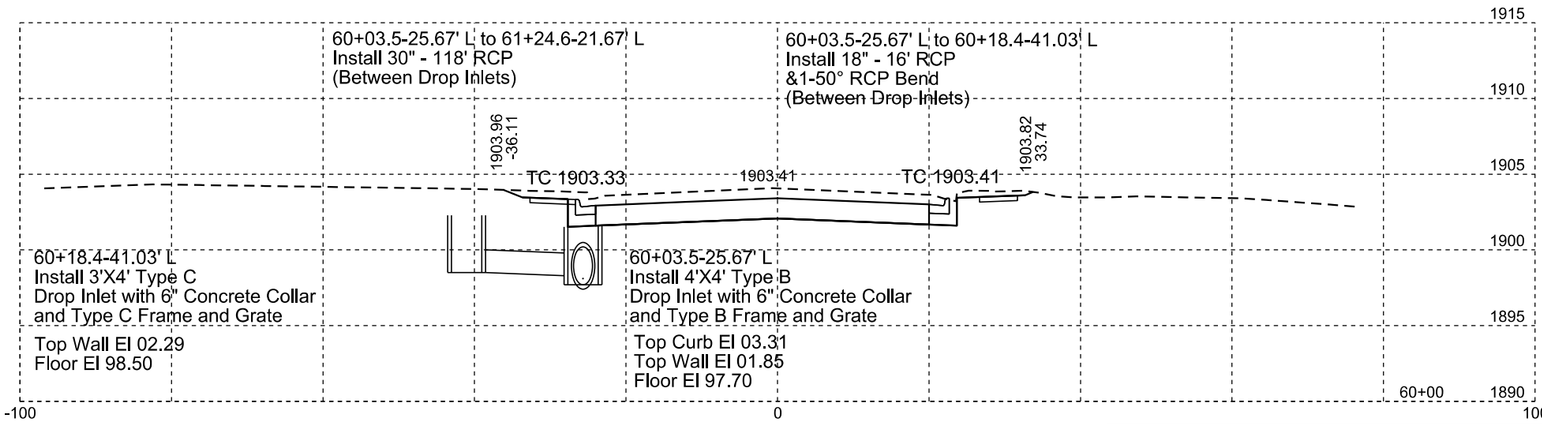

Plotting Date: 01/07/2015

STATE OF SOUTH DAKOTA	PROJECT	SHEET NO.	TOTAL SHEETS
	P 0020(117)254	X10	X38

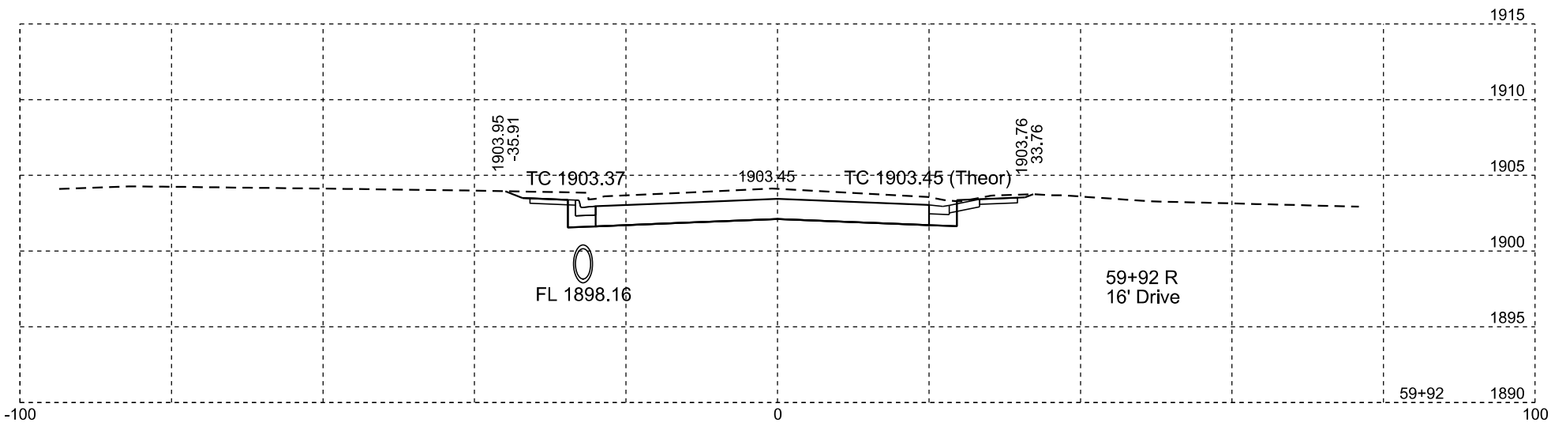

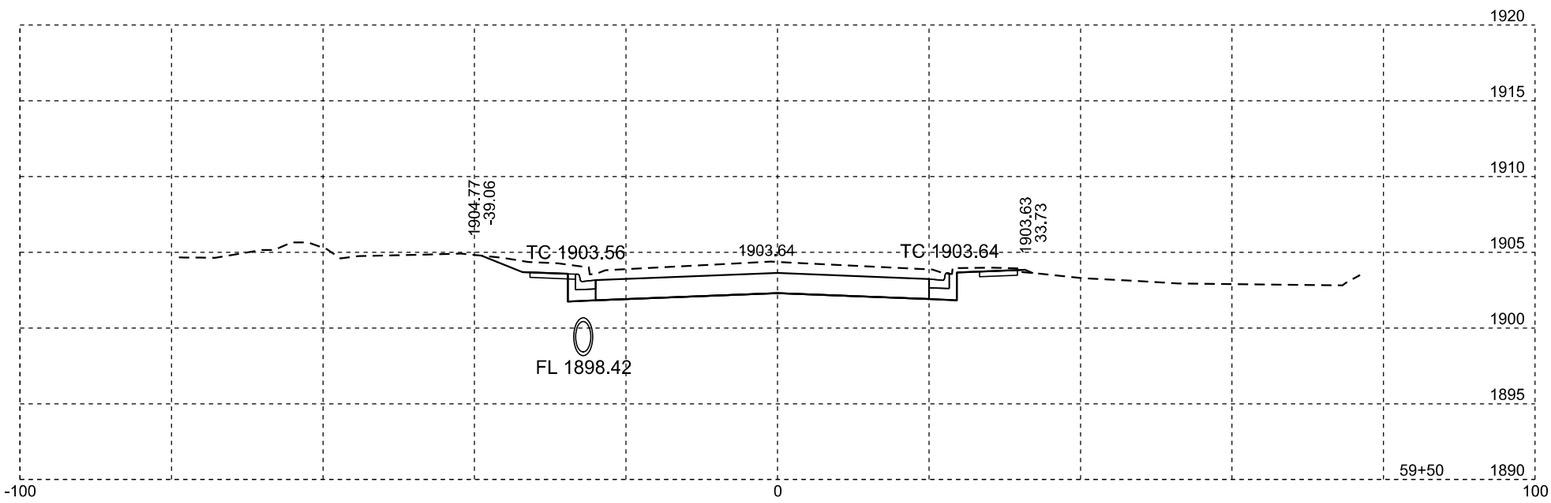

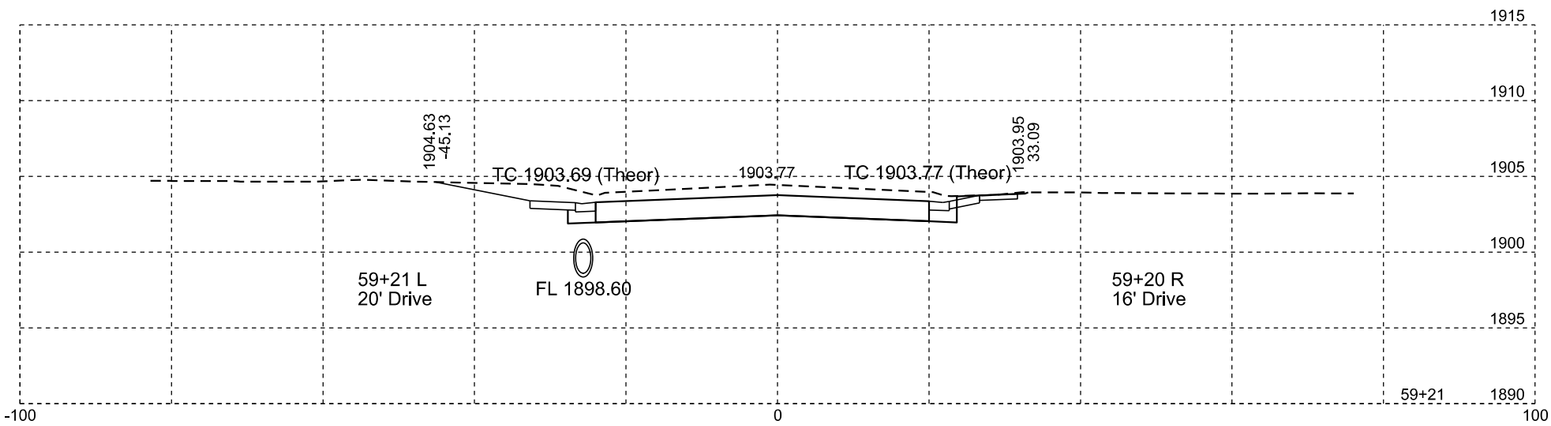

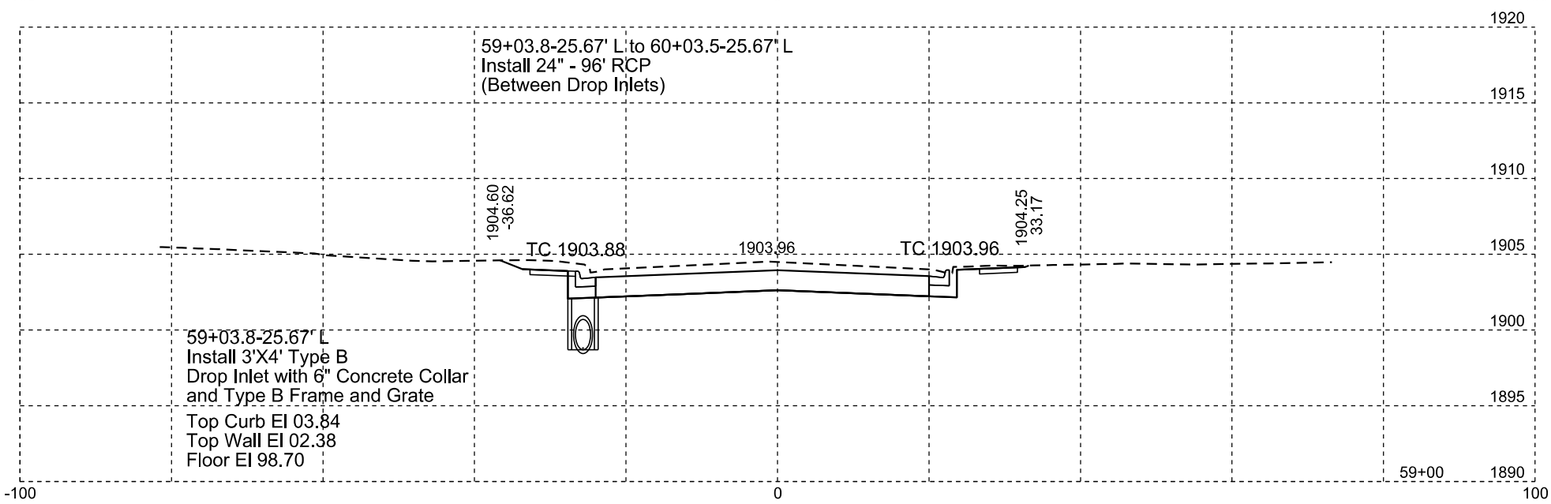

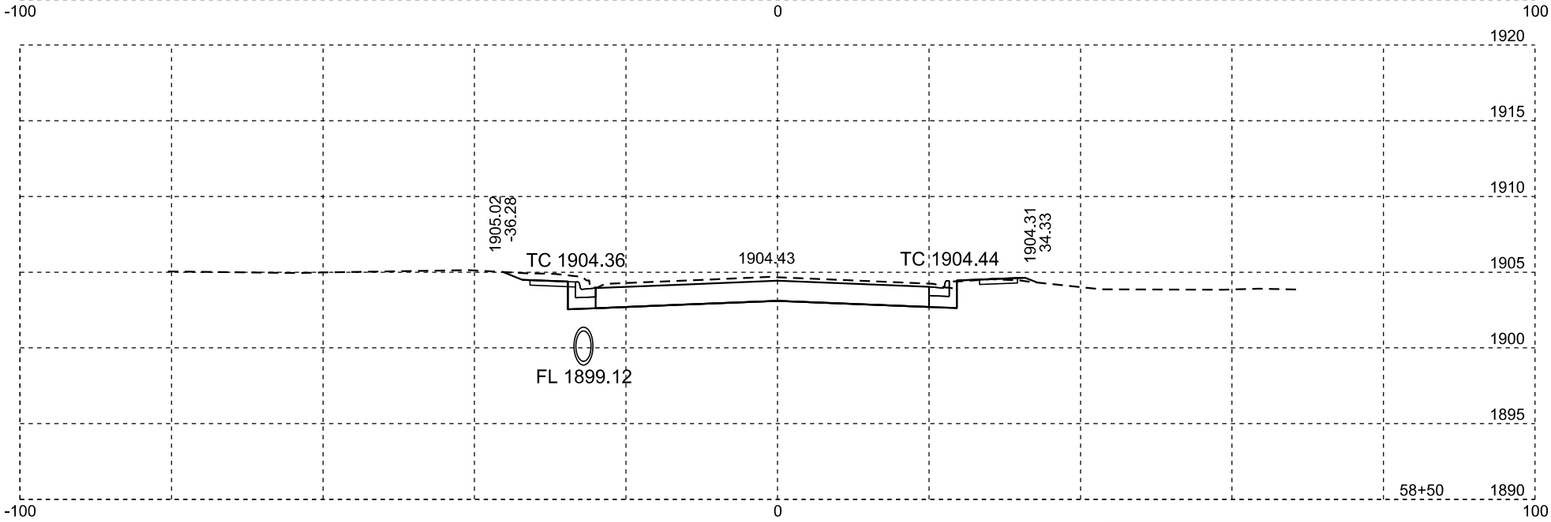

Plotting Date: 01/07/2015

STATE OF SOUTH DAKOTA	PROJECT	SHEET NO.	TOTAL SHEETS
	P 0020(117)254	X11	X38

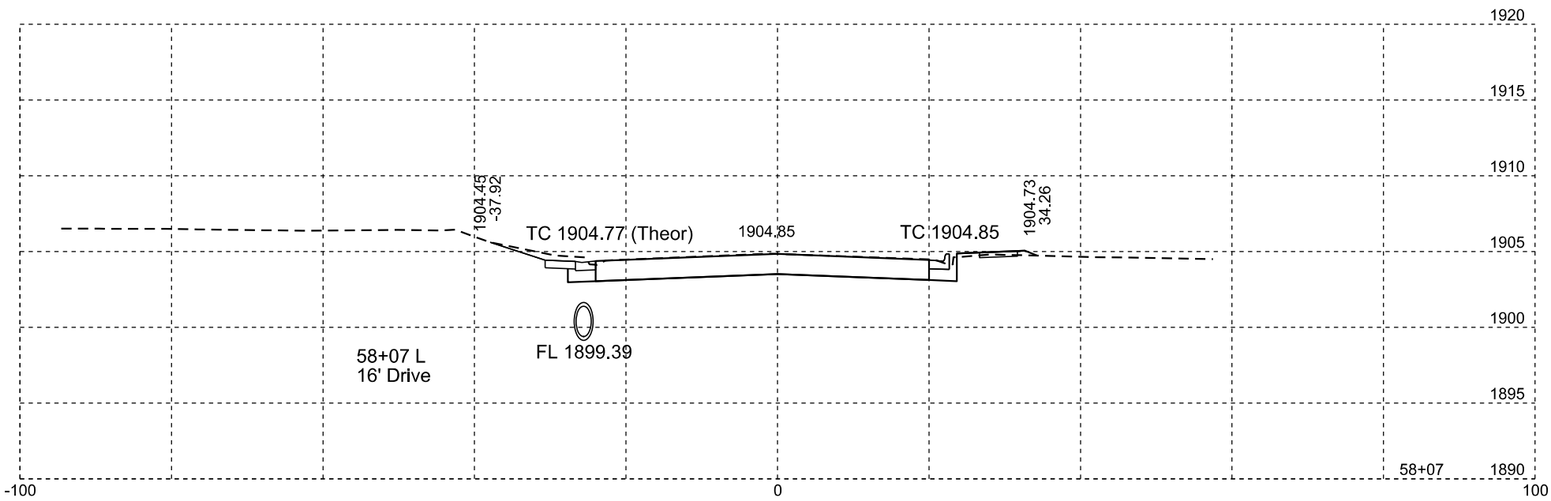

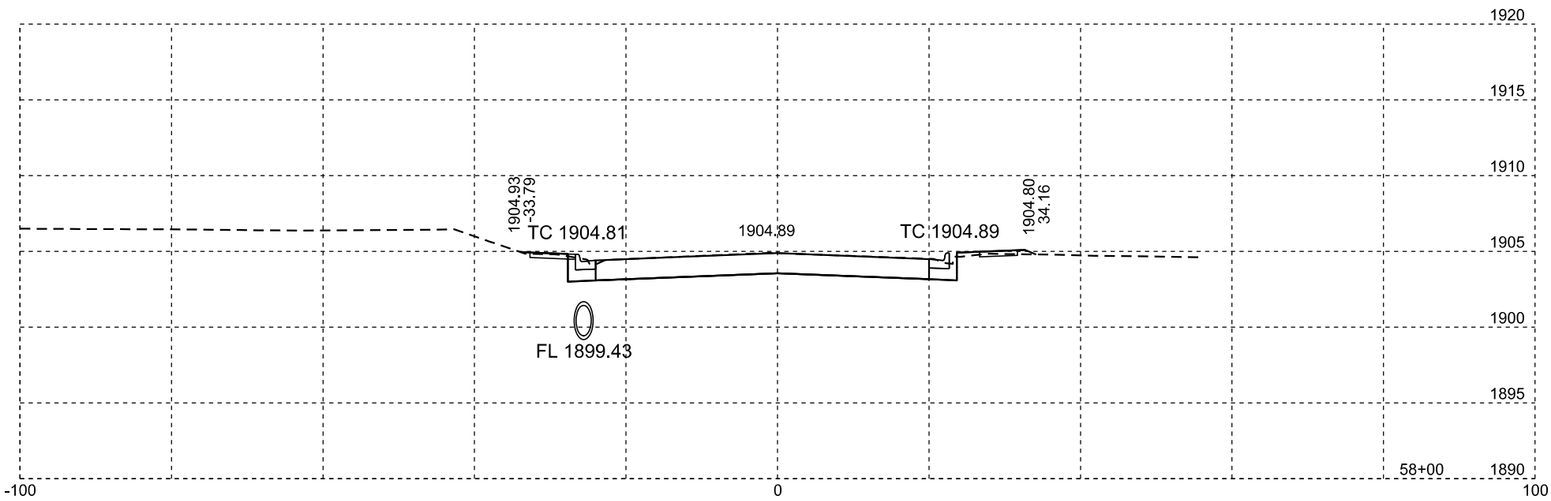

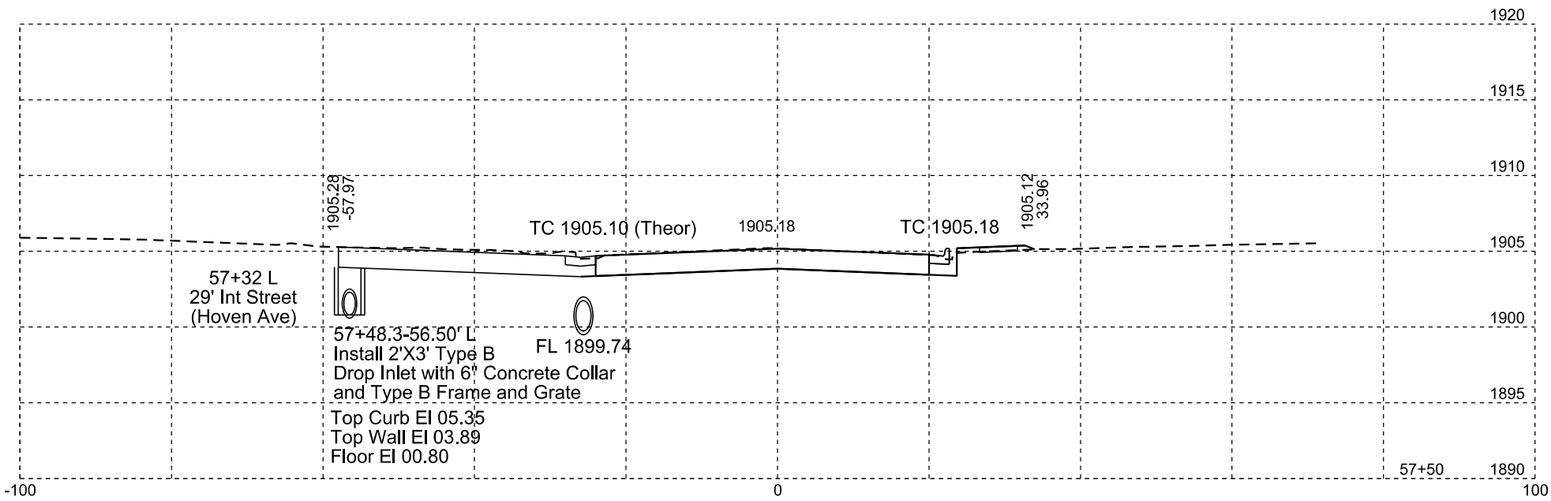

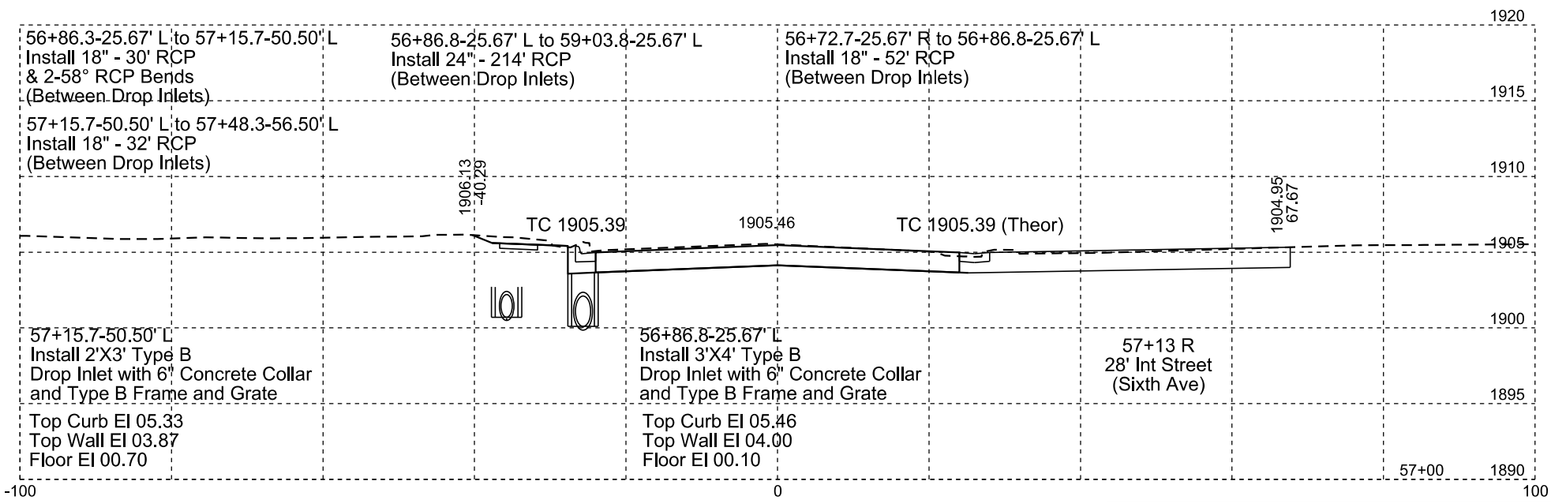

Plotting Date: 07/07/2015

STATE OF SOUTH DAKOTA	PROJECT	SHEET NO.	TOTAL SHEETS
	P 0020(117)254	X12	X38

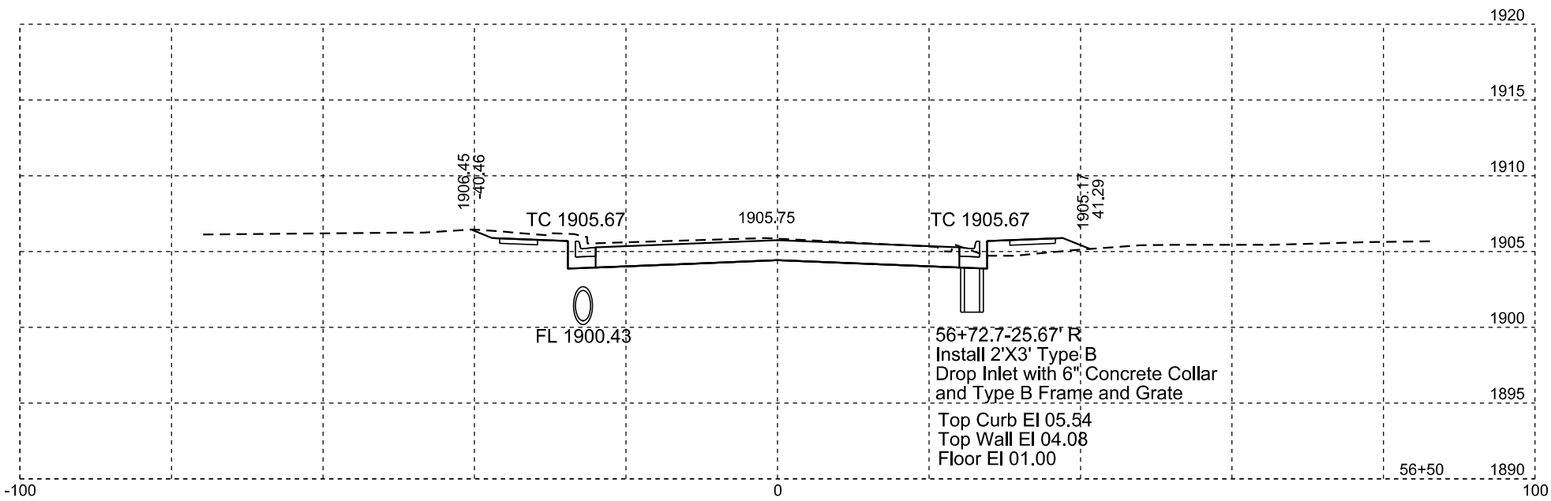

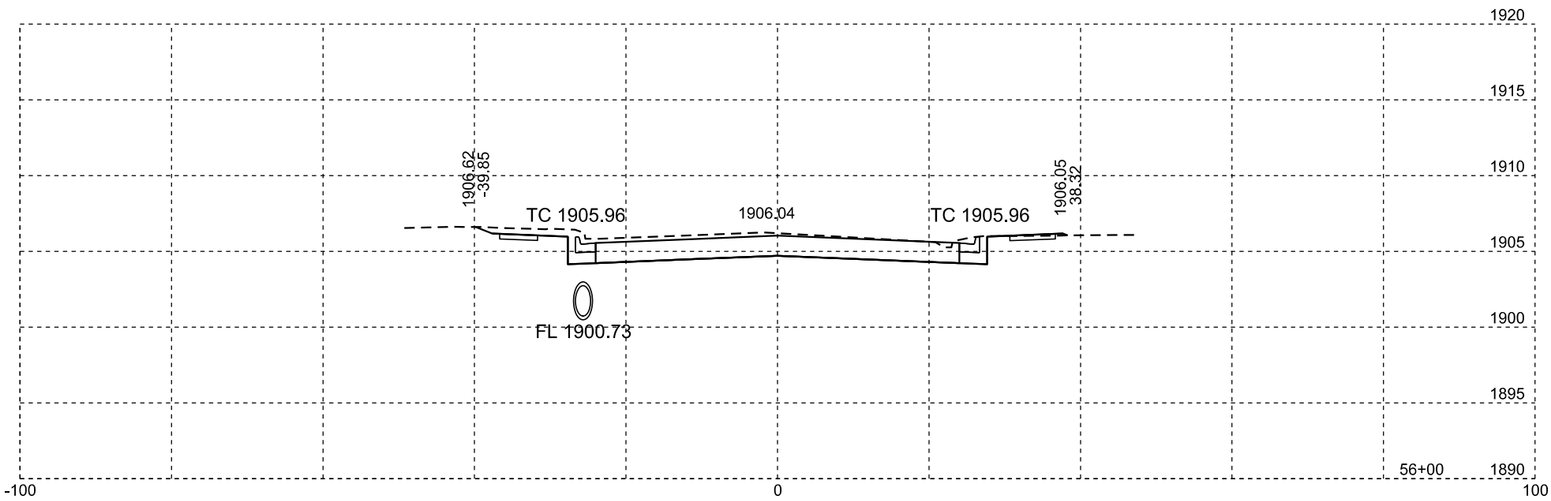

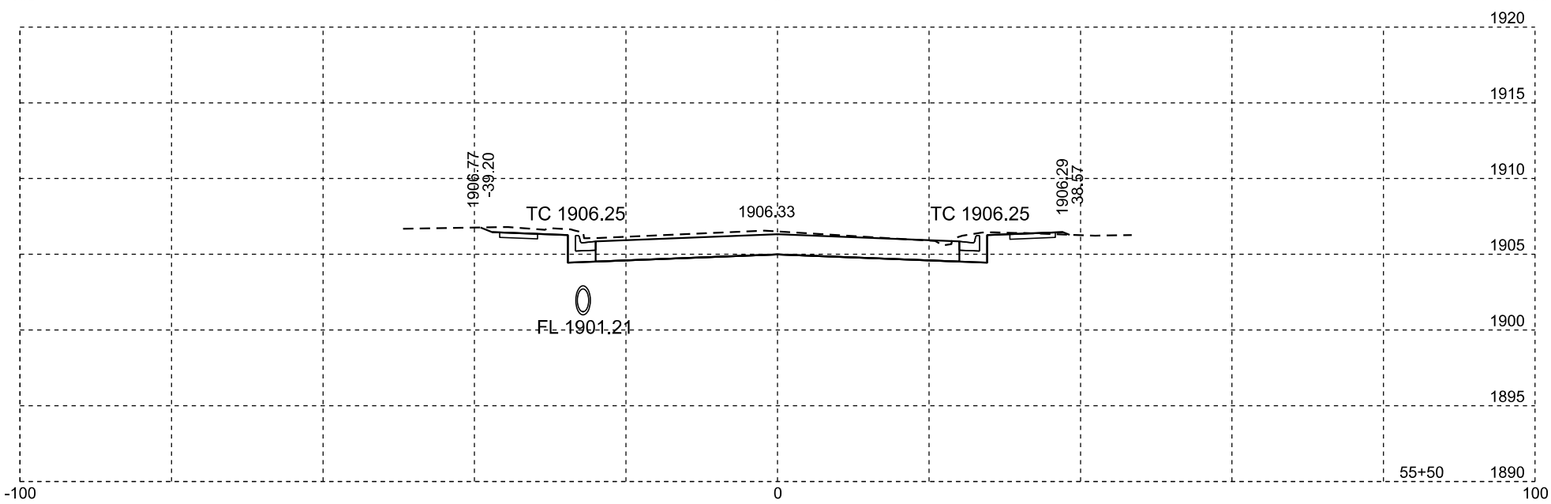

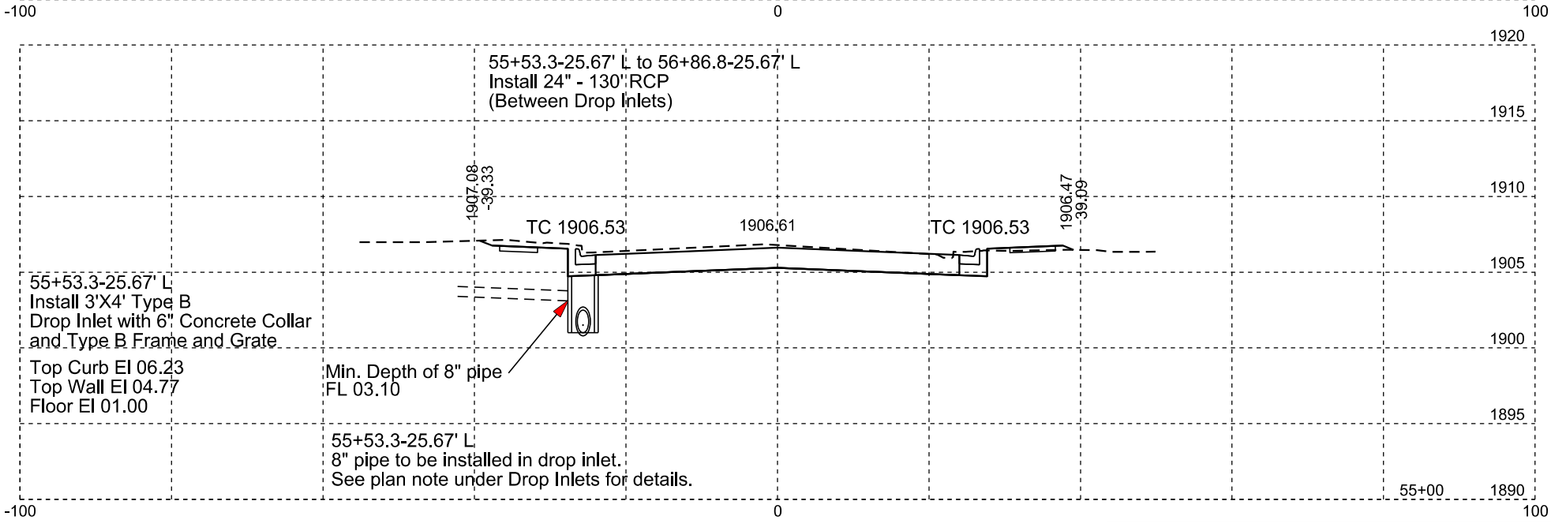

Plotting Date: 07/07/2015

STATE OF SOUTH DAKOTA	PROJECT	SHEET NO.	TOTAL SHEETS
	P 0020(117)254	X13	X38

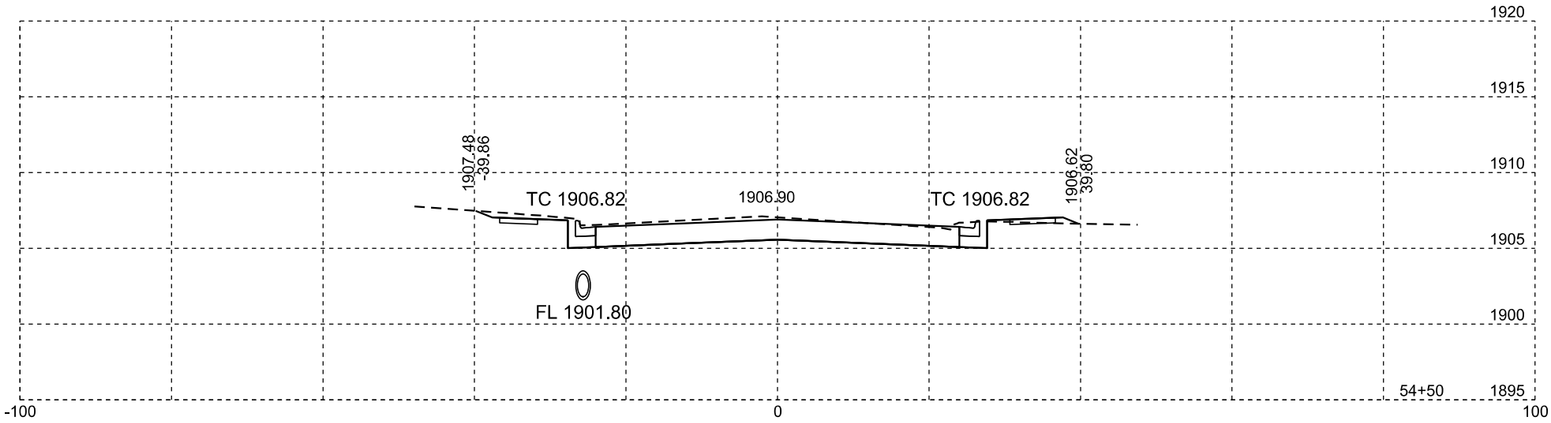

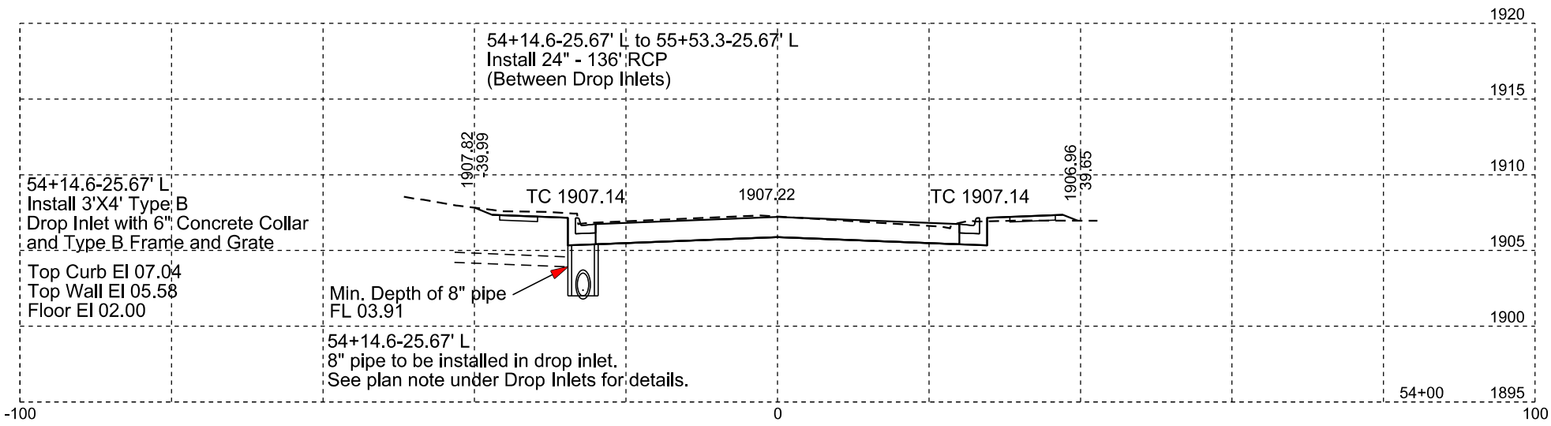

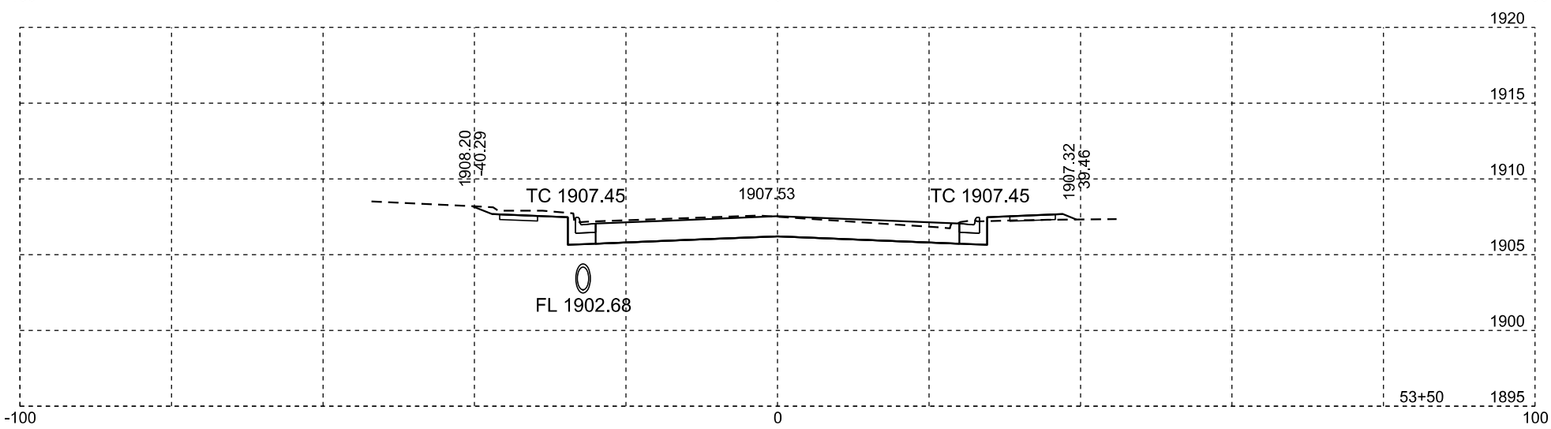

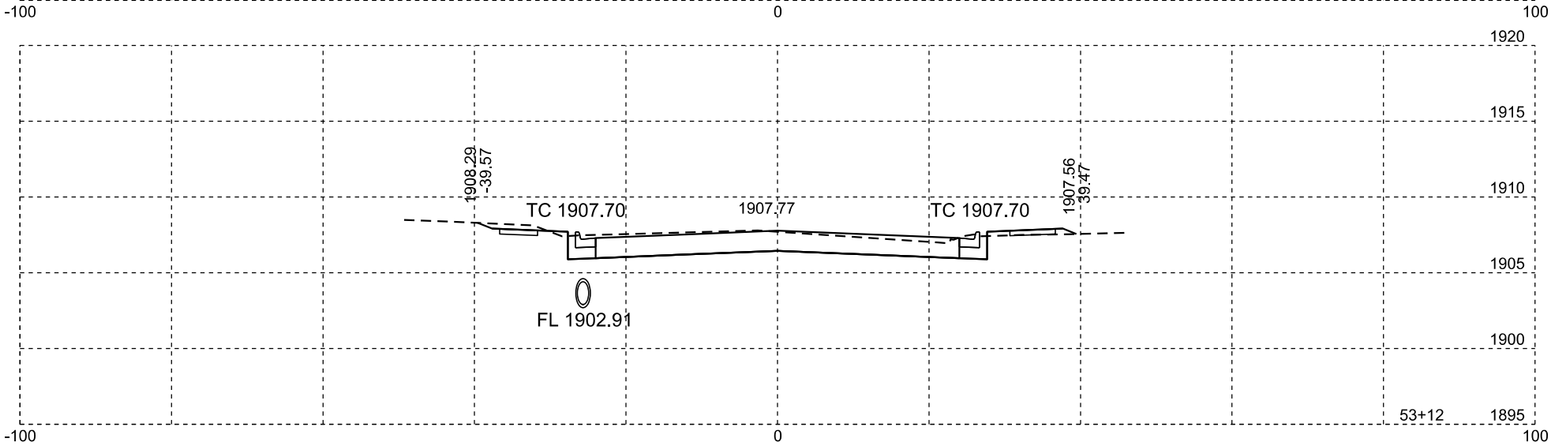

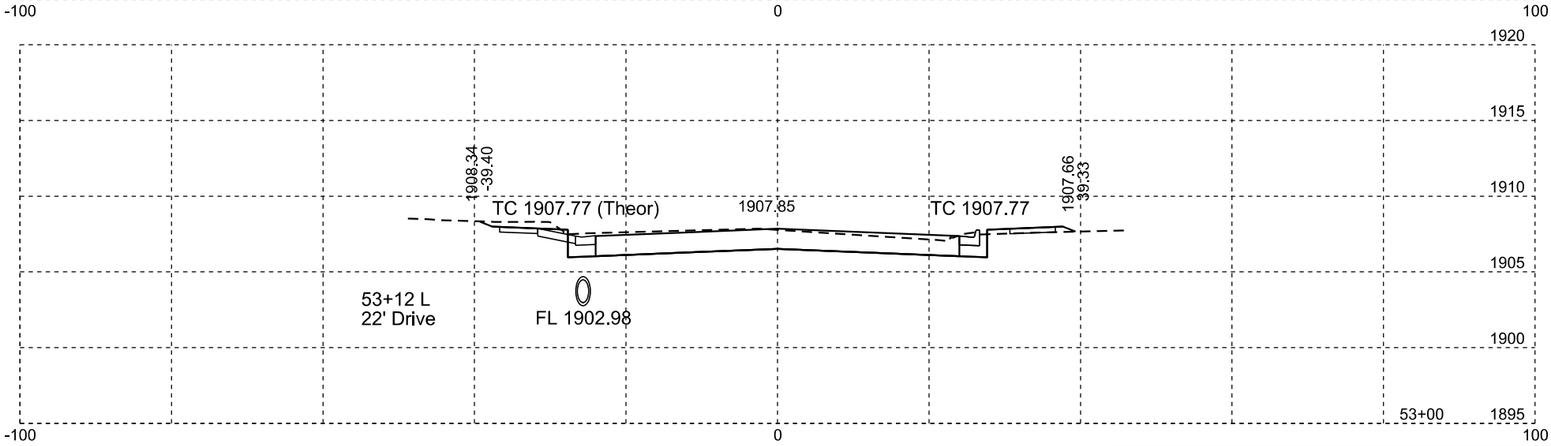

Plotting Date: 07/07/2015

STATE OF SOUTH DAKOTA	PROJECT	SHEET NO.	TOTAL SHEETS
	P 0020(117)254	X14	X38

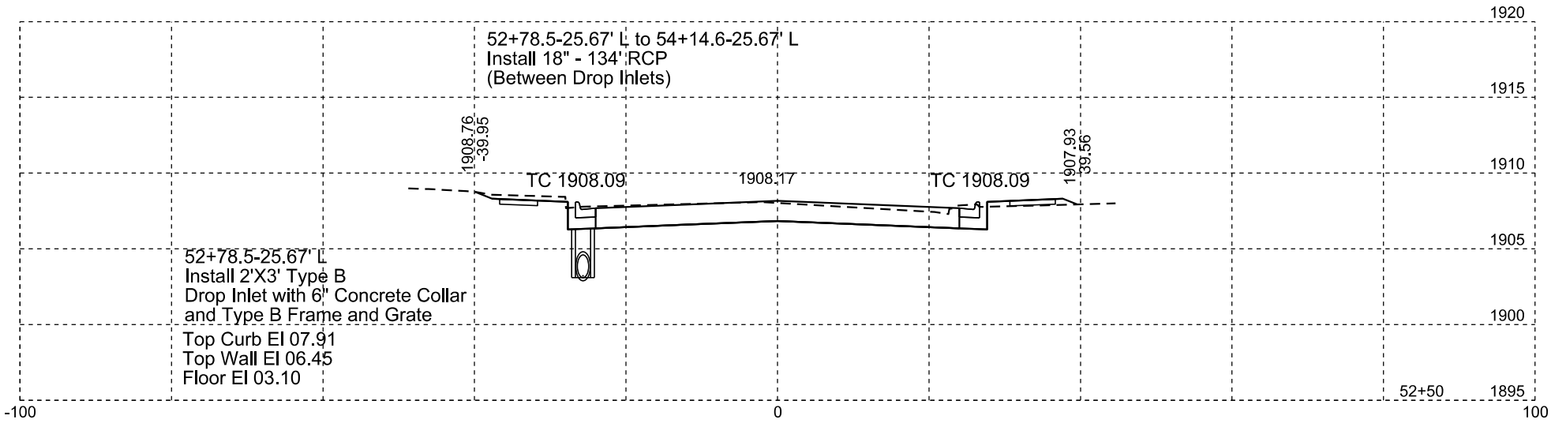

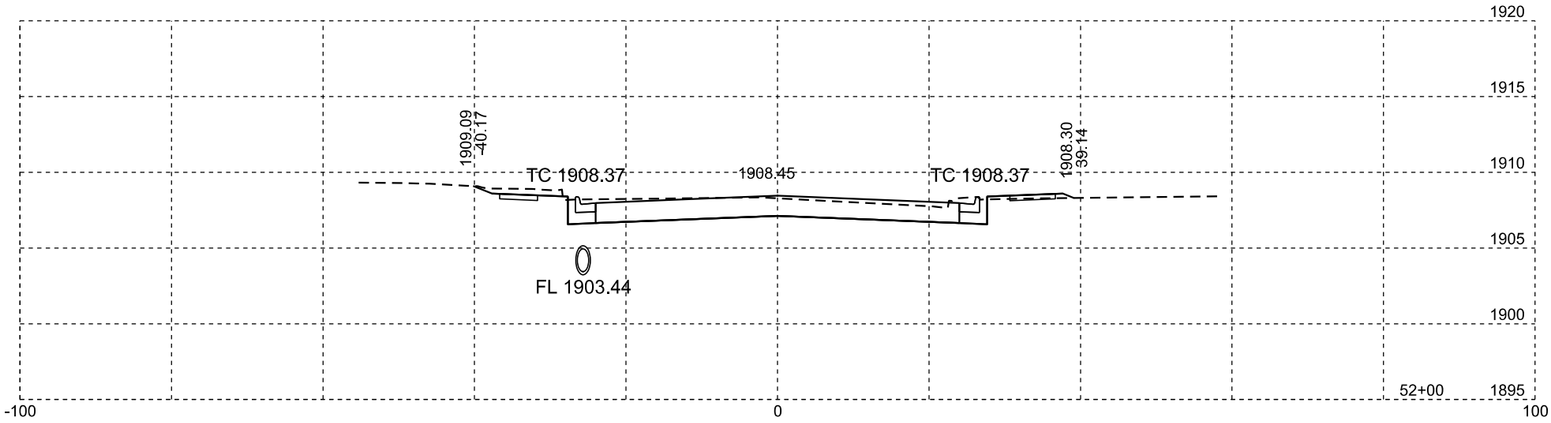

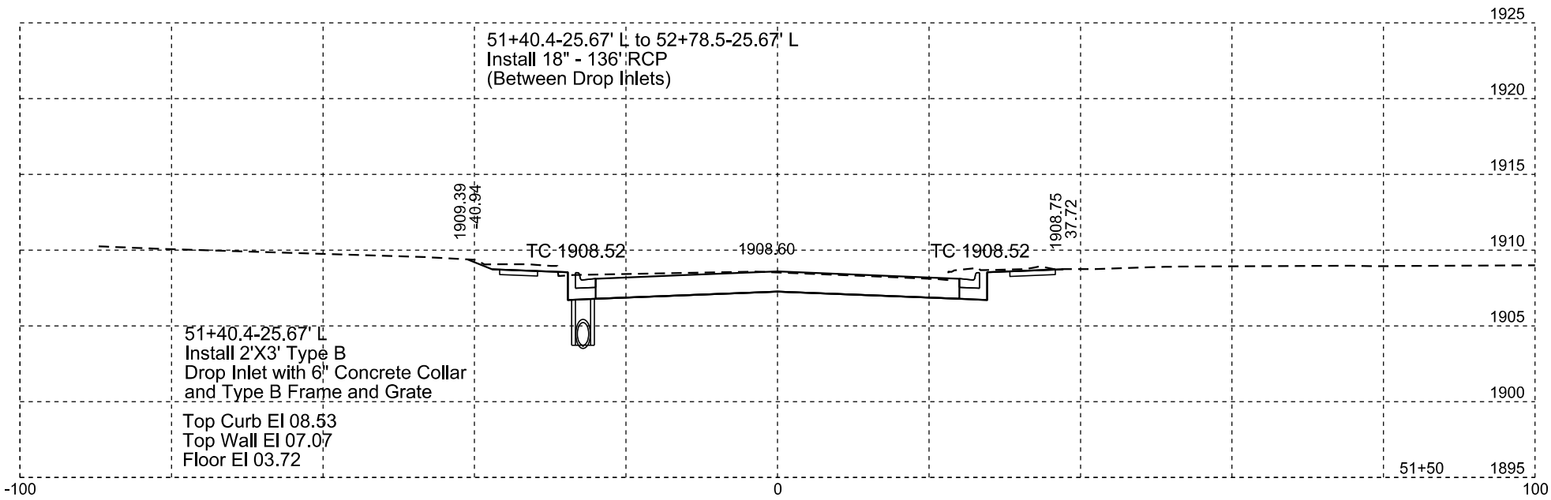

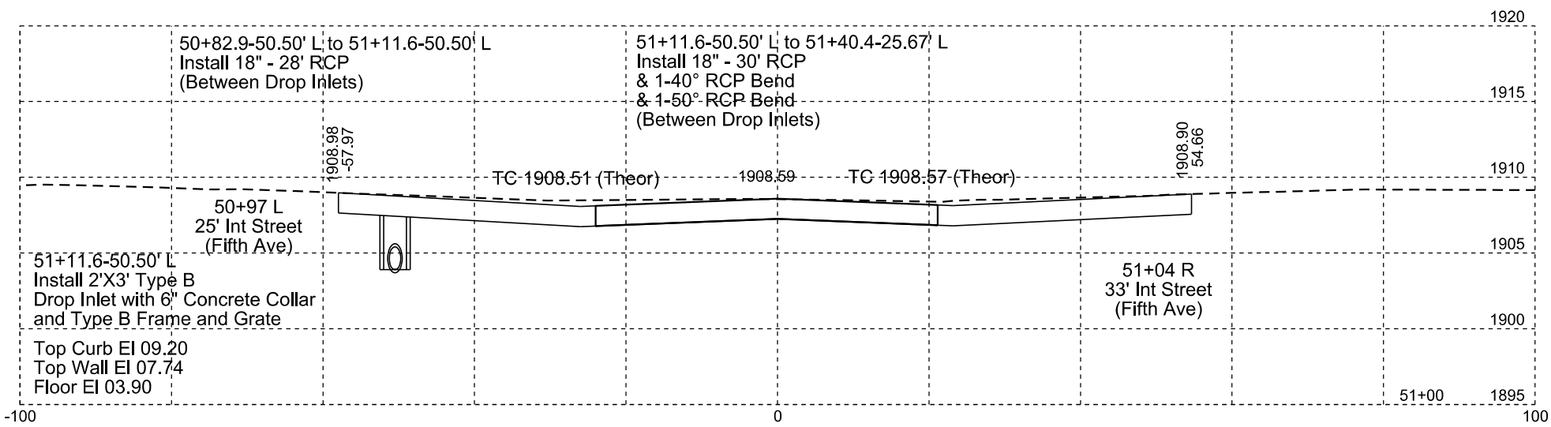

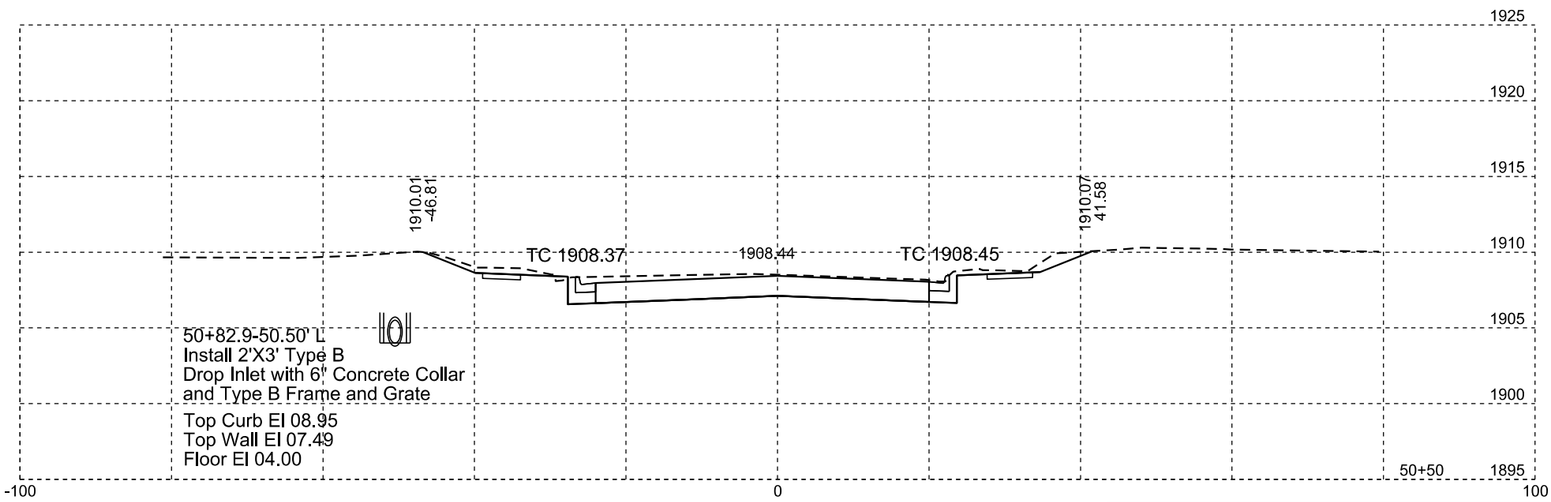

Plotting Date: 07/07/2015

STATE OF SOUTH DAKOTA	PROJECT	SHEET NO.	TOTAL SHEETS
	P 0020(117)254	X15	X38

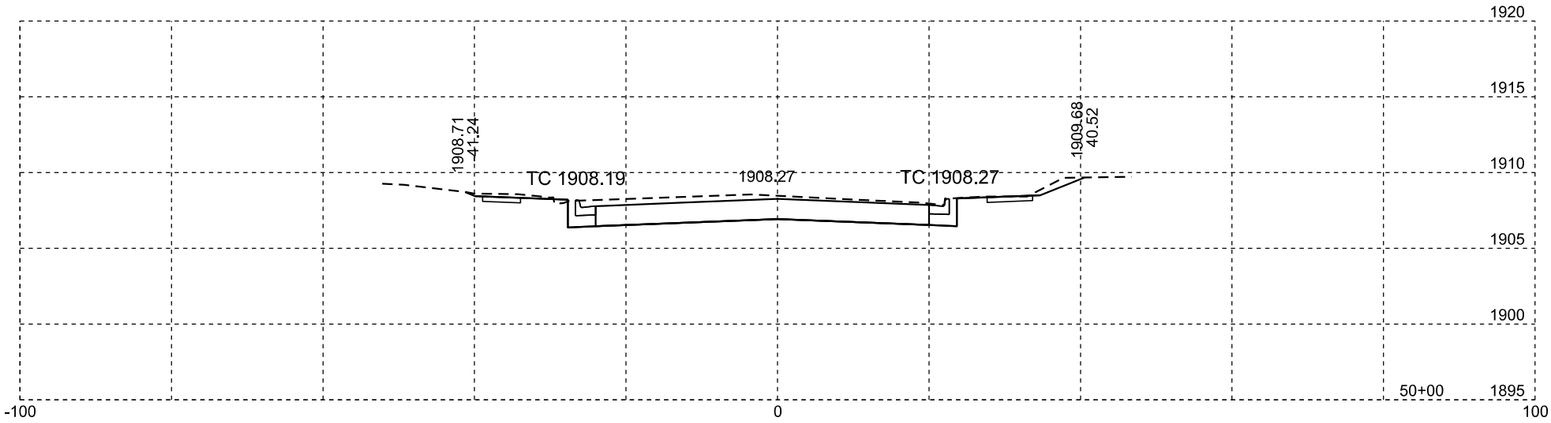

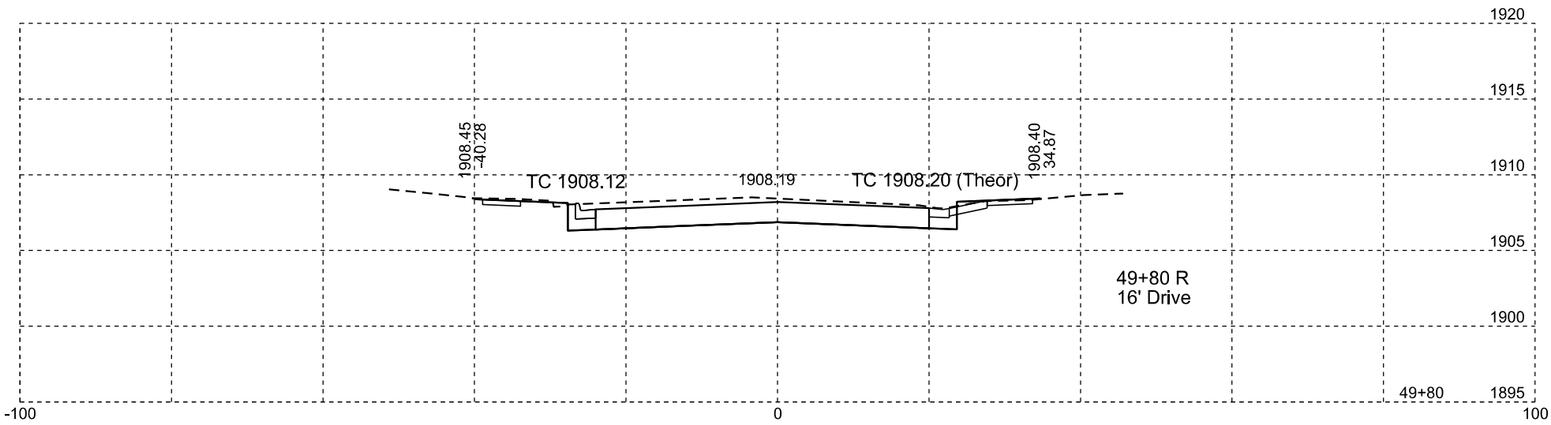

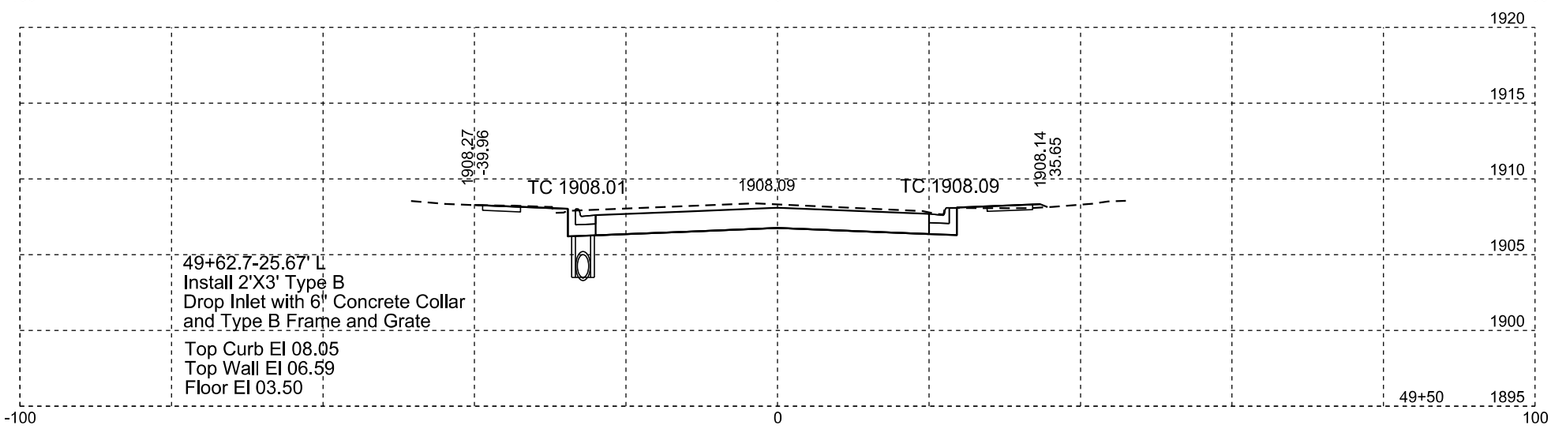

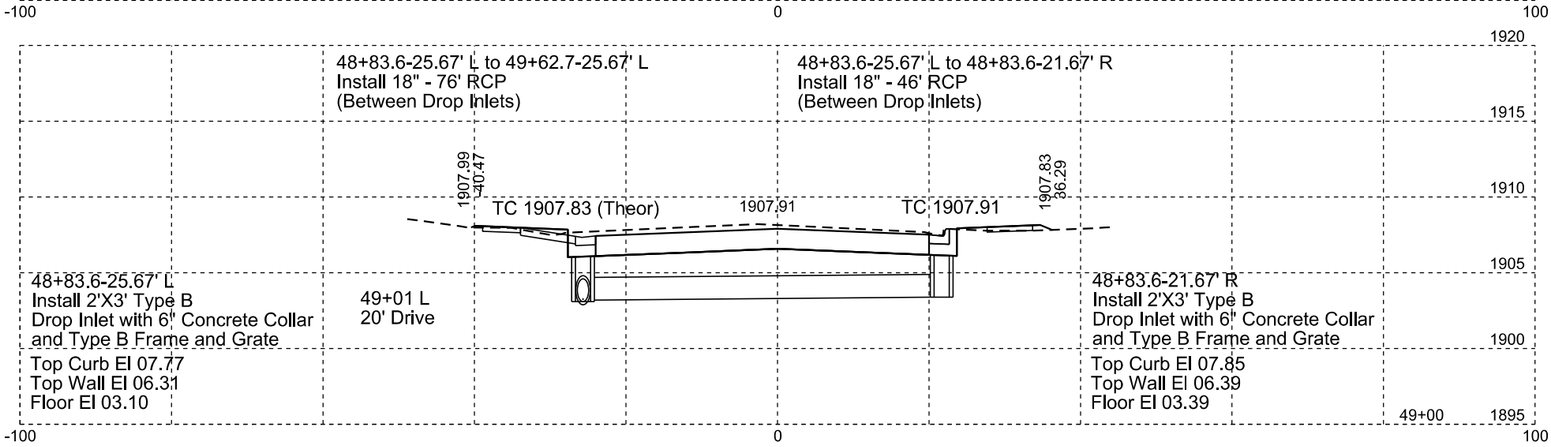

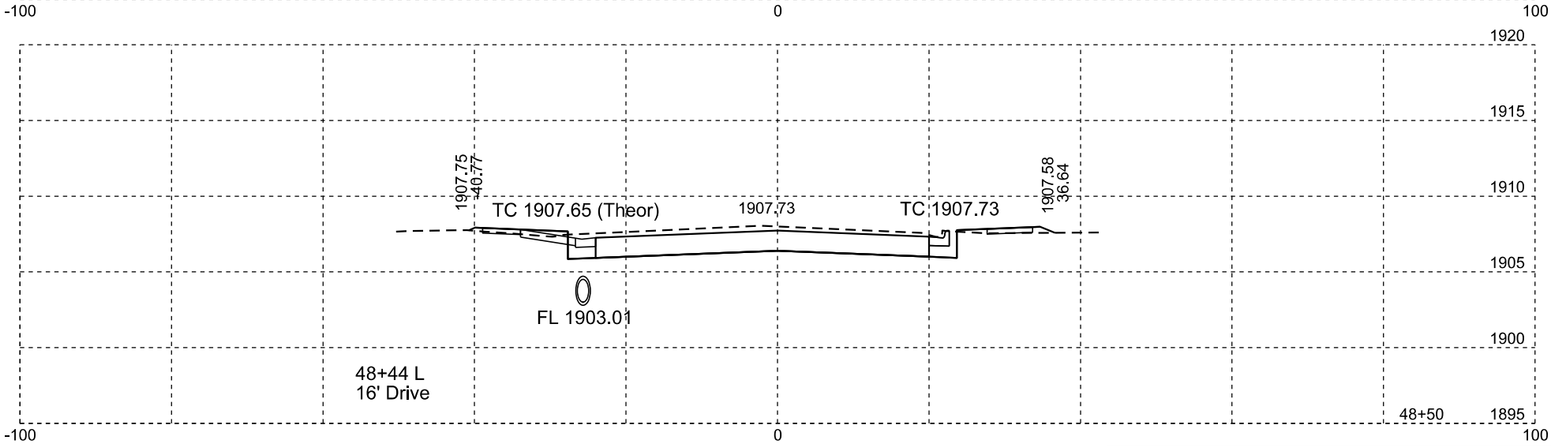

Plotting Date: 01/07/2015

STATE OF SOUTH DAKOTA	PROJECT	SHEET NO.	TOTAL SHEETS
	P 0020(117)254	X16	X38

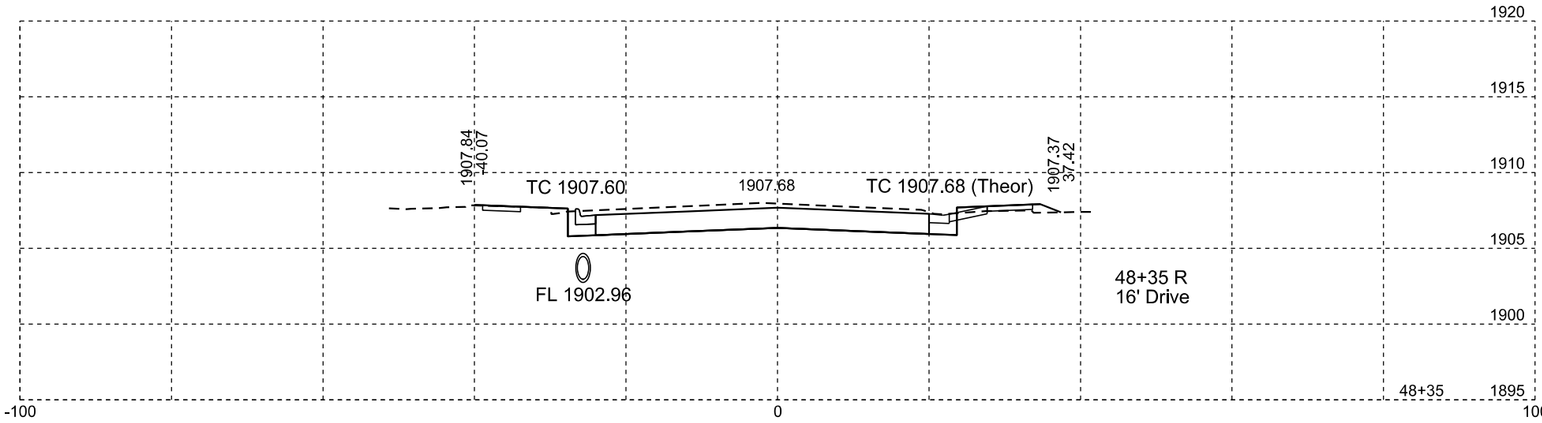

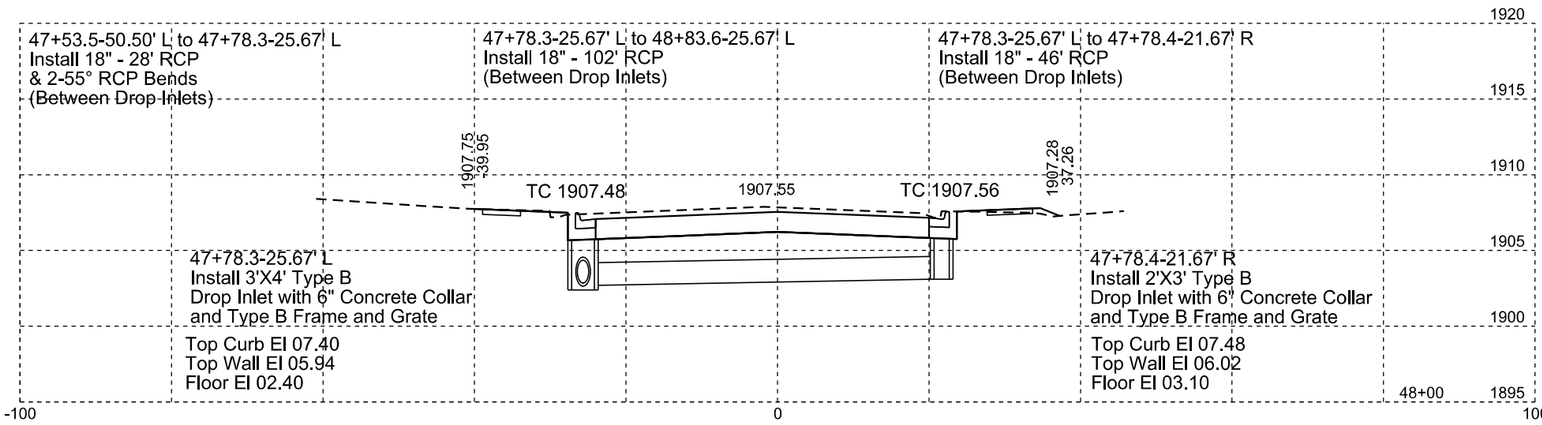

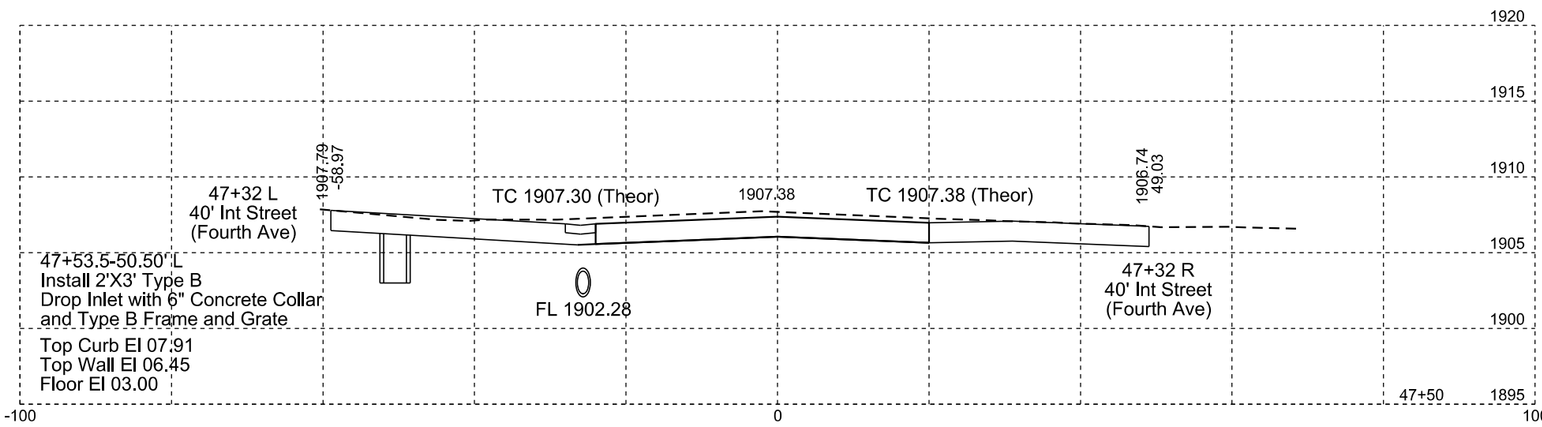

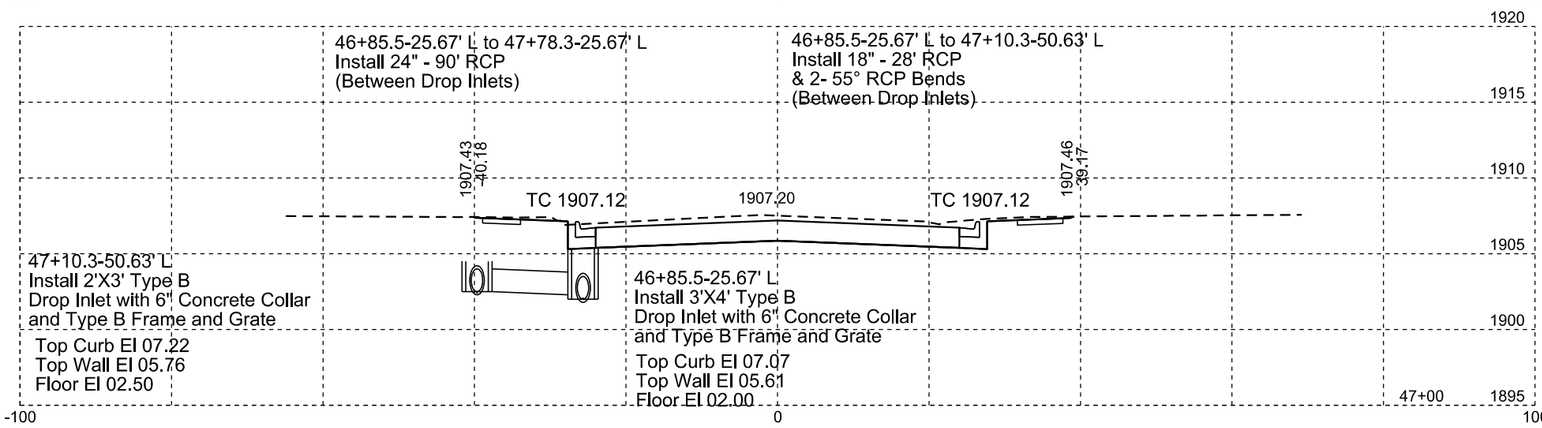

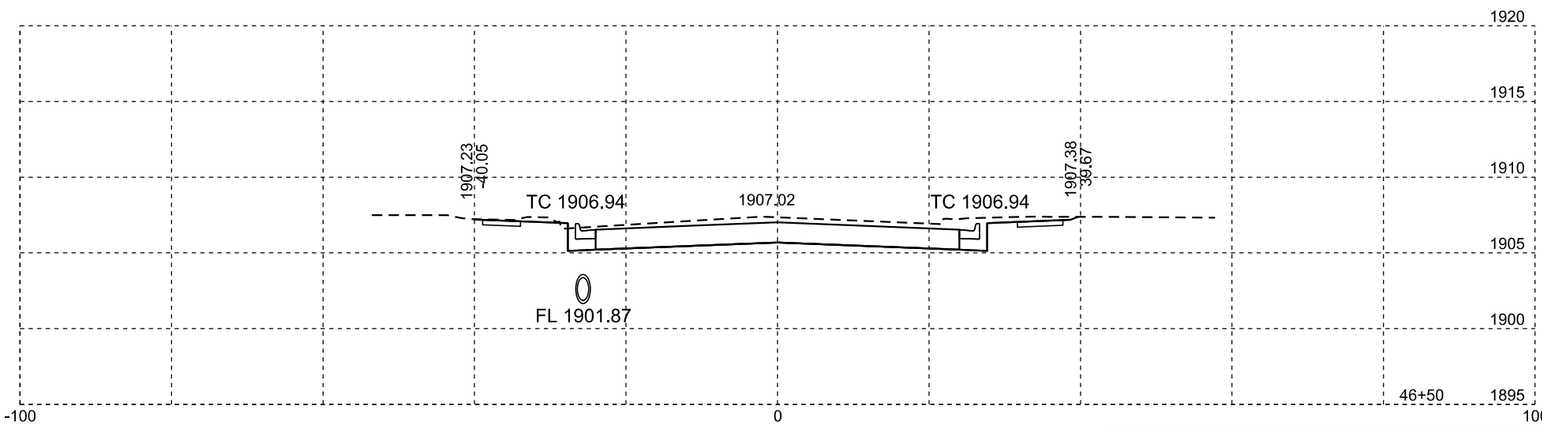

Plotting Date: 01/07/2015

STATE OF SOUTH DAKOTA	PROJECT	SHEET NO.	TOTAL SHEETS
	P 0020(117)254	X17	X38

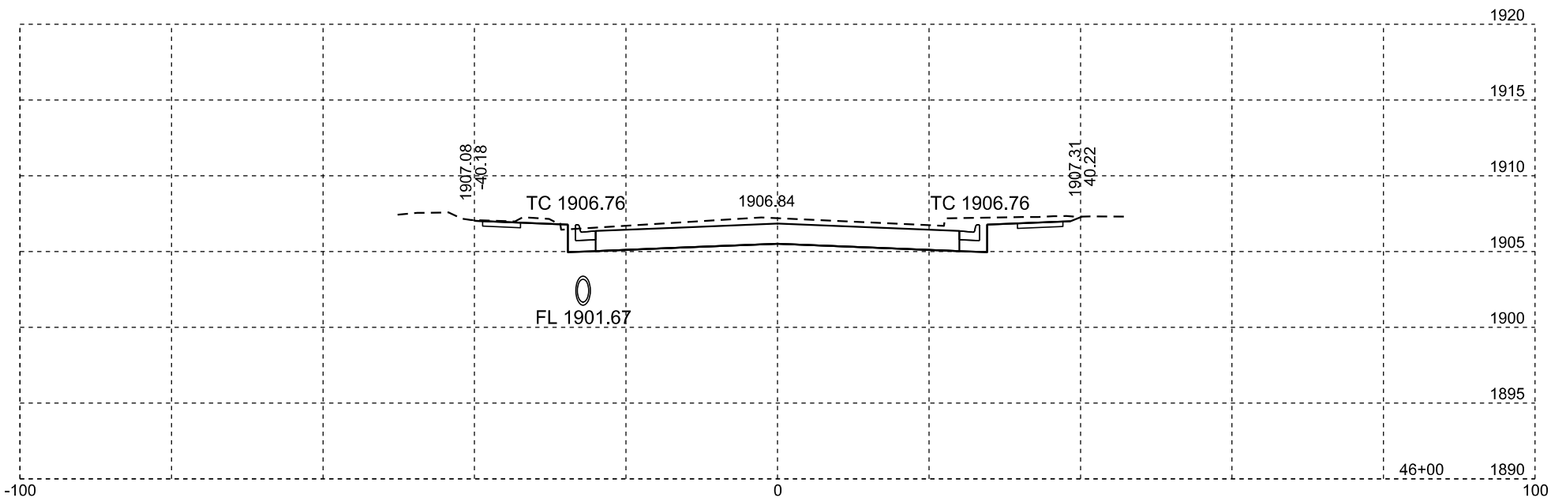

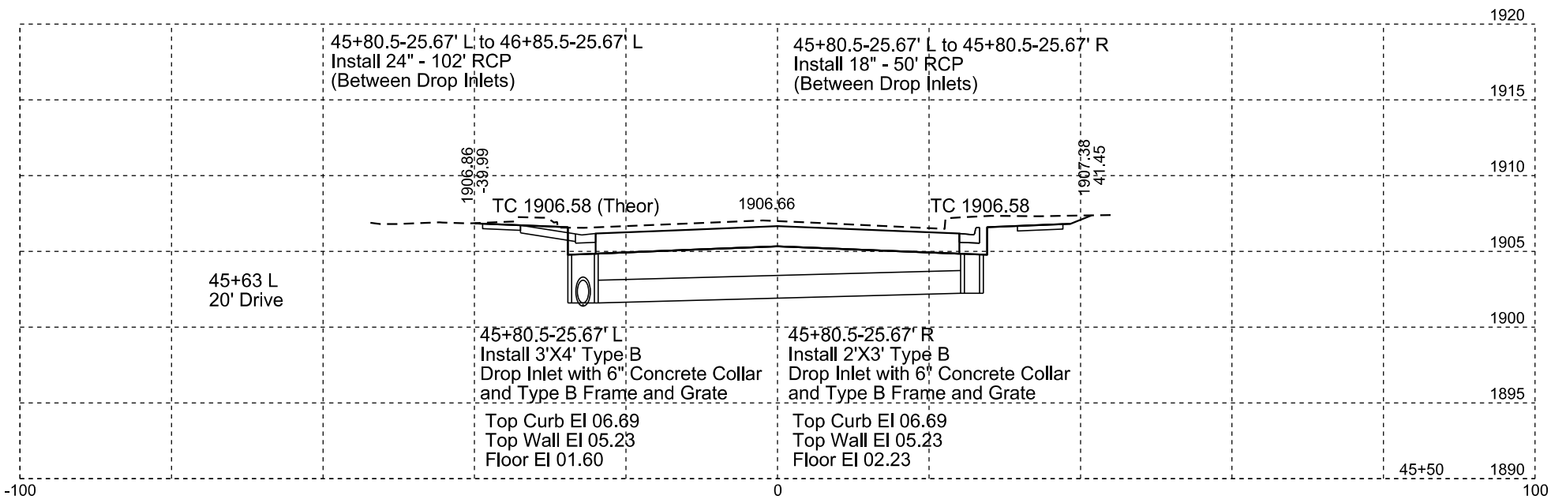

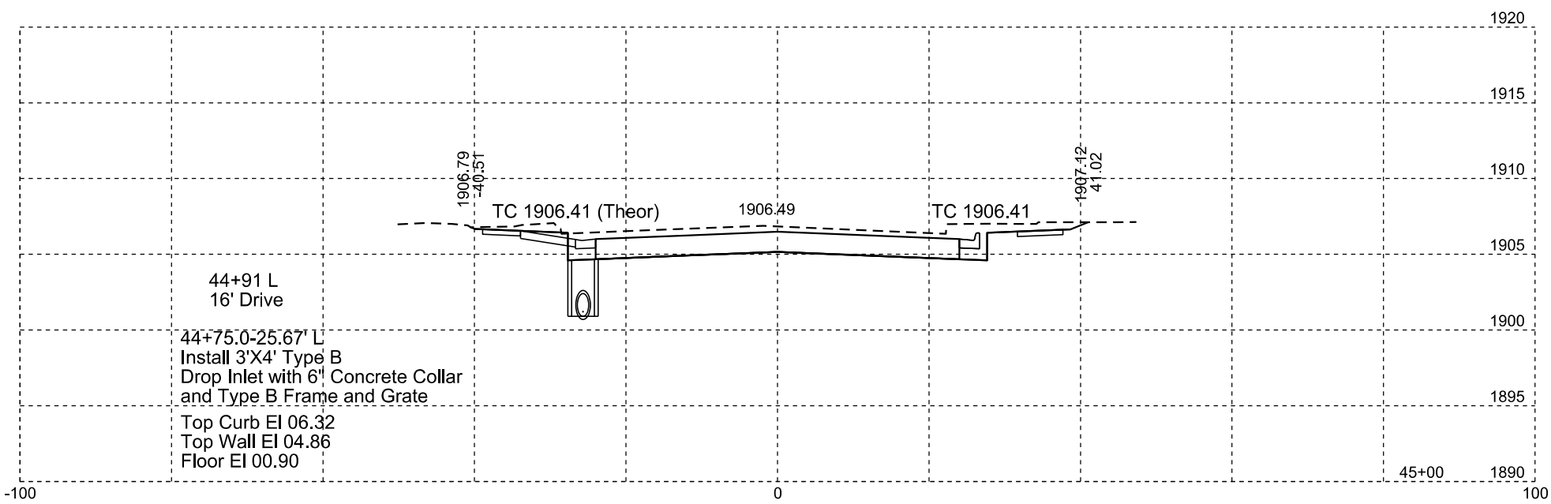

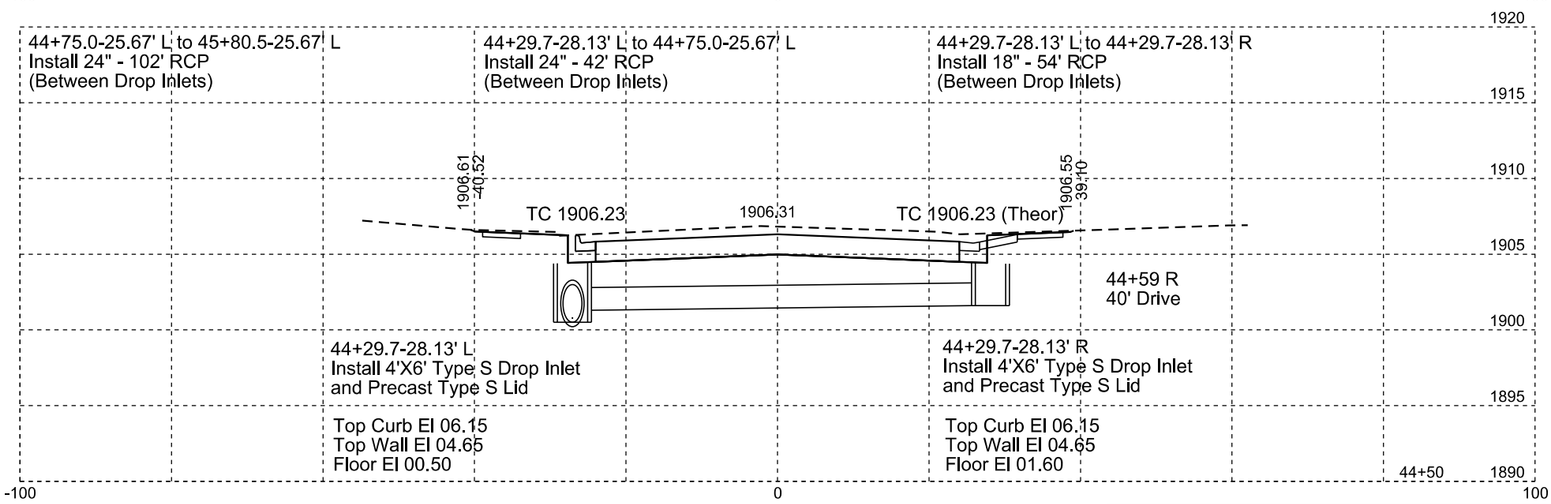

Plotting Date: 01/07/2015

STATE OF SOUTH DAKOTA	PROJECT	SHEET NO.	TOTAL SHEETS
	P 0020(117)254	X18	X38

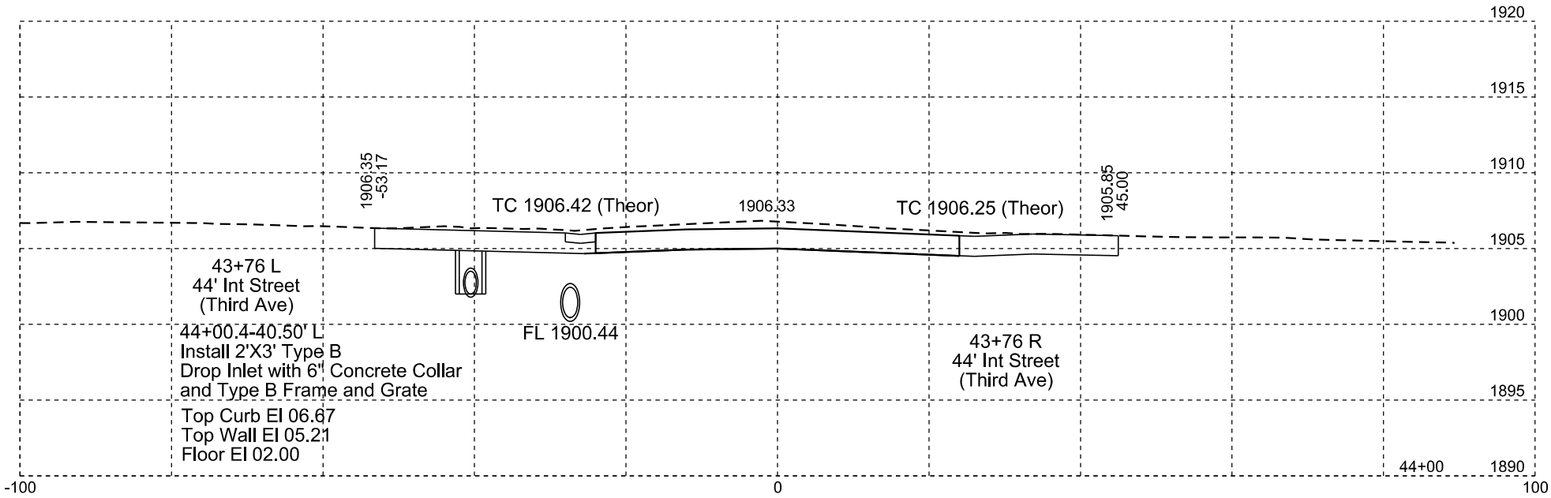

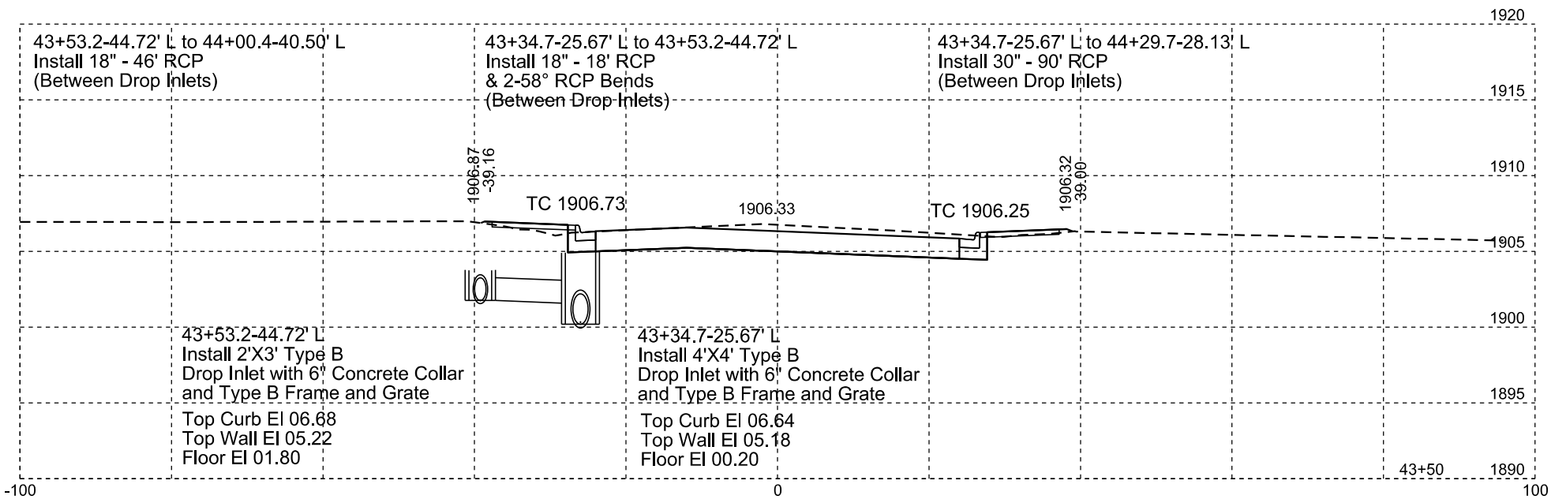

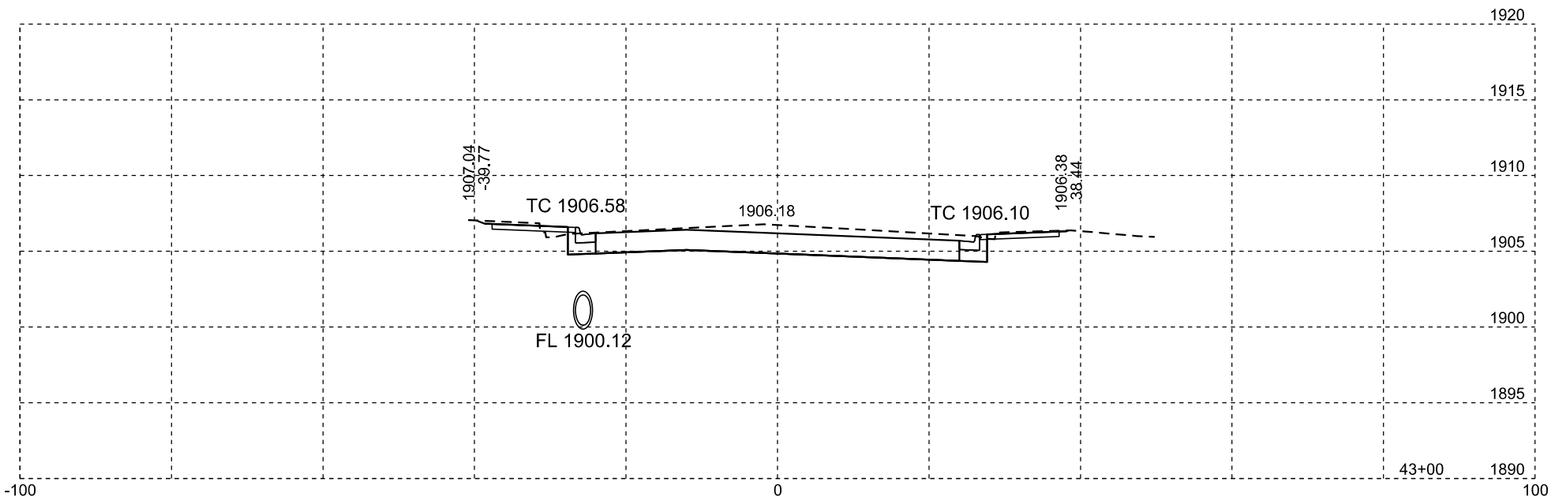

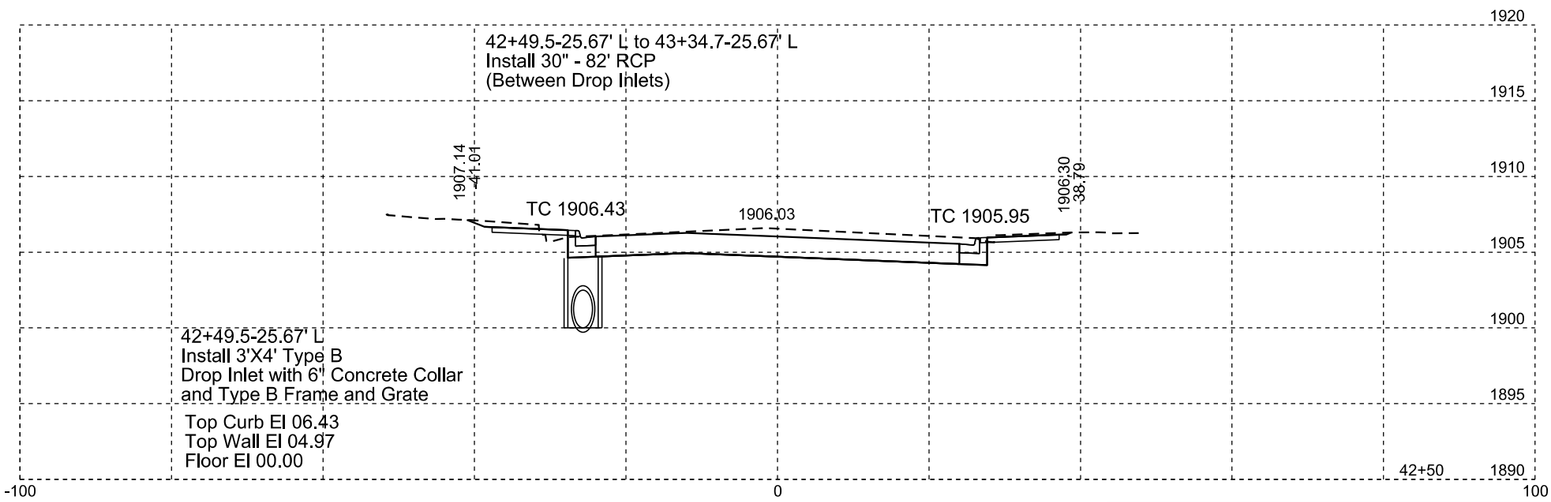

Plotting Date: 01/07/2015

STATE OF SOUTH DAKOTA	PROJECT	SHEET NO.	TOTAL SHEETS
	P 0020(117)254	X19	X38

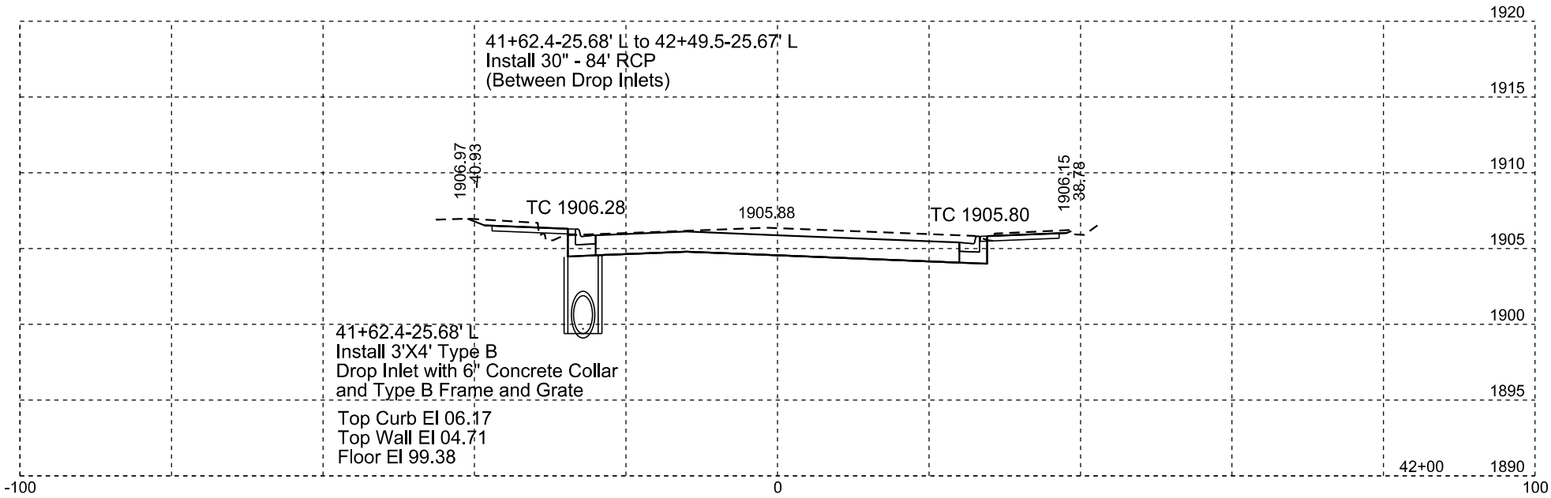

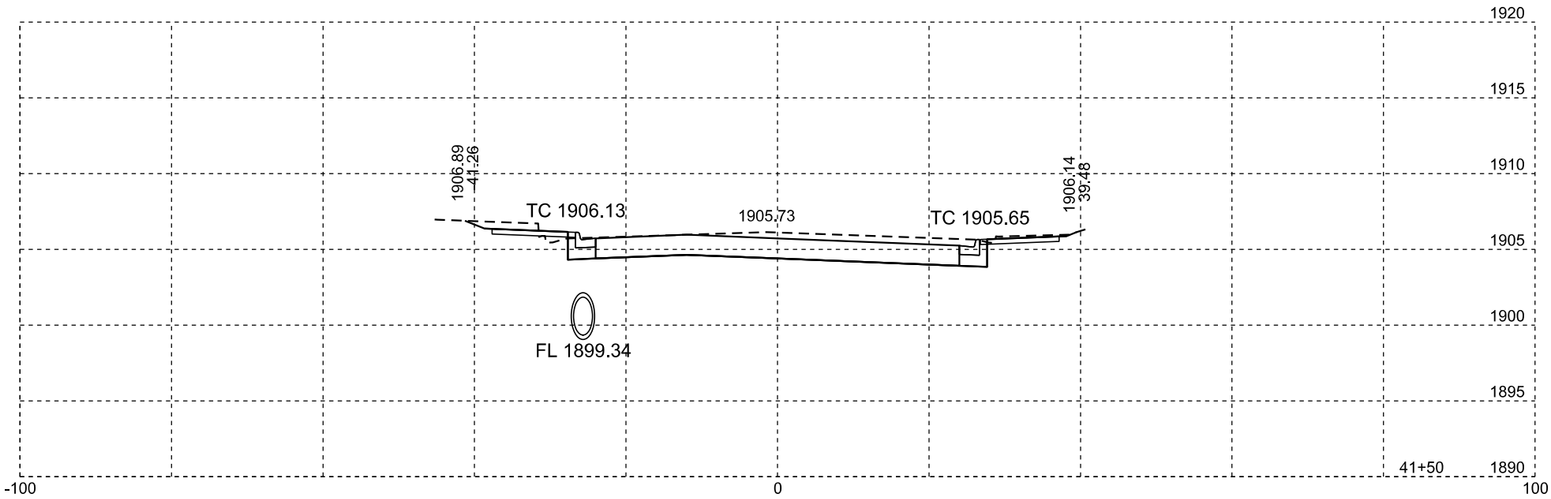

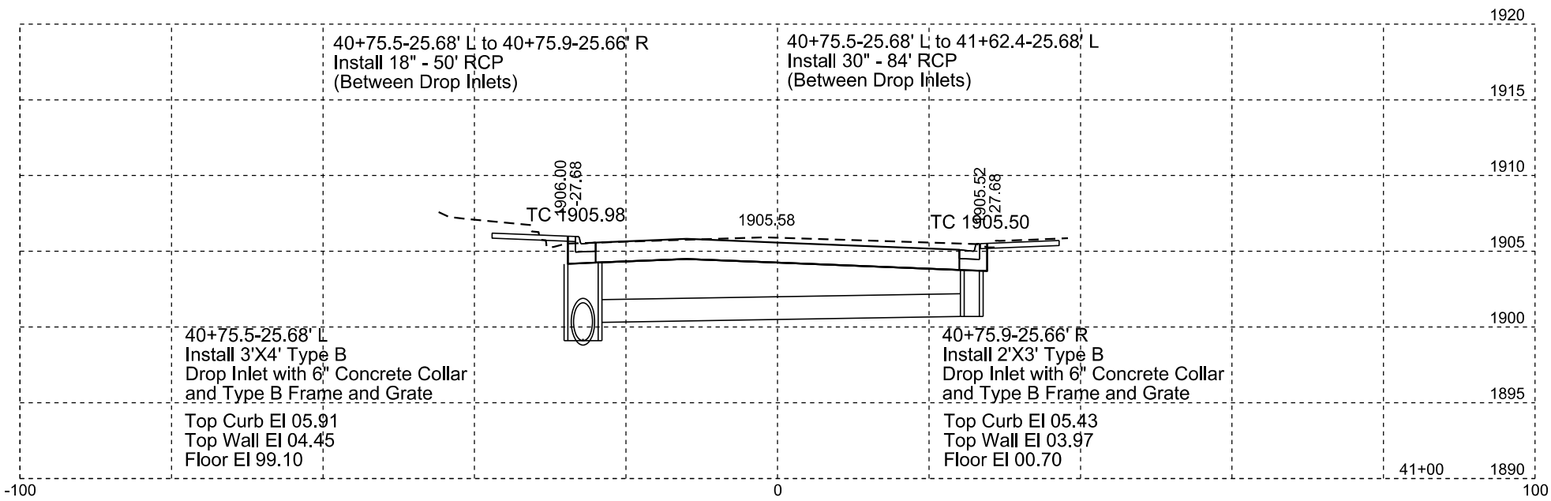

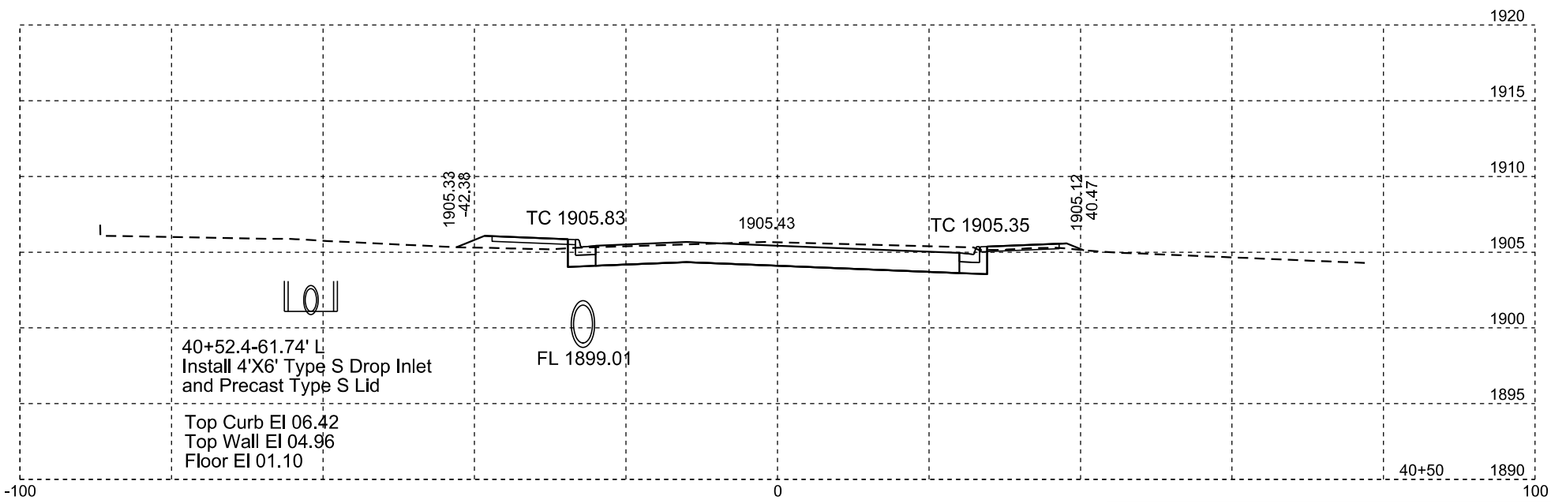

Plotting Date: 07/07/2015

STATE OF SOUTH DAKOTA	PROJECT	SHEET NO.	TOTAL SHEETS
	P 0020(117)254	X20	X38

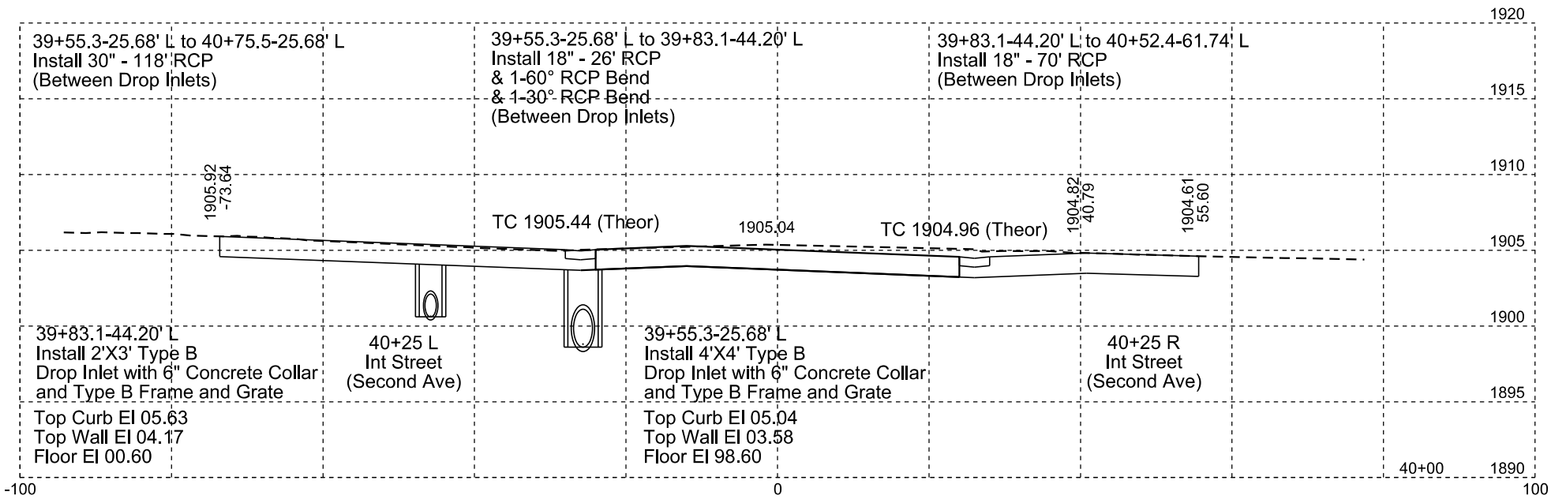

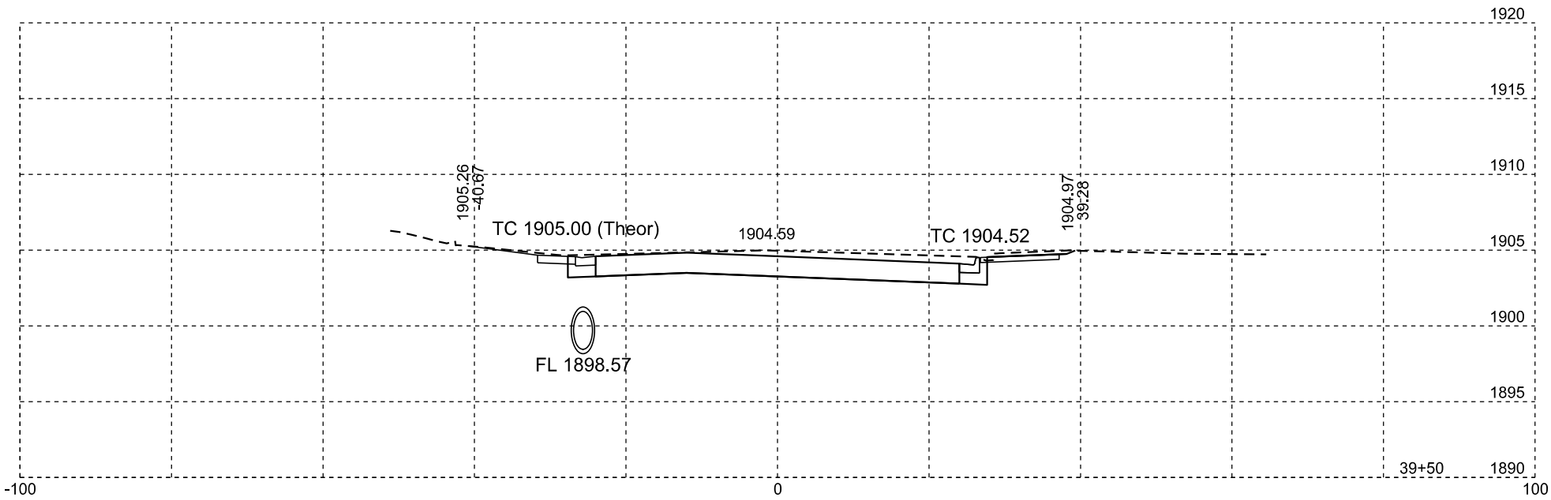

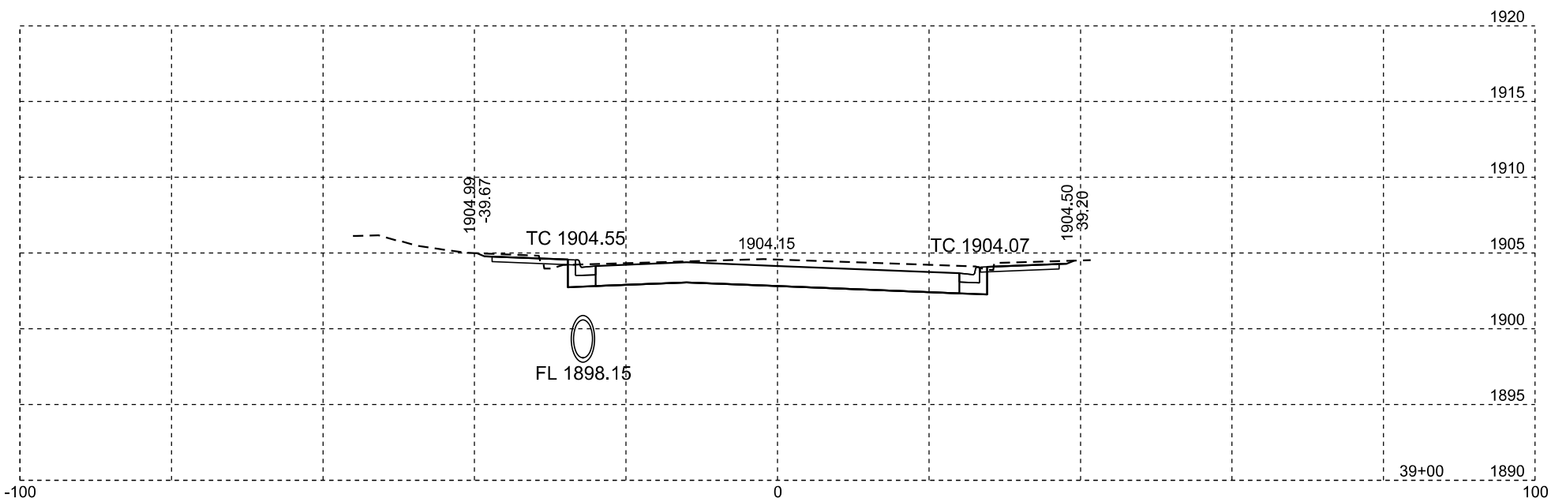

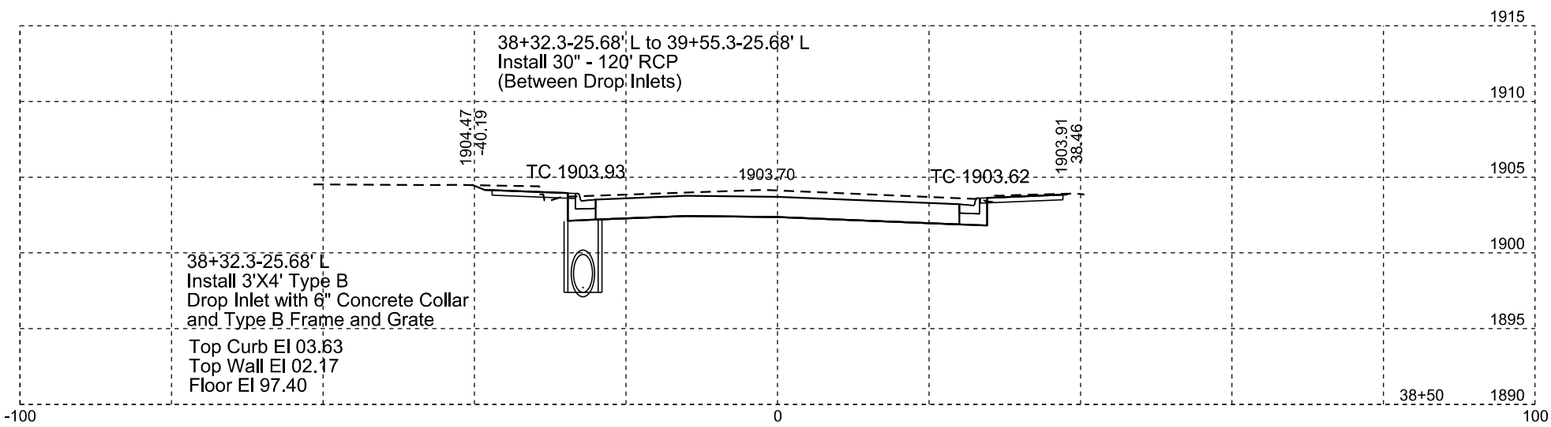

Plotting Date: 07/07/2015

STATE OF SOUTH DAKOTA	PROJECT	SHEET NO.	TOTAL SHEETS
	P 0020(117)254	X21	X38

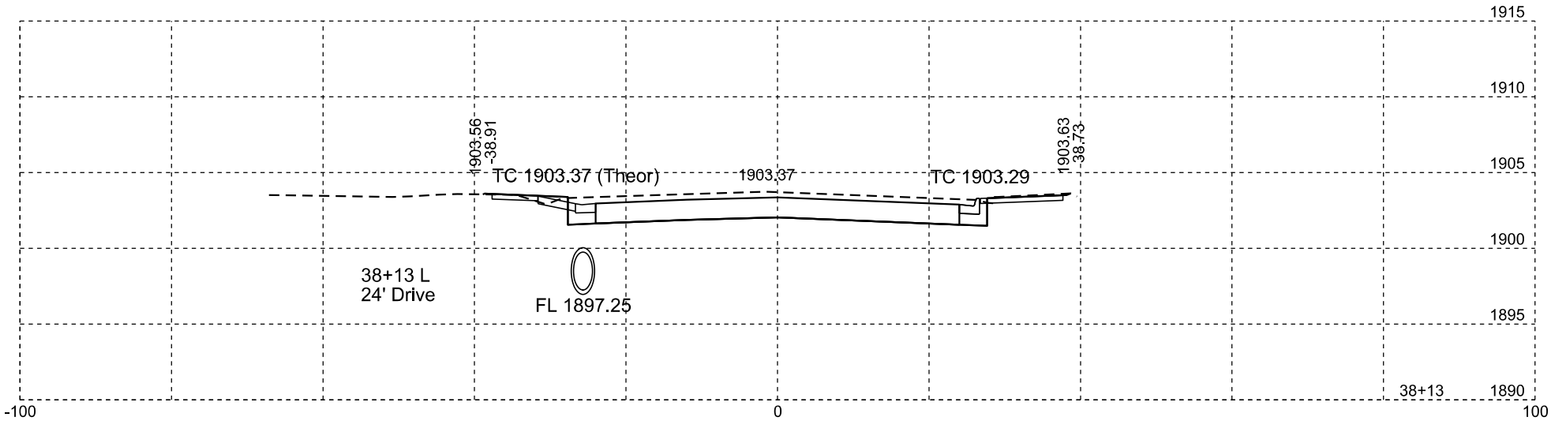

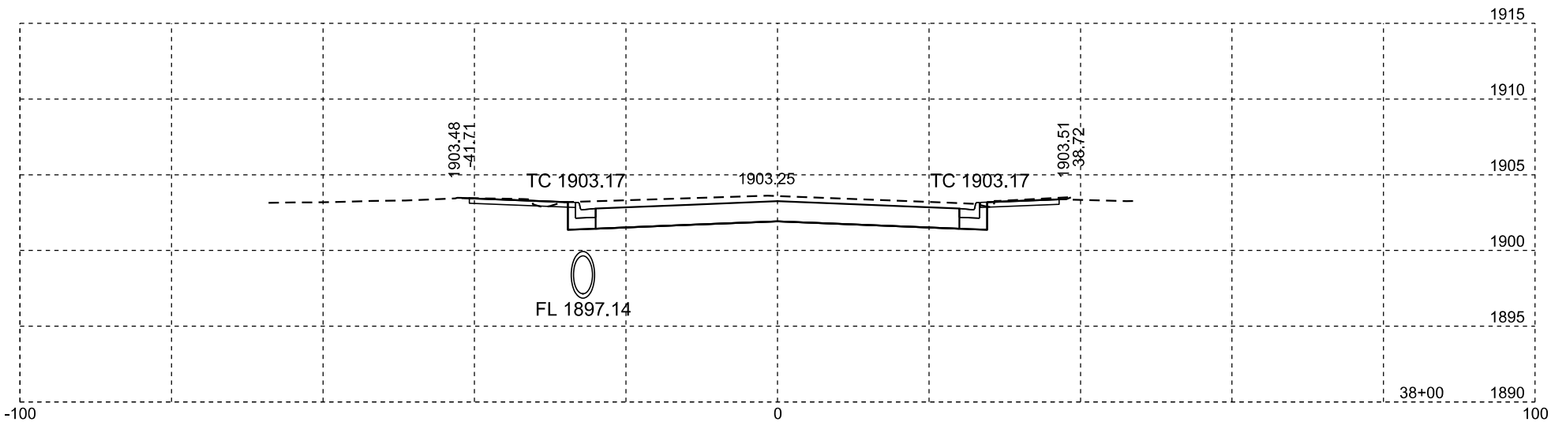

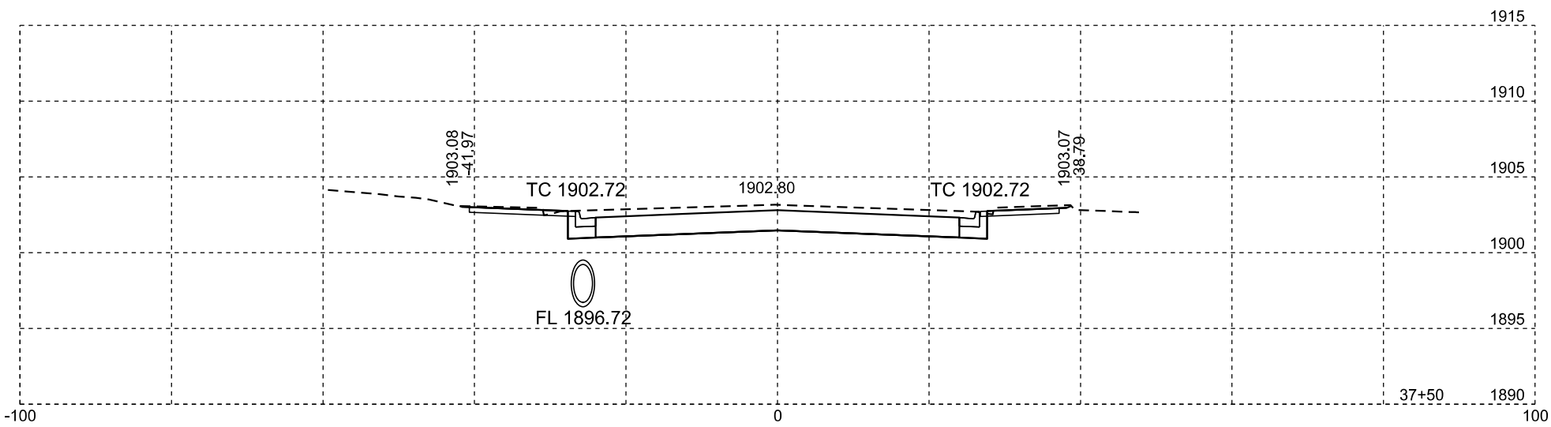

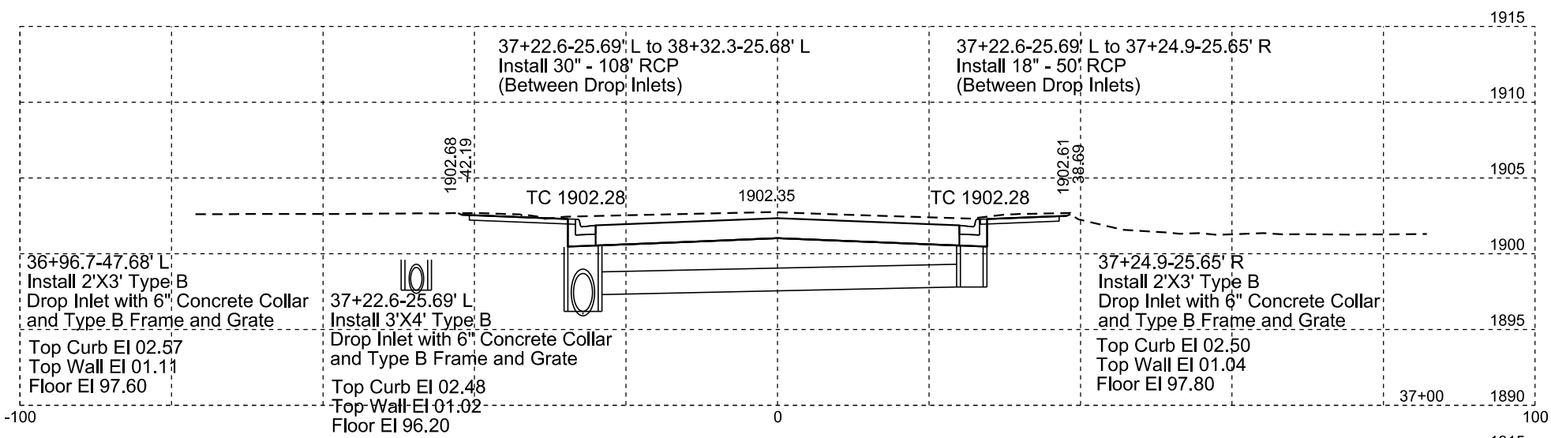

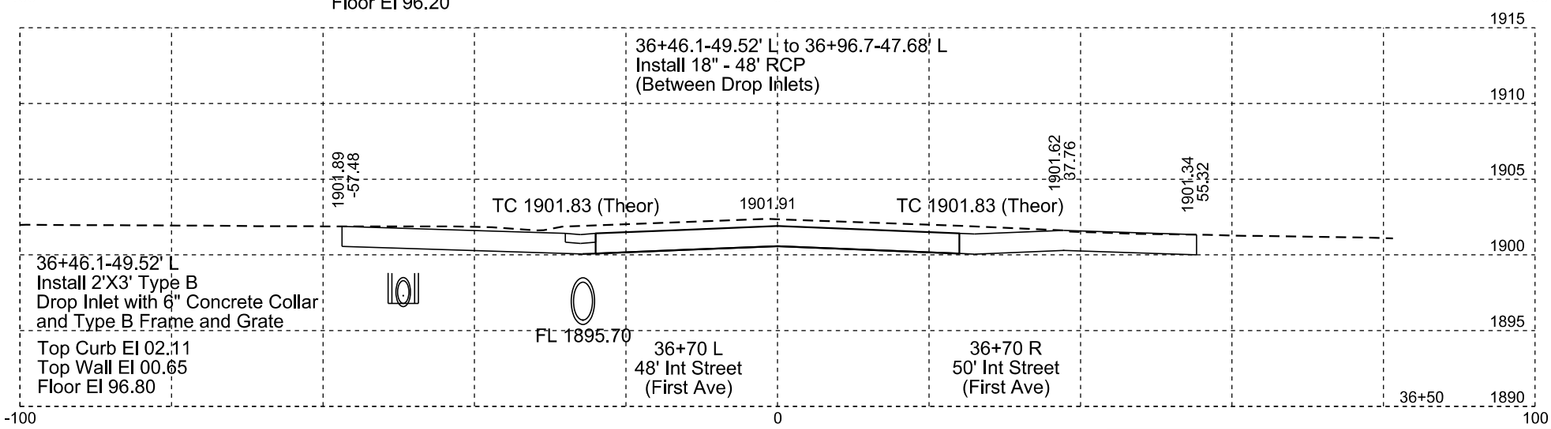

Plotting Date: 01/07/2015

STATE OF SOUTH DAKOTA	PROJECT	SHEET NO.	TOTAL SHEETS
	P 0020(117)254	X22	X38

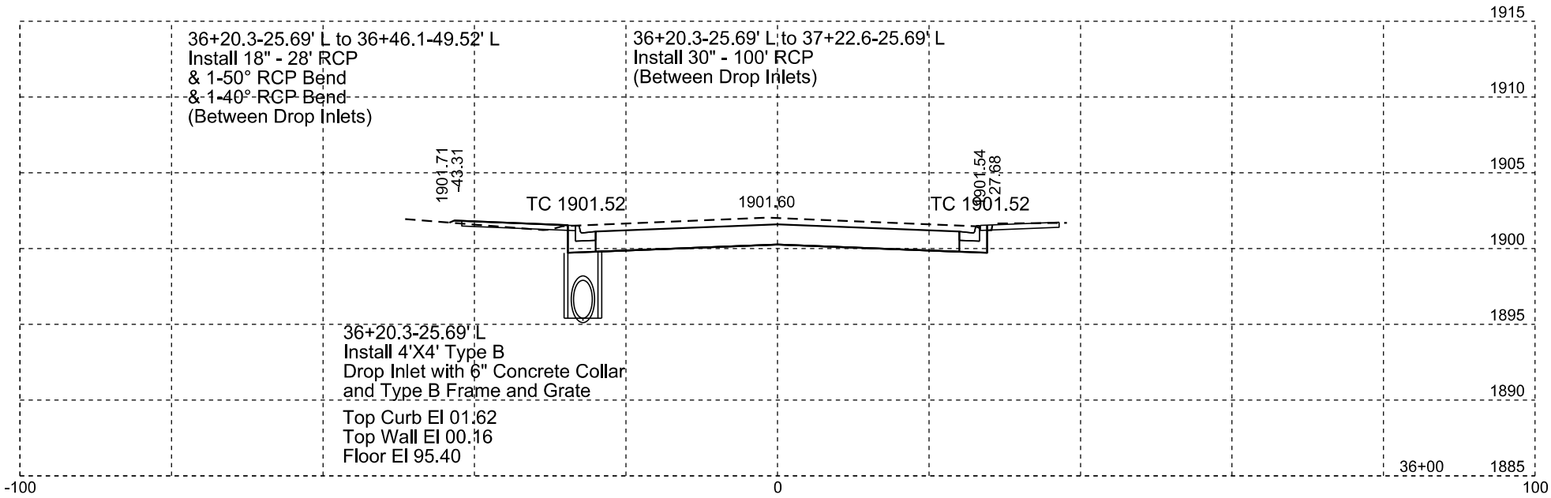

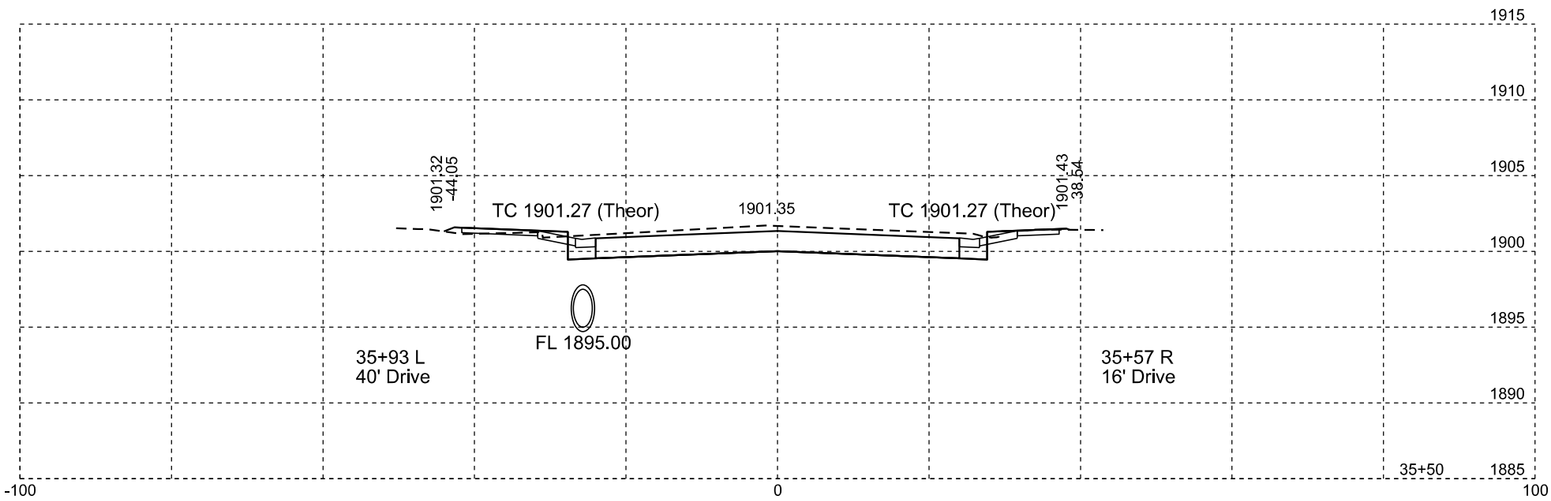

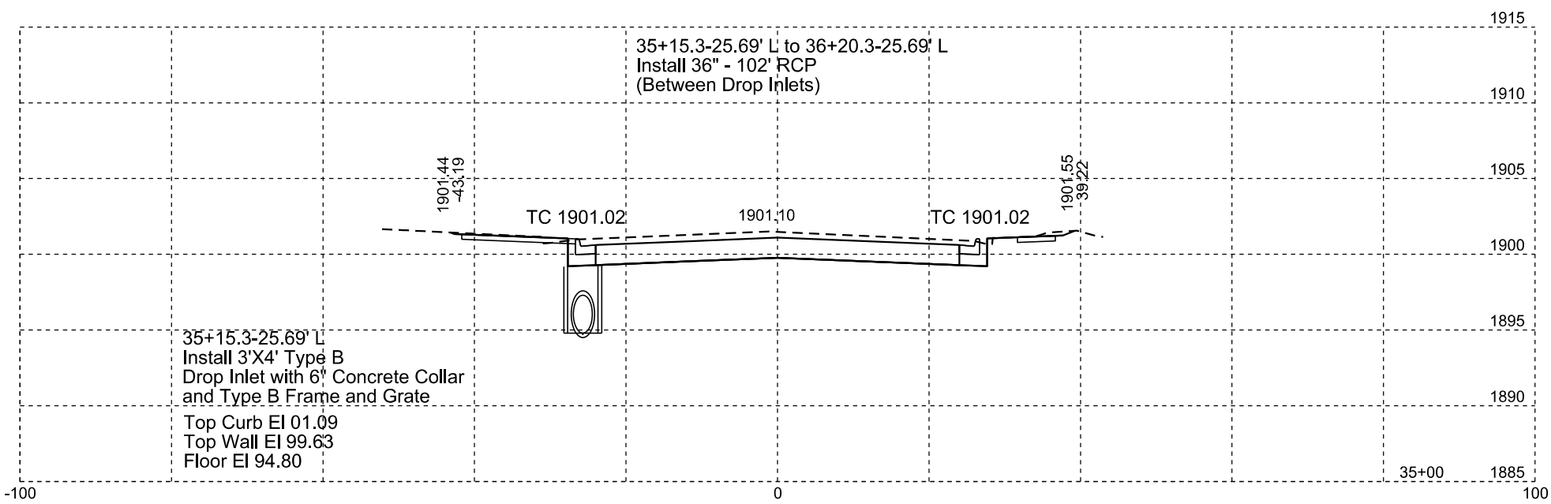

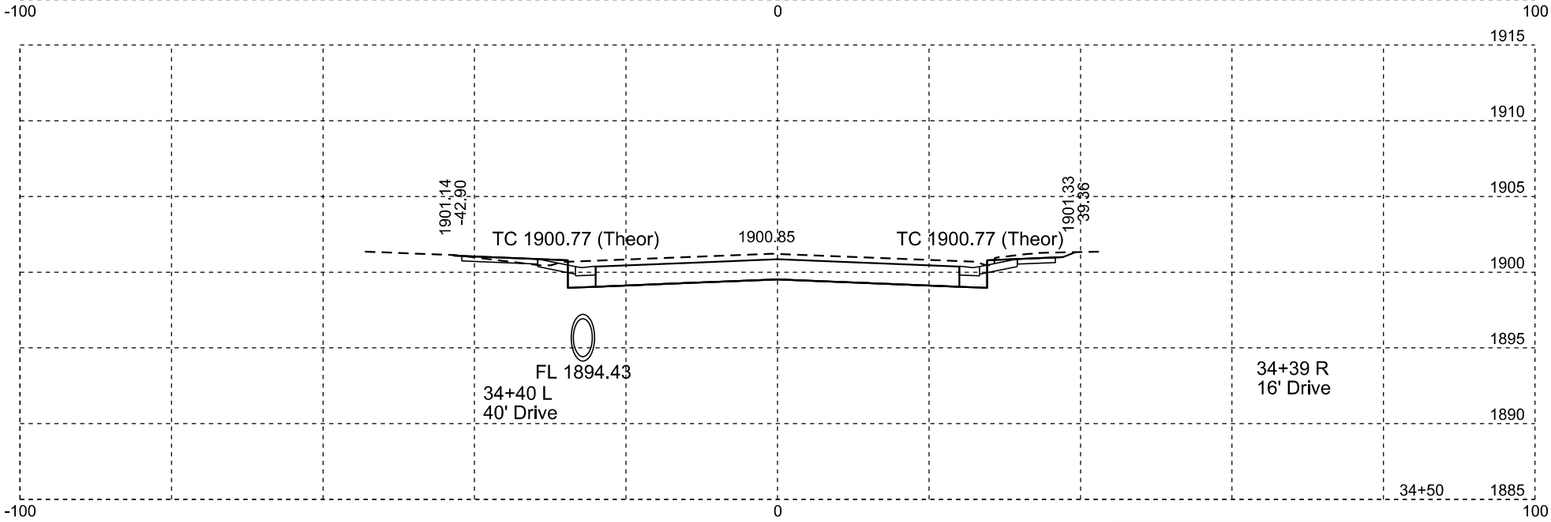

Plotting Date: 01/07/2015

STATE OF SOUTH DAKOTA	PROJECT	SHEET NO.	TOTAL SHEETS
	P 0020(117)254	X23	X38

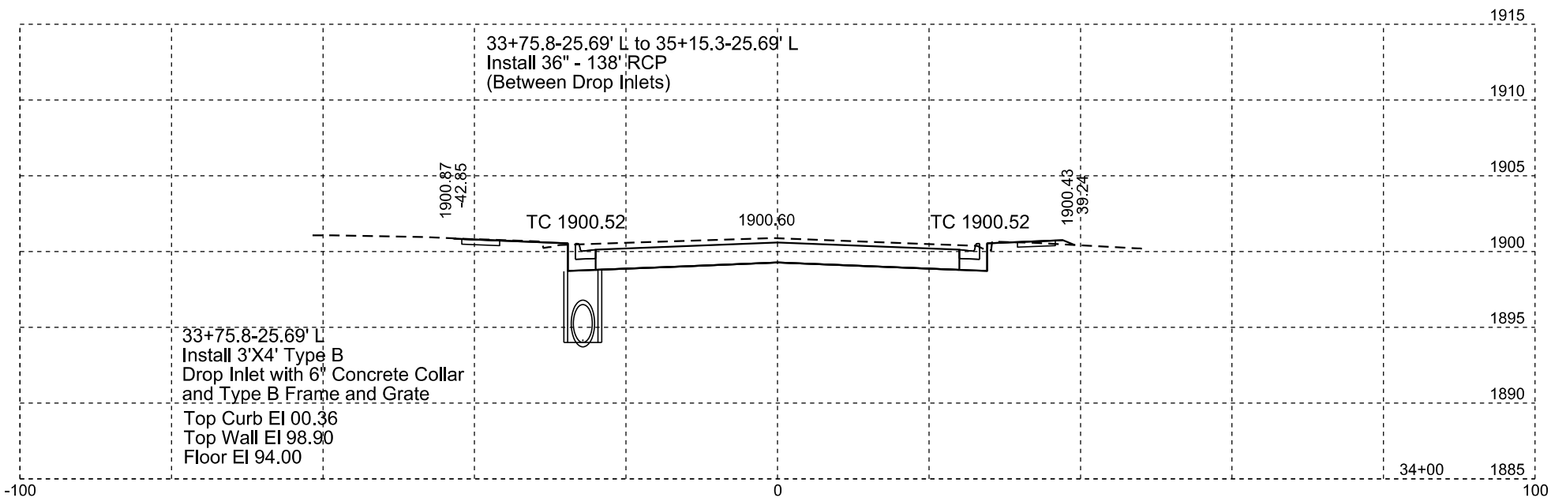

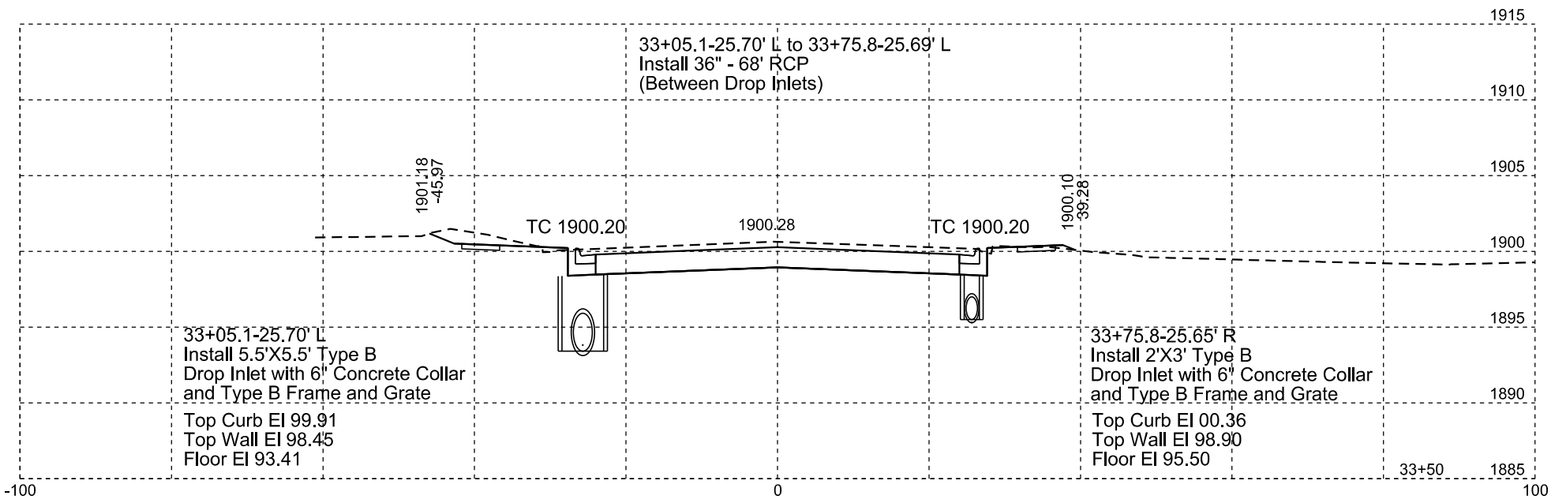

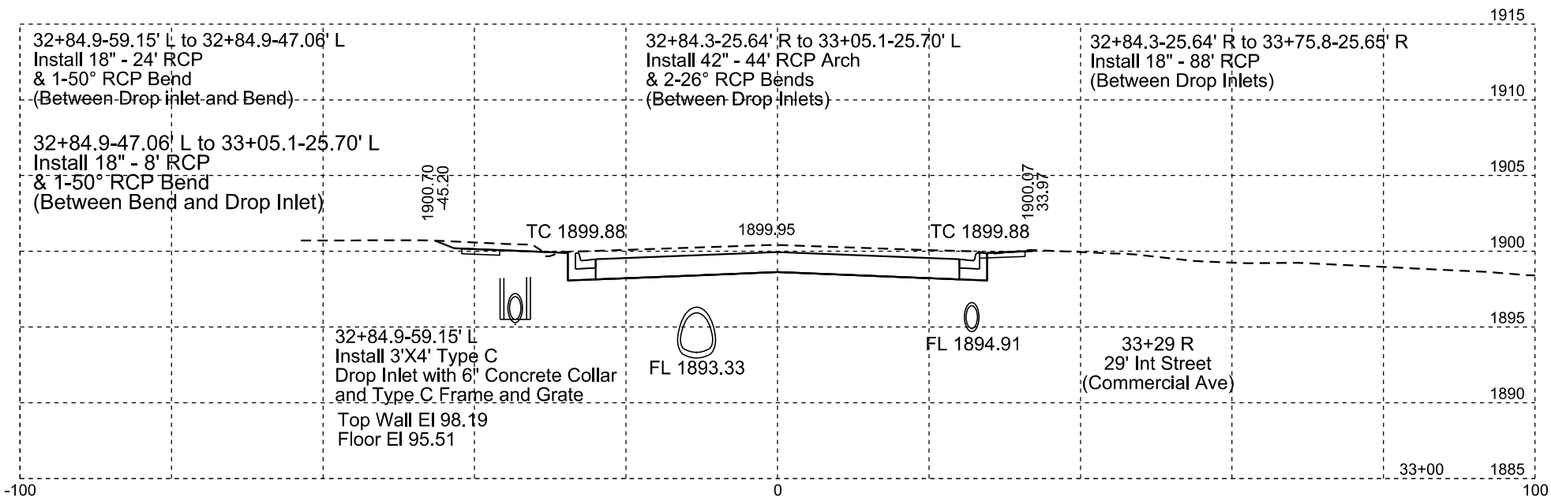

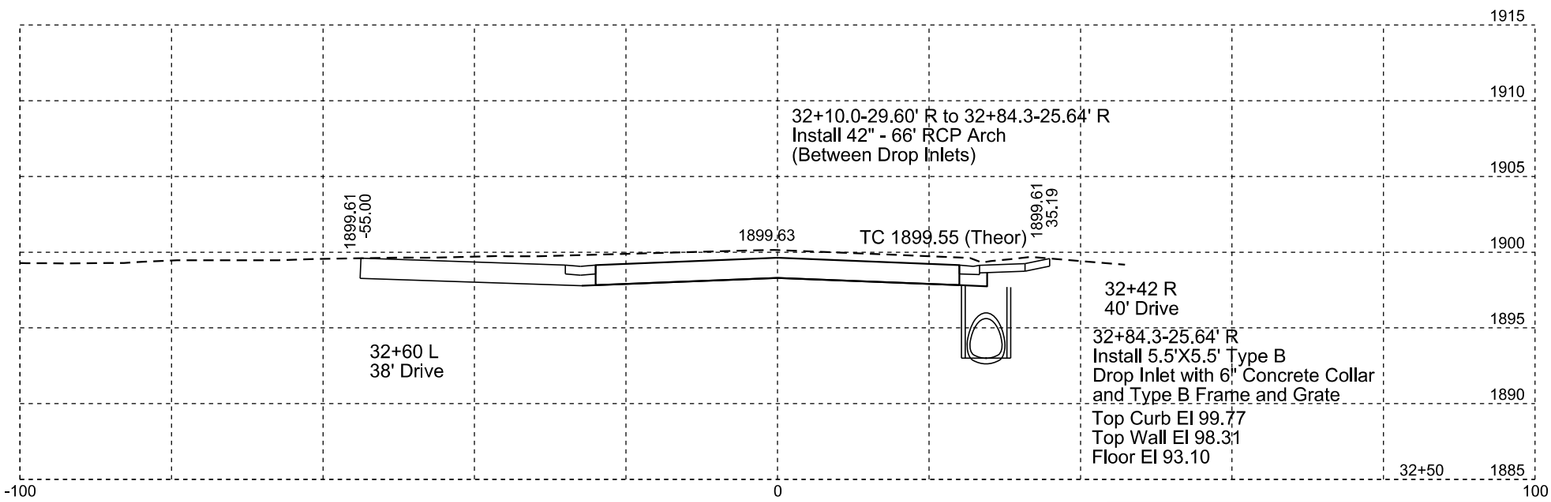

Plotting Date: 01/07/2015

STATE OF SOUTH DAKOTA	PROJECT	SHEET NO.	TOTAL SHEETS
	P 0020(117)254	X24	X38

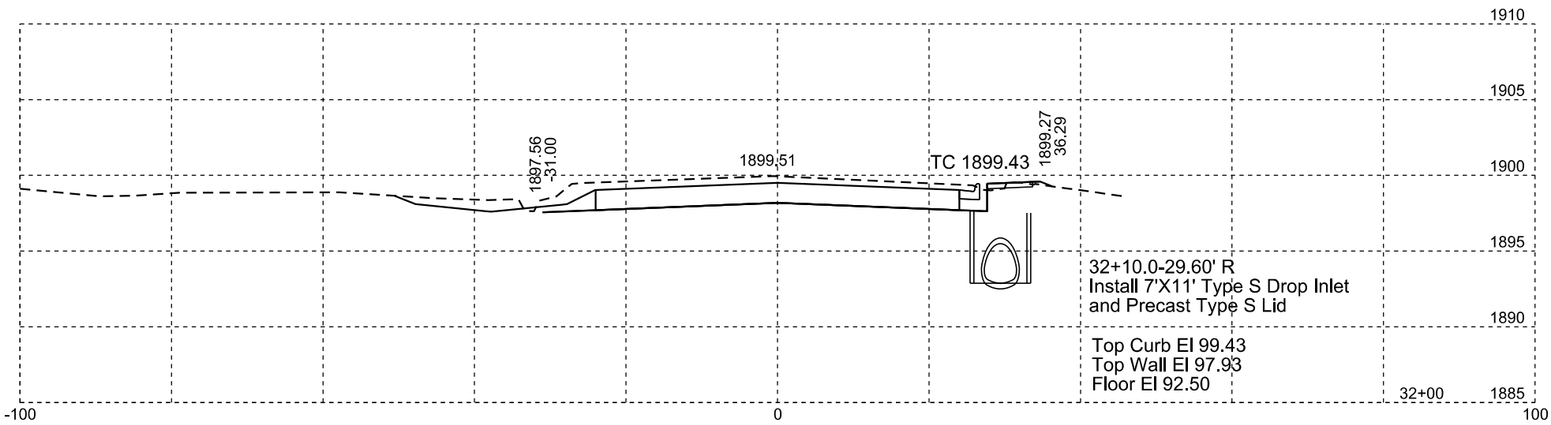

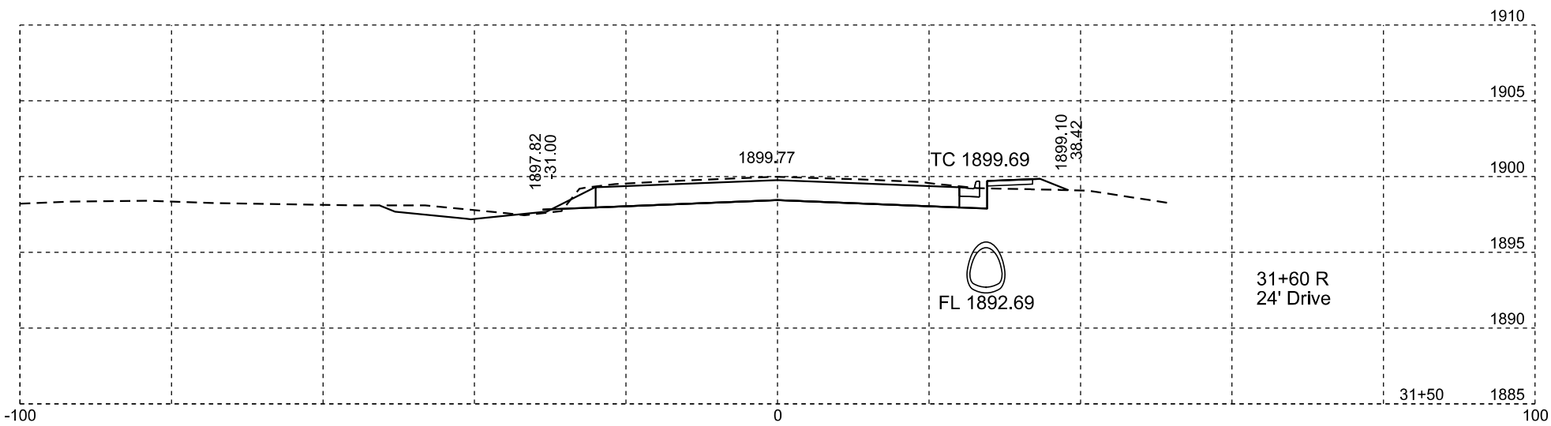

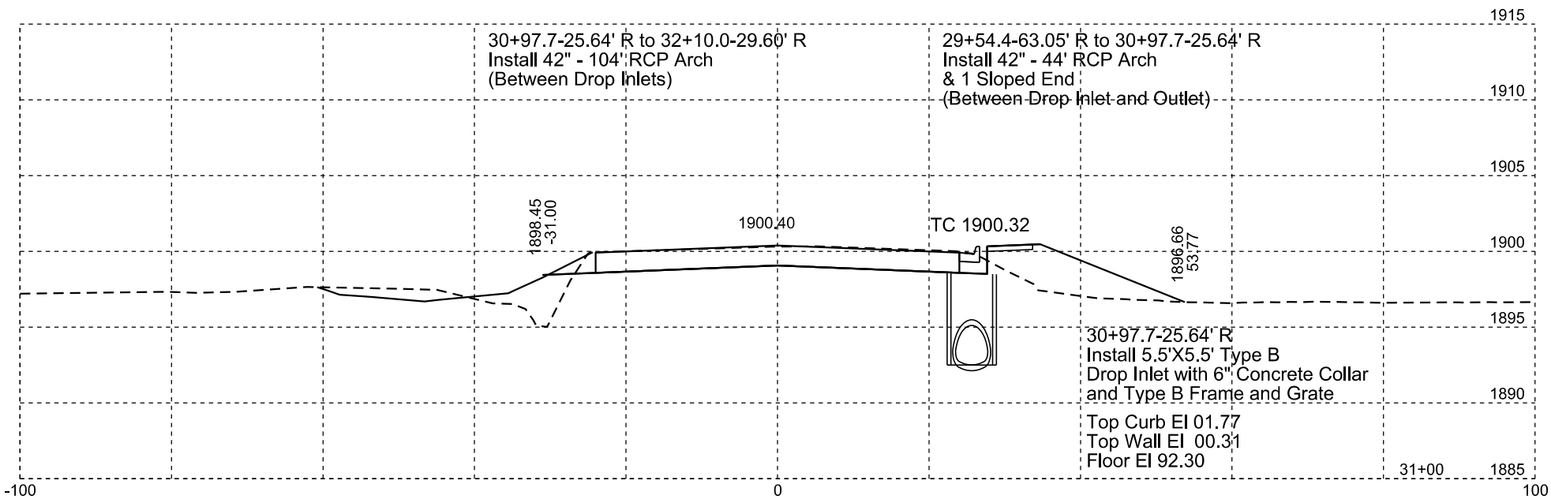

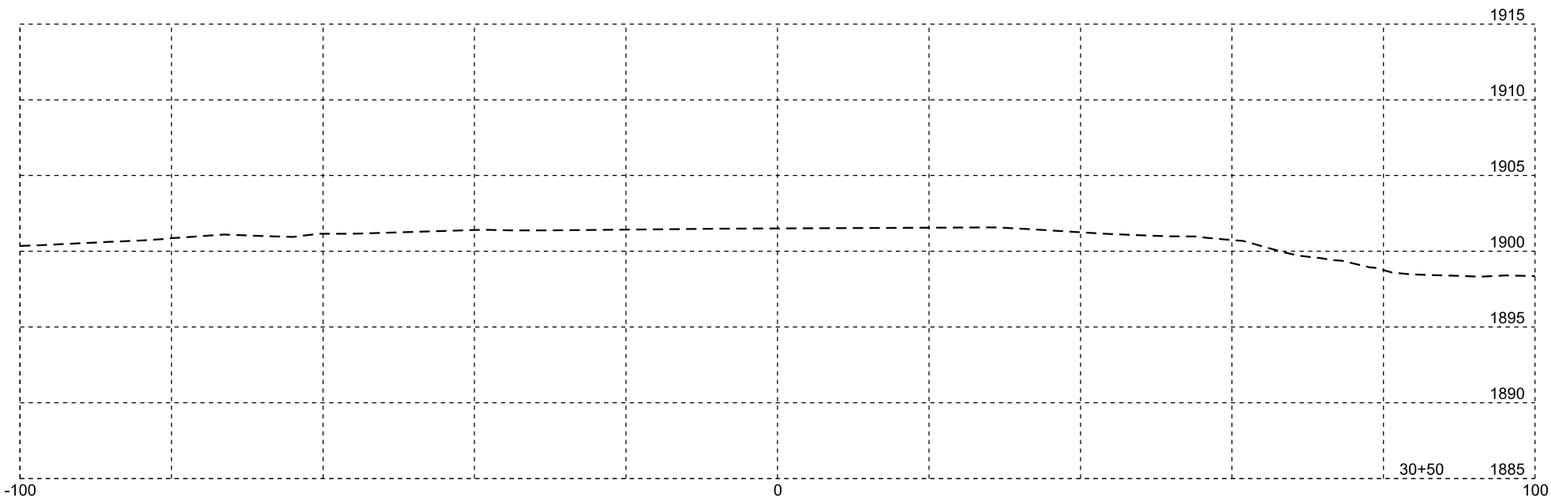

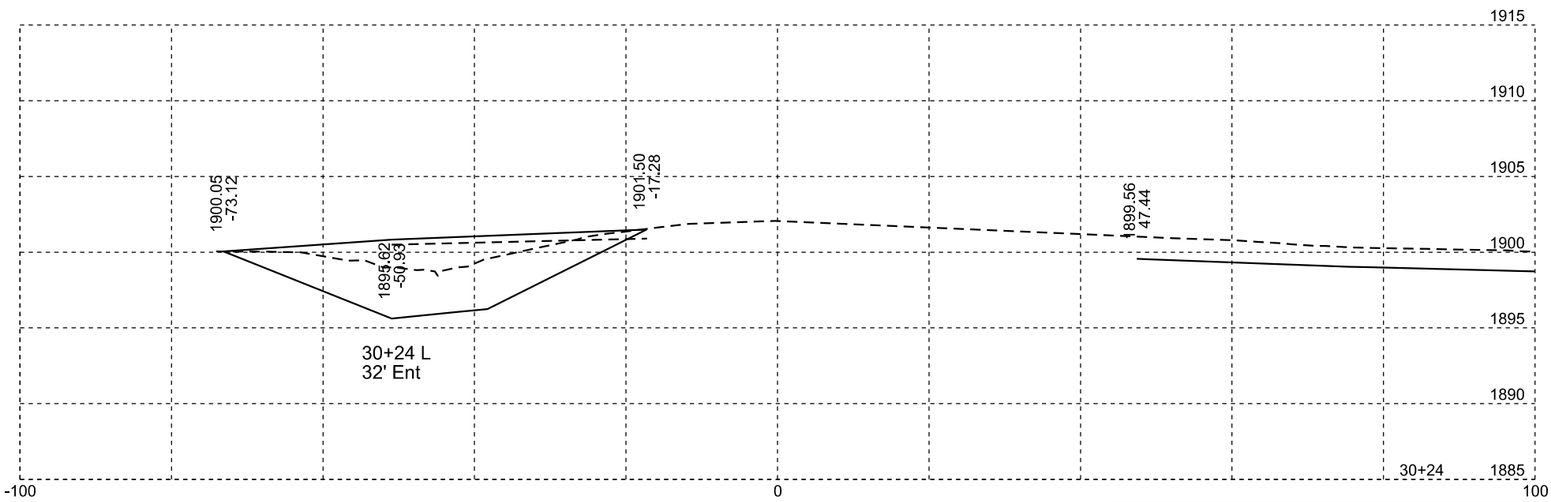

Plotting Date: 07/07/2015

STATE OF SOUTH DAKOTA	PROJECT	SHEET NO.	TOTAL SHEETS
	P 0020(117)254	X25	X38

STATE OF SOUTH DAKOTA	PROJECT	SHEET NO.	TOTAL SHEETS
	P 0020(117)254	X26	X38

Plotting Date: 01/07/2015

STATE OF SOUTH DAKOTA	PROJECT	SHEET NO.	TOTAL SHEETS
	P 0020(117)254	X27	X38

Plotting Date: 01/07/2015

STATE OF SOUTH DAKOTA	PROJECT	SHEET NO.	TOTAL SHEETS
	P 0020(117)254	X28	X38

Plotting Date: 01/07/2015

STATE OF SOUTH DAKOTA	PROJECT	SHEET NO.	TOTAL SHEETS
	P 0020(117)254	X29	X38

Plotting Date: 01/07/2015

STATE OF SOUTH DAKOTA	PROJECT	SHEET NO.	TOTAL SHEETS
	P 0020(117)254	X30	X38

Plotting Date: 01/07/2015

STATE OF SOUTH DAKOTA	PROJECT	SHEET NO.	TOTAL SHEETS
	P 0020(117)254	X31	X38

Plotting Date: 01/07/2015

STATE OF SOUTH DAKOTA	PROJECT	SHEET NO.	TOTAL SHEETS
	P 0020(117)254	X32	X38

Plotting Date: 01/07/2015

STATE OF SOUTH DAKOTA	PROJECT	SHEET NO.	TOTAL SHEETS
	P 0020(117)254	X33	X38

Plotting Date: 01/07/2015

STATE OF SOUTH DAKOTA	PROJECT	SHEET NO.	TOTAL SHEETS
	P 0020(117)254	X34	X38

Plotting Date: 01/07/2015

Plotting Date: 01/07/2015

STATE OF SOUTH DAKOTA	PROJECT	SHEET NO.	TOTAL SHEETS
	P 0020(117)254	X35	X38

STATE OF SOUTH DAKOTA	PROJECT	SHEET NO.	TOTAL SHEETS
	P 0020(117)254	X36	X38

Plotting Date: 01/07/2015

STATE OF SOUTH DAKOTA	PROJECT	SHEET NO.	TOTAL SHEETS
	P 0020(117)254	X37	X38

Plotting Date: 01/07/2015

STATE OF SOUTH DAKOTA	PROJECT	SHEET NO.	TOTAL SHEETS
	P 0020(117)254	X38	X38

Plotting Date: 01/07/2015