STATE OF	PROJECT	SHEET NO.	TOTAL SHEETS
S.D.	NH 0018(172)230	E1	E16

Section E: Structure Plans

INDEX OF SHEETS -

Sheet E1	Layout Map and Index
Sheet E2	Estimate of Structure Quantities
Sheet E3 to E11	Alt. A : 5 - 13' x 12' Box Culvert (C.I.P.)
Sheet E12 to E16	Alt. B : 2 - 12' x 12', 1 - 12' x 12', and 2 - 14' x 12' Box Culvert (Precast)

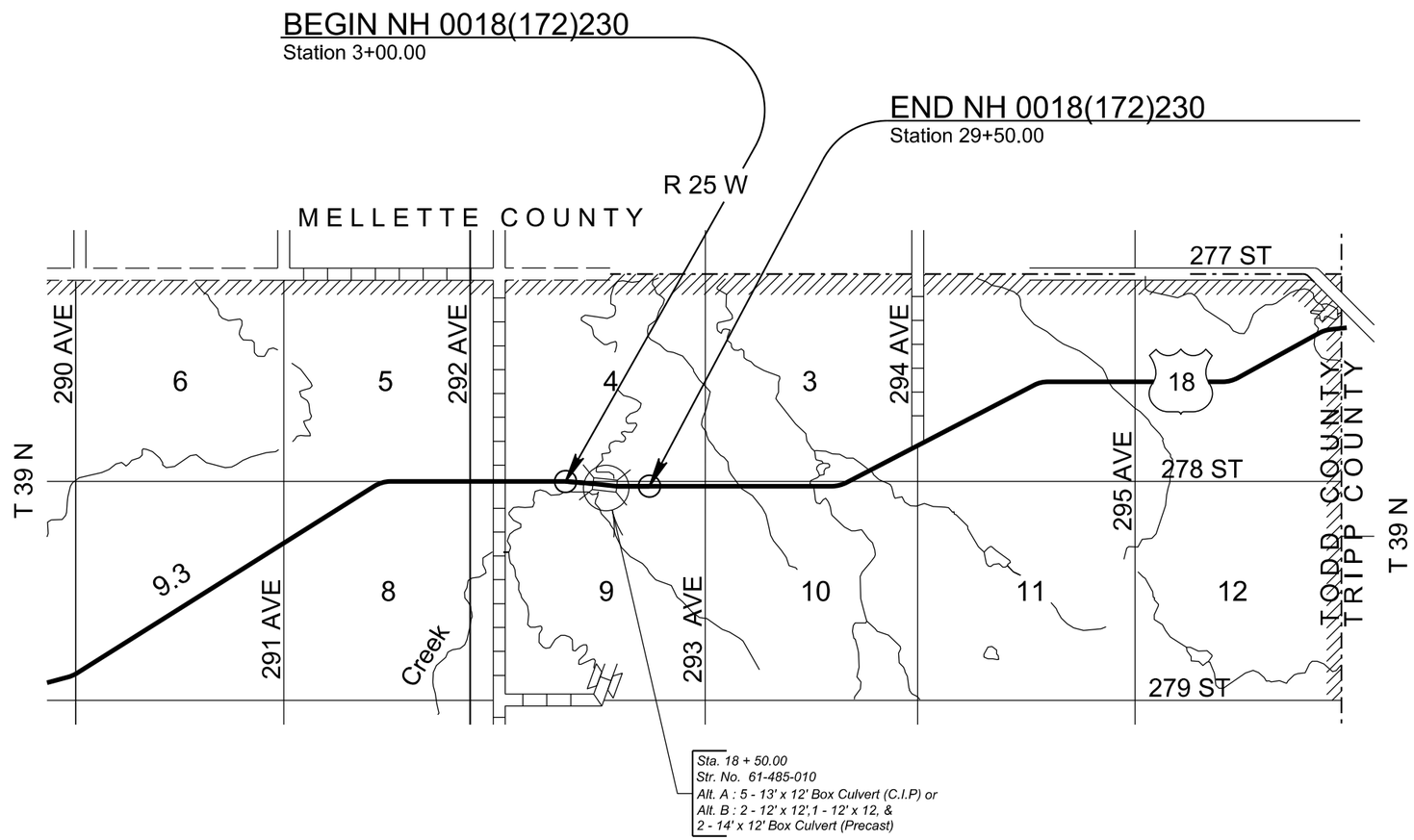

ESTIMATE OF STRUCTURE QUANTITIES

Bid Item Number	Item	Quantity	Unit
250E0030	Incidental Work, Structure	Lump Sum	LS

DRAINAGE STRUCTURE SITE 1
STRUCTURE NO. 61-485-010

ALTERNATE A

Bid Item Number	Item	Quantity	Unit
420E0200	Structure Excavation, Box Culvert	265	CuYd
421E0200	Box Culvert Undercut	1,050	CuYd
460E0120	Class A45 Concrete, Box Culvert	663.4	CuYd
480E0100	Reinforcing Steel	100,195	Lb
700E0210	Class B Riprap	541.6	Ton
831E0110	Type B Drainage Fabric	607	SqYd

ALTERNATE B

Bid Item Number	Item	Quantity	Unit
420E0200	Structure Excavation, Box Culvert	299	CuYd
421E0200	Box Culvert Undercut	1,177	CuYd
462E0200	Controlled Density Fill	103.2	CuYd
560E0196	12'x12' Precast Concrete Box Culvert, Furnish	84.0	Ft
560E0197	12'x12' Precast Concrete Box Culvert, Install	84.0	Ft
560E1196	12'x12' Precast Concrete Box Culvert End Section, Furnish	2	Each
560E1197	12'x12' Precast Concrete Box Culvert End Section, Install	2	Each
560E2178	2-12'x12' Precast Concrete Box Culvert, Furnish	84.0	Ft
560E2179	2-12'x12' Precast Concrete Box Culvert, Install	84.0	Ft
560E2236	2-14'x12' Precast Concrete Box Culvert, Furnish	84.0	Ft
560E2237	2-14'x12' Precast Concrete Box Culvert, Install	84.0	Ft
560E3178	2-12'x12' Precast Concrete Box Culvert End Section, Furnish	2	Each
560E3179	2-12'x12' Precast Concrete Box Culvert End Section, Install	2	Each
560E3236	2-14'x12' Precast Concrete Box Culvert End Section, Furnish	2	Each
560E3237	2-14'x12' Precast Concrete Box Culvert End Section, Install	2	Each
700E0210	Class B Riprap	130.0	Ton
831E0110	Type B Drainage Fabric	155	SqYd

INCIDENTAL WORK, STRUCTURE

1. In place centerline Sta. 17+84.30 - 34.1Rt. to centerline Sta. 19+05.40 – 34.6 Rt. is a 122.0' 3 span composite steel I-beam viaduct with a 30'-0" clear roadway. The superstructure consists of a reinforced concrete deck on 9 lines of girders with concrete pigeon hole railing faced with steel Thrie-beam continuous across the bridge. The deck has been overlaid with 2 inches of asphalt. The substructure consists of 2 column reinforced concrete bents and reinforced concrete sill type abutments, all of which are supported on timber piling.

2. Break down and remove the existing bridge and approach/sleeper slabs if applicable to 1 foot below finished groundline, or as required to construct the new structure in accordance with Section 110 of the South Dakota Standard Specifications. All portions of the existing bridge shall be removed and disposed of by the Contractor on a site obtained by the Contractor and approved by the Engineer in accordance with the WASTE DISPOSAL NOTES found in Section A.

3. During demolition of the structure, efforts shall be taken to prevent material from falling into White Horse Creek. Under no circumstances is asphalt allowed to fall into the creek.

4. The foregoing is a general description of the in-place bridge and should not be construed to be complete in all details. Before preparing the bid it shall be the responsibility of the Contractor to make a visual inspection of the structure to verify the extent of the work and materials involved. If desired by the Contractor, a copy of the original construction plans may be obtained through the Office of Bridge Design.

NOTICE - LEAD BASED PAINT

Be advised that the paint on the steel surfaces of the existing structure contains lead. The Contractor should plan his/her operations accordingly, and inform his/her employees of the hazards of lead exposure.

The elevations shown in these plans are based on the National Geodetic Survey (NGS) North American Vertical Datum of 1988 (NAVD88).

STATE OF	PROJECT	SHEET NO.	TOTAL SHEETS
S.D.	NH 0018(172)230	E3	E16

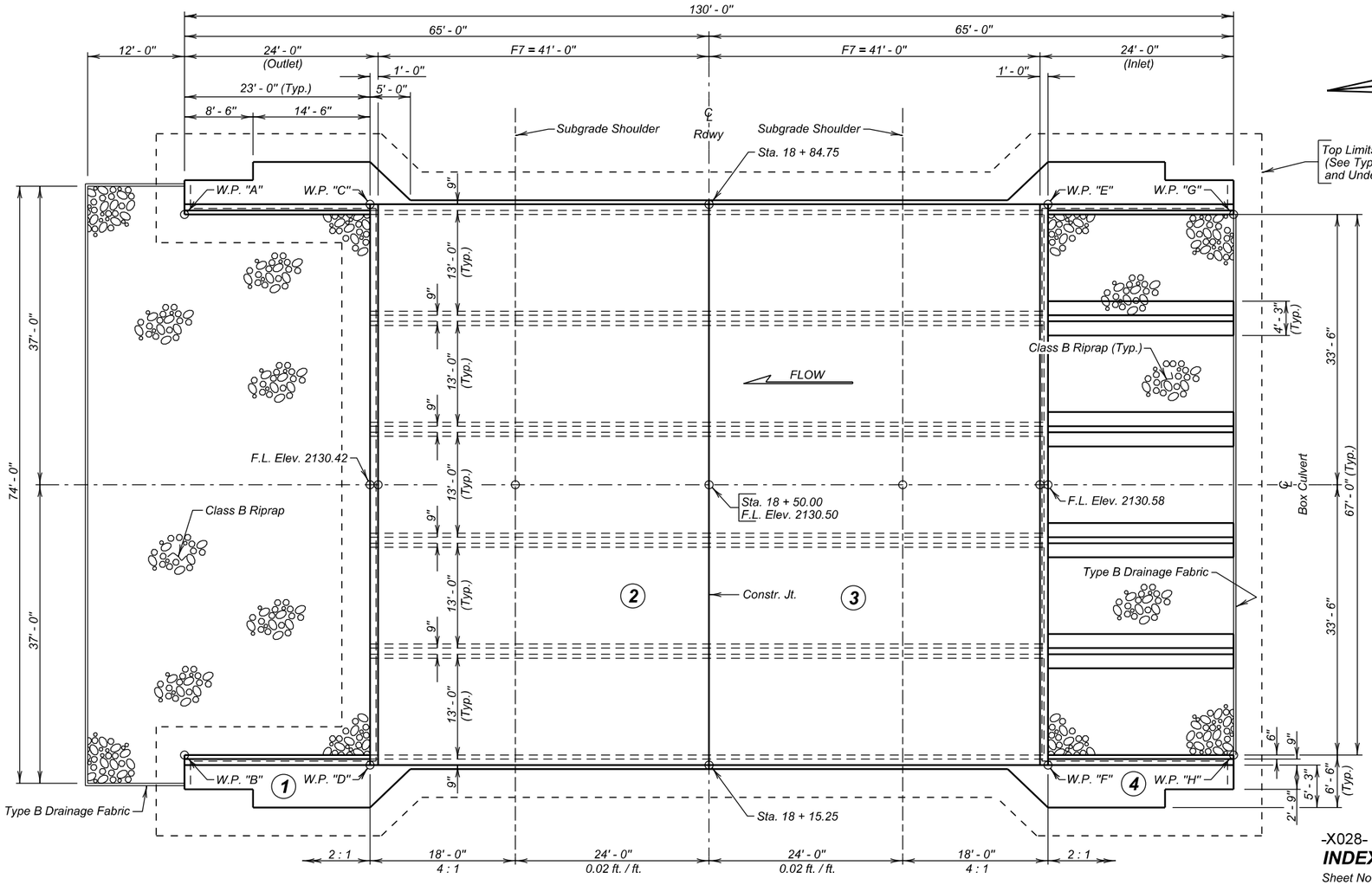

PLAN

NOTE:
Box Culvert flowline has been depressed 1' - 0" below channel flowline to accommodate aquatic organisms. The 1' - 0" depression will be allowed to fill in naturally over time.

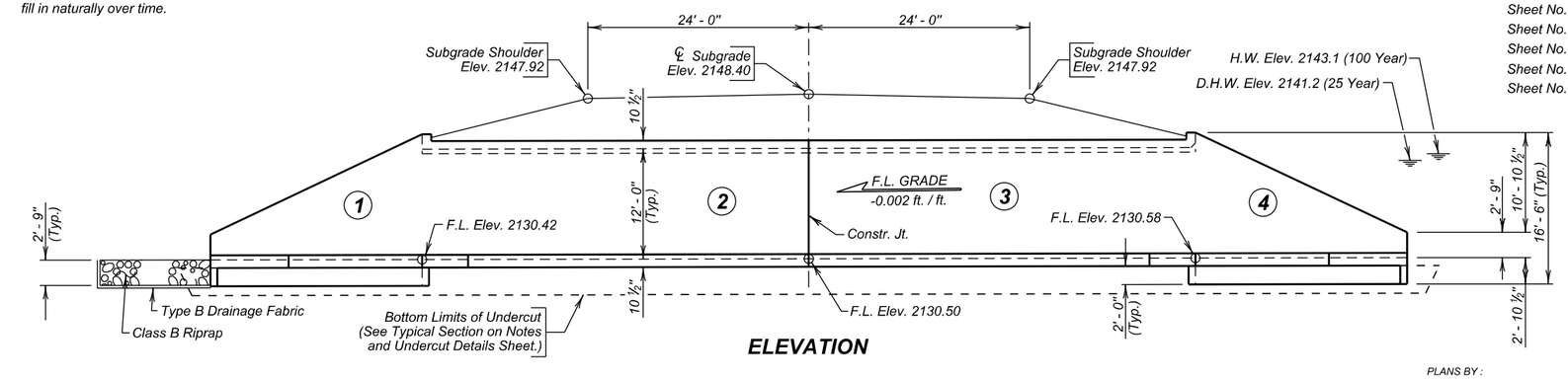

ELEVATION

HYDRAULIC DATA

Q_d	1890 cfs
A_d	630 sq ft
V_d	3.0 fps
Q_F	1890 cfs
Q_{100}	3370 cfs
Q_{OT}	$>Q_{500}$
V_{max}	4.8 fps

Q_d = Design discharge for the proposed culvert based on 25 year frequency. El. 2141.2

Q_{OT} = Overtopping discharge and frequency >500 year recurrence interval. El. 2148.4. Location 24 + 26.00.

Q_F = Designated peak discharge for the basin approaching proposed project based on 25 year frequency.

Q_{100} = Computed discharge for the basin approaching proposed project based on 100 year frequency. El. 2143.1

V_{max} = Maximum computed outlet velocity for the proposed culvert, based on 100 year frequency.

P. I. Sta. 9 + 00.00
Elev. = 2153.03 (Finished)
V. C. = 1000'

P. I. Sta. 23 + 50.00
Elev. = 2147.62 (Finished)
V. C. = 800'

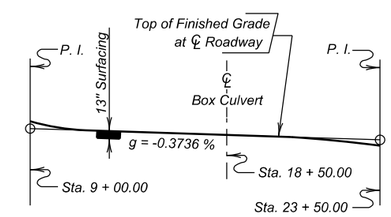

GRADELINE DATA

TABLE OF WORKING POINTS

W. P.	STATION	OFFSET
"A"	18 + 83.50	65.00' Lt.
"B"	18 + 16.50	65.00' Lt.
"C"	18 + 84.75	42.00' Lt.
"D"	18 + 15.25	42.00' Lt.
"E"	18 + 84.75	42.00' Rt.
"F"	18 + 15.25	42.00' Rt.
"G"	18 + 83.50	65.00' Rt.
"H"	18 + 16.50	65.00' Rt.

ESTIMATED QUANTITIES

	ITEM	UNIT	QUANTITY
	Class A45 Concrete, Box Culvert	Cu. Yd.	663.4
	Reinforcing Steel	Lb.	100195
	Structure Excavation, Box Culvert	Cu. Yd.	265
	Box Culvert Undercut	Cu. Yd.	1050
#	Class B Riprap	Ton	541.6
	Type B Drainage Fabric	Sq. Yd.	607

For estimating purposes only, a factor of 1.4 tons/cu. yd. was used to convert Cu. Yd. to Tons.

-X028-

INDEX OF CULVERT SHEETS -

Sheet No. 1 - General Drawing and Quantities
Sheet No. 2 - Notes and Undercut Details
Sheet No. 3 - Inlet Details (A)
Sheet No. 4 - Inlet Details (B)
Sheet No. 5 - Outlet Details
Sheet No. 6 - F7 Barrel End Section Details (41' - 0") (A)
Sheet No. 7 - F7 Barrel End Section Details (41' - 0") (B)
Sheet No. 8 - Standard Plate No.'s 460.02 and 460.10
Sheet No. 9 - Standard Plate No.620.16

ALTERNATE A

GENERAL DRAWING AND QUANTITIES

FOR

5 - 13' X12' BOX CULVERT (C.I.P.)

OVER WHITE HORSE CREEK — 0° SKEW
STA. 18 + 50.00 — SEC. 4-T39N-R25W
STR. NO. 61-485-010 — NH 0018(172)230
PCN 02RV — HL-93

TODD COUNTY
S. D. DEPT. OF TRANSPORTATION
NOVEMBER 2013

-X028-

PLANS BY :
OFFICE OF BRIDGE DESIGN, SOUTH DAKOTA DEPARTMENT OF TRANSPORTATION

DESIGNED BY	CK. DES. BY	DRAFTED BY	
TB	BB	BT	Kevin N. Goeden
TODD02RV	02RVTA01		BRIDGE ENGINEER

STATE OF	PROJECT	SHEET NO.	TOTAL SHEETS
S.D.	NH 0018(172)230	E4	E16

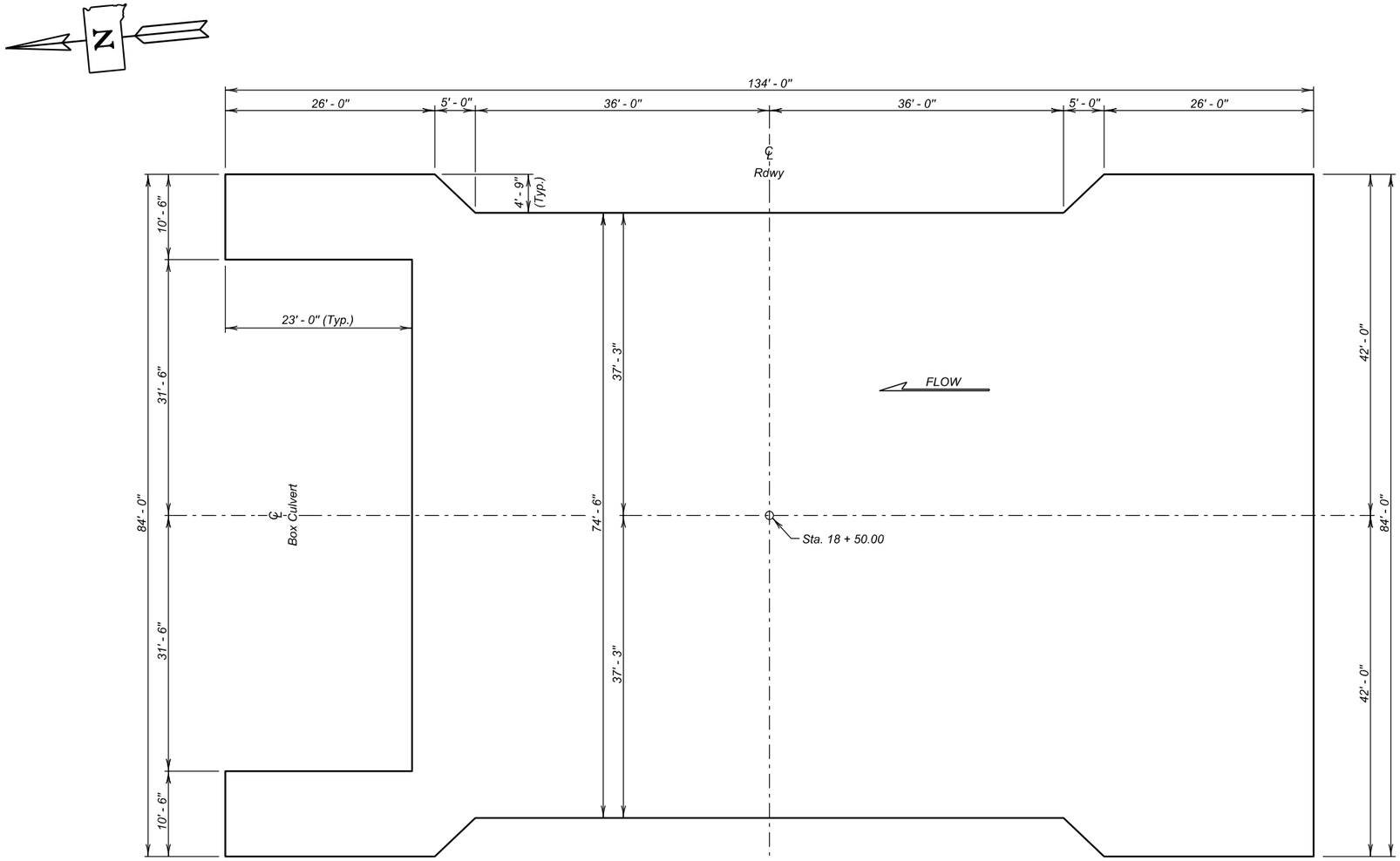

PLAN
(Bottom Dimensions)

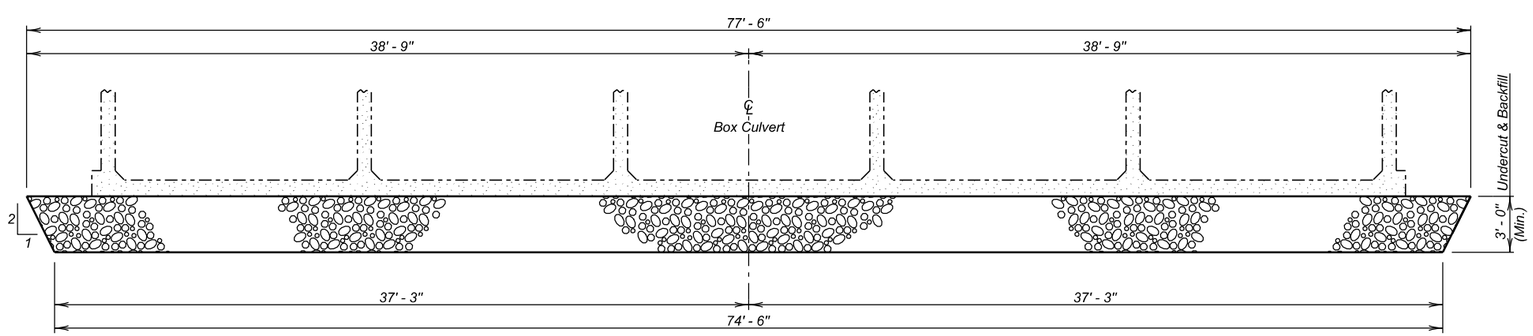

TYPICAL SECTION
(For Limits of Undercut)

SPECIFICATIONS

1. Design Specifications: AASHTO LRFD Bridge Design Specifications, 2012 Edition with 2013 interims.
2. Construction Specifications: South Dakota Standard Specifications for Roads and Bridges, 2004 Edition and required Provisions, Supplemental Specifications, and Special Provisions as included in the Proposal.

GENERAL NOTES

1. Design Live Load: HL-93 and construction load consisting of two 7' - 6" gage axles spaced 30 ft. apart with gross axle weight (each axle) = 95,850 lbs. The construction load shall not be applied until a minimum of 4 ft. of fill has been placed over the Box Culvert. Other construction loads in excess of legal load must be submitted thru proper channels to the Office of Bridge Design for analysis.
2. The design of the barrel section is based on a minimum fill height of 2 feet and includes all subsequent fill heights up to and including the maximum fill height of 7 ft. (F7).
3. Design Material Strengths: Concrete f'c = 4500 p.s.i.
   Reinforcing Steel fy = 60000 p.s.i.
4. All concrete shall be Class A45 conforming to Section 460. Substitute Class F Modified Fly Ash for cement in accordance with Section 605.
5. All reinforcing steel shall conform to ASTM A615 Grade 60.
6. All exposed edges shall be chamfered ¾ inch.
7. Use 1 inch clear cover on all reinforcing steel EXCEPT as shown.
8. The Contractor shall imprint on the structure the date of construction as specified and detailed on Standard Plate No. 460.02.
9. Care shall be taken to establish Working Points (W.P.) as shown on the wings.
10. Circled numbers in PLAN and ELEVATION views on the General Drawing are section I.D. Numbers (see SDDOT Materials Manual).
11. Compaction of earth embankment and box culvert backfill material shall be governed by the Specified Density method.

ESTIMATED QUANTITIES

	ITEM	UNIT	QUANTITY
¢	Box Culvert Undercut	Cu. Yd.	1050

¢ For payment, quantity is based on plan shown undercut dimensions and will not be measured unless the Engineer orders a change.

ALTERNATE A

NOTES AND UNDERCUT DETAILS

FOR

5 - 13' X12' BOX CULVERT (C.I.P.)

OVER WHITE HORSE CREEK — 0° SKEW
STA. 18 + 50.00 — SEC. 4-T39N-R25W
STR. NO. 61-485-010 — NH 0018(172)230
HL-93

TODD COUNTY
S. D. DEPT. OF TRANSPORTATION
NOVEMBER 2013

DESIGNED BY	CK. DES. BY	DRAFTED BY	
TB	BB	BT	Kevin N. Goeden
TODD02RV	02RVTA02		BRIDGE ENGINEER

STATE OF	PROJECT	SHEET NO.	TOTAL SHEETS
S.D.	NH 0018(172)230	E5	E16

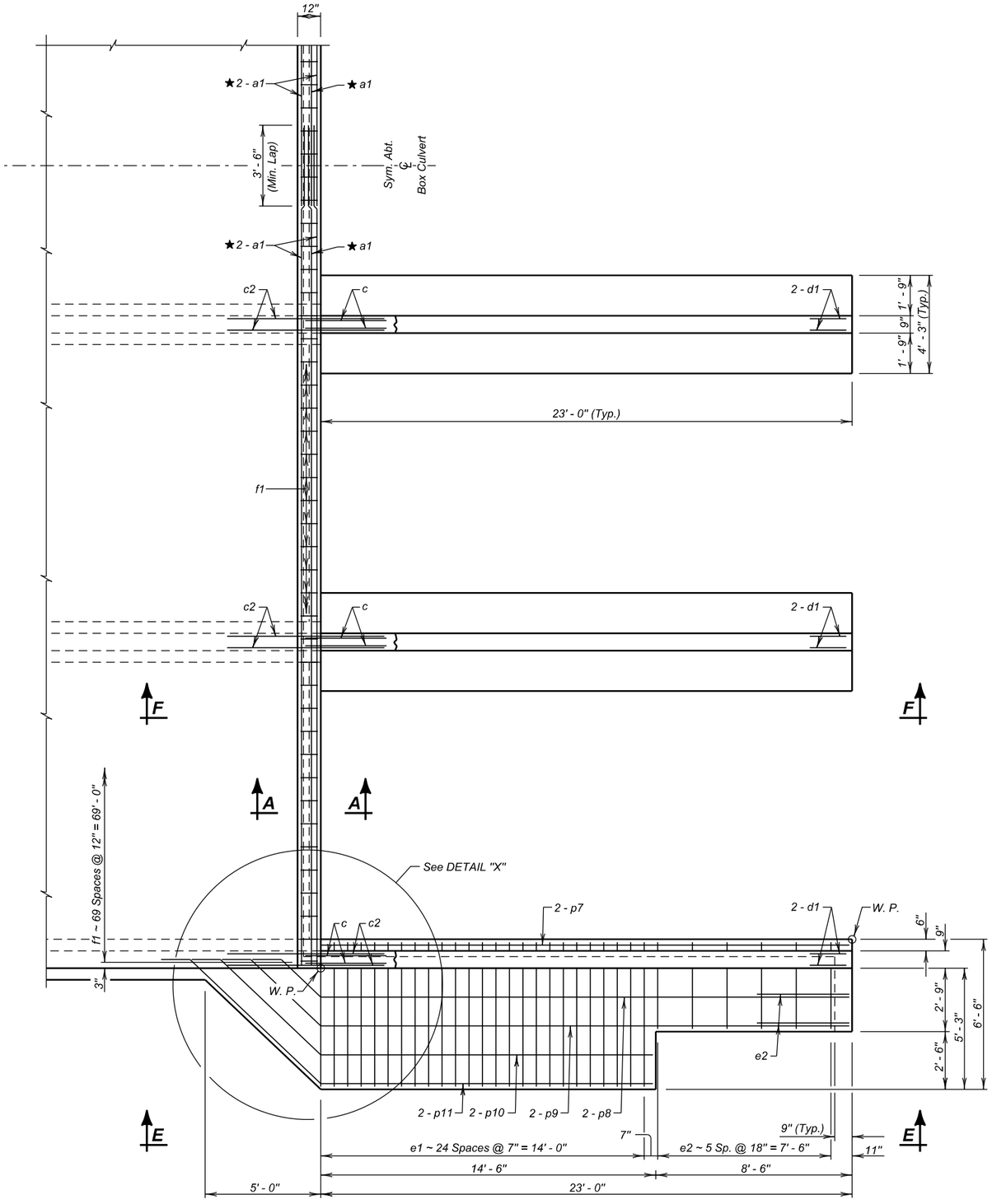

HALF PLAN

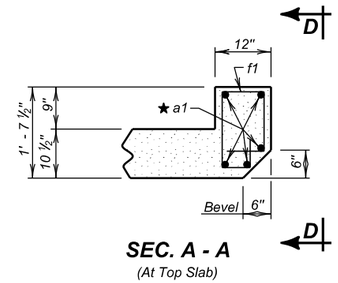

SEC. A - A
(At Top Slab)

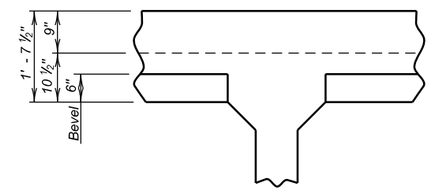

VIEW D - D
(At Middle Wall)

NOTE:
★ Minimum Lap = 3' - 6"

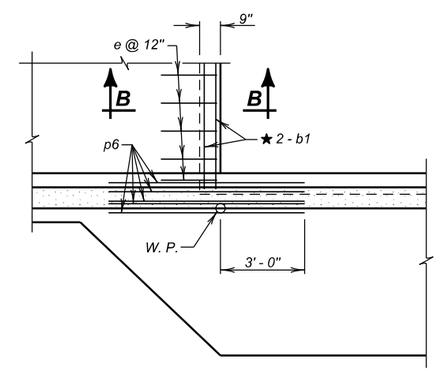

DETAIL "X"
(At Bottom Slab)

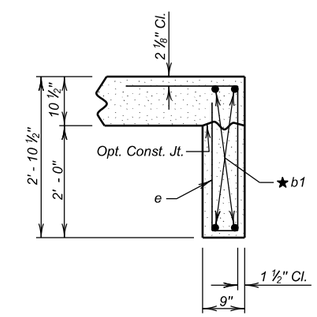

SEC. B - B

ALTERNATE A

INLET DETAILS (A)

FOR

5 - 13' X12' BOX CULVERT (C.I.P.)

OVER WHITE HORSE CREEK — 0° SKEW
STA. 18 + 50.00 — SEC. 4-T39N-R25W
STR. NO. 61-485-010 — NH 0018(172)230
HL-93

TODD COUNTY
S. D. DEPT. OF TRANSPORTATION
NOVEMBER 2013

DESIGNED BY	CK. DES. BY	DRAFTED BY	
TB	BB	BT	Kevin N. Goeden
TODD02RV	02RVTA03		BRIDGE ENGINEER

STATE OF	PROJECT	SHEET NO.	TOTAL SHEETS
S.D.	NH 0018(172)230	E6	E16

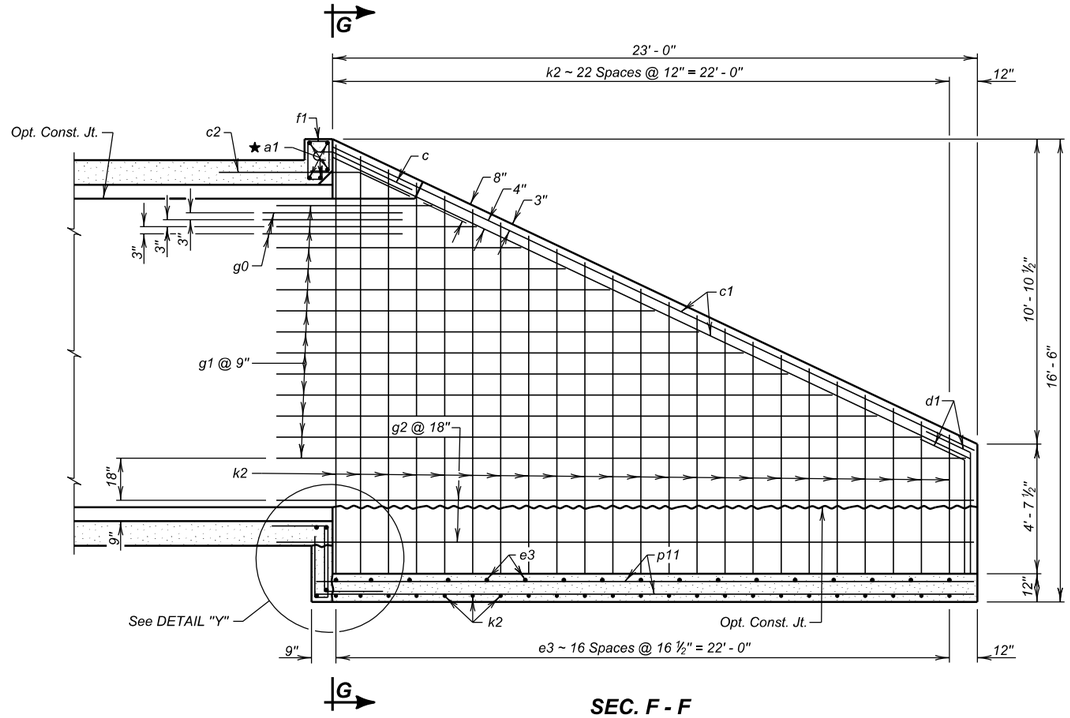

SEC. F - F

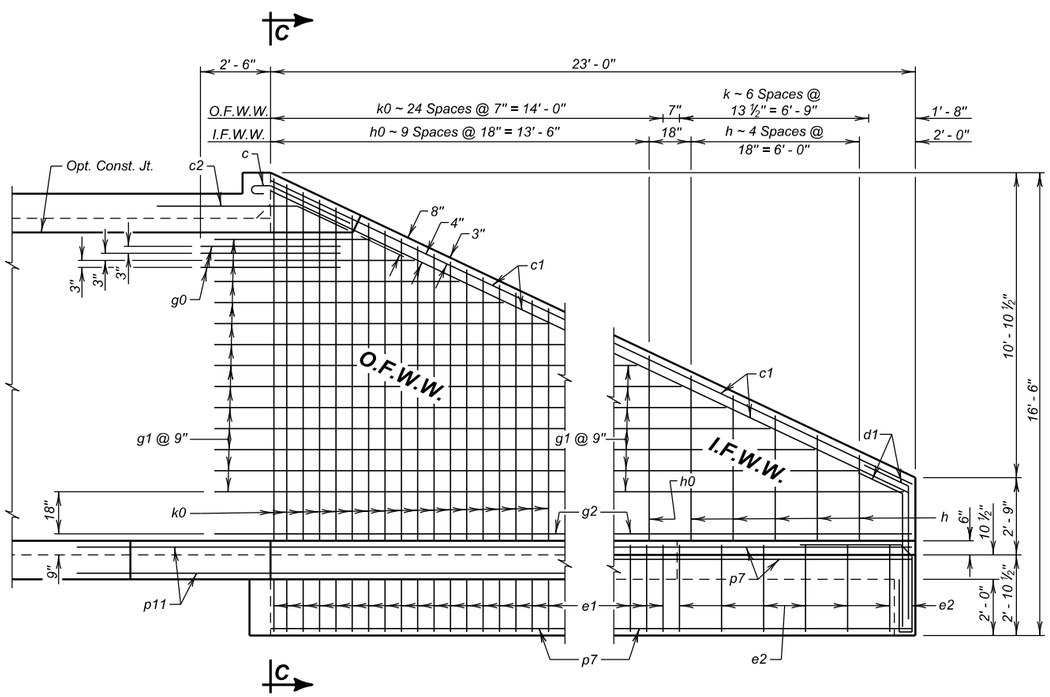

VIEW E - E

LEGEND FOR PLACING RE-STEEL

O. F. W. W. - Outside Face of Wing Wall
I. F. W. W. - Inside Face of Wing Wall

NOTE:
★ Minimum Lap = 3' - 6"

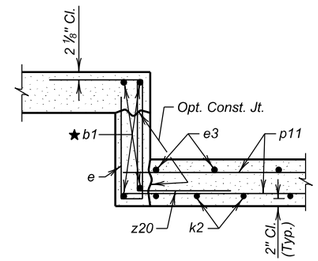

DETAIL "Y"

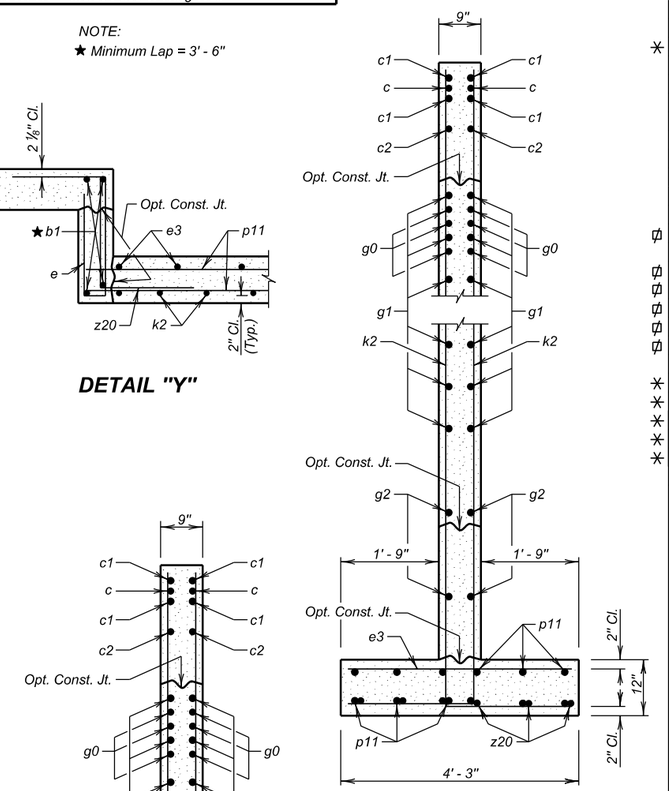

SEC. G - G

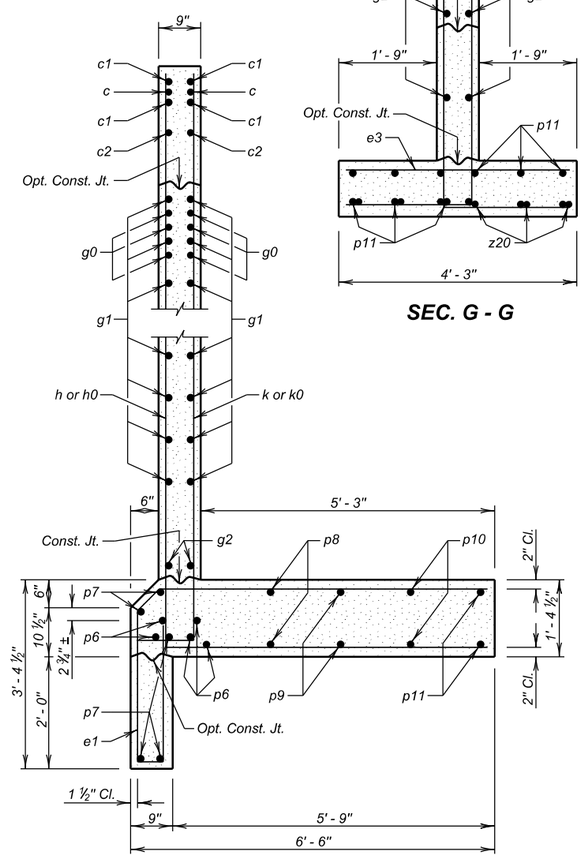

SEC. C - C

REINFORCING SCHEDULE

	Mk.	No.	Size	Length	Type
	a1	10	6	36' - 6"	Str.
	b1	8	6	36' - 0"	Str.
✳	c	12	5	4' - 6"	1A
	c1	24	5	25' - 6"	Str.
	c2	12	5	7' - 0"	19B
	d1	24	5	6' - 6"	19B
	e	69	4	7' - 3"	S12
	e1	50	4	12' - 0"	S12A
	e2	16	4	9' - 6"	S12A
	e3	68	4	4' - 0"	Str.
	f1	70	4	5' - 0"	S6A
	g0	36	5	5' - 0"	Str.
⌀	g1	78	4	30' - 0"	Str.
	g2	20	4	24' - 9"	Str.
⌀	h	5	6	17' - 9"	17A
⌀	h0	10	4	33' - 6"	17A
⌀	k	7	4	13' - 6"	17A
⌀	k0	25	4	23' - 9"	17A
⌀	k2	92	4	26' - 9"	17A
	p6	10	6	7' - 0"	Str.
✳	p7	10	4	25' - 6"	Str.
✳	p8	4	4	26' - 9"	Str.
✳	p9	4	4	28' - 6"	Str.
✳	p10	4	4	21' - 9"	Str.
✳	p11	52	4	23' - 6"	Str.
	z20	24	4	4' - 6"	17A

Bending Details

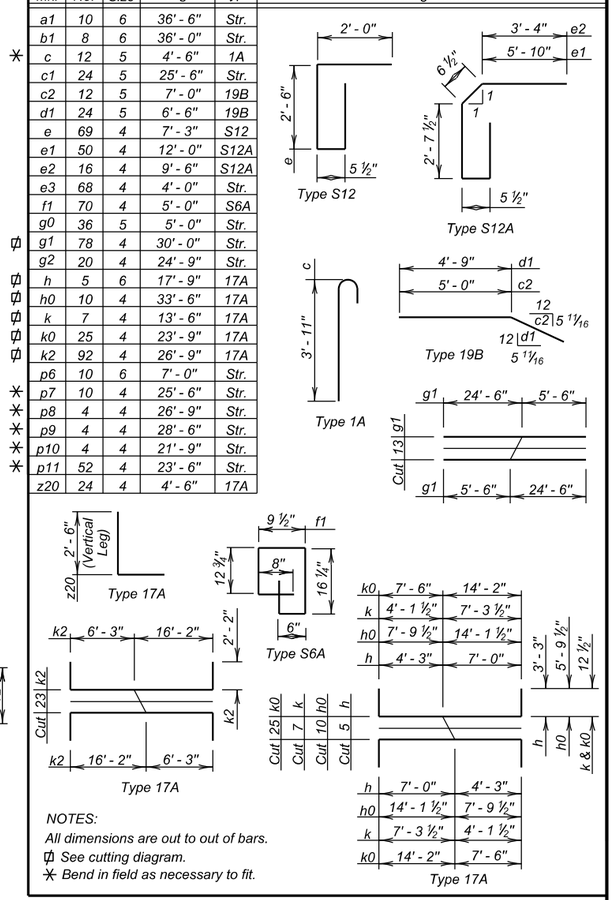

NOTES:
All dimensions are out to out of bars.
⌀ See cutting diagram.
✳ Bend in field as necessary to fit.

ESTIMATED QUANTITIES

ITEM	Class A45 Concrete, Box Culvert	Reinforcing Steel	Structure Excavation, Box Culvert
UNIT	Cu. Yd.	Lb.	Cu. Yd.
Inlet	79.1	9090	59.7

ALTERNATE A

INLET DETAILS (B)

FOR

5 - 13' X12' BOX CULVERT (C.I.P.)

OVER WHITE HORSE CREEK — 0° SKEW
STA. 18 + 50.00 — SEC. 4-T39N-R25W
STR. NO. 61-485-010 — NH 0018(172)230
HL-93

TODD COUNTY
S. D. DEPT. OF TRANSPORTATION
NOVEMBER 2013

DESIGNED BY	CK. DES. BY	DRAFTED BY	
TB	BB	BT	Kevin N. Goeden BRIDGE ENGINEER
TODD02RV	02RVTA04		

STATE OF	PROJECT	SHEET NO.	TOTAL SHEETS
S.D.	NH 0018(172)230	E7	E16

NOTE:
★ Minimum Lap = 3' - 6"

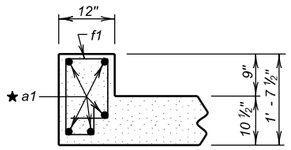

SEC. A - A
(At Top Slab)

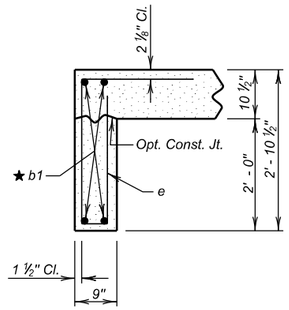

SEC. B - B

DETAIL "X"
(At Bottom Slab)

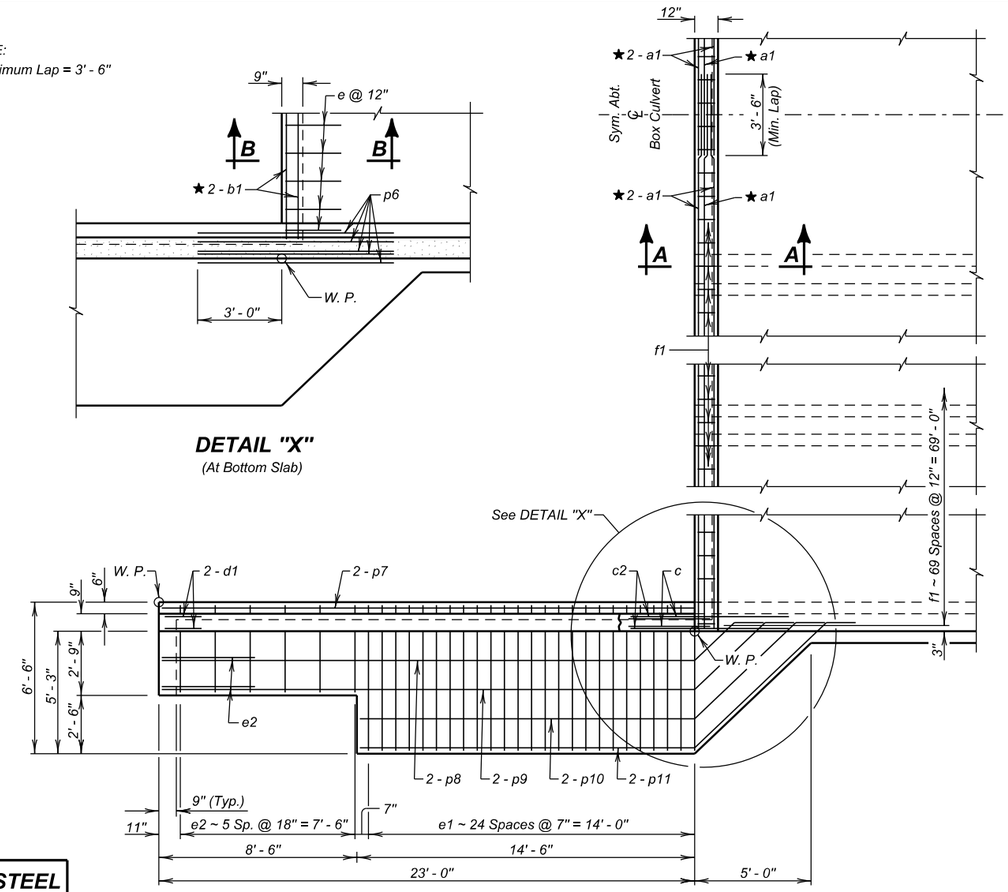

HALF PLAN

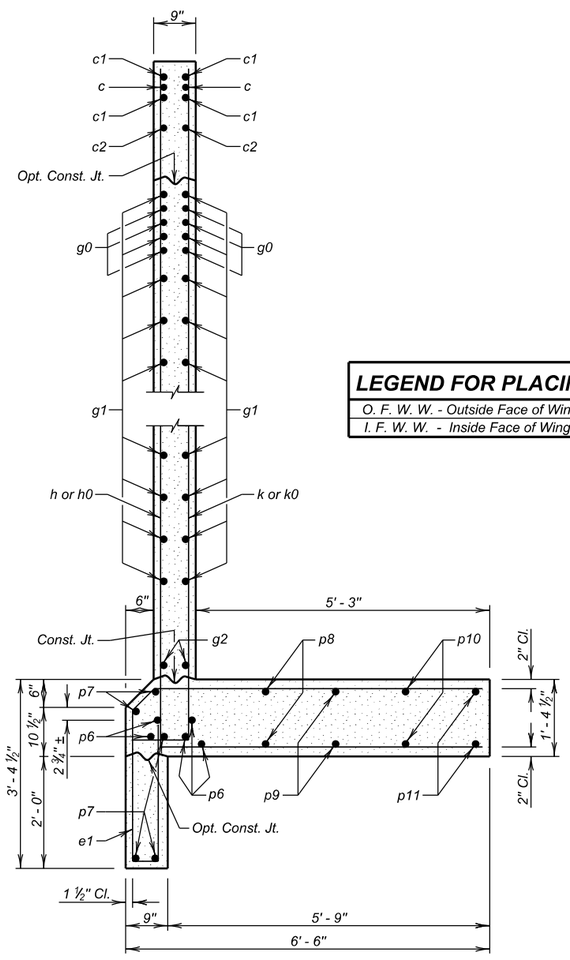

SEC. C - C

LEGEND FOR PLACING RE-STEEL

O. F. W. W. - Outside Face of Wing Wall
I. F. W. W. - Inside Face of Wing Wall

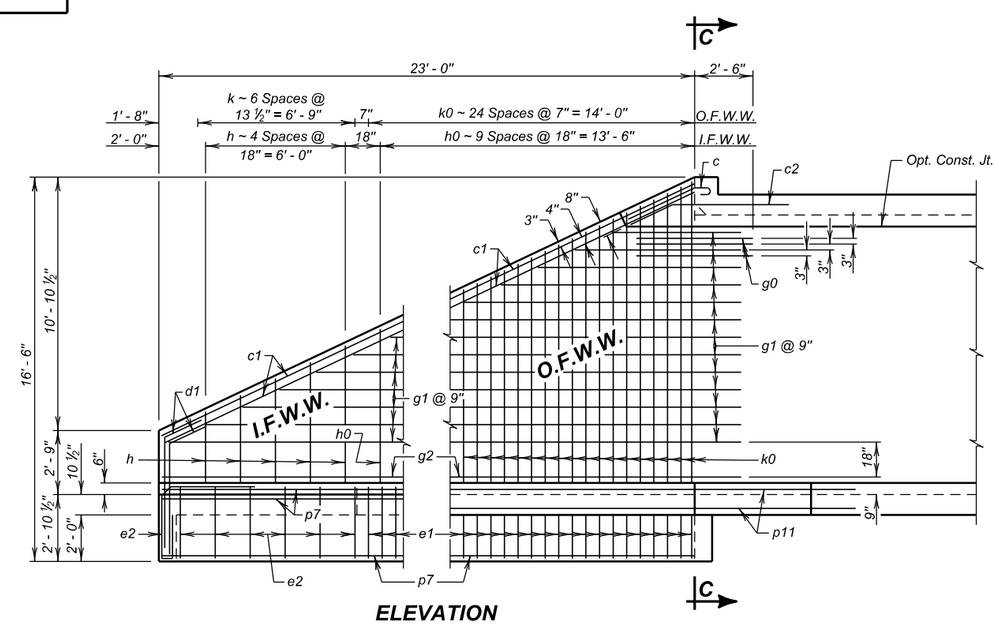

ELEVATION

REINFORCING SCHEDULE

	Mk.	No.	Size	Length	Type
	a1	10	6	36' - 6"	Str.
	b1	8	6	36' - 0"	Str.
✳	c	4	5	4' - 6"	1A
	c1	8	5	25' - 6"	Str.
	c2	4	5	7' - 0"	19B
	d1	8	5	6' - 6"	19B
	e	69	4	7' - 3"	S12
	e1	50	4	12' - 0"	S12A
	e2	16	4	9' - 6"	S12A
	f1	70	4	5' - 0"	S6A
	g0	12	5	5' - 0"	Str.
⌀	g1	26	4	30' - 0"	Str.
	g2	4	4	24' - 9"	Str.
⌀	h	5	6	17' - 9"	17A
⌀	h0	10	4	33' - 6"	17A
⌀	k	7	4	13' - 6"	17A
⌀	k0	25	4	23' - 9"	17A
	p6	10	6	7' - 0"	Str.
✳	p7	10	4	25' - 6"	Str.
✳	p8	4	4	26' - 9"	Str.
✳	p9	4	4	28' - 6"	Str.
✳	p10	4	4	21' - 9"	Str.
✳	p11	4	4	23' - 6"	Str.

Bending Details

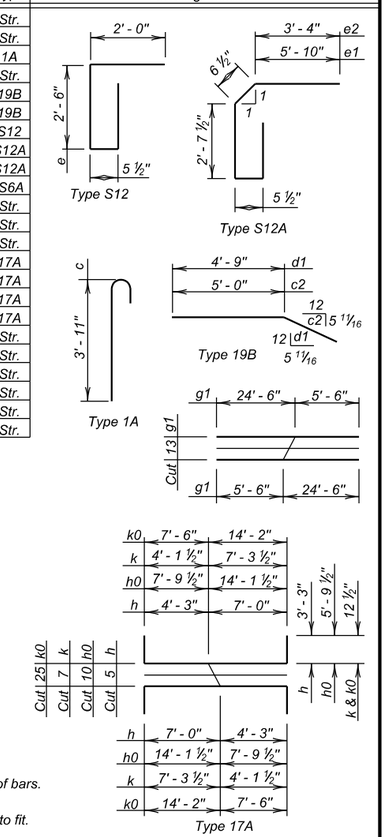

NOTES:
All dimensions are out to out of bars.
⌀ See cutting diagram.
✳ Bend in field as necessary to fit.

ESTIMATED QUANTITIES

ITEM	Class A45 Concrete, Box Culvert	Reinforcing Steel	Structure Excavation, Box Culvert
UNIT	Cu. Yd.	Lb.	Cu. Yd.
Outlet	39.2	4377	18.1

ALTERNATE A

OUTLET DETAILS

FOR

5 - 13' X12' BOX CULVERT (C.I.P.)

OVER WHITE HORSE CREEK — 0° SKEW
STA. 18 + 50.00 — SEC. 4-T39N-R25W
STR. NO. 61-485-010 — NH 0018(172)230
HL-93

TODD COUNTY
S. D. DEPT. OF TRANSPORTATION
NOVEMBER 2013

DESIGNED BY	CK. DES. BY	DRAFTED BY	
TB	BB	BT	Kevin N. Goeden BRIDGE ENGINEER
TODD02RV	02RVTA05		

STATE OF	PROJECT	SHEET NO.	TOTAL SHEETS
S.D.	NH 0018(172)230	E8	E16

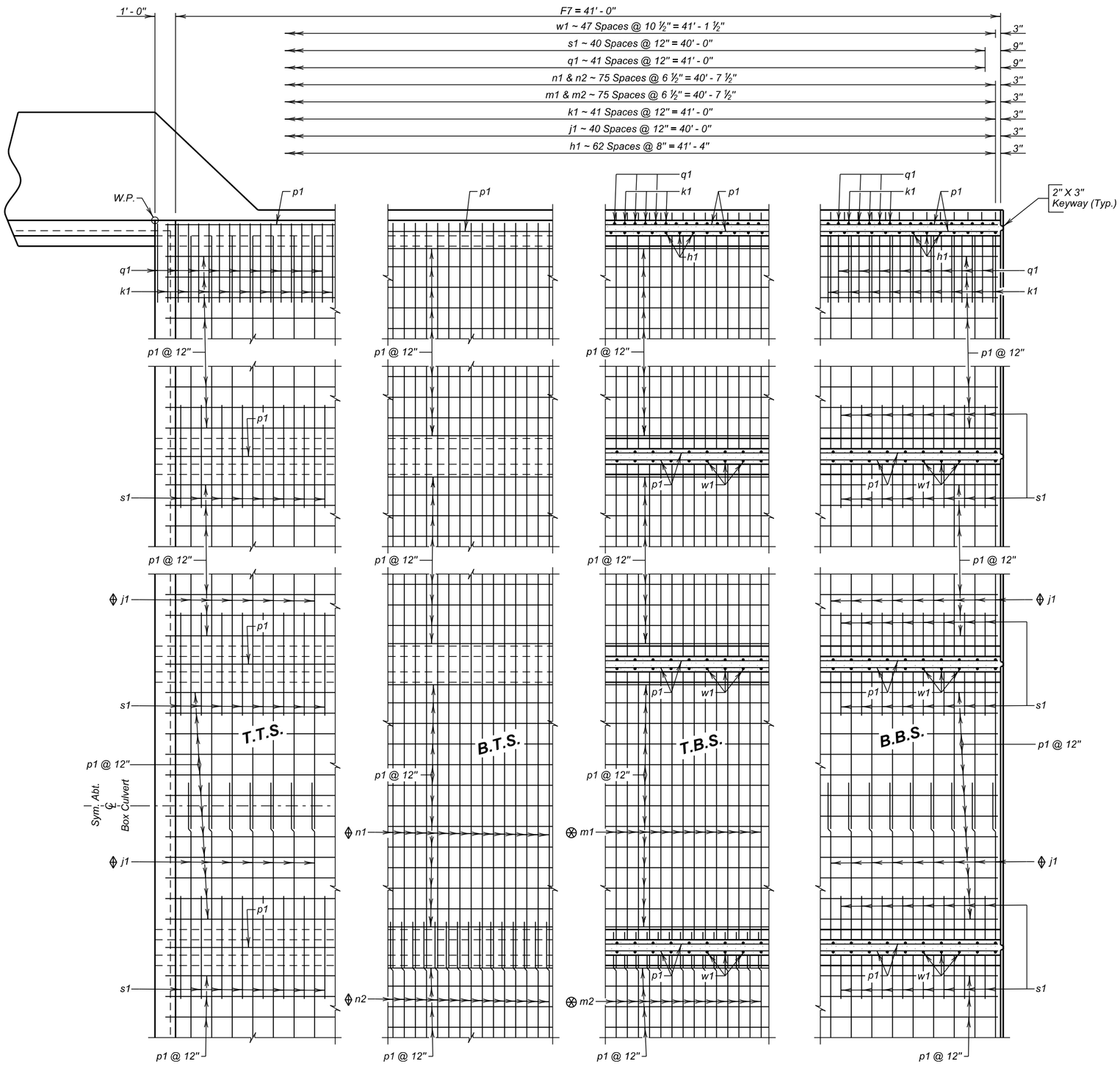

HALF PLAN

LEGEND FOR PLACING RE- STEEL

T.T.S. - Top of Top Slab
B.T.S. - Bottom of Top Slab
T.B.S. - Top of Bottom Slab
B.B.S. - Bottom of Bottom Slab

NOTES:

⟠ 2' - 3" = Minimum Lap

⊗ 1' - 9" = Minimum Lap

ALTERNATE A

F7 BARREL END SECTION DETAILS (41' - 0") (A)

FOR

5 - 13' X12' BOX CULVERT (C.I.P.)

OVER WHITE HORSE CREEK — 0° SKEW

STA. 18 + 50.00 — SEC. 4-T39N-R25W

STR. NO. 61-485-010 — NH 0018(172)230

HL-93

TODD COUNTY

S. D. DEPT. OF TRANSPORTATION

NOVEMBER 2013

6 OF 9

DESIGNED BY	CK. DES. BY	DRAFTED BY	
TB	BB	BT	Kevin N. Goeden
TODD02RV	02RVTA06		BRIDGE ENGINEER

STATE OF	PROJECT	SHEET NO.	TOTAL SHEETS
S.D.	NH 0018(172)230	E9	E16

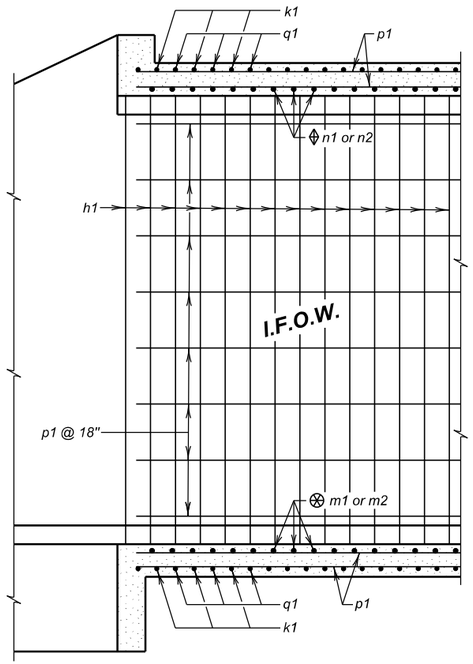

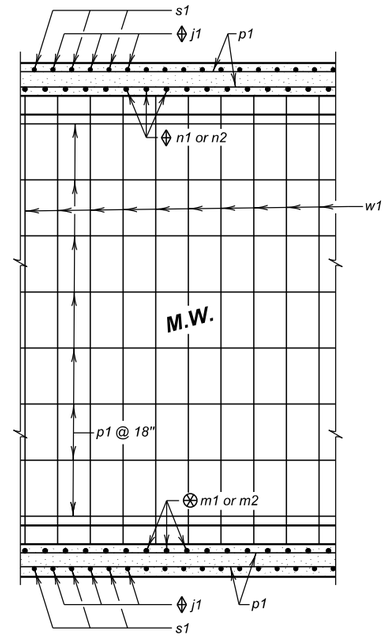

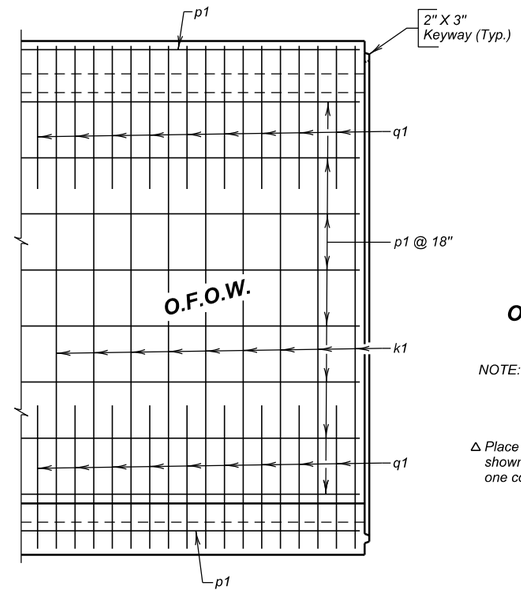

ELEVATION

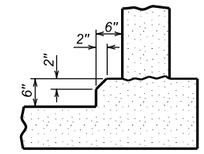

OPTIONAL FILLET DETAIL

(At Bottom Slab)

NOTE: Contractor may form the optional full fillet, with 2" Chamfer, as detailed. The cost of the additional concrete shall be borne by the Contractor.

△ Place z1 bars thru construction joint between barrel sections as shown on Standard Plate No. 460.10. Quantity of z1 bars is for one construction joint.

REINFORCING SCHEDULE

(For One F7 Barrel End Section)

	Mk.	No.	Size	Length	Type
	h1	126	4	14' - 3"	17A
⊕	j1	164	6	35' - 3"	Str.
	k1	84	5	21' - 3"	17
⊗	m1	76	5	43' - 0"	Str.
⊗	m2	76	5	29' - 0"	Str.
⊕	n1	76	6	42' - 6"	Str.
⊕	n2	76	6	29' - 0"	Str.
	p1	366	4	41' - 6"	Str.
	q1	168	5	7' - 9"	17A
	s1	328	6	5' - 0"	Str.
	w1	192	4	29' - 6"	S11A
△	z1	178	5	3' - 6"	Str.

Bending Details

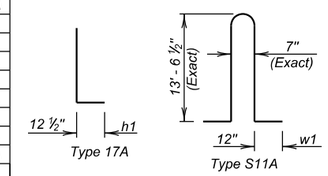

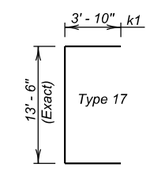

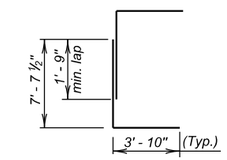

OPTIONAL k1 SPLICE DETAIL
Contractor may use optional reinforcing steel splice, as shown. The cost of the additional reinforcing steel shall be borne by the Contractor.

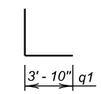

NOTES:

All dimensions are out to out of bars.

Request for additional reinforcing steel splices at points other than those shown, must be submitted to the Engineer for prior approval. If additional splices are approved, no payment will be allowed for the added quantity of reinforcing steel.

ESTIMATED QUANTITIES

ITEM	Class A45 Concrete, Box Culvert	Reinforcing Steel	Structure Excavation, Box Culvert
UNIT	Cu.Yd.	Lb.	Cu.Yd.
2 - F7 Barrel End Sections @ 41' - 0"	545.1	86728	187.3
⊕ 1 - Construction Joint	——	650	——

⊕ See General Drawing for number of construction joints required.

LEGEND FOR PLACING RE- STEEL

O.F.O.W. - Outside Face of Outside Wall
I.F.O.W. - Inside Face of Outside Wall
M.W. - Middle Wall

NOTE:
⊕ 2' - 3" = Minimum Lap
⊗ 1' - 9" = Minimum Lap

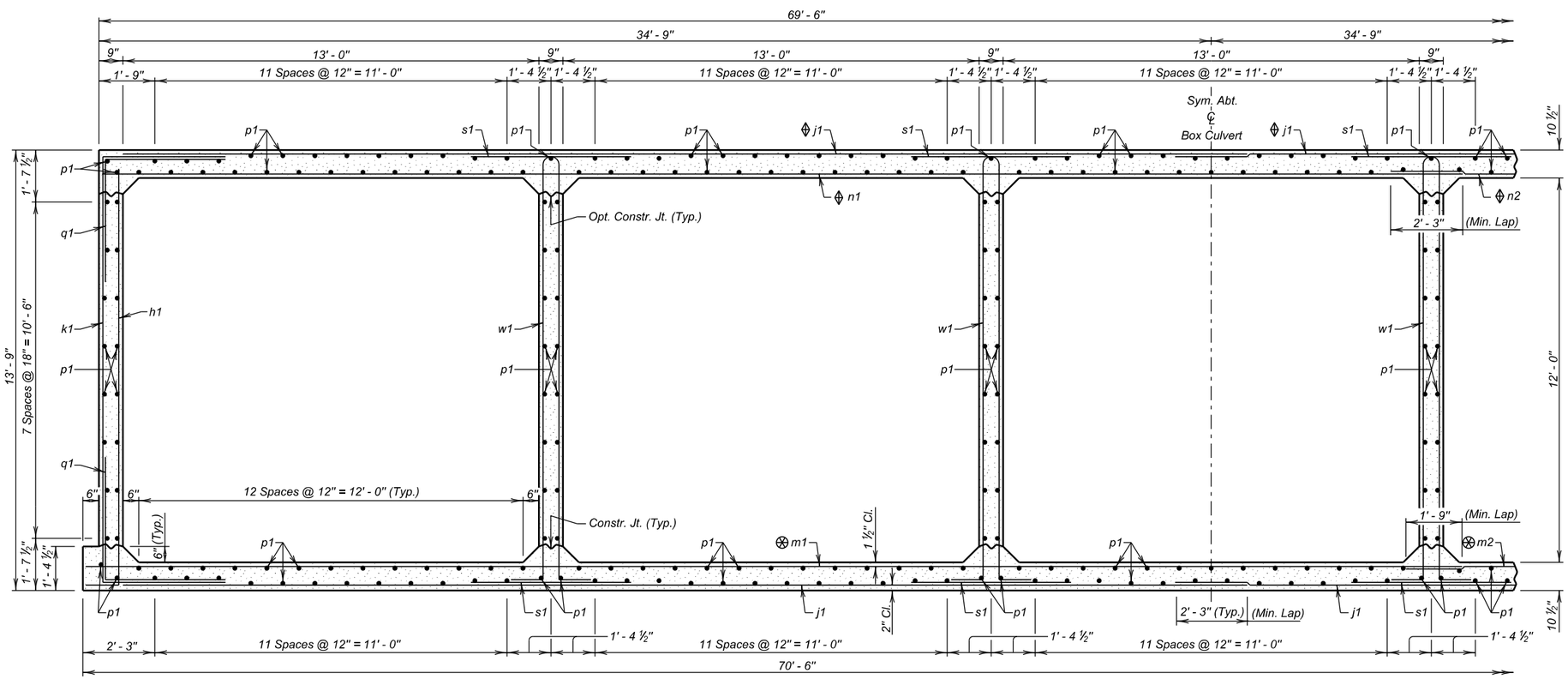

F7 BARREL HALF SECTION

(7' - 0" Maximum Fill)

ALTERNATE A

F7 BARREL END SECTION DETAILS (41' - 0") (B)

FOR

5 - 13' X12' BOX CULVERT (C.I.P.)

OVER WHITE HORSE CREEK — 0° SKEW
STA. 18 + 50.00 — SEC. 4-T39N-R25W
STR. NO. 61-485-010 — NH 0018(172)230
HL-93

TODD COUNTY
S. D. DEPT. OF TRANSPORTATION
NOVEMBER 2013

DESIGNED BY	CK. DES. BY	DRAFTED BY	
TB	BB	BT	Kevin N. Cooden
TODD02RV	02RVTA07		BRIDGE ENGINEER

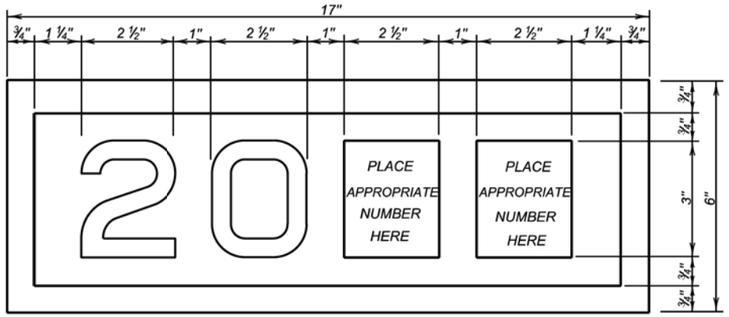

YEAR PLATE DETAILS

GENERAL NOTES:

1. Year plates of the general dimensions shown shall be constructed on all box culverts and bridges. The year plates shall be constructed in reverse and attached to the forms in such a manner that the finished imprint in the concrete does not exceed one-half (½) inch in depth.

2. Year plates shall be located on structure (s) as follows:

   a. On cast-in-place box culverts the year plates shall be four and one - half (4 ½) inches below the top of the upstream parapet wall and centered laterally on the upstream face. On precast box culverts the year plate shall be centered laterally on the upstream face of the top slab. Where an extended interior wall interferes with this location, the year plate shall be centered in an adjacent barrel.

   b. On bridges with six (6) inch curbs or "Jersey" shaped barriers with no endblocks, the year plate shall be centered vertically on the curb face approximately six (6) inches from the end of the bridge, or as designated by the Engineer. On bridges with "Jersey" shaped barrier endblocks, the year plate shall be centered on the upper sloped portion of the barrier approximately 5'- 6" from the end of the bridge, or as designated by the Engineer. There shall be one year plate at each end of the bridge on opposite sides.

   c. When the plans specify that both the original date of construction and the date of reconstruction are to be shown, one date shall be placed as listed above and the other located adjacent to it. Both year plates shall be shown at each end of the bridge on opposite sides.

3. There will be no separate measurement or payment made for year plates on box culverts and bridges. All costs for this work shall be incidental to other contract items.

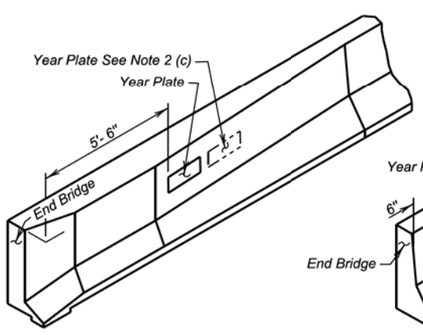

JERSEY BARRIER
(With Endblock)

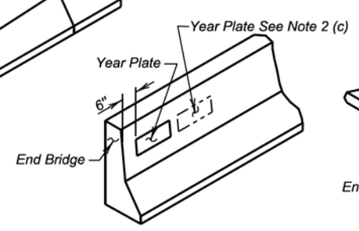

JERSEY BARRIER

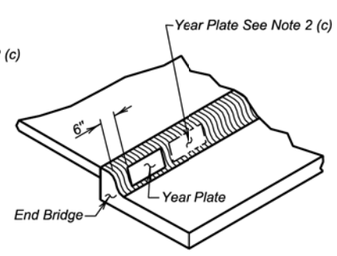

TYPE B CURB

June 26, 2012

Published Date: 2nd Qtr. 2014	SDDOT	YEAR PLATE DETAILS	PLATE NUMBER 460.02
			Sheet 1 Of 1

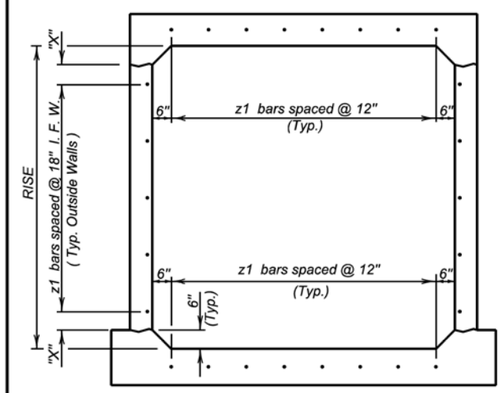

TYPICAL SINGLE BARREL VIEW A - A

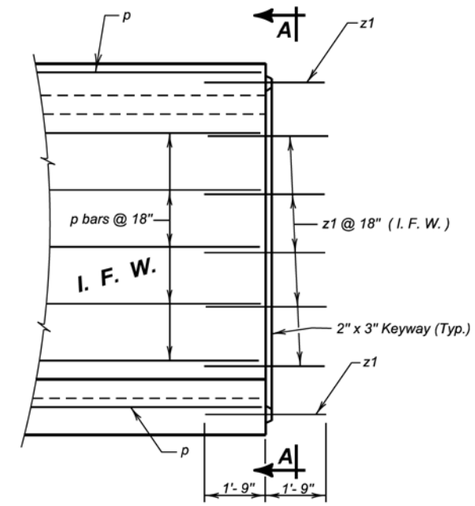

ELEVATION

LEGEND FOR PLACING RE-STEEL

I. F. W. - Inside Face Wall

RISE	"X"
3'- 0"	3"
4'- 0"	9"
5'- 0"	6"
6'- 0"	3"
7'- 0"	9"
8'- 0"	6"
9'- 0"	3"
10'- 0"	9"
11'- 0"	6"
12'- 0"	3"

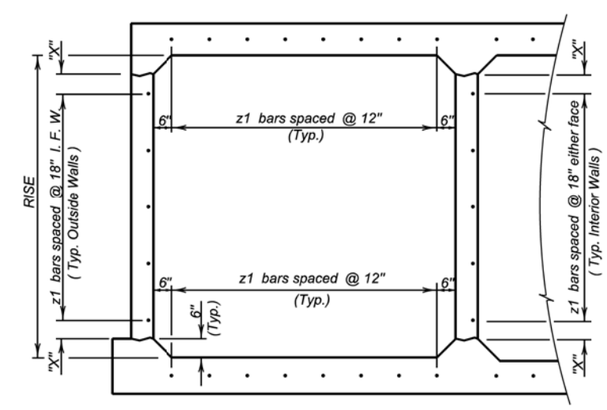

TYPICAL MULTIPLE BARREL VIEW A - A

GENERAL NOTES:

1. z1 bars shall be placed in the middle of the 2" X 3" keyway in the top and bottom slabs. z1 bars shall be lapped with the longitudinal p bars in the inside face of the wall for outside walls and in either face for interior walls. z1 bars are listed and included elsewhere in plans.

2. Drainage Fabric Protection shall be placed in accordance with Section 422, or Section 560, whichever is applicable.

June 26, 2012

Published Date: 2nd Qtr. 2014	SDDOT	BOX CULVERT BARREL TIE REINFORCEMENT	PLATE NUMBER 460.10
			Sheet 1 of 1

ALTERNATE A

5 - 13' X12' BOX CULVERT (C.I.P.)
STR. NO. 61-485-010
NOVEMBER 2013

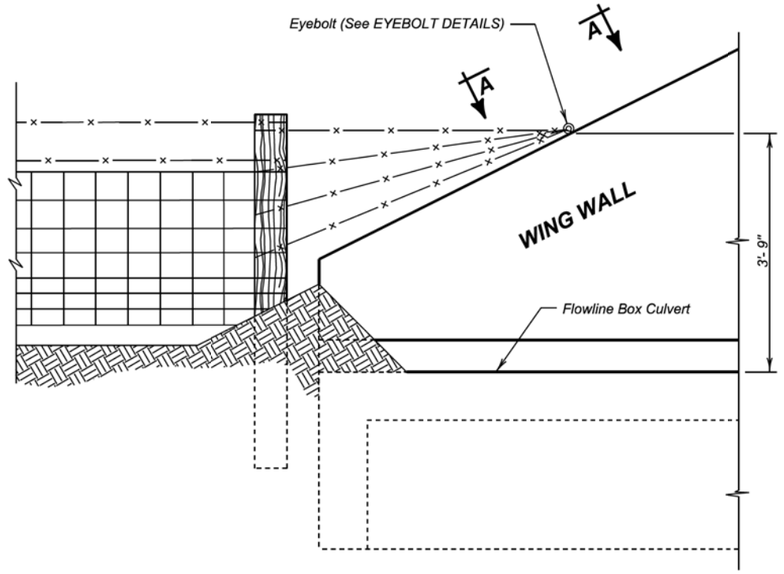

DETAIL FOR FENCE ANCHORS

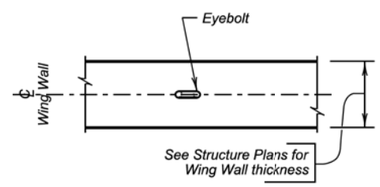

VIEW A - A

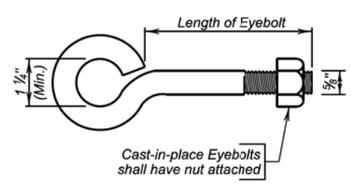

EYEBOLT DETAILS

GENERAL NOTES:

1. The fence and post details shown are for illustrative purpose only. The fence shall be as specified elsewhere in the plans.
2. Eyebolts shall be placed on all of the box culvert wing walls.
3. Eyebolts shall be ⅝ inch diameter and shall conform to ASTM A307.
4. Eyebolts, nuts, and concrete inserts shall be galvanized in accordance with AASHTO M232 (ASTM A153). Concrete inserts of corrosion resistant material need not be galvanized.
5. Cast-in-place eyebolts shall have a nut attached, be 4 ½ inches (Min.) in length and shall be embedded such that the eye of the bolt is flush with the concrete surface. (See Eyebolt Details) As an alternate, cast-in-place concrete inserts, capable of developing the full strength of the ⅝ inch diameter threaded eyebolt, may be used and shall be set in the concrete in accordance with the manufacturer's recommendations. The eyebolt shall be of sufficient length to develop its full strength. The eye of the eyebolt shall be flush with the concrete surface.
6. The cost for furnishing and installing eyebolts and/or concrete inserts shall be incidental to various contract items.

December 23, 2012

Published Date: 2nd Qtr. 2014	SDDOT	FENCE ANCHORS FOR BOX CULVERT WING WALLS	PLATE NUMBER 620.16 Sheet 1 of 1

ALTERNATE A

5 - 13' X12' BOX CULVERT (C.I.P.)
STR. NO. 61-485-010
NOVEMBER 2013

STATE OF	PROJECT	SHEET NO.	TOTAL SHEETS
S.D.	NH 0018(172)230	E12	E16

The elevations shown in these plans are based on the National Geodetic Survey (NGS) North American Vertical Datum of 1988 (NAVD88).

✳ Dimension may vary with fabricator and/or installation. See Shop Plans for actual installation length.
★ Minimum distance to satisfy fill slope.
△ Based on dimensions shown.
☐ Based on 9" side walls and 8" middle walls.

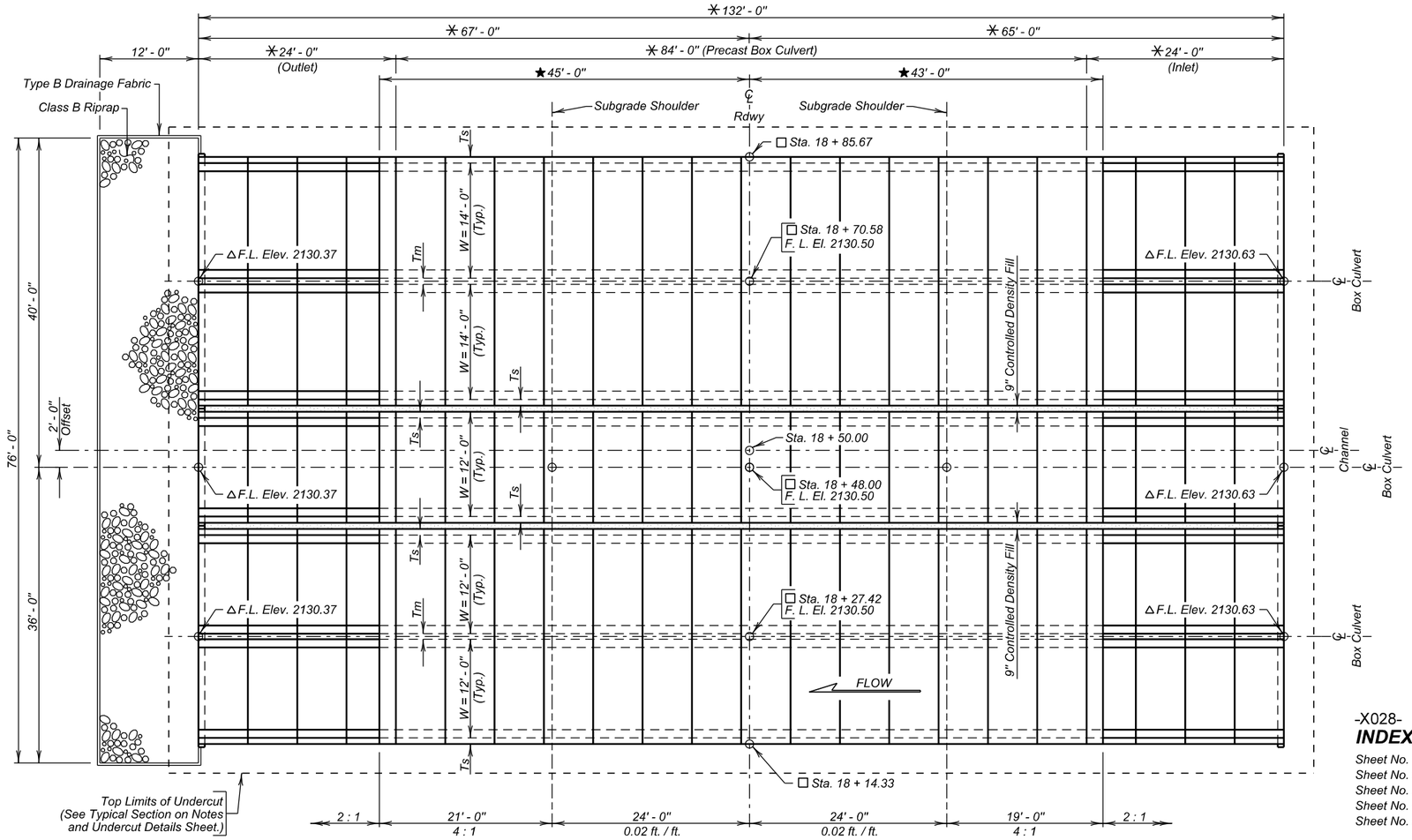

PLAN

NOTE:
Box culvert flow line has been depressed 1' - 0" below channel flow line to accommodate aquatic organisms. The 1' - 0" depression will be allowed to fill in naturally over time.

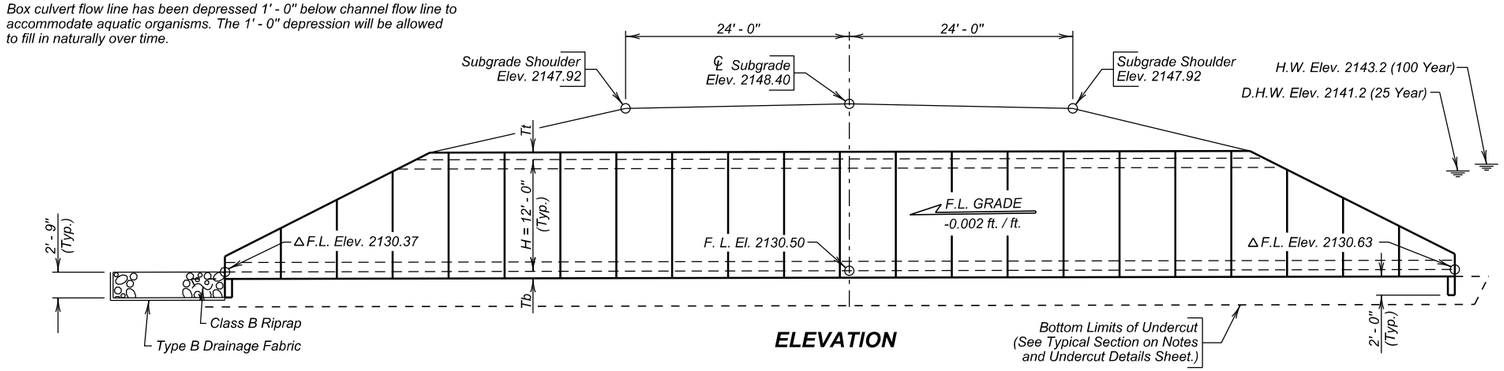

ELEVATION

ESTIMATED QUANTITIES

	ITEM	UNIT	QUANTITY
∡	Structure Excavation, Box Culvert	Cu. Yd.	299
	Box Culvert Undercut	Cu. Yd.	1177
∡	Controlled Density Fill	Cu. Yd.	103.2
≠	Class B Riprap	Ton	130.0
	Type B Drainage Fabric	Sq. Yd.	155
	12' X 12' Precast Concrete Box Culvert, Furnish	Ft.	84
	12' X 12' Precast Concrete Box Culvert, Install	Ft.	84
	12' X 12' Precast Concrete Box Culvert End Section, Furnish	Each	2
	12' X 12' Precast Concrete Box Culvert End Section, Install	Each	2
	2 - 12' X 12' Precast Concrete Box Culvert, Furnish	Ft.	84
	2 - 12' X 12' Precast Concrete Box Culvert, Install	Ft.	84
	2 - 12' X 12' Precast Concrete Box Culvert End Section, Furnish	Each	2
	2 - 12' X 12' Precast Concrete Box Culvert End Section, Install	Each	2
	2 - 14' X 12' Precast Concrete Box Culvert, Furnish	Ft.	84
	2 - 14' X 12' Precast Concrete Box Culvert, Install	Ft.	84
	2 - 14' X 12' Precast Concrete Box Culvert End Section, Furnish	Each	2
	2 - 14' X 12' Precast Concrete Box Culvert End Section, Install	Each	2

∡ Quantity is based on 10" bottom slab, 10" top slab and 9" walls.
≠ For estimating purposes only, a factor of 1.4 tons/cu. yd. was used to convert Cu. Yd. to Tons.

HYDRAULIC DATA

Q_d	1890 cfs
A_d	630 sq ft
V_d	3.0 fps
Q_F	1890 cfs
Q_{100}	3370 cfs
Q_{OT}	$>Q_{500}$
V_{max}	4.3 fps

Q_d = Design discharge for the proposed culvert based on 25 year frequency. El. 2141.2
Q_{OT} = Overtopping discharge and frequency >500 year recurrence interval. El. 2148.4. Location 24 + 26.00.
Q_F = Designated peak discharge for the basin approaching proposed project based on 25 year frequency.
Q_{100} = Computed discharge for the basin approaching proposed project based on 100 year frequency. El. 2143.2
V_{max} = Maximum computed outlet velocity for the proposed culvert, based on 100 year frequency.

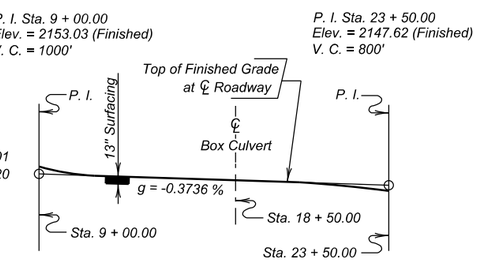

GRADELINE DATA

-X028-
INDEX OF CULVERT SHEETS

Sheet No. 1 - General Drawing and Quantities
Sheet No. 2 - Notes and Undercut Details
Sheet No. 3 - Details of Standard Plate No's. 460.02 & 560.01
Sheet No. 4 - Details of Standard Plate No's. 560.10 & 560.20
Sheet No. 5 - Details of Standard Plate No's. 620.16

LEGEND

W = Width of Opening
H = Height of Opening
Tt = Thickness of Top Slab
Tb = Thickness of Bottom Slab
Ts = Thickness of Side Wall
Tm = Thickness of Middle Wall

ALTERNATE B

GENERAL DRAWING AND QUANTITIES

FOR

2 - 12' X12', 1 - 12' X 12' & 2 - 14' X 12' BOX CULVERT (PRECAST)

OVER WHITE HORSE CREEK — 0° SKEW
STA. 18 + 50.00 — SEC. 4-T39N-R25W
STR. NO. 61-485-010 — NH 0018(172)230
PCN 02RV — HL-93

TODD COUNTY
S. D. DEPT. OF TRANSPORTATION
NOVEMBER 2013

-X028-

1 OF 5

PLANS BY :
OFFICE OF BRIDGE DESIGN, SOUTH DAKOTA DEPARTMENT OF TRANSPORTATION

DESIGNED BY	CK. DES. BY	DRAFTED BY	
TB	BB	BT	Kevin N. Goeden
TODD02RV	02RVTA10		BRIDGE ENGINEER

STATE OF	PROJECT	SHEET NO.	TOTAL SHEETS
S.D.	NH 0018(172)230	E13	E16

SPECIFICATIONS

Use South Dakota Standard Specifications for Roads and Bridges, 2004 Edition and Required Provisions, Supplemental Specifications and Special Provisions as included in the Proposal.

GENERAL NOTES

Design shall be in accordance with Section 560 of the South Dakota Specifications with the following criteria:

1. *Box culvert and box culvert end section design shall conform to the AASHTO LRFD Bridge Design Specifications, 2012 Edition with 2013 interims.*
2. *Design Live Load: HL-93 and construction loading consisting of one 7' - 6" gage axle with gross weight = 95,850 lbs. The construction load shall not be applied until a minimum of 4 ft. of fill has been placed over the Box Culvert. If construction loads in excess of legal load are anticipated by the Contractor, the Contractor shall submit a design analysis for the anticipated construction loading, through the proper channels, to the Office of Bridge Design for approval.*
3. *The box culvert shall be load rated in accordance with AASHTO Manual for Bridge Evaluation, 2010 Edition with latest Interim Revisions using the LRFR method. The rating shall include evaluation at the Design Load rating for the HL-93 truck at both Inventory and Operating levels and at the Legal Load rating for the three SD legal trucks (Type 3, 3S2 and 3-2). All sections of the box culvert shall rate at HL-93 or better (Inventory Level). Submit the results of the Load Rating with the Design and Check Design calculations or shop plans, as appropriate.*
4. *The design of the barrel sections shall be based on a minimum fill height of 2 feet and include all subsequent fill heights up to and including the maximum fill height of 7 ft. over the box culvert.*
5. *Minimum inside corner fillet shall be 6 in.*
6. *Minimum precast barrel section length shall be 4 ft.*
7. *Lift holes shall be plugged with an approved nonshrinkable grout.*
8. *The Fabricator shall imprint on the structure the date of construction as specified and detailed on Standard Plate No. 460.02.*
9. *Alternate end section details will be allowed, subject to the approval of the Bridge Construction Engineer. No additional payment will be made for any change in the barrel/end section configuration.*
10. *Installation of the precast sections shall be in accordance with the final approved shop plans.*
11. *Compaction of earth embankment and box culvert backfill shall be governed by the Specified Density method.*
12. *Adjust cutoff wall shown on Standard Plates No. 560.20 to extend the full width of the end sections (out-to-out) plus 9 inch spacing.*

CONTROLLED DENSITY FILL

1. *Controlled density fill shall be placed between the lines of precast box culverts as shown on the plans. Controlled density fill shall be a flowable mortar material. Material and mixing shall be in accordance with Section 462 of the SD Specifications, except as modified below. The mix shall be as follows:*

MATERIAL	RATE PER CUBIC YARD
Portland Cement Type I, II, III or V	100 lb
Fine Aggregate	2600 lb
Water	60 gal
Fly Ash, Type C	300 lb

2. *The fine aggregate shall be natural sand consisting of mineral aggregate particles conforming to the following gradation requirements:*

Percent Passing ⅜ inch sieve	100
Percent Passing No. 200 sieve	0 - 10

3. *The mix shown above is designed to produce a minimum compressive strength of 100 psi. The Engineer may adjust the proportion of water at the site to provide the necessary mix consistency.*
4. *No backfill material shall be placed sooner than 4 hours after placement of the controlled density fill.*
5. *All costs for furnishing and installing the controlled density fill, including formwork, labor, materials, equipment, and incidentals necessary to complete the work shall be included in the contract unit price per cubic yard for Controlled Density Fill. Payment will be for plans quantity regardless of the quantity actually placed.*

DESIGN MIX OF CONCRETE

Mix shall be as per fabricator's design, however minimum compressive strength shall not be less than 4500 p.s.i. at 28 days.

SHOP PLANS

The fabricator shall submit shop plans in accordance with the South Dakota Standard Specifications or in Adobe PDF format. Shop plan submittals shall be sent to the Office of Bridge Design. Include design and check design, if applicable, with initial submittal.

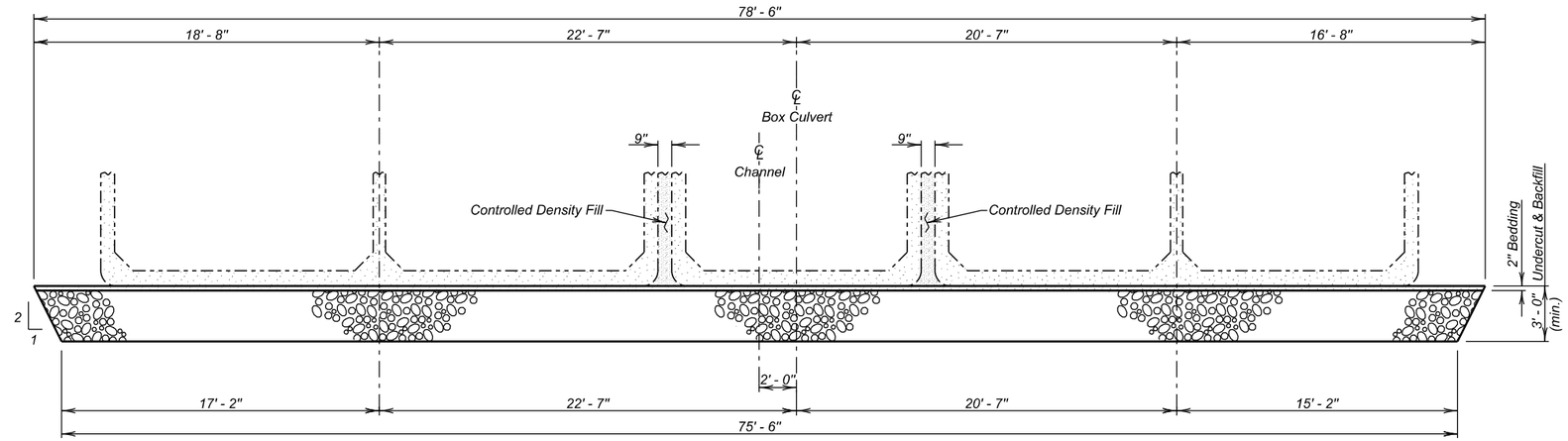

TYPICAL SECTION
(For Limits of Undercut)

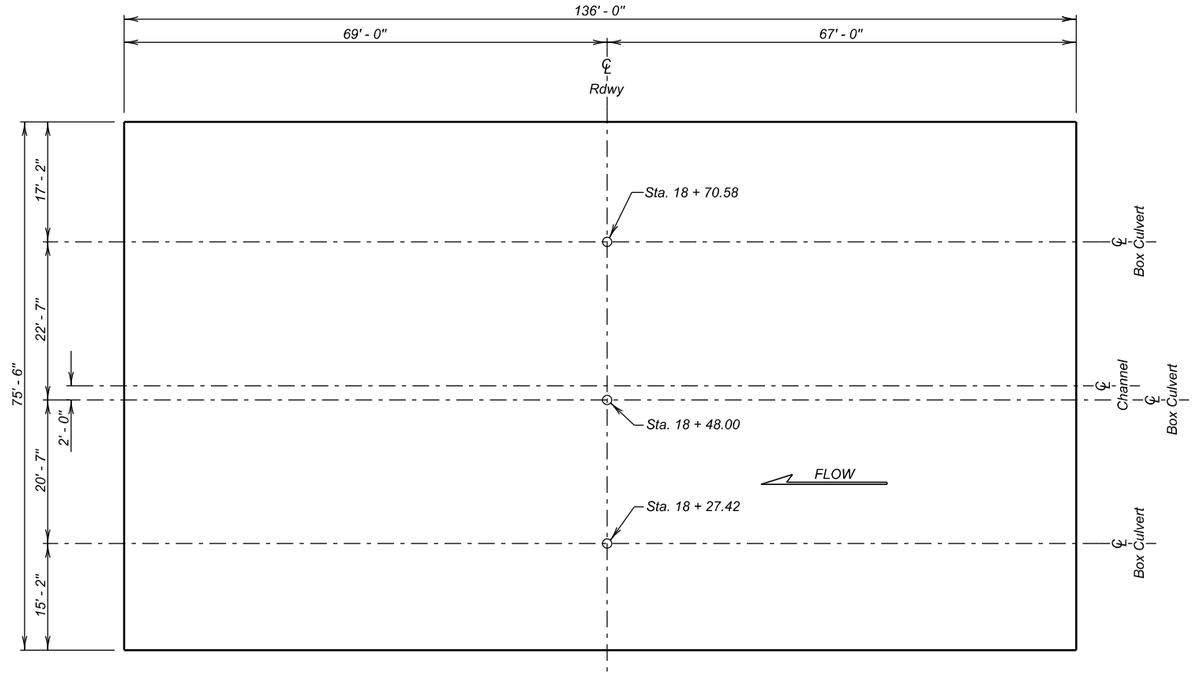

UNDERCUT LAYOUT
(Bottom Dimensions)

ESTIMATED QUANTITIES

ITEM	UNIT	QUANTITY
₵ Box Culvert Undercut	Cu. Yd.	1177

₵ *For payment, quantity is based on plan shown undercut dimensions and will not be measured unless the Engineer orders a change.*

ALTERNATE B

NOTES AND UNDERCUT DETAILS

FOR

2 - 12' X12', 1 - 12' X 12' & 2 - 14' X 12'
BOX CULVERT (PRECAST)

OVER WHITE HORSE CREEK — 0° SKEW
STA. 18 + 50.00 — SEC. 4-T39N-R25W
STR. NO. 61-485-010 — NH 0018(172)230
HL-93

TODD COUNTY
S. D. DEPT. OF TRANSPORTATION
NOVEMBER 2013

DESIGNED BY	CK. DES. BY	DRAFTED BY	
TB	BB	BT	Kevin N. Boeden
TODD02RV	02RVTA11		BRIDGE ENGINEER

STATE OF	PROJECT	SHEET NO.	TOTAL SHEETS
S.D.	NH 0018(172)230	E14	E16

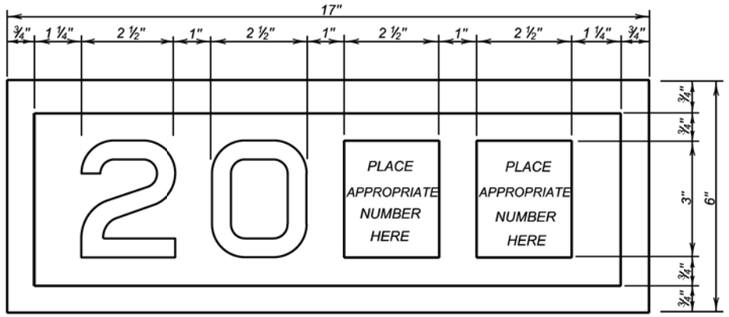

YEAR PLATE DETAILS

GENERAL NOTES:

1. Year plates of the general dimensions shown shall be constructed on all box culverts and bridges. The year plates shall be constructed in reverse and attached to the forms in such a manner that the finished imprint in the concrete does not exceed one-half (½) inch in depth.

2. Year plates shall be located on structure (s) as follows:

   a. On cast-in-place box culverts the year plates shall be four and one - half (4 ½) inches below the top of the upstream parapet wall and centered laterally on the upstream face. On precast box culverts the year plate shall be centered laterally on the upstream face of the top slab. Where an extended interior wall interferes with this location, the year plate shall be centered in an adjacent barrel.

   b. On bridges with six (6) inch curbs or "Jersey" shaped barriers with no endblocks, the year plate shall be centered vertically on the curb face approximately six (6) inches from the end of the bridge, or as designated by the Engineer. On bridges with "Jersey" shaped barrier endblocks, the year plate shall be centered on the upper sloped portion of the barrier approximately 5'- 6" from the end of the bridge, or as designated by the Engineer. There shall be one year plate at each end of the bridge on opposite sides.

   c. When the plans specify that both the original date of construction and the date of reconstruction are to be shown, one date shall be placed as listed above and the other located adjacent to it. Both year plates shall be shown at each end of the bridge on opposite sides.

3. There will be no separate measurement or payment made for year plates on box culverts and bridges. All costs for this work shall be incidental to other coniract items.

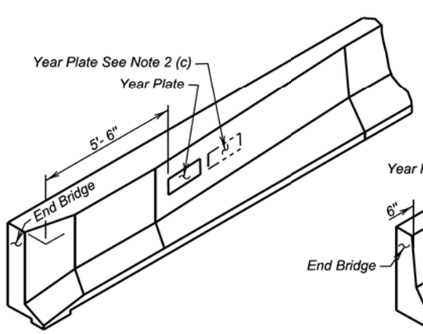

JERSEY BARRIER
(With Endblock)

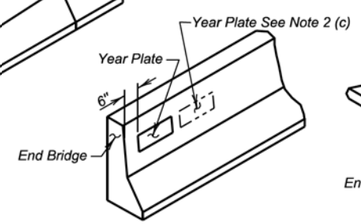

JERSEY BARRIER

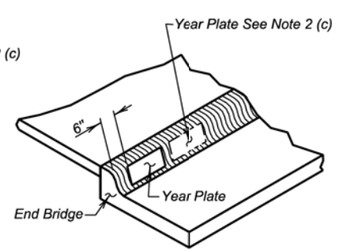

TYPE B CURB

June 26, 2012

Published Date: 2nd Qtr. 2014	SDDOT	YEAR PLATE DETAILS	PLATE NUMBER 460.02
			Sheet 1 Of 1

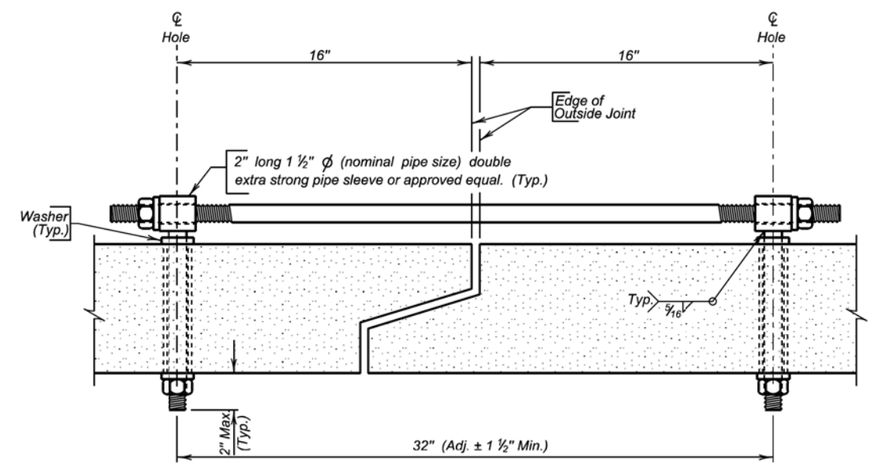

TIE BOLT ASSEMBLY

GENERAL NOTES:

1. All holes for tie bolts shall be cast-in-place,16 inches from outside edge of joint. Cast in inserts or sleeves, if used, shall be made of a corrosion resistant material.

2. Ties shall be 1 inch ϕ and conform to the requirements of ASTM A36. Nuts shall be heavy hex in conformance with ASTM A563. Washers shall conform to ASTM F436, Type 1. The welded pipe sleeve shall conform to ASTM A53, Grade B.

3. Welding and weld inspection shall be in conformance with AWS/ANSI D1.1 - (Current Year) Structural Welding Code - Steel.

4. Tie Bolt Assembly shall be galvanized in accordance with ASTM A153.

5. Tie Bolt Assembly details may vary from that shown, but alternate tie bolt assemblies are subject to testing to demonstrate equal strength. Submit details, through proper channels, to the Office of Bridge Design for approval.

6. All costs for furnishing and installing the precast box culvert tie bolt assembly shall be incidental to the contract unit price per Foot for "Precast Concrete Box Culvert, Furnish".

December 23, 2012

Published Date: 2nd Qtr. 2014	SDDOT	PRECAST BOX CULVERT TIE BOLT ASSEMBLY DETAILS	PLATE NUMBER 560.01
			Sheet 1 of 1

2 - 12' X12', 1 - 12' X 12' & 2 - 14' X 12'
BOX CULVERT (PRECAST)

ALTERNATE B

STR. NO. 61-485-010
NOVEMBER 2013

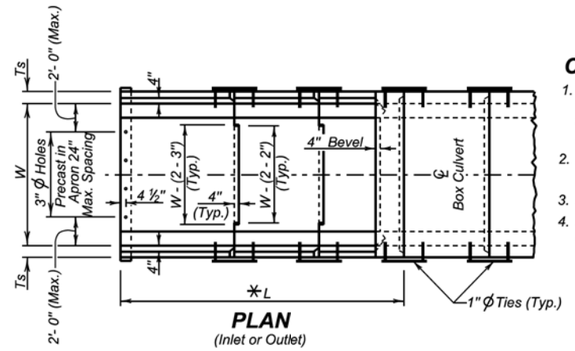

PLAN
(Inlet or Outlet)

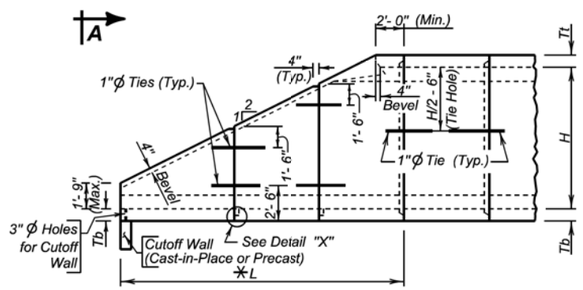

ELEVATION
(Inlet or Outlet)

CUTOFF WALL

1. All costs associated with furnishing and installing the Cutoff Wall, whether precast or cast-in-place, shall be incidental to the contract unit price per each for "Precast Box Culvert End Section, Furnish".
2. Concrete for cast-in-place cutoff wall shall be Class M6 concrete in accordance with section 462.
3. All reinforcing steel shall conform to ASTM A615 Grade 60.
4. Alternate details will be allowed, subject to the approval of the Bridge Construction Engineer.

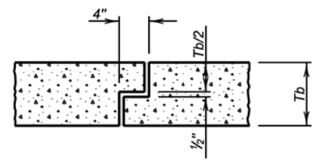

DETAIL "X"

NOTE: Joint details may vary from that shown, according to the manufacturer's design. Submit details with shop plans for approval.

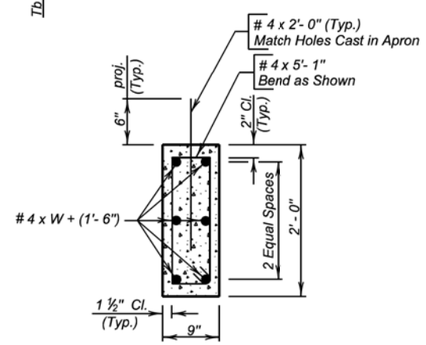

SEC. C - C

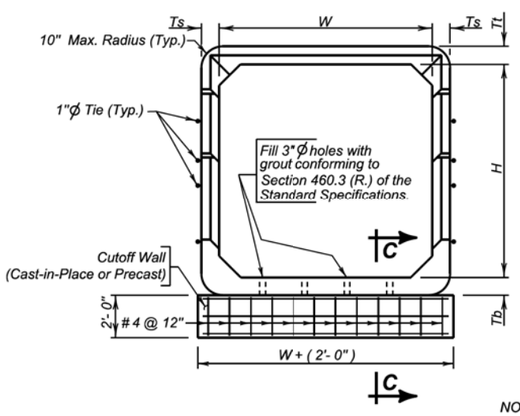

VIEW A - A

LEGEND

W = Width of Opening
H = Height of Opening
Tt = Thickness of Top Slab
Tb = Thickness of Bottom Slab
Ts = Thickness of Side Wall
L = Length of End Section

NOTES:
See GENERAL DRAWING for W and H dimensions.
Tt, Tb, L, and Ts dimensions shall be furnished by the Contractor.
✳ Length and number of units may vary from that shown.

December 23, 2012

Published Date: 2nd Qtr. 2014	SDDOT	PRECAST SINGLE BOX CULVERT SLOPED END SECTION DETAILS WITH 2'–0" CUTOFF WALL	PLATE NUMBER 560.10
			Sheet 1 of 1

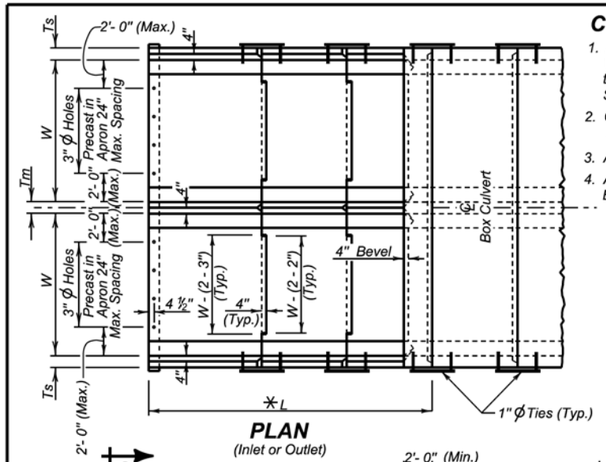

PLAN
(Inlet or Outlet)

CUTOFF WALL

1. All costs associated with furnishing and installing the Cutoff Wall, whether precast or cast-in-place, shall be incidental to the contract unit price per each for "Precast Box Culvert End Section, Furnish".
2. Concrete for cast-in-place cutoff wall shall be Class M6 concrete in accordance with section 462.
3. All reinforcing steel shall conform to ASTM A615 Grade 60.
4. Alternate details will be allowed, subject to the approval of the Bridge Construction Engineer.

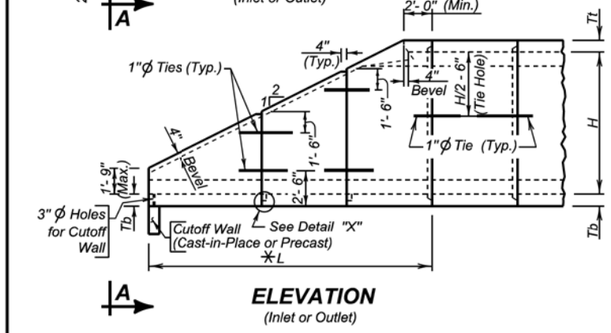

ELEVATION
(Inlet or Outlet)

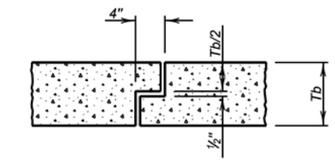

DETAIL "X"

NOTE: Joint details may vary from that shown, according to the manufacturer's design. Submit details with shop plans for approval.

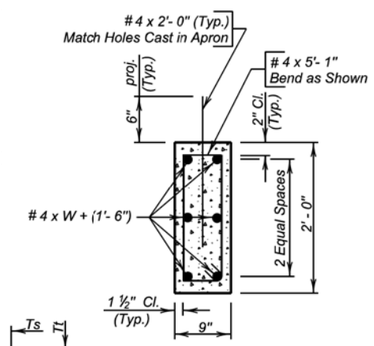

SEC. C - C

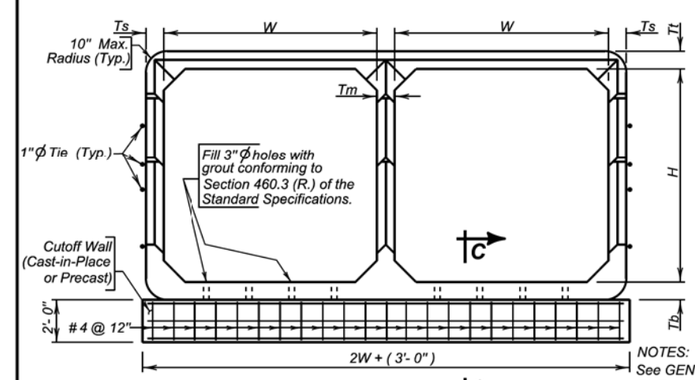

VIEW A - A

LEGEND

W = Width of Opening
H = Height of Opening
Tt = Thickness of Top Slab
Tb = Thickness of Bottom Slab
Ts = Thickness of Side Wall
Tm = Thickness of Middle Wall
L = Length of End Section

NOTES:
See GENERAL DRAWING for W and H dimensions.
Tt, Tb, Tm, L, and Ts dimensions shall be furnished by the Contractor.
✳ Length and number of units may vary from that shown.

December 23, 2012

Published Date: 2nd Qtr. 2014	SDDOT	PRECAST DOUBLE BOX CULVERT SLOPED END SECTION DETAILS WITH 2'–0" CUTOFF WALL	PLATE NUMBER 560.20
			Sheet 1 of 1

2 - 12' X12', 1 - 12' X 12' & 2 - 14' X 12'
BOX CULVERT (PRECAST)

ALTERNATE B

STR. NO. 61-485-010
NOVEMBER 2013

STATE OF	PROJECT	SHEET NO.	TOTAL SHEETS
S.D.	NH 0018(172)230	E16	E16

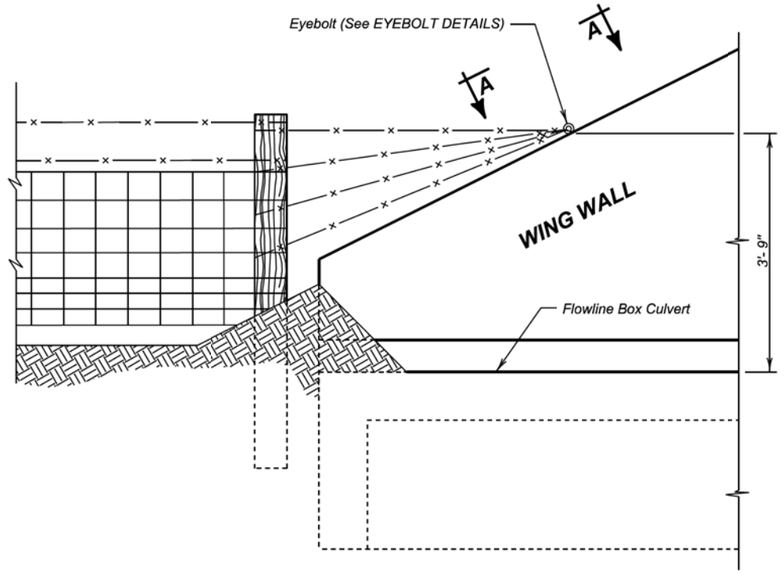

DETAIL FOR FENCE ANCHORS

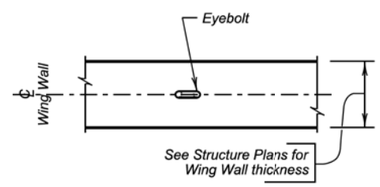

VIEW A - A

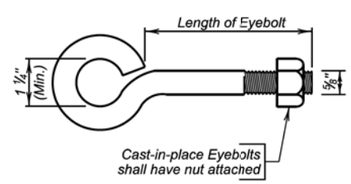

EYEBOLT DETAILS

GENERAL NOTES:

1. The fence and post details shown are for illustrative purpose only. The fence shall be as specified elsewhere in the plans.
2. Eyebolts shall be placed on all of the box culvert wing walls.
3. Eyebolts shall be ⅝ inch diameter and shall conform to ASTM A307.
4. Eyebolts, nuts, and concrete inserts shall be galvanized in accordance with AASHTO M232 (ASTM A153). Concrete inserts of corrosion resistant material need not be galvanized.
5. Cast-in-place eyebolts shall have a nut attached, be 4 ½ inches (Min.) in length and shall be embedded such that the eye of the bolt is flush with the concrete surface. (See Eyebolt Details) As an alternate, cast-in-place concrete inserts, capable of developing the full strength of the ⅝ inch diameter threaded eyebolt, may be used and shall be set in the concrete in accordance with the manufacturer's recommendations. The eyebolt shall be of sufficient length to develop its full strength. The eye of the eyebolt shall be flush with the concrete surface.
6. The cost for furnishing and installing eyebolts and/or concrete inserts shall be incidental to various contract items.

December 23, 2012

Published Date: 2nd Qtr. 2014	SDDOT	FENCE ANCHORS FOR BOX CULVERT WING WALLS	PLATE NUMBER 620.16 Sheet 1 of 1

2 - 12' X12', 1 - 12' X 12' & 2 - 14' X 12'
BOX CULVERT (PRECAST)

ALTERNATE B

STR. NO. 61-485-010
NOVEMBER 2013