Section B: Grading Plans

STATE OF SOUTH DAKOTA	PROJECT	SHEET	TOTAL SHEETS
	P 0034(150)272	B1	B28

Plotting Date: 09/29/2015

INDEX OF SHEETS

B1	General Layout W/Index
B2-B6	Estimate With General Notes & Tables
B7	Typical Sections
B8	Horizontal Alignment Sheets
B9	Control Data Sheet
B10	Topography Symbology & Legend
B11-B13	Plan & Profile Sheets
B14-B15	Guardrail Layouts
B16 -B28	Standard Plates

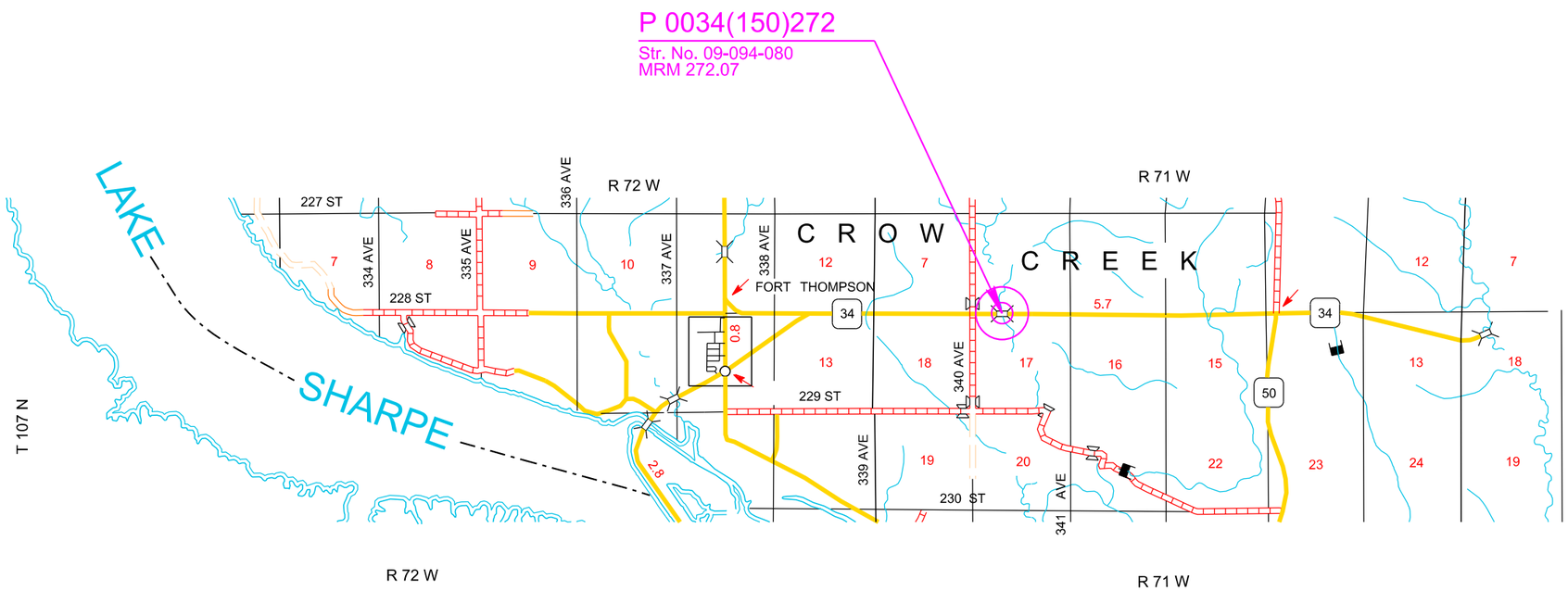

Plot Scale - 1:200

Plot Name -

File - U:\rdprj\bufr02RWtitleb.dgn

Plotted From - TRSF12139

SECTION B ESTIMATE OF QUANTITIES

BID ITEM NUMBER	ITEM	QUANTITY	UNIT
004E0030	Maintenance of Traffic Diversion(s)	Lump Sum	LS
009E0010	Mobilization	Lump Sum	LS
009E3230	Grade Staking	0.104	Mile
009E3250	Miscellaneous Staking	0.104	Mile
009E3280	Slope Staking	0.104	Mile
009E3290	Structure Staking	1	Each
009E3300	Three Man Survey Crew	40.0	Hour
100E0100	Clearing	Lump Sum	LS
110E0600	Remove Fence	980	Ft
110E0730	Remove Beam Guardrail	374.0	Ft
120E0010	Unclassified Excavation	8,277	CuYd
120E0600	Contractor Furnished Borrow Excavation	6,856	CuYd
120E2000	Undercutting	3,724	CuYd
120E6100	Water for Embankment	125.0	MGal
250E0020	Incidental Work, Grading	Lump Sum	LS
270E0040	Salvage and Stockpile Asphalt Mix and Granular Base Material	1,984.2	Ton
450E0122	18" RCP Class 2, Furnish	50	Ft
450E0130	18" RCP, Install	50	Ft
450E2304	18" RCP Safety End, Furnish	1	Each
450E2307	18" RCP Safety End, Install	1	Each
462E0100	Class M6 Concrete	2.5	CuYd
480E0100	Reinforcing Steel	288	Lb
600E0300	Type III Field Laboratory	1	Each
620E0020	Type 2 Right-of-Way Fence	820	Ft
620E0510	Type 1 Temporary Fence	1,251	Ft
620E1020	2 Post Panel	3	Each
620E1030	3 Post Panel	8	Each
630E0010	Straight Class A Thrie Beam Guardrail with Wood Posts	50.0	Ft
630E1010	Straight Class A W Beam Guardrail with Wood Posts	250.0	Ft
630E2000	W Beam to Thrie Beam Guardrail Transition	4	Each
630E2015	W Beam Guardrail Flared End Terminal	4	Each
670E3200	Type D Frame and Grate	2	Each
670E5400	Precast Drop Inlet Collar	2	Each

GRADING OPERATIONS

Water for Embankment is estimated at the rate of 10 gallons of water per cubic yard of Embankment.

The estimated cubic yards of excavation and/or embankment required to construct outlet ditches are included in the earthwork balance notes on the profile sheets.

Special ditch grades and other sections of the roadway different than the typical section shall be constructed to the limits shown on the cross sections. If significant changes to the cross sections are necessary during construction, the Engineer shall contact the Designer for the proposed change.

Generally, all shallow inlet and outlet ditches as noted on the plan sheets shall be cut with a 10-foot wide bottom with 5:1 backslopes. However, the Engineer may direct the Contractor to adjust the ditch width for proper alignment with the drainage structure.

Temporary fence and/or permanent fence shall be placed ahead of the grading operation unless otherwise directed by the Engineer.

TYPE II FIELD LABORATORY

The lab shall be equipped with an internet connection such as DSL, cable modem, or other approved service. The internet connection shall be provided with a multi-port wireless router. The internet connection shall be a minimum speed of 512 Kb unless limited by job location and approved by the DOT. Prior to installing the wireless router the Contractor shall submit the wireless router's technical data to the Area Office to check for compatibility with the state's computer equipment. The internet connection is intended for state personnel usage only. The Contractor's personnel are prohibited from using the internet connection unless pre-approved by the Project Engineer.

The Contractor shall submit a copy of each monthly bill for calls charged to this phone at the end of each month. The Project Engineer will then audit the bills to ensure all calls are legitimate and then initiate a Construction Change Order (CCO) to reimburse the Contractor for the actual phone calls made, including local and long distance calls. Reimbursement will not be made for fees associated with the purchase, installation, disconnection, monthly line charges, and incidentals involved in the installation, maintenance, and disconnection of the phone (including attachments). These items shall be incidental to the contract unit price per each for "Type II Field Laboratory".

UTILITIES

The Contractor shall be aware that the existing utilities shown in the plans were surveyed prior to the design of this project and might have been relocated or replaced by a new utility facility prior to construction of this project, might be relocated or replaced by a new utility facility during the construction of this project, or might not require adjustment and may remain in its current location. The Contractor shall contact each utility owner and confirm the status of all existing and new utility facilities. The utility contact information is provided elsewhere in the plans or bidding documents.

TRAFFIC DIVERSION

The traffic diversion is located at Sta. 0+94.00 to 9+93.23 (Diversion). The traffic diversion shall be constructed according to Section 4.5.A. of the Specifications. Installation and removal of the traffic diversion shall meet all requirements as set forth in the South Dakota Surface Water Quality Standards.

The traffic diversion located at Stations 0+94.00 to 9+93.23 (Diversion) shall be constructed according to the geometric layouts shown in the plans with the temporary drainage structure(s) provided in the following table. The temporary structure sizes are designed to pass the design flood frequency flows without overtopping the traffic diversion grade, to minimize potential upstream flooding, and are sized to meet FEMA (Federal Emergency Management Agency) requirements where applicable. The structure(s) shall be placed at the flowline elevation and location as stated in the "Table of Temporary Drainage Structures in Traffic Diversions". If the Contractor proposes to use a different size drainage structure and/or a different geometric layout for the temporary diversion, the proposal must be submitted to the Engineer during the project preconstruction meeting. This information shall be forwarded to the DOT Hydraulics Engineer for review. Construction of the traffic diversion(s) will not be allowed until approval of the proposal is obtained from the Hydraulics Engineer.

Table of Temporary Drainage Structure in Traffic Diversion(s)

Traffic Diversion Location	Design Flood Frequency	* Flowline Elevation	Temporary Drainage Structure
5+39 (Diversion)	2 year	1444.55	3-84" CMP

* The flowline elevation is at the Inlet of the temporary drainage structure(s).

Costs to provide temporary drainage structures shall be incidental to the contract lump sum price for "Maintenance of Traffic Diversion(s)".

Traffic diversion in waterways shall be constructed such that any material placed below the ordinary high water elevation (estimated as elevation 1450.8 at Sta. 5+39 (Diversion) in the 404 application) shall conform to the requirements of Class C Riprap. The quantity of riprap used in the traffic diversion is included in the quantity for "Class C Riprap" in Section E-Structures estimate of quantities. The quantity of riprap used for the traffic diversion shall be reused as riprap for the structure and all costs incurred to place and remove the riprap at the traffic diversion and subsequently place the riprap at the structure shall be incidental to the contract unit price per ton for "Class C Riprap". The traffic diversions shall be built in close conformity to the plan gradeline. Unless otherwise shown in the plans, the traffic diversions shall be removed such that the original ground surface is restored and the hydraulic capacity of the waterway is maintained. The removal shall be done in such a manner that there is minimal disturbance to the riverbed.

The removed traffic diversion embankment shall be used in the mainline embankment unless otherwise approved by the Engineer.

SHRINKAGE FACTOR: Mainline Embankment 25%
Diversion Embankment 35%

TABLE OF EXCAVATION QUANTITIES BY BALANCES

Station	to	Station	Excavation (CuYd)	*Undercut (CuYd)	*Contractor Furnished Borrow (CuYd)	Total Excavation (CuYd)	** Haul (CuYdSta)
3+02		8+53	1923	3724	782	6429	2503
Diversion							
0+94		9+93.23	0	0	6074	6074	0
		Totals:	1923	3724	6856	12503	2503

* The quantities for these items are in the Estimate of Quantities under their respective bid items.
** The quantities for these items are for information only.

TABLE OF UNCLASSIFIED EXCAVATION

Excavation	1923
Undercut	3724
Topsoil	1580
Salvaged Asphalt Mix and Granular Base Material	1050
Total	8277

PROCEDURES FOR DETERMINING UNCLASSIFIED EXCAVATION QUANTITY

When plan quantities are used for payment, the Unclassified Excavation quantity shall be used for final payment.

The following paragraphs are general earthwork information and information in regards to computing the Unclassified Excavation quantity when final cross sections are taken in the field:

The Unstable Material Excavation quantity is included in the Excavation quantity listed in the Table of Unclassified Excavation. When finaling a project, the Unstable Material Excavation quantity shall be added to the Excavation quantity to compute the Unclassified Excavation quantity.

The Topsoil quantity in the Table of Unclassified Excavation is an estimate. When finaling a project, the total quantity of field measured Topsoil shall be used in place of the estimated Topsoil quantity. The quantity of Topsoil from the cuts will be paid for twice as Unclassified Excavation, as it will be in both the Excavation and Topsoil quantities. This will be full compensation for Excavation, which includes necessary undercutting to provide space for placement of topsoil.

The Excavation quantities from individual balances and the Table of Unclassified Excavation have been reduced by the volume of in place surfacing that will be removed and/or salvaged.

HAUL

Included in the Table of Excavation Quantities by Balances is Haul. Haul is not a pay item and is for informational purposes only. Haul was not estimated for moving Contractor Furnished Borrow. The mass haul diagram is available at the Mitchell Region and Huron Area offices for use in figuring this haul.

Haul: Estimated quantity (CuYdSta) for moving unclassified excavation material to the locations where it is needed throughout the earthwork balance.

Average Haul = Haul/Unclassified Excavation = 2503/8277= 0.30 Sta.

UNDERCUTTING

In all cut sections the earthen subgrade shall be undercut 3 feet below the earthen subgrade surface. The undercut material or other suitable material, as directed by the Engineer, shall then be replaced and compacted to the density specified for the section being constructed.

Shallow embankment sections, fills which have a height less than 3 feet measured at the finished earth subgrade shoulder, shall be undercut to assure a minimum 3 feet height of earth embankment for the entire width of roadbed.

The plan shown quantity will be the basis of payment. However, if there are additional areas of undercut other than what is shown in the plans, the Engineer shall direct removal of these areas and the additional areas will be measured according to the Engineer.

TABLE OF UNDERCUTTING

Station	to	Station	Quantity (CuYd)
3+02		8+53	3724
		Total:	3724

SALVAGE AND STOCKPILE ASPHALT MIX AND GRANULAR BASE MATERIAL

An estimated 1984.2 tons (1049.9 Cubic Yards) of asphalt mix and granular base material shall be salvaged from the entire length of the existing highway and stockpiled at a site furnished by the Contractor and satisfactory to the Engineer.

There will be excess Salvage and Stockpile Asphalt Mix and Granular Base Material, the contractor may keep the excess.

The quantity of salvage asphalt mix and granular base material may vary from the plans. No adjustment will be made to the contract unit price for variations of the quantity of “Salvage and Stockpile Asphalt Mix and Granular Base Material.”

It is estimated that there are 190.55 cubic yards of salvageable material per station. This rate was used to compute the unclassified excavation quantities. The rate of salvageable material is based on a 35 foot width.

CONTRACTOR FURNISHED BORROW EXCAVATION

The Contractor shall provide a suitable site for Contractor furnished borrow excavation material. The Contractor is responsible for obtaining all required permits and clearances for the borrow site. The borrow material shall be approved by the Engineer. The plans quantity for “Contractor Furnished Borrow Excavation” as shown in the Estimate of Quantities will be the basis of payment for this item.

Restoration of the Contractor furnished borrow site shall be the responsibility of the Contractor.

INCIDENTAL WORK, GRADING

Station	Remarks
4+99-45' L to 5+23-57' L	Take Out 18" – 30' CMP with Headwall

TABLE OF RIPRAP

Station	L/R	* Class C Riprap (Ton)
5+39 (Diversion)	L/R	1145
	Totals:	1145

*Riprap included in Section E

DROP INLETS

Where drop inlets are constructed within areas of curb and gutter, the Contractor shall construct weep holes of at least 3 inches in diameter in the drop inlet walls. The weep holes shall be constructed at the same elevation as the adjacent top of the earthen subgrade and shall be maintained clean and open at all times until the permanent surfacing is placed. The drop inlets shall be covered throughout construction operations as necessary with an Engineer approved cover to provide safe travel for motorists and to prevent materials from entering the storm sewer system. After the permanent surfacing has been placed, the Contractor shall seal the weep holes with grout and remove all debris from the drop inlet. All costs involved with the coverings, weep holes, and removing debris from the drop inlets shall be incidental to the contract unit prices for the components of the drop inlets.

The plan shown quantities of the drop inlet components such as Class M6 Concrete, Reinforcing Steel, Type D Frame and Grate and Precast Drop Inlet Collar will be the basis of payment for these items.

If additions or reductions to the number of drop inlets are ordered by the Engineer, payment for the components required to construct the drop inlets will be made at the contract unit prices for the components of the drop inlets.

TABLE OF DROP INLETS AND QUANTITIES

Station	L / R	Drop Inlet Size	Drop Inlet Type	Class M6 Concrete (CuYd)	Reinf. Steel (Lb)	Concrete Collar (Each)	Frame and Grate/Lid Type
5+10	L	1.5'x3'	D	1.25	146	1	D
5+10	R	1.5'x3'	D	1.25	142	1	D
			Totals:	2.5	288	2	

Total Type D Frame and Grate 2

REINFORCED CONCRETE PIPE

High sulfate levels are likely to be encountered on this project. The type of cement shall be either a type V or a type II with 20% Class F Modified Fly Ash substituted for cement in accordance with section 605. The Water/Cementitious material ratio shall not exceed 0.45 as defined in section 460.3.A. The Mix shall be as per fabricator's design, however minimum compressive strength shall not be less than 4500 psi at 28 days. The pipe must be marked in an acceptable way to designate meeting the requirements for sulfate resistance.

TABLE OF PIPE QUANTITIES

Station	to	Station	18" RCP Class 2 (ft)	18" RCP Flared End (each)
5+10-17.62' L		5+10-17.62' R	34	0
5+10-17.62' R		5+10-37.40' R	16	1
		Totals:	50	1

BRACE PANELS FOR ROW FENCE

The E-Z Brace or an approved equal may be utilized as an alternate horizontal brace in the brace panels if approved by the Engineer. The E-Z Brace shall be attached to each wood post utilizing two 5/16" x 3" lag screws. Holes of appropriate diameter, based on wood post condition, shall be drilled before placement of lag screws. The following are contacts regarding the E-Z Brace:

Roger Papka
E-Z Brace
1160 Karen St.
Watertown, SD 57201
605-881-6142

Dennis Mack
E-Z Brace
108 18th St. NE
Watertown, SD 57201
605-881-4990

TABLE OF GUARDRAIL

Location	Remove Beam Guardrail (Ft)	Straight Double Class A Thrie Beam Guardrail with Wood Posts (Ft)	Straight Class A W Beam Guardrail with Wood Posts (Ft)	W Beam to Thrie Beam Guardrail Transition (Each)	W Beam Guardrail Flared End Terminal (Each)
Structure No. 09-094-080					
Sta. 3+73.19–23.13' R to Sta. 5+30.88-18' R	106	12.5	100	1	1
Sta. 4+38.56–23.16' L to Sta. 5+21.24-18' L	81	12.5	25	1	1
Sta. 6+18.83-18' L to Sta. 7+76.40-23.34' L	106	12.5	100	1	1
Sta. 6+28.47-18' R to Sta. 7+11.02-23.37' R	81	12.5	25	1	1
Totals:	374	50	250	4	4

TABLE OF CONSTRUCTION STAKING

(See Special Provision for Contractor Staking)

					Grade Staking						
Roadway and Description	Begin Station	End Station	Number of Lanes	Length (Ft)	Length (Mile)	Lane Factor	*Sets of Stakes	**Grade Staking Quantity (Mile)	Miscellaneous Staking Quantity (Mile)	Slope Staking Quantity (Mile)	Structure Staking Quantity (Each)
SD 34 (2 Lanes AC Pavement)	3+02	8+53	2	551	0.104	1	1	0.104	0.104	0.104	1
							Totals:	0.104	0.104	0.104	1

* 1 = Blue Top Stakes Only (Asphalt Concrete Pavement)

** Grade Staking Quantity = (Length) x (Lane Factor) x (Sets of Stakes)

Plot Scale - 1:200

Plotted From - TRSF12139

File - ...\prj\buff02RW\NotesSectionB.dgn

FENCE QUANTITIES

STATE OF SOUTH DAKOTA	PROJECT	SHEET	TOTAL SHEETS
	P 0034(150)272	B6	B28

Plotting Date: 09/29/2015

Station to Station		Side (L/R)	Right-of-Way Fence		Type 2 (Ft)			Temporary Fence	Type 1 (Ft)		Post Panels			Remove Fence	(Ft)				
											2 Post Panel (Each)	3 Post Panel (Each)							
2+38	5+15	L			215				328		1	2			328				
3+02	5+28	R			255				264			3			264				
6+33	6+85	R			65				304			2			304				
6+20	8+86	L			285				355		2	1			84				
TOTALS:					820				1251		3	8			980				

Post Type and Sequence:
Right-of-way fence shall be constructed using alternate wood and steel posts

Plot Scale - 1:200

Plotted From - TRSF12139

File - ...\rdi\prj\buff02RW\TableFence.dgn

STATE OF SOUTH DAKOTA	PROJECT	SHEET	TOTAL SHEETS
	P 0034(150)272	B7	B28

Plotting Date: 09/29/2015

TYPICAL GRADING SECTION

3+02 to 8+53

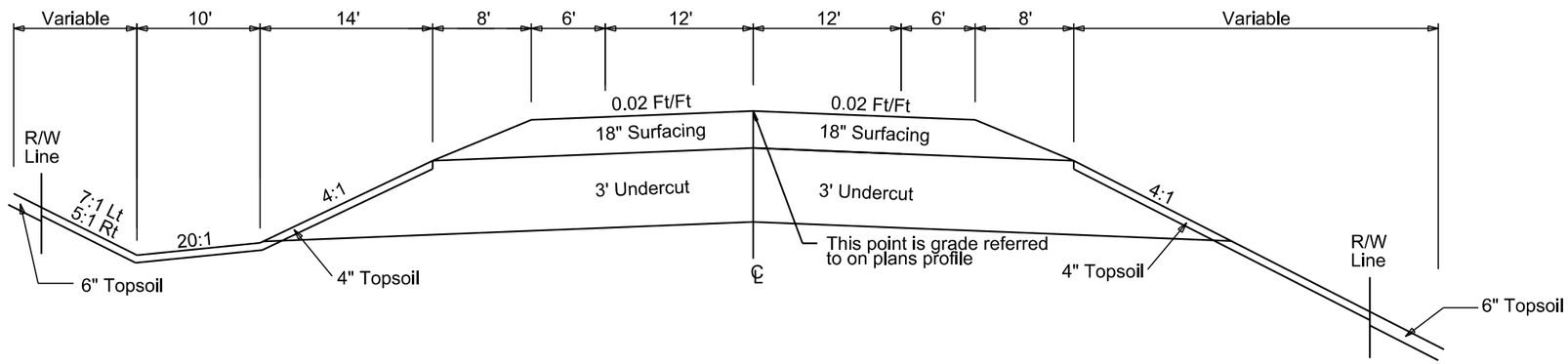

Diversion
1+57.83 to 9+90.32 Mainline Sta.
(0+94 to 9+93.23)
(OHWE 1450.80)

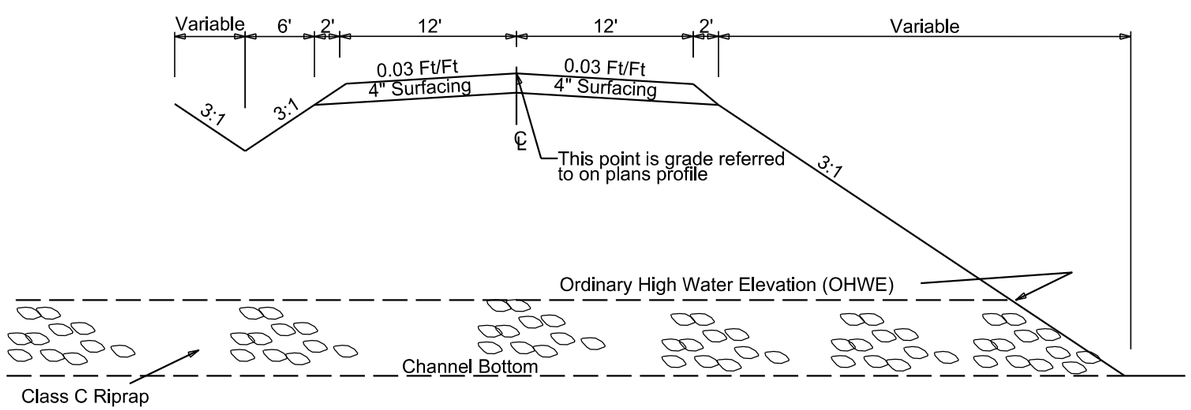

Plot Scale - 1:200

Plotted From - TRSF12139

File - U:\rd\prj\buff02RW\typ.dgn

HORIZONTAL ALIGNMENT DATA

STATE OF SOUTH DAKOTA	PROJECT	SHEET	TOTAL SHEETS
	P 0034(150)272	B8	B28

Plotting Date: 09/29/2015

MAINLINE

Type	Station			Northing	Easting
POB	0+00.00			637106.774	2218105.492
		TL= 1187.09	S 89°16'59" E		
POE	11+87.09			637091.920	2219292.488

DIVERSION

Type	Station			Northing	Easting
POB	0+00.00			637105.975	2218169.316
		TL= 94.07	S 89°16'59" E		
PC	0+94.07			637104.798	2218263.376
PI	2+10.92	R = 333.00	Delta = 38°40'27" L	637103.336	2218380.224
PRC	3+18.84			637175.212	2218472.362
PI	5+85.38	R = 333.00	Delta = 77°20'54" R	637339.152	2218682.519
PRC	7+68.38			637170.004	2218888.507
PI	8+85.24	R = 333.00	Delta = 38°40'27" L	637095.845	2218978.818
PT	9+93.16			637094.383	2219095.666
		TL= 71.07	S 89°16'59" E		
POE	10+64.23			637093.494	2219166.731

The coordinates shown on this sheet are based on the South Dakota State Plane Coordinate System. South Zone (NAD 83/2007); Geoid 2009; SF = 0.99987298

Plot Scale - 1:200
Plotted From - TRSF12139
File - ...\rdi\prj\buff02RW\DataHoriz.dgn

CONTROL DATA

STATE OF SOUTH DAKOTA	PROJECT	SHEET	TOTAL SHEETS
	P 0034(150)272	B9	B28

Plotting Date: 09/29/2015

HORIZONTAL AND VERTICAL CONTROL POINTS						
POINT	STATION	OFFSET	DESCRIPTION	NORTHING	EASTING	ELEVATION
CP21	1+11	73' R	ORANGE CAP BY MRM 272	637031.926	2218215.179	1464.09
CP22	4+30	23' R	SURVKAP NAIL BY GRAIL	637078.216	2218535.277	1463.61

The coordinates shown on this sheet are based on the South Dakota State Plane Coordinate System. South Zone (NAD 83/2007);
Geoid 2009; SF = 0.99987298
The elevations shown on this sheet are based on NAVD 88.

Plot Scale - 1:200
Plotted From - TRSF12139
File - ...\prj\buff02RW\DataControl.dgn

STATE OF SOUTH DAKOTA	PROJECT	SHEET	TOTAL SHEETS
	P 0034(150)272	B10	B28

Plotting Date: 09/29/2015

EXISTING TOPOGRAPHY SYMBOLOGY AND LEGEND

Anchor
Antenna
Approach
Assumed Corner
Azimuth Marker
BBQ Grill/ Fireplace
Bearing Tree
Bench Mark
Box Culvert
Bridge
Brush
Buildings
Bulk Tank
Cattle Guard
Cemetery
Centerline
Cistern
Clothes Line
Commercial Sign Double Face
Commercial Sign One Post
Commercial Sign Overhead
Commercial Sign Two Post
Concrete Symbol
Creek Edge
Curb/Gutter
Curb
Dam Grade/Dike/Levee
Deck Edge
Ditch Block
Doorway Threshold
Drainage Profile
Drop Inlet
Edge Of Asphalt
Edge Of Concrete
Edge Of Gravel
Edge Of Other
Edge Of Shoulder
Elec. Trans./Power Jct. Box
Fence Barbwire
Fence Chainlink
Fence Electric
Fence Misc.
Fence Rock
Fence Snow
Fence Wood
Fence Woven
Fire Hydrant
Flag Pole
Flower Bed
Gas Valve Or Meter
Gas Pump Island
Grain Bin
Guardrail
Guide Sign One Post
Guide Sign Two Post
Gutter
Guy Pole
Haystack

Hedge
Highway R.O.W. Marker
Interstate Close Gate
Iron Pin
Irrigation Ditch
Lake Edge
Lawn Sprinkler
Mailbox
Manhole Electric
Manhole Gas
Manhole Misc
Manhole Sanitary Sewer
Manhole Storm Sewer
Manhole Telephone
Manhole Water
Merry-Go-Round
Microwave Radio Tower
Misc. Line
Misc. Property Corner
Misc. Post
Overhang Or Encroachment
Overhead Utility Line — OH —
Parking Meter
Pipe With End Section
Pipe With Headwall
Pipe Without End Section
Playground Slide
Playground Swing
Power And Light Pole
Power And Telephone Pole
Power Meter
Power Pole
Power Pole And Transformer
Power Tower Structure
Propane Tank
Property Pipe
Property Pipe With Cap
Property Stone
Public Telephone
Railroad Crossing Signal
Railroad Milepost Marker
Railroad Profile
Railroad R.O.W. Marker
Railroad Signs
Railroad Switch
Railroad Track
Railroad Trestle
Rebar
Rebar With Cap
Reference Mark
Regulatory Sign One Post
Regulatory Sign Two Post
Retaining Wall
Riprap
River Edge
Rock And Wire Baskets
Rockpiles
Satellite Dish
Septic Tank

Shrub Tree
Sidewalk
Sign Face
Sign Post
Slough Or Marsh
Spring
Stream Gauge
Street Marker
Subsurface Utility Exploration Test Hole
Telephone Fiber Optics — T/F —
Telephone Junction Box
Telephone Pole
Television Cable Jct Box
Television Tower
Test Wells/Bore Holes
Traffic Signal
Trash Barrel
Tree Belt
Tree Coniferous
Tree Deciduous
Tree Stumps
Triangulation Station
Underground Electric Line — P —
Underground Gas Line — G —
Underground High Pressure Gas Line — HG —
Underground Sanitary Sewer — S —
Underground Storm Sewer — S —
Underground Tank
Underground Telephone Line — T —
Underground Television Cable — TV —
Underground Water Line — W —
Warning Sign One Post
Warning Sign Two Post
Water Fountain
Water Hydrant
Water Meter
Water Tower
Water Valve
Water Well
Weir Rock
Windmill
Wingwall
Witness Corner

State and National Line
County Line
Section Line
Quarter Line
Sixteenth Line
Property Line
Construction Line
R. O. W. Line
New R. O. W. Line
Cut and Fill Limits
Control of Access
New Control of Access
Proposed ROW (After Property Disposal)

Plot Scale - 1:200
Plotted From - TRSF12139
File - U:\radprj\buff02RW\toposymb.dgn

STATE OF SOUTH DAKOTA	PROJECT	SHEET	TOTAL SHEETS
	P 0034(150)272	B11	B28

Plotting Date: 09/29/2015 Rev 8/26/2015 JWF

4+99-45' L to 5+23-57' L
Take Out 18" - 30' CMP
with Headwall
(Incidental Work, Grading)

5+10 - 17.62' L to 17.62' R
Install 18" - 34' RCP
& 1 RCP Flared End

5+10 - 17.62' R to 38.42' R
Install 18" - 16' RCP
& 1 RCP Flared End

5+38.78 to 6+00.78
Take Out I-Beam Bridge
(Incidental Work, Structure)
(See Section E)

5+22.23 to 6+27.35
Install 106'-0 7/8" (15° RHF)
Continuous Concrete Bridge
(See Section E)

Remove Beam Guardrail
at the following location:
4+32-23' R to 5+38-15' R
4+58-20' L to 5+39-14' L
6+00-14' L to 7+06-21' L
6+00-16' R to 6+81-23' R

Install 1.5' x 3' Type D Drop Inlet
with 6" Concrete Collar and
Type D Frame and Grate
at the following locations:
5+10 - 17.62' L
5+10 - 17.62' R

Arlene Voice Estate, Allotment 4-6

SE1/4 SW1/4 SW1/4 and W1/2 SE1/4 SW1/4 of
Section 8 - Township 107 North - Range 71 West
of the 5th P.M.

Parcel A1

Sec. 8 - T107N - R71W

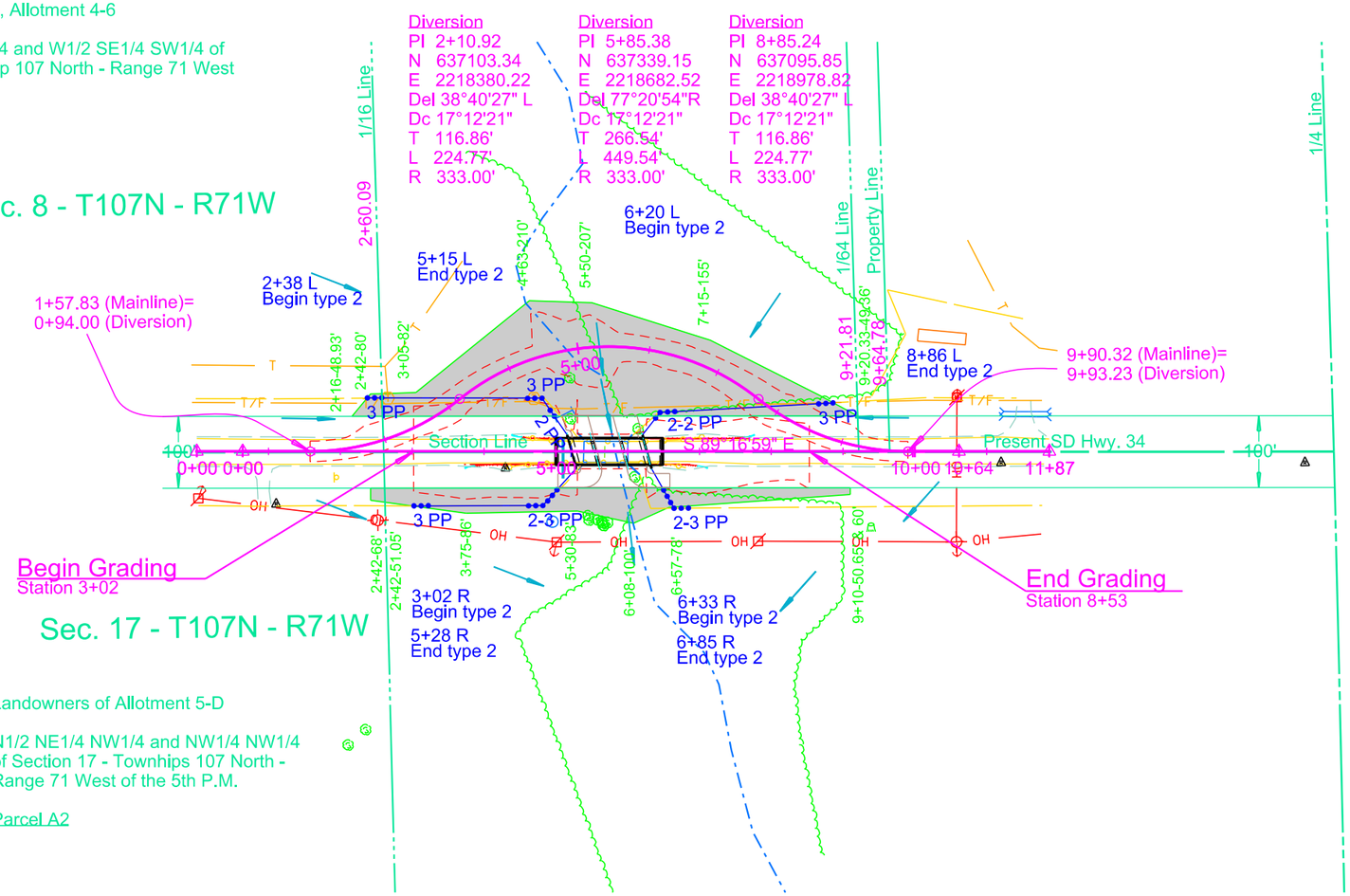

Sec. 17 - T107N - R71W

Landowners of Allotment 5-D

N1/2 NE1/4 NW1/4 and NW1/4 NW1/4
of Section 17 - Townhips 107 North -
Range 71 West of the 5th P.M.

Parcel A2

Parcel A1
2+16 to 9+20.33 L
Temporary Easement for
Cut & Fill containing
1.5 ac, more or less

Parcel A2
2+42 to 9+10 R
Temporary Easement for
Cut & Fill containing
0.4 ac, more or less

Plot Scale - 1:200
Plotted From - TRSF12139
File - U:\rdprj\buff02RW\000.dgn

STATE OF SOUTH DAKOTA	PROJECT	SHEET	TOTAL SHEETS
	P 0034(150)272	B12	B28

Plotting Date: 09/29/2015

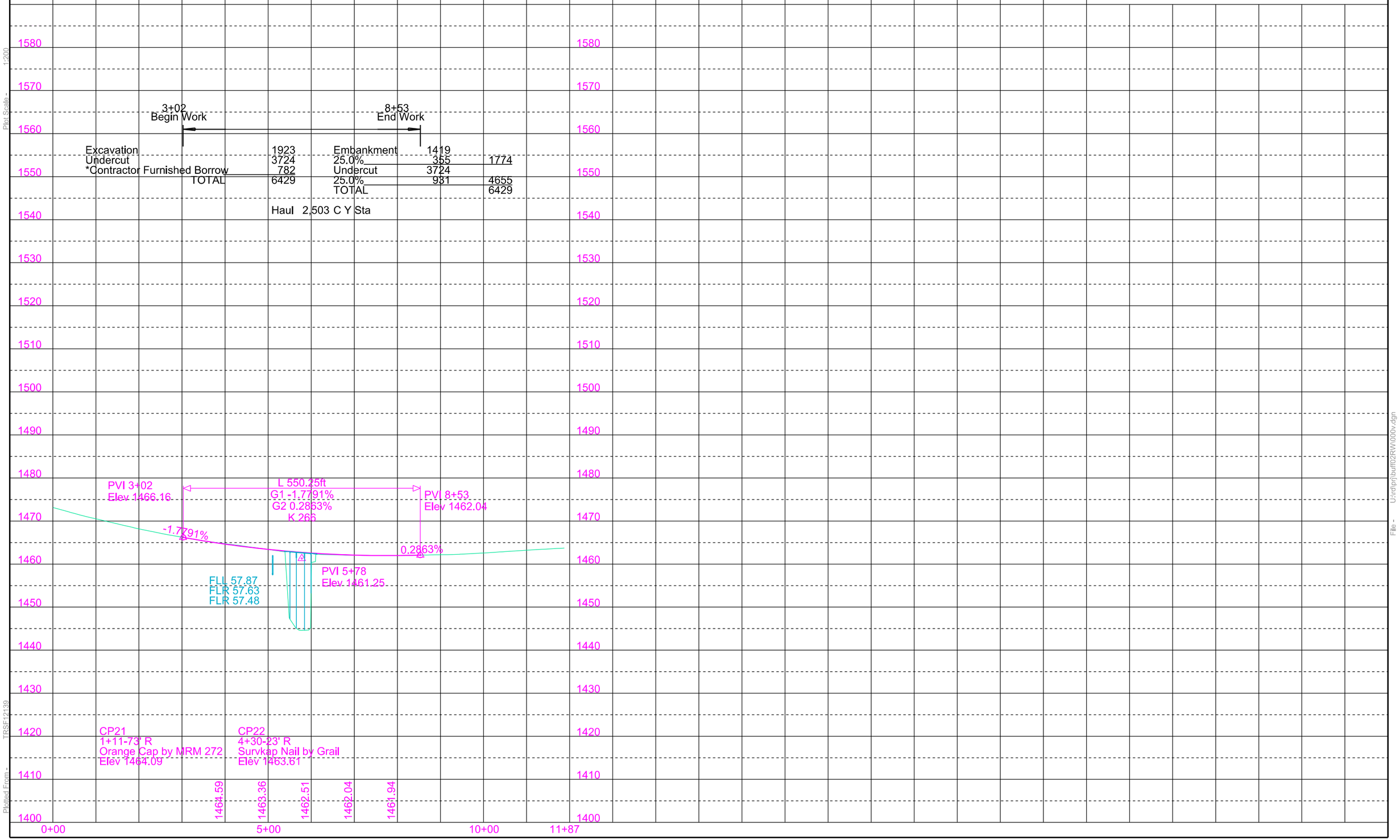

Plot Scale - 1:200

Plotted From - TRSF12139

File - U:\rdlph\buff02RW000v.dgn

STATE OF SOUTH DAKOTA	PROJECT	SHEET	TOTAL SHEETS
	P 0034(150)272	B13	B28

Plotting Date: 09/29/2015

Diversion

0+94.00
Begin Work

9+93.23
End Work

Contractor Furnished Borrow	6074	Embankment	4499	
		35.0%	1575	6074
TOTAL	6074	TOTAL		6074

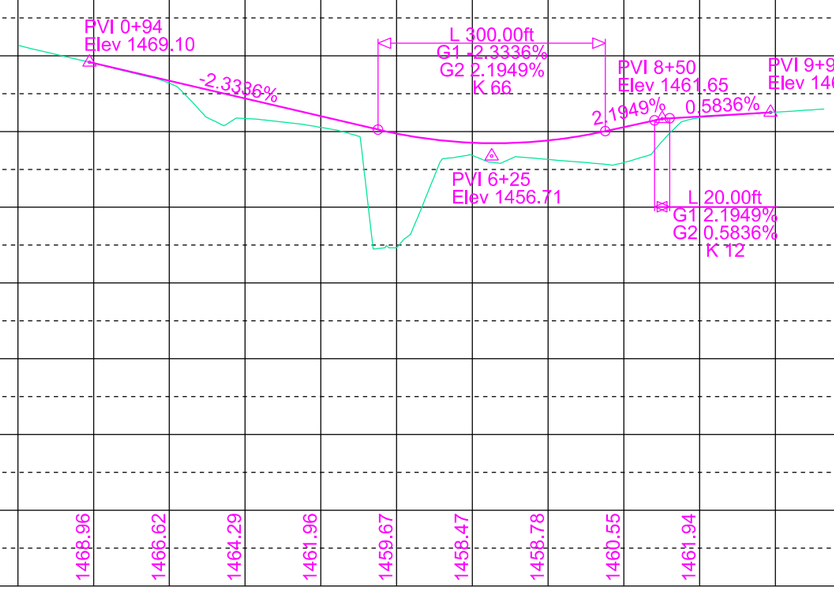

Plot Scale - 1:200

Plotted From - TRSF12139

File - U:\rdeph\buff02RW000valv.dgn

GUARDRAIL LAYOUT

STATE OF SOUTH DAKOTA	PROJECT	SHEET	TOTAL SHEETS
	P 0034(150)272	B14	B28

Plotting Date: 09/29/2015

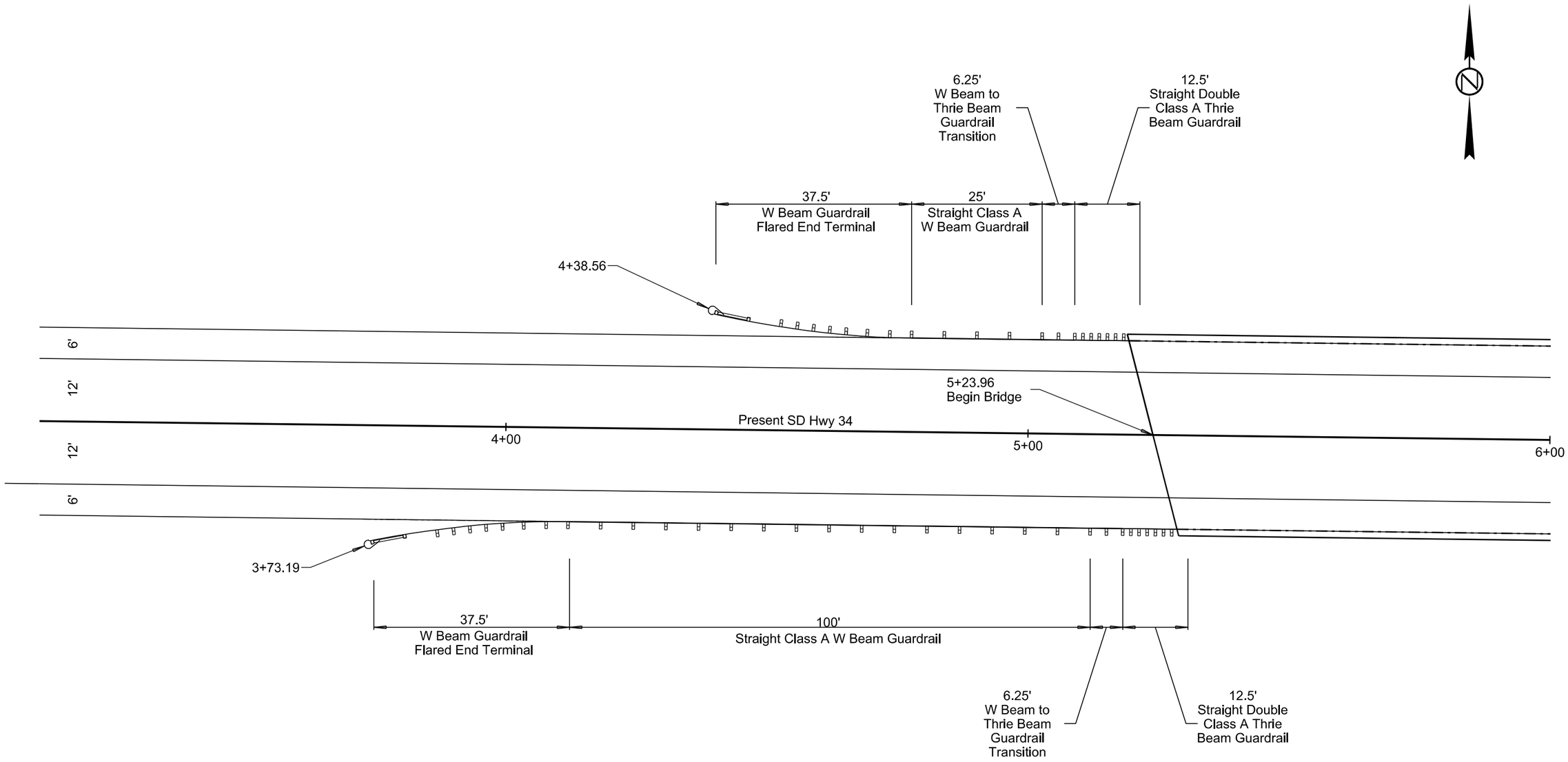

Plot Scale - 1:20

Plotted From - TRSF12139

File - ...\rd\prj\buff02RW\guardrail.dgn

GUARDRAIL LAYOUT

STATE OF SOUTH DAKOTA	PROJECT	SHEET	TOTAL SHEETS
	P 0034(150)272	B15	B28

Plotting Date: 09/29/2015

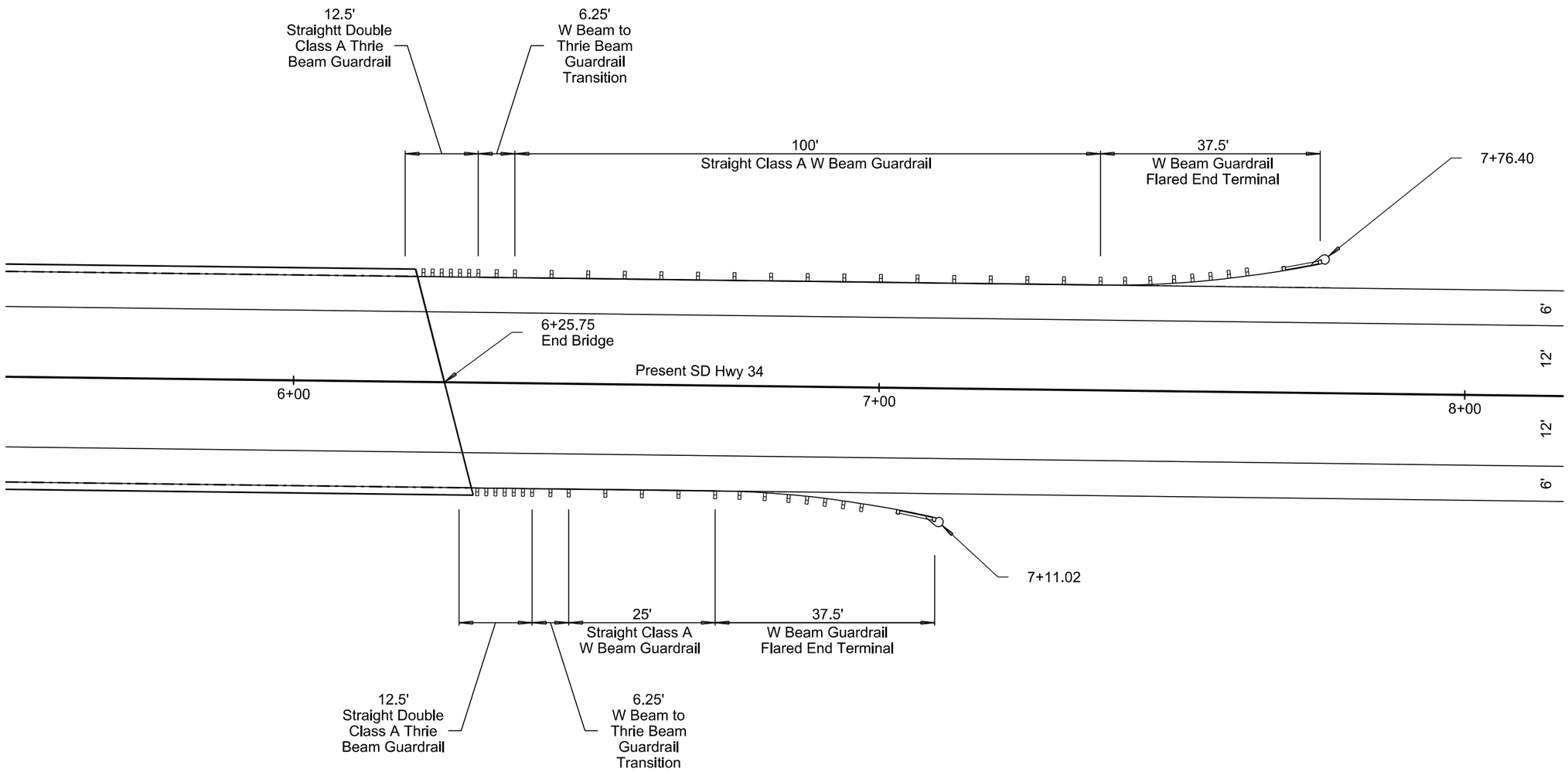

Plot Scale - 1:20

Plotted From - TRSF12139

File - ...\rdprj\buff02RW\guardrail2.dgn

Plot Scale - 1:200
TRSF12139
- Plotted From -

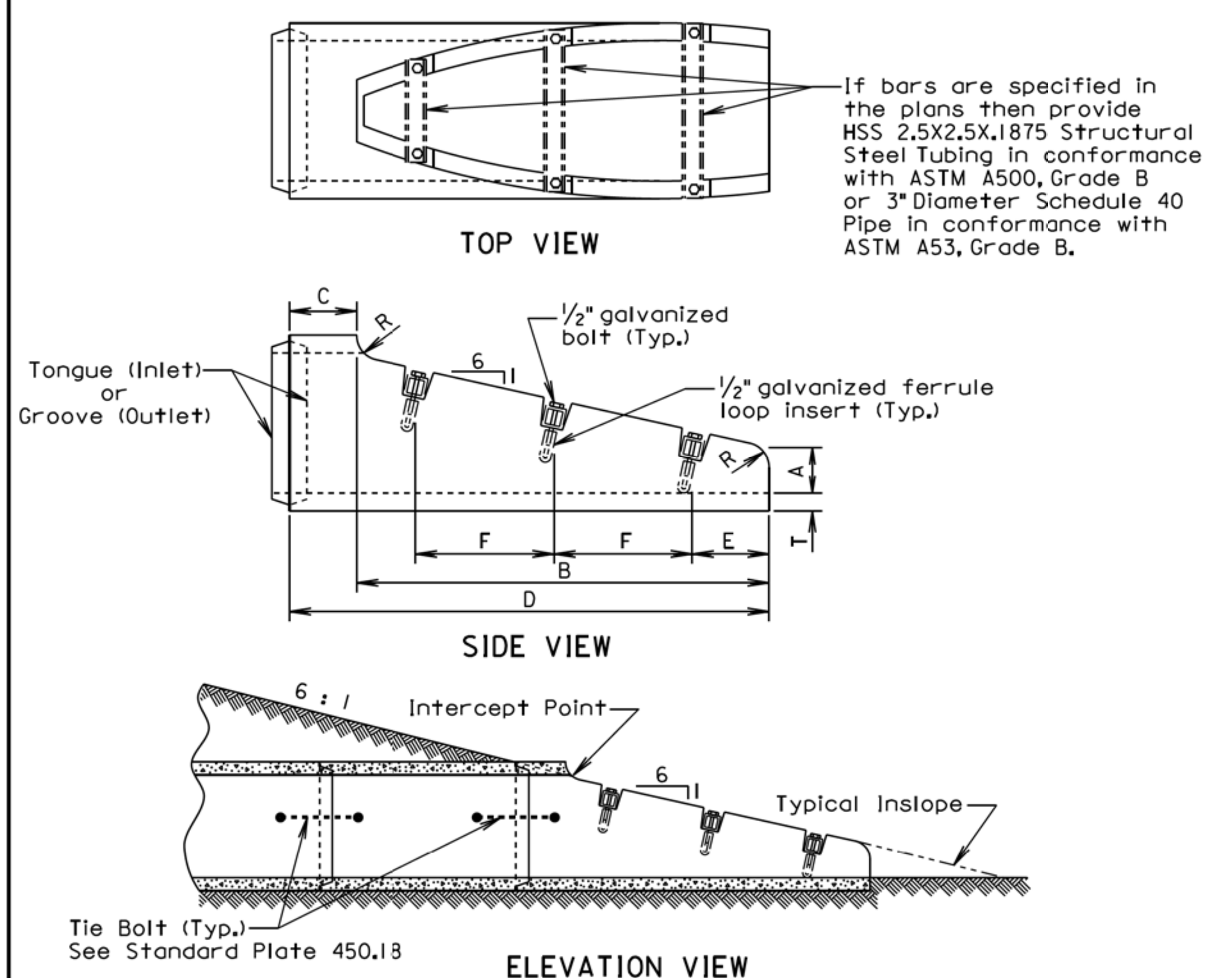

Dia. (in.)	T (in.)	R (in.)	A (in.)	B (in.)	C (in.)	D (in.)	E (in.)	F (in.)	No. Sections	No. Bars
FOR CIRCULAR PIPE										
15	2¼	3	6	48	9	57	6	18	1	3
18	2½	3	6	69	9	78	9	24	1	3
*24	3	3	6	111	9	120	6	24	1 or 2	5
FOR ARCH PIPE										
**18	2½	1	6	39	33	72	6	24	1	2

*The use of 2 sections must be an approved design.
**Equivalent Diameter of Circular R. C. P.

GENERAL NOTES:

The length of concrete pipe shown on the plans is between safety ends.

Safety ends without bars are acceptable with or without the bar notches.

Bars shall be galvanized after fabrication in accordance with ASTM A123.

August 31, 2013

Published Date: 3rd Qtr. 2015 | SDDOT | **R. C. P. SAFETY ENDS WITH OR WITHOUT BARS** | PLATE NUMBER 450.12 | Sheet 1 of 1

Wall "t" (in.)	Rod Dia. (in.)	Pipe Sleeve Dia. (nominal)
≤ 3¼	⅝	¾
3½-6½	¾	1
≥ 7	1	1¼

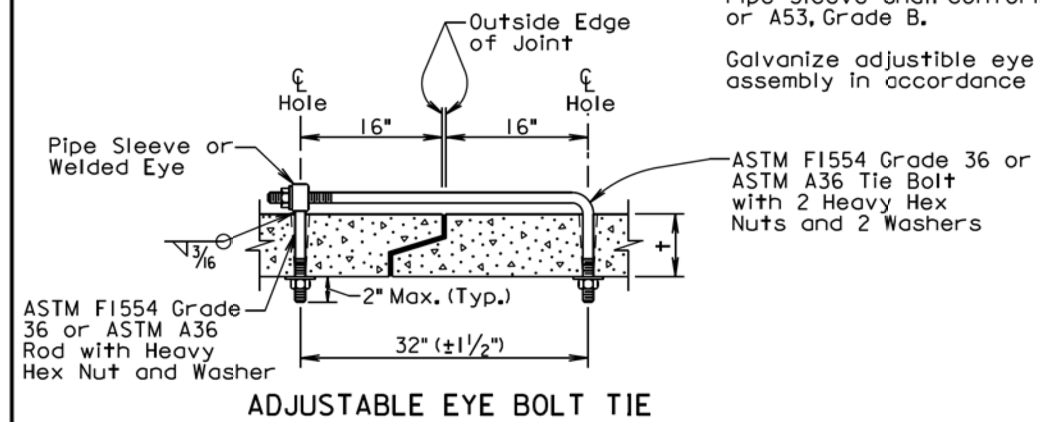

GENERAL NOTES:

Tie bolts shall conform to ASTM F1554 Grade 36 or ASTM A36. Nuts shall be heavy hex conforming to ASTM A563. Washers shall conform to ASTM F436.

Pipe Sleeve shall conform to ASTM A500 or A53, Grade B.

Galvanize adjustable eye bolt tie assembly in accordance with ASTM A153.

Pipe Dia. (in.)	"L" (in.)	Bolt Dia. (in.)
≤ 48	4	¾
> 48	6	1

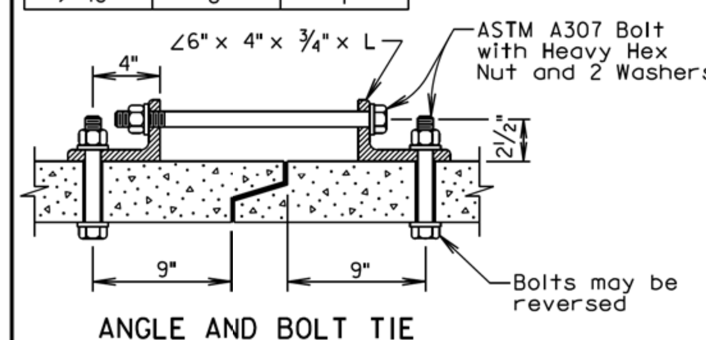

GENERAL NOTES:

Angles shall conform to ASTM A36.

Bolts shall conform to ASTM A307. Nuts shall be heavy hex conforming to ASTM A563. Washers shall conform to ASTM F436.

Galvanize angles, bolts, nuts, and washers in accordance with ASTM A153.

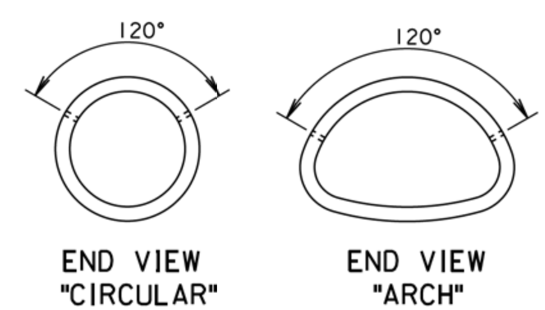

GENERAL NOTES:

In lieu of the tie bolts detailed above other types of tie bolt connections may be installed as approved by the Office of Bridge Design.

All pipe sections of R.C.P. and R.C.P. Arch shall be tied with tie bolts except for pipe located between drop inlets, manholes, and junction boxes. All pipe sections of pipes that only enter or exit drop inlets, manhole, and junction boxes shall be tied with tie bolts.

There will be no separate measurement or payment for the tie bolts. The cost for furnishing and installing the tie bolts shall be incidental to the contract unit price per foot for the corresponding bid item for R.C.P. or R.C.P. Arch.

February 28, 2013

Published Date: 3rd Qtr. 2015 | SDDOT | **TIE BOLTS FOR R.C.P. AND R.C.P. ARCH** | PLATE NUMBER 450.18 | Sheet 1 of 1

File - ...\prj\buff02RW\s45010_s45018.dgn

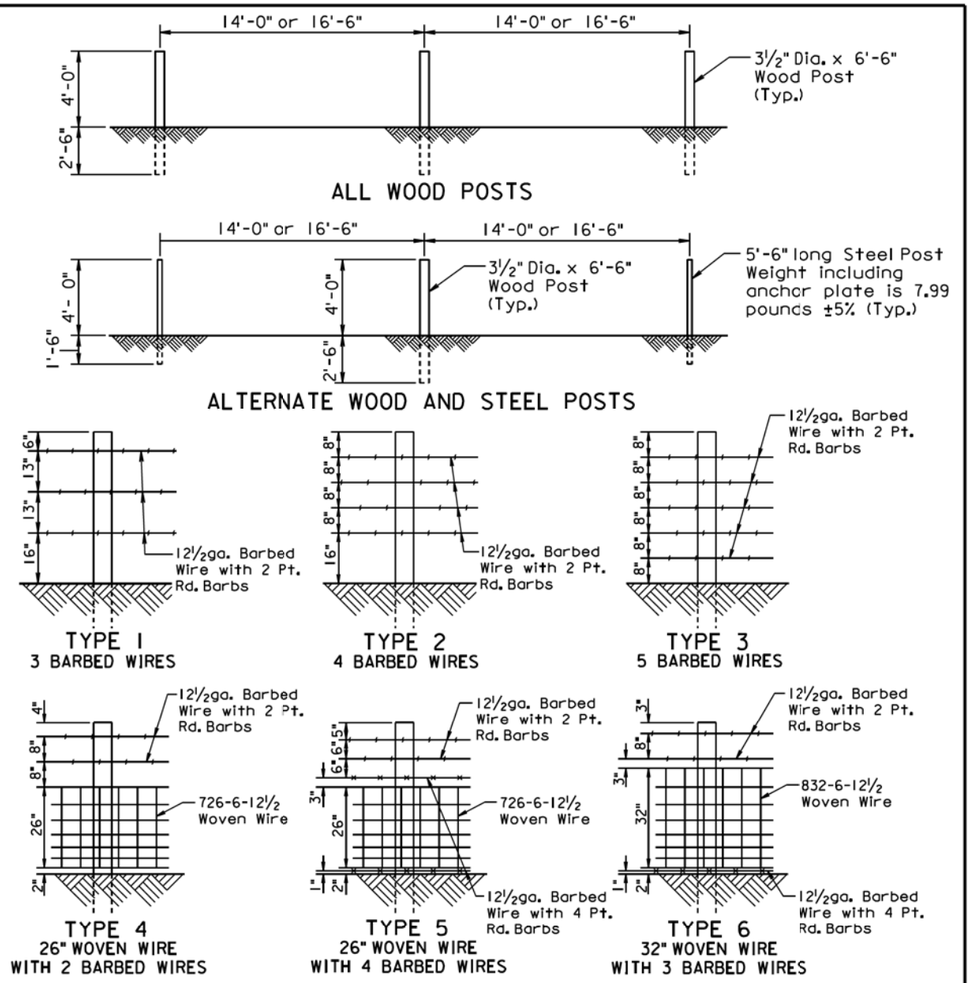

TYPE OF FENCE		LINE POST SPACING	BARBED WIRE		WOVEN WIRE
TYPE	DESCRIPTION		WIRE GAGE	NUMBER AND SHAPE OF BARBS	STYLE OR DESIGN NO.
1	3 Barbed Wires	16'-6"	12½	2 Point Round	—
2	4 Barbed Wires	16'-6"	12½	2 Point Round	—
3	5 Barbed Wires	16'-6"	12½	2 Point Round	—
4	26" Woven Wire with 2 Barbed Wires	14'-0"	12½	2 Point Round	726-6-12½
5	26" Woven Wire with 4 Barbed Wires	14'-0"	12½	2 wires with 2 Pt. Rd. 2 wires with 4 Pt. Rd.	726-6-12½
6	32" Woven Wire with 3 Barbed Wires	14'-0"	12½	2 wires with 2 Pt. Rd. 1 wire with 4 Pt. Rd.	832-6-12½

GENERAL NOTES:

Fence types designated on the plans that are followed by the letter S shall have smooth (barbless) wires.

When type 5S or 6S is designated the bottom wire may be barbed, smooth, or left off.

All degrees of curvature stated for fence are at centerline of roadway.

September 14, 2009

Published Date: 3rd Qtr. 2015

SDDOT

RIGHT-OF-WAY FENCE

PLATE NUMBER 620.01

Sheet 1 of 1

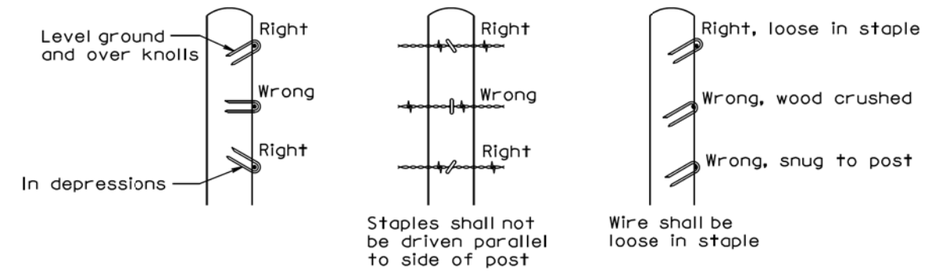

STAPLE INSTALLATION

GENERAL NOTES:

The Right-of-Way fence shall consist of barbed wire or a combination of woven wire and barbed wire. The barbed wire and/or woven wire shall be fastened to all wood posts or fastened to alternating wood and steel posts. Only wood posts shall be used for brace panels. Gates shall be of the type designated in the plans or as otherwise directed by the Engineer. Fence shall be constructed conforming to the details on the standard plates and in the plans unless otherwise directed by the Engineer.

Right-of-Way fence on Interstate Projects shall be constructed one foot within the Interstate Right-of-Way lines except at bridge openings, cattle passes, and as otherwise directed by the Engineer.

Right-of-Way fence other than on Interstate Projects shall be constructed within one foot of the Right-of-Way on the Landowner's side except at bridge openings, cattle passes, and as otherwise directed by the Engineer.

Barbs shall be fabricated from zinc coated 14 ga. wire. Two point barbs shall be wrapped twice around one main strand at 4" spacings and the four point barbs shall be interlocked and wrapped around both main strands at 5" spacings.

The gages of wire and wood post lengths and sizes are the minimum acceptable unless otherwise specified in the plans. The tolerances for steel posts shall be as stated in AASHTO M281. Woven wire shall conform to design and specifications of ASTM A116 and barbed wire shall conform to ASTM A121.

December 23, 2004

Published Date: 3rd Qtr. 2015

SDDOT

STAPLE INSTALLATION AND GENERAL RIGHT-OF-WAY FENCE NOTES

PLATE NUMBER 620.02

Sheet 1 of 1

Plot Scale - 1:200

- Plotted From - TRSF12139

File - ...\prj\buff02RW\s62001_s62002.dgn

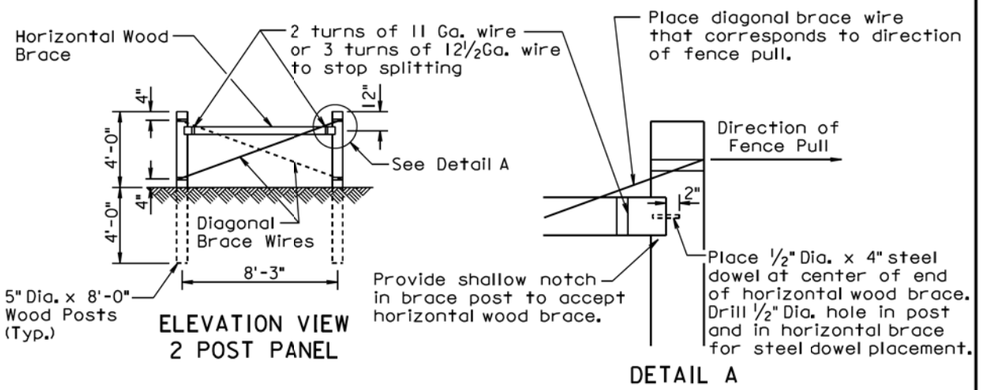

ELEVATION VIEW
2 POST PANEL

DETAIL A

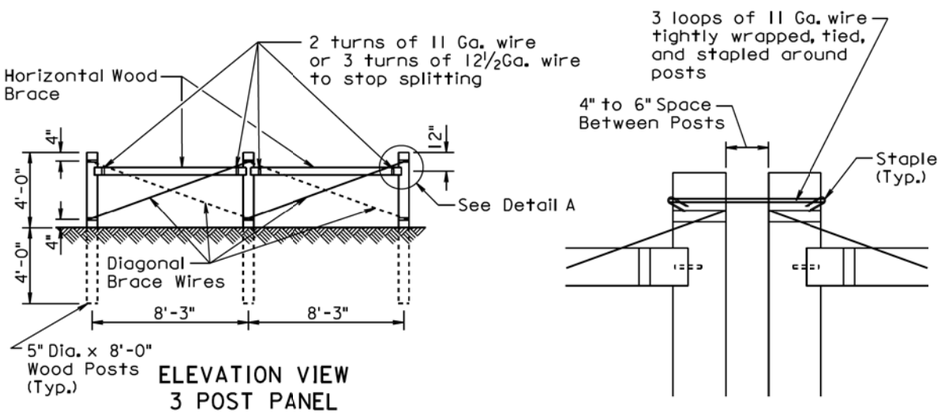

ELEVATION VIEW
3 POST PANEL

DETAIL B

GENERAL NOTES:

Two Post Panels shall be installed at least every 1320' between corners.

Two Post Panels shall be installed at any sharp vertical angle crest points and as directed by the Engineer.

Horizontal wood braces shall consist of 4" dia. x 8' wood posts or rough 4" x 4" x 8' timbers.

Diagonal brace wires shall be fabricated with 4 strands of 9 Ga. galvanized wire twisted tight. The diagonal brace wires shall be installed in accordance with the direction of the fence pull. Two diagonal brace wires are required if fence pull is in both directions.

December 23, 2004

Published Date: 3rd Qtr. 2015	SDDOT	BRACE PANELS AND APPLICATIONS OF BRACE PANELS	PLATE NUMBER 620.03
			Sheet 1 of 3

SPACING OF 2 POST PANELS WITHIN CURVES	
DEGREE OF CURVE	SPACING OF 2 POST PANEL
less than 3°15'	** 1320'
3°15' and greater	**At P.C., P.T., and at every 1320' between P.C. and P.T.

GENERAL NOTE:

All degrees of curvature stated for fence are at centerline of roadway.

* If fence length is less than 600' to next corner use a 2 post panel.
If fence length is greater than 600' to next corner use a 3 post panel.

** Fence lengths greater than 1320' and less than 2640' place 2 Post Panel approximately at midpoint.

① See Detail B on Sheet 1 of 3.

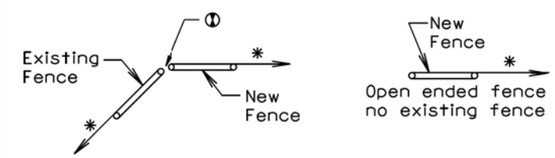

BEGIN OR END FENCE
(where new fence ties into existing fence)

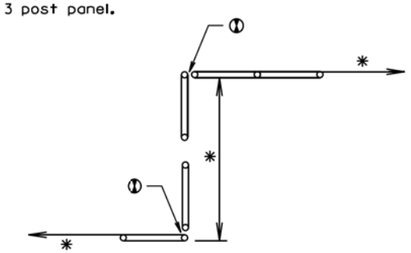

SHORT JOGS IN FENCE

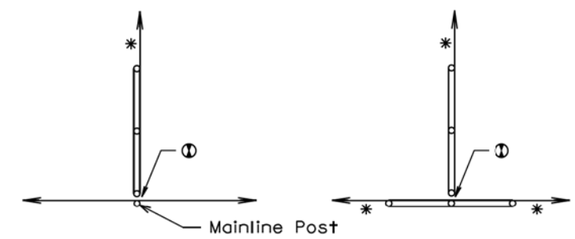

CROSS FENCE

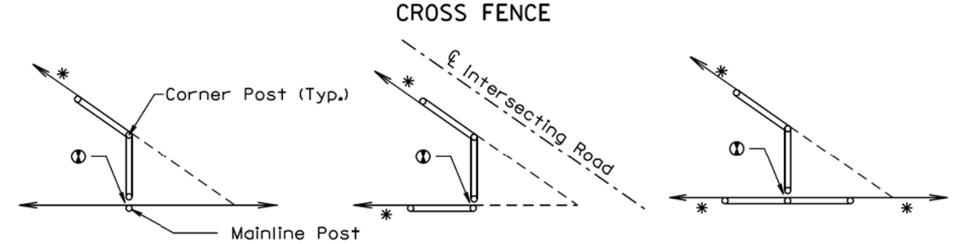

SHARP ANGLES IN CROSS FENCE

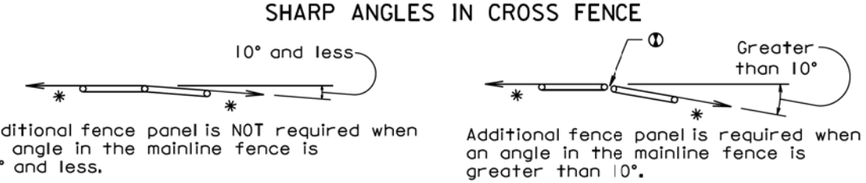

Additional fence panel is NOT required when an angle in the mainline fence is 10° and less.

Additional fence panel is required when an angle in the mainline fence is greater than 10°.

ANGLES IN MAINLINE FENCE

December 23, 2004

Published Date: 3rd Qtr. 2015	SDDOT	BRACE PANELS AND APPLICATIONS OF BRACE PANELS	PLATE NUMBER 620.03
			Sheet 2 of 3

Plot Scale - 1:200
- Plotted From - TRSF12139
File - ...\buff02RW\s62003_1s62003_2.dgn

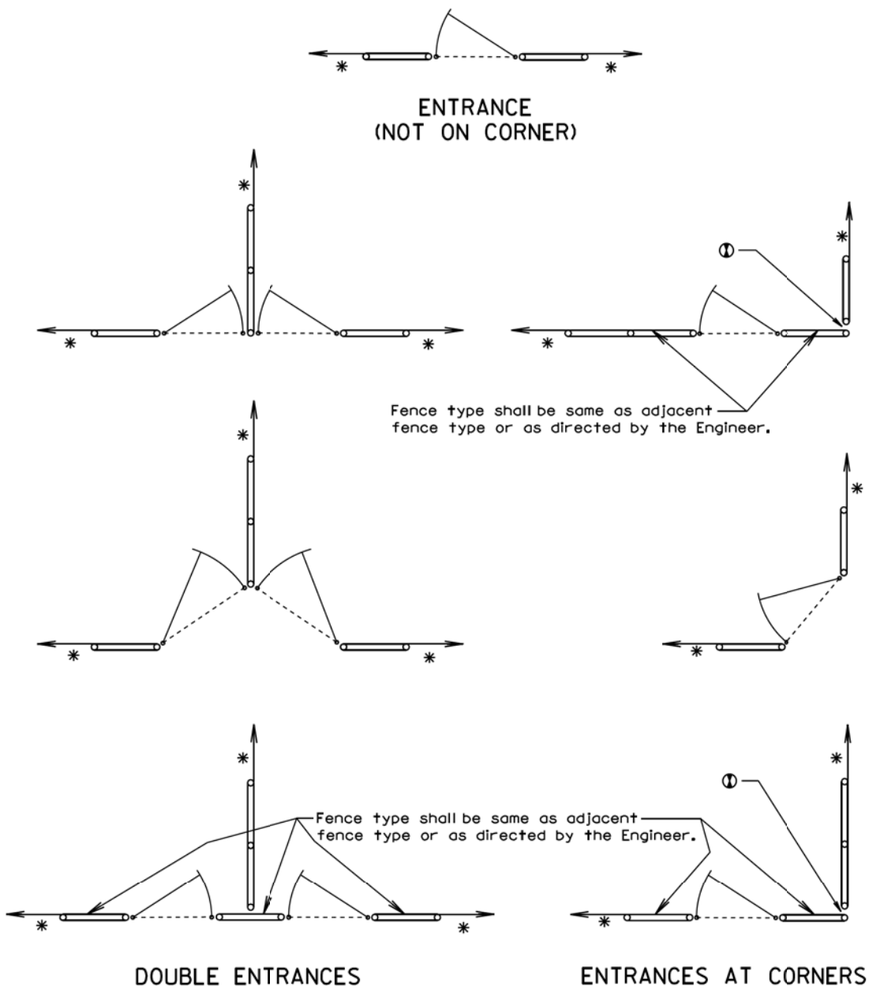

GATES

* If fence length is less than 600' to next corner use a 2 post panel.
If fence length is greater than 600' to next corner use a 3 post panel.

① See Detail B on Sheet 1 of 3.

December 23, 2004

Published Date: 3rd Qtr. 2015	SDDOT	BRACE PANELS AND APPLICATIONS OF BRACE PANELS	PLATE NUMBER 620.03
			Sheet 3 of 3

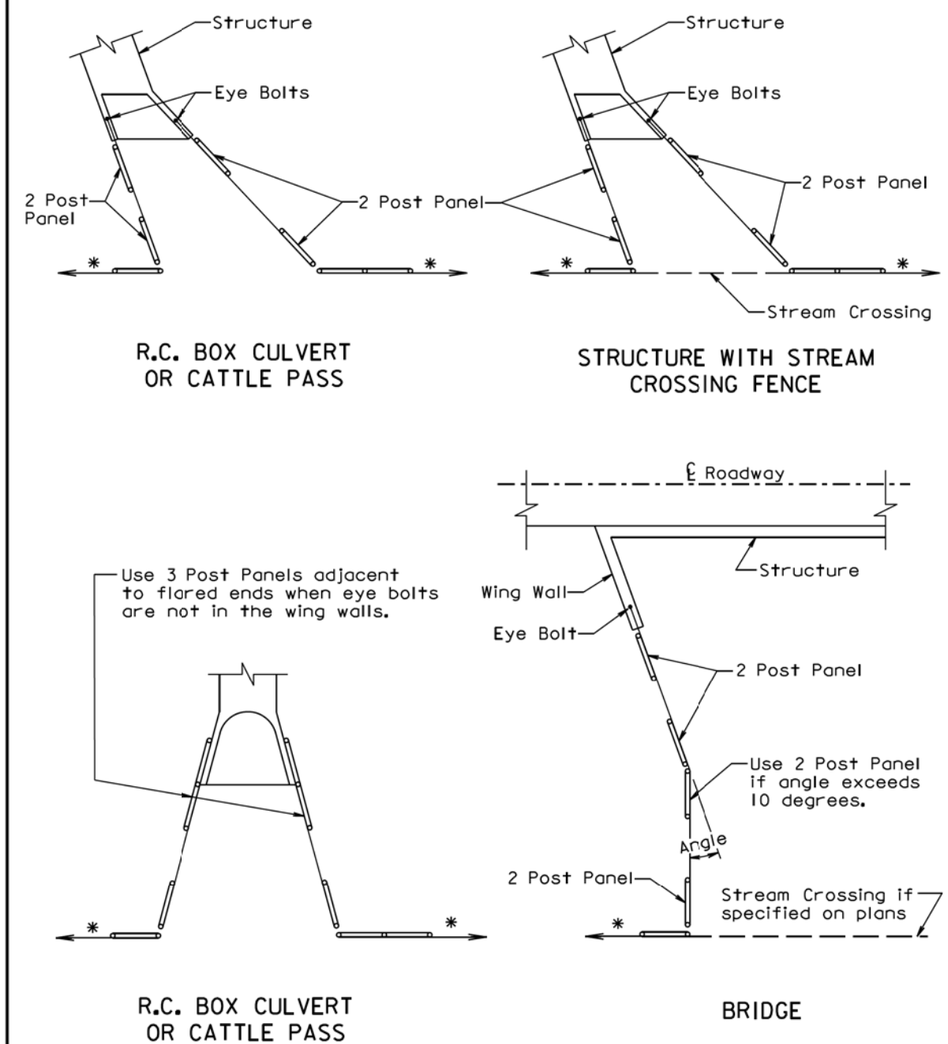

* If fence length is less than 600' to next corner use a 2 post panel.
If fence length is greater than 600' use a 3 post panel.

December 23, 2010

Published Date: 3rd Qtr. 2015	SDDOT	BRACE PANEL APPLICATIONS AT STRUCTURES	PLATE NUMBER 620.04
			Sheet 1 of 1

Plot Scale - 1:200
- Plotted From - TRSF12139
File - ...\buff02RW\s62003_3s62004.dgn

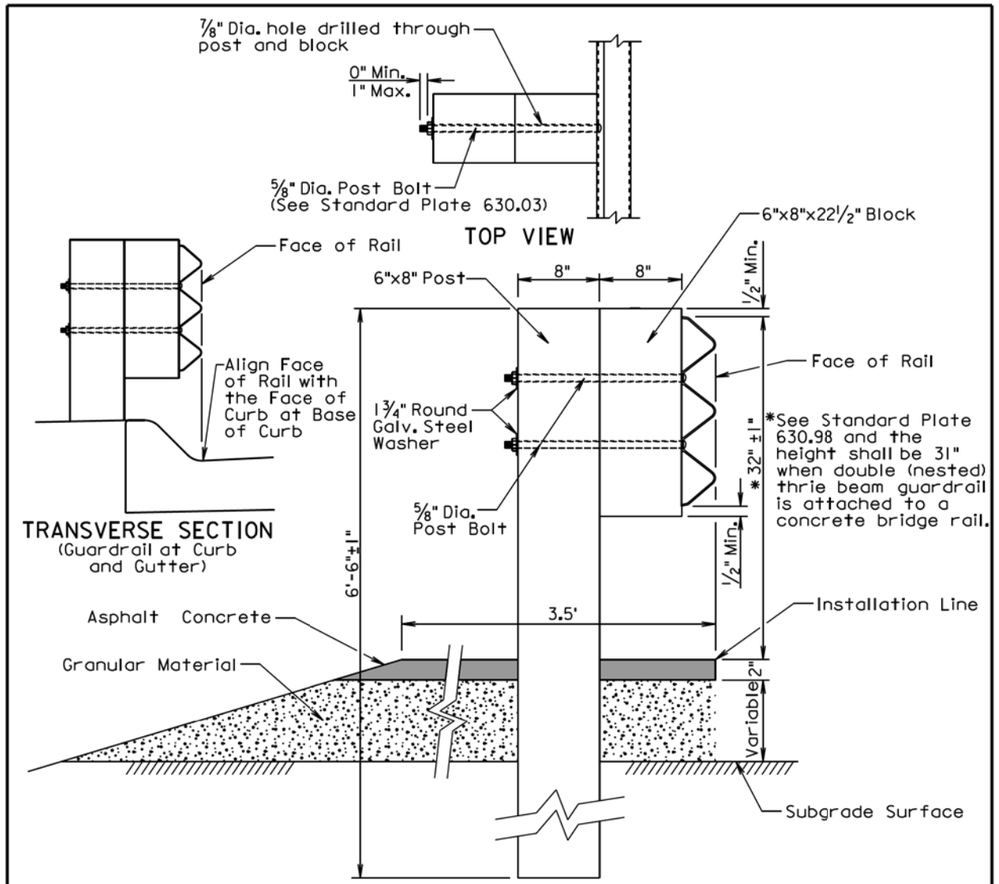

GENERAL NOTES:

Asphalt concrete shall be the same type used elsewhere on the project or shall be as specified in the plans. If asphalt concrete is not specified in the plans, the asphalt concrete shall conform to the Specifications for "Asphalt Concrete Composite." For informational purposes, the Rate of Materials for the 3.5' wide section of asphalt concrete as shown above shall be 4.80 Tons per Station.

Granular material shall be the same type used elsewhere on the project or shall be as specified in the plans. If granular material type is not specified in the plans, the material shall conform to the Specifications for "Base Course". The granular material shall be placed the same thickness as the mainline surfacing or as specified in the plans.

The cross slope for the surfacing and subgrade surface shall be as specified in the plans (See Typical Sections and/or Cross Sections).

The top of post and top of block shall have a true square cut. The top of block shall be ±1 inch from the top of the post.

June 26, 2015

Published Date: 3rd Qtr. 2015	SDDOT	THRIE BEAM GUARDRAIL POST INSTALLATION	PLATE NUMBER 630.01
			Sheet 1 of 1

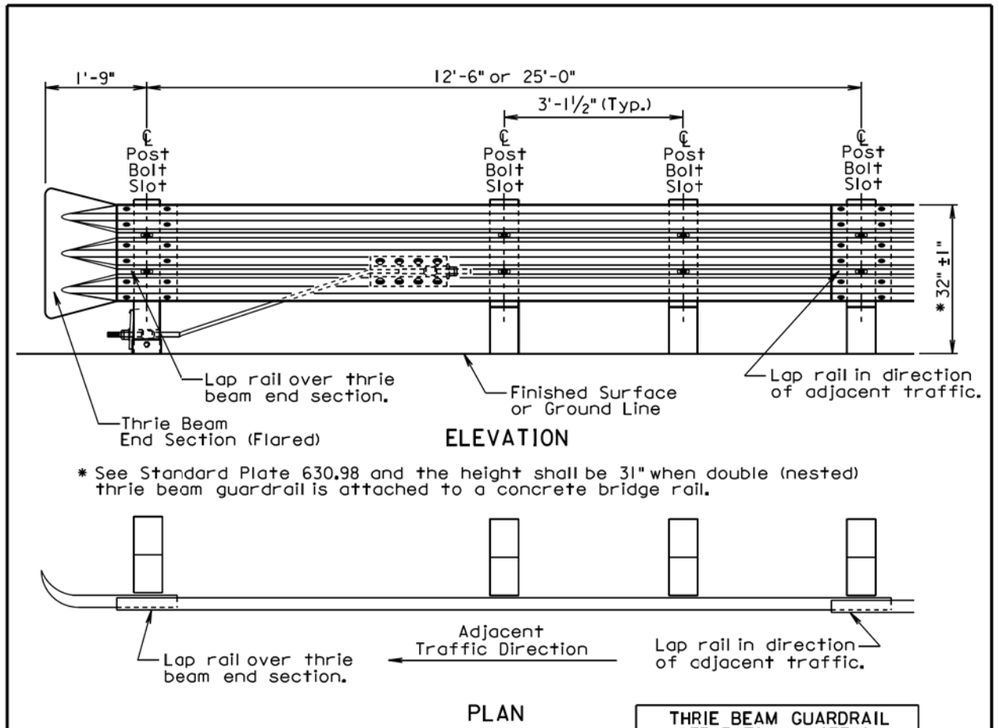

THRIE BEAM GUARDRAIL DEFLECTION CRITERIA	
POST SPACING	MAXIMUM DEFLECTION
6'-3"	2'-6"
3'-1 1/2"	1'-9"

For Informational Purposes Only

GENERAL NOTES:

All thrie beam rail shall be Type 1.

There will be no separate payment for furnishing and installing Thrie Beam End Sections (Flared) and Thrie Beam Terminal Connectors. All costs for the Thrie Beam End Sections (Flared) and Thrie Beam Terminal Connectors shall be incidental to the contract unit price per foot for the respective "Thrie Beam Guardrail" bid item.

Thrie beam rail section lengths may be 12'-6" and/or 25'-0". The combination of section lengths used shall be compatible with the total length of rail per site as shown in the plans.

Thrie Beam End Sections (Flared) shall only be used in a one-way traffic situation. See Standard Plate 630.80 for Thrie Beam End Section (Flared) in the Beam Guardrail Trailing End Terminal.

All costs for constructing thrie beam guardrail including labor, equipment, and materials including all posts, blocks, steel beam rail, and hardware shall be incidental to the contract unit price per foot for the respective "Thrie Beam Guardrail" bid item.

June 26, 2015

Published Date: 3rd Qtr. 2015	SDDOT	THRIE BEAM GUARDRAIL INSTALLATION	PLATE NUMBER 630.02
			Sheet 1 of 1

Plot Scale - 1:200
- Plotted From - TRSF12139
File - ...\prj\buff02RW\s63001_s63002.dgn

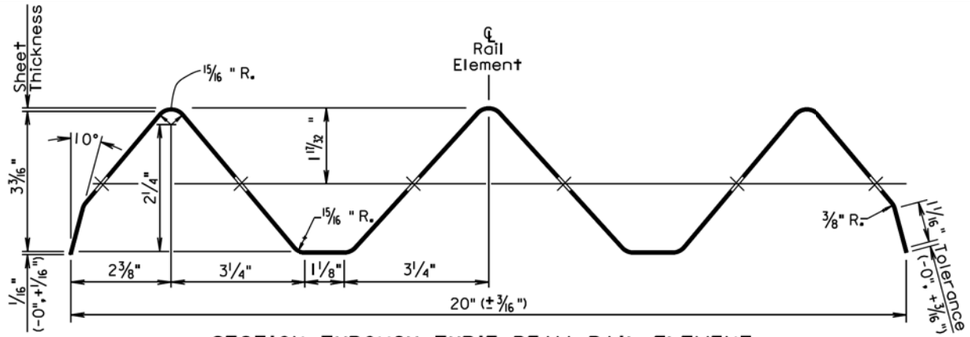

SECTION THROUGH THRIE BEAM RAIL ELEMENT

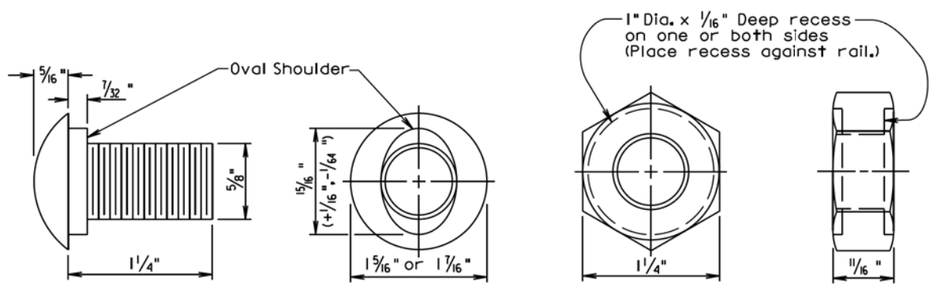

The Post Bolt is similar except the post bolt is 18" long.

SPLICE BOLT
(5/8" BUTTON HEAD BOLT AND RECESS NUT)

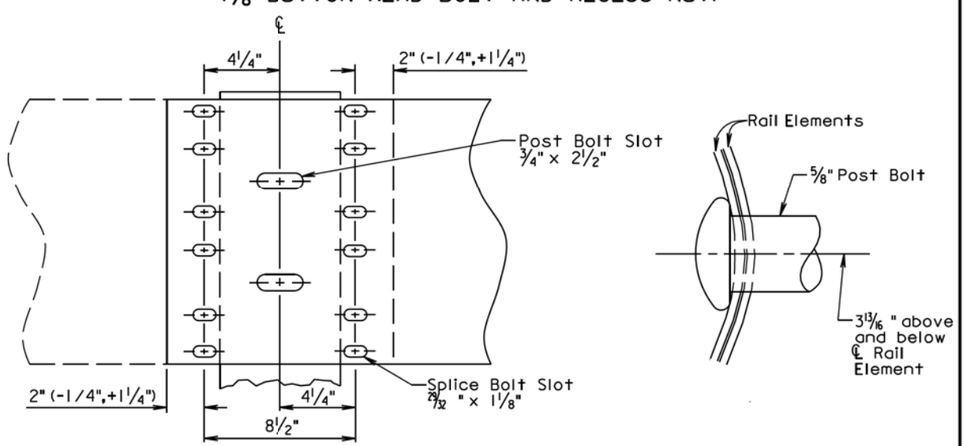

Lap in direction of traffic.

RAIL SPLICE

March 31, 2000

Published Date: 3rd Qtr. 2015	SDDOT	THRIE BEAM RAIL, RAIL SPLICE, AND HARDWARE	PLATE NUMBER 630.03 Sheet 1 of 1

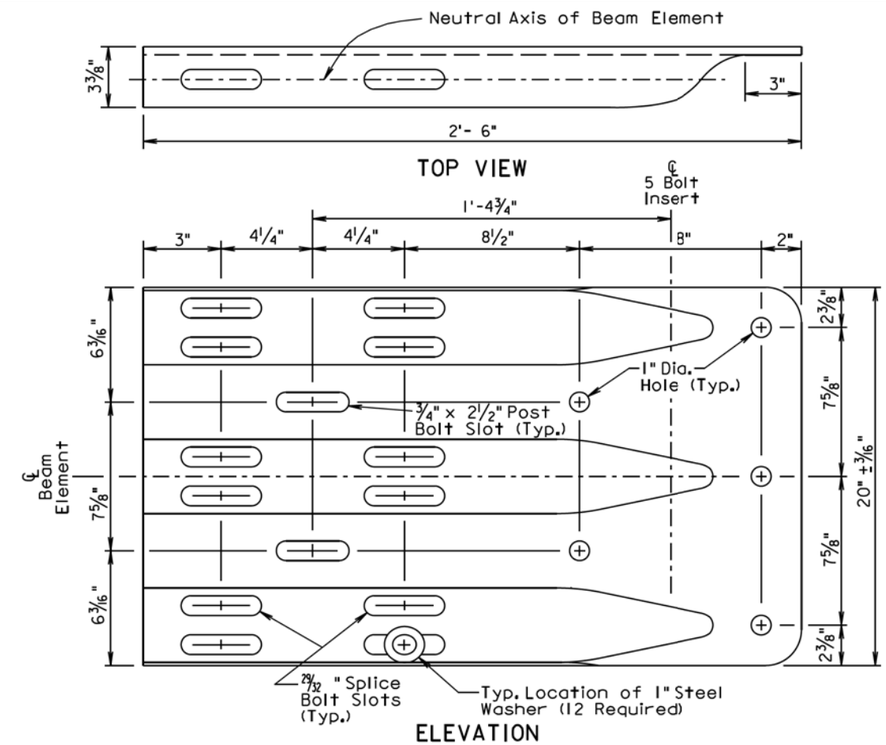

ELEVATION
THRIE BEAM TERMINAL CONNECTOR

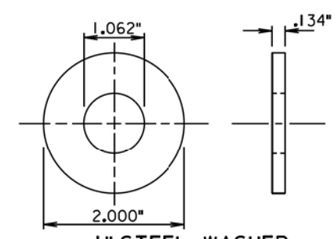

1" STEEL WASHER

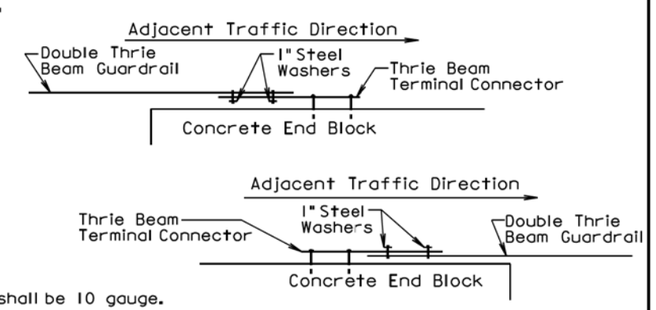

GENERAL NOTES:

Thrie Beam Terminal Connectors shall be 10 gauge.

When the thrie beam terminal connector is used to connect the rail to the bridge, 1" steel washers shall be used at the lap splice and the washers shall be in direct contact with the 3" slots of the thrie beam terminal connector. See the drawings above for the typical locations of the 1" steel washers.

There will be no separate payment for furnishing and installing the Thrie Beam Terminal Connector. All costs for the Thrie Beam Terminal Connector shall be incidental to the contract unit price per foot for the respective "Thrie Beam Guardrail" bid item.

September 14, 2001

Published Date: 3rd Qtr. 2015	SDDOT	THRIE BEAM TERMINAL CONNECTOR AND 1" STEEL WASHER	PLATE NUMBER 630.05 Sheet 1 of 1

Plot Scale - 1:200
- Plotted From - TRSF12139
File - ...\prj\buff02RW\s63003_s63005.dgn

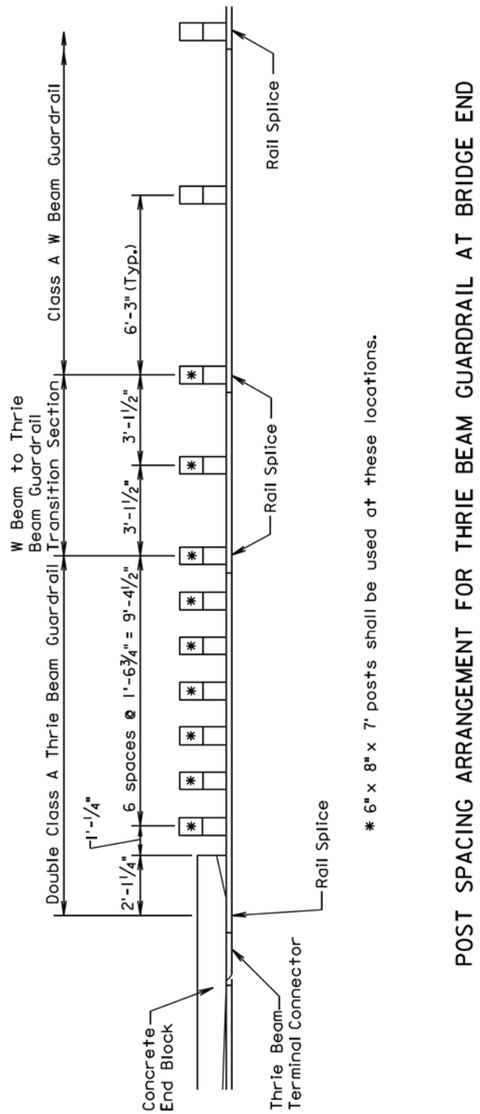

* 6" x 8" x 7' posts shall be used at these locations.

POST SPACING ARRANGEMENT FOR THRIE BEAM GUARDRAIL AT BRIDGE END

December 23, 2002

Published Date: 3rd Qtr. 2015	SDDOT	POST SPACING ARRANGEMENT FOR THRIE BEAM GUARDRAIL AT BRIDGE END	PLATE NUMBER 630.15 Sheet 1 of 1

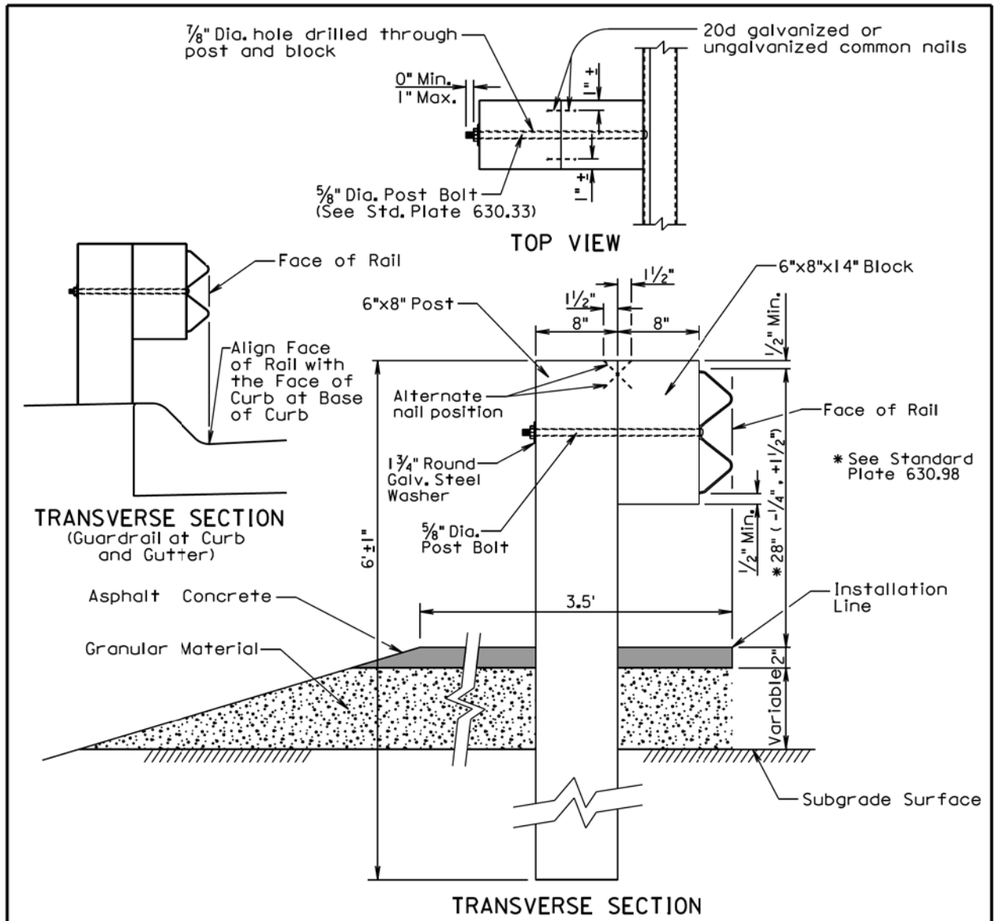

GENERAL NOTES:

Asphalt concrete shall be the same type used elsewhere on the project or shall be as specified in the plans. If asphalt concrete is not specified in the plans, the asphalt concrete shall conform to the Specifications for "Asphalt Concrete Composite." For informational purposes, the Rate of Materials for the 3.5' wide section of asphalt concrete as shown above shall be 4.80 Tons per Station.

Granular material shall be the same type used elsewhere on the project or shall be as specified in the plans. If granular material type is not specified in the plans, the material shall conform to the Specifications for "Base Course". The granular material shall be placed the same thickness as the mainline surfacing or as specified in the plans.

The cross slope for the surfacing and subgrade surface shall be as specified in the plans (See Typical Sections and/or Cross Sections).

The top of post and top of block shall have a true square cut. The top of block shall be ±1 inch from the top of the post.

June 26, 2015

Published Date: 3rd Qtr. 2015	SDDOT	W BEAM GUARDRAIL POST INSTALLATION	PLATE NUMBER 630.31 Sheet 1 of 1

Plot Scale - 1:200
Plotted From - TRSF12139
File - ...\prj\buff02RW\s630115_s63031.dgn

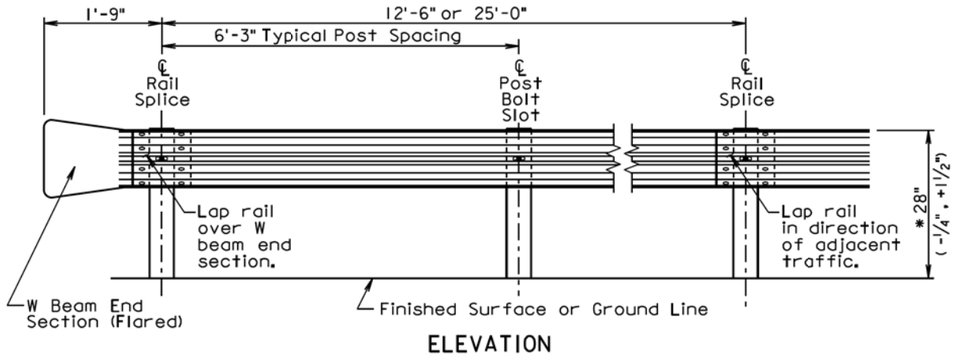

ELEVATION

*See Standard Plate 630.98

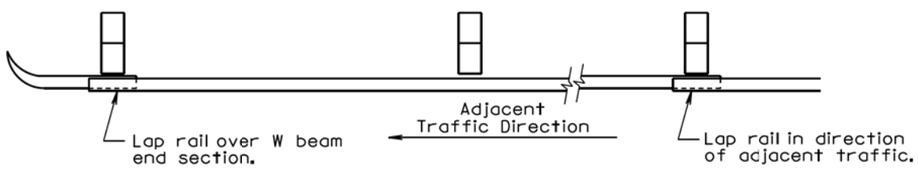

PLAN

W BEAM GUARDRAIL DEFLECTION CRITERIA	
POST SPACING	MAXIMUM DEFLECTION
6'-3"	5'-0"
3'-1 1/2"	3'-9"

For Informational Purposes Only

GENERAL NOTES:

All W beam rail shall be Type I.

There will be no separate payment for furnishing and installing W Beam End Sections (Flared) and W Beam Terminal Connectors. All costs for the W Beam End Sections (Flared) and W Beam Terminal Connectors shall be incidental to the contract unit price per foot for the respective "W Beam Guardrail" bid item.

W beam rail section lengths may be 12'-6" and/or 25'-0". The combination of section lengths used shall be compatible with the total length of rail per site as shown in the plans.

W Beam End Sections (Flared) shall only be used in a one way traffic situation. See Standard Plate 630.80 for W Beam End Section (Flared) in the Beam Guardrail Trailing End Terminal.

All costs for constructing W beam guardrail including labor, equipment, and materials including all posts, blocks, steel beam rail, and hardware shall be incidental to the contract unit price per foot for the respective "W Beam Guardrail" bid item.

June 26, 2015

Published Date: 3rd Qtr. 2015	SDDOT	W BEAM GUARDRAIL INSTALLATION	PLATE NUMBER 630.32 Sheet 1 of 1

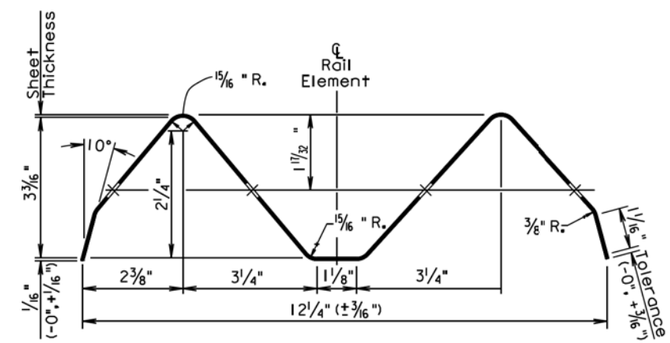

SECTION THROUGH W BEAM RAIL ELEMENT

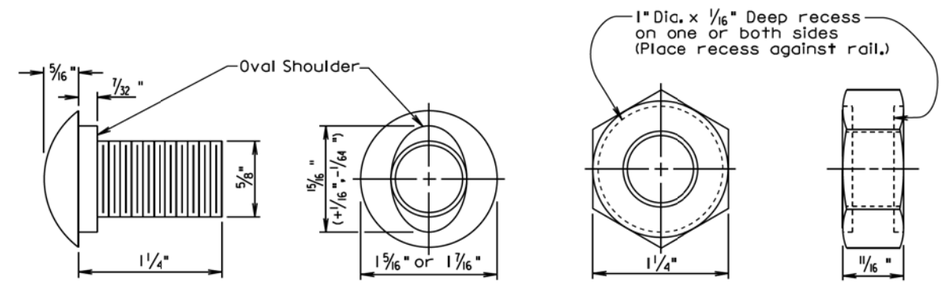

The Post Bolt is similar except the post bolt is 18" long.

SPLICE BOLT
(5/8" BUTTON HEAD BOLT AND RECESS NUT)

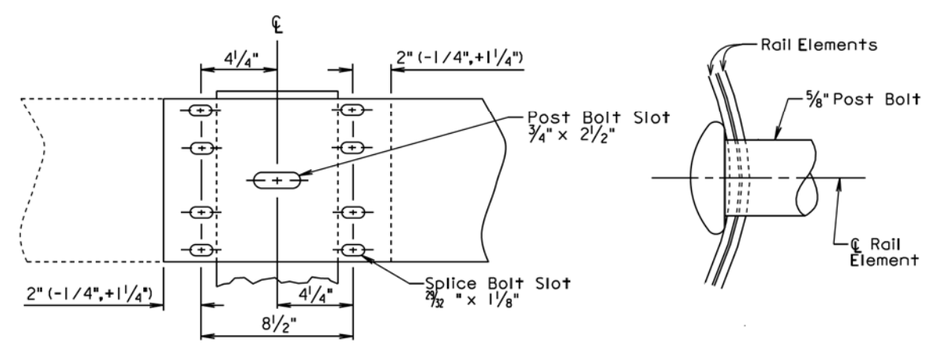

Lap in direction of traffic.

RAIL SPLICE

December 23, 2004

Published Date: 3rd Qtr. 2015	SDDOT	W BEAM RAIL, RAIL SPLICE, AND HARDWARE	PLATE NUMBER 630.33 Sheet 1 of 1

Plot Scale - 1:200
Plotted From - TRSF12139
File - ...\pr\buff02RW\s63032_s63033.dgn

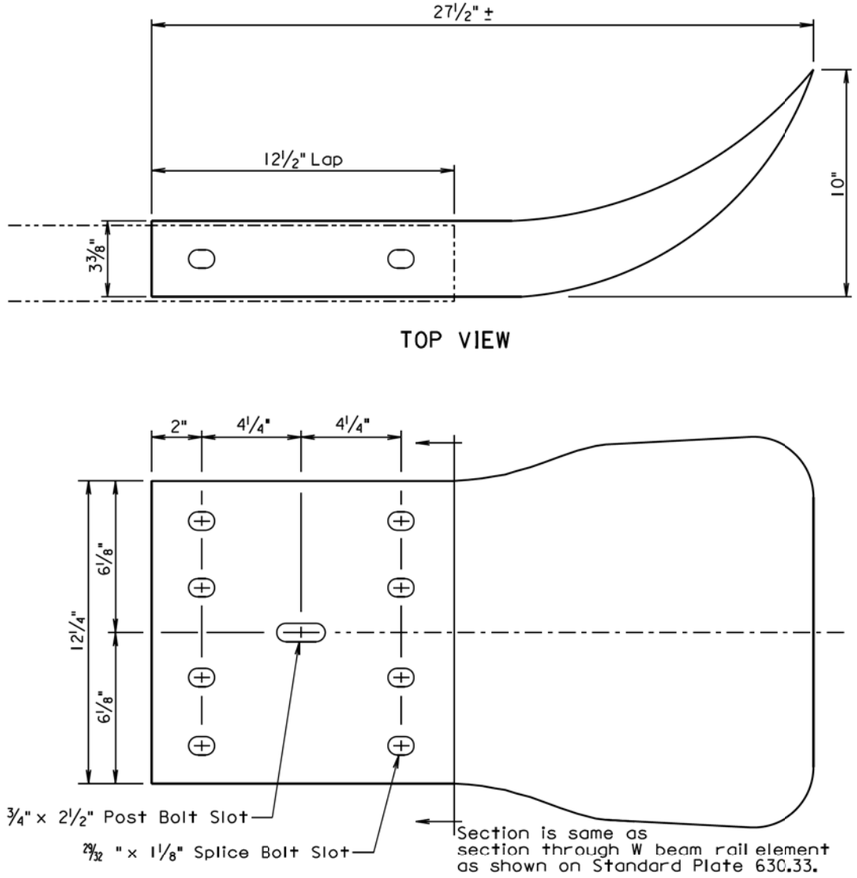

GENERAL NOTES:

W Beam End Sections (Flared) shall be 12 gage.

There will be no separate payment for furnishing and installing W Beam End Sections (Flared). All costs for the W Beam End Sections (Flared) shall be incidental to the contract unit price per foot for the respective "W Beam Guardrail" bid item.

W Beam End Sections (Flared) shall only be used in a one way traffic situation. See Standard Plate 630.80 for W Beam End Section (Flared) in the Beam Guardrail Trailing End Terminal.

March 31, 2000

Published Date: 3rd Qtr. 2015	SDDOT	W BEAM END SECTION (FLARED)	PLATE NUMBER 630.40
			Sheet 1 of 1

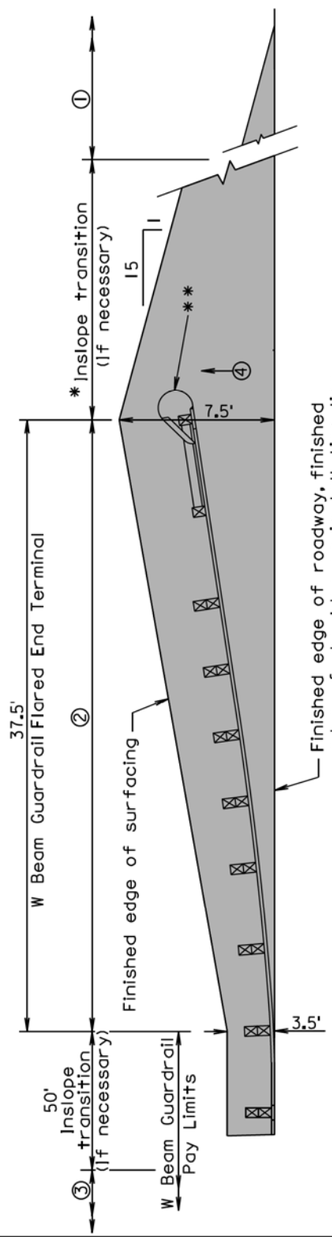

* The length of inslope transition varies with the amount of change between inslopes. The length of the transition shall change 100' for every whole number change in the inslope. For Example: If the inslope changes from a 5:1 to a 4:1 the length of the inslope transition would be 100'. If the inslope changes from a 6:1 to a 4:1 the length of the inslope transition would be 200'.

GENERAL NOTES:

The W beam guardrail flared end terminal shall be installed according to the manufacturer's installation instructions.

**An adhesive object marker shall be placed on the end section buffer or extruder after placement of the end section buffer or extruder. The adhesive object marker dimensions may be 16" x 16" or other variation due to the shape of the end section buffer or extruder. A minimum of 256 square inches of object marker reflective sheeting area is required. The reflective sheeting shall be fluorescent yellow super or very high intensity. All costs for furnishing and installing the adhesive object marker shall be incidental to various contract items.

Asphalt concrete shall be the same type used elsewhere on the project or shall be as specified in the plans. If asphalt concrete is not specified in the plans, the asphalt concrete shall conform to the Specifications for "Asphalt Concrete Composite."

Granular material shall be the same type used elsewhere on the project or shall be as specified in the plans. If granular material type is not specified in the plans, the material shall conform to the Specifications for "Base Course". The granular material shall be placed the same thickness as the mainline surfacing or as specified in the plans.

December 16, 2014

Published Date: 3rd Qtr. 2015	SDDOT	EMBANKMENT AND SURFACING FOR W BEAM GUARDRAIL FLARED END TERMINAL	PLATE NUMBER 630.45
			Sheet 1 of 1

Plot Scale - 1:200
- Plotted From - TRSF12139
File - ...\prj\buff02RW\s63040_s63045.dgn

STATE OF SOUTH DAKOTA	PROJECT	SHEET	TOTAL SHEETS
	P 0034(150)272	B25	B28

Plotting Date: 09/29/2015

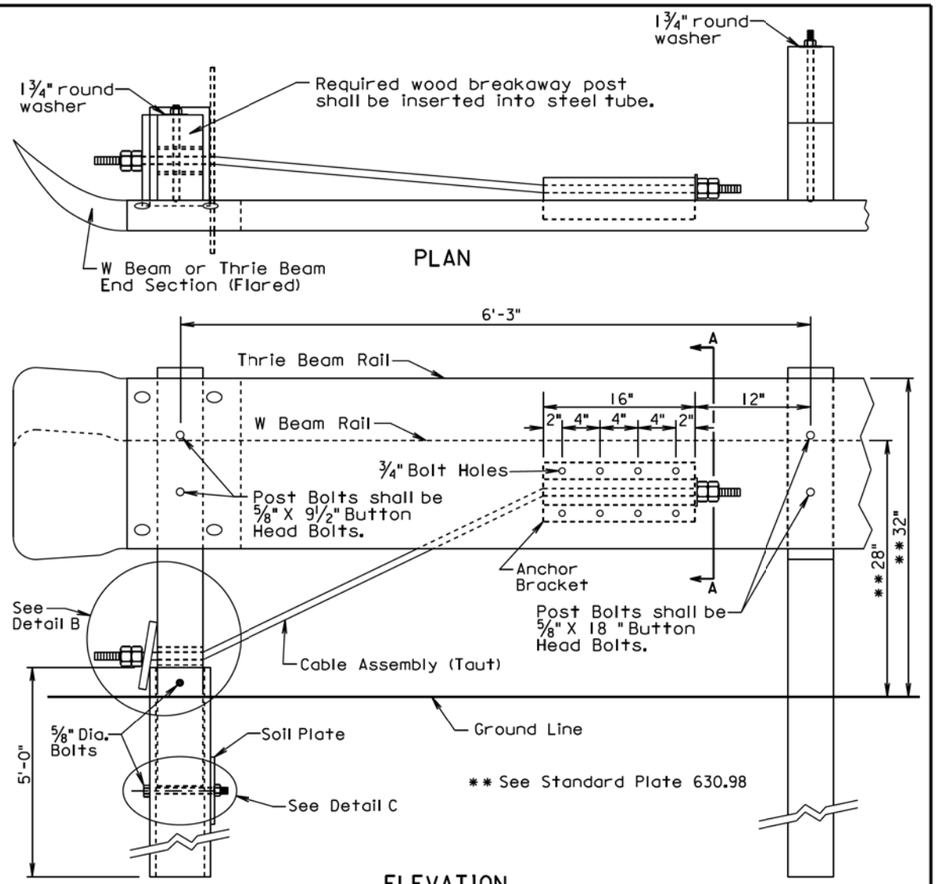

GENERAL NOTES:

All hardware shall be galvanized in accordance with ASTM A153.

The cable shall be ¾", Type II, with Class A coating in conformance with AASHTO M30.

The steel tube shall meet the requirements of ASTM Specification A500, Grade B, and shall be galvanized after fabrication in accordance with the requirements of AASHTO Specification M111.

The anchor bracket, soil plate, and bearing plate shall be fabricated from steel that meets ASTM A36 Specifications. They shall be galvanized after fabrication in accordance with ASTM A123.

Costs for constructing the beam guardrail trailing end terminal and furnishing the anchor bracket, cable assembly, steel tube, soil plate, bearing plate, pipe sleeve, wood breakaway post, and all hardware necessary to attach anchor bracket, cable assembly, steel tube, soil plate, bearing plate, pipe sleeve, and wood breakaway post shall be incidental to the contract unit price per each for "Beam Guardrail Trailing End Terminal".

Costs for the thrie beam or W beam guardrail and the thrie beam or W beam end sections (Flared) shall be incidental to the contract unit price per foot for the respective "Thrie Beam Guardrail" or "W Beam Guardrail" bid items.

June 26, 2010

Published Date: 3rd Qtr. 2015	SDDOT	BEAM GUARDRAIL TRAILING END TERMINAL	PLATE NUMBER 630.80
			Sheet 1 of 2

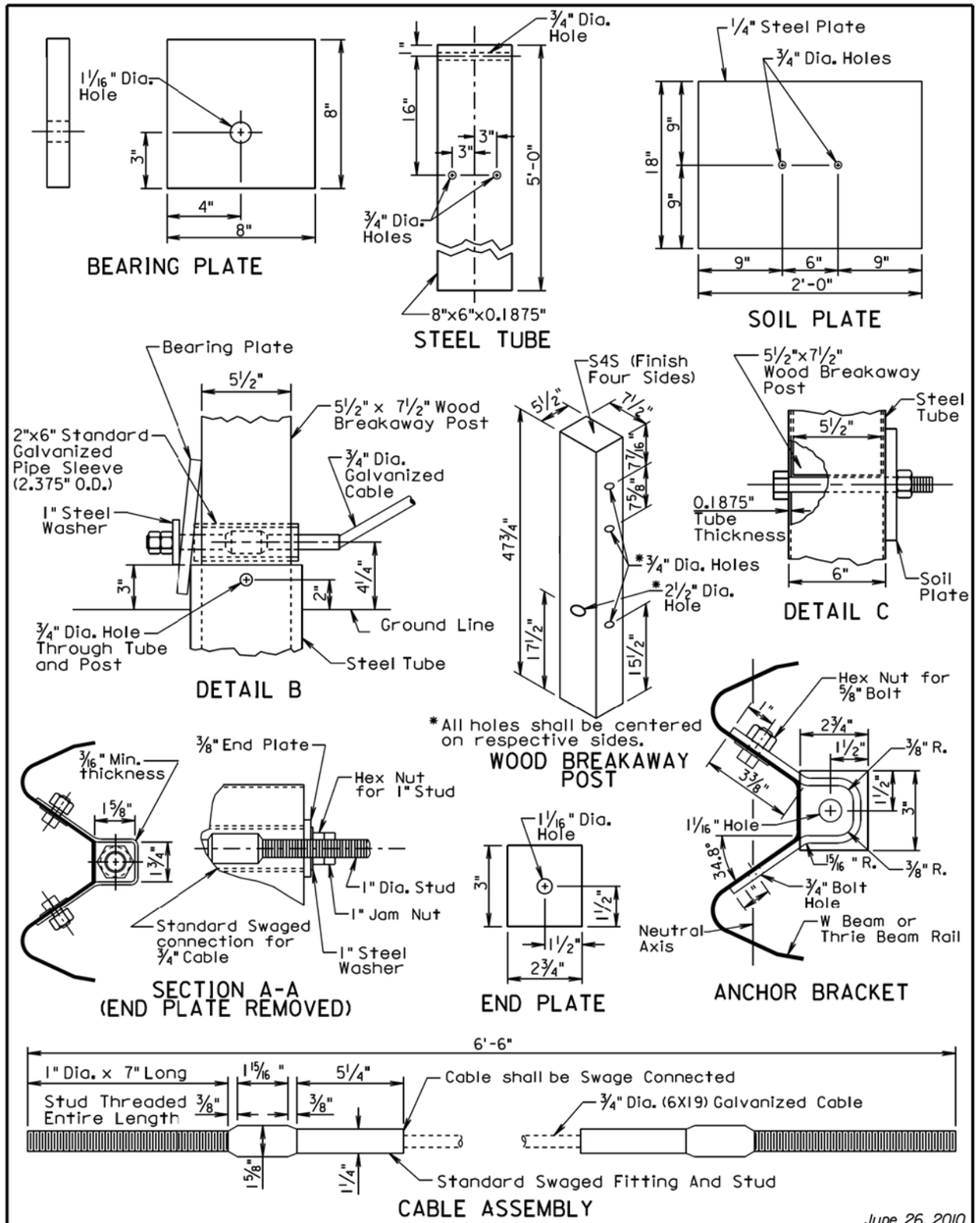

June 26, 2010

Published Date: 3rd Qtr. 2015	SDDOT	BEAM GUARDRAIL TRAILING END TERMINAL	PLATE NUMBER 630.80
			Sheet 2 of 2

Plot Scale - 1:200

- Plotted From - TRSF12139

File - ...\buff02RW\s63080_1s63080_2.dgn

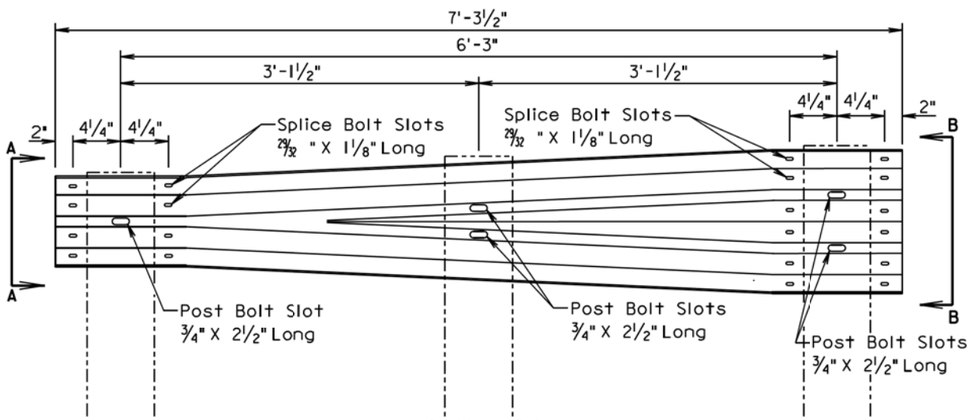

ELEVATION

VIEW A-A

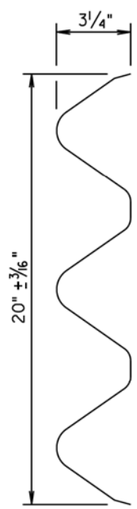

VIEW B-B

GENERAL NOTE:

All costs for constructing the W Beam to Thrie Beam Guardrail Transition including labor, equipment, and materials including two posts, two blocks, W beam to thrie beam transition section, and hardware shall be incidental to the contract unit price per each for "W Beam to Thrie Beam Guardrail Transition".

March 31, 2000

Published Date: 3rd Qtr. 2015	SDDOT	W BEAM TO THRIE BEAM GUARDRAIL TRANSITION SECTION	PLATE NUMBER 630.82
			Sheet 1 of 1

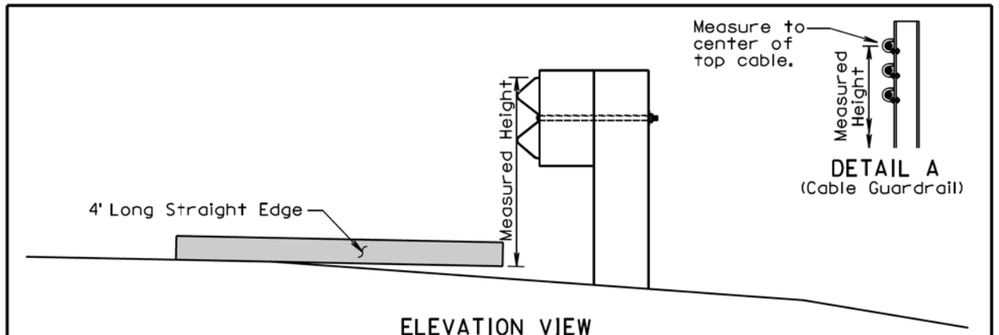

DETAIL A
(Cable Guardrail)

ELEVATION VIEW
(Guardrail Adjacent to Differential Slopes)

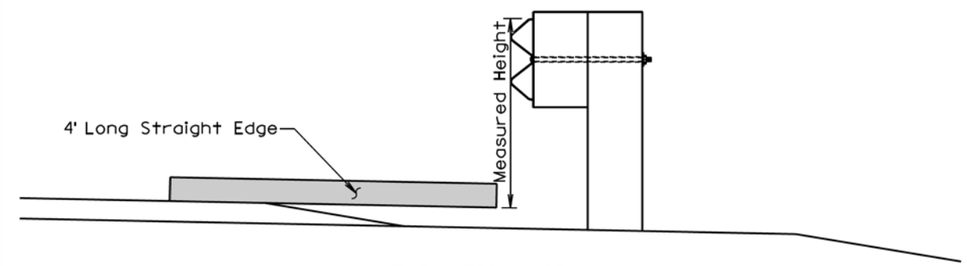

ELEVATION VIEW
(Guardrail Adjacent to Differential Surfacing Elevations)

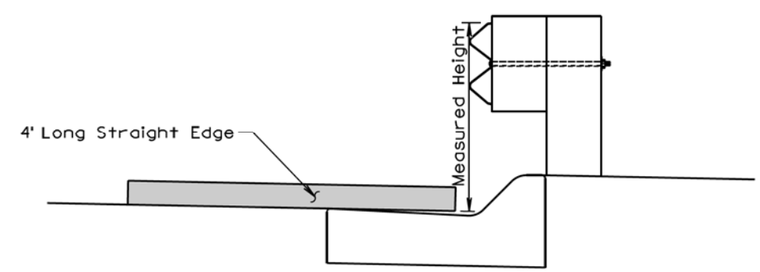

ELEVATION VIEW
(Guardrail at Curb and Gutter)

GENERAL NOTES:

The W Beam guardrail shown is for illustrative purpose. The guardrail height for all types of guardrail systems shall be measured in accordance with this standard plate.

When measuring height of cable guardrail or cable barrier the height shall be measured to the center of the top cable. See Detail A.

June 26, 2010

Published Date: 3rd Qtr. 2015	SDDOT	MEASURING GUARDRAIL HEIGHT	PLATE NUMBER 630.98
			Sheet 1 of 1

Plot Scale - 1:200
- Plotted From - TRSF12139
File - ...\prj\buff02RW\s63082_s63098.dgn

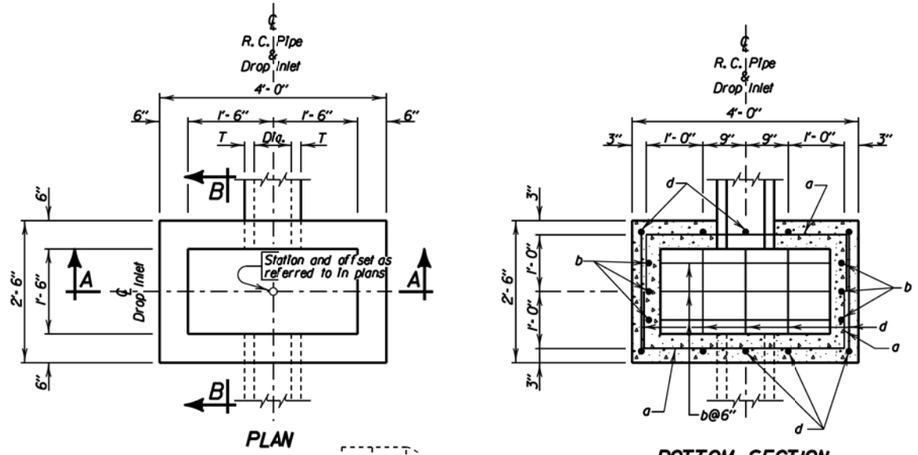

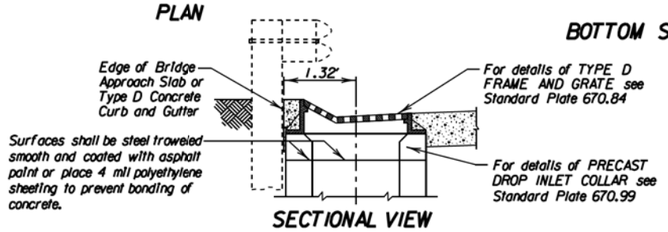

ESTIMATED QUANTITIES

ITEM	UNIT	CONSTANT QUANTITY	VARIABLE QUANTITY
✳ Class M6 Concrete	Cu Yd	0.22	0.20H
Reinforcing Steel	Lb	37	19.37H
Frame and Grate	Each	1	———

DROP INLETS FOR 12" TO 27" DIAMETER PIPE

GENERAL NOTES:

✳ Reduce total quantities of concrete by the amount of concrete displaced by the pipe. The total quantity of concrete shall be computed to the nearest hundredth of a cubic yard. The total quantity of reinforcing steel shall be computed to the nearest pound.

Drop inlets shown may be modified by the addition or omission of connecting pipes as shown on the layouts.

Reinforcing steel shall conform to ASTM A615 Grade 60. The b bars shall be lapped 12 inches. Cut and bend reinforcing steel as required to place pipe(s) through the drop inlet wall.

Pipe shall not enter through a corner of the drop inlet.

Use 2" clear cover on all reinforcing steel unless otherwise noted.

Precasting of reinforced drop inlets will be permissible. Prior to precasting, the Contractor shall submit details to the Engineer for approval.

Maximum pipe diameter shall not exceed 12 inches on the 2.5 foot wide side and shall not exceed 27 inches on the 4 foot wide side of the drop inlet.

The dimension of H is in feet.

PIPE DISPLACEMENT REDUCTIONS

R.C. Pipe Diameter Inches	T Inches	Class M6 Concrete Cu Yd
12	2	0.03
15	2 1/4	0.04
18	2 1/2	0.05
24	3	0.09
27	3 1/4	0.11

December 23, 2009

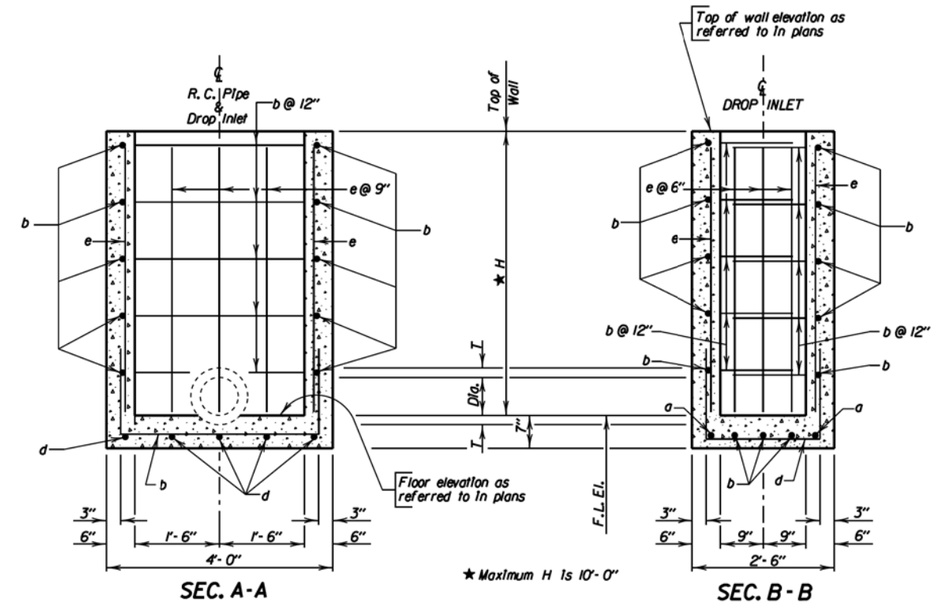

DROP INLETS FOR 12" TO 27" DIAMETER PIPE

REINFORCING SCHEDULE

MK.	No.	Size	Length	Type	Bending Details
a	2	4	5'-6"	17	
b	3+2H	4	6'-6"	17	
d	5	4	5'-0"	17	
e	16	4	H - 2"	Str.	

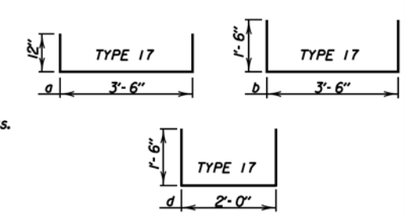

NOTE:
All dimensions are out to out of bars.

December 23, 2009

Plot Scale - 1:200
- Plotted From - TRSF12139
File - ...\buff02RW\ss67020_1ss67020_2.dgn

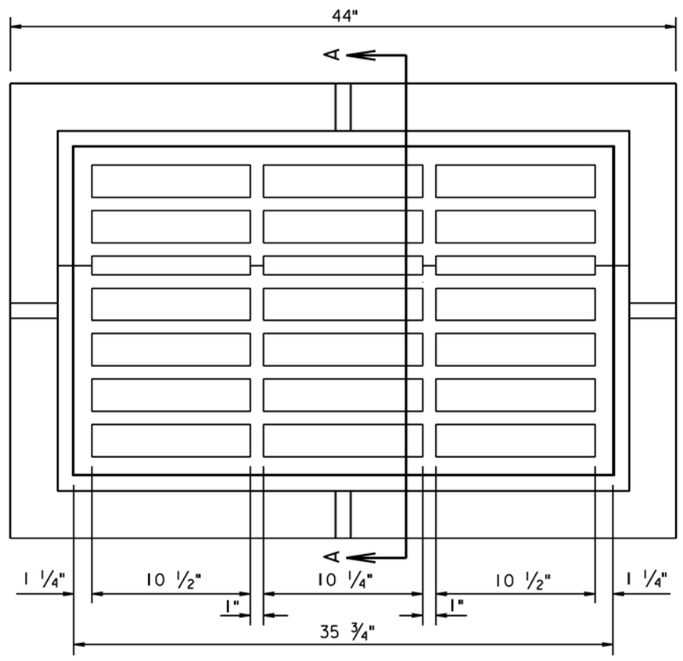

PLAN VIEW

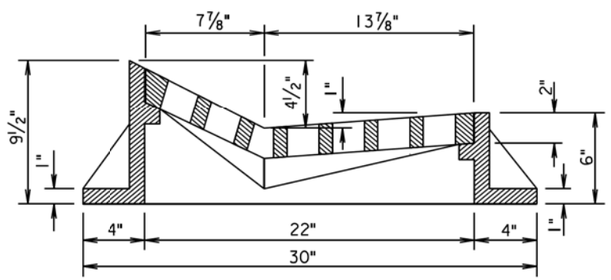

SECTION A-A

GENERAL NOTE:

The total weight of the frame and grate shall be 620 pounds minimum.

March 31, 2000

Published Date: 3rd Qtr. 2015	SDDOT	TYPE D FRAME AND GRATE	PLATE NUMBER 670.84
			Sheet 1 of 1

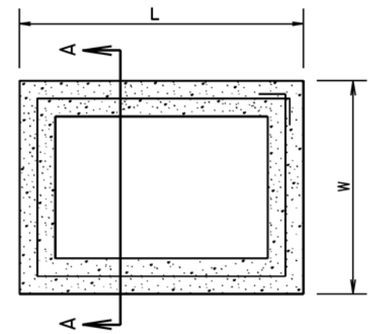

PLAN VIEW

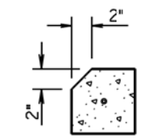

For Type D Drop Inlets only:
Use Precast Drop Inlet Collar with 2" chamfer on L sides only.

DETAIL B

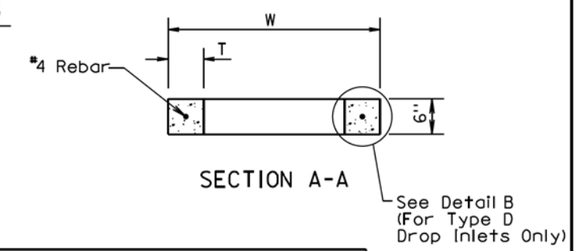

SECTION A-A

INFORMATIONAL QUANTITIES					
FRAME AND GRATE TYPE	L Ft-In	W Ft-In	T In	CLASS M6 CONCRETE CuYd	REINFORCING STEEL Lb
TYPE B	4'-0"	3'-0"	6	0.11	9
TYPE C	5'-0"	4'-0"	6	0.15	11
TYPE D	4'-0"	2'-6"	6	0.10	8

GENERAL NOTES:

All reinforcing steel shall conform to ASTM A615, Grade 60.

The 1/2" diameter bar shall lap 6"± and shall be centered in the concrete.

The cost of furnishing and installing Precast Drop Inlet Collars, including labor, materials, and incidentals shall be incidental to the contract unit price per Each for "Precast Drop Inlet Collar".

March 31, 2000

Published Date: 3rd Qtr. 2015	SDDOT	PRECAST DROP INLET COLLAR	PLATE NUMBER 670.99
			Sheet 1 of 1

Plot Scale - 1:200
- Plotted From - TRSF12139
File - ...\prj\buff02RW\s67084_s67099.dgn