Section E: Structure Plans

INDEX OF SHEETS -

Sheet E1	Layout Map and Index
Sheet E2	Estimate of Structure Quantities
Sheet E3 to E15	4 - 12' x 12' Box Culvert
Sheet E16 to E45	394' - 9 1/8" Prestressed Girder Bridge

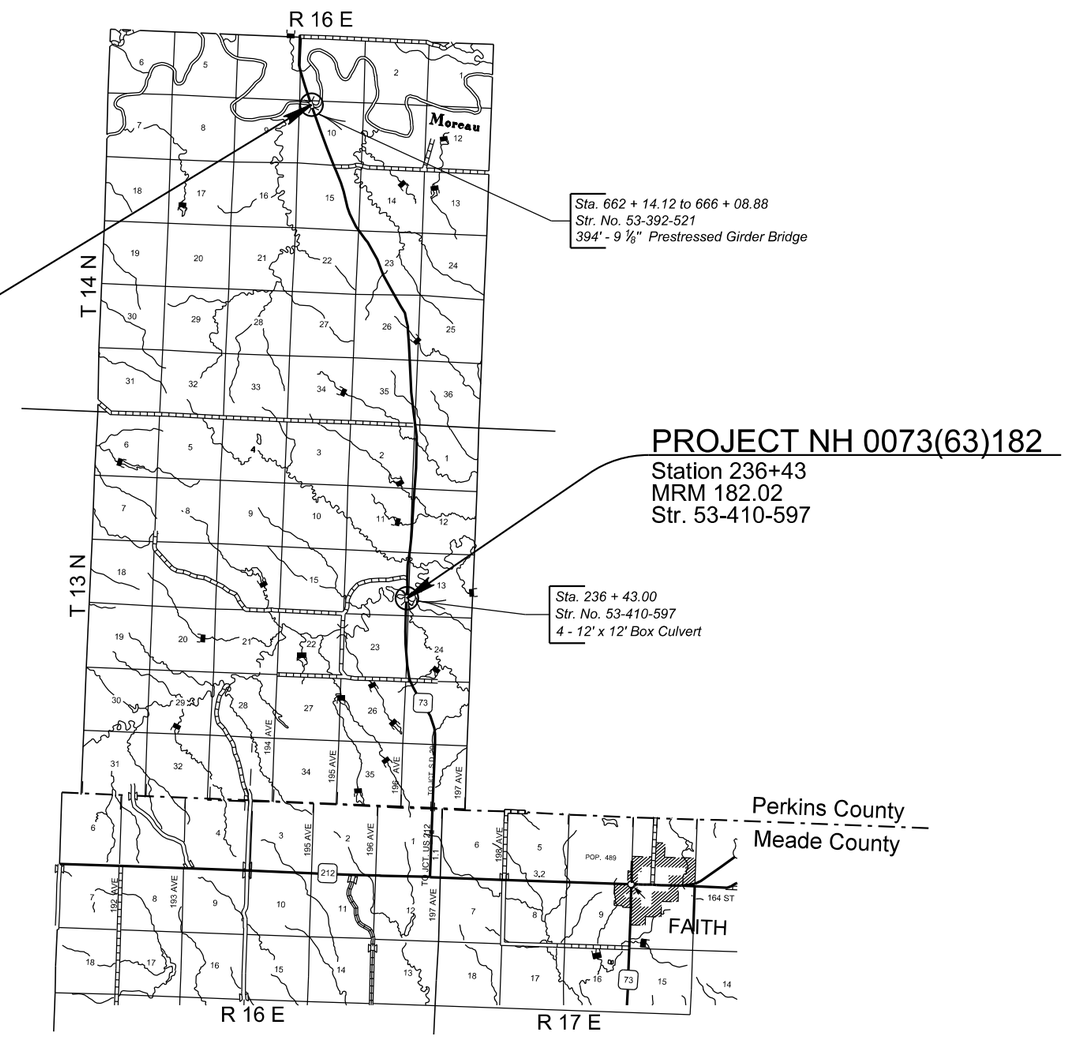

1 Revised December 18, 2014

SECTION E – ESTIMATE OF STRUCTURE QUANTITES

Str. No. 53-410-597
4 – 12' x 12' Box Culvert
Sta. 236 + 43.00

Bid Item Number	Item	Quantity	Unit
250E0030	Incidental Work, Structure	Lump Sum	LS
420E0200	Structure Excavation, Box Culvert	240	CuYd
421E0200	Box Culvert Undercut	1,178	CuYd
460E0120	Class A45 Concrete, Box Culvert	673.8	CuYd
480E0100	Reinforcing Steel	92,412	Lb
700E0210	Class B Riprap	524.3	Ton
831E0110	Type B Drainage Fabric	611	SqYd

INCIDENTAL WORK, STRUCTURE

1. Str. No. 53-410-597. In place centerline Sta. 235 + 79.00 to centerline Sta. 237 + 01.00 is a 122' - 0' I-Beam Bridge with a 24' - 0" clear roadway. The superstructure consists of a reinforced concrete slab with concrete pigeon hole railing lined with W-beam guardrail. The substructure consists of 2 column reinforced concrete bents and reinforced concrete vertical abutments all of which are supported on treated timber piles.

2. Break down and remove the existing structure 1 foot below finished ground or as required to construct the new structure in accordance with Section 110 of the Specifications. The existing I-beams and W-beam guardrail shall be salvaged for future highway related use. All remaining portions of the existing structure shall be removed and become property of the Contractor for disposal on a site obtained by the Contractor and approved by the Engineer in accordance with the ENVIRONMENTAL COMMITMENT NOTES found in SECTION A. The salvaged items shall be delivered and stockpiled at the Bison Maintenance Shop. Randy Vetter, 17854 S.D. HWY 34 W. Bison, S.D. 57620. (605)244-5257, (605)892-5501

3. During demolition of structure, efforts shall be taken to prevent material from falling into the creek. Under no circumstances is asphalt allowed to fall into the creek.

4. The foregoing is a general description of the in-place structure and should not be construed to be complete in all details. Before preparing the bid it shall be the responsibility of the Contractor to make a visual inspection of the structure to verify the extent of the work and materials involved. If desired by the Contractor, a copy of the original construction plans may be obtained through the Office of Bridge Design.

Str. No. 53-392-521
394'-9 $^{1}/_{8}$" Prestressed Girder Bridge
Sta. 662 + 14.12 to 666 + 08.88

Bid Item Number	Item	Quantity	Unit
009E5000	Concrete Penetrating Sealer	1,400.0	SqYd
120E3100	Bridge End Embankment	1,460	CuYd
250E0030	Incidental Work, Structure	Lump Sum	LS
410E0030	Structural Steel, Miscellaneous	Lump Sum	LS
410E2600	Membrane Sealant Expansion Joint	67.8	Ft
420E0100	Structure Excavation, Bridge	142	CuYd
430E0300	Granular Bridge End Backfill	78.5	CuYd
430E0510	Approach Slab Underdrain Excavation	4.7	CuYd
460E0030	Class A45 Concrete, Bridge Deck	512.5	CuYd
460E0050	Class A45 Concrete, Bridge	201.6	CuYd
460E0150	Concrete Approach Slab for Bridge	165.0	SqYd
460E0160	Concrete Approach Sleeper Slab for Bridge	33.9	SqYd
460E0500	Deck Drain, Girder Bridge	32	Each
465E0100	Class A45 Concrete, Drilled Shaft	164.8	CuYd
465E0200	Drilled Shaft Excavation	157.5	CuYd
465E1044	44" Permanent Casing	111	Ft
480E0100	Reinforcing Steel	105,198	Lb
480E0200	Epoxy Coated Reinforcing Steel	117,027	Lb
480E0505	No. 5 Rebar Splice	288	Each
480E0507	No. 7 Rebar Splice	86	Each
480E0511	No. 11 Rebar Splice	132	Each
510E0300	Preboring Pile	120	Ft
510E3521	HP 14x73 Steel Test Pile, Furnish and Drive	120	Ft
510E3525	HP 14x73 Steel Bearing Pile, Furnish and Drive	550	Ft
560E8054	54" Minnesota Shape Prestressed Concrete Beam	1,560	Ft
680E0040	4" Underdrain Pipe	244	Ft
680E2010	Precast Concrete Headwall for Drain	4	Each
680E2500	Porous Backfill	25.2	Ton
1 700E0310	Class C Riprap	5,743.0	Ton
1 831E0110	Type B Drainage Fabric	4,632	SqYd

The elevations shown in these plans are based on the National Geodetic Survey (NGS) North American Vertical Datum of 1988 (NAVD88).

STATE OF	PROJECT	SHEET NO.	TOTAL SHEETS
S.D.	NH 0073(63)182	E3	E45

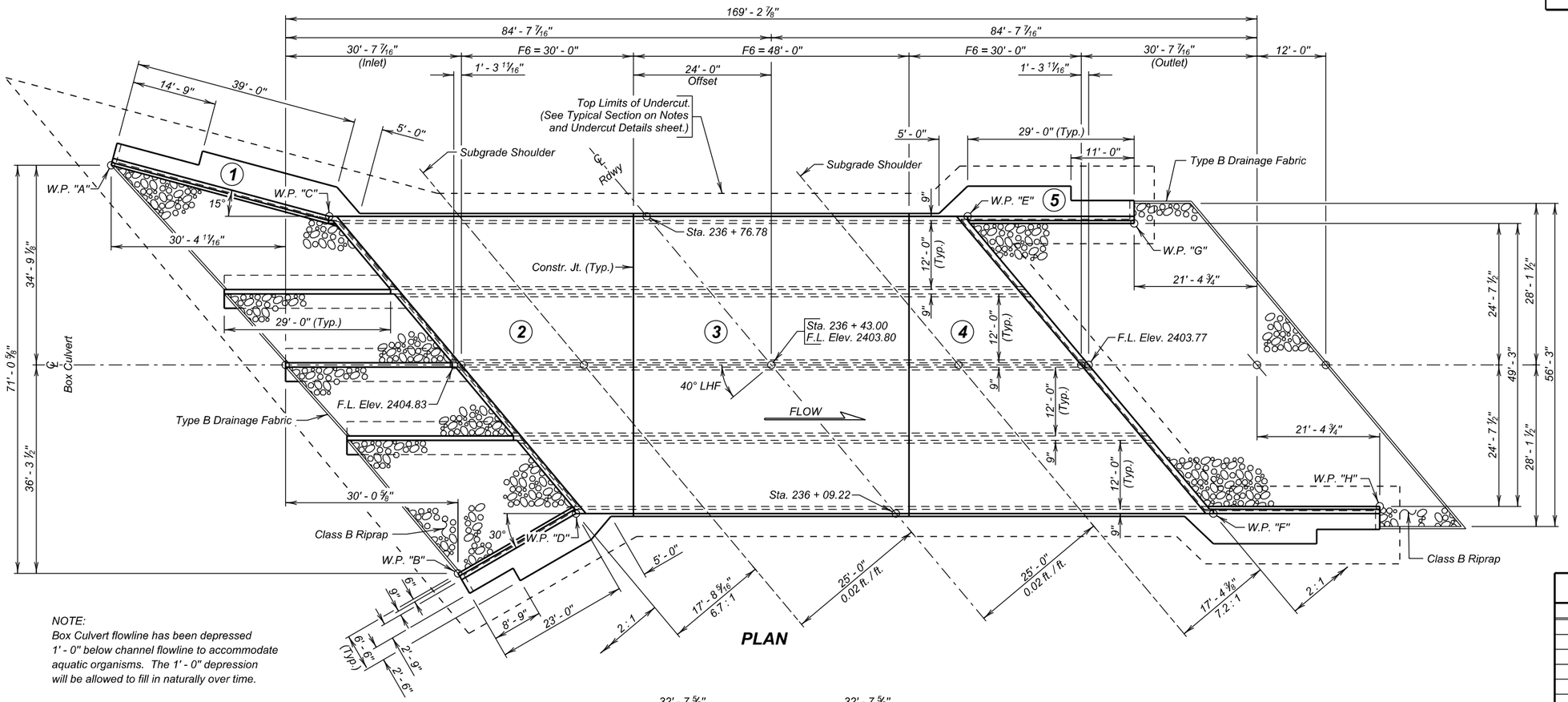

PLAN

NOTE:
Box Culvert flowline has been depressed 1' - 0" below channel flowline to accommodate aquatic organisms. The 1' - 0" depression will be allowed to fill in naturally over time.

-X028-
INDEX OF CULVERT SHEETS-

Sheet No. 1 - General Drawing and Quantities
Sheet No. 2 - Notes and Undercut Details
Sheet No. 3 - Inlet Details (A)
Sheet No. 4 - Inlet Details (B)
Sheet No. 5 - Inlet Details (C)
Sheet No. 6 - Outlet Details (A)
Sheet No. 7 - Outlet Details (B)
Sheet No. 8 - F6 Barrel End Section Details (30' - 0") (A)
Sheet No. 9 - F6 Barrel End Section Details (30' - 0") (B)
Sheet No. 10 - F6 Barrel Interior Section Details (48' - 0") (A)
Sheet No. 11 - F6 Barrel Interior Section Details (48' - 0") (B)
Sheet No. 12 - Details of Standard Plate No's 460.02 and 460.10
Sheet No. 13 - Details of Standard Plate No. 620.16

TABLE OF WORKING POINTS

W. P.	STATION	OFFSET
"A"	237 + 43.56	65.76' Lt.
"B"	236 + 50.27	65.13' Lt.
"C"	237 + 12.33	42.37' Lt.
"D"	236 + 45.05	42.69' Lt.
"E"	236 + 40.82	42.85' Rt.
"F"	235 + 73.67	42.37' Rt.
"G"	236 + 21.22	64.26' Rt.
"H"	235 + 55.99	65.39' Rt.

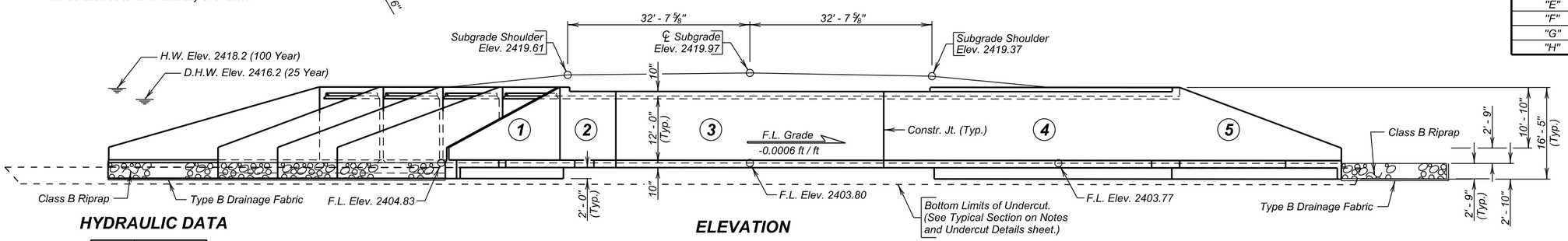

ELEVATION

HYDRAULIC DATA

Q_d	1680 cfs
A_d	525 sq. ft.
V_d	3.2 fps
Q_F	1680 cfs
Q_{100}	3000 cfs
Q_{OT}	$>Q_{100}$ cfs
V_{max}	5.7 fps

Q_d = Design discharge for the proposed culvert based on 25 year frequency. El. 2416.2

Q_{OT} = Overtopping discharge and frequency > Q_{100} yr. recurrence interval. El. 2421.22. Location Sta. 235 + 50.00

Q_F = Designated peak discharge for the basin approaching proposed project based on 25 year frequency.

Q_{100} = Computed discharge for the basin approaching proposed project based on 100 year frequency. El. 2418.2

V_{max} = Maximum computed outlet velocity for the proposed culvert based on a 100 year frequency.

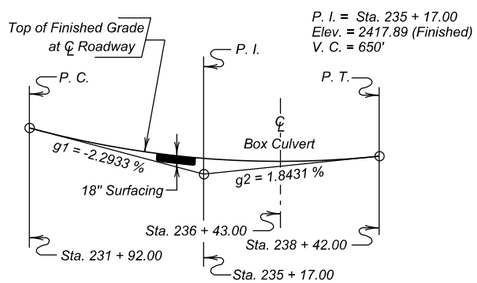

VERTICAL CURVE DATA

ESTIMATED QUANTITIES

ITEM	UNIT	QUANTITY
Class A45 Concrete, Box Culvert	Cu. Yd.	673.8
Reinforcing Steel	Lb.	92412
Structure Excavation, Box Culvert	Cu. Yd.	240
Box Culvert Undercut	Cu. Yd.	1178
Type B Drainage Fabric	Sq. Yd.	611
✳ Class B Riprap	Ton	524.3

✳ For estimating purposes only, a factor of 1.4 tons/cu. yd. was used to convert Cu. Yds. to Tons.

PLANS BY :
OFFICE OF BRIDGE DESIGN, SOUTH DAKOTA DEPARTMENT OF TRANSPORTATION

GENERAL DRAWING AND QUANTITIES

FOR

4 - 12' X 12' BOX CULVERT

OVER FLINT ROCK CREEK — 40° LHF SKEW
STA. 236 + 43.00 — SEC. 14-T13N-R16E
STR. NO. 53-410-597 — NH 0073(63)182
PCN 02S7 — HL-93

PERKINS COUNTY
S. D. DEPT. OF TRANSPORTATION
SEPTEMBER 2013

-X028-

DESIGNED BY	CK. DES. BY	DRAFTED BY	
DM	BAF	MG	Kevin N. Boeden BRIDGE ENGINEER
PERK02S7	02S7GA01		

STATE OF	PROJECT	SHEET NO.	TOTAL SHEETS
S.D.	NH 0073(63)182	E4	E45

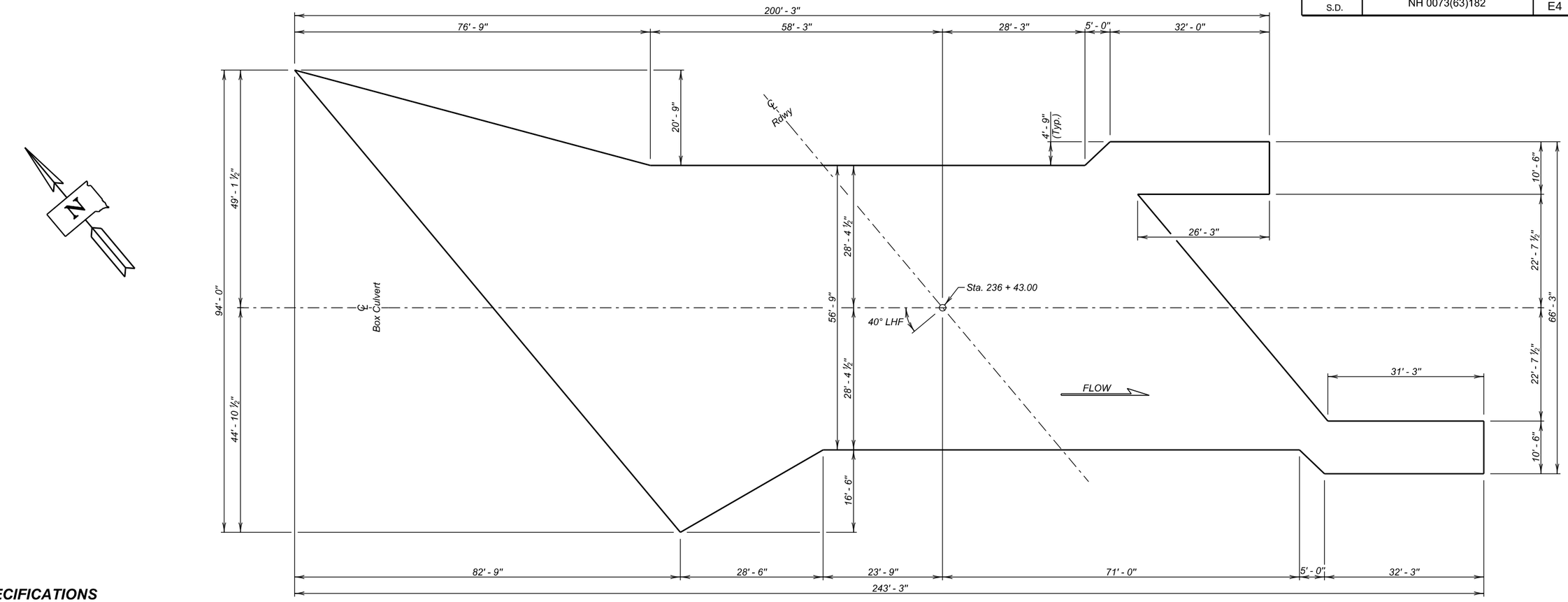

UNDERCUT LAYOUT
(Bottom Dimensions)

SPECIFICATIONS

1. Design Specifications: AASHTO LRFD Bridge Design Specifications, 2012 Edition with 2013 interims.
2. Construction Specifications: South Dakota Standard Specifications for Roads and Bridges, 2004 Edition and required Provisions, Supplemental Specifications and Special Provisions as included in the Proposal.

GENERAL NOTES

1. Design Live Load: HL-93 and construction load consisting of one 7' - 6" gage axle with gross weight = 95,850 lbs. The construction load shall not be applied until a minimum of 4 ft. of fill has been placed over the Box Culvert. Other construction loads in excess of legal load must be submitted thru proper channels to the Office of Bridge Design for analysis.
2. The design of the barrel section is based on a minimum fill height of 2 ft. and includes all subsequent fill heights up to and including the maximum fill height of 6 ft. (F6).
3. Design Material Strengths: Concrete fc = 4500 p.s.i.
   Reinforcing Steel fy = 60000 p.s.i.
4. All concrete shall be Class A45 conforming to Section 460.
5. All reinforcing steel shall conform to ASTM A615 Grade 60.
6. All exposed edges shall be chamfered ¾ inch.
7. Use 1 inch clear cover on all reinforcing steel EXCEPT as shown.
8. The Contractor shall imprint on the structure the date of construction as specified and detailed on Standard Plate No. 460.02.
9. Care shall be taken to establish Working Points (W.P.) as shown on the wings.
10. Circled numbers in PLAN and ELEVATION views on the General Drawing are section I.D. Numbers (see SDDOT Materials Manual).
11. Compaction of earth embankment and box culvert backfill material shall be governed by the Specified Density method.
12. The subsurface soils at Sta. 236 + 43.00 consist of brown to gray-sand to 4 ft. below existing flow line.

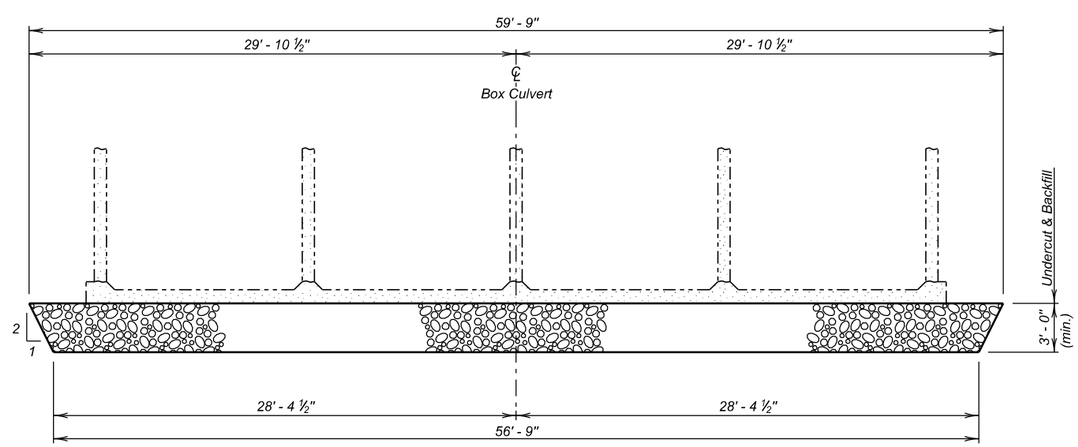

TYPICAL SECTION
(For Limits of Undercut)

ESTIMATED QUANTITIES

ITEM	UNIT	QUANTITY
⌀ Box Culvert Undercut	Cu. Yd.	1178

⌀ For payment, quantity is based on plan shown undercut dimensions and will not be measured unless the Engineer orders a change.

NOTES AND UNDERCUT DETAILS
FOR
4 - 12' X 12' BOX CULVERT

OVER FLINT ROCK CREEK — 40° LHF SKEW
STA. 236 + 43.00 — SEC. 14-T13N-R16E
STR. NO. 53-410-597 — NH 0073(63)182
HL-93

PERKINS COUNTY
S. D. DEPT. OF TRANSPORTATION
SEPTEMBER 2013

DESIGNED BY	CK. DES. BY	DRAFTED BY	
DM	JMH	MG	Kevin N. Geeden
PERK02S7	02S7GA02		BRIDGE ENGINEER

STATE OF	PROJECT	SHEET NO.	TOTAL SHEETS
S.D.	NH 0073(63)182	E5	E45

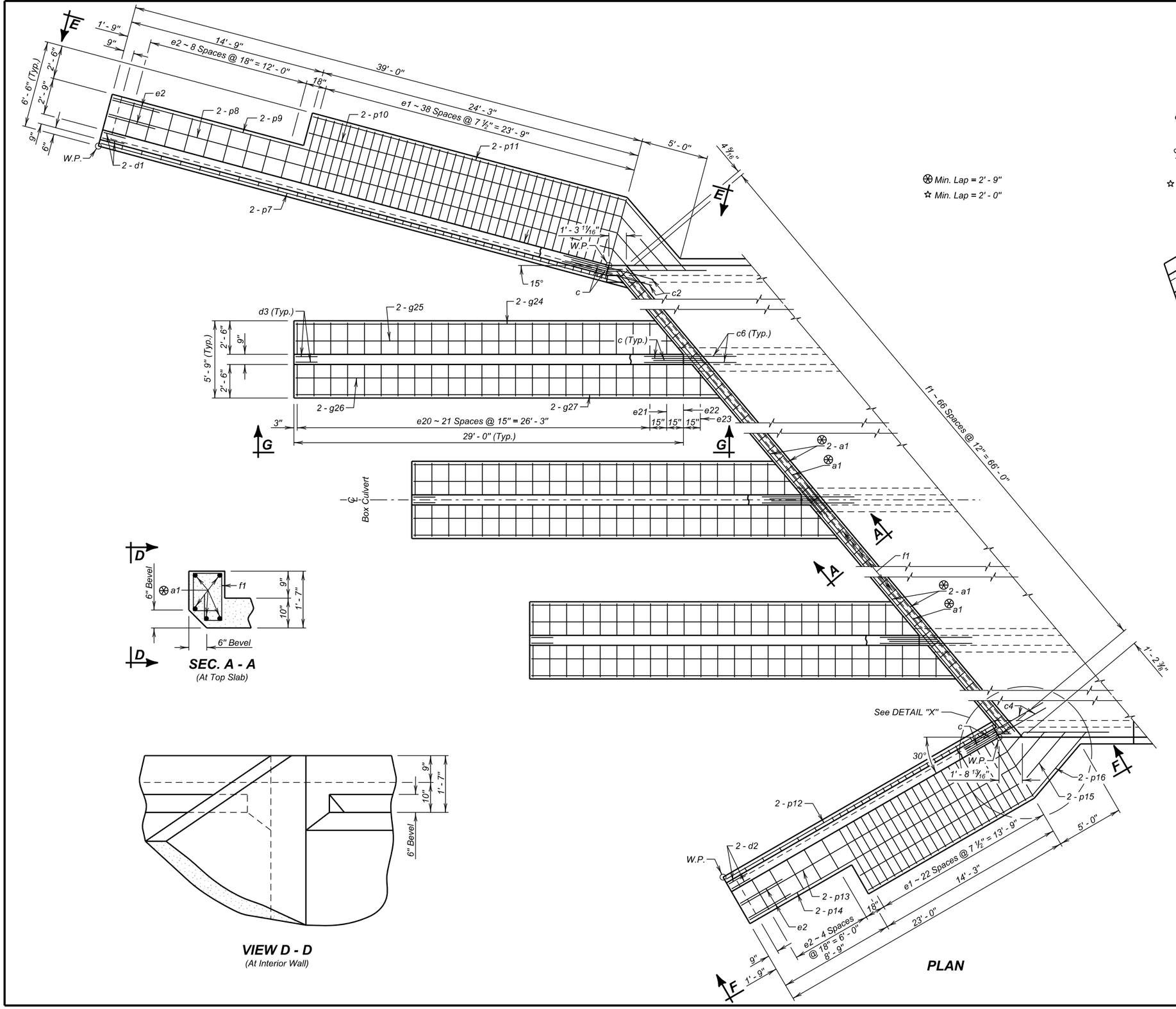

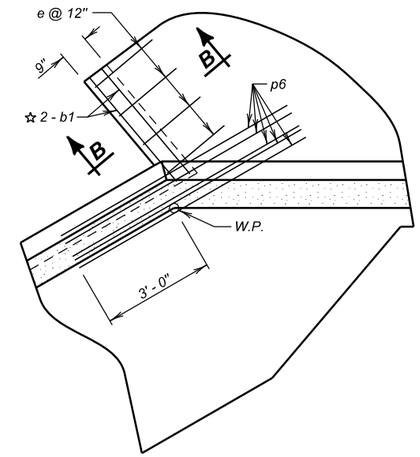

DETAIL "X"
(At Bottom Slab)

SEC. A - A
(At Top Slab)

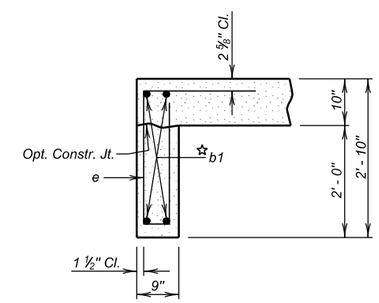

SEC. B - B

VIEW D - D
(At Interior Wall)

INLET DETAILS (A)

FOR

4 - 12' X 12' BOX CULVERT

OVER FLINT ROCK CREEK — 40° LHF SKEW
STA. 236 + 43.00 — SEC. 14-T13N-R16E
STR. NO. 53-410-597 — NH 0073(63)182
HL-93

PERKINS COUNTY
S. D. DEPT. OF TRANSPORTATION
SEPTEMBER 2013

DESIGNED BY	CK. DES. BY	DRAFTED BY	
DM	BAF	MG	Kevin N. Goeden
PERK02S7	02S7GA03		BRIDGE ENGINEER

STATE OF	PROJECT	SHEET NO.	TOTAL SHEETS
S.D.	NH 0073(63)182	E6	E45

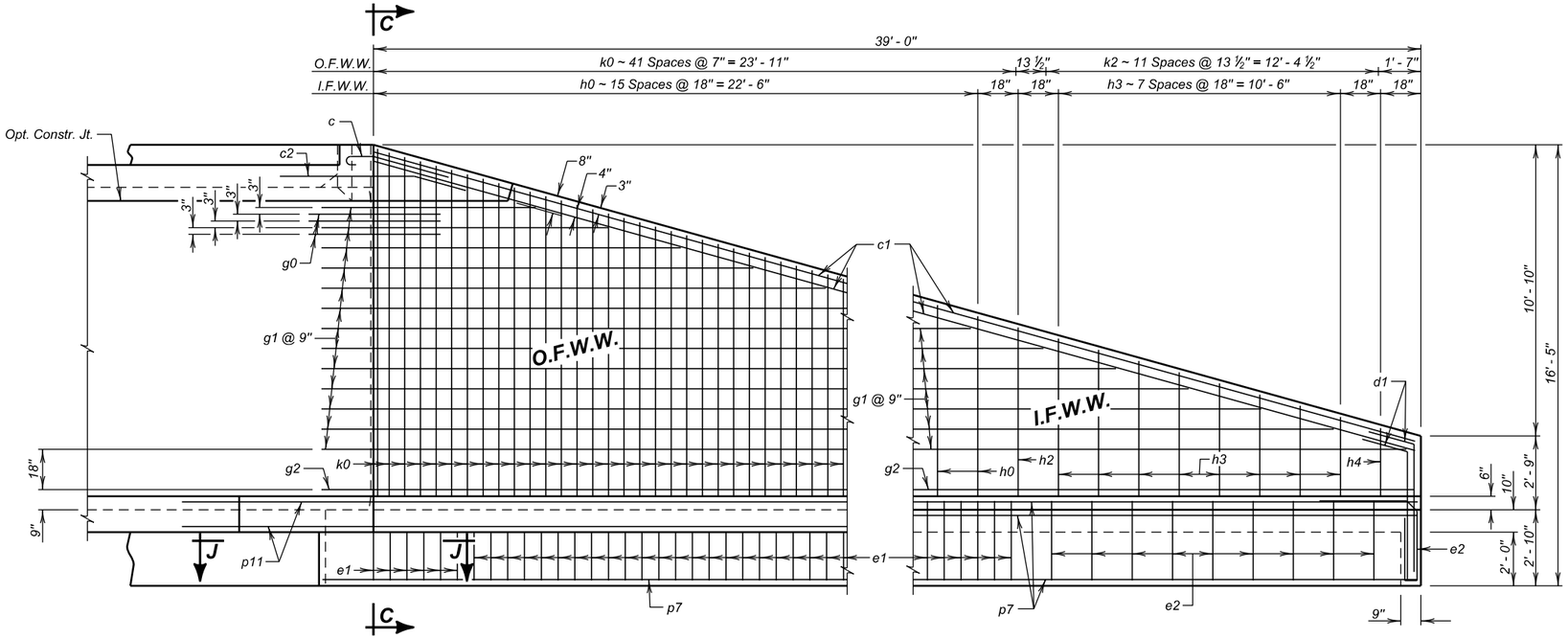

VIEW E - E

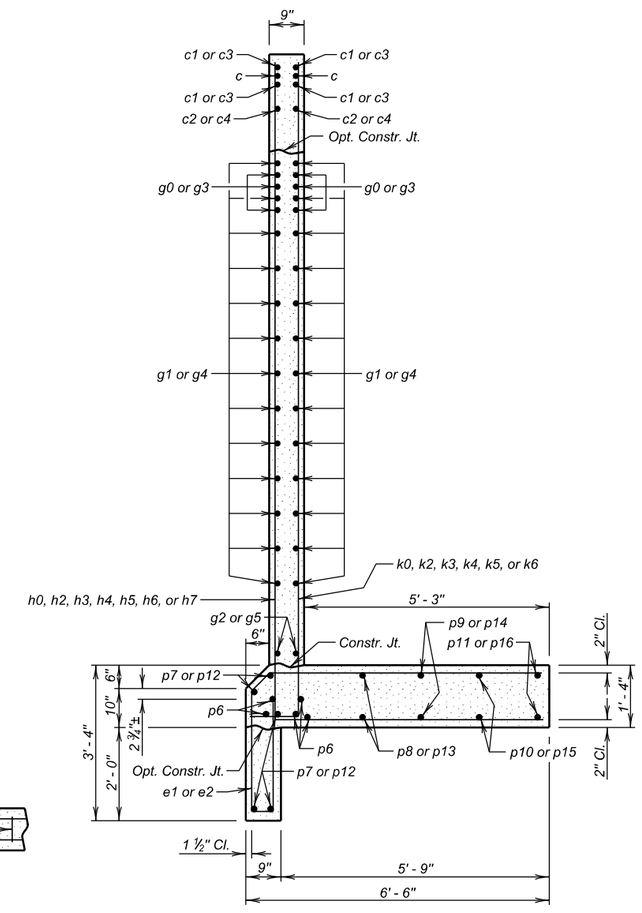

SEC. C - C

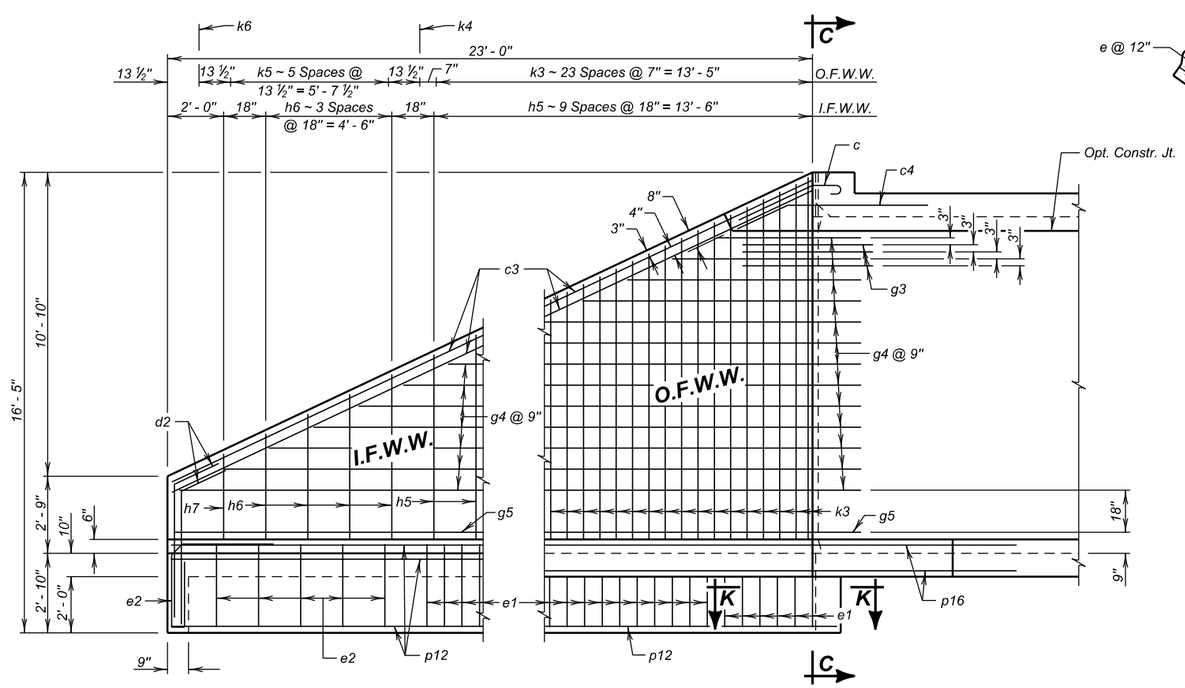

VIEW F - F

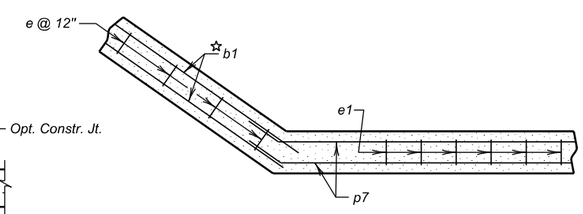

SEC. J - J

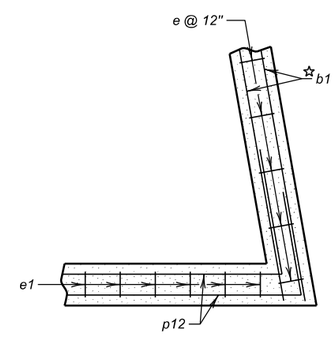

SEC. K - K

☆ Min. Lap = 2' - 0"

LEGEND FOR PLACING RE-STEEL

O. F. W. W. - Outside Face of Wing Wall
I. F. W. W. - Inside Face of Wing Wall

INLET DETAILS (B)

FOR

4 - 12' X 12' BOX CULVERT

OVER FLINT ROCK CREEK — 40° LHF SKEW
STA. 236 + 43.00 — SEC. 14-T13N-R16E
STR. NO. 53-410-597 — NH 0073(63)182
HL-93

PERKINS COUNTY
S. D. DEPT. OF TRANSPORTATION
SEPTEMBER 2013

DESIGNED BY	CK. DES. BY	DRAFTED BY	
DM	BAF	MG	Kevin N. Goeden
PERK02S7	02S7GA04		BRIDGE ENGINEER

STATE OF	PROJECT	SHEET NO.	TOTAL SHEETS
S.D.	NH 0073(63)182	E7	E45

REINFORCING SCHEDULE

	Mk.	No.	Size	Length	Type
⊛	a1	10	6	34' - 9"	Str.
⊛ ☆	b1	8	6	33' - 6"	Str.
✳	c	10	5	4' - 6"	1A
	c1	4	5	40' - 3"	Str.
	c2	2	5	7' - 0"	19B
	c3	4	5	25' - 3"	Str.
	c4	2	5	7' - 0"	19B
	c5	12	5	30' - 9"	Str.
	c6	6	5	7' - 0"	19B
	d1	4	5	6' - 6"	19B
	d2	4	5	6' - 6"	19B
	d3	6	5	6' - 9"	19B
	e	65	4	7' - 0"	S12
	e1	62	4	11' - 9"	S12A
	e2	18	4	9' - 3"	S12A
	e20	66	4	5' - 6"	Str.
	e21	3	4	4' - 6"	Str.
	e22	3	4	3' - 0"	Str.
	e23	3	4	1' - 6"	Str.
	f1	67	4	5' - 0"	S6A
	g0	6	5	5' - 0"	19B
⌀	g1	13	4	48' - 6"	19B
	g2	2	4	40' - 9"	19B
	g3	6	5	5' - 0"	19B
⌀	g4	13	4	30' - 0"	19B
	g5	2	4	24' - 9"	19B
	g20	18	5	5' - 0"	Str.
⌀	g21	39	4	37' - 0"	Str.
	g22	12	4	30' - 9"	Str.
	g23	12	4	29' - 9"	Str.
	g24	6	4	27' - 9"	Str.
	g25	6	4	28' - 9"	Str.
	g26	6	4	31' - 0"	Str.
	g27	6	4	32' - 0"	Str.
⌀	h0	8	4	33' - 6"	17A
	h2	1	4	13' - 3"	17A
⌀	h3	4	4	17' - 6"	17A
	h4	1	4	7' - 0"	17A
⌀	h5	5	4	33' - 3"	17A
⌀	h6	2	4	18' - 6"	17A
	h7	1	4	7' - 6"	17A
⌀	k0	21	4	23' - 9"	17A
⌀	k2	6	4	13' - 0"	17A
⌀	k3	12	4	24' - 0"	17A
	k4	1	4	8' - 6"	17A
⌀	k5	3	4	13' - 6"	17A
	k6	1	4	4' - 9"	17A
⌀	k20	87	4	27' - 9"	17A
	p6	10	6	7' - 0"	Str.
✳	p7	5	4	41' - 6"	Str.
✳	p8	2	4	42' - 0"	Str.
✳	p9	2	4	44' - 0"	Str.
✳	p10	2	4	31' - 0"	Str.
✳	p11	2	4	32' - 6"	Str.
✳	p12	5	4	25' - 6"	Str.
✳	p13	2	4	26' - 6"	Str.
✳	p14	2	4	27' - 9"	Str.
✳	p15	2	4	20' - 6"	Str.
✳	p16	2	4	22' - 0"	Str.
	z20	12	4	6' - 6"	20

Bending Details

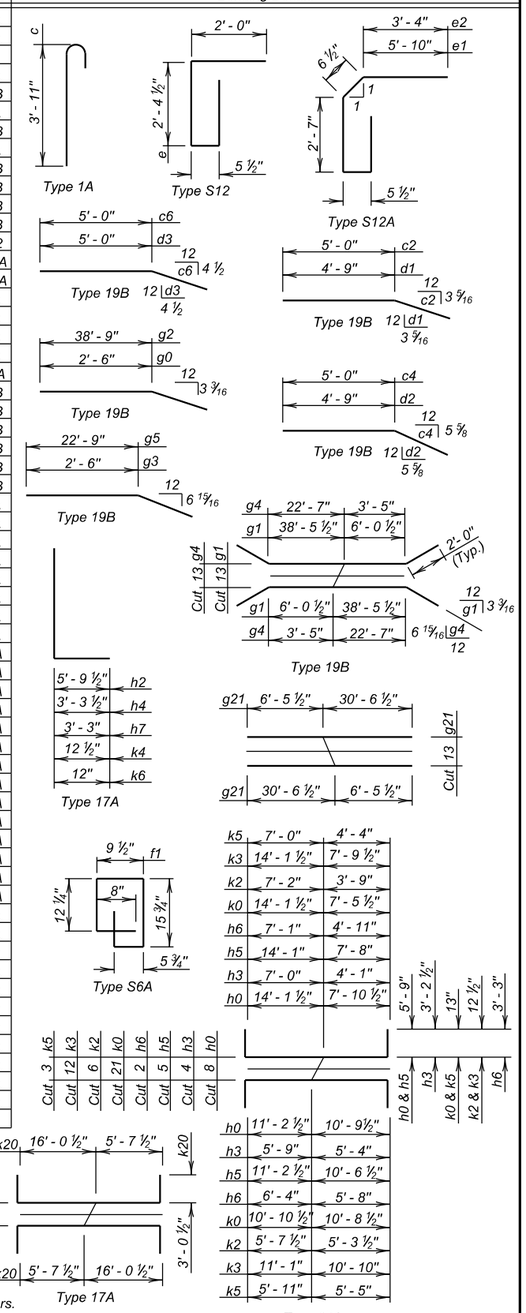

NOTES:
All dimensions are out to out of bars.
⌀ See cutting diagram.
✳ Bend in field as necessary to fit.

ESTIMATED QUANTITIES

ITEM	Class A45 Concrete, Box Culvert	Reinforcing Steel	Structure Excavation, Box Culvert
UNIT	Cu. Yd.	Lb.	Cu. Yd.
Inlet	90.3	9355	44.3

⊛ Min. Lap = 2' - 9"
☆ Min. Lap = 2' - 0"

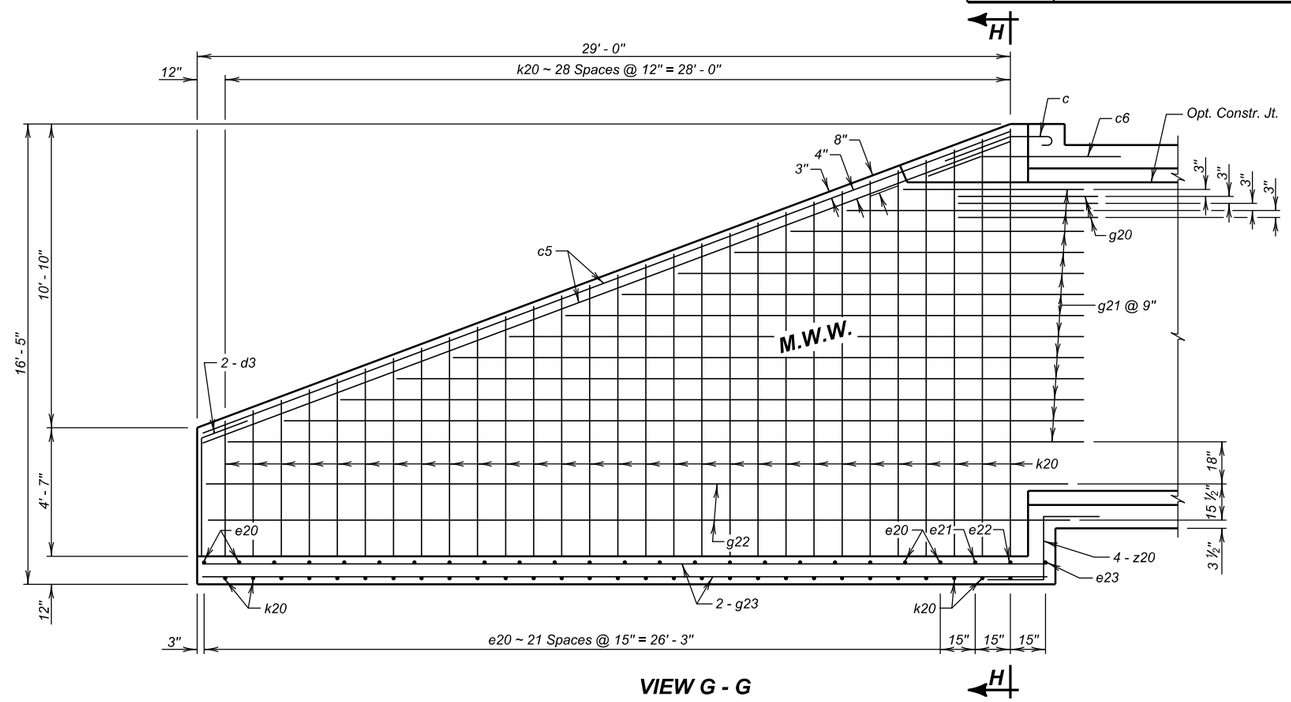

VIEW G - G

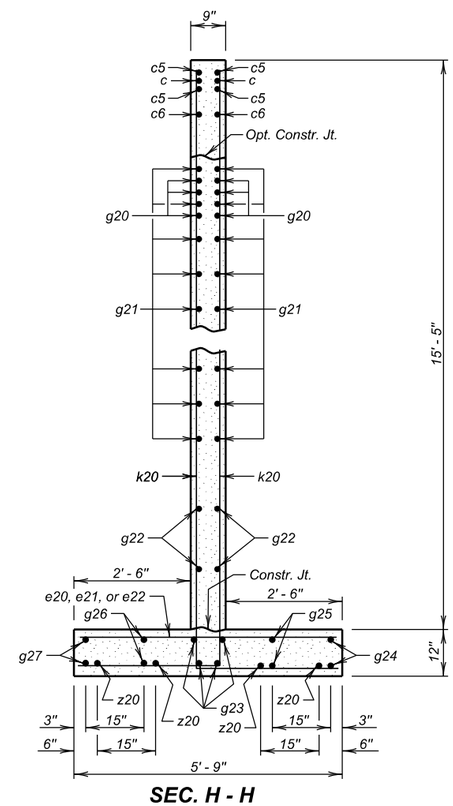

SEC. H - H

LEGEND FOR PLACING RE-STEEL

M. W. W. - Middle Wing Wall

INLET DETAILS (C)

FOR

4 - 12' X 12' BOX CULVERT

OVER FLINT ROCK CREEK — 40° LHF SKEW
STA. 236 + 43.00 — SEC. 14-T13N-R16E
STR. NO. 53-410-597 — NH 0073(63)182
HL-93

PERKINS COUNTY
S. D. DEPT. OF TRANSPORTATION
SEPTEMBER 2013

DESIGNED BY	CK. DES. BY	DRAFTED BY	
DM	BAF	MG	Kevin N. Goeden
PERK02S7	02S7GA05		BRIDGE ENGINEER

STATE OF	PROJECT	SHEET NO.	TOTAL SHEETS
S.D.	NH 0073(63)182	E8	E45

⊛ Min. Lap = 2' - 9"
☆ Min. Lap = 2' - 0"

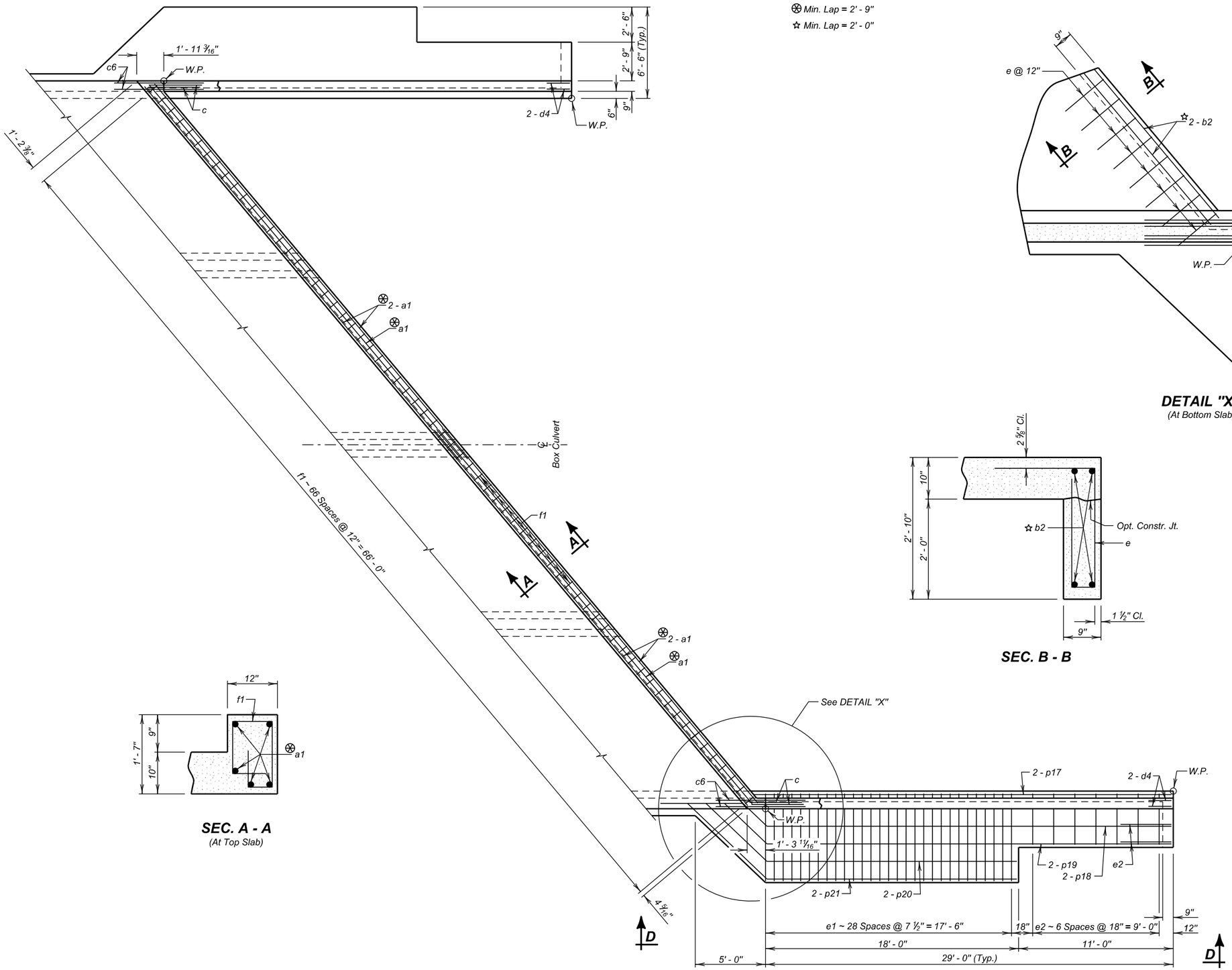

PLAN

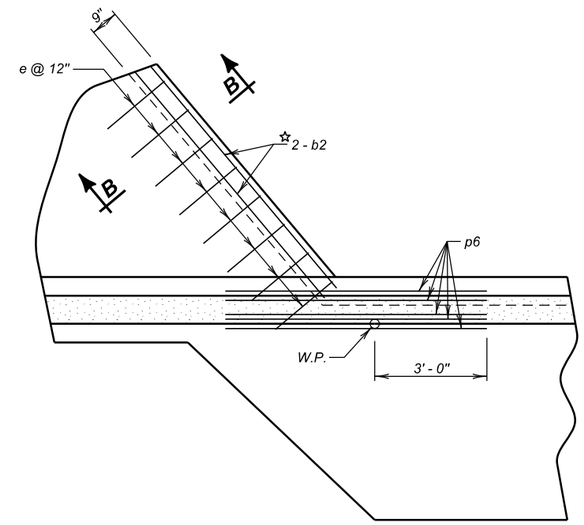

DETAIL "X"
(At Bottom Slab)

SEC. B - B

SEC. A - A
(At Top Slab)

OUTLET DETAILS (A)

FOR

4 - 12' X 12' BOX CULVERT

OVER FLINT ROCK CREEK — 40° LHF SKEW
STA. 236 + 43.00 — SEC. 14-T13N-R16E
STR. NO. 53-410-597 — NH 0073(63)182
HL-93

PERKINS COUNTY
S. D. DEPT. OF TRANSPORTATION
SEPTEMBER 2013

6 OF 13

DESIGNED BY	CK. DES. BY	DRAFTED BY	
DM	BAF	MG	Kevin N. Coeden
PERK02S7	02S7GA06		BRIDGE ENGINEER

STATE OF	PROJECT	SHEET NO.	TOTAL SHEETS
S.D.	NH 0073(63)182	E9	E45

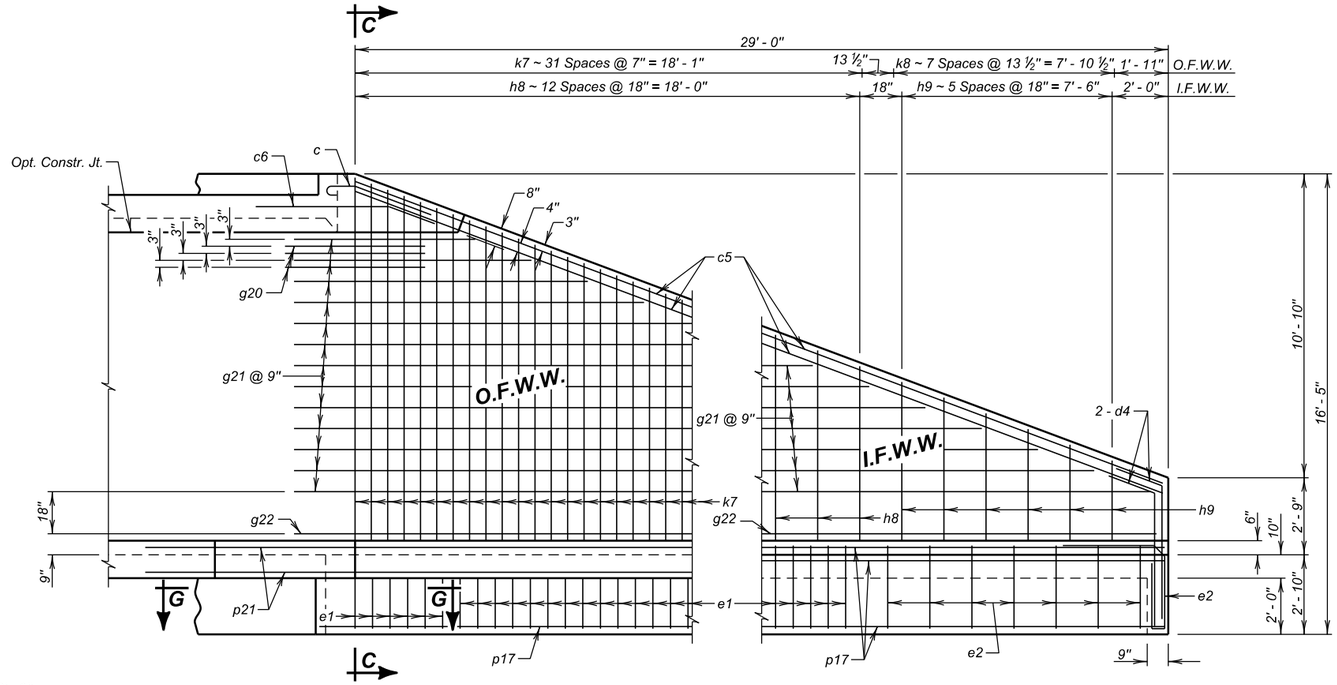

VIEW D - D

⊛ Min. Lap = 2' - 9"
☆ Min. Lap = 2' - 0"

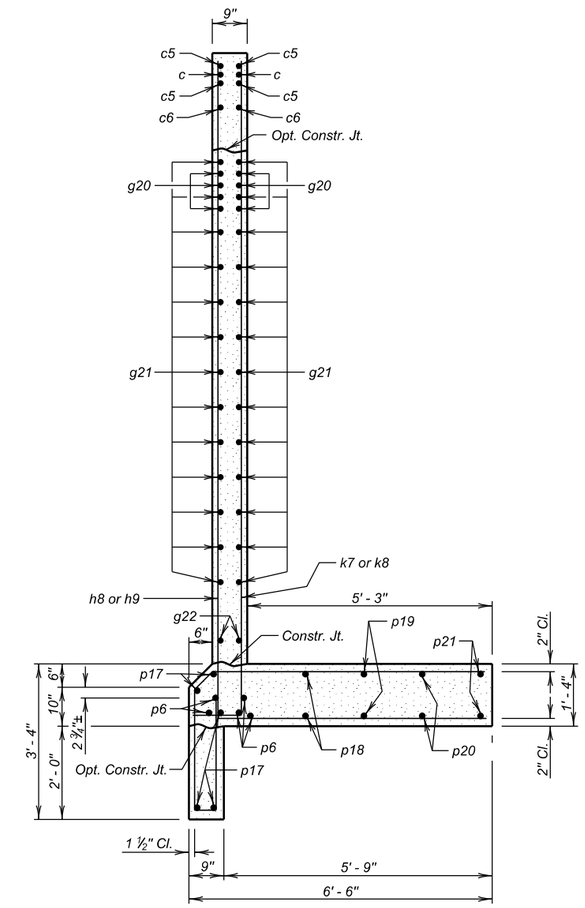

SEC. C - C

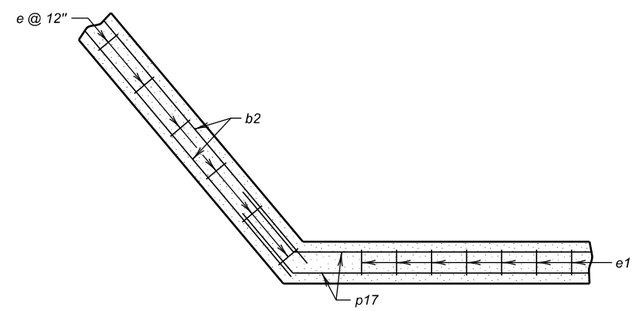

SEC. G - G

REINFORCING SCHEDULE

	Mk.	No.	Size	Length	Type
⊛	a1	10	6	34' - 9"	Str.
☆	b2	8	6	34' - 0"	Str.
✳	c	10	5	4' - 6"	1A
	c5	8	5	30' - 9"	Str.
	c6	4	5	7' - 0"	19B
	d4	8	5	6' - 6"	19B
	e	66	4	7' - 0"	S12
	e1	58	4	11' - 9"	S12A
	e2	18	4	9' - 3"	S12A
	f1	67	4	5' - 0"	S6A
	g20	12	5	5' - 0"	Str.
⌀	g21	26	4	37' - 0"	Str.
	g22	4	4	30' - 9"	Str.
⌀	h8	13	4	33' - 0"	17A
⌀	h9	6	4	17' - 3"	17A
⌀	k7	32	4	23' - 6"	17A
⌀	k8	8	4	13' - 0"	17A
	p6	10	6	7' - 0"	Str.
✳	p17	10	4	31' - 6"	Str.
✳	p18	4	4	32' - 9"	Str.
✳	p19	4	4	34' - 6"	Str.
✳	p20	4	4	25' - 9"	Str.
✳	p21	4	4	27' - 6"	Str.

Bending Details

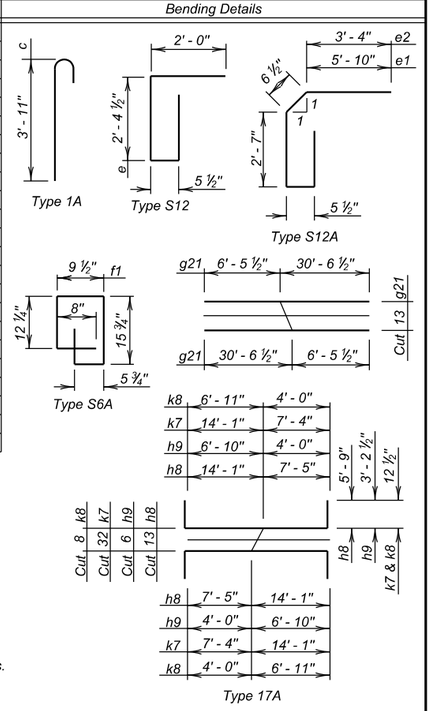

NOTES:
All dimensions are out to out of bars.
⌀ See cutting diagram.
✳ Bend in field as necessary to fit.

ESTIMATED QUANTITIES

ITEM	Class A45 Concrete, Box Culvert	Reinforcing Steel	Structure Excavation, Box Culvert
UNIT	Cu. Yd.	Lb.	Cu. Yd.
Outlet	45.1	4769	20.1

LEGEND FOR PLACING RE-STEEL

O. F. W. W. - Outside Face of Wing Wall
I. F. W. W. - Inside Face of Wing Wall

OUTLET DETAILS (B)

FOR

4 - 12' X 12' BOX CULVERT

OVER FLINT ROCK CREEK — 40° LHF SKEW
STA. 236 + 43.00 — SEC. 14-T13N-R16E
STR. NO. 53-410-597 — NH 0073(63)182
HL-93

PERKINS COUNTY
S. D. DEPT. OF TRANSPORTATION
SEPTEMBER 2013

DESIGNED BY	CK. DES. BY	DRAFTED BY	
DM	BAF	MG	Kevin N. Goeden
PERK02S7	02S7GA07		BRIDGE ENGINEER

STATE OF	PROJECT	SHEET NO.	TOTAL SHEETS
S.D.	NH 0073(63)182	E10	E45

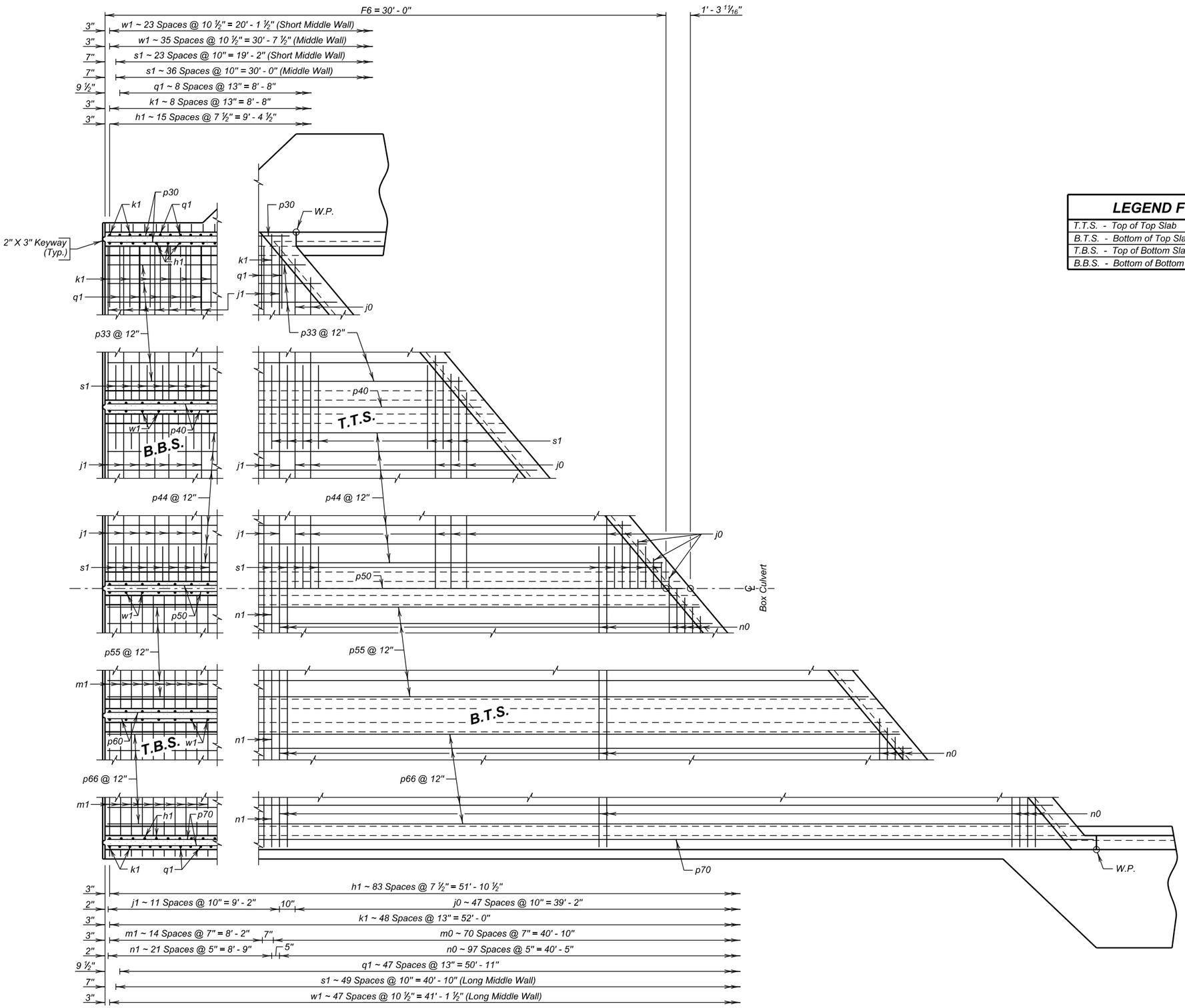

PLAN

(Outlet shown, Inlet similar opposite hand)

LEGEND FOR PLACING RE-STEEL
T.T.S. - Top of Top Slab
B.T.S. - Bottom of Top Slab
T.B.S. - Top of Bottom Slab
B.B.S. - Bottom of Bottom Slab

F6 BARREL END SECTION DETAILS (30' - 0") (A)

FOR

4 - 12' X 12' BOX CULVERT

OVER FLINT ROCK CREEK — 40° LHF SKEW

STA. 236 + 43.00 — SEC. 14-T13N-R16E

STR. NO. 53-410-597 — NH 0073(63)182

HL-93

PERKINS COUNTY

S. D. DEPT. OF TRANSPORTATION

SEPTEMBER 2013

DESIGNED BY	CK. DES. BY	DRAFTED BY	
DM	BAF	MG	Kevin N. Cooden BRIDGE ENGINEER
PERK02S7	02S7GA08		

STATE OF	PROJECT	SHEET NO.	TOTAL SHEETS
S.D.	NH 0073(63)182	E11	E45

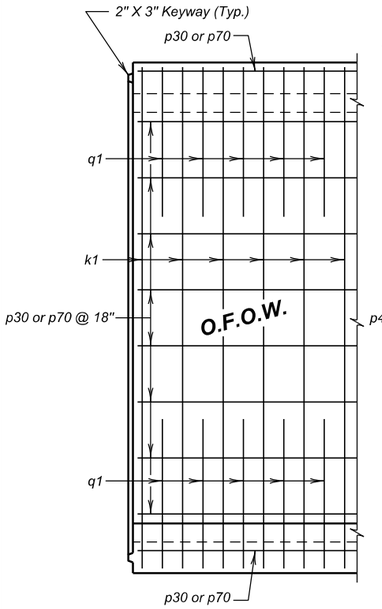

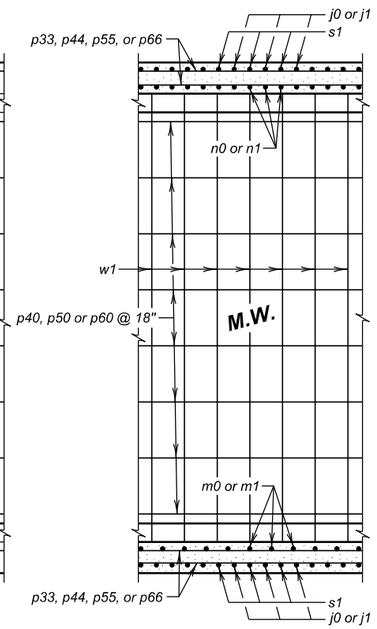

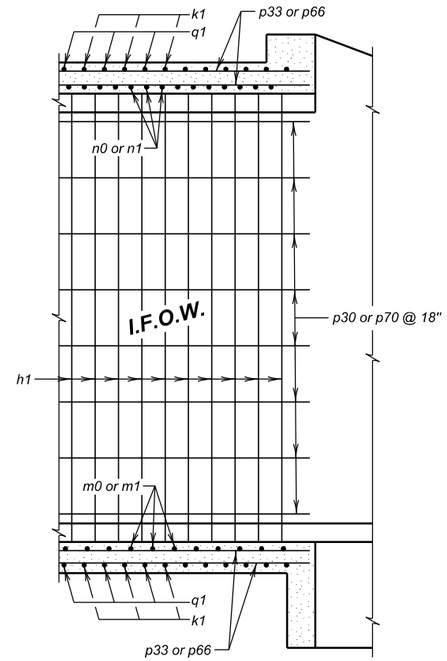

ELEVATION

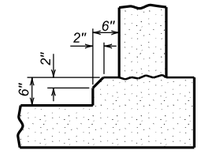

OPTIONAL FILLET DETAIL

(At Bottom Slab)

NOTE: Contractor may form the optional full fillet, with 2" Chamfer, as detailed. The cost of the additional concrete shall be borne by the Contractor.

OPTIONAL POUR - BOTTOM SLAB

The Bottom Slab may be poured continuously, at the option of the Contractor, with the use of a Preformed Metal keyway conforming to the keyway dimensions and location as shown on the plans. The keyway length shall be full width of the bottom slab. Care shall be taken to maintain proper alignment of the keyway during the pour sequence. All additional costs of this option shall be borne by the Contractor.

△ Place z1 bars thru construction joint between barrel sections as shown on Standard Plate No. 460.10. Quantity of z1 bars is for two construction joints.

LEGEND FOR PLACING RE-STEEL

O.F.O.W. - Outside Face of Outside Wall
I.F.O.W. - Inside Face of Outside Wall
M.W. - Middle Wall

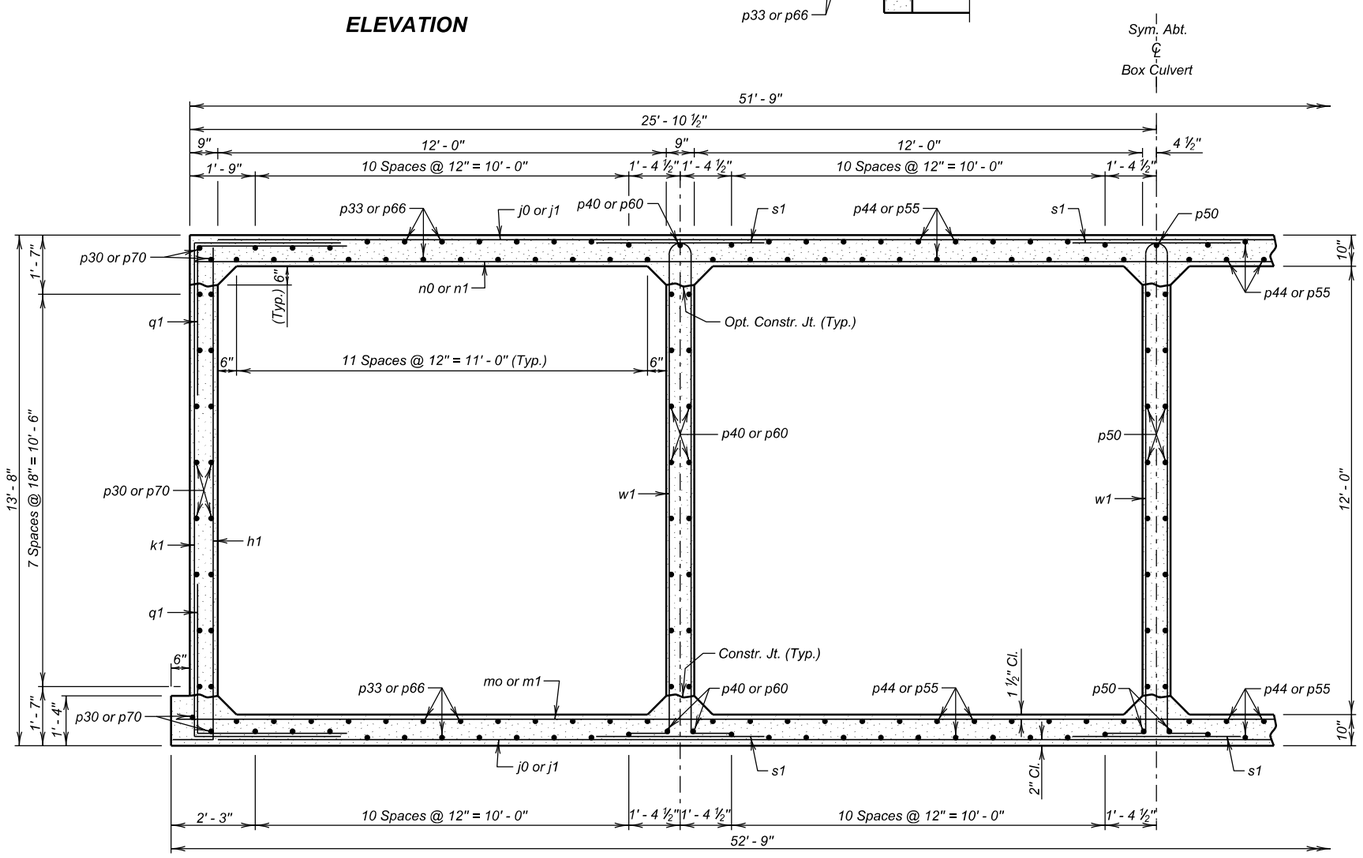

F6 BARREL HALF SECTION

(6' - 0" Maximum Fill)

REINFORCING SCHEDULE

(For Two F6 Barrel End Sections @ 30' - 0")

	Mk.	No.	Size	Length	Type
	h1	200	4	14' - 3"	17A
⌀	j0	48	5	52' - 6"	Str.
	j1	24	5	50' - 3"	Str.
	k1	116	5	21' - 3"	17
⌀	m0	71	5	55' - 3"	Str.
	m1	30	5	52' - 6"	Str.
⌀	n0	98	5	54' - 0"	Str.
	n1	44	5	51' - 6"	Str.
	p30	40	4	9' - 9"	Str.
⌀	p33	46	4	29' - 0"	Str.
	p40	38	4	20' - 6"	Str.
⌀	p44	46	4	50' - 3"	Str.
	p50	38	4	31' - 3"	Str.
⌀	p55	46	4	71' - 9"	Str.
	p60	38	4	42' - 0"	Str.
⌀	p66	46	4	93' - 0"	Str.
	p70	40	4	52' - 9"	Str.
	q1	228	5	8' - 0"	17A
	s1	441	5	4' - 6"	Str.
	w1	216	4	29' - 3"	S11A
△	z1	272	5	3' - 6"	Str.

Bending Details

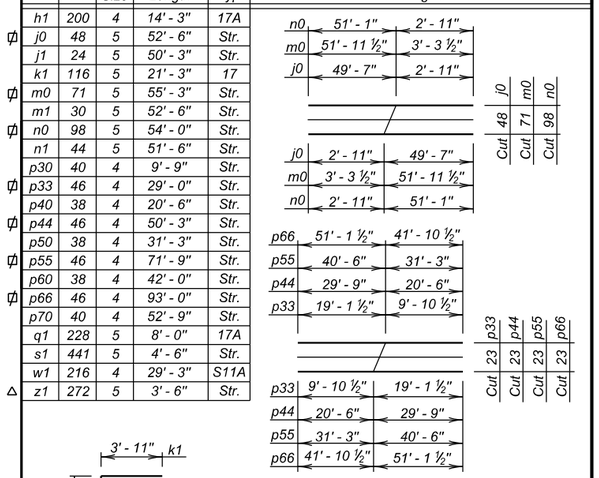

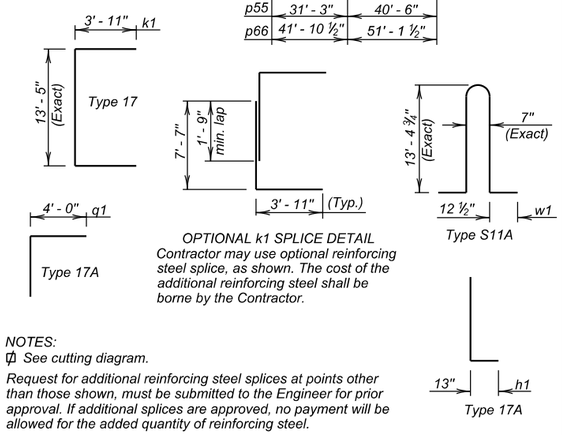

OPTIONAL k1 SPLICE DETAIL
Contractor may use optional reinforcing steel splice, as shown. The cost of the additional reinforcing steel shall be borne by the Contractor.

NOTES:
⌀ See cutting diagram.
Request for additional reinforcing steel splices at points other than those shown, must be submitted to the Engineer for prior approval. If additional splices are approved, no payment will be allowed for the added quantity of reinforcing steel.
All dimensions are out to out of bars.

ESTIMATED QUANTITIES

ITEM	Class A45 Concrete, Box Culvert	Reinforcing Steel	Structure Excavation, Box Culvert
UNIT	Cu.Yd.	Lb.	Cu.Yd.
2 - F6 Barrel End Sections @ 30' - 0"	299.1	42711	97.7

F6 BARREL END SECTION DETAILS (30' - 0") (B)

FOR

4 - 12' X 12' BOX CULVERT

OVER FLINT ROCK CREEK
STA. 236 + 43.00
STR. NO. 53-410-597

40° LHF SKEW
SEC. 14-T13N-R16E
NH 0073(63)182
HL-93

PERKINS COUNTY
S. D. DEPT. OF TRANSPORTATION
SEPTEMBER 2013

DESIGNED BY	CK. DES. BY	DRAFTED BY	
DM	BAF	MG	Kevin N. Goeden BRIDGE ENGINEER
PERK02S7	02S7GA09		

STATE OF	PROJECT	SHEET NO.	TOTAL SHEETS
S.D.	NH 0073(63)182	E12	E45

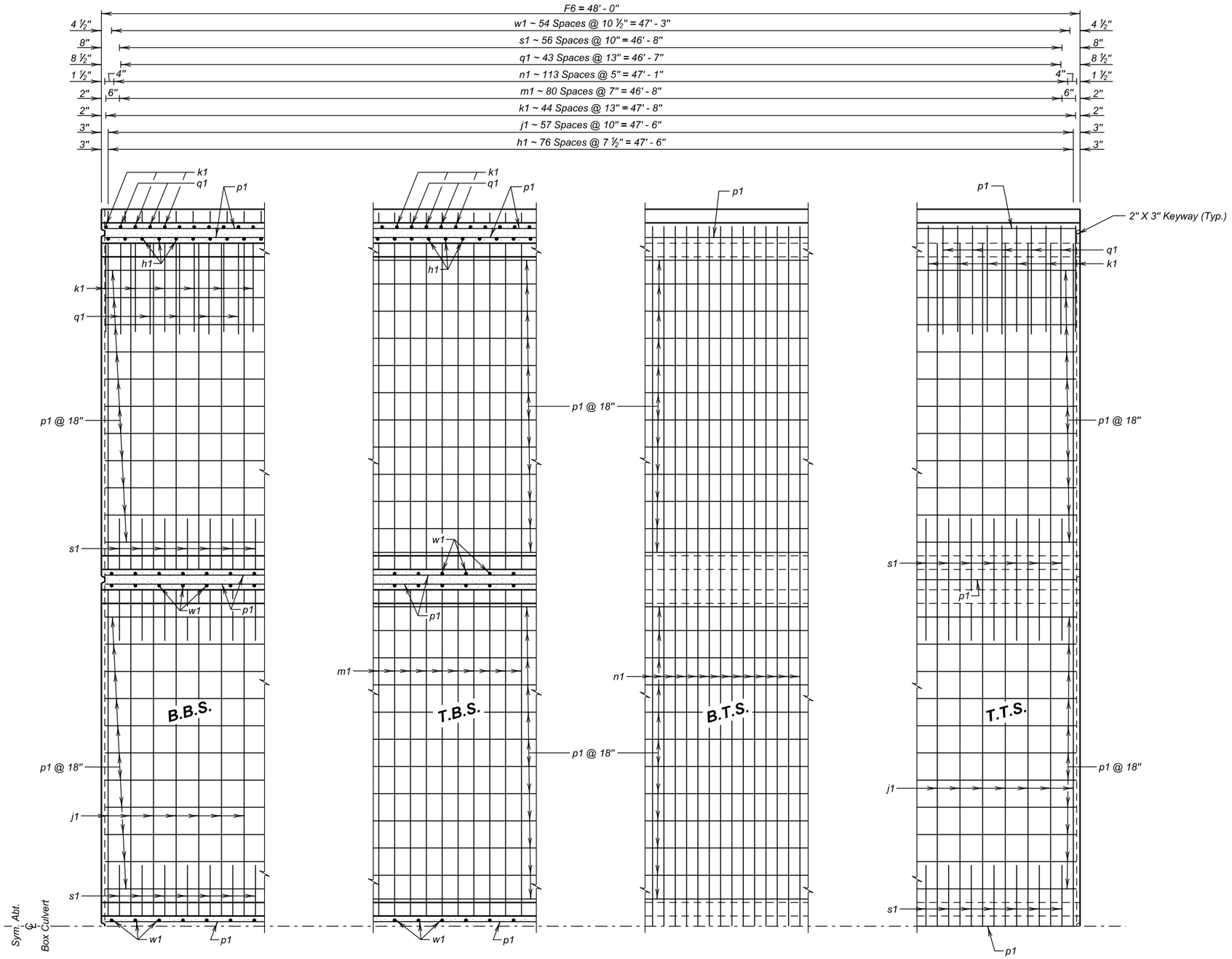

HALF PLAN

LEGEND FOR PLACING RE-STEEL

T.T.S.	- Top of Top Slab
B.T.S.	- Bottom of Top Slab
T.B.S.	- Top of Bottom Slab
B.B.S.	- Bottom of Bottom Slab

F6 BARREL INTERIOR SECTION DETAILS (48' - 0") (A)

FOR

4 - 12' X 12' BOX CULVERT

OVER FLINT ROCK CREEK — 40° LHF SKEW
STA. 236 + 43.00 — SEC. 14-T13N-R16E
STR. NO. 53-410-597 — NH 0073(63)182
HL-93

PERKINS COUNTY
S. D. DEPT. OF TRANSPORTATION
SEPTEMBER 2013

DESIGNED BY	CK. DES. BY	DRAFTED BY	
DM	BAF	MG	Kevin N. Goeden
PERK02S7	02S7GA10		BRIDGE ENGINEER

STATE OF	PROJECT	SHEET NO.	TOTAL SHEETS
S.D.	NH 0073(63)182	E13	E45

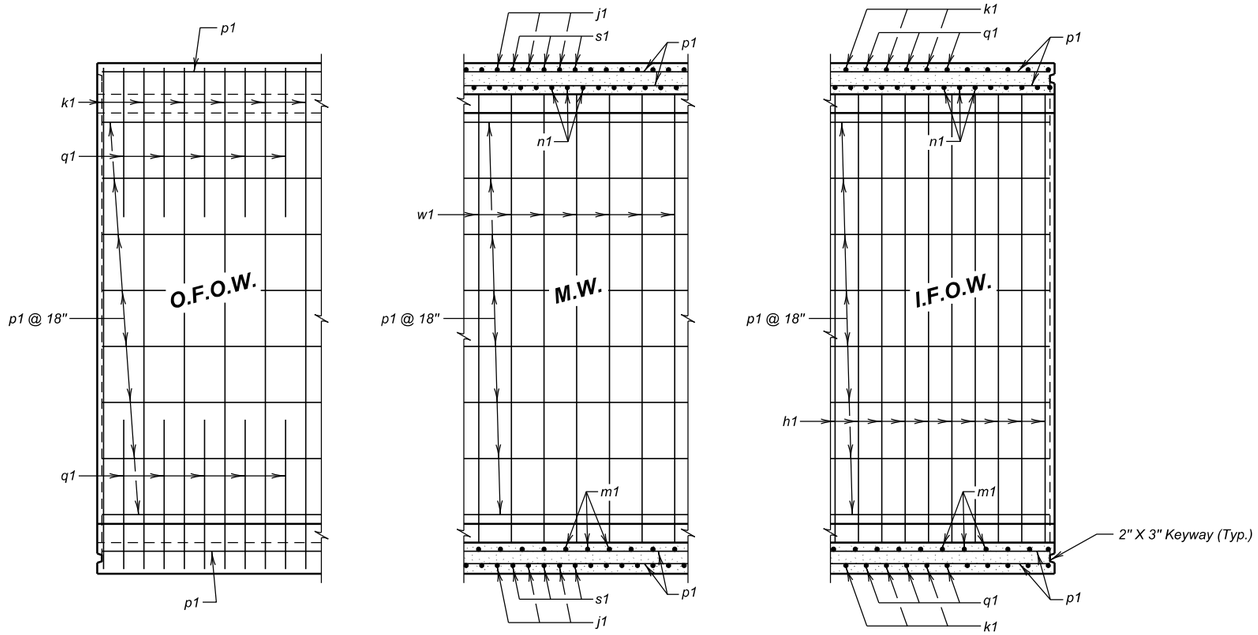

ELEVATION

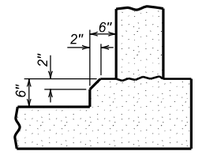

OPTIONAL FILLET DETAIL

(At Bottom Slab)

NOTE: Contractor may form the optional full fillet, with 2" Chamfer, as detailed. The cost of the additional concrete shall be borne by the Contractor.

OPTIONAL POUR - BOTTOM SLAB

The Bottom Slab may be poured continuously, at the option of the Contractor, with the use of a Preformed Metal keyway conforming to the keyway dimensions and location as shown on the plans. The keyway length shall be full width of the bottom slab. Care shall be taken to maintain proper alignment of the keyway during the pour sequence. All additional costs of this option shall be borne by the Contractor.

REINFORCING SCHEDULE

(For One F6 Barrel Interior Section @ 48' - 0")

Mk.	No.	Size	Length	Type
h1	154	4	14' - 3"	17A
j1	116	5	50' - 3"	Str.
k1	90	5	21' - 3"	17
m1	83	5	52' - 6"	Str.
n1	116	5	51' - 6"	Str.
p1	281	4	47' - 9"	Str.
q1	176	5	8' - 0"	17A
s1	342	5	4' - 6"	Str.
w1	165	4	29' - 3"	S11A

Bending Details

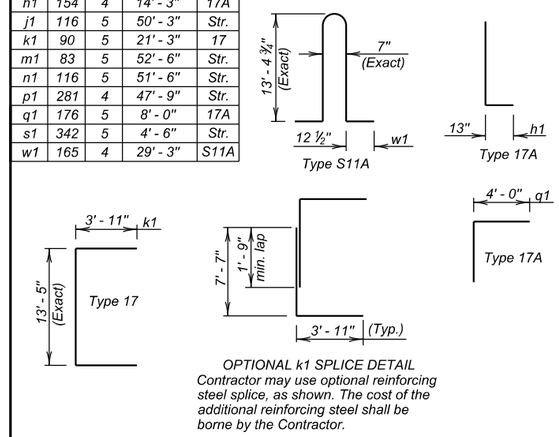

OPTIONAL k1 SPLICE DETAIL
Contractor may use optional reinforcing steel splice, as shown. The cost of the additional reinforcing steel shall be borne by the Contractor.

NOTES:

Request for additional reinforcing steel splices at points other than those shown, must be submitted to the Engineer for prior approval. If additional splices are approved, no payment will be allowed for the added quantity of reinforcing steel.

All dimensions are out to out of bars.

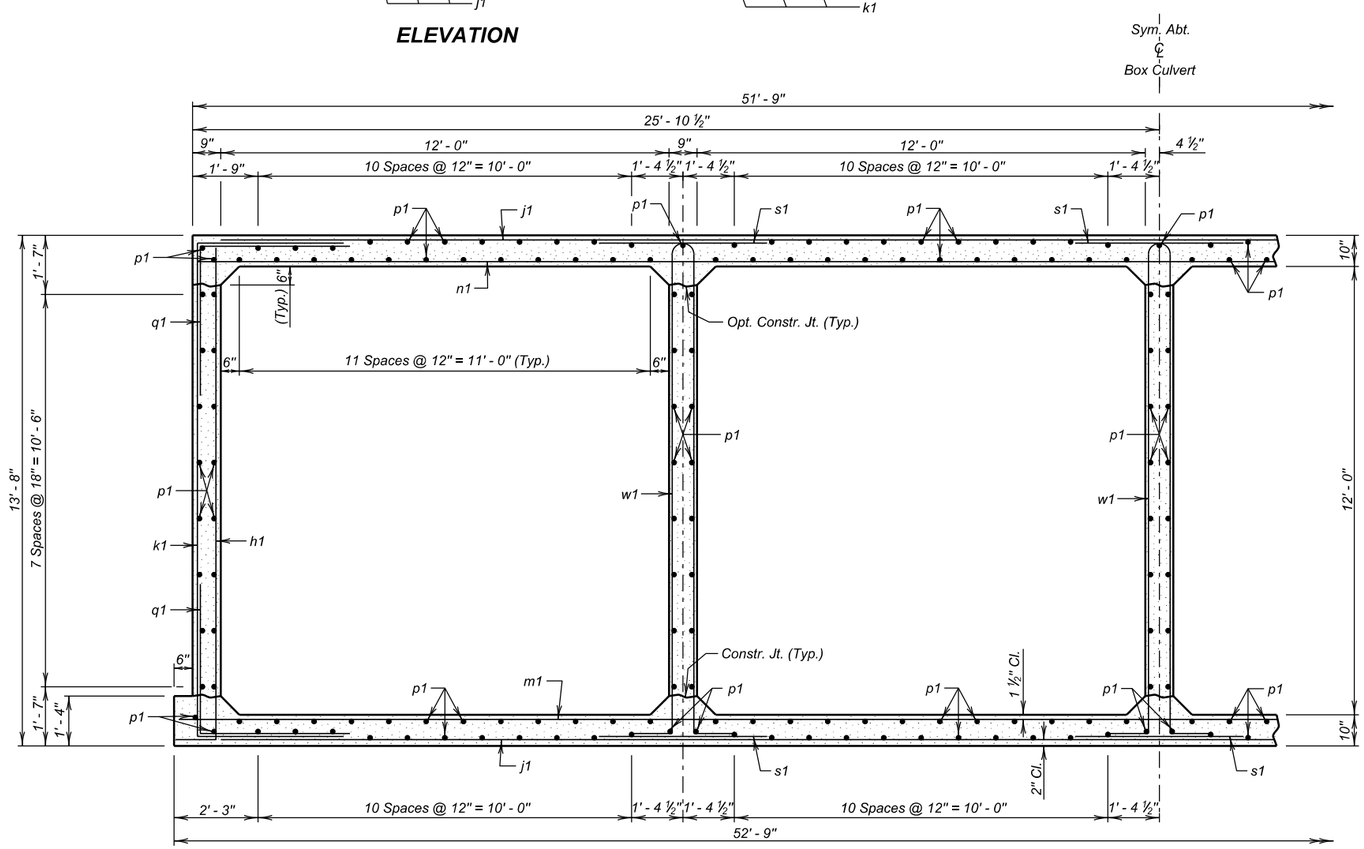

F6 BARREL HALF SECTION

(6' - 0" Maximum Fill)

ESTIMATED QUANTITIES

ITEM	Class A45 Concrete, Box Culvert	Reinforcing Steel	Structure Excavation, Box Culvert
UNIT	Cu.Yd.	Lb.	Cu.Yd.
1 - F6 Barrel Interior Section @ 48' - 0"	239.3	35577	78.1

LEGEND FOR PLACING RE-STEEL

O.F.O.W. - Outside Face of Outside Wall
I.F.O.W. - Inside Face of Outside Wall
M.W. - Middle Wall

F6 BARREL INTERIOR SECTION DETAILS (48' - 0") (B)

FOR

4 - 12' X 12' BOX CULVERT

OVER FLINT ROCK CREEK — 40° LHF SKEW
STA. 236 + 43.00 — SEC. 14-T13N-R16E
STR. NO. 53-410-597 — NH 0073(63)182
HL-93

PERKINS COUNTY
S. D. DEPT. OF TRANSPORTATION
SEPTEMBER 2013

DESIGNED BY	CK. DES. BY	DRAFTED BY	
DM	BAF	MG	Kevin N. Boeden
PERK02S7	02S7GA11		BRIDGE ENGINEER

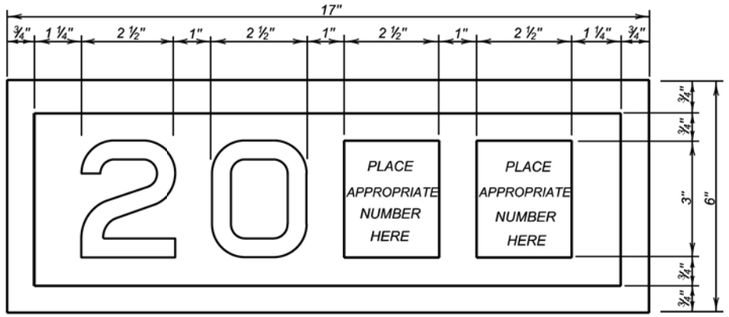

YEAR PLATE DETAILS

GENERAL NOTES:

1. Year plates of the general dimensions shown shall be constructed on all box culverts and bridges. The year plates shall be constructed in reverse and attached to the forms in such a manner that the finished imprint in the concrete does not exceed one-half (½) inch in depth.

2. Year plates shall be located on structure (s) as follows:

   a. On cast-in-place box culverts the year plates shall be four and one - half (4 ½) inches below the top of the upstream parapet wall and centered laterally on the upstream face. On precast box culverts the year plate shall be centered laterally on the upstream face of the top slab. Where an extended interior wall interferes with this location, the year plate shall be centered in an adjacent barrel.

   b. On bridges with six (6) inch curbs or "Jersey" shaped barriers with no endblocks, the year plate shall be centered vertically on the curb face approximately six (6) inches from the end of the bridge, or as designated by the Engineer. On bridges with "Jersey" shaped barrier endblocks, the year plate shall be centered on the upper sloped portion of the barrier approximately 5'- 6" from the end of the bridge, or as designated by the Engineer. There shall be one year plate at each end of the bridge on opposite sides.

   c. When the plans specify that both the original date of construction and the date of reconstruction are to be shown, one date shall be placed as listed above and the other located adjacent to it. Both year plates shall be shown at each end of the bridge on opposite sides.

3. There will be no separate measurement or payment made for year plates on box culverts and bridges. All costs for this work shall be incidental to other contract items.

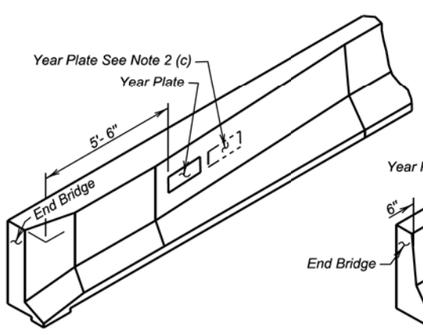

JERSEY BARRIER
(With Endblock)

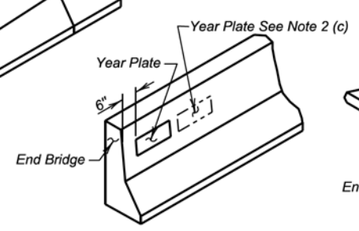

JERSEY BARRIER

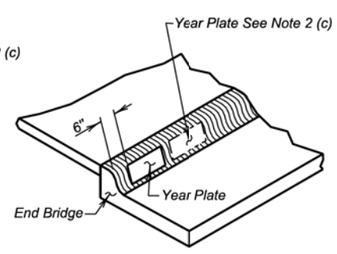

TYPE B CURB

June 26, 2012

Published Date: 4th Qtr. 2014	SDDOT	YEAR PLATE DETAILS	PLATE NUMBER 460.02
			Sheet 1 Of 1

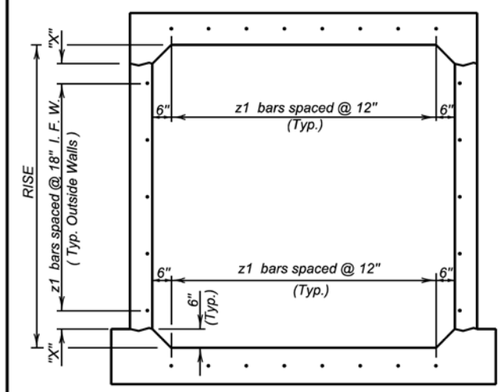

TYPICAL SINGLE BARREL VIEW A - A

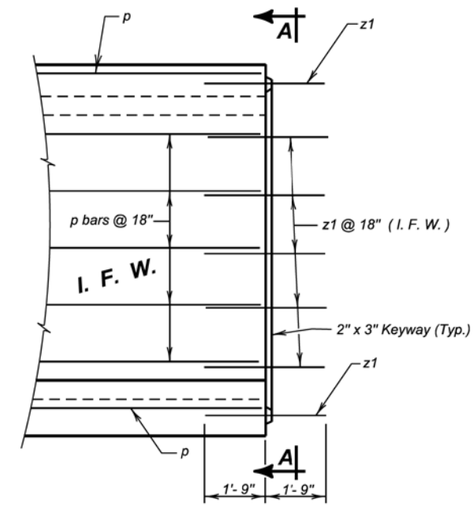

ELEVATION

LEGEND FOR PLACING RE-STEEL

I. F. W. - Inside Face Wall

RISE	"X"
3'- 0"	3"
4'- 0"	9"
5'- 0"	6"
6'- 0"	3"
7'- 0"	9"
8'- 0"	6"
9'- 0"	3"
10'- 0"	9"
11'- 0"	6"
12'- 0"	3"

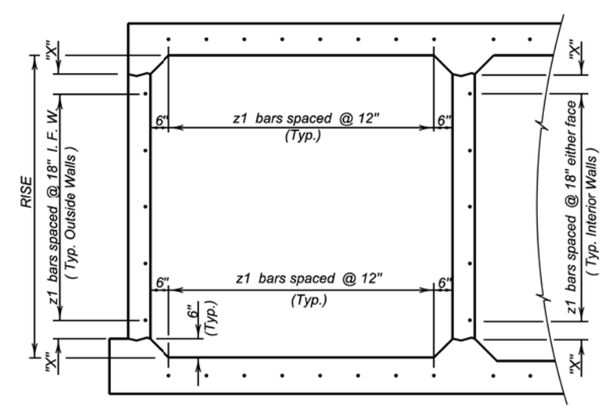

TYPICAL MULTIPLE BARREL VIEW A - A

GENERAL NOTES:

1. z1 bars shall be placed in the middle of the 2" X 3" keyway in the top and bottom slabs. z1 bars shall be lapped with the longitudinal p bars in the inside face of the wall for outside walls and in either face for interior walls. z1 bars are listed and included elsewhere in plans.

2. Drainage Fabric Protection shall be placed in accordance with Section 422, or Section 560, whichever is applicable.

June 26, 2012

Published Date: 4th Qtr. 2014	SDDOT	BOX CULVERT BARREL TIE REINFORCEMENT	PLATE NUMBER 460.10
			Sheet 1 of 1

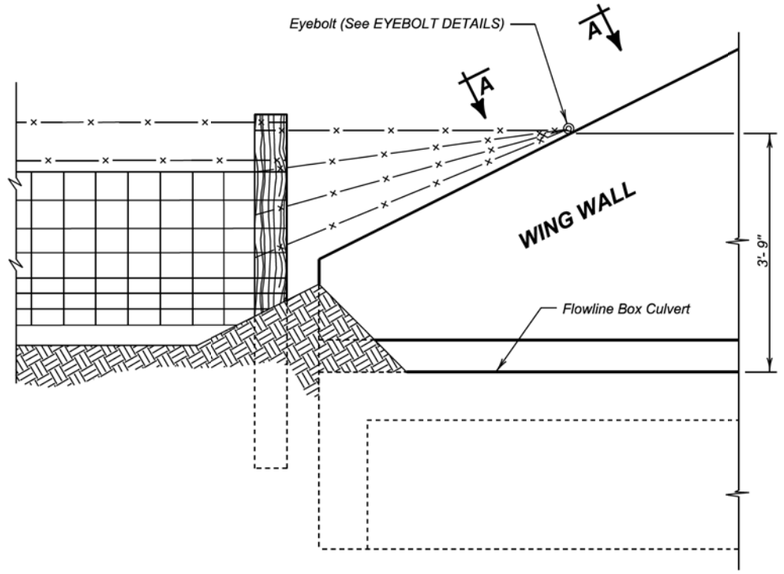

DETAIL FOR FENCE ANCHORS

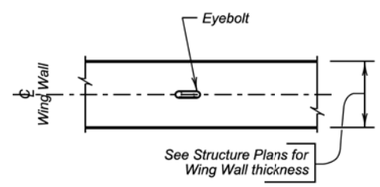

VIEW A - A

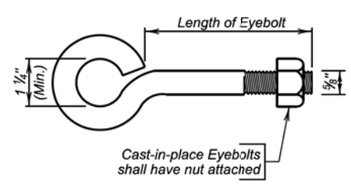

EYEBOLT DETAILS

GENERAL NOTES:

1. The fence and post details shown are for illustrative purpose only. The fence shall be as specified elsewhere in the plans.
2. Eyebolts shall be placed on all of the box culvert wing walls.
3. Eyebolts shall be ⅝ inch diameter and shall conform to ASTM A307.
4. Eyebolts, nuts, and concrete inserts shall be galvanized in accordance with AASHTO M232 (ASTM A153). Concrete inserts of corrosion resistant material need not be galvanized.
5. Cast-in-place eyebolts shall have a nut attached, be 4 ½ inches (Min.) in length and shall be embedded such that the eye of the bolt is flush with the concrete surface. (See Eyebolt Details) As an alternate, cast-in-place concrete inserts, capable of developing the full strength of the ⅝ inch diameter threaded eyebolt, may be used and shall be set in the concrete in accordance with the manufacturer's recommendations. The eyebolt shall be of sufficient length to develop its full strength. The eye of the eyebolt shall be flush with the concrete surface.
6. The cost for furnishing and installing eyebolts and/or concrete inserts shall be incidental to various contract items.

December 23, 2012

Published Date: 4th Qtr. 2014	SDDOT	FENCE ANCHORS FOR BOX CULVERT WING WALLS	PLATE NUMBER 620.16 Sheet 1 of 1

The elevations shown in these plans are based on the National Geodetic Survey (NGS) North American Vertical Datum of 1988 (NAVD88).

1 Revised December 18, 2014

STATE OF	PROJECT	SHEET NO.	TOTAL SHEETS
S.D.	NH 0073(63)182	E16	E45

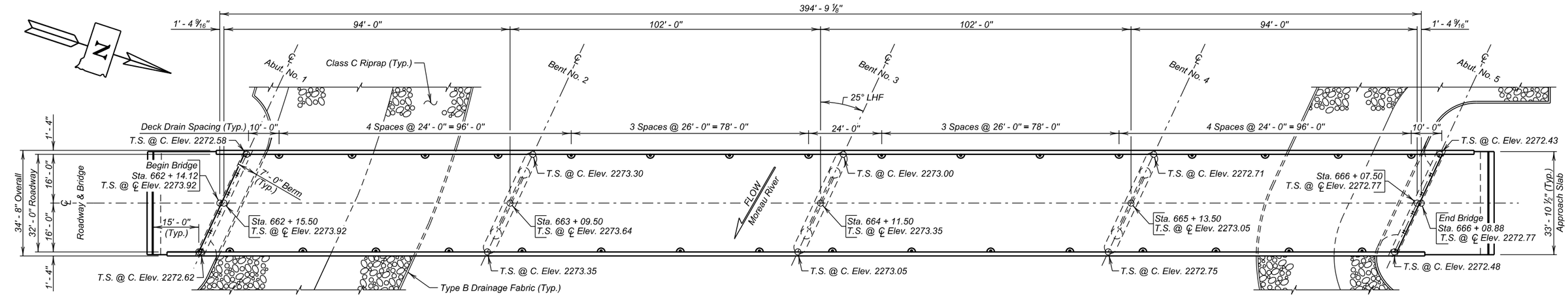

PLAN

NOTE:
T.S. @ ℄ Elev. = Top of Slab at Centerline Elevation
T.S. @ C. Elev. = Top of Slab at Curb Elevation

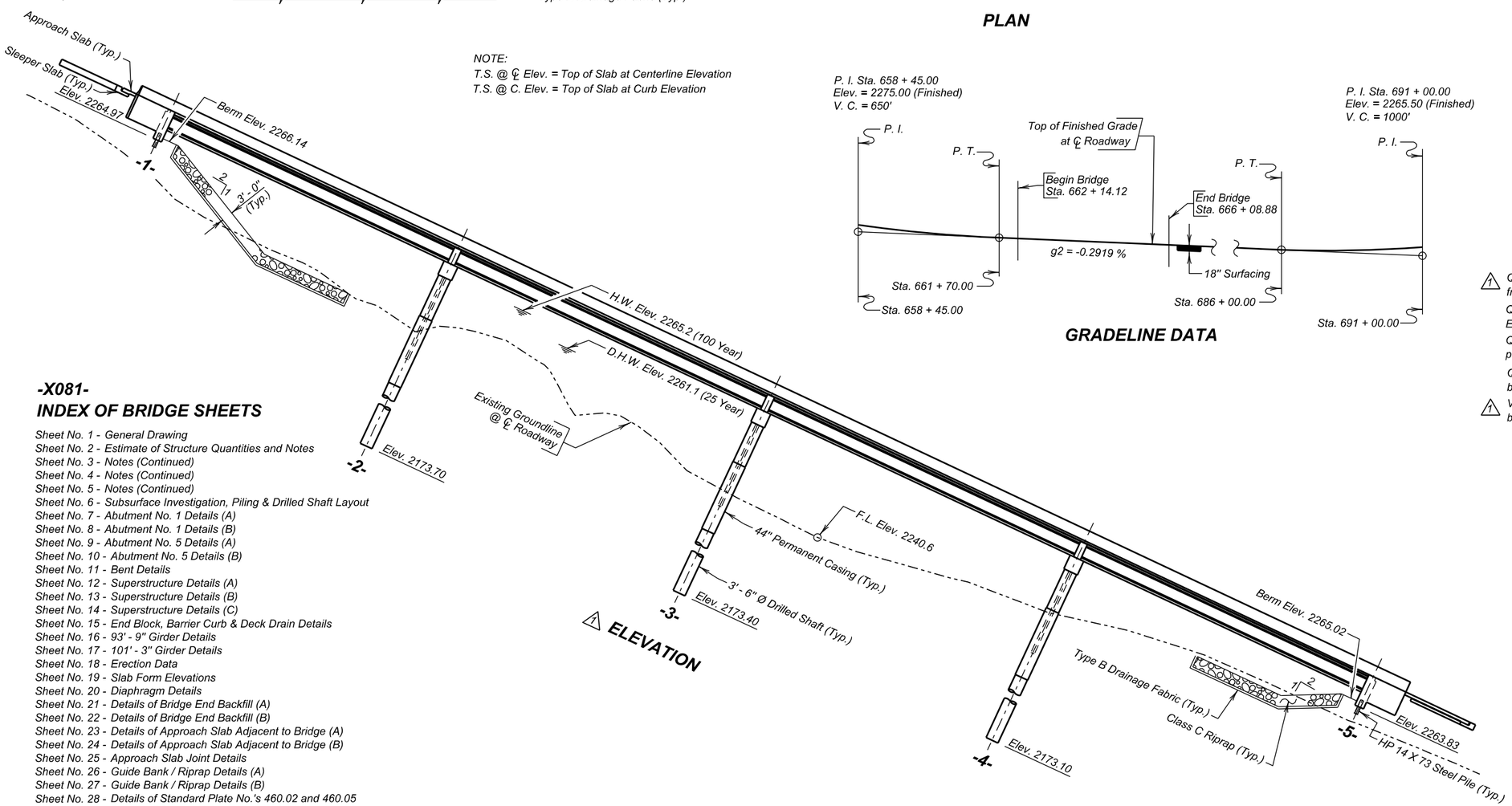

1 ELEVATION

GRADELINE DATA

HYDRAULIC DATA

	Q_d	19700 cfs
1	A_d	3717 sq. ft.
1	V_d	5.3 fps
	Q_F	19700 cfs
	Q_{100}	31700 cfs
	Q_{OT}	$>Q_{100}$ cfs
1	V_{max}	6.3 fps

1 Q_d = Design discharge for the proposed bridge based on 25 year frequency. El. 2261.1.

Q_{OT} = Overtopping discharge and frequency > Q_{100} yr. recurrence interval. El. 2267.5. Location Sta. 687 + 00.00

Q_F = Designated peak discharge for the basin approaching proposed project based on 25 year frequency.

Q_{100} = Computed discharge for the basin approaching proposed project based on 100 year frequency. El. 2265.2.

1 V_{max} = Maximum computed outlet velocity for the proposed bridge, based on 100 year frequency.

-X081-
INDEX OF BRIDGE SHEETS

Sheet No. 1 - General Drawing
Sheet No. 2 - Estimate of Structure Quantities and Notes
Sheet No. 3 - Notes (Continued)
Sheet No. 4 - Notes (Continued)
Sheet No. 5 - Notes (Continued)
Sheet No. 6 - Subsurface Investigation, Piling & Drilled Shaft Layout
Sheet No. 7 - Abutment No. 1 Details (A)
Sheet No. 8 - Abutment No. 1 Details (B)
Sheet No. 9 - Abutment No. 5 Details (A)
Sheet No. 10 - Abutment No. 5 Details (B)
Sheet No. 11 - Bent Details
Sheet No. 12 - Superstructure Details (A)
Sheet No. 13 - Superstructure Details (B)
Sheet No. 14 - Superstructure Details (C)
Sheet No. 15 - End Block, Barrier Curb & Deck Drain Details
Sheet No. 16 - 93' - 9" Girder Details
Sheet No. 17 - 101' - 3" Girder Details
Sheet No. 18 - Erection Data
Sheet No. 19 - Slab Form Elevations
Sheet No. 20 - Diaphragm Details
Sheet No. 21 - Details of Bridge End Backfill (A)
Sheet No. 22 - Details of Bridge End Backfill (B)
Sheet No. 23 - Details of Approach Slab Adjacent to Bridge (A)
Sheet No. 24 - Details of Approach Slab Adjacent to Bridge (B)
Sheet No. 25 - Approach Slab Joint Details
Sheet No. 26 - Guide Bank / Riprap Details (A)
Sheet No. 27 - Guide Bank / Riprap Details (B)
Sheet No. 28 - Details of Standard Plate No.'s 460.02 and 460.05
Sheet No. 29 - Details of Standard Plate No.'s 510.40 and 620.19
Sheet No. 30 - Details of Standard Plate No.'s 630.92 and 680.03

GENERAL DRAWING
FOR
394' - 9⅛" PRESTR. GIRDER BRIDGE

32' - 0" ROADWAY — 25° LHF SKEW
OVER MOREAU RIVER — SEC. 10-T14N-R16E
STA. 662 + 14.12 TO 666 + 08.88 — NH 0073(63)182
STR. NO. 53-392-521 — HL-93
PCN 02S7

PERKINS COUNTY
S. D. DEPT. OF TRANSPORTATION
NOVEMBER 2013

-X081-

DESIGNED BY	CK. DES. BY	DRAFTED BY	
JMH	MM	MG	Kevin N. Goeden
PERK02S7	02S7GB01		BRIDGE ENGINEER

PLANS BY :
OFFICE OF BRIDGE DESIGN, SOUTH DAKOTA DEPARTMENT OF TRANSPORTATION

ESTIMATE OF STRUCTURE QUANTITIES

DESCRIPTION	QUANTITY	UNIT	REMARKS
Concrete Penetrating Sealer	1400.0	SqYd	See Special Provision
Bridge End Embankment	1460	CuYd	See Special Provision
Incidental Work, Structure	Lump Sum	LS	
Structural Steel, Miscellaneous	Lump Sum	LS	
Membrane Sealant Expansion Joint	67.8	Ft	
Structure Excavation, Bridge	142	CuYd	
Granular Bridge End Backfill	78.5	CuYd	See Special Provision
Approach Slab Underdrain Excavation	4.7	CuYd	
Class A45 Concrete, Bridge Deck	512.5	CuYd	
Class A45 Concrete, Bridge	201.6	CuYd	
Concrete Approach Slab for Bridge	165.0	SqYd	
Concrete Approach Sleeper Slab for Bridge	33.9	SqYd	
Deck Drain, Girder Bridge	32	Each	
Class A45 Concrete, Drilled Shaft	164.8	CuYd	
Drilled Shaft Excavation	157.5	CuYd	
44" Permanent Casing	111	Ft	
Reinforcing Steel	105198	Lb	
Epoxy Coated Reinforcing Steel	117027	Lb	
No. 5 Rebar Splice	288	Each	
No. 7 Rebar Splice	86	Each	
No. 11 Rebar Splice	132	Each	
Preboring Pile	120	Ft	
HP 14x73 Steel Test Pile, Furnish and Drive	120	Ft	
HP 14x73 Steel Bearing Pile, Furnish and Drive	550	Ft	
54" Minnesota Shape Prestressed Concrete Beam	1560	Ft	
4" Underdrain Pipe	244	Ft	
Precast Concrete Headwall for Drain	4	Each	
Porous Backfill	25.2	Ton	
1 Class C Riprap	5743.0	Ton	
1 Type B Drainage Fabric	4632.0	SqYd	

SPECIFICATIONS FOR BRIDGE

1. Design Specifications: AASHTO LRFD Bridge Design Specifications, 2012 Edition with 2013 Interims.

2. Construction Specifications: South Dakota Standard Specifications for Roads and Bridges, 2004 Edition and required provisions, supplemental specifications and special provisions as included in the proposal.

BRIDGE DESIGN LOADING

1. AASHTO HL-93.

2. Dead Load includes 22 psf for future wearing surface on the roadway.

DESIGN MATERIAL STRENGTHS*

Concrete	f'c = 4,500 psi
Reinforcing Steel	fy = 60,000 psi
Piling (ASTM A572 Grade 50)	fy = 50,000 psi

*For prestressed beams, see notes regarding Prestressed Girders.

GENERAL CONSTRUCTION

1. All mild reinforcing steel shall conform to ASTM A615, Grade 60.

2. All exposed concrete corners and edges shall be chamfered 3/4" unless noted otherwise.

3. Use 2" clear cover on all reinforcing steel except as shown.

4. Contractor shall imprint on the structure the date of new construction as specified and detailed on Standard Plate No. 460.02.

5. Barrier Curbs and End blocks shall be built normal to the grade.

6. Request for construction joints or resteel splices at points other than those shown, must be submitted to the Engineer for prior approval. If additional splices are approved, no payment will be allowed for the added quantity of resteel.

7. The elevation of the bridge deck is 18" above subgrade elevation.

INCIDENTAL WORK, STRUCTURE

1. In place centerline Sta. 662+05.00 – 44' Rt. to centerline Sta. 665+83.00 – 42' Rt. is a 378.31' 7 span I-Beam Viaduct with a 24'-0" clear roadway width. The superstructure consists of 7 lines of 36WF194 I-Beams with a reinforced concrete slab. The concrete pigeon hole railing is faced with a steel W-beam, continuous across the bridge. The deck has been overlaid with 2 inches of asphalt concrete. The substructure consists of 2 column reinforced concrete bents and reinforced concrete vertical abutments, all of which are supported on timber piling.

2. Break down and remove the existing bridge, and approach/sleeper slabs if applicable, to 1 foot below finished groundline, or as required to construct the new structure in accordance with Section 110 of the Specifications. All portions of the existing bridge not salvaged for future highway related use shall be removed and disposed of by the Contractor on a site obtained by the Contractor and approved by the Engineer in accordance with Section A.

3. The existing 36WF194 bridge beams and W-Beam guardrail shall be salvaged for future highway related use. The salvaged items shall be delivered and stockpiled at the Bison Maintenance Shop. Care shall be taken during dismantling, transportation, and stockpiling operations not to damage the structural properties of the salvaged items.

4. During demolition of the structure, efforts shall be taken to prevent material from falling into the river. Under no circumstances is asphalt allowed to fall into the river.

5. The foregoing is a general description of the in-place bridge and should not be construed to be complete in all details. Before preparing the bid it shall be the responsibility of the Contractor to make a visual inspection of the structure to verify the extent of the work and materials involved. If desired by the Contractor, a copy of the original construction plans may be obtained through the Office of Bridge Design.

NOTICE - LEAD BASED PAINT

Be advised that the paint on the steel surfaces of the existing structure contains lead. The Contractor should plan his/her operations accordingly, and inform his/her employees of the hazards of lead exposure.

DESIGN MIX OF CONCRETE

1. All structural concrete shall be Class A45 unless otherwise indicated.

2. Type II cement is required, except Type III may be used for the prestressed beams.

3. Coarse aggregate to be used in concrete shall consist of either crushed quartzite or other crushed ledge rock. If crushed ledge rock other than quartzite is to be used, it shall be from a source approved by the Engineer.

4. Grout design mix shall be as specified in Section 460.3S of the Standard Specifications. A compressive strength of 2000 psi shall be attained by the grout prior to erection of any beams. Chamfer edges of grout pads ¾". The quantity of grout is included in and shall be paid for at the contract unit price per cubic yard for Class A45 Concrete, Bridge.

USGS STREAM GAGE

A USGS gauging station is located on the existing bridge and will be removed or relocated by the USGS. The Contractor shall coordinate the removal or relocation of this station with the USGS. A minimum of two weeks notice shall be given to the USGS prior to any work involving the stream gauging station. Contact the U.S. Geological Survey, Water Resource Division, 1608 Mt. View Rd. Rapid City, SD 57702. Joyce Williamson (605)394-3219.

ESTIMATE OF STRUCTURE QUANTITIES AND NOTES

FOR

394' - 9⅛" PRESTR. GIRDER BRIDGE

STR. NO. 53-392-521

NOVEMBER 2013

DESIGNED BY	CK. DES. BY	DRAFTED BY	
JMH	MM	MG	Kevin N. Goeden
PERK02S7	02S7GB02		BRIDGE ENGINEER

ABUTMENTS

1. Preboring piling at each abutment is required to whichever is greater, ten feet or to natural ground.

2. The HP 14x73 Piling were designed using a factored bearing resistance of 134 tons per pile. Piling shall develop a field verified nominal bearing resistance of 335 tons per pile.

3. One test pile shall be driven at each abutment and will become part of the pile group.

4. The contractor shall have sufficient pile splice material on hand before pile driving is started. See Standard Plate No. 510.40.

5. Piles shall not be driven out of position by more than two inches in the direction normal to the abutment centerline. A pile-driving template shall be used to insure this accuracy.

6. Abutment backwalls above the construction joint may be cast separately from the deck slab. The concrete used for the backwalls and wings shall be Class A45 Concrete, Bridge. All abutment and bridge deck concrete shall have attained design strength prior to backfilling. Abutment wing walls shall not be cast until after the deck has been poured.

7. Each finished abutment shall include a Bridge Survey Marker. See Standard Plate No. 460.05.

ABUTMENT BACKWALL COATING

The material for waterproofing the abutment backwall shall be one of the products from the approved products list. The acceptable abutment backwall coating suppliers are listed on the approved products list at the following Internet address:

http://apps.sd.gov/applications/HC60ApprovedProducts/ProductList.aspx

The cost of furnishing and applying the coating shall be incidental to the contract unit price per cubic yard for Class A45 Concrete, Bridge.

BENTS

1. The design of the drilled shafts is based upon encountering competent bedrock at elevation 2230'. If competent bedrock is not encountered at or above this elevation, contact the Office of Bridge Design, through proper channels, before proceeding with the drilled shaft construction.

2. Geotechnical Engineering Activity personnel shall be present during the drilling operations to confirm these elevations and to observe placement of the drilled shafts. The Geotechnical Engineering Activity shall be notified a minimum of two weeks prior to the start of excavation for the drilled shafts.

3. The drilled shafts shall be constructed using the permanent casing method in conformance with Section 465 of the Specifications. A construction joint shall be placed at the top of the permanent casing, Elev."C", as shown on the plans. The Contractor may expect to encounter water at this construction joint location and should plan operations accordingly.

4. It is the responsibility of the Contractor to have a drilled shaft installation plan submitted and approved prior to ordering the casing. If the Contractor intends to use construction platforms, etc. that would require any of the construction joints to be at a location other than the location shown in the plans, the Contractor shall include these proposed changes in the drilled shaft installation plan for approval by the Office of Bridge Design.

5. The quantities for Drilled Shaft Excavation; 44" Permanent Casing; Class A45 Concrete, Drilled Shaft; Class A45 Concrete, Bridge; and Structure Excavation, Bridge are based upon the construction joint locations as shown in the plans. Payment for these items shall be at the contract unit price for the plans shown quantities regardless of any approved changes in the location of the construction joints as requested by the Contractor due to the construction of work platforms, etc. Measurement and payment will be made at the contract unit price for any changes due to variations in the competent foundation soil as ordered by the Engineer.

ACCESS TUBES

1. Access tubes shall be furnished and installed in each of the drilled shafts in accordance with Section 465 of the Specifications.

2. These access tubes are to be used for crosshole sonic log testing of the drilled shaft in the event that the Department deems that the quality of the drilled shaft is suspect. In order for the Department to determine if crosshole sonic log testing is necessary, no subsequent work above the construction joint will be allowed for 7 days or until authorized by the Engineer, whichever comes first. Upon authorization by the Engineer and prior to any subsequent concrete placement above the construction joint, the Contractor shall remove the water from the access tubes, cut the access tubes off flush with the top of the drilled shaft and completely fill the access tubes with grout.

PRESTRESSED GIRDERS

1. Minimum concrete compressive strength f'c = **7500** psi at 28 days for all girders, fci = **6300** psi for all Girders.

2. All mild reinforcing steel shall be deformed bars conforming to ASTM A615, Grade 60.

3. Individual tendons in all pretensioned sections shall consist of seven wire uncoated Type 270K Strands having a nominal diameter of 0.6" and a minimum ultimate strength of 58600 lbs. per cable. An initial tensile force of 43500 lbs. shall be applied to all 0.6" cables in all girders. All prestressing steel shall conform to AASHTO M203. (low lax strands).

4. All prestressed girders within a span shall be cast within an 8 day period. If not, the newest girder shall be at least 6 weeks old before the deck slab is poured. The girders shall be poured in all steel forms.

5. Prestressed concrete girders shall always be lifted by the devices provided in the top flanges near the ends of the girders. Types of lifting devices other than those shown on the plans may be used provided they are approved by the Office of Bridge Design. The design of the lifting devices shall be the responsibility of the Fabricator.

6. Each beam shall be marked showing structure number, casting date, and beam number. Marking shall be on the face of the beam near the end and so located that they will be exposed after the diaphragms have been cast. Facia beams shall be marked on an inside face. All markings shall be stenciled and clearly legible. For beam designations and locations, see superstructure layout plan and Erection Data sheet.

7. The physical properties of the elastomeric bearing pads shall conform to the requirements of Section 18.2 of the AASHTO LFRD Bridge Construction Specification and the AASHTO Materials Specification M251.The elastomeric bearing pads shall conform to Grade 70 (durometer).The cost of the pads shall be incidental to the contract unit price per cubic yard for Class A45 Concrete, Bridge. Certification that pads are 70 durometer and meet the requirements of AASHTO LFRD Bridge Construction Specification Section 18.2 and AASHTO Materials Specification M251 shall be furnished to the Engineer with the shop drawings. No laminated bearing pads will be allowed.

8. All exposed corners shall be chamfered 3/4" or rounded to 3/4" radius.

9. Dead Load of girder taken as effective at transfer. Cut strands, except those extended and bent, flush with end of girder and coat end of strands with mortar.

10. The Contractor shall be responsible for ensuring that transportation stresses, handling and erection do not cause damage to the girders.

11. Furnish and Install Inserts for T8 Rebars as shown in the plans. All costs involved shall be incidental to the contract unit price per foot of girder.

NOTES (CONTINUED)

FOR

394' - 9⅛" PRESTR. GIRDER BRIDGE

STR. NO. 53-392-521

NOVEMBER 2013

DESIGNED BY	CK. DES. BY	DRAFTED BY	
JMH	MM	MG	Kevin N. Goeden
PERK02S7	02S7GB03		BRIDGE ENGINEER

SUPERSTRUCTURE

1. Girder lifting hooks shall be cut off before placement of concrete deck slab.

2. The diaphragms at the bents shall be poured integrally with the deck slab. Placement of diaphragms at the bents shall not slow down the rate of deck concrete placement and finishing. The Contractor shall place the concrete for the specified diaphragms ahead of the deck concrete in such a manner that advancement of the deck concrete reaches the diaphragm just as placement of concrete in the diaphragm is complete.

3. The deck-finishing machine shall be adjusted and operated in such a manner that the roller screed or screeds are parallel with the centerline of the bridge and the finish machine is parallel to the skew of the bridge. Concrete placement in front of the finish machine shall be kept parallel to the machine.

4. The bridge deck must be placed and finished continuously at a minimum rate of 50 ft. of deck per hour measured along Centerline Roadway. This rate is exclusive of concrete placed in the diaphragms. (See note 2 above.) If concrete cannot be placed and finished at this rate, the Engineer shall order a header installed and operations stopped. Notify the Bridge Construction Engineer if deck pour operations are stopped. Operations may resume only when the Engineer is satisfied that a rate of 50 ft. of deck per hour can be achieved and the concrete in the previous pour has attained a minimum compressive strength of 2000 psi.

5. Snap ties, if used in the barrier curb formwork, shall be epoxy coated. The epoxy coating shall be inert in concrete and compatible with the coating applied to the new epoxy coated reinforcing steel.

CLASS A45 CONCRETE, BRIDGE DECK

1. Concrete used in the bridge deck slab, bent diaphragms and barrier curbs shall be in accordance with the requirements for bridge deck concrete as specified in Section 460.3 A of the Specifications. In addition, the concrete used in the bridge deck and barrier curbs shall have Class F Modified Fly Ash substituted for a portion of the cement in accordance with Section 605 of the Specifications. The amount of cement to be replaced shall be 20 percent by weight. The ratio of substitution of fly ash to cement shall be 1:1 by weight.

2. The bridge deck concrete, excluding the barrier curbs, shall be placed and cured in accordance with the Special Provision for Bridge Deck Curing and Finishing.

3. See Special Provision for Concrete Penetrating Sealer.

SHOP PLANS

Shop plans shall be required as specified by the Specifications and in Adobe PDF format. Send shop plan submittals to the Office of Bridge Design. Shop plans are required for both the prestressed girders and fabricated steel items.

BOLT TESTING

The certified mill test reports for all bolts used on the project shall include the test results for all of the testing specified in section 972.2. D of the Specifications. Some of these tests are supplemental tests that must be requested at the time the bolts are ordered. It is the responsibility of the Contractor to notify the bolt supplier of these requirements.

FALSEWORK

The Contractor shall be required to include with his Falsework Plans, details for the construction of an adequate “Walk-Way” including railing.

FALL PROTECTION

1. The Contractor shall install a Fall Protection System conforming to OSHA Regulations. When working on the girders prior to decking installation, a Horizontal Lifeline – or other OSHA approved system shall be installed. The Contractor shall have one Personal Fall Arrest System (PFAS) available for use by a Department Inspector. The PFAS shall be compatible with the installed Fall Protection System.

2. Modifications to any bridge components used to accommodate the Fall Protection System shall be shown on the Falsework Plans and/or the appropriate Shop Plans. Field welding to bridge components will not be allowed. Field placed concrete inserts or drilled-in anchor bolts will be allowed if approved by the Engineer. All costs associated with providing the Fall Protection System shall be incidental to the other contract items.

CLASS B COMMERCIAL TEXTURE FINISH

1. A Class B commercial texture finish shall be applied to the following areas:

   a. **Barrier Rail:** all exposed surfaces (front, top and back).
   b. **Slab:** edge of slab.

2. The Class B commercial texture finish shall be applied in accordance with Section 460.3 M.1.c of the Specifications.

3. Where the Class B commercial texture finish is to be applied, concrete curing shall be accomplished with cotton or burlap mats and polyethylene sheeting. Curing shall continue for not less than seven days after placing concrete before the commercial texture finish is applied. The commercial texture finish shall be applied in accordance with the manufacturer’s recommendations. The commercial texture finish itself does not require a specific cure except for drying.

DECK DRAINS

1. Deck Drains shall be 4” diameter x 5’-9” Fiberglass Pipe conforming to the requirements of ASTM - D2996.

2. The Fiberglass Pipe Sleeve can be made from a 4 inch diameter Fiberglass Pipe Fitting. It shall be attached to the 4 inch diameter Fiberglass Pipe, as shown in the plans, per the manufacturer’s recommendation.

3. All fiberglass pipe and pipe fittings shall be handled and installed according to the guidelines and procedures recommended by the manufacturer. Pipe, pipe fittings, and adhesive must be from the same manufacturer.

4. Use fiberglass wear pads to protect against contact with supports or U-bolts.

5. The 3/8 inch diameter U-bolts, nuts and washers shall conform to ASTM F1554 Grade 36 and shall be galvanized in accordance with ASTM F2329.

6. The deck drain to girder connection as shown in the plans allows the deck drain location to be adjusted slightly to clear transverse slab steel.

7. All fiberglass pipes and pipe fittings shall use pigmented resin throughout the wall. The color shall be an approved gray (Federal Standard 595B Color 26622).

8. Steel for the bent plates and washers shall conform to ASTM A709 Grade 36 and shall be galvanized in accordance with ASTM A123. Washers shall be plate washers or a continuous bar at least 5/16” thick with standard holes and shall have a size sufficient to completely cover the slot after installation.

9. The $^{3}/_{8}$ inch diameter ASTM A307 bolts and ASTM A563 nuts shall be galvanized in accordance with ASTM F2329.

9. The $^{3}/_{8}$ inch diameter concrete inserts shall be capable of developing the strength of the A307 bolts and shall be galvanized.

10. Maintain 2” clear cover between the back of the concrete inserts and the adjacent girder web.

11. Payment for deck drains shall be at the contract unit price per each for Deck Drain, Girder Bridge, and shall be full compensation for furnishing, fabricating, and installing the deck drains and all attaching hardware in accordance with the plans and specifications.

NOTES (CONTINUED)

FOR

394' - 9⅛" PRESTR. GIRDER BRIDGE

STR. NO. 53-392-521

NOVEMBER 2013

DESIGNED BY	CK. DES. BY	DRAFTED BY	
JMH	MM	MG	Kevin N. Goeden
PERK02S7	02S7GB04		BRIDGE ENGINEER

SDDOT's LRFD PILE DRIVING EQUATIONS

To determine the nominal bearing capacity of driven piles the SDDOT uses the US Customary formulas below for timber, concrete, steel H-piling and shell type piles.

For Double Action Steam or Air Hammers and Closed Cylinder Top Diesel Hammers:

$$Q\ (\text{drive}) = \frac{10.5E}{S + 0.1} \times \frac{W}{W + M}$$

For Single Action Steam or Air Hammers and Open Cylinder Top Diesel Hammers:

$$Q\ (\text{drive}) = \frac{10.5WH}{S + 0.1} \times \frac{W}{W + M}$$

Where:

Q = the nominal pile bearing resistance in **tons**
W = the weight of a gravity hammer, or the ram of an energy hammer in **tons**.
H = the height of free fall of the hammer or ram in **feet**.
M = the weight in **tons** of the driven mass and shall include the weight of the pile, the weight of the driving cap and the weight of the anvil, if used.
E = the energy per blow in **foot-tons**.
S = the average penetration in **inches** of the pile per blow for the last five blows for gravity hammers and last 10 blows for energy hammers.

PILE DRIVING

1. A drivability analysis was performed using the wave equation analysis program (GRLWEAP). An acceptable hammer is provided below. Based on initial analysis, the hammer listed will need to be operated no higher than the second fuel setting in order to prevent overstressing of the pile during driving operations. If during actual driving operations an adequate hammer drop to obtain design bearing is not achieved, contact the Geotechnical Engineering Activity prior to increasing the fuel setting.

   Delmag D46-32

2. Pile hammers not listed will require evaluation and approval prior to use from the Geotechnical Engineering Activity.

3. Compaction of earth embankment and bridge berm material shall be governed by the Specified Density Method.

APPROACH SLABS

1. Sleeper slab riser shall be cast with the approach slab or cast after the approach slab is placed. Care shall be taken to ensure the correct grade is maintained across the joint.

2. The use of an approved finishing machine will be required during placement of Class A45 Concrete for the approach slabs. Concrete placement in front of the machine shall be kept parallel to the screed.

3. The concrete in the approach slab shall be tined normal to centerline roadway.

4. Concrete Approach Sleeper Slab for Bridge will be paid for at the contract unit price per square yard. This payment shall be full compensation for all excavation, furnishing, hauling, and placing all materials including concrete and reinforcing steel; for disposal of all excavated material and surplus materials; and for labor, tools, equipment and any incidentals necessary to complete this item of work.

5. Concrete Approach Slab for Bridge will be paid for at the contract unit price per square yard. This payment shall be full compensation for all excavation, furnishing, hauling and placing all materials including concrete, asphalt paint or 4 mil polyethylene sheeting, elastic joint sealer and reinforcing steel; for disposal of all excavated material and surplus materials and for labor, tools, equipment and any incidentals necessary to complete this item of work.

STRUCTURE EXCAVATION, BRIDGE

Excavation around webwalls shall be included in the quantity for Structure Excavation, Bridge. Limits of Structure Excavation, Bridge at Bents for payment are shown below. Drilled Shaft Excavation is not included in this quantity.

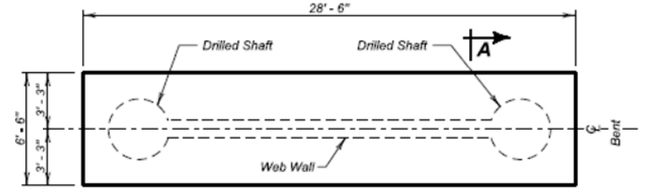

PLAN
(For Limits of Excavation)

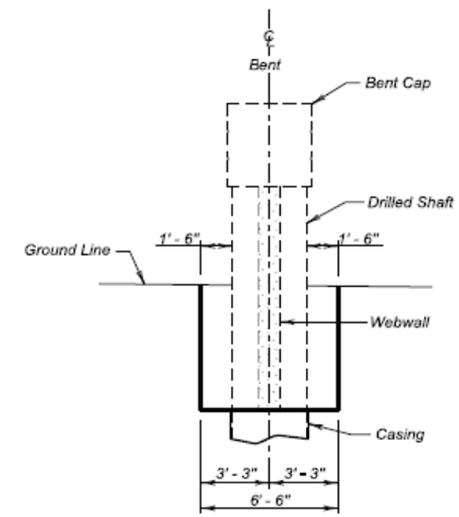

SEC. A - A

NOTES (CONTINUED)
FOR
394' - 9⅛" PRESTR. GIRDER BRIDGE

STR. NO. 53-392-521
NOVEMBER 2013

DESIGNED BY	CK. DES. BY	DRAFTED BY	
JMH	MM	MG	Kevin N. Boeden
PERK02S7	02S7GB05		BRIDGE ENGINEER

STATE OF	PROJECT	SHEET NO.	TOTAL SHEETS
S.D.	NH 0073(63)182	E21	E45

* Values represent uncorrected "N" values from Penetration Test.

Sample Zone — 48 Blows Per Foot

If refusal of the penatration test was achieved based on 50 blows within one of the 6 inch sets, the number of blows over inches is listed.

Hole Number	P3	
Station	662+14	
Depth	10.5	ft
Soil Color	Brown	
Classification	Sand	
Strength (Q_u)	-----	psf
Dry Density	88.1	pcf
Wet Density	92.7	pcf
Moisture	5.2	%
Pass No. 10	99.4	%
Pass No. 40	98.5	%
Pass No. 200	4.6	%
Sand Content	94.7	%
Silt Content	3.1	%
Clay Content	1.6	%

Hole Number	P6	
Station	665+53	
Depth	20.2	ft
Soil Color	Brown	
Classification	Gravel Sand	
Strength (Q_u)	106	psf
Dry Density	127.6	pcf
Wet Density	148.6	pcf
Moisture	16.4	%
Pass No. 10	68.9	%
Pass No. 40	45.9	%
Pass No. 200	19.4	%
Sand Content	49.5	%
Silt Content	11.4	%
Clay Content	8.0	%

Hole Number	P6	
Station	665+53	
Depth	34.8	ft
Soil Color	Gray	
Classification	Silt Clay	
Strength (Q_u)	4,317	psf
Dry Density	92.8	pcf
Wet Density	117.7	pcf
Moisture	26.8	%
Pass No. 10	100.0	%
Pass No. 40	100.0	%
Pass No. 200	98.4	%
Sand Content	1.6	%
Silt Content	62.8	%
Clay Content	35.6	%

Hole Number	P7	
Station	666+16	
Depth	5.5	ft
Soil Color	Brown	
Classification	Silt Sand	
Strength (Q_u)	-----	psf
Dry Density	87.3	pcf
Wet Density	96.8	pcf
Moisture	10.9	%
Pass No. 10	100.0	%
Pass No. 40	100.0	%
Pass No. 200	42.6	%
Sand Content	57.7	%
Silt Content	34.7	%
Clay Content	7.6	%

Hole Number	P8	
Station	663+15	
Depth	44.8	ft
Soil Color	Gray	
Classification	Silt	
Strength (Q_u)	3,155	psf
Dry Density	95.9	pcf
Wet Density	122.0	pcf
Moisture	27.2	%
Pass No. 10	100.0	%
Pass No. 40	100.0	%
Pass No. 200	57.6	%
Sand Content	42.4	%
Silt Content	41.6	%
Clay Content	16.0	%

The Fox Hills Formation consists of thin beds of alternating gray and tan sandstone and shale. Calcareous and claystone concretions along with carbonaceous material (coal) are present throughout.

The Geotechnical Engineering Activity has on file all of the boring logs for this project. These logs and additional results of laboratory test, if any, are available for review at the Central Office in Pierre.

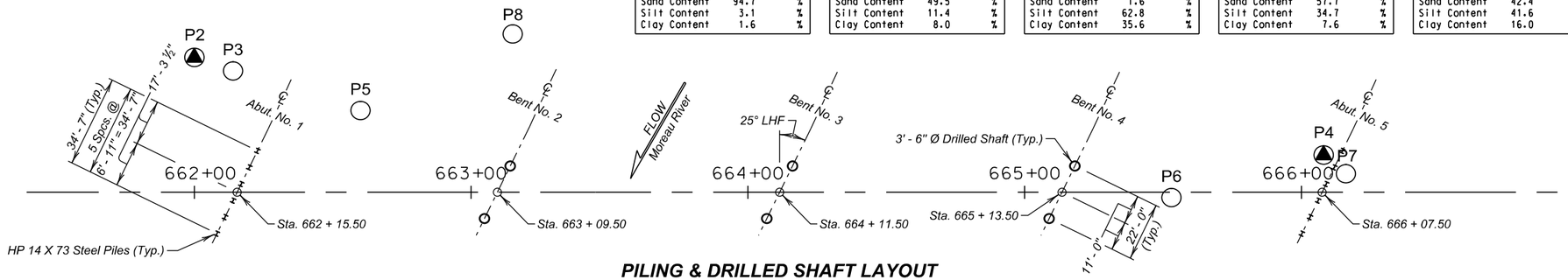

PILING & DRILLED SHAFT LAYOUT

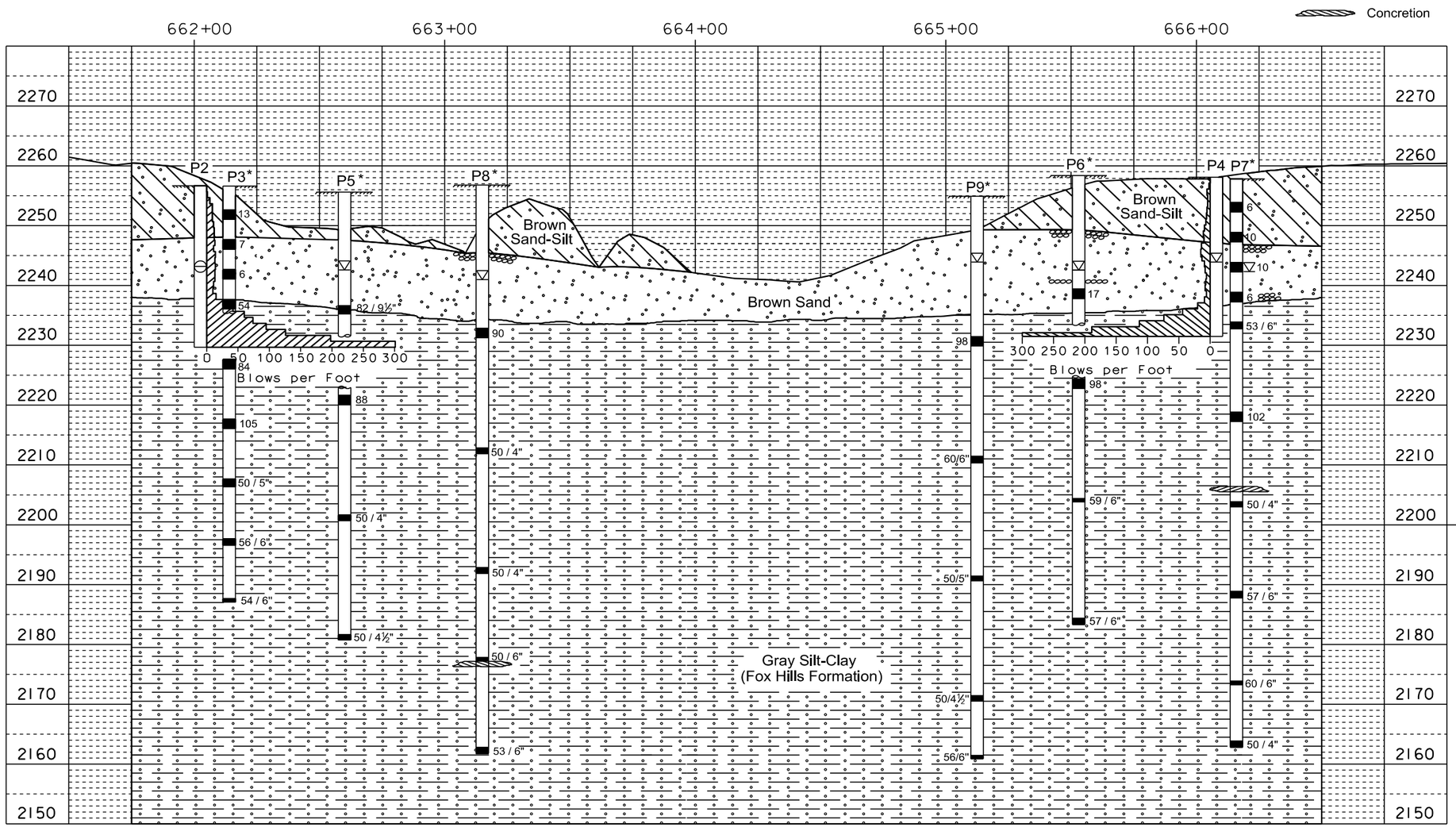

LEGEND

- Drive Test
- Water
- Caved
- Penetration Test
- Sample Zone

Drive test are conducted by dropping a 490 pound hammer 30 inches to drive a 2⅞ inch drill stem to measure the resistance to penetration of the soil.

Penetration test holes are drilled with a 6⅝ inch diameter hollow stem auger. Penetration tests are conducted by dropping a 140 pound hammer 30 inches to obtain 2 inch nominal diameter samples and to measure the resistance to penetration of the soil.

GROUND WATER ELEVATIONS

as of DECEMBER 2013

P2	(CAVED)	2243.2
P3		2243.6
P4		2243.9
P5		2242.6
P6		2242.6
P7		2242.3
P8		2241.0

as of JUNE 2014

P9		2243.9

MEASURED SKIN FRICTION

	ELEV.	PSF
P2	2229.7	1897
P4	2231.5	1925

SUBSURFACE INVESTIGATION, PILING & DRILLED SHAFT LAYOUT

FOR

394' - 9⅛" PRESTR. GIRDER BRIDGE

32' - 0" ROADWAY — 25° LHF SKEW
OVER MOREAU RIVER — SEC. 10-T14N-R16E
STA. 662 + 14.12 TO 666 + 08.88 — NH 0073(63)182
STR. NO. 53-392-521 — HL-93

PERKINS COUNTY

S. D. DEPT. OF TRANSPORTATION

NOVEMBER 2013

DESIGNED BY	CK. DES. BY	DRAFTED BY	
JMH	MM	MG/JL	Kevin N. Goeden
PERK02S7	02S7GB06		BRIDGE ENGINEER

STATE OF	PROJECT	SHEET NO.	TOTAL SHEETS
S.D.	NH 0073(63)182	E22	E45

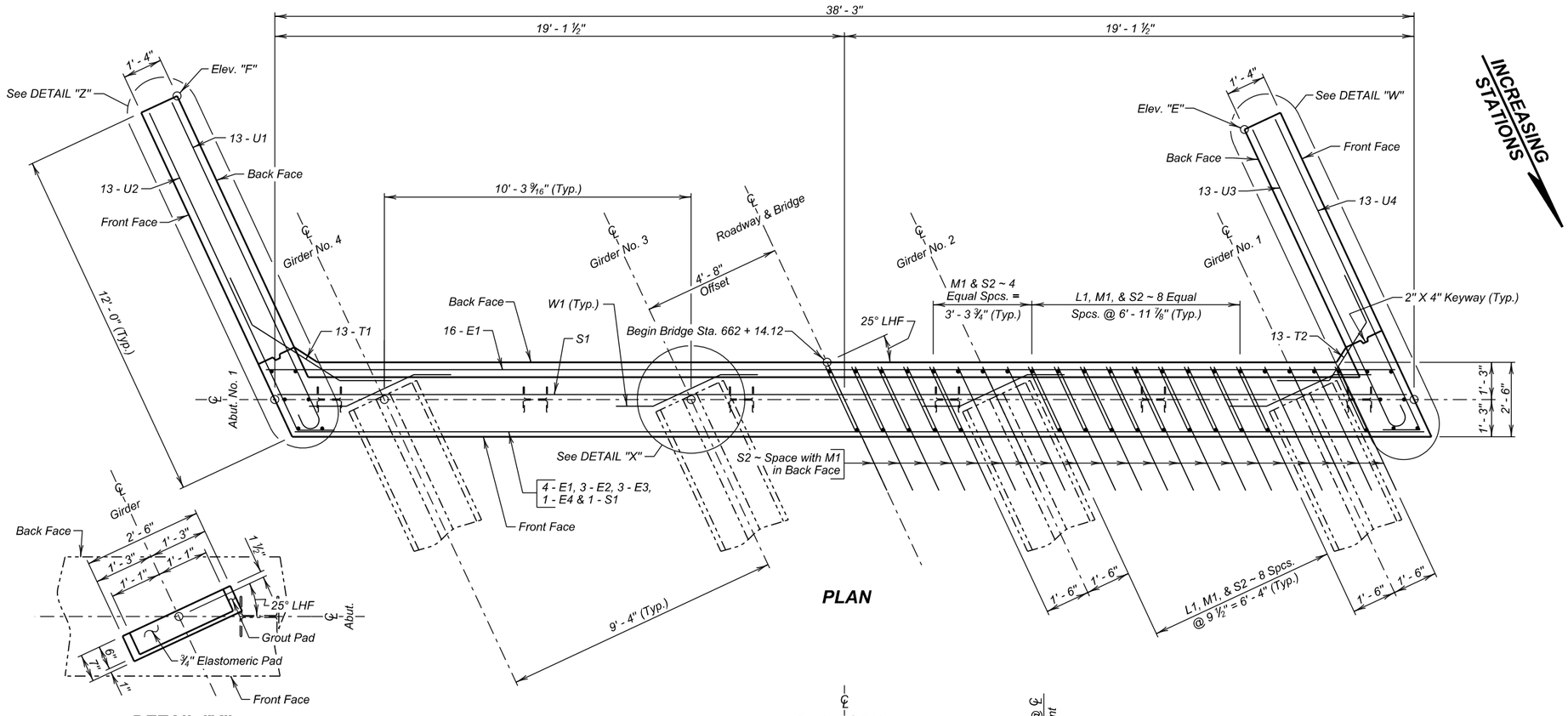

PLAN

DETAIL "X"

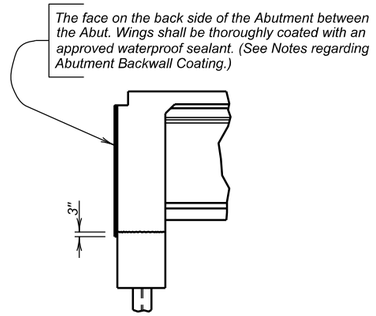

ABUT. BACKWALL COATING DETAILS

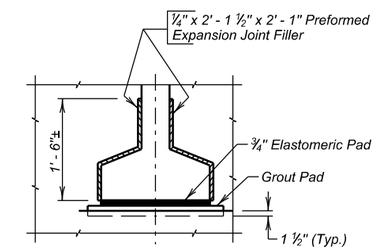

DETAIL "Y"

(Typical at Girder Ends; Abutments only)

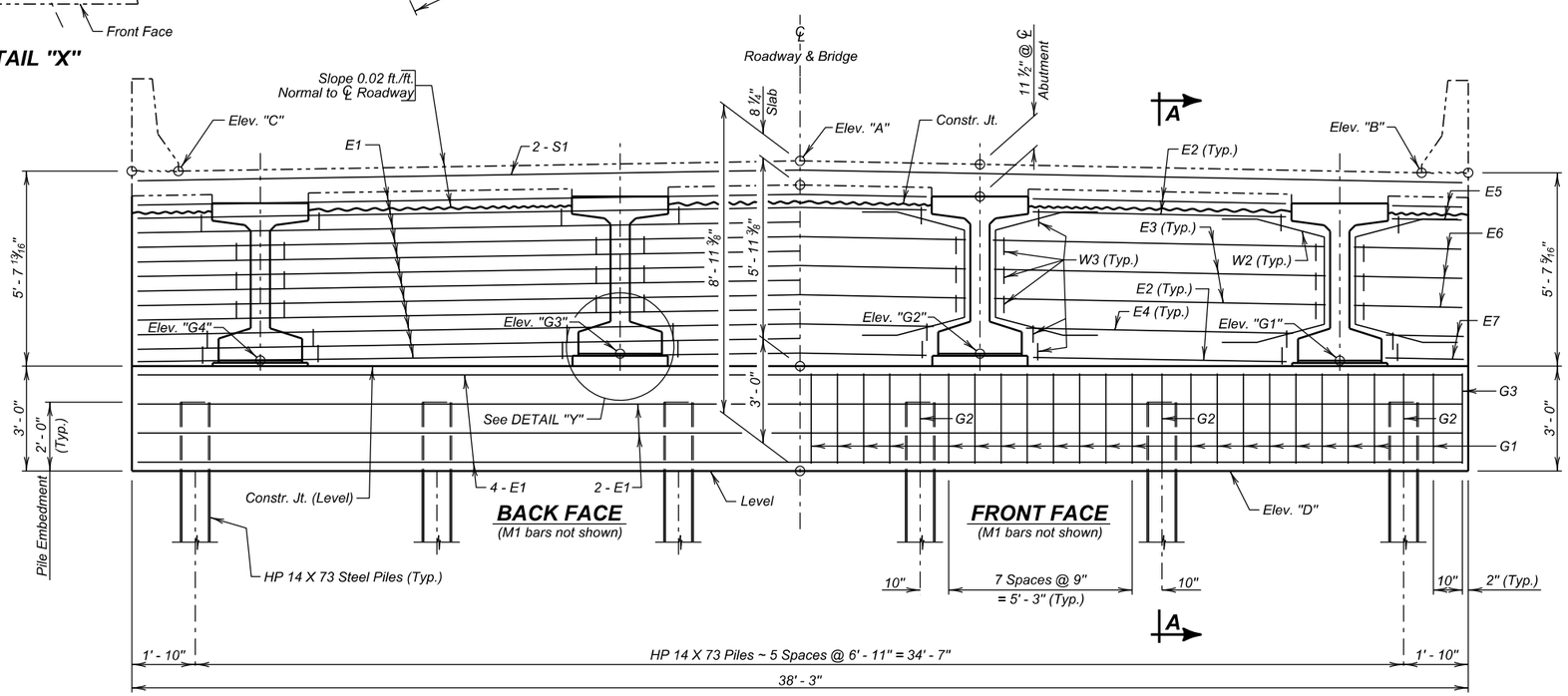

ELEVATION

(Along ℄ Abutment)

TABLE OF ELEVATIONS

Abut. No.	Elev. "A"	Elev. "B"	Elev. "C"	Elev. "D"	Elev. "E"	Elev. "F"
1	2273.92	2273.58	2273.62	2264.97	2272.42	2272.47

TABLE OF ELEVATIONS

Abut. No.	Elev. "G1"	Elev. "G2"	Elev. "G3"	Elev. "G4"
1	2268.10	2268.30	2268.31	2268.14

NOTE - Elev. "A", "B" and "C" are top of slab at ℄ of Abutment. Elev. "E" and "F" are at top of wingwall 14 ¼" below top of slab elevation. Elev. "G1", "G2", "G3", and "G4" are top of grout pad elevations at ℄ Abutment.
Top of Grout Pads shall be Level and Smooth.

ABUTMENT NO. 1 DETAILS (A)

FOR

394' - 9⅛" PRESTR. GIRDER BRIDGE

32' - 0" ROADWAY — 25° LHF SKEW
OVER MOREAU RIVER — SEC. 10-T14N-R16E
STA. 662 + 14.12 TO 666 + 08.88 — NH 0073(63)182
STR. NO. 53-392-521 — HL-93

PERKINS COUNTY
S. D. DEPT. OF TRANSPORTATION
NOVEMBER 2013

DESIGNED BY	CK. DES. BY	DRAFTED BY	
JMH	MM	MG	Kevin N. Boeden
PERK02S7	02S7GB07		BRIDGE ENGINEER

STATE OF	PROJECT	SHEET NO.	TOTAL SHEETS
S.D.	NH 0073(63)182	E23	E45

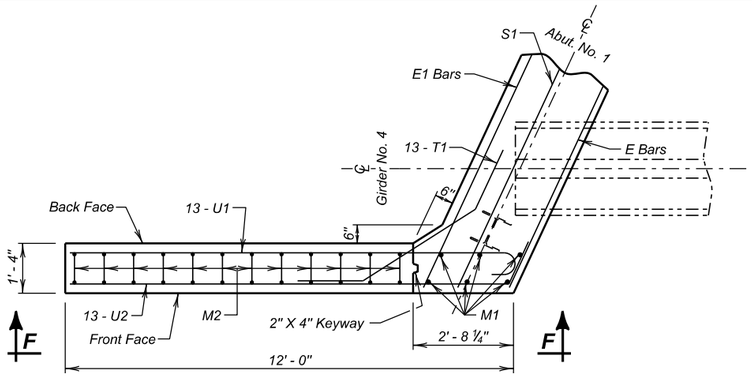

DETAIL "Z"

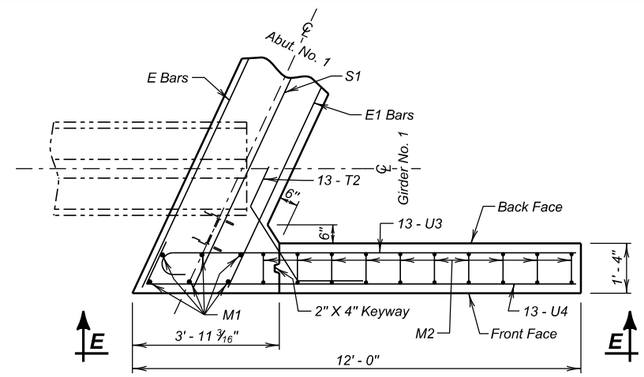

DETAIL "W"

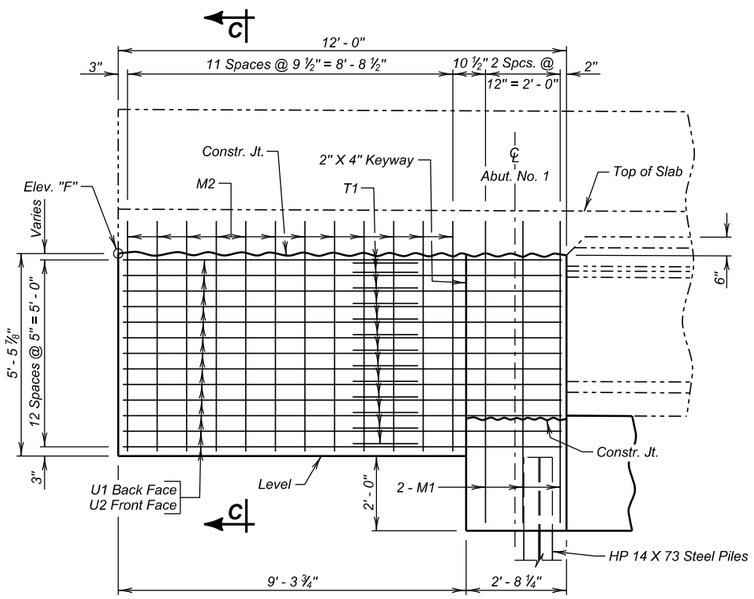

VIEW F - F

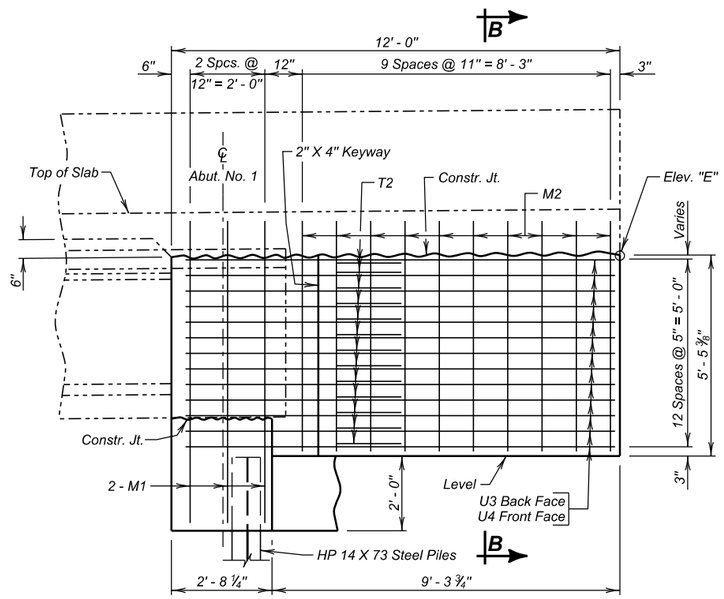

VIEW E - E

REINFORCING SCHEDULE

	Mk.	No.	Size	Length	Type
	E1	24	6	37' - 11"	Str.
	E2	9	5	7' - 3"	Str.
	E3	9	5	9' - 6"	Str.
	E4	3	5	8' - 0"	Str.
	E5	4	5	2' - 0"	Str.
	E6	6	5	3' - 1"	Str.
	E7	4	5	2' - 3"	Str.
	G1	42	4	10' - 3"	T2
	G2	6	5	8' - 10"	S3A
	G3	2	4	10' - 9"	T2
△	L1	29	4	4' - 8"	17A
	M1	82	5	7' - 4"	Str.
	M2	22	5	13' - 2"	17
△	S1	2	9	37' - 11"	Str.
△	S2	41	5	8' - 0"	14A
	T1	13	6	7' - 3"	19
	T2	13	6	6' - 0"	19
	U1	13	8	12' - 10"	1A
	U2	13	5	13' - 2"	19B
	U3	13	8	11' - 11"	1A
	U4	13	5	13' - 0"	19B
	W1	4	5	5' - 0"	19
	W2	8	4	8' - 6"	14
	W3	48	5	3' - 2"	17

Bending Details

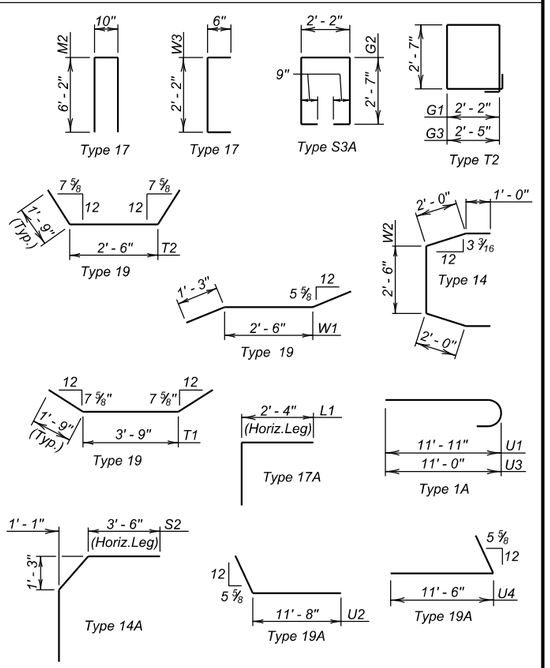

NOTE:
All dimensions are out to out of bars.
△ Bars to be Epoxy Coated.

ESTIMATED QUANTITIES

	ITEM	UNIT	QUANTITY
ϕ	Class A45 Concrete, Bridge	Cu. Yd.	30.8
	Reinforcing Steel	Lb.	4570
	Epoxy Coated Reinforcing Steel	Lb.	690
	Structure Excavation, Bridge	Cu. Yd.	13.4
	HP 14 x 73 Steel Test Pile, Furnish and Drive	Ft.	1 @ 60'
	HP 14 x 73 Steel Bearing Pile, Furnish and Drive	Ft.	5 @ 55' = 275'
	Preboring Pile	Ft.	6 @ 10' = 60'

ϕ Includes 0.1 cu. yds. for grout pads.

Note: Concrete shall be placed in the space under the beams (within the backwall width) during the pour. Care shall be taken to get the concrete vibrated into this area. If upon form removal the space is not completely filled and consolidated, the contractor shall grout the remaining voids.

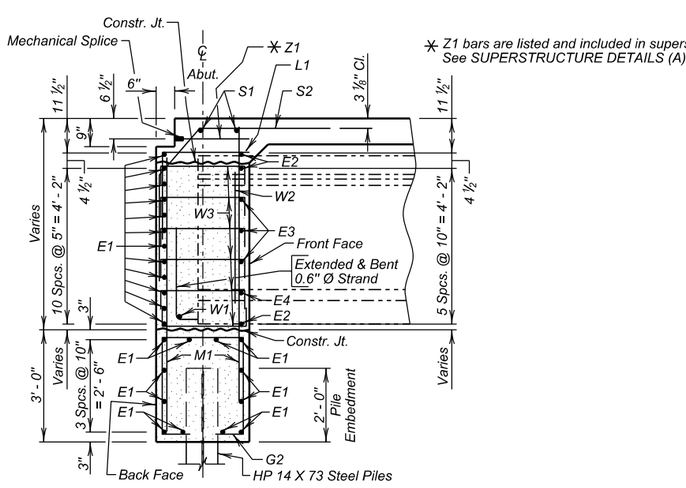

SEC. A - A

✳ Z1 bars are listed and included in superstructure. See SUPERSTRUCTURE DETAILS (A) & (B).

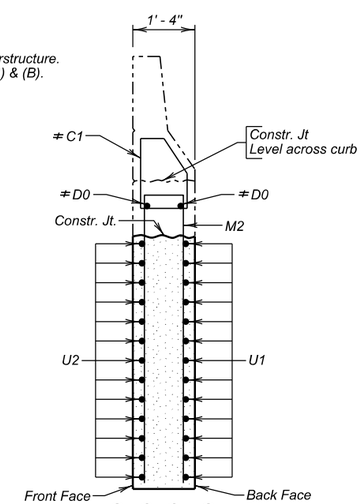

SEC. C - C

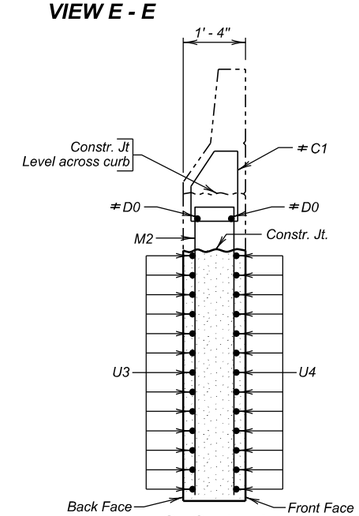

SEC. B - B

NOTE -
≠ Listed on SUPERSTRUCTURE DETAILS (B)

ABUTMENT NO. 1 DETAILS (B)

FOR

394' - 9⅛" PRESTR. GIRDER BRIDGE

32' - 0" ROADWAY — 25° LHF SKEW
OVER MOREAU RIVER — SEC. 10-T14N-R16E
STA. 662 + 14.12 TO 666 + 08.88 — NH 0073(63)182
STR. NO. 53-392-521 — HL-93

PERKINS COUNTY
S. D. DEPT. OF TRANSPORTATION
NOVEMBER 2013

DESIGNED BY	CK. DES. BY	DRAFTED BY	
JMH	MM	MG	Kevin N. Goeden
PERK02S7	02S7GB08		BRIDGE ENGINEER

STATE OF	PROJECT	SHEET NO.	TOTAL SHEETS
S.D.	NH 0073(63)182	E24	E45

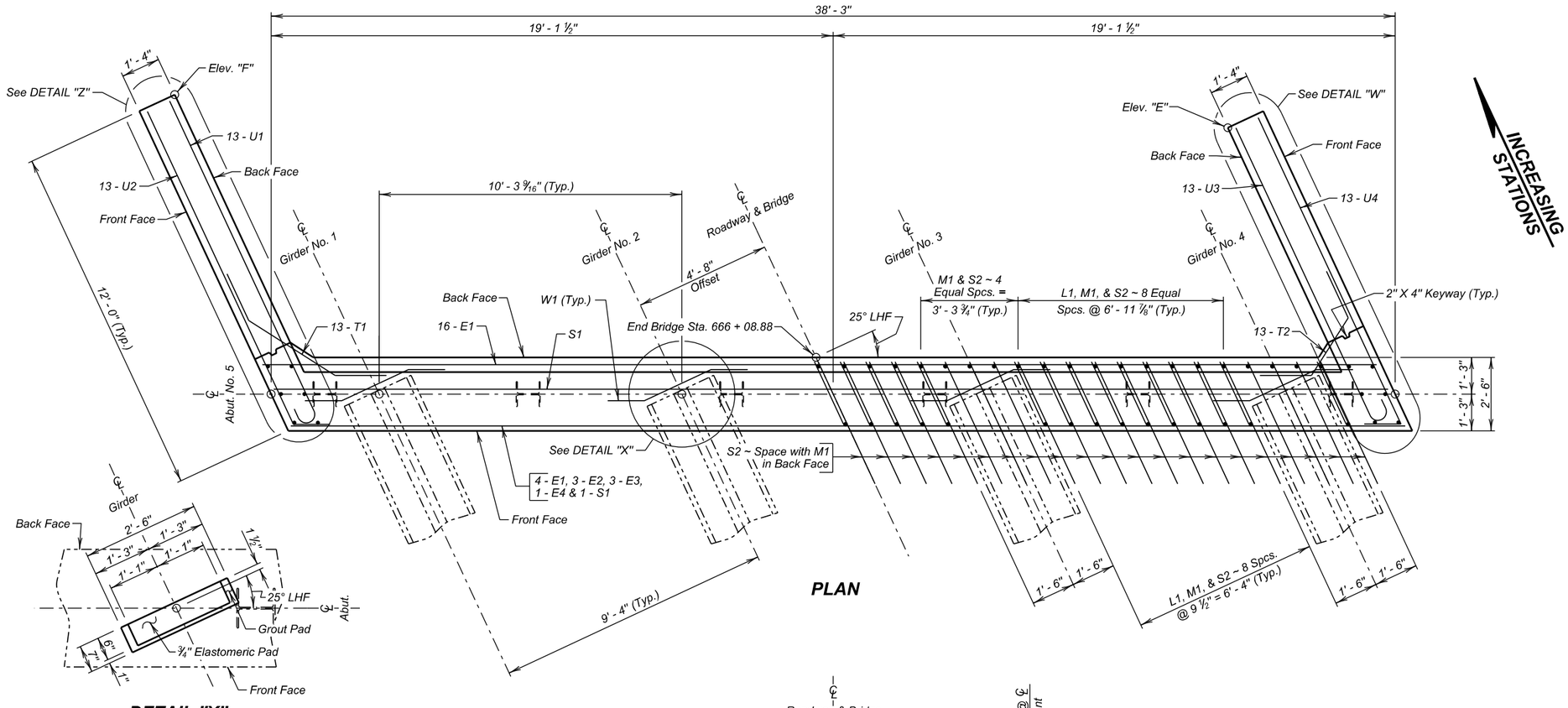

PLAN

DETAIL "X"

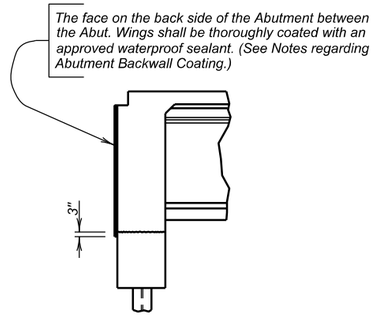

ABUT. BACKWALL COATING DETAILS

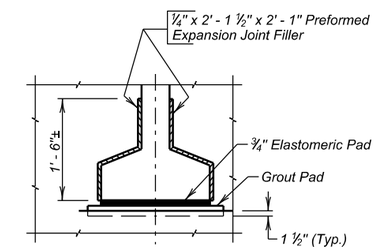

DETAIL "Y"
(Typical at Girder Ends; Abutments only)

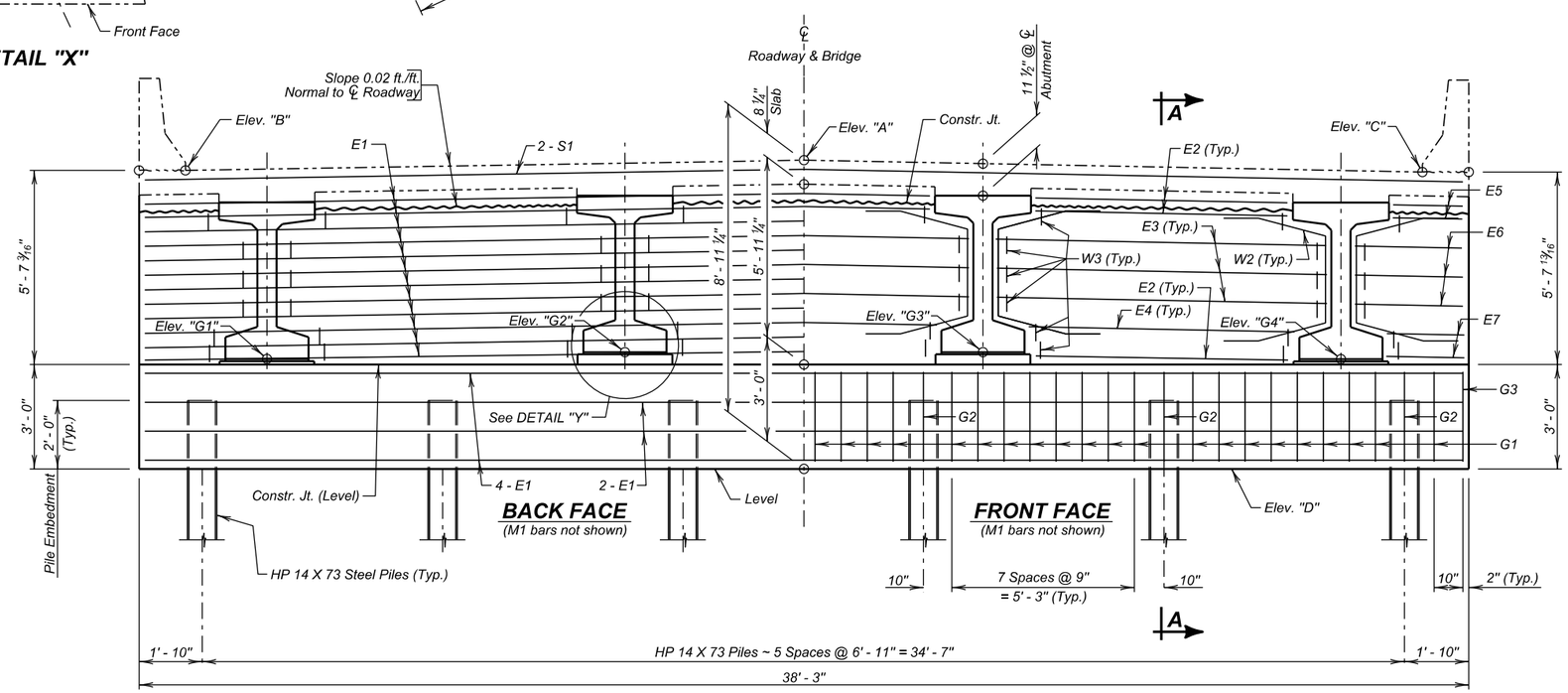

BACK FACE
(M1 bars not shown)

FRONT FACE
(M1 bars not shown)

ELEVATION
(Along ℄ Abutment)

TABLE OF ELEVATIONS

Abut. No.	Elev. "A"	Elev. "B"	Elev. "C"	Elev. "D"	Elev. "E"	Elev. "F"
5	2272.77	2272.43	2272.48	2263.83	2271.26	2271.21

TABLE OF ELEVATIONS

Abut. No.	Elev. "G1"	Elev. "G2"	Elev. "G3"	Elev. "G4"
5	2266.95	2267.15	2267.17	2266.99

NOTE - Elev. "A", "B" and "C" are top of slab at ℄ of Abutment. Elev. "E" and "F" are at top of wingwall 14 ¼" below top of slab elevation. Elev. "G1", "G2", "G3", and "G4" are top of grout pad elevations at ℄ Abutment.
Top of Grout Pads shall be Level and Smooth.

ABUTMENT NO. 5 DETAILS (A)

FOR

394' - 9⅛" PRESTR. GIRDER BRIDGE

32' - 0" ROADWAY — 25° LHF SKEW
OVER MOREAU RIVER — SEC. 10-T14N-R16E
STA. 662 + 14.12 TO 666 + 08.88 — NH 0073(63)182
STR. NO. 53-392-521 — HL-93

PERKINS COUNTY
S. D. DEPT. OF TRANSPORTATION
NOVEMBER 2013

DESIGNED BY	CK. DES. BY	DRAFTED BY	
JMH	MM	MG	Kevin N. Boeden
PERK02S7	02S7GB09		BRIDGE ENGINEER

STATE OF	PROJECT	SHEET NO.	TOTAL SHEETS
S.D.	NH 0073(63)182	E25	E45

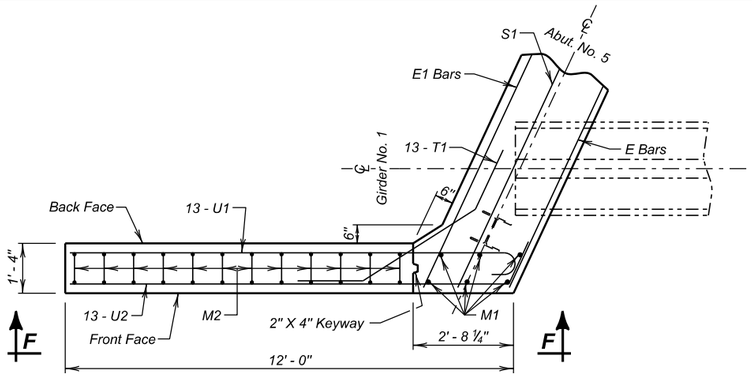

DETAIL "Z"

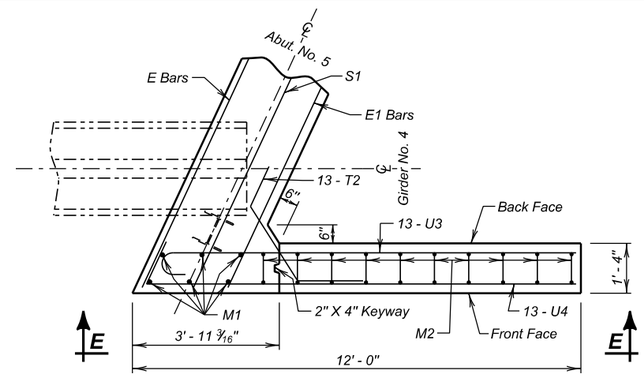

DETAIL "W"

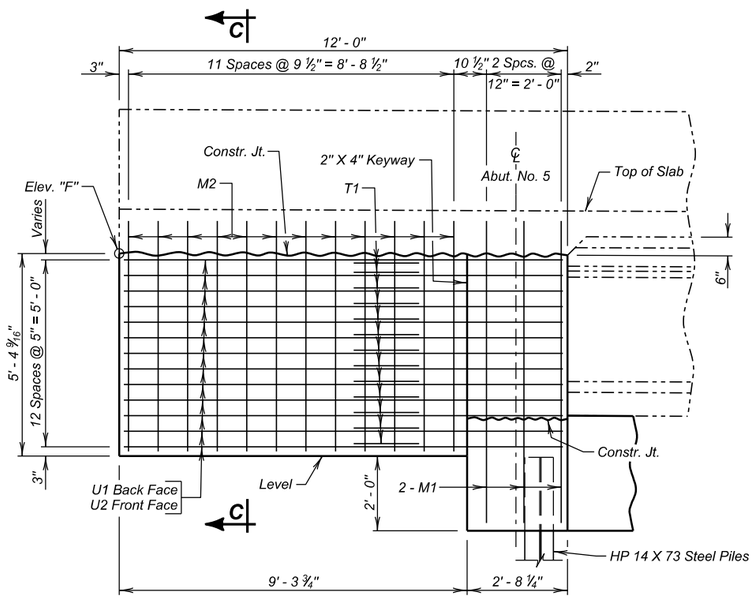

VIEW F - F

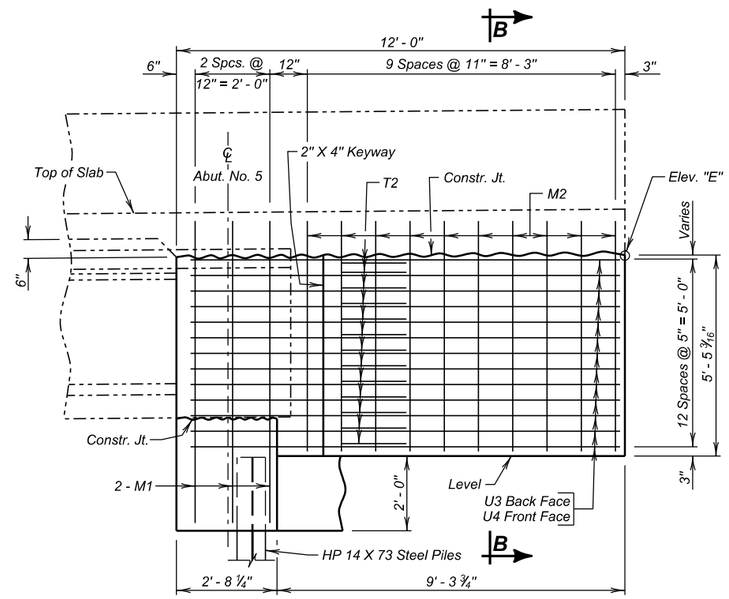

VIEW E - E

REINFORCING SCHEDULE

	Mk.	No.	Size	Length	Type
	E1	24	6	37' - 11"	Str.
	E2	9	5	7' - 3"	Str.
	E3	9	5	9' - 6"	Str.
	E4	3	5	8' - 0"	Str.
	E5	4	5	2' - 0"	Str.
	E6	6	5	3' - 1"	Str.
	E7	4	5	2' - 3"	Str.
	G1	42	4	10' - 3"	T2
	G2	6	5	8' - 10"	S3A
	G3	2	4	10' - 9"	T2
△	L1	29	4	4' - 8"	17A
	M1	82	5	7' - 4"	Str.
	M2	22	5	13' - 2"	17
△	S1	2	9	37' - 11"	Str.
△	S2	41	5	8' - 0"	14A
	T1	13	6	7' - 3"	19
	T2	13	6	6' - 0"	19
	U1	13	8	12' - 10"	1A
	U2	13	5	13' - 2"	19B
	U3	13	8	11' - 11"	1A
	U4	13	5	13' - 0"	19B
	W1	4	5	5' - 0"	19
	W2	8	4	8' - 6"	14
	W3	48	5	3' - 2"	17

Bending Details

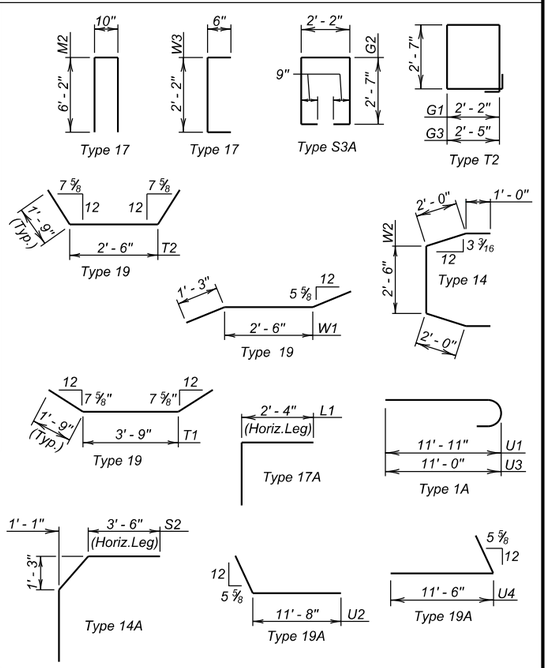

NOTE:
All dimensions are out to out of bars.
△ Bars to be Epoxy Coated.

ESTIMATED QUANTITIES

	ITEM	UNIT	QUANTITY
ϕ	Class A45 Concrete, Bridge	Cu. Yd.	30.7
	Reinforcing Steel	Lb.	4570
	Epoxy Coated Reinforcing Steel	Lb.	690
	Structure Excavation, Bridge	Cu. Yd.	13.5
	HP 14 x 73 Steel Test Pile, Furnish and Drive	Ft.	1 @ 60'
	HP 14 x 73 Steel Bearing Pile, Furnish and Drive	Ft.	5 @ 55' = 275'
	Preboring Pile	Ft.	6 @ 10' = 60'

ϕ Includes 0.1 cu. yds. for grout pads.

Note: Concrete shall be placed in the space under the beams (within the backwall width) during the pour. Care shall be taken to get the concrete vibrated into this area. If upon form removal the space is not completely filled and consolidated, the contractor shall grout the remaining voids.

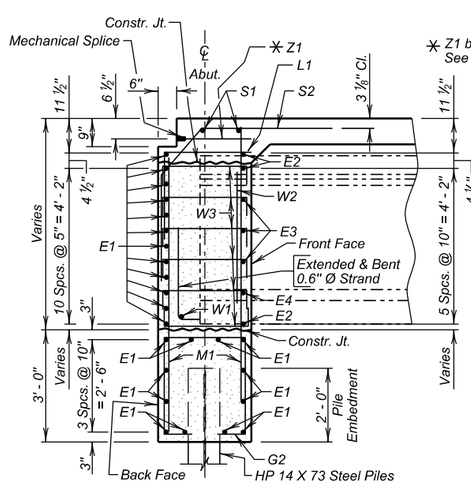

Z1 bars are listed and included in superstructure. See SUPERSTRUCTURE DETAILS (A) & (B).

SEC. A - A

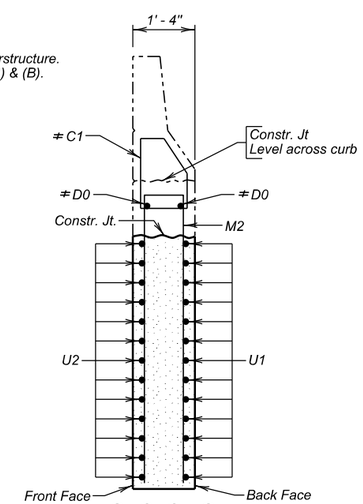

SEC. C - C

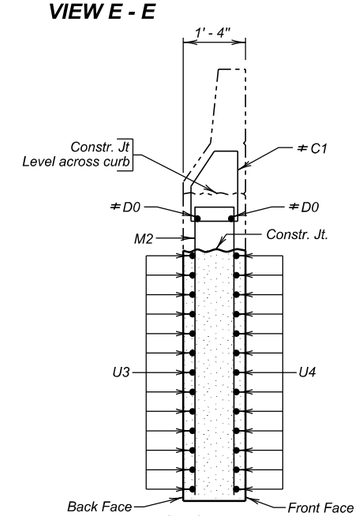

SEC. B - B

NOTE -
≠ Listed on SUPERSTRUCTURE DETAILS (B)

ABUTMENT NO. 5 DETAILS (B)

FOR

394' - 9⅛" PRESTR. GIRDER BRIDGE

32' - 0" ROADWAY — 25° LHF SKEW
OVER MOREAU RIVER — SEC. 10-T14N-R16E
STA. 662 + 14.12 TO 666 + 08.88 — NH 0073(63)182
STR. NO. 53-392-521 — HL-93

PERKINS COUNTY
S. D. DEPT. OF TRANSPORTATION
NOVEMBER 2013

DESIGNED BY	CK. DES. BY	DRAFTED BY	
JMH	MM	MG	Kevin N. Goeden
PERK02S7	02S7GB10		BRIDGE ENGINEER

STATE OF	PROJECT	SHEET NO.	TOTAL SHEETS
S.D.	NH 0073(63)182	E26	E45

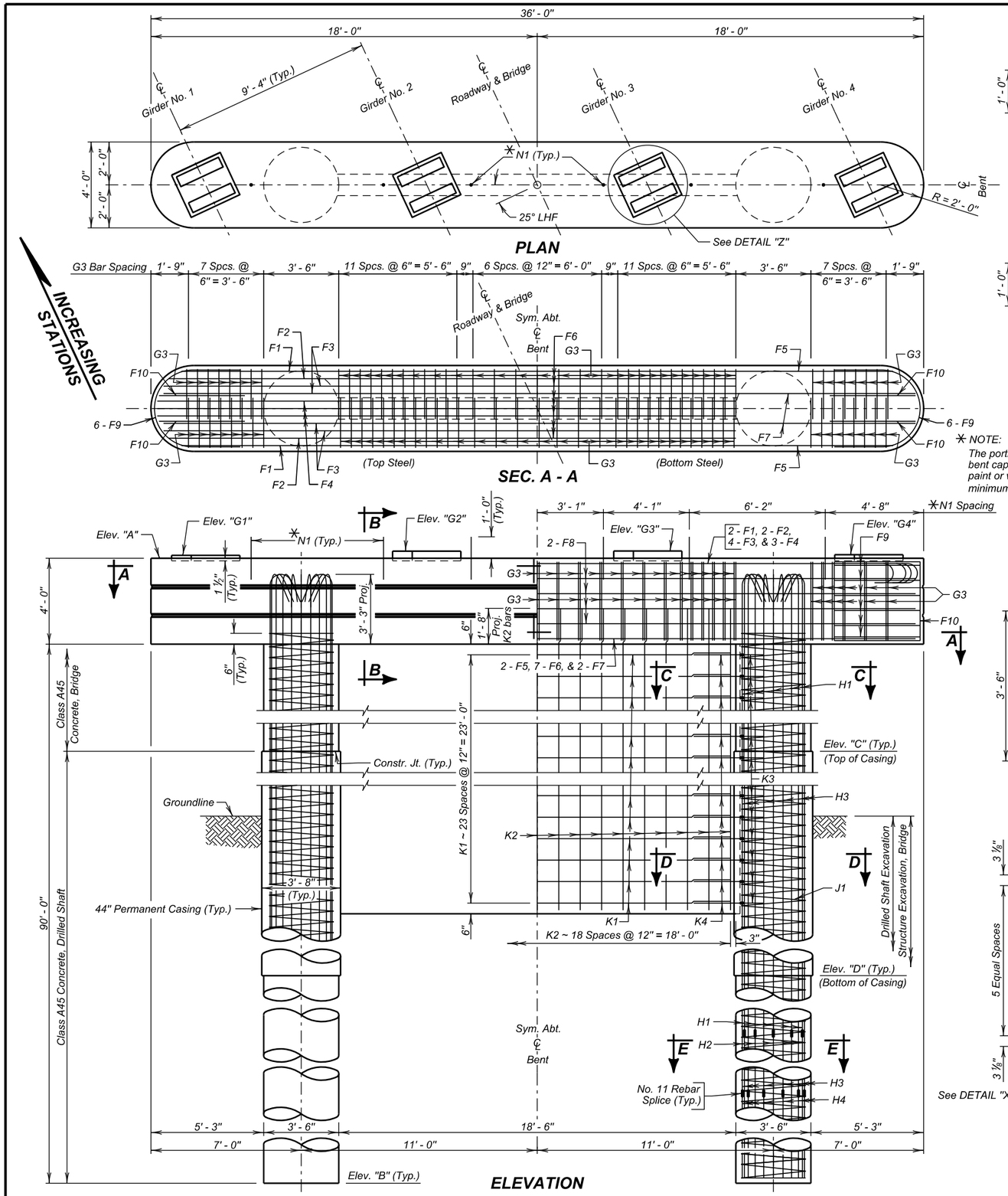

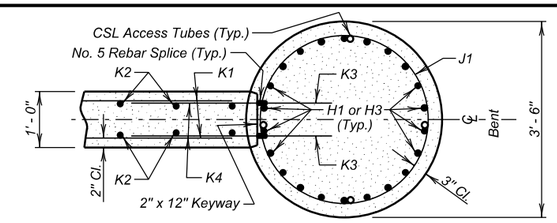

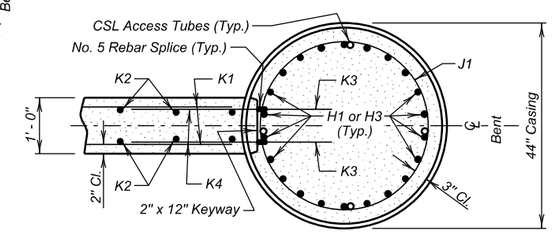

✳ NOTE:
The portion of the N1 bar above the bent cap is to be coated with asphalt paint or wrapped with tar paper to a minimum thickness of 7/16".

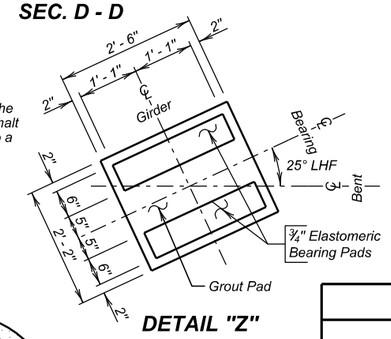

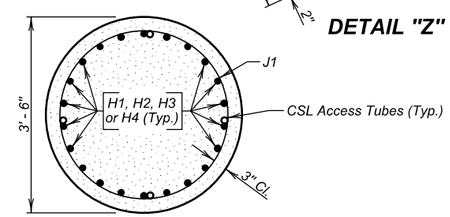

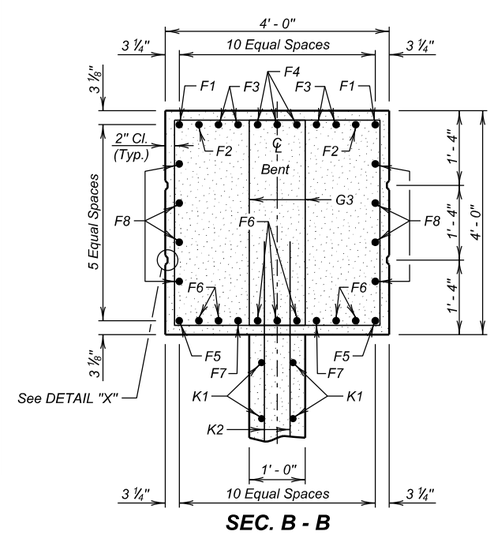

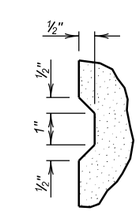

REINFORCING SCHEDULE
(For One Bent - 3 Required)

Mk.	No.	Size	Length	Type
F1	2	10	36' - 1"	1
F2	2	10	37' - 2"	1
F3	4	10	37' - 9"	1
F4	3	10	38' - 3"	1
F5	2	10	33' - 2"	Str.
F6	7	10	18' - 6"	Str.
F7	2	10	35' - 3"	Str.
F8	8	5	33' - 2"	Str.
F9	12	5	10' - 0"	S11
F10	4	5	11' - 7"	17
G3	94	4	12' - 10"	T1
H1	22	11	43' - 7"	1A
H2	22	11	51' - 0"	Str.
H3	22	11	53' - 7"	1A
H4	22	11	41' - 0"	Str.
J1	2	4	1703' - 3"	Spiral
K1	48	5	18' - 0"	Str.
K2	38	5	25' - 6"	Str.
K3	96	5	1' - 0"	Str.
K4	96	5	2' - 3"	Str.
N1	6	8	2' - 0"	Str.

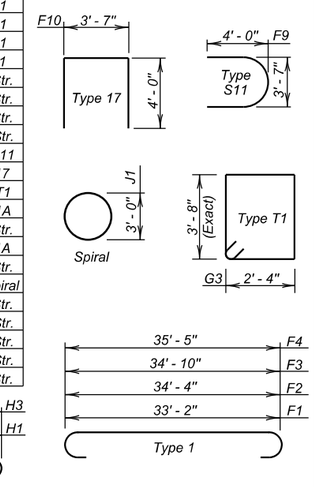

NOTES-
All dimensions are out to out of bars.
Spirals - Use 6" pitch and 1 ½ extra turns at each end. Use 1 ½ turns for lap at splice as required, or weld as approved by the Office of Bridge Design.
Use 4 vertical spacer bars per column. Spirals may be smooth bars.
Bar length shown does not not include splices.

ESTIMATED QUANTITIES

	ITEM	UNIT	QUANTITY Bent No. 2	Bent No. 3	Bent No. 4
⌀	Class A45 Concrete, Bridge	Cu. Yd.	46.9	46.7	46.5
△	Reinforcing Steel	Lb.	31374	31374	31374
	Structure Excavation, Bridge	Cu. Yd.	40.2	12.1	63.1
	Drilled Shaft Excavation	Cu. Yd.	52.7	49.1	55.7
	Class A45 Concrete, Drilled Shaft	Cu. Yd.	54.7	54.9	55.2
	44" Permanent Casing	Ft.	37	37	37
	No. 11 Rebar Splice	Each	44	44	44
	No. 5 Rebar Splice	Each	96	96	96

⌀ Includes 0.2 Cu. Yds. for Grout Pads at Bents 2, 3, & 4.
△ Includes 542 lbs. at Bents 2, 3, & 4 for Spacer Bars.
Each bar is computed at ¾ lbs per linear foot regardless of type furnished.

TABLE OF ELEVATIONS

Bent No.	★Elev. "G1"	★Elev. "G2"	★Elev. "G3"	★Elev. "G4"	Elev. "A"	Elev. "B"	Elev. "C"	Elev. "D"
2	2267.83	2268.03	2268.04	2267.86	2267.70	2173.70	2250.50	2232.00
3	2267.53	2267.73	2267.74	2267.57	2267.40	2173.40	2250.50	2232.00
4	2267.23	2267.43	2267.45	2267.27	2267.10	2173.10	2250.50	2232.00

NOTE: Top of Grout Pad shall be level and smooth .
★Elevations are Top of Grout Pad at centerline of bent.

BENT DETAILS
FOR
394' - 9⅛" PRESTR. GIRDER BRIDGE

32' - 0" ROADWAY — 25° LHF SKEW
OVER MOREAU RIVER — SEC. 10-T14N-R16E
STA. 662 + 14.12 TO 666 + 08.88 — NH 0073(63)182
STR. NO. 53-392-521 — HL-93

PERKINS COUNTY
S. D. DEPT. OF TRANSPORTATION
NOVEMBER 2013

DESIGNED BY	CK. DES. BY	DRAFTED BY	
JMH	MM	MG	Kevin N. Boeden
PERK02S7	02S7GB11		BRIDGE ENGINEER

STATE OF	PROJECT	SHEET NO.	TOTAL SHEETS
S.D.	NH 0073(63)182	E27	E45

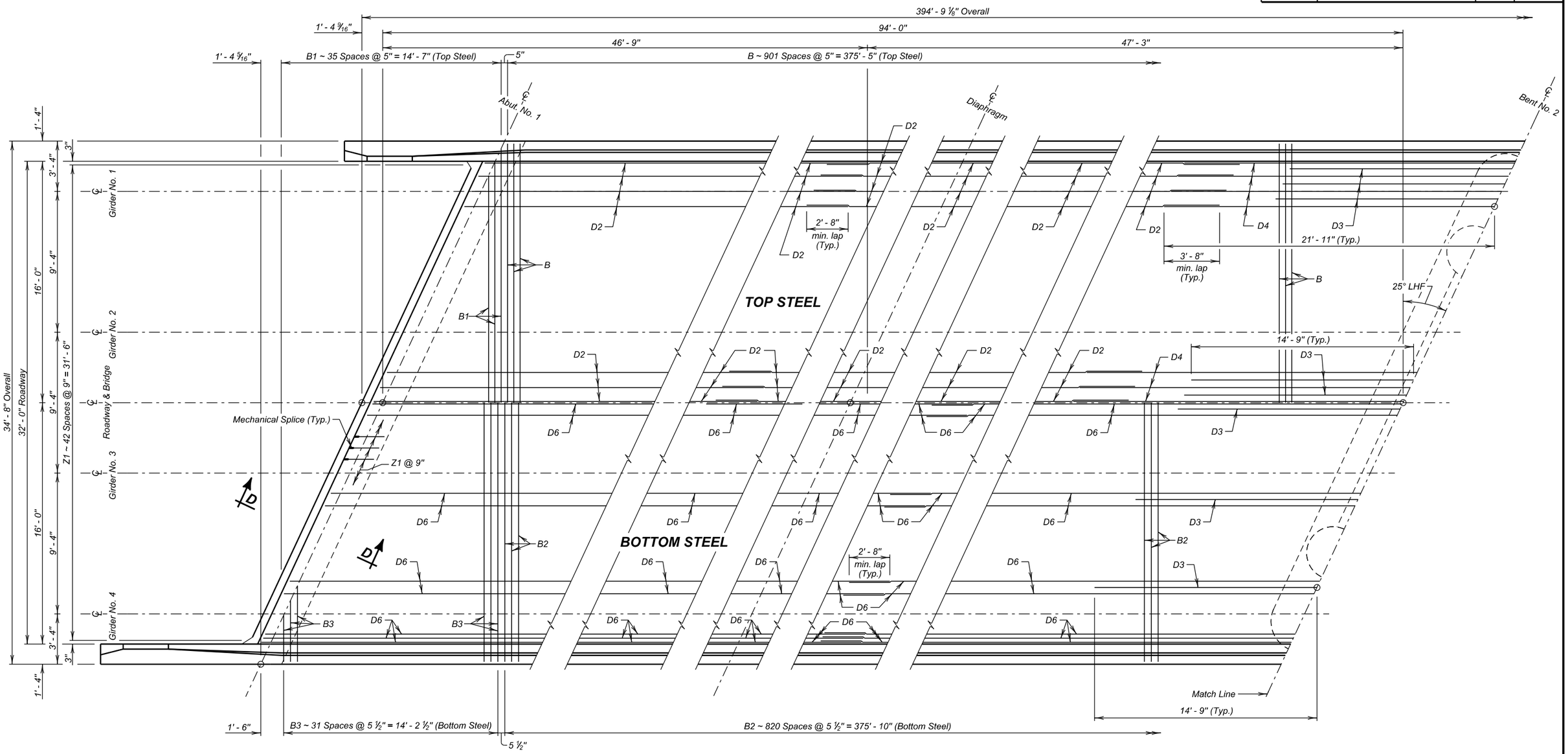

PARTIAL PLAN

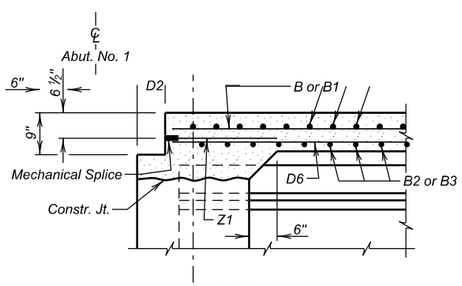

SEC. D - D

SUPERSTRUCTURE DETAILS (A)

FOR

394' - 9⅛" PRESTR. GIRDER BRIDGE

32' - 0" ROADWAY — 25° LHF SKEW
OVER MOREAU RIVER — SEC. 10-T14N-R16E
STA. 662 + 14.12 TO 666 + 08.88 — NH 0073(63)182
STR. NO. 53-392-521 — HL-93

PERKINS COUNTY
S. D. DEPT. OF TRANSPORTATION
NOVEMBER 2013

DESIGNED BY	CK. DES. BY	DRAFTED BY	
JMH	MM	MG	Kevin N. Goeden
PERK02S7	02S7GB12		BRIDGE ENGINEER

STATE OF	PROJECT	SHEET NO.	TOTAL SHEETS
S.D.	NH 0073(63)182	E28	E45

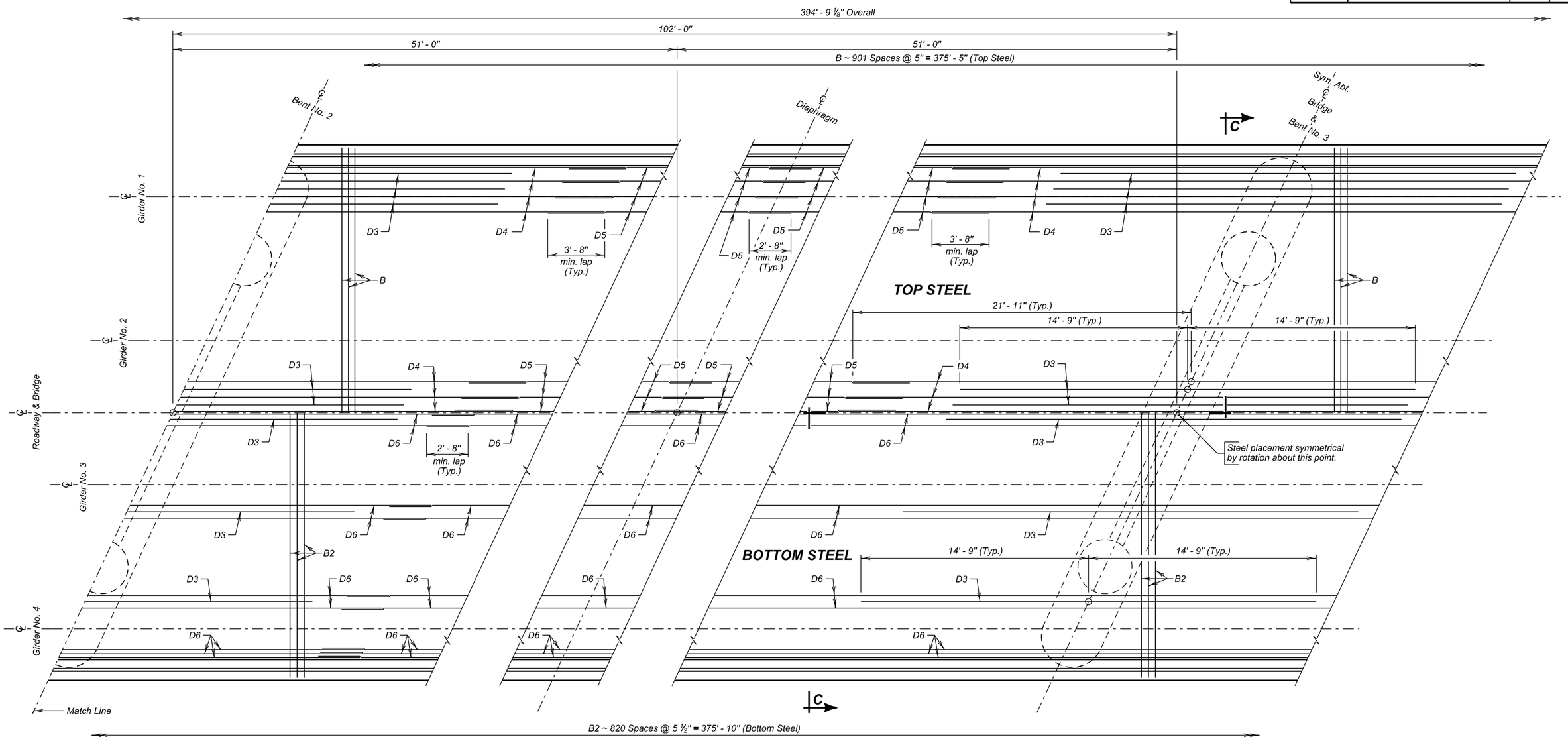

PARTIAL PLAN

SUPERSTRUCTURE DETAILS (B)

FOR

394' - 9⅛" PRESTR. GIRDER BRIDGE

32' - 0" ROADWAY — 25° LHF SKEW
OVER MOREAU RIVER — SEC. 10-T14N-R16E
STA. 662 + 14.12 TO 666 + 08.88 — NH 0073(63)182
STR. NO. 53-392-521 — HL-93

PERKINS COUNTY
S. D. DEPT. OF TRANSPORTATION
NOVEMBER 2013

DESIGNED BY	CK. DES. BY	DRAFTED BY	
JMH	MM	MG	Kevin N. Goeden
PERK02S7	02S7GB13		BRIDGE ENGINEER

STATE OF	PROJECT	SHEET NO.	TOTAL SHEETS
S.D.	NH 0073(63)182	E29	E45

REINFORCING SCHEDULE

	Mk.	No.	Size	Length	Type
⌀	B	902	5	35' - 6"	1
≠ ⌀	B1	36	5	37' - 11"	1A
	B2	821	4	34' - 4"	Str.
≠	B3	32	4	36' - 7"	Str.
	B15	12	5	14' - 6"	Str.
	B16	16	4	52' - 2"	Str.
	B17	8	4	8' - 6"	19B
	B18	12	8	4' - 3"	19B
	B19	12	5	2' - 4"	Str.
	B20	12	6	3' - 6"	17A
	C1	810	5	5' - 7"	T1A
	C2	782	5	5' - 1"	S11
	C3	4	5	5' - 0"	S11
	C4	4	5	5' - 0"	S11
	C5	4	5	5' - 0"	S11
	C6	4	5	6' - 8"	T1
	C7	4	5	6' - 9"	T1
	C8	4	5	6' - 11"	T1
	C9	4	5	7' - 0"	T1
	C10	16	6	5' - 11"	T1A
	C11	16	5	7' - 1"	T1
	C12	4	6	5' - 6"	17
	C13	4	5	5' - 4"	17
	D	32	4	53' - 3"	Str.
	D0	32	5	54' - 6"	Str.
	D1	84	4	57' - 6"	Str.
	D2	132	5	39' - 5"	Str.
	D3	168	7	29' - 6"	Str.
	D4	99	7	43' - 10"	Str.
	D5	132	5	34' - 4"	Str.
	D6	231	5	58' - 5"	Str.
✳	T1	18	6	7' - 5"	Str.
✳	T2	54	5	9' - 4"	Str.
✳	T3	18	5	7' - 2"	Str.
✳	T4	12	5	5' - 0"	19C
✳	T5	9	5	33' - 6"	Str.
✳	T6	30	5	6' - 4"	19C
✳	T7	30	5	5' - 0"	19C
✳	T8	36	6	2' - 6"	Str.
	U1	54	4	14' - 9"	S4
	U2	18	6	15' - 3"	S4
	U3	6	6	15' - 4"	S4
✳	U4	72	4	4' - 4"	17
	Z1	86	7	2' - 0"	Str.

Bending Details

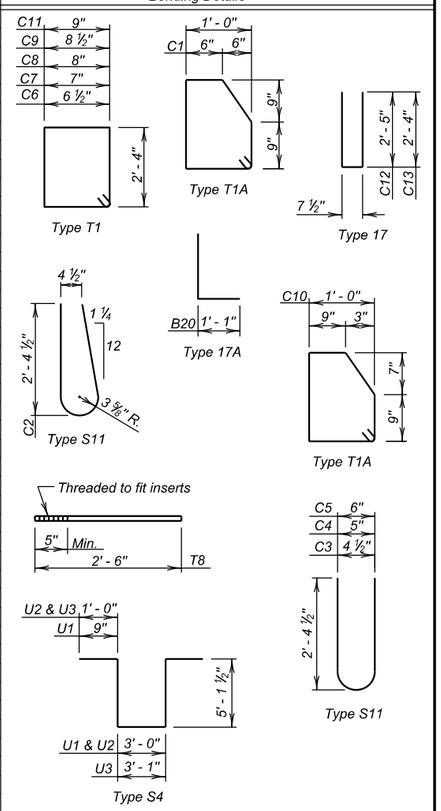

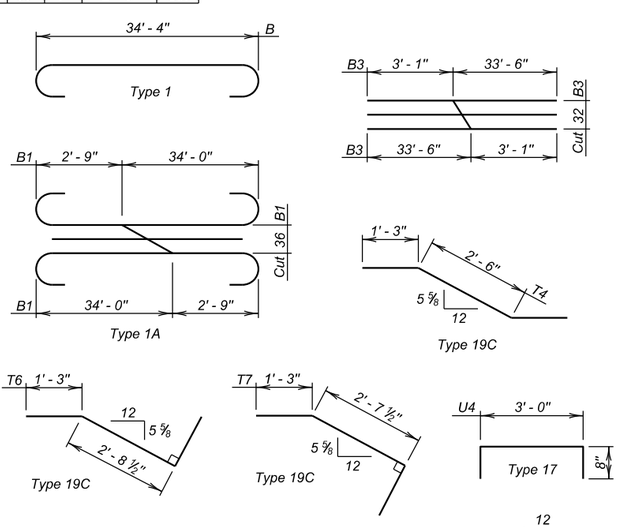

NOTES -

≠ See cutting diagram.

All reinforcing steel shall be epoxy coated except as noted.
See Approach Slab sheet for location of Z1 bars.
All dimensions are out to out of bars.

✳ Bars not to be epoxy coated.

⌀ Tip bars as required to maintain top and bottom clear cover.

NOTE -

Concrete shall be placed in the space under the beams at Bents 2, 3, & 4 (within the diaphragm width) during the diaphragm pour. If upon form removal the space is not completly filled and consolidated, the contractor shall grout the remaining voids.

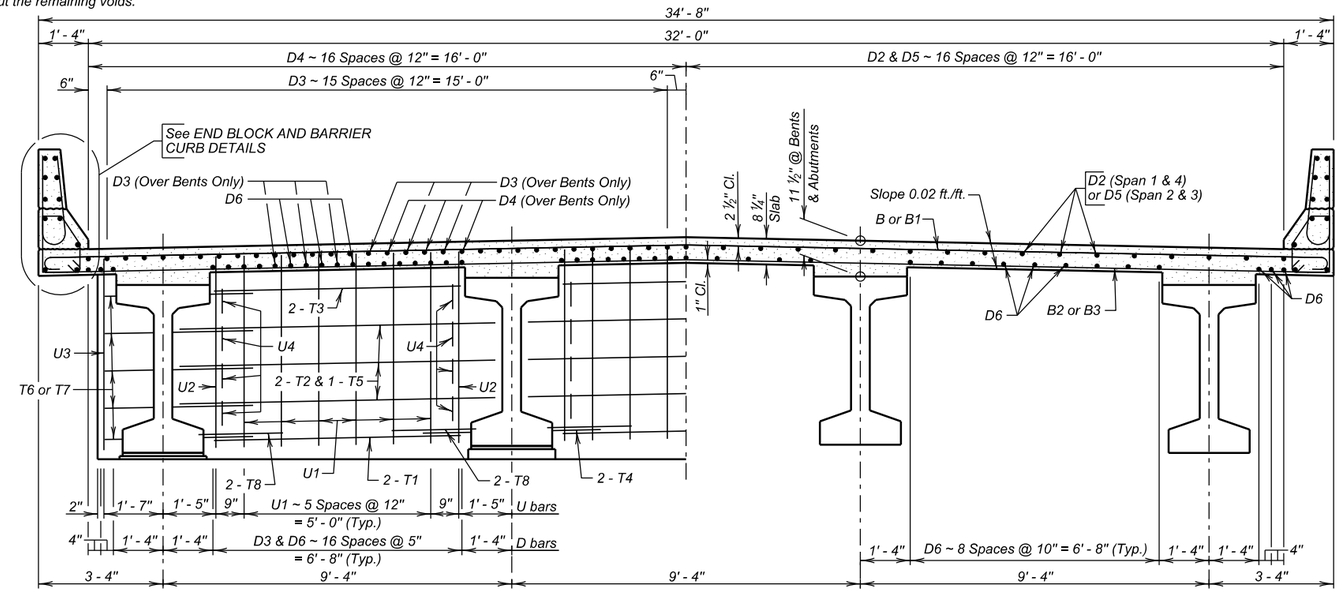

SEC. C - C

(Midspan diaphragm not shown in this section, see DIAPHRAGM DETAILS sheet.)

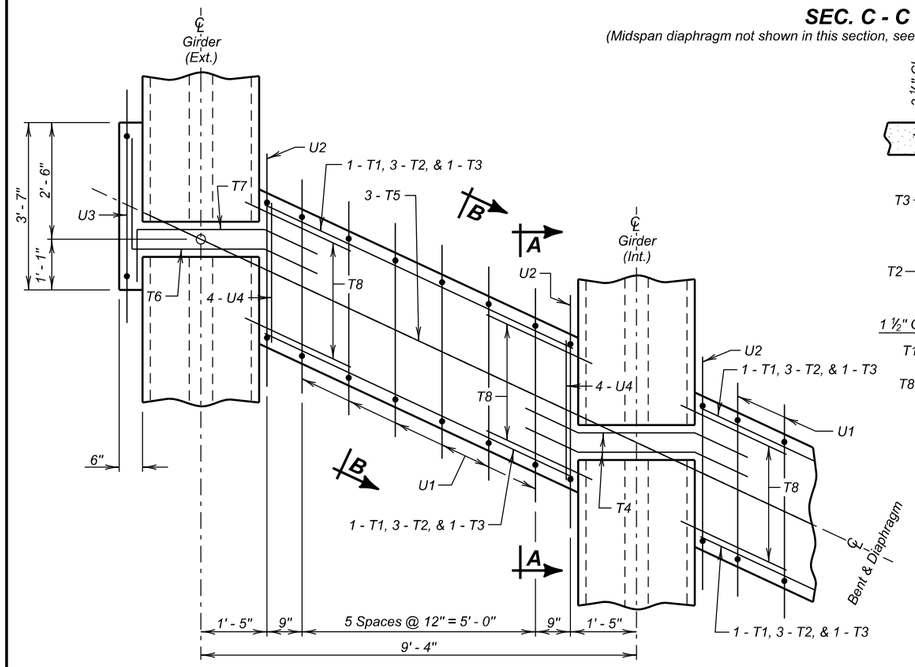

BENT DIAPHRAGMS

(Slab Not Shown)

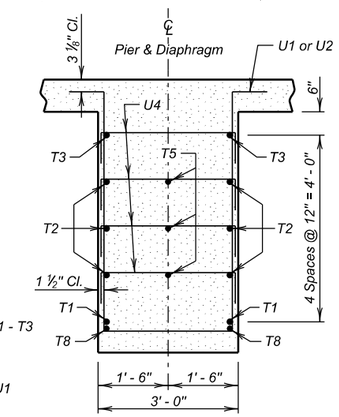

SEC. B - B

(Girders Not Shown)

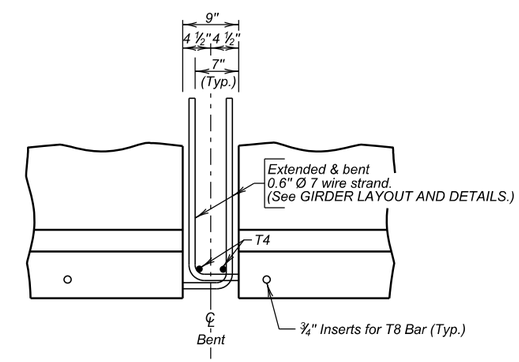

SEC. A - A

(Showing extended and bent strand detail and T4 bar placement at Bent. T6 & T7 similar at exterior girder.)

ESTIMATED QUANTITIES

	ITEM	UNIT	QUANTITY
☆	Class A45 Concrete, Bridge Deck	Cu.Yd.	512.5
⌀	Epoxy Coated Reinforcing Steel	Lb.	115647
⌀	Reinforcing Steel	Lb.	1936
	54" Minnesota Shape Prestressed Concrete Beam	Ft.	1560
	No. 7 Rebar Splice	Each	86
	Concrete Penetrating Sealer	Sq.Yd.	1400
	Deck Drain, Girder Bridge	Each	32

⌀ Includes quantities for Bent Diaphragms, Barrier Curbs, and Slab.

☆ Includes quantities for Bent Diaphragms, Barrier Curbs, Slab and Haunch. (Average depth of 2 ⅛" used for Haunch Quantity.) Concrete Quantity for Barrier Curbs is 0.0842 Cu.Yd. / Ft. and for End blocks is 1.1659 Cu.Yd. each.

SUPERSTRUCTURE DETAILS (C)

FOR

394' - 9⅛" PRESTR. GIRDER BRIDGE

32' - 0" ROADWAY — 25° LHF SKEW
OVER MOREAU RIVER — SEC. 10-T14N-R16E
STA. 662 + 14.12 TO 666 + 08.88 — NH 0073(63)182
STR. NO. 53-392-521 — HL-93

PERKINS COUNTY
S. D. DEPT. OF TRANSPORTATION
NOVEMBER 2013

DESIGNED BY	CK. DES. BY	DRAFTED BY	
JMH	MM	MG	Kevin N. Goeden
PERK02S7	02S7GB14		BRIDGE ENGINEER

STATE OF	PROJECT	SHEET NO.	TOTAL SHEETS
S.D.	NH 0073(63)182	E30	E45

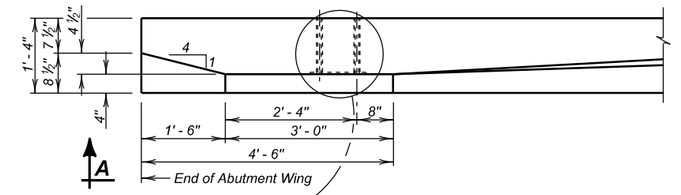

PART PLAN

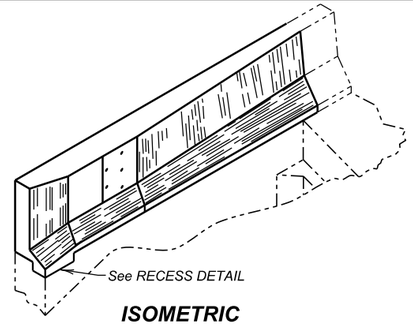

ISOMETRIC VIEW

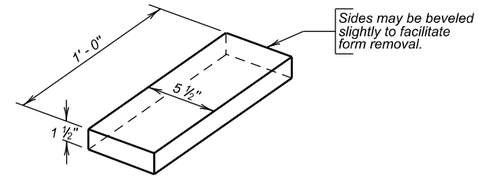

RECESS DETAIL

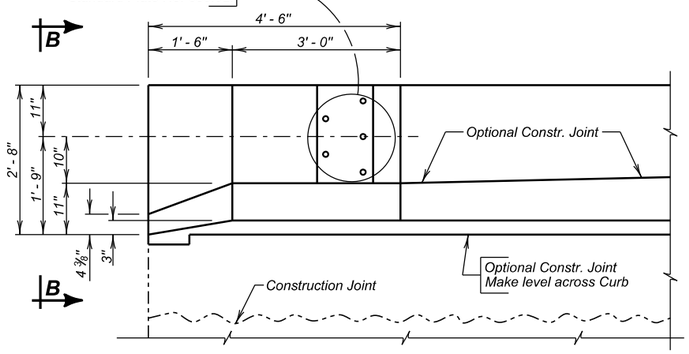

VIEW A - A

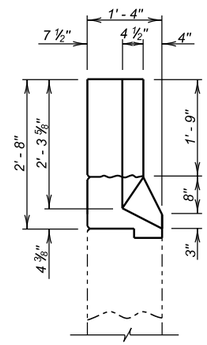

VIEW B - B

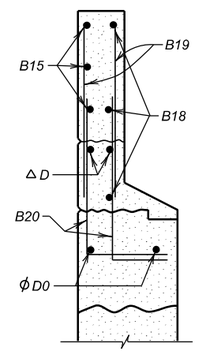

SEC. C - C

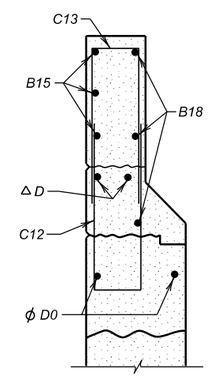

SEC. D - D

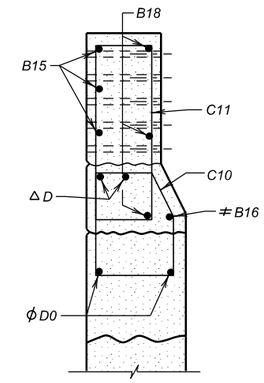

SEC. E - E

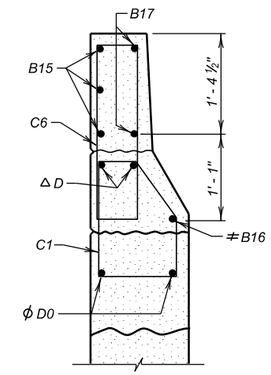

SEC. F - F

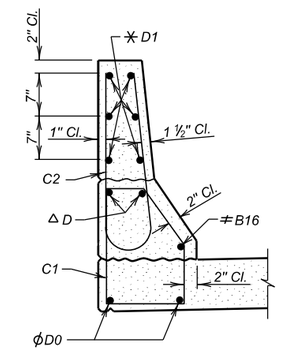

SEC. G - G

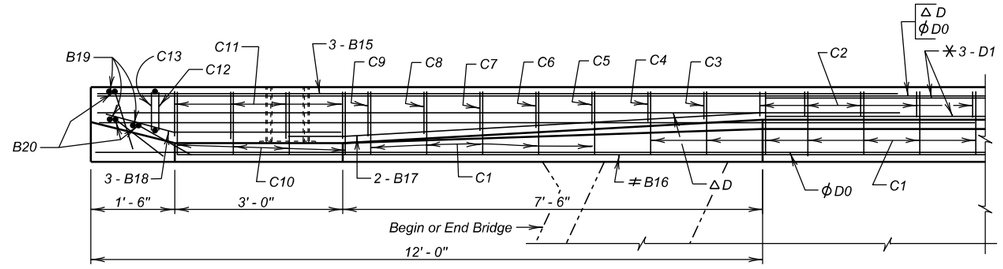

PLAN

ϕ Min. Lap = 3' - 3"
✳ Min. Lap = 2' - 3"
△ Min. Lap = 1' - 9"
≠ Min. Lap = 1' - 0"

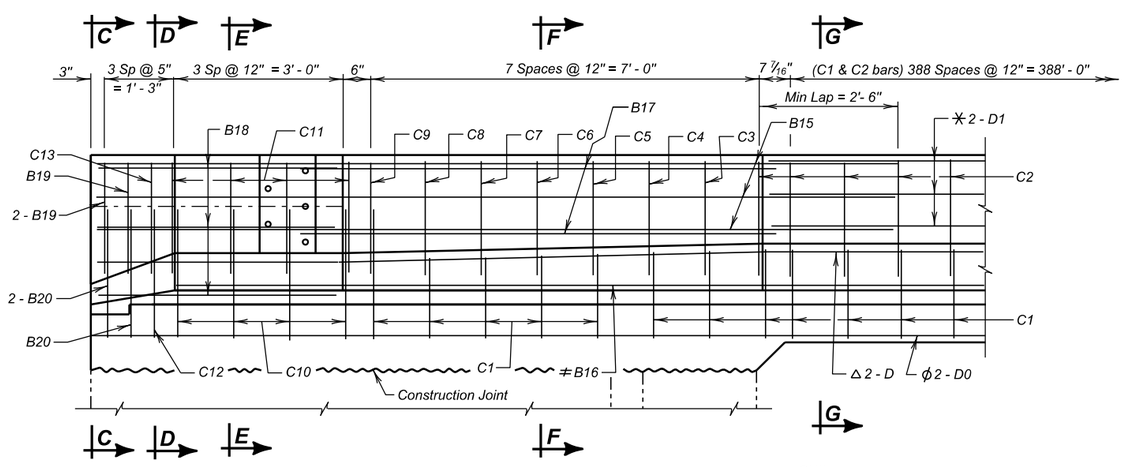

ELEVATION

NOTE:
For listing of re-bars see Reinforcing Schedule on SUPERSTRUCTURE DETAILS (B).

NOTE: The connection between the drop tube and bottom flange of girder shall be made prior to the placing of the deck slab. See General Drawing for spacing of deck drains and note sheets for notes regarding deck drains.

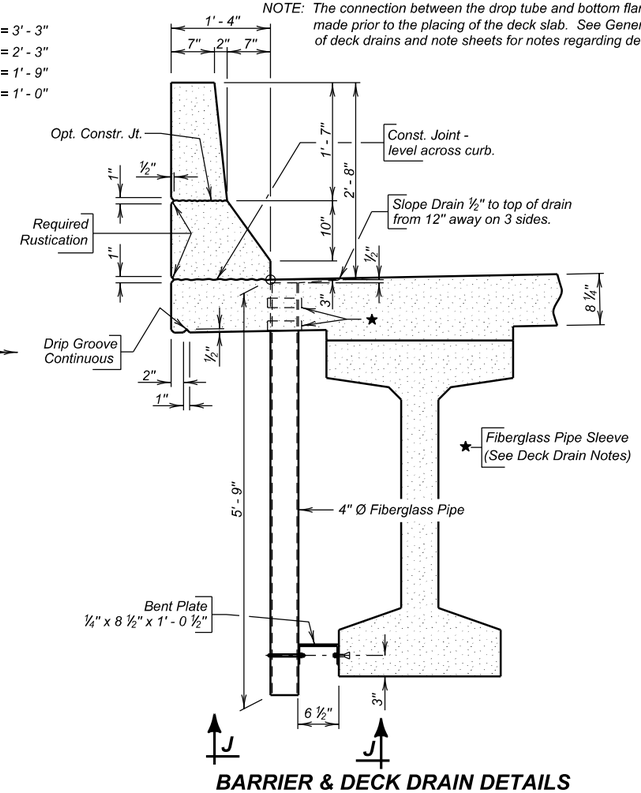

BARRIER & DECK DRAIN DETAILS

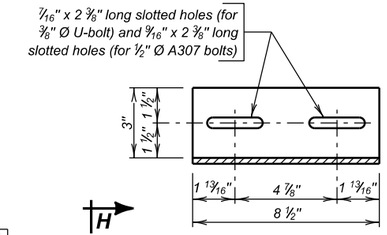

SEC. H - H

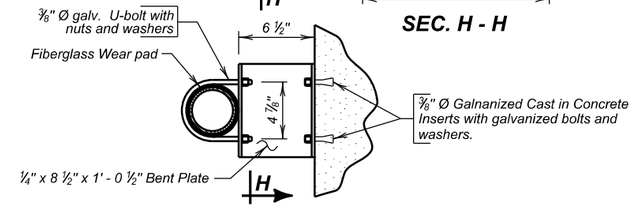

VIEW J - J

END BLOCK, BARRIER CURB & DECK DRAIN DETAILS

FOR

394' - 9⅛" PRESTR. GIRDER BRIDGE

32' - 0" ROADWAY — 25° LHF SKEW
OVER MOREAU RIVER — SEC. 10-T14N-R16E
STA. 662 + 14.12 TO 666 + 08.88 — NH 0073(63)182
STR. NO. 53-392-521 — HL-93

PERKINS COUNTY
S. D. DEPT. OF TRANSPORTATION
NOVEMBER 2013

DESIGNED BY	CK. DES. BY	DRAFTED BY	
JMH	MM	MG	Kevin N. Goeden BRIDGE ENGINEER
PERK02S7	02S7GB15		

STATE OF	PROJECT	SHEET NO.	TOTAL SHEETS
S.D.	NH 0073(63)182	E31	E45

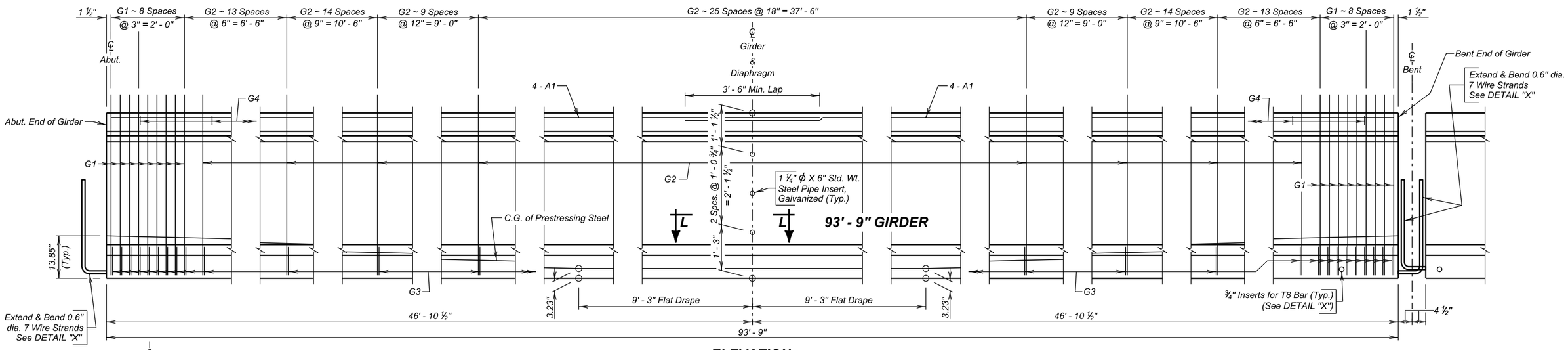

ELEVATION

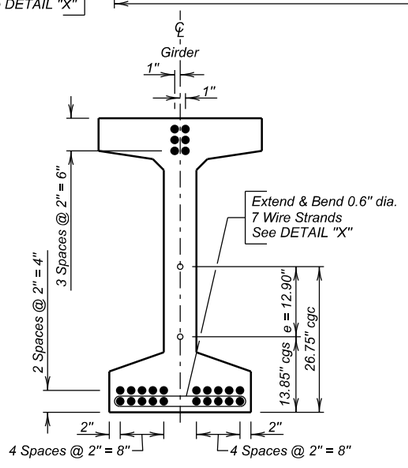

END VIEW

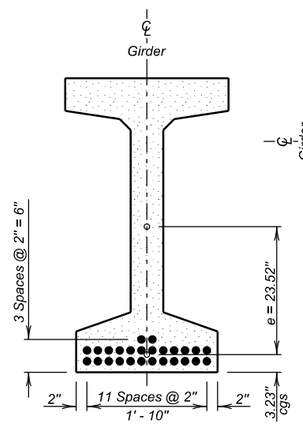

℄ SECTION

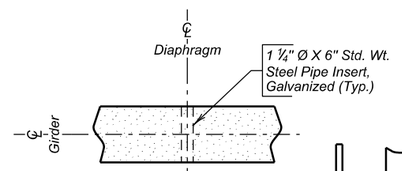

SEC. L - L

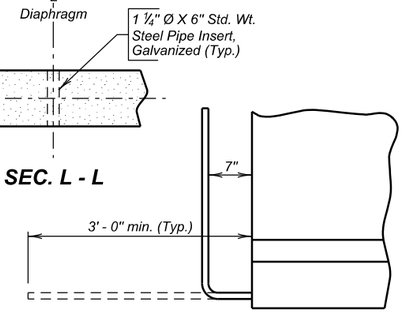

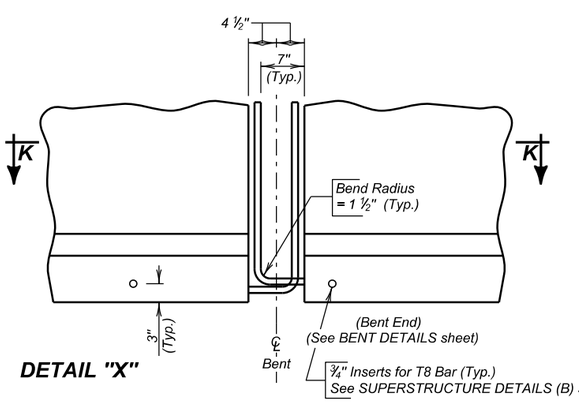

DETAIL "X"

REINFORCING SCHEDULE
(For One Girder)

Mk.	No.	Size	Length	Type	Bending Details
A1	8	7	48' - 8"	Str.	
G1	18	5	10' - 0"	S11	
G2	96	4	10' - 0"	S11	
G3	114	4	4' - 10"	S3A	
G4	47	4	2' - 8"	17	

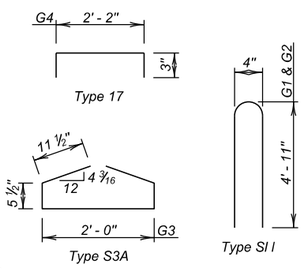

All dimensions are out to out of bars.

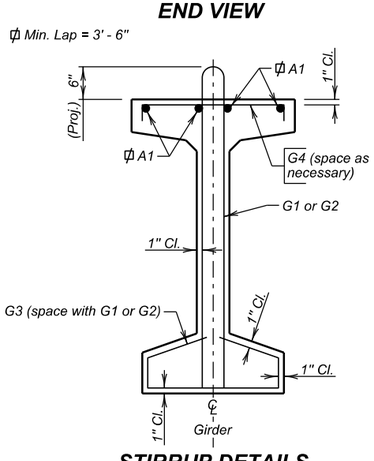

STIRRUP DETAILS

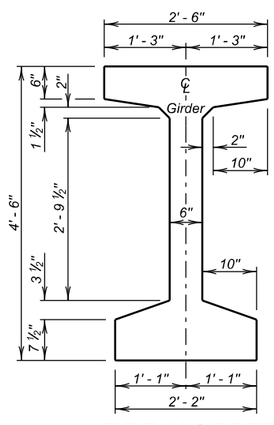

93' - 9" GIRDERS TYPE 54 GIRDER
(26 ~ 0.6 Dia. Type 270 Low Lax. Strands)

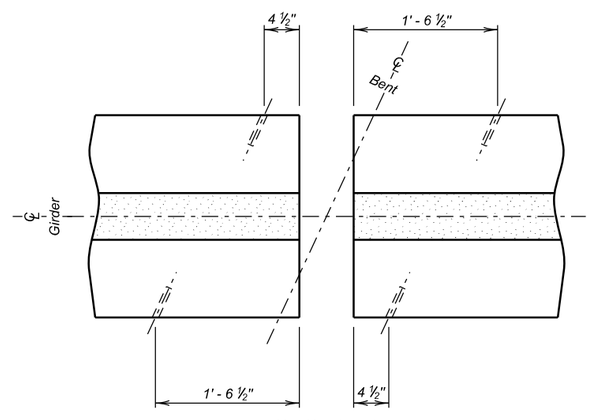

SEC. K - K
Layout for inserts at beam ends
(Bent only)

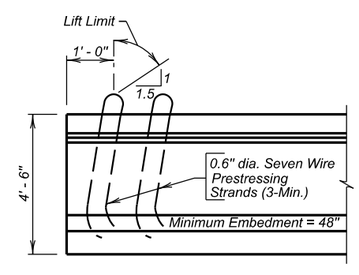

TYPICAL LIFTING DEVICE

NOTE:
Cast in Concrete inserts are required in exterior girders at deck drain locations. See GENERAL DRAWING and END BLOCK, BARRIER CURB and DECK DRAIN DETAILS.

93' - 9" GIRDER DETAILS
FOR
394' - 9⅛" PRESTR. GIRDER BRIDGE

32' - 0" ROADWAY — 25° LHF SKEW
OVER MOREAU RIVER — SEC. 10-T14N-R16E
STA. 662 + 14.12 TO 666 + 08.88 — NH 0073(63)182
STR. NO. 53-392-521 — HL-93

PERKINS COUNTY
S. D. DEPT. OF TRANSPORTATION
NOVEMBER 2013

DESIGNED BY	CK. DES. BY	DRAFTED BY	
JMH	MM	MG	Kevin N. Goeden
PERK02S7	02S7GB16		BRIDGE ENGINEER

STATE OF	PROJECT	SHEET NO.	TOTAL SHEETS
S.D.	NH 0073(63)182	E32	E45

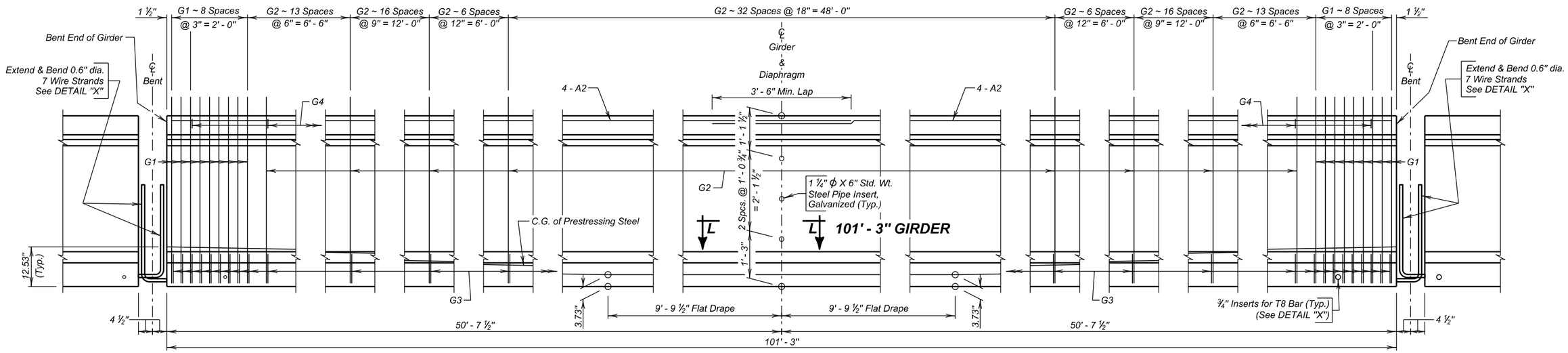

ELEVATION

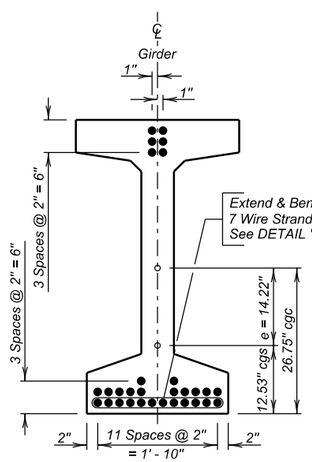

END VIEW

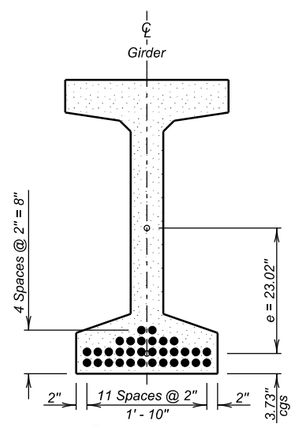

℄ SECTION

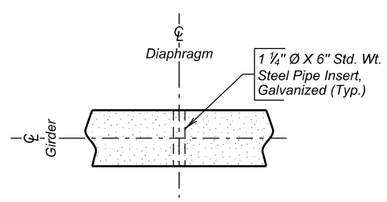

SEC. L - L

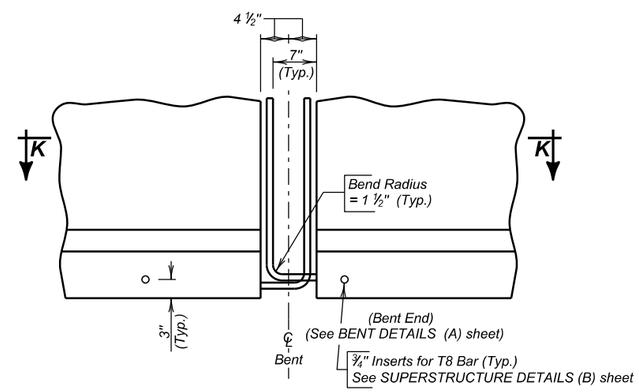

DETAIL "X"

REINFORCING SCHEDULE
(For One Girder)

Mk.	No.	Size	Length	Type	Bending Details
A2	8	7	52' - 5"	Str.	
G1	18	5	10' - 0"	S11	
G2	102	4	10' - 0"	S11	
G3	120	4	4' - 10"	S3A	
G4	51	4	2' - 8"	17	

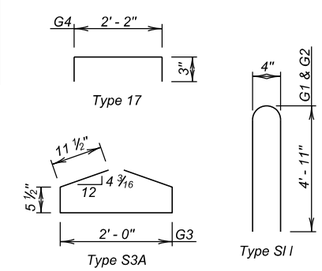

All dimensions are out to out of bars.

ϕ Min. Lap = 3' - 6"

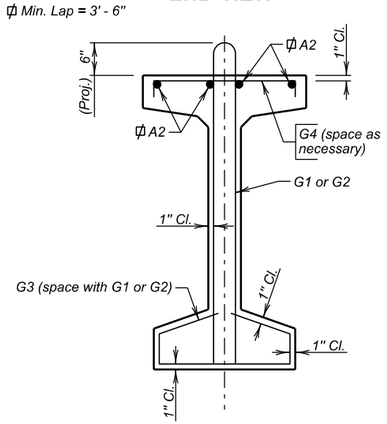

STIRRUP DETAILS

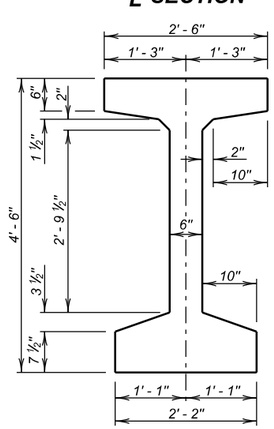

101' - 3" GIRDERS TYPE 54 GIRDER
(30 ~ 0.6 Dia. Type 270 Low Lax. Strands)

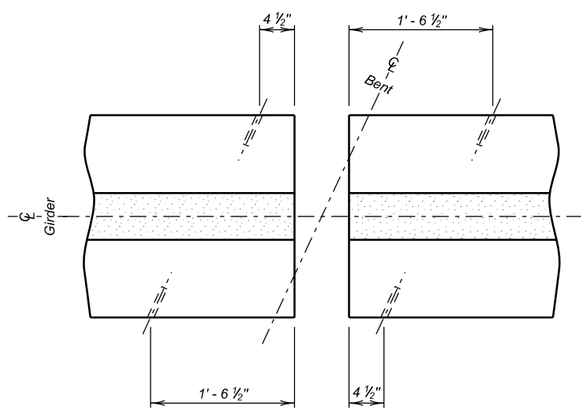

SEC. K - K
Layout for inserts at beam ends (Bent only)

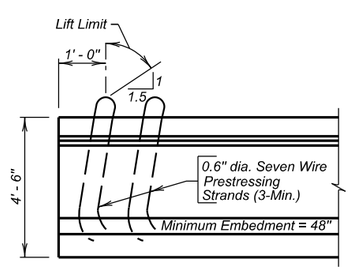

TYPICAL LIFTING DEVICE

NOTE:
Cast in Concrete inserts are required in exterior girders at deck drain locations. See GENERAL DRAWING and END BLOCK, BARRIER CURB and DECK DRAIN DETAILS.

101' - 3" GIRDER DETAILS
FOR
394' - 9⅛" PRESTR. GIRDER BRIDGE

32' - 0" ROADWAY — 25° LHF SKEW
OVER MOREAU RIVER — SEC. 10-T14N-R16E
STA. 662 + 14.12 TO 666 + 08.88 — NH 0073(63)182
STR. NO. 53-392-521 — HL-93

PERKINS COUNTY
S. D. DEPT. OF TRANSPORTATION
NOVEMBER 2013

DESIGNED BY	CK. DES. BY	DRAFTED BY	
JMH	MM	MG	Kevin N. Goeden
PERK02S7	02S7GB17		BRIDGE ENGINEER

STATE OF	PROJECT	SHEET NO.	TOTAL SHEETS
S.D.	NH 0073(63)182	E33	E45

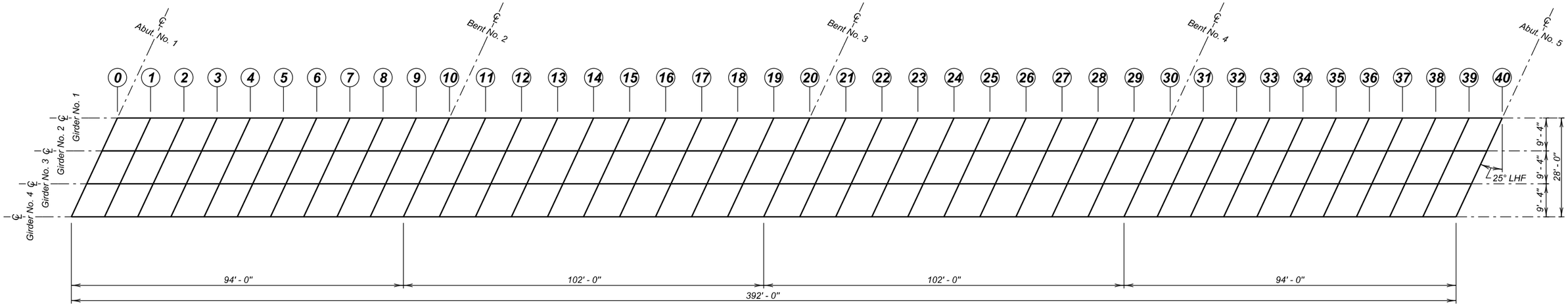

GIRDER LAYOUT

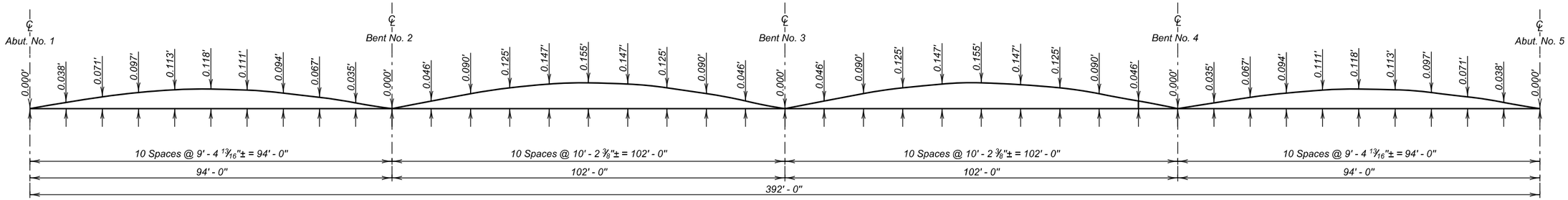

CAMBER DIAGRAM

The Camber shown is the amount which has been added to the theoretical slab elevations to get slab elevations shown in the table of Slab Form Elevations and Calculations on sheet 19 of 30. Camber shown is for D. L. of slab, traffic barrier, and haunch, but does not include D. L. of beams.

ERECTION DATA

FOR

394' - 9⅛" PRESTR. GIRDER BRIDGE

32' - 0" ROADWAY — 25° LHF SKEW
OVER MOREAU RIVER — SEC. 10-T14N-R16E
STA. 662 + 14.12 TO 666 + 08.88 — NH 0073(63)182
STR. NO. 53-392-521 — HL-93

PERKINS COUNTY

S. D. DEPT. OF TRANSPORTATION

NOVEMBER 2013

DESIGNED BY	CK. DES. BY	DRAFTED BY	
JMH	MM	MG	Kevin N. Goeden
PERK02S7	02S7GB18		BRIDGE ENGINEER

STATE OF	PROJECT	SHEET NO.	TOTAL SHEETS
S.D.	NH 0073(63)182	E34	E45

TABLE OF SLAB FORM ELEVATIONS AND CALCULATIONS

		0	1	2	3	4	5	6	7	8	9	10	11	12	13	14	15	16	17	18	19	20
Girder No. 1	Elev. "M"	2273.619	2273.630	2273.636	2273.634	2273.623	2273.600	2273.566	2273.521	2273.467	2273.408	2273.345	2273.361	2273.376	2273.381	2273.373	2273.351	2273.313	2273.262	2273.197	2273.123	2273.047
	(-) Elev."N"																					
	(=) d																					
	(-) 0. 688'																					
	(=) h																					
Girder No. 2	Elev. "M"	2273.819	2273.829	2273.835	2273.834	2273.822	2273.800	2273.765	2273.721	2273.666	2273.607	2273.544	2273.561	2273.575	2273.580	2273.572	2273.551	2273.513	2273.461	2273.396	2273.322	2273.247
	(-) Elev."N"																					
	(=) d																					
	(-) 0. 688'																					
	(=) h																					
Girder No. 3	Elev. "M"	2273.832	2273.842	2273.848	2273.846	2273.835	2273.812	2273.778	2273.733	2273.679	2273.620	2273.557	2273.573	2273.588	2273.593	2273.585	2273.563	2273.525	2273.474	2273.409	2273.335	2273.259
	(-) Elev."N"																					
	(=) d																					
	(-) 0. 688'																					
	(=) h																					
Girder No. 4	Elev. "M"	2273.658	2273.668	2273.674	2273.672	2273.661	2273.638	2273.604	2273.559	2273.505	2273.446	2273.383	2273.399	2273.414	2273.419	2273.411	2273.389	2273.352	2273.300	2273.235	2273.161	2273.085
	(-) Elev."N"																					
	(=) d																					
	(-) 0. 688'																					
	(=) h																					

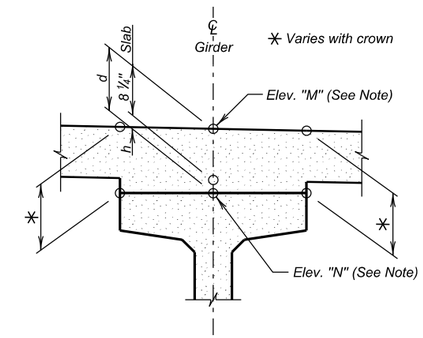

NOTE —

The table contains the information necessary to determine the depth of concrete over the girders at points shown. Calculations may be carried in the spaces provided. Elev. "M" is the design elevation of the top of slab before any concrete has been poured. This elevation includes correction for camber and dead load deflection. Elev. "N" is a field measured elevation taken on top of girders at the points shown with the girders in their positions. This elevation must be taken after erection is completed, but prior to placing any of the concrete. Girders shall not be supported between bearings when elevations are taken.

TABLE OF SLAB FORM ELEVATIONS AND CALCULATIONS

		21	22	23	24	25	26	27	28	29	30	31	32	33	34	35	36	37	38	39	40
Girder No. 1	Elev. "M"	2273.064	2273.078	2273.083	2273.075	2273.053	2273.016	2272.964	2272.899	2272.825	2272.750	2272.757	2272.762	2272.761	2272.751	2272.730	2272.698	2272.655	2272.601	2272.541	2272.475
	(-) Elev."N"																				
	(=) d																				
	(-) 0. 688'																				
	(=) h																				
Girder No. 2	Elev. "M"	2273.263	2273.277	2273.282	2273.275	2273.253	2273.215	2273.163	2273.099	2273.025	2272.949	2272.957	2272.961	2272.961	2272.950	2272.930	2272.897	2272.854	2272.800	2272.740	2272.675
	(-) Elev."N"																				
	(=) d																				
	(-) 0. 688'																				
	(=) h																				
Girder No. 3	Elev. "M"	2273.276	2273.290	2273.295	2273.287	2273.266	2273.228	2273.176	2273.111	2273.037	2272.962	2272.969	2272.974	2272.973	2272.963	2272.942	2272.910	2272.867	2272.813	2272.753	2272.687
	(-) Elev."N"																				
	(=) d																				
	(-) 0. 688'																				
	(=) h																				
Girder No. 4	Elev. "M"	2273.102	2273.116	2273.121	2273.113	2273.092	2273.054	2273.002	2272.937	2272.863	2272.788	2272.795	2272.800	2272.799	2272.789	2272.769	2272.736	2272.693	2272.639	2272.579	2272.513
	(-) Elev."N"																				
	(=) d																				
	(-) 0. 688'																				
	(=) h																				

NOTE —

Based on a "d" of 11 ½" at the ℄ of each abutment and 11 ½" at the ℄ of the Bent (see SEC. C - C on SUPERSTRUCTURE DETAILS (B), it is anticipated that the midspan haunch dimension "h" over the ℄ of each girder will be 1 ¼". If when computing the dimensions in the table, it is found that any dimension "h" is less than zero or greater than 4" the Office of Bridge Design of the South Dakota Dept. of Transportation shall be notified immediately. After the "Table of Slab Form Elevations and Calculations" has been completely filled out and approved for deck forming, a copy shall be forwarded to the Office of Bridge Design for review and analysis for the purpose of securing information relative to camber growth in the beams. This information is necessary for preparing plans for future structures of this type.

SLAB FORM ELEVATIONS

FOR

394' - 9⅛" PRESTR. GIRDER BRIDGE

32' - 0" ROADWAY — 25° LHF SKEW
OVER MOREAU RIVER — SEC. 10-T14N-R16E
STA. 662 + 14.12 TO 666 + 08.88 — NH 0073(63)182
STR. NO. 53-392-521 — HL-93

PERKINS COUNTY

S. D. DEPT. OF TRANSPORTATION

NOVEMBER 2013

DESIGNED BY	CK. DES. BY	DRAFTED BY	
JMH	MM	MG	Kevin N. Goeden
PERK02S7	02S7GB19		BRIDGE ENGINEER

STATE OF	PROJECT	SHEET NO.	TOTAL SHEETS
S.D.	NH 0073(63)182	E35	E45

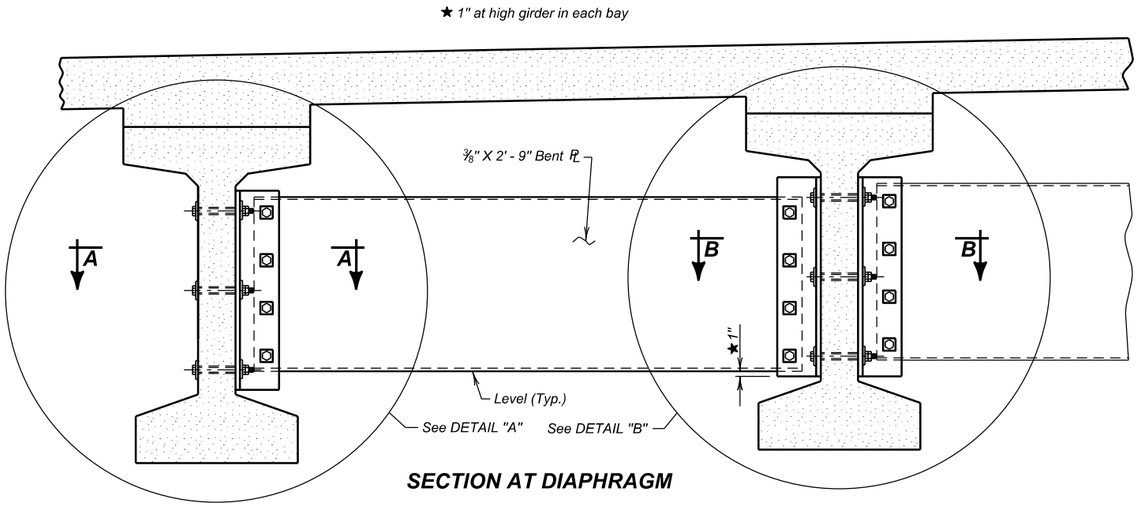

SECTION AT DIAPHRAGM

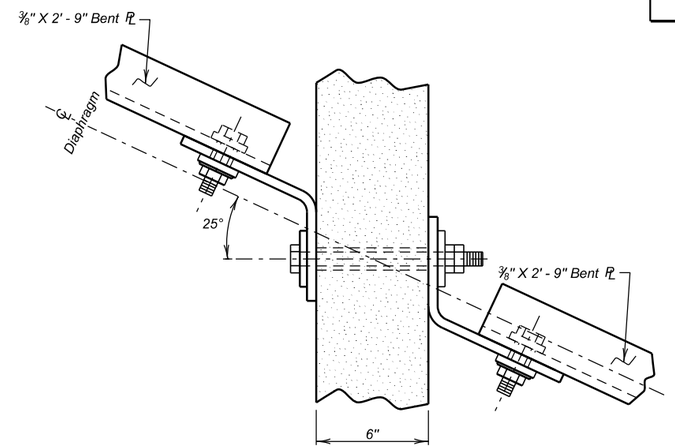

SEC. B - B

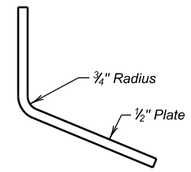

DETAIL "X"

✳ Bolt head shall be adjacent to the Exterior Face of the Exterior Girder.

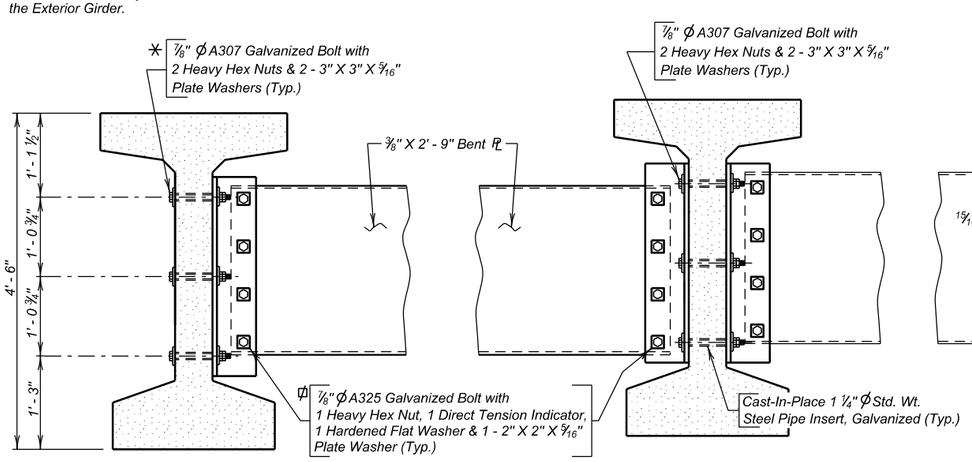

DETAIL "A"
(Typ. Exterior Girder)

ϕ Bolt Head and Direct Tension Indicator shall be adjacent to 15/16" ϕ holes in Bent Plate Diaphragm.

DETAIL "B"
(Typ. Interior Girder)

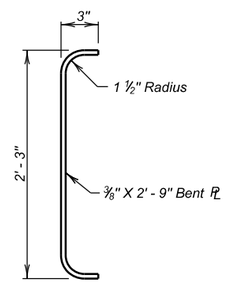

END VIEW BENT PLATE DIAPHRAGM

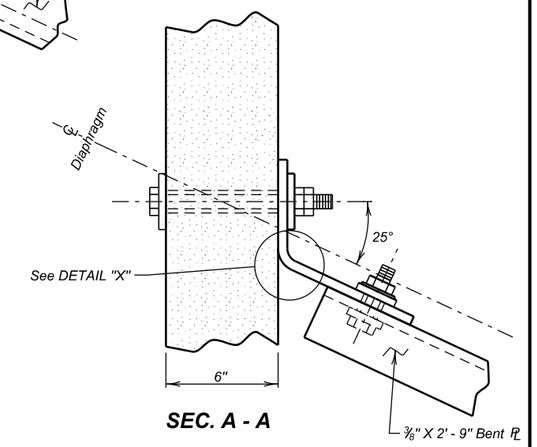

SEC. A - A

NOTES:

1. All steel for the diaphragms including plate washers shall conform to ASTM A36 and shall be galvanized in accordance with ASTM A123 or A153. Bolts, nuts, and washers shall be galvanized in accordance with ASTM F2329. Direct Tension Indicators shall conform to Section 410.3.G.5b of the Specifications.
2. The steel diaphragms between adjacent girders shall be installed as soon as possible and in conjunction with girder erection.
3. All costs associated with furnishing, fabricating, assembly and installation of diaphragms shall be included in the lump sum price for Structural Steel, Miscellaneous.

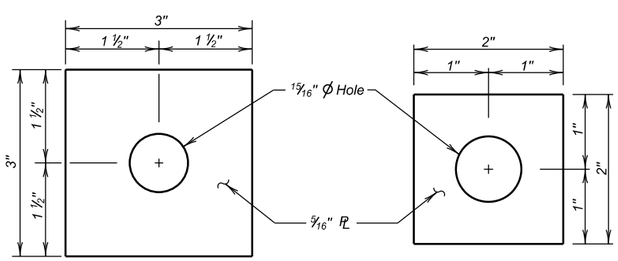

PLATE WASHER DETAILS

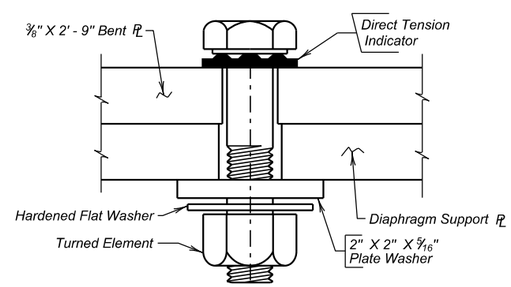

DIRECT TENSION INDICATOR DETAIL

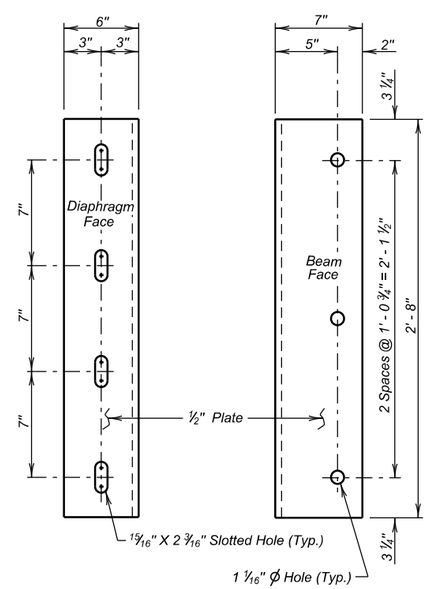

DIAPHRAGM SUPPORT PLATE

ESTIMATED QUANTITIES

ITEM	UNIT	QUANTITY
△ Structural Steel, Miscellaneous	L.S.	Lump Sum

△ For informational purposes only, the estimated weight of structural steel is 6279 Lbs. for 12 diaphragms.

DIAPHRAGM DETAILS

FOR

394' - 9⅛" PRESTR. GIRDER BRIDGE

32' - 0" ROADWAY — 25° LHF SKEW
OVER MOREAU RIVER — SEC. 10-T14N-R16E
STA. 662 + 14.12 TO 666 + 08.88 — NH 0073(63)182
STR. NO. 53-392-521 — HL-93

PERKINS COUNTY
S. D. DEPT. OF TRANSPORTATION
NOVEMBER 2013

DESIGNED BY	CK. DES. BY	DRAFTED BY	
JMH	MM	MG	Kevin N. Boeden
PERK02S7	02S7GB20		BRIDGE ENGINEER

STATE OF	PROJECT	SHEET NO.	TOTAL SHEETS
S.D.	NH 0073(63)182	E36	E45

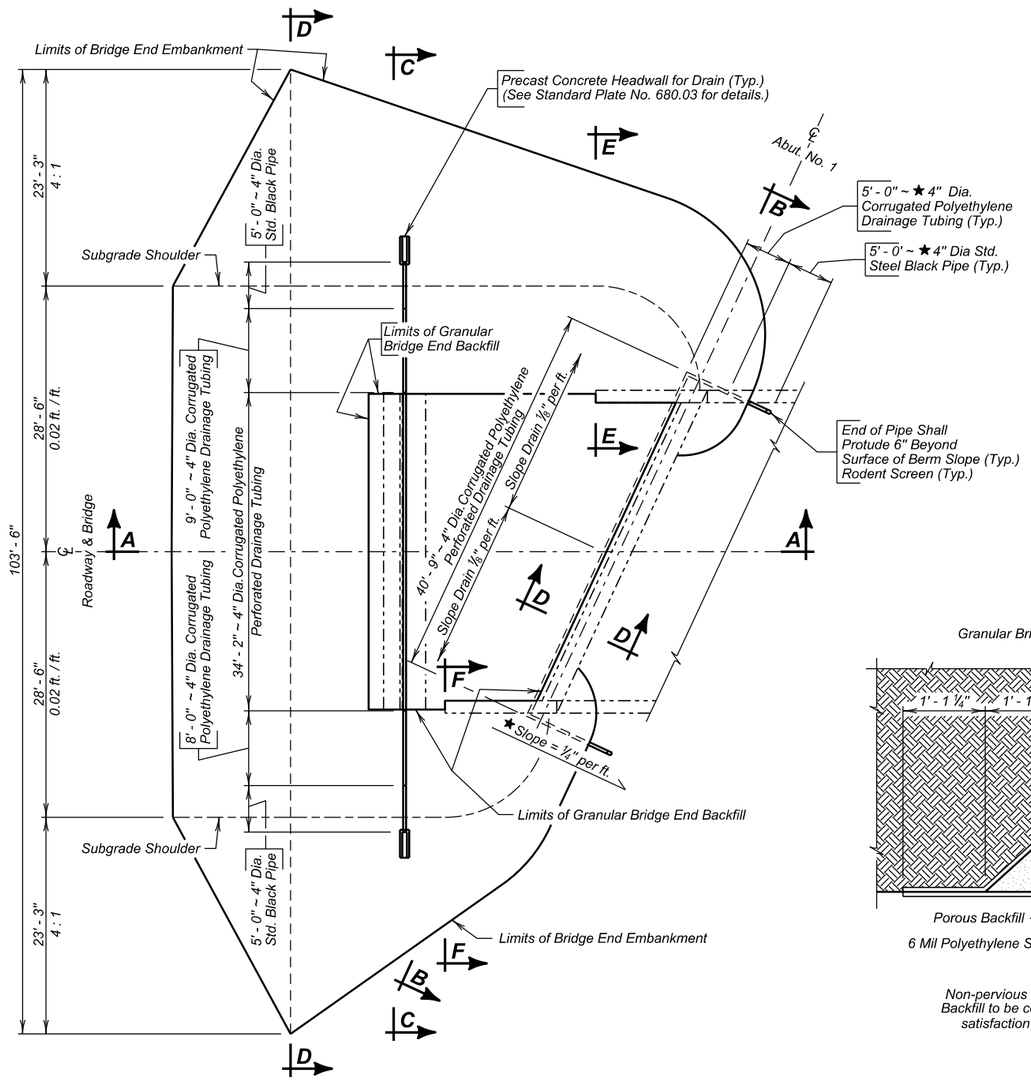

PLAN

(Bridge End Backfill shown adjacent to Abut. No. 1, Abut. No. 5 similar by rotation.)

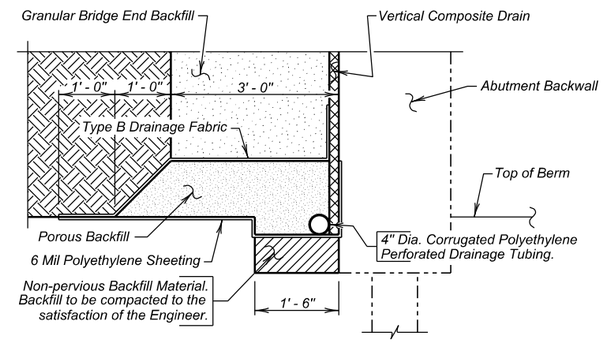

SEC. D - D

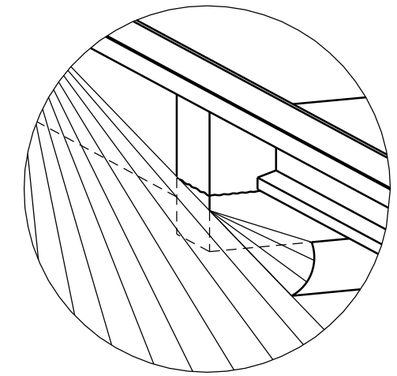

SPILL CONE DETAIL AT EMBANKMENT

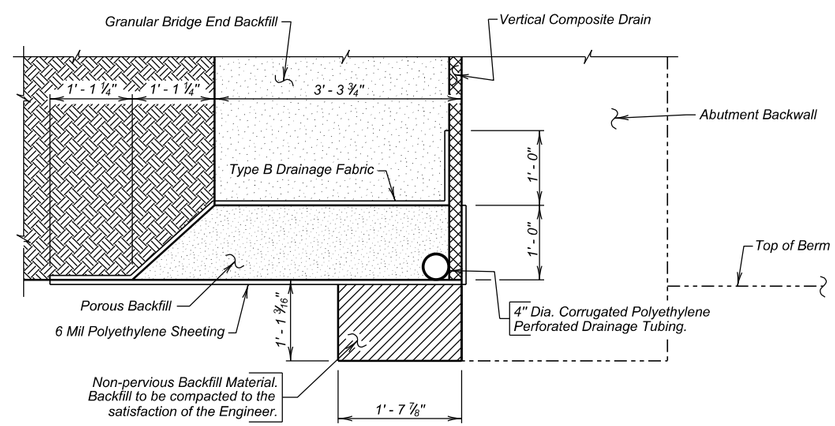

DETAIL "X"

ESTIMATED QUANTITIES

(For Two Abutments)

ITEM	UNIT	QUANTITY
Granular Bridge End Backfill	Cu. Yd.	78.5
∡ Bridge End Embankment	Cu. Yd.	1460
⊕ ⊕ Porous Backfill	Ton	25.2
4" Underdrain Pipe	Ft.	244
⊕ Approach Slab Underdrain Excavation	Cu. Yd.	4.7
Precast Concrete Headwall for Drain	Each	4

1. 150 ft. 4" dia. Corrugated Polyethylene Perforated Drainage Tubing.
2. 54 ft. 4" dia. Corrugated Polyethylene Drainage Tubing.
3. 40 ft. 4" dia. Std. Black Steel Pipe with Rodent Screens.
4. 489 sq. ft. Vertical Composite Drain

Items 1 thru 4 are approximate quantities contained in the 4" Underdrain Pipe and are for information only.

5. 3042 sq. ft. 6 mil Polyethylene Sheeting, not including laps.
6. 250 sq. yd. Type B Drainage Fabric.

Items 5 and 6 are approximate quantities contained in the Granular Bridge End Backfill and are for information only.

⊕ For estimating purposes only, a factor of 1.89 tons/cu. yd. was used to convert cu. yds. to tons.

∡ Shrinkage Factor of 1.25 Used.

⊕ Quantity based on a 12" wide trench.

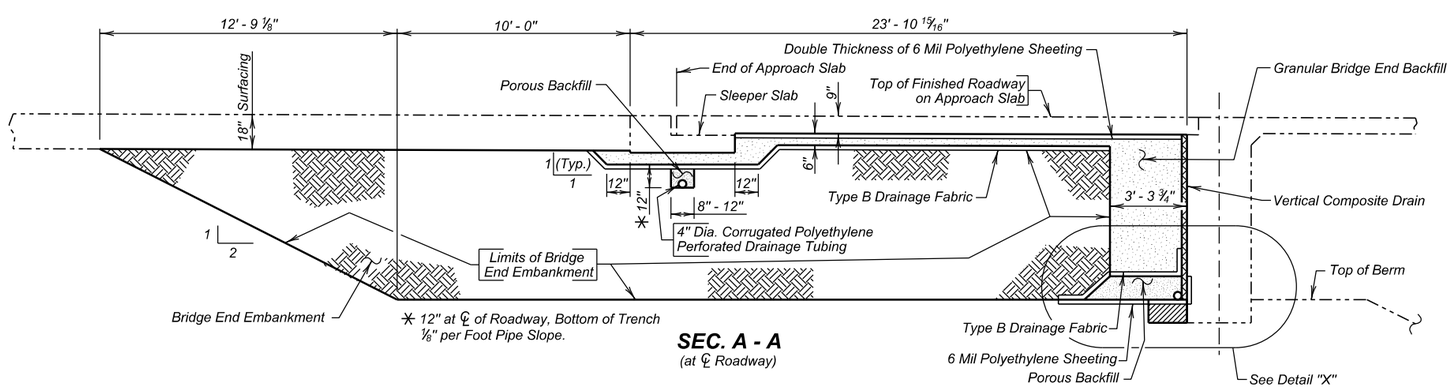

SEC. A - A

(at ℄ Roadway)

DETAILS OF BRIDGE END BACKFILL (A)

FOR

394' - 9 1/8" PRESTR. GIRDER BRIDGE

32' - 0" ROADWAY — 25° LHF SKEW
OVER MOREAU RIVER — SEC. 10-T14N-R16E
STA. 662 + 14.12 TO 666 + 08.88 — NH 0073(63)182
STR. NO. 53-392-521 — HL-93

PERKINS COUNTY
S. D. DEPT. OF TRANSPORTATION
NOVEMBER 2013

DESIGNED BY	CK. DES. BY	DRAFTED BY	
JMH	MM	MG	Kevin N. Goeden
PERK02S7	02S7GB21		BRIDGE ENGINEER

STATE OF	PROJECT	SHEET NO.	TOTAL SHEETS
S.D.	NH 0073(63)182	E37	E45

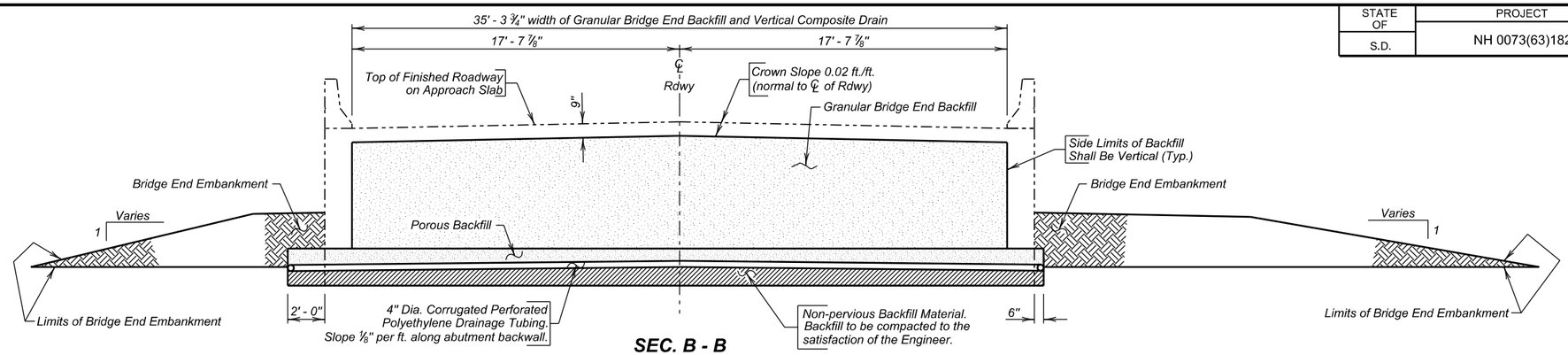

SEC. B - B

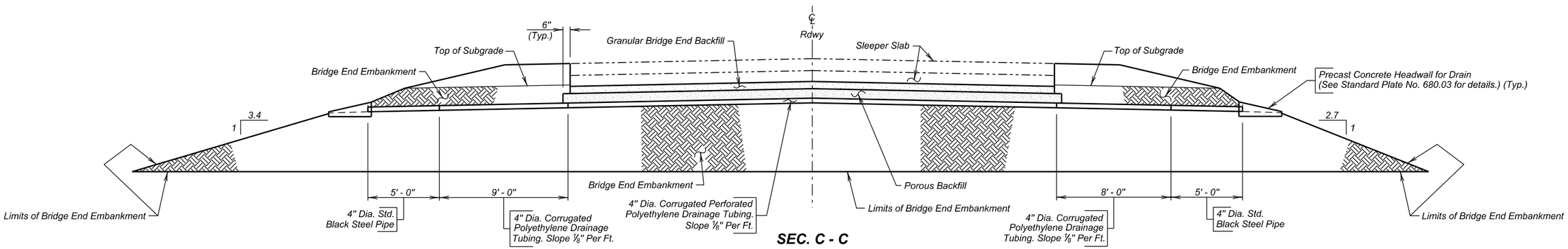

SEC. C - C

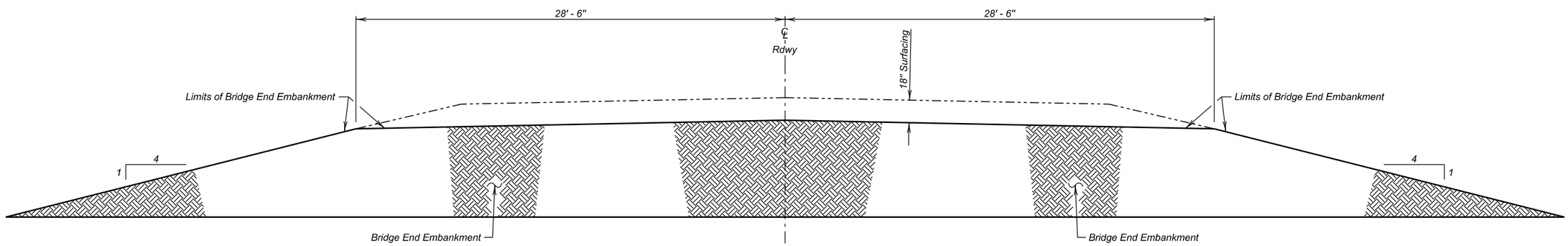

SEC. D - D

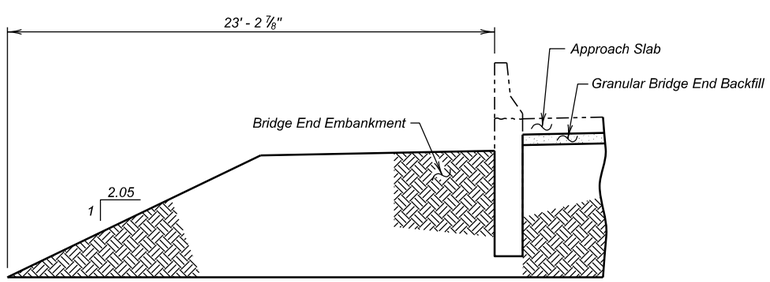

VIEW E - E

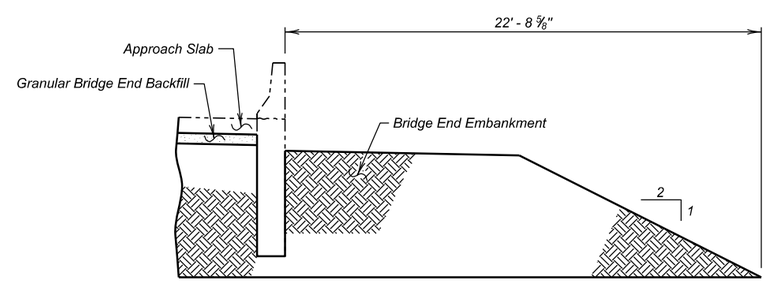

VIEW F - F

DETAILS OF BRIDGE END BACKFILL (B)

FOR

394' - 9 1/8" PRESTR. GIRDER BRIDGE

32' - 0" ROADWAY — 25° LHF SKEW
OVER MOREAU RIVER — SEC. 10-T14N-R16E
STA. 662 + 14.12 TO 666 + 08.88 — NH 0073(63)182
STR. NO. 53-392-521 — HL-93

PERKINS COUNTY
S. D. DEPT. OF TRANSPORTATION
NOVEMBER 2013

DESIGNED BY	CK. DES. BY	DRAFTED BY	
JMH	MM	MG	Kevin N. Goeden
PERK02S7	02S7GB22		BRIDGE ENGINEER

STATE OF	PROJECT	SHEET NO.	TOTAL SHEETS
S.D.	NH 0073(63)182	E38	E45

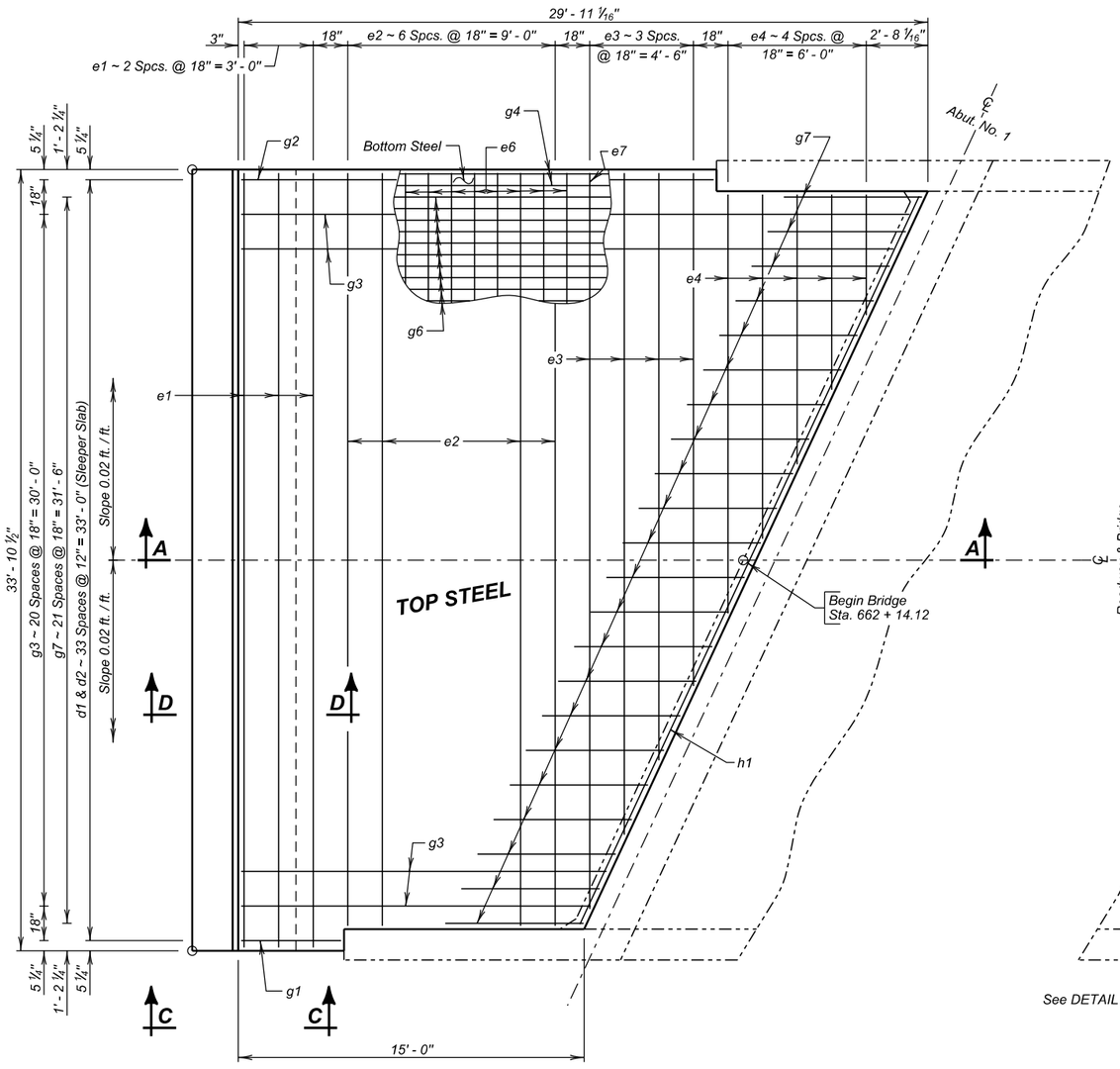

PLAN
(Begin Bridge)

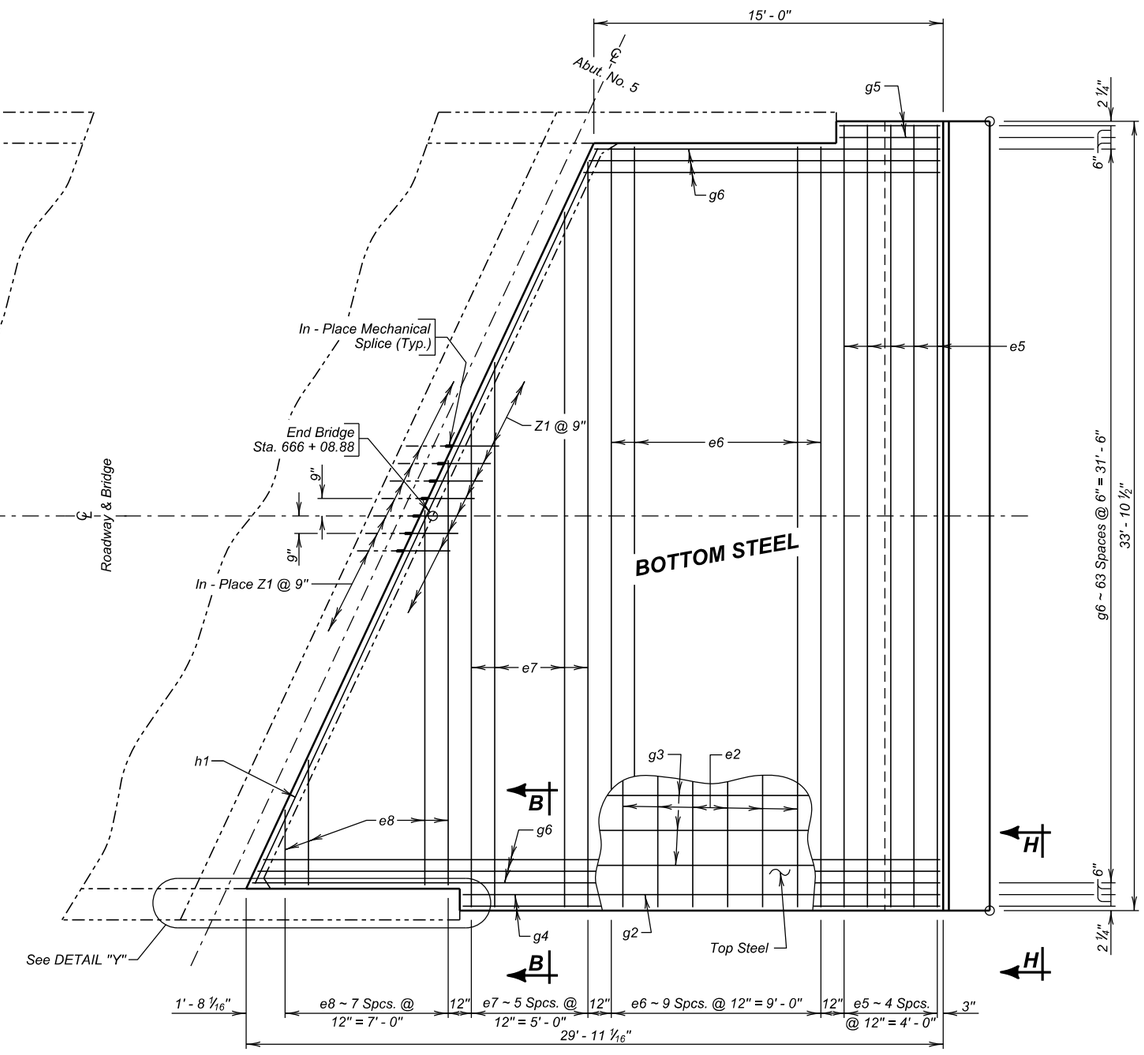

PLAN
(End Bridge)

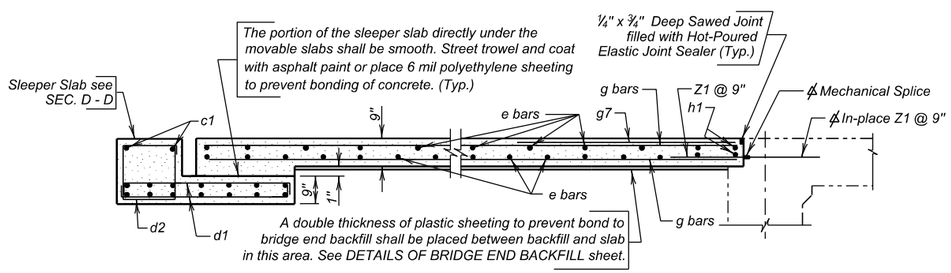

SEC. A - A

℄ In-place Z1 bars and Mechanical Splices are listed and included in superstructure quantities. See SUPERSTRUCTURE DETAILS (C).

DETAILS OF APPROACH SLAB ADJACENT TO BRIDGE (A)

FOR

394' - 9 1/8" PRESTR. GIRDER BRIDGE

32' - 0" ROADWAY — 25° LHF SKEW
OVER MOREAU RIVER — SEC. 10-T14N-R16E
STA. 662 + 14.12 TO 666 + 08.88 — NH 0073(63)182
STR. NO. 53-392-521 — HL-93

PERKINS COUNTY
S. D. DEPT. OF TRANSPORTATION
NOVEMBER 2013

DESIGNED BY	CK. DES. BY	DRAFTED BY	
JMH	MM	MG	Kevin N. Goeden
PERK02S7	02S7GB23		BRIDGE ENGINEER

STATE OF	PROJECT	SHEET NO.	TOTAL SHEETS
S.D.	NH 0073(63)182	E39	E45

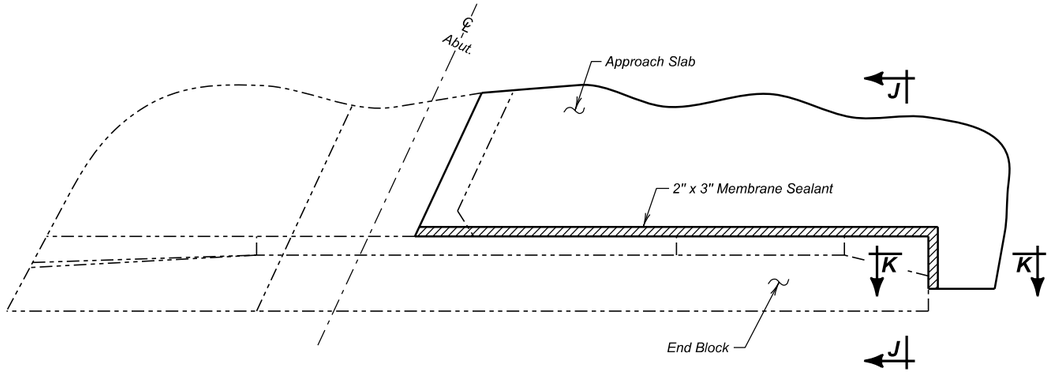

DETAIL "Y"

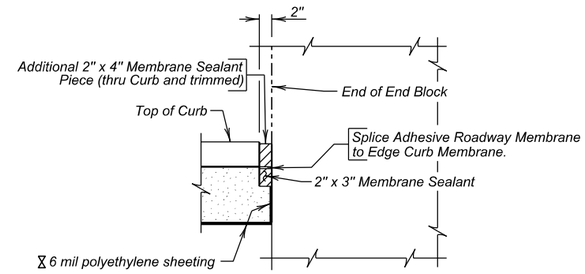

SEC. K - K

6 mil polyethylene sheeting shall not interfere with the bond between the Membrane Sealant and the approach slab.

REINFORCING SCHEDULE

(For Two Approach Slabs and Two Sleeper Slabs)

	Mk.	No.	Size	Length	Type
	Approach Slabs				
	e1	6	4	33' - 7"	Str.
	e2	14	4	32' - 5"	Str.
✂	e3	4	4	53' - 8"	Str.
✂	e4	5	4	22' - 5"	Str.
	e5	10	6	33' - 7"	Str.
	e6	20	6	32' - 5"	Str.
✂	e7	6	6	52' - 7"	Str.
✂	e8	8	6	20' - 4"	Str.
	g1	2	4	4' - 1"	Str.
	g2	2	4	20' - 4"	Str.
✂	g3	21	4	44' - 2"	Str.
	g4	4	8	20' - 4"	Str.
	g5	4	8	4' - 1"	Str.
✂	g6	64	8	44' - 4"	Str.
	g7	44	4	6' - 0"	Str.
	h1	4	6	34' - 10"	Str.
	Z1	86	7	2' - 0"	Str.
	Sleeper Slabs				
	c1	32	5	33' - 7"	Str.
	d1	136	4	5' - 0"	2
	d2	68	4	6' - 1"	T2

Bending Details

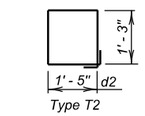

Type T2

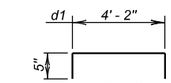

Type 2

14' - 10"	29' - 6"	g6
15' - 2"	29' - 0"	g3
2' - 8"	17' - 8"	e8
20' - 11"	31' - 8"	e7
4' - 9"	17' - 8"	e4
22' - 0"	31' - 8"	e3

Cut 64	Cut 21	Cut 8	Cut 6	Cut 5	Cut 4	
g6	g3	e8	e7	e4	e3	

31' - 8"	22' - 0"	e3
17' - 8"	4' - 9"	e4
31' - 8"	20' - 11"	e7
17' - 8"	2' - 8"	e8
29' - 0"	15' - 2"	g3
29' - 6"	14" - 10"	g6

NOTE -
All bars to be Epoxy Coated.
All dimensions are out to out of bars.
✂ See cutting diagram.

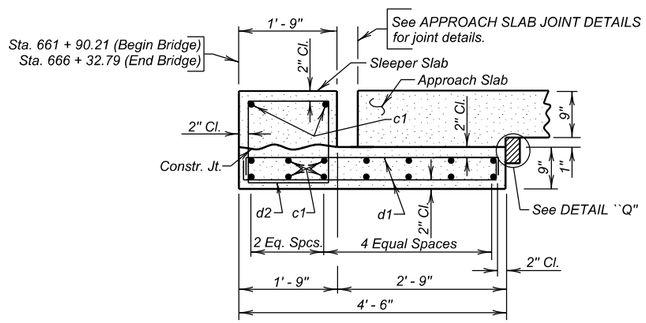

SEC. D - D
(Sleeper Slab)

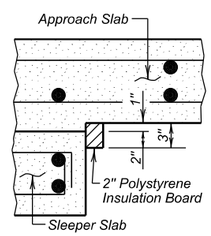

DETAIL "Q"

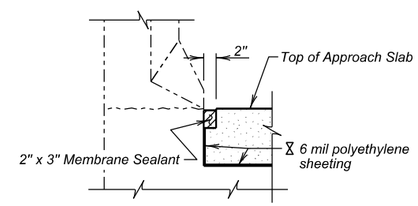

SEC. J - J

ESTIMATED QUANTITIES

(For Two Approach Slabs & Two Sleeper Slabs)

ITEM	UNIT	QUANTITY
Concrete Approach Slab for Bridge	Sq. Yd.	165.0
Concrete Approach Sleeper Slab for Bridge	Sq. Yd.	33.9

1. 41.8 Cu. Yds. Concrete in Approach Slabs.
2. 12078 Lbs. Epoxy coated Re-Steel in Approach Slabs.
3. 12.1 Cu. Yds. Concrete in Sleeper Slabs.
4. 1851 Lbs. Epoxy coated Re-Steel in Sleeper Slab.
5. 17 Sq. Ft. of 2" Polystyrene Insulation Board
6. 44 Ft. of Membrane Sealant adjacent to wings.

Items 1 thru 6 are approximate quantities contained in the above bid items and are for information only.

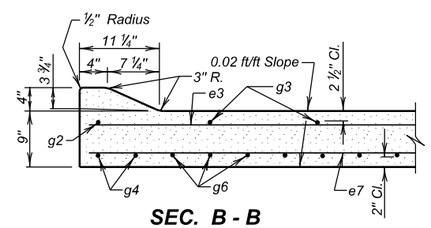

SEC. B - B

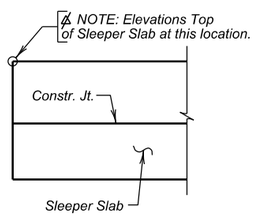

VIEW H - H

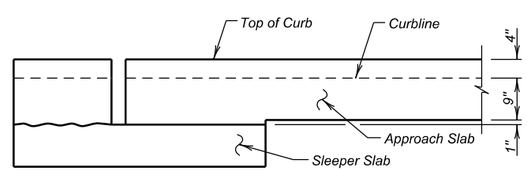

VIEW C - C

DETAILS OF APPROACH SLAB ADJACENT TO BRIDGE (B)

FOR

394' - 9⅛" PRESTR. GIRDER BRIDGE

32' - 0" ROADWAY — 25° LHF SKEW
OVER MOREAU RIVER — SEC. 10-T14N-R16E
STA. 662 + 14.12 TO 666 + 08.88 — NH 0073(63)182
STR. NO. 53-392-521 — HL-93

PERKINS COUNTY
S. D. DEPT. OF TRANSPORTATION
NOVEMBER 2013

DESIGNED BY	CK. DES. BY	DRAFTED BY	
JMH	MM	MG	Kevin N. Goeden
PERK02S7	02S7GB24		BRIDGE ENGINEER

STATE OF	PROJECT	SHEET NO.	TOTAL SHEETS
S.D.	NH 0073(63)182	E40	E45

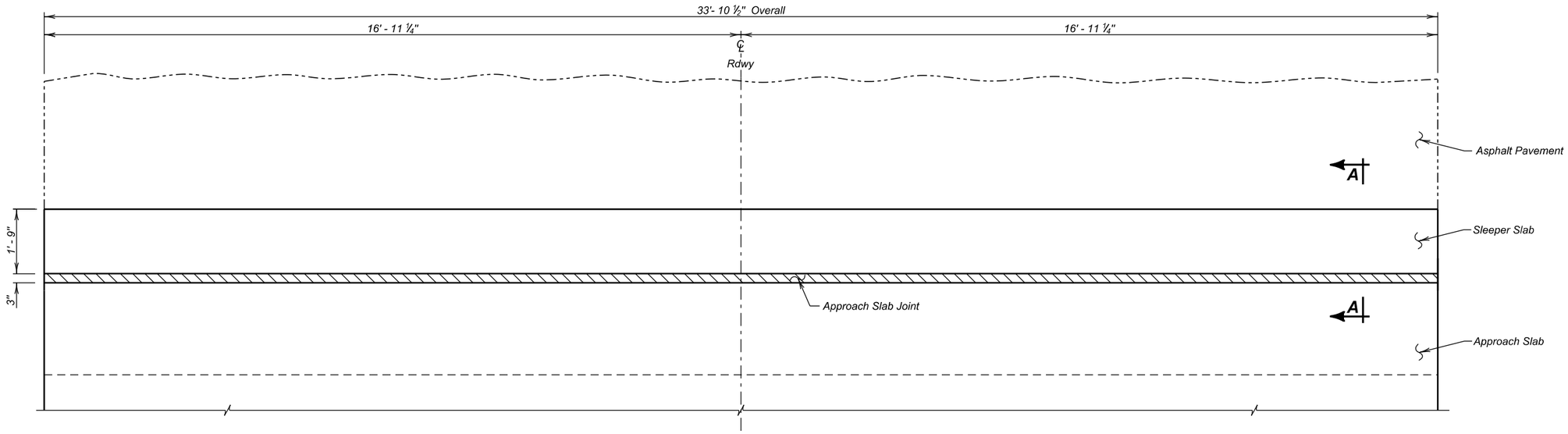

PLAN

GENERAL NOTES

1. The Membrane Sealant shall be on the approved product list for Membrane Sealant Expansion Joints.
2. The manufacturer shall supply the membrane sealant in packaging that precompresses the membrane sealant. The precompressed dimension shall be as recommended by the sealant manufacturer, however, in no case shall the precompressed dimension exceed 75% of the joint opening width. The foam sealant shall be slowly self expanding to permit workers ample time to install the membrane sealant before the membrane sealant exceeds the joint opening width.
3. The membrane sealant shall provide a water tight seal throughout a joint movement range of + 25% (minimum) from the specified joint opening dimension.
4. The membrane sealant shall be supplied in pieces a minimum of 5 feet in length. The foam sealant shall be ultra-violet and ozone resistant.
5. The bonding adhesive used to attach the membrane sealant to the adjacent concrete shall be approved by the membrane sealant manufacturer.
6. Adhesive used to join adjacent pieces of the membrane sealant shall be as recommended by the manufacturer.
7. If Styrofoam filler material is used in the construction, it shall be closed cell and water-tight as approved by the Engineer.
8. The minimum concrete air temperature at the time of joint installation and adhesive curing shall be 40° F.
9. A technical representative of the membrane sealant manufacturer shall be present at the jobsite during installation. The technical representative shall be knowledgeable in the correct procedures for the preparation and installation of the joint material to ensure the Contractor installs the joint to the Manufacturers recommendations.
10. Surfaces that will be in contact with the membrane sealant shall be thoroughly cleaned by abrasive blasting to remove all laitance and contaminants (such as oil, curing compounds, etc.) from the surface. At a minimum, two passes of abrasive blasting with the nozzle held at an angle to within 1 to 2 inches of the surface will be required. Cleaning of the surfaces with solvents, wire brushing, or grinding shall not be permitted.
11. After abrasive blasting, but immediately prior to membrane joint installation, the entire joint contact surface shall be air blasted. The air compressor used for joint cleaning shall be equipped with trap devices capable of providing moisture-free and oil-free air at a recommended pressure of 90 psi. To obtain complete bonding with the adhesive, the adjacent surfaces must be dry and clean. The contact surfaces for the joint shall be visually inspected by the Engineer immediately prior to joint installation to verify the surface is dry and clean.
12. Individual spliced sections shall be installed as per the manufacturers' recommendations. The membrane joint sealant manufacturer shall submit a detailed installation procedure to the Engineer at least 5 days prior to joint installation for his review.
13. Traffic shall not be allowed on the joint until the bonding adhesive has had time to cure, as recommended by the manufacturer.
14. Use plywood or other material to protect concrete adjacent to the joint from spalling before any equipment is moved across the joint. Any spall areas will be repaired at the Contractor's expense by breaking out and replacing adjacent concrete, as approved by the Engineer.
15. The Membrane Sealant Expansion Joint will be measured in feet to the nearest one-tenth foot, complete in place. Measurement will be made of the overall horizontal length. The Membrane Sealant Expansion Joint will be paid for at the contract unit price per foot complete in place. Payment for this item shall be full compensation for furnishing all the required materials in place, including labor, equipment and incidentals necessary to complete the work in accordance with the plans and the foregoing specifications.

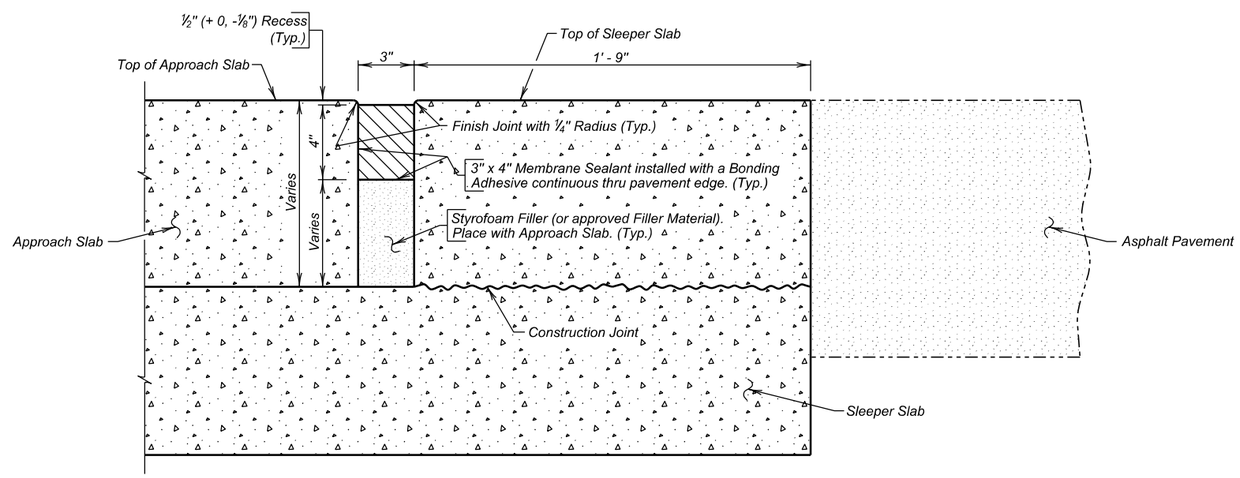

SEC. A - A

ESTIMATED QUANTITIES
(For Two Approach Slabs)

ITEM	UNIT	QUANTITY
Membrane Sealant Expansion Joint	Ft.	67.8

APPROACH SLAB JOINT DETAILS

FOR

394' - 9⅛" PRESTR. GIRDER BRIDGE

32' - 0" ROADWAY — 25° LHF SKEW
OVER MOREAU RIVER — SEC. 10-T14N-R16E
STA. 662 + 14.12 TO 666 + 08.88 — NH 0073(63)182
STR. NO. 53-392-521 — HL-93

PERKINS COUNTY
S. D. DEPT. OF TRANSPORTATION
NOVEMBER 2013

DESIGNED BY	CK. DES. BY	DRAFTED BY	
JMH	MM	MG	Kevin N. Goeden
PERK02S7	02S7GB25		BRIDGE ENGINEER

The elevations shown in these plans are based on the National Geodetic Survey (NGS) North American Vertical Datum of 1988 (NAVD88).

1 Revised December 18, 2014

STATE OF	PROJECT	SHEET NO.	TOTAL SHEETS
S.D.	NH 0073(63)182	E41	E45

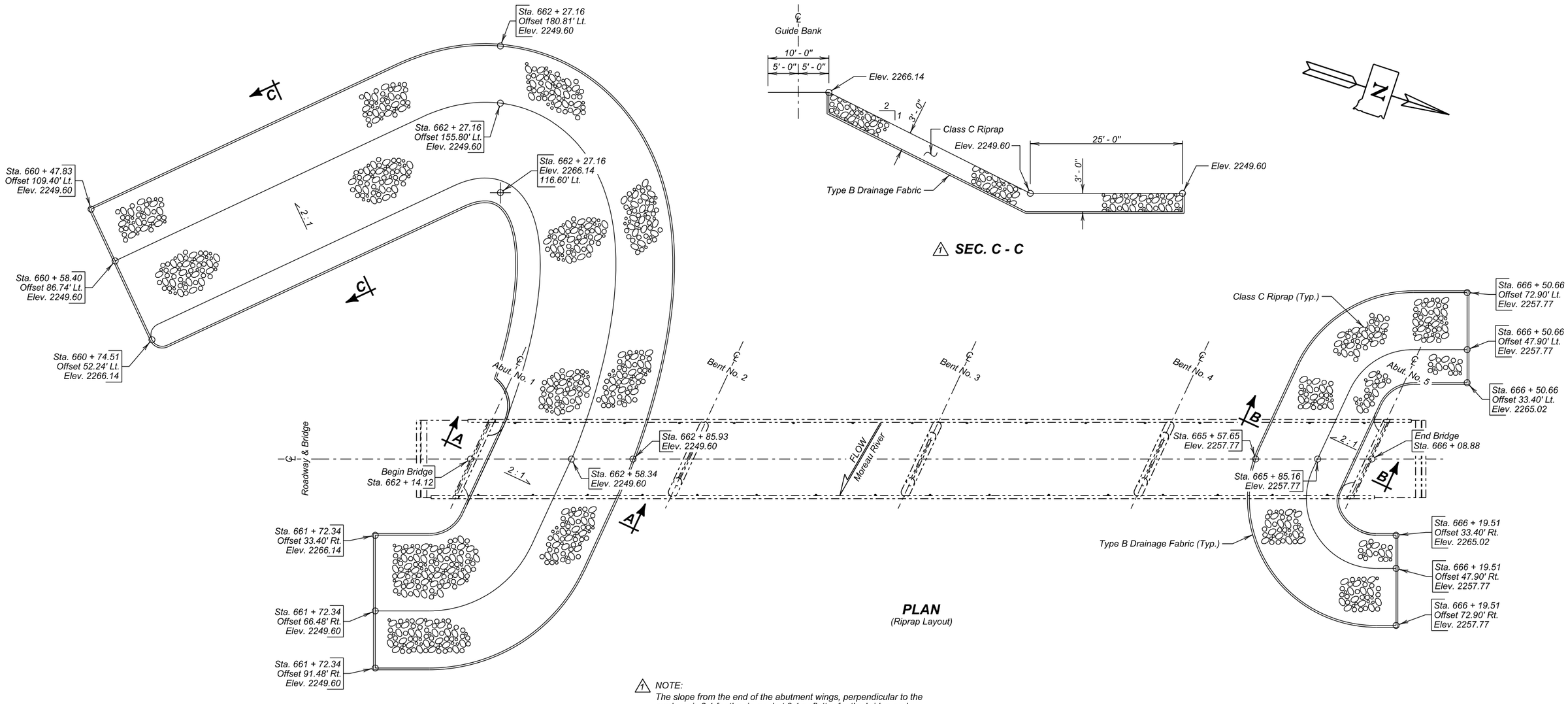

1 NOTE:
The slope from the end of the abutment wings, perpendicular to the roadway is 2:1 for the riprap, but 2:1 or flatter for the bridge end backfill. This will cause some of the riprap to be buried.

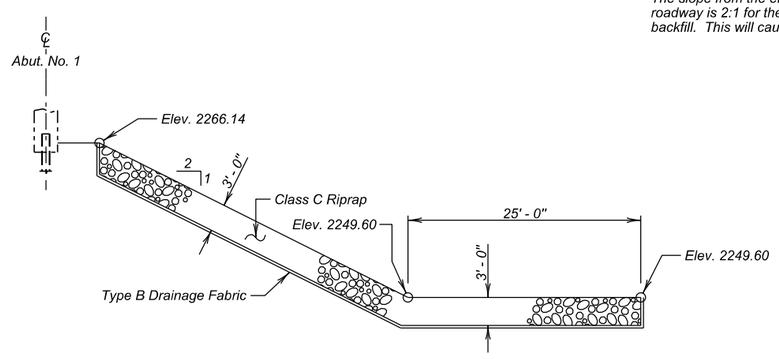

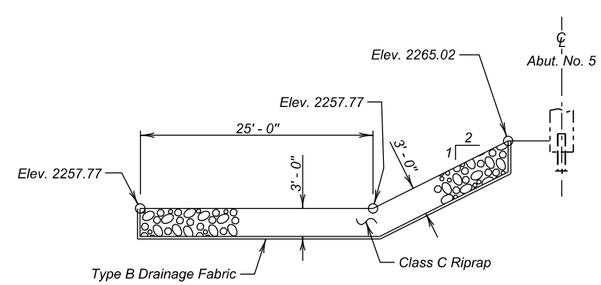

GUIDE BANK / RIPRAP DETAILS (A)

FOR

394' - 9⅛" PRESTR. GIRDER BRIDGE

32' - 0" ROADWAY — 25° LHF SKEW
OVER MOREAU RIVER — SEC. 10-T14N-R16E
STA. 662 + 14.12 TO 666 + 08.88 — NH 0073(63)182
STR. NO. 53-392-521 — HL-93

PERKINS COUNTY
S. D. DEPT. OF TRANSPORTATION
NOVEMBER 2013

DESIGNED BY	CK. DES. BY	DRAFTED BY	
JMH	MM	MG	Kevin N. Goeden
PERK02S7	02S7GB26		BRIDGE ENGINEER

1 Revised December 18, 2014

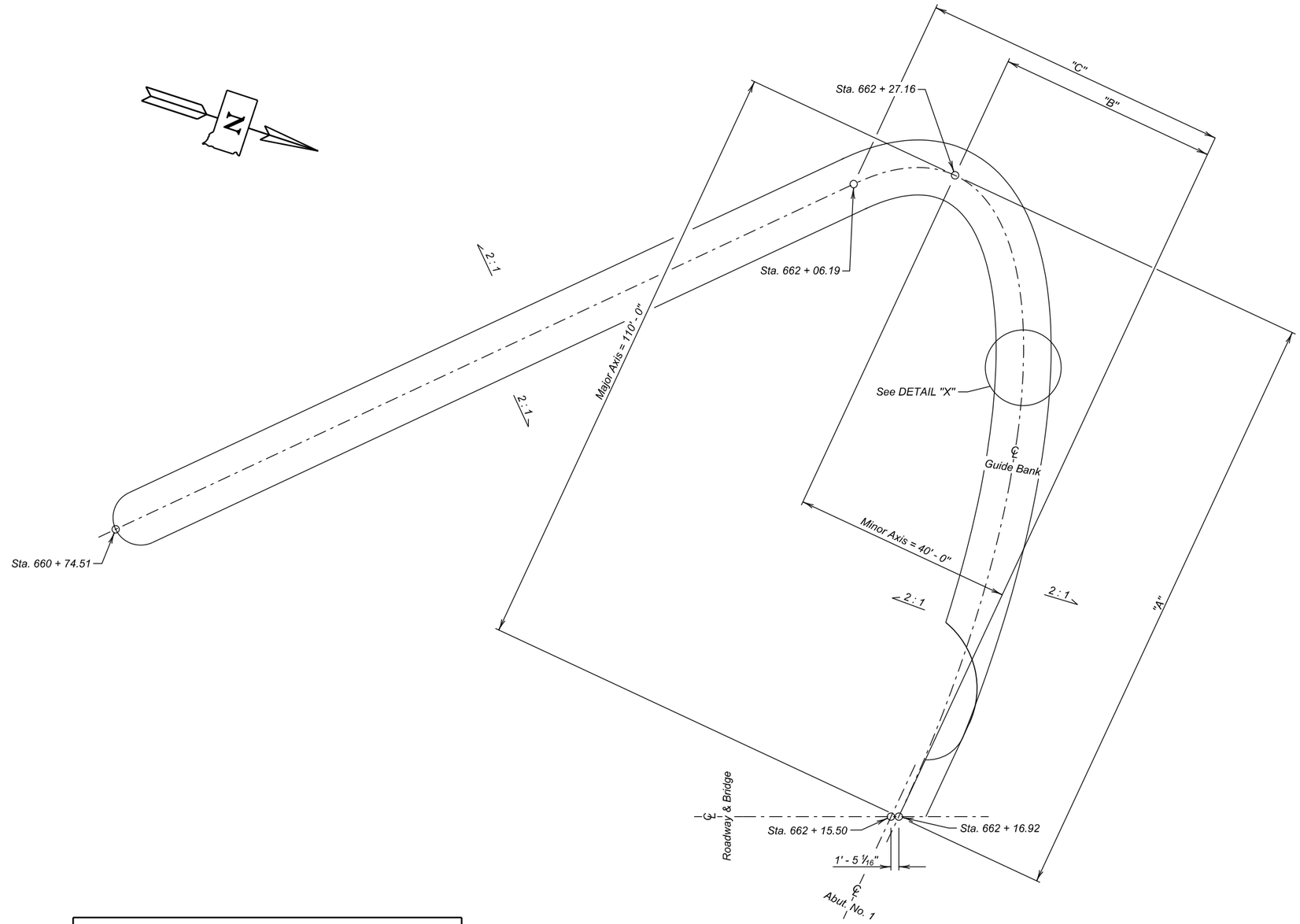

TYPICAL PLAN OF GUIDE BANK

DISTANCE "A"	DISTANCE "B"	DISTANCE "C"
10'	0.17'	——
20'	0.67'	——
30'	1.52'	——
40'	2.74'	——
50'	4.37'	——
60'	6.47'	——
70'	9.14'	——
80'	12.55'	——
90'	17.00'	——
95'	19.84'	——
100'	23.34'	56.66'
105'	28.08'	51.92'
110'	40.00'	——

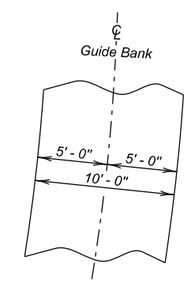

DETAIL "X"

ESTIMATED QUANTITIES

ITEM	UNIT	QUANTITY
1 # Class C Riprap	Ton	5743.0
1 Type B Drainage Fabric	Sq. Yd.	4632

For estimating purposes only, a factor of 1.4 tons/cu.yd. was used to convert Cu. Yds. to Tons.

GUIDE BANK / RIPRAP DETAILS (B)

FOR

394' - 9⅛" PRESTR. GIRDER BRIDGE

32' - 0" ROADWAY — 25° LHF SKEW
OVER MOREAU RIVER — SEC. 10-T14N-R16E
STA. 662 + 14.12 TO 666 + 08.88 — NH 0073(63)182
STR. NO. 53-392-521 — HL-93

PERKINS COUNTY

S. D. DEPT. OF TRANSPORTATION

NOVEMBER 2013

DESIGNED BY	CK. DES. BY	DRAFTED BY	
JMH	MM	MG	Kevin N. Goeden
PERK02S7	02S7GB27		BRIDGE ENGINEER

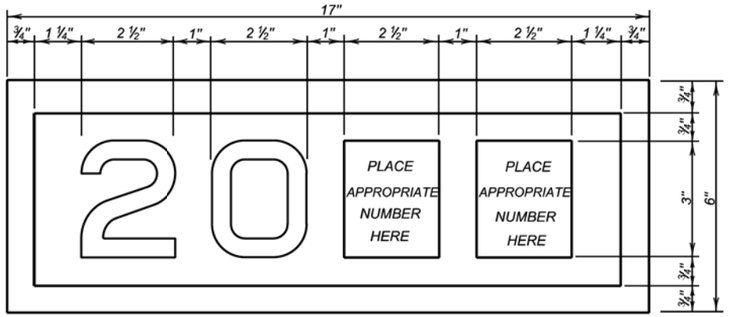

YEAR PLATE DETAILS

GENERAL NOTES:

1. Year plates of the general dimensions shown shall be constructed on all box culverts and bridges. The year plates shall be constructed in reverse and attached to the forms in such a manner that the finished imprint in the concrete does not exceed one-half (½) inch in depth.

2. Year plates shall be located on structure (s) as follows:

   a. On cast-in-place box culverts the year plates shall be four and one - half (4 ½) inches below the top of the upstream parapet wall and centered laterally on the upstream face. On precast box culverts the year plate shall be centered laterally on the upstream face of the top slab. Where an extended interior wall interferes with this location, the year plate shall be centered in an adjacent barrel.

   b. On bridges with six (6) inch curbs or "Jersey" shaped barriers with no endblocks, the year plate shall be centered vertically on the curb face approximately six (6) inches from the end of the bridge, or as designated by the Engineer. On bridges with "Jersey" shaped barrier endblocks, the year plate shall be centered on the upper sloped portion of the barrier approximately 5'- 6" from the end of the bridge, or as designated by the Engineer. There shall be one year plate at each end of the bridge on opposite sides.

   c. When the plans specify that both the original date of construction and the date of reconstruction are to be shown, one date shall be placed as listed above and the other located adjacent to it. Both year plates shall be shown at each end of the bridge on opposite sides.

3. There will be no separate measurement or payment made for year plates on box culverts and bridges. All costs for this work shall be incidental to other coniract items.

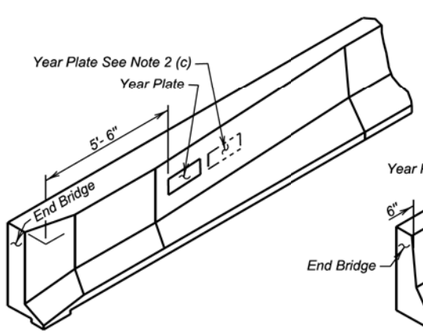

JERSEY BARRIER
(With Endblock)

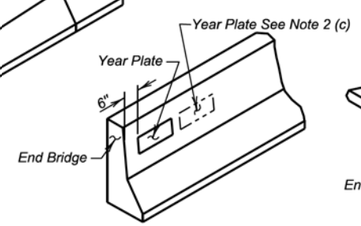

JERSEY BARRIER

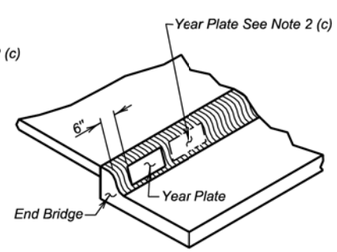

TYPE B CURB

June 26, 2012

Published Date: 4th Qtr. 2014	SDDOT	YEAR PLATE DETAILS	PLATE NUMBER 460.02
			Sheet 1 Of 1

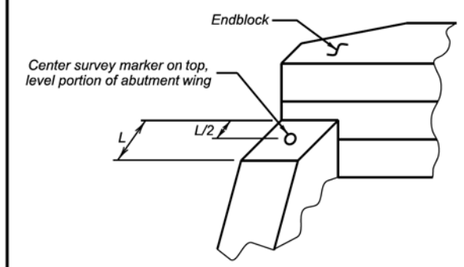

ABUTMENT WITH "STRAIGHT" WINGS

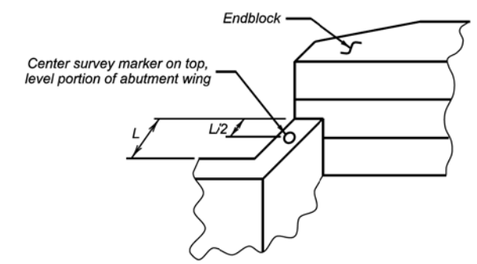

ABUTMENT WITH "SWEPT BACK" WINGS

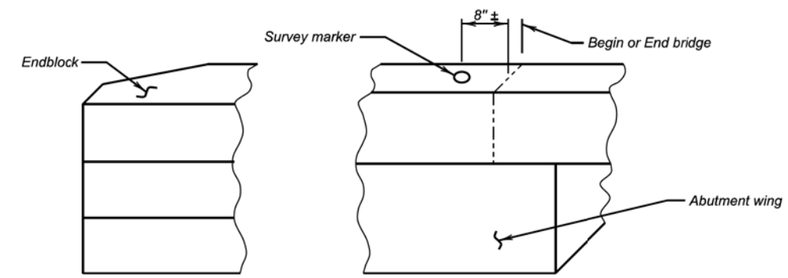

ABUTMENT WITH "SWEPT BACK" WINGS
(Endblock on top of wings)

GENERAL NOTES:

1. Survey markers shall be located at each abutment on the same side of the bridge as the year plate. Place survey markers on abutment wings as shown. Two survey markers will be required at each bridge.

2. Survey markers shall be of a type intended for installation in concrete, be made of solid brass or bronze, have a domed top and be either a 3" top diameter (with a ¾" X 2" long ribbed shank), or a US Army Corps of Engineers Type C Disc with a 3 ½" top diameter.

3. There will be no separate measurement or payment made for survey markers. All costs for this work shall be incidental to the other contract items.

June 26, 2012

Published Date: 4th Qtr. 2014	SDDOT	BRIDGE SURVEY MARKER	PLATE NUMBER 460.05
			Sheet 1 of 1

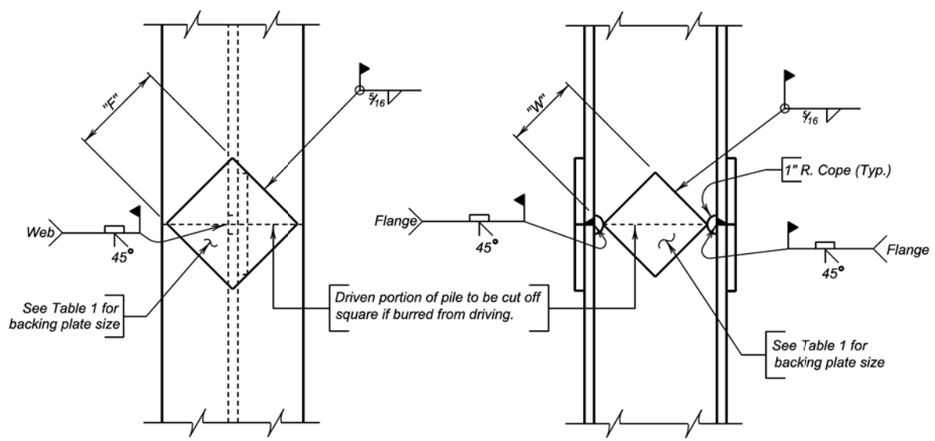

NOTE:

Prepare joint surfaces lower end of upper section on the ground and weld on backing plates; then place upper section on lower section and weld.

COMPLETE JOINT PENETRATION WELD DETAIL

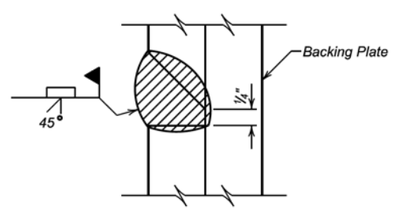

GENERAL NOTES:

1. Steel for backing plates shall conform to ASTM A709 Grade 50.
2. Welding and weld inspection shall be in conformance with AWS D1.5 (Current Year) Bridge Welding Code - Steel.
3. Welder must be certified and registered with the SDDOT.
4. Backing plate shall at a minimum be as thick as the web of the pile being spliced.
5. Web must be coped with 1 inch radius.
6. Submit Welding Procedure Specification (WPS) to Bridge Construction Engineer for approval prior to pile driving.

TABLE 1
(BACKING PLATES)

PILE	10"	12"	14"
"F" FLANGE	6 1/2"	8"	10"
"W" WEB	4 3/4"	6 1/4"	7 1/2"

December 23, 2012

Published Date: 4th Qtr. 2014 | SDDOT | STEEL PILE SPLICE DETAILS | PLATE NUMBER 510.40 | Sheet 1 of 1

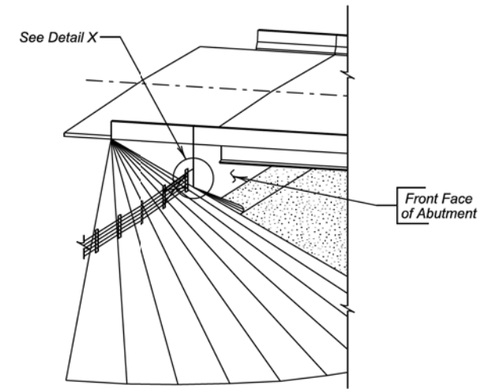

DETAILS FOR FENCE ANCHORS

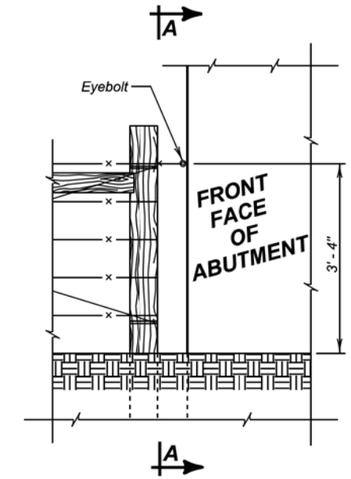

DETAIL "X"

GENERAL NOTES:

1. The fence and post details shown are for illustrative purpose only. The fence shall be as specified elsewhere in the plans.
2. Eyebolts shall be placed on all of the bridge abutment wings.
3. Eyebolts shall be 5/8 inch diameter and shall conform to ASTM A307.
4. Eyebolts shall be galvanized in accordance with AASHTO M232 (ASTM A153).
5. Eyebolts shall be installed after abutment wings are backfilled and berm construction is complete. Drill-in and epoxy eyebolts into abutment such that the eye of the bolt is flush with the concrete surface.
6. The epoxy resin mixture shall be of a type for bonding steel to hardened concrete and shall conform to AASHTO M235 Type IV, Grade 3 (Equivalent to ASTM C881, Type IV, Grade 3).
7. The diameter of the drilled holes shall not be less than 1/8 inch greater, nor more than 3/8 inch greater than the diameter of the eyebolts or as per Manufacturer's recommendations. The drilled holes shall be blown out with compressed air using a device that will reach the back of the hole to be sure that all debris or loose material has been removed prior to epoxy injection.
8. Mix epoxy resin as recommended by the Manufacturer and apply by an injection method as approved by the Engineer. Beginning at the back of the drilled holes, fill the holes 1/3 to 1/2 full of epoxy, or as recommended by the Manufacturer, prior to insertion of the eyebolts. Care shall be taken to prevent epoxy from flowing out of the horizontal holes prior to eyebolt insertion. Rotate the eyebolt during installation to eliminate voids and ensure complete bonding of the bolt. Insertion of the eyebolts by the dipping or painting method will not be allowed.
9. Loads shall not be applied to the epoxy grouted eyebolts until the epoxy resin has had sufficient time to cure as specified by the epoxy resin manufacturer.
10. The cost for furnishing and installing the eyebolts shall be incidental to various contract items.

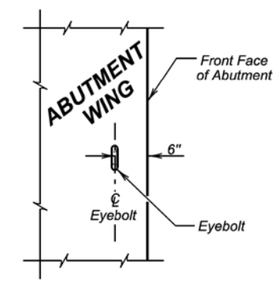

VIEW A - A

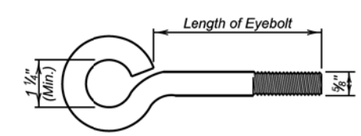

EYEBOLT DETAILS

December 23, 2012

Published Date: 4th Qtr. 2014 | SDDOT | FENCE ANCHORS FOR BRIDGE ABUTMENTS (SWEPT BACK WINGS) | PLATE NUMBER 620.19 | Sheet 1 of 1

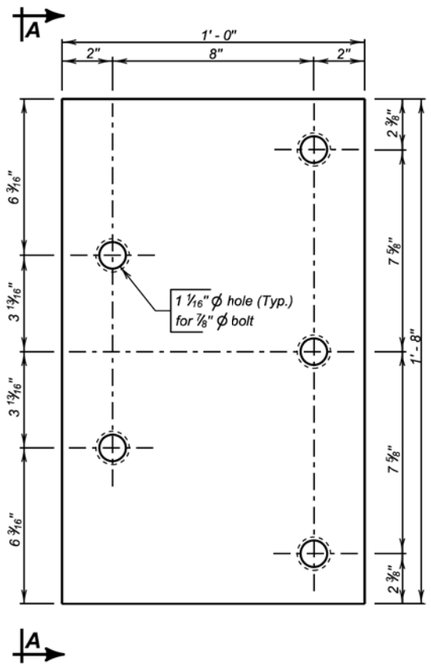

ELEVATION

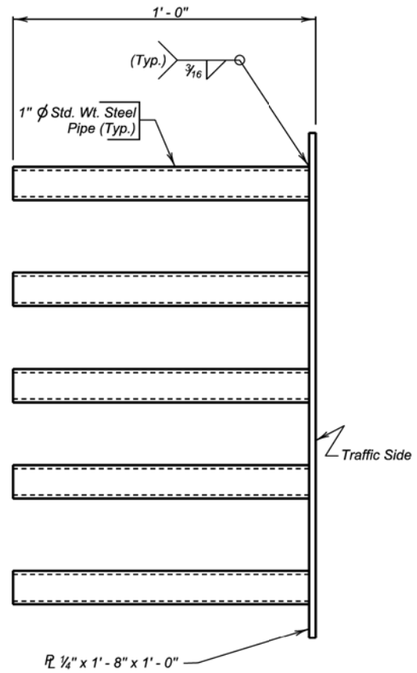

VIEW A - A

GENERAL NOTES:

1. Steel plate for the insert assembly shall conform to ASTM A709 Grade 36. The steel pipes shall conform to ASTM A53 or ASTM A500 Grade B.
2. Welding and weld inspection shall be in conformance with AWS D1.1 - (Current Year) Structural Welding Code - Steel.
3. After fabrication, galvanize in accordance with AASHTO M111 (ASTM A123).
4. Bolts, nuts, and washers shall be provided with each assembly. Bolts shall be galvanized and conform to the requirements of ASTM A307, A325, or A449. Plain washers shall be galvanized and conform to ASTM F844.
5. Bolt heads shall be placed on the traffic side of the endblock. Bolt projection at the back side of the insert shall not exceed 1 inch beyond the nut.
6. The cost of the 5 bolt insert plate assembly complete in place including welding and galvanizing shall be incidental to the contract unit price per Cubic Yard for " Class A45 Concrete, Miscellaneous ", " Class A45 Concrete, Bridge Deck ", or " Class A45 Concrete, Bridge Repair ", as applicable.

December 23, 2013

Published Date: 4th Qtr. 2014	SDDOT	5 BOLT INSERT PLATE ASSEMBLY	PLATE NUMBER 630.92
			Sheet 1 of 1

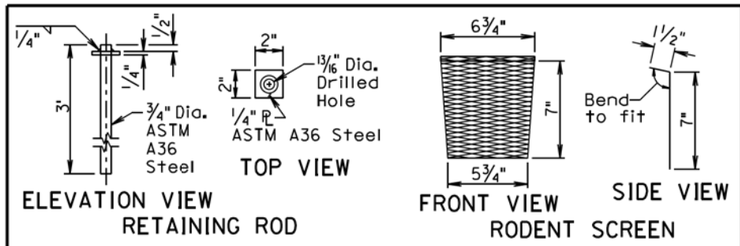

REINFORCING SCHEDULE				
MK.	No.	Size	Length	Type
g	1	4	6'-3"	17
h	2	4	2'-4"	17

NOTE:
All dimensions are out to out of bars.

Bending Details

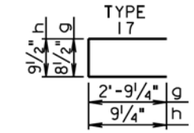

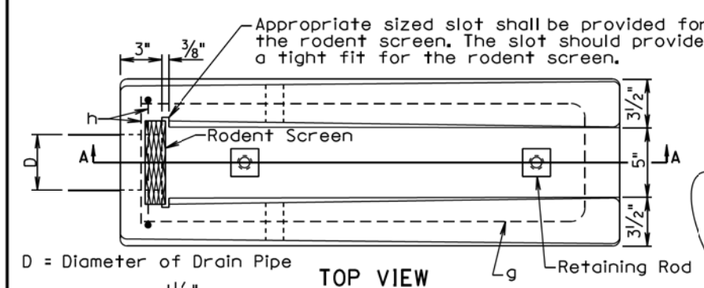

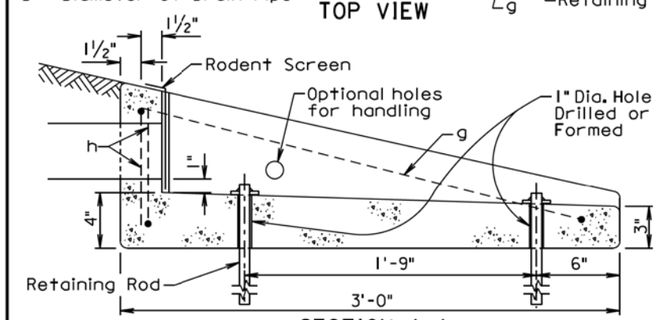

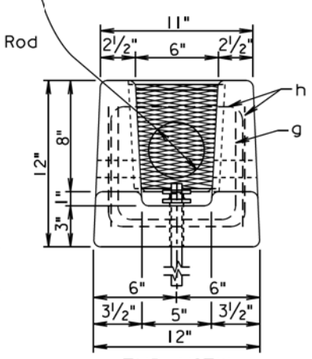

GENERAL NOTES:

The concrete shall be Class M6. The concrete shall conform to the requirements of section 462 of the Standard Specifications. It is estimated that each unit weighs approximately 210 pounds.

All reinforcing steel shall conform to ASTM A615 Grade 60 and shall be epoxy coated. The reinforcing steel shall be securely retained to prevent displacement during placement of concrete. It is estimated that 7.3 pounds of reinforcing steel is required for each unit.

The pipe shall be placed in the concrete headwall with the pipe end flush with the concrete surface adjacent to the rodent screen.

The rodent screen shall be galvanized 13 Ga. steel with a diamond shaped flattened mesh pattern. The size shall be 1/2". The size refers to the measurement across the smallest diamond shaped opening measured from the centers of the wires.

The retaining rod shall be galvanized in accordance with ASTM A123 after all shop welding has been completed.

The drawing indicates using 1/2" fillets; however, 3/4" chamfers may be substituted for the 1/2" fillets.

All costs for furnishing and installing the concrete headwall including equipment, labor, and materials including concrete, reinforcing steel, retaining rods, and rodent screen shall be incidental to the contract unit price per each for "Precast Concrete Headwall for Drain".

December 23, 2010

Published Date: 4th Qtr. 2014	SDDOT	PRECAST CONCRETE HEADWALL FOR DRAIN	PLATE NUMBER 680.03
			Sheet 1 of 1