Section M: Pavement Markings

STATE OF SOUTH DAKOTA	PROJECT	SHEET	TOTAL SHEETS
	IM 0902(157)94	M1	M6

Plotting Date: 12/16/2014

INDEX OF SHEETS

M1	General Layout W/Index
M2-M3	Estimate With General Notes & Tables
M4-M5	Typical Pavement Marking Layouts
M6	Standard Plates

BEGIN IM 0902(157)94
EB
MRM = 94.00 + 0.794
Station 0+00
WB
MRM = 94.00 + 0.801
Station 0+00

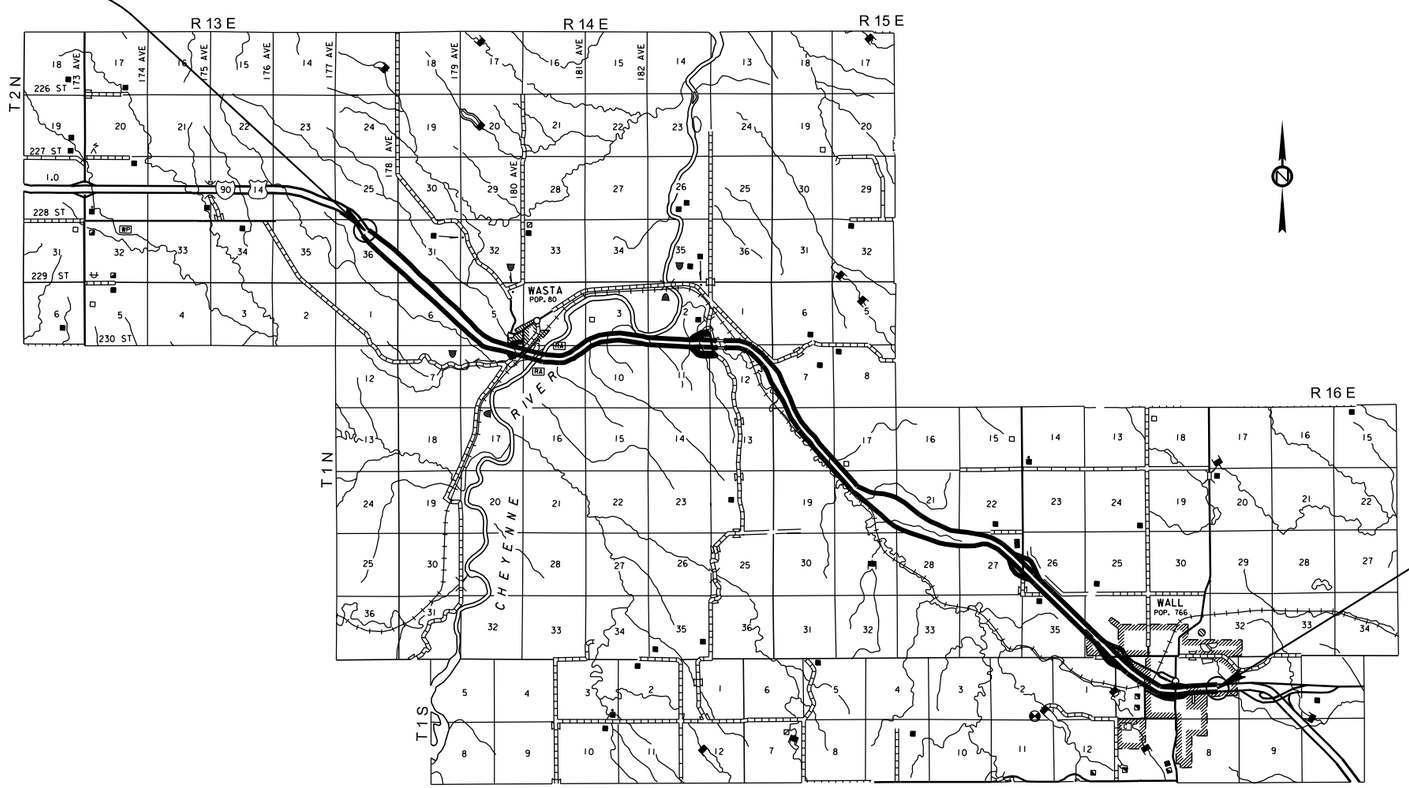

END IM 0902(157)94
EB
MRM = 111.25 + 0.407
Station 517+02.38
WB
MRM = 11.26 + 0.400
Station 517+02.38

Plotted From - trrct11628

File - ...\034V_SectionMTitle.dgn

ESTIMATE OF QUANTITIES

Bid Item Number	Item	Quantity	Unit
633E0010	Cold Applied Plastic Pavement Marking, 4"	48,289	Ft
633E0020	Cold Applied Plastic Pavement Marking, 8"	288	Ft
633E0025	Cold Applied Plastic Pavement Marking, 12"	10,998	Ft
633E1200	Waterborne Pavement Marking Paint with High Grade Polymer, White	992.0	Gal
633E1205	Waterborne Pavement Marking Paint with High Grade Polymer,Yellow	992.0	Gal
633E5000	Grooving for Cold Applied Plastic Pavement Marking, 4"	48,289	Ft
633E5005	Grooving for Cold Applied Plastic Pavement Marking, 8"	288	Ft
633E5010	Grooving for Cold Applied Plastic Pavement Marking, 12"	10,998	Ft
633E5100	Grooving for Durable Pavement Marking, 4"	376,918	Ft

GENERAL NOTES

Permanent pavement markings shall be applied from MRM 94.00+.761 to 111.66+.041 on the Eastbound lanes and 94.00+.779 to 112.12+.180 on the Westbound lanes. At Exits 98, 101, 107, 109, 110, 112 westbound on ramp & the Rest Area Exits, all gore areas shall be grooved in and 12“ Cold Applied Plastic Markings shall be applied, and ramp taper skip throats shall be grooved in and 4“ Cold Applied Plastic Markings shall be applied. Exit 101 and 110 on and off ramp edge lines shall be grooved in and painted with “Waterborne Pavement Marking Paint with High Grade Polymer.” Also at Exits 101 and 110, wrong way arrows shall be grooved in and 8” Cold Applied Plastic Markings shall be applied.

Grooving, removal, and cleaning work shall be conducted in such a manner as to control and minimize airborne dust and similar debris that may become a hazard to motor vehicle operation.

PERMANENT PAVEMENT MARKINGS

All materials shall be applied as per manufacturer’s recommendations.

Application of permanent pavement markings shall be completed within 14 days following completion of final surfacing.

Pavement markings for both mainline edge lines shall be “Waterborne Pavement Marking Paint with High Grade Polymer.” Centerline skips shall be “Cold Applied Plastic Pavement Marking, 4”.” The centerline skips and edge lines shall be grooved-in.

Pavement marking paint and glass beads furnished and applied by the Contractor shall meet the requirements for materials and application as per the Specifications.

GROOVE PAVEMENT FOR PAVEMENT MARKING

In areas where there is existing markings, the grooving process shall remove at least 90% of the deficient line. Existing markings that fall outside of the groove shall be removed using additional methods approved by the Engineer.

The Contractor shall establish a positive means for the removal of the grinding and/or grooving residue. Solid residue shall be removed from the pavement surfaces before being blown by traffic action or wind. Residue shall not be permitted to flow across lanes being used by public traffic or into gutter or drainage facilities. Residue, whether in solid or slurry form, shall be disposed of in a manner that will prevent it from reaching any waterway in a concentrated state.

Unless otherwise specified in the plans, the Contractor shall groove the surface for pavement markings as specified below and as per manufacturer instructions.

The grooving shall be completed within the following tolerances for Pavement Marking Paint with High Build Polymer:

Depth of Groove:	70 mils ± 5 mils
Width of 4” Groove:	5” to 6” with tolerance of ± ¼”
Tapers at Begin/End Lines:	6” to 9”

The equipment shall be capable of the following:

- Grooving the total width of the groove in one pass or uniform depths with multiple passes.
- Grooving without causing damage to the pavement joints or joint sealant material.
- Providing uniform alignment and depth.
- Moving continuously to permit a mobile traffic work operation.

The bottom of the groove shall be uniform and free of loose material. The groove shall be flat and of uniform depth for the entire width of the groove. Grooving on bridge decks shall start and stop a sufficient distance from the expansion joints so no damage occurs in these areas.

PAVEMENT MARKING PAINT WITH HIGH GRADE POLYMER

All materials shall be applied as per manufacturer’s recommendations.

This material shall consist of a durable high build, low VOC, fast drying, waterborne traffic paint with an acrylic polymer emulsion and with reflective media adhered to the paint. The reflective media shall consist of glass beads as well as bonded bore reflective elements.

The bonded core reflective elements shall contain either clear or yellow tinted microcrystalline ceramic beads bonded to the outer surface. All microcrystalline ceramic beads bonded to reflective elements shall have a minimum index of refraction of 1.8 when tested using the liquid oil immersion method.

The Department will take retro-reflectivity readings on the pavement marking lines no sooner than 3 days and no later than 30 days after the completion of all line applications required for an individual highway route using a portable retro-reflectometer conforming to 30-meter geometry. Retro-reflectivity readings will be taken on a test location with cleaning being limited to light hand brooming.

Pavement markings not conforming to the Retro-reflectivity requirements shall be removed and replaced. If replacement of markings cannot be applied within the same year, the Contractor shall schedule subject work to be completed no later than June 15th in the following year. Upon replacement, the retro-reflectivity testing process will be done again requiring new readings.

The Department will randomly select one test location per mile of each edge line including ramps and one test location per mile of centerline (solid and/or skip line will be considered as one centerline). Three retro-reflectivity readings will be taken at each test location. The three readings will be averaged and become the reading for that test location.

Initial Readings (within 3 - 30 days of the line application):

Pavement Marking Color	Minimum Value
White	350 mcd/m2/lux
Yellow	275 mcd/m2/lux

All pavement markings not conforming to the requirements provided in these plans will be considered deficient and may be required to be removed. Additional retro-reflectivity readings will be taken by the Department to determine the limits of removal. The removal shall be accomplished using suitable sand blasting or grinding equipment unless the Engineer authorizes other means. The removal process shall remove at least 90% of the deficient line, with no excessive scarring of the existing pavement. The removal width shall be one inch wider all around the nominal width of the pavement marking to be removed. Removal and replacement of the pavement markings shall be at Contractor’s expense, with no cost incurred by the State.

RATES OF MATERIALS FOR HIGH GRADE POLYMER PAINT

Solid 4" Line = 27.8 Gals/Mile
Glass Beads – 5.3 Lbs/Gal
Composite Reflective Elements – 2.1 Lbs/Gal

All cost for materials, labor, and equipment necessary to furnish and install the pavement markings shall be incidental to the contract unit price per gallon for "Waterborne Pavement Marking Paint with High Grade Polymer, White or Yellow."

COLD APPLIED PLASTIC PAVEMENT MARKING

The Contractor shall apply the cold applied plastic pavement marking material as per manufacturer's instructions.

Cold applied plastic pavement markings shall be grooved into the surface.

Location of markings will be determined by Engineer.

GROOVE PAVEMENT FOR COLD APPLIED PLASTIC MARKING

All Grooving for Cold Applied Plastic Pavement Marking shall be done in accordance with Section 633 of the Specifications.

The depth of groove shall be completed within the following tolerance:

Depth of Groove: 100 mils, ± 10 mils

WRONG WAY ARROWS

8" white cold plastic pavement marking shall be used for the wrong way arrows on the Interstate off ramps. A total of 8 arrows are required on this project, two arrows per off ramp.

Each arrow is equivalent to 36 linear feet of marking material.

STATE OF SOUTH DAKOTA	PROJECT	SHEET	TOTAL SHEETS
	IM 0902(157)94	M4	M6

Plotting Date: 12/16/2014

PAVEMENT MARKING LAYOUT

(TYPICAL)

WRONG-WAY ARROWS ON INTERSTATE OFF RAMPS

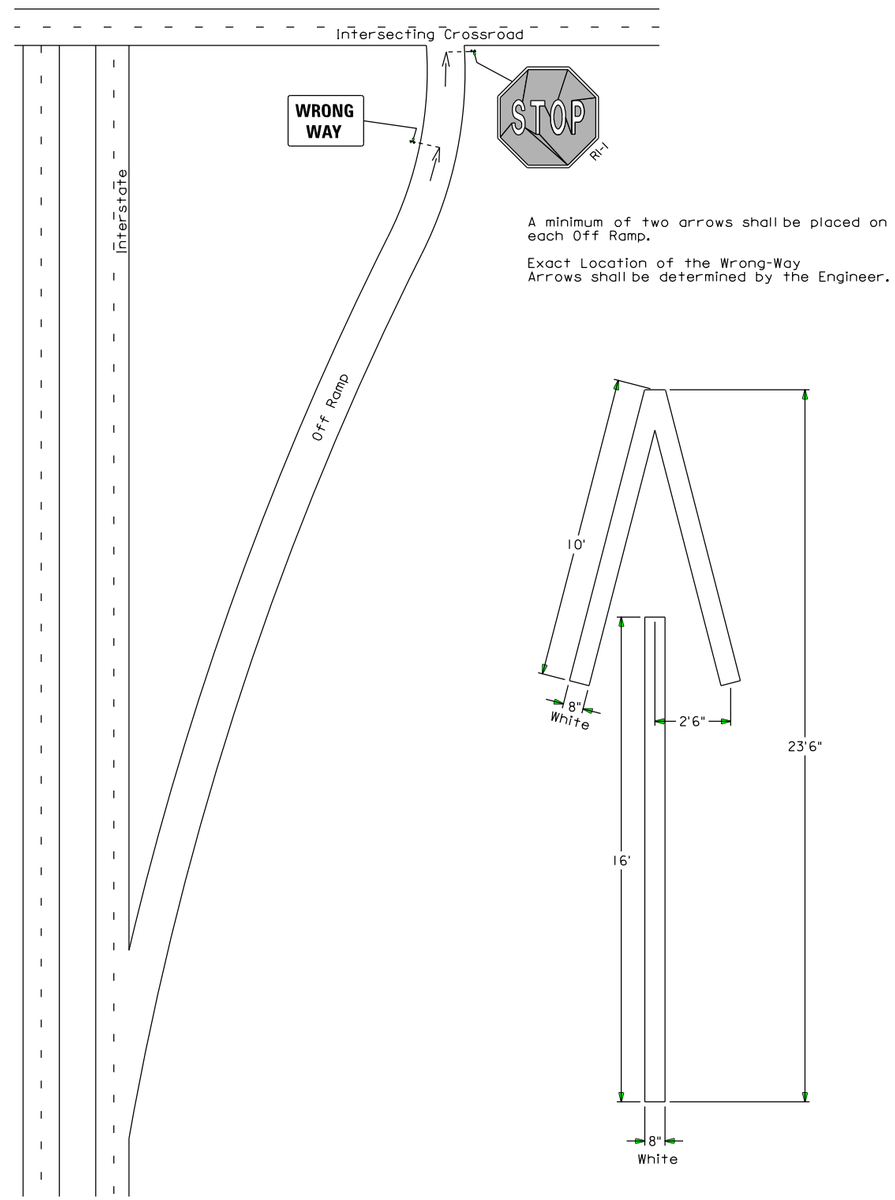

Plot Scale - 1:200

Plotted From - trrc11628

File - ...\034V_WrongWayArrowsTypical.dgn

PAVEMENT MARKING LAYOUT

(TYPICAL 4-LANE DIVIDED)

STATE OF SOUTH DAKOTA	PROJECT	SHEET	TOTAL SHEETS
	IM 0902(157)94	M5	M6

Plotting Date: 12/16/2014

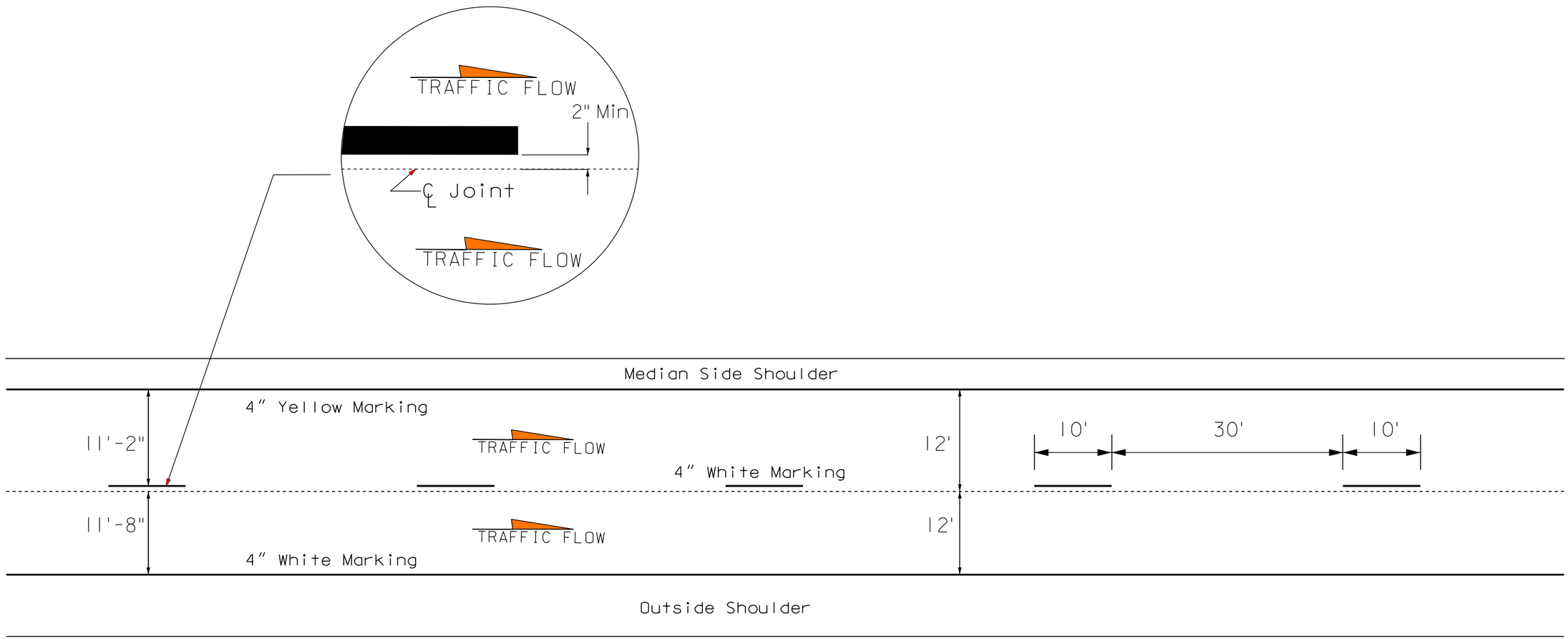

Plot Scale - 1:200

Plotted From - trrc11628

File - ...\034V_TypDiv4Ln.dgn

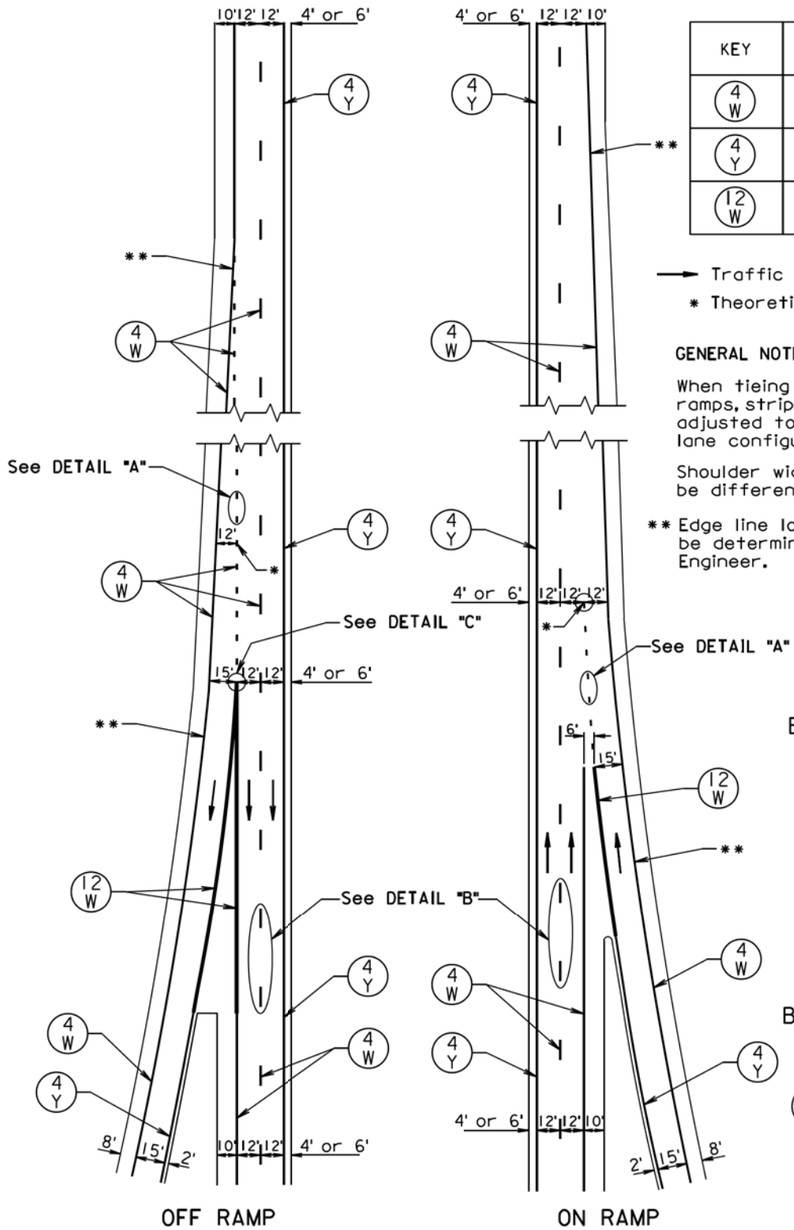

KEY	ITEM
4 W	4" White
4 Y	4" Yellow
12 W	12" White

→ Traffic Direction

* Theoretical Gore Point

GENERAL NOTES:

When tieing into existing ramps, striping shall be adjusted to match existing lane configuration.

Shoulder widths might be different than shown.

** Edge line location shall be determined by the Engineer.

July 1, 2005

Published Date: 4th Qtr. 2014	SDDOT	PAVEMENT MARKING LAYOUT FOR TAPERED INTERSTATE RAMPS	PLATE NUMBER 633.05 Sheet 1 of 1

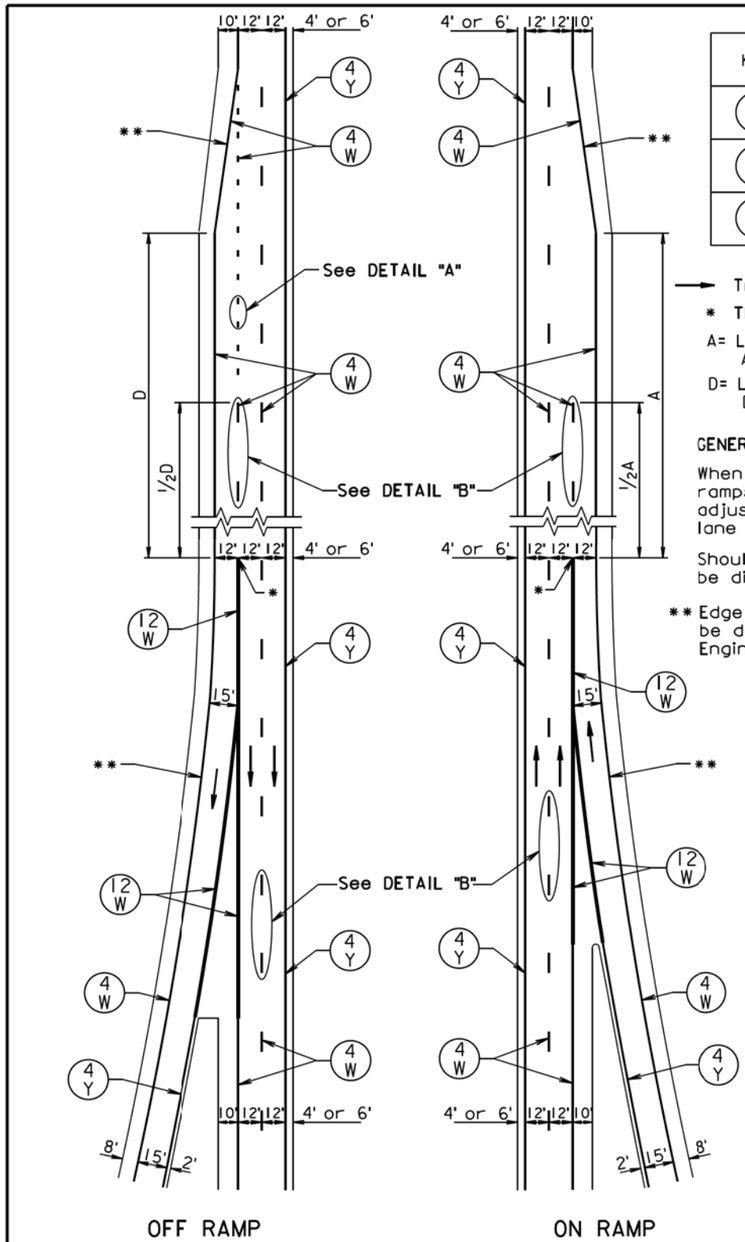

KEY	ITEM
4 W	4" White
4 Y	4" Yellow
12 W	12" White

→ Traffic Direction

* Theoretical Gore Point

A= Length Of Parallel Acceleration Lane

D= Length Of Parallel Deceleration Lane

GENERAL NOTES:

When tieing into existing ramps, striping shall be adjusted to match existing lane configuration.

Shoulder widths might be different than shown.

** Edge line location shall be determined by the Engineer.

July 1, 2005

Published Date: 4th Qtr. 2014	SDDOT	PAVEMENT MARKING LAYOUT FOR PARALLEL INTERSTATE RAMPS	PLATE NUMBER 633.06 Sheet 1 of 1

PLOT SCALE - 1:200

PLOTTED FROM - TRRC11628

PLOT NAME - 4

FILE - ...\034V_SECTIONMSTDPLATES1.DGN