SECTION F: SURFACING PLANS

STATE OF SOUTH DAKOTA	PROJECT	SHEET	TOTAL SHEETS
	IM 0904(57)189 & NH 0083(85)87	F1	F145

Plotting Date: 08/06/2015

PLOT SCALE - 1:7920.02

PLOT NAME - 1

FILE -...\PRJ\JONS035E\TITLE F 035E.DGN

INDEX OF SHEETS

F1	General Layout with Index
F2 thru F25	Estimate of Quantities, Notes, Rates and Tables
F26 thru F44	Typical Surfacing Sections
F45 thru F55	PCC Pavement Joint Layouts
F56 thru F57	General On Ramp Acceleration Lane and Off Ramp Deceleration Lane Details
F58	Vertical Clearance Under Structure Details
F59 thru F68	Driving Surface Transition Details
F69 thru F73	Guardrail and Additional Surfacing Details
F74	Details for Membrane Sealant Expansion Joint
F75 thru F80	Ramp Detour Details
F81 thru F92	PCC Pavement Repair Details
F93 thru F98	Cutoff Drain and Edge Drain Details
F99 thru F126	Standard Plates
F127 thru F145	PCC Overlay Centerline Profile Sheets

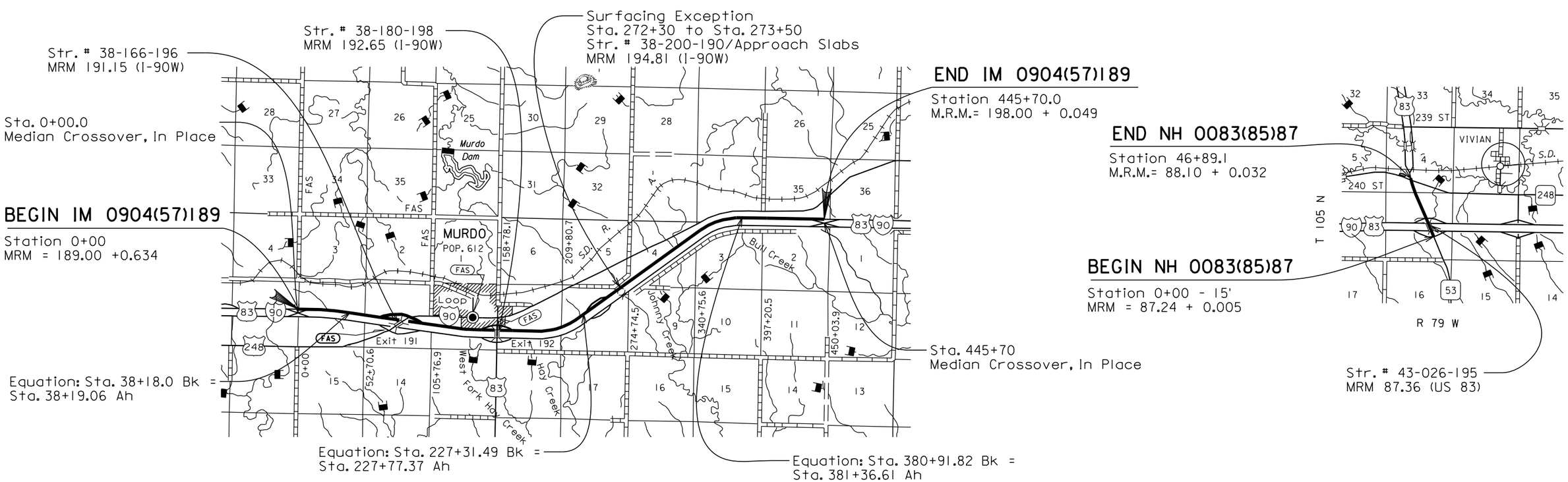

PLOTTED FROM - TRPR16032

Revised: 27 Aug 15, RML

SECTION F ESTIMATE OF QUANTITIES for IM 0904(57)189, PCN 035E

BID ITEM NUMBER	ITEM	QUANTITY	UNIT
009E0010	Mobilization	Lump Sum	LS
009E3230	Grade Staking	11.298	Mile
009E3240	Graded Centerline Staking	9.066	Mile
009E3250	Miscellaneous Staking	11.083	Mile
009E3280	Slope Staking	2.665	Mile
009E3300	Three Man Survey Crew	40.0	Hour
009E3500	Weigh-In-Motion System	1	Each
009E4200	Construction Schedule, Category II	Lump Sum	LS
110E0415	Remove Edge Drains	Lump Sum	LS
110E0510	Remove Pipe End Section	10	Each
110E0700	Remove 3 Cable Guardrail	911	Ft
110E0730	Remove Beam Guardrail	300.1	Ft
110E0740	Remove 3 Cable Guardrail Anchor Assembly	6	Each
110E0745	Remove 3 Cable Guardrail Slip Base Anchor Assembly	2	Each
110E0760	Remove Beam Guardrail Trailing End Terminal	1	Each
110E0770	Remove W Beam Guardrail Breakaway Cable Terminal	2	Each
110E0800	Remove W Beam Guardrail End Terminal	1	Each
110E1100	Remove Concrete Pavement	11,440.9	SqYd
110E1640	Remove Granular Material	3,675.1	CuYd
110E6000	Remove 3 Cable Guardrail for Reset	661	Ft
110E6230	Remove W Beam Guardrail for Reset	125.0	Ft
110E6260	Remove W Beam Guardrail Breakaway Cable Terminal for Reset	2	Each
110E7020	Remove Interim Crossover Closure for Reset	704	Ft
110E7152	Remove Delineator for Reset	38	Each
110E7510	Remove Pipe End Section for Reset	12	Each
120E0010	Unclassified Excavation	30,458	CuYd
120E0100	Unclassified Excavation, Digouts	210	CuYd
120E0400	Select Subgrade Topping	14,894	CuYd
120E0600	Contractor Furnished Borrow Excavation	26,900	CuYd
120E6100	Water for Embankment	347.0	MGal
120E6200	Water for Granular Material	698.7	MGal
120E9000	Pit Run	6,948.3	Ton
250E0010	Incidental Work	Lump Sum	LS
260E1010	Base Course	31,163.2	Ton
260E1030	Base Course, Salvaged	4,935.9	Ton
260E2010	Gravel Cushion	7,106.6	Ton
260E2030	Gravel Cushion, Salvaged	7,726.8	Ton
260E6000	Granular Material, Furnish	5,306.1	Ton
270E0040	Salvage and Stockpile Asphalt Mix and Granular Base Material	6,892.4	Ton
270E0110	Salvage and Stockpile Granular Material	2,819.6	Ton
270E0200	Blend, Haul, and Stockpile Granular Material	10,612.2	Ton
320E0004	PG 58-28 Asphalt Binder	614.2	Ton
320E1070	Class HR Asphalt Concrete	15,301.6	Ton
320E1200	Asphalt Concrete Composite	9,000.0	Ton
320E3000	Compaction Sample	1	Each
320E5010	Saw and Seal Shoulder Joint	85,739	Ft
320E7012	Grind 12" Rumble Strip or Stripe in Asphalt Concrete	14.9	Mile
330E0010	MC-70 Asphalt for Prime	101.3	Ton
330E0100	SS-1h or CSS-1h Asphalt for Tack	22.3	Ton
330E0210	SS-1h or CSS-1h Asphalt for Flush Seal	19.9	Ton
330E2000	Sand for Flush Seal	35.4	Ton
332E0010	Cold Milling Asphalt Concrete	8,372	SqYd

SECTION F ESTIMATE OF QUANTITIES (CONTINUED) for IM 0904(57)189, PCN 035E

BID ITEM NUMBER	ITEM	QUANTITY	UNIT
380E0110	11" Nonreinforced PCC Pavement	9,414.1	SqYd
380E0800	PCC Shoulder Pavement	740.0	SqYd
380E1500	PCC Overlay, Furnish	29,934.1	CuYd
380E1585	8.5" PCC Overlay, Placement	129,083.4	SqYd
380E5030	Nonreinforced PCC Pavement Repair	200.0	SqYd
380E6000	Dowel Bar	77,920	Each
380E6110	Insert Steel Bar in PCC Pavement	75	Each
410E2600	Membrane Sealant Expansion Joint	76.0	Ft
430E0700	Precast Concrete Headwall for Drain	16	Each
450E2016	24" RCP Flared End, Furnish	1	Each
450E2017	24" RCP Flared End, Install	1	Each
450E2036	48" RCP Flared End, Furnish	1	Each
450E2037	48" RCP Flared End, Install	1	Each
450E2200	24" RCP Sloped End, Furnish	3	Each
450E2201	24" RCP Sloped End, Install	3	Each
450E2211	42" RCP Sloped End with Bars, Furnish	3	Each
450E2213	42" RCP Sloped End, Install	3	Each
450E4600	24" RCP Arch Sloped End, Furnish	1	Each
450E4601	24" RCP Arch Sloped End, Install	1	Each
450E5215	24" CMP Flared End, Furnish	1	Each
450E5216	24" CMP Flared End, Install	1	Each
* 450E8900	Cleanout Pipe Culvert	27	Each
450E9001	Reset Pipe End Section	12	Each
600E0300	Type III Field Laboratory	1	Each
629E0100	3 Cable Guardrail	1,811	Ft
629E0200	Reset 3 Cable Guardrail	661	Ft
629E0300	3 Cable Guardrail Slip Base Anchor Assembly	8	Each
629E0400	3 Cable Guardrail Anchor Assembly	2	Each
629E9060	Reset Interim Crossover Closure	704	Ft
630E0110	Straight Double Class A Thrie Beam Guardrail with Wood Posts	125.0	Ft
630E1010	Straight Class A W Beam Guardrail with Wood Posts	312.5	Ft
630E2000	W Beam to Thrie Beam Guardrail Transition	5	Each
630E2015	W Beam Guardrail Flared End Terminal	1	Each
630E2020	W Beam Guardrail Tangent End Terminal	2	Each
630E2030	W Beam Guardrail Breakaway Cable Terminal	2	Each
630E2050	Beam Guardrail Trailing End Terminal	1	Each
630E2110	Beam Guardrail Post and Block	16	Each
630E2205	Breakaway Cable Terminal End Post	4	Each
630E5160	Reset W Beam Rail	125.0	Ft
630E5180	Reset W Beam Guardrail Breakaway Cable Terminal	2	Each
632E2100	Reset Delineator	38	Each
680E0010	2' Deep Edge Drain	6,539	Ft
680E0015	Edge Drain Outlet	16	Each
831E0210	Non-woven Geotextile Separator	2,347	SqYd
831E1500	Geotextile Bond Breaker Fabric	220,342	SqYd

*** - Denotes Non-Participating**

SECTION F ESTIMATE OF QUANTITIES for NH 0083(85)87, PCN 05H6

BID ITEM NUMBER	ITEM	QUANTITY	UNIT
009E0010	Mobilization	Lump Sum	LS
009E4200	Construction Schedule, Category II	Lump Sum	LS
110E1100	Remove Concrete Pavement	1,538.2	SqYd
120E0010	Unclassified Excavation	780	CuYd
120E0100	Unclassified Excavation, Digouts	20	CuYd
120E6200	Water for Granular Material	4.5	MGal
260E1010	Base Course	337.7	Ton
270E0040	Salvage and Stockpile Asphalt Mix and Granular Base Material	827.4	Ton
320E0004	PG 58-28 Asphalt Binder	35.8	Ton
320E1070	Class HR Asphalt Concrete	889.1	Ton
320E3000	Compaction Sample	1	Each
320E5010	Saw and Seal Shoulder Joint	6,571	Ft
330E0010	MC-70 Asphalt for Prime	8.6	Ton
330E0100	SS-1h or CSS-1h Asphalt for Tack	1.3	Ton
330E0210	SS-1h or CSS-1h Asphalt for Flush Seal	1.3	Ton
380E5030	Nonreinforced PCC Pavement Repair	1,538.2	SqYd
380E6000	Dowel Bar	411	Each
380E6110	Insert Steel Bar in PCC Pavement	958	Each
380E6310	Seal Random Cracks in PCC Pavement	67	Ft
390E0100	Saw and Seal Joint	2,257	Ft
390E0200	Repair Type A Spall	49.0	SqFt
410E2600	Membrane Sealant Expansion Joint	24.0	Ft
430E0700	Precast Concrete Headwall for Drain	6	Each
680E0010	2' Deep Edge Drain	1,471	Ft
680E0015	Edge Drain Outlet	6	Each
680E0100	Cutoff Drain	4	Each

SURFACING THICKNESS DIMENSIONS

Plans tonnage will be applied even though the thickness may vary from that shown on the plans.

At those locations where material must be placed to achieve a required elevation, plans tonnage may be varied to achieve the required elevation.

UTILITIES

The Contractor shall contact the involved utility companies through South Dakota One Call (1-800-781-7474) prior to starting work. It shall be the responsibility of the Contractor to coordinate work with the utility owners to avoid damage to existing facilities.

Utilities are not planned to be affected on this project. If utilities are identified near the improvement area through the SD One Call Process as required by South Dakota Codified Law 49-7A and Administrative Rule Article 20:25, the Contractor shall contact the Engineer to determine modifications that will be necessary to avoid utility impacts.

CONTROL OF ACCESS

If a Contractor's operations would require access to the interstate ROW in any locations not currently designated as public access, prior approval must be obtained from the Department. All requests will be reviewed on the basis of safety and construction sequencing. A contractor shall not assume that all requests will be granted.

The Contractor shall be responsible for all safety control and signing measures.

The request for access shall be provided in writing to the Engineer two weeks in advance of any proposed break in control of access.

EXIT 192 RAMP DETOURS

The westbound ramp detours for Exit 192 have been constructed on a previous project. The Contractor will construct eastbound ramp detours when the westbound ramp detours are no longer needed, see ramp detour details. Upon removal of the salvaged material, the westbound ramp detour areas shall be shaped to the original profile and to the satisfaction of the Engineer.

All costs incurred in removing salvaged material and shaping to the final slope shall be incidental to the contract unit prices for the various bid items.

TYPE III FIELD LABORATORY

Substitution of a cellular telephone for the hard-wired touch-tone telephone is not allowed, as state personnel need the ability to download information over direct phone lines. The phone is intended for state personnel usage only. Contractor personnel are prohibited from using this phone unless pre-approved by the Project Engineer. It is the responsibility of the Contractor to contact Golden West Telecommunications prior to bidding to ensure the plant site area where the lab will be placed is able to have a hard wired phone connection.

The lab shall be equipped with an internet connection such as DSL, cable modem, or other approved service. The internet connection shall be provided with a multi-port wireless router. The internet connection shall be a minimum speed of 512 Kb unless limited by job location and approved by the DOT. Prior to installing the wireless router the Contractor shall submit the wireless router's technical data to the Area Office to check for compatibility with the state's computer equipment. The internet connection is intended for state personnel usage only. The Contractor's personnel are prohibited from using the internet connection unless pre-approved by the Project Engineer.

The Contractor shall submit a copy of each monthly bill for calls charged to this phone at the completion of the project. The Project Engineer will then audit the bills to ensure all calls are legitimate and then initiate a Construction Change Order (CCO) to reimburse the Contractor for the actual phone calls made, including local and long distance calls. Reimbursement will not be made for fees associated with the purchase, installation, disconnection, monthly line charges, and incidentals involved in the installation, maintenance, and disconnection of the phone (including attachments). These items shall be incidental to the contract unit price per each for TYPE III FIELD LABORATORY.

REMOVE AND RESET MEDIAN CROSSOVER AND RAMP DETOUR CLOSURES

The interim crossover closures (estimated at 704') shall be removed and reset at the locations shown In the Table of Interim Crossover Closures when traffic is no longer being carried on the median crossovers and ramp detours at the end of construction. The closures shall be constructed according to the details for INTERIM CROSSOVER CLOSURE FOR MEDIAN CROSSOVERS AND RAMP DETOURS located elsewhere in these plans.

TABLE OF INTERIM CROSSOVER CLOSURES

Location	Remove and Reset Interim Crossover Closure Ft.
Median Crossovers	
MRM 189.00 +0.634	224
MRM 198.00 +0..049	224
Exit 192 Ramp Detours	
On Ramp Detour	128
Off Ramp Detour	128
Totals	704

REMOVE AND RESET DELINEATORS

4" x 4" delineators shall be removed from the WB ramp detours and reset on the EB ramp detours. The delineators shall be installed according to the ramp detour detail sheets.

TABLE OF DELINEATORS

Location	Amber Delineators	White Delineators
	each	each
Exit 192 – EB Off Ramp	12	6
Exit 192 – EB On Ramp	14	6
TOTAL	26	12

EXISTING PCC PAVEMENT

The existing PCC Pavement consists of 8" Continuously Reinforced PCC Pavement and 8" & 10" Nonreinforced PCC Pavement. The existing 8" Continuously Reinforced PCC Pavement is continuously reinforced with #5 deformed longitudinal steel bars spaced 6.5" center to center and #5 deformed transverse steel bars spaced 48" center to center.

The coarse aggregate in the existing Continuously Reinforced PCC Pavement is natural rock.

The aggregate in the existing 8" & 10" Nonreinforced PCC Pavement may be quartzite or limestone.

The PCC Pavement removed from this project will be crushed and reused in the Select Subgrade Topping.

UNCLASSIFIED EXCAVATION

Unclassified Excavation quantity shall be as noted in the following table. Unclassified Excavation will not be measured for payment and the basis of payment will be plans quantity. Unclassified Excavation is salvaged asphalt mix and granular base material, salvaged granular base material, removal of granular material, removal of concrete pavement, 2' subgrade excavation for Select Subgrade Topping, and removal of waste material, see typical sections.

The Unclassified Excavation waste material may be used as Contractor Furnished Borrow Excavation for inslope flattening and widening. The Contractor will ensure no asphalt concrete material will be used for inslope flattening and widening.

UNCLASSIFIED EXCAVATION, DIGOUTS

Included in the Estimate of Quantities are 25 cubic yards per mile of Unclassified Excavation, Digouts for the necessary removal of unstable material. Quantity is based upon a length of 8.402 miles for I-90 Westbound lanes and 0.810 miles for US83.

The Contractor must ensure any water that collects in the digouts can escape the subgrade. The Contractor can accomplish this by ensuring the digouts daylight to the inslope or a drain tube is placed at the bottom of the digouts and the outlet is placed at the closest available point. Cost for drain tube shall be included in the contract unit price per cubic yard for "Unclassified Excavation, Digouts".

Backfill shall be Base Course or Base Course, Salvaged paid for at the contract unit price per ton.

TABLE OF UNCLASSIFIED EXCAVATION

Location of Removal Areas	Salvaged Asphalt Mix and Granular Base Material	Salvaged Granular Material	Remove Granular Material	Remove Concrete Pavement	## 2' Subgrade Excavation for Select Subgrade Topping	Waste Material
	CuYds	CuYds	CuYds	CuYds	CuYds	CuYds
I-90 WBL						
Sta. 0+00 -1' to Sta. 6+76.0	114.1	368.1		401.2	2,840.6	471.5
Sta. 74+85.9 to Sta. 86+74.6	182.6	686.2		704.4	5,888.5	1,332.8
Sta. 268+88.1 to Sta. 272+28.1, includes both shoulders	29.2	115.0		260.3	1,548.8	225.0
Sta. 273+51.9 to Sta. 277+51.9, includes both shoulders		59.3		393.2	1,822.1	289.3
Sta. 439+05.0 to Sta. 445+70.0	111.9	263.1		394.1	2,794.5	460.3
		1491.7				
Exit 191 Westbound Ramps						
Sta. 10+19.8 to Sta. 29+70.3 On Ramp	959.0					9.7
Sta. 0+15.3 to Sta. 14+87.1 Off Ramp	727.2					0.8
Exit 192 Westbound Ramps						
Sta. 10+17.8 to Sta. 13+29.8 On Ramp				196.4		86.7
Sta. 7+70.3 to Sta. 10+82.3 Off Ramp				196.4		86.7
Weigh Area						
Sta. 10+19.8 to Sta. 25+29.9						382.3
Westbound Ramp Detours						
Exit 191 In Place On Ramp Detour	** 571.6		# 2,200.6			
Exit 191 In Place Off Ramp Detour	** 445.6		# 1,474.5			
Eastbound Ramp Detours						
Exit 191 Future Off Ramp Detour	** 33.9					** 545.5
Exit 191 Future On Ramp Detour	** 33.9					** 706.4
I-90 Westbound Lanes Full Depth Repair				44.4		
US83 Shoulders						
Sta. 10+95.0 to Sta. 12+20.5 Lt.	10.5					
Sta. 13+46.2 to Sta. 44+71.5 Lt.	209.5					
Sta. 10+93.4 to Sta. 12+09.3 Rt.	9.7					
Sta. 12+73.5 to Sta. 43+77.2 Rt.	208.1					
Subtotals	3,646.7	1,491.7	3,675.1	2,590.4	14,894.5	4,597.0
* TOTAL	30,895.4					

* Plans quantity will be the basis of measurement and payment for the above mentioned work.

** Material will be removed near the completion of the project. This material can be reused as Base Course, Salvaged to construct the Eastbound ramp detours, no blending required.

Material will be removed near the completion of the project. The material is 3,675.1 cu.yds. of Pit Run which can be reused to construct the Eastbound ramp detours.

Quantity includes 3,723.8 cu.yds. of excess material which may be used as Contractor Furnished Borrow Excavation.

COLD MILLING ASPHALT CONCRETE

The Los Angeles Abrasion Loss value on the aggregate used for the in place asphalt concrete could not be determined.

Cold Milling Asphalt Concrete is estimated to produce 464.2 tons of salvaged asphalt concrete material. Cold Milled Asphalt Concrete shall be crushed and reused as Base Course, Salvaged and Gravel Cushion, Salvaged provided it is blended at a ratio not exceeding 1 part asphalt concrete material to 1 part Granular Material, Furnish.

TABLE OF COLD MILLING ASPHALT CONCRETE

Location	Cold Milling Asphalt Concrete SqYd	Depth of Cold Milling Asphalt Concrete Inches
Exit 191 Westbound On Ramp		
Sta. 10+45.0 to Sta. 10+85.0	87.6	0” to 1”
Sta. 10+85.0 to Sta. 29+30.3	4,039.2	1”
Sta. 29+30.3 to Sta. 29+70.3	514.7	1” to 2”
Exit 191 Westbound Off Ramp		
Sta. 0+15.3 to Sta. 0+55.3	601.2	2” to 1”
Sta. 0+55.3 to Sta. 14+45.0	3,041.9	1”
Sta. 14+45.0 to Sta. 14+85.0	87.6	1” to 0”
TOTAL	8,372.2	

SALVAGE AND STOCKPILE ASPHALT MIX AND GRANULAR BASE MATERIAL

Asphalt mix and granular base material shall be salvaged from the location shown in the Table of Salvage and Stockpile Asphalt Mix and Granular Base Material. The salvaged material shall be stockpiled at a site furnished by the Contractor and satisfactory to the Engineer.

The quantity of salvaged asphalt mix and granular base material may vary from the plans. The Contractor will be required to use all the salvaged material on this project by decreasing or increasing the quantity of Base Course or Gravel Cushion as necessary, or as directed by the Engineer. Plans quantity will be the basis of measurement and payment for the above mentioned work.

SALVAGE AND STOCKPILE ASPHALT MIX AND GRANULAR BASE MATERIAL (CONTINUED)

No adjustment in the contract unit price per ton for salvaged material will be made because of a variation in salvaged material quantities.

An estimated 7,356.6 tons (3,892.3 cu.yds.) will be salvaged during this operation, including cold milling quantities. The salvaged material will be reused as Base Course, Salvaged and Gravel Cushion, Salvaged. Only 5,306.1 tons of salvaged material will be available for construction of the permanent roadway (mainline, ramps, guardrail, and etc.) due to salvaging operation near the completion of the project. The 5,306.1 tons of salvaged material will be blended with Granular Material, Furnish.

TABLE OF SALVAGE AND STOCKPILE ASPHALT MIX AND GRANULAR BASE MATERIAL

Location of Removal Areas	Salvaged Asphalt Mix and Granular Base Material Tons
I-90 WBL	
Sta. 0+00 -1’ to Sta. 6+76.0	215.7
Sta. 74+85.9 to Sta. 86+74.6	345.2
Sta. 268+88.1 to Sta. 272+28.1, includes both shoulders	55.2
Sta. 439+05.0 to Sta. 445+70.0	211.5
Exit 191 Westbound Ramps	
Sta. 10+19.8 to Sta. 29+70.3 On Ramp	1,812.5
Sta. 0+15.3 to Sta. 14+87.1 Off Ramp	1,374.4
Westbound Ramp Detours	
Exit 191 In Place On Ramp Detour	** 1,080.2
Exit 191 In Place Off Ramp Detour	** 842.1
Eastbound Ramp Detours	
Exit 191 Future Off Ramp Detour	** 64.1
Exit 191 Future On Ramp Detour	** 64.1
US83 Shoulders	
Sta. 10+95.0 to Sta. 12+20.5 Lt.	19.8
Sta. 13+46.2 to Sta. 44+71.5 Lt.	396.0
Sta. 10+93.4 to Sta. 12+09.3 Rt.	18.3
Sta. 12+73.5 to Sta. 43+77.2 Rt.	393.3
* TOTAL	6,892.4

* Plans quantity will be the basis of measurement and payment for the above mentioned work.

** Material will be removed near the completion of the project, estimated quantity equals 2,050.5 tons. This material can be reused as Base Course, Salvaged to construct the Eastbound Ramp Detours without blending with Granular Material, Furnished.

BLEND & STOCKPILE GRANULAR MATERIAL

Salvage and Stockpile Asphalt Mix and Granular Base Material estimated at 5,306.1 tons shall be blended with 5,306.1 tons of Granular Material, Furnish and shall be blended and stockpiled at the contractor furnished stockpile site(s). A computerized scale along with a scale operator shall be provided by the Contractor at the stockpile site to weigh the salvaged material prior to blending.

Asphalt mix and granular base material shall be blended with Granular Material, Furnish at a rate of 50% salvaged asphalt mix and granular base material and 50% Granular Material, Furnish to obtain stockpile material. Prior to incorporation into the stockpile, cold milled asphalt material shall be run over a 1 ½” screen to remove large chunks. No further testing of the material will be required. The use of a pugmill to blend the materials will be accepted.

Calibrated conveyor(s) shall be used to provide a uniform blending of the materials. Material shall be blended prior to incorporation into the pile.

All other costs for hauling, stockpiling, and blending asphalt mix and granular base material and Granular Material, Furnish shall be incidental to the contract unit price per ton for “Blend and Stockpile Granular Material”.

An estimated 2,885.4 tons of blended material and an estimated 2,050.5 tons of unblended material will be used on this project as Base Course, Salvaged (total Base Course, Salvaged = 4,935.9 tons). An estimated 7,726.8 tons of blended material will be used on this project as Gravel Cushion Salvaged.

GRANULAR MATERIAL, FURNISH

Granular Material shall be furnished by the Contractor for use in blending with the salvaged asphalt mix and granular base material from this project.

The Granular Material shall be Base Course meeting the requirements of Section 882.

All other costs for hauling, stockpiling, and blending asphalt mix material and Granular Material, Furnish shall be incidental to the contract unit price per ton for “Blend, Haul & Stockpile Granular Material”.

SALVAGE AND STOCKPILE GRANULAR MATERIAL

Granular material shall be salvaged from the location shown in the Table of Salvage and Stockpile Granular Material and typical sections. The salvaged material shall be stockpiled at a site furnished by the Contractor and satisfactory to the Engineer.

The quantity of salvaged granular base material may vary from the plans. The Contractor will be required to use all the salvaged material on this project. Plans quantity will be the basis of measurement and payment for the above mentioned work.

No adjustment in the contract unit price per ton for salvaged material will be made because of a variation in salvaged material quantities.

The salvaged material shall be reused on this project as Select Subgrade Topping.

TABLE OF SALVAGE AND STOCKPILE GRANULAR MATERIAL

Location of Removal Areas	Salvaged Granular Material
	Tons
I-90 WBL	
Sta. 0+00 -1' to Sta. 6+76.0	695.8
Sta. 74+85.9 to Sta. 86+74.6	1,297.0
Sta. 268+88.1 to Sta. 272+28.1, includes both shoulders	217.4
Sta. 273+51.9 to Sta. 277+51.9, includes both shoulders	112.1
Sta. 439+05.0 to Sta. 445+70.0	497.3
* TOTAL	2,819.6

* Plans quantity will be the basis of measurement and payment for the above mentioned work.

REMOVE GRANULAR MATERIAL

Location of Removal Areas	Remove Granular Material
	CuYds
Westbound Ramp Detours	
Exit 191 In Place On Ramp Detour	2,200.6
Exit 191 In Place Off Ramp Detour	1,474.5
* TOTAL	3,675.1

* Plans quantity will be the basis of measurement and payment for the above mentioned work. The material being removed is Pit Run, estimated 3,675.1 cu.yds (6,945.9 tons). The granular material may be reused as Pit Run for the construction of the Eastbound Ramp Detours. Refer to the typical sections for location of material. This quantity is based on a unit weight of 1.89 tons per cubic yard for the reclaimed granular aggregate.

RECLAIMED CONCRETE AGGREGATE

PCC Pavement (RCA) removed from within the project limits will be crushed to a minus 2.5 inch size. Asphalt from the shoulders and from the asphalt patch areas should be salvaged separately. All in place rebar shall be separated and removed from the RCA. Existing rebar will become the property of the Contractor.

All in place PCC Pavement will be reused on this project. There is an estimated 4,055.7 tons (2,546.0 cu.yds.)of PCC Pavement on this project that will be crushed and reused in the Select Subgrade Topping material. This quantity is based on a unit weight of 118 lbs. per cubic foot for the reclaimed concrete aggregate.

Payment for the placement of RCA is included in the Select Subgrade Topping bid item.

TABLE OF REMOVE CONCRETE PAVEMENT

Location	In Place PCC Pavement
	SqYds
I-90 - Westbound Mainline	
Sta. 0+00 -1' to Sta. 6+76.0	1,805.3
Sta. 74+85.9 to Sta. 86+74.5	3,169.6
Sta. 268+88.1 to Sta. 272+28.1	906.6
Sta. 273+51.9 to Sta. 277+51.9	1,066.6
Sta. 439+05.0 to Sta. 445+70.0	1,773.3
I-90 Westbound Outside and Median Shoulders	
Sta. 270+78.1 to Sta. 272+28.1	233.3
Sta. 273+51.9 to Sta. 277+51.9	622.2
Exit 192 Westbound Ramps	
Sta. 10+17.8 to Sta. 13+29.8 On Ramp	832.0
Sta. 7+70.3 to Sta. 10+82.3 Off ramp	832.0
I-90 Westbound Lanes Full Depth Repair	200.0
Total	11,440.9

EXCESS GRANULAR MATERIAL

Excess granular material at the end of project construction will be hauled and stockpiled at the Murdo Maintenance Yard - NE1/4 Sec 13-T2S-R28E Jones County.

EXCAVATION FOR SELECT SUBGRADE TOPPING

In the places where the PCC Pavement surfacing is being removed (begin/end of project, adjacent bridges, and excavation for clearance under the structures), the upper subgrade soil shall be modified by mixing the excavated soil with salvaged surfacing materials prior to resurfacing.

After the existing PCCP and asphalt shoulders are removed, the existing base course shall be removed and stockpiled. The removed PCCP will be crushed to a minus 2.5 inch size. As the existing base course is lime treated, it may be necessary to crush it also to obtain the minus 2.5 inch material that is desired.

The exposed subgrade will be excavated to a depth of 2 feet below the top of the proposed subgrade, accounting for grade changes. The salvaged PCCP and base course will be blended with the excavated soil and used as "Select Subgrade Topping" to backfill the excavation area. The blended backfill material will consist of a ratio of approximately 3:1 excavated soil to crushed PCCP and salvaged base course. The entire subgrade shall be constructed using this blended material.

If any extremely soft or oversaturated subgrade is encountered during the excavation for select topping, contact the Geotechnical Engineering Activity for assistance with possible mitigation procedures.

It is anticipated that there will be approximately 3,723.8 CuYds of embankment material more than what is needed. The excavated material not needed for the "Select Subgrade Topping" shall be used as Contractor Furnished Borrow Excavation or wasted at a site approved by the Engineer. The excess material may be disposed of in the State ROW to flatten inslopes as approved by the Engineer.

If waste material is disposed of in the State ROW, the removal and replacement of the topsoil and seeding shall be incidental to the contract unit price per cubic yard for "Unclassified Excavation".

Payment to remove the subgrade shall be paid for once as Unclassified Excavation.

Revised: 6 Aug 15, RML

SELECT SUBGRADE TOPPING

The salvaged PCCP and granular base material will be blended with the excavated soil and used as "Select Subgrade Topping" to backfill the excavated subgrade. No asphalt concrete material will be allowed in the Select Subgrade Topping.

Select Subgrade Topping shall be compacted with sheepsfoot or other approved rollers. Compaction shall be as per 260.3 D. Additional test strips will be made as required by changes in soil types. Moisture requirements will be determined in accordance with SD 104, except the optimum and field moisture will be determined using material passing a ¾ inch sieve.

Density testing will be performed a minimum of 1 per lane per structure per lift.

Moisture testing will be performed a minimum of 1 per day.

Edge drains are present and will be replaced in the reconstructed roadway sections, see typical sections.

The strength data contained in this report are based on the conditions at the time of investigation (September, 2014). The subgrade strength may be reduced in the springtime due to changes in the subgrade moisture. A copy of the surfacing/subgrade investigation for this project is available from the Winner Area and the Pierre Region offices.

Field measurement of Select Subgrade Topping shall not be made and payment for Select Subgrade Topping will be based upon plans quantity unless changes are directed by the Engineer.

All costs associated with the crushing, mixing and placement of the Select Subgrade Topping material shall be incidental to the contract unit price per Cubic Yard for Select Subgrade Topping, quantity estimated at 14,894.5 Cu.Yds.

EDGE DRAIN REMOVAL

At locations where PCC Pavement will be removed, the Contractor will remove the edge drains, edge drain fabric, edge drain outlets, and concrete headwalls installed along the WB median and outside shoulders, see following table.

The Contractor shall locate edge drain outlets prior to construction along these work areas. Edge Drain Outlets will be installed at the same location as the in place outlets or as directed by the Engineer.

The Contractor may salvage concrete headwalls to be reused with the new edge drain outlets with the approval by the Engineer.

The Contractor shall cap off the existing edge drains with an approved cap as directed by the Engineer.

All costs for removing, salvaging, capping, including materials and incidentals shall be incidental to the contract lump sum price for REMOVE EDGE DRAINS.

Edge Drain Removal, for information only

Location	Edge Drain	Edge Drain Outlet & Concrete Headwall
	Feet	Each
I-90 Outside Shoulder		
Sta. 0+00 to Sta. 6+76	676.0	2
Sta. 74+85.9 to Sta. 75+59	73.1	1
Sta. 86+19 to Sta. 86+74.6	55.6	1
Sta. 268+88.1 to Sta. 271+75	286.9	1
Sta. 274+24 to Sta. 277+51.9	327.9	1
Sta. 439+05 to Sta. 445+70	665.0	2
I-90 Median Shoulder		
Sta. 0+00 to Sta. 6+76	676.0	1
Sta. 74+85.9 to Sta. 86+74.6	1,188.7	3
Sta. 268+88.1 to Sta. 271+75	286.9	1
Sta. 274+24 to Sta. 277+51.9	327.9	1
Sta. 439+05 to Sta. 445+70	665.0	1
TOTAL	5,229.0	15

2' DEEP EDGE DRAINS

At least two weeks prior to installation of the edge drain, a manufacturer's certification of material specification compliance shall be submitted to the Engineer.

The Geotextile shall be a Type A Drainage Fabric conforming to the requirements of Section 831.1 of the Standard Specifications and located as shown on the plans and in accordance with the manufacturer's recommendations. Fabric will be placed no higher than 2" from the top of the trench. The top 2 inches of the trench shall be filled with Porous Backfill.

Two weeks prior to beginning installation, the Contractor shall furnish the Engineer with copies of the manufacturer's literature with details, specifications, and installation requirements for edge drain and outlet pipe. In addition, the Contractor shall provide information on the type of trenching equipment to be used and the proposed procedure for installation of the edge drain and outlets. Installation of edge drain and edge drain outlets, and excavation and backfill of trenches shall be in accordance with the details shown on the plans, as specified herein, and in accordance with the manufacturer's recommendations.

Each segment of edge drain shall be spliced to the adjacent segment in accordance with manufacturer's recommendations prior to installation, kept in proper alignment, and not allowed to separate during installation. The porous backfill shall be placed to the depth indicated in the edge drain details and shall be compacted by a vibratory compactor or other means, satisfactory to the Engineer, which does not result in damage to the edge drain pipe.

The Acceptance Testing Frequency for the Porous Backfill shall be a minimum of 1 per 250 tons. The Project Engineer may reduce the testing frequency to 1 per 2000 tons after the first three passing tests provided the source remains the same and provided there is no apparent change in the properties of the material. If observations by the Project Engineer cause concern that specifications compliance is questionable, he may return to the 1 per 250 ton frequency.

2' DEEP EDGE DRAINS (CONTINUED)

Trenches for outlets shall be excavated to the lines and grades shown on the plans or as directed by the Engineer and shall be backfilled with fill material. The fill material shall be placed to the depth indicated in the edge drain details and shall be compacted by a vibratory compactor or other means, satisfactory to the Engineer, which does not result in damage to the outlet pipe. Edge Drain Outlets will be installed at the same location as the in place outlets or as directed by the Engineer.

Trenches shall not be left open during non-working hours.

The material removed from the edge drain trench and edge drain outlet trench, shall be disposed of by the Contractor at a site approved by the Engineer. Cost of disposal shall be incidental to the contract unit prices per foot for 2' Deep Edge Drain and Edge Drain Outlet. Material removed from the edge drain trenches may be used as Contractor Furnished Borrow Excavation for inslope flattening.

Payment for constructing the edge drain including trench excavation, 4" slotted corrugated polyethylene drainage tubing, porous backfill material, geotextile fabric, fittings, labor, equipment, tools and incidentals necessary to satisfactorily complete the work shall be incidental to the contract unit price per foot for 2' Deep Edge Drain.

Payment for constructing the edge drain outlets including the outlet trench excavation, 4" PVC edge drain outlet pipe, 4" standard weight black steel pipe (length = 5'), fill material, bends, couplers, caps, fittings, labor, equipment, tools and incidentals necessary to satisfactorily complete the work shall be incidental to the contract unit price per each for Edge Drain Outlet.

Payment for supplying and installing the precast concrete headwall shall be incidental to the contract unit price per each for Precast Concrete Headwall For Drain.

Edge Drain and Outlet Installation

Location	Edge Drain	Edge Drain Outlet & Concrete Headwall
	Feet	Each
I-90 Outside Shoulder		
Sta. 0+00 to Sta. 6+76	676.0	2
Sta. 74+85.9 to Sta. 86+74.6	1,188.7	3
Sta. 268+88.1 to Sta. 272+28.1	340.0	1
Sta. 273+51.9 to Sta. 277+51.9	400.0	1
Sta. 439+05 to Sta. 445+70	665.0	2
I-90 Median Shoulder		
Sta. 0+00 to Sta. 6+76	676.0	1
Sta. 74+85.9 to Sta. 86+74.6	1,188.7	3
Sta. 268+88.1 to Sta. 272+28.1	340.0	1
Sta. 273+51.9 to Sta. 277+51.9	400.0	1
Sta. 439+05 to Sta. 445+70	665.0	1
TOTAL	6,539.4	16

Revised: 6 Aug 15, RML

EXISTING EDGE DRAIN OUTLETS

Prior to construction at slope widening/flattening locations along the length of the project on the WB median and outside shoulders, the Contractor shall locate and protect the Edge Drain Outlets and concrete Headwalls during construction. The Contractor will ensure all outlets function properly during construction. It is estimated that there are approximately 172 edge drain outlets.

Existing edge drain outlets located in the areas of the mainline slope widening/flattening and the ramp gore areas will need to be extended out to the new inslopes with 4" PVC Edge Drain Outlet Pipe and 4" Standard Weight Black Steel Pipe. The 4" Standard Weight Black Steel Pipe will be 5' long at all locations. The in place and new 4" PVC Edge Drain Outlet Pipe lengths will be adjusted to ensure the Concrete Headwall will be located properly along the new inslope. The Concrete Headwalls shall be removed and reset as directed by the Engineer. All costs associated with furnishing and extending/reducing the pipes, removing/resetting the concrete headwalls, fill material, bends, couplers, caps, fittings, labor, equipment, tools and incidentals necessary to satisfactorily complete the work shall be incidental to the contract lump sum price for Incidental Work.

Any edge drain outlet pipes and headwalls damaged during construction shall be repaired at the Contractor's expense and to the satisfaction of the Engineer.

CONTRACTOR FURNISHED BORROW EXCAVATION

The Contractor shall provide a suitable site for Contractor Furnished Borrow Excavation material to be used at the locations listed in the Table of Contractor Furnished Borrow Excavation.

Placement of the Contractor Furnished Borrow Excavation will be to the satisfaction of the Engineer.

Water for Embankment is estimated at the rate of 10 gallons of water per cubic yard of Contractor Furnished Borrow Excavation

The Contractor is responsible for obtaining all required permits and clearances for the borrow site as stated in Commitment I: Historical Preservation Office Clearances in Section A. The borrow material shall be approved by the Engineer.

Restoration of the Contractor Furnished Borrow Excavation site shall be the responsibility of the Contractor.

The Unclassified Excavation waste material may be used as Contractor Furnished Borrow Excavation for inslope flattening and widening as required, see typical sections. The outside and median shoulder inslope shall be at a 6:1 or flatter to at least the clear zone (36' from edge of median driving lane and 30' from edge of outside driving lane). All slopes for median ditch blocks and maintenance crossover shall be a 10:1 or flatter. Care shall be taken so that a minimum 4" depth of topsoil shall be placed over the entire disturbed area while proper drainage is maintained. Final acceptance of the inslopes will be at the discretion of the Engineer.

TABLE OF CONTRACTOR FURNISHED BORROW EXCAVATION

Location	Contractor Furnished Borrow Excavation	Water For Embankment
	CuYds	Mgal
Mainline – Inslope Flattening		
Sta. 0+00 -1' to Sta. 445+70, Outside and Median Shoulders	17,800.0	229.6
Culvert End Replacement	115.0	1.5
Gore Areas		
Exit 191 On Ramp	433.3	5.6
Exit 191 Off Ramp	100.6	1.3
Exit 192 On Ramp	668.9	8.6
Exit 192 Off Ramp	223.1	2.9
Weigh Area On Ramp	337.0	4.3
Weigh Area Off Ramp	131.1	1.7
Ramps		
Exit 191 On Ramp Sta. 10+19.8 to Sta. 29+70.3	1,589.0	20.5
Exit 191 Off Ramp Sta. 0+15.3 to Sta. 14+87.1	1,215.8	15.7
Exit 192 On Ramp Sta. 10+17.8 to Sta. 13+29.8	207.3	2.7
Exit 192 Off Ramp Sta. 7+70.3 to Sta. 10+82.3	212.6	2.7
Weigh Area On Ramp Sta. 10+14.0 to Sta. 15+61.3	119.2	1.5
Weigh Area Off Ramp Sta. 20+12.2 to Sta. 25+56.4	116.4	1.5
Guardrail Westbound Lane – Permanent		
MRM 191.15 WB Median Shoulder	1,768.3	22.8
MRM 192.65 WB Median Shoulder	911.9	11.8
Str. # 38-200-190 End Bridge Outside Shoulder End Bridge Median Shoulder	 46.1 662.6	 0.6 8.5
Guardrail Westbound Lane – Traffic Control		
Str. # 38-200-190 Begin Bridge Outside Shoulder Begin Bridge Median Shoulder	 67.6 49.1	 0.9 0.6
Guardrail Eastbound Lane – Traffic Control		
Str. # 38-200-191 End Bridge Outside Shoulder End Bridge Median Shoulder	 82.0 43.0	 1.1 0.6
TOTAL	26,899.9	347.0

BACKFILLING OF DIGOUTS

Included in the Estimate of Quantities are 50 cubic yards of Base Course or per mile and 0.6 Mgal of Water for Granular Material per mile for backfilling of digouts of the existing surface at locations to be designated by the Engineer. Compaction of the Base Course for the digouts shall be to the satisfaction of the Engineer. An estimated 8.402 miles is required for I-90 Westbound lanes and an estimated 0.810 miles is required for US83.

CONSTRUCTION HAUL ROAD

Included in the Estimate of Quantities are 1,000 tons of Gravel Cushion per mile and 12 MGal of Water for Granular Material per mile for the purpose of haul road construction. The use of this material will be at the discretion of the Contractor. Any additional construction and removal for the construction haul road shall be the Contractor's responsibility. The Contractor shall receive no additional compensation for this work. An estimated 8.401 miles required for project.

BASE COURSE, SALVAGED

The Base Course, Salvaged shall be obtained from the stockpile site(s) provided by the Contractor from the blended and salvaged material produced on this project and may be used without further testing.

Base Course, Salvaged taken from stockpile sites shall be run over a 1 1/2 inch screen prior to placement.

Base Course, Salvaged shall be compacted according to the requirements of the Specifications. All other requirements for Base Course, Salvaged shall apply.

GRAVEL CUSHION, SALVAGED

The Gravel Cushion, Salvaged shall be obtained from the stockpile site(s) provided by the Contractor from the blended and salvaged material produced on this project and may be used without further testing.

Gravel Cushion, Salvaged taken from stockpile sites shall be run over a 1 1/2 inch screen prior to placement.

The Contractor will be required to use all the Gravel Cushion, Salvaged on this project by decreasing or increasing the quantity of Gravel Cushion necessary, or as directed by the Engineer.

Gravel Cushion, Salvaged shall be compacted according to the requirements of the Specifications. All other requirements for Gravel Cushion, Salvaged shall apply.

MAINTENANCE OF MAINLINE SURFACE & SHOULDERS

The Contractor shall place Asphalt Concrete Composite on the Eastbound mainline and shoulders, at the Engineers discretion, before Head-to-Head traffic is placed on it. The Contractor will remove loose and broken pavement from the mainline and shoulders.

After Initial Patching is complete, the Contractor shall be responsible for maintaining the surface, throughout the length and duration of the project.

Cost for maintaining the mainline surface and shoulders for the length and duration of the project shall be incidental to the contract unit price per ton for Asphalt Concrete Composite, quantity estimated at 2,000 tons.

OVERWIDTH DETOUR ROUTE – SD 248

The Contractor shall be responsible for maintaining the surface at its current condition throughout the length and duration of the project to the satisfaction of the Engineer.

Cost for maintaining the roadway surface shall be incidental to the contract unit price per ton for Asphalt Concrete Composite, quantity estimated at 6,000 tons.

CLASS HR ASPHALT CONCRETE

Salvaged asphalt concrete material (RAP) shall be obtained from stockpile located in the Murdo Maintenance Yard - NE1/4 Sec 13-T2S-R28E Jones County and may be used without further testing. This material is royalty free to the Contractor. An estimated 5,200 tons of salvaged asphalt mix material will be used for Class HR Asphalt Concrete. The RAP has been stockpiled since the summer of 2015. RAP in the cold feed shall be crushed to meet the requirements specified in Section 884.2.C.1.

Virgin mineral aggregate shall be furnished by the Contractor.

The Class HR Asphalt Concrete shall include 30 percent salvaged asphalt concrete (RAP) in the mixture. Job mix formula tolerances for the RAP shall be ± 5% from the target value.

The RAP shall be crushed to provide a homogenous mixture of material so that the maximum particle size in the cold feed will not exceed 1 1/2 Inches (37.5mm).

Screening or scalping of the RAP stockpile(s) will not be allowed.

Virgin mineral aggregate for Class HR Asphalt Concrete shall conform to the requirements for Class E, Type 1.

All other requirements for Class HR shall apply.

ASPHALT CONCRETE RUMBLE STRIPS

Rumble Strips for the median and outside shoulders shall be constructed as per Standard Plate 320.32 for 12” Rumble Strip In Asphalt Concrete On Interstate Shoulders. Rumble Strips will be placed 6” from edge of PCC Pavement. Payment for forming rumble strips, on the shoulders, including labor, materials and incidentals shall be at the contract unit price per mile for GRIND 12” RUMBLE STRIP OR STRIPE IN ASPHALT CONCRETE. It is estimated that 8.2 miles of asphalt concrete rumble strip will be required for the median shoulder and 6.7 miles for outside shoulder

SUMMARY OF ASPHALT CONCRETE

Location	Class HR Asphalt Concrete With Specified Density Ton	Class HR Asphalt Concrete Without Specified Density Ton
I-90 Westbound Lanes		
Median Shoulders		
Sta. 0+00 -1’ to Sta. 268+88.1 Sta. 277+51.9 to Sta. 445+70.0		4,058.9
Outside Shoulder – 8’		
Sta. 0+00 -1’ to Sta. 46+96.8 Sta. 65+42.6 to Sta. 99+04.2 Sta. 108+77.0 to Sta. 129+67.8 Sta. 148+18.7 to Sta. 169+12.3 Sta. 178+84.9 to Sta. 220+44.5 Sta. 239+44.3 to Sta. 254+31.2 Sta. 264+03.6 to Sta. 268+88.1 Sta. 277+51.9 to Sta. 445+70.0		6,345.1
Outside Shoulder – 6’		
Sta. 46+96.8 to Sta. 62+76.8 Sta. 101+97.0 to Sta. 108+77.0 Sta. 129+67.8 to Sta. 145+52.9 Sta. 172+04.9 to Sta. 178+84.9 Sta. 220+44.5 to Sta. 236+78.5 Sta. 257+23.6 to Sta. 264+03.6		854.2
Ramps – Westbound Lanes		
Exit 191 On Ramp		
Sta. 10+19.8 to Sta. 12+51.8, Mainline Transition	81.6	150.0
Sta. 12+51.8 to Sta. 29+70.3 – Mainline - Both Shoulders	595.6	428.2
Exit 191 Off Ramp		
Sta. 0+15.3 to Sta. 12+55.1 – Mainline - Both Shoulders	429.7	309.0
Sta. 12+551. to Sta. 14+87.1, Mainline Transition	81.6	150.0
Weigh Area		
Sta. 10+19.8 to Sta. 12+51.8, Mainline Transition	78.7	113.9
Sta. 12+51.8 to Sta. 22+97.9 – Mainline - Both Shoulders	399.7	61.5
Sta. 22+97.9 to Sta. 25+29.9, Mainline Transitions	78.7	113.9
Additional Surfacing Adjacent to Guardrail		54.8
Exit 192 Future Ramp Detours		916.5
US83 Shoulders		
Sta. 10+93.4 to Sta. 12+09.3 Rt.		19.3
Sta. 12+73.5 to Sta. 43+77.2 Rt.		416.6
Sat. 45+90.0 to Sta. 46+89.1 Rt.		12.8
Sta. 10+95.0 to Sta. 12+20.5 Lt.		20.9
Sta. 13+46.2 to Sta. 44+71.5 Lt.		419.5
TOTAL	1,745.6	14,445.1

PCC OVERLAY CENTERLINE PROFILE

The PCC Overlay centerline profile shown in these plans was used to calculate the cubic yards for the PCC Overlay furnished. The PCC Overlay centerline profile was designed so that there will be a minimum of 7.8 inches of PCC at all locations of the typical sections. The PCC Overlay centerline profile sheets are included in the plans for information only. The Contractor shall create a new PCC Overlay centerline profile in accordance with the Special Provision for Contractor Staking.

11” NONREINFORCED CONCRETE PAVEMENT, 8.5” PCC OVERLAY, AND 7” PCC SHOULDER PAVEMENT

The fine aggregate shall be screened over a 1 inch square opening screen just prior to introduction into the concrete paving mix. The Contractor will screen all of the aggregate to prevent the incorporation of foreign materials (i.e.: mud balls) into the concrete mix.

The concrete mix shall conform to the special provision for Contractor Furnished Mix Design for PCC Pavement.

There will be no direct payment for trimming of the Gravel Cushion for PCC pavement. The trimming will be considered incidental to the related items required for PCC Pavement. Trimming shall be performed as required by Section 380.3 C. of the Specifications.

A minimum of 2 pavement blockouts may be required at various locations on the project to facilitate traffic during the paving activity.

A construction joint will be sawed whenever new concrete pavement is placed adjacent to existing concrete pavement.

The transverse contraction joints shall be perpendicular to the centerline as detailed in the special detail for PCC Pavement Transverse Contraction Joint Spacing and standard plate for PCC Pavement Dowel Bar Assembly for Transverse Contraction Joints. In multilane areas the transverse contraction joints shall be perpendicular to the centerline and be in a straight line across the width of the pavement. In special situations the Engineer may pre-approve transverse contraction joints that do not meet these requirements. All nonconforming transverse contraction joints shall be removed at the Contractor’s expense. Any method of placement that cannot produce these requirements shall not be allowed to continue.

The surface of the mainline paving shall be longitudinally tined. All other areas shall be tined as directed by the Engineer.

PCC Pavement Rumble Strips will be placed adjacent to Str. # 38-200-190 in the PCC Pavement Shoulders (Outside and Median), 6” from the edge of the mainline PCC Pavement. See Standard Plate 380.15 for placement of PCC Pavement Rumble Strips. Payment for forming rumble strips including labor, materials and incidentals shall be incidental to the contract unit price per square yard for 11" NONREINFORCED PCC PAVEMENT and PCC SHOULDER PAVEMENT.

PCC PAVEMENT RUMBLE STRIPS, for information only	
Location	PCCP Rumble Strips
	mile
PCCP Shoulder	0.3

ALKALI SILICA REACTIVITY -

Fine aggregate shall conform to Section 800.2 D Alkali Silica Reactivity (ASR) Requirements.

Below is a list of known fine aggregate sources and the average corresponding 14 day expansion values:

Source	Location	Expansion Value
Bachman	Winner, SD	0.335*
Birdsall S&G	Creston, SD	0.158
Birdsall S&G	Oral, SD	0.131
Birdsall S&G	Wasta, SD	0.170
Bitterman	Delmont, SD	0.316*
Concrete Materials	Corson, SD	0.170
Croell	Quinn, SD	0.089
Emme Sand & Gravel	Oneil, NE	0.217
Fisher S&G	Rapid City, SD	0.092
Fisher S&G	Spearfish, SD	0.053
Fisher S&G	Wasta, SD	0.159
Fuchs	Pickstown, SD	0.275*
Higman	Akron, IA	0.198
Higman	Hudson, SD	0.187
Hilde	Madison, SD	0.116
Jensen	Herried, SD	0.276*
L.G. Everist	Brookings, SD	0.186
L.G. Everist	Hawarden, IA	0.166
L.G. Everist	Summit, SD	0.141
Morris	Blunt, SD	0.192
Morris – Richards Pit	Onida, SD	0.188
Myrl & Roys Paving- Nelson Pit	Sioux Falls, SD	0.156
Northern Concrete Agg.	Rauville, SD	0.113
Northern Concrete Agg.	Luverne, MN	0.124
Opperman - Gunvordahl Pit	Burke, SD	0.337*
Opperman - Cahoy Pit	Herrick, SD	0.307*
Opperman - Jones Pit	Burke, SD	0.321*
Opperman – Randall Pit	Pickstown, SD	0.239
Thorpe Pit	Britton, SD	0.098
Wagner Building Supplies	Pickstown (Wagner), SD	0.241
Winter Brothers- Whitehead Pit	Brookings, SD	0.197

* These sources will require Type V cement in the concrete mix design
and Class F (Modified) fly ash as specified.

The Department will use the running average of the last three known expansion test results or less for determining acceptability of source and the required Type of cement. These expansion results are reported in the preceding table. Additional testing, when requested by the Contractor, will be performed by the Department at the Contractor's expense.

The values listed in the table are intended for use in bidding. If a previously tested pit by SDDOT with acceptable test values (less than 0.250) is discovered after letting to require Type V cement (greater than 0.250) the Department will accept financial responsibility for the change from Type II to Type V cement.

Type II or Type V cement will not change the requirement for the fly ash. The cost for either type of cement shall be subsidiary to the contract item.

PAVEMENT SMOOTHNESS

The following locations shall be tested for smoothness in accordance with the Special Provision for IRI PCC Pavement Smoothness:

I 90 - Sta. 0+00 -1’ to Sta. 445+70.0 Thru Equations (Driving and Passing Lanes)

The following locations shall be tested for smoothness with a Contractor furnished and operated 25 foot California style profilograph in accordance with the Special Provision for PI PCC Pavement Smoothness:

Exit 191 On Ramp Acceleration Lane
Exit 192 On Ramp Acceleration Lane
Weigh Area Site On Ramp Acceleration Lane

TABLE OF SUPERELEVATION

STATION TO STATION	REMARKS
Westbound Lanes	
Sta. 0+00 -1’ to Sta. 122+06.0 Thru Equation	Normal Crown Section
Sta. 122+06.0 to Sta. 123+44.0	Superelevation Transition
Sta. 123+44.0 to Sta. 142+78.6	20° 00' Curve Lt. 0.020 Superelevation Rate.
Sta. 142+78.6 to Sta. 144+16.6	Superelevation Transition
Sta. 144+16.6 to Sta. 188+30.0	Normal Crown Section
Sta. 188+30.0 to Sta. 190+43.0	Superelevation Transition
Sta. 190+43.0 to Sta. 226+88.8	1° 00' Curve Lt. 0.042 Superelevation Rate.
Sta. 226+88.8 to Sta. 229+47.9 Thru Equation	Superelevation Transition
Sta. 229+47.9 to Sta. 342+24.3	Normal Crown Section
Sta. 342+24.3 to Sta. 344+37.3	Superelevation Transition
Sta. 344+37.3 to Sta. 380+49.2	1° 00' Curve Rt. 0.042 Superelevation Rate.
Sta. 380+49.2 to Sta. 383+07.0 Thru Equation	Superelevation Transition
Sta. 383+07.0 to Sta. 445+70.0	Normal Crown Section

TABLE OF GEOTEXTILE BOND BREAKER FABRIC

Location	Geotextile Bond Breaker Fabric
	SqYd
I-90 Westbound Mainline	
Sta. 6+76.0 to Sta. 74+85.9	35,562.8
Sta. 86+74.6 to Sta. 268+88.1	95,114.9
Sta. 277+51.9 to Sta. 439+05.0	84,355.1
Gore Areas	
Exit 191 On Ramp	1,032.0
Exit 191 Off Ramp	885.9
Exit 192 On Ramp	675.5
Exit 192 Off Ramp	685.9
Weigh Area On Ramp	1,223.2
Weigh Area Off Ramp	806.3
TOTAL	220,341.6

Quantity shown is the actual square yardage required with no laps

Prior to placing the fabric, Asphalt Concrete Composite (estimated at 1,000 tons) will be used to fill partial depth repair areas and spall areas at locations in the PCC Pavement of the Westbound lanes as directed by the Engineer.

Prior to placing the fabric, full depth Nonreinforced PCC Pavement Repair (estimated at 200 sq.yds.) will be used to repair areas recommended by the Engineer where the existing PCC Pavement in the Westbound lanes have failed thought the total depth of the pavement.

TABLE OF PCC PAVEMENT

Location	PCC Overlay, Furnish CuYd	8.5" PCC Overlay, Placement SqYd	11" Nonreinforced PCC Pavement SqYd
I-90 WB Mainline			
Sta. 0+00 -1' to Sta. 6+76.0			1,880.6
Sta. 6+76.0 to Sta. 74+85.9	4,327.9	18,916.4	
Sta. 74+85.9 to Sta. 86+74.6			3,301.9
Sta. 86+74.6 to Sta. 268+88.1	11,683.5	50,593.1	
Sta. 268+88.1 to Sta. 272+28.1			944.4
Sta. 273+51.9 to Sta. 277+51.9			1,111.1
Sta. 277+51.9 to Sta. 439+05.0	10,450.8	44,869.7	
Sta. 439+05.0 to Sta. 445+70.0			1,847.2
I-90 Ramp Gore Areas			
Exit 191 WB On Ramp	622.6	2,636.8	
Exit 191 WB Off Ramp	398.5	1,687.7	
Exit 192 WB On Ramp	622.5	2,636.3	
Exit 192 WB Off Ramp	398.4	1,687.3	
Weigh Area WB On Ramp	622.5	2,636.3	
Weigh Area WB Off Ramp	398.2	1,686.4	
I-90 Ramps			
Exit 192 WB On Ramp	204.6	866.7	
Exit 192 WB Off Ramp	204.6	866.7	
TOTALS	29,934.1	129,083.4	9,085.2

TABLE OF PCC PAVEMENT FOR SHOULDERS

Location	PCC Shoulder Pavement (Outside Shoulder, average depth = 7") SqYd	11" Nonreinforced PCC Pavement (Median Shoulder) SqYd
I-90 WB Shoulders		
Sta. 268+88.1 to Sta. 272+28.1	340.0	151.1
Sta. 273+51.9 to Sta. 277+51.9	400.0	177.8
TOTALS	740.0	328.9

TRANSVERSE CONTRACTION JOINTS

See PCC Pavement Layouts sheets and standard plate for PCC Pavement Transverse Contraction Joint Spacing for joint spacing in Nonreinforced PCC Pavement. Joint spacing in the PCC Shoulder Pavement shall match adjacent mainline pavement.

Silicone sealing operations shall be suspended per Specifications for seasonal restrictions (380.3 P.3). Hot poured elastic joint sealer may be temporarily placed during the seasonal restrictions of silicone sealing. If hot poured elastic joint sealer is used, it will be removed the following year and replaced with silicone sealant. All costs associated with the placement and removal of the hot poured elastic joint sealer, any additional joint cleaning, sawing, and traffic control shall be at the Contractor's expense with no additional payment.

TABLE OF DOWEL BARS

Location	1 ¼" Bars	1 ½" Bars
	Each	Each
I-90 WB Mainline		
Sta. 0+00 -1' to Sta. 6+76.0		816
Sta. 6+76.0 to Sta. 74+85.9	11,010	
Sta. 74+85.9 to Sta. 86+74.6		1,416
Sta. 86+74.6 to Sta. 268+88.1	29,647	
Sta. 268+88.1 to Sta. 272+28.1		408
Sta. 273+51.9 to Sta. 277+51.9		480
Sta. 277+51.9 to Sta. 439+05.0	25,848	
Sta. 439+05.0 to Sta. 445+70.0		792
I-90 Ramp Gore Areas		
Exit 191 WB On Ramp	1,310	
Exit 191 WB Off Ramp	843	
Exit 192 WB On Ramp	1,307	
Exit 192 WB Off Ramp	856	
Weigh Area WB On Ramp	1,311	
Weigh Area WB Off Ramp	826	
I-90 Ramps		
Exit 192 WB On Ramp	525	
Exit 192 WB Off Ramp	525	
Subtotal	74,008	3912
TOTAL	77,920	

LOCATION OF CONCRETE PAVEMENT JOINTS

The location of joints, as shown on the "PCC Pavement Layout" sheets, are only approximate locations to be used as a guide in the final location of joints and to afford bidders a basis for estimating the construction costs of the joints. The final locations of the joints are to be designated by the Engineer during construction.

STEEL BAR INSTALLATION

The Contractor shall install 1¼ inch x 18 inch epoxy coated plain round dowel bar.

The steel bars shall be cut to the specified length by sawing and shall be free from burring or other deformations. Shearing will not be permitted.

Epoxy coated plain round steel bars shall be installed on 12 inch centers in the transverse joint. The first steel bar shall be placed a minimum of 3 inches and a maximum of 6 inches from the outside edge of the slab.

Cost for the epoxy resin adhesive, steel bars, drilling of holes, applying the adhesive, installing the steel bars into the drilled holes and all other items incidental to the installation of the steel bars shall be incidental to the contract unit price per each for Insert Steel Bar in PCC Pavement.

TABLE OF STEEL BAR INSTALLATION

LOCATION*	1-1/4" x 18" Plain Round Dowel Bars
	each
Sta. 0+00 -1' I-90 WB Mainline	25
Sta. 13+29.8 Exit 192 On Ramp	25
Sta. 7+70.3 Exit 192 Off Ramp	25
TOTAL	75

CULVERTS

All costs of removing damaged portions of culverts shall be included in the price bid for culverts and ends.

The Contractor shall verify the pipe sizes prior to ordering material.

NOTICE – GALVANIZED COATINGS

Be advised that the galvanized coatings on pipe culverts contain lead. The Contractor should plan his/her operations accordingly, and inform his/her employees of the hazards of lead exposure when a torch is used for cutting pipes.

TIE BOLTS FOR RCP CULVERTS

Tie bolts shall be installed on all newly installed RCP End Sections that are connected to existing RCP. A concrete collar will be installed at the discretion of the Project Engineer if new end sections do not fit properly with existing pipe. Cost for concrete collar shall be incidental to the contract unit price per each for new pipe end sections.

CULVERT CLEANOUT

Material in all existing culverts and entrances shall be cleaned out by water flushing or other approved methods.

It is the responsibility of the Contractor to visit the sites to determine the extent of culvert cleaning work required. The Engineer will have final determination as to which pipes will be cleaned out during construction.

Cost for this work shall be incidental to the contract unit price per each for CLEANOUT PIPE CULVERT, estimated at 27 pipes.

The Contractor shall implement appropriate sediment control measures prior to water flushing in order to prevent discharges from project boundaries to comply with the Storm Water Permit. All costs associated shall be incidental to the various contract items.

Location	Pipe Size and Type
Sta. 40+95	48" RCP
Sta. 103+00	24" RCP
Sta. 105+78	24' RCP
Sta. 124+00	24" RCP
Sta. 135+50	84" RCP
Sta. 139+74	30" RCP
Sta. 183+20	42" RCP
Sta. 202+60	36" RCP
Sta. 209+30	60" RCP
Sta. 221+00	36" RCP
Sta. 230+00	60" Arch RCP
Sta. 234+30	42" RCP
Sta. 234+50	24" RCP
Sta. 242+00	24" Arch RCP
Sta. 248+00	24" RCP
Sta. 267+30	60" RCP
Sta. 287+75	24" CMP
Sta. 288+00	42" RCP
Sta. 299+80	54" RCP
Sta. 315+25	24" RCP
Sta. 320+30	48" RCP
Sta. 326+00	84" RCP
Sta. 332+00	24" RCP
Sta. 346+00	36" RCP
Sta. 355+00	24" RCP
Sta. 367+00	24" RCP
Sta. 442+00	42" RCP

WEIGH IN MOTION UPGRADE

Upgrade of the Electronics, Bending Plates, Bending Plate Frames and Inductive Loops at the Vivian Weigh in Motion (WIM) Site

The contractor shall perform upgrades and repairs to the existing Vivian WIM Site (Interstate 90 approximate MRM 211 + .131 Miles, approximately 1.8 miles west of US83/ Interstate 90 Interchange (near Vivian, SD)) to include:

1. The contractor shall install a new International Road Dynamics Corporation (IRD) 1068iDC ISINC Lite Electronics System (old electronics system was IRD DAW 190 version) in our existing electronics cabinet located in the south ditch at the right of way line near MRM 211 + .131 on Interstate 90. The IRD 1068iDC ISINC Lite Electronics System will include ISINC WIM Electronics with modem (existing Golden West communications land line), AC (existing AC power West Central Electric Corp) and data line surge protection, backup battery, screw in input terminal on the back of the ISNIC unit, software and hardware. The new IRD 1068iDC ISINC Lite Electronics System will be 100% compatible with the present and upgraded inroad part of the WIM system. A representative of IRD (Phone # 306-653-6627) must be on site to aid in the installation of the new IRD 1068iDC ISINC Lite Electronics System. The final installation of the new IRD 1068iDC ISINC Lite Electronics System must be approved by a representative of the SDDOT Office of Inventory Management Traffic Section.

2. The contractor shall remove the existing 7 bending plates (2 per lane except only one in East Bound driving lane) from their existing load frames (which will be replaced as discussed in item 3 below). One of the bending plate (trailing plate) and frame in the East Bound driving lane has been removed and filled with concrete. After new load frames have been installed, then install 8 new IRD Model 100568 1.75meter Bending Plates following the steps and requirements of IRD installation manual (IRD part number 69045001 Revision C (4/3/15)). The contractor will load the 7 old removed bending plates onto a vehicle supplied by the SDDOT Office of Inventory Management Traffic Section. The contractor will supply all necessary equipment including hardware and software, manpower and materials to complete this installation. A representative of IRD (Phone # 306-653-6627) must be on site to aid in the installation of the new IRD Model 100568 1.75meter Bending Plates. The final installation of the 8 new IRD Model 100568 1.75meter Bending Plates must be approved by a representative of the SDDOT Office of Inventory Management Traffic Section.

3. After the 7 old bending plates have been removed the contractor will remove the bending plate load frames in the existing cut area in the PCC Concrete surfacing. A concrete saw will need to cut around the outside of the old frames and then the old load frames can be separated from the roadway with a cutting torch or grinding wheel cutter. The old load frames will not be salvaged and will be disposed of by the contractor. A small jack hammer or grinding wheel will then be used to remove any existing loose or spalling epoxy and concrete material. When the old load frame and loose material is removed, the load frame cavity will be cleaned to the satisfaction of the SDDOT Engineer. Care should be taken not to damage drain pipes and wire conduits under the old load frame. Any damage to the drain pipes and/or wire conduits will be replaced at the contractor expense except for the East Bound driving lane trailing drain pipes and/or wire conduits.

WEIGH IN MOTION UPGRADE (CONTINUED)

For the East Bound trailing plate and frame cavity (which has been filled with concrete), a concrete saw will need to cut around the filled repair cavity area to a depth similar to the other bending plate cavities and then a small jack hammer will remove the repair concrete. If damage occurs to the East Bound driving lane trailing drain pipes and/or wire conduits, the SDDOT will pay to repair. Then 8 new IRD 1.75 meter bending plate load frames will be installed following the steps and requirements of IRD installation manual (IRD part number 69045001 Revision C (4/3/15)). A representative of IRD (Phone # 306-653-6627) must be on site to aid in the installation of the new IRD 1.75 meter bending plate load frames. The contractor will supply all necessary equipment including hardware and software, manpower and materials to complete this installation. The final installation of the 8 new IRD 1.75 meter bending plate load frames must be approved by a representative of the SDDOT Office of Inventory Management Traffic Section.

4. The contractor will install 8 (2 per lane) standard inductive traffic loops which must meet NEMA TS-2 Environmental Specifications. The 8 inductive traffic loops will be installed in the same locations as the existing loops by cutting the old loop wire out (which may increase the existing saw cuts by a small amount) and installing new loop wire and sealing the loops. New loop wire will be able to run through existing conduit to pull boxes alongside the roadway. No splices in new loop wire will be allowed except in existing pull boxes. The old lead in cable (from splice in pull boxes thru existing conduit to the existing electronics cabinet), will be replaced with new lead in cable. A representative of the SDDOT Office of Inventory Management Traffic Section will be on site and direct the installation of the inductive loops. The SDDOT Engineer will determine if the weather is acceptable to install inductive loops (40 F and rising and no rain). All saw cuts must be cleaned to the satisfaction of the SDDOT Engineer before sealing the cuts. The contractor shall provide all supplies necessary for complete installation of the loops including loops, sealant, numbering loops by location, etc.

5. Calibration - after the contractor completes all the work above and before payment. The WIM system will be calibrated by personnel from IRD Corporation and must meet ASTM E 1318-09 Level I accuracy requirements. The contractor will need to supply a 5 axle semi-truck with operator for the calibration process. The 5 axle semi-truck will have a gross weight between 75,000 and 80,000 pounds. A static weight of the semi-truck (including each axle weight) shall be recorded at a certified static scale and a copy of the certified weights supplied to the SDDOT Engineer at the beginning of calibration. The tandem axles on the tractor and trailer shall not be spaced more than 55" apart and the semi will carry a non-shifting load.

6. Payment for all labor, equipment, software, hardware, tools, materials, and all other items to replace the electronics system, bending plates, load frames and inductive loops and have a fully calibrated and operational WIM system shall be included in the contract unit price per each for Weigh-In-Motion System.

7. A two year warranty is required on all components of the new IRD 1068iDC ISNIC Lite Electronics System, IRD Model 100568 1.75meter bending plates, load frames and inductive loops.

RATES OF MATERIALS

The Estimate of Surfacing Quantities is based on the following quantities of materials per **mile**.

9' OUTSIDE SHOULDER

Sta. 6+76.0 to Sta. 46+96.8
Sta. 65+42.6 to Sta. 74+85.9
Sta. 86+74.6 to Sta. 99+04.2
Sta. 108+77.0 to Sta. 129+67.8
Sta. 148+18.7 to Sta. 169+12.3
Sta. 178+84.9 to Sta. 220+44.5
Sta. 239+44.3 to Sta. 254+31.2
Sta. 264+03.6 to Sta. 268+88.1
Sta. 277+51.9 to Sta. 336+92.0
Sta. 339+72.0 to Sta. 374+71.0
Sta. 377+75.0 to Sta. 392+69.0
Sta. 398+77.0 to Sta. 439+05.0

BASE COURSE

Crushed Material 1,972 tons

Water for Granular Material at the rate of 24 M Gallons

MC-70 Asphalt for Prime at the Rate of 8 ton applied 11.5 feet wide (Rate = 0.30 gallon per square yard).

SS-1h or CSS-1h Asphalt for Tack at the rate of 1 ton applied 11 feet wide (Rate = 0.05 gallon per square yard).

CLASS HR ASPHALT CONCRETE

Crushed Aggregate	640 tons
Salvaged Asphalt Concrete	274 tons
PG 58-28 Asphalt Binder	38 tons
Total	952 tons

The exact proportions of these materials will be determined on construction.

FLUSH SEAL

SS-1h or CSS-1h Asphalt for Flush Seal at the rate of 1 ton applied 10.5 feet wide (Rate = 0.05 gallon per square yard).

4' MEDIAN SHOULDER

Sta. 6+76.0 to Sta. 74+85.9
Sta. 86+74.6 to Sta. 142+48.9
Sta. 146+00.8 to Sta. 171+60.0
Sta. 178+61.7 to Sta. 268+88.1
Sta. 277+51.9 to Sta. 336+92.0
Sta. 339+72.0 to Sta. 374+71.0
Sta. 377+75.0 to Sta. 392+69.0
Sta. 398+77.0 to Sta. 439+05.0

BASE COURSE

Crushed Material 1,146 tons

Water for Granular Material at the rate of 14 M Gallons

MC-70 Asphalt for Prime at the Rate of 5 ton applied 6.5 feet wide (Rate = 0.30 gallon per square yard).

SS-1h or CSS-1h Asphalt for Tack at the rate of 1 ton applied 6 feet wide (Rate = 0.05 gallon per square yard).

CLASS HR ASPHALT CONCRETE

Crushed Aggregate	312 tons
Salvaged Asphalt Concrete	134 tons
PG 58-28 Asphalt Binder	19 tons
Total	465 tons

The exact proportions of these materials will be determined on construction.

FLUSH SEAL

SS-1h or CSS-1h Asphalt for Flush Seal at the rate of 1 ton applied 5.5 feet wide (Rate = 0.05 gallon per square yard).

RATES OF MATERIALS

The Estimate of Surfacing Quantities is based on the following quantities of materials per **station**.

6' OUTSIDE SHOULDER ADJACENT GORE AREAS

Sta. 46+96.8 to Sta. 62+76.8
Sta. 101+97.0 to Sta. 108+77.0
Sta. 129+67.8 to Sta. 145+52.9
Sta. 172+04.9 to Sta. 178+84.9
Sta. 220+44.5 to Sta. 236+78.5
Sta. 257+23.6 to Sta. 264+03.6

BASE COURSE

Crushed Material 24.50 tons

Water for Granular Material at the rate of 0.29 M Gallons

MC-70 Asphalt for Prime at the Rate of 0.11 ton applied 8.5 feet wide (Rate = 0.30 gallon per square yard).

SS-1h or CSS-1h Asphalt for Tack at the rate of 0.02 ton applied 8 feet wide (Rate = 0.05 gallon per square yard).

CLASS HR ASPHALT CONCRETE

Crushed Aggregate	8.39 tons
Salvaged Asphalt Concrete	3.60tons
PG 58-28 Asphalt Binder	0.50 tons
Total	12.49 tons

The exact proportions of these materials will be determined on construction.

FLUSH SEAL

SS-1h or CSS-1h Asphalt for Flush Seal at the rate of 0.2 ton applied 7.5 feet wide (Rate = 0.05 gallon per square yard).

I-90 MAINLINE

Sta. 74+85.9 to Sta. 86+74.6

GRAVEL CUSHION or GRAVEL CUSHION, SALVAGED

Crushed or Salvaged Material 158.50 tons

Water for Granular Material at the rate of 1.90 M. Gallons

9' OUTSIDE SHOULDER

Sta. 74+85.9 to Sta. 86+74.6

BASE COURSE

Crushed Material 45.28 tons

Water for Granular Material at the rate of 0.54 M Gallons

MC-70 Asphalt for Prime at the Rate of 0.15 ton applied 11.45 feet wide (Rate = 0.30 gallon per square yard).

SS-1h or CSS-1h Asphalt for Tack at the rate of 0.03 ton applied 11 feet wide (Rate = 0.05 gallon per square yard).

CLASS HR ASPHALT CONCRETE

Crushed Aggregate	12.12 tons
Salvaged Asphalt Concrete	5.19 tons
PG 58-28 Asphalt Binder	0.72 tons
Total	18.03 tons

The exact proportions of these materials will be determined on construction.

FLUSH SEAL

SS-1h or CSS-1h Asphalt for Flush Seal at the rate of 0.02 ton applied 10.5feet wide (Rate = 0.05 gallon per square yard).

4' MEDIAN SHOULDER

Sta. 74+85.9 to Sta. 86+74.6

BASE COURSE

Crushed Material 29.98 tons

Water for Granular Material at the rate of 0.36 M Gallons

MC-70 Asphalt for Prime at the Rate of 0.09 ton applied 6.5 feet wide (Rate = 0.30 gallon per square yard).

SS-1h or CSS-1h Asphalt for Tack at the rate of 0.01 ton applied 6 feet wide (Rate = 0.05 gallon per square yard).

CLASS HR ASPHALT CONCRETE

Crushed Aggregate	5.91 tons
Salvaged Asphalt Concrete	2.53 tons
PG 58-28 Asphalt Binder	0.35 tons
Total	8.79 tons

The exact proportions of these materials will be determined on construction.

FLUSH SEAL

SS-1h or CSS-1h Asphalt for Flush Seal at the rate of 0.01 ton applied 5.5 feet wide (Rate = 0.05 gallon per square yard).

RATES OF MATERIALS

The Estimate of Surfacing Quantities is based on the following quantities of materials per **station**.

Exit 191 Right Shoulder

Sta. 12+51.8 to Sta. 29+70.3 On Ramp
Sta. 0+15.3 to Sta. 12+55.1 Off Ramp

BASE COURSE

Crushed Material 55.13 tons

Water for Granular Material at the rate of 0.66 M Gallons

CLASS HR ASPHALT CONCRETE – 1st Lift

Crushed Aggregate	4.02 tons
Salvaged Asphalt Concrete	1.72 tons
PG 58-28 Asphalt Binder	0.24 tons
Total	5.98 tons

The exact proportions of these materials will be determined on construction.

SS-1h or CSS-1h Asphalt for Tack at the rate of 0.02 ton applied 7.1 feet wide (Rate = 0.05 gallon per square yard).

CLASS HR ASPHALT CONCRETE – 2nd Lift

Crushed Aggregate	4.02 tons
Salvaged Asphalt Concrete	1.72 tons
PG 58-28 Asphalt Binder	0.24 tons
Total	5.98 tons

The exact proportions of these materials will be determined on construction.

Exit 191 Left Shoulder

Sta. 12+51.8 to Sta. 29+70.3 On Ramp
Sta. 0+15.3 to Sta. 12+55.1 Off Ramp

BASE COURSE

Crushed Material 40.54 tons

Water for Granular Material at the rate of 0.49 M Gallons

CLASS HR ASPHALT CONCRETE – 1st Lift

Crushed Aggregate	2.86 tons
Salvaged Asphalt Concrete	1.23 tons
PG 58-28 Asphalt Binder	0.17 tons
Total	4.26 tons

The exact proportions of these materials will be determined on construction.

SS-1h or CSS-1h Asphalt for Tack at the rate of 0.01 ton applied 5.3 feet wide (Rate = 0.05 gallon per square yard).

CLASS HR ASPHALT CONCRETE – 2nd Lift

Crushed Aggregate	2.86 tons
Salvaged Asphalt Concrete	1.23 tons
PG 58-28 Asphalt Binder	0.17 tons
Total	4.26 tons

The exact proportions of these materials will be determined on construction.

Exit 191 Mainline

Sta. 12+51.8 to Sta. 29+70.3 On Ramp
Sta. 0+15.3 to Sta. 12+55.1 Off Ramp

SS-1h or CSS-1h Asphalt for Tack at the rate of 0.07 ton applied 31.7 feet wide (Rate = 0.05 gallon per square yard).

CLASS HR ASPHALT CONCRETE

Crushed Aggregate	23.29 tons
Salvaged Asphalt Concrete	9.98 tons
PG 58-28 Asphalt Binder	1.39 tons
Total	34.66 tons

The exact proportions of these materials will be determined on construction.

FLUSH SEAL

SS-1h or CSS-1h Asphalt for Flush Seal at the rate of 0.07 ton applied 31.2 feet wide (Rate = 0.05 gallon per square yard).

Sand for Flush Seal at the rate of 0.62 tons applied 14.0 feet wide (Rate = 8.00 lbs. per square yard).

US83 SHOULDERS

Sta. 12+73.5 to Sta. 43+77.2 Rt.
Sta. 45+90.0 to Sta. 46+89.1 Rt.
Sta. 13+46.2 to Sta. 44+71.5 Lt.

BASE COURSE

Crushed Material 5.10 tons

Water for Granular Material at the rate of 0.06 M Gallons

MC-70 Asphalt for Prime at the Rate of 0.13 ton applied 9.5 feet wide (Rate = 0.30 gallon per square yard).

SS-1h or CSS-1h Asphalt for Tack at the rate of 0.02 ton applied 9 feet wide (Rate = 0.05 gallon per square yard).

CLASS HR ASPHALT CONCRETE

Crushed Aggregate	9.01 tons
Salvaged Asphalt Concrete	3.86 tons
PG 58-28 Asphalt Binder	0.54 tons
Total	13.41 tons

The exact proportions of these materials will be determined on construction.

FLUSH SEAL

SS-1h or CSS-1h Asphalt for Flush Seal at the rate of 0.02 ton applied 8.5 feet wide (Rate = 0.05 gallon per square yard).

TABLE OF ADDITIONAL QUANTITIES

Location	Water for Granular Material MGal	Base Course Ton	Base Course or Base Course, Salvaged Ton	Gravel Cushion or Gravel Cushion, Salvaged Ton	PG 58-28 Asphalt Binder Ton	Class HR Asphalt Concrete Ton	MC-70 Asphalt for Prime Ton	SS-1h or CSS-1h Asphalt for Tack Ton	SS-1h or CSS-1h Asphalt for Flush Seal Ton	Sand for Flush Seal Ton
I-90 Mainline										
Sta. 0+00 -1' to Sta. 6+76.0	12.9			1,044.5						
Sta. 268+88.1 to Sta. 272+28.1	6.5			525.3						
Sta. 273+51.9 to Sta. 277+51.9	7.6			618.0						
Sta. 439+05.0 to Sta. 445+70.0	12.7			1,027.0						
Median Shoulders										
Sta. 0+00 -1' to Sta. 3+36.0	0.3	23.6			1.0 / 1.0 / 1.0	24.9 / 24.9 / 24.9				1.2
Sta. 3+36.0 to Sta. 6+76.0	1.2	102.9			1.2	29.9	0.3			
Sta. 142+48.9 to Sta. 146+00.8	0.5	40.3			1.6 / 1.2	40.7 / 30.9				
Sta. 171+60.0 to Sta. 178+61.7	1.0	80.3			3.2 / 2.5	81.1 / 61.7		--- / 0.1	0.1	
Sta. 336+92.0 to Sta. 339+72.0	1.4	113.8			1.0	24.6	0.2			
Sta. 374+71.0 to Sta. 377+75.0	1.5	123.6			1.1	26.7	0.3			
Sta. 392+69.0 to Sta. 398+77.0	2.6	212.4			2.1	53.5	0.6			
Sta. 439+05.0 to Sta. 442+45.0	1.2	102.9			1.2	29.9	0.3			
Sta. 442+45.0 to Sta. 445+70.0	0.3	22.8			1.0 / 1.0 / 1.0	24.1 / 24.1 / 24.1				1.2
Outside Shoulders										
Sta. 0+00 -1' to Sta. 3+36.0	1.9	160.7			2.4	60.8	0.5	0.1	0.1	
Sta. 3+36.0 to Sta. 6+76.0	1.9	158.0			2.5	61.3	0.5	0.1	0.1	
Sta. 49+47.0 to Sta. 65+38.1	3.3	278.1								
Sta. 99+09.9 to Sta. 107+76.9	0.9	75.8								
Sta. 132+18.9 to Sta. 148+14.2	7.2	599.9								
Sta. 169+17.9 to Sta. 178+42.3	3.9	327.5								
Sta. 222+97.3 to Sta. 239+39.7	3.3	278.1								
Sta. 254+36.7 to Sta. 263+03.6	0.9	75.7								
Sta. 268+88.1 to Sta. 272+28.1	0.6			53.6						
Sta. 273+51.9 to Sta. 277+51.9	0.8			63.0						
Sta. 336+92.0 to Sta. 339+72.0	1.7	141.7			2.0	50.5	0.4	0.1	0.1	
Sta. 374+71.0 to Sta. 377+75.0	1.8	153.9			2.2	54.8	0.5	0.1	0.1	
Sta. 392+69.0 to Sta. 398+77.0	3.6	305.4			4.4	109.6	1.0	0.1	0.1	
Sta. 439+05.0 to Sta. 442+45.0	1.9	158.0			2.5	61.3	0.5	0.1	0.1	
Sta. 442+45.0 to Sta. 445+70.0	1.9	155.0			2.3	58.6	0.5	0.1	0.1	
Ramps										
Sta. 10+19.8 to Sta. 12+51.8 Exit 191 On ramp, Lt. shoulder / Rt. Shoulder Mainline transition	4.5	162.0 / 215.5			1.1 / 4.9 / 3.3	27.6 / 122.4 / 81.6		--- / 0.2 / 0.2	0.2	1.4
Sta. 12+55.1 to Sta. 14+87.1 Exit 191 Off ramp, Lt. shoulder / Rt. Shoulder Mainline transition	4.5	162.0 / 215.5			1.1 / 4.9 / 3.3	27.6 / 122.4 / 81.6		--- / 0.2 / 0.2	0.2	1.4
Sta. 10+17.8 to Sta. 13+29.8 Exit 192 On ramp, Lt. shoulder / Rt. Shoulder Mainline transition	1.5 3.1			57.3 / 68.5 262.4						
Sta. 7+70.3 to Sta. 10+82.3 Exit 192 Off ramp, Lt. shoulder / Rt. Shoulder Mainline transition	1.5 3.1			57.3 / 68.5 262.4						
Sta. 10+19.8 to Sta. 12+51.8 Weigh Area On ramp, Lt. shoulder / Rt. Shoulder Mainline transition	1.8		70.7 / 85.6		1.2 / 3.3 / 3.1	30.5 / 83.4 / 78.7		--- / 0.2 / 0.2	0.2	1.4
Sta. 12+51.8 to Sta. 22+97.9 Weigh Area Lt. shoulder / Rt. Shoulder Mainline transition	5.8		234.0 / 265.7		1.0 / 1.4 16.0	24.5 / 37.0 399.7		1.0	1.0	9.1
Sta. 22+97.9 to Sta. 25+29.9 Weigh Area Off ramp, Lt. shoulder / Rt. Shoulder Mainline transition	1.8		70.7 / 85.6		1.2 / 3.3 / 3.1	30.5 / 83.4 / 78.7		--- / 0.2 / 0.2	0.2	1.4

TABLE OF ADDITIONAL QUANTITIES (CONTINUED)

Location	Water for Granular Material MGal	Base Course Ton	Base Course or Base Course, Salvaged Ton	Gravel Cushion or Gravel Cushion, Salvaged Ton	PG 58-28 Asphalt Binder Ton	Class HR Asphalt Concrete Ton	MC-70 Asphalt for Prime Ton	SS-1h or CSS-1h Asphalt for Tack Ton	SS-1h or CSS-1h Asphalt for Flush Seal Ton	Sand for Flush Seal Ton
Wedges adjacent PCCP										
Sta. 62+76.8 to Sta. 65+42.6	0.3			24.2						
Sta. 99+04.2 to Sta. 101+97.0	0.3			26.6						
Sta. 145+52.9 to Sta. 148+18.7	0.3			24.2						
Sta. 169+12.3 to Sta. 172+04.9	0.3			26.6						
Sta. 236+78.5 to Sta. 239+44.3	0.3			24.2						
Sta. 254+31.2 to Sta. 257+23.6	0.3			26.6						
Sta. 268+88.1 to Sta. 272+28.1, Median / Outside	0.9			39.7 / 35.7						
Sta. 273+51.9 to Sta. 277+51.9, Median / Outside	1.1			46.7 / 42.0						
Sta. 10+17.8 to Sta. 13+29.8 Exit 192 On Ramp, Lt. / Rt.	0.8			31.0 / 31.0						
Sta. 7+70.3 to Sta. 10+82.3 Exit 192 Off Ramp, Lt. / Rt.	0.8			31.0 / 31.0						
Additional Surfacing for Guardrail										
Str. # 38-166-196 – WB Median Shoulder	9.1		756.0							
- WB Outside Shoulder	3.0		253.4		1.7	42.5	0.5	0.1	0.1	
Str. # 38-180-198 – WB Median Shoulder	9.7		810.5							
Str. # 38-200-190 – Begin Median Shoulder	0.5		42.8							
- Begin Outside Shoulder	0.7		55.5							
– End Median Shoulder	3.8		312.6		0.3	7.2	0.1			
- End Outside Shoulder	0.4		30.5		0.2	5.1	0.1			
Str. # 38-200-191 – End Median Shoulder	0.4		29.8							
- End Outside Shoulder	0.5		38.4							
US83 Shoulders										
Sta. 10+95.0 to Sta. 12+20.5 Lt.	0.1	7.5			0.8	20.9	0.2			
Sta. 10+93.5 to Sta. 12+09.3 Rt.	0.1	6.9			0.8	19.3	0.2			
TOTAL	146.6	4,459.8	3,141.8	4,548.3	95.4	2,387.5	6.7	3.5	2.7	17.1

Location	Water for Granular Material MGal	Base Course Or Base Course, Salvaged Ton	Pit Run Ton	PG 58-28 Asphalt Binder Ton	Class HR Asphalt Concrete Ton	SS-1h or CSS-1h Asphalt for Tack Ton	Nonwoven Geotextile Separator Sq.Yds.
Exit 192 Future Ramp Detours							
EB Off Ramp Detour	47.9	926.9	3,063.7	8.1 / 7.0	202.9 / 173.8	--- / 0.2	957.0
EB On Ramp Detour	61.6	1,251.3	3,884.6	11.6 / 10.0	289.2 / 250.6	--- / 0.3	1,389.8
TOTAL	109.5	2,178.2	6,948.3	36.7	916.5	0.5	2,346.8

TABLES OF GUARDRAIL AND RELATED ITEMS

Location	Remove 3 Cable Guardrail	Remove 3 Cable Guardrail Anchor Assembly	Remove 3 Cable Guardrail Slip Base Anchor Assembly	Remove Beam Guardrail	Remove W Beam Guardrail Breakaway Cable Terminal	Remove Trailing End Terminal	Remove Tangent End Terminal	Remove W Beam Guardrail for Reset	Remove W Beam Guardrail Breakaway Cable Terminal for Reset	Remove 3 Cable Guardrail for Reset
	Feet	Each	Each	Feet	Each	Each	Each	Feet	Each	Feet
Str. 38-166-196, I-90W										
Median Shoulder	212	2								
Outside Shoulder				125.0	1	1				
Str. 38-180-198, I-90W										
Median Shoulder	228	2								
Str. 38-200-190, I-90W										
Begin Bridge Rt.										
Begin Bridge Lt.										
End Bridge Rt.			1					62.5	1	375
End Bridge Lt.		1						62.5	1	286
Str. 38-200-191, I-90E										
End Bridge Rt.				93.8			1			
End Bridge Lt.	471	1	1	81.3	1					
TOTAL	911	6	2	300.1	2	1	1	125.0	2	661

Location	3 Cable Guardrail	Reset 3 Cable Guardrail	3 Cable Guardrail Anchor Assembly	3 Cable Guardrail Slip Base Anchor Assembly	Double Class A Thrie Beam Guardrail With Wood Posts	W Beam to Thrie Beam Guardrail Transition	Class A W Beam Guardrail With Wood Posts	W Beam Guardrail Breakaway Cable Terminal	Beam Guardrail Post and Block	Breakaway Cable Terminal End Post	Reset W Beam Rail	Reset W Beam Guardrail Breakaway Cable Terminal	Tangent End Terminal	Flared End Terminal	Trailing End Terminal	Comments
	Feet	Feet	Each	Each	Feet	Each	Feet	Each	Each	Each	Feet	Each	Each	Each	Each	
Str. 38-166-196, I-90W																
Median Shoulder	374			2												
Outside Shoulder					75.0	1	37.5							1	1	
Str. 38-180-198, I-90W																
Median Shoulder	358			2												
Str. 38-200-190, I-90W																
Begin Bridge Rt.	487		1	1	12.5	1	62.5	1								Future Project Traffic Control
Begin Bridge Lt.					12.5	1	75.0						1			Future Project Traffic Control
End Bridge Rt.	32	375		1					8	2	62.5	1				
End Bridge Lt.	89	286		1					8	2	62.5	1				
Str. 38-200-191, I-90E																
End Bridge Rt.					12.5	1	75.0						1			Traffic Control
End Bridge Lt.	471		1	1	12.5	1	62.5	1								Traffic Control
TOTAL	1811	661	2	8	125	5	312.5	2	16	4	125.0	2	2	1	1	

TABLE OF CONSTRUCTION STAKING
(See Special Provision for Contractor Staking)

Roadway and Description	Begin Station				End Station			Number of Lanes	Length (Ft)	Length (Mile)	Lane Factor	*Sets of Stake	**Grade Staking Quantity (Mile)	Miscellaneous Staking Quantity (Mile)	Slope Staking Quantity (Mile)	Graded Centerline Staking (Mile)
I-90 WB Mainline	0	+	-01.0	to	6	+	76.0	2	677.0	0.128	1.0	2	0.256	0.128		0.128
	6	+	76.0	to	74	+	85.9	2	6809.9	1.290	1.0	1	1.290	1.290		1.290
	74	+	85.9	to	86	+	74.6	2	1188.7	0.225	1.0	2	0.450	0.225		0.225
	86	+	74.6	to	268	+	88.1	2	18213.5	3.450	1.0	1	3.450	3.450		3.450
	268	+	88.1	to	272	+	28.1	2	340.0	0.064	1.0	2	0.129	0.064		0.064
	273	+	51.9	to	277	+	51.9	2	400.0	0.076	1.0	2	0.152	0.076		0.076
	277	+	51.9	to	439	+	05.0	2	16153.1	3.059	1.0	1	3.059	3.059		3.059
	439	+	05.0	to	445	+	70.0	2	665.0	0.126	1.0	2	0.252	0.126		0.126
Exit 191 On Ramp Gore Area	46	+	96.8	to	65	+	42.6	1	1845.8	0.350	1.0	1	0.350	0.350	0.350	
Exit 191 Off Ramp Gore Area	99	+	04.2	to	108	+	77.0	1	972.8	0.184	1.0	1	0.184	0.184	0.184	
Exit 192 On Ramp Gore Area	129	+	67.8	to	148	+	18.7	1	1850.9	0.351	1.0	1	0.351	0.351	0.351	
Exit 192 Off Ramp Gore Area	169	+	12.3	to	178	+	84.9	1	972.6	0.184	1.0	1	0.184	0.184	0.184	
Weigh Area On Ramp Gore Area	220	+	44.5	to	239	+	44.3	1	1899.8	0.360	1.0	1	0.360	0.360	0.360	
Weigh Area Off Ramp Gore Area	254	+	31.2	to	264	+	03.6	1	972.4	0.184	1.0	1	0.184	0.184	0.184	
Exit 191 On Ramp	10	+	19.8	to	29	+	70.3	2	1950.5	0.369	1.0	1	0.369	0.369	0.369	0.369
Exit 191 Off Ramp	0	+	15.3	to	14	+	87.1	2	1471.8	0.279	1.0	1	0.279	0.279	0.279	0.279
Exit 192 On Ramp	10	+	17.8	to	13	+	29.8	2	312.0	0.059	1.0	1		0.059	0.059	
Exit 192 Off Ramp	7	+	70.3	to	10	+	82.3	2	312.0	0.059	1.0	1		0.059	0.059	
Weigh Area with On/Off Ramps	10	+	19.8	to	25	+	29.9	2	1510.1	0.286	1.0	1		0.286	0.286	
												TOTAL =	11.298	11.083	2.665	9.066

* 1 = Paving Hubs Only
2 = Milling Hub Stakes and Paving Hub Stakes or Blue Top and Paving Hub Stakes

** Grade Staking Quantity = (Length) x (Lane Factor) x (Sets of Stakes)

TABLE OF PIPE AND RELATED ITEMS

Location	Culvert Type and End	Contractor Furnished Borrow Excavaation (cu.yds.)		Remove and Reset Pipe End Section (each)		Remove Pipe End Section (each)		24" RCP Flared End, Furnish / Install (each)		48" RCP Flared End, Furnish / Install (each)		42" RCP Sloped End w/ Bars, Furnish / Install (each)		24" RCP Sloped End, Furnish / Install (each)		24" Arch RCP Sloped End, Furnish / Install (each)		24" CMP Flared End, Furnish / Install (each)	
		Lt.	Rt.	Lt.	Rt.	Lt.	Rt.	Lt.	Rt.	Lt.	Rt.			Lt.	Rt.	Lt.	Rt.	Lt.	Rt.
Sta.6+00	24" RCP with Flared End	5		1															
Sta. 58+50	48" RCP with Flared Ends	5				1				1									
Sta. 103+00	24" RCP with Safety Ends	5				1								1					
Sta. 105+78	24" RCP with Flared End	5				1								1					
Sta. 124+00	24" RCP with Flared End	5				1						1							
Sta. 139+74	30" RCP with Flared End	5		1															
Sta. 183+20	42" RCP with Flared End	5		1															
Sta. 202+60	36" RCP with Flared End	5		1															
Sta. 209+30	60" RCP with Flared End	10		1															
Sta. 221+00	36" RCP with Flared End	5		1															
Sta. 234+30	42" RCP with Flared End	5				1						1							
Sta. 242+00	24" Arch RCP with Flared End	5				1										1			
Sta. 248+00	24" RCP with Flared End	5				1								1					
Sta. 287+75	24" CMP with Flared End	5				1												1	
Sta. 288+00	42" RCP with Flared End	5		1															
Sta. 332+00	24" RCP with Flared End	5		1															
Sta. 346+00	36" RCP with Flared End	5		1															
Sta. 355+00	24" RCP with Flared End	5		1															
Sta. 367+00	24" RCP with Flared End	5				1		1											
Sta. 414+50	42" RCP with Flared End	5				1						1							
Sta. 432+40	30" RCP with Flared End	5		1															
Sta. 442+00	42" RCP with Flared End	5		1															
	SUBTOTALS	115	0	12	0	10	0	1	0	1	0	3	0	3	0	1	0	1	0
	TOTAL	115		12		10		1		1		3		3		1		1	

NOTES RELATED TO PCC PAVEMENT REPAIR – US83

EXISTING PCC PAVEMENT

The existing 8” Nonreinforced P.C.C. Pavement is reinforced with No. 5 deformed bars longitudinal, spaced 30” center to center and 1 1/4” plain dowel bars transverse, spaced 12” center to center.

RESTORATION OF GRAVEL CUSHION

An inspection of the granular subgrade shall be made after removing concrete from each pavement replacement area. Areas of excess moisture shall be dried to the satisfaction of the Engineer. Loose material shall be removed. Each replacement area shall be leveled and compacted to the satisfaction of the Engineer.

If additional Gravel Cushion material is required, the Contractor shall furnish, place and compact Gravel Cushion to the satisfaction of the Engineer at no additional cost to the State.

Cost for this work shall be incidental to the contract unit price per square yard for Nonreinforced PCC Pavement Repair.

NONREINFORCED PCC PAVEMENT REPAIR

Locations, size (length or width) and type of concrete repair are subject to change in the field. The Engineer will determine location, size, and type of each concrete repair area at the time of construction. Payment shall be based on actual area replaced.

Existing concrete pavement shall be sawed full depth on all sides of the PCCP repair areas. When either the beginning or end of a PCCP repair area falls close to an existing joint or crack, the PCCP repair area shall be extended to eliminate the existing joint or crack. Where possible, new working joints shall be adjacent to existing working joints.

Saw cuts that extend beyond the repair area shall be minimized and filled with a non-shrinkage mortar mix at the Contractor’s expense.

Existing concrete pavement in the replacement areas shall be removed by the lift out method or by means that minimize damage to the base and sides of remaining in place concrete. All removed material shall be removed from within the right-of-way by the end of the workday. Damage to adjacent concrete caused by the Contractor’s operations shall be removed and replaced at the Contractor’s expense.

If the pavement replacement area is entirely on either side of the existing contraction joint, the location of one of the working joints shall be at the original location. Any existing dowel bar assemblies shall be sawed off or removed.

At repair locations where the new working joint is not opposite the existing working joint, the Contractor shall place a ¼” preformed asphalt expansion joint material along the longitudinal joint from the existing working joint to the new working joint. The expansion joint material shall meet the requirements of AASHTO M33. Cost for this material shall be incidental to the contract unit price per square yard for Nonreinforced PCC Pavement Repair.

NONREINFORCED PCC PAVEMENT REPAIR (CONTINUED)

All joints (longitudinal and transverse) through and around the repair areas shall be sawed and sealed in accordance with the details shown in these plans. Refer to Saw and Seal Joints notes.

New pavement thickness shall be 8.0” at all locations.

Concrete shall meet the requirements of the Specifications Section 380, except as modified by the following notes:

The fine aggregate shall be screened over a one-inch square-opening screen just prior to introduction into the concrete paving mix if required by the Engineer.

The slump requirement shall be limited to 3" maximum after water reducer is added and the concrete shall contain 4.5% to 7.0% entrained air. The concrete mix shall contain a minimum of 50% coarse aggregate by weight. Coarse aggregate shall be crushed ledge rock, Size No. 1 unless an alternative gradation is approved by the Concrete Engineer. The concrete mix shall contain at least 650 lbs. of Type I or II cement or 600 lbs. of Type III cement per cubic yard. The minimum 28 day compressive strength shall be 4,000 psi. The Contractor is responsible for the mix design used. The Contractor shall submit a mix design and supporting documentation for approval at least 2 weeks prior to use.

The use of a water reducer at manufacturer's recommended dosage shall be required.

Concrete shall be cured with white pigmented curing compound (AASHTO M148, Type 2) applied as soon as practical at a rate of 125 square feet per gallon. Concrete shall be cured for a minimum of 48 hours before opening to traffic. The 48 hours is based upon a concrete surface temperature of 60º F or higher throughout the cure period. If the concrete temperature falls below 60º F, the cure time shall be extended or other measures shall be taken, at no additional cost to the State. In addition to the curing requirements, a strength of 3,500 psi must be attained prior to opening to traffic.

Insulation blankets will be used to cover concrete at intersecting streets, driveways and areas designated by the Engineer to expedite the curing of the concrete. Concrete shall be covered with suitable insulation blanket consisting of a layer of closed cell polystyrene foam protected by at least one layer of plastic. Insulation blanket shall have an R-value of at least 0.5, as rated by the manufacturer. Insulation blanket shall be left in place, except for joint sawing operations, until the 3,500 psi is attained. Insulation blanket shall be overlapped on to the existing concrete by 4’. The initial contraction joint sawing shall be performed as soon as practical after placement to avoid random cracking. Covering repair areas with insulation blankets may be waived during periods of hot weather upon approval of the Engineer.

Cost for performing the aforementioned work including furnishing and placing concrete, labor, tools and equipment shall be incidental to the contract unit price per square yard for Nonreinforced PCC Pavement Repair.

STEEL BAR INSERTION

Locations and quantities of concrete repair are subject to change in the field at the discretion of the Engineer. The Contractor shall be responsible for ordering the actual quantity of steel bars necessary to complete the work.

The Contractor shall insert the steel bars (1¼ inch x 18 inch epoxy coated plain round dowel bar for transverse joints, No. 9 x 18” epoxy coated deformed tie bars for transverse joints, and No. 5 x 24” epoxy coated deformed tie bars for longitudinal joints) into drilled holes in the existing concrete pavement. An epoxy resin adhesive must be used to anchor the steel bar in the drilled hole.

Plain round dowel bars shall be cut to the specified length by sawing and shall be free from burring or other deformations. Shearing shall not be permitted.

Epoxy coated plain round steel bars shall be installed on 12 inch centers in the transverse joint. The first steel bar shall be placed a minimum of 3 inches and a maximum of 6 inches from the outside edge of the slab.

Epoxy coated deformed steel bars shall be inserted on 18 inch centers in the transverse joint. The first steel bar shall be placed a minimum of 3 inches and a maximum of 9 inches from the outside edge of the slab.

Epoxy coated deformed steel bars shall be inserted on 30 inch centers in the longitudinal joint and shall be placed a minimum of 15 inches from the existing transverse contraction joint.

A rigid frame or mechanical device shall be required to guide the drill to ensure proper horizontal and vertical alignment of the steel bars in the drilled holes.

Cost for the epoxy resin adhesive, steel bars, drilling of holes, applying the adhesive, installing the steel bars into the drilled holes and all other items incidental to the installation of the steel bars shall be incidental to the contract unit price per each for Insert Steel Bar in PCC Pavement.

SAW AND SEAL JOINTS

All longitudinal and transverse joints at concrete repair areas shall be sawed and sealed.

Joints shall not be sealed unless they are thoroughly clean and dry. Cleaning shall be accomplished by sand blasting and other tools as necessary. Just prior to sealing, each joint shall be blown out using a jet of compressed air to remove all traces of dust.

Longitudinal and transverse joints shall be sealed with Hot Poured Elastic Joint Sealer.

Cost for sawing and sealing of the longitudinal and transverse joints shall be incidental to the contract unit price per foot for Saw And Seal Joint.

NOTES RELATED TO PCC PAVEMENT REPAIR – US83

Revised: 6 Aug 15, RML

SEALING RANDOM CRACKS – US83

Only those random cracks in the existing concrete pavement with joints that are open and accept water and incompressibles as selected by the Engineer shall be prepared and sealed with Hot Poured Elastic Joint Sealant.

Each random crack shall be routed and the joint and roadway surface immediately cleaned by flushing with water or compressed air. The use of a concrete saw to route the crack will not be allowed. If there is any existing joint filler remaining in the cracks following routing, it shall be satisfactorily removed prior to sealing. Just prior to sealing, the sides of the routed crack shall be cleaned by sandblasting and the routed reservoir blown clean with compressed air.

The sealant shall be placed in the routed reservoir with equipment and by methods that insure complete and uniform filling.

Sealing Random Cracks will be measured by the foot to the nearest 0.1 foot of random cracks sealed and accepted on the project.

Sealing Random Cracks will be paid for at the contract unit price per foot measured for payment. Payment shall be full compensation for all labor, equipment, materials and incidentals required for crack routing, cleaning, furnishing and placing sealant and removing routed and foreign material from the roadway.

Entrance at Sta. 27+66 Rt. – 2 cracks (22’ and 45’)

CUTOFF DRAIN

The Contractor will install cutoff drains (transverse and longitudinal) at locations per the Cutoff Drain detail sheets. The Contractor will ensure proper drainage.

Costs for this work shall be incidental to the contract unit price per each for “CUTOFF DRAIN”.

2’ DEEP EDGE DRAINS

At least two weeks prior to installation of the edge drain, a manufacturer’s certification of material specification compliance shall be submitted to the Engineer.

The Geotextile shall be a Type A Drainage Fabric conforming to the requirements of Section 831 of the Specifications and located as shown on the plans and in accordance with the manufacturer’s recommendations. Fabric will be placed no higher than 2” from the top of the trench. The top 2 inches of the trench shall be filled with Porous Backfill.

Two weeks prior to beginning installation, the Contractor shall furnish the Engineer with copies of the manufacturer’s literature with details, specifications, and installation requirements for edge drain and outlet pipe. In addition, the Contractor shall provide information on the type of trenching equipment to be used and the proposed procedure for installation of the edge drain and outlets. Installation of edge drain and edge drain outlets, and excavation and backfill of trenches shall be in accordance with the details shown on the plans, as specified herein, and in accordance with the manufacturer’s recommendations.

2’ DEEP EDGE DRAINS (CONTINUED)

Each segment of edge drain shall be spliced to the adjacent segment in accordance with manufacturer’s recommendations prior to installation, kept in proper alignment, and not allowed to separate during installation. The porous backfill shall be placed to the depth indicated in the edge drain details and shall be compacted by a vibratory compactor or other means, satisfactory to the Engineer, which does not result in damage to the edge drain pipe.

The Acceptance Testing Frequency for the Porous Backfill shall be a minimum of 1 per 250 tons. The Project Engineer may reduce the testing frequency to 1 per 2000 tons after the first three passing tests provided the source remains the same and provided there is no apparent change in the properties of the material. If observations by the Project Engineer cause concern that specifications compliance is questionable, he may return to the 1 per 250 ton frequency.

Trenches for outlets shall be excavated to the lines and grades shown on the plans or as directed by the Engineer and shall be backfilled with fill material. The fill material shall be placed to the depth indicated in the edge drain details and shall be compacted by a vibratory compactor or other means, satisfactory to the Engineer, which does not result in damage to the outlet pipe.

Trenches shall not be left open during non-working hours.

The material removed from the edge drain trench and edge drain outlet trench, shall be disposed of by the Contractor at a site approved by the Engineer. Cost of disposal shall be incidental to the contract unit prices per foot for 2’ Deep Edge Drain and Edge Drain Outlet. Material removed from the edge drain trenches may be used as Contractor Furnished Borrow Excavation for inslope flattening.

Payment for constructing the edge drain including trench excavation, 4” slotted corrugated polyethylene drainage tubing, porous backfill material, geotextile fabric, fittings, labor, equipment, tools and incidentals necessary to satisfactorily complete the work shall be incidental to the contract unit price per foot for 2’ Deep Edge Drain.

Payment for constructing the edge drain outlets including the outlet trench excavation, 4” PVC edge drain outlet pipe, 4” Standard Weight Black Steel Pipe (length = 5’), fill material, bends, couplers, caps, fittings, labor, equipment, tools and incidentals necessary to satisfactorily complete the work shall be incidental to the contract unit price per each for Edge Drain Outlet.

Payment for supplying and installing the precast concrete headwall (Precast Concrete Headwall for Drain) shall be incidental to the contract unit price per each for Precast Concrete Headwall For Drain.

See detail sheets for Edge Drain locations.

NOTES RELATED TO PCC PAVEMENT REPAIR – US83

TABLE OF PCC PAVEMENT REPAIR

Station	Description	Repair Size		Remove Concrete Pavement	Nonreinforced PCC Pavement Repair (8.0")	Dowel Bar	Insert Steel Bar In PCC Pavement			Saw and Seal Joint	Repair Type A Spall	Comments
		Length	Width				Each					
		Ft	Ft	Sq Yd	Sq Yd	Each	#5	#9	1 ¼"	Ft	Sq Ft	
0+00 Rt. -18'	EB On Ramp (6'x6'x8.6')			2.0	2.0		6			20.6		
0+00 Lt. -9'	EB Off Ramp (13'x16'x17')			10.9	10.9		12	28		46.0		
0+14	Centerline	0.5	2.0								1.0	
0+33 Rt.	NB Driving Lane	0.3	1.5								0.5	
9+84	2 Lanes	4	28	12.4	12.4		2	37		64		
10+44 Lt.	WB On Ramp	9.0	13.0	13.0	13.0		4	9	9	44.0		
10+57 Rt.	WB Off Ramp (3'x3'x3')			0.4	0.4		2			9.0		
12+21 Rt.	WB Off Ramp	3	5	1.7	1.7		4	6		16		
12+49 Rt.	WB Off Ramp	3	5.2	1.7	1.7		2	6		16.4		
12+51 Rt.	WB Off Ramp	4	8	3.6	3.6		4	10		24.0		
13+05 Rt.	WB Off Ramp	10.5	15.2	18.3	18.3		14	12	12	52.4		
13+70 Lt.	SB Turning Lane	3	6	2.0	2.0		2	8		18.0		
14+30	Centerline	2	2								4.0	
15+23	Centerline	1.5	0.4								0.6	
16+29	Center Turning Lane	4	3	1.3	1.3		4	4		14.0		
16+50 Lt.	SB Turning Lane	4	3	1.3	1.3		4	4		14.0		
16+50 Lt.	SB Driving Lane	4	3	1.3	1.3		4	4		14.0		
17+11 Lt.	SB Turning Lane	3	4	1.3	1.3		4	4		14.0		
17+11 Lt.	SB Driving Lane	1.2	0.6								0.7	
17+11	Center Turning Lane	0.5	5.2								2.6	
17+71	Center Turning Lane	6	4	2.7	2.7		8	2		20.0		
18+90	Center Turning Lane	4	5	2.2	2.2		4	3	3	18.0		
18+90 Rt.	NB Driving Lane	4	5	2.2	2.2		4	3	3	18.0		
19+10	NB Driving Lane	0.4	1.3								0.5	
20+27	Center Turning Lane	1	2								2.0	Adjacent NB Driving Lane
20+27 Lt.	SB Driving Lane	3	1								3.0	
22+02	Center Turning Lane	1	2								2.0	Adjacent NB Driving Lane
22+10	Center Turning Lane	3	4	1.3	1.3		4	4		14.0		
22+10 Lt.	Center Turning Lane	1.3	1								1.3	
22+65 Rt.	NB Turning Lane	30	14	46.7	46.7	14	24		18	88.0		
23+30	Center Turning Lane	1.5	5.5								8.3	
23+33 Lt.	SB Driving & Turning Lanes	6	26	17.3	17.3		2	17	17	64.0		
23+50 Lt.	SB Driving Lane	2.3	3								6.9	
23+90 Rt.	NB Driving Lane	4	3	1.3	1.3		4	4		14.0		
23+90 Rt.	NB Turning Lane	4	3	1.3	1.3		4	4		14.0		
24+50 Lt.	SB Driving Lane	1.2	0.6								0.7	
24+50 Lt.	SB Driving Lane	1.1	0.4								0.4	
24+89 Lt.	SB Turning Lane	4	5	2.2	2.2		4	3	3	18.0		
25+70 Lt.	SB Turning Lane	3	4	1.3	1.3		4	4		14.0		
25+70 Lt.	SB Driving Lane	0.4	1.2								0.5	
25+70	Center Turning Lane	3	4	1.3	1.3		4	4		14.0		
25+70 Rt.	NB Driving Lane	1	1								1.0	Middle of Lane
25+70 Lt.	NB Driving Lane	3	4	1.3	1.3		4	4		14.0		
										676.4		

NOTES RELATED TO PCC PAVEMENT REPAIR – US83

TABLE OF PCC PAVEMENT REPAIR (CONTINUED)

Station	Description	Repair Size		Remove Concrete Pavement	Nonreinforced PCC Pavement Repair (8.0")	Dowel Bar	Insert Steel Bar In PCC Pavement			Saw and Seal Joint	Repair Type A Spall	Longitudinal Joint Spall Repair
		Length	Width				Each					
		Ft	Ft	Sq Yd	Sq Yd	Each	#5	#9	1 ¼"	Ft	Sq Ft	
26+50	NB Driving Lane	3	4	1.3	1.3		4	4		14.0		
26+50 Lt.	SB Driving Lane	3	4	1.3	1.3		4	4		14.0		
26+90 Lt.	SB Turning Lane	3	4	1.3	1.3		4	4		14.0		
27+08.5 Rt.	NB Driving Lane	3	4	1.3	1.3		4	4		14.0		
27+18 Rt.	NB Turning Lane	61	14	94.9	94.9	28	48		18	150.0		
27+32 Lt.	SB Driving Lane	4.8	0.4								1.9	
27+45 Rt.	Entrance	20	16.9	37.6	37.6		16		23	73.8		
27+88	Center Turning Lane	3	4	1.3	1.3		4	4		14.0		
27+95	Center Turning Lane	3	4	1.3	1.3		4	4		14.0		
27+95 Rt.	Entrance	20	10.3	32.1	32.1		16		9	61.6		
29+10 Rt.	NB Driving Lane	0.5	0.5								0.3	
29+68 Lt.	SB Driving Lane	1	0.5								0.5	
31+50	Centerline	3.5	3.5	1.4	1.4		2	4		14.0		
31+50 Rt.	NB Turning Lane	0.5	0.5								0.3	
32+65 Lt.	SB Driving Lane	1.8	1.3								3.1	
32+88	Center Turning & NB Driving Lane	4	3	1.3	1.3	3	4	4		14.0		
33+70 Rt.	NB Turning Lane	1	0.5								0.5	
36+25 Lt	Center Turning Lane	3	4	1.3	1.3		4	3	3	14.0		
36+28 Lt.	SB Turning Lane	4	3	1.3	1.3	4	2	3		14.0		
36+45 Rt.	NB Driving Lane	1	2								2.0	Adjacent NB Turning Lane
36+67 Rt.	NB Turning Lane	0.5	1.4								0.7	
38+66 Rt.	NB Turning Lane	1.8	0.4								0.7	
38+88	Center Turning Lane	0.3	1								0.3	
39+45 Lt.	SB Driving Lane	0.7	0.6								0.4	
40+83 Rt.	NB Driving & Turning Lanes	196	26	566.2	566.2	234	49		34	444.0		
41+05 Lt.	SB Turning Lane	4	3	1.3	1.3	4	1	3	0	14.0		
42+90 Rt.	NB Turning Lane	61	14	94.9	94.9	28	24		18	150.0		
44+00 Lt.	SB Driving Lane	4	3	1.3	1.3		6	4		14.0		
44+88	Full Roadway Width	20	72	160.0	160.0		16		96	184.0		
45+78 Rt.	NB Turning Lane	3	4	1.3	1.3		4	4		14.0		
45+95	Center Turning Lane	0.1	0.9								0.1	
46+17	Center Turning Lane	0.2	0.5								1.0	
46+20 Lt.	SB Turning Lane & SD248			383.2	383.2	96	83	5	17	334.9		
46+38	Center Turning Lane	0.2	0.6							1580.3	1.2	
			TOTALS =	**1,538.2**	**1,538.2**	**411**	**437**	**238**	**283**	**2,256.7**	**49**	

Note: Quantities provided are for information only. Actual quantities to be determined on construction.

IN PLACE SURFACING SECTIONS

STATE OF SOUTH DAKOTA	PROJECT	SHEET	TOTAL SHEETS
	IM 0904(57)189 & NH 0083(85)87	F26	F145

Plotting Date: 08/06/2015

Remove PCC Pavement

Salvage and Stockpile Granular Base Material

Salvage and Stockpile Asphalt Mix and Granular Base Material

Unclassified Excavation

I-90 Westbound Lanes
Median Crossovers

Sta. 0+00.0 - 1' to Sta. 3+36.0
Sta. 442+45.0 to Sta. 445+70.0

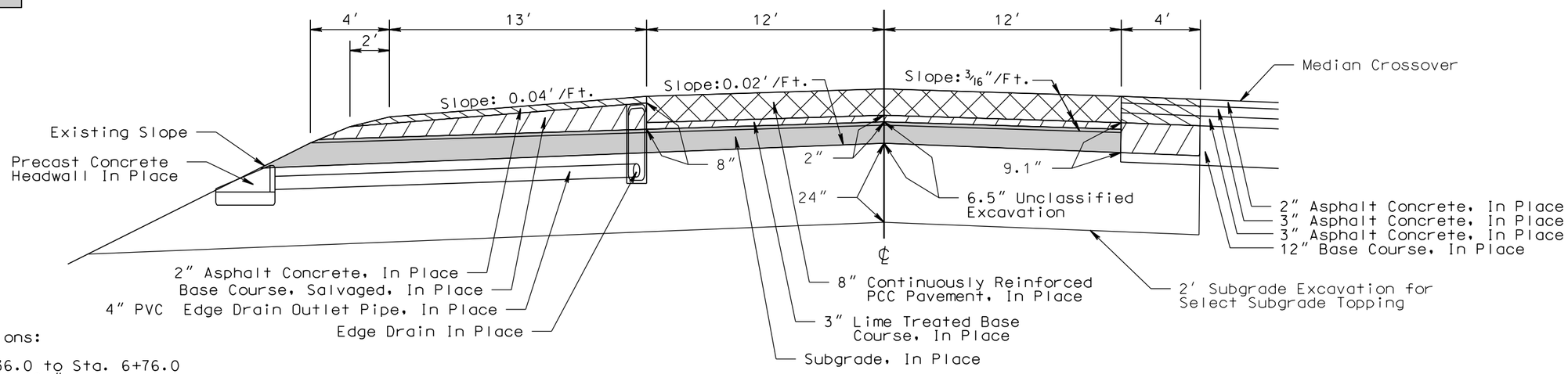

Transitions:

Sta. 3+36.0 to Sta. 6+76.0
$ 32.5" to 24"

Sta. 3+36.0 to Sta. 5+96.0
* 6.5" to 0"

Sta. 5+96.0 to Sta. 6+76.0
* 0"
** 2" to 0"
# 8" to 6"
7" to 5"

Sta. 439+05.0 to Sta. 442+45.0
$ 24" to 32"

Sta. 439+05.0 to Sta. 439+85.0
* 0"
** 0" to 2"
# 6" to 8"
5" to 7"

Sta. 439+85.0 to Sta. 442+45.0
* 0" to 6.5"

I-90 Westbound Lanes

Sta. 3+36.0 to Sta. 6+76.0
Sta. 439+05.0 to Sta. 442+45.0

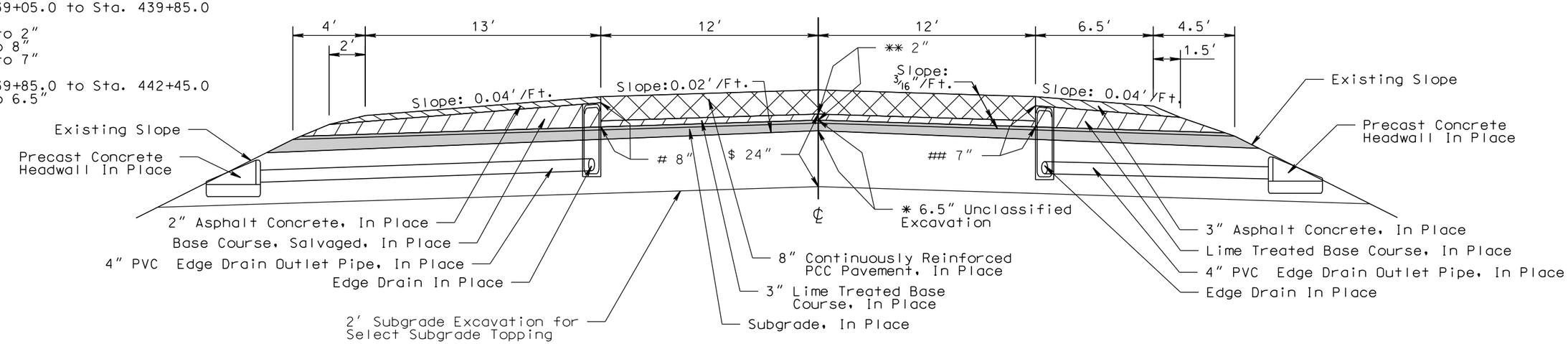

PLOT SCALE - 1:6.00001

PLOTTED FROM - TRPR16032

PLOT NAME - 2

FILE - ...\TYPICAL SECTIONS 035E.DGN

IN PLACE SURFACING SECTIONS

STATE OF SOUTH DAKOTA	PROJECT	SHEET	TOTAL SHEETS
	IM 0904(57)189 & NH 0083(85)87	F27	F145

Plotting Date: 08/06/2015

I-90 Westbound Lanes

Sta. 6+76.0 to Sta. 58+87.1
Sta. 65+36.0 to Sta. 74+85.9
Sta. 86+74.6 to Sta. 99+33.2
Sta. 104+46.5 to Sta. 137+96.2
Sta. 147+98.8 to Sta. 169+34.4
Sta. 178+42.3 to Sta. 232+88.7
Sta. 239+37.7 to Sta. 254+59.9
Sta. 259+73.3 to Sta. 268+88.1
Sta. 277+51.9 to Sta. 336+92.0
Sta. 339+72.0 to Sta. 374+71.0
Sta. 377+75.0 to Sta. 392+69.0
Sta. 398+77.0 to Sta. 439+05.0

Transitions:

Sta. 55+20.1 to Sta. 58+87.1
Sta. 229+21.7 to Sta. 232+88.7
* 12′ to 18′

Sta. 104+46.5 to Sta. 106+84.5
Sta. 259+73.3 to Sta. 262+11.3
* 18′ to 12′

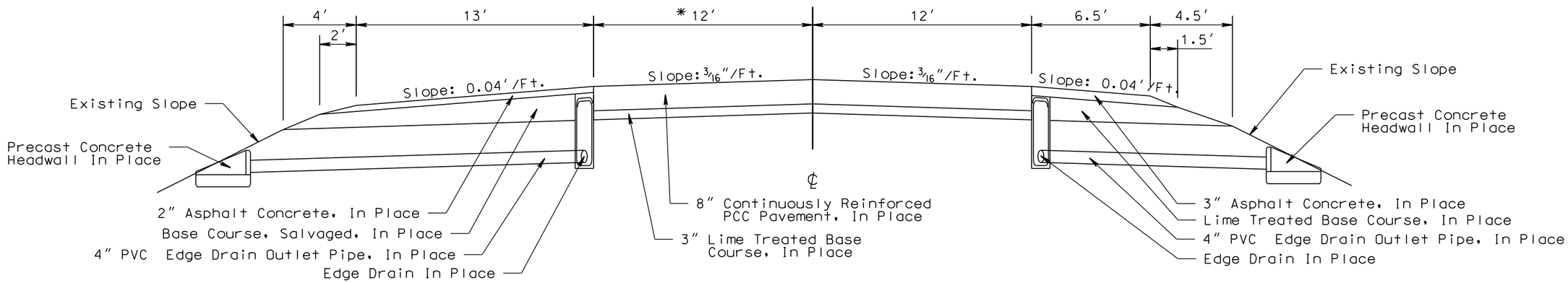

Off Ramp Gore Area Transitions:

Sta. 99+33.2 to Sta. 101+84.6
Sta. 254+59.9 to Sta. 257+11.4
* 35.1 to 12.6′

Sta. 101+84.6 to Sta. 104+46.5
Sta. 257+11.4 to Sta. 259+73.3
* 12.6 to 6′

Sta. 99+33.3 to Sta. 99+90.0
Sta. 254+59.9 to Sta. 255+16.6
** 3′

Sta. 99+90.0 to Sta. 101+84.6
Sta. 255+16.6 to Sta. 257+11.4
** 3′ to 13′

On Ramp Gore Area Transitions:

Sta. 58+87.1 to Sta. 62+70
Sta. 232+88.7 to Sta. 236+71.6
* 6′ to 12.3′

Sta. 62+70 to Sta. 65+36.0
Sta. 236+71.6 to Sta. 239+37.7
* 12.3′ to 34.8′

Sta. 62+70 to Sta. 64+64.8
Sta. 236+71.6 to Sta. 238+66.4
** 13′ to 3′

Sta. 64+64.8 to Sta. 65+36.0
Sta. 238+66.4 to Sta. 239+37.7
** 3′

I-90 Westbound Lanes
Exit 191 and Weigh Area Gore Area

Sta. 58+87.1 to Sta. 65+36.0
Sta. 99+33.2 to Sta. 104+46.5
Sta. 232+88.7 to Sta. 239+37.7
Sta. 254+59.9 to Sta. 259+73.3

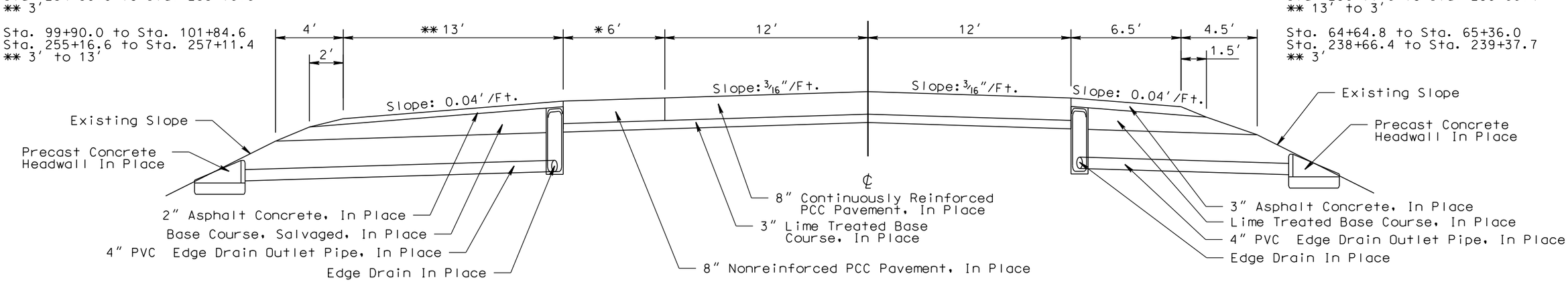

PLOT SCALE - 1:6.00001

PLOTTED FROM - TRPR16032

PLOT NAME - 3

FILE -...\TYPICAL SECTIONS 035E.DGN

IN PLACE SURFACING SECTIONS

STATE OF SOUTH DAKOTA	PROJECT	SHEET	TOTAL SHEETS
	IM 0904(57)189 & NH 0083(85)87	F28	F145

Plotting Date: 08/06/2015

Remove PCC Pavement

Salvage and Stockpile Granular Base Material

Salvage and Stockpile Asphalt Mix and Granular Base Material

Unclassified Excavation

Transitions:

Sta. 74+85.9 to Sta. 79+85.9
24" to 36.5"

Sta. 74+85.9 to Sta. 75+65.9
* 0" to 2"
** 0"

Sta. 75+65.9 to Sta. 79+85.9
* 2"
** 0" to 10.5"

Sta. 81+74.6 to Sta. 85+94.6
* 2"
** 10.5" to 0"

Sta. 85+94.6 to Sta. 86+74.6
* 2" to 0"
** 0"

Sta. 81+74.6 to Sta. 86+74.6
36.5" to 24"

I-90 Westbound Lanes

Sta. 74+85.9 to Sta. 86+74.6
(See Vertical Clearance Detail Sheet)

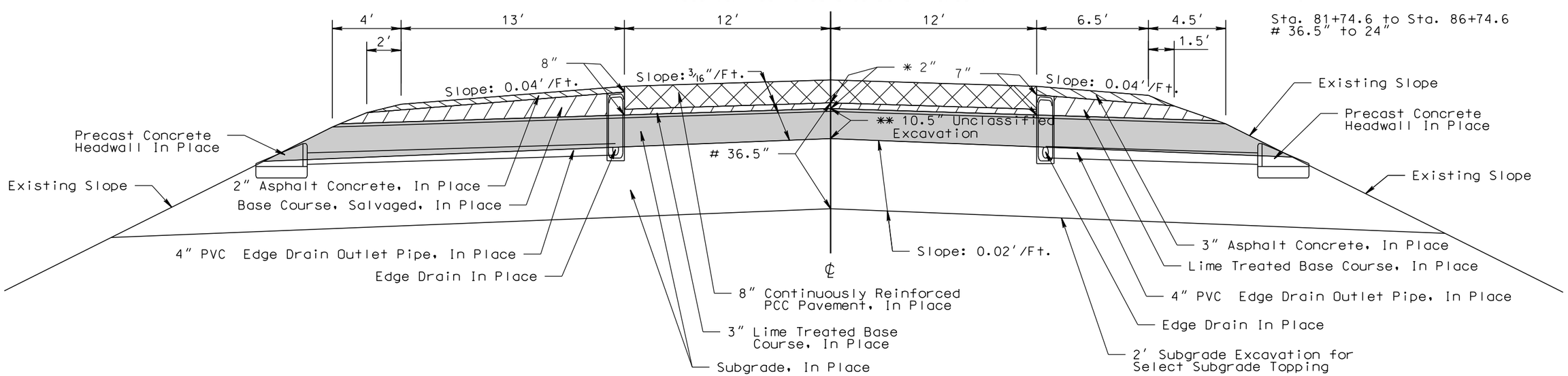

PLOT SCALE - 1:6.00001

PLOTTED FROM - TRPR16032

PLOT NAME - 4

FILE -...\TYPICAL SECTIONS 035E.DGN

IN PLACE SURFACING SECTIONS

STATE OF SOUTH DAKOTA	PROJECT	SHEET	TOTAL SHEETS
	IM 0904(57)189 & NH 0083(85)87	F29	F145

Plotting Date: 08/06/2015

Transitions:

Sta. 137+96.2 to Sta. 141+63.5
* 12′ to 18′
** 10′ to 4′

Sta. 174+54.5 to Sta. 176+92.3
* 18′ to 12′
** 4′ to 10′

I-90 Westbound Lanes
Exit 192 Gore Area

Sta. 137+96.2 to Sta. 141+63.5
Sta. 174+54.5 to Sta. 178+42.3

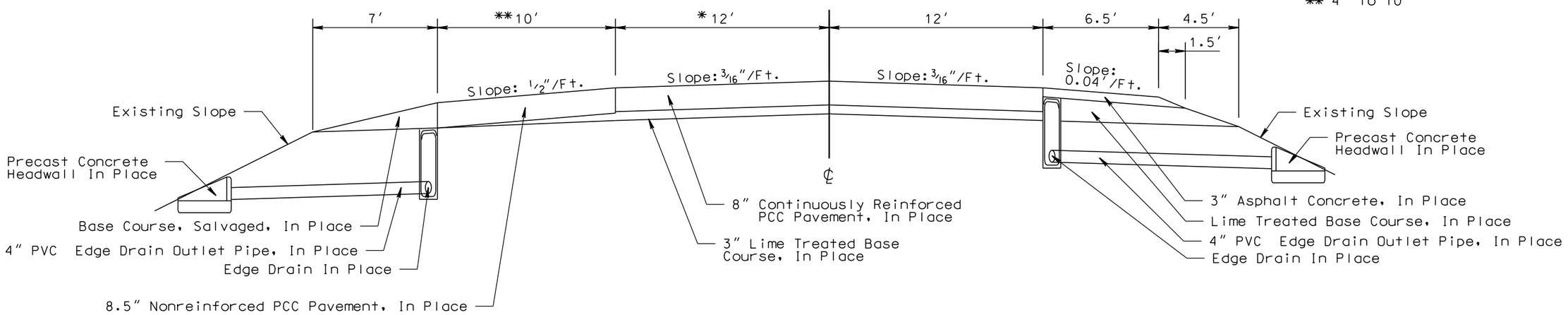

Transitions:

Sta. 141+63.5 to Sta. 142+24.6
** 4′ to 3′

Sta. 141+63.5 to Sta. 145+46.1
* 6′ to 12.3′

Sta. 145+46.1 to Sta. 147+98.8
* 12.3′ to 32.8′

I-90 Westbound Lanes
Exit 192 Gore Area

Sta. 141+63.5 to Sta. 147+98.8
Sta. 169+34.4 to Sta. 174+54.5

Transitions:

Sta. 169+34.4 to Sta. 171+92.5
* 36.2′ to 12.6′

Sta. 171+92.5 to Sta. 174+54.5
* 12.6′ to 6′

Sta. 174+14.9 to Sta. 174+54.5
** 3′ to 4′

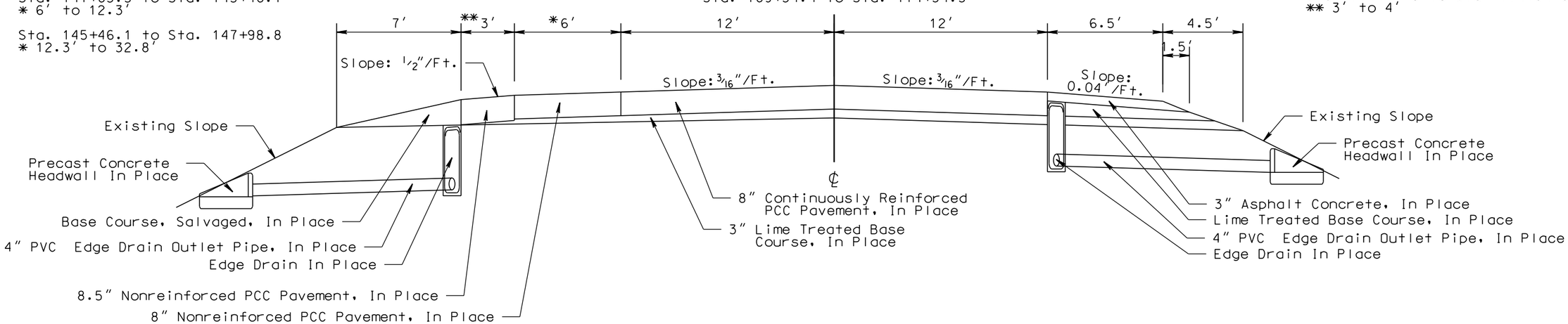

PLOT SCALE - 1:6.00001

PLOTTED FROM - TRPR16032

PLOT NAME - 5

FILE -...\TYPICAL SECTIONS 035E.DGN

IN PLACE SURFACING SECTIONS

STATE OF SOUTH DAKOTA	PROJECT	SHEET	TOTAL SHEETS
	IM 0904(57)189 & NH 0083(85)87	F30	F145

Plotting Date: 08/06/2015

Remove PCC Pavement

Salvage and Stockpile Granular Base Material

Salvage and Stockpile Asphalt Mix and Granular Base Material

Unclassified Excavation

I-90 Westbound Lanes
Bridge Area

Sta. 268+88.1 to Sta. 270+78.1

Transitions:

Sta. 268+88.1 to Sta. 270+78.1
$ 24" to 28.75"

Sta. 268+88.1 to Sta. 269+68.1
** 0" to 2"
# 0"
8" to 10"

Sta. 269+68.1 to Sta. 270+78.1
0" to 2.75"
10"
** 2"

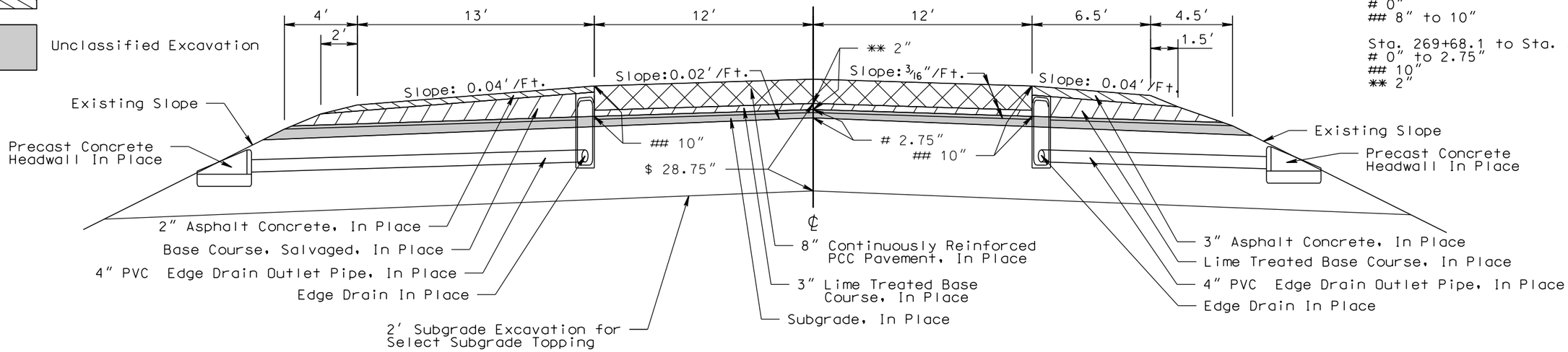

I-90 Westbound Lanes
Bridge Area

Sta. 270+78.1 to Sta. 272+28.1
Sta. 273+51.9 to Sta. 277+51.9

Transitions:

Sta. 270+78.1 to Sta. 272+28.1
$ 28.75" to 32.5"
2.75" to 6.5"

Sta. 273+51.9 to Sta. 277+51.9
$ 32.5" to 24"

Sta. 273+51.9 to Sta. 276+57.8
6.5" to 0"

Sta. 276+57.8 to Sta. 277+51.9
2" to 0"
0"

Transitions:

Sta. 272+20.1 to Sta. 272+28.1
Sta. 273+51.9 to Sta. 273+59.9

* 9" Nonreinforced PCC Pavement
** 2" Lime Treated Base Course

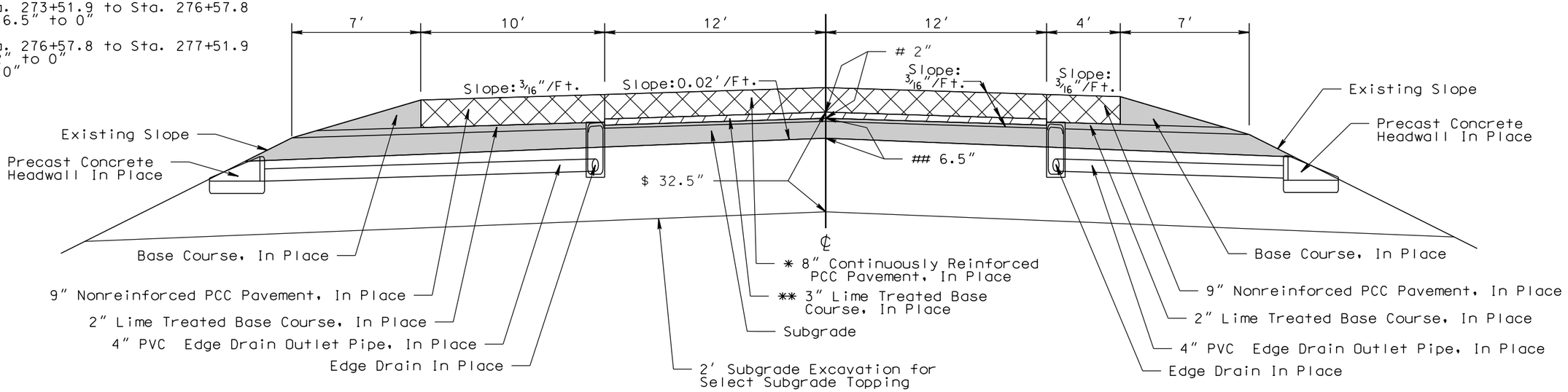

PLOT SCALE - 1:6.00001

PLOTTED FROM - TRPR16032

PLOT NAME - 6

FILE -...\TYPICAL SECTIONS 035E.DGN

IN PLACE SURFACING SECTIONS

STATE OF SOUTH DAKOTA	PROJECT	SHEET	TOTAL SHEETS
	IM 0904(57)189 & NH 0083(85)87	F31	F145

Plotting Date: 08/06/2015

I-90 Westbound Lanes

Sta. 336+92 to Sta. 339+72
Sta. 374+71 to Sta. 377+75
Sta. 392+69 to Sta. 393+75
Sta. 397+00 to Sta. 398+77

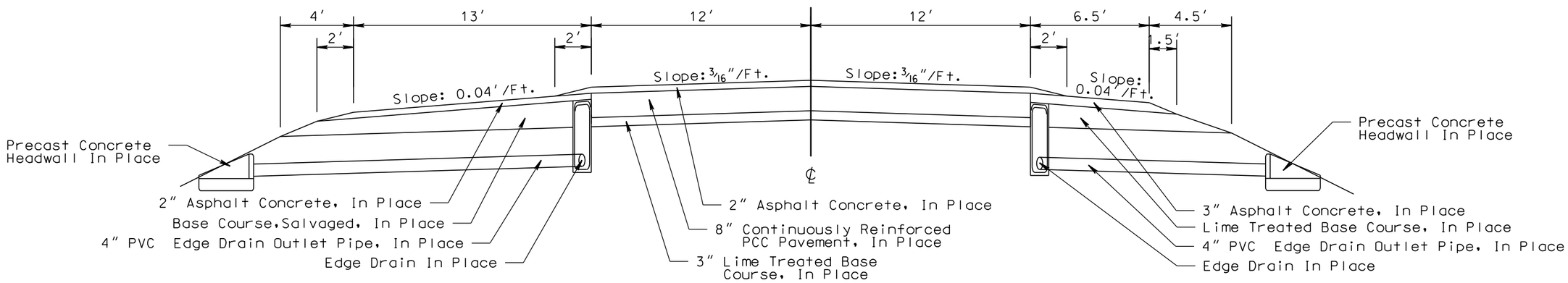

I-90 Westbound Lanes

Sta. 393+75 to Sta. 397+00

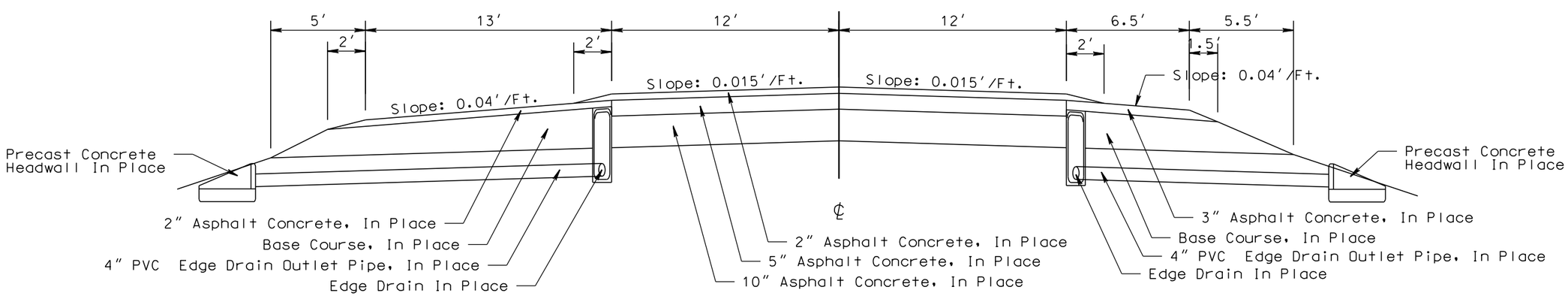

PLOT SCALE - 1:6.00001

PLOTTED FROM - TRPR16032

PLOT NAME - 7

FILE -...\TYPICAL SECTIONS 035E.DGN

IN PLACE SURFACING SECTIONS

STATE OF SOUTH DAKOTA	PROJECT	SHEET	TOTAL SHEETS
	IM 0904(57)189 & NH 0083(85)87	F32	F145

Plotting Date: 08/06/2015

Cold Milling Asphalt Concrete

Salvage and Stockpile Asphalt Mix and Granular Base Material

Unclassified Excavation

Sta. 10+19.8 to Sta. 10+45.0 Exit 191 On Ramp
Sta. 14+85.0 to Sta. 14+87.1 Exit 191 Off Ramp

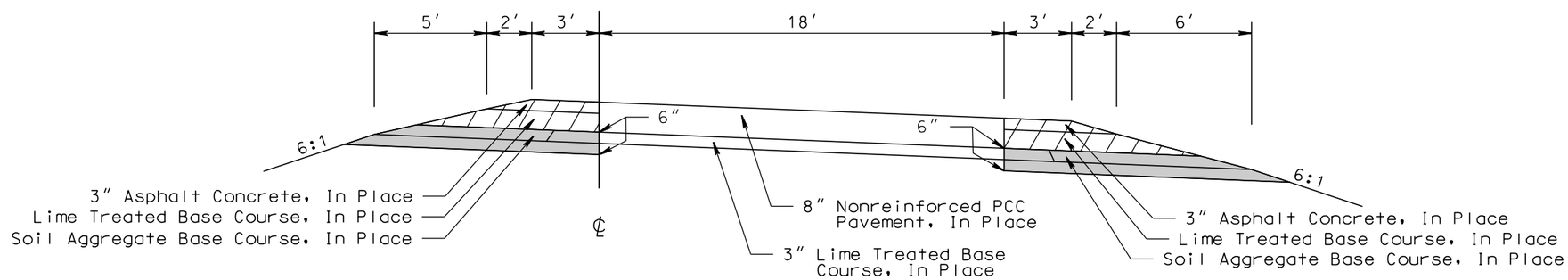

Transitions:

Sta. 10+45.0 to Sta. 10+85.0 On Ramp
* 0″ to 1″

Sta. 11+31.8 to Sta. 12+51.8 On Ramp
* 1″ to 4″

Sta. 29+30.3 to Sta. 29+70.3 On Ramp
* 1″ to 2″

Sta. 0+15.3 to Sta. 0+55.3 Off Ramp
* 2″ to 1″

Sta. 12+55.1 to Sta. 13+75.1 Off Ramp
* 4″ to 1″

Sta. 14+45.0 to Sta. 14+85.0 Off Ramp
* 1″ to 0″

Exit 191 WBL

Sta. 10+45.0 to Sta. 29+70.3 WB On Ramp
Sta. 0+15.3 to Sta. 14+85.0 WB Off Ramp

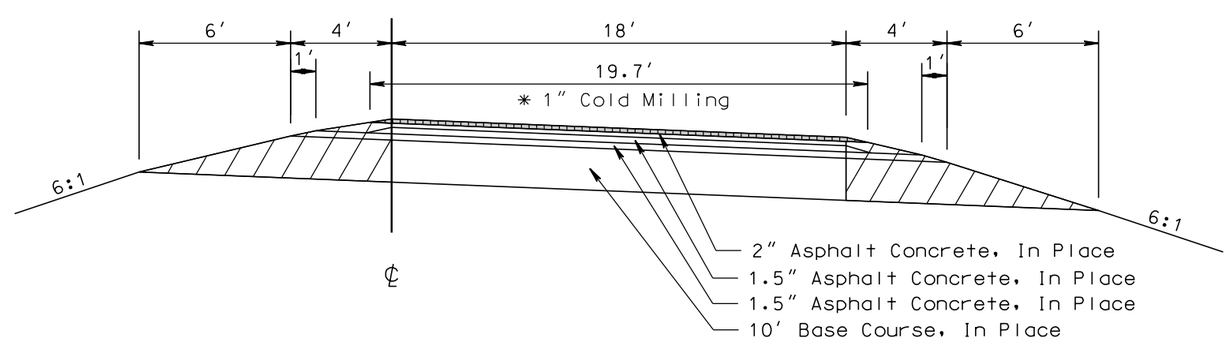

PLOT SCALE - 1:6.00001

PLOTTED FROM - TRPR16032

PLOT NAME - 8

FILE -...\TYPICAL SECTIONS 035E.DGN

IN PLACE SURFACING SECTIONS

STATE OF SOUTH DAKOTA	PROJECT	SHEET	TOTAL SHEETS
	IM 0904(57)189 & NH 0083(85)87	F33	F145

Plotting Date: 08/06/2015

Remove PCC Pavement

Unclassified Excavation

Exit 192 WBL

Sta. 10+17.8 to Sta. 13+29.8 WB On Ramp
Sta. 7+70.3 to Sta. 10+82.3 WB Off Ramp

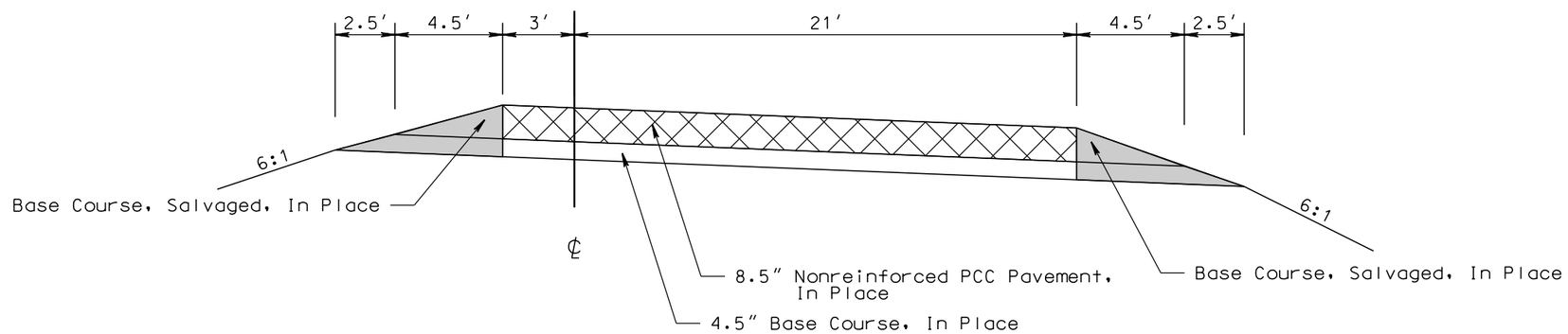

Transitions:

Sta. 17+26.6 to Sta. 17+73.8
* 3′ to 23′

Sta. 17+73.8 to Sta. 17+99.7
* 23′

Sta. 17+99.7 to Sta. 18+47.0
* 23′ to 3′

Sta. 10+19.8 to Sta. 25+29.9 Weigh Area

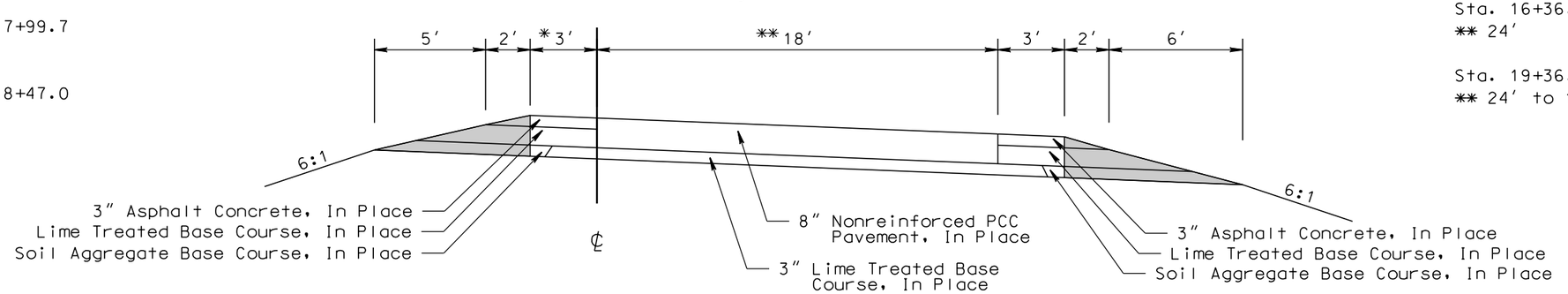

Transitions:

Sta. 15+61.4 to Sta. 16+36.8
** 18′ to 24′

Sta. 16+36.8 to Sta. 19+36.8
** 24′

Sta. 19+36.8 to Sta. 20+12.2
** 24′ to 18′

PLOT SCALE - 1:6.00001

PLOTTED FROM - TRPR16032

PLOT NAME - 9

FILE -...\TYPICAL SECTIONS 035E.DGN

TYPICAL SURFACING SECTIONS

STATE OF SOUTH DAKOTA	PROJECT	SHEET	TOTAL SHEETS
	IM 0904(57)189 & NH 0083(85)87	F34	F145

Plotting Date: 08/06/2015

Revised: 6 Aug 15, RML

I-90 Westbound Lanes
Median Crossovers
Sta. 0+00.0 - 1' to Sta. 3+36.0
Sta. 442+45.0 to Sta. 445+70.0

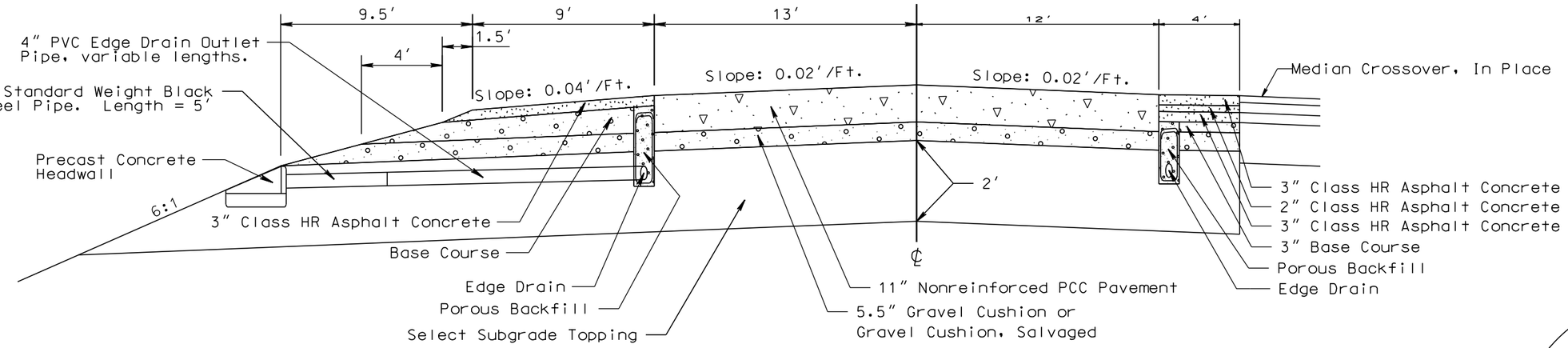

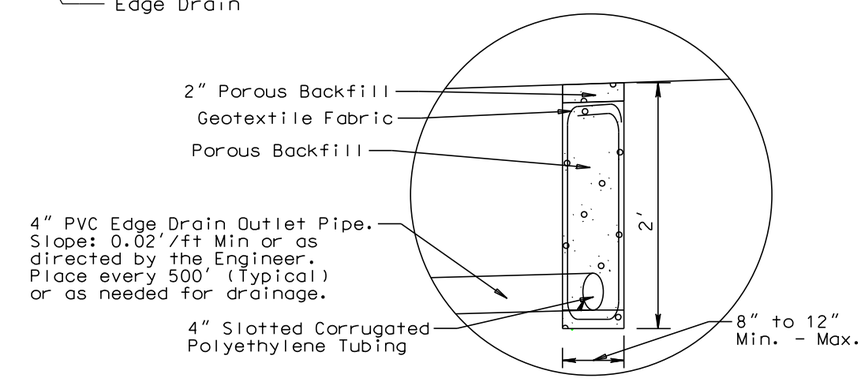

Detail for 2' Deep Edge Drain

Transitions:

Sta. 3+36.0 to Sta. 6+76.0
* 4' to 2.5'
** 9.5' to 6.3'
# 4.4' to 2.5'
9.4' to 6'

Sta. 439+05.0 to Sta. 442+45.0
* 2.5' to 4'
** 6.3' to 9.5'
# 2.5' to 4.4'
6' to 9.4'

I-90 Westbound Lanes

Sta. 3+36.0 to Sta. 6+76.0
Sta. 439+05.0 to Sta. 442+45.0

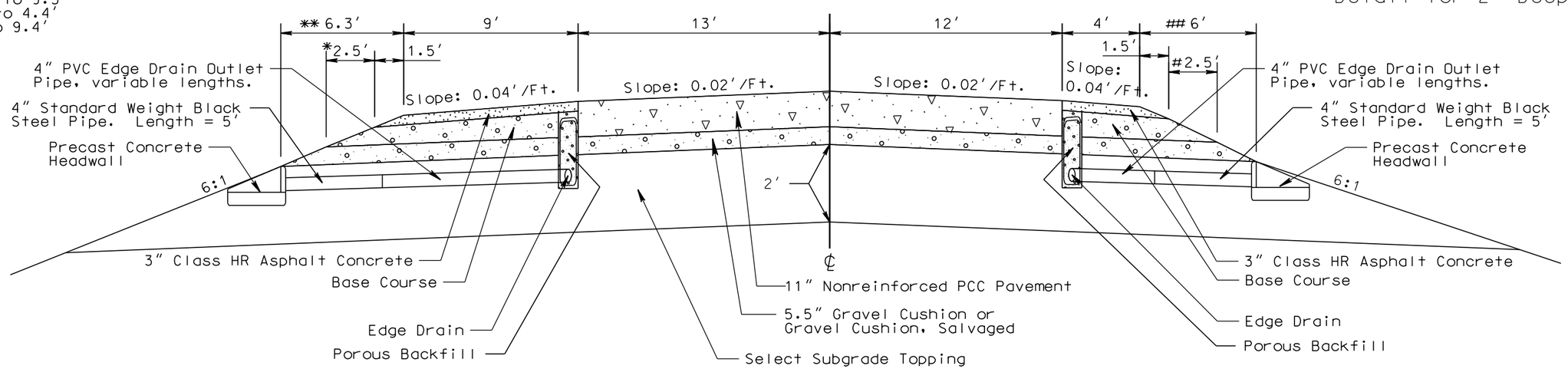

Care must be taken to insure that the edge drain and outlet tubing is not damaged during construction. Sufficient cover material is to be placed over the edge drain and outlets before heavy equipment is allowed to work over them. Damaged pipes will be replaced at the Contractor's expense.

PLOT SCALE - 1:6.00001

PLOTTED FROM - TRPR16032

PLOT NAME - 10

FILE - ...\TYPICAL SECTIONS 035E.DGN

STATE OF SOUTH DAKOTA	PROJECT	SHEET	TOTAL SHEETS
	IM 0904(57)189 & NH 0083(85)87	F35	F145

Plotting Date: 08/06/2015

TYPICAL SURFACING SECTIONS

$$$ Precast Concrete Headwall may require resetting. Outlet Pipe may require an extension or reduction in length due to slope flattening and the installation of the Standard Weight Black Steel Pipe.

Revised: 6 Aug 15, RML

I-90 Westbound Lanes

Sta. 6+76.0 to Sta. 46+96.8
Sta. 65+42.6 to Sta. 74+85.9
Sta. 86+74.6 to Sta. 99+04.2
Sta. 108+77.0 to Sta. 129+67.8
Sta. 148+18.7 to Sta. 169+12.3
Sta. 178+84.9 to Sta. 220+44.5
Sta. 239+44.3 to Sta. 254+31.2
Sta. 264+03.6 to Sta. 268+88.1
Sta. 277+51.9 to Sta. 336+92.0
Sta. 339+72.0 to Sta. 374+71.0
Sta. 377+75.0 to Sta. 392+69.0
Sta. 398+77.0 to Sta. 439+05.0

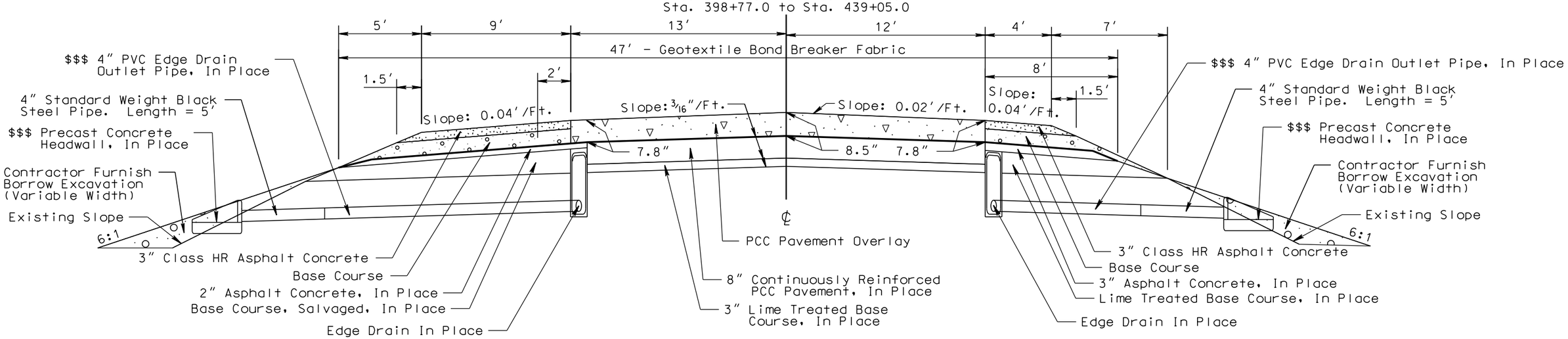

Off Ramp Gore Area Transitions:

Sta. 106+37.0 to Sta. 108+37.0
Sta. 261+63.6 to Sta. 263+63.6
* 13′ to 3′

Sta. 108+37.0 to Sta. 108+77.0
Sta. 263+63.6 to Sta. 264+03.6
* 3′

I-90 Westbound Lanes
Exit 191 and Weigh Area Gore Area

Sta. 46+96.8 to Sta. 62+76.8
Sta. 101+97.0 to Sta. 108+77.0
Sta. 220+44.5 to Sta. 236+78.5
Sta. 257+23.6 to Sta. 264+03.6

On Ramp Gore Area Transitions:

Sta. 46+96.8 to Sta. 47+96.8
Sta. 220+44.5 to Sta. 221+45.7
* 3′

Sta. 47+96.8 to Sta. 52.96.8
Sta. 221+45.7 to Sta. 226+51.5
* 3′ to 13′

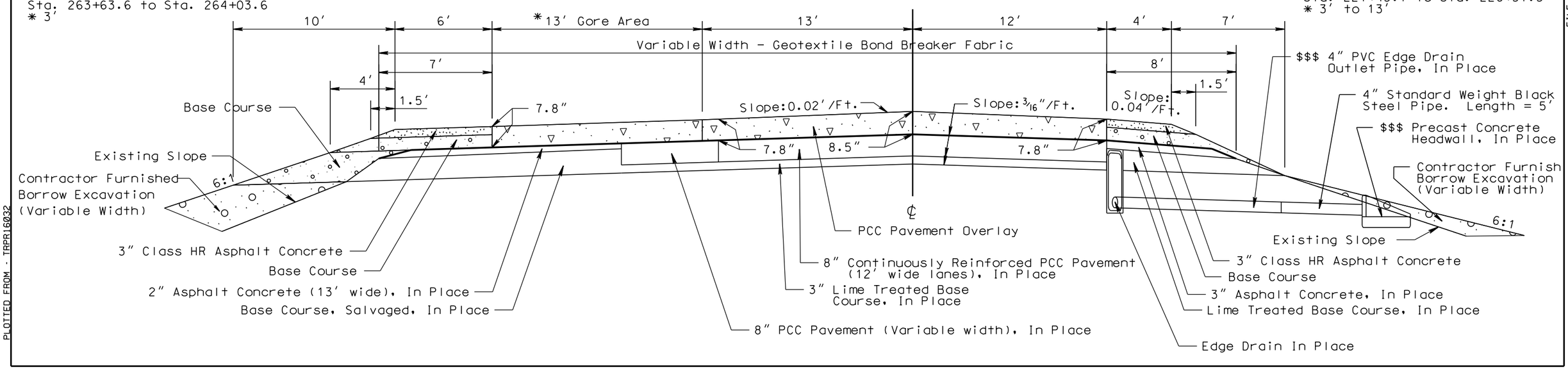

PLOT SCALE - 1:6.00001
PLOT NAME - 11
FILE - ...\TYPICAL SECTIONS 035E.DGN
PLOTTED FROM - TRPR16032

STATE OF SOUTH DAKOTA	PROJECT	SHEET	TOTAL SHEETS
	IM 0904(57)189 & NH 0083(85)87	F36	F145

Plotting Date: 08/06/2015

Revised: 6 Aug 15, RML

TYPICAL SURFACING SECTIONS

$$$ Precast Concrete Headwall may require resetting. Outlet Pipe may require an extension or reduction in length due to slope flattening and the installation of the Standard Weight Black Steel Pipe.

I-90 Westbound Lanes
Exit 191 and Weigh Area Gore Area

Sta. 62+76.8 to Sta. 65+42.6
Sta. 99+04.2 to Sta. 101+97.0
Sta. 236+78.5 to Sta. 239+44.3
Sta. 254+31.2 to Sta. 257+23.6

Off Ramp Gore Area Transitions:

Sta. 99+04.2 to Sta. 101+97.0
Sta. 254+31.2 to Sta. 257+23.6
* 41.5 to 19'

On Ramp Gore Area Transitions:

Sta. 62+76.8 to Sta. 65+42.6
Sta. 236+78.5 to Sta. 239+44.3
* 19' to 37.6'

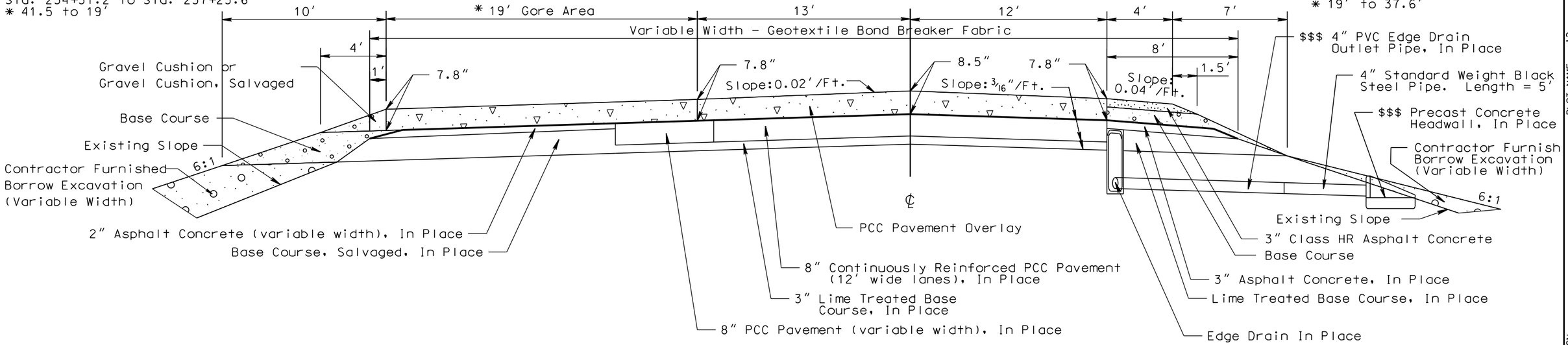

I-90 Westbound Lanes

Sta. 74+85.9 to Sta. 86+74.6
(See Vertical Clearance Detail Sheet)

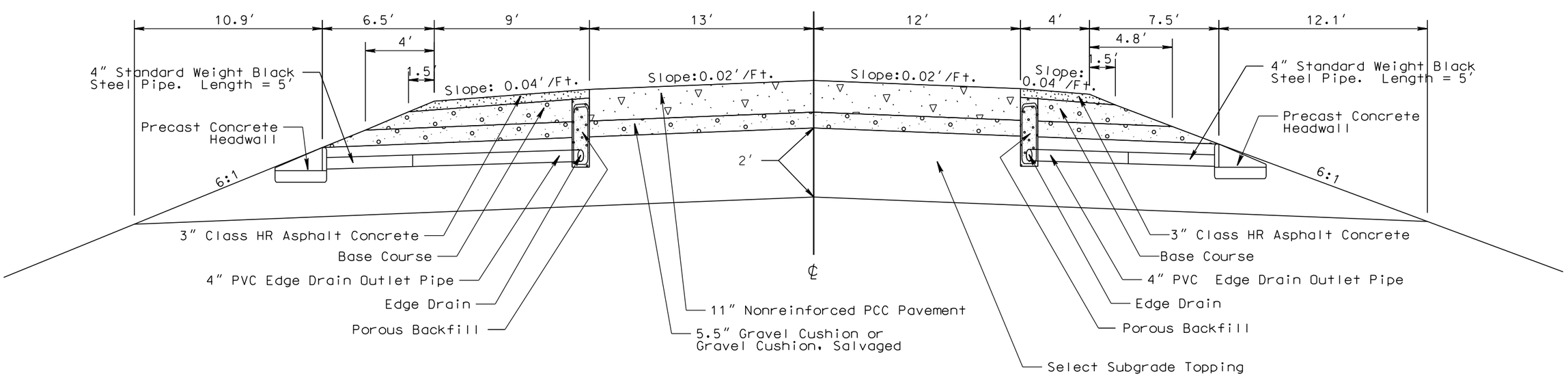

PLOT SCALE - 1:6.00001

PLOTTED FROM - TRPR16032

PLOT NAME - 12

FILE -...\TYPICAL SECTIONS 035E.DGN

STATE OF SOUTH DAKOTA	PROJECT	SHEET	TOTAL SHEETS
	IM 0904(57)189 & NH 0083(85)87	F37	F145

Plotting Date: 08/06/2015

Revised: 6 Aug 15, RML

TYPICAL SURFACING SECTIONS

$$$ Precast Concrete Headwall may require resetting. Outlet Pipe may require an extension or reduction in length due to slope flattening and the installation of the Standard Weight Black Steel Pipe.

Off Ramp Gore Area Transitions:

Sta. 176+44.9 to Sta. 178+44.9
* 13′ to 3′

Sta. 178+44.9 to Sta. 178+84.9
* 3′

I-90 Westbound Lanes
Exit 192 Gore Area

Sta. 129+67.8 to Sta. 145+52.9
Sta. 172+04.9 to Sta. 178+84.9

On Ramp Gore Area Transitions:

Sta. 129+67.8 to Sta. 130+68.2
* 3′

Sta. 130+68.2 to Sta. 135+70.1
* 3′ to 13′

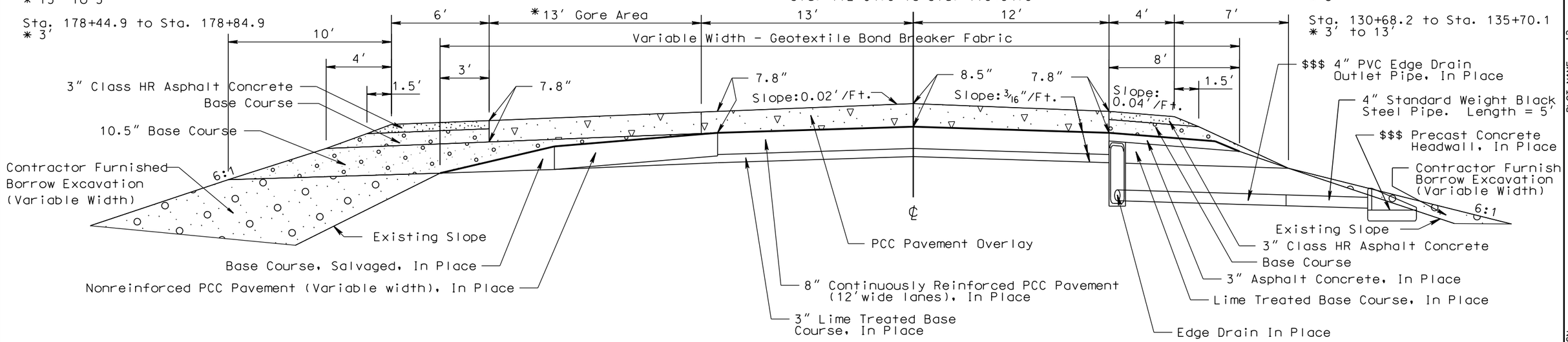

Surfacing for Future Ramp Detours
along WB Median Shoulder
Sta. 142+48.9 to Sta. 146+00.8 WBL
Sta. 171+60.0 to Sta. 178+61.7 WBL

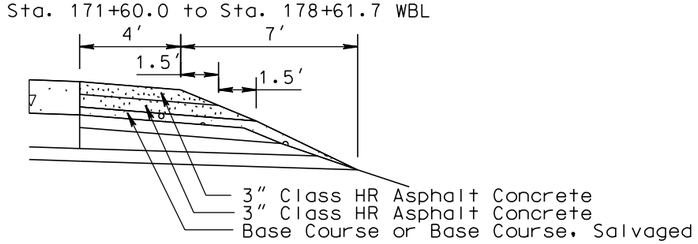

On Ramp Gore Area Transitions:

Sta. 145+52.9 to Sta. 148+18.7
* 19′ to 37.6′

Off Ramp Gore Area Transitions:

Sta. 169+12.3 to Sta. 172+04.9
* 41.5′ to 19′

I-90 Westbound Lanes
Exit 192 Gore Area

Sta. 145+52.9 to Sta. 148+18.7
Sta. 169+12.3 to Sta. 172+04.9

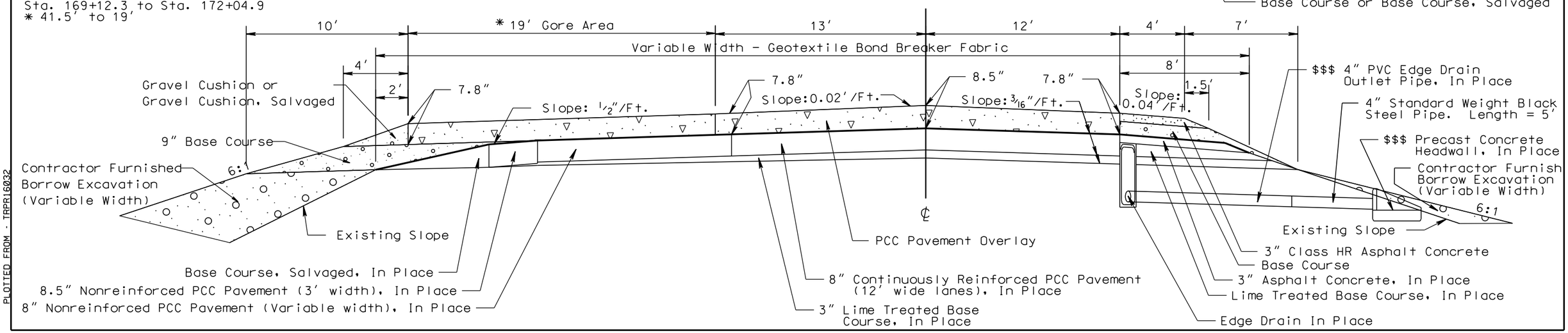

PLOT SCALE - 1:6.00001

PLOT NAME - 13

FILE - ...\TYPICAL SECTIONS 035E.DGN

PLOTTED FROM - TRPR16032

$$$ Precast Concrete Headwall may require resetting. Outlet Pipe may require an extension or reduction in length due to slope flattening and the installation of the Standard Weight Black Steel Pipe.

TYPICAL SURFACING SECTIONS

STATE OF SOUTH DAKOTA	PROJECT	SHEET	TOTAL SHEETS
	IM 0904(57)189 & NH 0083(85)87	F38	F145

Plotting Date: 08/06/2015

Revised: 6 Aug 15, RML

I-90 Westbound Lanes
Bridge Area

Sta. 268+88.1 to Sta. 272+28.1
Sta. 273+51.9 to Sta. 277+51.9

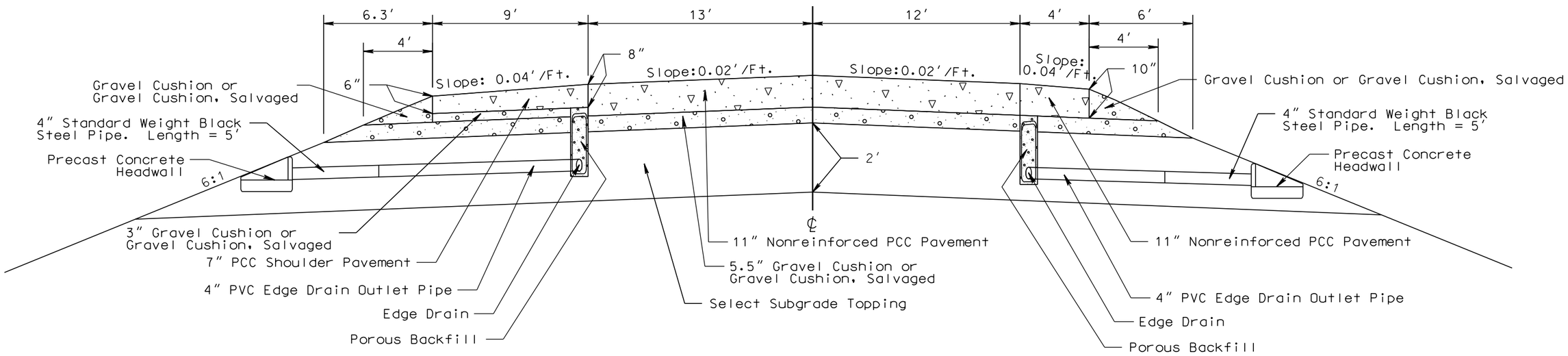

I-90 Westbound Lanes

Sta. 336+92 to Sta. 339+72
Sta. 374+71 to Sta. 377+75
Sta. 392+69 to Sta. 393+75
Sta. 397+00 to Sta. 398+77

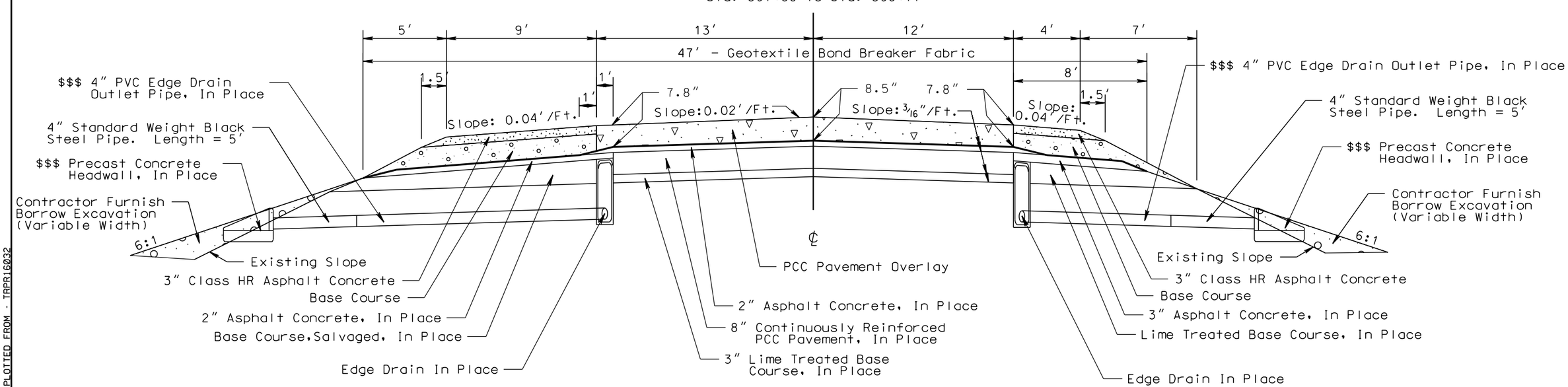

PLOT SCALE - 1:6.00001

PLOTTED FROM - TRPR16032

PLOT NAME - 14

FILE - ...\TYPICAL SECTIONS 035E.DGN

STATE OF SOUTH DAKOTA	PROJECT	SHEET	TOTAL SHEETS
	IM 0904(57)189 & NH 0083(85)87	F39	F145

Plotting Date: 08/06/2015

TYPICAL SURFACING SECTIONS

Revised: 6 Aug 15, RML

$$$ Precast Concrete Headwall may require resetting. Outlet Pipe may require an extension or reduction in length due to slope flattening and the installation of the Standard Weight Black Steel Pipe.

I-90 Westbound Lanes

Sta. 393+75 to Sta. 397+00

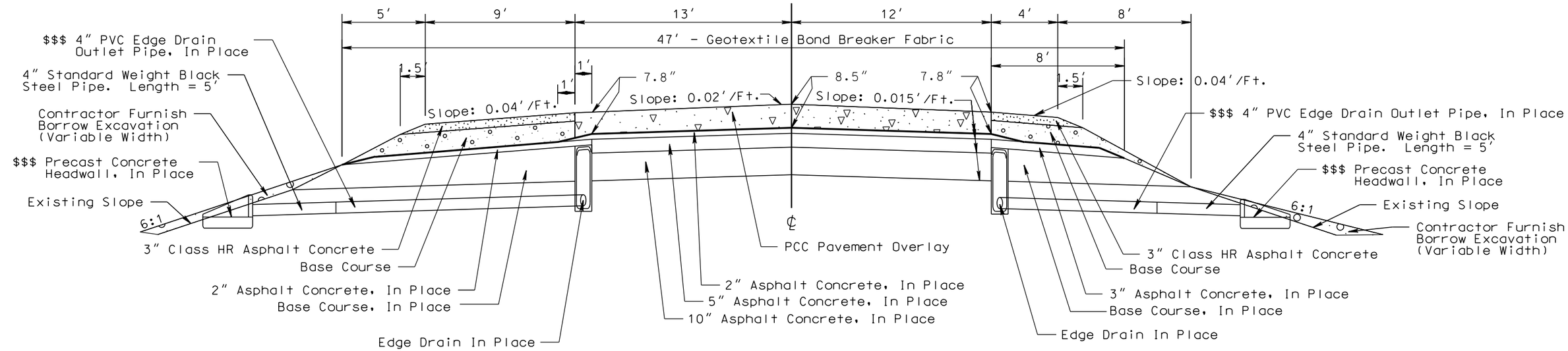

On Ramp Transitions:

Sta. 10+19.8 to Sta. 11+31.8
* 2.8″ to 0″

Sta. 11+31.8 to Sta. 12+51.8
* 0″
** 4″ to 1″

Sta. 10+19.8 to Sta. 12+51.8
3.5′ to 2.7′
9′ to 7′
$ 4.4′ to 3.5′
$$ 12.4′ to 9.2′

Exit 191 WBL

Sta. 10+19.8 to Sta. 12+51.8 WB On Ramp
Sta. 12+55.1 to Sta. 14+87.1 WB Off Ramp

8″ PCC Pavement, In Place - ℄ to 18′ Rt.
Sta. 10+19.8 to Sta. 10+45.0 WB On Ramp
Sta. 14+85.0 to Sta. 14+87.1 WB Off Ramp

Off Ramp Transitions:

Sta. 12+55.1 to Sta. 13+75.1
* 0″
** 1″ to 4″

Sta. 13+75.1 to Sta. 14+87.1
* 0″ to 2.8″

Sta. 12+55.1 to Sta. 14+87.1
2.7′ to 3.5′
7′ to 9′
$ 3.5′ to 4.4′
$$ 9.2′ to 12.4′

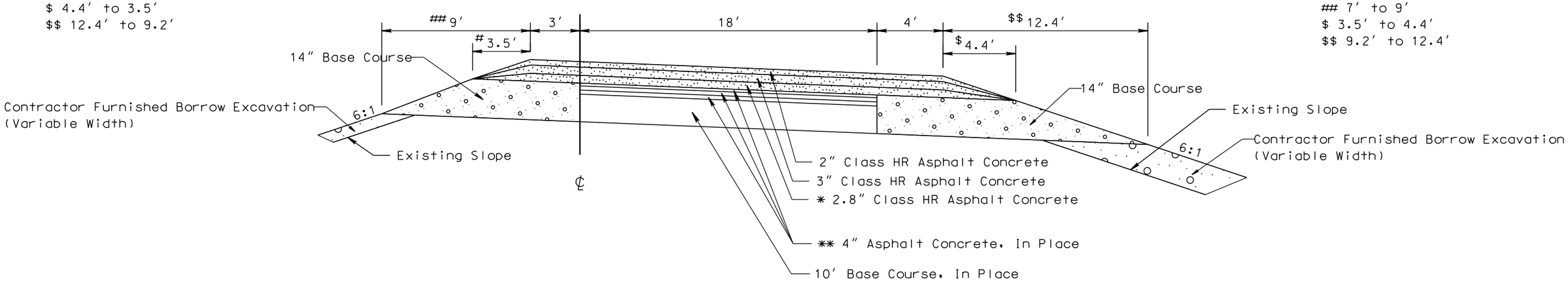

PLOT SCALE - 1:6.00001

PLOT NAME - 15

FILE -...\TYPICAL SECTIONS 035E.DGN

PLOTTED FROM - TRPR16032

TYPICAL SURFACING SECTIONS

STATE OF SOUTH DAKOTA	PROJECT	SHEET	TOTAL SHEETS
	IM 0904(57)189 & NH 0083(85)87	F40	F145

Plotting Date: 08/06/2015

Exit 191 WBL

Sta. 12+51.8 to Sta. 29+70.3 WB On Ramp
Sta. 0+15.3 to Sta. 12+55.1 WB Off Ramp

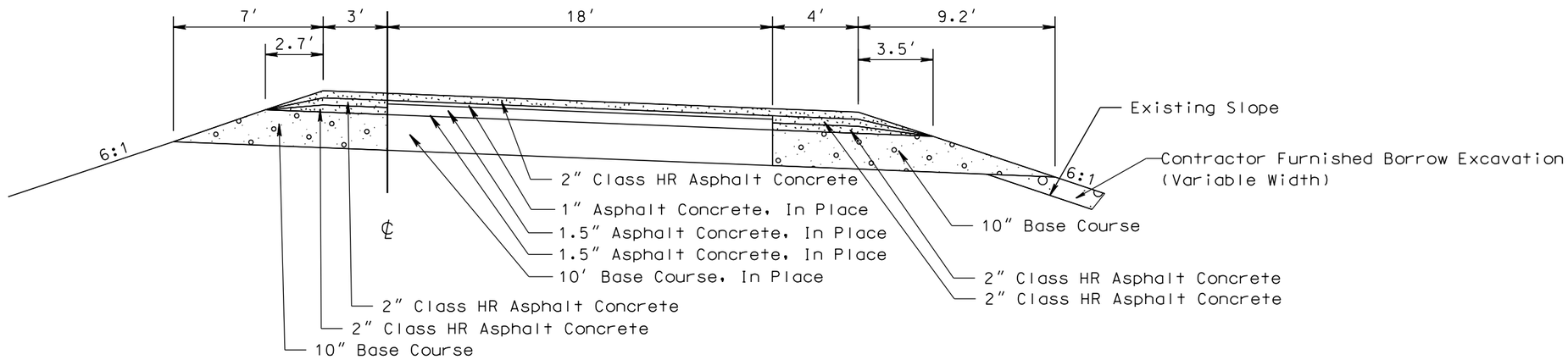

On Ramp Transitions:

Sta. 10+17.8 to Sta. 13+29.8
* 5.5′ to 3′
** 7′ to 2′
# 7.8″ to 0″

Exit 192 WBL

Sta. 10+17.8 to Sta. 13+29.8 WB On Ramp
Sta. 7+70.3 to Sta. 10+82.3 WB Off Ramp

Off Ramp Transitions:

Sta. 7+70.3 to Sta. 10+82.3
* 3′ to 5.5′
** 2′ to 7′
# 0″ to 7.8″

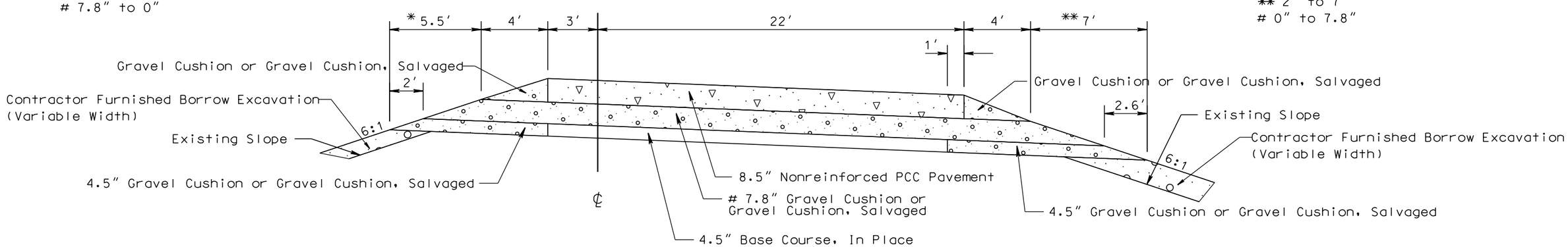

PLOT SCALE - 1:6.00001

PLOTTED FROM - TRPR16032

PLOT NAME - 16

FILE -...\TYPICAL SECTIONS 035E.DGN

TYPICAL SURFACING SECTIONS

STATE OF SOUTH DAKOTA	PROJECT	SHEET	TOTAL SHEETS
	IM 0904(57)189 & NH 0083(85)87	F41	F145

Plotting Date: 08/06/2015

On Ramp Transitions:

Sta. 10+19.8 to Sta. 11+39.8
** 3" to 0"

Sta. 11+39.8 to Sta. 12+51.8
* 2.8" to 0"
** 0"

Off Ramp Transitions:

Sta. 22+97.9 to Sta. 24+09.9
* 0" to 2.8"
** 0"

Sta. 24+09.9 to Sta. 25+29.9
** 0" to 3"

Sta. 10+19.8 to Sta. 12+51.8 Weigh Area On Ramp
Sta. 22+97.9 to Sta. 25+29.9 Weigh Area Off Ramp

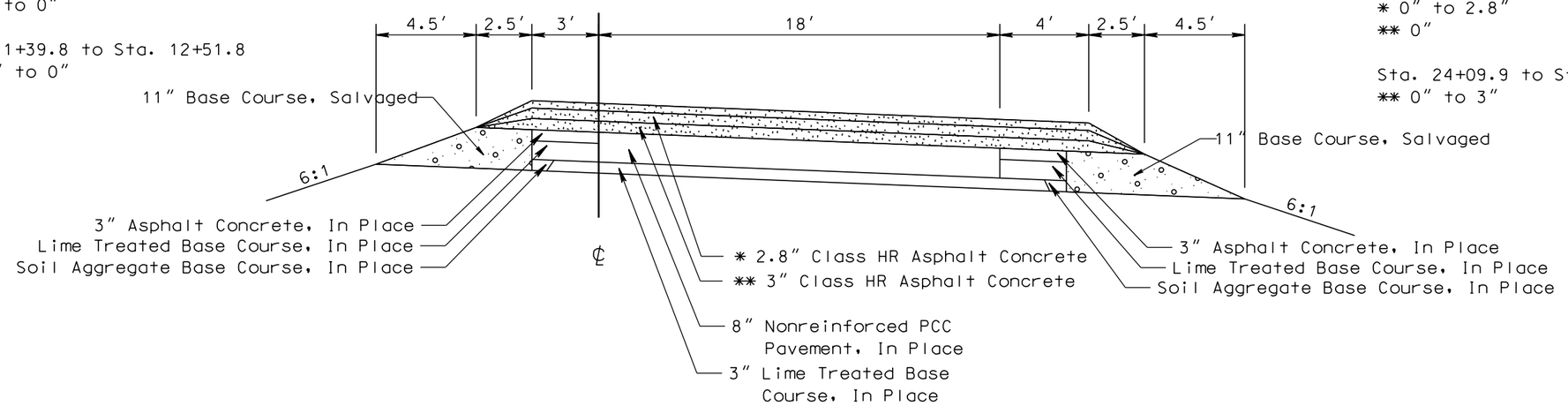

Transitions:

Sta. 17+26.6 to Sta. 17+73.8
* 3' to 23'

Sta. 17+73.8 to Sta. 17+99.7
* 23'

Sta. 17+99.7 to Sta. 18+47.0
* 23' to 3'

Transitions:

Sta. 15+61.4 to Sta. 16+36.8
4' to 3'
** 18' to 24'

Sta. 16+36.8 to Sta. 19+36.8
3'
** 24'

Sta. 19+36.8 to Sta. 20+12.2
3' to 4'
** 24' to 18'

Sta. 12+51.8 to Sta. 22+97.9 Weigh Area

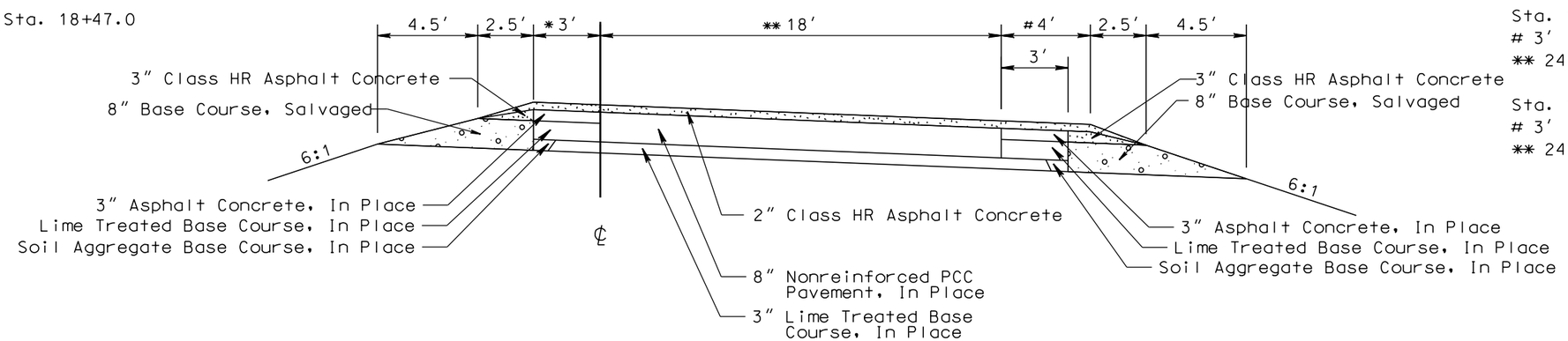

PLOT SCALE - 1:6.00001

PLOTTED FROM - TRPR16032

PLOT NAME - 17

FILE -...\TYPICAL SECTIONS 035E.DGN

IN PLACE SURFACING SECTIONS

STATE OF SOUTH DAKOTA	PROJECT	SHEET	TOTAL SHEETS
	IM 0904(57)189 & NH 0083(85)87	F42	F145

Plotting Date: 08/06/2015

Salvage and Stockpile Asphalt Mix and Granular Base Material

US 83 Mainline

Sta. 10+95 to Sta. 12+20

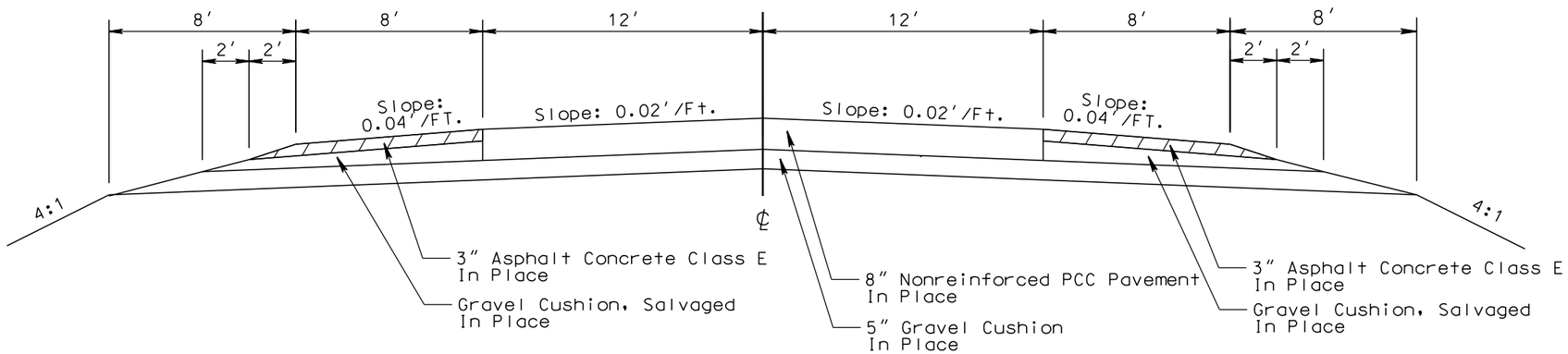

US 83 Mainline

Sta. 13+74 to Sta. 46+89.1

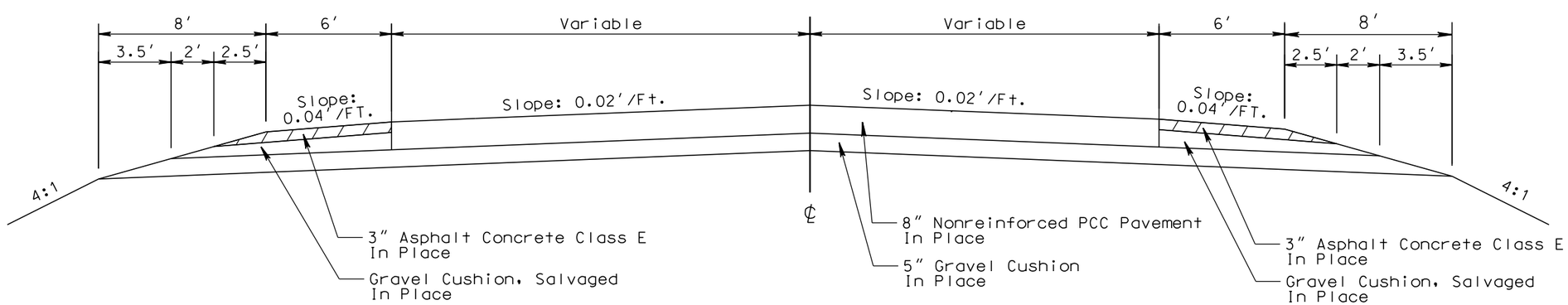

PLOT SCALE - 1:6.00001

PLOTTED FROM - TRPR16032

PLOT NAME - 18

FILE -...\TYPICAL SECTIONS 035E.DGN

TYPICAL SURFACING SECTIONS

STATE OF SOUTH DAKOTA	PROJECT	SHEET	TOTAL SHEETS
	IM 0904(57)189 & NH 0083(85)87	F43	F145

Plotting Date: 08/06/2015

Revised: 6 Aug 15, RML

US 83 Mainline

Sta. 10+95.0 to Sta. 12+20.5 Lt.
Sta. 10+93.4 to Sta. 12+09.3 Rt.

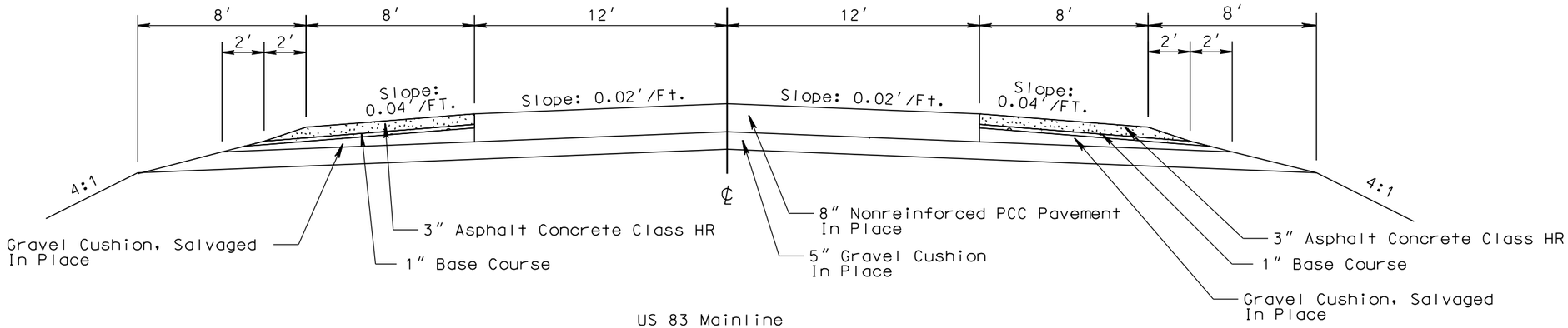

US 83 Mainline

Sta. 12+73.5 to Sta. 43+77.2 Rt.
Sta. 45+90.0 to Sta. 46+89.1 Rt.
Sta. 13+46.2 to Sta. 44+71.5 Lt.

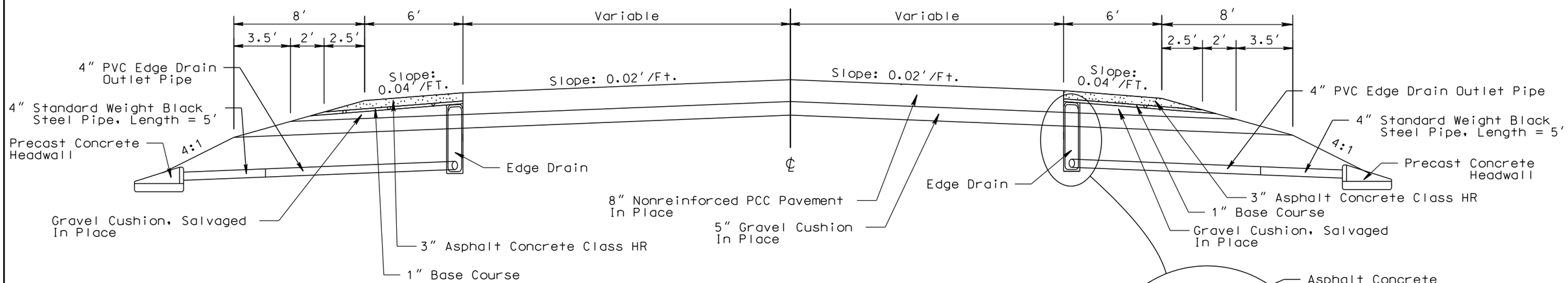

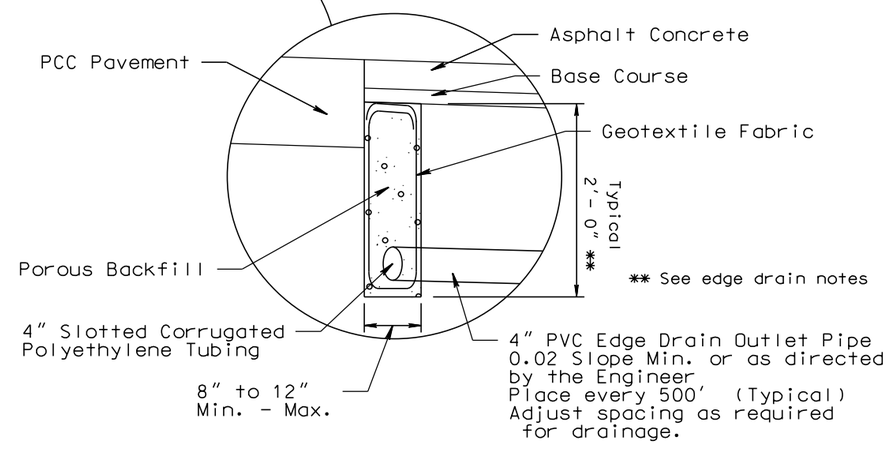

Note: Edge Drains installed from
Sta. 38+00 to Sta. 46+89.1 Lt. & Rt.
See Edge Drain Layouts for details.

PLOT SCALE - 1:6.00001

PLOTTED FROM - TRPR16032

PLOT NAME - 19

FILE -...\TYPICAL SECTIONS 035E.DGN

US83 / SD 248 PCC Pavement Removal & Resurfacing
Sta. 45+53.2 to Sta. 46+89.1

PCC Pavement Removal

Gravel Cushion will be removed and replaced. Subgrade will be removed and disposed of by the Contractor. Cost for this work shall be incidental to the contract unit price per square yard for Nonreinforced PCC Pavement Repair.

Superelevation Slope

Sta. 45+53.2 to Sta. 45+84.4
* 0.0511'/Ft. to 0.013'/Ft.

Sta. 46+60.8 to Sta. 46+89.1
* 0.016/Ft. to Sta. 0.0511'/Ft.

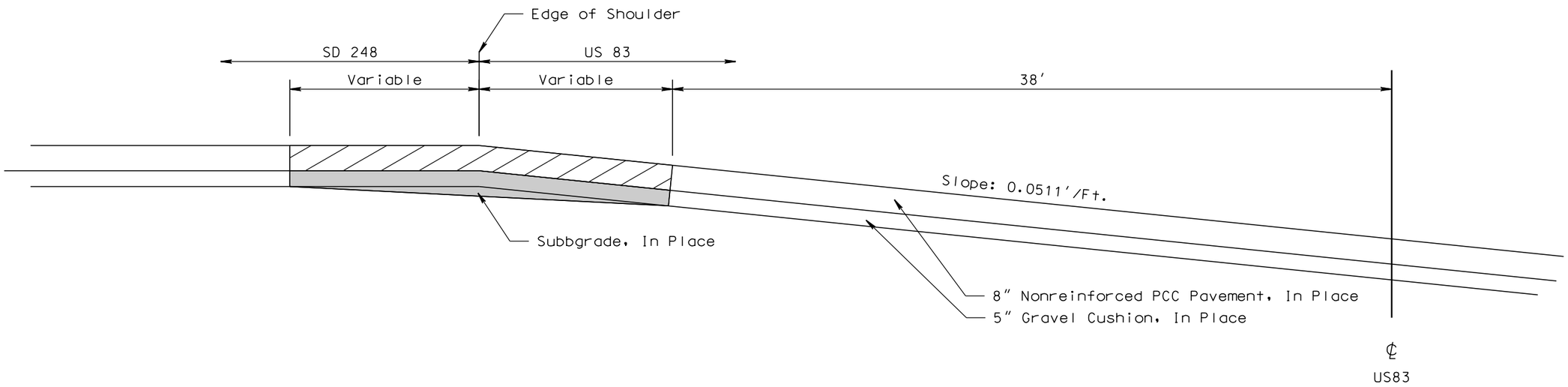

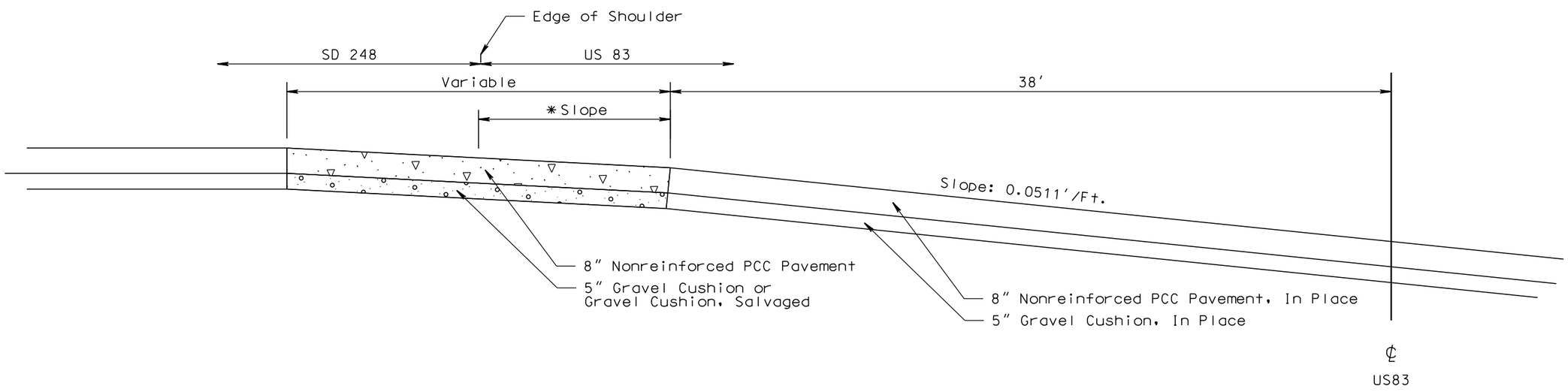

PLOT SCALE - 1:6.00001
PLOTTED FROM - TRPR16032
PLOT NAME - 20
FILE - ...\TYPICAL SECTIONS 035E.DGN

PCC PAVEMENT JOINT LAYOUT

STATE OF SOUTH DAKOTA	PROJECT	SHEET	TOTAL SHEETS
	IM 0904(57)189 & NH 0083(85)87	F45	F145

Plotting Date: 08/06/2015

Scale 1 Inch = 40 Feet
Sheet 1 of 11 Sheets

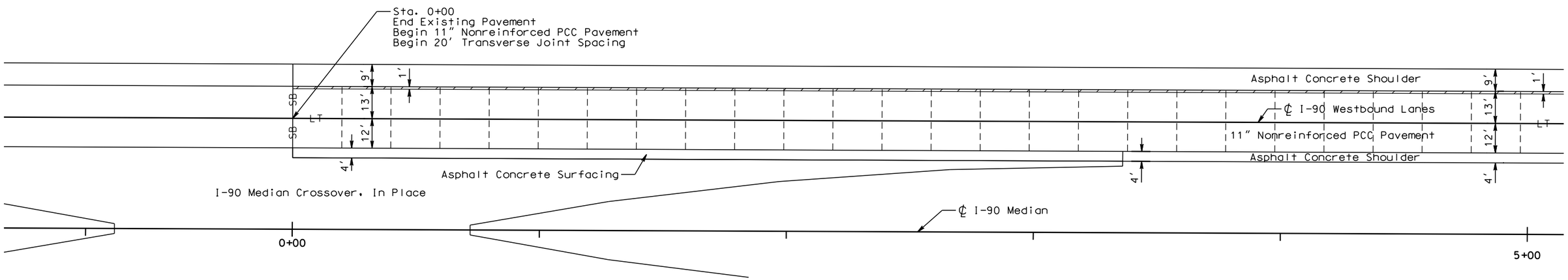

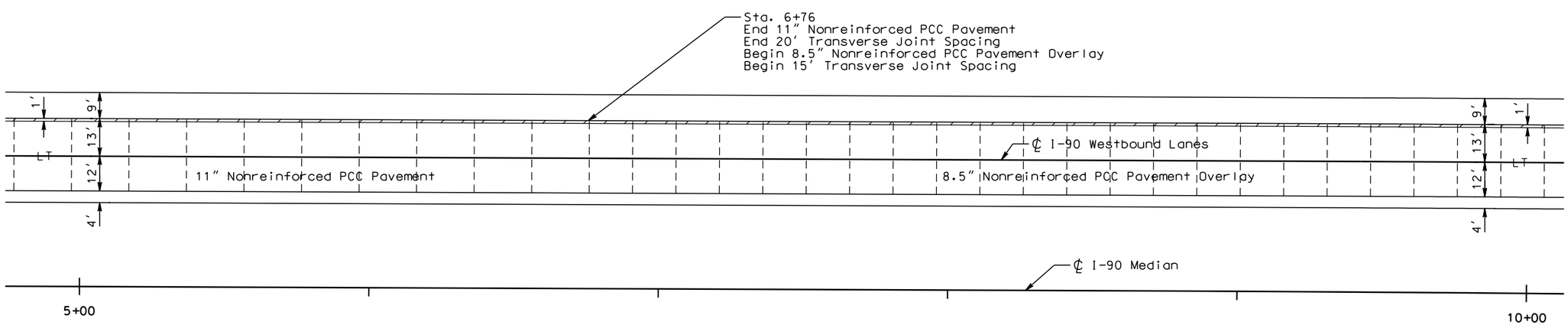

LEGEND:

Longitudinal Construction Joint Without Tie Bars —— L —— L —— L ——
Longitudinal Construction Joint With Tie Bars —— LT —— LT —— LT ——
Transverse Contraction Joint -
Steel Bar Installation in Longitudinal or Transverse Joint — SB —— SB —— SB —
Areas to be poured monolithically with adjacent slab (See Detail A)

Transverse contraction joints within these areas shall not have dowel bar assemblies. All other transverse contraction joints shall have dowel bar assemblies.

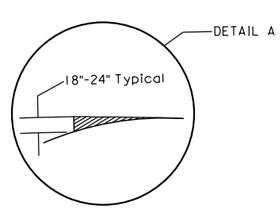

Stationing alignment for mainline is located at centerline of median.

PLOT SCALE - 1:40
PLOTTED FROM - TRPR16032
PLOT NAME - 21
FILE - ...\PCC PAVEMENT LAYOUTS 035E.DGN

PCC PAVEMENT JOINT LAYOUT

STATE OF SOUTH DAKOTA	PROJECT	SHEET	TOTAL SHEETS
	IM 0904(57)189 & NH 0083(85)87	F46	F145

Plotting Date: 08/06/2015

Scale 1 Inch = 40 Feet
Sheet 2 of 11 Sheets

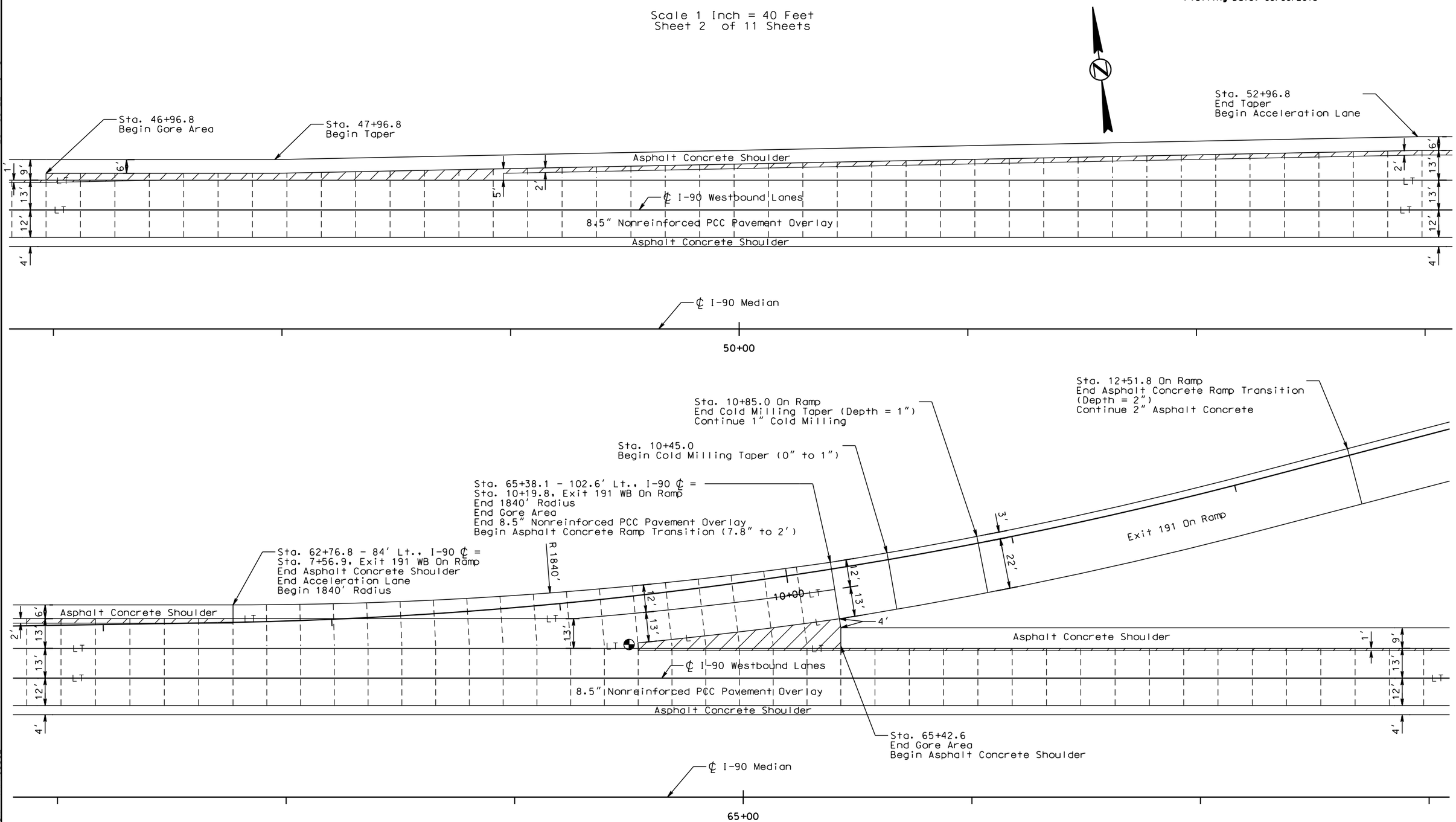

Stationing alignment for mainline is located at centerline of median.

PLOT SCALE - 1:40

PLOT NAME - 22

FILE - ...\PCC PAVEMENT LAYOUTS 035E.DGN

PLOTTED FROM - TRPR16032

PCC PAVEMENT JOINT LAYOUT

STATE OF SOUTH DAKOTA	PROJECT	SHEET	TOTAL SHEETS
	IM 0904(57)189 & NH 0083(85)87	F47	F145

Plotting Date: 08/06/2015

Scale 1 Inch = 40 Feet
Sheet 3 of 11 Sheets

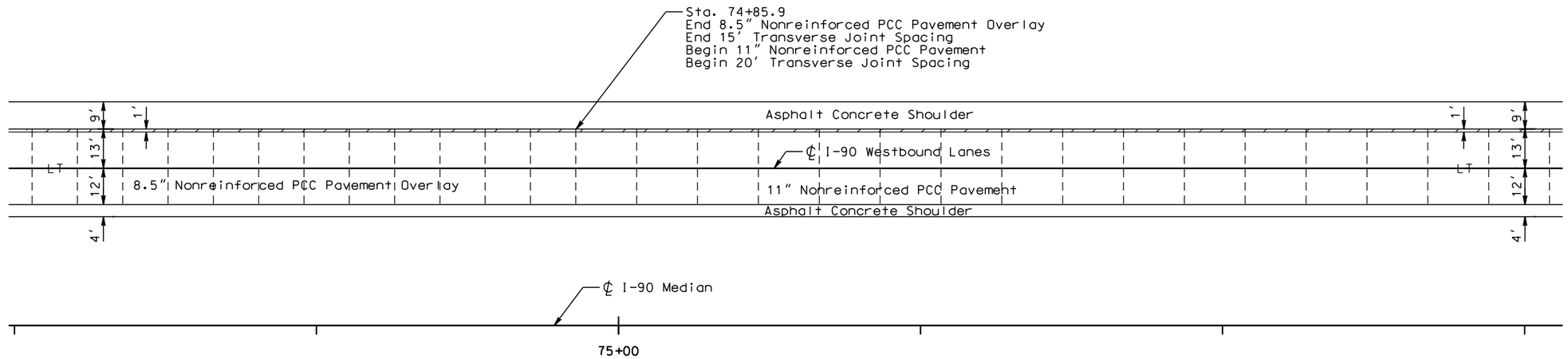

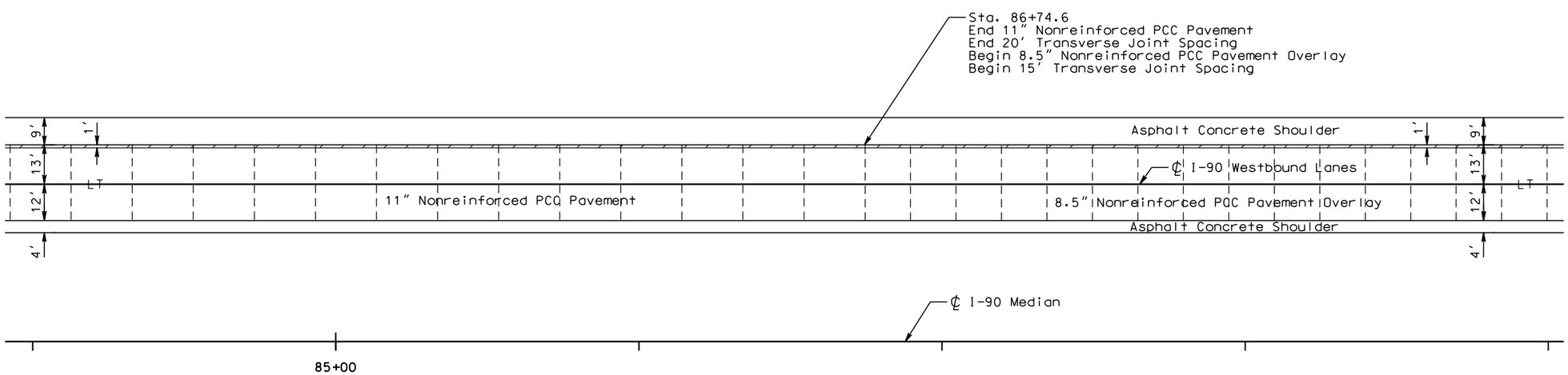

Stationing alignment for mainline is located at centerline of median.

PLOT SCALE - 1:40

PLOTTED FROM - TRPR16032

PLOT NAME - 23

FILE - ...\PCC PAVEMENT LAYOUTS 035E.DGN

PCC PAVEMENT JOINT LAYOUT

STATE OF SOUTH DAKOTA	PROJECT	SHEET	TOTAL SHEETS
	IM 0904(57)189 & NH 0083(85)87	F48	F145

Plotting Date: 08/06/2015

Scale 1 Inch = 40 Feet
Sheet 4 of 11 Sheets

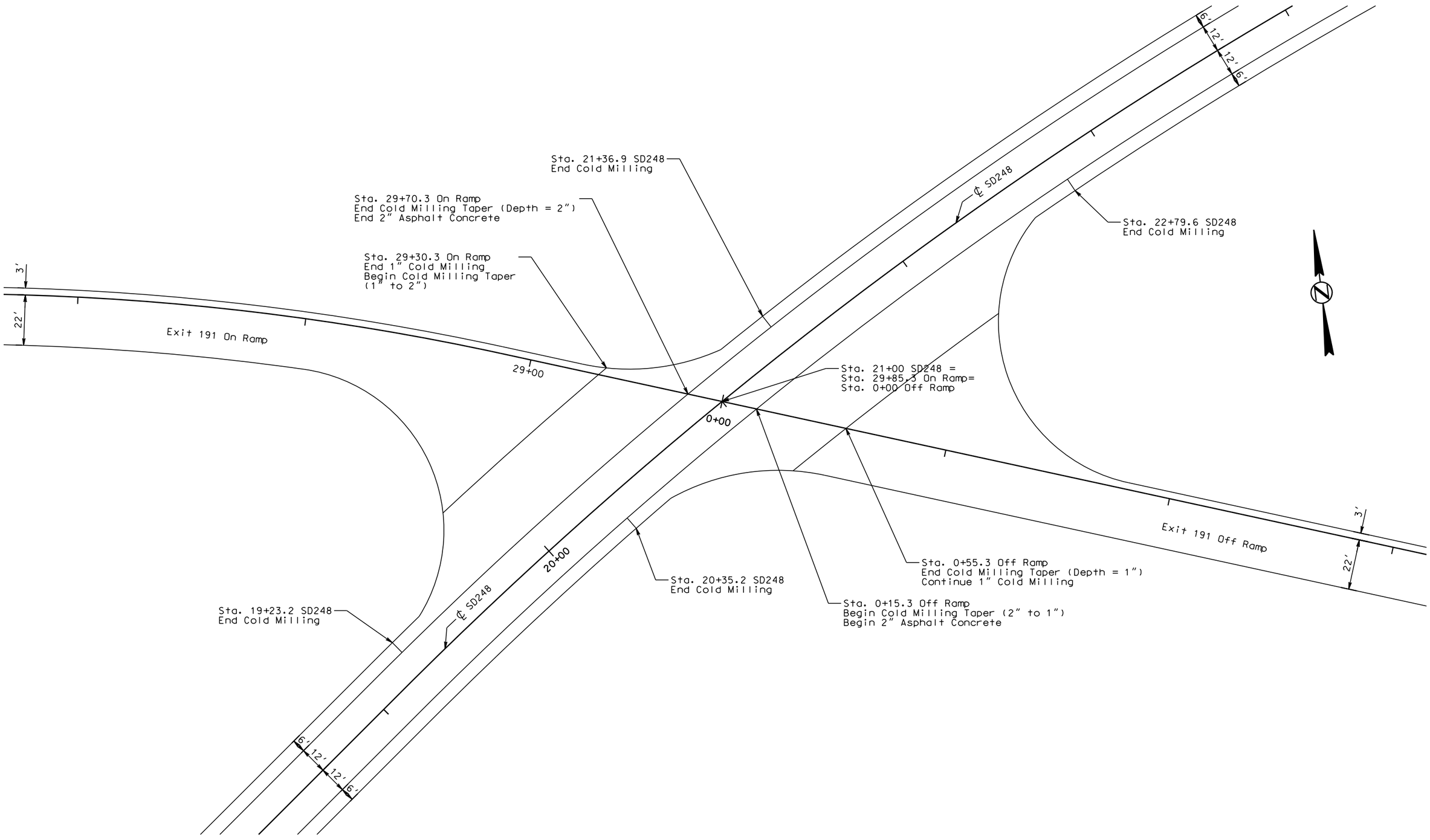

PLOT SCALE - 1:40

PLOTTED FROM - TRPR16032

PLOT NAME - 24

FILE -...\PCC PAVEMENT LAYOUTS 035E.DGN

PCC PAVEMENT JOINT LAYOUT

STATE OF SOUTH DAKOTA	PROJECT	SHEET	TOTAL SHEETS
	IM 0904(57)189 & NH 0083(85)87	F49	F145

Plotting Date: 08/06/2015

Scale 1 Inch = 40 Feet
Sheet 5 of 11 Sheets

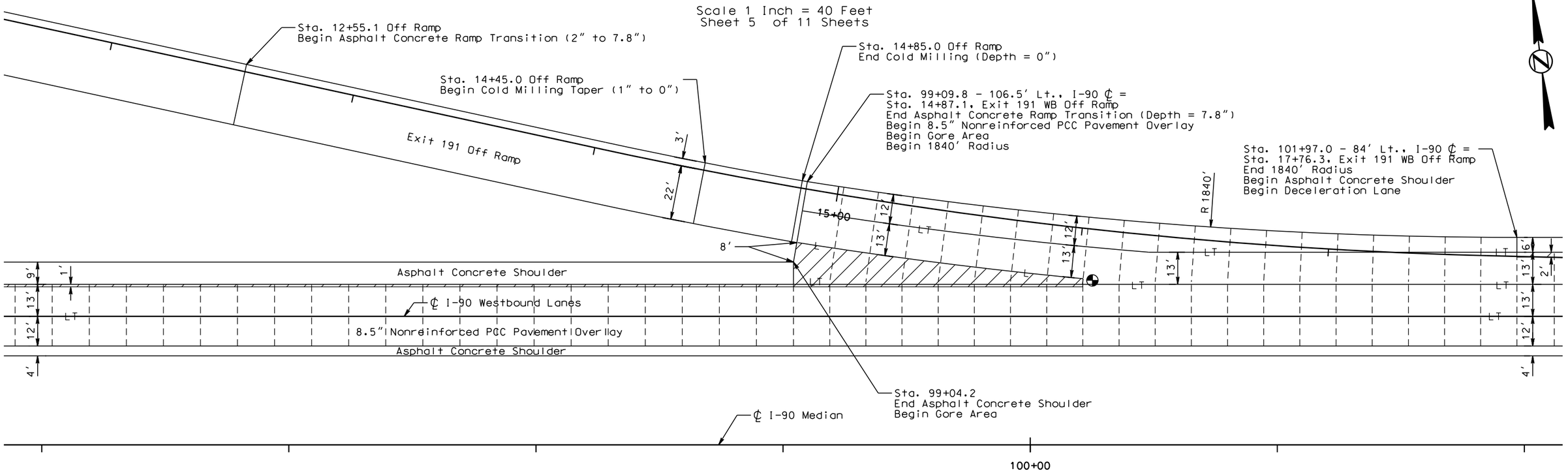

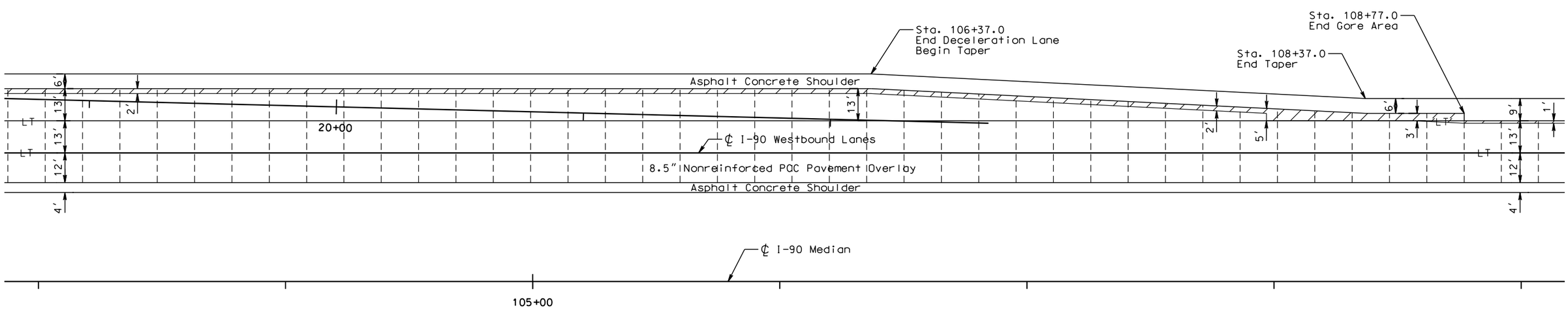

Stationing alignment for mainline is located at centerline of median.

PLOT SCALE - 1:40

PLOTTED FROM - TRPR16032

PLOT NAME - 25

FILE - ...\PCC PAVEMENT LAYOUTS 035E.DGN

PCC PAVEMENT JOINT LAYOUT

STATE OF SOUTH DAKOTA	PROJECT	SHEET	TOTAL SHEETS
	IM 0904(57)189 & NH 0083(85)87	F50	F145

Plotting Date: 08/06/2015

Scale 1 Inch = 40 Feet
Sheet 6 of 11 Sheets

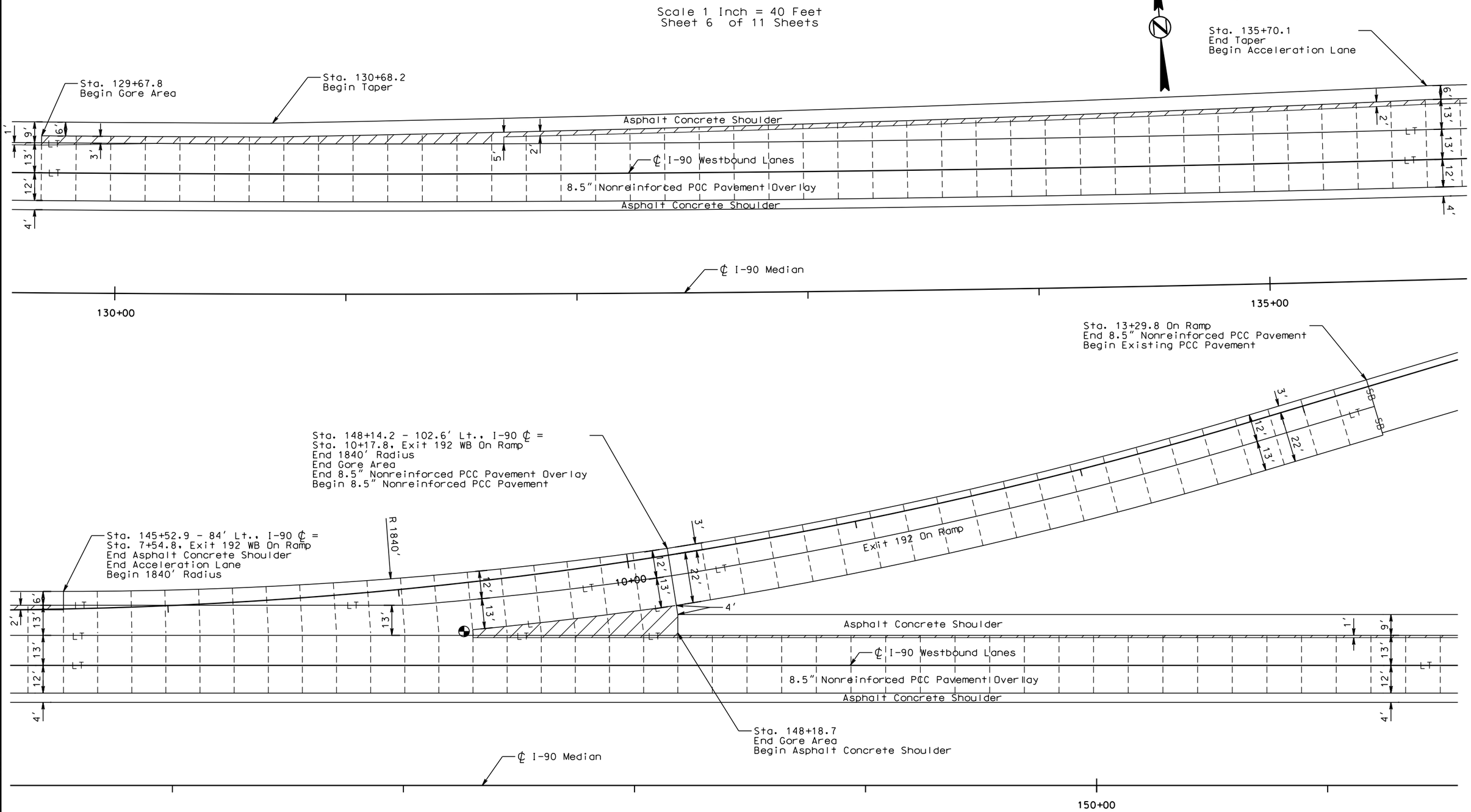

Stationing alignment for mainline is located at centerline of median.

PLOT SCALE - 1:40

PLOT NAME - 26

FILE - ...\PCC PAVEMENT LAYOUTS 035E.DGN

PLOTTED FROM - TRPR16032

PCC PAVEMENT JOINT LAYOUT

STATE OF SOUTH DAKOTA	PROJECT	SHEET	TOTAL SHEETS
	IM 0904(57)189 & NH 0083(85)87	F51	F145

Plotting Date: 08/06/2015

Scale 1 Inch = 40 Feet
Sheet 7 of 11 Sheets

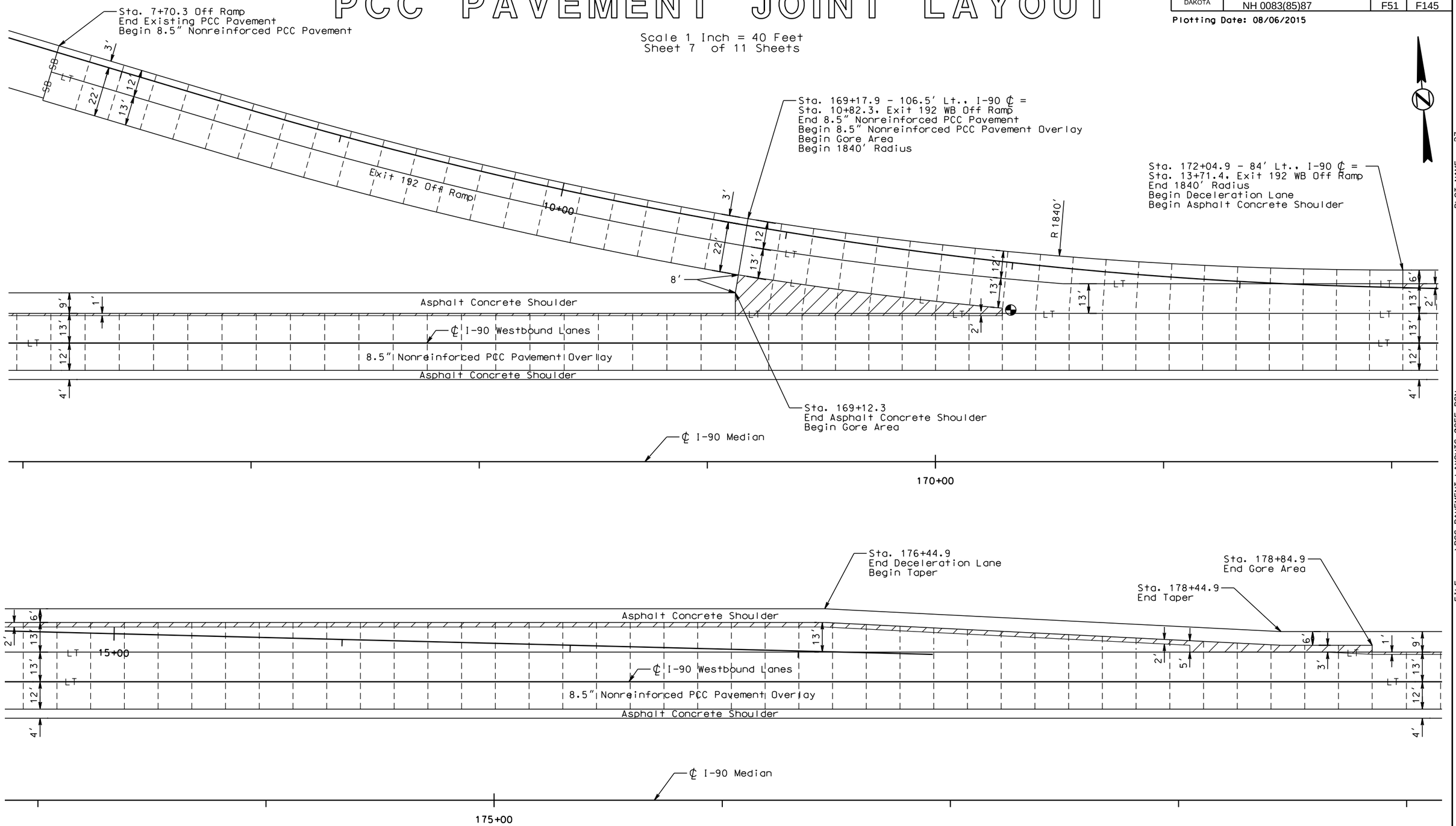

Stationing alignment for mainline is located at centerline of median.

PLOT SCALE - 1:40

PLOTTED FROM - TRPR16032

PLOT NAME - 27

FILE - ...\PCC PAVEMENT LAYOUTS 035E.DGN

PCC PAVEMENT JOINT LAYOUT

STATE OF SOUTH DAKOTA	PROJECT	SHEET	TOTAL SHEETS
	IM 0904(57)189 & NH 0083(85)87	F52	F145

Plotting Date: 08/06/2015

Scale 1 Inch = 40 Feet
Sheet 8 of 11 Sheets

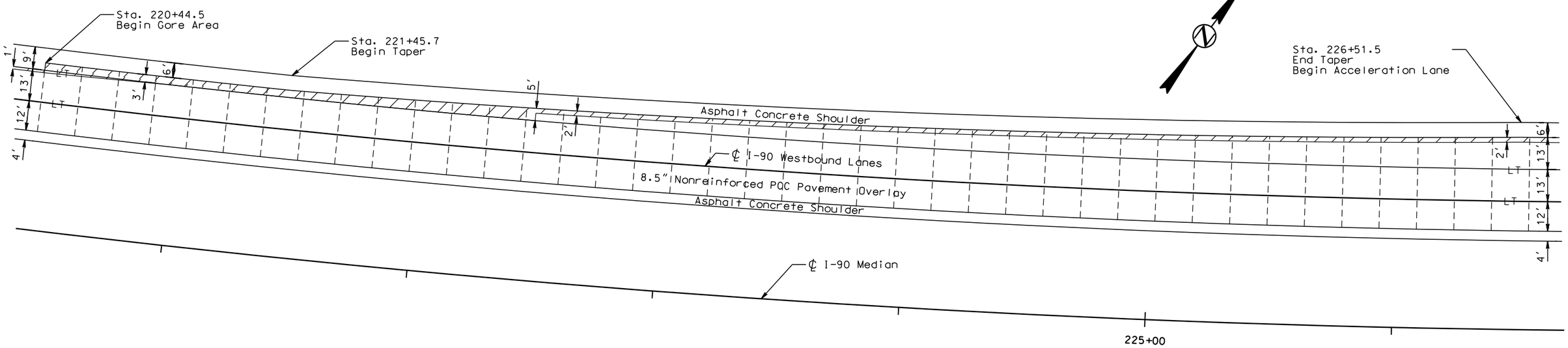

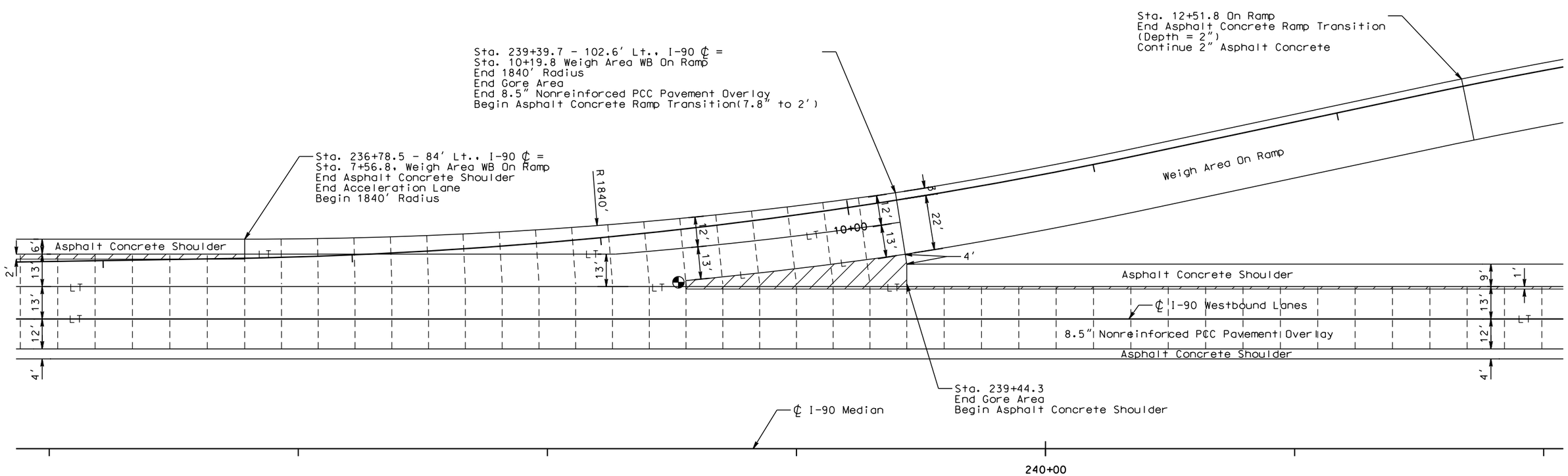

Stationing alignment for mainline is located at centerline of median.

PLOT SCALE - 1:40

PLOT NAME - 28

FILE - ...\PCC PAVEMENT LAYOUTS 035E.DGN

PLOTTED FROM - TRPR16032

PCC PAVEMENT JOINT LAYOUT

STATE OF SOUTH DAKOTA	PROJECT	SHEET	TOTAL SHEETS
	IM 0904(57)189 & NH 0083(85)87	F53	F145

Plotting Date: 08/06/2015

Scale 1 Inch = 40 Feet
Sheet 9 of 11 Sheets

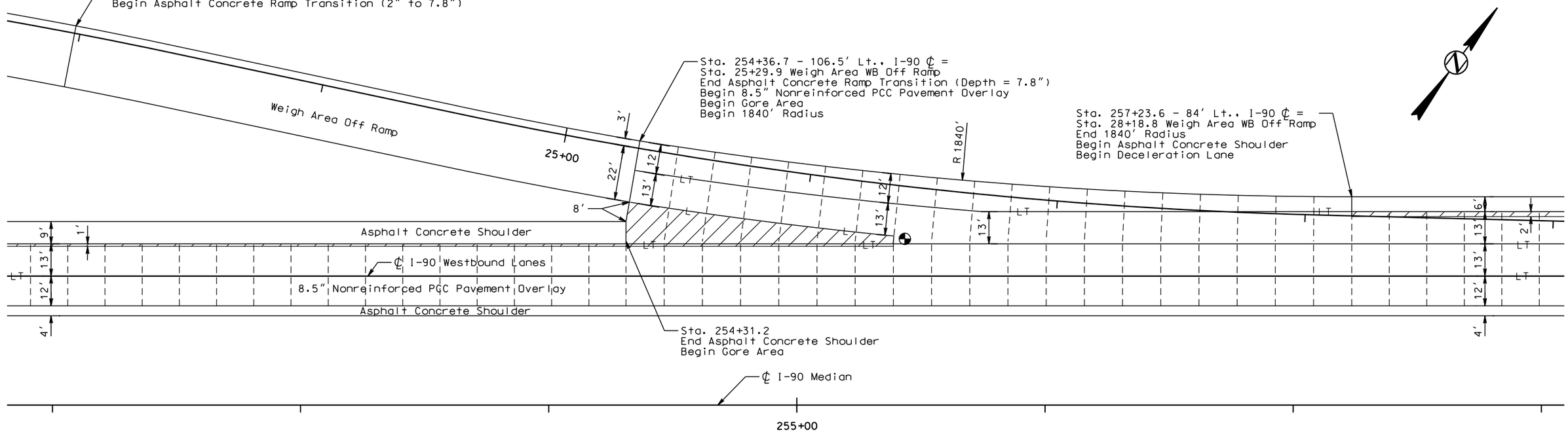

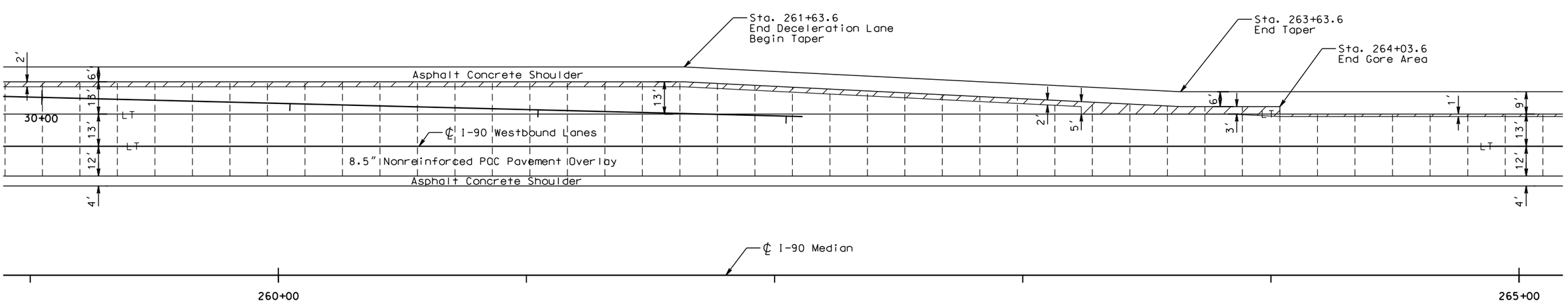

Stationing alignment for mainline is located at centerline of median.

PLOT SCALE - 1:40

PLOT NAME - 29

FILE - ...\PCC PAVEMENT LAYOUTS 035E.DGN

PLOTTED FROM - TRPR16032

PCC PAVEMENT JOINT LAYOUT

STATE OF SOUTH DAKOTA	PROJECT	SHEET	TOTAL SHEETS
	IM 0904(57)189 & NH 0083(85)87	F54	F145

Plotting Date: 08/06/2015

Scale 1 Inch = 40 Feet
Sheet 10 of 11 Sheets

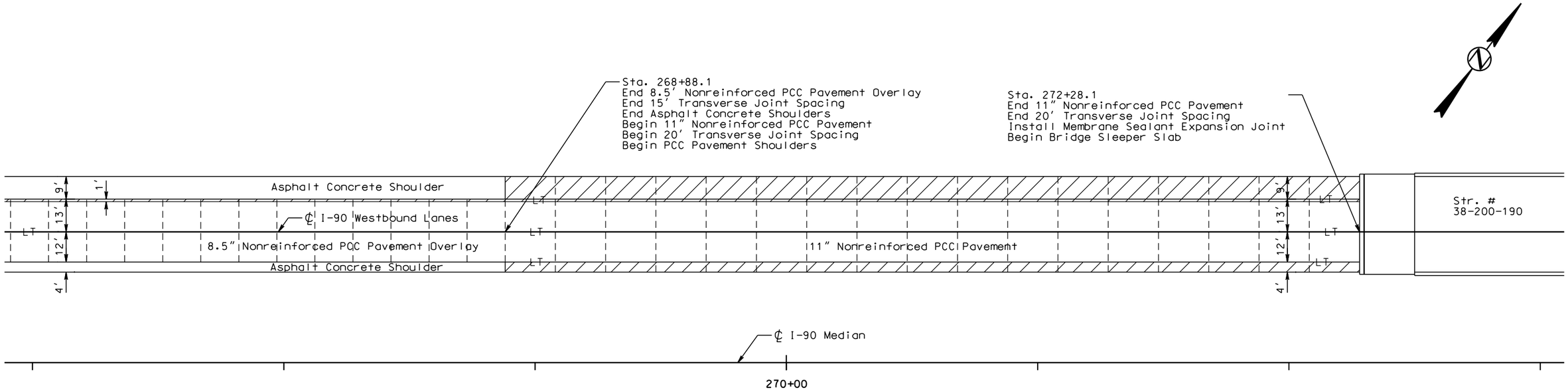

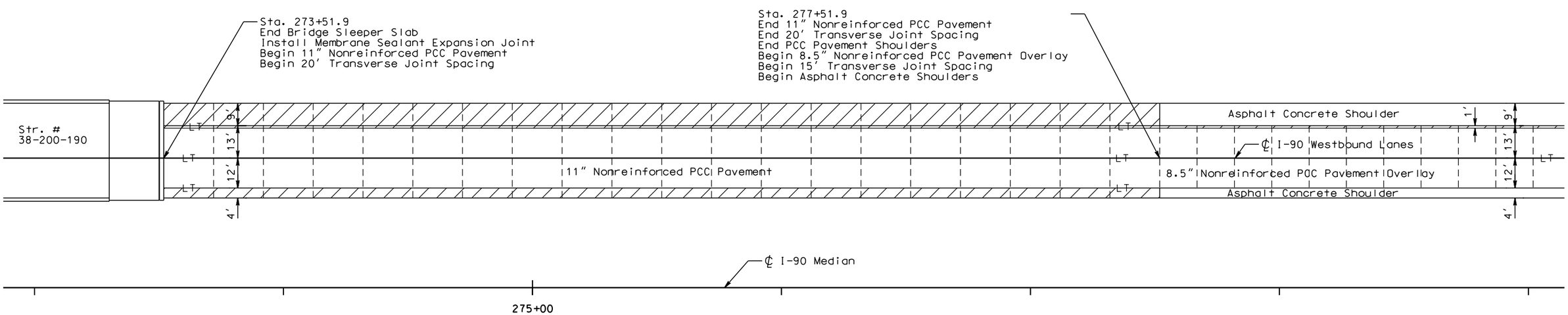

Stationing alignment for mainline is located at centerline of median.

PLOT SCALE - 1:40

PLOTTED FROM - TRPR16032

PLOT NAME - 30

FILE - ...\PCC PAVEMENT LAYOUTS 035E.DGN

PCC PAVEMENT JOINT LAYOUT

STATE OF SOUTH DAKOTA	PROJECT	SHEET	TOTAL SHEETS
	IM 0904(57)189 & NH 0083(85)87	F55	F145

Plotting Date: 08/06/2015

Scale 1 Inch = 40 Feet
Sheet 11 of 11 Sheets

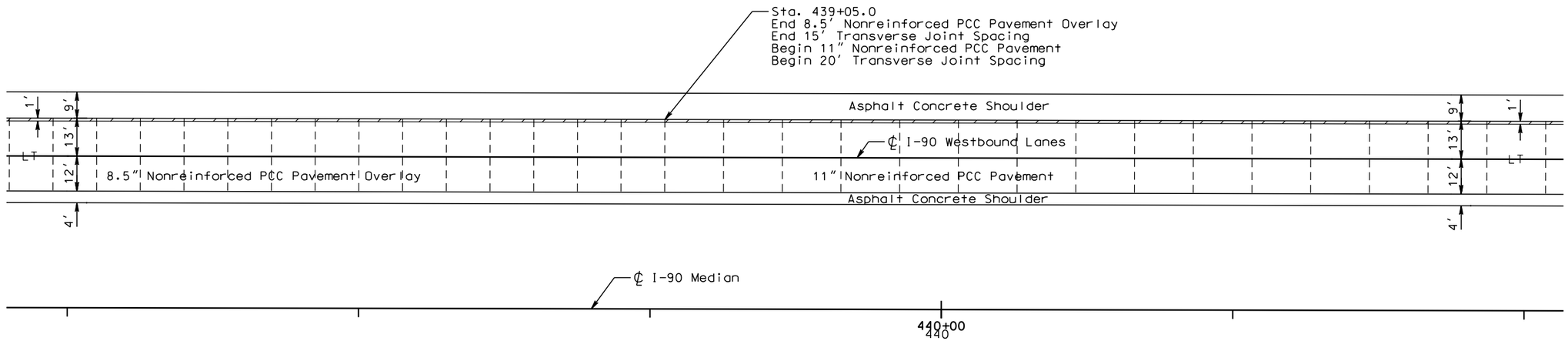

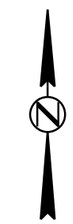

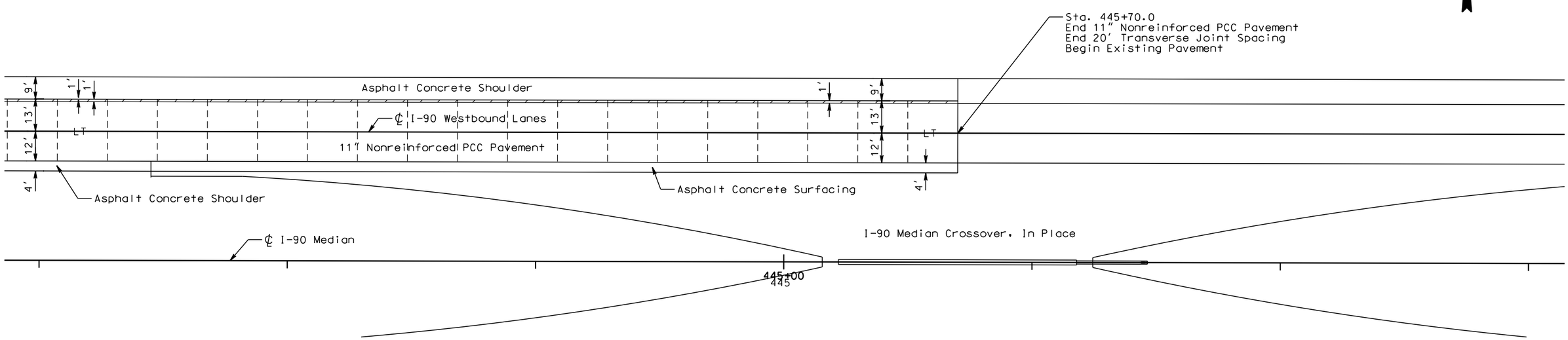

Stationing alignment for mainline is located at centerline of median.

PLOT SCALE - 1:40

PLOTTED FROM - TRPR16032

PLOT NAME - 31

FILE - ...\PCC PAVEMENT LAYOUTS 035E.DGN

STATE OF SOUTH DAKOTA	PROJECT	SHEET	TOTAL SHEETS
	IM 0904(57)189 & NH 0083(85)87	F56	F145

Plotting Date: 08/06/2015

Deceleration Lane will be lengthed if ramp speed of 50 mph or less can not acheived at the end of Deceleration Lane.

General Off Ramp Deceleration Lane Details

Notes:

Stationing for existing ramp is for reference only.

2% Crown Slope for interstate may vary depending on horizontal geometrics.

See P.C.C. Pavement Joint Layout Sheets for Concrete Joint Pavement Details.

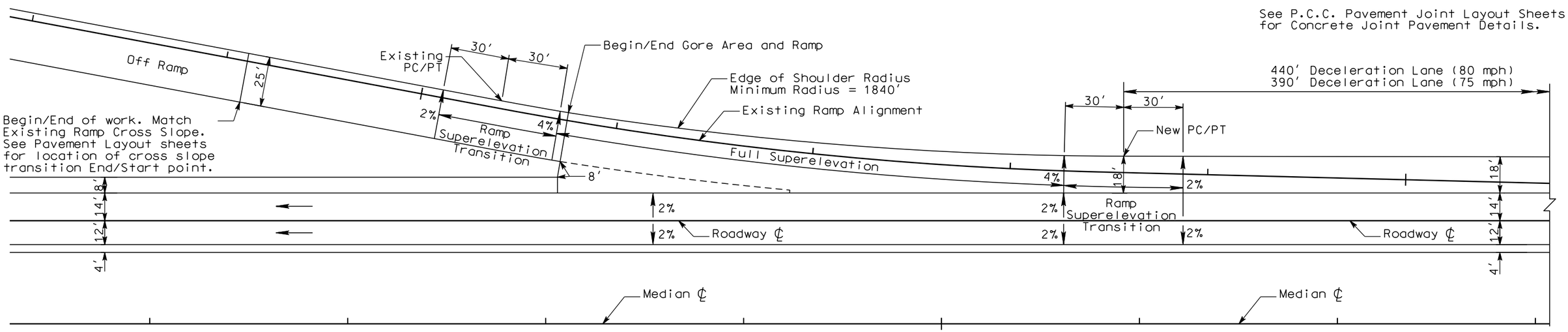

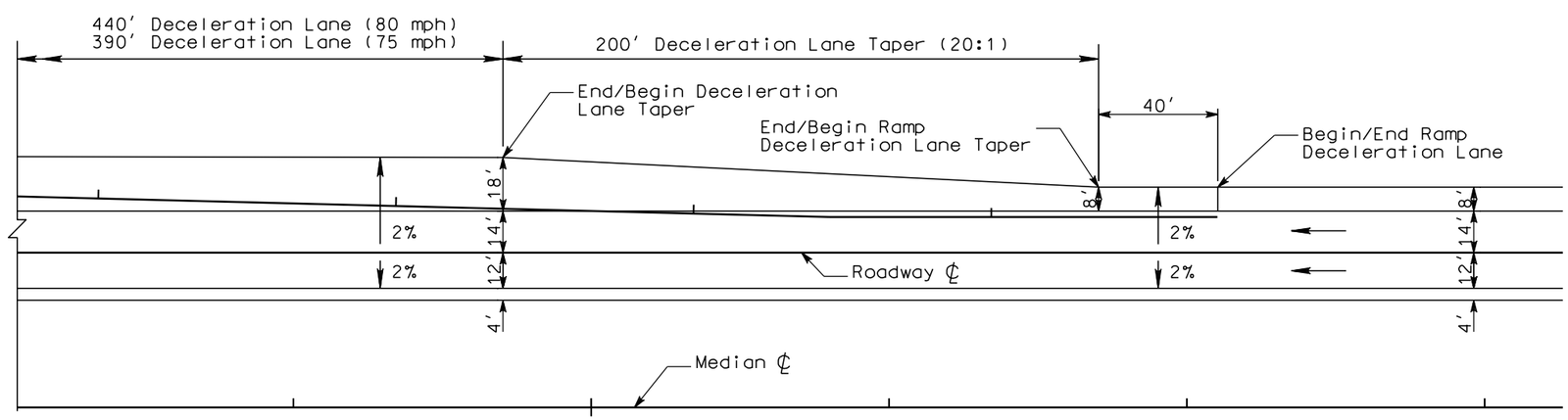

PLOT SCALE - 1:49.8506

PLOT NAME - 32

FILE -...\GENERAL RAMP DETAILS.DGN

PLOTTED FROM - TRPR16032

STATE OF SOUTH DAKOTA	PROJECT	SHEET	TOTAL SHEETS
	IM 0904(57)189 & NH 0083(85)87	F57	F145

Plotting Date: 08/06/2015

Acceleration Lane will be lengthed if ramp speed of 50 mph is not acheived at the beginning of Acceleration Lane.

General On Ramp Acceleration Lane Details

Notes:

Stationing for existing ramp is for reference only.

2% Crown Slope for interstate may vary depending on horizontal geometrics.

See P.C.C. Pavement Joint Layout Sheets for Concrete Joint Pavement Details.

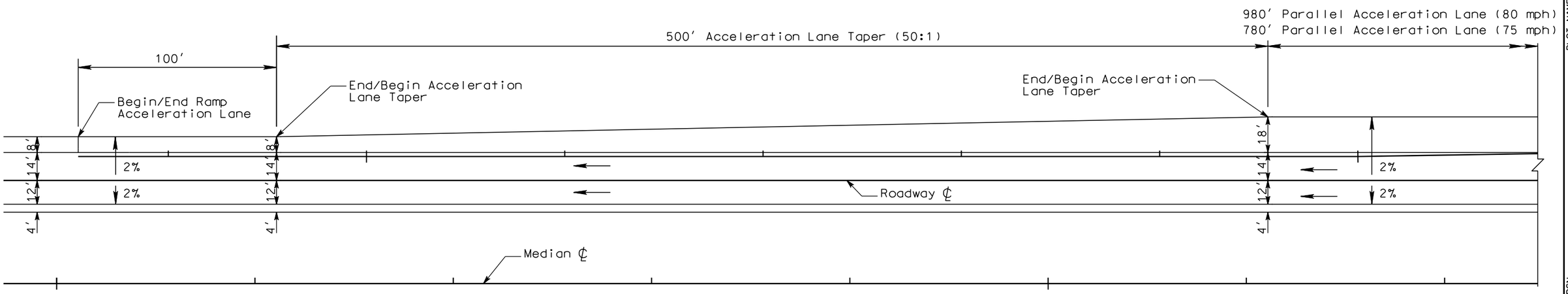

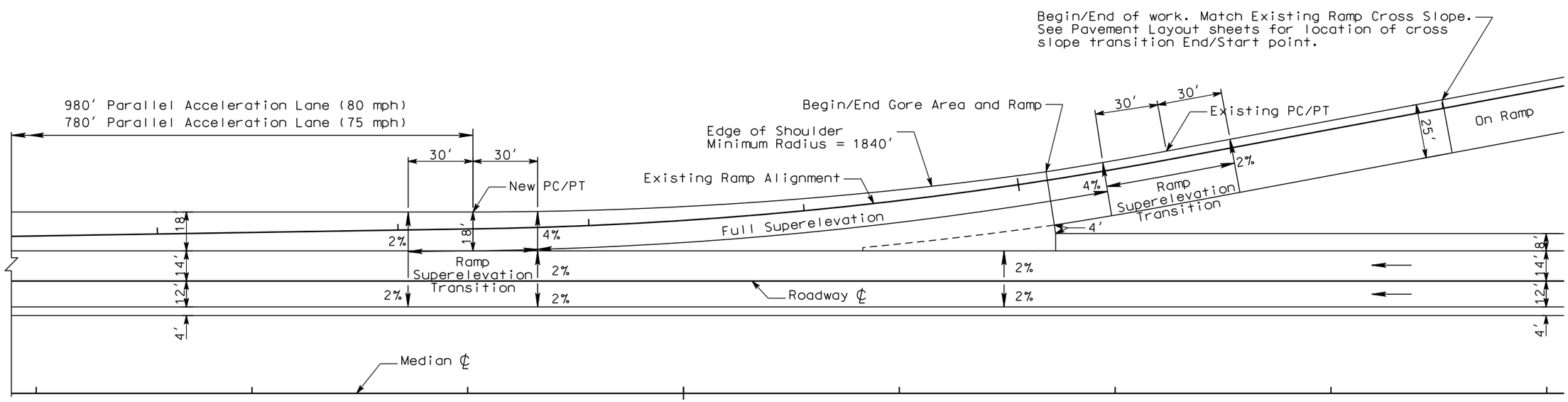

PLOT SCALE - 1:49.8506

PLOTTED FROM - TRPR16032

PLOT NAME - 33

FILE -...\GENERAL RAMP DETAILS.DGN

STATE OF SOUTH DAKOTA	PROJECT	SHEET	TOTAL SHEETS
	IM 0904(57)189 & NH 0083(85)87	F58	F145

Plotting Date: 08/06/2015

Remove PCC Pavement

Unclassified Excavation

2′ Subgrade Excavation

VERTICAL CLEARANCE UNDER STRUCTURES

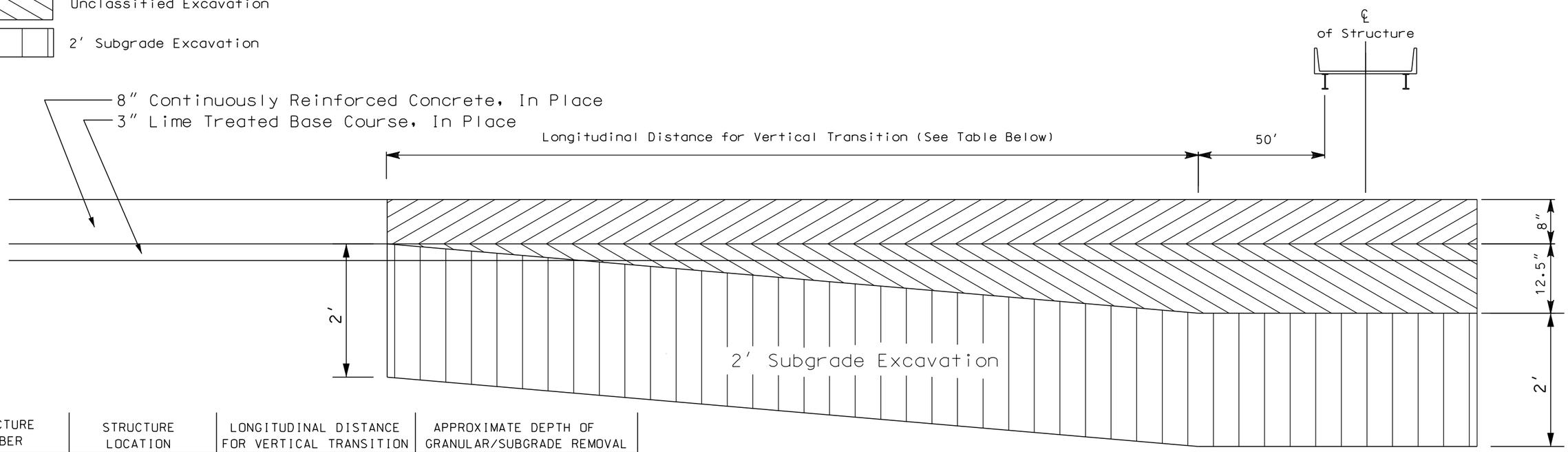

STRUCTURE NUMBER	STRUCTURE LOCATION	LONGITUDINAL DISTANCE FOR VERTICAL TRANSITION	APPROXIMATE DEPTH OF GRANULAR/SUBGRADE REMOVAL
38-166-196 WB	MRM 191.15	500′	12.5″

The Contractor shall verify that a minimum of 16′ - 6″clearance will be maintained at all structures after construction for full roadway width.

Proper clearance exists at Str. # 38-180-198 (Exit 192).The Contractor shall maintain a minimum of 16′ - 6″ clearance at this structure after construction for full roadway width.

All distances and measurements shall be verified by the Contractor before concrete is placed.

Backfill for 2′ Subgrade Excavation will be Select Subgrade Topping (blended undercut soil and crushed PCC Pavement/salvaged granular material).

TRANSITION FOR MAINTAINING VERTICAL CLEARANCE UNDER STRUCTURES

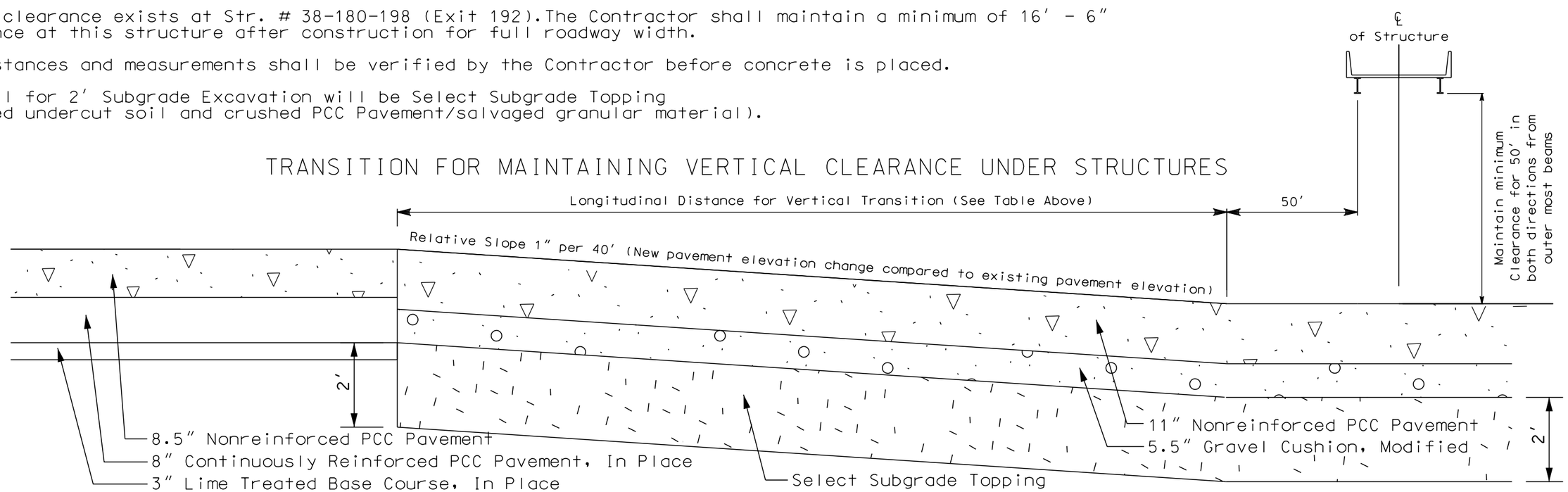

PLOT SCALE - 1:203.757

PLOT NAME - 34

FILE -...\VERTICAL CLEARANCE LAYOUT 035E.DGN

PLOTTED FROM - TRPR16032

DRIVING SURFACE TRANSITION DETAILS

STATE OF SOUTH DAKOTA	PROJECT	SHEET	TOTAL SHEETS
	IM 0904(57)189 & NH 0083(85)87	F59	F145

Plotting Date: 08/06/2015

Remove Concrete Pavement

Unclassified Excavation - Waste Material

NOT TO SCALE

See Typical Surfacing Sections for additional details for removal and surfacing.

BEGINNING OF PROJECT (Sta. 0+00.0 -1′ to Sta. 6+76.0)

LONGITUDINAL SECTION AT CENTERLINE SHOWING REMOVAL OF IN PLACE SURFACING

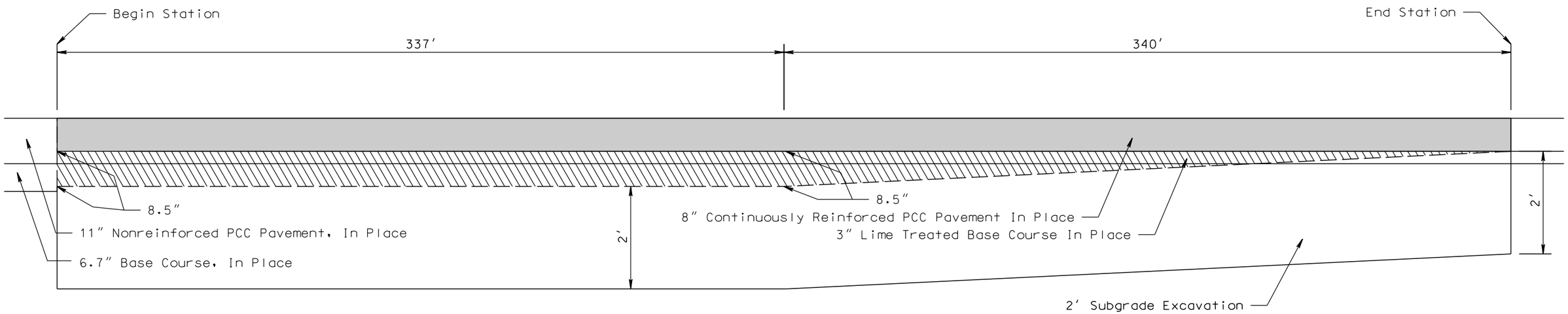

LONGITUDINAL SECTION AT CENTERLINE SHOWING SURFACING

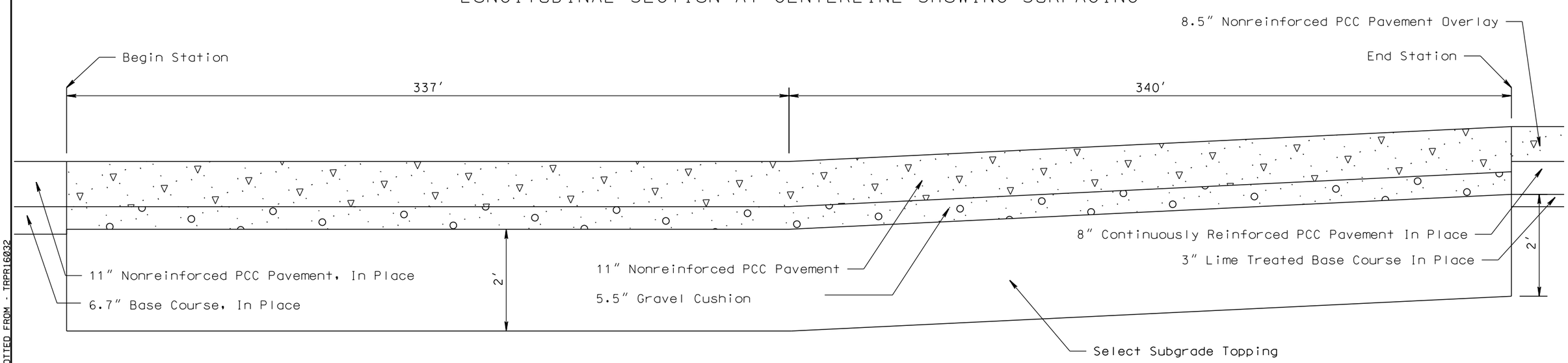

PLOT SCALE - 1:15

PLOTTED FROM - TRPR16032

PLOT NAME - 35

FILE -...\DRIVING SURFACE TRANS 035E.DGN

DRIVING SURFACE TRANSITION DETAILS

NOT TO SCALE

Remove Concrete Pavement

Unclassified Excavation - Waste Material

See Typical Surfacing Sections for additional details for removal and surfacing.

ON END OF STRUCTURE 38-200-190 (Sta. 268+88.1 to Sta. 272+28.1)

LONGITUDINAL SECTION AT CENTERLINE SHOWING REMOVAL OF IN PLACE SURFACING

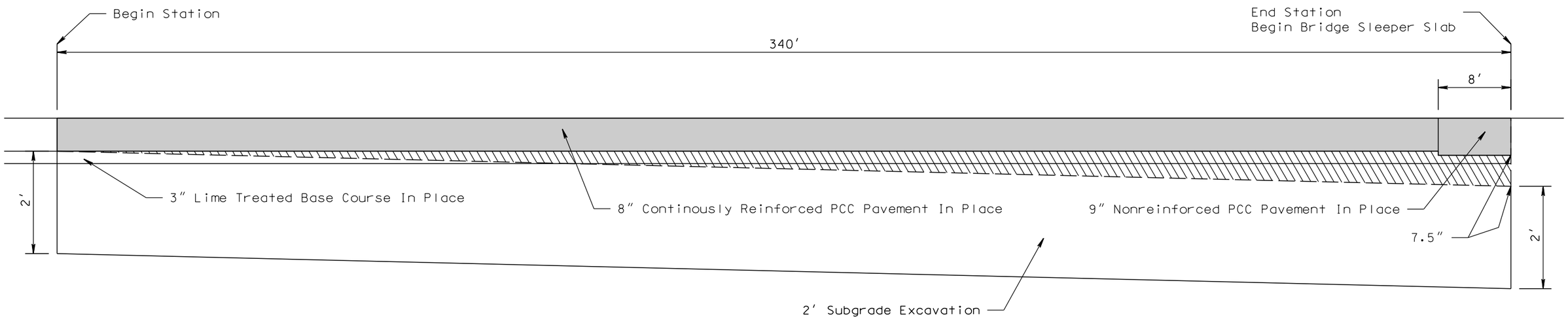

LONGITUDINAL SECTION AT CENTERLINE SHOWING SURFACING

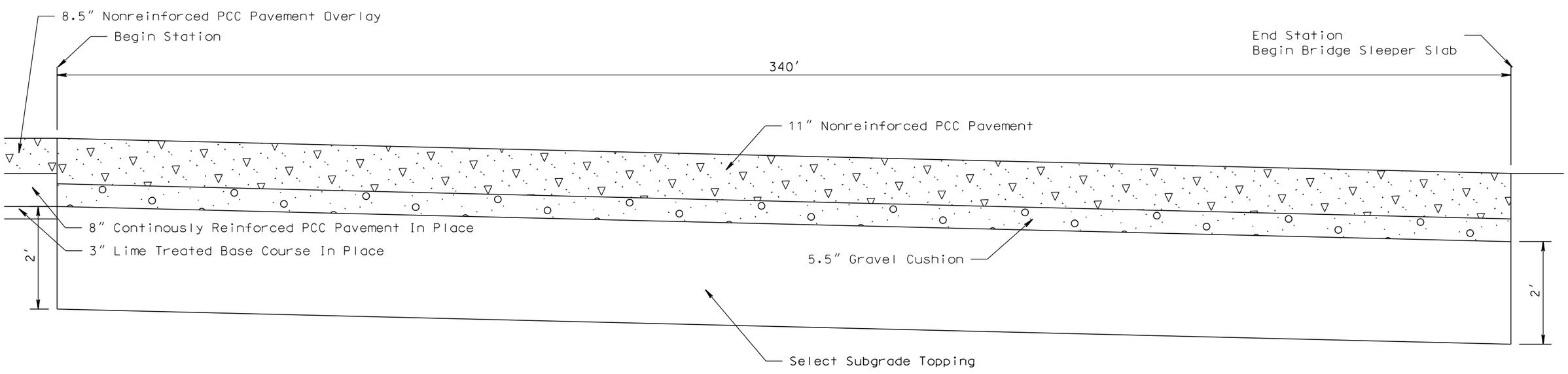

DRIVING SURFACE TRANSITION DETAILS

Remove Concrete Pavement

Unclassified Excavation - Waste Material

NOT TO SCALE

See Typical Surfacing Sections for additional details for removal and surfacing.

OFF END OF STRUCTURE 38-200-190 (Sta. 273+51.9 to Sta. 277+51.9)

LONGITUDINAL SECTION AT CENTERLINE SHOWING REMOVAL OF IN PLACE SURFACING

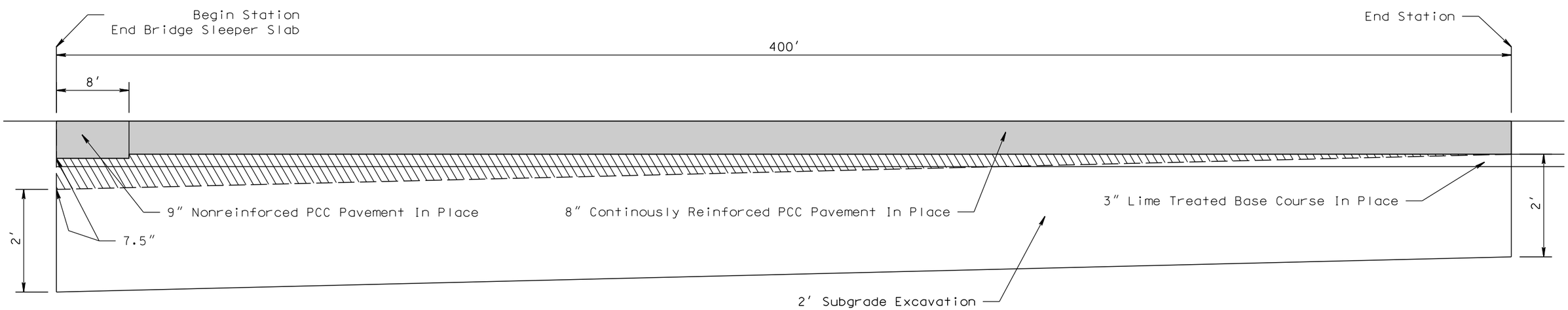

LONGITUDINAL SECTION AT CENTERLINE SHOWING SURFACING

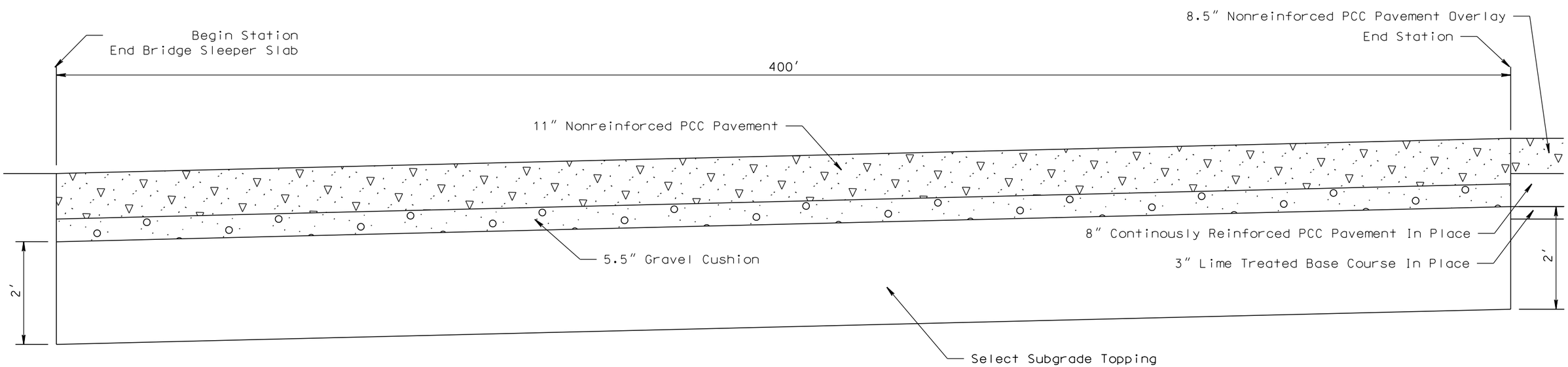

PLOT SCALE - 1:15
PLOT NAME - 37
FILE - ...\DRIVING SURFACE TRANS 035E.DGN
PLOTTED FROM - TRPR16032

DRIVING SURFACE TRANSITION DETAILS

STATE OF SOUTH DAKOTA	PROJECT	SHEET	TOTAL SHEETS
	IM 0904(57)189 & NH 0083(85)87	F62	F145

Plotting Date: 08/06/2015

NOT TO SCALE

Cold Milling Asphalt Concrete

See Typical Surfacing Sections for additional details for removal and surfacing.

EXIT 191 ON RAMP (STA. 10+19.8 TO STA. 12+51.8)

LONGITUDINAL SECTION AT CENTERLINE SHOWING REMOVAL OF IN PLACE SURFACING

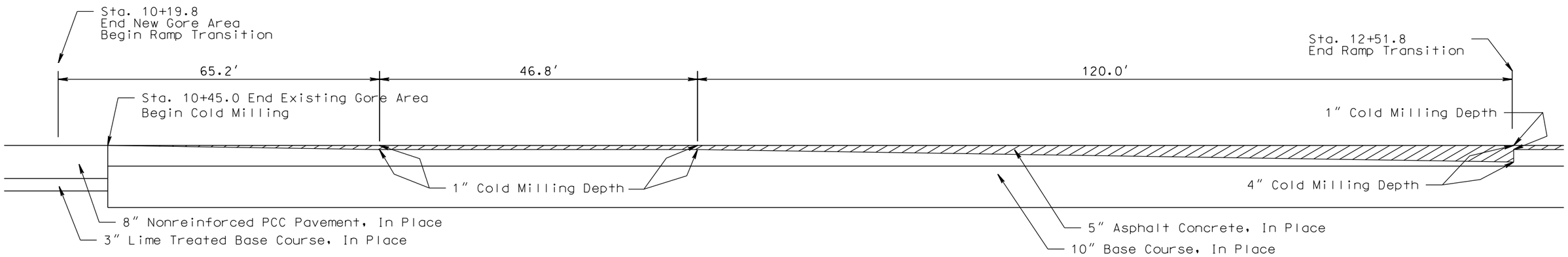

LONGITUDINAL SECTION AT CENTERLINE SHOWING SURFACING

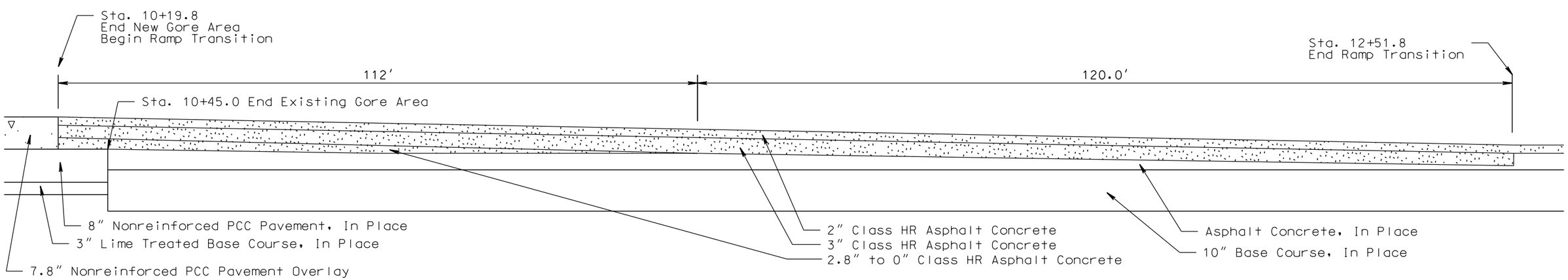

PLOT SCALE - 1:15

PLOTTED FROM - TRPR16032

PLOT NAME - 38

FILE - ...\DRIVING SURFACE TRANS 035E.DGN

DRIVING SURFACE TRANSITION DETAILS

STATE OF SOUTH DAKOTA	PROJECT	SHEET	TOTAL SHEETS
	IM 0904(57)189 & NH 0083(85)87	F63	F145

Plotting Date: 08/06/2015

NOT TO SCALE

Cold Milling Asphalt Concrete

See Typical Surfacing Sections for additional details for removal and surfacing.

EXIT 191 OFF RAMP (STA. 12+55.1 TO STA. 14+87.1)

LONGITUDINAL SECTION AT CENTERLINE SHOWING REMOVAL OF IN PLACE SURFACING

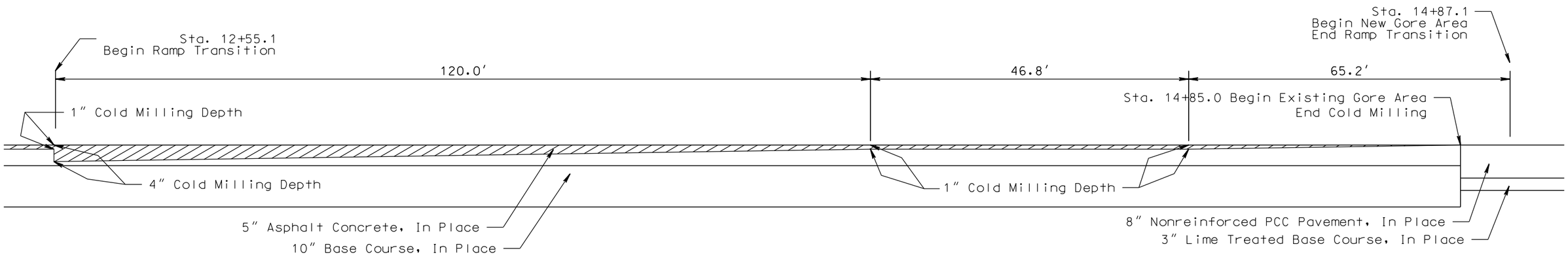

LONGITUDINAL SECTION AT CENTERLINE SHOWING SURFACING

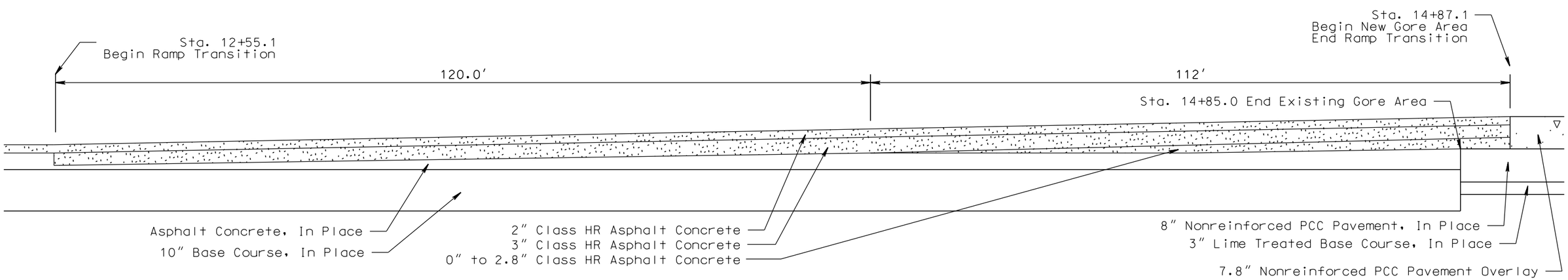

PLOT SCALE - 1:15

PLOTTED FROM - TRPR16032

PLOT NAME - 39

FILE - ...\DRIVING SURFACE TRANS 035E.DGN

DRIVING SURFACE TRANSITION DETAILS

STATE OF SOUTH DAKOTA	PROJECT	SHEET	TOTAL SHEETS
	IM 0904(57)189 & NH 0083(85)87	F64	F145

Plotting Date: 08/06/2015

NOT TO SCALE

PCC Pavement Removal

See Typical Surfacing Sections for additional details for removal and surfacing.

EXIT 192 ON RAMP (STA. 10+17.8 TO STA. 13+29.8)

LONGITUDINAL SECTION AT CENTERLINE SHOWING REMOVAL OF IN PLACE SURFACING

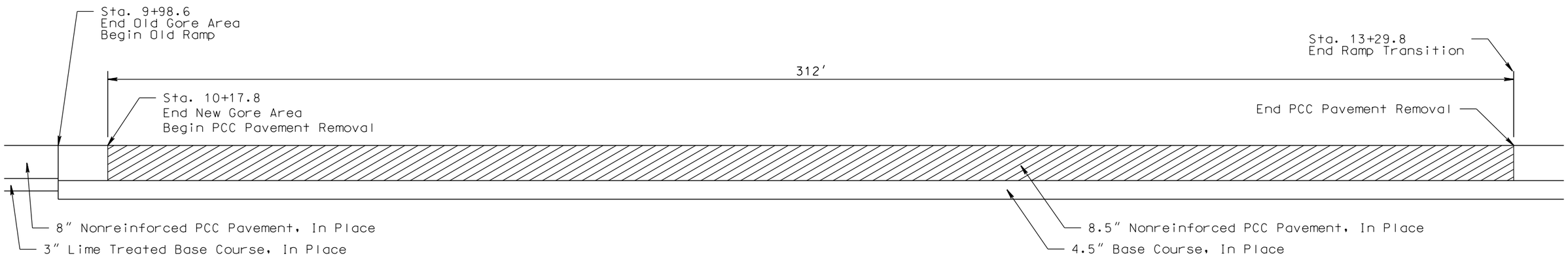

LONGITUDINAL SECTION AT CENTERLINE SHOWING SURFACING

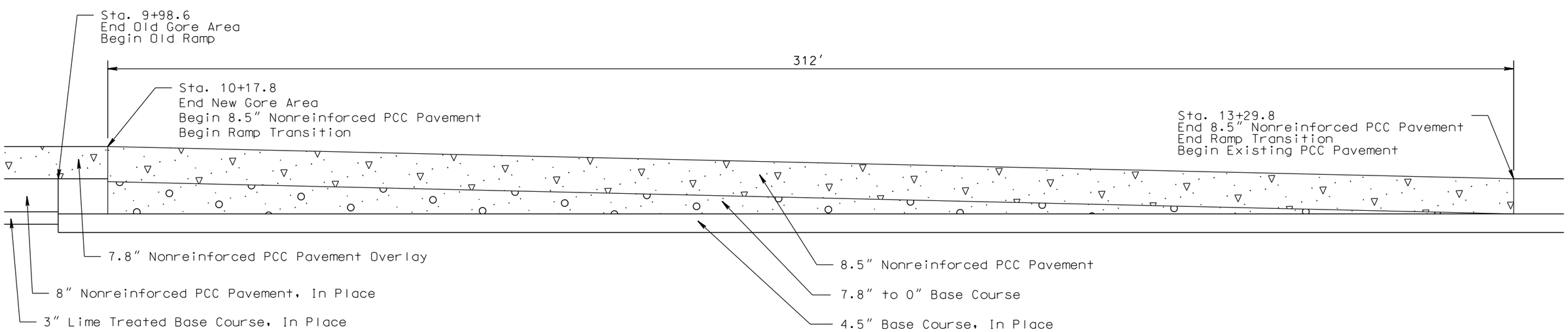

PLOT SCALE - 1:15

PLOTTED FROM - TRPR16032

PLOT NAME - 40

FILE - ...\DRIVING SURFACE TRANS 035E.DGN

DRIVING SURFACE TRANSITION DETAILS

STATE OF SOUTH DAKOTA	PROJECT	SHEET	TOTAL SHEETS
	IM 0904(57)189 & NH 0083(85)87	F65	F145

Plotting Date: 08/06/2015

NOT TO SCALE

PCC Pavement Removal

See Typical Surfacing Sections for additional details for removal and surfacing.

EXIT 192 OFF RAMP (STA. 7+70.3 TO STA. 10+82.3)

LONGITUDINAL SECTION AT CENTERLINE SHOWING REMOVAL OF IN PLACE SURFACING

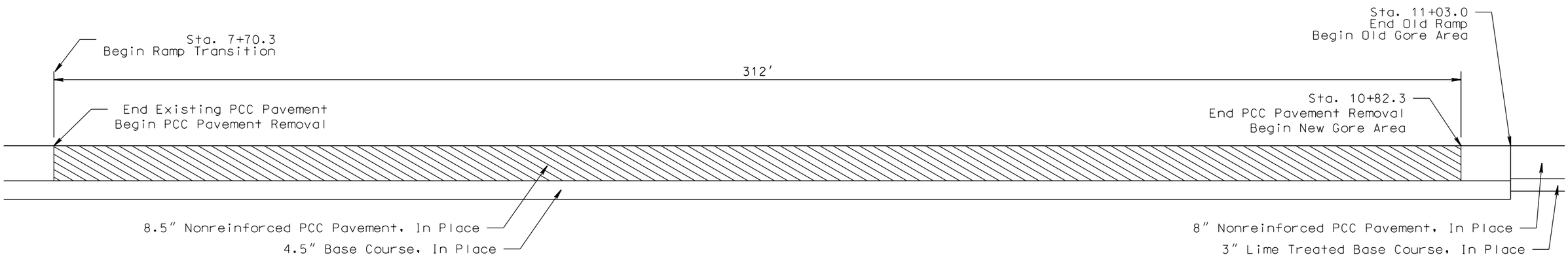

LONGITUDINAL SECTION AT CENTERLINE SHOWING SURFACING

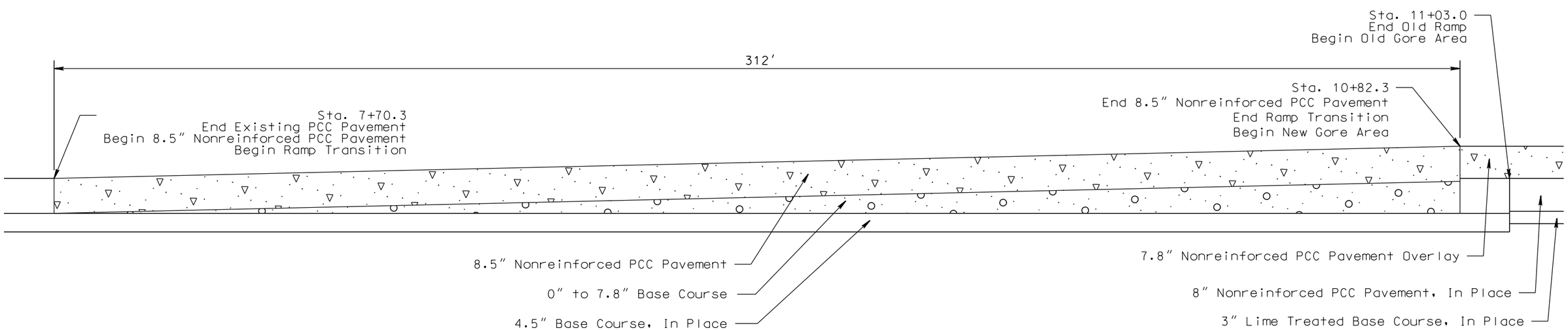

PLOT SCALE - 1:15

PLOTTED FROM - TRPR16032

PLOT NAME - 41

FILE -...\DRIVING SURFACE TRANS 035E.DGN

DRIVING SURFACE TRANSITION DETAILS

STATE OF SOUTH DAKOTA	PROJECT	SHEET	TOTAL SHEETS
	IM 0904(57)189 & NH 0083(85)87	F66	F145

Plotting Date: 08/06/2015

NOT TO SCALE

See Typical Surfacing Sections for additional details for removal and surfacing.

WEIGH AREA ON RAMP (STA. 10+19.8 TO STA. 12+51.8)

LONGITUDINAL SECTION AT CENTERLINE SHOWING REMOVAL OF IN PLACE SURFACING

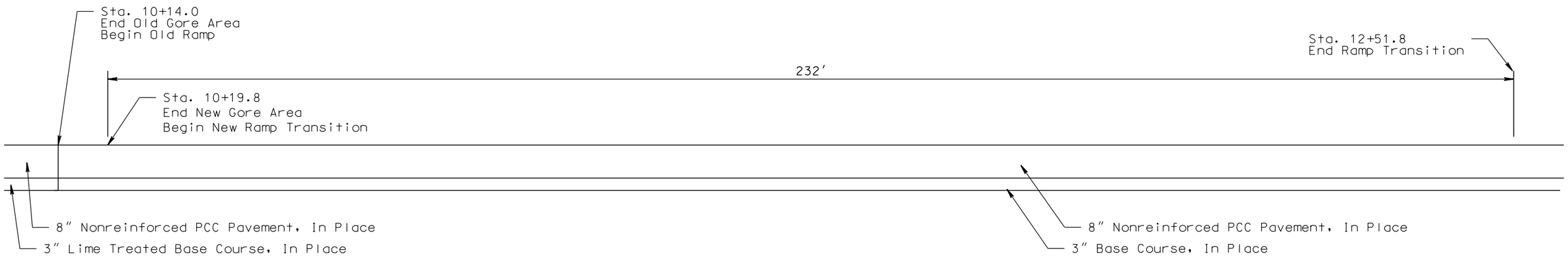

LONGITUDINAL SECTION AT CENTERLINE SHOWING SURFACING

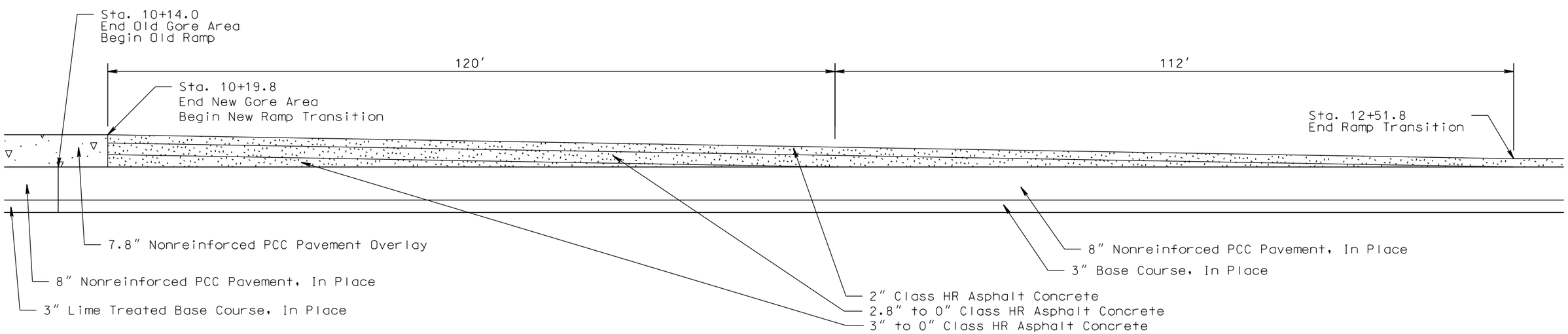

PLOT SCALE - 1:15

PLOTTED FROM - TRPR16032

PLOT NAME - 42

FILE - ...\DRIVING SURFACE TRANS 035E.DGN

DRIVING SURFACE TRANSITION DETAILS

NOT TO SCALE

See Typical Surfacing Sections for additional details for removal and surfacing.

WEIGH AREA OFF RAMP (STA. 22+97.9 TO STA. 25+29.9)

LONGITUDINAL SECTION AT CENTERLINE SHOWING REMOVAL OF IN PLACE SURFACING

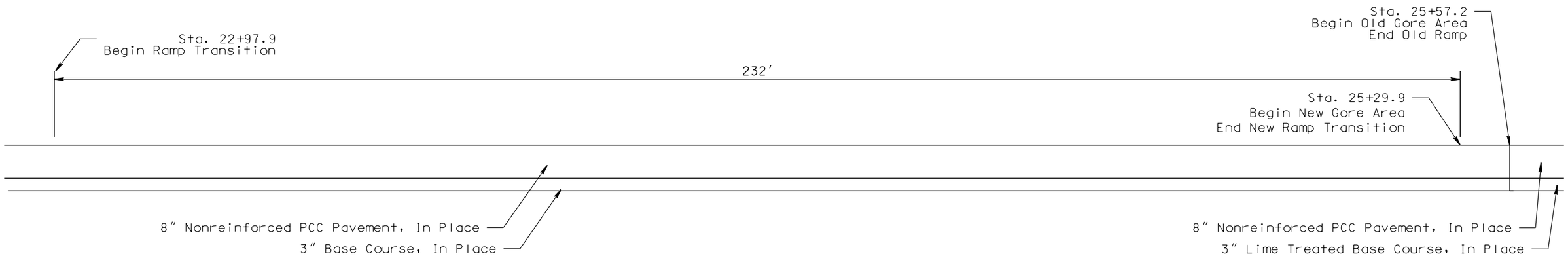

LONGITUDINAL SECTION AT CENTERLINE SHOWING SURFACING

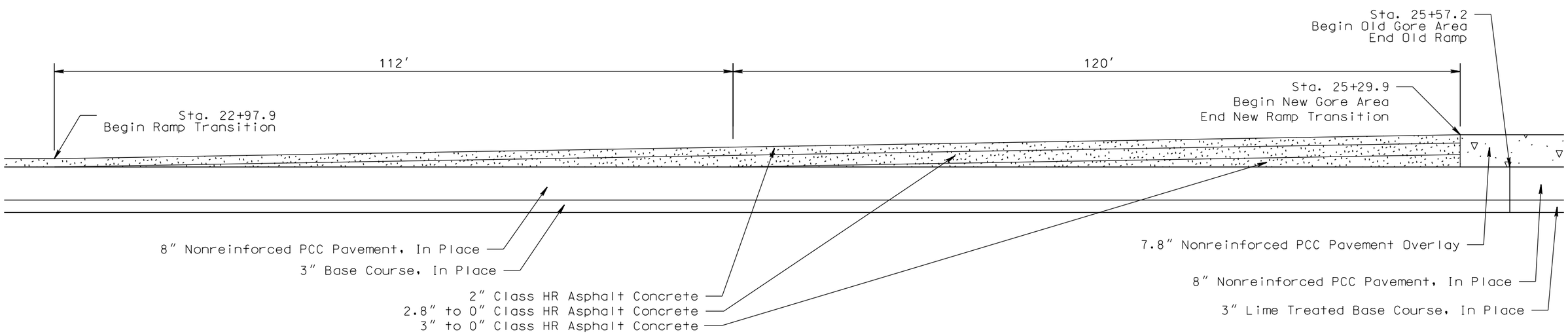

PLOT SCALE - 1:15
PLOT NAME - 43
FILE -...\DRIVING SURFACE TRANS 035E.DGN
PLOTTED FROM - TRPR16032

DRIVING SURFACE TRANSITION DETAILS

STATE OF SOUTH DAKOTA	PROJECT	SHEET	TOTAL SHEETS
	IM 0904(57)189 & NH 0083(85)87	F68	F145

Plotting Date: 08/06/2015

Remove Concrete Pavement

Unclassified Excavation - Waste Material

NOT TO SCALE

See Typical Surfacing Sections for additional details for removal and surfacing.

END OF PROJECT (Sta. 439+05.0 to Sta. 445+70.0)

LONGITUDINAL SECTION AT CENTERLINE SHOWING REMOVAL OF IN PLACE SURFACING

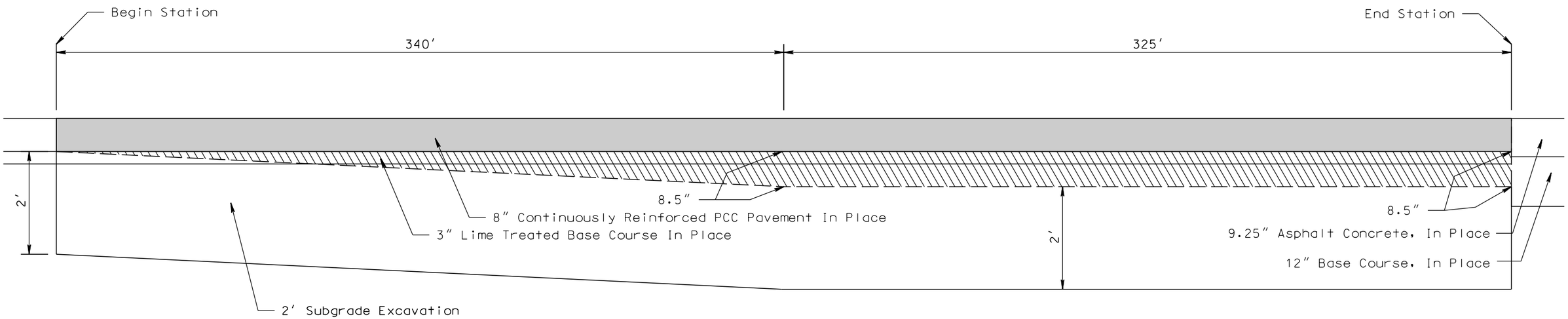

LONGITUDINAL SECTION AT CENTERLINE SHOWING SURFACING

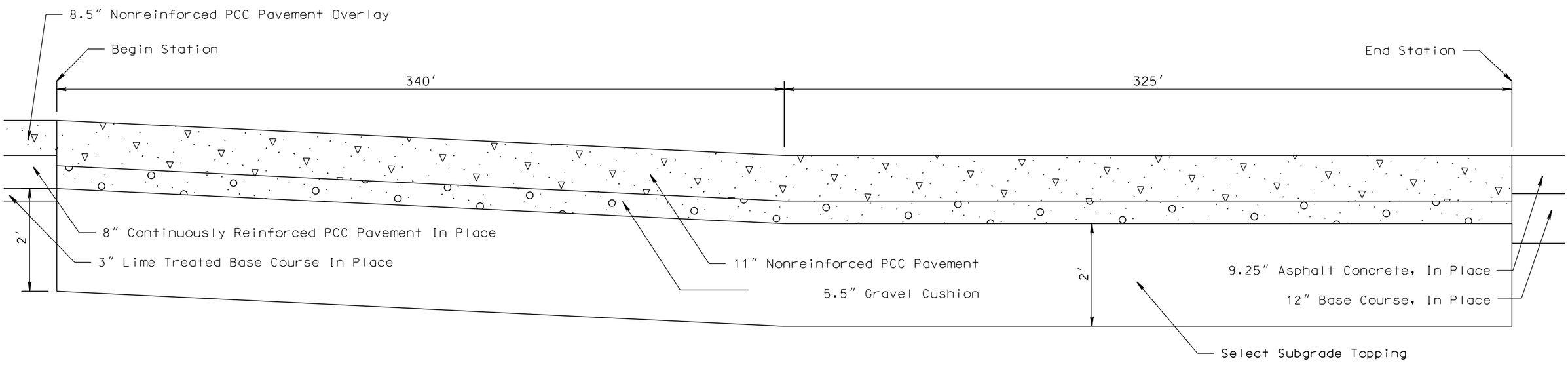

PLOT SCALE - 1:15

PLOTTED FROM - TRPR16032

PLOT NAME - 44

FILE -...\DRIVING SURFACE TRANS 035E.DGN

STATE OF SOUTH DAKOTA	PROJECT	SHEET	TOTAL SHEETS
	IM 0904(57)189 & NH 0083(85)87	F69	F145

Plotting Date: 08/06/2015

GUARDRAIL LAYOUT

Scale 1 Inch = 40 Feet
Sheet 1 of 5 Sheets

Exit 191
Westbound Lanes

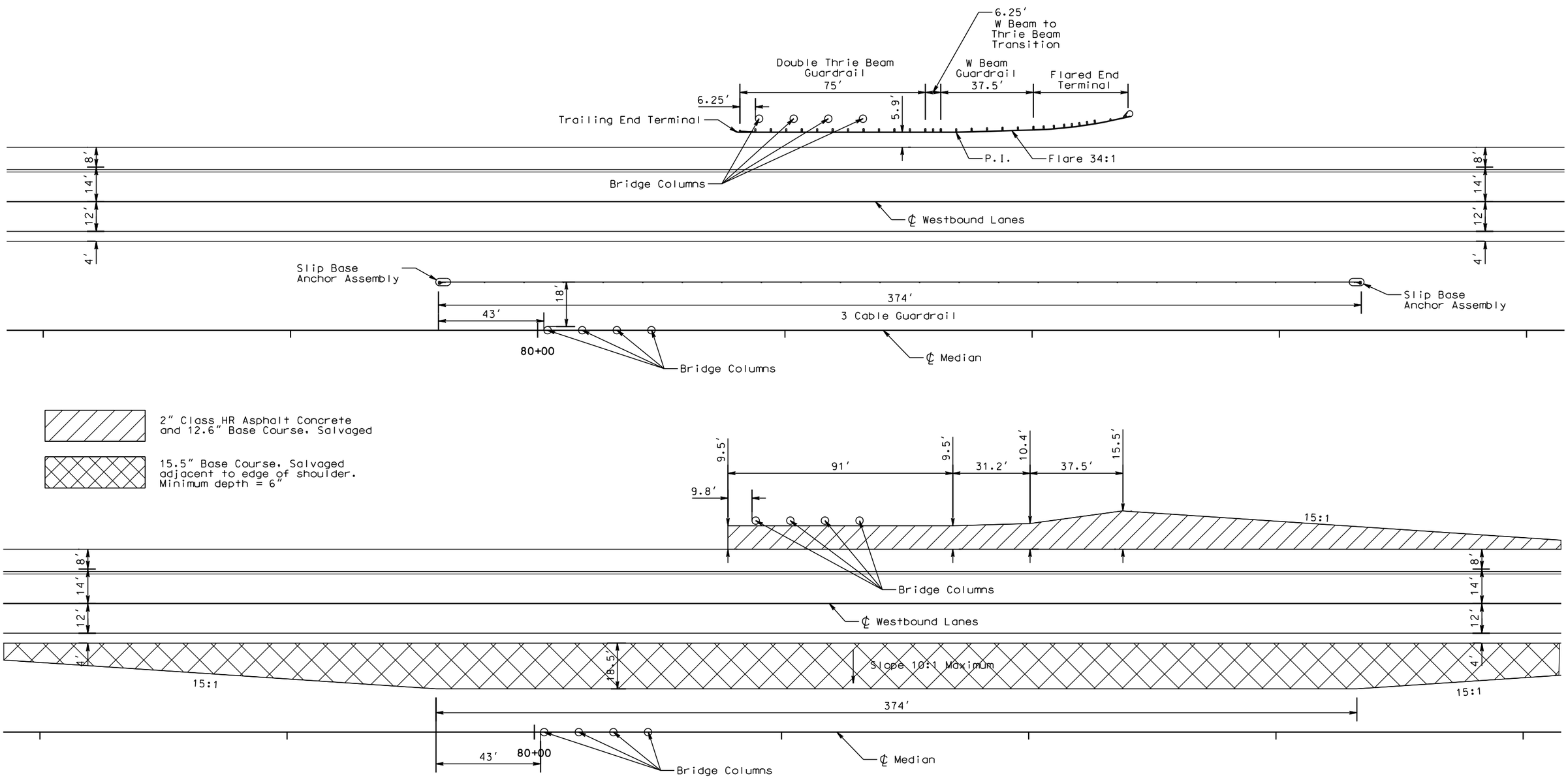

PLOT SCALE - 1:40

PLOT NAME - 45

FILE - ...\GUARDRAIL LAYOUTS 035E.DGN

PLOTTED FROM - TRPR16032

STATE OF SOUTH DAKOTA	PROJECT	SHEET	TOTAL SHEETS
	IM 0904(57)189 & NH 0083(85)87	F70	F145

Plotting Date: 08/06/2015

GUARDRAIL LAYOUT

Scale 1 Inch = 40 Feet
Sheet 2 of 5 Sheets

Exit 192
Westbound Lanes

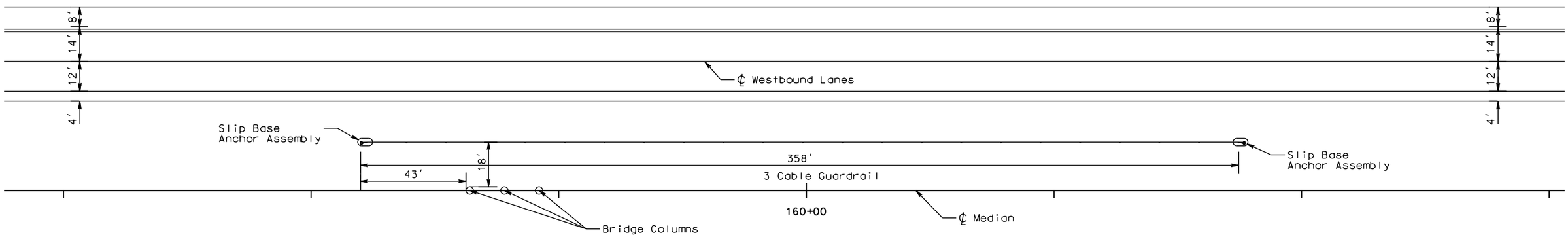

17.7" Base Course, Salvaged adjacent to edge of shoulder. Minimum depth = 6"

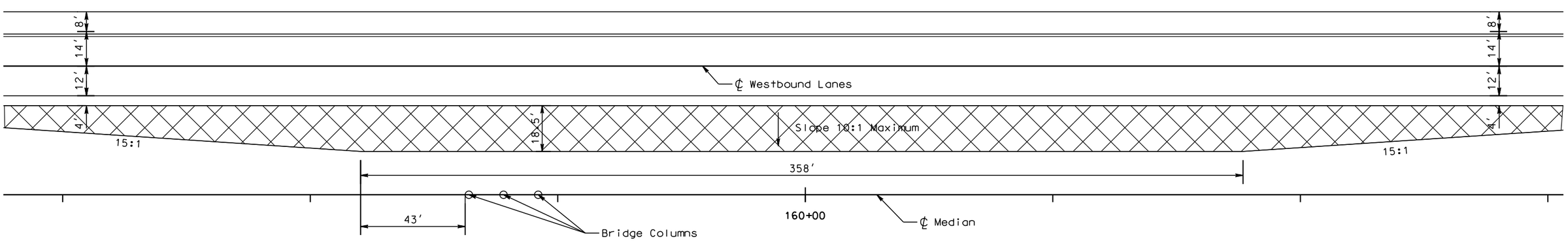

PLOT SCALE - 1:40

PLOT NAME - 46

FILE - ...\GUARDRAIL LAYOUTS 035E.DGN

PLOTTED FROM - TRPR16032

STATE OF SOUTH DAKOTA	PROJECT	SHEET	TOTAL SHEETS
	IM 0904(57)189 & NH 0083(85)87	F71	F145

Plotting Date: 08/06/2015

GUARDRAIL LAYOUT

Scale 1 Inch = 40 Feet
Sheet 3 of 5 Sheets

Str.# 38-200-190
Westbound Lanes

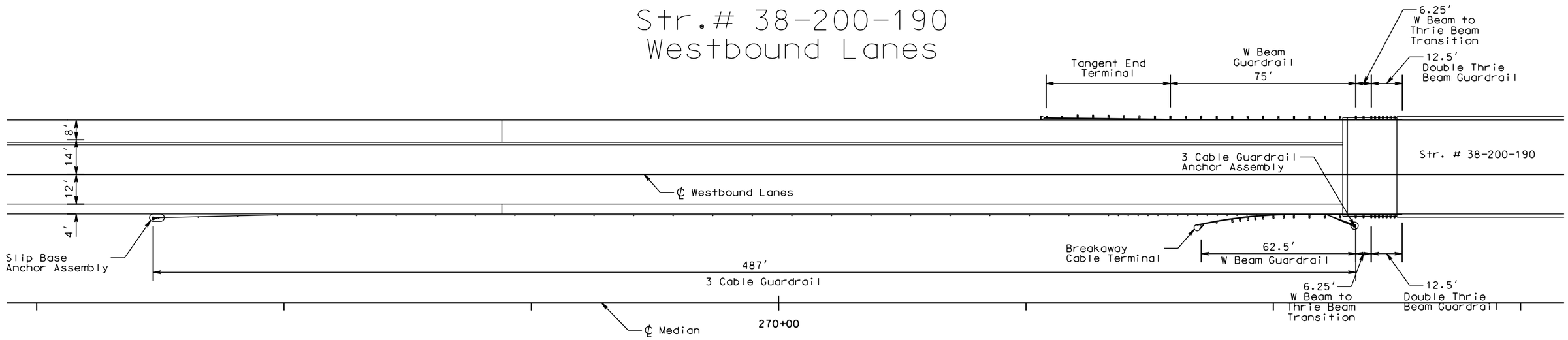

14.6″ Base Course, Salvaged

15.5″ Base Course, Salvaged

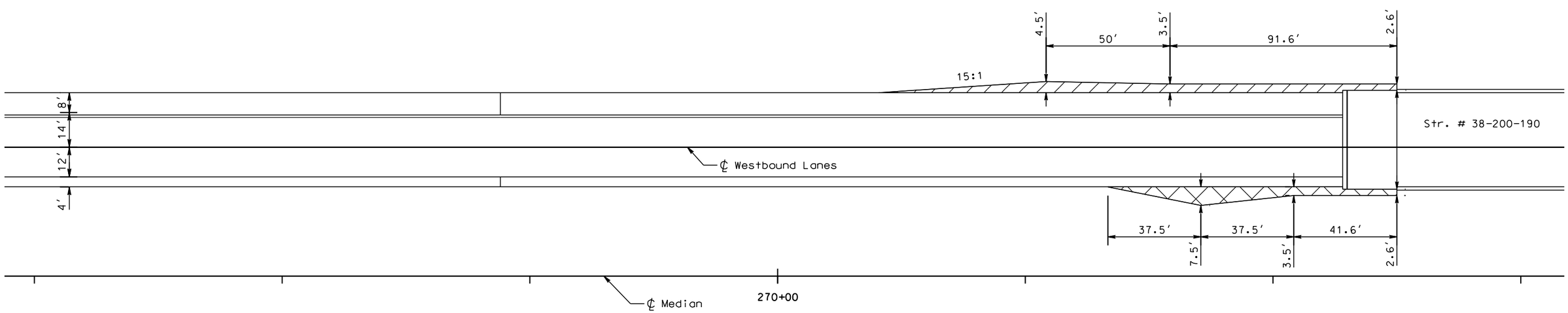

PLOT SCALE - 1:40

PLOTTED FROM - TRPR16032

PLOT NAME - 47

FILE - ...\GUARDRAIL LAYOUTS 035E.DGN

STATE OF SOUTH DAKOTA	PROJECT	SHEET	TOTAL SHEETS
	IM 0904(57)189 & NH 0083(85)87	F72	F145

Plotting Date: 08/06/2015

GUARDRAIL LAYOUT

Scale 1 Inch = 40 Feet
Sheet 4 of 5 Sheets

Str.# 38-200-190
Westbound Lanes

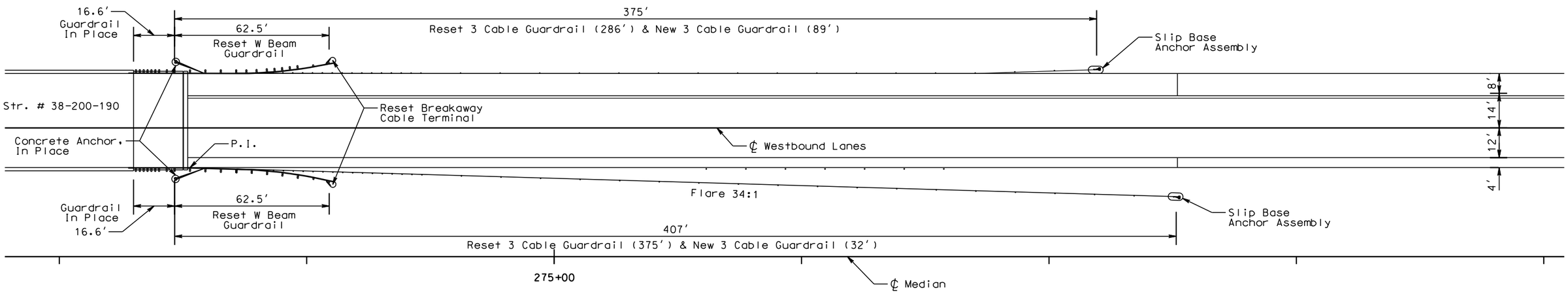

2″ Class HR Asphalt Concrete and 12.6″ Base Course, Salvaged

2″ Class HR Asphalt Concrete and 13.5″ Base Course, Salvaged

15.5″ Base Course, Salvaged adjacent to edge of shoulder. Minimum depth = 6″

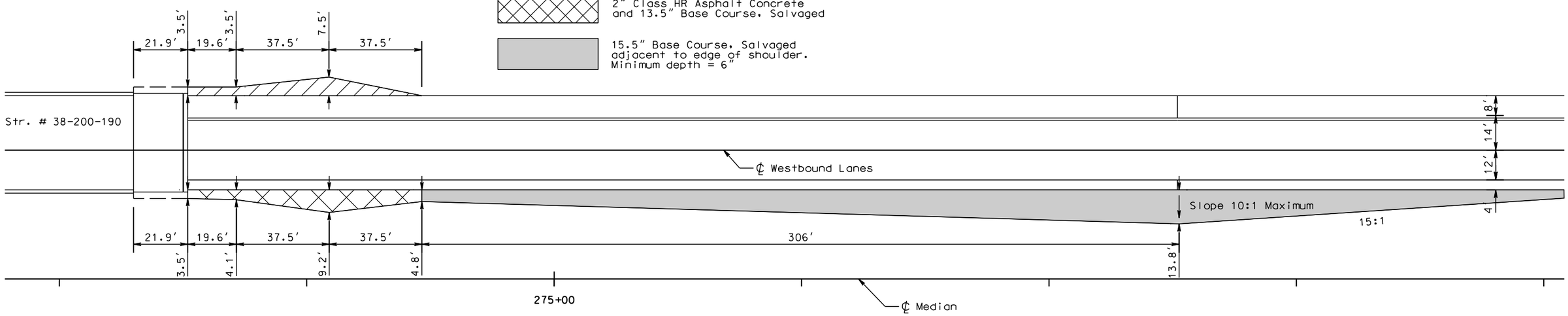

PLOT SCALE - 1:40

PLOT NAME - 48

FILE - ...\GUARDRAIL LAYOUTS 035E.DGN

PLOTTED FROM - TRPR16032

STATE OF SOUTH DAKOTA	PROJECT	SHEET	TOTAL SHEETS
	IM 0904(57)189 & NH 0083(85)87	F73	F145

Plotting Date: 08/06/2015

GUARDRAIL LAYOUT

Scale 1 Inch = 40 Feet
Sheet 5 of 5 Sheets

Str.# 38-200-191
Eastbound Lanes

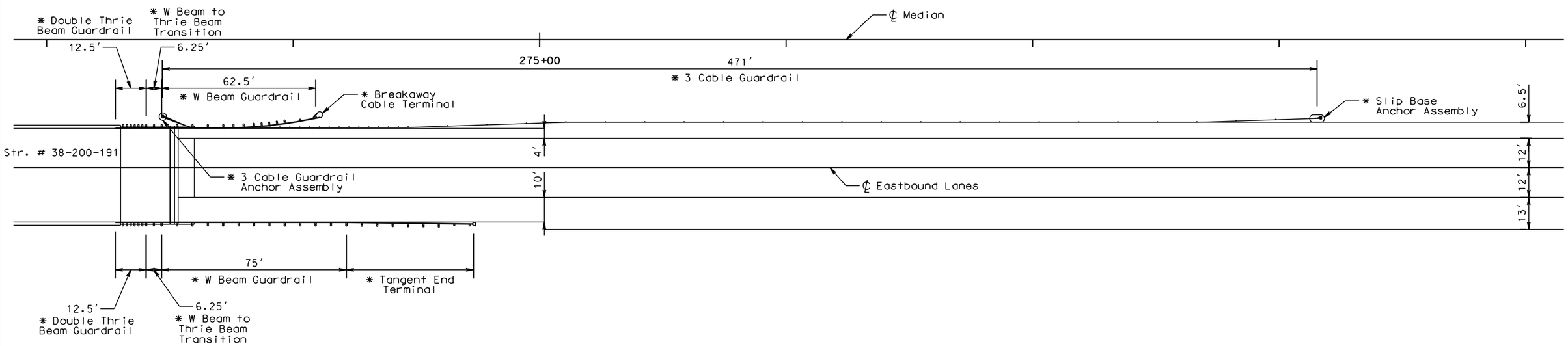

11" Base Course, Salvaged

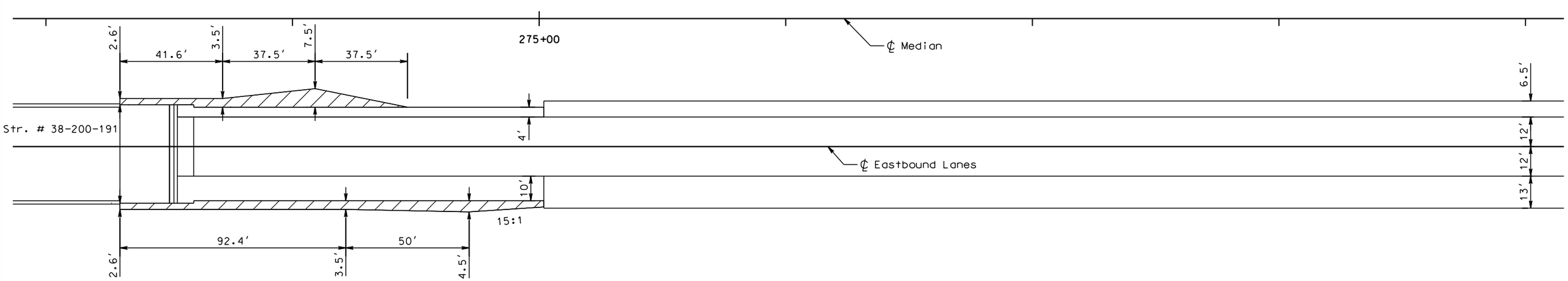

* Traffic Control Guardrail to be removed when WBL construction is complete and detoured traffic has been returned to WBL.

PLOT SCALE - 1:40

PLOT NAME - 49

FILE - ...\GUARDRAIL LAYOUTS 035E.DGN

PLOTTED FROM - TRPR16032

MEMBRANE EXPANSION SEALANT JOINT

STATE OF SOUTH DAKOTA	PROJECT	SHEET	TOTAL SHEETS
	IM 0904(57)189 & NH 0083(85)87	F74	F145

Plotting Date: 08/06/2015

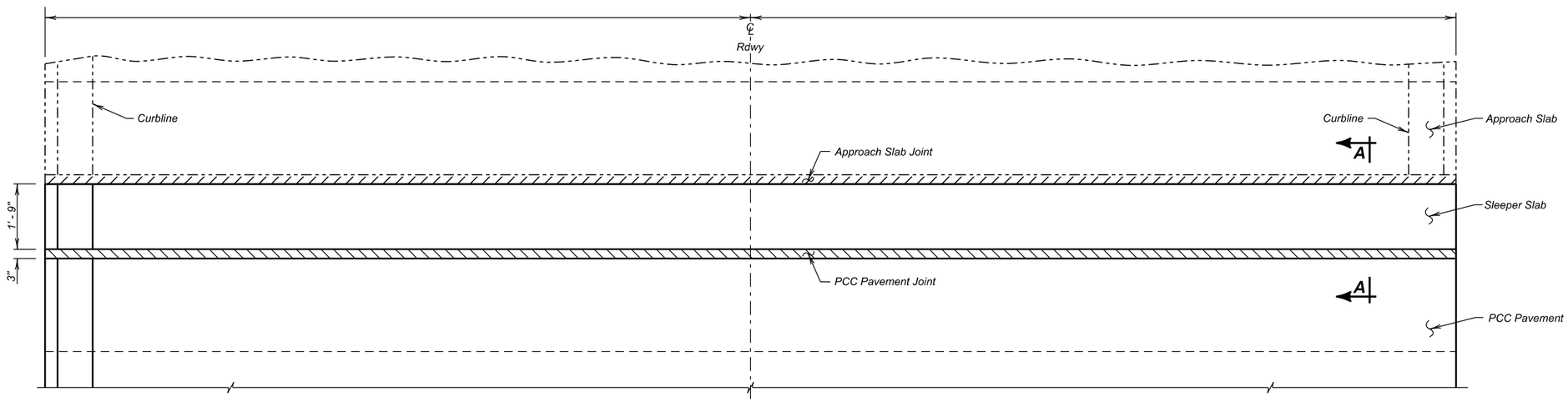

PLAN

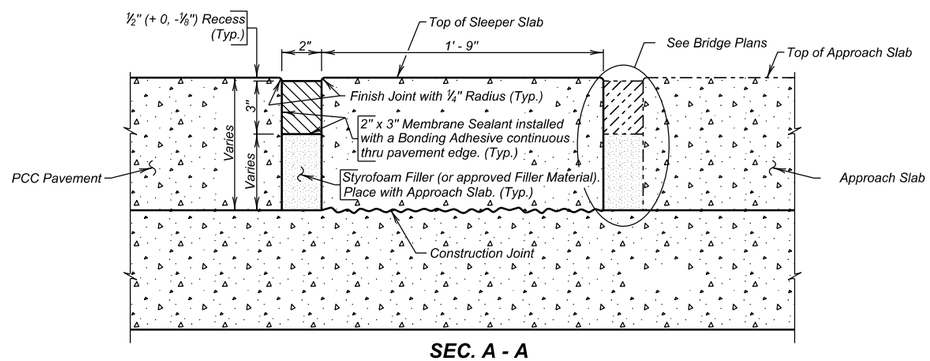

SEC. A - A

GENERAL NOTES

1. The Membrane Sealant shall be on the approved product list for Membrane Sealant Expansion Joints.
2. The manufacturer shall supply the membrane sealant in packaging that precompresses the membrane sealant. The precompressed dimension shall be as recommended by the sealant manufacturer, however, in no case shall the precompressed dimension exceed 75% of the joint opening width. The foam sealant shall be slowly self expanding to permit workers ample time to install the membrane sealant before the membrane sealant exceeds the joint opening width.
3. The membrane sealant shall provide a water tight seal throughout a joint movement range of + 25% (minimum) from the specified joint opening dimension.
4. The membrane sealant shall be supplied in pieces a minimum of 5 feet in length. The foam sealant shall be ultra-violet and ozone resistant.
5. The bonding adhesive used to attach the membrane sealant to the adjacent concrete shall be approved by the membrane sealant manufacturer.
6. Adhesive used to join adjacent pieces of the membrane sealant shall be as recommended by the manufacturer.
7. If Styrofoam filler material is used in the construction, it shall be closed cell and water-tight as approved by the Engineer.
8. The minimum concrete air temperature at the time of joint installation and adhesive curing shall be 40° F.
9. A technical representative of the membrane sealant manufacturer shall be present at the jobsite during installation. The technical representative shall be knowledgeable in the correct procedures for the preparation and installation of the joint material to ensure the Contractor installs the joint to the Manufacturers recommendations.
10. Surfaces that will be in contact with the membrane sealant shall be thoroughly cleaned by abrasive blasting to remove all laitance and contaminants (such as oil, curing compounds, etc.) from the surface. At a minimum, two passes of abrasive blasting with the nozzle held at an angle to within 1 to 2 inches of the surface will be required. Cleaning of the surfaces with solvents, wire brushing, or grinding shall not be permitted.
11. After abrasive blasting, but immediately prior to membrane joint installation, the entire joint contact surface shall be air blasted. The air compressor used for joint cleaning shall be equipped with trap devices capable of providing moisture-free and oil-free air at a recommended pressure of 90 psi. To obtain complete bonding with the adhesive, the adjacent surfaces must be dry and clean. The contact surfaces for the joint shall be visually inspected by the Engineer immediately prior to joint installation to verify the surface is dry and clean.
12. Individual spliced sections shall be installed as per the manufacturers' recommendations. The membrane joint sealant manufacturer shall submit a detailed installation procedure to the Engineer at least 5 days prior to joint installation for his review.
13. Traffic shall not be allowed on the joint until the bonding adhesive has had time to cure, as recommended by the manufacturer.
14. Use plywood or other material to protect concrete adjacent to the joint from spalling before any equipment is moved across the joint. Any spall areas will be repaired at the Contractor's expense by breaking out and replacing adjacent concrete, as approved by the Engineer.
15. The Membrane Sealant Expansion Joint will be measured in feet to the nearest one-tenth foot, complete in place. Measurement will be made of the overall horizontal length. The Membrane Sealant Expansion Joint will be paid for at the contract unit price per foot complete in place. Payment for this item shall be full compensation for furnishing all the required materials in place, including labor, equipment and incidentals necessary to complete the work in accordance with the plans and the foregoing specifications.

LOCATION	LENGTH feet
Sta. 272+28.1 I-90	38.0
Sta. 273+51.9 I-90	38.0
Sta. 1+32 US83	24.0
TOTAL	100.0

PLOT SCALE - 1:0.176
PLOTTED FROM - TRPR16032
PLOT NAME - 50
FILE - ...\MEMBRANE JOINT DETAIL.DGN

STATE OF SOUTH DAKOTA	PROJECT	SHEET	TOTAL SHEETS
	IM 0904(57)189 & NH 0083(85)87	F75	F145

Plotting Date: 08/06/2015

Exit 192 Ramp Detours

Scale 1 Inch = 40 Feet
Sheet 1 of 4 Sheets

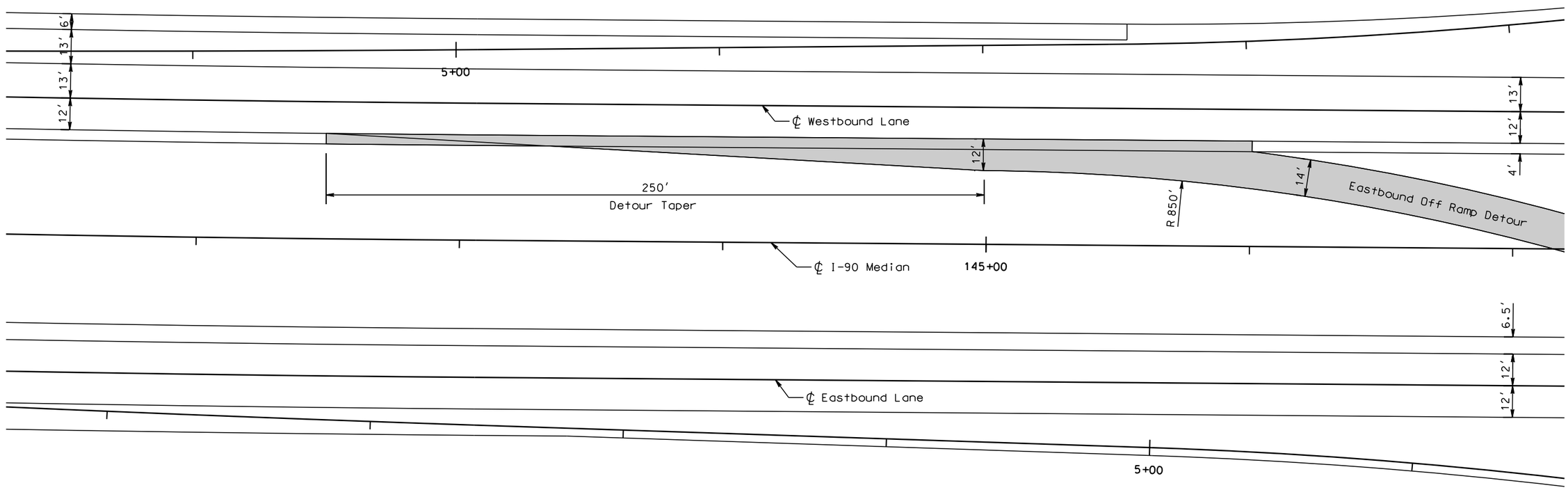

General Notes:

The Ramp Detour shall be constructed with a maximum horizontal degree of curve of 6° 45' and the vertical alignment shall be adequate for stopping sight distance.

If needed, Pipes shall be installed and sized appropriately for adequate drainage. Length, size and type of pipe will be determined in the field by the Project Engineer during construction. Payment for the pipe and installation shall be incidental to the various contract items.

Surfacing for Ramp Detour:
6" Class HR Asphalt Concrete
12" Base Course or Base Course, Salvaged Pit Run

PLOT SCALE - 1:40

PLOT NAME - 51

FILE - ...\RAMP DETOUR LAYOUT.DGN

PLOTTED FROM - TRPR16032

STATE OF SOUTH DAKOTA	PROJECT	SHEET	TOTAL SHEETS
	IM 0904(57)189 & NH 0083(85)87	F76	F145

Plotting Date: 08/06/2015

Exit 192 Ramp Detours

Scale 1 Inch = 40 Feet
Sheet 2 of 4 Sheets

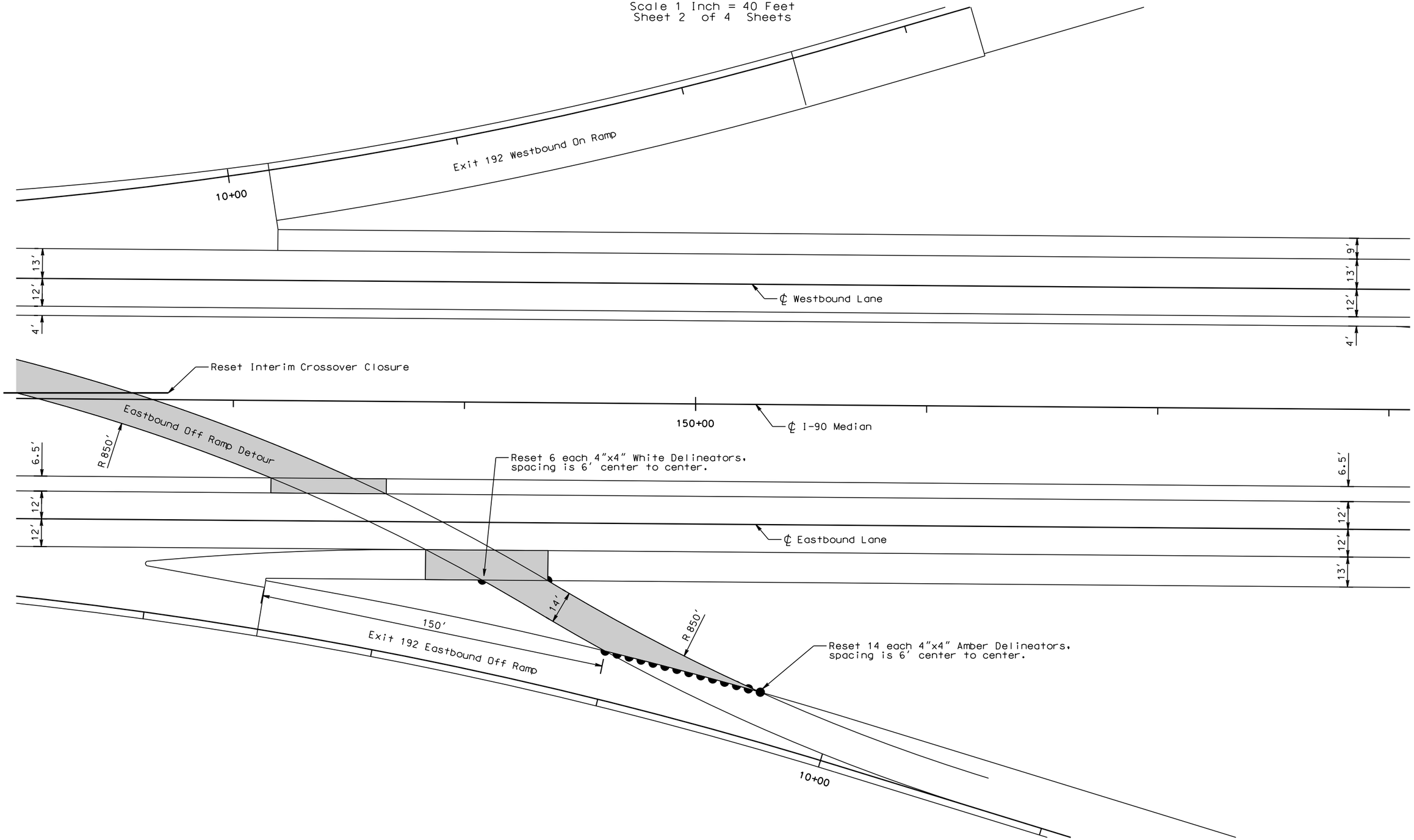

PLOT SCALE - 1:40

PLOTTED FROM - TRPR16032

PLOT NAME - 52

FILE - ...\RAMP DETOUR LAYOUT.DGN

STATE OF SOUTH DAKOTA	PROJECT	SHEET	TOTAL SHEETS
	IM 0904(57)189 & NH 0083(85)87	F77	F145

Plotting Date: 08/06/2015

Exit 192 Ramp Detours

Scale 1 Inch = 40 Feet
Sheet 3 of 4 Sheets

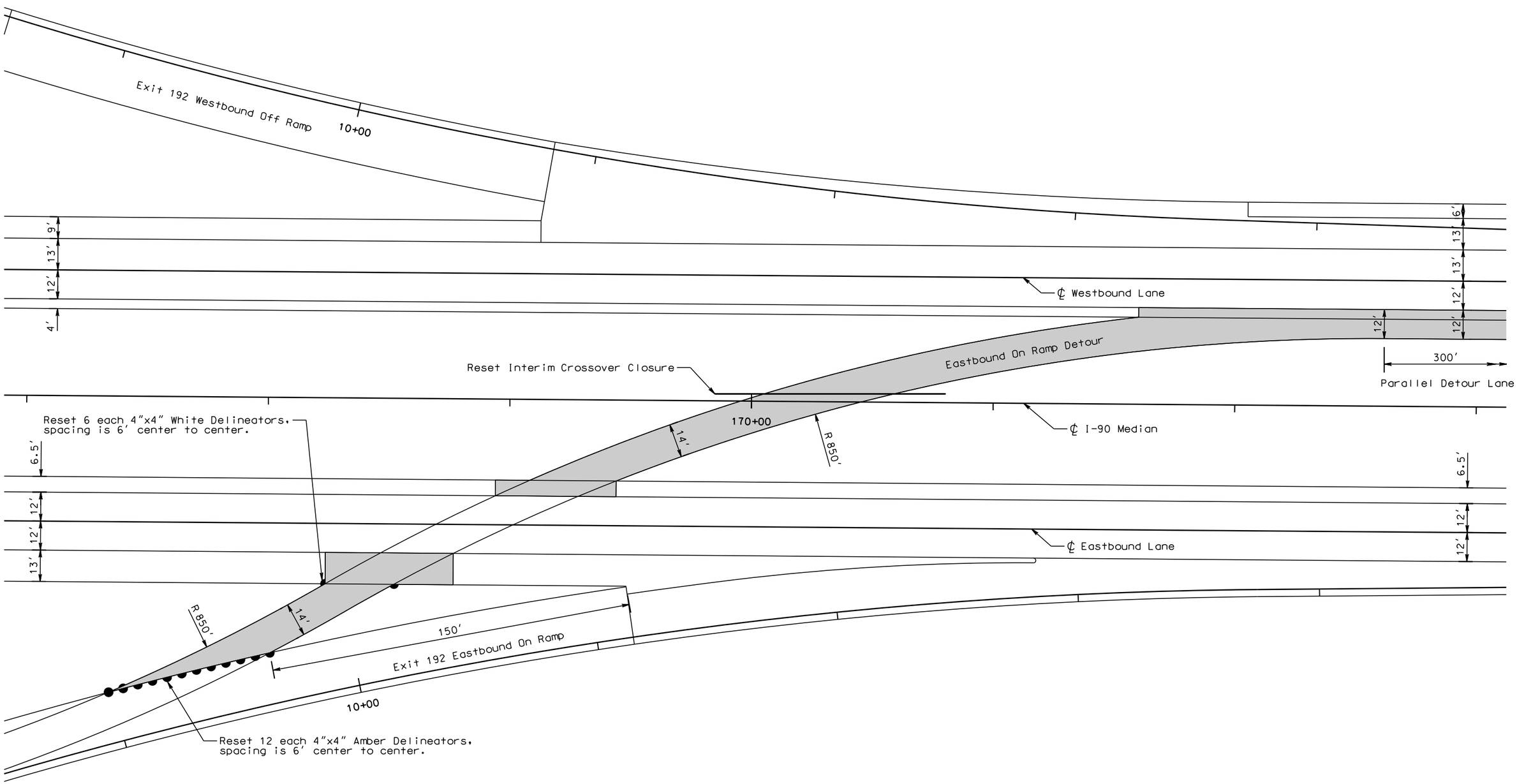

PLOT SCALE - 1:40

PLOTTED FROM - TRPR16032

PLOT NAME - 53

FILE ....\RAMP DETOUR LAYOUT.DGN

STATE OF SOUTH DAKOTA	PROJECT	SHEET	TOTAL SHEETS
	IM 0904(57)189 & NH 0083(85)87	F78	F145

Plotting Date: 08/06/2015

Exit 192 Ramp Detours

Scale 1 Inch = 40 Feet
Sheet 4 of 4 Sheets

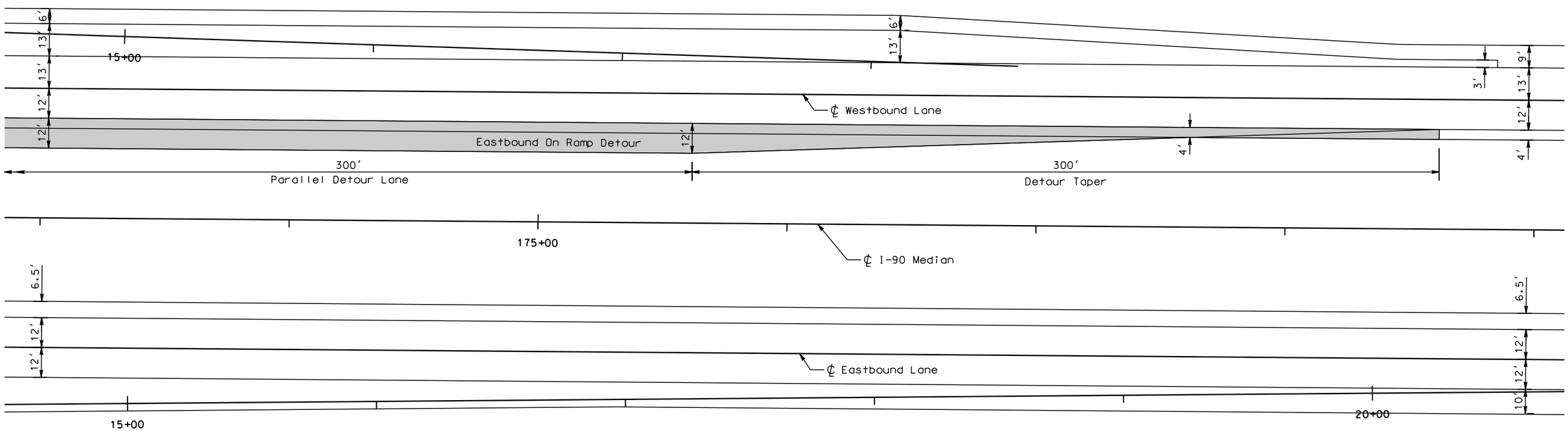

PLOT SCALE - 1:40

PLOT NAME - 54

FILE - ...\RAMP DETOUR LAYOUT.DGN

PLOTTED FROM - TRPR16032

STATE OF SOUTH DAKOTA	PROJECT	SHEET	TOTAL SHEETS
	IM 0904(57)189 & NH 0083(85)87	F79	F145

Plotting Date: 08/06/2015

TYPICAL SURFACING SECTION

RAMP DETOURS

FUTURE RAMP DETOUR TYPICAL ALONG WESTBOUND LANE MEDIAN SHOULDER

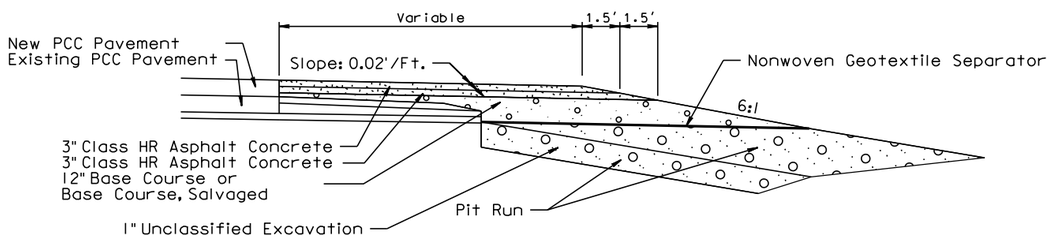

FUTURE RAMP DETOUR TYPICAL ALONG EASTBOUND LANE MEDIAN SHOULDER

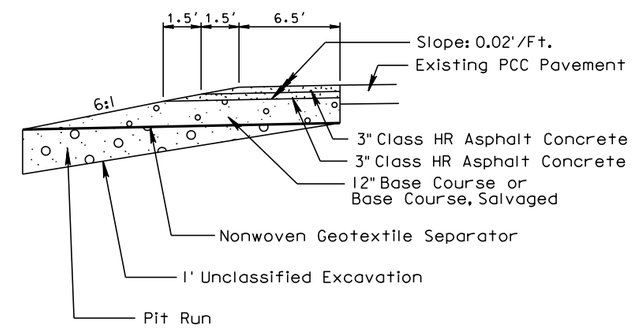

RAMP DETOUR TYPICAL SECTION

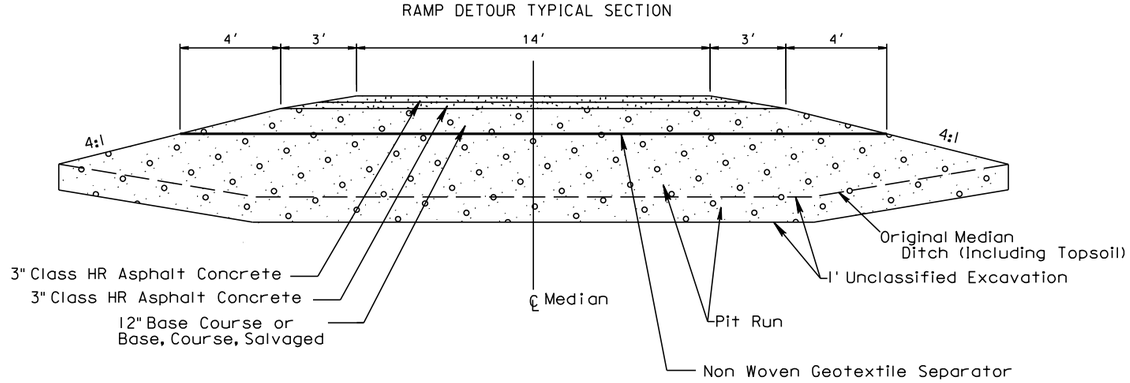

PLOT SCALE - 1:6

PLOTTED FROM - TRPR16032

PLOT NAME - 55

FILE - ...\DETOUR TYPICAL 035E.DGN

INSTALLATION DETAILS FOR 4" x 4" DELINEATORS (DIVIDED HIGHWAY)

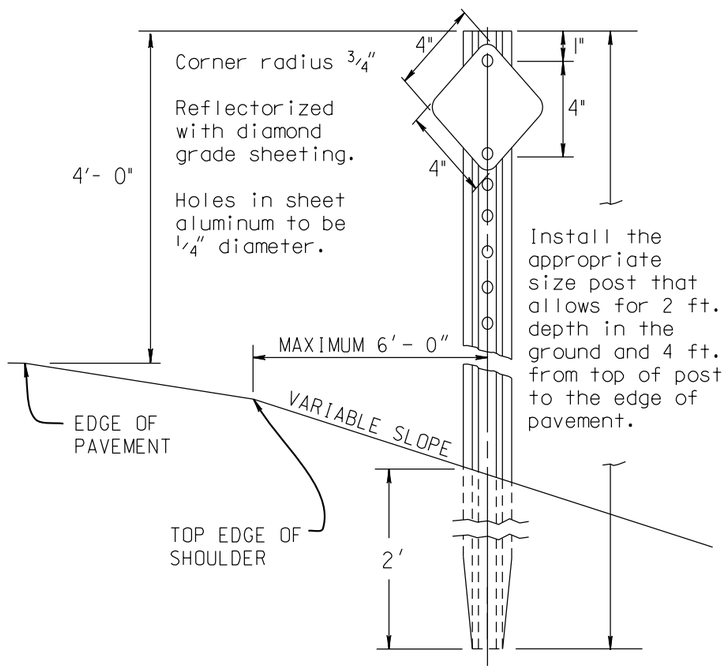

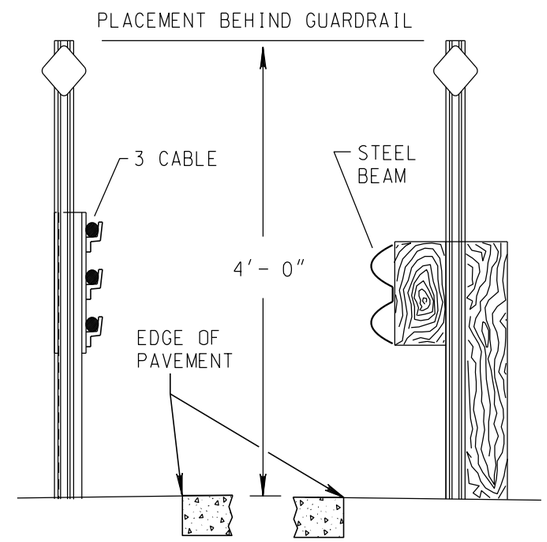

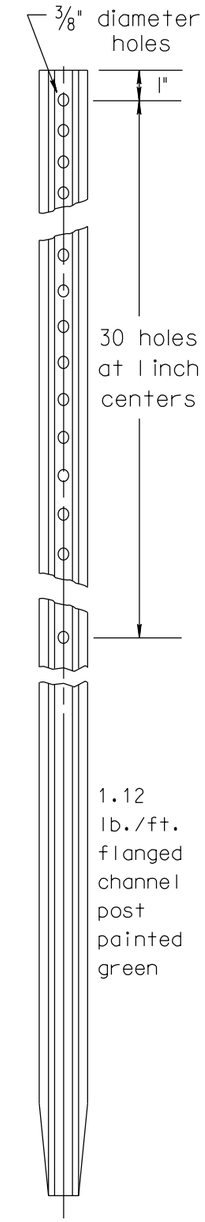

(TYPICAL)

DETAIL FOR SINGLE MOUNTING 4" x 4" DELINEATORS ON POST

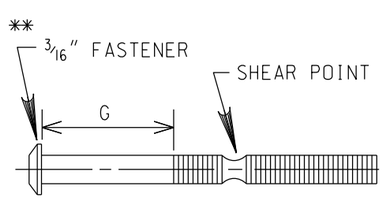

G = GRIP RANGE
1.595" MIN.
1.656" MAX.

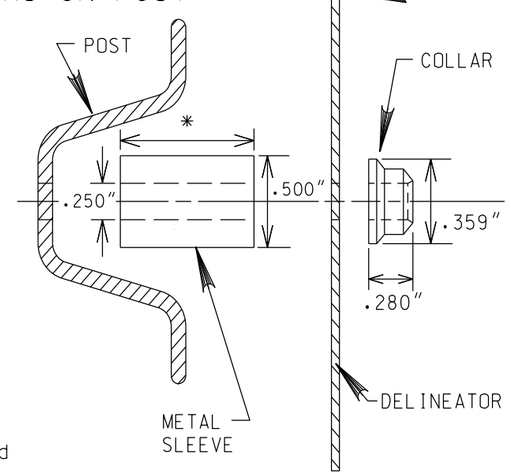

* Length varies according to depth of post.

** Alternative methods of fastening, such as 3/4"- 7/8" Twin Rivets, may be approved by the Engineer.

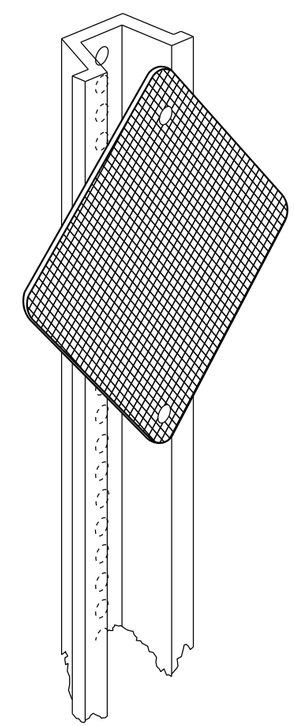

PLOT SCALE - 1:211.963
PLOTTED FROM - TRPR16032
PLOT NAME - 56
FILE - ...\JONS035E\DELINEATORS 035E.DGN

STATE OF SOUTH DAKOTA	PROJECT	SHEET	TOTAL SHEETS
	IM 0904(57)189 & NH 0083(85)87	F81	F145

Plotting Date: 08/06/2015

Full Depth PCCP Repair

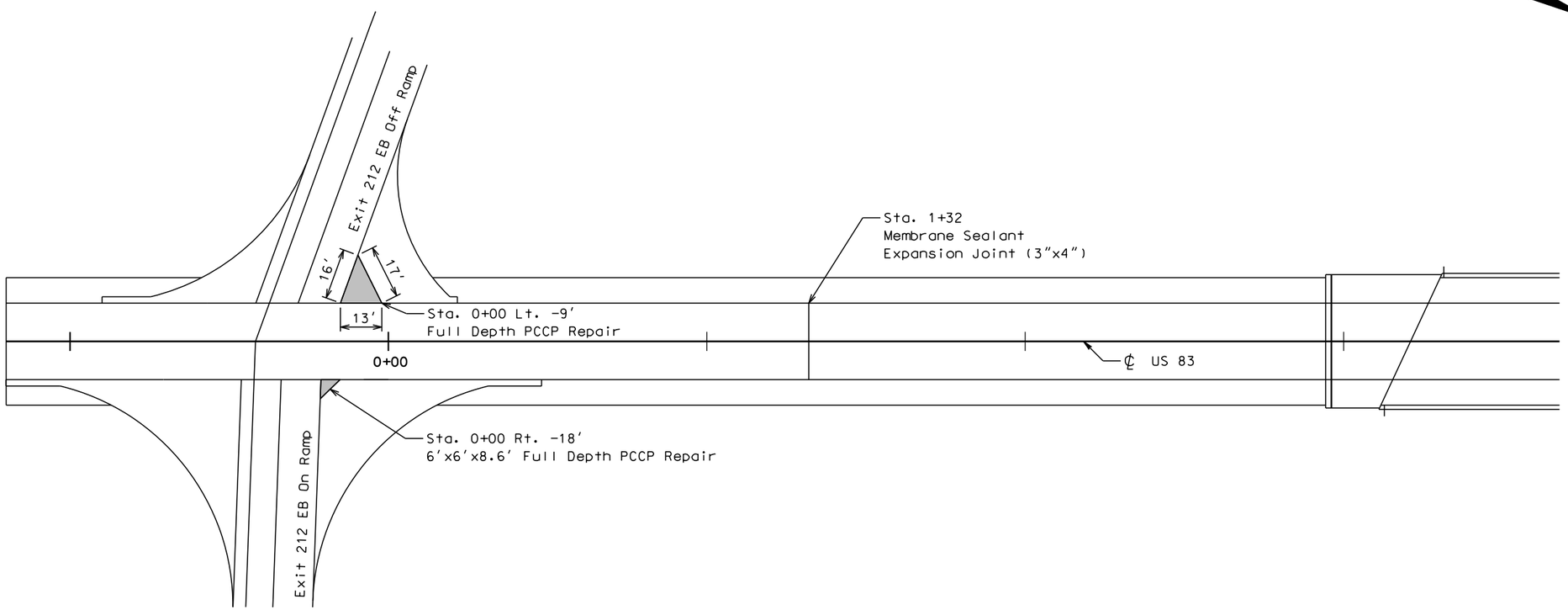

PLOT SCALE - 1:40

PLOT NAME - 57

FILE - ...\PRJ\JONS035E\REPAIR AREAS.DGN

PLOTTED FROM - TRPR16032

STATE OF SOUTH DAKOTA	PROJECT	SHEET	TOTAL SHEETS
	IM 0904(57)189 & NH 0083(85)87	F82	F145

Plotting Date: 08/06/2015

Full Depth PCCP Repair

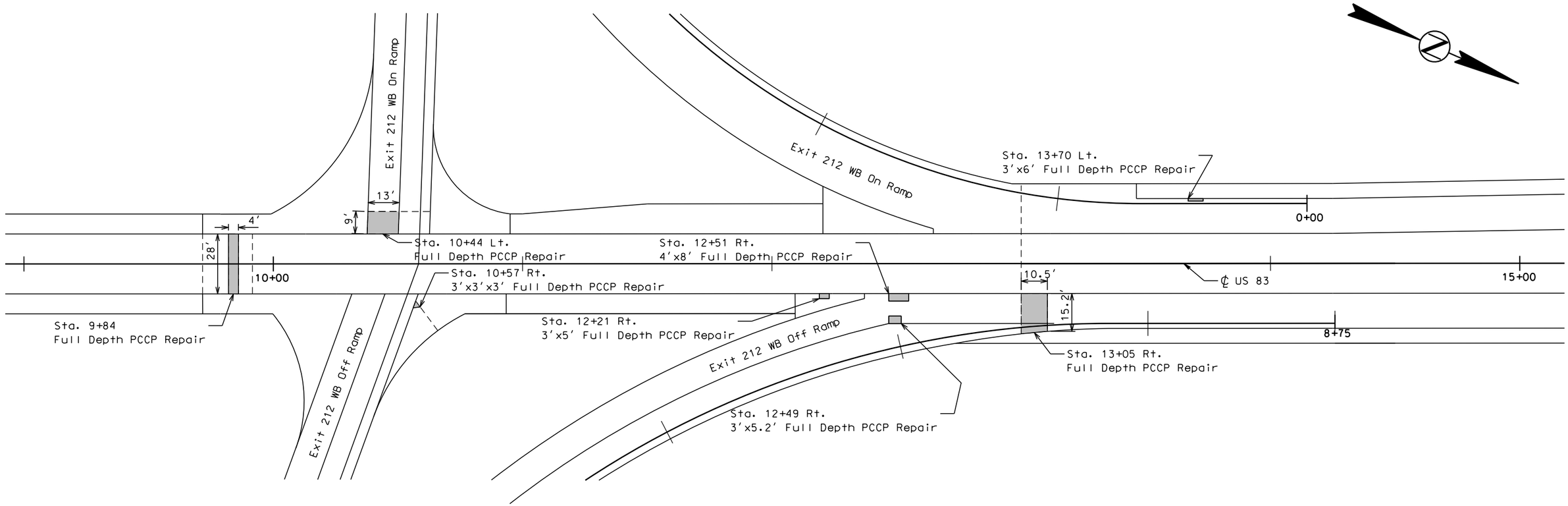

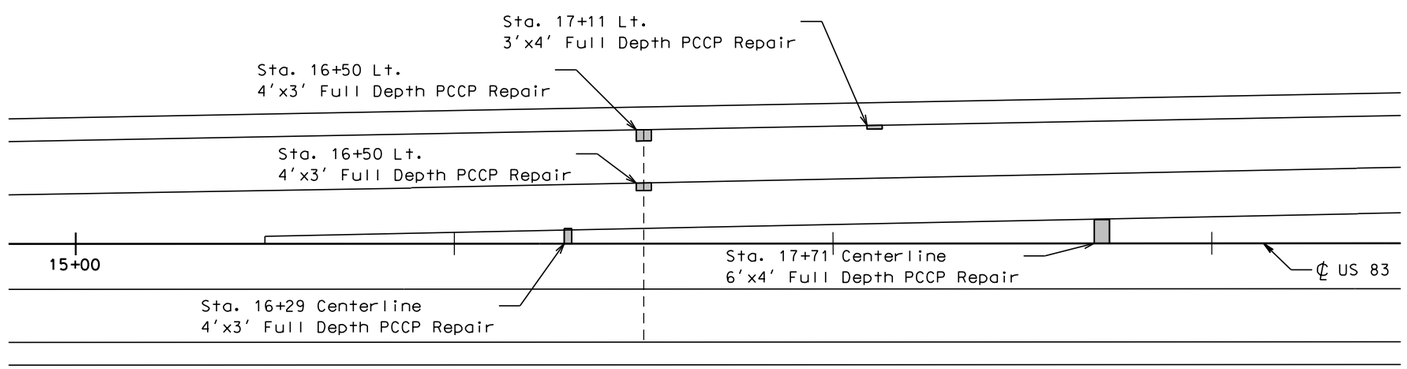

PLOT SCALE - 1:40

PLOTTED FROM - TRPR16032

PLOT NAME - 58

FILE - ...\PRJ\JONS035E\REPAIR AREAS.DGN

STATE OF SOUTH DAKOTA	PROJECT	SHEET	TOTAL SHEETS
	IM 0904(57)189 & NH 0083(85)87	F83	F145

Plotting Date: 08/06/2015

Full Depth PCCP Repair

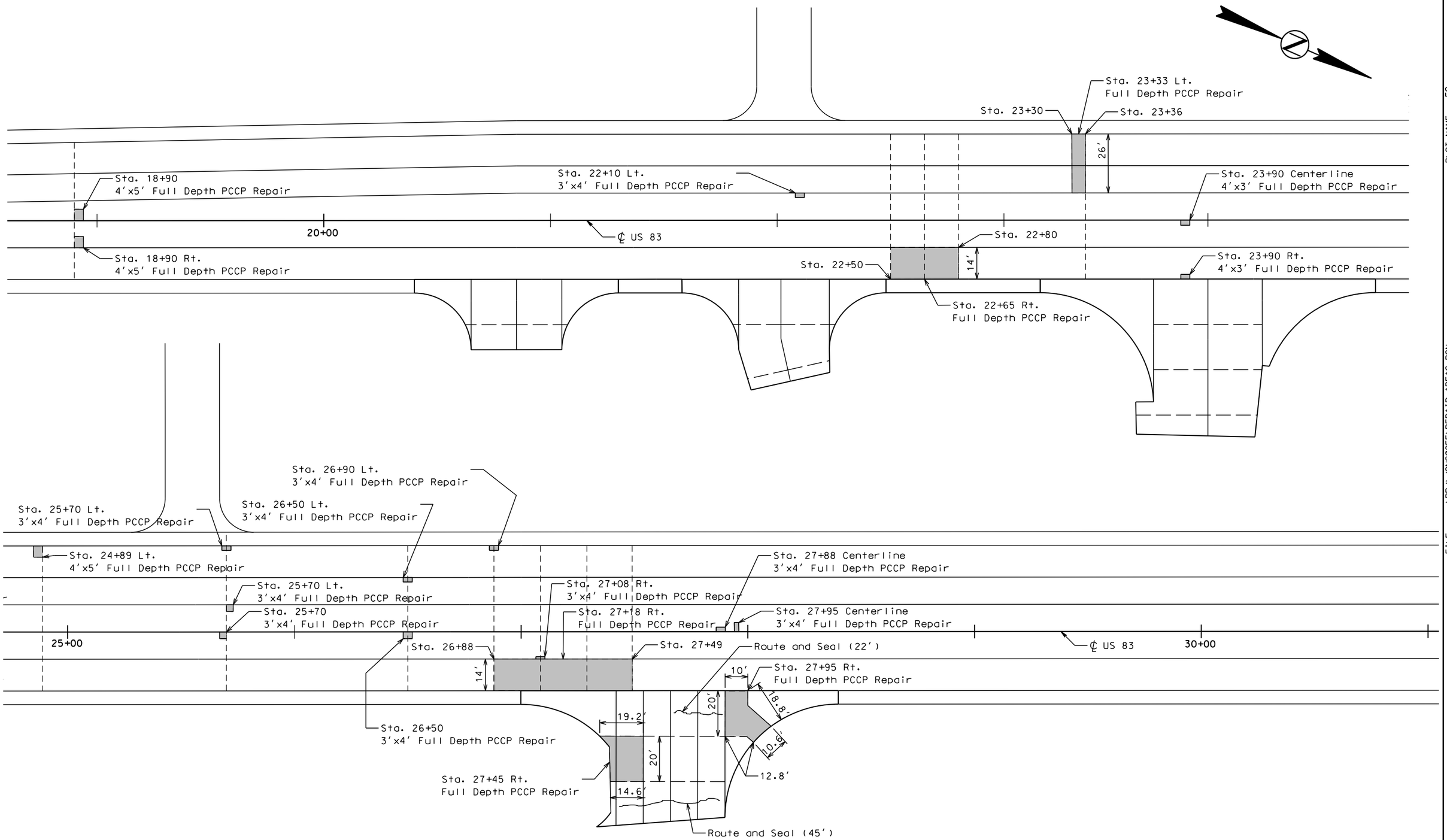

PLOT SCALE - 1:40

PLOTTED FROM - TRPR16032

PLOT NAME - 59

FILE - ...\PRJ\JONS035E\REPAIR AREAS.DGN

STATE OF SOUTH DAKOTA	PROJECT	SHEET	TOTAL SHEETS
	IM 0904(57)189 & NH 0083(85)87	F84	F145

Plotting Date: 08/06/2015

Full Depth PCCP Repair

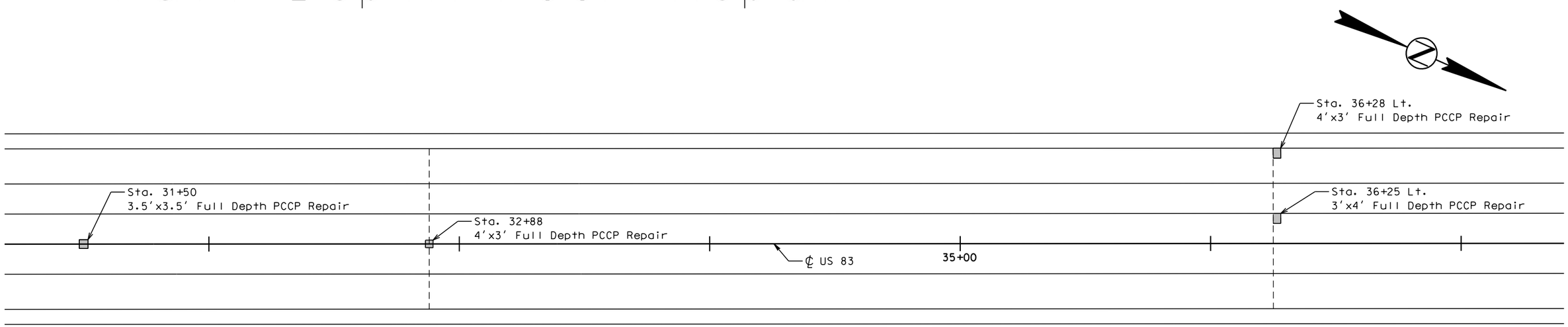

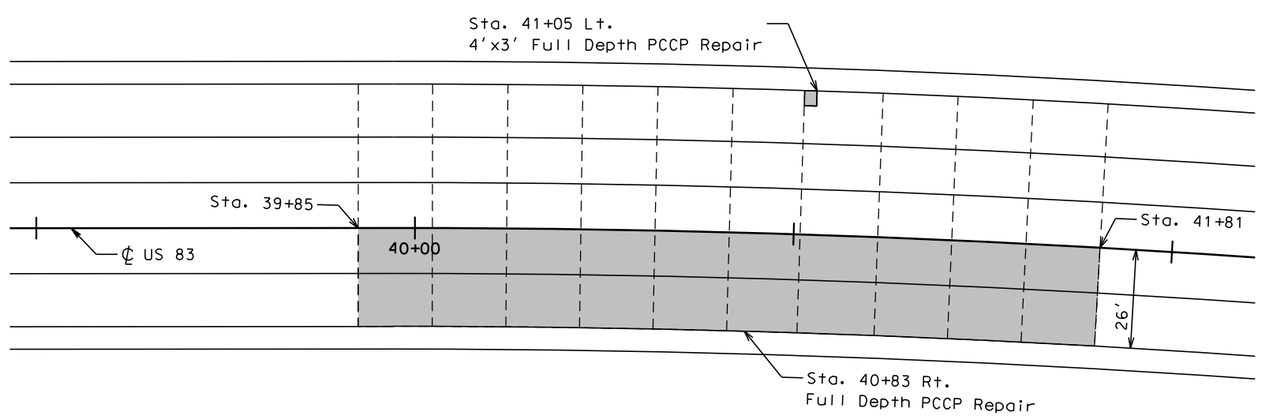

PLOT SCALE - 1:40

PLOTTED FROM - TRPR16032

PLOT NAME - 60

FILE -...\PRJ\JONS035E\REPAIR AREAS.DGN

STATE OF SOUTH DAKOTA	PROJECT	SHEET	TOTAL SHEETS
	IM 0904(57)189 & NH 0083(85)87	F85	F145

Plotting Date: 08/06/2015

Full Depth PCCP Repair

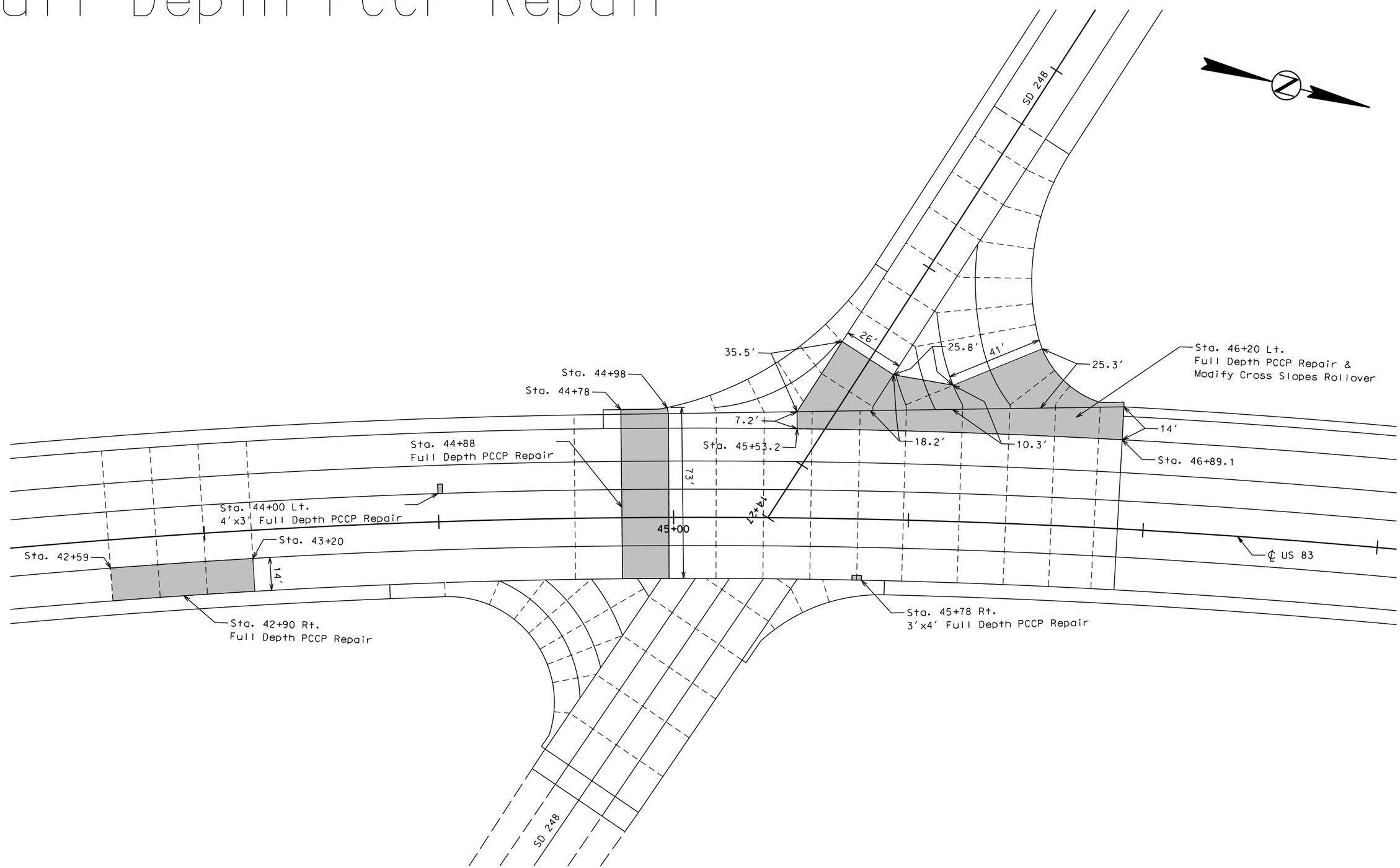

PLOT SCALE - 1:40

PLOTTED FROM - TRPR16032

PLOT NAME - 61

FILE - ...\PRJ\JONS035E\REPAIR AREAS.DGN

NONREINFORCED PCC PAVEMENT REPAIR DETAILS

GENERAL LAYOUT OF TYPICAL REPAIR AREAS

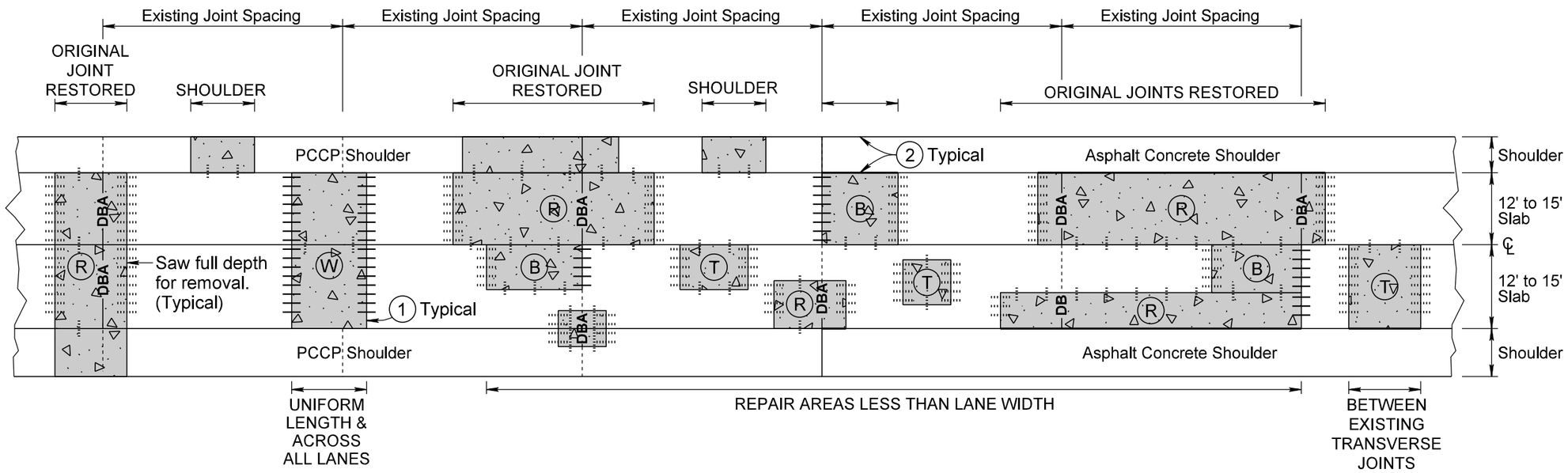

KEY:

PCC Pavement Repair Area

PCC PAVEMENT REPAIR AREA TYPES:

(W) Two Working Joints (Use only if repair is full roadway width and uniform length (across all lanes))

(T) Two Tied Joints

(B) One Working & One Tied Joint

(R) Two Tied Joints with Original Joint Restored with Dowel Bar Assembly

Steel Bars for Transverse Joints

Pavement Thickness >= 10.5"

— Drilled in 1½" x 18" epoxy coated plain round dowel bars spaced 18" center to center.

..... Drilled in No. 11 x 18" epoxy coated deformed tie bars spaced 18" center to center.

Pavement Thickness >= 8.0" and < 10.5"

— Drilled in 1¼" x 18" epoxy coated plain round dowel bars spaced 18" center to center.

..... Drilled in No. 9 x 18" epoxy coated deformed tie bars spaced 18" center to center.

DBA Dowel Bar Assembly

Steel Bars for Longitudinal Joints

No. 5 x 30" epoxy coated deformed tie bars.
Sawed Joint - spaced 48" center to center.
Construction Joint - spaced 48" center to center.

No. 5 x 24" epoxy coated deformed tie bars.
Drilled In - spaced 30" center to center.

NOTES: Saw around repair areas full depth for removal.

(1) Where possible, transverse joints shall be constructed/maintained full roadway width.

(2) Edges of repair areas shall be formed to match the width of the existing concrete pavement.

(3) Need for bars in small repair areas on/near the shoulder to be determined on a case-by-case basis, on construction by the Engineer.

The Engineer will determine location, size, and type of each concrete repair area at the time of construction.

PLOT SCALE - 1:10
PLOT NAME - 62
FILE - ...\PRJ\JONS035E\PCCP REPAIRS.DGN
PLOTTED FROM - TRPR16032

PCC PAVEMENT REPAIR, NONREINFORCED

PLAIN ROUND DOWEL BAR INSTALLATION
(TWO WORKING JOINTS)

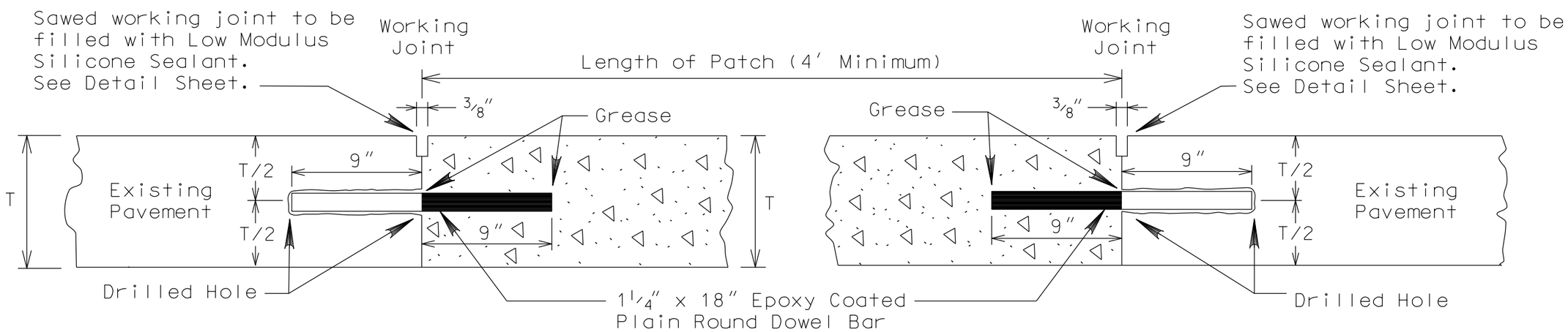

T = Existing and new pavement thickness.

Bar embedded to a minimum depth of 9 inches into the existing pavement by utilizing an epoxy resin adhesive.

Cost for furnishing and installing epoxy coated plain round dowel bars shall be included in the contract unit price per each for Install Steel Bar in Concrete Pavement.

PLOT SCALE - 1:6.4
PLOT NAME - 63
FILE - ...\PRJ\JONS035E\PCCP REPAIRS.DGN
PLOTTED FROM - TRPR16032

PCC PAVEMENT REPAIR, NONREINFORCED

STEEL BAR INSTALLATION
(ONE TIED JOINT AND ONE WORKING JOINT)

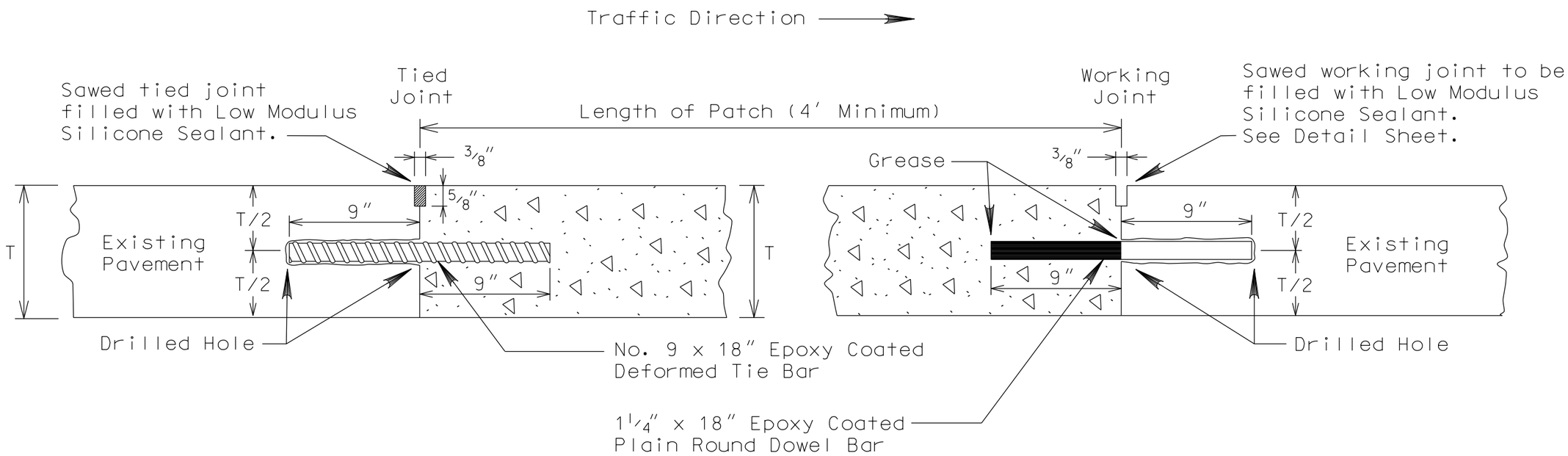

T = Existing and new pavement thickness.

Bar embedded to a minimum depth of 9 inches into the existing pavement by utilizing an epoxy resin adhesive.

Cost for furnishing and installing steel bars (deformed tie and plain round dowel) shall be included in the contract unit price per each for Install Steel Bar in Concrete Pavement.

PLOT SCALE - 1:6.4
PLOT NAME - 64
FILE ...\PRJ\JONS035E\PCCP REPAIRS.DGN
PLOTTED FROM - TRPR16032

PCC PAVEMENT REPAIR, NONREINFORCED

DEFORMED TIE BAR INSTALLATION
(TWO TIED JOINTS)

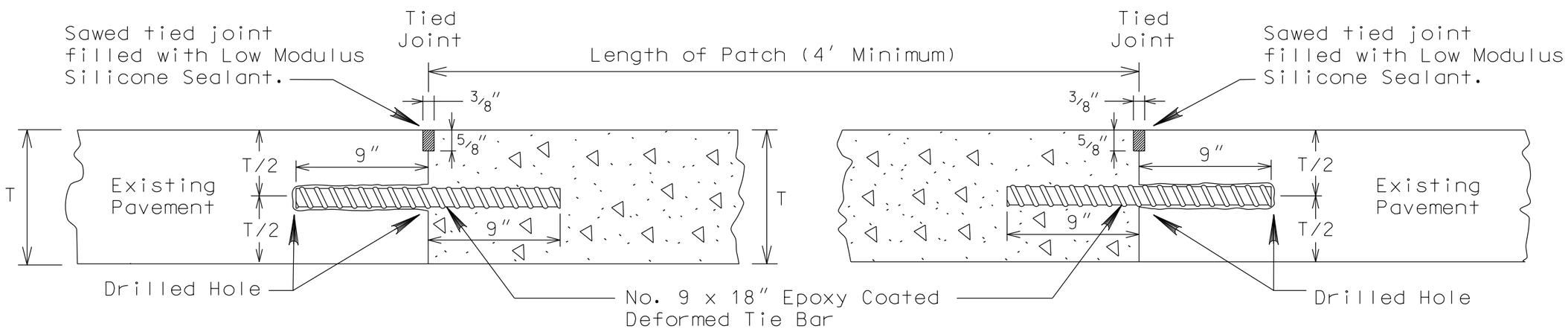

T = Existing and new pavement thickness.

Bar embedded to a minimum depth of 9 inches into the existing pavement by utilizing an epoxy resin adhesive.

Cost for furnishing and installing epoxy coated deformed tie bars shall be included in the contract unit price per each for Install Steel Bar in Concrete Pavement.

PLOT SCALE - 1:6.4
PLOT NAME - 65
FILE -...\PRJ\JONS035E\PCCP REPAIRS.DGN
PLOTTED FROM - TRPR16032

PCC PAVEMENT REPAIR, NONREINFORCED

LONGITUDINAL CONSTRUCTION JOINT WITH DRILLED IN TIE BARS

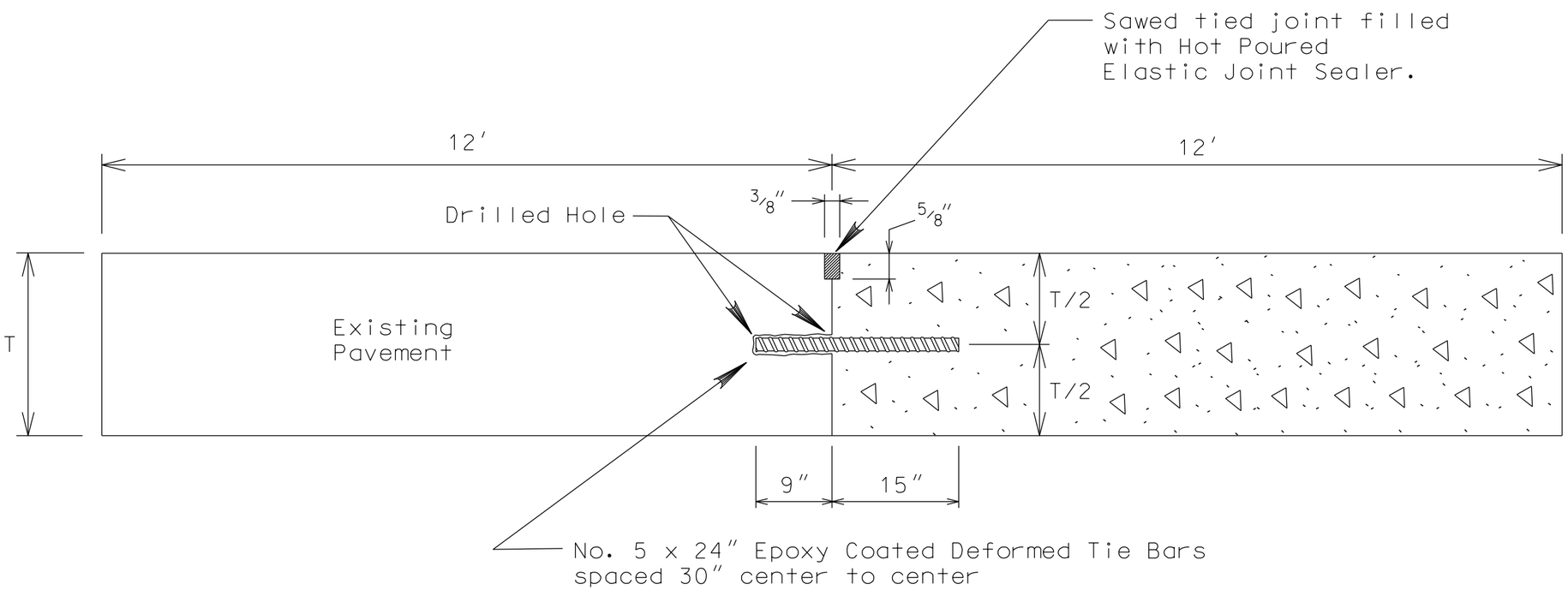

T = New existing and new pavement thickness.

Bar embedded a minimum depth of 9 inches into the existing pavement by utilizing an epoxy resin adhesive.

Bars shall be placed a minimum of 15 inches from existing transverse contraction joints.

Cost for furnishing and installing drilled in centerline tie bars shall be included in the contract unit price per each for Install Steel Bar in Concrete Pavement.

PLOT SCALE - 1:6.4
PLOT NAME - 66
FILE - ...\PRJ\JONS035E\PCCP REPAIRS.DGN
PLOTTED FROM - TRPR16032

PCC PAVEMENT REPAIR, NONREINFORCED

SAWED LONGITUDINAL JOINT

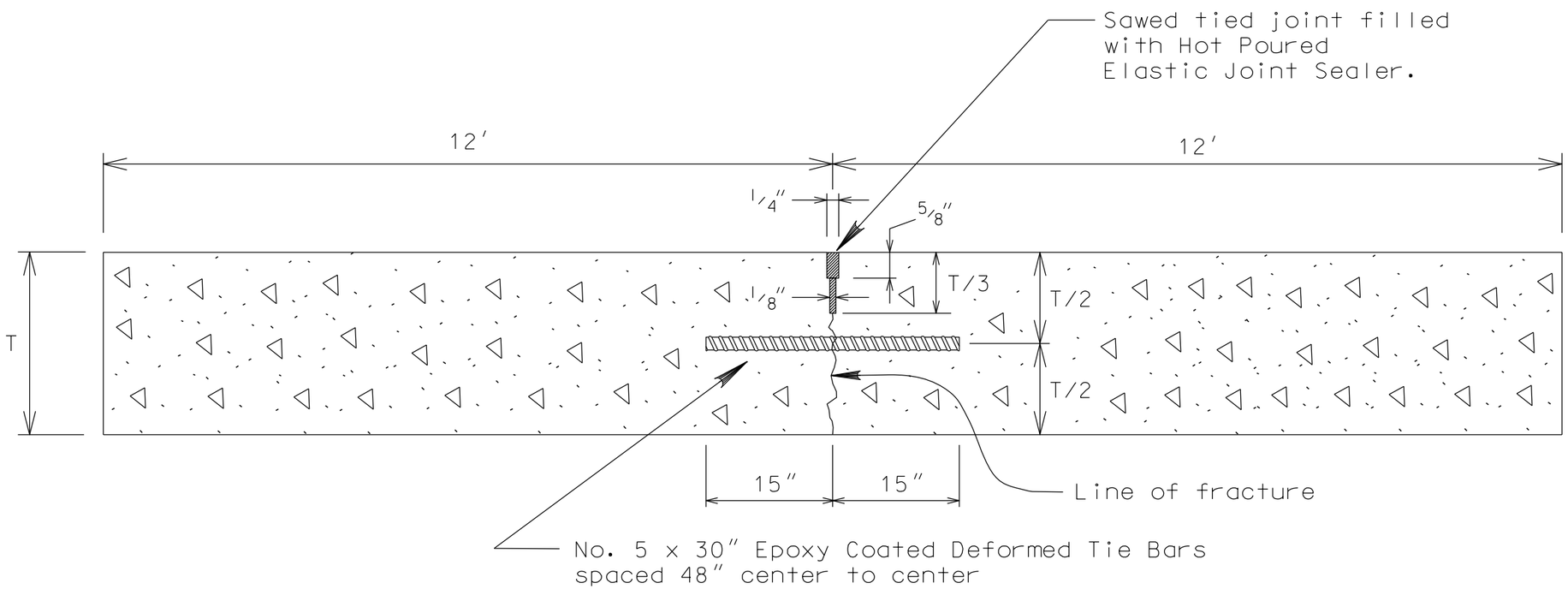

T = New pavement thickness.

The first saw cut to control cracking shall be a minimum of 1/3 the depth of the pavement. Additional sawing for widening the saw cut to provide the width for the installation of the Hot Poured Elastic Joint Sealer will be necessary.

Cost for furnishing and installing centerline tie bars shall be incidental to the contract unit price per square yard for PCC Pavement Repair, Nonreinforced.

PLOT SCALE - 1:6.4
PLOT NAME - 67
FILE - ...\PRJ\JONS035E\PCCP REPAIRS.DGN
PLOTTED FROM - TRPR16032

PCC PAVEMENT REPAIR, NONREINFORCED

LONGITUDINAL CONSTRUCTION JOINT WITH TIE BARS & KEYWAY

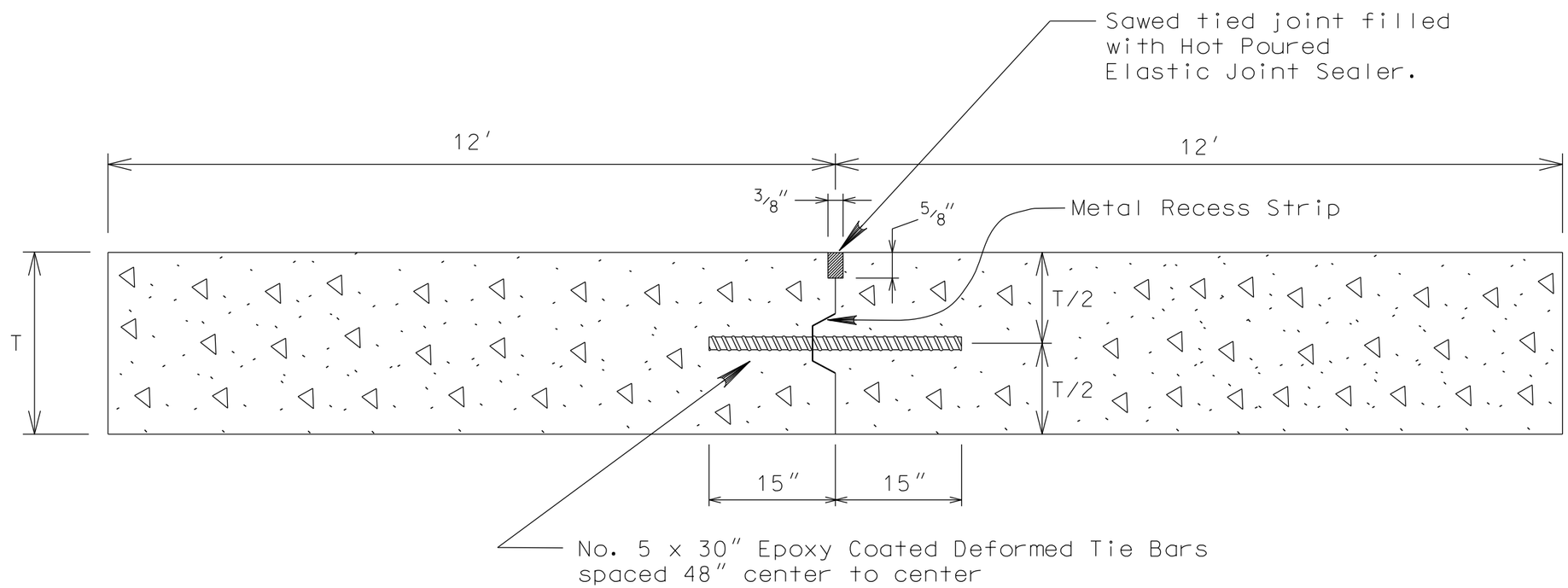

T = New pavement thickness.

Deformed tie bars will only be installed on centerline when there is full width pavement removal.

Cost for furnishing and installing centerline tie bars shall be incidental to the contract unit price per square yard for PCC Pavement Repair, Nonreinforced.

PLOT SCALE - 1:6.4

PLOTTED FROM - TRPR16032

PLOT NAME - 68

FILE - ...\PRJ\JONS035E\PCCP REPAIRS.DGN

US83 CUTOFF DRAINS

Sheet 1 of 3

Cutoff Drain

Location	Length
Sta. 39+85 Rt.	54′
Sta. 41+81 Rt.	54′

Longitudinal Cutoff Drain

Location	Length
Sta. 39+85 Rt. to Sta. 41+81 Rt.	196′

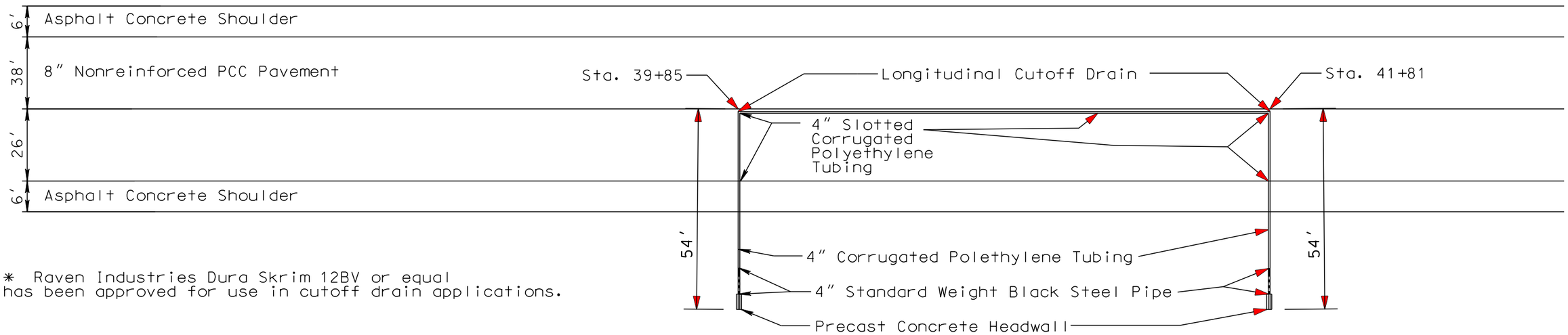

∗ Raven Industries Dura Skrim 12BV or equal has been approved for use in cutoff drain applications.

Transverse Cutoff Drain

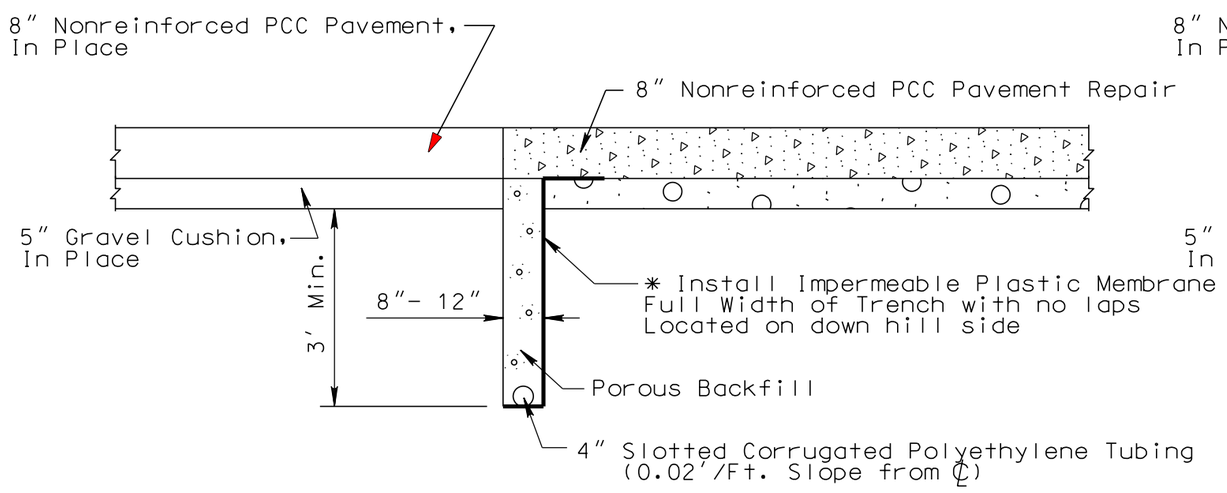

Longitudinal Cutoff Drain

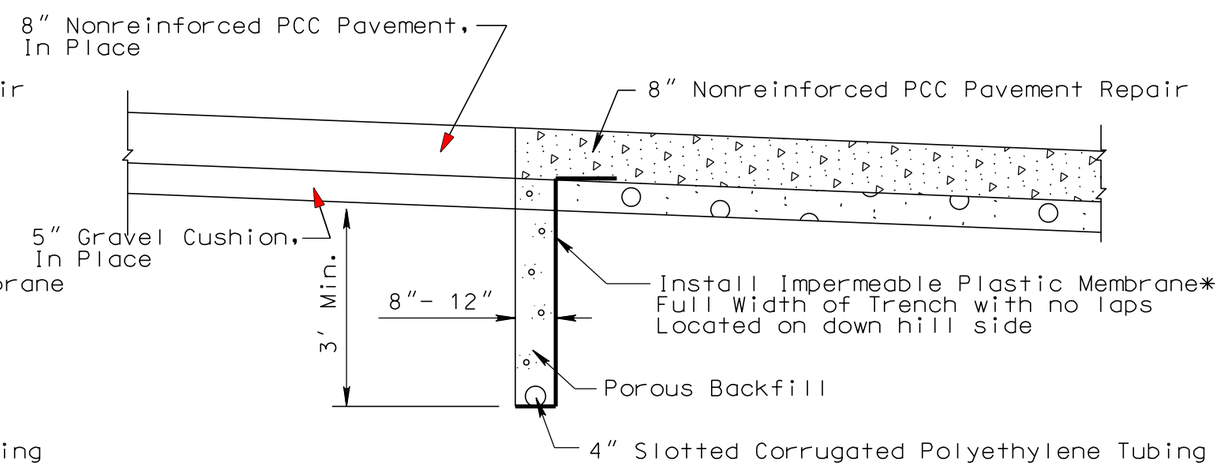

PLOT SCALE - 1:19.9401
PLOTTED FROM - TRPR16032
PLOT NAME - 69
FILE -...\PRJ\JONS035E\CUTOFF DRAIN.DGN

STATE OF SOUTH DAKOTA	PROJECT	SHEET	TOTAL SHEETS
	IM 0904(57)189 & NH 0083(85)87	F94	F145

Plotting Date: 08/06/2015

US83 CUTOFF DRAINS

Sheet 2 of 3

Cutoff Drain
Location Length
Sta. 44+88 101'

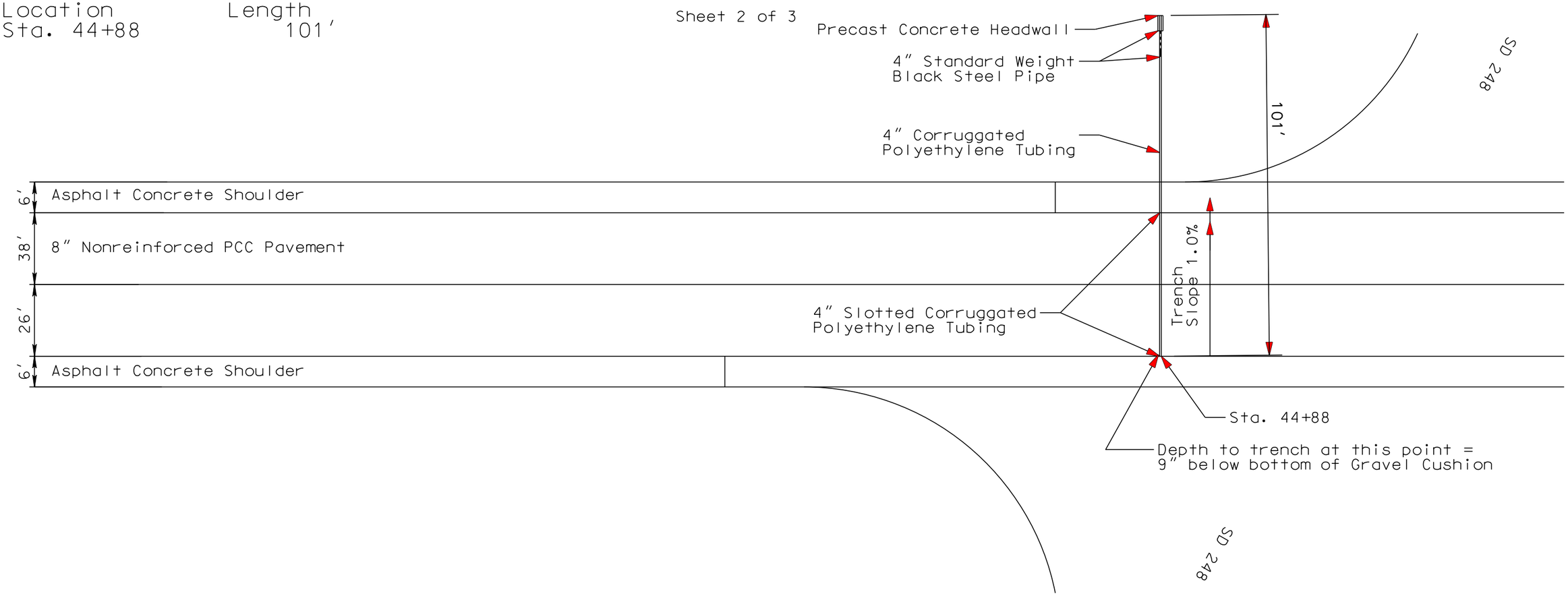

Transverse Cutoff Drain

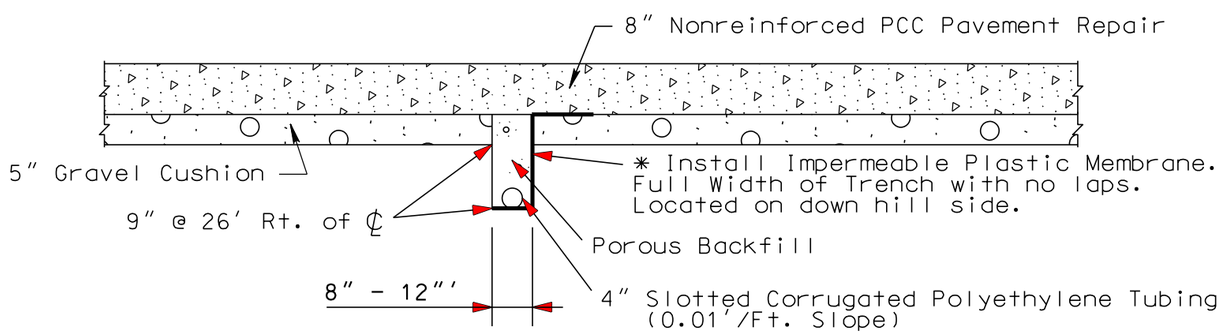

* Raven Industries Dura Skrim 12BV or equal has been approved for use in cutoff drain applications.

PLOT SCALE - 1:19.9401
PLOTTED FROM - TRPR16032
PLOT NAME - 70
FILE - ...\PRJ\JONS035E\CUTOFF DRAIN.DGN

GENERAL DETAIL FOR US83 CUTOFF DRAIN

Sheet 3 of 3

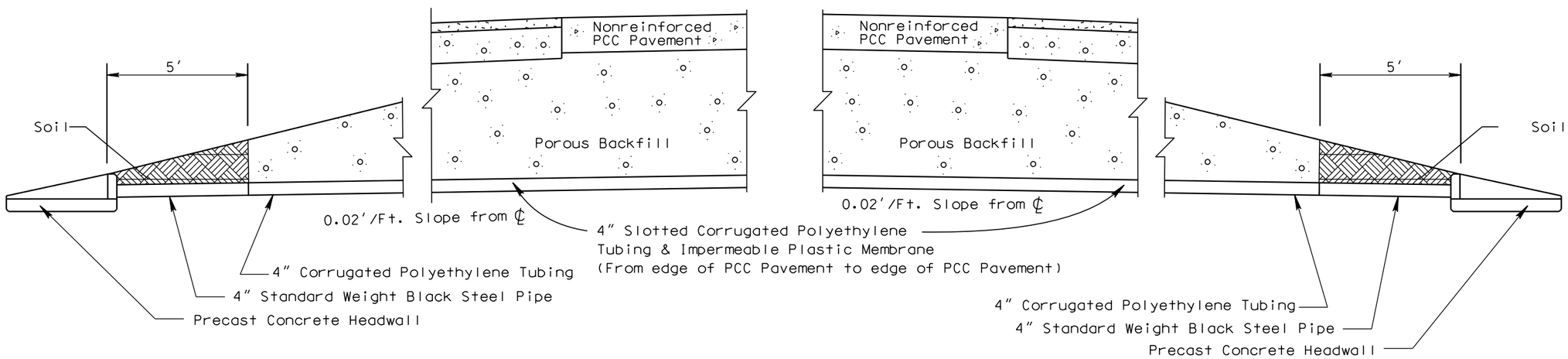

It will be the Contractor's responsibility to determine the amount of Pipe, Gravel Cushion and Porous Backfill required to be installed at each Cutoff Drain. All costs to install Precast Headwalls, 4″ Standard Weight Black Steel Pipe, 4″ Corrugated Polyethylene Tubing, 4″ Slotted Corrugated Polyethylene Tubing, Gravel Cushion, Impermeable Plastic Membrane and Porous Backfill shall be incidental to the contract unit price per each for "Cutoff Drain".

Care must be taken to insure that the underdrain and outlet tubing is not damaged during construction. Sufficient cover material is to be placed over the underdrain before heavy equipment is allowed to work over the underdrain. Damaged pipes will be replaced at the Contractor's expense.

PLOT SCALE - 1:20
PLOTTED FROM - TRPR16032
PLOT NAME - 71
FILE - ...\PRJ\JONS035E\CUTOFF DRAIN.DGN

Edge Drains and Cutoff Drains

Scale 1 Inch = 40 Feet
Sheet 1 of 2 Sheets

STATE OF SOUTH DAKOTA	PROJECT	SHEET	TOTAL SHEETS
	IM 0904(57)189 & NH 0083(85)87	F96	F145

Plotting Date: 08/06/2015

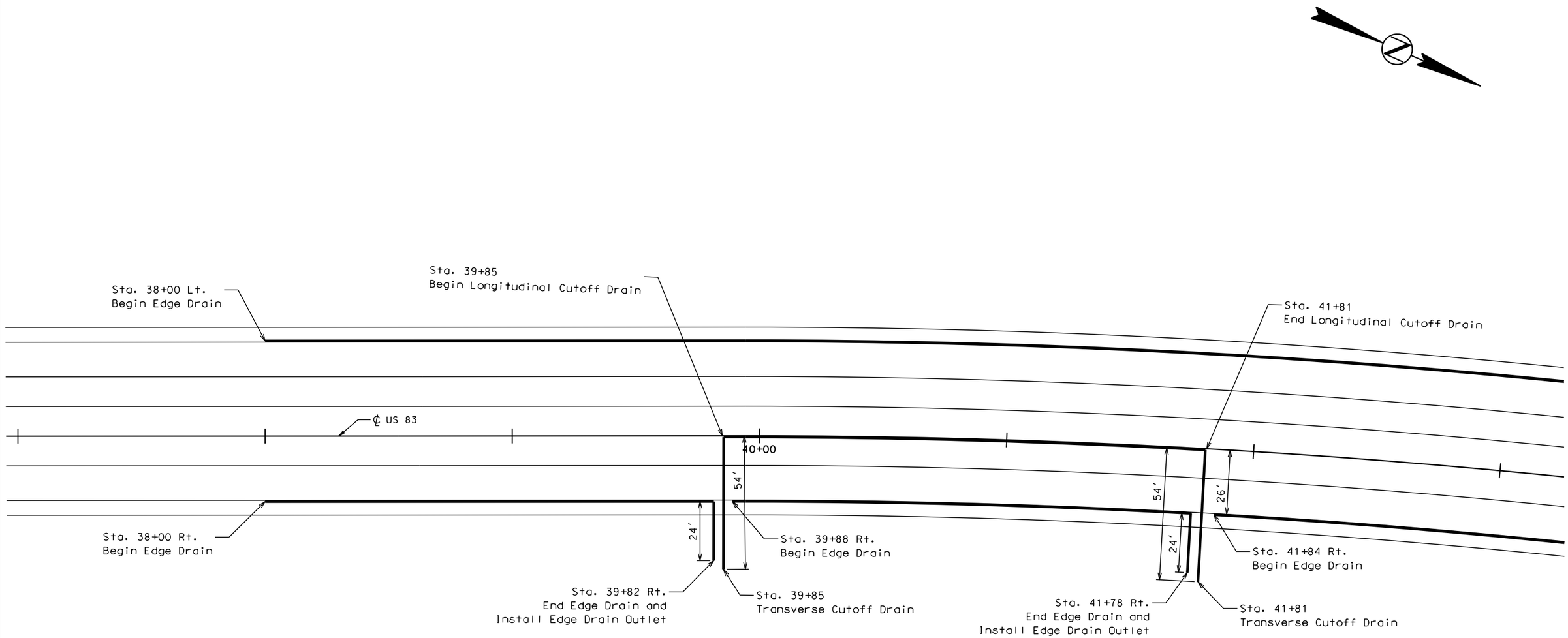

The Engineer will contact the Geothechnical office to perform an inspection after Surfacing has been removed and prior to installation of the Transverse and Longitudinal Cutoff Drains.

PLOT SCALE - 1:40

PLOTTED FROM - TRPR16032

PLOT NAME - 72

FILE - ...\EDGE DRAINS AND CUTOFF DRAINS.DGN

Edge Drains and Cutoff Drains

STATE OF SOUTH DAKOTA	PROJECT	SHEET	TOTAL SHEETS
	IM 0904(57)189 & NH 0083(85)87	F97	F145

Plotting Date: 08/06/2015

Scale 1 Inch = 40 Feet
Sheet 2 of 2 Sheets

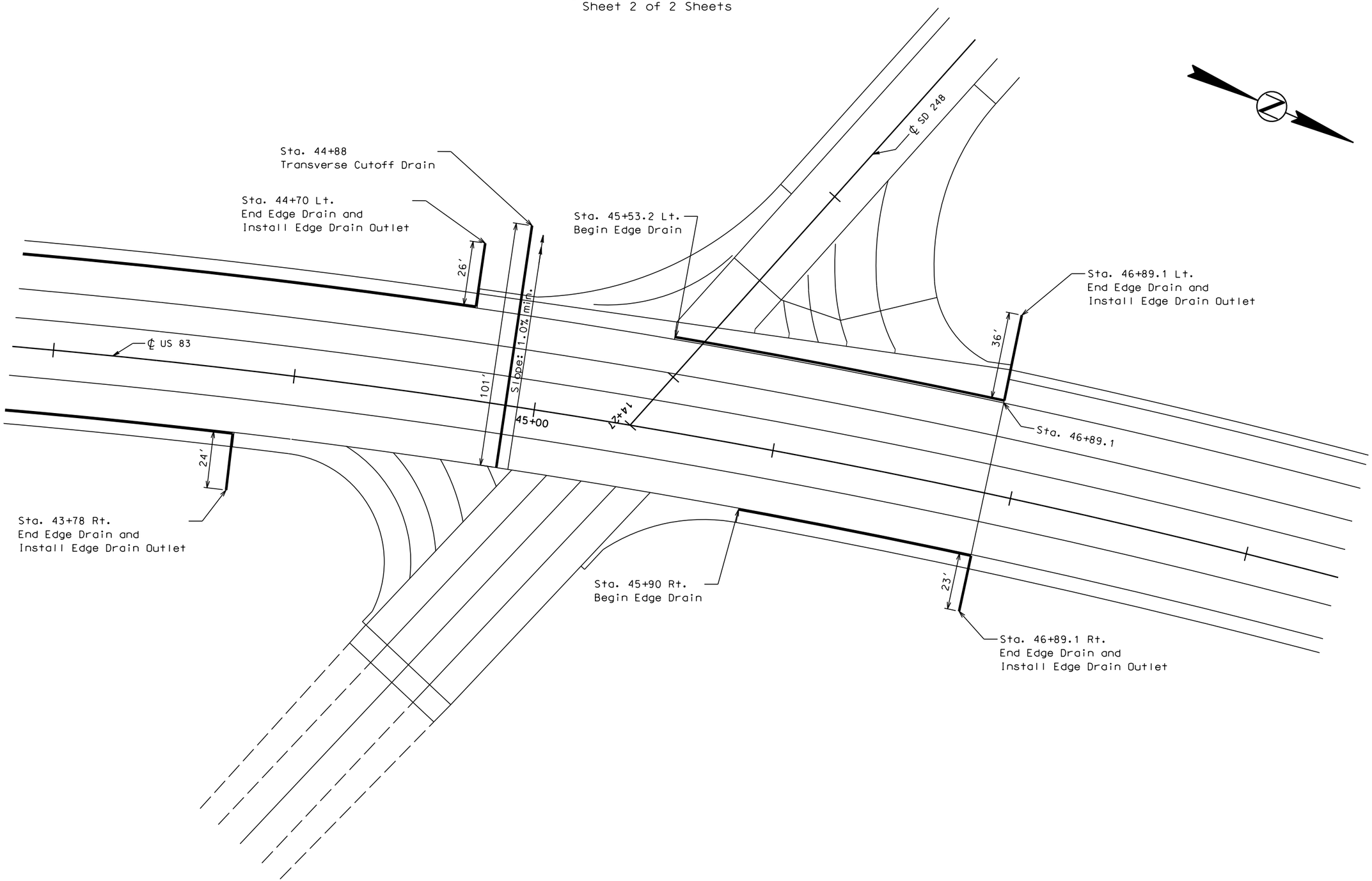

PLOT SCALE - 1:40

PLOTTED FROM - TRPR16032

PLOT NAME - 73

FILE - ...\EDGE DRAINS AND CUTOFF DRAINS.DGN

TYPICAL EDGE DRAIN LAYOUTS

Revised: 6 Aug 15, RML

TYPICAL SECTION SHOWING 2' DEEP EDGE DRAIN PLACEMENT

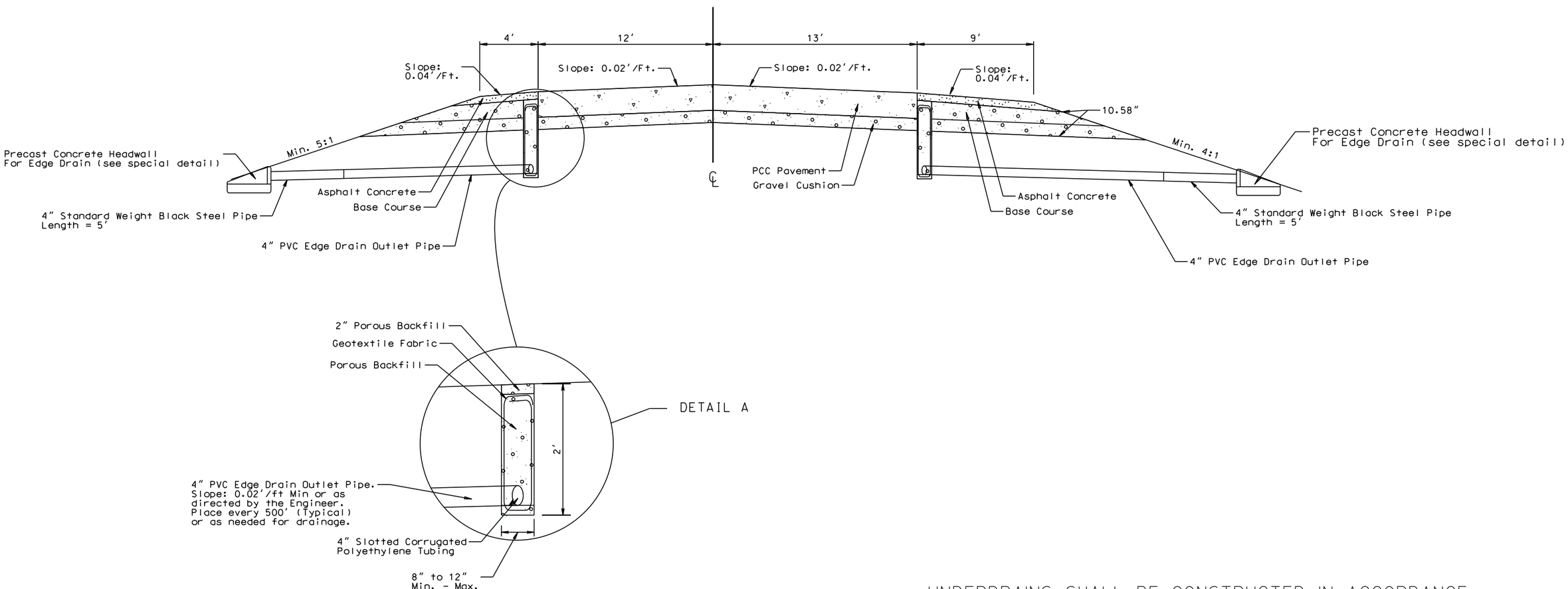

Detail for 2' Deep Edge Drain

UNDERDRAINS SHALL BE CONSTRUCTED IN ACCORDANCE WITH SECTION 680 OF THE SPECIFICATIONS.

Care must be taken to insure that the edge drain and outlet tubing is not damaged during construction. Sufficient cover material is to be placed over the edge drain and outlets before heavy equipment is allowed to work over them. Damaged pipes will be replaced at the Contractor's expense.

PLOT SCALE - 1:41.4289
PLOTTED FROM - TRPR16032
PLOT NAME - 74
FILE - ...\EDGE DRAINS AND CUTOFF DRAINS.DGN

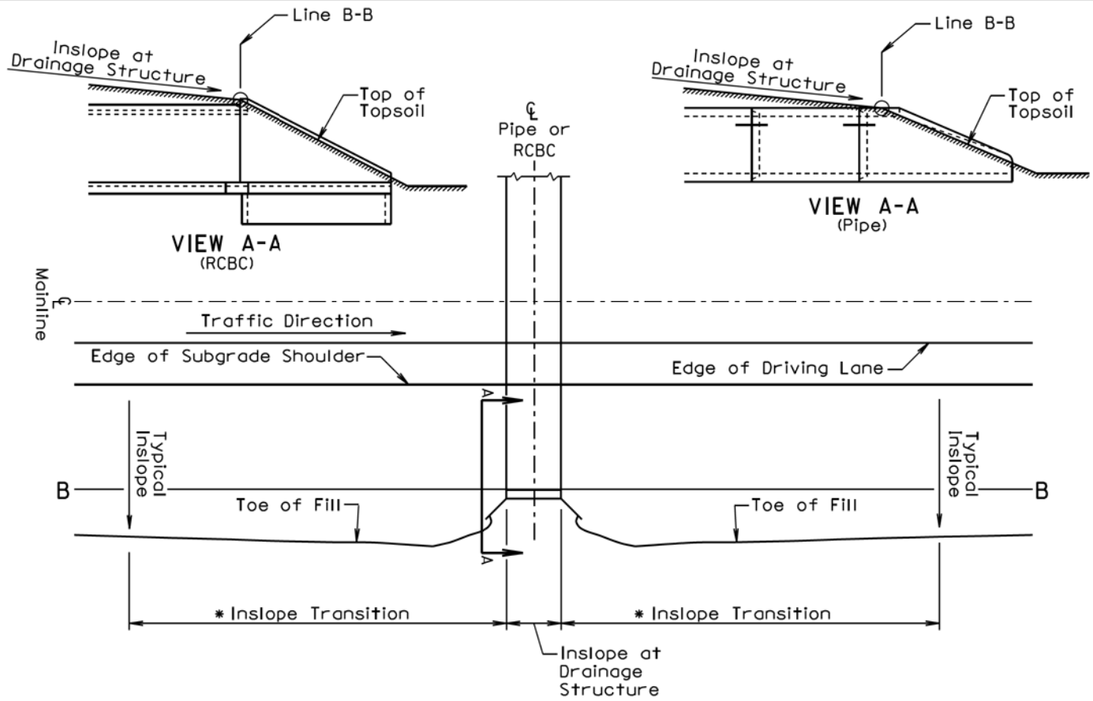

TYPE 1 INSLOPE TRANSITION

GENERAL NOTES:

This Type 1 Inslope Transition is used when the specified inslope at the drainage structure is flatter than the typical inslope and the inslope at the drainage structure is between a 4:1 slope and 6:1 slope.

Line B-B represents the clear zone line, the location where soil intercepts the parapet on an RCBC, the location where the soil intercepts the top of the pipe adjacent to the opening of the pipe end section, or may represent a change in slope.

* Transition from the typical inslope to the inslope at the drainage structure. Within the clear zone (area from edge of subgrade shoulder to line B-B) use 100' length for each 1:1 slope change. Example: transition from a 4:1 to a 6:1 would require a 200' length transition. The typical inslope outside of the clear zone shall be transitioned gradually to the slope necessary adjacent to the RCBC wing wall or pipe culvert end section within the transition length necessary for the transition within the clear zone.

Published Date: 3rd Qtr. 2015

SDDOT

INSLOPE TRANSITIONS AT PIPE CULVERTS OR REINFORCED CONCRETE BOX CULVERTS

PLATE NUMBER 120.05

Sheet 1 of 2

February 14, 2011

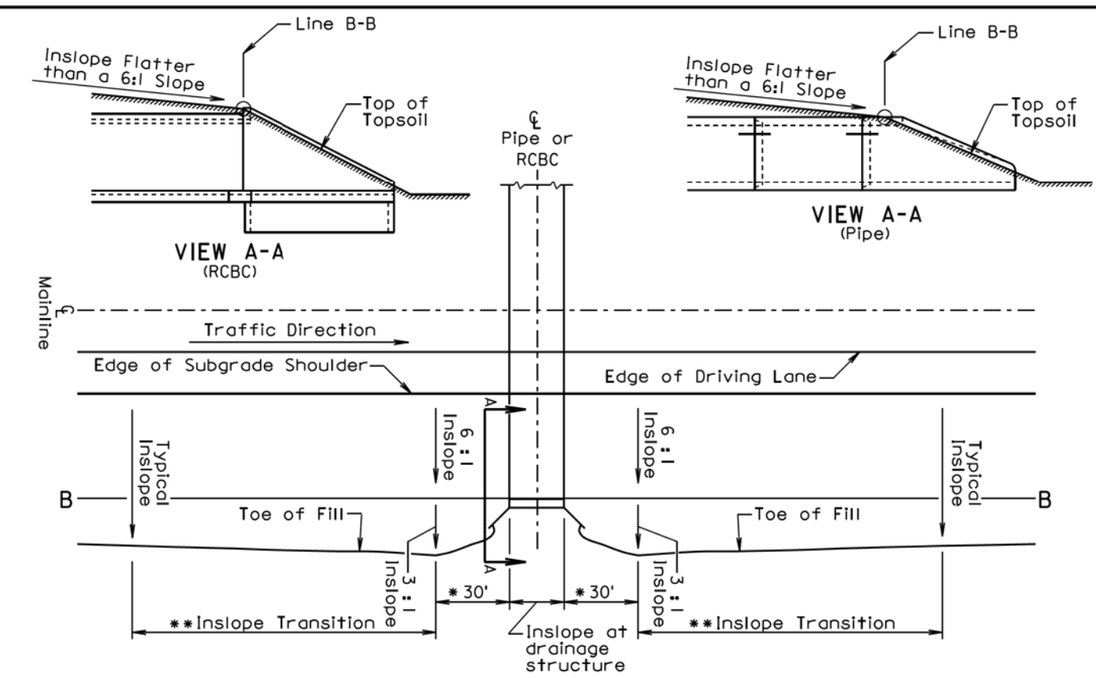

TYPE 2 INSLOPE TRANSITION

GENERAL NOTES:

This Type 2 Inslope Transition is used when the specified inslope at the pipe or RCBC is flatter than a 6:1 slope.

Line B-B represents the clear zone line, the location where soil intercepts the parapet on an RCBC, the location where the soil intercepts the top of the pipe adjacent to the opening of the pipe end section, or may represent a change in slope.

* Transition from inslope at drainage structure to a 6 :1 inslope and 3:1 inslope.

** Transition from typical inslope to the inslopes adjacent to the drainage structure. Within the clear zone (area from edge of subgrade shoulder to line B-B) use 100' length for each 1:1 slope change. Example: transition from a 4:1 to a 6:1 would require a 200' length transition. The typical inslope outside of the clear zone shall be transitioned to a 3:1 inslope within the transition length necessary for the transition within the clear zone.

Published Date: 3rd Qtr. 2015

SDDOT

INSLOPE TRANSITIONS AT PIPE CULVERTS OR REINFORCED CONCRETE BOX CULVERTS

PLATE NUMBER 120.05

Sheet 2 of 2

February 14, 2011

STATE OF SOUTH DAKOTA

PROJECT IM 0904(57)189 & NH 0083(85)87

SHEET F99

TOTAL SHEETS F145

Plotting Date: 08/06/2015

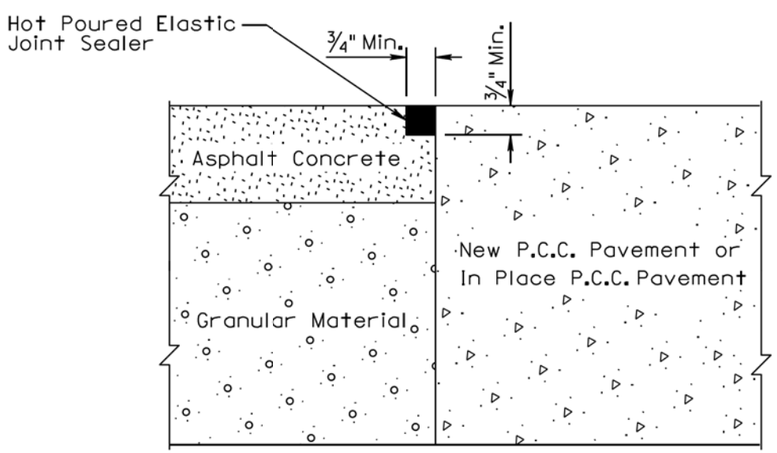

March 31, 2000

Published Date: 3rd Qtr. 2015	SDDOT	ASPHALT CONCRETE SHOULDER JOINT ADJACENT TO PCC PAVEMENT	PLATE NUMBER 320.15
			Sheet 1 of 1

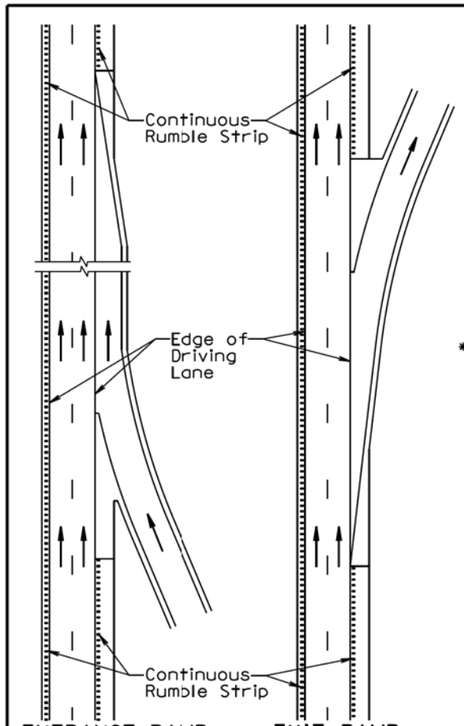

PLAN VIEW

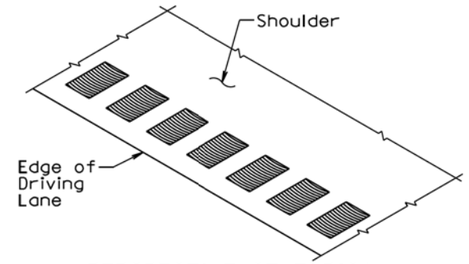

PERSPECTIVE OF TYPICAL RUMBLE STRIP IN ASPHALT CONCRETE

* When PCC pavement width from centerline to edge of pavement is 12', the rumble strip may be placed a maximum of 2' from the edge of the driving lane.

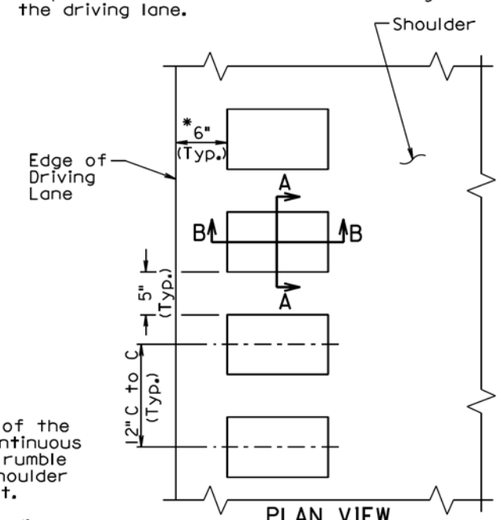

PLAN VIEW
TYPICAL RUMBLE STRIP IN ASPHALT CONCRETE

GENERAL NOTES:

A rumble strip shall be constructed on all of the asphalt concrete shoulders by grinding continuous indentations in the asphalt concrete. The rumble strip shall receive a flush seal with the shoulder flush sealing or asphalt surface treatment.

A rumble strip should be placed through median crossovers as directed by the Engineer.

A rumble strip shall not be constructed through entrance ramps, exit ramps, and gore areas.

Prior to constructing the rumble strip the Contractor shall submit to the Engineer, for approval, the proposed method of constructing the rumble strip.

Measurement of the rumble strip shall be to the nearest 0.1 of a mile for each shoulder. Measurement and payment of the rumble strip shall include the segments adjacent to median crossovers, entrance ramps, exit ramps, and gore areas without rumble strips. Payment for constructing the rumble strip shall be at the contract unit price per mile for "Grind 12" Rumble Strip or Stripe in Asphalt Concrete".

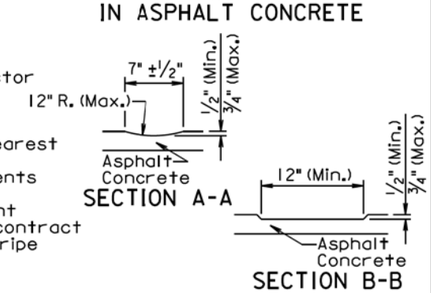

June 26, 2011

Published Date: 3rd Qtr. 2015	SDDOT	12" RUMBLE STRIP IN ASPHALT CONCRETE ON INTERSTATE SHOULDERS	PLATE NUMBER 320.32
			Sheet 1 of 1

PLOT SCALE - 1:200
PLOT NAME - 76
FILE - ...\JONS035E\STDPLATEPAGE 2.DGN
-PLOTTED FROM - TRPR16032

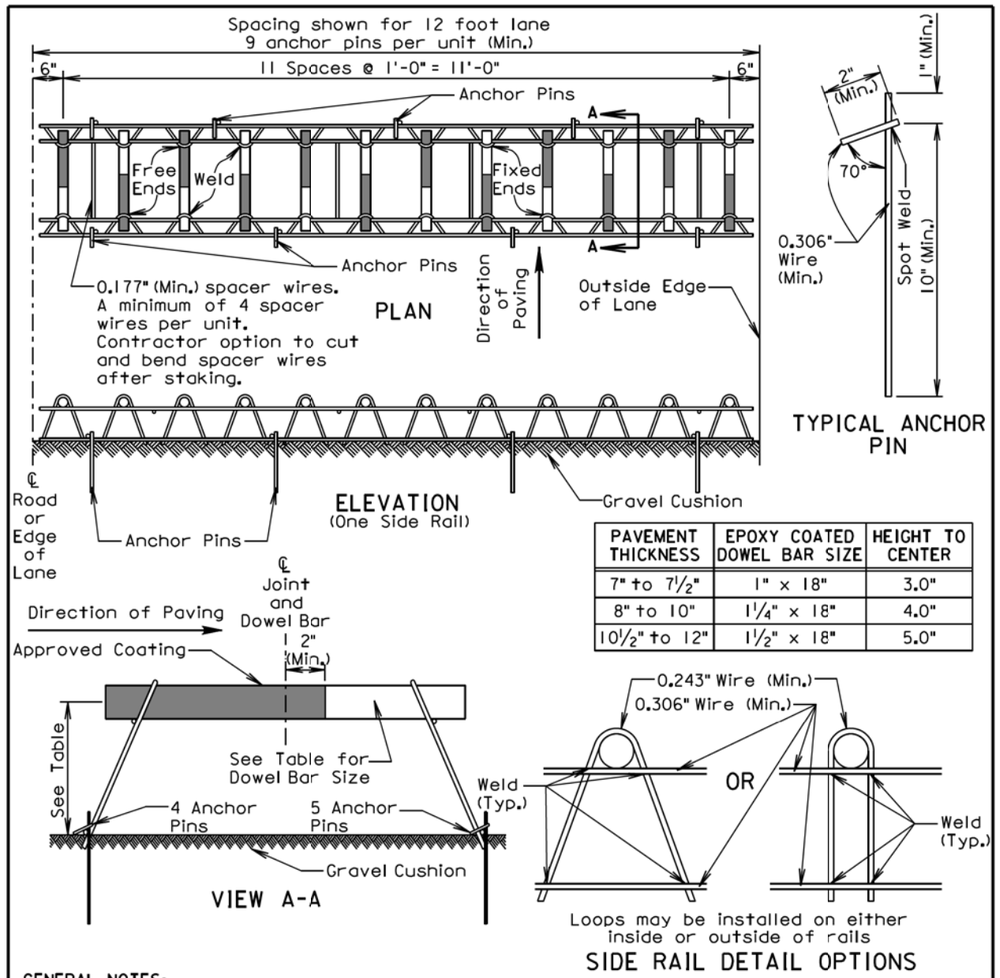

PAVEMENT THICKNESS	EPOXY COATED DOWEL BAR SIZE	HEIGHT TO CENTER
7" to 7½"	1" x 18"	3.0"
8" to 10"	1¼" x 18"	4.0"
10½" to 12"	1½" x 18"	5.0"

GENERAL NOTES:

Longitudinal joint tie bars shall be placed a minimum of 15 inches from the transverse contraction joint.

Centerline of individual dowel bars shall be parallel to top of subgrade ±1/8 inch in 18 inches and to all other dowel bars in the assembly ±1/16 inch in 18 inches.

Centerline of individual dowel bars shall be parallel to the centerline of the roadway ±1/2 inch in 18 inches.

The transverse contraction joints shall be sawed perpendicular to the centerline of the roadway and the dowel bars shall be centered on the sawed joint ±1 inch.

Supporting devices as shown on this sheet, or equivalent as approved by the Engineer, shall be used to maintain proper horizontal and vertical alignment of the dowel bars.

August 30, 2013

Published Date: 3rd Qtr. 2015	SDDOT	**PCC PAVEMENT DOWEL BAR ASSEMBLY FOR TRANSVERSE CONTRACTION JOINTS 12 Bar Assembly on Granular Base Material**	*PLATE NUMBER* 380.01 *Sheet 1 of 1*

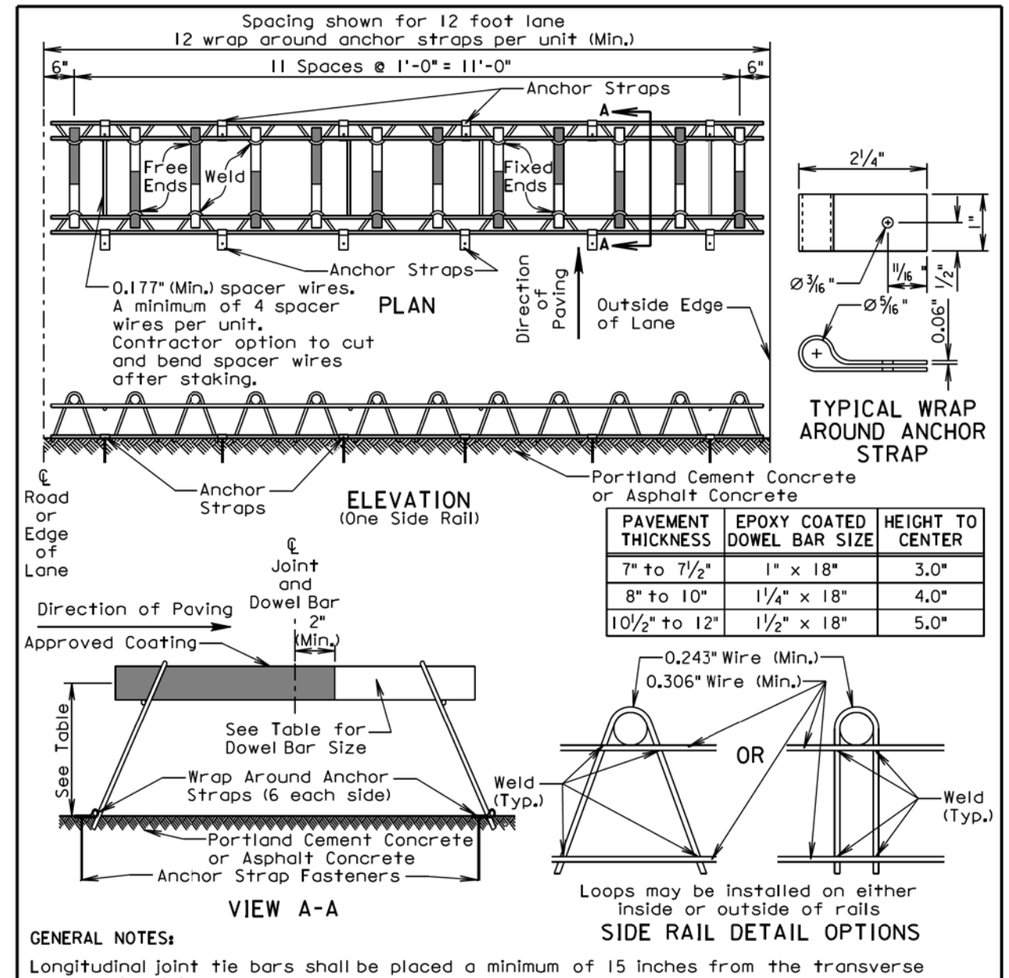

PAVEMENT THICKNESS	EPOXY COATED DOWEL BAR SIZE	HEIGHT TO CENTER
7" to 7½"	1" x 18"	3.0"
8" to 10"	1¼" x 18"	4.0"
10½" to 12"	1½" x 18"	5.0"

GENERAL NOTES:

Longitudinal joint tie bars shall be placed a minimum of 15 inches from the transverse contraction joint.

Centerline of individual dowel bars shall be parallel to top of subgrade ±1/8 inch in 18 inches and to all other dowel bars in the assembly ±1/16 inch in 18 inches.

Centerline of individual dowel bars shall be parallel to the centerline of the roadway ±1/2 inch in 18 inches.

The transverse contraction joints shall be sawed perpendicular to the centerline of the roadway and the dowel bars shall be centered on the sawed joint ±1 inch.

Supporting devices as shown on this sheet, or equivalent as approved by the Engineer, shall be used to maintain proper horizontal and vertical alignment of the dowel bars.

Appropriate anchor strap fasteners shall be used to prevent movement of the dowel bar assemblies during the paving operation.

August 30, 2013

Published Date: 3rd Qtr. 2015	SDDOT	**PCC PAVEMENT DOWEL BAR ASSEMBLY FOR TRANSVERSE CONTRACTION JOINTS 12 Bar Assembly on Hard Surfaced Base Material**	*PLATE NUMBER* 380.02 *Sheet 1 of 1*

PLOT SCALE - 1:200
PLOT NAME - 77
FILE - ...\JONS035E\STDPLATEPAGE 3.DGN
-PLOTTED FROM - TRPR16032

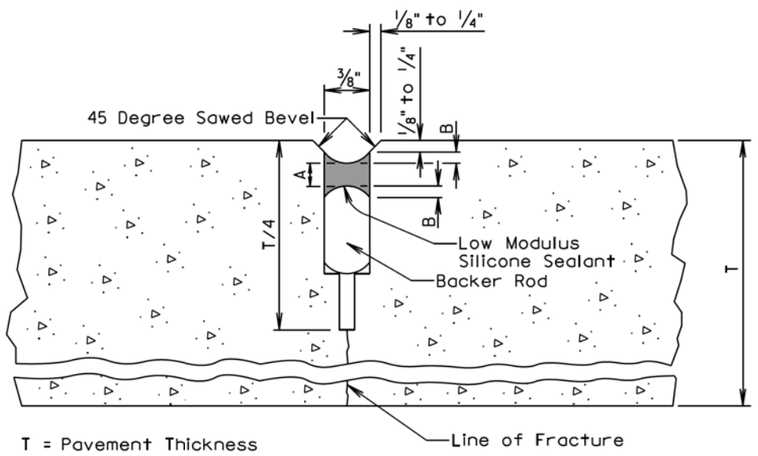

LOW MODULUS SILICONE SEALANT ALLOWABLE CONSTRUCTION TOLERANCES			
A (Min.) (In.)	A (Max.) (In.)	B (Min.) (In.)	B (Max.) (In.)
3/16	5/16	1/8	1/4

GENERAL NOTES:

The first saw cut to control cracking shall be a minimum of 1/4 the thickness of the pavement. Additional sawing for widening the saw cut to provide the width for the installation of the low modulus silicone joint sealant will be necessary.

The backer rod shall be a nonmoisture absorbing resilient material approximately 25% larger in diameter than the width of the joint to be sealed.

June 26, 2013

Published Date: 3rd Qtr. 2015	SDDOT	PCC PAVEMENT BEVELED TRANSVERSE CONTRACTION JOINT WITH OR WITHOUT DOWEL BAR ASSEMBLY	PLATE NUMBER 380.06
			Sheet 1 of 1

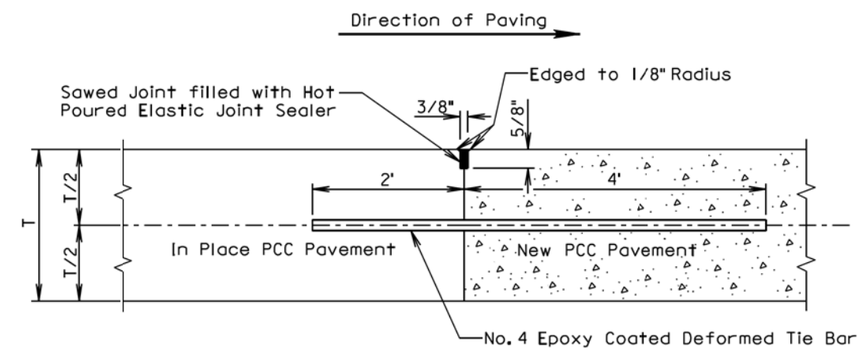

GENERAL NOTES:

No. 4 epoxy coated deformed tie bars shall be spaced 12 inches center to center and shall be a minimum of 3 inches and a maximum of 6 inches from the pavement edges.

The minimum distance between a transverse construction joint with tie bars and an adjacent transverse contraction joint shall be 5 feet.

When a transverse construction joint is made, paving will not be allowed in this area for 12 hours.

A transverse construction joint may be placed in lieu of the transverse contraction joint when shown in the plans.

The term "In Place PCC Pavement" in the above drawing indicates that the in place PCC pavement was placed on the current project.

June 26, 2013

Published Date: 3rd Qtr. 2015	SDDOT	PCC PAVEMENT MID PANEL TRANSVERSE CONSTRUCTION JOINT	PLATE NUMBER 380.07
			Sheet 1 of 1

PLOT SCALE - 1:200
PLOT NAME - 78
FILE - ...\JONS035E\STDPLATEPAGE 4.DGN
-PLOTTED FROM - TRPR16032

DETAIL A
TRANSVERSE CONSTRUCTION JOINT WITH TIE BARS

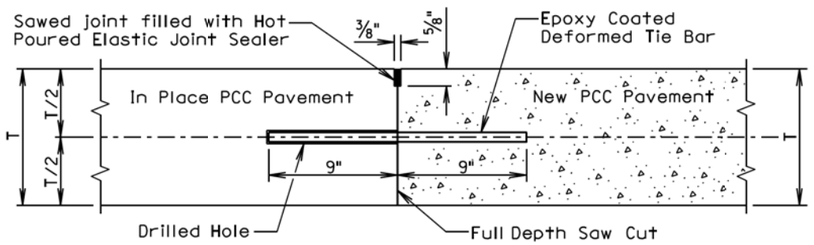

T = In Place PCC Pavement and New PCC Pavement Thickness

GENERAL NOTES:

The term "In Place PCC Pavement" in the above drawing indicates that the in place PCC pavement was placed on a previous project.

See sheet 2 of 2 of this standard plate to determine if Detail A shall be used.

The tie bars shall be embedded a minimum depth of 9 inches into the in place PCC pavement and anchored with an epoxy resin adhesive.

No. 9 epoxy coated deformed tie bars shall be used in 10 inch thickness and less PCC Pavement and No. 11 epoxy coated deformed tie bars shall be used in 10.5 inch thickness and greater PCC Pavement. The tie bar spacing shall be 18 inches center to center and shall be a minimum of 3 inches and a maximum of 9 inches from the pavement edges.

DETAIL B
TRANSVERSE CONSTRUCTION JOINT WITH DOWEL BARS

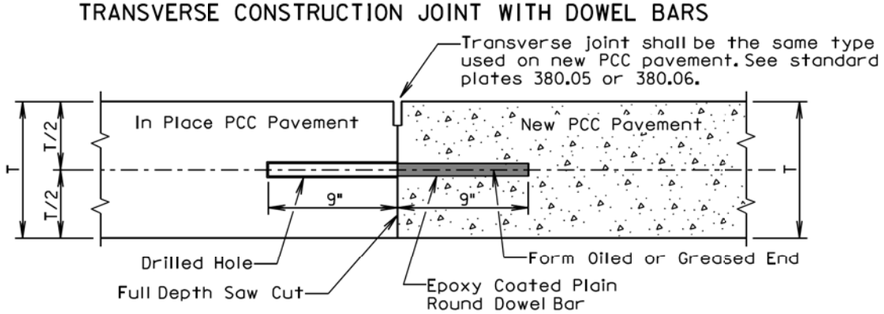

T = In Place PCC Pavement and New PCC Pavement Thickness

GENERAL NOTES:

The term "In Place PCC Pavement" in the above drawing indicates that the in place PCC pavement was placed on a previous project or current project.

See sheet 2 of 2 of this standard plate to determine if Detail B shall be used.

The plain round dowel bars shall be embedded a minimum depth of 9 inches into the in place PCC pavement and anchored with an epoxy resin adhesive.

The epoxy coated plain round dowel bar size, number, and spacing shall be the same as detailed on the corresponding dowel bar assembly standard plate (380.01, 380.02, 380.03, or 380.04). The epoxy coated plain round dowel bars shall be a minimum of 3 inches and a maximum of 6 inches from the pavement edges.

September 6, 2013

Published Date: 3rd Qtr. 2015	SDDOT	PCC PAVEMENT TRANSVERSE CONSTRUCTION JOINTS WITH TIE BARS OR DOWEL BARS	PLATE NUMBER 380.08
			Sheet 1 of 2

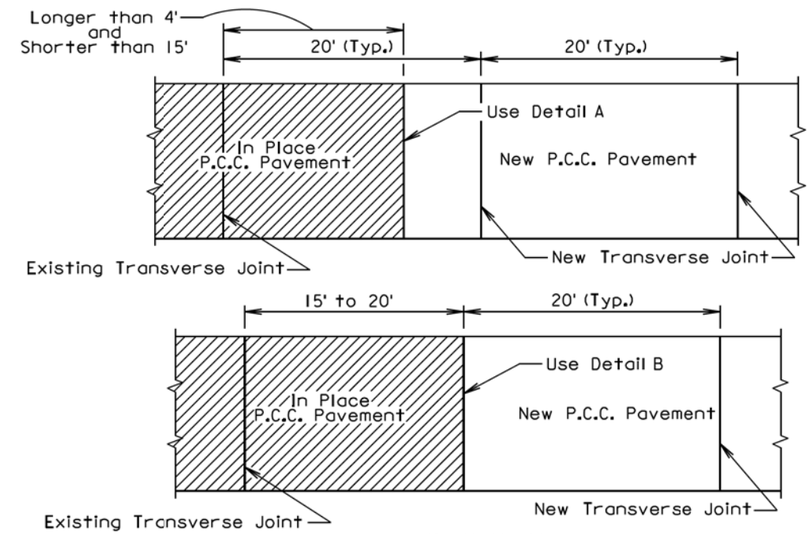

PLAN VIEW
(For typical transverse joint spacing of 20' on the current project)

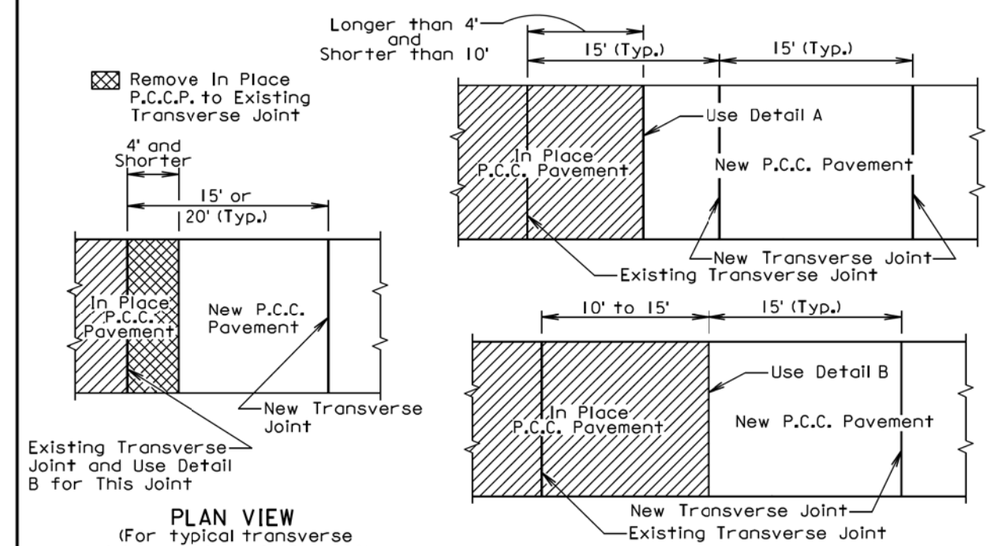

PLAN VIEW
(For typical transverse joint spacing of 15' or 20' on the current project)

PLAN VIEW
(For typical transverse joint spacing of 15' on the current project)

September 6, 2013

Published Date: 3rd Qtr. 2015	SDDOT	PCC PAVEMENT TRANSVERSE CONSTRUCTION JOINTS WITH TIE BARS OR DOWEL BARS	PLATE NUMBER 380.08
			Sheet 2 of 2

PLOT SCALE - 1:200
PLOT NAME - 79
FILE - ...\JONS035E\STDPLATEPAGE 5.DGN
PLOTTED FROM - TRPR16032

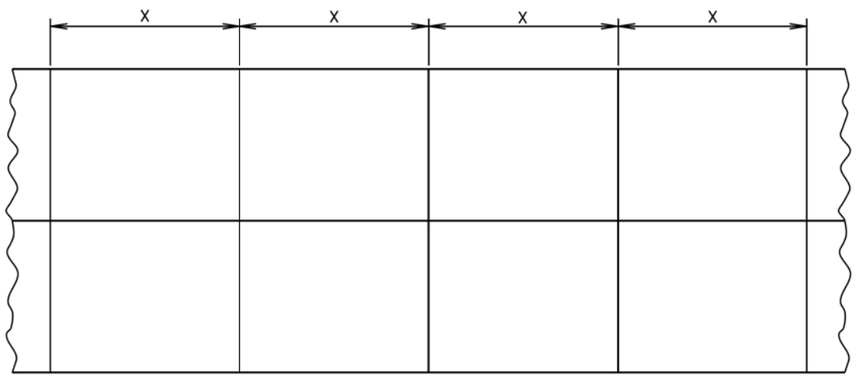

PCCP Thickness	Transverse Contraction Joint Spacing (X)
8" to 9.5"	15'
10" and Thicker	20'

August 31, 2013

Published Date: 3rd Qtr. 2015

SDDOT

PCC PAVEMENT TYPICAL CONTRACTION JOINT SPACING

PLATE NUMBER 380.09

Sheet 1 of 1

LONGITUDINAL CONSTRUCTION JOINT WITH TIE BARS

(DRILLED IN BARS)

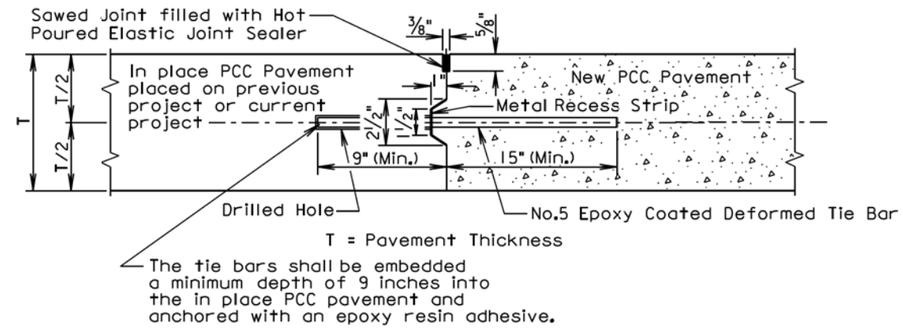

LONGITUDINAL CONSTRUCTION JOINT WITH TIE BARS

(INSERTED OR FORMED IN BARS)

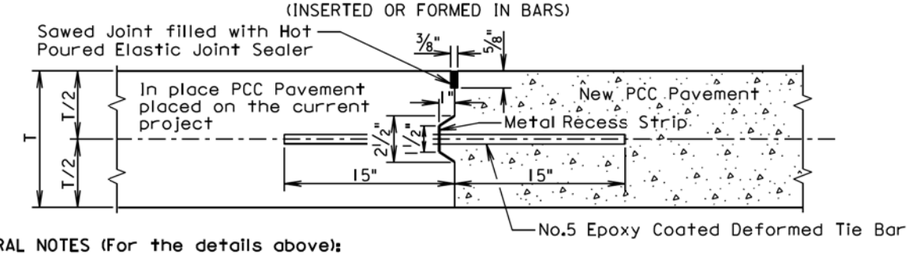

GENERAL NOTES (For the details above):

The epoxy coated deformed tie bars shall be spaced in accordance with the following tables:

Tie Bar Spacing 48" Maximum	
Transverse Contraction Joint Spacing	Number of Tie Bars
6.5' to 10'	2
10.5' to 14'	3
14.5' to 18'	4
18.5' to 22'	5

Tie Bar Spacing 30" Maximum	
Transverse Contraction Joint Spacing	Number of Tie Bars
5' to 7'	2
7.5' to 9.5'	3
10' to 12'	4
12.5' to 14.5'	5
15' to 17'	6
17.5' to 19.5'	7
20' to 22'	8

The tie bars shall be placed a minimum of 15 inches from transverse contraction joints.

The required number of tie bars as shown in the table shall be uniformly spaced within each panel. The uniformly spaced tie bars shall be spaced a maximum of 48 inches center to center for a female keyway and shall be spaced a maximum of 30 inches center to center for a vertical face and male keyway. The maximum tie bar spacing shall apply to tie bars within each panel.

The keyway illustrated in the above details depict a female keyway.

The keyway is optional and is not required. When concrete pavement is formed and a keyway is provided, a metal recess strip shall be used. When concrete pavement is slip formed, a metal recess strip is not required.

August 31, 2013

Published Date: 3rd Qtr. 2015

SDDOT

PCC PAVEMENT LONGITUDINAL JOINTS WITH TIE BARS

PLATE NUMBER 380.10

Sheet 1 of 2

PLOT SCALE - 1:200
PLOT NAME - 80
FILE - ...\JONS035E\STDPLATEPAGE 6.DGN
PLOTTED FROM - TRPR16032

SAWED LONGITUDINAL JOINT WITH TIE BARS

(POURED MONOLITHICALLY)

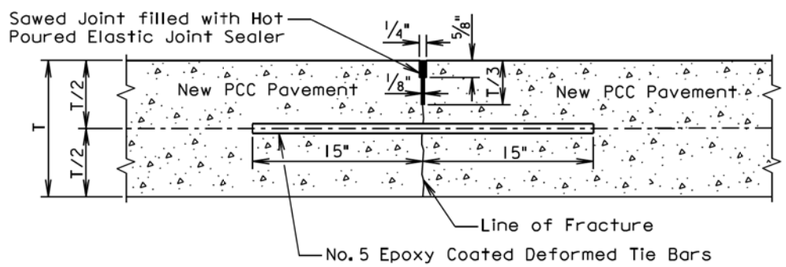

T = Pavement Thickness

GENERAL NOTES (For the detail above):

The epoxy coated deformed tie bars shall be spaced in accordance with the following table:

Tie Bar Spacing 48" Maximum	
Transverse Contraction Joint Spacing	Number of Tie Bars
6.5' to 10'	2
10.5' to 14'	3
14.5' to 18'	4
18.5' to 22'	5

The tie bars shall be placed a minimum of 15 inches from the transverse contraction joints.

The required number of tie bars as shown in the table shall be uniformly spaced within each panel with a maximum space of 48 inches center to center. The maximum tie bar spacing shall apply to tie bars within each panel.

The first saw cut to control cracking shall be a minimum of 1/3 the thickness of the pavement. Additional sawing for widening the saw cut to provide the width for the installation of the hot poured elastic joint sealer is necessary.

August 31, 2013

Published Date: 3rd Qtr. 2015	SDDOT	PCC PAVEMENT LONGITUDINAL JOINTS WITH TIE BARS	PLATE NUMBER 380.10
			Sheet 2 of 2

LONGITUDINAL CONSTRUCTION JOINT WITHOUT TIE BARS

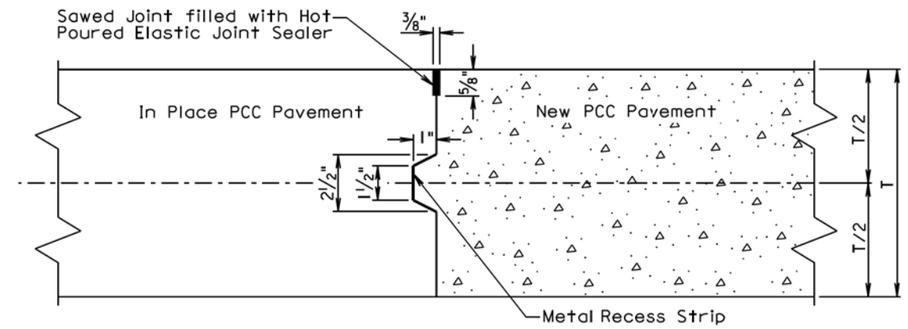

T = Pavement Thickness

GENERAL NOTES:

When concrete pavement is formed and a keyway is provided, a metal recess strip shall be used. When concrete pavement is slip formed, a metal recess strip is not required.

The term "In Place PCC Pavement" in the above drawing indicates that the in place PCC pavement was placed on the current project.

LONGITUDINAL CONSTRUCTION JOINT WITHOUT TIE BARS

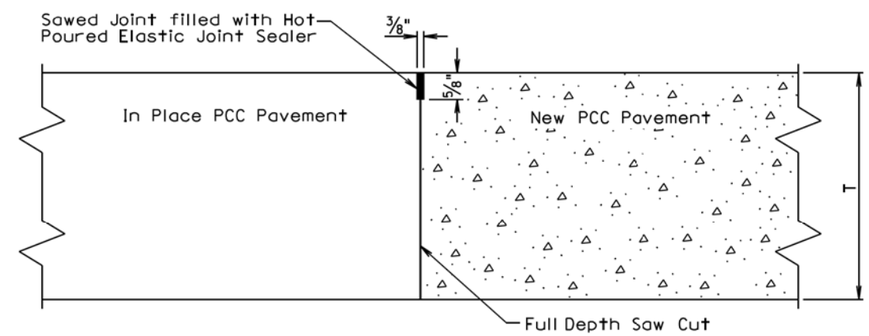

T = Pavement Thickness

GENERAL NOTE:

The term "In Place PCC Pavement" in the above drawing indicates that the in place PCC pavement was placed on a previous project.

September 14, 2001

Published Date: 3rd Qtr. 2015	SDDOT	PCC PAVEMENT LONGITUDINAL JOINTS WITHOUT TIE BARS	PLATE NUMBER 380.12
			Sheet 1 of 2

PLOT SCALE - 1:200
PLOT NAME - 81
FILE - ...\JONS035E\STDPLATEPAGE 7.DGN
PLOTTED FROM - TRPR16032

SAWED LONGITUDINAL JOINT WITHOUT TIE BARS

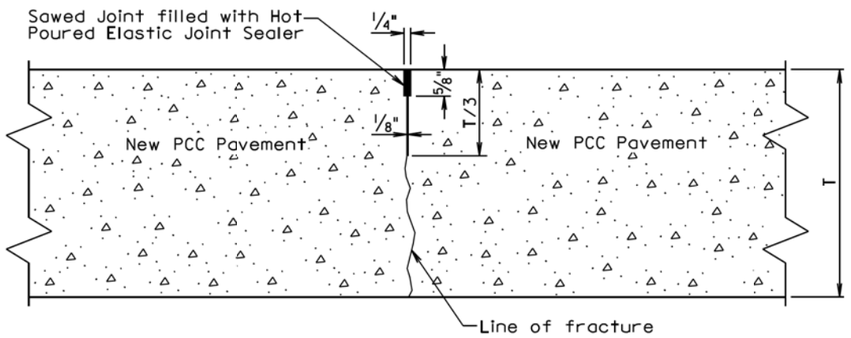

T = Pavement Thickness

GENERAL NOTE:

The first saw cut to control cracking shall be a minimum of 1/3 the thickness of the pavement. Additional sawing for widening the saw cut to provide the width for the installation of the hot poured elastic joint sealer will be necessary.

September 14, 2001

Published Date: 3rd Qtr. 2015	SDDOT	PCC PAVEMENT LONGITUDINAL JOINTS WITHOUT TIE BARS	PLATE NUMBER 380.12 Sheet 2 of 2

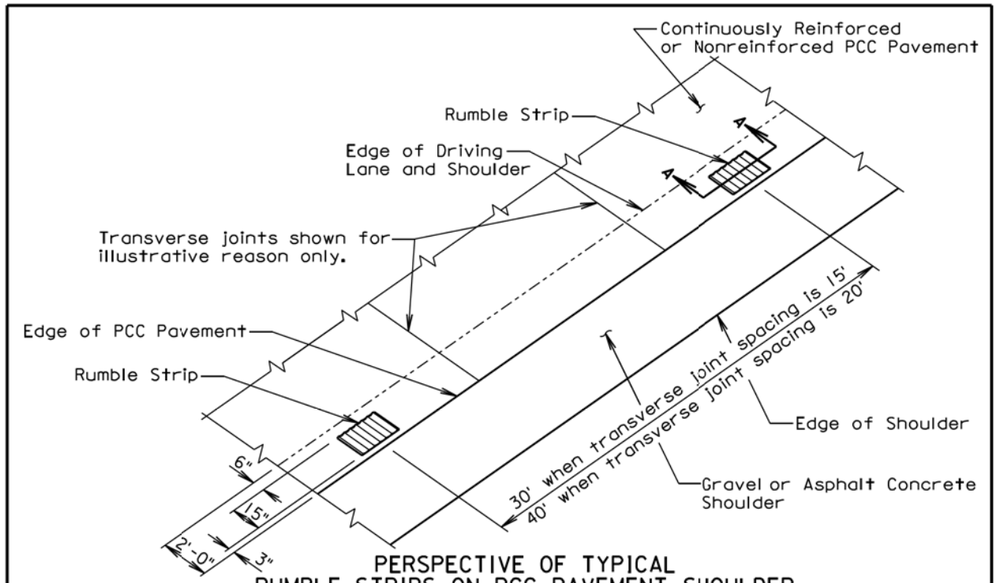

PERSPECTIVE OF TYPICAL
RUMBLE STRIPS ON PCC PAVEMENT SHOULDER
ADJACENT TO GRAVEL OR ASPHALT CONCRETE SHOULDER

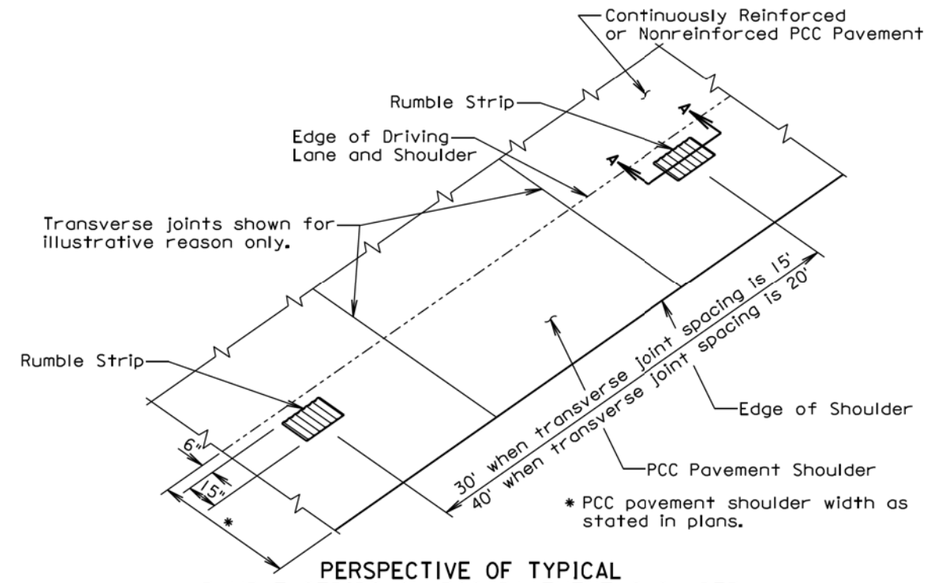

PERSPECTIVE OF TYPICAL
RUMBLE STRIPS ON PCC PAVEMENT SHOULDER

August 31, 2013

Published Date: 3rd Qtr. 2015	SDDOT	RUMBLE STRIP ON PCC PAVEMENT SHOULDER	PLATE NUMBER 380.15 Sheet 1 of 2

PLOT SCALE - 1:200
PLOT NAME - 82
FILE - ...\JONS035E\STDPLATEPAGE 8.DGN
-PLOTTED FROM - TRPR16032

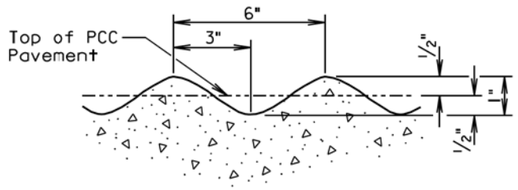

DETAIL B

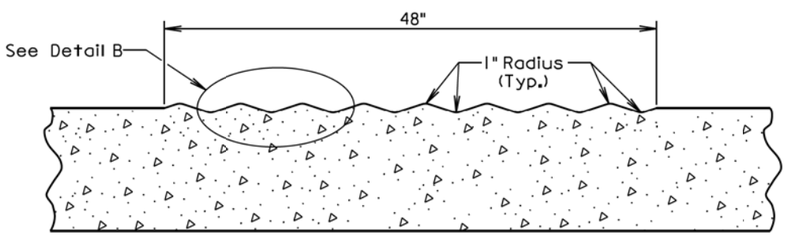

SECTION A-A

GENERAL NOTES:

The rumble strips shall be evenly spaced and shall not coincide with any transverse contraction joints.

The rumble strips shall NOT be placed along areas adjacent to entrance ramps, exit ramps, and gore areas.

Payment for constructing the PCC Pavement Rumble Strips shall be incidental to the contract unit price per square yard for the corresponding PCC Pavement bid item.

August 31, 2013

Published Date: 3rd Qtr. 2015	SDDOT	RUMBLE STRIP ON PCC PAVEMENT SHOULDER	PLATE NUMBER 380.15
			Sheet 2 of 2

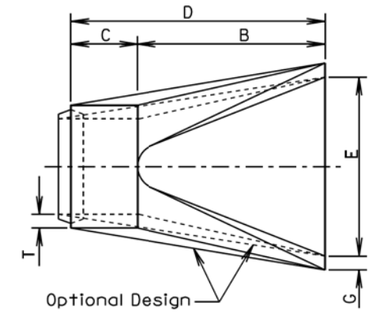

TOP VIEW

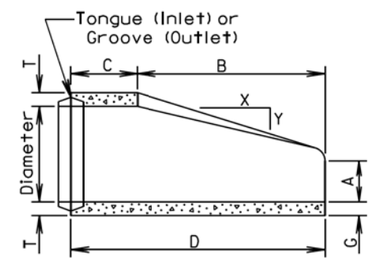

LONGITUDINAL SECTION

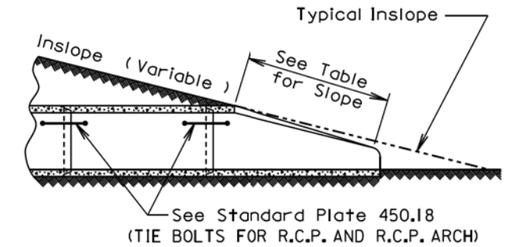

SLOPE DETAIL

GENERAL NOTES:

Lengths of concrete pipe shown on plan sheets are between flared ends only.

Construction of R.C.P. Flared End shall conform to the requirements of Section 990 of the Specifications.

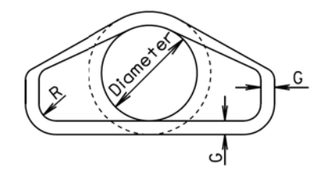

END VIEW

Dia. (in.)	Approx. Wt. of Section (lbs.)	Approx. Slope (X to Y)	T (in.)	A (in.)	B (in.)	C (in.)	D (in.)	E (in.)	G (in.)	R (in.)
12	530	2.4: 1	2	4	24	48 7/8	72 7/8	24	2	1 1/2
15	740	2.4: 1	2 1/4	6	27	46	73	30	2 1/4	1 1/2
18	990	2.3: 1	2 1/2	9	27	46	73	36	2 1/2	1 1/2
21	1280	2.4: 1	2 3/4	9	36	37 1/2	73 1/2	42	2 3/4	1 1/2
24	1520	2.5: 1	3	9 1/2	43 1/2	30	73 1/2	48	3	1 1/2
27	1930	2.5: 1	3 1/4	10 1/2	49 1/2	24	73 1/2	54	3 1/4	1 1/2
30	2190	2.5: 1	3 1/2	12	54	19 3/4	73 3/4	60	3 1/2	1 1/2
36	4100	2.5: 1	4	15	63	34 3/4	97 3/4	72	4	1 1/2
42	5380	2.5: 1	4 1/2	21	63	35	98	78	4 1/2	1 1/2
48	6550	2.5: 1	5	24	72	26	98	84	5	1 1/2
54	8240	2: 1	5 1/2	27	65	33 1/4	98 1/4	90	5 1/2	1 1/2
60	8730	1.9: 1	6	35	60	39	99	96	5	1 1/2
66	10710	1.7: 1	6 1/2	30	72	27	99	102	5 1/2	1 1/2
72	12520	1.8: 1	7	36	78	21	99	108	6	1 1/2
78	14770	1.8: 1	7 1/2	36	90	21	111	114	6 1/2	1 1/2
84	18160	1.6: 1	8	36	90 1/2	21	111 1/2	120	6 1/2	1 1/2
90	20900	1.5: 1	8 1/2	41	87 1/2	24	111 1/2	132	6 1/2	6

June 26, 2015

Published Date: 3rd Qtr. 2015	SDDOT	R. C. P. FLARED ENDS	PLATE NUMBER 450.10
			Sheet 1 of 1

PLOT SCALE - 1:200
PLOT NAME - 83
FILE - ...\JONS035E\STDPLATEPAGE 9.DGN
-PLOTTED FROM - TRPR16032

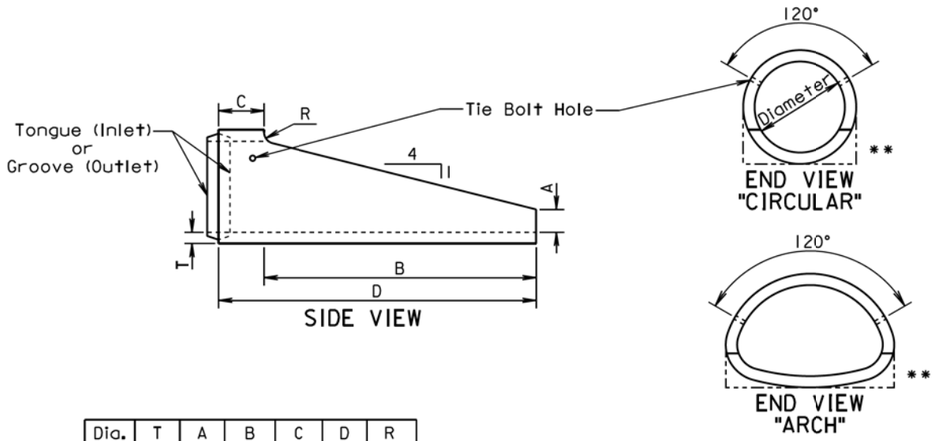

Dia. (in.)	T (in.)	A (in.)	B (in.)	C (in.)	D (in.)	R (in.)
FOR CIRCULAR PIPE						
24	3	6	72	12	84	3
30	3½	7½	90	12	102	3½
FOR ARCH PIPE						
* 24	3	6	48	12	60	3
* 30	3½	7½	60	12	72	3½
* 36	4½	8⅝	66	30	96	0
* 42	4½	10	77¼	18¾	96	0

ALTERNATE

Dia. (in.)	T (in.)	A (in.)	B (in.)	C (in.)	D (in.)	R (in.)
FOR CIRCULAR PIPE						
24	3	9	72	12	84	0
30	3½	11	90	12	102	0
FOR ARCH PIPE						
* 24	3	9	48	12	60	0
* 30	3½	11	60	12	72	0

* Equivalent Diameter of Circular R.C.P.

** Acceptable Flat Bottom Alternate.

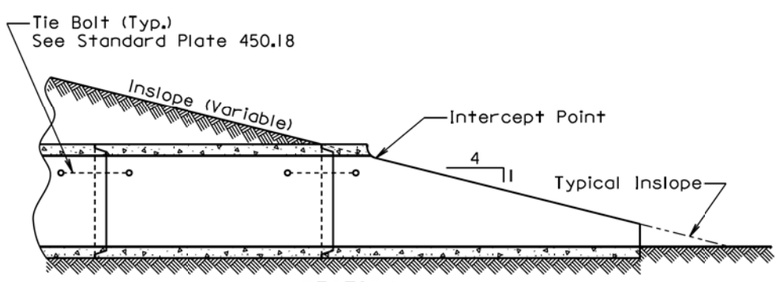

SECTION
(Along Centerline of Pipe)

GENERAL NOTE:

The length of concrete pipe shown in the construction plans is between sloped ends.

September 22, 2006

Published Date: 3rd Qtr. 2015	SDDOT	R. C. P. SLOPED ENDS	PLATE NUMBER 450.13 Sheet 1 of 1

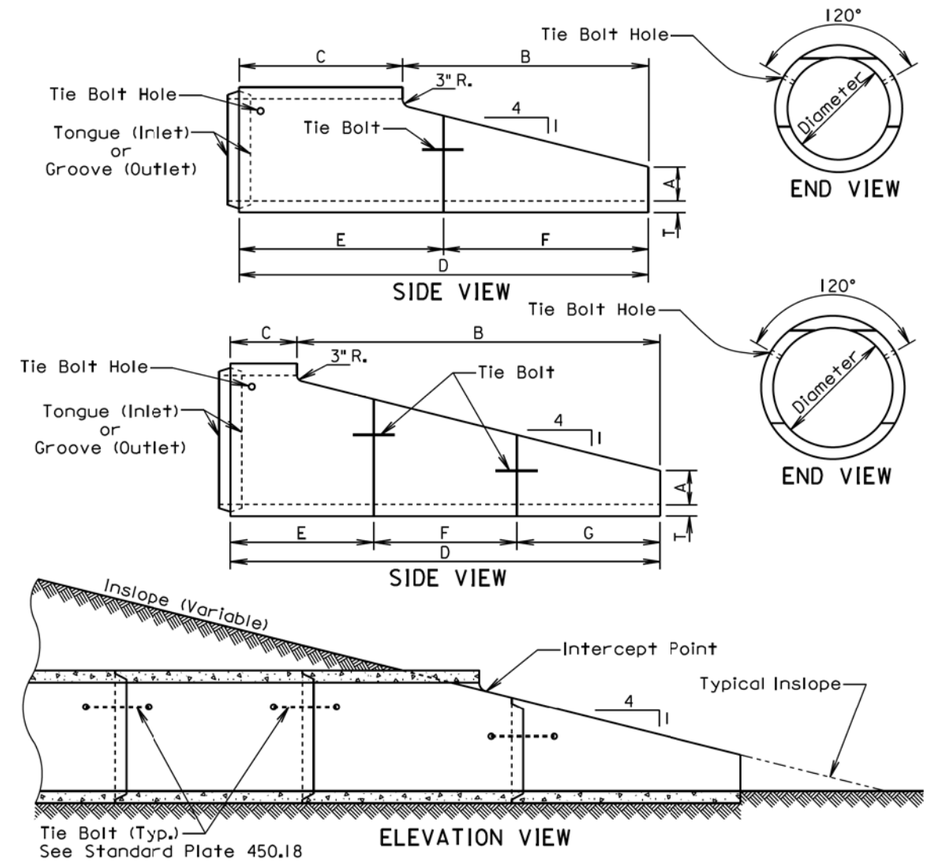

ELEVATION VIEW

Dia. (in.)	T (in.)	A (in.)	B (in.)	C (in.)	D (in.)	E (in.)	F (in.)	G (in.)
36	4	12	86.5	57.5	144	72	72	
42	4.5	12	110.5	33.5	144	72	72	
48	5	12	134.5	33.5	168	96	72	
54	5.5	12	158.5	33.5	192	96	96	
60	6	12	182.5	33.5	216	72	72	72

GENERAL NOTE:

The length of concrete pipe shown in the construction plans is between sloped ends.

If bars are specified in the plans, then the bar assemblies shall be constructed in accordance with Standard Plate 450.15.

August 31, 2013

Published Date: 3rd Qtr. 2015	SDDOT	R. C. P. SLOPED ENDS WITH OR WITHOUT BARS	PLATE NUMBER 450.14 Sheet 1 of 1

PLOT SCALE - 1:200

PLOTTED FROM - TRPR16032

PLOT NAME - 84

FILE - ...\JONS035E\STDPLATEPAGE 10.DGN

Wall "t" (in.)	Rod Dia. (in.)	Pipe Sleeve Dia. (nominal)
≤ 3¼	⅝	¾
3½-6½	¾	1
≥ 7	1	1¼

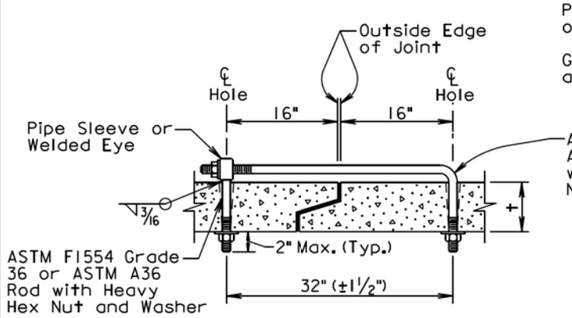

ADJUSTABLE EYE BOLT TIE

GENERAL NOTES:

Tie bolts shall conform to ASTM F1554 Grade 36 or ASTM A36. Nuts shall be heavy hex conforming to ASTM A563. Washers shall conform to ASTM F436.

Pipe Sleeve shall conform to ASTM A500 or A53, Grade B.

Galvanize adjustible eye bolt tie assembly in accordance with ASTM A153.

Pipe Dia. (in.)	"L" (in.)	Bolt Dia. (in.)
≤ 48	4	¾
> 48	6	1

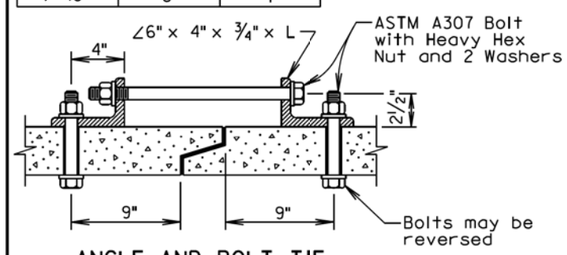

ANGLE AND BOLT TIE

GENERAL NOTES:

Angles shall conform to ASTM A36.

Bolts shall conform to ASTM A307. Nuts shall be heavy hex conforming to ASTM A563. Washers shall conform to ASTM F436.

Galvanize angles, bolts, nuts, and washers in accordance with ASTM A153.

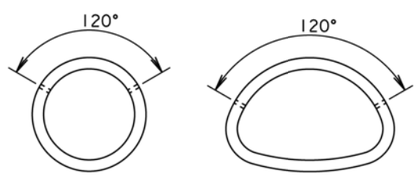

END VIEW "CIRCULAR"

END VIEW "ARCH"

GENERAL NOTES:

In lieu of the tie bolts detailed above other types of tie bolt connections may be installed as approved by the Office of Bridge Design.

All pipe sections of R.C.P. and R.C.P. Arch shall be tied with tie bolts except for pipe located between drop inlets, manholes, and junction boxes. All pipe sections of pipes that only enter or exit drop inlets, manhole, and junction boxes shall be tied with tie bolts.

There will be no separate measurement or payment for the tie bolts. The cost for furnishing and installing the tie bolts shall be incidental to the contract unit price per foot for the corresponding bid item for R.C.P. or R.C.P. Arch.

February 28, 2013

Published Date: 3rd Qtr. 2015	SDDOT	TIE BOLTS FOR R.C.P. AND R.C.P. ARCH	PLATE NUMBER 450.18
			Sheet 1 of 1

Alternate Type Connector Sections may be used with approval of the Engineer.

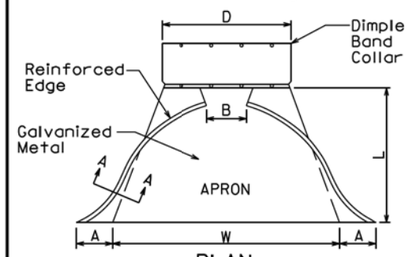

PLAN

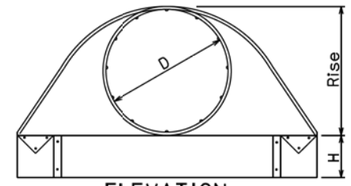

ELEVATION

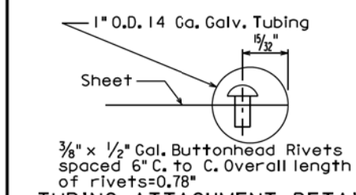

TUBING ATTACHMENT DETAILS
SECTION A-A

Dia. D (in.)	Ga.	DIMENSIONS (in.) A	B	H	L	W	Approx. Slope	Body
12	16	6	6	6	21	24	2½:1	1 Pc.
15	16	7	8	6	26	30	2½:1	1 Pc.
18	16	8	10	6	31	36	2½:1	1 Pc.
21	16	9	12	6	36	42	2½:1	1 Pc.
24	16	10	13	6	41	48	2½:1	1 Pc.
30	14	12	16	8	46	60	2½:1	1 Pc.
36	14	14	19	9	51	72	2½:1	2 Pc.
42	12	16	22	11	60	84	2½:1	2 Pc.
48	12	18	27	12	69	90	2¼:1	2 Pc.
54	12	18	30	12	78	102	2:1	3 Pc.
60	12	18	33	12	84	114	1¾:1	3 Pc.
66	12	18	36	12	87	120	1½:1	3 Pc.
72	12	18	39	12	87	126	1⅓:1	3 Pc.
78	12	18	42	12	87	132	1¼:1	3 Pc.
84	12	18	45	12	87	138	1⅙:1	3 Pc.

STANDARD CONNECTIONS

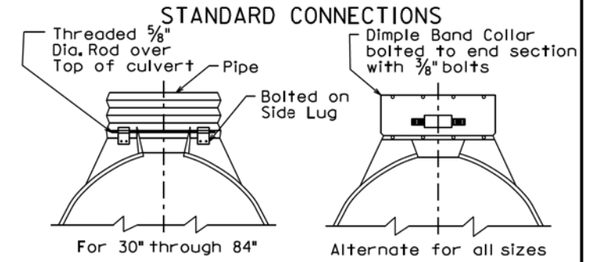

For 30" through 84"

Alternate for all sizes

NOTE:
Tubing is slipped over the sheet and rivets or lugs prior to forming operations of the apron.

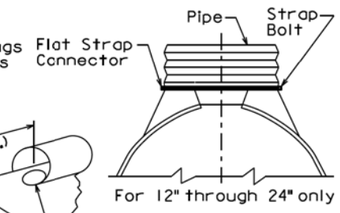

For 12" through 24" only

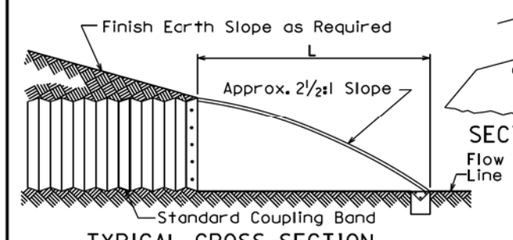

TYPICAL CROSS-SECTION

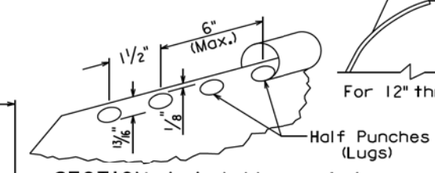

SECTION A-A (alternate)

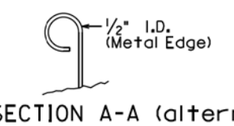

SECTION A-A (alternate)

GENERAL NOTES:

All 3 pc. bodies shall have 12 Ga. sides and 10 Ga. center panels. Width of center panels shall be greater than 20% of the pipe periphery. Multiple panel bodies to have lap seams tightly joined by ⅜" Dia. galvanized rivets or bolts.

For 60" through 84" sizes, reinforced edges shall be supplemented with galvanized stiffener angles. The angles will be 2" x 2" x ¼" for 60" through 72" diameters and 2½" x 2½" x ¼" for 78" and 84" diameters. The angles shall be attached by ⅜" diameter galvanized nuts and bolts.

Rivets and Bolts shall be ⅜" Dia. Min. for 10 Ga. and 12 Ga. sheet, and 5/16" Dia. Min. for 14 Ga. and 16 Ga. sheets. Tighten nuts with torque wrench to 25 lbs. torque.

March 31, 2000

Published Date: 3rd Qtr. 2015	SDDOT	C.M.P. FLARED ENDS	PLATE NUMBER 450.35
			Sheet 1 of 1

PLOT SCALE - 1:200
PLOT NAME - 85
FILE - ...\JONS035E\STDPLATEPAGE 11.DGN
-PLOTTED FROM - TRPR16032

GENERAL NOTES:

Either flanged channel steel posts or S3x5.7 steel I beam posts shall be used, but post type shall be consistent thoughout the project. The S3x5.7 Steel I Beam post shall be used for the end posts.

All costs associated with furnishing and constructing the 3 cable guardrail anchor assembly including the concrete anchor, cable anchor bracket, compensating device, steel turnbuckle cable assembly, and necessary hardware shall be incidental to the contract unit price per each for "3 Cable Guardrail Anchor Assembly".

All costs associated with furnishing and constructing the 3 cable guardrail including posts, cable, cable splices, and hardware shall be incidental to the contract unit price per foot for "3 Cable Guardrail".

The following table and criteria shall apply to the arrangement of the Spring Cable End Assemblies (Compensation Devices) and Turnbuckle Cable End Assemblies:

LENGTH OF CABLE RUN	CRITERIA FOR ARRANGEMENT OF THE SPRING CABLE END ASSEMBLIES (COMPENSATION DEVICES) AND TURNBUCKLE CABLE END ASSEMBLIES
Less than 500'	Use turnbuckle on the approaching traffic end and compensating device on the other end of each individual cable, except in the W Beam to 3 Cable Transition where all compensating devices shall be provided at the bridge ends.
Greater than 500' to 1000'	Use compensating device on each end of each individual cable.
Greater than 1000'	Start new run by interlacing at last parallel post as shown on sheet 2 of 6.

All Compensating Devices shall be attached to the cable anchor bracket when one end of the run is attached to a bridge.

Compensating Devices must have a spring rate of 450 ± 50 pounds per inch and shall have a total available travel of 6 inches minimum.

The cable shall be retensioned after the initial 2 week pretension period in accordance with the following table:

CABLE TENSIONING SPECIFICATIONS

Temperature Range (Degree F)	-20 to -11	-10 to -1	0 to 9	10 to 19	20 to 29	30 to 39	40 to 49	50 to 59	60 to 69	70 to 79	80 to 89	90 to 99	100 to 109	110 to 120
Spring Compression (Inch)	4¼	4	3¾	3½	3¼	3	2¾	2½	2¼	2	1¾	1½	1¼	1

POST SPACING FOR HORIZONTAL CURVES

Roadway ℄ Curvature	Maximum Post Spacing (Ft)
1° and Less	16'
Greater than 1° to 8°	12'
Greater than 8° to 13°	8'
Greater than 13°	NOT ALLOWED

June 26, 2015

Published Date: 3rd Qtr. 2015

SDDOT

3 CABLE GUARDRAIL (LOW TENSION)

PLATE NUMBER 629.01

Sheet 1 of 6

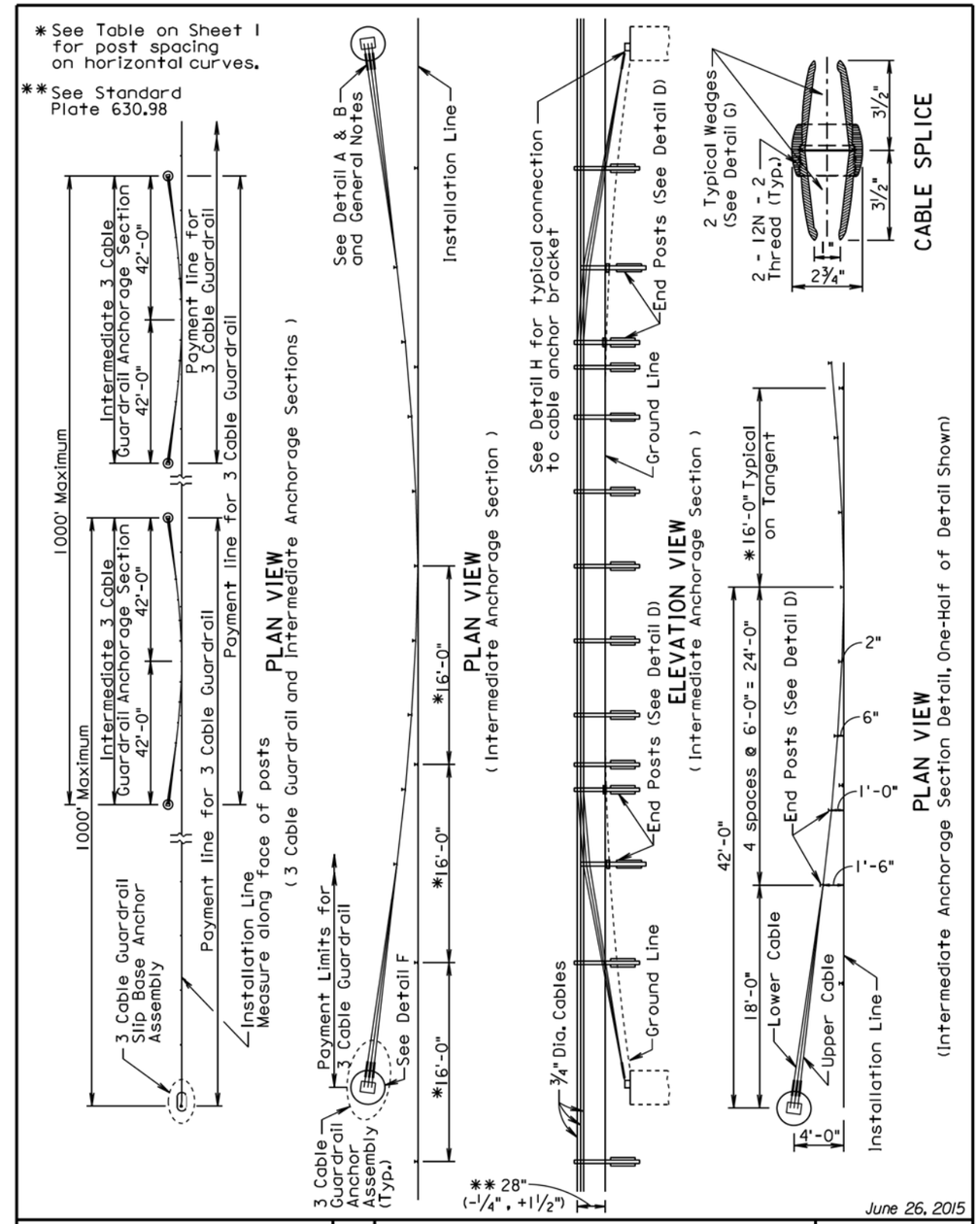

June 26, 2015

Published Date: 3rd Qtr. 2015

SDDOT

3 CABLE GUARDRAIL (LOW TENSION)

PLATE NUMBER 629.01

Sheet 2 of 6

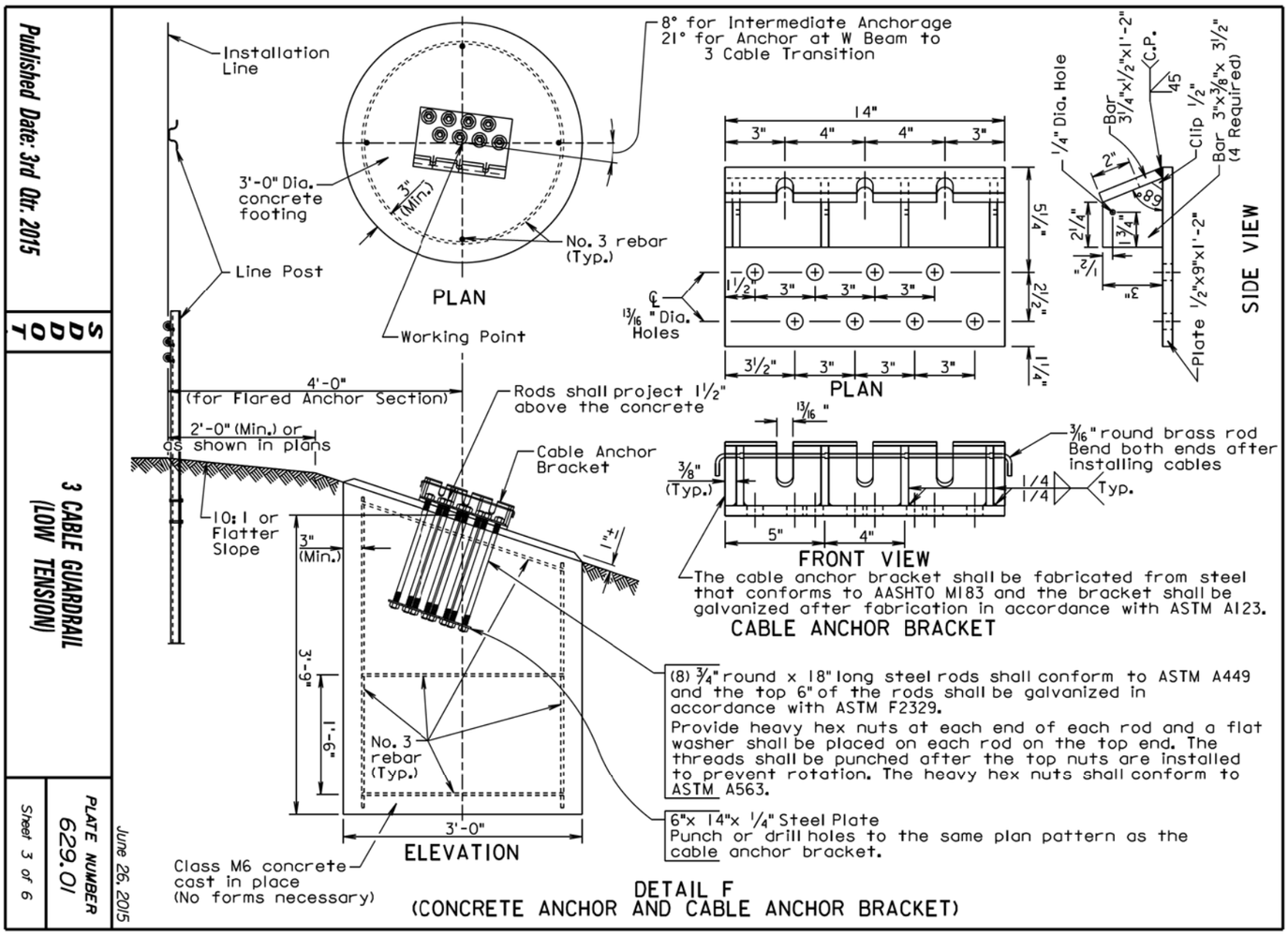

DETAIL F
(CONCRETE ANCHOR AND CABLE ANCHOR BRACKET)

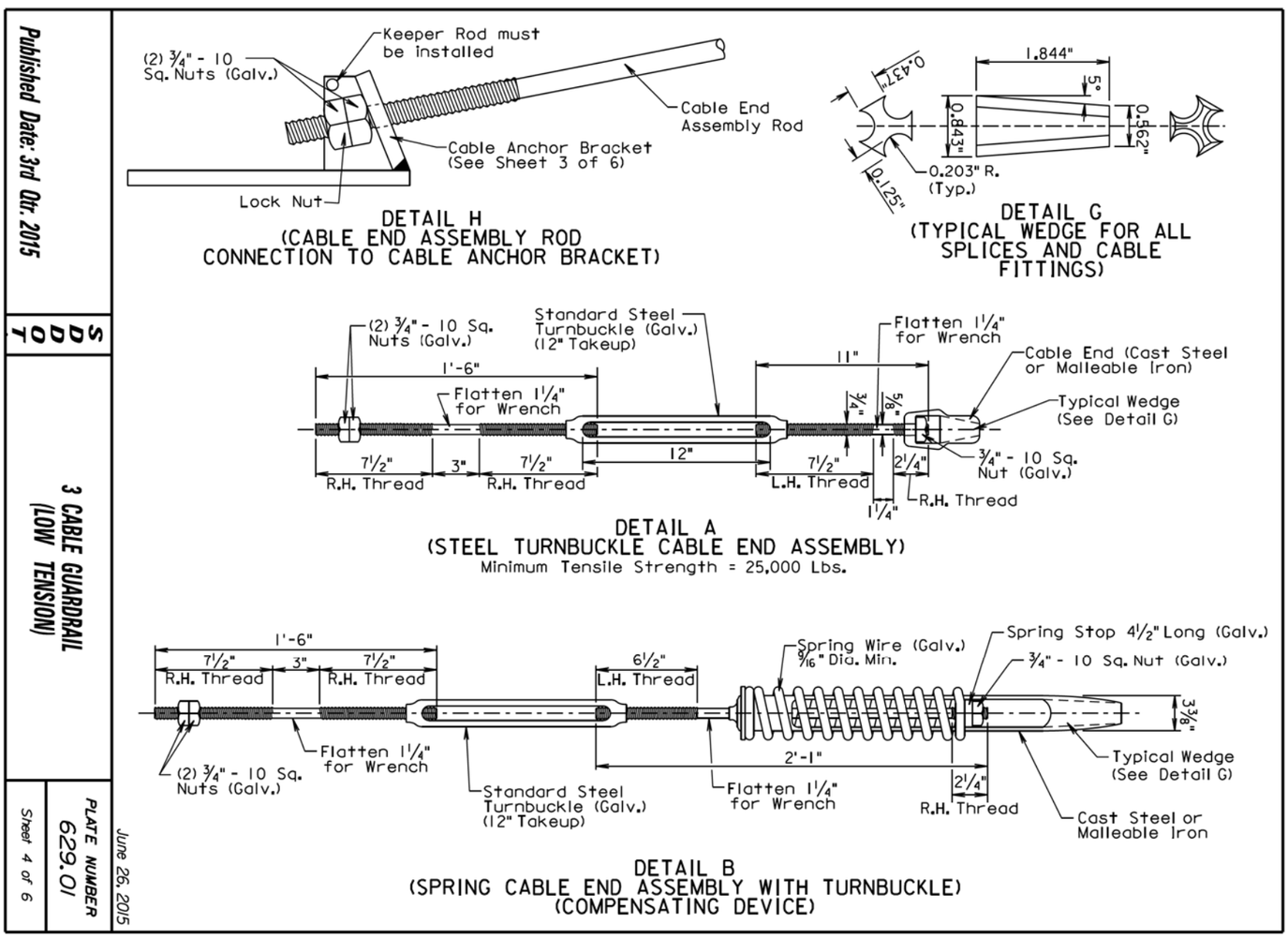

Published Date: 3rd Qtr. 2015

SDDOT

3 CABLE GUARDRAIL (LOW TENSION)

PLATE NUMBER 629.01

Sheet 3 of 6

June 26, 2015

Published Date: 3rd Qtr. 2015

SDDOT

3 CABLE GUARDRAIL (LOW TENSION)

PLATE NUMBER 629.01

Sheet 4 of 6

June 26, 2015

STATE OF SOUTH DAKOTA

PROJECT IM 0904(57)189 & NH 0083(85)87

SHEET F111

TOTAL SHEETS F145

Plotting Date: 08/06/2015

Published Date: 3rd Qtr. 2015

SDDOT

3 CABLE GUARDRAIL (LOW TENSION)

PLATE NUMBER 629.01

Sheet 5 of 6

June 26, 2015

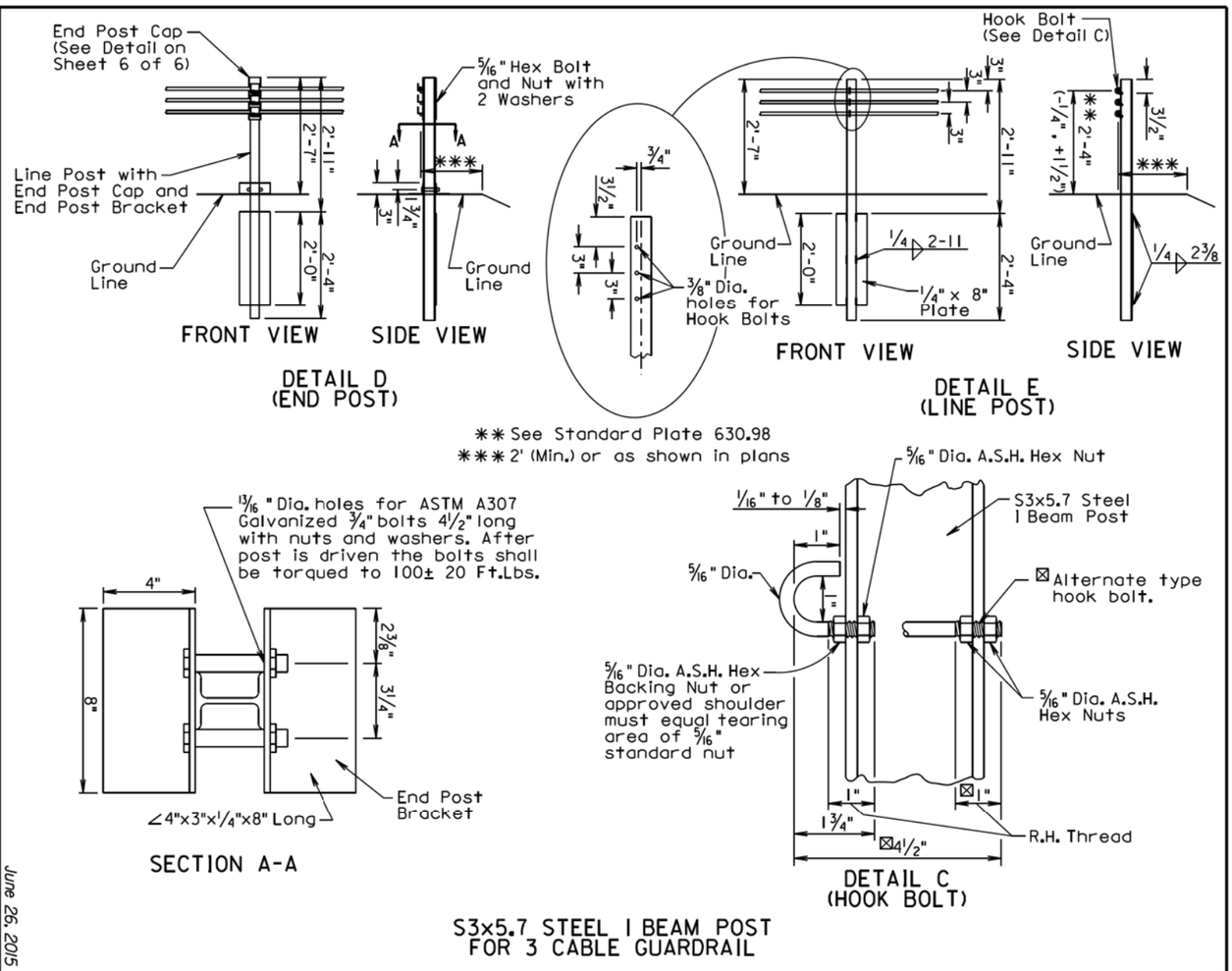

Published Date: 3rd Qtr. 2015

SDDOT

3 CABLE GUARDRAIL (LOW TENSION)

PLATE NUMBER 629.01

Sheet 6 of 6

June 26, 2015

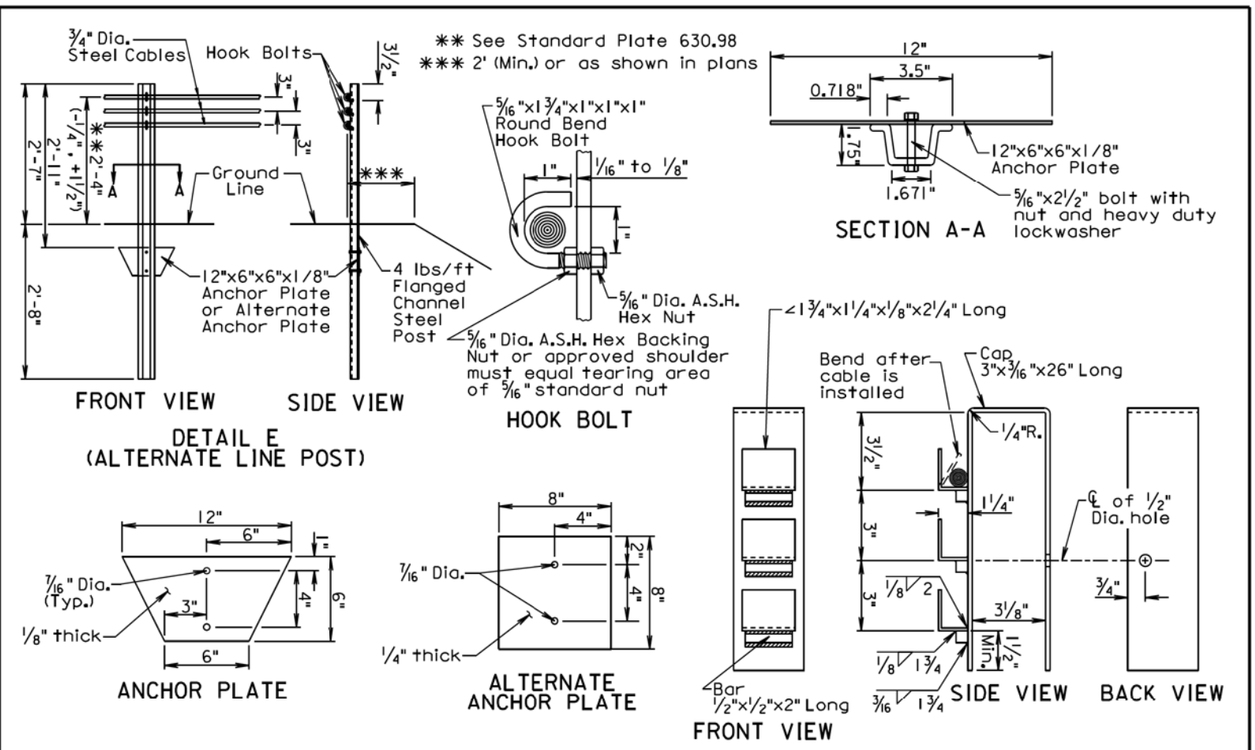

GENERAL NOTES:

Flanged channel steel posts shall be produced from high strength steel in accordance with ASTM A499, Grade 60.

Anchor plates shall be in conformance with ASTM A709, Grade 36.

Bolt shall be in conformance with ASTM A354 Grade BD or BC. Nut shall be in conformance with ASTM A563 Grade DH.

Bolt shall be galvanized in accordance with ASTM F2329.

Finish for the post and anchor plate shall be a baked on high quality dark green enamel.

Alternate anchor plate may be unfinished.

Plotting Date: 08/06/2015

STATE OF SOUTH DAKOTA	PROJECT IM 0904(57)189 & NH 0083(85)87	SHEET F112	TOTAL SHEETS F145

Published Date: 3rd Qtr. 2015

SDDOT

W BEAM TO 3 CABLE TRANSITION

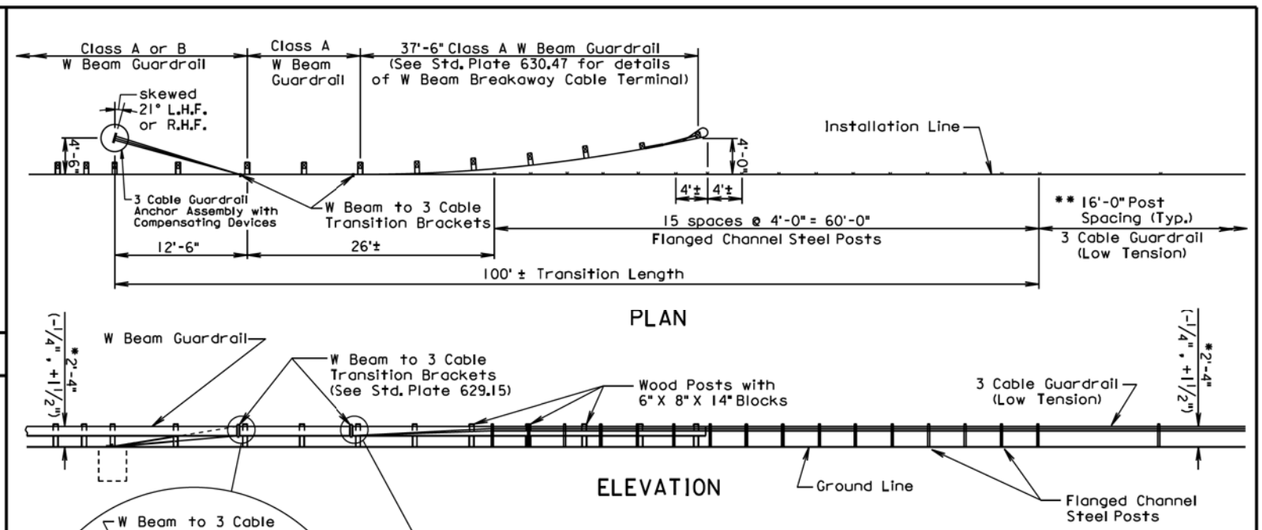

PLAN

ELEVATION

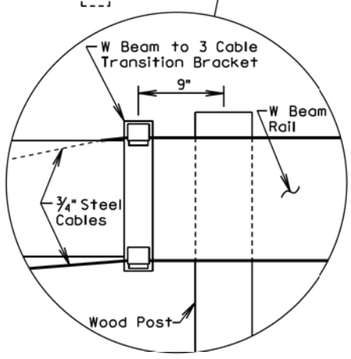

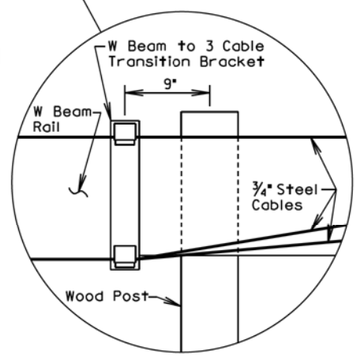

* See Standard Plate 630.98

** or post spacing as specified in the plans

GENERAL NOTES:

Flanged channel steel posts are shown on this standard plate, however, S3 X 5.7 steel I beam posts may be substituted for the flanged channel steel posts.

All costs associated with furnishing and installing the W Beam to 3 Cable Transition Bracket shall be incidental to the contract unit price per Ft. for "3 Cable Guardrail", "Reset 3 Cable Guardrail", or "Reset 3 Cable Guardrail, Cable Only".

See Standard Plates 630.31, 630.32, and 630.33 for details and payment information for W Beam Guardrail.

See Standard Plate 629.01 for details and payment information for 3 Cable Guardrail.

PLATE NUMBER 629.05

Sheet 1 of 1

December 16, 2014

Published Date: 3rd Qtr. 2015

SDDOT

3 CABLE GUARDRAIL SLIP BASE ANCHOR ASSEMBLY

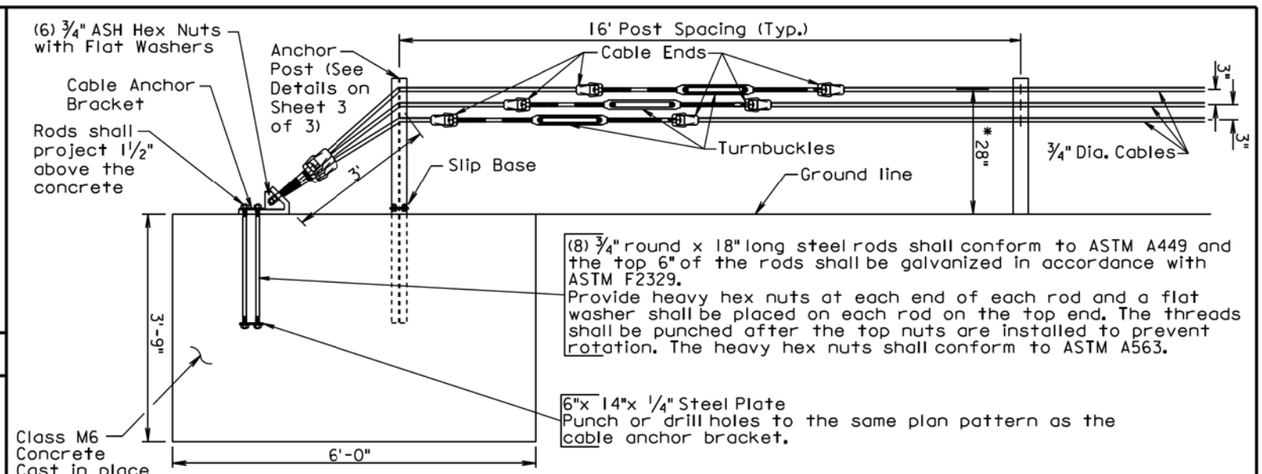

ELEVATION VIEW
(Anchor Assembly)

(8) 3/4" round x 18" long steel rods shall conform to ASTM A449 and the top 6" of the rods shall be galvanized in accordance with ASTM F2329.
Provide heavy hex nuts at each end of each rod and a flat washer shall be placed on each rod on the top end. The threads shall be punched after the top nuts are installed to prevent rotation. The heavy hex nuts shall conform to ASTM A563.

6" x 14" x 1/4" Steel Plate
Punch or drill holes to the same plan pattern as the cable anchor bracket.

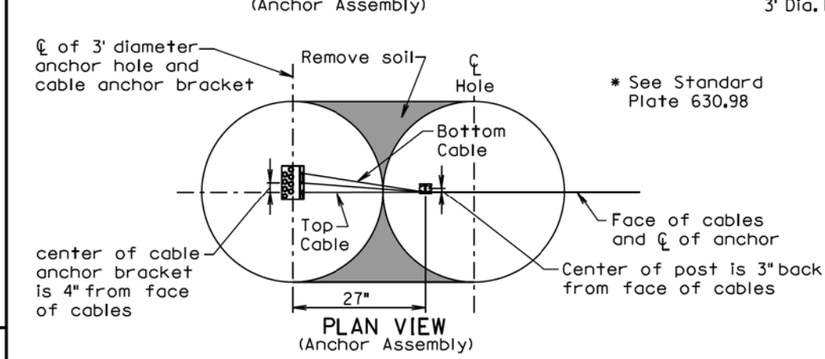

PLAN VIEW
(Anchor Assembly)

* See Standard Plate 630.98

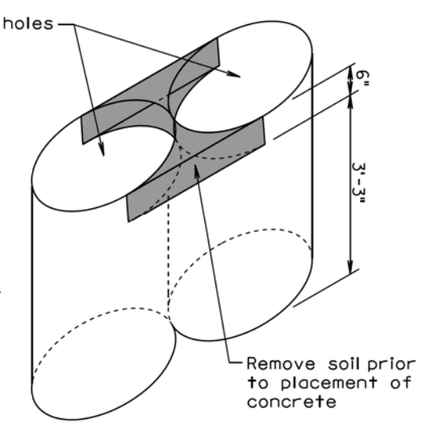

ISOMETRIC VIEW

ANCHOR CONSTRUCTION NOTES:

1. Auger two 3' diameter by 3'-9" deep holes tangent to each other.
2. Clean out the top 6 inches of soil between the holes.
3. Place concrete in holes with anchor bolts and slip base stub post in place.
4. For informational purposes the neat line concrete volume of the anchor is 1.9 cubic yards.

PLATE NUMBER 629.10

Sheet 1 of 3

June 26, 2015

STATE OF SOUTH DAKOTA	PROJECT IM 0904(57)189 & NH 0083(85)87	SHEET F113	TOTAL SHEETS F145

Plotting Date: 08/06/2015

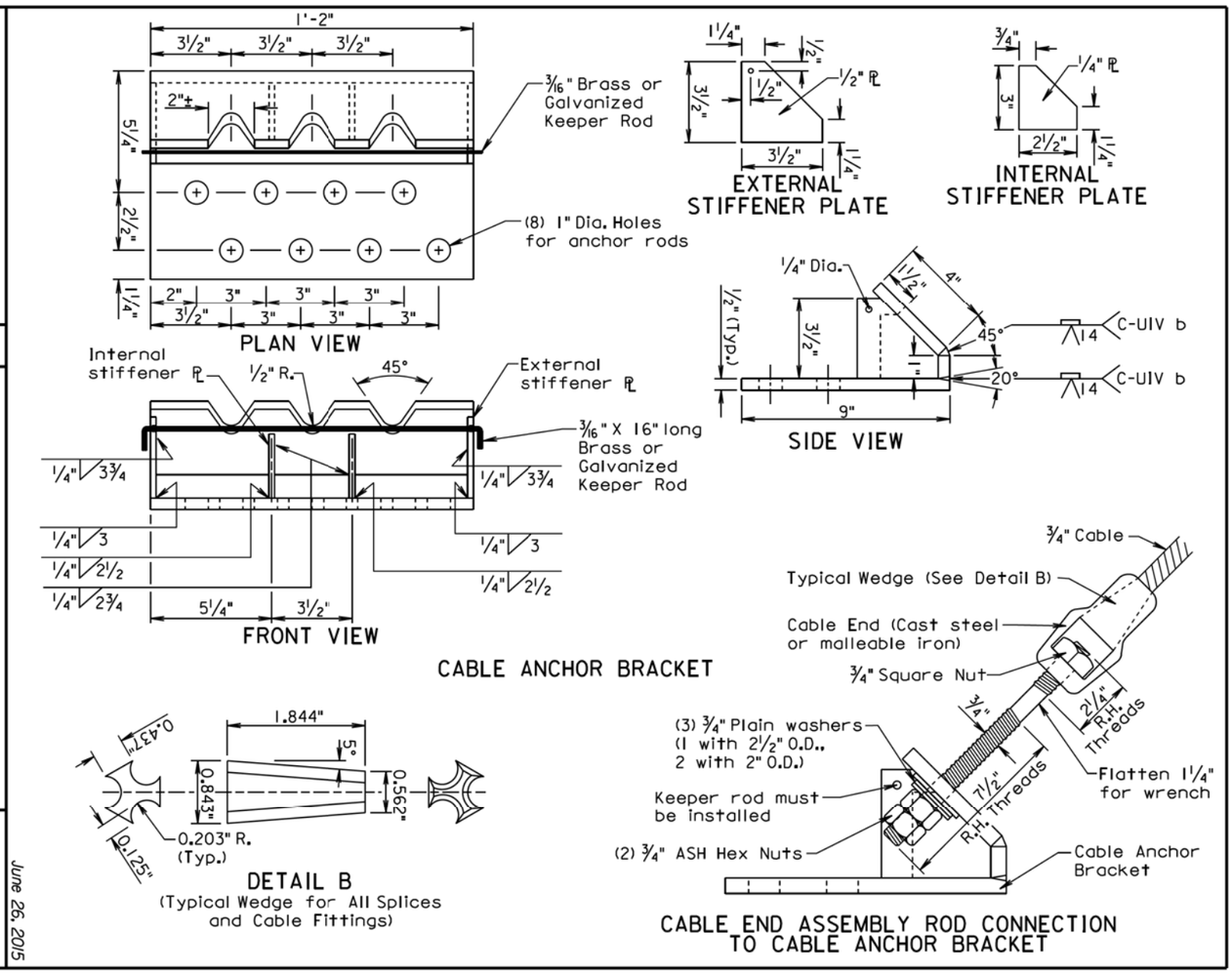

Published Date: 3rd Qtr. 2015

SDDOT

3 CABLE GUARDRAIL SLIP BASE ANCHOR ASSEMBLY

PLATE NUMBER 629.10

Sheet 2 of 3

June 26, 2015

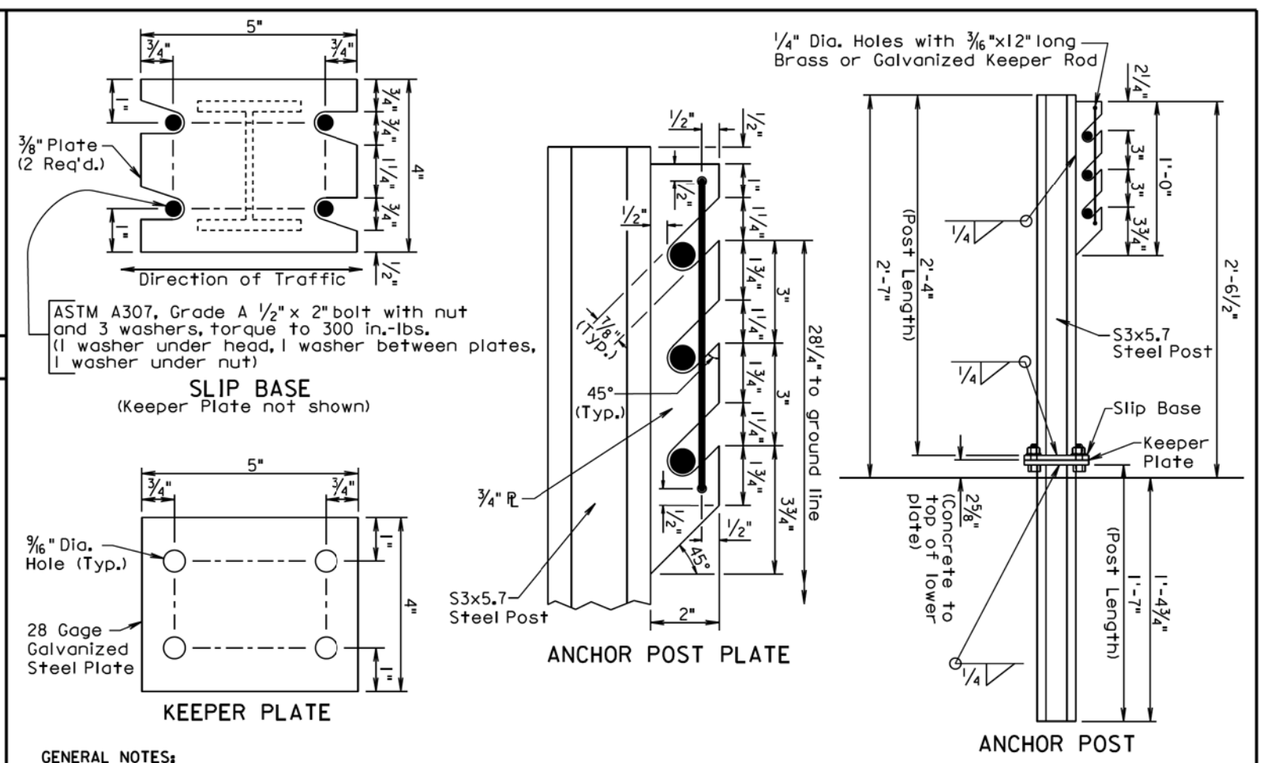

GENERAL NOTES:

Anchor post shall be a S3x5.7 rolled steel section. Post and plates shall conform to ASTM A709, Grade 36 and shall be galvanized in accordance with ASTM A123.

¾" round wire cable shall consist of three strands (7 wires per strand) and have a minimum tensile strength of 25,000 pounds.

Cast steel elements shall conform to AASHTO M103 (ASTM 27-73) grade U-60-30.

All costs associated with furnishing and constructing the 3 cable guardrail slip base anchor assembly including the concrete anchor, cable anchor bracket, anchor bolts, plates, slip base stub post, anchor post, steel turnbuckles, cable ends, U-bolt cable clips, and necessary hardware shall be incidental to the contract unit price per each for "3 Cable Guardrail Slip Base Anchor Assembly".

Published Date: 3rd Qtr. 2015

SDDOT

3 CABLE GUARDRAIL SLIP BASE ANCHOR ASSEMBLY

PLATE NUMBER 629.10

Sheet 3 of 3

June 26, 2015

STATE OF SOUTH DAKOTA

PROJECT IM 0904(57)189 & NH 0083(85)87

SHEET F114

TOTAL SHEETS F145

Plotting Date: 08/06/2015

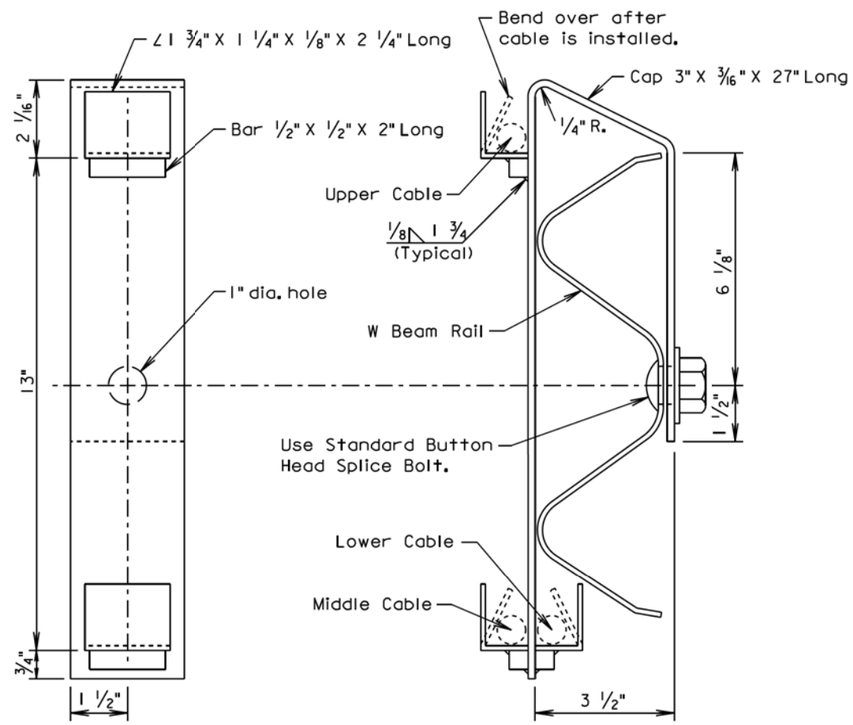

ELEVATION
(TRANSITION BRACKET)

END VIEW
(W BEAM RAIL AND TRANSITION BRACKET)

GENERAL NOTES:

Steel used in the fabrication of the bracket shall conform to ASTM A36 and the bracket shall be galvanized after fabrication in accordance with ASTM A123.

March 31, 2000

Published Date: 3rd Qtr. 2015	SDDOT	W BEAM TO 3 CABLE TRANSITION BRACKET	PLATE NUMBER 629.15
			Sheet 1 of 1

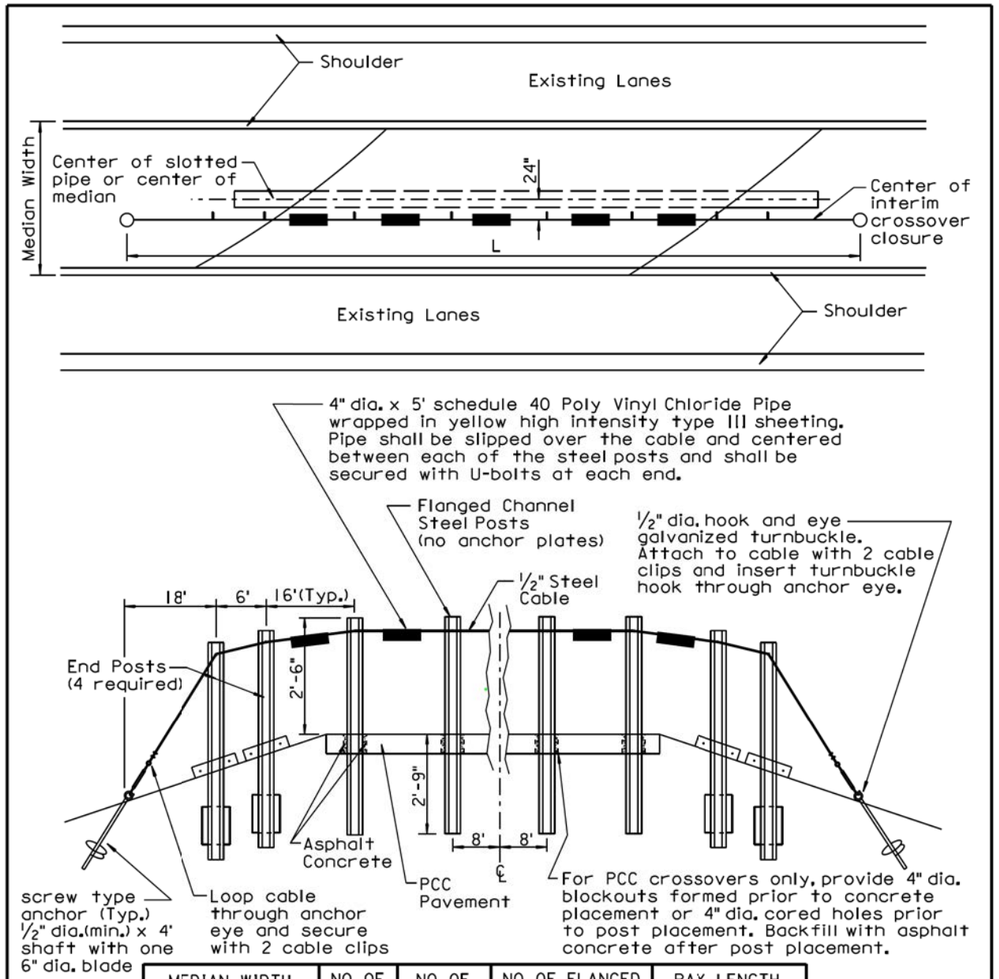

MEDIAN WIDTH	NO. OF PVC PIPES	NO. OF U-BOLTS	NO. OF FLANGED CHANNEL STEEL POSTS	PAY LENGTH L
60'	5	10	4	128'

GENERAL NOTES:

All costs for materials, backfilling holes with asphalt concrete, labor, equipment, and incidentals necessary to construct the interim crossover closure shall be incidental to the contract unit price per Ft for "Interim Crossover Closure". The costs of coring holes or providing blockouts in the surfacing shall be incidental to the surfacing bid item(s).

The Interim Crossover Closure shall be constructed using 3 cable guardrail posts with hook bolts. For specific details of the 3 cable guardrail hardware and installation, see Standard Plate 629.01 sheets 1 through 6.

March 31, 2000

Published Date: 3rd Qtr. 2015	SDDOT	INTERIM CROSSOVER CLOSURE	PLATE NUMBER 629.41
			Sheet 1 of 1

PLOT SCALE - 1:200
PLOTTED FROM - TRPR160032
PLOT NAME - 91
FILE - ...\JONS035E\STDPLATEPAGE 17.DGN

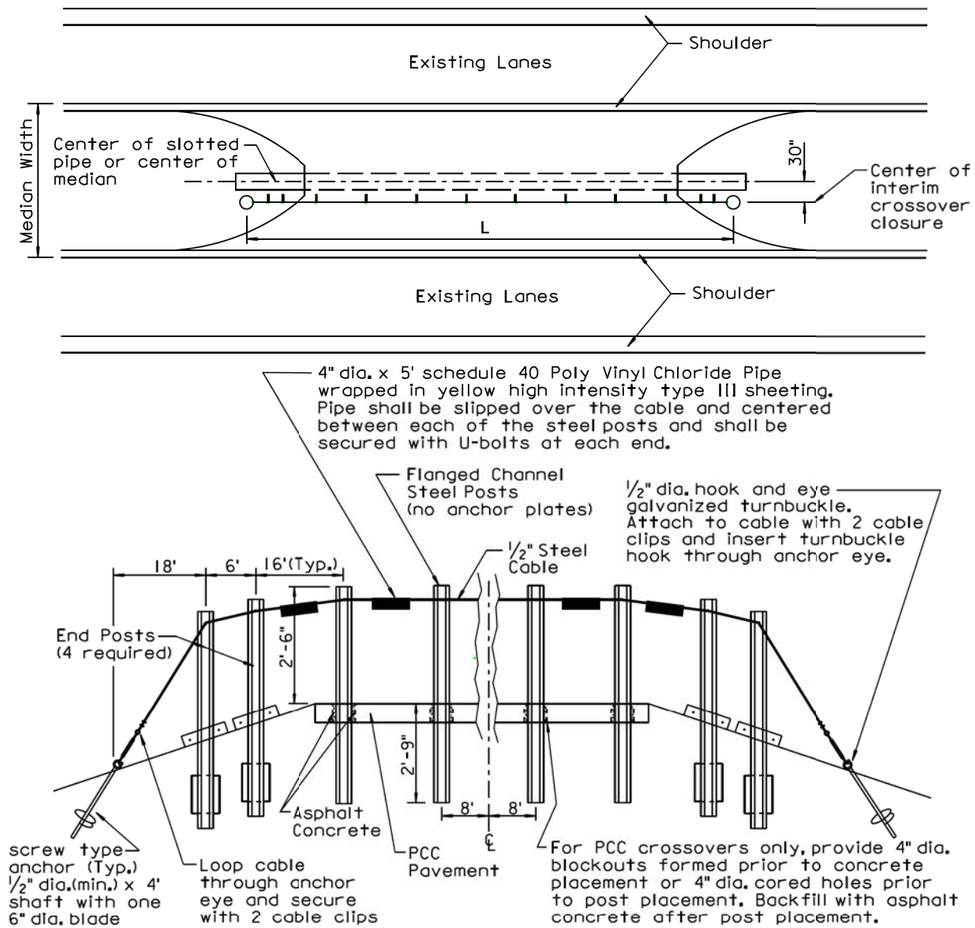

MEDIAN WIDTH	NO. OF PVC PIPES	NO. OF U-BOLTS	NO. OF FLANGED CHANNEL STEEL POSTS	NO. OF BLOCKOUTS OR CORED HOLES (PCC CROSSOVERS)	PAY LENGTH L
60' and 66'	11	18	10	10	224'
80'	9	14	8	8	192'

GENERAL NOTES:

All costs for materials, backfilling holes with asphalt concrete, labor, equipment, and incidentals necessary to construct the interim crossover closure shall be incidental to the contract unit price per Ft for "Interim Crossover Closure". The costs of coring holes or providing blockouts in the surfacing shall be incidental to the surfacing bid item(s).

The Interim Crossover Closure shall be constructed using 3 cable guardrail posts with hook bolts. For specific details of the 3 cable guardrail hardware and installation, see Standard Plate 629.01 sheets 1 through 6.

March 31, 2000

Published Date: 3rd Qtr. 2015	SDDOT	INTERIM CROSSOVER CLOSURE	PLATE NUMBER 629.42
			Sheet 1 of 1

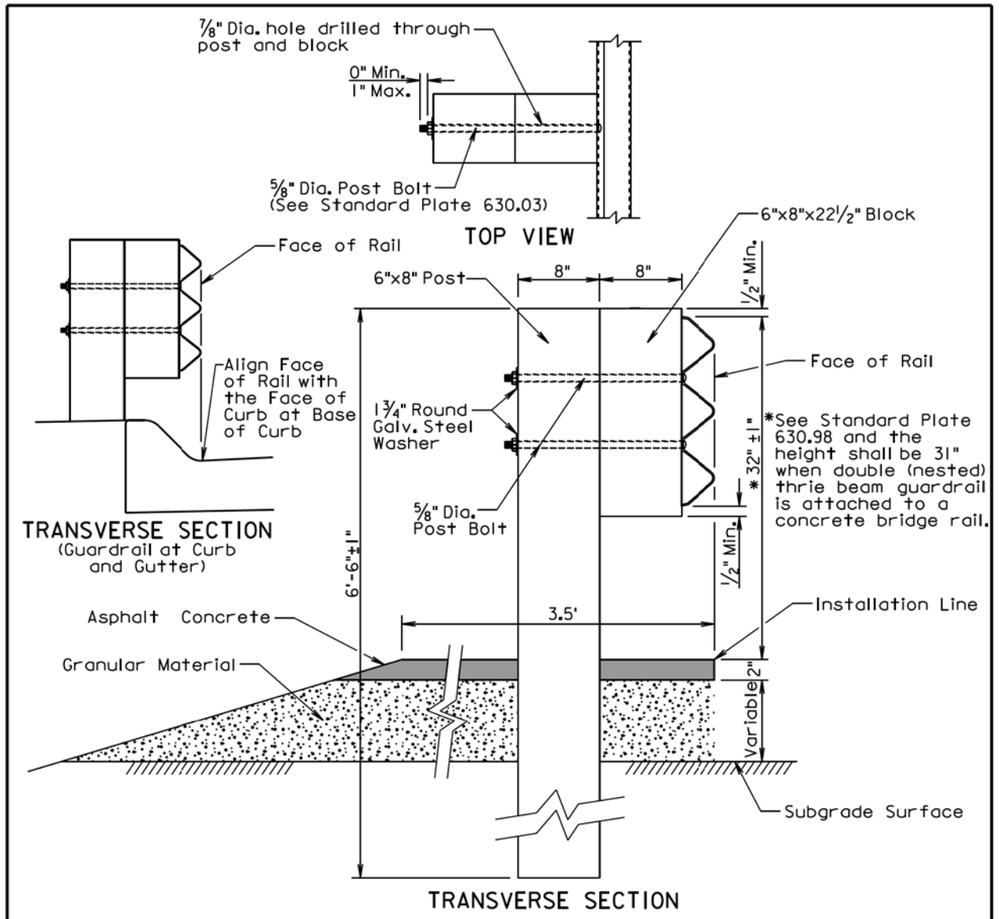

TRANSVERSE SECTION

GENERAL NOTES:

Asphalt concrete shall be the same type used elsewhere on the project or shall be as specified in the plans. If asphalt concrete is not specified in the plans, the asphalt concrete shall conform to the Specifications for "Asphalt Concrete Composite." For informational purposes, the Rate of Materials for the 3.5' wide section of asphalt concrete as shown above shall be 4.80 Tons per Station.

Granular material shall be the same type used elsewhere on the project or shall be as specified in the plans. If granular material type is not specified in the plans, the material shall conform to the Specifications for "Base Course". The granular material shall be placed the same thickness as the mainline surfacing or as specified in the plans.

The cross slope for the surfacing and subgrade surface shall be as specified in the plans (See Typical Sections and/or Cross Sections).

The top of post and top of block shall have a true square cut. The top of block shall be ±1 inch from the top of the post.

June 26, 2015

Published Date: 3rd Qtr. 2015	SDDOT	THRIE BEAM GUARDRAIL POST INSTALLATION	PLATE NUMBER 630.01
			Sheet 1 of 1

PLOT SCALE - 1:200
PLOT NAME - 92
FILE - ...\JONS035E\STDPLATEPAGE 18.DGN
-PLOTTED FROM - TRPR16032

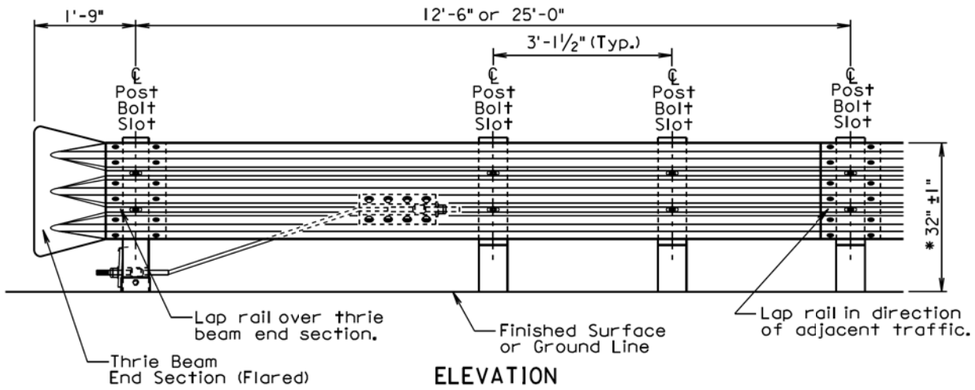

ELEVATION

* See Standard Plate 630.98 and the height shall be 31" when double (nested) thrie beam guardrail is attached to a concrete bridge rail.

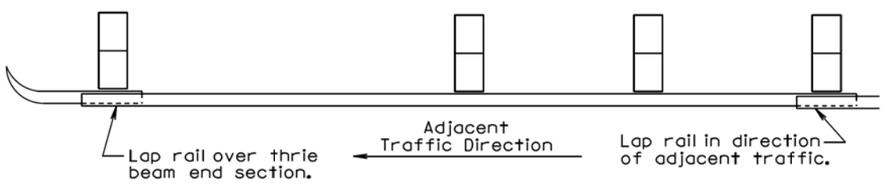

PLAN

THRIE BEAM GUARDRAIL DEFLECTION CRITERIA	
POST SPACING	MAXIMUM DEFLECTION
6'-3"	2'-6"
3'-1½"	1'-9"

For Informational Purposes Only

GENERAL NOTES:

All thrie beam rail shall be Type I.

There will be no separate payment for furnishing and installing Thrie Beam End Sections (Flared) and Thrie Beam Terminal Connectors. All costs for the Thrie Beam End Sections (Flared) and Thrie Beam Terminal Connectors shall be incidental to the contract unit price per foot for the respective "Thrie Beam Guardrail" bid item.

Thrie beam rail section lengths may be 12'-6" and/or 25'-0". The combination of section lengths used shall be compatible with the total length of rail per site as shown in the plans.

Thrie Beam End Sections (Flared) shall only be used in a one-way traffic situation. See Standard Plate 630.80 for Thrie Beam End Section (Flared) in the Beam Guardrail Trailing End Terminal.

All costs for constructing thrie beam guardrail including labor, equipment, and materials including all posts, blocks, steel beam rail, and hardware shall be incidental to the contract unit price per foot for the respective "Thrie Beam Guardrail" bid item.

June 26, 2015

Published Date: 3rd Qtr. 2015	SDDOT	THRIE BEAM GUARDRAIL INSTALLATION	PLATE NUMBER 630.02 Sheet 1 of 1

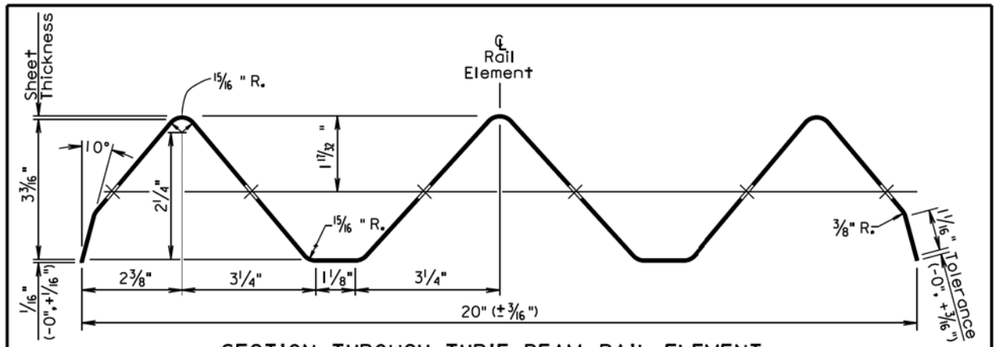

SECTION THROUGH THRIE BEAM RAIL ELEMENT

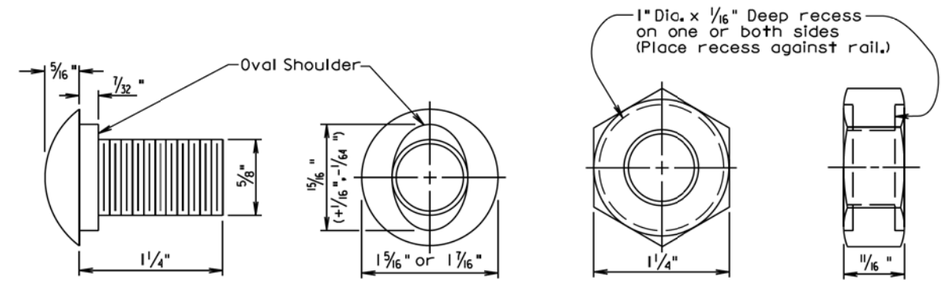

The Post Bolt is similar except the post bolt is 18" long.

SPLICE BOLT
(5/8" BUTTON HEAD BOLT AND RECESS NUT)

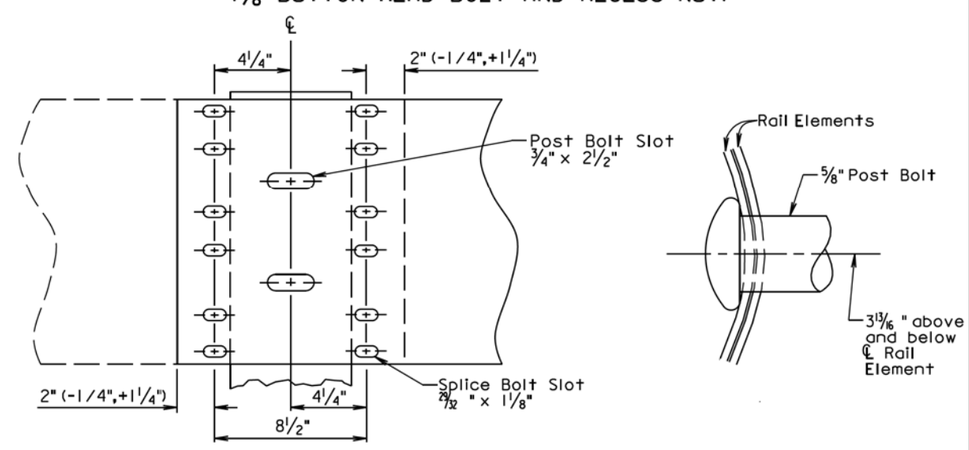

Lap in direction of traffic.

RAIL SPLICE

March 31, 2000

Published Date: 3rd Qtr. 2015	SDDOT	THRIE BEAM RAIL, RAIL SPLICE, AND HARDWARE	PLATE NUMBER 630.03 Sheet 1 of 1

PLOT SCALE - 1:200
PLOTTED FROM - TRPR16032
PLOT NAME - 93
FILE - ...\JONS035E\STDPLATEPAGE 19.DGN

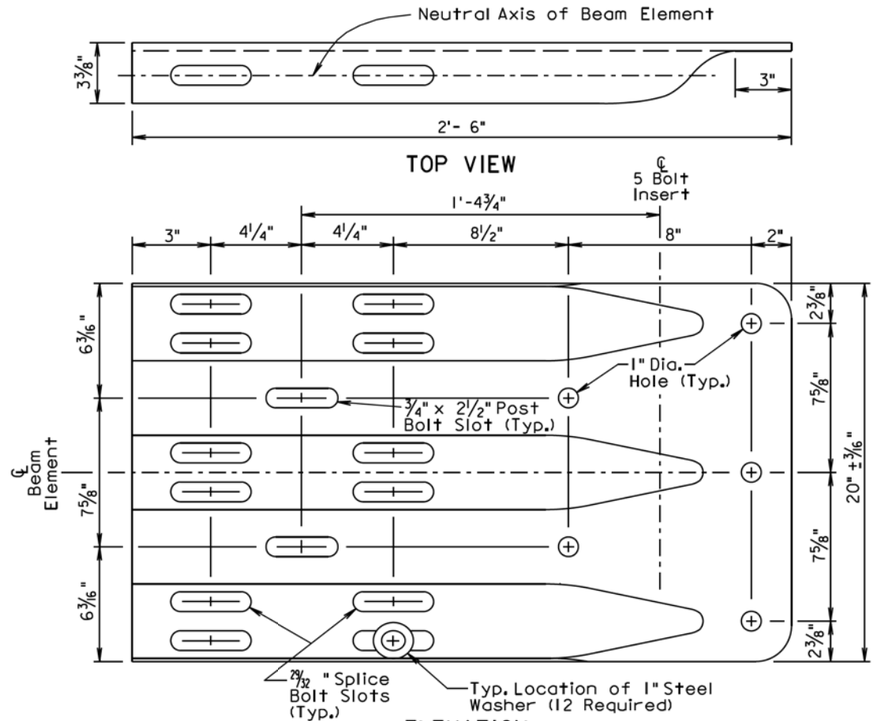

ELEVATION
THRIE BEAM TERMINAL CONNECTOR

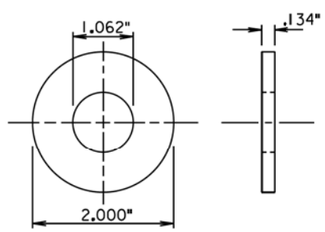

1" STEEL WASHER

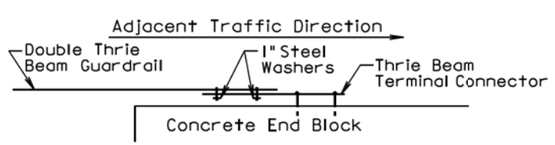

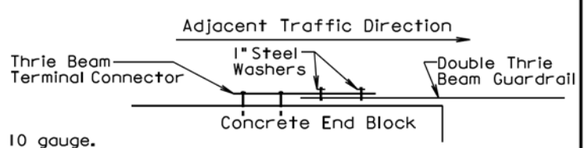

GENERAL NOTES:

Thrie Beam Terminal Connectors shall be 10 gauge.

When the thrie beam terminal connector is used to connect the rail to the bridge, 1" steel washers shall be used at the lap splice and the washers shall be in direct contact with the 3" slots of the thrie beam terminal connector. See the drawings above for the typical locations of the 1" steel washers.

There will be no separate payment for furnishing and installing the Thrie Beam Terminal Connector. All costs for the Thrie Beam Terminal Connector shall be incidental to the contract unit price per foot for the respective "Thrie Beam Guardrail" bid item.

September 14, 2001

Published Date: 3rd Qtr. 2015	SDDOT	THRIE BEAM TERMINAL CONNECTOR AND 1" STEEL WASHER	PLATE NUMBER 630.05
			Sheet 1 of 1

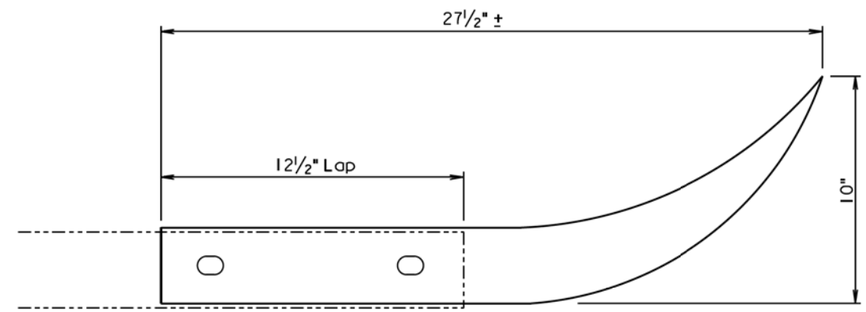

TOP VIEW

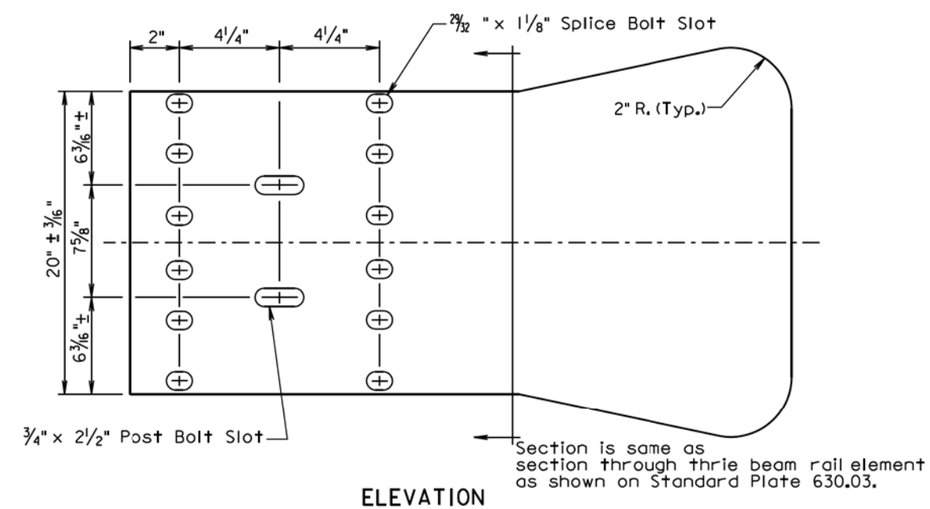

ELEVATION

GENERAL NOTES:

Thrie Beam End Sections (Flared) shall be 12 gage.

There will be no separate payment for furnishing and installing Thrie Beam End Sections (Flared). All costs for the Thrie Beam End Sections (Flared) shall be incidental to the contract unit price per foot for the respective "Thrie Beam Guardrail" bid item.

Thrie Beam End Sections (Flared) shall only be used in a one way traffic situation. See Standard Plate 630.80 for Thrie Beam End Section (Flared) in the Beam Guardrail Trailing End Terminal.

March 31, 2000

Published Date: 3rd Qtr. 2015	SDDOT	THRIE BEAM END SECTION (FLARED)	PLATE NUMBER 630.10
			Sheet 1 of 1

PLOT SCALE - 1:200
PLOTTED FROM - TRPR16032
PLOT NAME - 94
FILE - ...\JONS035E\STDPLATEPAGE 20.DGN

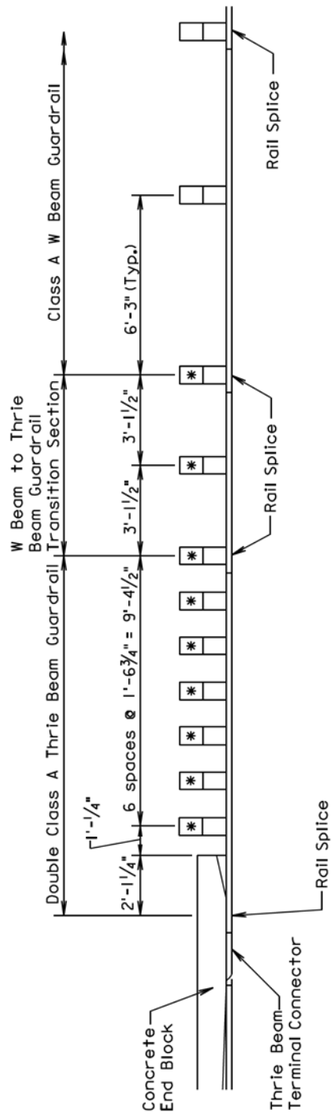

* 6" x 8" x 7' posts shall be used at these locations.

POST SPACING ARRANGEMENT FOR THRIE BEAM GUARDRAIL AT BRIDGE END

December 23, 2002

Published Date: 3rd Qtr. 2015	SDDOT	POST SPACING ARRANGEMENT FOR THRIE BEAM GUARDRAIL AT BRIDGE END	PLATE NUMBER 630.15 Sheet 1 of 1

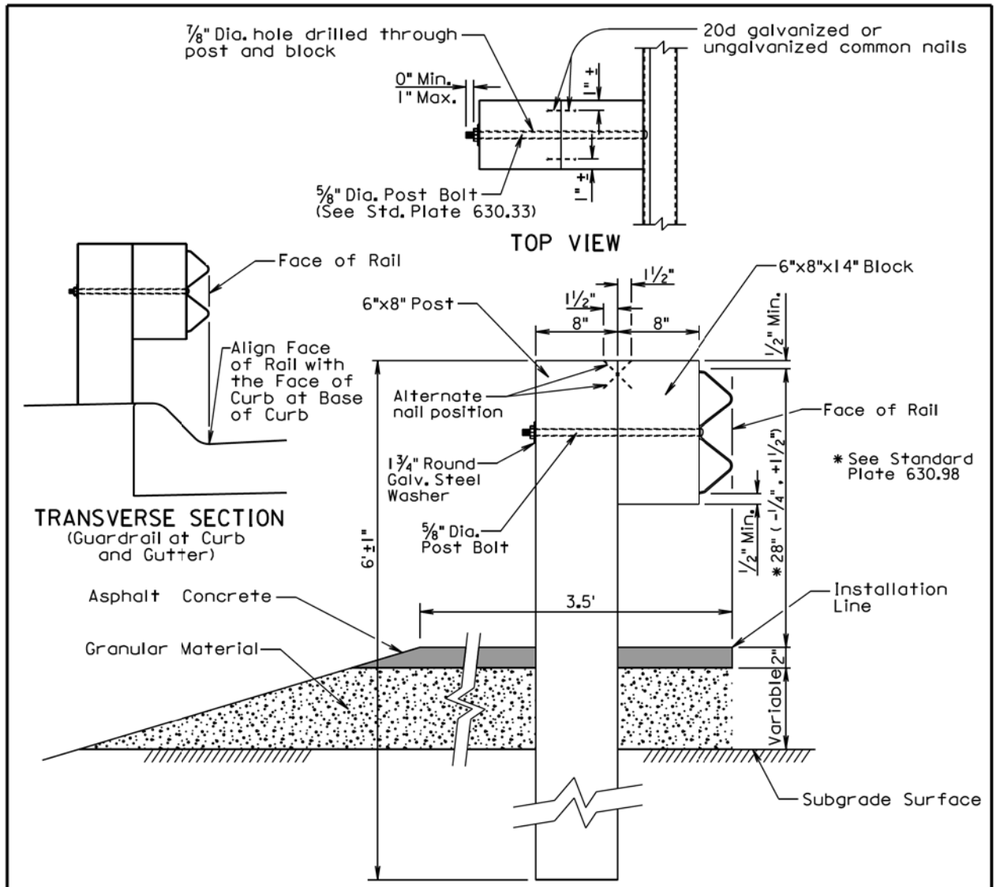

TRANSVERSE SECTION

GENERAL NOTES:

Asphalt concrete shall be the same type used elsewhere on the project or shall be as specified in the plans. If asphalt concrete is not specified in the plans, the asphalt concrete shall conform to the Specifications for "Asphalt Concrete Composite." For informational purposes, the Rate of Materials for the 3.5' wide section of asphalt concrete as shown above shall be 4.80 Tons per Station.

Granular material shall be the same type used elsewhere on the project or shall be as specified in the plans. If granular material type is not specified in the plans, the material shall conform to the Specifications for "Base Course". The granular material shall be placed the same thickness as the mainline surfacing or as specified in the plans.

The cross slope for the surfacing and subgrade surface shall be as specified in the plans (See Typical Sections and/or Cross Sections).

The top of post and top of block shall have a true square cut. The top of block shall be ±1 inch from the top of the post.

June 26, 2015

Published Date: 3rd Qtr. 2015	SDDOT	W BEAM GUARDRAIL POST INSTALLATION	PLATE NUMBER 630.31 Sheet 1 of 1

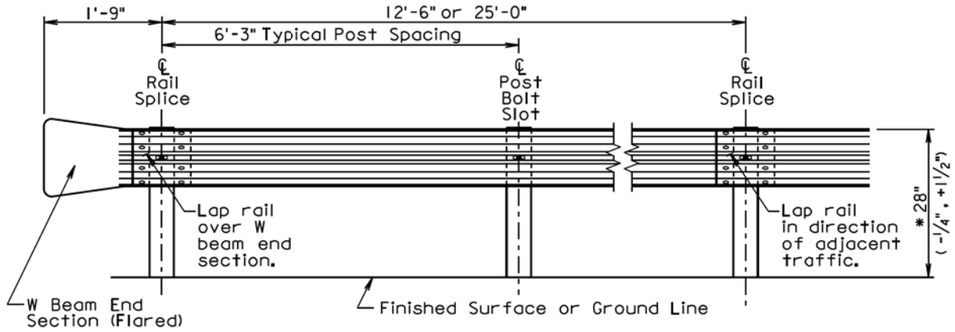

ELEVATION

*See Standard Plate 630.98

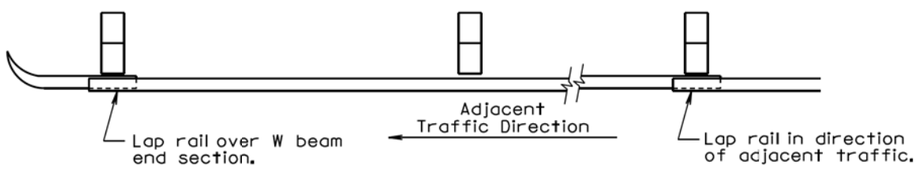

PLAN

W BEAM GUARDRAIL DEFLECTION CRITERIA	
POST SPACING	MAXIMUM DEFLECTION
6'-3"	5'-0"
3'-1 1/2"	3'-9"

For Informational Purposes Only

GENERAL NOTES:

All W beam rail shall be Type I.

There will be no separate payment for furnishing and installing W Beam End Sections (Flared) and W Beam Terminal Connectors. All costs for the W Beam End Sections (Flared) and W Beam Terminal Connectors shall be incidental to the contract unit price per foot for the respective "W Beam Guardrail" bid item.

W beam rail section lengths may be 12'-6" and/or 25'-0". The combination of section lengths used shall be compatible with the total length of rail per site as shown in the plans.

W Beam End Sections (Flared) shall only be used in a one way traffic situation. See Standard Plate 630.80 for W Beam End Section (Flared) in the Beam Guardrail Trailing End Terminal.

All costs for constructing W beam guardrail including labor, equipment, and materials including all posts, blocks, steel beam rail, and hardware shall be incidental to the contract unit price per foot for the respective "W Beam Guardrail" bid item.

June 26, 2015

Published Date: 3rd Qtr. 2015	SDDOT	W BEAM GUARDRAIL INSTALLATION	PLATE NUMBER 630.32
			Sheet 1 of 1

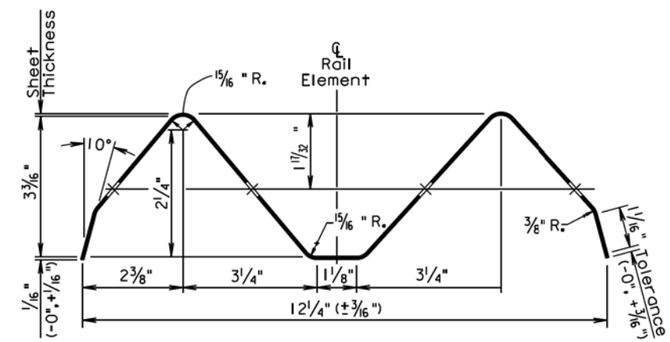

SECTION THROUGH W BEAM RAIL ELEMENT

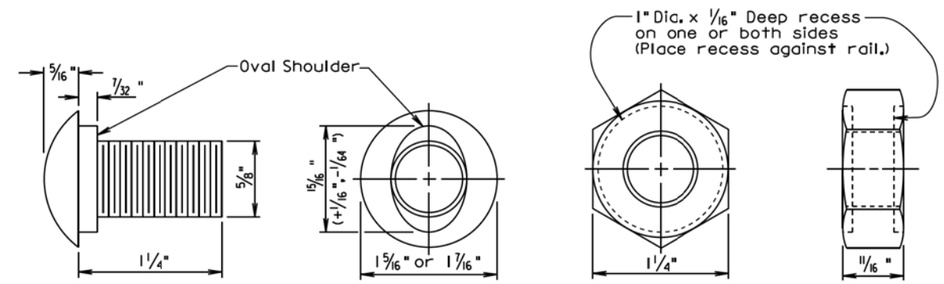

The Post Bolt is similar except the post bolt is 18" long.

SPLICE BOLT
(5/8" BUTTON HEAD BOLT AND RECESS NUT)

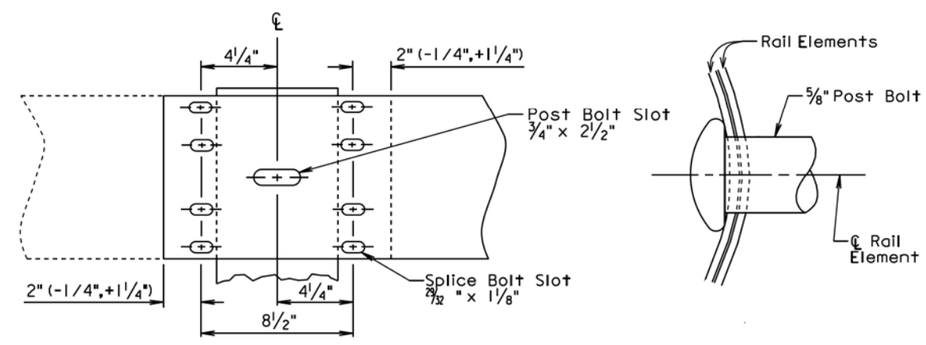

Lap in direction of traffic.

RAIL SPLICE

December 23, 2004

Published Date: 3rd Qtr. 2015	SDDOT	W BEAM RAIL, RAIL SPLICE, AND HARDWARE	PLATE NUMBER 630.33
			Sheet 1 of 1

PLOT SCALE - 1:200
PLOT NAME - 96
FILE - ...\JONS035E\STDPLATEPAGE 22.DGN
-PLOTTED FROM - TRPR160032

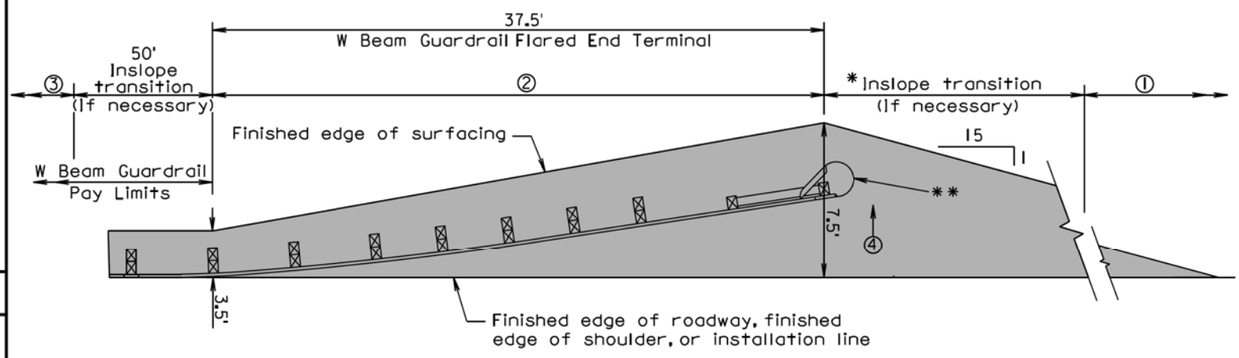

2" Asphalt concrete surfacing with variable thickness granular material

PLAN

① Same inslope as mainline inslope
② 4:1 inslope
③ 2:1 inslope or flatter, or inslope as specified in plans
④ Same slope as roadway cross slope

* The length of inslope transition varies with the amount of change between inslopes. The length of the transition shall change 100' for every whole number change in the inslope. For Example: If the inslope changes from a 5:1 to a 4:1 the length of the inslope transition would be 100'. If the inslope changes from a 6:1 to a 4:1 the length of the inslope transition would be 200'.

GENERAL NOTES:

The W beam guardrail flared end terminal shall be installed according to the manufacturer's installation instructions.

** An adhesive object marker shall be placed on the end section buffer or extruder after placement of the end section buffer or extruder. The adhesive object marker dimensions may be 16" x 16" or other variation due to the shape of the end section buffer or extruder. A minimum of 256 square inches of object marker reflective sheeting area is required. The reflective sheeting shall be fluorescent yellow super or very high intensity. All costs for furnishing and installing the adhesive object marker shall be incidental to various contract items.

Asphalt concrete shall be the same type used elsewhere on the project or shall be as specified in the plans. If asphalt concrete is not specified in the plans, the asphalt concrete shall conform to the Specifications for "Asphalt Concrete Composite."

Granular material shall be the same type used elsewhere on the project or shall be as specified in the plans. If granular material type is not specified in the plans, the material shall conform to the Specifications for "Base Course". The granular material shall be placed the same thickness as the mainline surfacing or as specified in the plans.

Published Date: 3rd Qtr. 2015

SDDOT

EMBANKMENT AND SURFACING FOR W BEAM GUARDRAIL FLARED END TERMINAL

PLATE NUMBER 630.45

Sheet 1 of 1

December 16, 2014

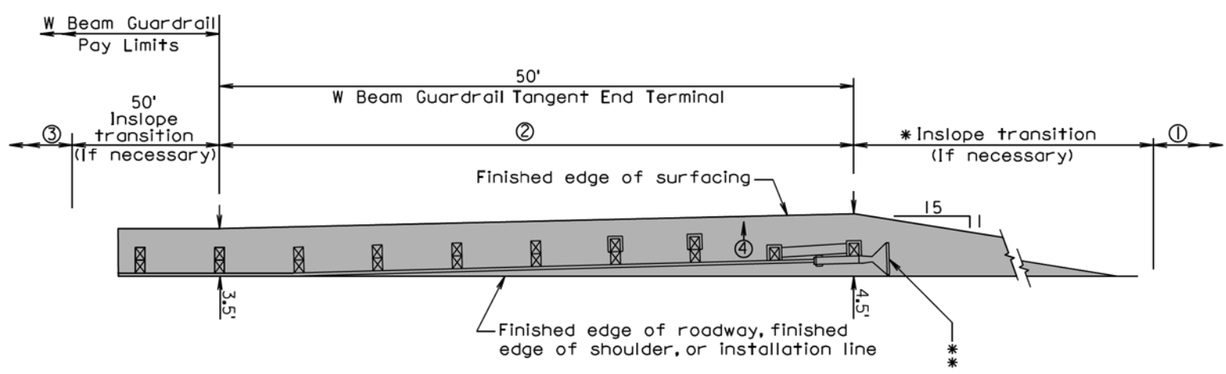

PLAN

2" Asphalt concrete surfacing with variable thickness granular material

① Same inslope as mainline inslope
② 4:1 inslope
③ 2:1 inslope or flatter, or inslope as specified in plans
④ Same slope as roadway cross slope

* The length of inslope transition varies with the amount of change between inslopes. The length of the transition shall change 100' for every whole number change in the inslope. For Example: If the inslope changes from a 5:1 to a 4:1 the length of the inslope transition would be 100'. If the inslope changes from a 6:1 to a 4:1 the length of the inslope transition would be 200'.

GENERAL NOTES:

The W beam guardrail tangent end terminal shall be installed according to the manufacturer's installation instructions.

** An adhesive object marker shall be placed on the end section buffer or extruder after placement of the end section buffer or extruder. The adhesive object marker dimensions may be 16" x 16" or other variation due to the shape of the end section buffer or extruder. A minimum of 256 square inches of object marker reflective sheeting area is required. The reflective sheeting shall be fluorescent yellow super or very high intensity. All costs for furnishing and installing the adhesive object marker shall be incidental to various contract items.

Asphalt concrete shall be the same type used elsewhere on the project or shall be as specified in the plans. If asphalt concrete is not specified in the plans, the asphalt concrete shall conform to the Specifications for "Asphalt Concrete Composite."

Granular material shall be the same type used elsewhere on the project or shall be as specified in the plans. If granular material type is not specified in the plans, the material shall conform to the Specifications for "Base Course". The granular material shall be placed the same thickness as the mainline surfacing or as specified in the plans.

Published Date: 3rd Qtr. 2015

SDDOT

EMBANKMENT AND SURFACING FOR W BEAM GUARDRAIL TANGENT END TERMINAL

PLATE NUMBER 630.46

Sheet 1 of 1

December 16, 2014

STATE OF SOUTH DAKOTA | PROJECT IM 0904(57)189 & NH 0083(85)87 | SHEET F121 | TOTAL SHEETS F145

Plotting Date: 08/06/2015

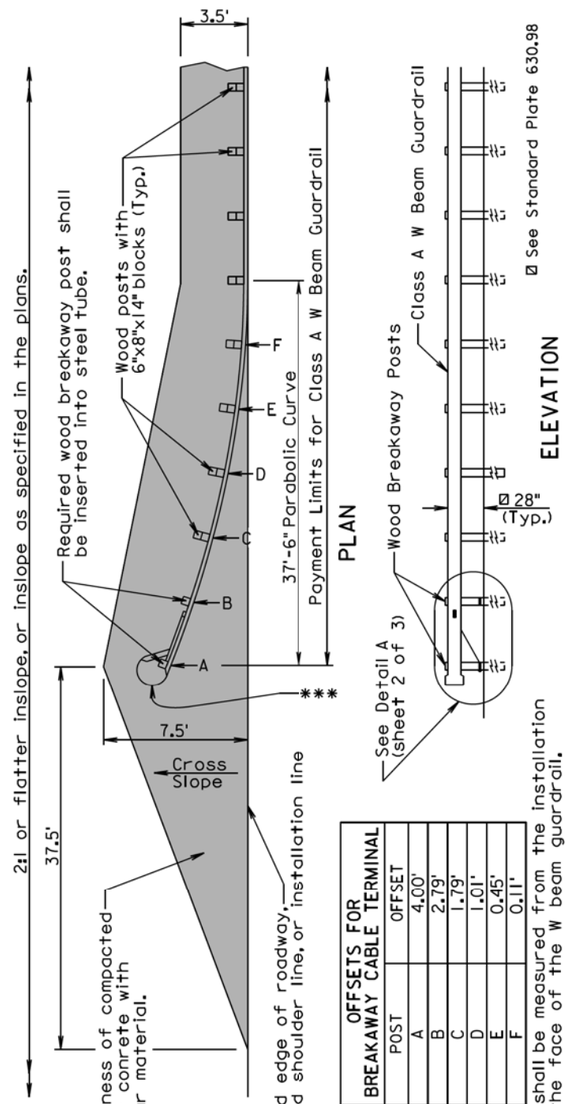

OFFSETS FOR BREAKAWAY CABLE TERMINAL

POST	OFFSET
A	4.00'
B	2.79'
C	1.79'
D	1.01'
E	0.45'
F	0.11'

GENERAL NOTES:

The finished embankment surfacing cross slope shall match the roadway cross slope; however, if a steeper cross slope is necessary the steepest allowable cross slope is 10:1.

Asphalt concrete shall be the same type used elsewhere on the project or shall be as specified in the plans. If asphalt concrete is not specified in the plans, the asphalt concrete shall conform to the Specifications for "Asphalt Concrete Composite."

Granular material shall be the same type used elsewhere on the project or shall be as specified in the plans. If granular material type is not specified in the plans, the material shall conform to the Specifications for "Base Course". The granular material shall be placed the same thickness as the mainline surfacing or as specified in the plans.

*** An adhesive object marker shall be placed on the end section buffer after placement of the end section buffer. The adhesive object marker dimensions may be 16" x 16" or other variation due to the shape of the end section buffer. A minimum of 256 square inches of object marker reflective sheeting area is required. The reflective sheeting shall be fluorescent yellow super or very high intensity. All costs for furnishing and installing the adhesive object marker shall be incidental to various contract items.

Costs for constructing the W Beam Guardrail Breakaway Cable Terminal including labor, equipment, and materials including the anchor bracket, cable assembly, steel tubes, soil plates, bearing plate, pipe sleeve, W beam end section(buffer), modified W beam terminal connector, and all necessary hardware shall be incidental to the contract unit price per each for "W Beam Guardrail Breakaway Cable Terminal".

December 16, 2014

Published Date: 3rd Qtr. 2015 | SDDOT | **W BEAM GUARDRAIL BREAKAWAY CABLE TERMINAL** | PLATE NUMBER 630.47 | Sheet 1 of 3

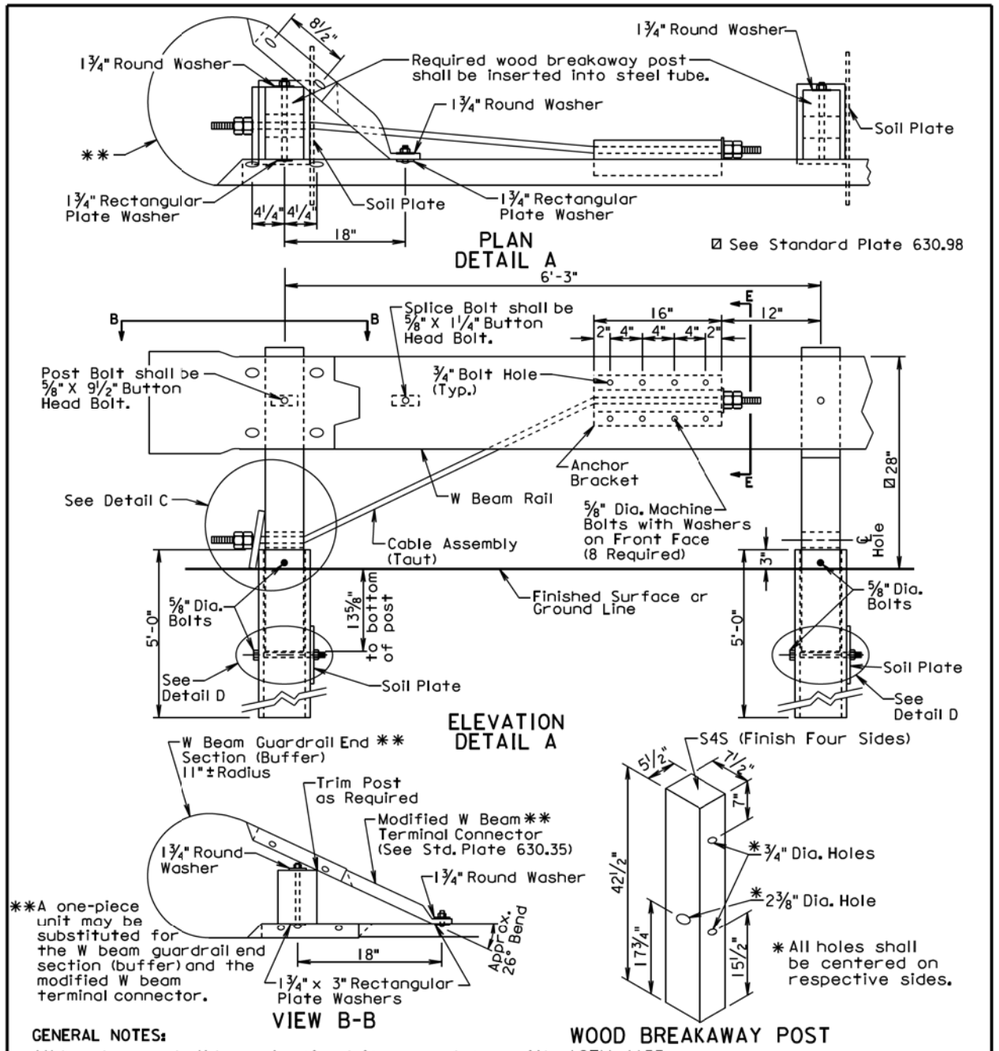

GENERAL NOTES:

All hardware shall be galvanized in accordance with ASTM A153.

The steel tubes shall meet the requirements of ASTM Specification A500, Grade B, and shall be galvanized after fabrication in accordance with the requirements of AASHTO Specification M111.

The anchor bracket, soil plate, and bearing plate shall be fabricated from steel that meets ASTM A36 Specifications. They shall be galvanized after fabrication in accordance with ASTM A123.

The W Beam End Section (Buffer) shall be 12 gage galvanized steel.

The cable shall be ¾", Type II, with Class A coating in conformance with AASHTO M30.

December 16, 2014

Published Date: 3rd Qtr. 2015 | SDDOT | **W BEAM GUARDRAIL BREAKAWAY CABLE TERMINAL** | PLATE NUMBER 630.47 | Sheet 2 of 3

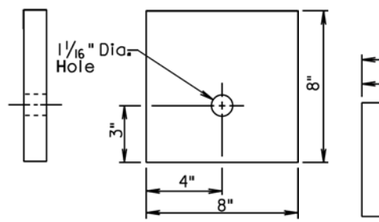

BEARING PLATE

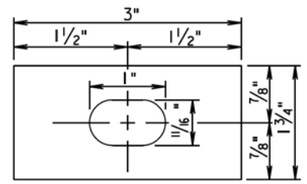

RECTANGULAR PLATE WASHER

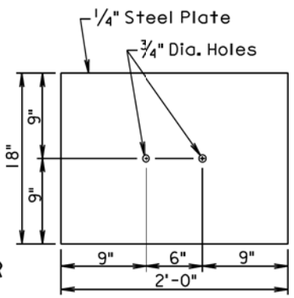

SOIL PLATE

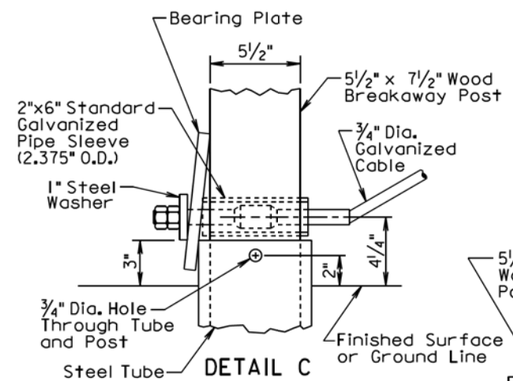

DETAIL C

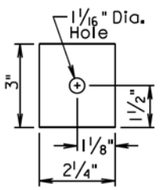

END PLATE

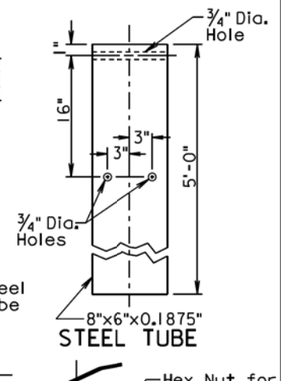

STEEL TUBE

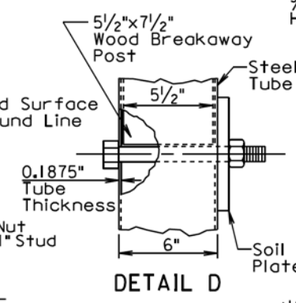

DETAIL D

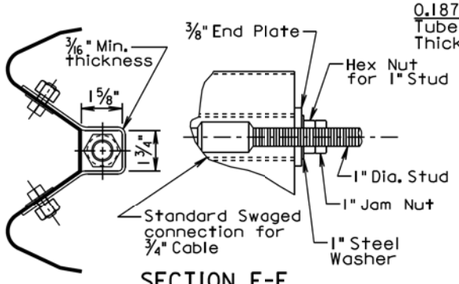

SECTION E-E
(END PLATE REMOVED)

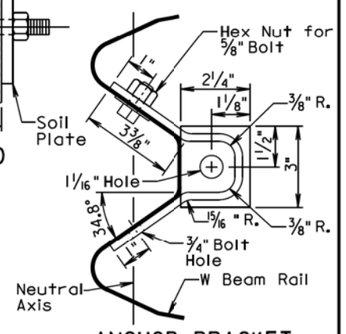

ANCHOR BRACKET

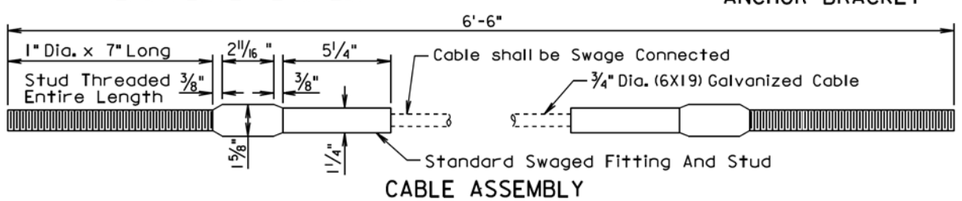

CABLE ASSEMBLY

December 16, 2014

Published Date: 3rd Qtr. 2015	SDDOT	W BEAM GUARDRAIL BREAKAWAY CABLE TERMINAL	PLATE NUMBER 630.47 Sheet 3 of 3

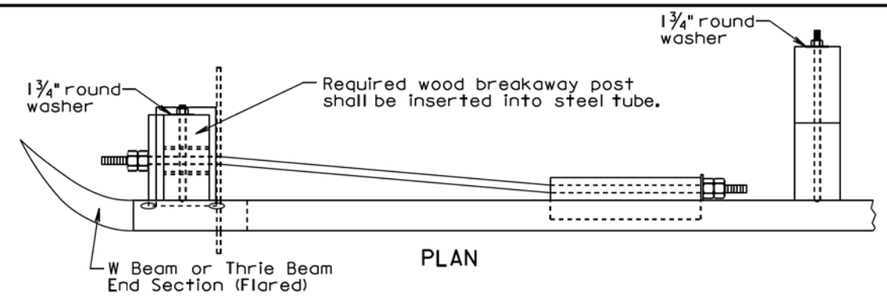

PLAN

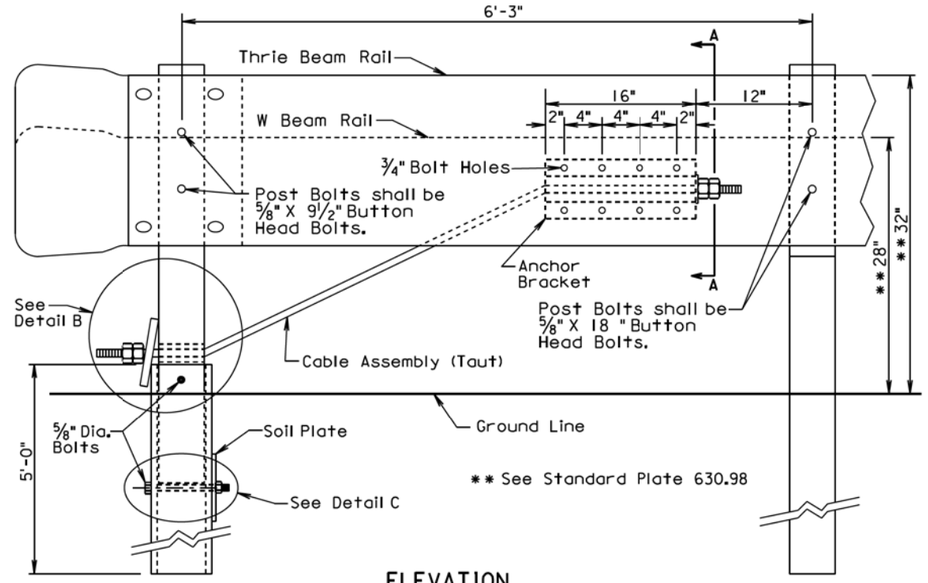

ELEVATION

GENERAL NOTES:

All hardware shall be galvanized in accordance with ASTM A153.

The cable shall be 3/4", Type II, with Class A coating in conformance with AASHTO M30.

The steel tube shall meet the requirements of ASTM Specification A500, Grade B, and shall be galvanized after fabrication in accordance with the requirements of AASHTO Specification M111.

The anchor bracket, soil plate, and bearing plate shall be fabriccted from steel that meets ASTM A36 Specifications. They shall be galvanized after fabrication in accordance with ASTM A123.

Costs for constructing the beam guardrail trailing end terminal and furnishing the anchor bracket, cable assembly, steel tube, soil plate, bearing plate, pipe sleeve, wood breakaway post, and all hardware necessary to attach anchor bracket, cable assembly, steel tube, soil plate, bearing plate, pipe sleeve, and wood breakaway post shall be incidental to the contract unit price per each for "Beam Guardrail Trailing End Terminal".

Costs for the thrie beam or W beam guardrail and the thrie beam or W beam end sections (Flared) shall be incidental to the contract unit price per foot for the respective "Thrie Beam Guardrail" or "W Beam Guardrail" bid items.

June 26, 2010

Published Date: 3rd Qtr. 2015	SDDOT	BEAM GUARDRAIL TRAILING END TERMINAL	PLATE NUMBER 630.80 Sheet 1 of 2

PLOT SCALE - 1:200
PLOT NAME - 99
FILE - ...\JONS035E\STDPLATEPAGE 25.DGN
PLOTTED FROM - TRPR16032

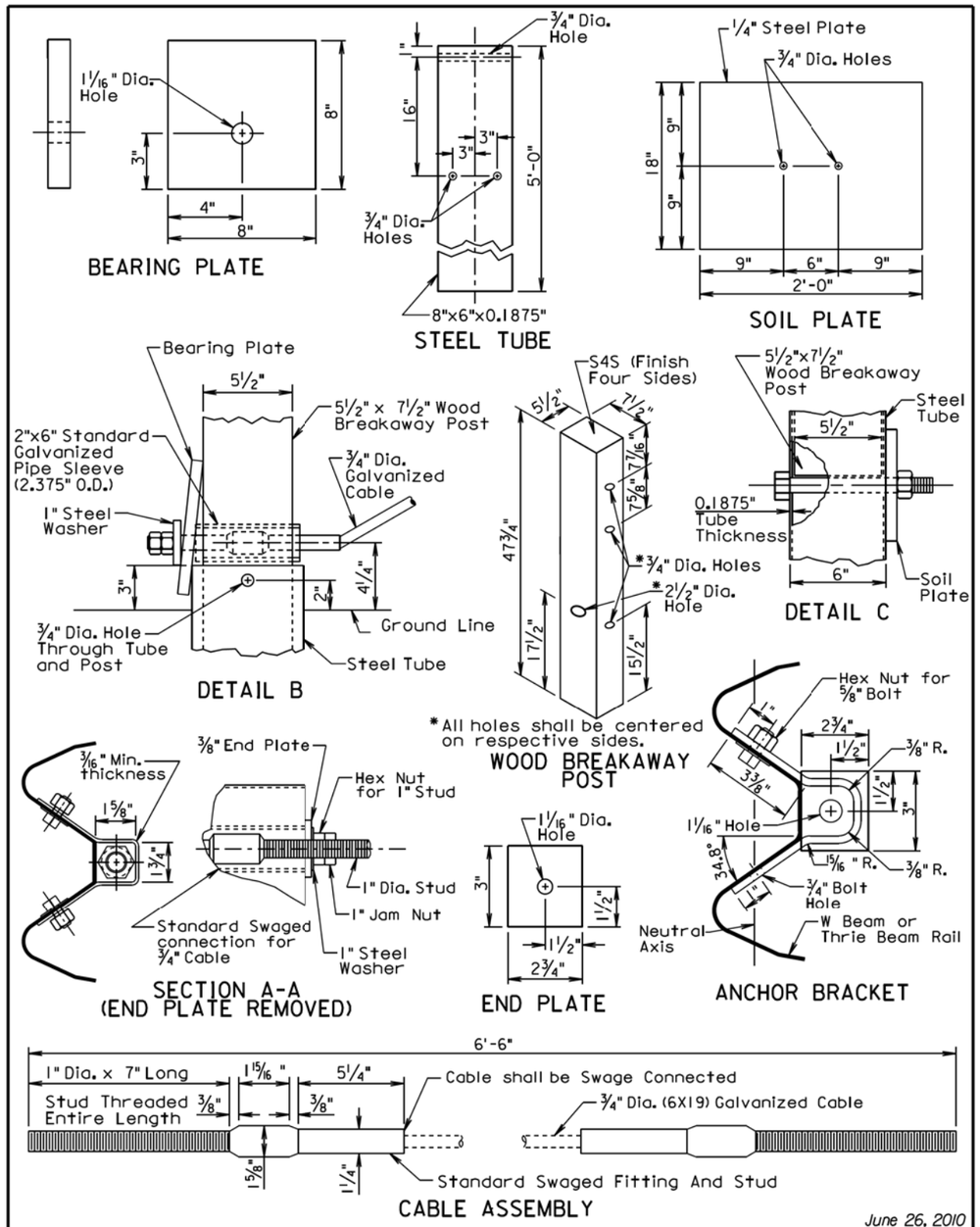

June 26, 2010

Published Date: 3rd Qtr. 2015	SDDOT	BEAM GUARDRAIL TRAILING END TERMINAL	PLATE NUMBER 630.80
			Sheet 2 of 2

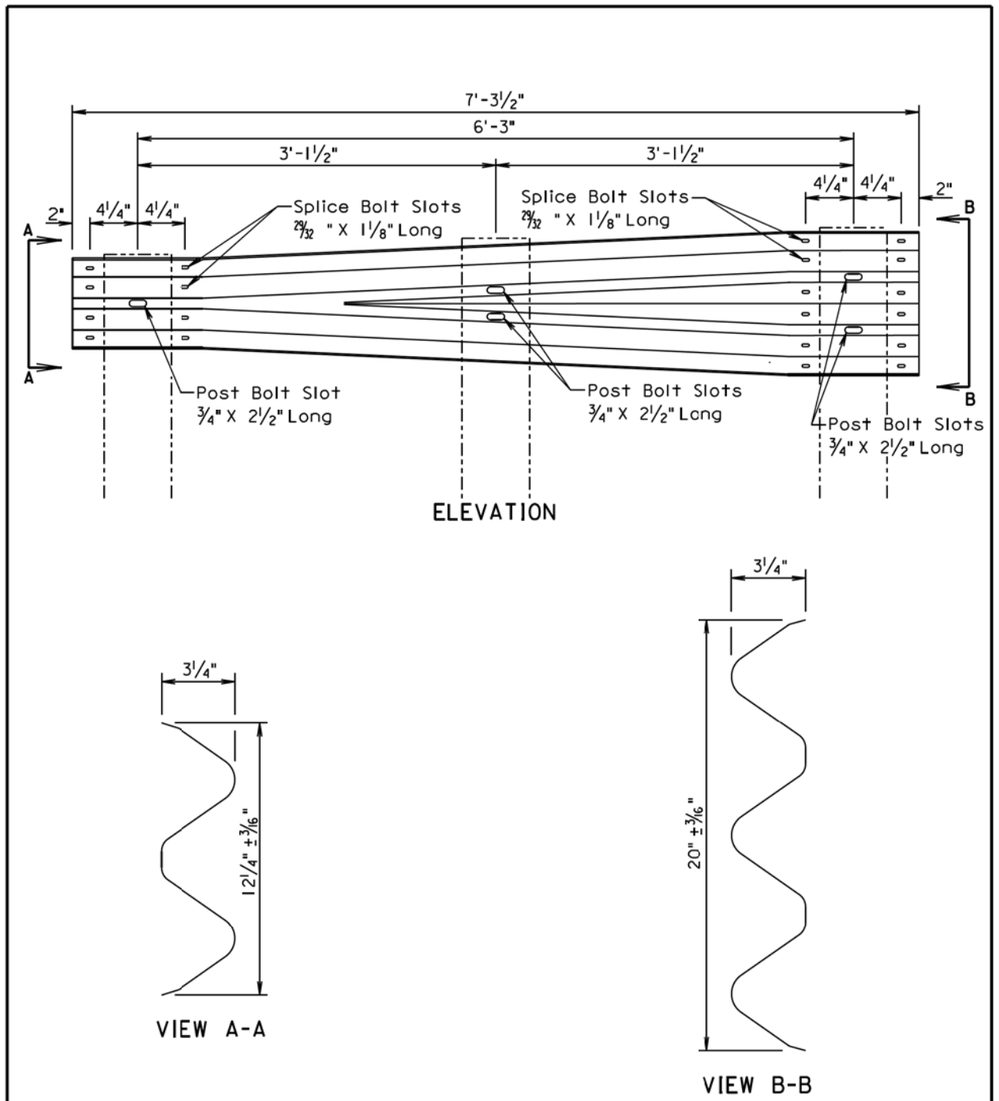

GENERAL NOTE:

All costs for constructing the W Beam to Thrie Beam Guardrail Transition including labor, equipment, and materials including two posts, two blocks, W beam to thrie beam transition section, and hardware shall be incidental to the contract unit price per each for "W Beam to Thrie Beam Guardrail Transition".

March 31, 2000

Published Date: 3rd Qtr. 2015	SDDOT	W BEAM TO THRIE BEAM GUARDRAIL TRANSITION SECTION	PLATE NUMBER 630.82
			Sheet 1 of 1

PLOT SCALE - 1:200
PLOT NAME - 100
FILE - ...\JONS035E\STDPLATEPAGE 26.DGN
PLOTTED FROM - TRPR16032

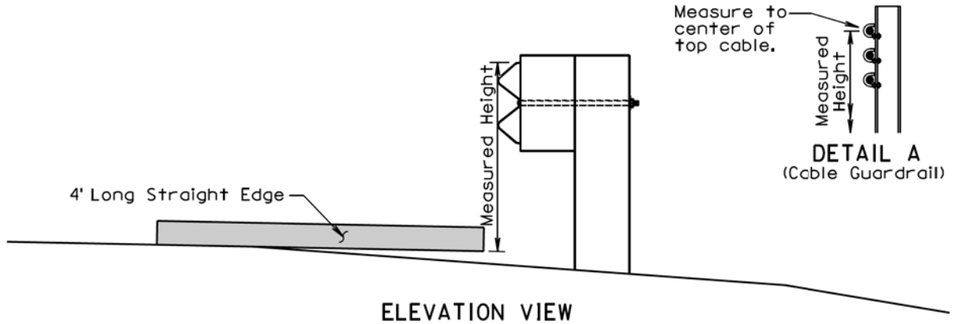

ELEVATION VIEW
(Guardrail Adjacent to Differential Slopes)

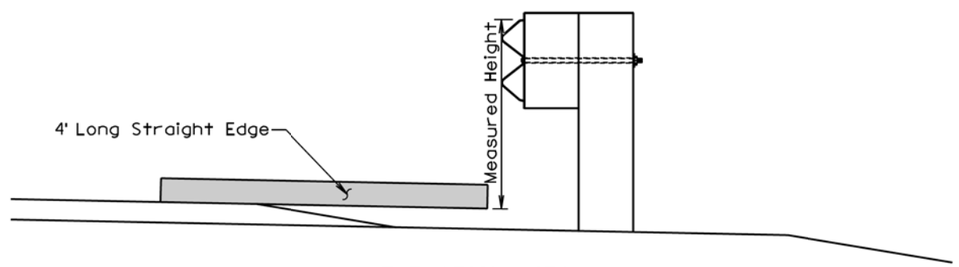

ELEVATION VIEW
(Guardrail Adjacent to Differential Surfacing Elevations)

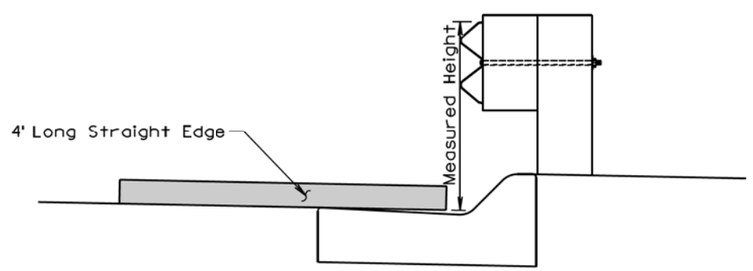

ELEVATION VIEW
(Guardrail at Curb and Gutter)

GENERAL NOTES:

The W Beam guardrail shown is for illustrative purpose. The guardrail height for all types of guardrail systems shall be measured in accordance with this standard plate.

When measuring height of cable guardrail or cable barrier the height shall be measured to the center of the top cable. See Detail A.

June 26, 2010

Published Date: 3rd Qtr. 2015

SDDOT

MEASURING GUARDRAIL HEIGHT

PLATE NUMBER 630.98

Sheet 1 of 1

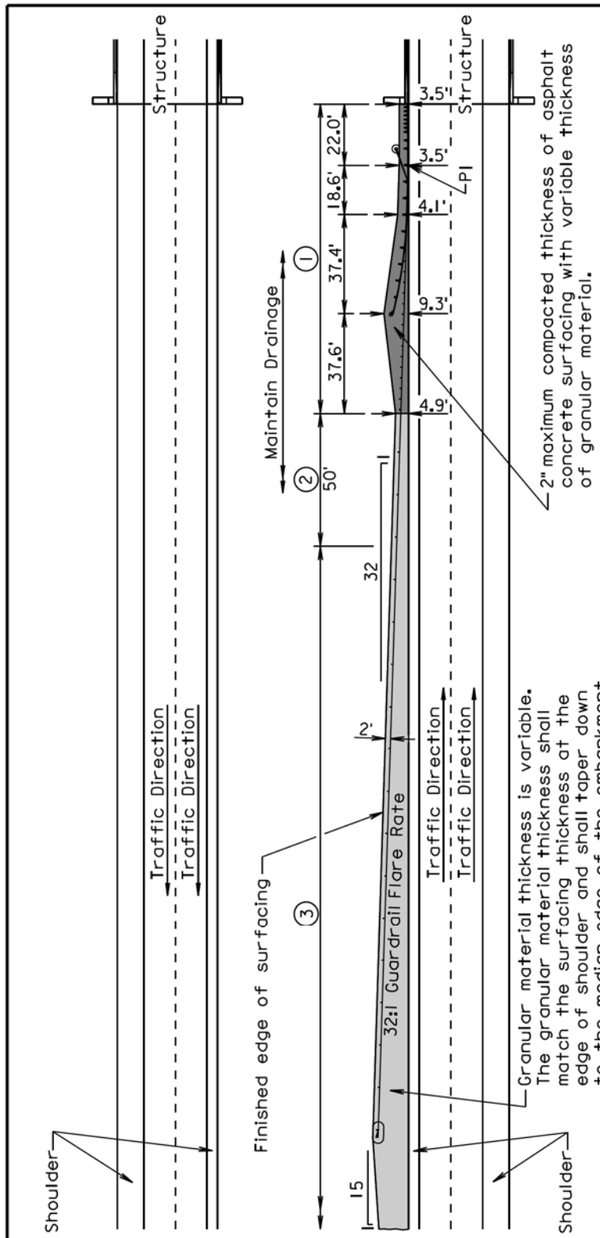

PLAN VIEW

1. Finished embankment surfacing cross slope shall be the same as the roadway cross slope.
2. Finished embankment surfacing cross slope transition.
3. Finished embankment surfacing cross slope shall be 10:1, however, a cross slope flatter than 10:1 may be used to obtain the 6" minimum thickness of granular material.

GENERAL NOTES:

Asphalt concrete shall be the same type used elsewhere on the project or shall be as specified in the plans. If asphalt concrete is not specified in the plans, the asphalt concrete shall conform to the Specifications for "Asphalt Concrete Composite."

Granular material shall be the same type used elsewhere on the project or shall be as specified in the plans. If granular material type is not specified in the plans, the material shall conform to the Specifications for "Base Course".

February 10, 2014

Published Date: 3rd Qtr. 2015

SDDOT

EMBANKMENT AND SURFACING FOR TYPICAL MEDIAN PROTECTION

PLATE NUMBER 630.99

Sheet 1 of 1

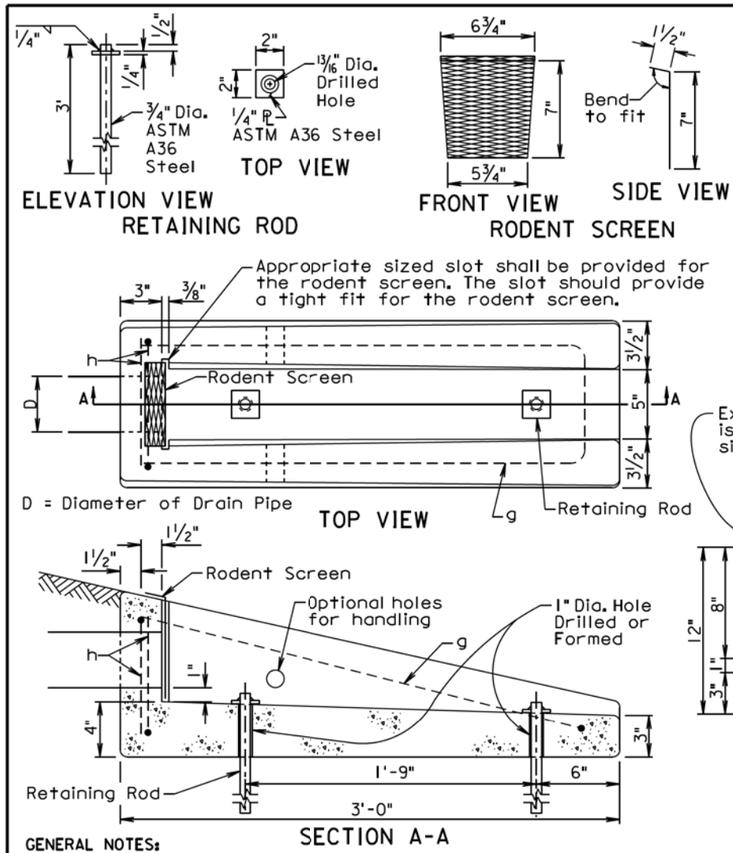

REINFORCING SCHEDULE

MK.	No.	Size	Length	Type
g	1	4	6'-3"	17
h	2	4	2'-4"	17

NOTE:
All dimensions are out to out of bars.

Bending Details

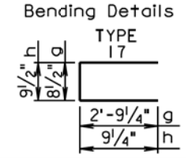

GENERAL NOTES:

The concrete shall be Class M6. The concrete shall conform to the requirements of section 462 of the Standard Specifications. It is estimated that each unit weighs approximately 210 pounds.

All reinforcing steel shall conform to ASTM A615 Grade 60 and shall be epoxy coated. The reinforcing steel shall be securely retained to prevent displacement during placement of concrete. It is estimated that 7.3 pounds of reinforcing steel is required for each unit.

The pipe shall be placed in the concrete headwall with the pipe end flush with the concrete surface adjacent to the rodent screen.

The rodent screen shall be galvanized 13 Ga. steel with a diamond shaped flattened mesh pattern. The size shall be 1/2". The size refers to the measurement across the smallest diamond shaped opening measured from the centers of the wires.

The retaining rod shall be galvanized in accordance with ASTM A123 after all shop welding has been completed.

The drawing indicates using 1/2" fillets; however, 3/4" chamfers may be substituted for the 1/2" fillets.

All costs for furnishing and installing the concrete headwall including equipment, labor, and materials including concrete, reinforcing steel, retaining rods, and rodent screen shall be incidental to the contract unit price per each for "Precast Concrete Headwall for Drain".

December 23, 2010

Published Date: 3rd Qtr. 2015	SDDOT	***PRECAST CONCRETE HEADWALL FOR DRAIN***	*PLATE NUMBER* 680.03
			Sheet 1 of 1

PLOT SCALE - 1:200
PLOT NAME - 102
FILE - ...\JONS035E\STDPLATEPAGE 28.DGN
-PLOTTED FROM - TRPR16032

STATE OF SOUTH DAKOTA	PROJECT	SHEET	TOTAL SHEETS
	IM 0904(57)189 & NH 0083(85)87	F127	F145

Plotting Date: 08/06/2015

PCC OVERLAY CENTERLINE PROFILE

The PCC Overlay centerline profile shown in these plans was used to calculate the cubic yards for the PCC Overlay furnished.
The PCC Overlay centerline profile was designed so that there will be a minimum of 7.8 inches of PCC at all locations of the typical sections.
The PCC Overlay centerline profile sheets are included in the plans for information only.
The Contractor shall create a new PCC Overlay centerline profile in accordance with the Special Provision for Contractor Staking.
The elevations shown are the top of the PCC Overlay at Centerline.
Profile begins at Station 6+76 and ends at Station a 74+92.82

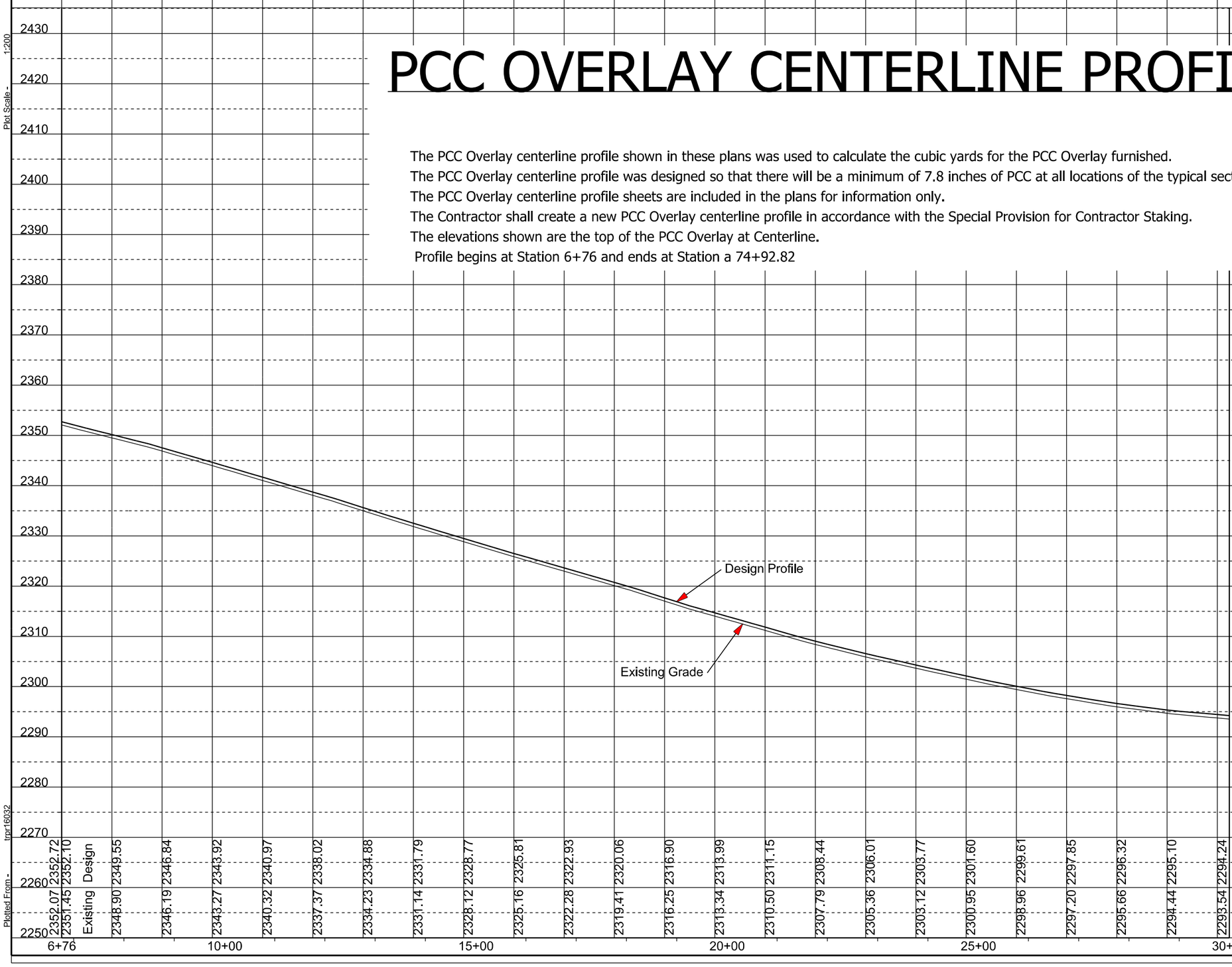

Existing	2352.07	2351.45	2352.10	2348.90	2346.19	2343.27	2340.32	2337.37	2334.23	2331.14	2328.12	2325.16	2322.28	2319.41	2316.25	2313.34	2310.50	2307.79	2305.36	2303.12	2300.95	2298.96	2297.20	2295.66	2294.44	2293.54
Design				2349.55	2346.84	2343.92	2340.97	2338.02	2334.88	2331.79	2328.77	2325.81	2322.93	2320.06	2316.90	2313.99	2311.15	2308.44	2306.01	2303.77	2301.60	2299.61	2297.85	2296.32	2295.10	2294.24

Plot Scale - 1:200

Plotted From- tpr16032

File - U:\msjprj\Jons035E1st pro.dgn

STATE OF SOUTH DAKOTA	PROJECT	SHEET	TOTAL SHEETS
	IM 0904(57)189 & NH 0083(85)87	F128	F145

Plotting Date: 08/06/2015

PCC OVERLAY CENTERLINE PROFILE

The PCC Overlay centerline profile shown in these plans was used to calculate the cubic yards for the PCC Overlay furnished.
The PCC Overlay centerline profile was designed so that there will be a minimum of 7.8 inches of PCC at all locations of the typical sections.
The PCC Overlay centerline profile sheets are included in the plans for information only.
The Contractor shall create a new PCC Overlay centerline profile in accordance with the Special Provision for Contractor Staking.
The elevations shown are the top of the PCC Overlay at Centerline.
Profile begins at Station 6+76 and ends at Station a 74+92.82

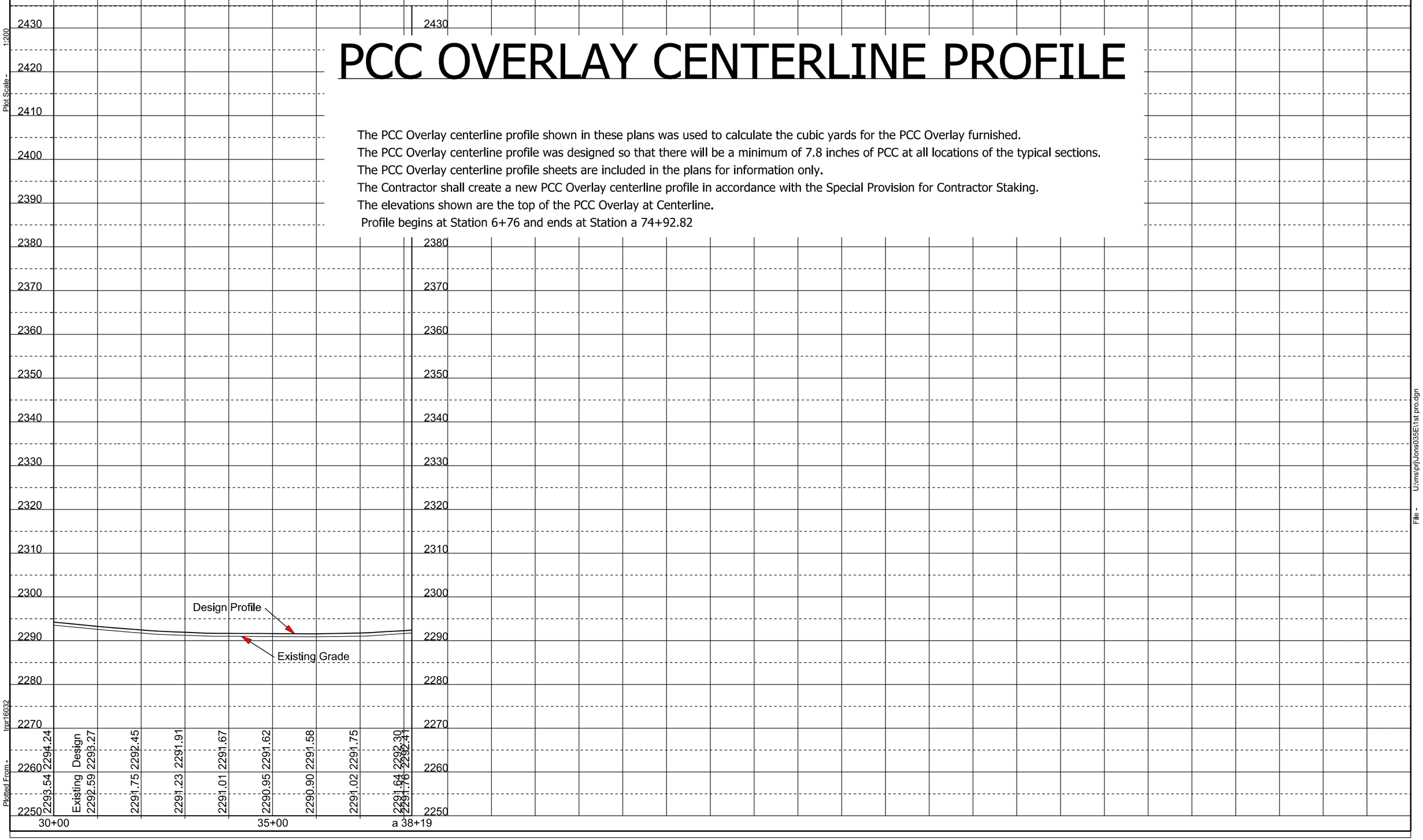

STATE OF SOUTH DAKOTA	PROJECT	SHEET	TOTAL SHEETS
	IM 0904(57)189 & NH 0083(85)87	F129	F145

Plotting Date: 08/06/2015

PCC OVERLAY CENTERLINE PROFILE

The PCC Overlay centerline profile shown in these plans was used to calculate the cubic yards for the PCC Overlay furnished.
The PCC Overlay centerline profile was designed so that there will be a minimum of 7.8 inches of PCC at all locations of the typical sections.
The PCC Overlay centerline profile sheets are included in the plans for information only.
The Contractor shall create a new PCC Overlay centerline profile in accordance with the Special Provision for Contractor Staking.
The elevations shown are the top of the PCC Overlay at Centerline.
Profile begins at Station 6+76 and ends at Station a 74+92.82

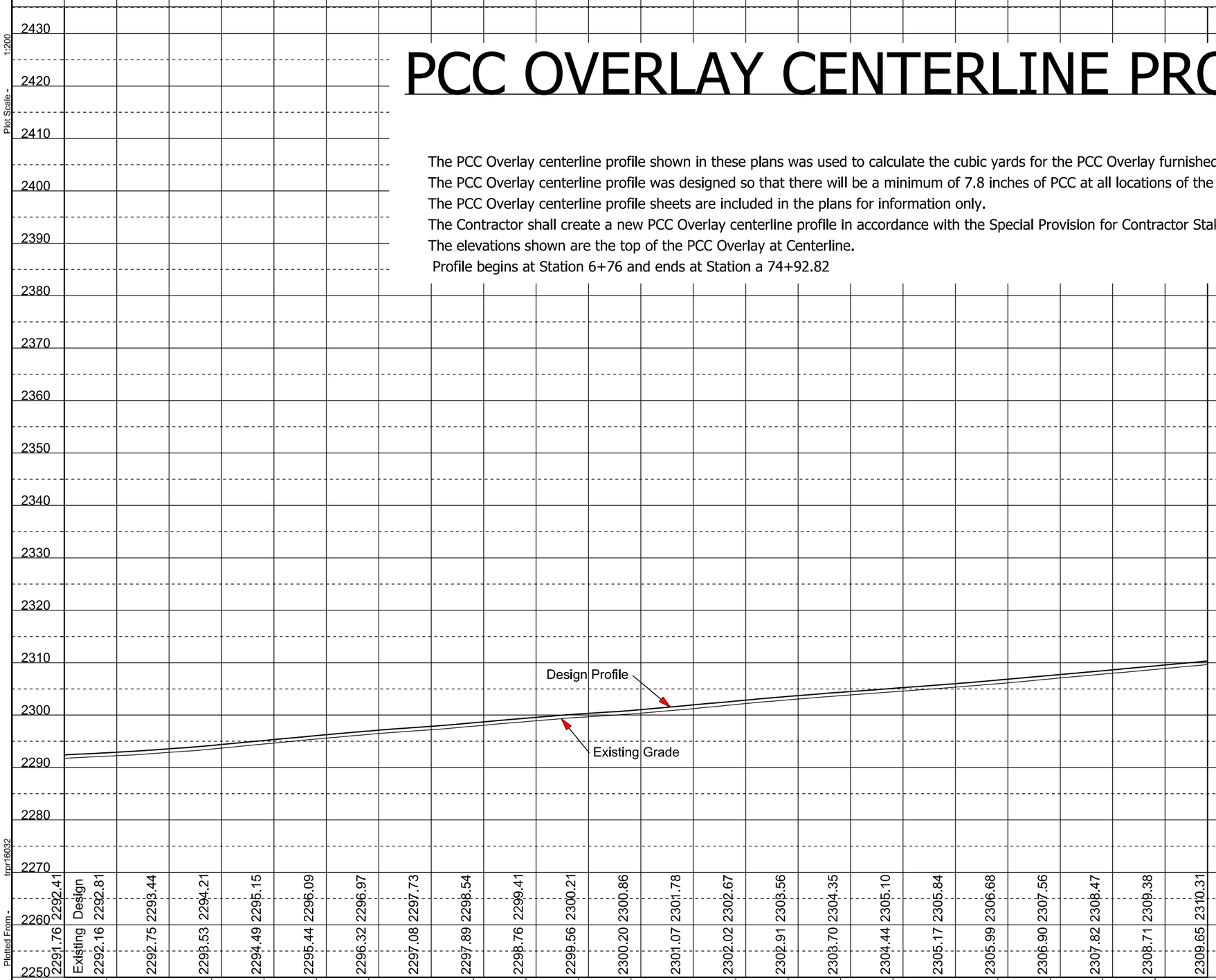

	a 38+19	a 40+00				a 45+00				a 50+00				a 55+00				a 60+00
Design	2292.41	2293.44	2294.21	2295.15	2296.09	2296.97	2297.73	2298.54	2299.41	2300.21	2300.86	2301.78	2302.67	2303.56	2304.35	2305.10	2305.84	2306.68	2307.56	2308.47	2309.38	2310.31
Existing	2291.76	2292.75	2293.53	2294.49	2295.44	2296.32	2297.08	2297.89	2298.76	2299.56	2300.20	2301.07	2302.02	2302.91	2303.70	2304.44	2305.17	2305.99	2306.90	2307.82	2308.71	2309.65

Plot Scale - 1:200
Plotted From - tmpr16032
File - U:\ms\prj\Jons035E\1st pro.dgn

STATE OF SOUTH DAKOTA	PROJECT	SHEET	TOTAL SHEETS
	IM 0904(57)189 & NH 0083(85)87	F130	F145

Plotting Date: 08/06/2015

PCC OVERLAY CENTERLINE PROFILE

The PCC Overlay centerline profile shown in these plans was used to calculate the cubic yards for the PCC Overlay furnished.
The PCC Overlay centerline profile was designed so that there will be a minimum of 7.8 inches of PCC at all locations of the typical sections.
The PCC Overlay centerline profile sheets are included in the plans for information only.
The Contractor shall create a new PCC Overlay centerline profile in accordance with the Special Provision for Contractor Staking.
The elevations shown are the top of the PCC Overlay at Centerline.
Profile begins at Station 6+76 and ends at Station a 74+92.82

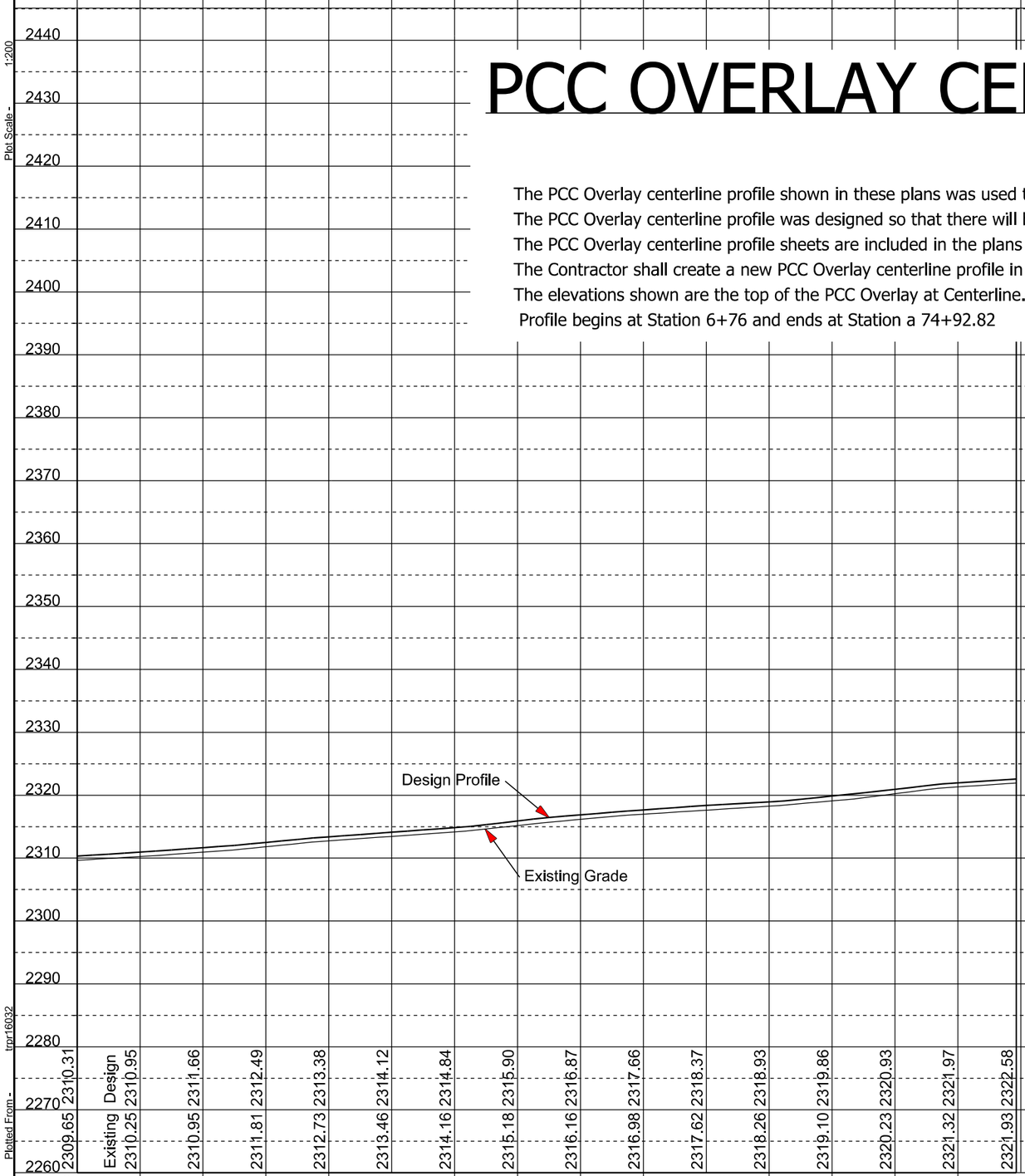

Plot Scale - 1:200

Plotted From - tmpr16032

File - U:\ms\prj\Jons035E\1st pro.dgn

STATE OF SOUTH DAKOTA	PROJECT	SHEET	TOTAL SHEETS
	IM 0904(57)189 & NH 0083(85)87	F131	F145

Plotting Date: 08/06/2015

PCC OVERLAY CENTERLINE PROFILE

The PCC Overlay centerline profile shown in these plans was used to calculate the cubic yards for the PCC Overlay furnished.
The PCC Overlay centerline profile was designed so that there will be a minimum of 7.8 inches of PCC at all locations of the typical sections.
The PCC Overlay centerline profile sheets are included in the plans for information only.
The Contractor shall create a new PCC Overlay centerline profile in accordance with the Special Provision for Contractor Staking.
The elevations shown are the top of the PCC Overlay at Centerline.
Profile begins at Station a 86+80.54 and ends at Station b 268+53.97

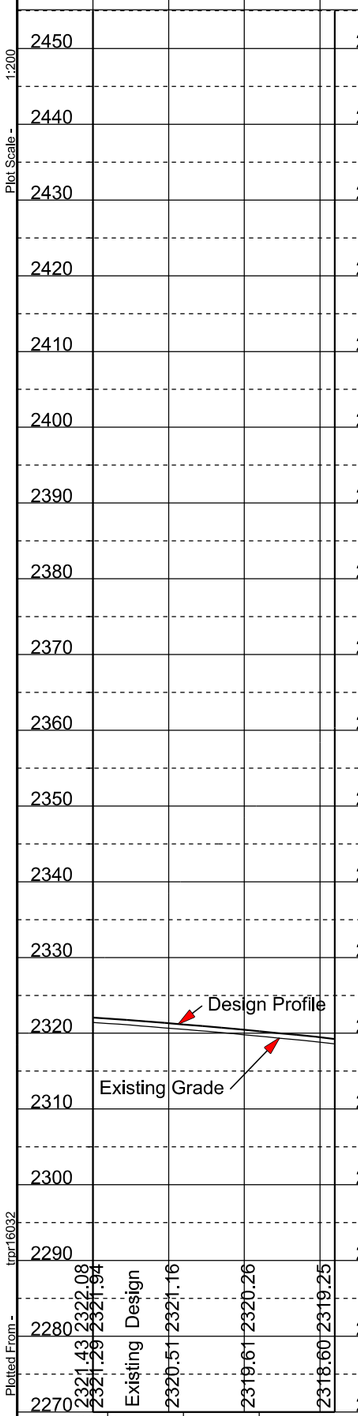

Plot Scale - 1:200

Plotted From - tmpr16032

File - U:\ms\prj\Jons035E2nd pro.dgn

STATE OF SOUTH DAKOTA	PROJECT	SHEET	TOTAL SHEETS
	IM 0904(57)189 & NH 0083(85)87	F132	F145

Plotting Date: 08/06/2015

PCC OVERLAY CENTERLINE PROFILE

The PCC Overlay centerline profile shown in these plans was used to calculate the cubic yards for the PCC Overlay furnished.
The PCC Overlay centerline profile was designed so that there will be a minimum of 7.8 inches of PCC at all locations of the typical sections.
The PCC Overlay centerline profile sheets are included in the plans for information only.
The Contractor shall create a new PCC Overlay centerline profile in accordance with the Special Provision for Contractor Staking.
The elevations shown are the top of the PCC Overlay at Centerline.
Profile begins at Station a 86+80.54 and ends at Station b 268+53.97

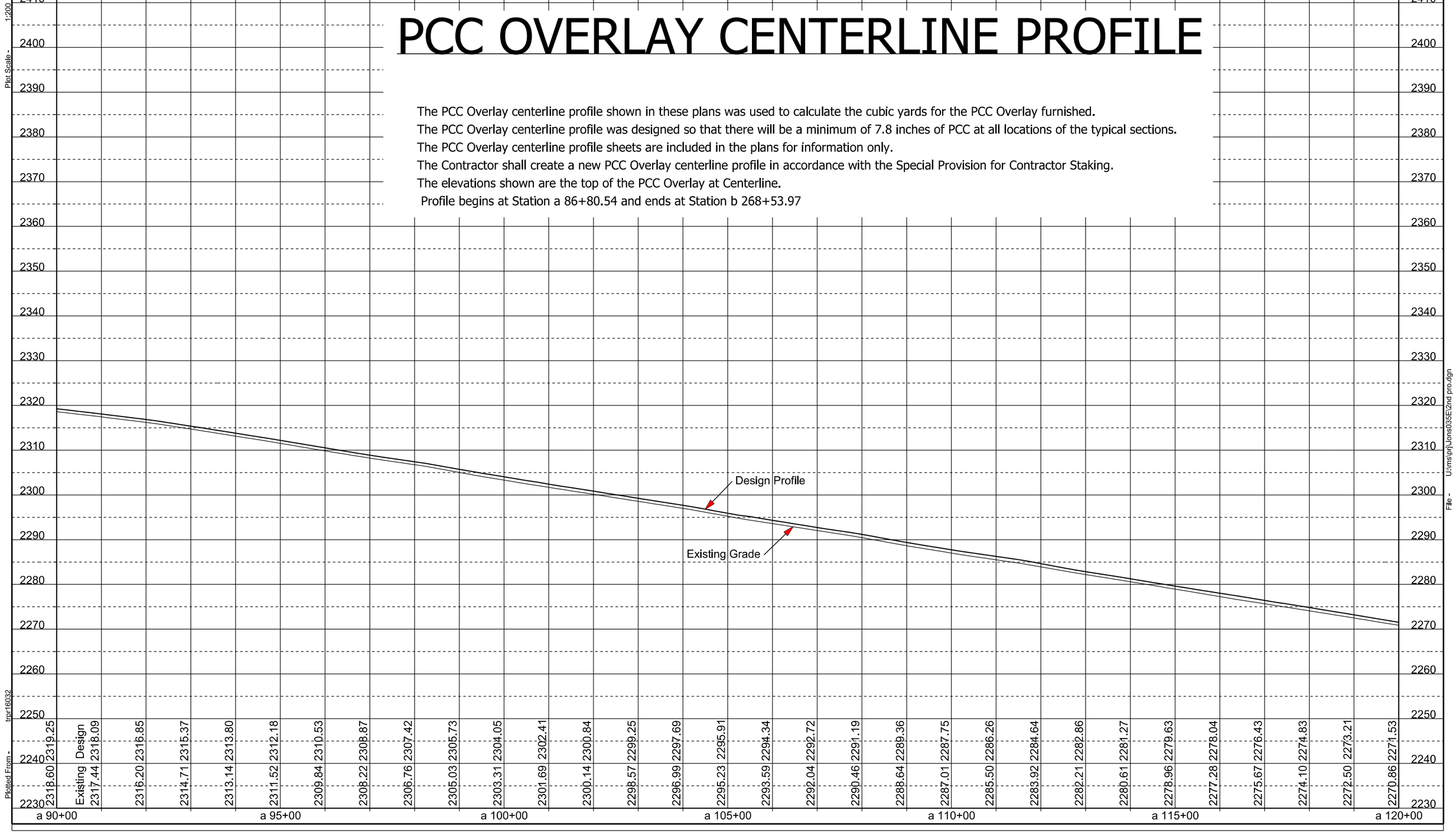

Plot Scale - 1:200
Plotted From - tmpr16032
File - U:\ms\prj\Jons035E2nd pro.dgn

STATE OF SOUTH DAKOTA	PROJECT	SHEET	TOTAL SHEETS
	IM 0904(57)189 & NH 0083(85)87	F133	F145

Plotting Date: 08/06/2015

PCC OVERLAY CENTERLINE PROFILE

The PCC Overlay centerline profile shown in these plans was used to calculate the cubic yards for the PCC Overlay furnished.
The PCC Overlay centerline profile was designed so that there will be a minimum of 7.8 inches of PCC at all locations of the typical sections.
The PCC Overlay centerline profile sheets are included in the plans for information only.
The Contractor shall create a new PCC Overlay centerline profile in accordance with the Special Provision for Contractor Staking.
The elevations shown are the top of the PCC Overlay at Centerline.
Profile begins at Station a 86+80.54 and ends at Station b 268+53.97

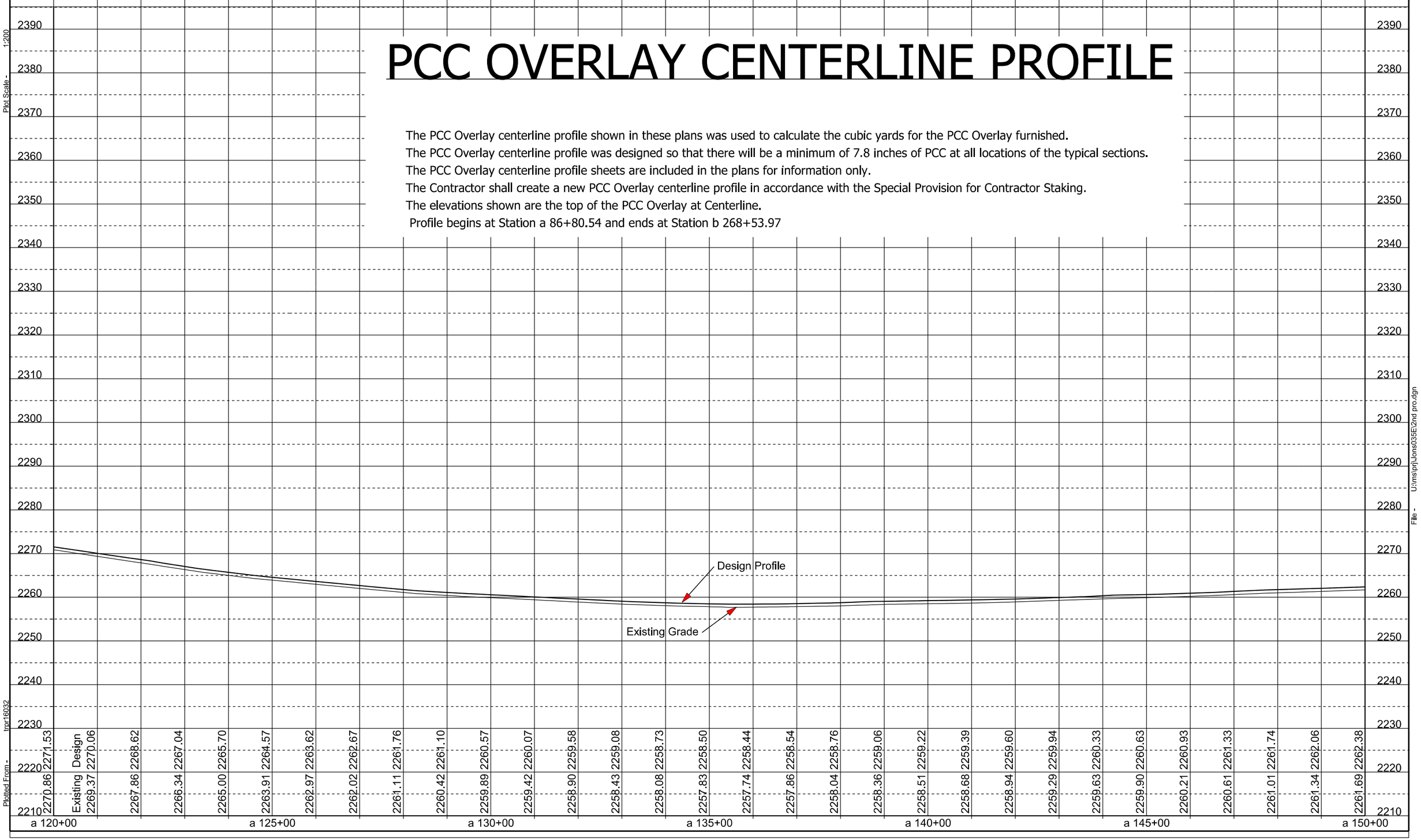

	Existing	Design
a 120+00	2270.86	2271.53
	2269.37	2270.06
	2267.86	2268.62
	2266.34	2267.04
	2265.00	2265.70
a 125+00	2263.91	2264.57
	2262.97	2263.62
	2262.02	2262.67
	2261.11	2261.76
	2260.42	2261.10
a 130+00	2259.89	2260.57
	2259.42	2260.07
	2258.90	2259.58
	2258.43	2259.08
	2258.08	2258.73
a 135+00	2257.83	2258.50
	2257.74	2258.44
	2257.86	2258.54
	2258.04	2258.76
	2258.36	2259.06
a 140+00	2258.51	2259.22
	2258.68	2259.39
	2258.94	2259.60
	2259.29	2259.94
	2259.63	2260.33
a 145+00	2259.90	2260.63
	2260.21	2260.93
	2260.61	2261.33
	2261.01	2261.74
	2261.34	2262.06
	2261.69	2262.38
a 150+00		

Plot Scale - 1:200
Plotted From - tmpr16032
File - U:\ms\prj\Jons035E2nd pro.dgn

STATE OF SOUTH DAKOTA	PROJECT	SHEET	TOTAL SHEETS
	IM 0904(57)189 & NH 0083(85)87	F134	F145

Plotting Date: 08/06/2015

PCC OVERLAY CENTERLINE PROFILE

The PCC Overlay centerline profile shown in these plans was used to calculate the cubic yards for the PCC Overlay furnished.
The PCC Overlay centerline profile was designed so that there will be a minimum of 7.8 inches of PCC at all locations of the typical sections.
The PCC Overlay centerline profile sheets are included in the plans for information only.
The Contractor shall create a new PCC Overlay centerline profile in accordance with the Special Provision for Contractor Staking.
The elevations shown are the top of the PCC Overlay at Centerline.
Profile begins at Station a 86+80.54 and ends at Station b 268+53.97

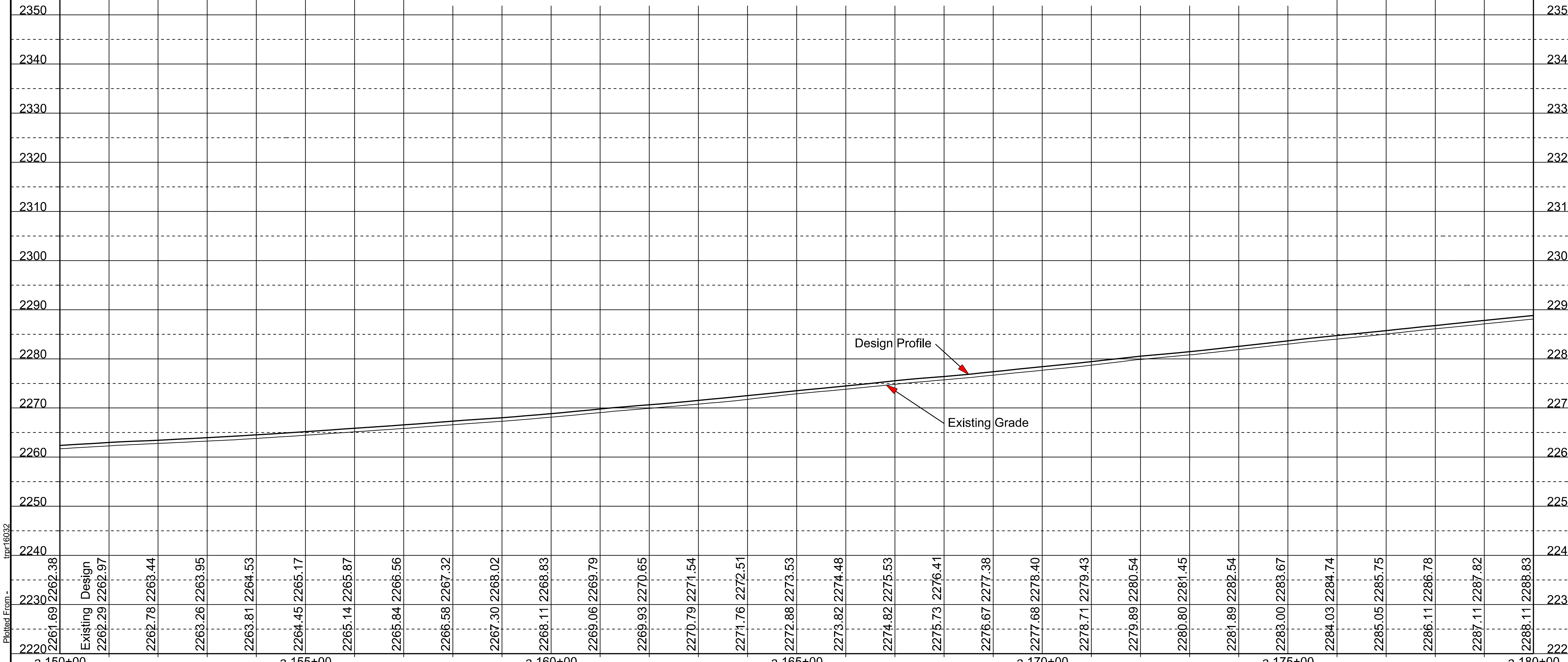

Station	Existing	Design
a 150+00	2261.69	2262.38
	2262.29	2262.97
	2262.78	2263.44
	2263.26	2263.95
	2263.81	2264.53
a 155+00	2264.45	2265.17
	2265.14	2265.87
	2265.84	2266.56
	2266.58	2267.32
	2267.30	2268.02
a 160+00	2268.11	2268.83
	2269.06	2269.79
	2269.93	2270.65
	2270.79	2271.54
	2271.76	2272.51
a 165+00	2272.88	2273.53
	2273.82	2274.48
	2274.82	2275.53
	2275.73	2276.41
	2276.67	2277.38
a 170+00	2277.68	2278.40
	2278.71	2279.43
	2279.89	2280.54
	2280.80	2281.45
	2281.89	2282.54
a 175+00	2283.00	2283.67
	2284.03	2284.74
	2285.05	2285.75
	2286.11	2286.78
	2287.11	2287.82
a 180+00	2288.11	2288.83

Plot Scale - 1:200

Plotted From - trpr16032

File - U:\ms\prj\ons035E\2nd pro.dgn

PCC OVERLAY CENTERLINE PROFILE

The PCC Overlay centerline profile shown in these plans was used to calculate the cubic yards for the PCC Overlay furnished.
The PCC Overlay centerline profile was designed so that there will be a minimum of 7.8 inches of PCC at all locations of the typical sections.
The PCC Overlay centerline profile sheets are included in the plans for information only.
The Contractor shall create a new PCC Overlay centerline profile in accordance with the Special Provision for Contractor Staking.
The elevations shown are the top of the PCC Overlay at Centerline.
Profile begins at Station a 86+80.54 and ends at Station b 268+53.97

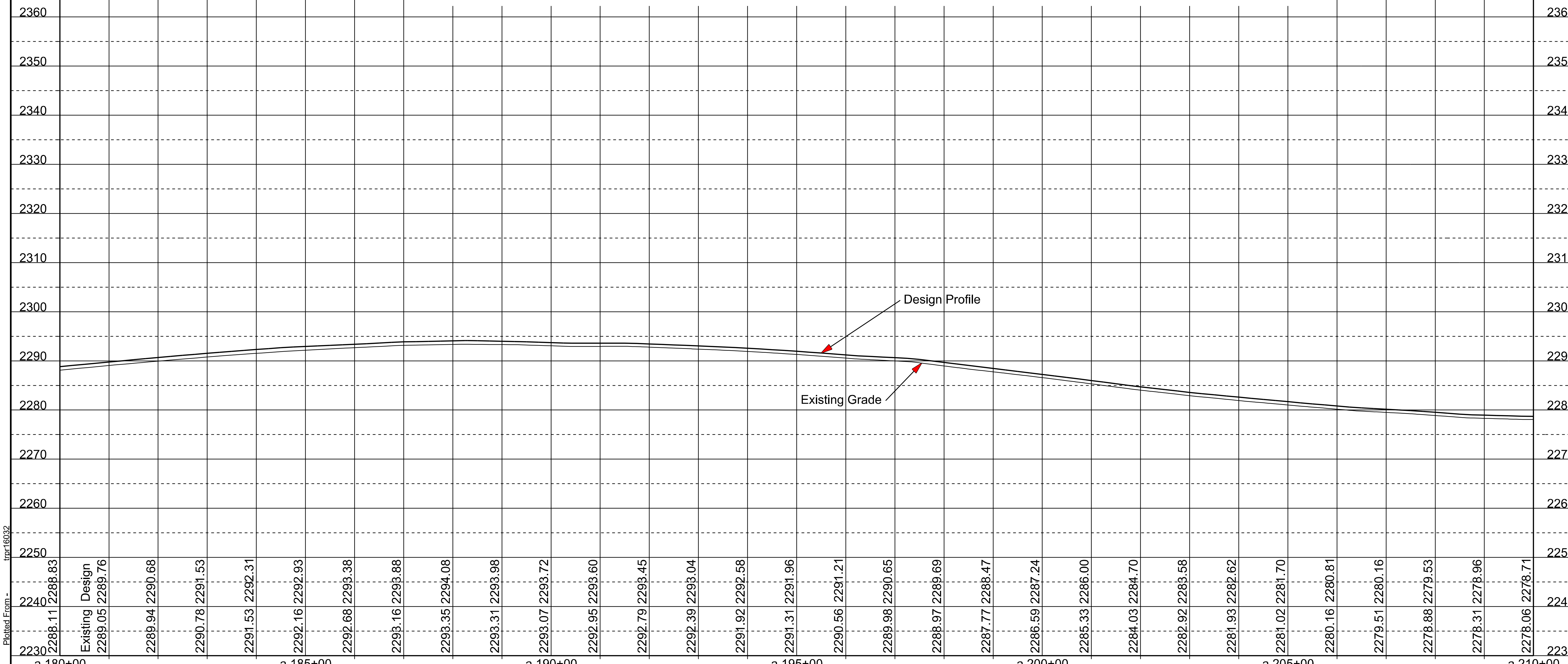

Station	Existing	Design
a 180+00	2288.11	2288.83
	2289.05	2289.76
	2289.94	2290.68
	2290.78	2291.53
	2291.53	2292.31
a 185+00	2292.16	2292.93
	2292.68	2293.38
	2293.16	2293.88
	2293.35	2294.08
	2293.31	2293.98
a 190+00	2293.07	2293.72
	2292.95	2293.60
	2292.79	2293.45
	2292.39	2293.04
	2291.92	2292.58
a 195+00	2291.31	2291.96
	2290.56	2291.21
	2289.98	2290.65
	2288.97	2289.69
	2287.77	2288.47
a 200+00	2286.59	2287.24
	2285.33	2286.00
	2284.03	2284.70
	2282.92	2283.58
	2281.93	2282.62
a 205+00	2281.02	2281.70
	2280.16	2280.81
	2279.51	2280.16
	2278.88	2279.53
	2278.31	2278.96
a 210+00	2278.06	2278.71

Plot Scale - 1:200
Plotted From - trpr16032
File - U:\ms\prj\Jons035E\2nd pro.dgn

STATE OF SOUTH DAKOTA	PROJECT	SHEET	TOTAL SHEETS
	IM 0904(57)189 & NH 0083(85)87	F136	F145

Plotting Date: 08/06/2015

PCC OVERLAY CENTERLINE PROFILE

The PCC Overlay centerline profile shown in these plans was used to calculate the cubic yards for the PCC Overlay furnished.
The PCC Overlay centerline profile was designed so that there will be a minimum of 7.8 inches of PCC at all locations of the typical sections.
The PCC Overlay centerline profile sheets are included in the plans for information only.
The Contractor shall create a new PCC Overlay centerline profile in accordance with the Special Provision for Contractor Staking.
The elevations shown are the top of the PCC Overlay at Centerline.
Profile begins at Station a 86+80.54 and ends at Station b 268+53.97

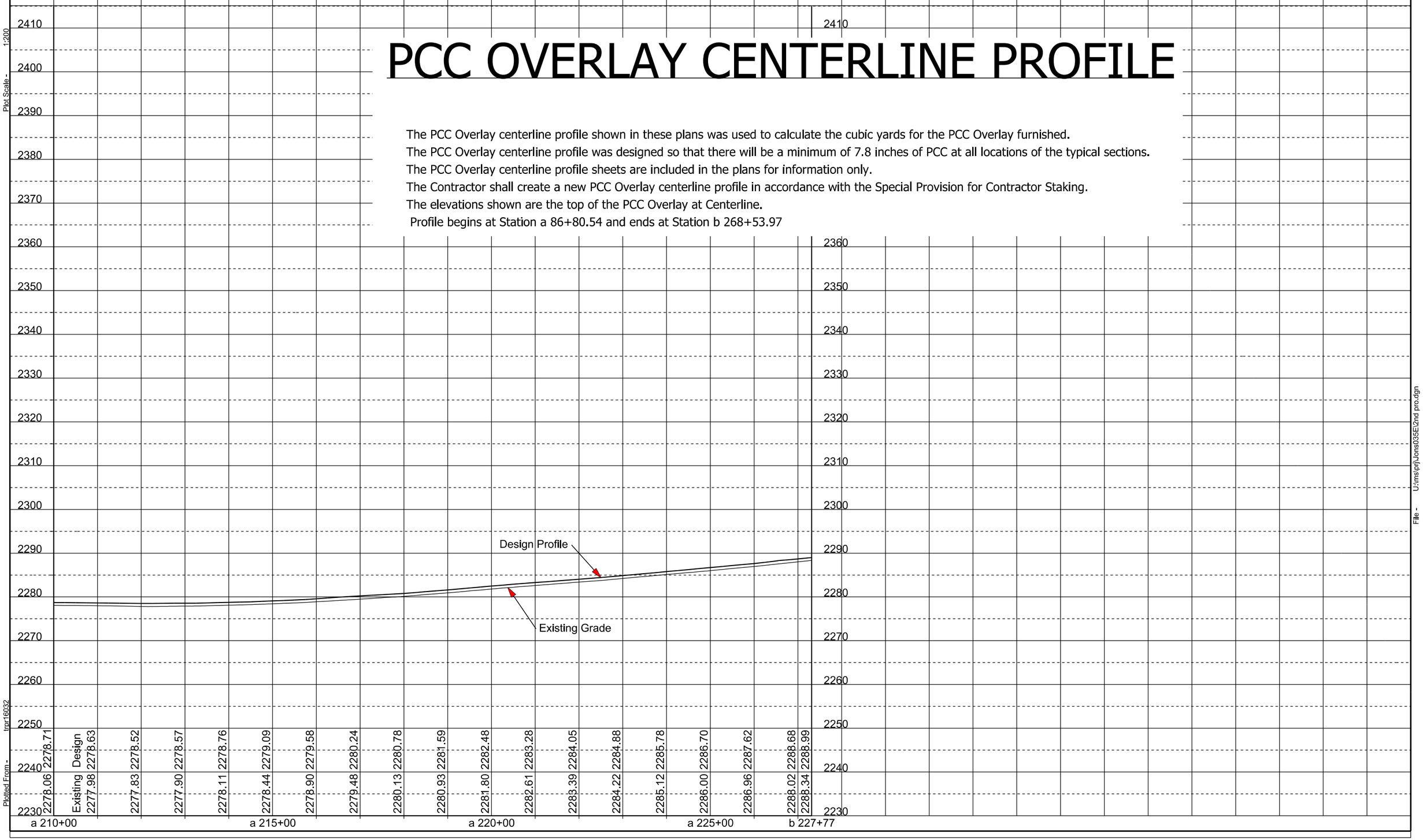

STATE OF SOUTH DAKOTA	PROJECT	SHEET	TOTAL SHEETS
	IM 0904(57)189 & NH 0083(85)87	F137	F145

Plotting Date: 08/06/2015

PCC OVERLAY CENTERLINE PROFILE

The PCC Overlay centerline profile shown in these plans was used to calculate the cubic yards for the PCC Overlay furnished.
The PCC Overlay centerline profile was designed so that there will be a minimum of 7.8 inches of PCC at all locations of the typical sections.
The PCC Overlay centerline profile sheets are included in the plans for information only.
The Contractor shall create a new PCC Overlay centerline profile in accordance with the Special Provision for Contractor Staking.
The elevations shown are the top of the PCC Overlay at Centerline.
Profile begins at Station a 86+80.54 and ends at Station b 268+53.97

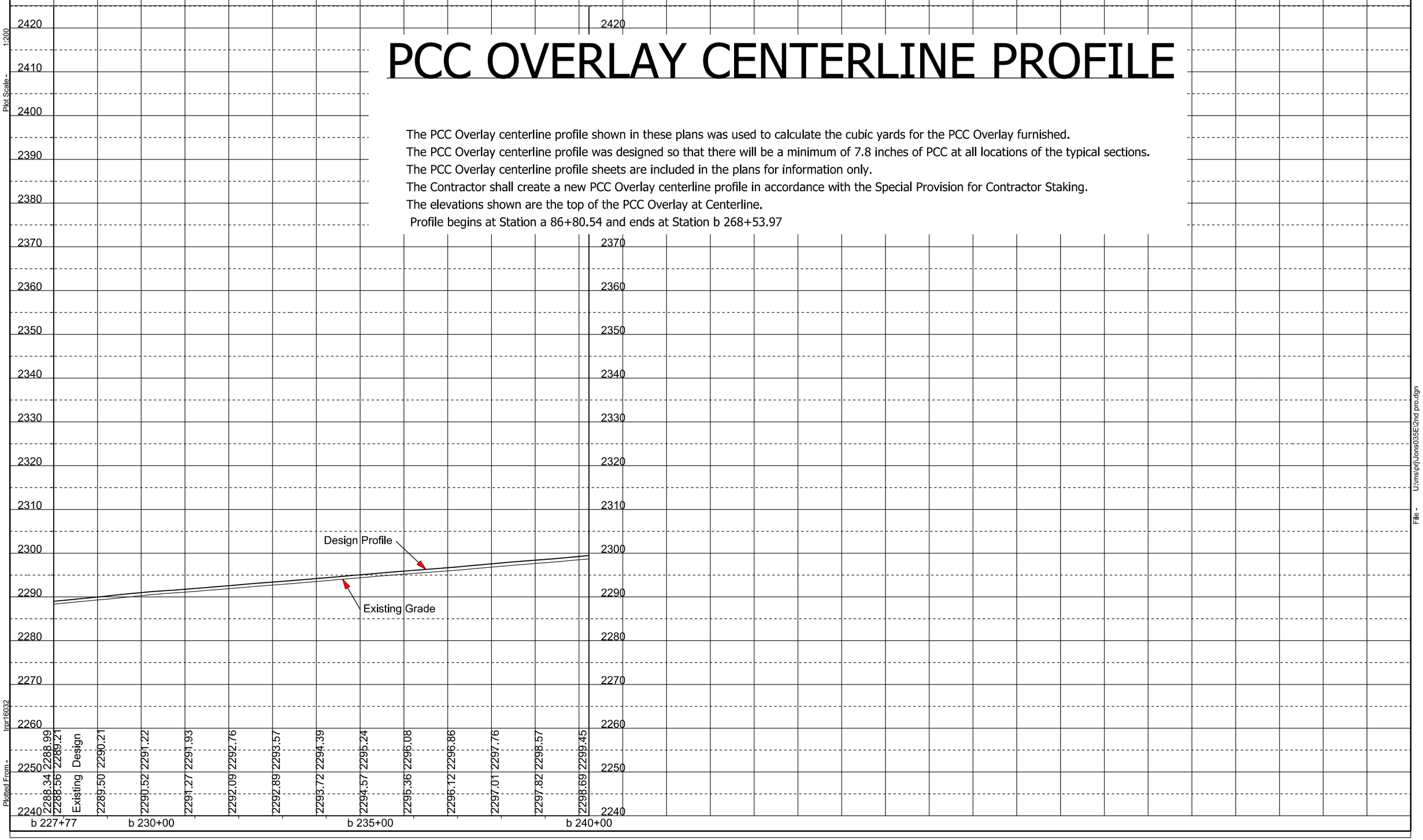

STATE OF SOUTH DAKOTA	PROJECT	SHEET	TOTAL SHEETS
	IM 0904(57)189 & NH 0083(85)87	F138	F145

Plotting Date: 08/06/2015

PCC OVERLAY CENTERLINE PROFILE

The PCC Overlay centerline profile shown in these plans was used to calculate the cubic yards for the PCC Overlay furnished.
The PCC Overlay centerline profile was designed so that there will be a minimum of 7.8 inches of PCC at all locations of the typical sections.
The PCC Overlay centerline profile sheets are included in the plans for information only.
The Contractor shall create a new PCC Overlay centerline profile in accordance with the Special Provision for Contractor Staking.
The elevations shown are the top of the PCC Overlay at Centerline.
Profile begins at Station a 86+80.54 and ends at Station b 268+53.97

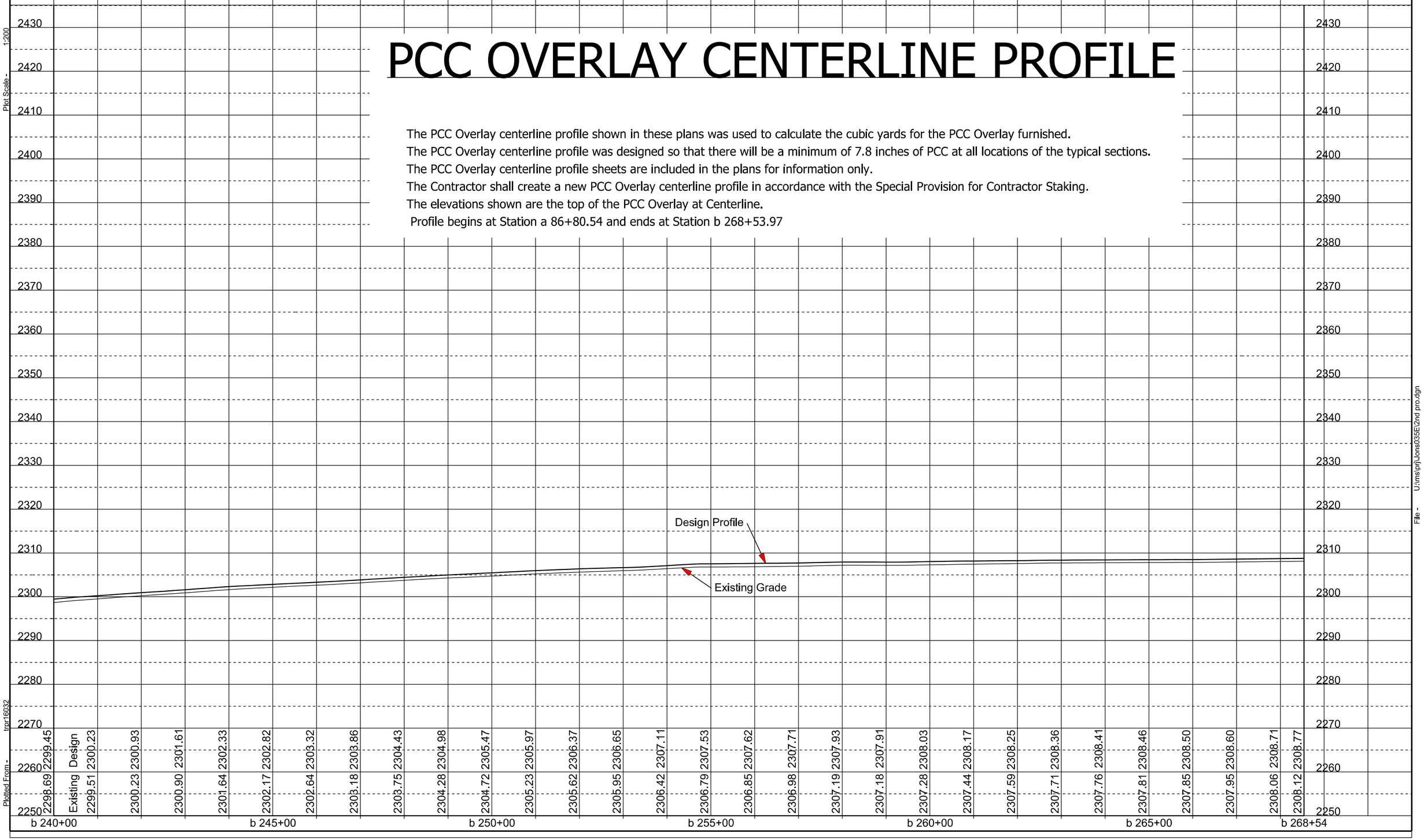

	Design	Existing
b 240+00	2299.45	2298.69
	2300.23	2299.51
	2300.93	2300.23
	2301.61	2300.90
	2302.33	2301.64
b 245+00	2302.82	2302.17
	2303.32	2302.64
	2303.86	2303.18
	2304.43	2303.75
	2304.98	2304.28
b 250+00	2305.47	2304.72
	2305.97	2305.23
	2306.37	2305.62
	2306.65	2305.95
	2307.11	2306.42
b 255+00	2307.53	2306.79
	2307.62	2306.85
	2307.71	2306.98
	2307.93	2307.19
	2307.91	2307.18
b 260+00	2308.03	2307.28
	2308.17	2307.44
	2308.25	2307.59
	2308.36	2307.71
	2308.41	2307.76
b 265+00	2308.46	2307.81
	2308.50	2307.85
	2308.60	2307.95
	2308.71	2308.06
b 268+54	2308.77	2308.12

Plot Scale - 1:200
Plotted From - tmpr16032
File - U:\ms\prj\Jons035E2nd pro.dgn

STATE OF SOUTH DAKOTA	PROJECT	SHEET	TOTAL SHEETS
	IM 0904(57)189 & NH 0083(85)87	F139	F145

Plotting Date: 08/06/2015

PCC OVERLAY CENTERLINE PROFILE

The PCC Overlay centerline profile shown in these plans was used to calculate the cubic yards for the PCC Overlay furnished.
The PCC Overlay centerline profile was designed so that there will be a minimum of 7.8 inches of PCC at all locations of the typical sections.
The PCC Overlay centerline profile sheets are included in the plans for information only.
The Contractor shall create a new PCC Overlay centerline profile in accordance with the Special Provision for Contractor Staking.
The elevations shown are the top of the PCC Overlay at Centerline.
Profile begins at Station b 277+17.80 and ends at Station c 439+04.14

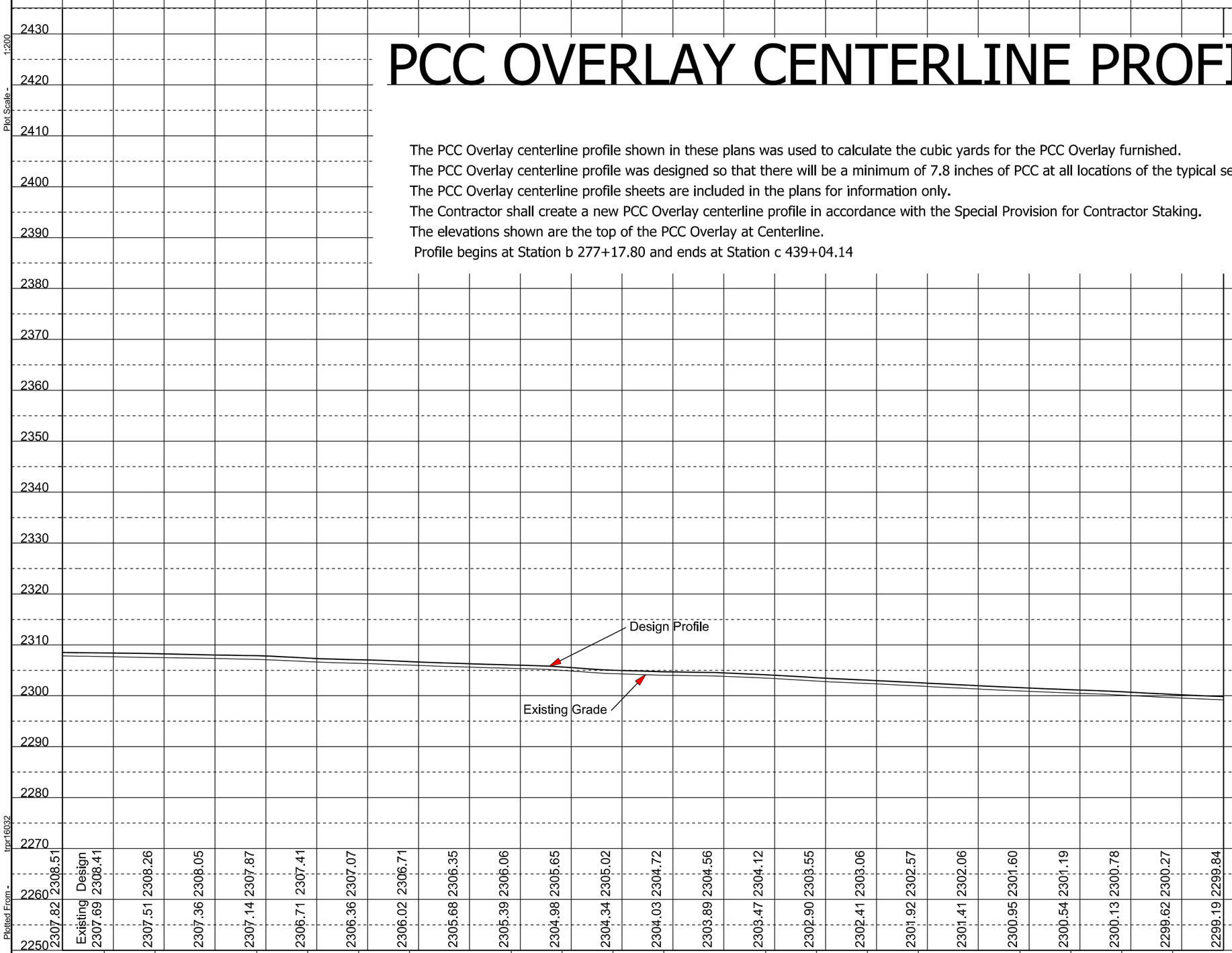

Plot Scale - 1:200

Plotted From - tmpr16032

File - U:\ms\prj\Jons035E\3rd pro.dgn

STATE OF SOUTH DAKOTA	PROJECT	SHEET	TOTAL SHEETS
	IM 0904(57)189 & NH 0083(85)87	F140	F145

Plotting Date: 08/06/2015

PCC OVERLAY CENTERLINE PROFILE

The PCC Overlay centerline profile shown in these plans was used to calculate the cubic yards for the PCC Overlay furnished.
The PCC Overlay centerline profile was designed so that there will be a minimum of 7.8 inches of PCC at all locations of the typical sections.
The PCC Overlay centerline profile sheets are included in the plans for information only.
The Contractor shall create a new PCC Overlay centerline profile in accordance with the Special Provision for Contractor Staking.
The elevations shown are the top of the PCC Overlay at Centerline.
Profile begins at Station b 277+17.80 and ends at Station c 439+04.14

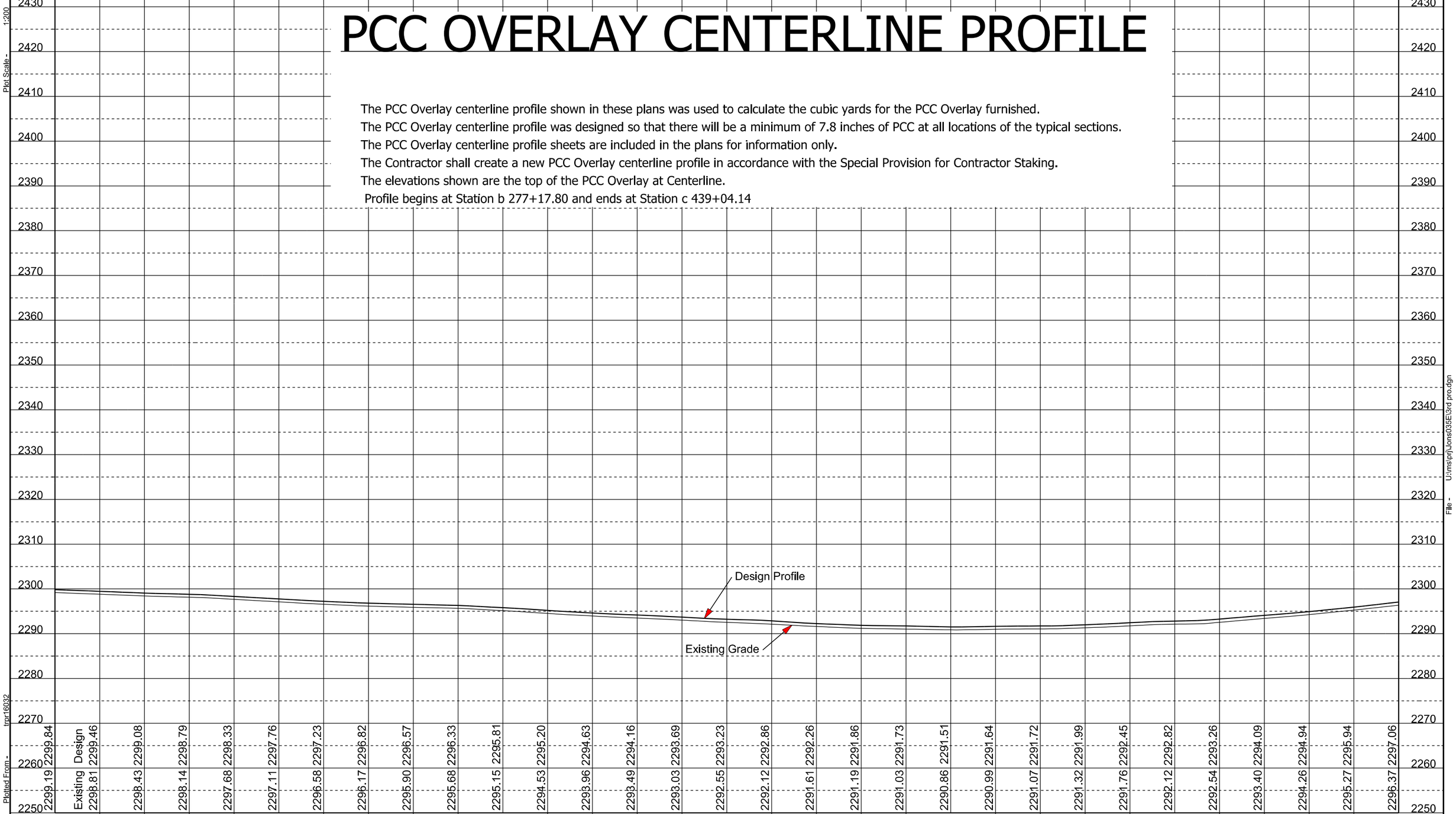

Plot Scale - 1:200
Plotted From - tmpr16032
File - U:\ms\prj\Jons035E\3rd pro.dgn

STATE OF SOUTH DAKOTA	PROJECT	SHEET	TOTAL SHEETS
	IM 0904(57)189 & NH 0083(85)87	F141	F145

Plotting Date: 08/06/2015

PCC OVERLAY CENTERLINE PROFILE

The PCC Overlay centerline profile shown in these plans was used to calculate the cubic yards for the PCC Overlay furnished.
The PCC Overlay centerline profile was designed so that there will be a minimum of 7.8 inches of PCC at all locations of the typical sections.
The PCC Overlay centerline profile sheets are included in the plans for information only.
The Contractor shall create a new PCC Overlay centerline profile in accordance with the Special Provision for Contractor Staking.
The elevations shown are the top of the PCC Overlay at Centerline.
Profile begins at Station b 277+17.80 and ends at Station c 439+04.14

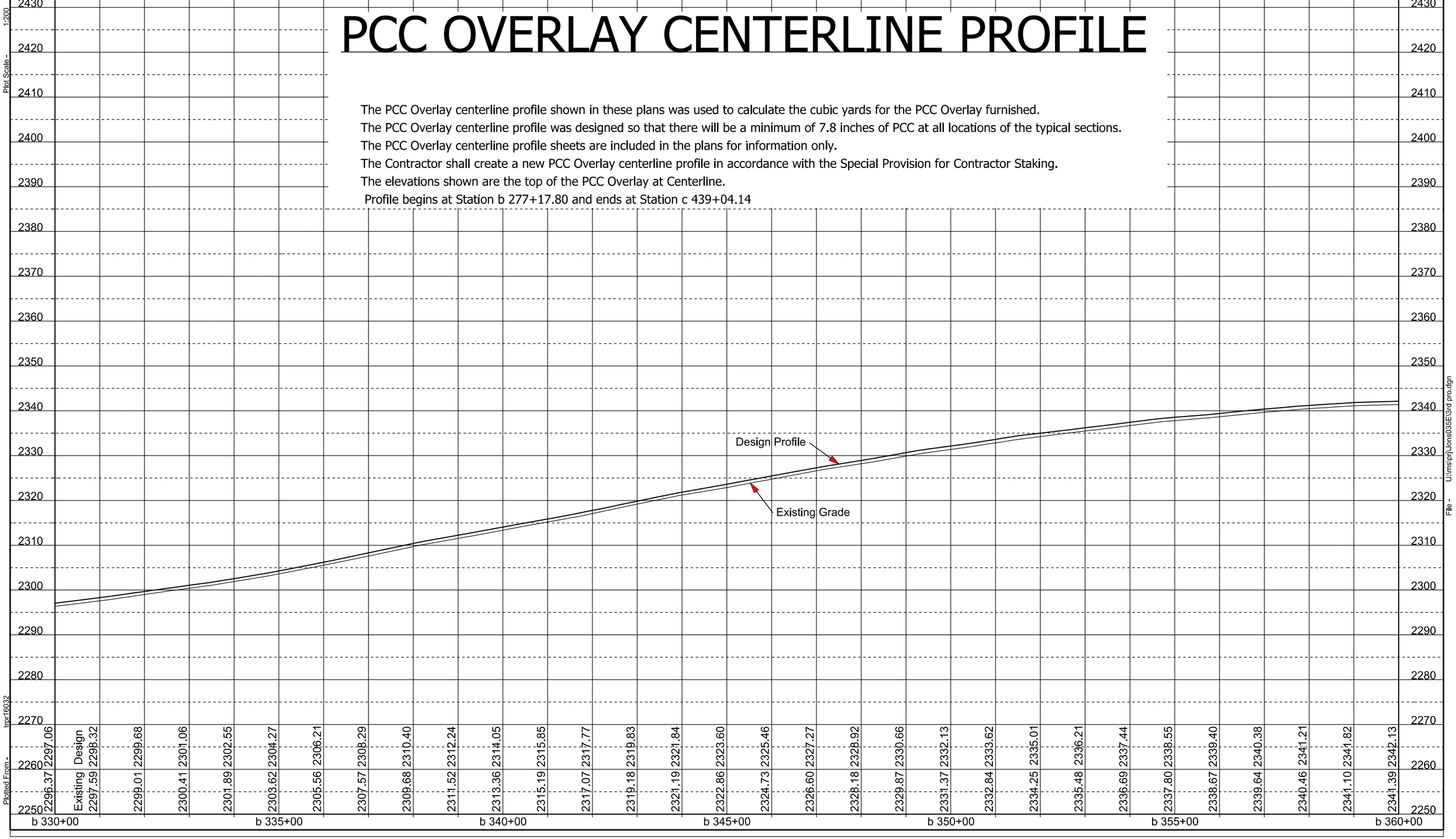

STATE OF SOUTH DAKOTA	PROJECT	SHEET	TOTAL SHEETS
	IM 0904(57)189 & NH 0083(85)87	F142	F145

Plotting Date: 08/06/2015

PCC OVERLAY CENTERLINE PROFILE

The PCC Overlay centerline profile shown in these plans was used to calculate the cubic yards for the PCC Overlay furnished.
The PCC Overlay centerline profile was designed so that there will be a minimum of 7.8 inches of PCC at all locations of the typical sections.
The PCC Overlay centerline profile sheets are included in the plans for information only.
The Contractor shall create a new PCC Overlay centerline profile in accordance with the Special Provision for Contractor Staking.
The elevations shown are the top of the PCC Overlay at Centerline.
Profile begins at Station b 277+17.80 and ends at Station c 439+04.14

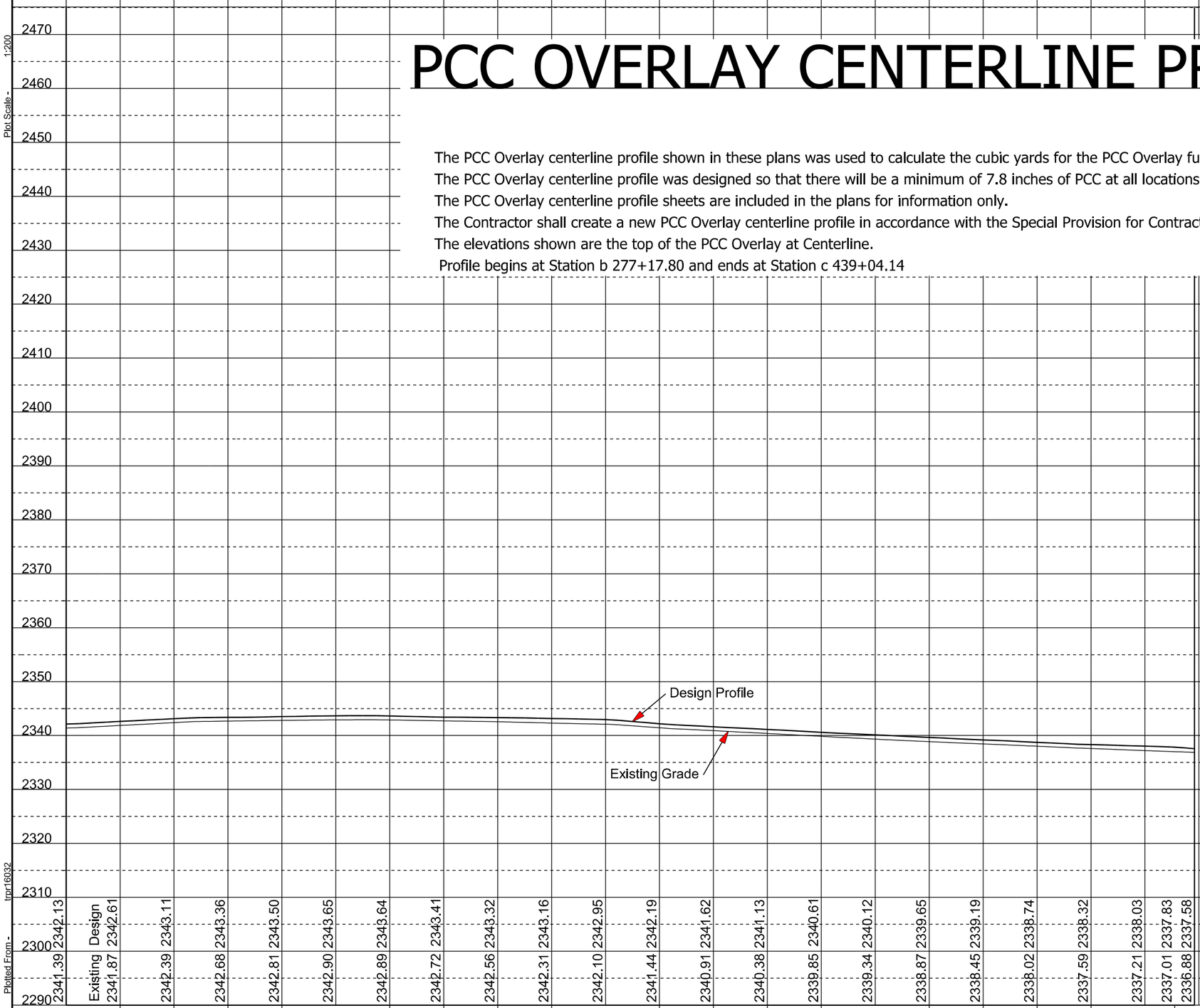

Plot Scale - 1:200

Plotted From - tpr16032

File - U:\ms\prj\Jons035E\3rd pro.dgn

STATE OF SOUTH DAKOTA	PROJECT	SHEET	TOTAL SHEETS
	IM 0904(57)189 & NH 0083(85)87	F143	F145

Plotting Date: 08/06/2015

PCC OVERLAY CENTERLINE PROFILE

The PCC Overlay centerline profile shown in these plans was used to calculate the cubic yards for the PCC Overlay furnished.
The PCC Overlay centerline profile was designed so that there will be a minimum of 7.8 inches of PCC at all locations of the typical sections.
The PCC Overlay centerline profile sheets are included in the plans for information only.
The Contractor shall create a new PCC Overlay centerline profile in accordance with the Special Provision for Contractor Staking.
The elevations shown are the top of the PCC Overlay at Centerline.
Profile begins at Station b 277+17.80 and ends at Station c 439+04.14

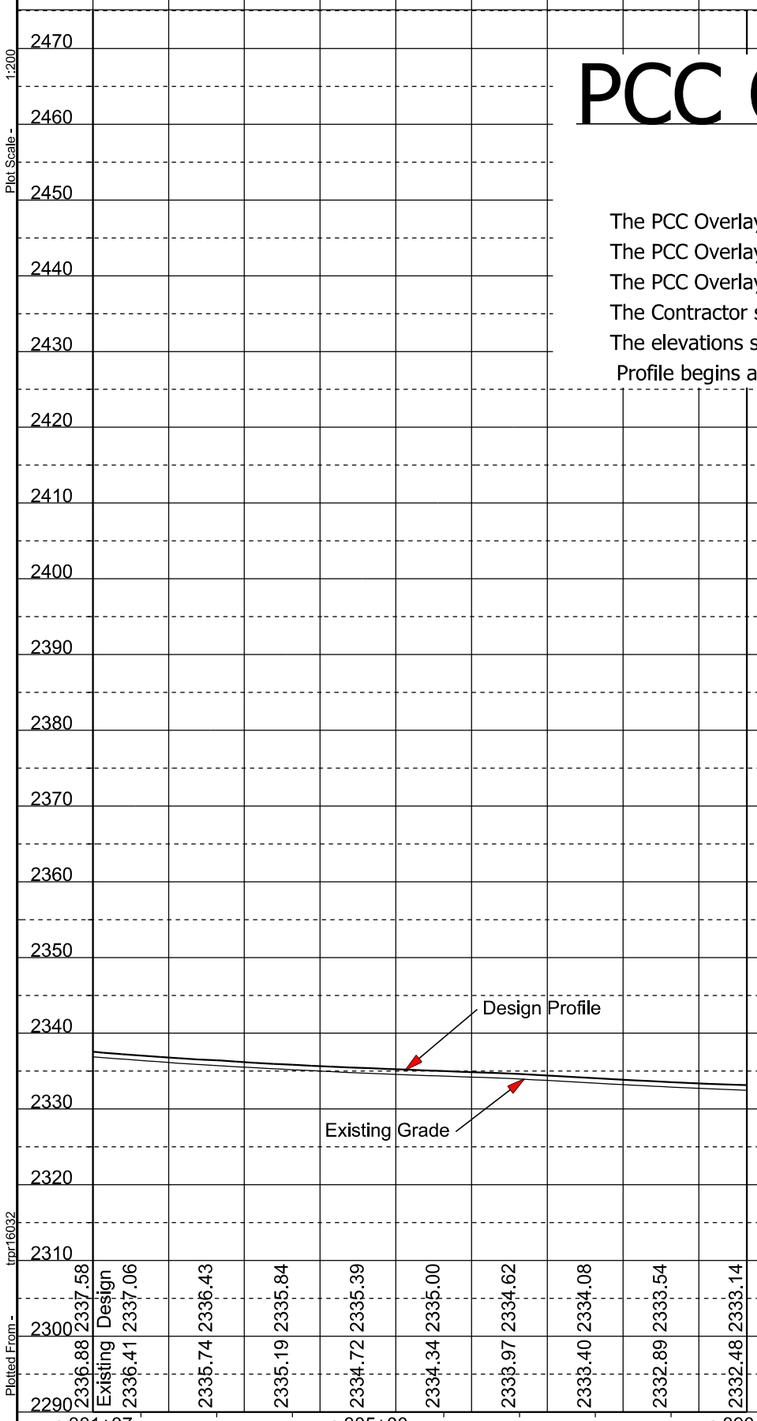

Plot Scale - 1:200

Plotted From - tmpr16032

File - U:\ms\prj\Jons035E\3rd pro.dgn

STATE OF SOUTH DAKOTA	PROJECT	SHEET	TOTAL SHEETS
	IM 0904(57)189 & NH 0083(85)87	F144	F145

Plotting Date: 08/06/2015

PCC OVERLAY CENTERLINE PROFILE

The PCC Overlay centerline profile shown in these plans was used to calculate the cubic yards for the PCC Overlay furnished.
The PCC Overlay centerline profile was designed so that there will be a minimum of 7.8 inches of PCC at all locations of the typical sections.
The PCC Overlay centerline profile sheets are included in the plans for information only.
The Contractor shall create a new PCC Overlay centerline profile in accordance with the Special Provision for Contractor Staking.
The elevations shown are the top of the PCC Overlay at Centerline.
Profile begins at Station b 277+17.80 and ends at Station c 439+04.14

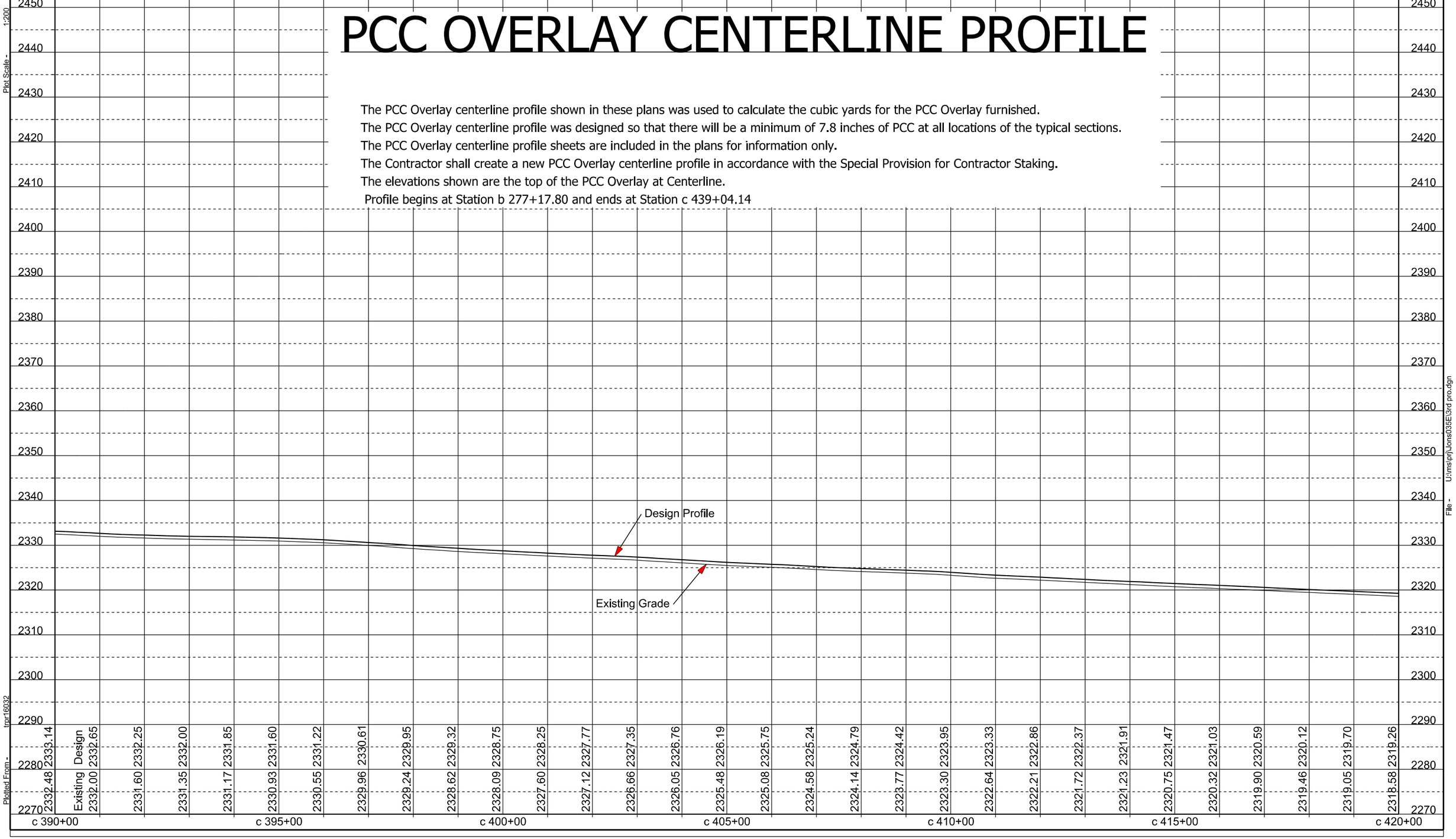

STATE OF SOUTH DAKOTA	PROJECT	SHEET	TOTAL SHEETS
	IM 0904(57)189 & NH 0083(85)87	F145	F145

Plotting Date: 08/06/2015

PCC OVERLAY CENTERLINE PROFILE

The PCC Overlay centerline profile shown in these plans was used to calculate the cubic yards for the PCC Overlay furnished.
The PCC Overlay centerline profile was designed so that there will be a minimum of 7.8 inches of PCC at all locations of the typical sections.
The PCC Overlay centerline profile sheets are included in the plans for information only.
The Contractor shall create a new PCC Overlay centerline profile in accordance with the Special Provision for Contractor Staking.
The elevations shown are the top of the PCC Overlay at Centerline.
Profile begins at Station b 277+17.80 and ends at Station c 439+04.14

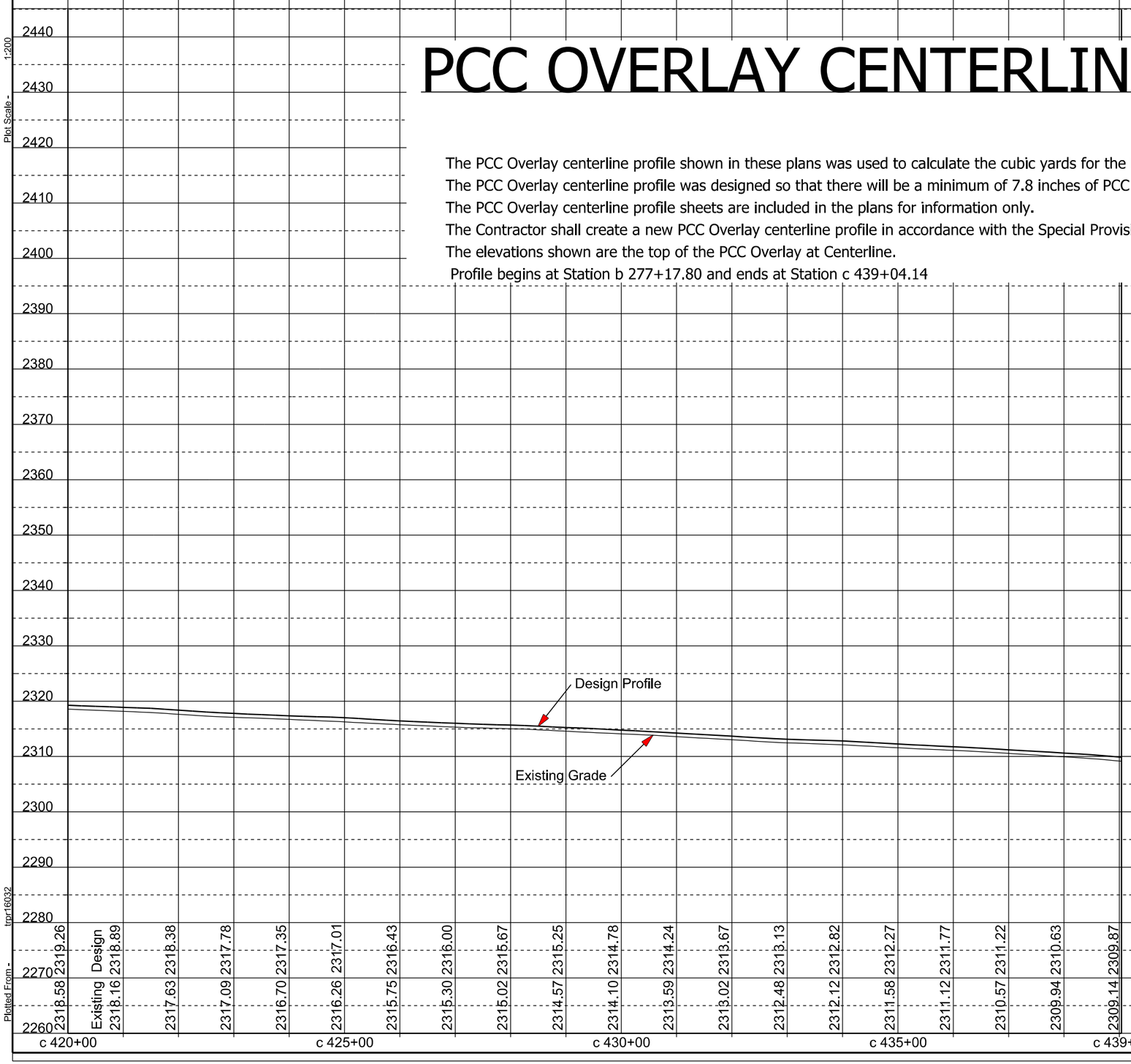

Plot Scale - 1:200
Plotted From - tmpr16032
File - U:\ms\prj\Jons035E\3rd pro.dgn