Section F: Surfacing Plans

STATE OF SOUTH DAKOTA	PROJECT	SHEET	TOTAL SHEETS
	NH 0085(81)112	F1	F16

Plotting Date: 10/14/2014

INDEX OF SHEETS

F1	General Layout W/Index
F2-F7	Estimate With General Notes & Tables
F8-F9	Typical Sections
F10	Cold Milling Detail
F11	Traffic Counter Detail
F12-F16	Standard Plates

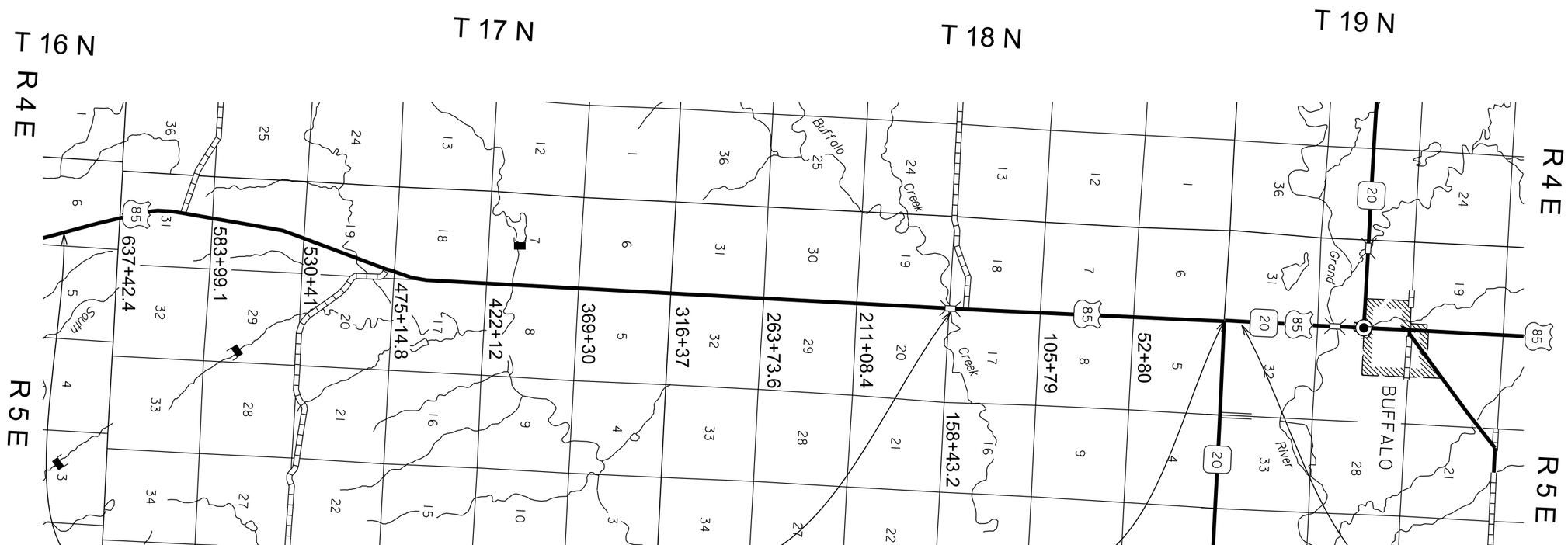

END PROJECT
Sta 664+63.8
2420.2' North & 9843 West of the
Southeast Corner of Section 6 -
Township 16 North - Range 5 East
MRM 112.00 + 0.321

Exception
Sta 156+77.25 to Sta 157+82.75
Continuous Concrete Bridge
Length = 105.5' = 0.019 mile
MRM 121.82

Equation
Sta 500+55.3 Bk =
Sta 0+00 Ah
MRM 124.87

BEGIN PROJECT
Sta 496+55.3
400' North of the
Northwest Corner Section 5 -
Township 18 North - Range 5 East
MRM 124.87

Plot Scale - 1:200
Plotted From - trrc11610
File - ...\Design\TitleF_036g.dgn

SECTION F ESTIMATE OF QUANTITIES

Bid Item Number	Item	Quantity	Unit
009E3320	Checker	Lump Sum	LS
120E0100	Unclassified Excavation, Digouts	630	CuYd
120E6200	Water for Granular Material	123.0	MGal
260E1010	Base Course	14,768.0	Ton
260E1050	Base Course, Salvaged Asphalt Mix	499.0	Ton
280E0020	Process In Place Surfacing, Shoulder	122,590	SqYd
320E7012	Grind 12" Rumble Strip or Stripe in Asphalt Concrete	25.4	Mile
330E0010	MC-70 Asphalt for Prime	146.9	Ton
330E0100	SS-1h or CSS-1h Asphalt for Tack	124.2	Ton
330E0210	SS-1h or CSS-1h Asphalt for Flush Seal	57.0	Ton
330E2000	Sand for Flush Seal	658.2	Ton
332E0010	Cold Milling Asphalt Concrete	7,591	SqYd
900E0010	Refurbish Single Mailbox	4	Each
900E5840	Permanent Vehicle Classification System	1	Each

ALTERNATE A

Bid Item Number	Item	Quantity	Unit
320E0007	PG 64-28 Asphalt Binder	2,511.6	Ton
320E1003	Class Q3 Hot Mixed Asphalt Concrete	43,505.0	Ton
320E4000	Hydrated Lime	422.1	Ton

ALTERNATE B

Bid Item Number	Item	Quantity	Unit
320E0007	PG 64-28 Asphalt Binder	2,210.6	Ton
320E1003	Class Q3 Hot Mixed Asphalt Concrete	44,604.3	Ton
320E4000	Hydrated Lime	434.7	Ton

PERMANENT VEHICLE CLASSIFICATION SYSTEM ONLY USING INDUCTIVE TRAFFIC LOOPS

The contractor shall install on US 85 at MRM 112 + 2430' (approximate station 652+10) {The SDDOT Engineer will determine the exact location} one permanent vehicle axle classification system only using inductive traffic loops (Peek Traffic Inc Model ADR 6000 or equal). The system must classify vehicles to the FHWA Schedule F format with an accuracy of greater than 95%.

The system shall include:

A. 4 (2 per lane) standard inductive traffic loops which must meet NEMA TS-2 Environmental Specifications installed by sawing or routing them into the top of the roadway surface after the surfacing is completed. A representative of the SDDOT Office of Inventory Management - Traffic Section will be on site and direct the installation of the inductive loops. The contractor shall provide all supplies necessary for complete installation of the loops including loops, sealant, numbering loops by location, etc. All saw cuts must be cleaned to the satisfaction of the SDDOT Engineer before sealing the cuts.

B. 4 (2 per lane) advanced IRDIS inductive axle detection loops installed by sawing or routing them into the top of the roadway surface after the surfacing is completed. A representative of the supplier of the IRDIS inductive axle detection loops (ACT Traffic Solutions Inc. 1-952-288-4828 or equal) shall be on site and direct the installation of the IRDIS inductive axle detection loops and the Contractor shall complete this installation in an continuous manner (no time delays). The Contractor shall provide the supplier and the SDDOT at least a two week notice of the dates of this installation. Layout A attached shows the general layout for each lane sets of inductive and IRDIS loops. Layout B attached shows some general details of the installation of the IRDIS inductive axle detection loops. All saw cuts must be cleaned to the satisfaction of the SDDOT Engineer before sealing the cuts.

C. Cabinet Requirements

The contractor shall provide 110 V AC (100 Amp) electric service and telephone service to an electronics cabinet. The cabinet shall be installed by the west side right of way line just south of the driveway approach. The contractor shall pay for all charges (installation and connect fees, lighting surge suppression, supplies, etc.) for the electric and telephone services and pay for the first month of each service. The monthly service accounts will be setup in the name of the SDDOT Office of Inventory Management-Traffic Section who will assume the monthly service payment after the first month. The cabinet and base will have a water drain hole in the lowest corner of the cabinet and thru the base so that water will freely drain from the cabinet. The cabinet door will be located on the west side (so when looking into the cabinet a person can view the roadway).

The cabinet shall be aluminum and shall be supplied with the following installed items:

1. TYPE 4B base mount (SMF) aluminum two shelf cabinet with fan and thermostat and a cabinet light controlled by a door switch. Each cabinet shall be fitted with a #2 Corbin style lock and 2 keys.
2. Lightning surge suppression and terminal blocks for four (4) inductive loops shall be fitted.
3. AC Power panel with two (2) switch type circuit breakers. The AC power panel shall have a plastic cover.
4. GFI duplex outlet, ACP340 line protector.
5. Telephone jack connection point with PC642C150D surge protector.

D. The contractor shall provide and install underground 2 inch conduit to a depth at least 24 inches below ground from the edge of the roadway to electrical junction boxes (one on east side and one on west side) located 2 feet off the edges of the shoulder and then into the electronics cabinet. The supplier of the IRDIS loops and/or the SDDOT Office of Inventory Management - Traffic Section will do the wiring of the electronics cabinet. Layout C attached shows a general layout and specifications of how to connect the loops to the conduit. Standard Plate 635.65 attached shows details and specifications of an electrical junction box.

E. The Contractor shall purchase from the supplier of the IRDIS inductive axle detection loops all necessary hardware and software to make the system operational including all equipment to retrieve data by remote telemetry. The supplier shall install electronics, software and hardware and initialize the system. After the supplier determines the system to be operational then the SDDOT Office of Inventory Management - Traffic Section will conduct a manual classification using a road tube classifier for 48 hours and/or a 4 to 6 hour visual classification to quality check the 95% accuracy of the system.

F. The base for the electrical service cabinet shall be similar to Standard Plate 635.60.

G. Conduit used for the vehicle classification system shall be 2" Rigid Conduit, Schedule 40. A buried cable marker shall be placed in the trench for the conduit as indicated on Standard Plate 635.76. Cost of the marker shall be incidental to the contract unit price per each for "Permanent Vehicle Classification System".

H. The basis of payment for the Permanent Vehicle Classification System shall be the contract item "Permanent Vehicle Classification System". All costs associated with furnishing and installing a working vehicle classification system shall be incidental to the contract unit price per each for "Permanent Vehicle Classification System".

MAILBOXES

The Contractor shall reset the existing mailboxes on new posts with the necessary support hardware for single mailbox assemblies. The local Postmaster will determine the recommended mounting height of the mailboxes throughout the project. The Contractor shall coordinate with the Engineer on the proper postal representative to contact.

All costs for removing existing mailboxes, providing temporary mailboxes, and resetting mailboxes with new posts and necessary support hardware shall be incidental to the contract unit price per each for “Refurbish Single Mailbox”.

TABLE OF REFURBISH MAILBOX

MRM	L/R	Single (Each)
112.473	L	1
113.396	L	1
117.095	L	1
124.669	L	1
		4

TABLE OF SUPERELEVATION

Station	to	Station		
0+00		455+51.8	-	Normal Crown Section
455+51.8		456+91.8	-	Superelevation Transition
456+91.8		473+83.3	-	5730’ Radius Curve Right 0.030’/’ Superelevation Rate Point of Rotation at Centerline
473+83.3		475+23.3	-	Superelevation Transition
475+23.3		538+17.9	-	Normal Crown Section
537+05.9		538+45.9	-	Superelevation Transition
538+45.9		548+56.6	-	5730’ Radius Curve Left 0.030’/’ Superelevation Rate Point of Rotation at Centerline
548+56.6		549+96.6	-	Superelevation Transition
549+96.6		608+83.8	-	Normal Crown Section
607+72.1		609+45.1	-	Superelevation Transition
609+45.1		624+46.6	-	3820’ Radius Curve Left 0.0420’/’ Superelevation Rate Point of Rotation at Centerline
624+46.6		626+19.6	-	Superelevation Transition
626+19.6		664+63.8	-	Normal Crown Section

SAWING EXISTING SURFACING

Where new asphalt concrete is placed adjacent to existing asphalt concrete or portland cement concrete the existing asphalt concrete (except cold milled areas) or portland cement concrete shall be sawed full depth to a true line with a vertical face. No separate payment shall be made for sawing.

SURFACING THICKNESS DIMENSIONS

Plans tonnage will be applied even though the thickness may vary from that shown in the plans. At those locations where material must be placed to achieve a required elevation, plans tonnages may be varied to achieve the required elevation.

INTERSECTING ROADS AND ENTRANCES

Intersecting roads and entrances shall be satisfactorily cleared of vegetation, shaped and compacted prior to placement of mainline surfacing including milling as needed. This work will be considered incidental to other contract items. Separate measurement and payment will not be made.

SHOULDER WORK

Vegetation and accumulated material on or adjacent to the existing roadway edge shall be removed to the satisfaction of the Engineer prior to asphalt concrete resurfacing. Any remaining windrow of accumulated material shall be spread evenly on the inslope adjacent to the asphalt shoulder, to the satisfaction of the Engineer.

Shoulder work shall be incidental to other contract items. Separate measurement and payment will not be made.

PROCESS IN PLACE SURFACING, SHOULDER

Process In Place Surfacing, Shoulder is computed at the rate of 4,928 SqYd/Mile for each 8.4’ shoulder.

Water for compaction shall be uniformly blended throughout the depth of the material.

The depth requirement for process in-place is 5 inches.

WATER FOR COMPACTION

A rate of 10 gallons per ton (5 MGal per mile) has been used to calculate water for compaction for each Process In Place Surfacing, Shoulder. This rate may be adjusted as directed by the engineer. Four percent, plus or minus, moisture will be required at the time of compaction unless otherwise directed by the Engineer

Water shall be paid for at the contract unit bid price per MGal for Water for Granular Material.

EXCAVATION OF UNSTABLE MATERIAL

Included in the Estimate of Quantities are 50 cubic yards of Unclassified Excavation, Digouts per mile for necessary removal of unstable material.

Backfill shall be Base Course, Salvaged Asphalt Mix paid for at the contract unit price per ton for Base Course, Salvaged Asphalt Mix.

ADDITIONAL QUANTITIES

Included in the Table of Additional Quantities are:

200 tons of Class Q3 Hot Mixed Asphalt Concrete, 2.0 tons of Hydrated Lime, and 11.6 tons of PG 64-28 Asphalt Binder per mile for Alt A and 200 tons of Class Q2 Hot Mixed Asphalt Concrete, 2.0 tons of Hydrated Lime, and 10.0 tons of PG 64-28 Asphalt Binder per mile for Alt B for spot leveling, strengthening, and repair of the existing surface.

10 tons of SS-1h or CSS-1h Emulsified Asphalt for Tack for repair and leveling areas throughout the project.

BASE COURSE

Included in the Estimate of Quantities is 500 tons per mile, per shoulder to bring the existing shoulder slope to the new slope after processing. The base material shall be placed on the shoulders prior to processing. The rate of 500 tons per mile is an estimate. The actual rate may vary based on the existing cross slope of the shoulders. The Contractor shall be responsible for determining the quantity of base course required to achieve the dimensions shown in the typical section.

Base Course shall be Contractor furnished.

BASE COURSE, SALVAGED ASPHALT MIX

Base Course, Salvaged Asphalt Mix shall be obtained from the material produced on this project and may be used without further testing. This material shall be used for backfilling digouts, intersecting roads, and approaches.

All other requirements for Base Course, Salvaged shall apply.

Compaction of the Base Course, Salvaged shall be to the satisfaction of the Engineer.

Included in the Estimate of Quantities are 100 cubic yards of Base Course, Salvaged Asphalt Mix and/or Base Course per mile for backfill of Unclassified Excavation Digouts.

The contract unit price per ton for Base Course, Salvaged Asphalt Mix shall include loading, placing, and compacting the cold milled material.

COLD MILLING ASPHALT CONCRETE

Loose material resulting from the cold milling shall be immediately picked up, and stockpiled for use as Base Course, Salvaged Asphalt Mix.

Cold Milling Asphalt Concrete shall be performed as shown in the typical sections, and as necessary at the end of the project, so that the top mat of the new asphalt surfacing will match existing surfaces. The milling depths might vary due to irregularities in the surface.

The Los Angeles Abrasion Loss value on the aggregate used for the in place asphalt concrete was 25 percent. This value was obtained from testing during construction of the in place asphalt concrete.

Cold milling asphalt is estimated to produce 499 tons (264 Cubic Yards) of salvaged asphalt concrete material. An estimated 499 tons of salvage asphalt concrete will be used on this project as Base Course Salvaged Asphalt Mix.

CHECKING SPREAD RATES

The Contractor shall be responsible for checking the Asphalt Concrete Surfacing and Base Course spread rates and take the weigh delivery tickets as the surfacing material arrives on the project and is placed onto the roadway.

The Contractor shall compute the required spread rates for each typical surfacing section and create a spread chart prior to the start of material delivery and placement. The Engineer will review and check the Contractor's calculations and spread charts.

The station to station spread shall be written on each ticket as the surfacing material is delivered to the roadway.

At the end of each day's shift, the Contractor shall verify the following:

- All tickets are present and accounted for,
- The quantity summary for each item is calculated,
- The amount of material wasted if any,
- Each day's ticket summary is marked with the corresponding 'computed by',
- The ticket summary is initialed and certified that the delivered and placed quantity is correct.

All daily tickets and the summary by item shall be given to the Engineer no later than the following morning.

If the checker is not properly and accurately performing the required duties, the Contractor shall correct the problem or replace the checker with an individual capable of performing the duties to the satisfaction of the Engineer. Failure to do so will result in suspension of the work.

The Department will perform depth checks. The Contractor shall be responsible for placement of material to the correct depth unless otherwise directed by the Engineer. If the placed material is not within a tolerance of ±1/4" of the plan shown depth, the Contractor shall correct the problem at no additional cost to the Department. Excess material above the tolerance will not be paid for. Achieving the correct depth may require picking up and moving material or other action as required by the Engineer.

All costs for providing the Contractor furnished checker and performing all related duties shall be incidental to the contract lump sum price for the CHECKER. No allowances will be made to the contract lump sum price for CHECKER due to authorized quantity variations unless the quantities for the material being checked vary above or below the estimated quantities by more than 25%. Payment for the CHECKER shall then be increased or decreased by the same proportion as the placed material quantity bears to the estimated material quantity.

RUMBLE STRIPS/STRIPES

Rumble Strip installation shall be completed prior to application of the Flush Seal and Permanent Pavement Markings. Rumble Strips/Stripes shall be installed in rural areas with posted speeds greater than 50 mph. They will not be required where there is development in close proximity to the highway. The Engineer shall provide the exact start and stop locations for the rumble strip/stripe installation.

Water shall be used with the rumble strip/stripe installation for dust control.

Rumble strips or stripes shall not be placed on any bridge decks or approach slabs.

The gaps for the rumble strip/stripes installation as detailed on the standard plates shall be included with the measurement and payment.

Construction of Asphalt Concrete Rumble Strips shall be paid for at the contract unit price per mile for "Grind 12" Rumble Strip or Stripe in Asphalt Concrete".

RUMBLE STRIP/STRIPE ROADWAY CLEANING

The Contractor shall remove loose material from the driving surface and/or asphalt shoulders of the roadway on a daily basis. Loose material may be used as fillet material adjacent to the paved shoulder. It shall be the Contractor's responsibility to ensure the loose material does not enter any vegetated areas and/or waterways.

All costs associated with this work shall be incidental to the contract unit price per mile for "Grind 12" Rumble Strip or Stripe in Asphalt Concrete".

CLASS Q3 HOT MIXED ASPHALT CONCRETE

Mineral Aggregate for Class Q3 Hot Mixed Asphalt Concrete - Alternate A shall conform to the requirements of the Special Provision for Gyratory Controlled Quality Control/Quality Assurance Hot Mixed Asphalt Concrete Pavement.

Mineral Aggregate for Class Q3 Hot Mixed Asphalt Concrete - Alternate B shall consist of a minimum of 80 percent crushed limestone ledgerock and shall conform to the requirements of the Special Provision for Gyratory Controlled Quality Control/Quality Assurance Hot Mixed Asphalt Concrete Pavement except for the following:

Gyratory Compactive Effort:

	$N_{initial}$	N_{design}	$N_{maximum}$
Class Q3	6	50	75

All remaining requirements of the Special Provision shall apply.

The Class Q3 Hot Mixed Asphalt Concrete 1” Leveling Lift shall be compacted by the Specified Roller Coverage Method.

The asphalt concrete on the shoulders will not be compacted to a specified density. The shoulders shall be compacted using the same rolling pattern used on the adjacent mainline asphalt concrete or as directed by the Engineer.

RATES OF MATERIALS

SECTION 3
Sta. 11+70 to Sta. 664+63.8

The Estimate of Quantities is based on the following quantities of materials per mile.

1” LEVELING LIFT
CLASS Q3 HOT MIXED ASPHALT CONCRETE

	Alt A	Alt B	
Aggregate	767	794	Tons
PG 64-28 Asphalt Binder	47	42	Tons
Total Mix	814	836	Tons
Hydrated Lime	8	8	Tons
Total Mix with Hydrated Lime	822	844	Tons

The exact proportions of these materials will be determined on construction.

SS-1h or CSS-1h Emulsified Asphalt for Tack applied at the rate of 3.367 ton applied 27 feet wide (0.05 gallons per square yard).

1.5” WEARING LIFT
CLASS Q3 HOT MIXED ASPHALT CONCRETE

	Alt A	Alt B	
Aggregate	1457	1509	Tons
PG 64-28 Asphalt Binder	90	79	Tons
Total Mix	1547	1588	Tons
Hydrated Lime	15	16	Tons
Total Mix with Hydrated Lime	1562	1604	Tons

The exact proportions of these materials will be determined on construction.

SS-1h or CSS-1h Emulsified Asphalt for Tack applied at the rate of 3.866 ton applied 31 feet wide (0.05 gallons per square yard).

2.5” SHOULDER LIFT (one shoulder only)
CLASS Q3 HOT MIXED ASPHALT CONCRETE

	Alt A	Alt B	
Aggregate	383	397	Tons
PG 64-28 Asphalt Binder	24	21	Tons
Total Mix	407	418	Tons
Hydrated Lime	4	4	Tons
Total Mix with Hydrated Lime	411	422	Tons

The exact proportions of these materials will be determined on construction.

MC-70 Asphalt for Prime applied at the rate of 5.909 ton applied 8.5 feet wide (0.30 gallons per square yard). Application on the Processed Shoulders.

SS-1h or CSS-1h Emulsified Asphalt for Tack applied at the rate of 0.872 ton applied 7 feet wide (0.05 gallons per square yard). Prior to the Shoulder Lift.

SECTION 3
Sta. 11+70 to Sta. 664+63.8

FLUSH SEAL

SS-1h or CSS-1h Emulsified Asphalt for Flush Seal at the rate of 4.489 tons applied 36 feet wide (0.05 gallons per square yard)

Sand for Flush Seal at the rate of 51.627 tons applied 22 feet wide (8 pounds per square yard)

STATE OF SOUTH DAKOTA	PROJECT	SHEET	TOTAL SHEETS
	NH 0085(81)112	F6	F16

SUMMARY OF ASPHALT CONCRETE COMPACTION

				Alt A		Alt B	
Section	Sta. to	Sta.	Length	Asphalt Concrete Class Q3 with Specified Compaction	Asphalt Concrete Class Q3 without Specified Compaction	Asphalt Concrete Class Q3 with Specified Compaction	Asphalt Concrete Class Q3 without Specified Compaction
				Ton	Ton	Ton	Ton
Shoulder-R	491+15.0	495+05.0	390.0	0	43.60	0	44.80
2	496+55.3	500+55.3	400.0	222	92.40	228	94.80
3	0+00.0	7+80.0	780.0	432.9	156.30	592.8	12.40
Transition	7+80.0	11+70.0	390.0	180.4	78.10	185.3	80.20
3	11+70.0	156+77.25	14507.3	5367.7	3350.0	5512.8	3438.7
Bridge	156+77.25	157+82.75	105.5	-	-	-	-
3	157+82.75	664+63.8	50681.1	26252.8	4429.5	26962.3	4543
Spot leveling, strengthening and repair of existing surface				0	2532.1	0	2532.1
Weigh Station				0	367.2	0	377.1
		Total:	**66863.8**	**32455.8**	**11049.2**	**33481.2**	**11123.1**

TABLE OF QUANTITIES

											Alt A			Alt B				
Section	Station to	Station	Length	Cold Milling	Unclassified Excavation, Digouts	Base Course, Salvaged Asphalt Mix	Base Course	Process in Place Surfacing, Shoulder	MC-70 Asphalt for Prime	SS-1h or CSS-1h Asphalt for Tack	PG 64-28 Asphalt Binder	Class Q3 Hot Mixed Asphalt Concrete	Hydrated Lime	PG 64-28 Asphalt Binder	Class Q3 Hot Mixed Asphalt Concrete	Hydrated Lime	SS-1h or CSS-1h Asphalt for Flush Seal	Sand for Flush Seal
			Ft	SqYd	CuYd	Ton	Ton	SqYd	Ton	Ton	Ton	Ton	Ton	Ton	Ton	Ton	Ton	Ton
3	11+70.0	155+27.25	14357.25	777.8	136	51	3182.0	26800.0	32.14	24.41	503.05	8717.7	84.3	443.23	8951.5	87.0	12.21	140.4
Bridge	156+77.25	157+82.75	105.50															
3	159+32.75	664+63.8	50531.05	1555.6	479	102	11277.0	94325.0	113.11	85.93	1770.50	30682.3	296.7	1559.95	31505.3	306.2	42.96	494.1
Add Quantities			1960	5257.3	15	346	309.0	1465.0	1.65	13.9	238.09	4104.96	41.05	207.38	4147.49	41.48	1.78	23.7
	Total		**66848.30**	**7590.7**	**630**	**499**	**14768.0**	**122590**	**146.90**	**124.24**	**2511.64**	**43504.96**	**422.05**	**2210.56**	**44604.29**	**434.68**	**56.95**	**658.2**

TABLE OF ADDITIONAL QUANTITIES

											Alt A			Alt B				
Section	**Station to**	**Station**	**Length**	**Cold Milling**	**Unclassified Excavation, Digouts**	**Base Course, Salvaged Asphalt Mix**	**Base Course**	**Process in Place Surfacing, Shoulder**	**MC-70 Asphalt for Prime**	**SS-1h or CSS-1h Asphalt for Tack**	**PG 64-28 Asphalt Binder**	**Class Q3 Hot Mixed Asphalt Concrete**	**Hydrated Lime**	**PG 64-28 Asphalt Binder**	**Class Q3 Hot Mixed Asphalt Concrete**	**Hydrated Lime**	**SS-1h or CSS-1h Asphalt for Flush Seal**	**Sand for Flush Seal**
			Ft	SqYd	CuYd	Ton	Ton	SqYd	Ton	Ton	Ton	Ton	Ton	Ton	Ton	Ton	Ton	Ton
Shoulder-R	491+15.0	495+05.0	390.0				37.0	364.0	0.44	0.08	2.53	43.6	0.44	2.24	44.8	0.45	0.06	
2	496+55.3	500+55.3	400.0	2611.1	4.0	14.0				1.00	18.24	314.40	3.14	16.14	322.80	3.23	0.45	6.0
3	0+00.0	7+80.0	780.0		7.0	28.0	38.0	373.0	0.34	1.95	34.17	589.20	5.89	30.26	605.20	6.05	0.88	11.8
Transition	7+80.0	11+70.0	390.0		4.0	14.0	74.0	728.0	0.87	0.87	14.99	258.50	2.59	13.28	265.50	2.66	0.39	5.9
Spot leveling, strengthening and repair of existing surface											146.86	2532.1	25.32	126.61	2532.1	25.32		
Tight blading, repair and leveling areas										10.00								
Entrances (35)						190.0	160.0											
Intersecting Roads (5)						100.0												
Weigh Station				2646.2							21.3	367.16	3.67	18.85	377.09	3.77		
	Total		**1960.0**	**5257.3**	**15.0**	**346.0**	**309.0**	**1465.0**	**1.65**	**13.90**	**238.09**	**4104.96**	**41.05**	**207.38**	**4147.49**	**41.48**	**1.78**	**23.7**

STATE OF SOUTH DAKOTA	PROJECT	SHEET	TOTAL SHEETS
	NH 0085(81)112	F8	F16

Plotting Date: 10/14/2014

TYPICAL SECTIONS

Section 2
Sta 491+15 to Sta 495+05
In Place & Resurfacing Section

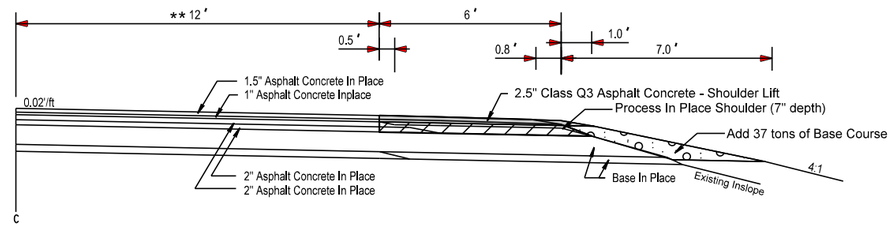

* Existing
490+06.3 to 493+56.3 Transition -12' to 24' L
493+56.3 to 500+55.3 - 24' L
493+55.3 to 497+05.3 Transition - 12' to 24' R
497+05.3 to 500+55.3 - 24' R

Section 2
Sta 496+55.3 to Sta 500+55.3
In Place Section

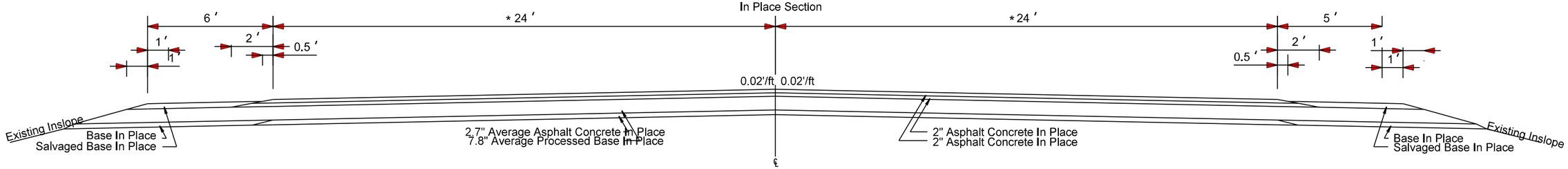

** New Transition
491+15 to 495+05 Transition -12' to 18'
495+05 to 500+55.3- 18'

Section 2
Sta 496+55.3 to Sta 500+55.3
Resurfacing Section

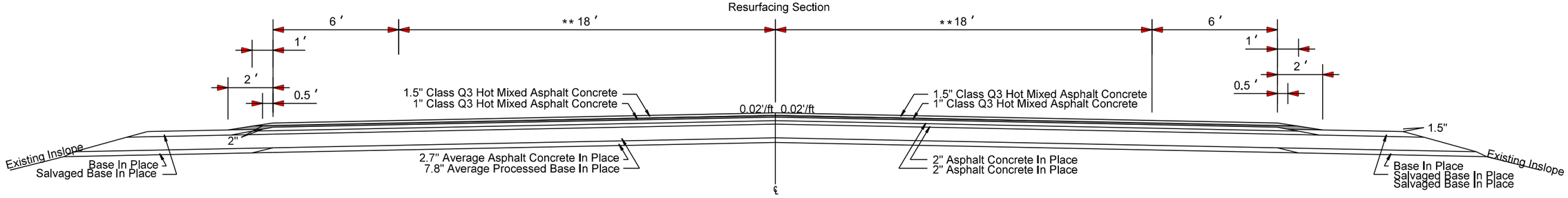

Plot Scale - 1:5
Plotted From - trrc11610
File - ...\prj\Hard036G\Design\typF.dgn

STATE OF SOUTH DAKOTA	PROJECT	SHEET	TOTAL SHEETS
	NH 0085(81)112	F9	F16

Plotting Date: 10/14/2014

TYPICAL SECTIONS

* Existing
0+00 to 3+37 - 24' L
3+37 to 6+87 -Transition 24' to 12' L
0+00 to 6+00 - 24' R
6+00 to 9+50 - Transition 24' to 12' R

Section 3

Sta 0+00 to Sta 664+63.8

In Place & Shoulder Processing Section

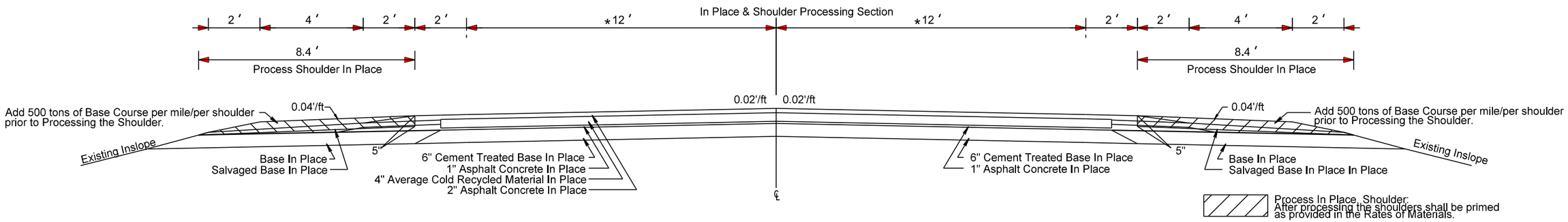

New Transition
0+00 to 7+80 - 18'
7+80 to 11+70 Transition - 18' to 12'
Total paved Shoulder Width
0+00 to 11+70 - 6' each

Resurfacing Section

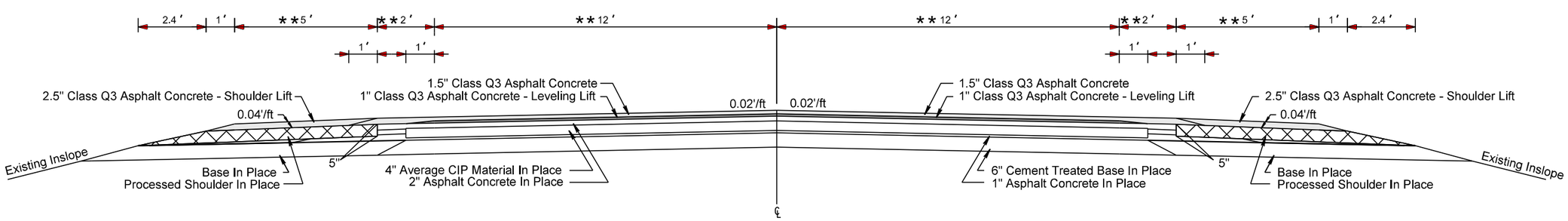

Plot Scale - 1:4

Plotted From - trnc11610

File - ...\prj\Hard036G\Design\typF.dgn

STATE OF SOUTH DAKOTA	PROJECT	SHEET	TOTAL SHEETS
	NH 0085(81)112	F10	F16

Plotting Date: 10/14/2014

COLD MILLING ASPHALT CONCRETE
BEGIN & END OF PROJECT
BEGIN & END OF STRUCTURE
Str. No. 32-250-300 MRM 121.82

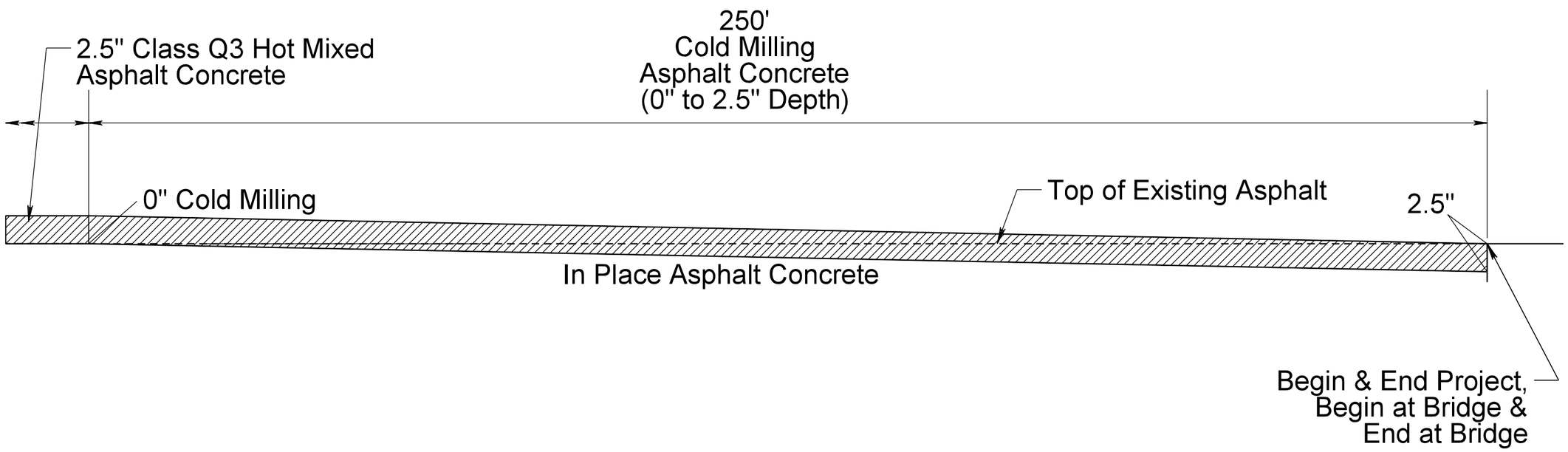

Plot Scale - 1:20

Plotted From - trrc11610

File - ...\Design\cold milling.dgn

PERMANENT VEHICLE CLASSIFICATION SYSTEMS DETAIL

Layout A

GENERAL LAYOUT

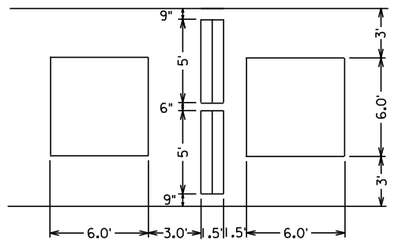

NOTES:

1. SAW CUT DEPTH A-1.25", B-1.75" DEEP. DEPTH FOR LOOPS ARE 1.75".
2. SAW CUTS ARE TYPICALLY 0.25" WIDE.
3. WIRE LENGTH NEEDED FOR A 5' AXLE LOOP IS 96', AND FOR A 6.0' MAIN LOOP IS 69'. ALL LOOPS ALSO NEED THE TWISTED LEAD-IN (2 WIRES-IN A LEAD IN).

NOTE:

1. MAIN LOOPS ARE (6.0') AND ARE 4 TURNS EACH.
2. WIRES FROM THE LOOPS IN THE OPPOSITE LANE SHALL BE PLACED IN A SAWCUT TO THE SHOULDER AND PLACED IN 2" RIGID CONDUIT, SCHEDULE 80 UNDER THE ROADWAY.

Layout C

CURB LEAD-IN ROUTING DETAIL

(NTS)

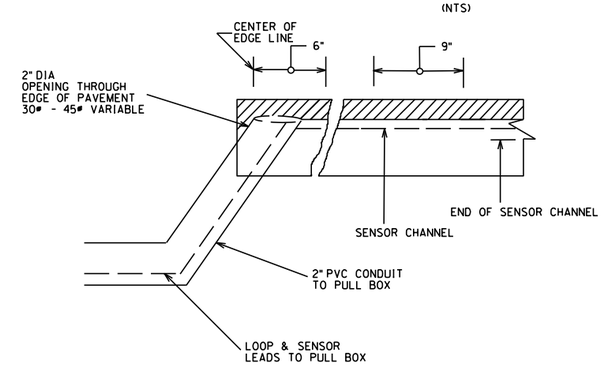

Layout B

CROSS SECTION VIEW

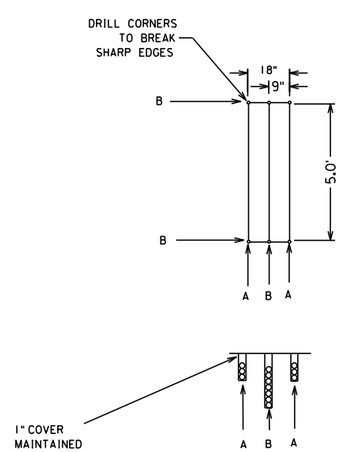

Plot Scale - 1:10
Plotted From - trrc11610
File - ...\Design\traffic counter.dgn

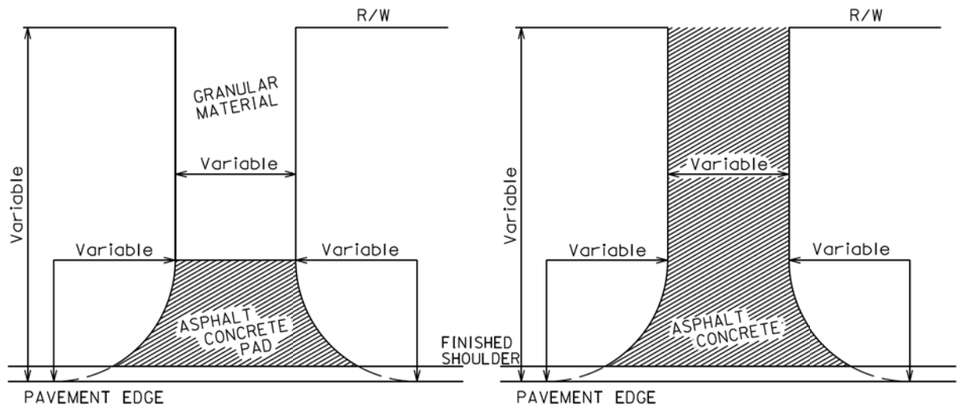

INTERSECTING ROAD
NO ASPHALT CONCRETE SURFACING
BEYOND R/W

INTERSECTING ROAD
ASPHALT CONCRETE SURFACING
BEYOND R/W

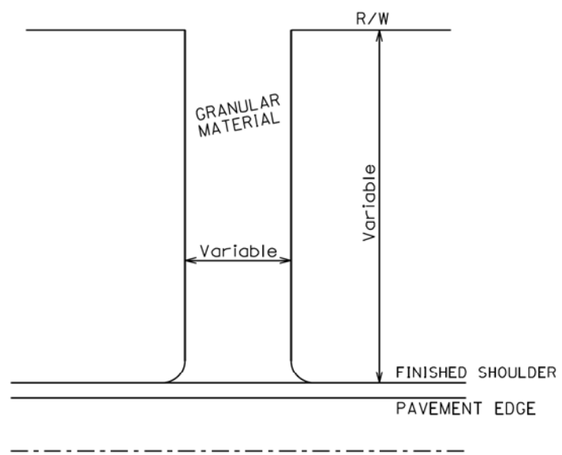

ENTRANCE

The surfacing details shown on this sheet are provided as a guide for surfacing these facilities. The precise construction limits for situations other than the standards shown will be determined by the Engineer, at the time of construction.

ROADWAY WITH SHOULDER

March 31, 2000

Published Date: 3rd Qtr. 2014	SDDOT	RESURFACING OF INTERSECTING ROADS AND ENTRANCES	PLATE NUMBER 320.11
			Sheet 1 of 1

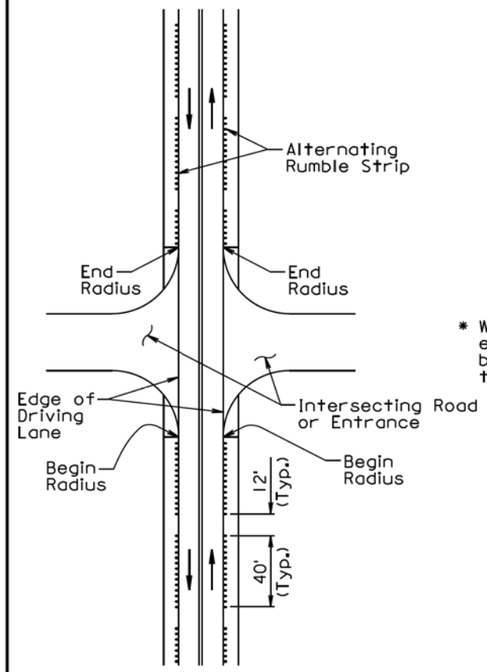

PLAN VIEW

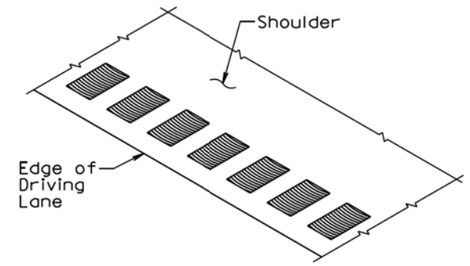

PERSPECTIVE OF TYPICAL
RUMBLE STRIP IN ASPHALT CONCRETE

* When PCC pavement width from centerline to edge of pavement is 12', the rumble strip may be placed a maximum of 2' from the edge of the driving lane.

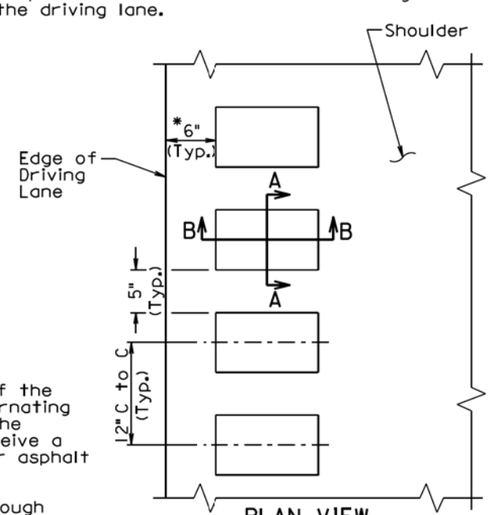

PLAN VIEW
TYPICAL RUMBLE STRIP
IN ASPHALT CONCRETE

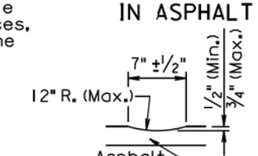

SECTION A-A

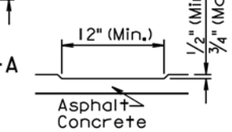

SECTION B-B

GENERAL NOTES:

A rumble strip shall be constructed on all of the asphalt concrete shoulders by grinding alternating patterns of 40' continuous indentations in the asphalt concrete. The rumble strip shall receive a flush seal with the shoulder flush sealing or asphalt surface treatment.

A rumble strip shall not be constructed through intersecting roads, entrances, and turnouts. The lengths of the 40' segments with continuous indentations and the 12' segments without a rumble strip adjacent to the intersecting roads, entrances, and turnouts shall be adjusted as approved by the Engineer.

Prior to constructing the rumble strip the Contractor shall submit to the Engineer, for approval, the proposed method of constructing the rumble strip.

Measurement of the rumble strip shall be to the nearest 0.1 of a mile for each shoulder. Measurement and payment of the rumble strip shall include the 12' long segments without rumble strips and the segments adjacent to the intersecting roads, entrances, and turnouts without rumble strips. Payment for constructing the rumble strip shall be at the contract unit price per mile for "Grind 12" Rumble Strip or Stripe in Asphalt Concrete".

June 26, 2011

Published Date: 3rd Qtr. 2014	SDDOT	12" RUMBLE STRIP IN ASPHALT CONCRETE ON NONDIVIDED HIGHWAY SHOULDERS	PLATE NUMBER 320.24
			Sheet 1 of 1

Plot Scale - 1:200
- Plotted From - trrc11610
File - ...\Design\FStdPlate\Pg1.dgn

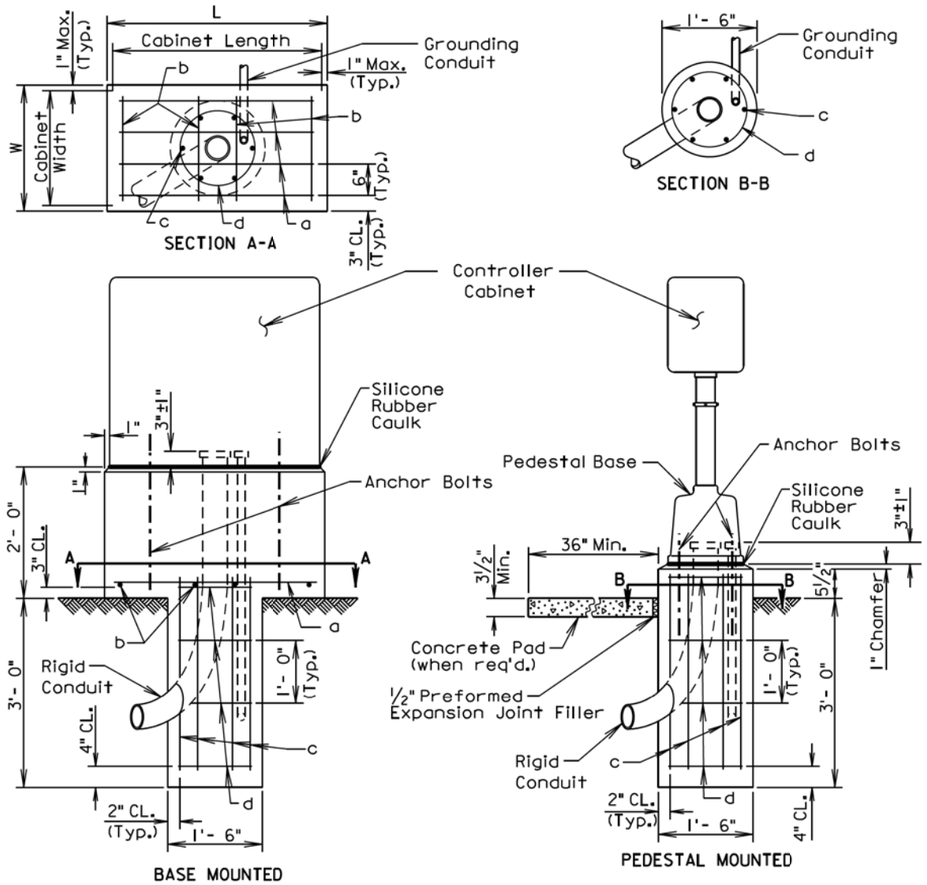

GENERAL NOTES:

The above ground portion of the footing shall conform to the base of the controller to the satisfaction of the Engineer.

Conduits shall be sealed and water-tight until the conductor cables are installed.

If the controller is not located within or adjacent to an existing sidewalk, the Contractor shall provide a concrete pad as directed by the Engineer.

Anchor bolts and related hardware shall conform to the controller manufacturer's requirements and recommendations.

A continuous bead of silicone rubber caulk shall provide a weather-tight seal between the base and the concrete.

Reinforcing Schedule (for one footing)

Mk.	No.	Size	Length	Type	Bending Detail
a	*	3	L - 4"	Str.	
b	*	3	W - 4"	Str.	
c	6	6	3'- 0"	Str.	
d	4	3	4'- 0"	T3	Type T3

Note: Dimensions are out to out of bar

* Vary number of bars as required by footing size.

March 31, 2000

Published Date: 3rd Qtr. 2014

SDDOT

CONTROLLER CABINET AND FOOTING

PLATE NUMBER 635.60

Sheet 1 of 1

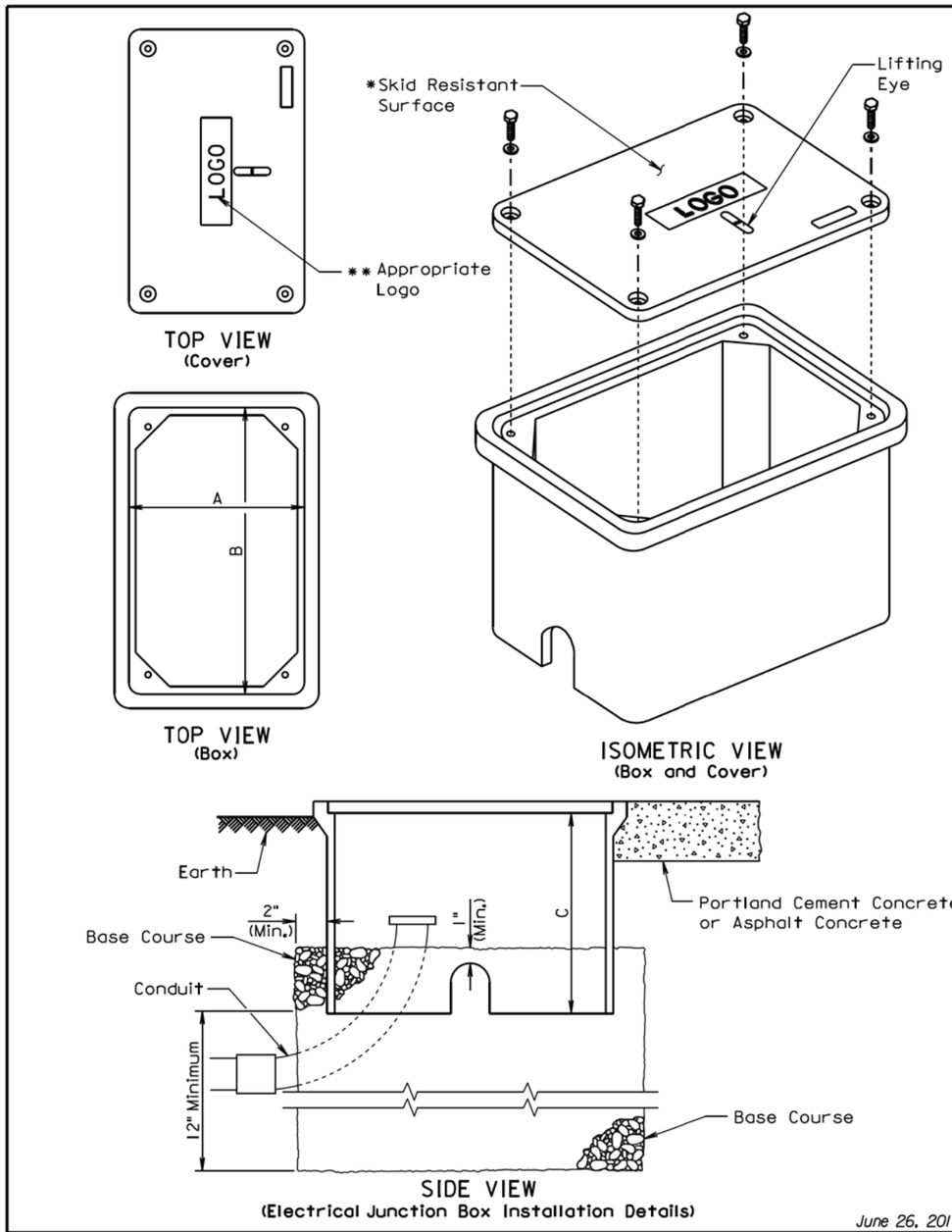

June 26, 2012

Published Date: 3rd Qtr. 2014

SDDOT

ELECTRICAL JUNCTION BOXES TYPE 1 THROUGH TYPE 4

PLATE NUMBER 635.65

Sheet 1 of 2

Plot Scale - 1:200
- Plotted From - trrc11610
File - ...\Design\FStdPlatePg2.dgn

ELECTRICAL JUNCTION BOX

TYPE	DESCRIPTION	DIMENSIONS		
		A	B	C
1	Open Bottom with Gasket	11"-15"	18"-21"	18" (Min.)
2	Open Bottom with Gasket	13"-18"	23"-28"	18" (Min.)
3	Open Bottom with Gasket	17"-22"	24"-30"	18" (Min.)
4	Open Bottom with Gasket	28"-33"	36"-48"	24" (Min.)

GENERAL NOTES:

The cover shall be gasketed with a minimum of two stainless steel bolts and washers.

The cover shall have a lifting eye.

* The surface of the cover shall have a minimum wet and dry coefficient of friction value of 0.5 as determined by ASTM F 609.

** The cover of the junction box shall have the appropriate logo in one inch size letters and shall be recessed. When the junction box contains cables or wires for a traffic signal then the logo shall be "Signal". When the junction box contains lighting conductors then the logo shall be "Lighting".

The electrical junction boxes shall comply with the American National Standards Institute (ANSI)/Society of Cable Telecommunications Engineers (SCTE) 77 2007 Specification for Underground Enclosure Integrity. The loading requirement for all the electrical junction boxes shall be Tier 8 of ANSI/SCTE 77 2007.

The electrical junction boxes shall be UL listed.

June 26, 2012

Published Date: 3rd Qtr. 2014	SDDOT	ELECTRICAL JUNCTION BOXES TYPE 1 THROUGH TYPE 4	PLATE NUMBER 635.65
			Sheet 2 of 2

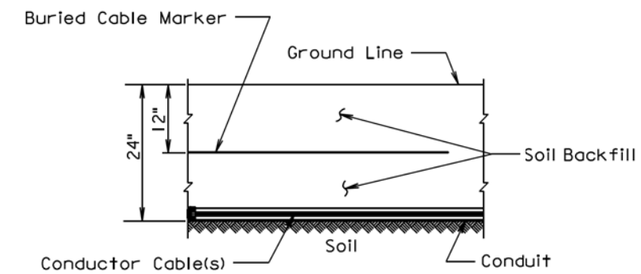

SECTION VIEW

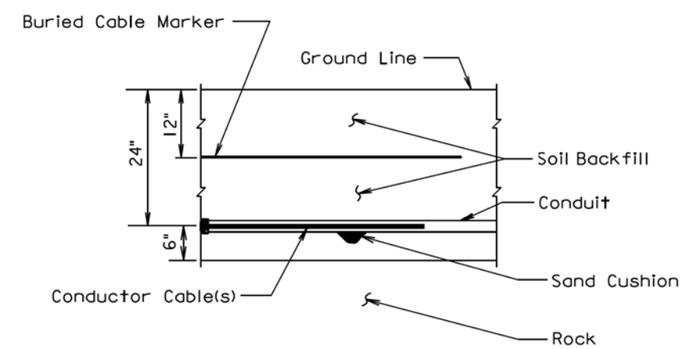

SECTION VIEW

GENERAL NOTE:

The Buried Cable Marker shall be plastic, approximately 6" wide, and shall be capable of sustaining a minimum of a 350% tolerance of elongation without tearing. The Buried Cable Marker shall have a life expectancy approximately equal to that of the conductor(s) beneath it. A phrase indicating the presence of a buried electric circuit below shall be printed in a contrasting color on the cable marker. The Buried Cable Marker shall be subject to approval by the Engineer. All costs associated with furnishing and installing the Buried Cable Marker shall be incidental to the contract unit price per Foot for the bid item used for the electrical conductor.

March 31, 2000

Published Date: 3rd Qtr. 2014	SDDOT	CONDUIT INSTALLATION	PLATE NUMBER 635.76
			Sheet 1 of 1

Plot Scale - 1:200
Plotted From - trrc11610
File - ...\Design\FStdPlatePg3.dgn

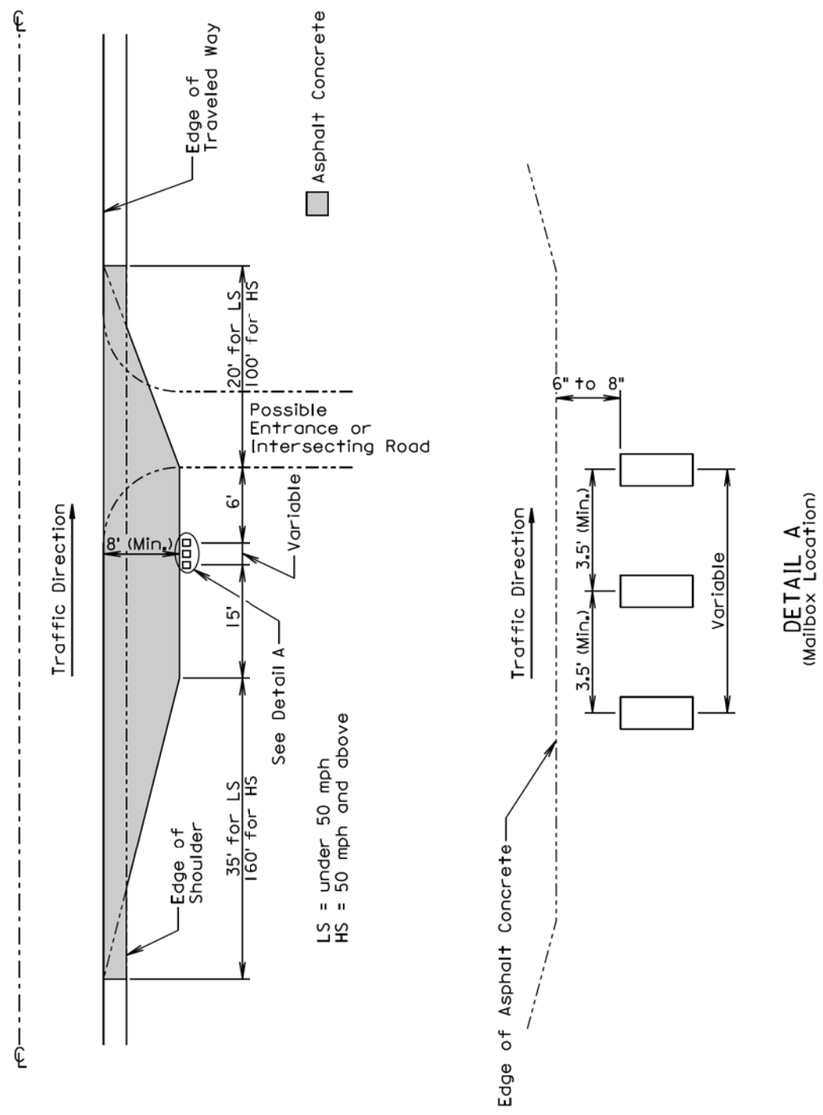

August 31, 2013

Published Date: 3rd Qtr. 2014	SDDOT	MAILBOX TURNOUT	PLATE NUMBER 900.01
			Sheet 1 of 1

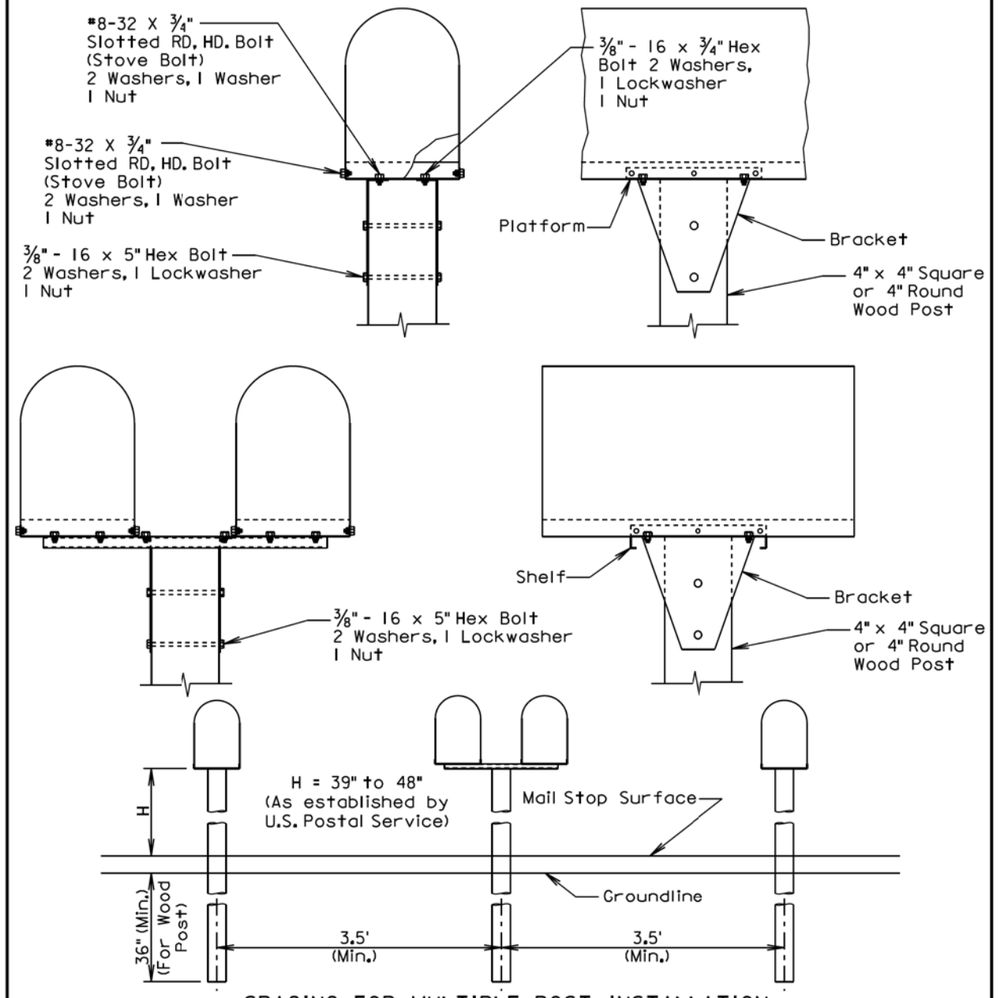

SPACING FOR MULTIPLE POST INSTALLATION

GENERAL NOTES:

The post support assemblies provided should be consistant throughout the project.

Single and double mailboxes may be in any sequence.

Post support assemblies shall be one from the approved products list, a 4"x4" or 4" round wood post, or an alternate post support assembly that meets the test level 3 crash testing requirements of NCHRP 350 or MASH.

Alternate mailbox support assemblies shall be approved by the Engineer prior to installation. The Contractor shall provide the Engineer written certification that the mailbox support assembly has met the crash testing requirements and will be installed in accordance with the manufacturer's installation instructions.

September 6, 2013

Published Date: 3rd Qtr. 2014	SDDOT	SINGLE AND DOUBLE MAILBOX ASSEMBLIES	PLATE NUMBER 900.02
			Sheet 1 of 1

Plot Scale - 1:200
- Plotted From- trrc11610
File - ...\Design\FStdPlatePg4.dgn

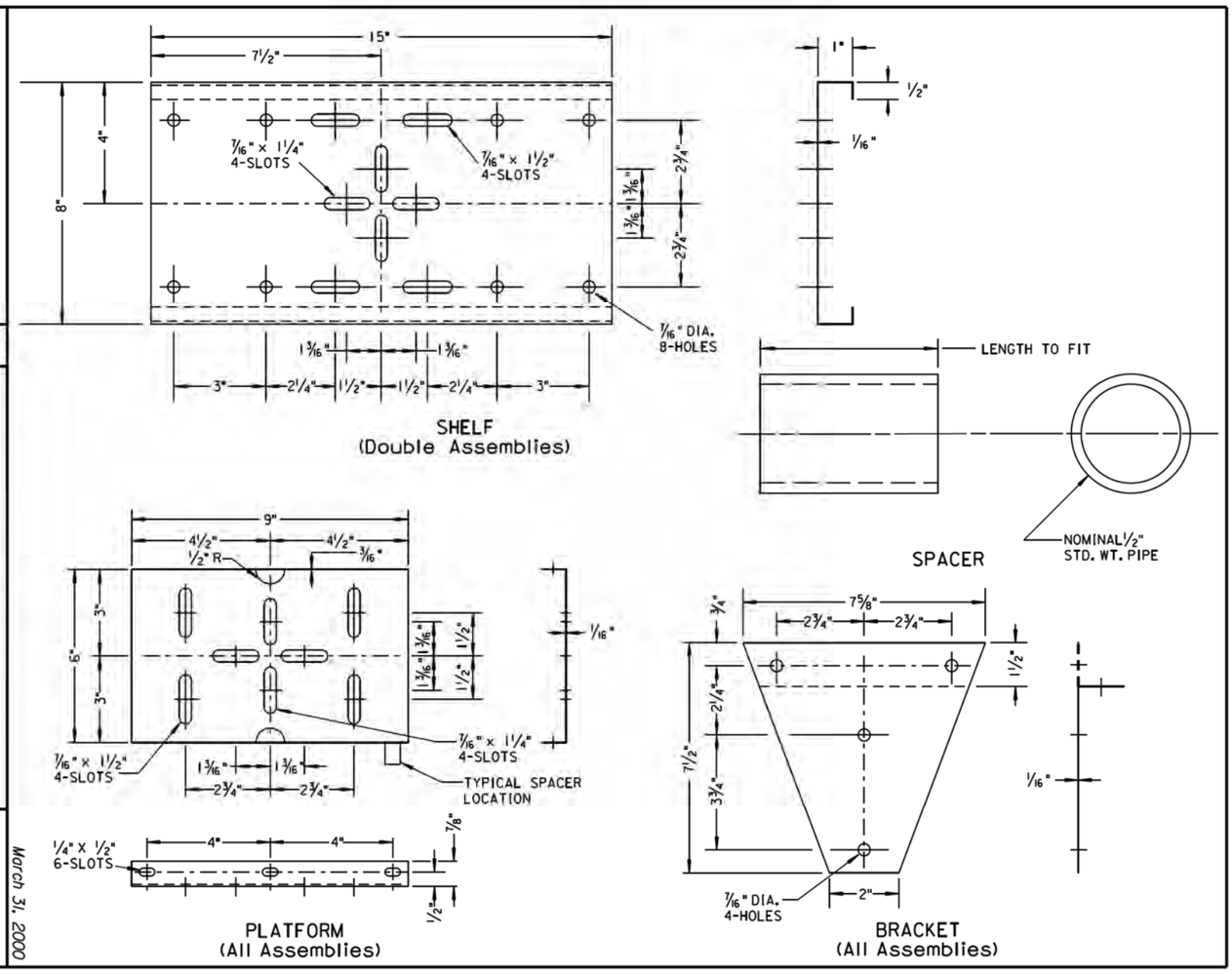

Published Date: 3rd Qtr. 2014

SDDOT

MAILBOX SUPPORT HARDWARE

PLATE NUMBER 900.03

Sheet 1 of 1

March 31, 2000

STATE OF SOUTH DAKOTA	PROJECT	SHEET	TOTAL SHEETS
	NH 0085(81)112	F16	F16

Plotting Date: 10/14/2014