SECTION B: GRADING PLANS

STATE OF SOUTH DAKOTA	PROJECT	SHEET	TOTAL SHEETS
	P 0037(129)207 NH 0012(198)308	B1	B131

Plotting Date: 06/22/2016

INDEX OF SHEETS

B1	General Layout W/Index
B2-B12	Estimate With General Notes & Tables
B13-B14	Pipe Quantities
B15-B17	Pavement Curb and Gutter and Sidewalk Quantities
B18-B22	Typical Sections
B23	Horizontal Alignment Sheets
B24	Control Data Sheet
B25-B27	Subsurface Utility Locations
B28	Legend
B29-B58	Plan & Profile Sheets
B59-B72	Pavement Removal Layout sheets
B73-B82	Curb & Gutter Layout
B83-B93	Curb Ramp Layouts
B94-B99	Special Details
B100-B131	Standard Plates

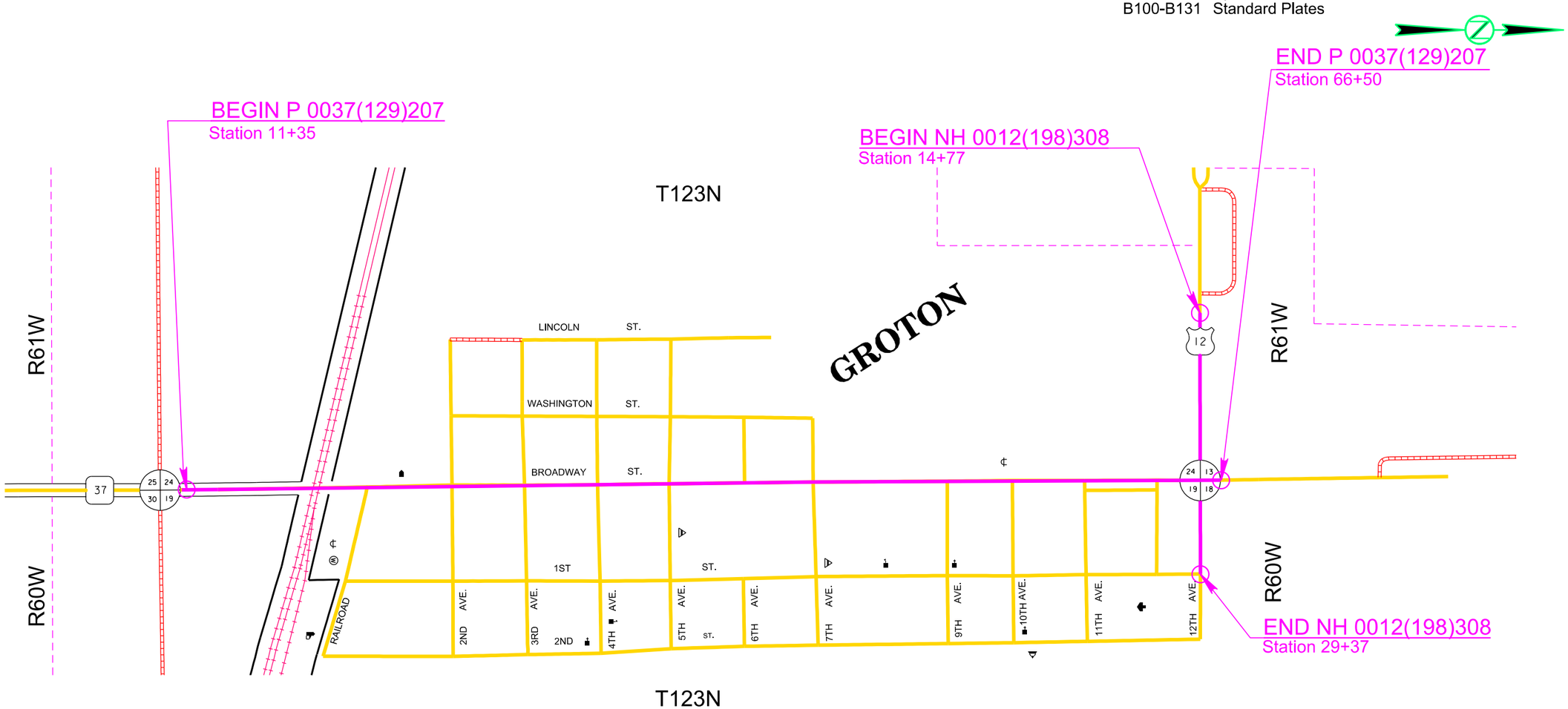

Plot Scale - 1:200

Plotted From - trgt17192

File - U:\rdprj\brown039\kittleb.dgn

SECTION B ESTIMATE OF QUANTITIES – PCN 039K

BID ITEM NUMBER	ITEM	QUANTITY	UNIT
009E0010	Mobilization	Lump Sum	LS
009E3230	Grade Staking	1.122	Mile
009E3250	Miscellaneous Staking	1.061	Mile
009E3280	Slope Staking	1.061	Mile
009E3300	Three Man Survey Crew	40.0	Hour
100E0020	Clear and Grub Tree	24	Each
110E0300	Remove Concrete Curb and Gutter	4,756	Ft
110E0400	Remove Drop Inlet	14	Each
110E0605	Remove Chain Link Fence	30	Ft
110E1130	Remove Concrete Driveway Pavement	263.9	SqYd
110E1140	Remove Concrete Sidewalk	874.7	SqYd
110E7040	Remove Gate for Reset	2	Each
120E0010	Unclassified Excavation	33,629	CuYd
120E0400	Select Subgrade Topping	10,086	CuYd
120E0900	Contaminated Material Excavation	100	CuYd
120E1000	Muck Excavation	571	CuYd
120E2000	Undercutting	2,155	CuYd
120E6100	Water for Embankment	115.9	MGal
250E0020	Incidental Work, Grading	Lump Sum	LS
270E0020	Salvage and Stockpile Asphalt Mix Material	16,014.0	Ton
380E3520	6" PCC Approach Pavement	706.8	SqYd
380E3540	8" PCC Approach Pavement	57.8	SqYd
380E4050	8" PCC Fillet Section	711.7	SqYd
450E0102	12" RCP Class 2, Furnish	86	Ft
450E0103	12" RCP Class 3, Furnish	34	Ft
450E0110	12" RCP, Install	120	Ft
450E0122	18" RCP Class 2, Furnish	1,568	Ft
450E0123	18" RCP Class 3, Furnish	110	Ft
450E0130	18" RCP, Install	1,678	Ft
450E0142	24" RCP Class 2, Furnish	164	Ft
450E0143	24" RCP Class 3, Furnish	248	Ft
450E0150	24" RCP, Install	412	Ft
450E0162	30" RCP Class 2, Furnish	8	Ft
450E0170	30" RCP, Install	8	Ft
450E0182	36" RCP Class 2, Furnish	20	Ft
450E0190	36" RCP, Install	20	Ft
450E0408	18" RCP Bend, Furnish	3	Each
450E0409	18" RCP Bend, Install	3	Each
450E0416	24" RCP Bend, Furnish	1	Each
450E0417	24" RCP Bend, Install	1	Each
450E2200	24" RCP Sloped End, Furnish	9	Each
450E2201	24" RCP Sloped End, Install	9	Each
450E2301	15" RCP Safety End with Bars, Furnish	5	Each
450E2303	15" RCP Safety End, Install	5	Each

BID ITEM NUMBER	ITEM	QUANTITY	UNIT
450E2304	18" RCP Safety End, Furnish	11	Each
450E2307	18" RCP Safety End, Install	11	Each
450E3002	18" RCP Arch Class 2, Furnish	110	Ft
450E3003	18" RCP Arch Class 3, Furnish	286	Ft
450E3010	18" RCP Arch, Install	396	Ft
450E3013	24" RCP Arch Class 3, Furnish	164	Ft
450E3020	24" RCP Arch, Install	164	Ft
450E3023	30" RCP Arch Class 3, Furnish	276	Ft
450E3030	30" RCP Arch, Install	276	Ft
450E3032	36" RCP Arch Class 2, Furnish	150	Ft
450E3033	36" RCP Arch Class 3, Furnish	198	Ft
450E3040	36" RCP Arch, Install	348	Ft
450E3043	42" RCP Arch Class 3, Furnish	1,064	Ft
450E3050	42" RCP Arch, Install	1,064	Ft
450E3053	48" RCP Arch Class 3, Furnish	84	Ft
450E3060	48" RCP Arch, Install	84	Ft
450E4520	48" RCP Arch Flared End, Furnish	1	Each
450E4521	48" RCP Arch Flared End, Install	1	Each
450E6999	6" High Density Polyethylene Pipe, Furnish	22	Ft
450E7000	6" High Density Polyethylene Pipe, Install	22	Ft
450E7009	15" High Density Polyethylene Pipe, Furnish	564	Ft
450E7010	15" High Density Polyethylene Pipe, Install	564	Ft
450E7400	High Density Polyethylene Pipe Bend, Furnish	3	Each
450E7401	High Density Polyethylene Pipe Bend, Install	3	Each
450E7500	High Density Polyethylene Pipe Tee, Furnish	3	Each
450E7501	High Density Polyethylene Pipe Tee, Install	3	Each
462E0100	Class M6 Concrete	115.3	CuYd
480E0100	Reinforcing Steel	23,720	Lb
600E0200	Type II Field Laboratory	1	Each
620E2100	Reset Gate	2	Each
621E0060	6' Chain Link Fence with Top Rail	10	Ft
621E0260	Special 6' Chain Link Fence	20	Ft
650E0080	Type B68 Concrete Curb and Gutter	6,340	Ft
650E4680	Type P8 Concrete Gutter	502	Ft
650E6280	8" Concrete Valley Gutter	222.5	SqYd
651E0040	4" Concrete Sidewalk	29,384	SqFt
651E0140	4" Reinforced Concrete Sidewalk	589	SqFt
651E7000	Type 1 Detectable Warnings	460	SqFt
670E1200	Type B Frame and Grate Assembly	26	Each
670E2200	Type C Frame and Grate	1	Each
670E5340	4' x 11' Precast Concrete Type S Drop Inlet Lid	5	Each
670E5342	4' x 6' Precast Concrete Type S Drop Inlet Lid	1	Each
670E5400	Precast Drop Inlet Collar	24	Each
671E6007	Type A7 Manhole Frame and Lid	5	Each

BID ITEM NUMBER	ITEM	QUANTITY	UNIT
671E6030	Type S Manhole Frame and Lid	6	Each
831E0300	Reinforcement Fabric (MSE)	7,550	SqYd
900E0010	Refurbish Single Mailbox	3	Each
900E0012	Refurbish Double Mailbox	6	Each
998E0100	Railroad Protective Insurance	Lump Sum	LS

Plot Scale - 1:200
Plotted From - tnpr17192
File - ...\brjbrwn039K\NotesSectionB.dgn

SECTION B ESTIMATE OF QUANTITIES – PCN 05AV

BID ITEM NUMBER	ITEM	QUANTITY	UNIT
009E0010	Mobilization	Lump Sum	LS
009E3230	Grade Staking	0.747	Mile
009E3250	Miscellaneous Staking	0.277	Mile
009E3280	Slope Staking	0.277	Mile
009E3300	Three Man Survey Crew	40.0	Hour
110E0400	Remove Drop Inlet	8	Each
110E1100	Remove Concrete Pavement	4,472.8	SqYd
110E1130	Remove Concrete Driveway Pavement	137.7	SqYd
120E0010	Unclassified Excavation	4,762	CuYd
120E0400	Select Subgrade Topping	2,225	CuYd
120E1000	Muck Excavation	246	CuYd
120E6100	Water for Embankment	29.5	MGal
250E0020	Incidental Work, Grading	Lump Sum	LS
270E0020	Salvage and Stockpile Asphalt Mix Material	680.8	Ton
380E3520	6" PCC Approach Pavement	237.6	SqYd
450E0122	18" RCP Class 2, Furnish	26	Ft
450E0123	18" RCP Class 3, Furnish	14	Ft
450E0130	18" RCP, Install	40	Ft
450E0142	24" RCP Class 2, Furnish	74	Ft
450E0143	24" RCP Class 3, Furnish	48	Ft
450E0150	24" RCP, Install	122	Ft
450E0408	18" RCP Bend, Furnish	1	Each
450E0409	18" RCP Bend, Install	1	Each
450E0416	24" RCP Bend, Furnish	2	Each
450E0417	24" RCP Bend, Install	2	Each
450E2016	24" RCP Flared End, Furnish	1	Each
450E2017	24" RCP Flared End, Install	1	Each
450E3002	18" RCP Arch Class 2, Furnish	228	Ft
450E3010	18" RCP Arch, Install	228	Ft
450E3062	54" RCP Arch Class 2, Furnish	40	Ft
450E3070	54" RCP Arch, Install	40	Ft
450E3304	18" RCP Arch Bend, Furnish	1	Each
450E3305	18" RCP Arch Bend, Install	1	Each
450E4500	18" RCP Arch Flared End, Furnish	2	Each
450E4501	18" RCP Arch Flared End, Install	2	Each
450E4524	54" RCP Arch Flared End, Furnish	2	Each
450E4525	54" RCP Arch Flared End, Install	2	Each
450E7001	8" High Density Polyethylene Pipe, Furnish	16	Ft
450E7002	8" High Density Polyethylene Pipe, Install	16	Ft
462E0100	Class M6 Concrete	20.7	CuYd
480E0100	Reinforcing Steel	4,427	Lb
650E0080	Type B68 Concrete Curb and Gutter	62	Ft
650E0085	Type B68.5 Concrete Curb and Gutter	2,033	Ft
650E4685	Type P8.5 Concrete Gutter	256	Ft

BID ITEM NUMBER	ITEM	QUANTITY	UNIT
651E0040	4" Concrete Sidewalk	4,446	SqFt
651E7000	Type 1 Detectable Warnings	80	SqFt
670E1200	Type B Frame and Grate Assembly	6	Each
670E2200	Type C Frame and Grate	2	Each
670E5400	Precast Drop Inlet Collar	6	Each
671E4548	48" Manhole Cone Section	3.0	Ft
671E6007	Type A7 Manhole Frame and Lid	1	Each
671E6009	Type A9 Manhole Frame and Lid	1	Each

GRADING OPERATIONS

Water for Embankment is estimated at the rate of 10 gallons of water per cubic yard of Embankment minus Waste.

The estimated cubic yards of excavation and/or embankment required to construct outlet ditches, ditch blocks, and approaches are included in the earthwork balance notes on the profile sheets.

Special ditch grades and other sections of the roadway different than the typical section(s) shall be constructed to the limits shown on the cross sections. If significant changes to the cross sections are necessary during construction, the Engineer shall contact the Designer for the proposed change.

Generally, all shallow inlet and outlet ditches as noted on the plan sheets shall be cut with a 10-foot wide bottom with 5:1 backslopes. However, the Engineer may direct the Contractor to adjust the ditch width for proper alignment with the drainage structure.

TYPE II FIELD LABORATORY

The lab shall be equipped with an internet connection such as DSL, cable modem, or other approved service. The internet connection shall be provided with a multi-port wireless router. The internet connection shall be a minimum speed of 512 Kb unless limited by job location and approved by the DOT. Prior to installing the wireless router the Contractor shall submit the wireless router's technical data to the Area Office to check for compatibility with the state's computer equipment. The internet connection is intended for state personnel usage only. The Contractor's personnel are prohibited from using the internet connection unless pre-approved by the Project Engineer. All costs required for providing the internet connection shall be incidental to the contract unit price per each for "Type II Field Laboratory".

RESTRICTED WORK AREA

The Contractor work limits are confined to the area within the existing right-of-way adjacent to the parcels noted in the table below. The Engineer will notify the Contractor of the date and time when work outside of the existing right-of-way may proceed. It is anticipated possession will be secured by September 2016.

Parcel No.	Station	to	Station	L/R
1	18+36.38		19+90.20	L
3	18+16.08		19+71.89	R
A2	21+09.86		22+40.59	L

UTILITIES

The Contractor shall be aware that the existing utilities shown in the plans were surveyed prior to the design of this project and might have been relocated or replaced by a new utility facility prior to construction of this project, might be relocated or replaced by a new utility facility during the construction of this project, or might not require adjustment and may remain in its current location. The Contractor shall contact each utility owner and confirm the status of all existing and new utility facilities. The utility contact information is provided elsewhere in the plans or bidding documents.

Subsurface utility explorations were done for this project. The findings can be found in the SUBSURFACE UTILITY LOCATIONS table elsewhere in the plans. The table is provided to aid the Contractor during construction. All information in the table is approximate and shall be verified by the Contractor prior to construction in those areas.

GROUNDWATER DEPTHS

The following table shows groundwater depths taken during the projects subsurface investigation on SD37 and is provided for information. The groundwater depths were recorded after an open period in the borings as shown in the following table.

Station	Offset	Drilled Depth (ft)	Initial Water Level (ft)	Final Water Level (ft)	Time Between Readings (hrs)
17+40	7.0' R	15	Dry @ 6.6	5.7	21
23+80	6.9' L	15	9.4	7.9	17
30+20	8.3' R	15	11.2	8.4	20
36+60	7.4' L	15	9.4	9.5	17
44+50	6.8' R	15	6.6	4.2	21
50+40	6.8' R	15	13.1	10.7	19
57+80	7.9' R	15	Dry @ 8.6	Dry @ 7.5	18

Proper protective measures will be required for the storm sewer construction. Seasonal changes also may affect the groundwater elevations. Sumps and/or other dewatering methods will likely be required.

Plot Scale - 1:200
Plotted From - TRRC11626
File - ...\prj\brwn039K\NotesSectionB.dgn

SHRINKAGE FACTOR - PCN 039K: Embankment +20% to +40 %

TABLE OF EXCAVATION QUANTITIES BY BALANCES – PCN 039K

Station to	Station	Excavation (CuYd)	* Muck Exc. (CuYd)	*Undercut (CuYd)	*Undercut for Detour (see Section C) (CuYd)	Excavation for Select Topping (CuYd)	Total Excavation (CuYd)	** Waste (CuYd)	** Haul (CuYdSta)
11+35	66+50	5724	571	2074	81	10086	18536	6870	16755

* The quantities for these items are in the Estimate of Quantities under their respective bid items.
** The quantities for these items are for information only.

TABLE OF UNCLASSIFIED EXCAVATION – PCN 039K

Excavation	5724
Excavation for Select Topping	10086
Undercut for Unstable Subgrade	2074
Remove AC Pavement/Undercut for Detour (Section C)	120
Topsoil	3021
Salvaged Asphalt Mix Material	8381
Salvaged Granular Base Material	4223
Total	33629

SHRINKAGE FACTOR - PCN 05AV: Embankment +25% to +50%

TABLE OF EXCAVATION QUANTITIES BY BALANCES – PCN 05AV

Station to	Station	Excavation (CuYd)	* Muck Exc. (CuYd)	Excavation for Select Topping (CuYd)	Total Excavation (CuYd)	** Waste (CuYd)	** Haul (CuYdSta)
14+77	29+37	949	246	2225	3420	390	2441

* The quantities for these items are in the Estimate of Quantities under their respective bid items.
** The quantities for these items are for information only.

TABLE OF UNCLASSIFIED EXCAVATION – PCN 05AV

Excavation	785
Excavation for Select Topping	2225
Topsoil	197
Salvaged Asphalt Mix Material	360
Salvaged Granular Base Material	1195
Total	4762

Plot Scale - 1:200
Plotted From - tmpr17192
File - ...\prj\brwn\039K\NotesSectionB.dgn

PROCEDURES FOR DETERMINING UNCLASSIFIED EXCAVATION QUANTITY

When plan quantities are used for payment, the Unclassified Excavation quantity shall be used for final payment.

The following paragraphs are general earthwork information and information in regards to computing the Unclassified Excavation quantity when final cross sections are taken in the field:

The Unstable Material Excavation quantity is included in the Excavation quantity listed in the Table of Unclassified Excavation. When finaling a project, the Unstable Material Excavation quantity shall be added to the Excavation quantity to compute the Unclassified Excavation quantity.

The Topsoil quantity in the Table of Unclassified Excavation is an estimate. When finaling a project, the total quantity of field measured Topsoil shall be used in place of the estimated Topsoil quantity. If topsoil is field measured, it will be added to the Unclassified Excavation quantity. Otherwise, topsoil will be paid for as plans quantity. The quantity of Topsoil from the cuts will be paid for twice as Unclassified Excavation, as it will be in both the Excavation and Topsoil quantities. This will be full compensation for Excavation, which includes necessary undercutting to provide space for placement of topsoil.

The Excavation quantities from individual balances and the Table of Unclassified Excavation have been reduced by the volume of in place surfacing that will be removed and/or salvaged.

Salvaged Asphalt Mix shall be paid for once as Unclassified Excavation. As shown in the Table of Unclassified Excavation, the estimated quantity of 8473 cubic yards of Salvaged Asphalt Mix on SD37 and 360 cubic yards of Salvaged Asphalt Mix Material on US12 shall be added to the Excavation quantities to determine the Unclassified Excavation quantity. When finaling a project, the quantities of Salvaged Asphalt Mix Material from fill sections will not be adjusted according to field measurements. The quantity of Salvaged Asphalt Mix Material from cut sections will not be added to the Excavation quantity as it is already in the cuts on the final cross sections.

The volume of in place Concrete Surfacing removed will NOT be paid for as Unclassified Excavation.

The Excavation quantities from individual balances and the table above have been reduced by the volume of in place concrete pavement that will be removed.

When finaling a project, the estimated quantity of 1327.2 cubic yards of Concrete Pavement removed from the cut sections shall be subtracted from the Unclassified Excavation quantity for final payment. The quantity of Concrete Pavement from cut sections subtracted from the Unclassified Excavation quantity shall be plans quantity and will not be adjusted according to field measurements.

HAUL

Included in the Table of Excavation Quantities by Balances is Haul. It is not a pay item and is for informational purposes only. Haul was not estimated for moving Contractor Furnished Borrow Excavation. The mass haul diagram is available as part of the bid package for use in figuring this haul.

Haul: Estimated quantity (CuYdSta) for moving unclassified excavation material to the locations where it is needed throughout the earthwork balance.

For Purpose of Extra Haul Computations:

Average Haul (039K) = Haul/Unclassified Excavation = 16755/33509 = 0.5 Sta.

Average Haul (05AV) = Haul/Unclassified Excavation = 2441/4882 = 0.5 Sta.

WASTE MATERIAL

The waste material estimated at 6870 cubic yards (039K) and 390 cubic yards (05AV) will become the property of the Contractor at the completion of the project. Any material needed for construction of the project shall be used before waste is hauled off.

EXCAVATION FOR SELECT SUBGRADE TOPPING

For SD Highway 37, the existing asphalt concrete pavement and underlying gravel cushion shall be removed and salvaged. The removed gravel cushion shall be crushed to a minus 2.5 inch size.

For US Highway 12, the existing asphalt concrete pavement, PCC pavement, and underlying cement base shall be removed and salvaged. The removed PCC pavement and cement base shall be crushed to a minus 2.5 inch size.

The exposed subgrade shall be undercut 1 foot below the finished subgrade and extend 1 foot from behind the curb to 1 foot behind the opposite curb in the curb and gutter section. The salvaged gravel cushion will be blended with the undercut soil and used as “Select Subgrade Topping” to backfill the undercut. For both SD37 and US12, the Select Subgrade Topping material will consist of a mixture of approximately 50% (by volume) undercut soil and 50% salvaged surfacing (PCCP) and gravel cushion as approved by the Engineer. See Section F for gravel cushion (Granular Material, Furnish).

The limits of Undercutting and Select Subgrade Topping on the intersecting streets should be to one foot outside the fillet sections.

Undercut for Select Subgrade Topping material not needed in the “Select Subgrade Topping” can be used as embankment material as approved by the Engineer. The majority of waste is anticipated to be the unused undercut material.

Undercutting and placing Select Subgrade Topping near existing and proposed pipe shall be done with care so as not to damage the pipe. Pipe damaged by these operations shall be replaced by the Contractor at no cost to the State.

Payment to remove the “Excavation For Select Topping” shall be paid for once as “Unclassified Excavation”.

Field measurement of Select Subgrade Topping shall not be made and payment for Select Subgrade Topping will be based upon plans quantity unless changes are directed by the Engineer.

All costs associated with the crushing, mixing, hauling and placement of the “Select Subgrade Topping” material shall be included in the contract unit price per Cubic Yard for “Select Subgrade Topping”.

TABLE OF EXCAVATION FOR SELECT SUBGRADE TOPPING – PCN 039K

Station	to	Station	Depth (Ft)	Quantity (CuYd)
11+35		19+20	1’	1403
19+20		44+00	1’	5050
44+00		60+50	1’	3070
60+50		66+50	1’	563
		Total:		10086

TABLE OF EXCAVATION FOR SELECT SUBGRADE TOPPING – PCN 05AV

Station	to	Station	Depth (Ft)	Quantity (CuYd)
18+50		25+64	1’	2225
		Total:		2225

Plot Scale - 1:200
Plotted From - tnpr17192
File - ...\pr\brwn039K\NotesSectionB.dgn

UNSTABLE SUBGRADE STABILIZATION

Some areas of unstable subgrade may be exposed during the undercutting operation. These areas should be excavated and recompacted using the existing soil or replacement soil. If, in the opinion of the Engineer, the area will not stabilize by this method, Reinforcement Fabric (MSE) and granular material may be used. Stabilization will be accomplished by placing a layer of Reinforcement Fabric (MSE) at the bottom of the undercut. The undercut will then be backfilled with granular material/soil mix (see Section F) and compacted. The Engineer should contact the Geotechnical Engineering Activity (605-773-3725) if assistance is required. An estimated 7,156 sq. yds of Reinforcement Fabric (MSE) has been included in the materials quantities for bidding purposes. This quantity is assumed to cover 6,222 sq. yds of subgrade (56' wide x 1000' long). An estimated 394 sq. yds of Reinforcement Fabric (MSE) has been included for bidding purposes to widen the detour at US12 and County Road 12E (See Section C). The bid quantity has been increased by 15% to account for overlaps. This quantity can be adjusted or eliminated by CCO, depending on field conditions.

The Undercut, for Unstable Subgrade, is intended to be used to establish an estimated quantity of Undercut for bidding purposes only. Undercut may be necessary in unstable areas as previously noted in the Unstable Subgrade Stabilization section. The unstable area is assumed to cover an area 56' in width and 1000' in length. For estimating purposes, the undercut depth is assumed to be 1 foot, resulting in an undercut quantity of 2,074 CuYd. If the undercut material is deemed unusable and will not be reused, it will only be paid for as Unclassified Excavation. Basis of payment shall be measured or eliminated by CCO, depending on field conditions.

Fabric Specifications

The fabric shall conform to the specification for Geotextiles and Impermeable Plastic Membrane (Section 831 of the Standard Specifications). The fabric shall be on the Approved Products List for this material or shall be certified by the supplier to meet this specification prior to installation.

Fabric will be paid for at the contract unit price per sq. yd for Reinforcement Fabric (MSE). Payment quantities will be based on area covered plus 15%. Overlaps are accounted for by the additional 15%. Payment will be full compensation for furnishing and installing the fabric.

Installation Requirements

The top of the subgrade shall be prepared by smoothing the surface of the subgrade to minimize any ruts, ridges, and depressions. Any rocks or other protrusions that might damage the fabric shall be removed.

The fabric should be unrolled perpendicular to the centerline and overlapped a minimum of 2 feet. The fabric shall be placed as taut as possible with minimal wrinkles. Placement shall be done so that subsequent backfill material does not shove, wrinkle or distort the in place fabric. The overlaps shall be shingled in a manner that assures backfill material will not be forced under the fabric during backfilling operations. The fabric may be held in place with small piles of granular material or staples. No traffic will be allowed on the uncovered fabric.

Backfill material shall be dumped at least 20 feet behind the leading edge of the backfill and pushed into place with a loader or dozer from the covered areas to the uncovered areas. The first lift of backfill material shall be 8 inches thick or as directed by the Engineer. The backfill material shall be compacted to 95% maximum dry density as determined by the Specified Density Method.

MUCK EXCAVATION

The areas of muck excavation are drawn on the cross sections with a normal depth of 3 feet. The estimated quantities, 571 cubic yards on SD37 and 246 cubic yards on US12, of muck excavation shall be paid for at the contract unit price per cubic yard for "Muck Excavation".

Muck excavation consists of the removal of highly organic and/or highly saturated material from the designated areas shown on the cross sections. Highly organic muck material shall not be used in the embankment but may be used as topsoil. Non-organic muck material may be used as embankment outside of the fill subgrade shoulder if it is properly handled and dried prior to placement in the embankment.

Field measurement of muck excavation will not be made unless the Engineer orders additional excavation, or when the Engineer determines, in accordance with Section 120.3 A.1. of the Specifications, that the classification of excavation be changed.

If the areas designated as muck excavation can be removed with similar equipment and procedures as used for unclassified excavation, the material shall be measured and paid for as "Unclassified Excavation".

TABLE OF MUCK EXCAVATION – PCN 039K

Station	to	Station	L/R	Depth (Ft)	Quantity (CuYd)
13+00		18+50	R	3	571
				Total:	571

TABLE OF MUCK EXCAVATION – PCN 05AV

Station	to	Station	L/R	Depth (Ft)	Quantity (CuYd)
19+00		20+00	L	3	246
				Total:	246

SALVAGE AND STOCKPILE ASPHALT MIX MATERIAL

An estimated 15,839.4 tons (8381 Cubic Yards) of asphalt mix material shall be salvaged from the entire length of existing SD37.

The existing pavement section on US12 consists of 4" of asphalt concrete on 7" cracked and seated PCCP and 4" cement treated base. An estimated 680.8 tons (360.2 Cubic Yards) of asphalt mix material shall be salvaged from the mainline of US12 from 18+50 to 25+64. The asphalt overlay shall be salvaged and blended to be used as base course. Concrete pavement removal below the existing asphalt concrete shall be included in the cost for "Remove Concrete Pavement".

The salvaged materials shall be used according to Section F.

The quantity of salvage and stockpile asphalt mix material may vary from the plans. No adjustment will be made to the contract unit price for variations of the quantity of "Salvage and Stockpile Asphalt Mix Material".

The estimated quantity of salvageable material on SD37 is based on removing the mainline to a depth of 13.3". The estimated quantity of salvageable material on US12 is based on removing the mainline to a depth of 4".

The following table is furnished for information only.

Station	Distance from Centerline (Feet) Lt.	Rt.	Thickness of Asphalt Mix Material (Inches)	Thickness of Granular Material (Inches)
17+40		7.0	13	11
23+80	6.9		13	6
30+20		8.3	13	7
36+60	7.4		13	6
44+50		6.8	13	7
50+40		6.8	15	4
57+80		7.9	13	2
	Average Thickness:		13.3	6.1

Note: Granular material shall be salvaged separately from the asphalt mix material as detailed in the Excavation for Select Subgrade Topping Plan Note.

The Los Angeles Abrasion Loss value on the aggregate used for the in place asphalt concrete varies from 22 to 24 percent. These values were obtained from testing during construction of the in place asphalt concrete.

Salvaging is estimated to produce 15,839.4 tons of salvaged asphalt material on SD37 and 680.8 tons of salvaged asphalt material on US12. An estimated 1,494.9 tons will be used as RAP on SD37 in the Class HR Asphalt Concrete. The remainder of the salvaged asphalt concrete material shall be blended and stockpiled for use as base material as detailed in the plan notes and as directed by the Engineer.

Plot Scale - 1:200
Plotted From - tpp17192
File - ...\prj\brwn039K\NotesSectionB.dgn

TABLE OF CONCRETE DRIVEWAY PAVEMENT REMOVAL – PCN 039K

Station	to	Station	L/R	Quantity (SqYd)
22+15.90		22+43.86	L	13.4
22+99.64		23+25.12	L	19.5
23+68.72		24+06.25	L	18.2
24+30.76		24+46.61	L	7.6
22+95.95		23+35.42	R	20.5
23+83.54		24+05.23	R	9.9
27+59.71		27+93.83	L	16.8
28+05.06		28+37.28	L	15.7
27+49.44		27+73.30	R	11.2
28+17.54		28+41.05	R	10.7
29+98.05		30+15.21	L	7.3
31+20.05		31+38.87	L	7.2
31+03.07		31+50.14	R	33.7
35+09.11		35+28.65	L	8.1
34+09.12		34+30.82	R	9.8
34+80.32		35+01.86	R	9.9
38+38.53		38+71.20	L	16.5
36+94.84		36+96.02	R	7.2
58+06.29		58+12.93	R	20.7
			Total:	263.9

TABLE OF CONCRETE DRIVEWAY PAVEMENT REMOVAL – PCN 05AV

Station	to	Station	L/R	Quantity (SqYd)
16+67.36		16+95.83	L	11.5
20+09.04		20+49.52	L	18.2
20+25.80		20+73.84	R	24.6
25+01.63		25+26.43	L	12.2
27+26.14		27+72.66	L	25.1
28+65.92		29+13.44	L	24.5
25+16.12		25+59.03	R	21.6
			Total:	137.7

TABLE OF SIDEWALK REMOVAL – PCN 039K

Station	to	Station	L/R	Quantity (SqYd)
21+88.50		21+95.78	R	5.1
24+56.59		24+60.00	R	2.9
25+46.41		25+51.62	R	14.1
24+97.01		25+59.24	L	53.7
26+05.24		26+11.01	R	13.3
29+14.49		29+25.91	R	18.3
25+98.65		27+63.20	L	104.6
28+33.70		29+21.15	L	49.6
29+65.46		30+46.52	R	55.8
30+92.64		32+91.43	R	119.3
29+61.92		32+90.61	L	195.0
33+37.72		33+42.65	R	13.6
35+97.17		35+99.06	R	1.4
33+29.50		36+53.40	L	192.2
36+94.98		37+54.71	L	32.2
40+28.77		40+32.69	L	1.9
44+30.86		44+33.67	R	1.7
			Total:	874.7

TABLE OF DROP INLET REMOVAL – PCN 039K

All costs for removal of the frame and grate assembly shall be incidental to the contract unit price per each for "Remove Drop Inlet".

Station	L/R	Quantity (Each)
25+43	22' L	1
25+43	22' R	1
26+14	22' L	1
26+14	22' R	1
29+78	22' L	1
29+78	22' R	1
33+43	22' R	1
36+40	22' L	1
36+40	22' R	1
36+58	43' R	1
40+06	22' L	1
40+06	22' R	1
43+71	22' R	1
44+32	38' R	1
	Total:	14

TABLE OF DROP INLET REMOVAL – PCN 05AV

All costs for removal of the frame and grate assembly shall be incidental to the contract unit price per each for "Remove Drop Inlet".

Station	L/R	Quantity (Each)
15+62	25' L	1
18+62	25' L	1
20+00	25' L	1
22+81	25' L	1
22+81	25' R	1
24+77	39' R	1
25+97	39' R	1
27+09	25' L	1
	Total:	8

TABLE OF TREE REMOVAL – PCN 039K

Station	L/R	Offset (ft)	Quantity
24+98	R	32.8	1
26+33	R	28.1	1
26+59	R	25.8	1
26+84	R	29.3	1
27+05	R	29.3	1
27+28	R	27.8	1
32+23	L	36.1	1
32+79	L	34.9	1
33+59	L	34.7	1
33+65	R	32.0	1
33+76	L	34.7	1
33+84	L	34.8	1
33+93	L	34.9	1
34+00	R	36.3	1
34+26	L	35.6	1
34+40	L	35.6	1
34+86	L	35.4	1
35+78	L	34.5	1
35+98	L	34.3	1
36+10	L	34.0	1
36+13	R	38.8	1
37+21	L	34.5	1
56+54	L	37.3	1
57+32	L	38.2	1
	Total:		24

Plot Scale - 1:200
Plotted From - trgr17192
File - ...\prj\bwn039K\NotesSectionB.dgn

INCIDENTAL WORK, GRADING – PCN 039K

Station	Remarks
12+34-43' L	Take Out 18"-37' RCP & End Sections
14+59-45' L	Take Out 18"-37' RCP & End Sections
18+14-50' L	Take Out 18"-65' CMP & End Sections
18+55	Take Out 18"-66' RCP & End Sections
19+58	Take Out 18"-56' RCP & End Sections
25+43-22' L to 22' R	Take Out 12"-50' RCP
25+43-22' R to 26+14-22' R	Take Out 15"-72' RCP
25+55-49' R to 25+43-22' L	Take Out 12"-50' RCP
26+14-22' L to 22' R	Take Out 15"-44' RCP
26+14-22' R to 29+78-22' R	Take Out 15"-366' RCP
29+78-22' L to 22' R	Take Out 15"-44' RCP
29+78-22' R to 33+43-22' R	Take Out 18"-366' RCP
28+19-31' R	Take Out Landscape Timber
33+36-39' R to 33+43-22' R	Take Out 18"–16' RCP
33+43-22' R to 36+40-22' R	Take Out 18"-296' RCP
35+90-38' R	Take Out Post w/Rain Gauge
36+40-22' R to 40+06-22' R	Take Out 18"-366' RCP
36+40-22' L to 36+47-38' L	Take Out 18"-16' RCP
36+58-43' R to 36+94-50' R	Take Out 15"-36' RCP
36+40-22' L to 22' R	Take Out 18"-44' RCP
36+40-22' R to 36+58-43' R	Take Out 18"-24' RCP
40+06-22' L to 40+30-44' L	Take Out 18"-33' RCP
40+06-22' L to 22' R	Take Out 18"-44' RCP
40+06-22' R to 43+71-22' R	Take Out 18"-364' RCP
43+71-22' R to 44+32-22' R	Take Out 24"-60' RCP
44+32-38'R to 22' R	Take Out 30"-15' RCP
44+32-22' R to 44+65-56' L	Take Out 36"-85' RCP
44+68	Take Out 18"-57' RCP & End Sections
44+69	Take Out 18"-26' RCP & End Sections
54+27-33' R	Take Out 18"-48' RCP
57+91-31' R	Take Out 18"-49' RCP
60+93	Take Out 24"-66' RCP & End Sections
65+54-43' R	Take Out 18"-64' RCP & End Sections
65+84-49' L	Take Out 18"-64' CMP & End Sections
66+31	Take Out 24"-68' RCP

INCIDENTAL WORK, GRADING – PCN 05AV

Station	Remarks
19+50-50' L	Take Out 2 End Sections
22+81-43' L	Take Out 24"-18' RCP & End Section
22+26-26' R to 22+87-26' R	Take Out 24"-61' RCP
25+15-54' L	Take Out 24"-48' RCP & 2 End Sections
25+63-54' L to 25+77-54' L	Take Out 24"-14' RCP & End Section (West)
25+77-45' R to 26+07-45' R	Take Out Landscaping

REMOVAL OF EXISTING CONCRETE PAVEMENT STA. 14+77 to STA. 29+37 – PCN 05AV

The existing concrete pavement along US12 is 7" Non-reinforced P.C.C. Pavement over 4" cement treated base. The concrete pavement exists below a 4" asphalt concrete overlay which shall be included in the cost for "Salvage and Stockpile Asphalt Mix Material".

The existing 7 inch P.C.C. Pavement is typically 48 feet wide and is reinforced with welded wire fabric. The longitudinal wires are No. 4 gauge and are spaced 30 inches center to center and the transverse wires are No. 4 gauge and are spaced 12 inches center to center. This information is from original construction plans and actual pavement thickness may vary.

The existing contraction joints are repetitively spaced at 16', 17', 21', and 20' with a 2' per 12' lane skew.

The existing concrete pavement shall be removed and salvaged for use in the select subgrade topping according to the Select Subgrade Topping notes. There is approximately 1372 cu. yds of PCC Pavement for this use.

All costs for removing, hauling, and stockpiling the existing concrete pavement shall be incidental to the contract unit price per square yard for "Remove Concrete Pavement".

TABLE OF CONCRETE PAVEMENT REMOVAL – PCN 05AV

Station	to	Station		Description	Quantity (SqYd)
14+77		22+10	L	Curb and Gutter	219.9
14+77		22+10	R	Curb and Gutter	106.2
22+10		29+37	L	Curb and Gutter	206.1
22+10		29+37	R	Curb and Gutter	132.6
18+50		25+64		48' Wide	3808.0
				Total:	4472.8

TABLE OF CONCRETE CURB AND GUTTER REMOVAL – PCN 039K

Station	to	Station	L/R	Quantity (Ft)
21+53.24		25+60.03	L	430.1
21+72.78		25+60.64	R	412.7
25+97.31		29+22.07	L	367.3
25+98.38		29+26.99	R	369.7
29+60.81		32+92.63	L	359.9
29+64.95		32+92.63	R	369.1
33+27.96		36+54.41	L	356.7
33+28.51		36+57.98	R	369.5
36+92.91		40+33.09	L	383.1
40+73.05		43+89.62	L	331.4
36+96.61		43+90.12	R	767.2
44+30.35		44+30.20	R	8.9
50+49.73		50+49.81	R	12.0
50+88.54		50+88.71	R	13.6
54+06.54		54+06.62	R	7.7
54+45.31		54+45.48	R	13.6
57+62.56		57+67.50	R	11.9
58+08.46		58+12.38	R	8.5
61+35.92		61+37.46	R	37.6
61+72.75		62+01.87	R	36.5
62+07.97		62+39.76	R	36.7
62+91.32		63+27.82	R	52.4
			Total:	4756.1

Plot Scale - 1:200
Plotted From - tnpl17192
File - ...\prj\brwn039K\NotesSectionB.dgn

EXISTING RETAINING WALL – PCN 05AV

The existing retaining wall from Sta. 23+90-57' L to 24+97-55' L shall remain in place and fill material will be placed up the wall face. Damage to the retaining wall caused by the Contractor's operations shall be repaired at the Contractor's expense.

PIPE FOR APPROACHES, INTERSECTING ROADS, AND DOWNSPOUTS

Class II reinforced concrete pipe, high density polyethylene pipe, corrugated polypropylene pipe, or steel reinforced polyethylene pipe may be substituted for corrugated metal pipe at approaches and intersecting roads at no additional cost to the State.

If high density polyethylene pipe, corrugated polypropylene pipe, or steel reinforced polyethylene pipe are provided, then the end sections shall be metal, be compatible, and conform to the type of end section as shown in the plans.

PVC PIPE

PVC pipe shall be SDR35 and conform to ASTM D3034. All costs associated with supplying and installing the pipe, including necessary bends, connecting devices, sealants, excavation, bedding and backfill shall be incidental to the price per foot or the respective PVC pipe.

CONCRETE PIPE CONNECTIONS

Pipe connections to existing pipes, manholes, junction boxes, and drop inlets shall be done by breaking a hole into the existing structure and inserting the pipe. A concrete collar shall then be poured around the pipe in the area of the connection.

When it is not possible to use a normal pipe joint (male-female ends), connections to existing pipe shall be made by placing a 2' wide by 6" thick M6 concrete collar around the outside of the connection. The concrete collar shall be reinforced with 6x6 W2.9 x W2.9 wire mesh.

All costs for constructing the concrete collars including materials and labor shall be incidental to the contract unit price per foot for the corresponding pipe bid item.

STORM SEWER

Reinforced concrete pipe may be either bell and spigot or tongue and groove. The pipe sections shall be adjoined such that the ends are fully entered and the inner surfaces are reasonably flush and even.

Lift holes in the reinforced concrete pipe shall be plugged with grout.

Watertight joints are required for reinforced concrete pipe, drop inlets, manholes, and junction boxes where storm sewers run parallel to and within 10 feet horizontally from existing or proposed water mains.

Watertight joints are required where reinforced concrete pipes, drop inlets, manholes, or junction boxes cross water mains and are separated a distance of 18 inches or less, above or below, the water main.

If watertight joints are required then the watertight joints shall extend for a distance of 10 feet beyond the water main. This measurement shall be from the sealed concrete joint to the outer most surface of the water main.

Watertight joint seals shall conform to the following requirements:

1. Reinforced Concrete Pipe (Circular): Gasketed pipe shall conform to the requirements of ASTM C443. Non-gasketed concrete pipe shall be sealed with a mastic joint seal conforming to the requirements of ASTM C990 and encased with a minimum 2' wide by 6" thick M6 concrete collar reinforced with 6x6 W2.9 x W2.9 wire mesh.

2. Reinforced Concrete Pipe (Arch): Joints shall be sealed with a waterstop seal meeting the requirements of ASTM C990. Waterstop seals shall consist of hydrophilic compounds such as Waterstop-RX or ConSeal CS-231.

3. Drop Inlets, Manholes, and Junction Boxes: Joints shall be sealed with a waterstop seal or seal wrap meeting the requirements of ASTM C990 or encased with a minimum 2' wide by 6" thick M6 concrete collar reinforced with 6x6 W2.9 x W2.9 wire mesh. Waterstop seal shall contain hydrophilic compounds such as Waterstop-RX or ConSeal CS-231. Seal wrap shall be a self adhesive external joint wrap such as ConWrap CS-217 or Mar Mac Seal Wrap.

Gaskets and seals (mastic, waterstop, and seal wraps) shall be installed in accordance with the manufacturer's recommendations.

The cost for furnishing and installing all gaskets, mastic joint seal, waterstop seal, seal wrap, concrete collars, and for plugging the lift holes shall be incidental to the contract unit price per foot for the corresponding pipe bid item.

SHALLOW PIPE

Heavy equipment shall not run over shallow pipe during construction activities. Shallow pipe are indicated as Class 3 in the Table of Pipe Quantities.

TABLE OF JUNCTION BOXES AND QUANTITIES – PCN 039K

Station	L/R	Size L'xW'xH'	**Frame and Lid (Type)	Class M6 Concrete (CuYd)	Reinforcing Steel (Lb)
38+50	R	Special 7'x7'x4'	A7	7.34	1468
42+00	R	Special 7'x7'x4'	A7	7.34	1468
44+31	R	Special 7'x7'x4'	A7	7.08	1480
54+45	R	Special 5'x5'x4'	A7	4.59	893
*58+07.74	R	Special 5'x5'x4'	A7	4.48	881
			Totals:	30.83	6190

Total Type A7 Manhole Frame and Lid 5

* Junction box requires watertight joints in accordance with STORM SEWER notes.

** Frame and Lid to be placed in the northeast corner of the junction box.

TABLE OF JUNCTION BOXES AND QUANTITIES – PCN 05AV

Station	L/R	Size L'xW'xH'	*Frame and Lid (Type)	Class M6 Concrete (CuYd)	Reinforcing Steel (Lb)	** 48" Manhole Cone Section (Ft)
22+32.43	R	5'x5'x7.5'	A9	4.38	846	3
25+57.63	L	Special 5'x5'x4'	A7	4.18	845	
			Totals:	8.56	1691	3

Total Type A9 Manhole Frame and Lid 1

Total Type A7 Manhole Frame and Lid 1

* Frame and Lid to be placed in the southeast corner of the junction box.

** Eccentric

Plot Scale - 1:200
Plotted From - tqpr17192
File - ...\prj\bwn\039K\NotesSectionB.dgn

DROP INLETS

Where drop inlets are constructed within areas of curb and gutter, the Contractor shall construct weep holes of at least 3 inches in diameter in the drop inlet walls. The weep holes shall be constructed at the same elevation as the adjacent top of the earthen subgrade and shall be maintained clean and open at all times until the permanent surfacing is placed. The drop inlets shall be covered throughout construction operations as necessary with an Engineer approved cover to provide safe travel for motorists and to prevent materials from entering the storm sewer system. After the permanent surfacing has been placed, the Contractor shall seal the weep holes with grout and remove all debris from the drop inlet. All costs involved with the coverings, weep holes, and removing debris from the drop inlets shall be incidental to the contract unit prices for the components of the drop inlets.

The plan shown quantities of the drop inlet components such as Class M6 Concrete, Reinforcing Steel, Type B Frame and Grate Assembly, Type C Frame and Grate, Precast Drop Inlet Collar, and Precast Concrete Type S Drop Inlet Lid will be the basis of payment for these items.

If additions or reductions to the number of drop inlets are ordered by the Engineer, payment for the components required to construct the drop inlets will be made at the contract unit prices for the components of the drop inlets.

TABLE OF DROP INLETS AND QUANTITIES – PCN 05AV

Station	L / R	Drop Inlet Size	Drop Inlet Type	Class M6 Concrete (CuYd)	Reinf. Steel (Lb)	Precast Drop Inlet Collar (Each)	Frame and Grate/Lid Type
15+62.21	L	2'x3'	B	0.81	162	1	B
18+62.57	L	2'x3'	B	0.71	149	1	B
20+00	L	2'x3'	B	1.04	192	1	B
22+80.81	R	5.5'x5.5'	B	5.31	1473	1	B
22+80.90	L	2'x3'	B	0.77	174	1	B
24+77	R	3'x4'	C	1.40	222		C
25+97.50	R	3'x4'	C	1.25	202		C
Special 27+08.39	L	2'x3'	B	0.81	162	1	B
			Totals:	12.1	2736	6	8

Total Type B Frame and Grate Assembly	6
Total Type C Frame and Grate	2

TABLE OF DROP INLETS AND QUANTITIES – PCN 039K

Station	L / R	Drop Inlet Size	Drop Inlet Type	Class M6 Concrete (CuYd)	Reinf. Steel (Lb)	Precast Drop Inlet Collar (Each)	Frame and Grate/Lid Type
Special 24+23	L	4'x11'	S	4.33	1069		+S
Special 24+23	R	4'x11'	S	4.44	1094		+S
Special 25+34.93	R	4'x4'	B	1.47	277		B
Special 25+35.44	L	2'x3'	B	0.66	100		B
25+60.27	L	2'x3'	B	0.48	120	1	B
25+66.96	R	3'x4'	B	1.26	203	1	B
*25+97.14	L	2'x3'	B	0.49	117	1	B
25+98.01	R	3'x4'	B	1.30	208	1	B
26+23.35	R	4'x4'	B	1.54	213	1	B
*27+10	L	4'x11'	S	2.88	546		S
Special 27+10	R	4'x11'	S	4.72	1165		+S
29+22.40	L	2'x3'	B	0.72	150	1	B
29+27.31	R	2'x3'	B	0.72	151	1	B
29+60.46	L	2'x3'	B	0.72	157	1	B
*29+64.65	R	2'x3'	B	0.73	158	1	B
*29+89.52	L	4'x6'	S	3.09	569		S
Special 29+96	R	7'x11'	S	7.18	1735		+S
32+00	R	4'x4'	B	1.69	253	1	B
32+88.10	L	2'x3'	B	0.58	131	1	B
*33+27.44	L	2'x3'	B	0.53	132	1	B
33+53	R	5.5'x3'	B	1.70	332	1	B
*36+23	L	4'x11'	S	2.94	552		S
Special 36+27	R	7'x11'	S	7.05	1738		+S
*36+58.37	R	2'x3'	B	0.79	165	1	B
40+30	R	5.5'x3'	B	1.81	340	1	B
40+33.34	L	5.5'x3'	B	1.84	285	1	B
43+58	L	4'x11'	S	3.34	597		S
Special 43+58	R	7'x11'	S	7.45	1785		+S
44+30.06	R	5.5'x3'	B	1.64	299	1	B
44+69	R	3'x4'	B	1.65	259	1	B
*53+81.91	R	2'x3'	B	0.85	174	1	B
*54+45.18	R	2'x3'	B	0.75	154	1	B
*57+42.43	R	3'x4'	B	1.51	245	1	B
57+42.05	R	3'x4'	C	1.05	188		C
57+67.72	R	2'x3'	B	0.72	151	1	B
*58+07.74	R	2'x3'	B	0.80	161	1	B
60+93	R	3'x4'	B	1.64	271	1	B
62+32	L	4'x11'	S	3.70	639		S
*62+32	R	4'x11'	S	3.73	647		S
			Totals:	84.49	17530	24	

Total Type B Frame and Grate Assembly	26
Total Type C Frame and Grate	1
+Total Type S Manhole Frame & Lid	6
Total 4'x6' Precast Concrete Type S Drop Inlet Lid	1
Total 4'x11' Precast Concrete Type S Drop Inlet Lid	5

* Drop inlet requires watertight joints in accordance with the STORM SEWER notes.

8" PCC FILLET SECTIONS

Payment for "8" PCC Fillet Section" shall be based on plans quantity. If additions or reductions to the area of PCC fillet sections are ordered by the Engineer, payment will be made in accordance with the contract unit price per square yard for "8" PCC Fillet Section".

Plot Scale - 1:200
Plotted From - tnpr17192
File - ...\prj\brwn039K\NotesSectionB.dgn

TYPE 1 DETECTABLE WARNINGS

Detectable warnings shall be in compliance with the Americans with Disabilities Act regulations.

The detectable warnings shall be installed according to the manufacturer's installation instructions.

A concrete thickness equal to the adjacent concrete sidewalk thickness and 2 inches of granular cushion material shall be placed below the Type 1 Detectable Warnings. When concrete is placed below the detectable warnings then the concrete thickness shall be transitioned at the rate of 1" per foot to match the adjacent concrete sidewalk thickness.

The detectable warnings shall be a brick red color for application in concrete curb ramps. Cast iron plates may be a natural patina (weathered steel).

When Type 1 Detectable Warnings are specified, the Contractor shall furnish and install only one of the products listed in the Type 1 Detectable Warnings table.

Type 1 Detectable Warnings

Product	Manufacturer
Detectable Warning Plate Cast Iron Plate	Neenah Foundry Company Neenah, WI 800-558-5075 http://www.neenahfoundry.com/
Detectable Warning Plate Cast Iron Plate	Deeter Foundry Lincoln, NE 800-234-7466 http://www.deeter.com/
Detectable Warning Plate Cast Iron Plate(No Coating)	East Jordan Iron Works, Inc. 301 Spring Street East Jordan, MI 49727 800-626-4653 http://www.ejiw.com

MAILBOXES

The Contractor shall reset the existing mailboxes on new posts with the necessary support hardware for single or double mailbox assemblies. The local Postmaster will determine the recommended mounting height of the mailboxes throughout the project. The Contractor shall coordinate with the Engineer on the proper postal representative to contact.

If large mailboxes are located at double mailbox installations, a single post may need to be used for the large mailbox.

All costs for removing existing mailboxes, providing temporary mailboxes, and resetting mailboxes with new posts and necessary support hardware shall be incidental to the contract unit price per each for "Refurbish Single Mailbox" or "Refurbish Double Mailbox".

TABLE OF REFURBISH MAILBOX - PCN 039K

Station	L/R	Single (Each)	Double (Each)
26+30	R		1
28+82	R		2
32+90	L	1	
33+53	R		3
36+00	R	1	
55+80	L	1	
	Totals:	3	6

TABLE OF REMOVE CHAIN LINK FENCE – PCN 039K

Station	Station	Type	Quantity (Ft)
37+30-48' R	37+30-58' R	Remove Fence	10
49+64-56' L	49+84-56' L	Remove Fence	20
		Totals:	30

TABLE OF INSTALL CHAIN LINK FENCE – PCN 039K

Station	Station	Type	Quantity (Ft)
37+30-38' R	37+30-48' R	6' Chain Link with Top Rail	10
50+24-56' L	50+44-56' L	6' Special Chain Link (Barbed Wire Top)	20
		Totals:	30

TABLE OF REMOVE CHAIN LINK GATE FOR RESET – PCN 039K

Station	Type	Quantity (Each)
37+30-43' R	Remove Gate for Reset (Single Vehicular)	1
50+34-56' L	Remove Gate for Reset (Double Vehicular)	1
	Totals:	2

TABLE OF RESET CHAIN LINK GATE – PCN 039K

Station	Type	Quantity (Each)
37+30-53' R	Reset Gate (Single Vehicular)	1
49+74-56' L	Reset Gate (Double Vehicular)	1
	Totals:	2

Plot Scale - 1:200
Plotted From - tnpr17192
File - ...\prj\brwn039K\NotesSectionB.dgn

TABLE OF CONSTRUCTION STAKING FOR PROJECT P 0037(129)207 and NH 0012(198)308

(See Special Provision for Contractor Staking)

Roadway and Description	Begin Station	End Station	Number of Lanes	Length (Ft)	Grade Staking: Length (Mile)	Grade Staking: Lane Factor	Grade Staking: *Sets of Stakes	Grade Staking: **Grade Staking Quantity (Mile)	Miscellaneous Staking Quantity (Mile)	Slope Staking Quantity (Mile)
SD 37 (2 Lanes AC Pavement)	11+35	61+07	2	4972	0.942	1	1	0.942	0.942	0.942
SD 37 (Transition from 2 Lanes to 3 Lanes AC Pavement)	61+07	62+76	3	169	0.032	1.5	1	0.048	0.032	0.032
SD 37 (3 Lanes AC Pavement)	62+76	63+58	3	260	0.049	1.5	1	0.074	0.049	0.049
SD37 (3 Lanes AC Pavement)	64+19	64+66	3	47	0.009	1.5	1	0.014	0.009	0.009
SD37 (Transition from 3 Lanes to 2 Lanes AC Pavement)	64+66	66+18	3	152	0.029	1.5	1	0.044	0.029	0.029
							039K Total:	**1.122**	**1.061**	**1.061**
US12 (Shoulder Widening on North Side AC Pavement)	14+77	18+50	1	373	0.071	0.5	1	0.036	0.071	0.071
US12 (5 Lanes PCCP Pavement)	18+50	25+64	5	714	0.135	2.5	2	0.675	0.135	0.135
US12 (Shoulder Widening on North Side AC Pavement)	25+64	29+37	1	373	0.071	0.5	1	0.036	0.071	0.071
							05AV Total:	**0.747**	**0.277**	**0.277**
							Grand Total:	1.869	1.338	1.338

* 1 = Blue Top Stakes Only (Asphalt Concrete Pavement)
2 = Blue Top and Paving Hub Stakes (PCC Pavement)

** Grade Staking Quantity = (Length) x (Lane Factor) x (Sets of Stakes)

Plot Scale - 1:200
Plotted From - tmpr17192
File - ...\prj\brwn039K\NotesSectionB.dgn

PIPE QUANTITIES

STATE OF SOUTH DAKOTA	PROJECT	SHEET	TOTAL SHEETS
	P 0037(129)207 NH 0012(198)308	B13	B131

Plotting Date: 06/22/2016 Revised 6-16-2016(BT)

	Reinforced Concrete																																			PVC							
	Circular								Circular Safety		Circular Sloped		Circular Flared		Circular Bend							Arch									Arch Flared End			Arch Bend		Circular			Bend			Tee
	12" Cl. 2	12" Cl. 3	18" Cl. 2	18" Cl. 3	24" Cl. 2	24" Cl. 3	30" Cl. 2	36" Cl. 2	15" with Bars	18"		24"		24"	18" 5°	18" 20°	18" 25°	18" 65°	24" 5°	24" 25°	24" 45°	18" Cl. 2	18" Cl. 3	24" Cl. 3	30" Cl. 3	36" Cl. 2	36" Cl. 3	42" Cl. 3	48" Cl. 3	54" Cl. 2	18"	48"	54"		18" 60°	6" SDR35	8" SDR35	15" SDR35	6" 40°	15" 5°	15" 90°	15" X 15"
Station Offset (L/R)	Ft	Ft	Ft	Ft	Ft	Ft	Ft	Ft	Each	Each		Each		Each	Each	Each	Each	Each	Each	Each	Each	Ft	Ft	Ft	Ft	Ft	Ft	Ft	Ft	Ft	Each	Each	Each		Each	Ft	Ft	Ft	Each	Each	Each	Each
PCN 039K																																											
12+34-51' L			68							2																																	
14+57-51' L			64							2																																	
18+14-51' L			60							2																																	
18+55 (Skew 14° LHF)					68							2																															
19+58 (Skew 16° LHF)						86						2																															
24+23-24.67' L to 24.67' R																							46																				
24+23-24.67' R to 25+34.93-21.67' R																							106																				
25+35.44-21.67' L to 25+34.93-21.67' R				42																																							
25+35.44-21.67' L to 25+60.27-46.36' L		34																																									
25+34.93-21.67' R to 25+60.96-46.87' R																						34																					
*25+34.93-21.67' R to 26+23.35-21.67' R																								84																			
*25+60.27-46.36' L to 25+97.14-45.73' L	38																																										
25+61-94' L to 25+60.27-46.36' L	48																																										
25+98.01-47.89' R to 26+23.35-22' R																						34																					
26+23.35-21.67' R to 27+10-24.67' R																								80																			
27+10-24.13' L to 27+10-24.67' R																							46																				
*27+10-24.67' R to 29+96-26.17' R																									276																		
29+22.40-47.52' L to 29+60.46-46.63' L			36																																								
*29+27.31-46.49' R to 29+64.59-46.67' R			36																																								
29+60.46-46.63' L to 29+89.52-24.13' L			34																																								
*29+64.59-46.67' R to 29+96-24.13' R			34															1																									
*29+89.52-24.13' L to 29+96-26.17' R																							46																				
29+96-26.17' R to 32+00-21.67' R																											198																
*32+00-21.67' R to 33+53-21.67' R																										150																	
*32+88.10-46.45' L to 33+27.44-46.57' L			38																																								
33+32-50' R to 33+53-21.67' R			32													1																											
*33+27.44-46.47' L to 33+53-21.67' R				68													1																										
33+53-21.67' R to 36+27-25.63' R																												268															
36+23-24.13' L to 36+47-37' L																																				22			1				
*36+23-24.13' L to 36+27-25.63' R																							42																				
36+27-25.63' R to 36+58.37-46.51' R					36																1																						
*36+27-25.63' R to 38+50-28' R																												218															
38+50-28' R to 40+30-21.67' R																												180															
36+58.37-46.51' R to 50' R			2																																								
40+33.34-46.04' R to 40+30-21.67' R			66																																								
40+30-21.67' R to 42+00-28' R																												170															
42+00-28' R to 43+58-25.63' R																												158															
43+58-24.13' L to 25.63' R																						42																					
43+58-25.63' R to 44+31-22.75' R																												70															
44+31-22.75' R to 44+30.06-46.53' R								20																																			
44+30.06-46.53' R to 55' R							8																																				
44+31-22.75' R to 44+63.67-57.14' L																													84			1											
44+69-21.67' R to 57.13' L						80						1																															
44+69-21.67' R to 46+00-30.17' R																																						132		1			
44+69-21.67' R to 36' R									1																													14					
46+00-30.17' R to 38.85' R									1																													8				1	
46+00-30.17' R to 47+25-30.17' R																																						126					
47+25-30.17' R to 48+50-30.17' R																																						126					
Subtotal:	86	34	470	110	104	166	8	20	2	6		5				1	1	1			1	110	286	164	276	150	198	1064	84			1				22		406	1	1		1

*The entire length or a portion of the pipes with astericks require watertight joints according to the Storm Sewer Notes

Plot Scale - 1:200

Plotted From - trpr17192

File - ...\rdprj\brwn039K1Tablepipe.dgn

PIPE QUANTITIES

STATE OF SOUTH DAKOTA	PROJECT	SHEET	TOTAL SHEETS
	P 0037(129)207 NH 0012(198)308	B14	B131

Plotting Date: 06/22/2016 Revised 6-16-2016(BT)

	Reinforced Concrete																																		PVC						
	Circular								Circular Safety		Circular Sloped		Circular Flared		Circular Bend							Arch									Arch Flared End			Arch Bend		Circular			Bend			Tee
	12" Cl. 2	12" Cl. 3	18" Cl. 2	18" Cl. 3	24" Cl. 2	24" Cl. 3	30" Cl. 2	36" Cl. 2	15" with Bars	18"		24"		24"	18" 5°	18" 20°	18" 25°	18" 65°	24" 5°	24" 25°	24" 45°	18" Cl. 2	18" Cl. 3	24" Cl. 3	30" Cl. 3	36" Cl. 2	36" Cl. 3	42" Cl. 3	48" Cl. 3	54" Cl. 2	18"	48"	54"	18" 60°		6" SDR35	8" SDR35	15" SDR35	6" 40°	15" 5°	15" 90°	15" X 15"
Station Offset (L/R)	Ft	Ft	Ft	Ft	Ft	Ft	Ft	Ft	Each	Each		Each		Each	Each	Each	Each	Each	Each	Each	Each	Ft	Ft	Ft	Ft	Ft	Ft	Ft	Ft	Ft	Each	Each	Each		Each	Ft	Ft	Ft	Each	Each	Each	Each
47+25-30.17' R to 39' R									1																													8				1
48+50-30.17' R to 39.91' R									1																													10				1
48+50-30.17' R to 49+75-30.17' R																																						126				
49+75-30.17' R to 45.31' R									1																													14			1	
49+73.82-45' L			42							2																																
*53+81.91-49' R to 21.67' R			28							1																																
*53+81.91-21.67 R to 54+45-21.67' R			64																																							
*54+45-21.67' R to 54+45.18-46.37' R			24																																							
*54+45-21.67' R to 57+42.43-21.67' R			296																																							
*57+42.43-21.67' R to 57+42.05-46.36' R			22																																							
57+42.05-46.36' R to 57+67.72-50.95' R			24																																							
57+42.43-21.67' R to 58+07.74-21.67' R			64																																							
58+07.74-21.67' R to 58+07.74-46.78' R			24																																							
58+07.74-21.67' R to 60+93-21.67' R			286																																							
60+93-21.67' R to 43' R						20						1																														
60+93-21.67' R to 38' L					60							1																														
62+32-33.05' L to 24.13' R			54																																							
*62+32-24.13' R to 63+54.31-24.13' R			116																																							
*65+54-46' R			54							2																																
*66+31						62						2																														
Subtotal:			1098		60	82			3	5		4																										158			1	2
039K Total:	86	34	1568	110	164	248	8	20	5	11		9				1	1	1			1	110	286	164	276	150	198	1064	84			1				22		564	1	1	1	3
PCN 05AV																																										
15+62.21-25' L to 28' L			4																																							
18+62.57-37.66' L to 25' L				14											1																											
19+50 L																														40			2									
20+00-37.66' L to 25' L			14																																							
22+26.46-26.47' R to 22+32.43-28.25' R					4																																					
*22+32.43-28.25' R to 22+80.81-28.07' R					44																																					
22+80.81-28.07' R to 22+87-26.5' R					4																																					
22+80.81-23.7' R to 28.07' R					4																																					
22+80.90-47' L to 80' L						26								1																												
22+80.90-47' L to 25' L						22													1																							
23+50-65' L to 25+58-64' L																						214									1			1								
25+57.63-46.16' L to 62.34' L																						14									1											
25+57.63-46.16' L to 25+77-54' L					18															1																						
25+60-54' L																																										
24+77-38' R to 45.15' R																																					8					
25+97.50-38' R to 45.40' R																																					8					
27+08.39-32.83' L to 24' L			8																																							
05AV Total:			26	14	74	48								1	1				1	1		228								40	2		2		1			16				
GRAND TOTAL:	86	34	1594	124	238	296	8	20	5	11		9		1	1	1	1	1	1	1	1	338	286	164	276	150	198	1064	84	40	2	1	2		1		22	16	564	1	1	1	3

*The entire length or a portion of the pipes with astericks require watertight joints according to the Storm Sewer Notes

Plot Scale - 1:200

Plotted From - trpr17192

File - ...\rd\prj\brwn039K\Tablepipe.dgn

PAVEMENT, CURB AND GUTTER, AND SIDEWALK QUANTITIES

STATE OF SOUTH DAKOTA	PROJECT	SHEET	TOTAL SHEETS
	P 0037(129)207 NH 0012(198)308	B15	B131

Plotting Date: 06/22/2016 Revised 6-16-2016(BT)

		PCC Fillet Section	Concrete Curb and Gutter		Concrete Gutter				Type A		Concrete Sidewalk		Detectable Warning
		PCC	Type B		Type P		Valley		PCC Approach Pavement		PCC		Type 1
		8"	68	68.5	8	8.5	8"		6"	8"	4"	Reinforced 4"	
Station	to Station	SqYd	Ft	Ft	Ft	Ft	SqYd		SqYd	SqYd	SqFt	SqFt	SqFt
BNSF Railroad to 2nd Ave													
19+42 L	25+79 L										2040.5	66.0	
19+42 L	20+39.64, 20' L		98.0										
20+39.64, 20' L	20+79.64, 20' L				40.0				28.9				
20+79.64, 20' L	21+34.95, 20' L		55.3										
21+34.95, 20' L	21+50.95, 20' L				16.0				15.6				
21+50.95, 20' L	23+01.01, 20' L		150.0										10.0
23+01.01, 20' L	23+25.01, 20' L				28.0				44.4				
23+25.01, 20' L	23+81.43, 20'L		53.0										
23+81.43, 20' L	24+01.43, 20' L				20.0				35.6				
24+01.43, 20' L	25+79 L	25.6	141.5										20.0
							15.3						
19+29 R	25+79 R										2075.5	66.0	
19+29 R	21+12.55, 54' R		193.9										
21+60.25, 54' R	23+00.39, 20' R		213.3										10.0
23+00.39, 20' R	23+24.39, 20' R				24.0				40.0				
23+24.39, 20' R	23+85.70, 20' R		61.3										
23+85.70, 20' R	24+05.70, 20' R				20.0				35.6				
24+05.70, 20' R	25+79 R	25.8	162.9										20.0
							14.9						
2nd Ave to 3rd Ave													
25+79 L	29+41 L										1968.1	65.1	
25+79 L	27+64.81, 20' L	24.8	188.9										20.0
27+64.81, 20' L	27+94.81, 20' L				30.0				46.7				
27+94.81, 20' L	29+41 L	25.8	133.5										20.0
							15.4						
25+79 R	29+41 R										2019.2	66.9	
25+79 R	27+51.59, 20' R	26.1	175.7										20.0
27+51.59, 20' R	27+71.59, 20' R				20.0				35.6				
27+71.59, 20' R	28+21.20, 20' R		49.6										
28+21.20, 20' R	28+37.20, 20' R				16.0				31.1				
28+37.20, 20' R	29+41 R	25.9	112.1										20.0
							15.0						
3rd Ave to 4th Ave													
29+41 L	33+08 L										1960.4		20.0
29+41 L	30+00.12, 20' L	26.1	61.8										
30+00.12, 20' L	30+16.12, 20' L				16.0				31.1				
30+16.12, 20' L	31+31.42, 20' L		115.3										
31+31.42, 20' L	31+47.42, 20' L				16.0				31.1				
31+47.42, 20' L	32+35.72, 20' L		89.0										
32+35.72, 20' L	32+59.72, 20' L				24.0				40.0				
32+59.72, 20' L	33+08 L	25.8	49.6										20.0
							16.0						
	Subtotal:	205.9	2104.7		270.0		76.6		415.7		10063.7	264.0	180.0

Plot Scale - 1:200

Plotted From - trpr17192

File - U:\rdprj\brwn039K\TableCG.dgn

PAVEMENT, CURB AND GUTTER, AND SIDEWALK QUANTITIES

STATE OF SOUTH DAKOTA	PROJECT	SHEET	TOTAL SHEETS
	P 0037(129)207 NH 0012(198)308	B16	B131

Plotting Date: 07/28/2016 Revised 7/28/16 NJF

		PCC Fillet Section	Concrete Curb and Gutter		Concrete Gutter			Type A		Concrete Sidewalk		Detectable Warning
		PCC	Type B		Type P		Valley	PCC Approach Pavement		PCC		Type 1
		8"	68	68.5	8	8.5	8"	6"	8"	4"	Reinforced 4"	
Station	to Station	SqYd	Ft	Ft	Ft	Ft	SqYd	SqYd	SqYd	SqFt	SqFt	SqFt
3rd Ave to 4th Ave												
29+41 R	33+08 R									1984.6	72.6	
29+41 R	31+07.42, 20' R	26.1	165.0									20.0
31+07.42, 20' R	31+47.42, 20' R				40.0			57.8				
31+47.42, 20' R	33+08 R	24.9	166.8									20.0
							14.4					
4th Ave to 5th Ave												
33+08 L	36+76 L									1932.0	60.0	
33+08 L	34+15.47, 20' L	26.0	110.0									20.0
34+15.47, 20' L	34+31.47, 20' L				16.0			31.1				
34+31.47, 20' L	35+16.42, 20' L		85.0									
35+16.42, 20' L	35+32.42, 20' L				16.0			31.1				
35+32.42, 20' L	36+76 L	25.9	144.3									20.0
							15.3					
33+08 R	36+76 R									1934.7	60.0	
33+08 R	34+84.32, 20' R	26.3	138.9									20.0
34+84.32, 20' R	35+00.32, 20' R				16.0			31.1				
35+00.32, 20' R	36+76 R	26.0	140.7									20.0
							15.1					
5th Ave to 6th Ave												
36+76 L	40+53 L									1757.8		
36+76 L	38+40.97, 20' L	26.0	170.4									20.0
38+40.97, 20' L	38+68.97, 20' L				28.0			44.4				
38+68.97, 20' L	40+53 L	25.0	185.9									10.0
							15.3					
5th Ave to 7th Ave												
36+76 R	44+10 R									3701.6		
36+95.26, 82' R	36+94.40, 45' R		12.1									
36+94.40, 45' R	36+94.35, 54' R				16.0			31.1				
36+94.35, 54' R	44+10 R	52.1	662.2									40.0
							16.2					
6th Ave to 7th Ave												
40+53 L	44+10 L	50.2	362.1									
7th Ave to 9th Ave												
44+10 R	50+71 R	26.0	664.0							3017.0	60.0	20.0
							15.6					
9th Ave to 10th Ave												
50+71 R	54+26 R	51.1	362.0							1569.0		20.0
							15.7					
10th Ave to 11th Ave												
54+26 R	57+86 R	51.1	295.6							1584.0		20.0
							16.1					
	Subtotal:	436.7	3665.0		132.0		123.7	226.6		17480.7	252.6	250.0

Plot Scale - 1:200

Plotted From - trpr17192

File - U:\rdprj\brwn039K\TableCG.dgn

PAVEMENT, CURB AND GUTTER, AND SIDEWALK QUANTITIES

STATE OF SOUTH DAKOTA	PROJECT	SHEET	TOTAL SHEETS
	P 0037(129)207 NH 0012(198)308	B17	B131

Plotting Date: 07/28/2016 Revised 7/28/16 NJF

		PCC Fillet Section	Concrete Curb and Gutter		Concrete Gutter			Type A		Concrete Sidewalk		Detectable Warning
		PCC	Type B		Type P		Valley	PCC Approach Pavement		PCC		Type 1
Station	to Station	8"	68	68.5	8	8.5	8"	6"	8"	4"	Reinforced 4"	
		SqYd	Ft	Ft	Ft	Ft	SqYd	SqYd	SqYd	SqFt	SqFt	SqFt
11th Ave to 12th Ave												
60+82 L	62+76.43, 32' L		32.8		40.0			28.9				
57+88 R	61+57 R									1593.7		
58+06.83, 82' R	58+06.20, 52' R	26.8	10.7									
58+06.20, 52' R	58+06.19, 51' R				20.0			35.6				
58+06.19, 51' R	61+57 R	26.4	290.0									20.0
							22.2					
12th Ave to US 12												
61+57, 24' L	62+76, 32' L		121.0									
61+57 R	62+76 R											
61+57 R	61+87.68, 20' R	15.9	10.7							56.0		10.0
61+87.68, 20' R	62+19.68, 20' R				40.0				57.8			
62+19.68, 20' R	62+76 R		104.6							189.7	72.3	
Subtotal:		69.1	569.8		100.0		22.2	64.5	57.8	1839.4	72.3	30.0
(039K) Total:		711.7	6339.5		502.0		222.5	706.8	57.8	29383.8	588.9	460.0
PCN 05AV												
West US12 to SD37 Intersection												
14+77 L	16+69, 29.68' L			192.1								
16+69, 29.68' L	17+01, 30.8' L					32.0		24.4				
17+01, 30.8' L	21+86, 130' L			542.0						300.9		20.0
18+50, 25' R	20+33.91, 25' R			183.7								
20+33.91, 25' R	20+73.91, 25' R					40.0		28.9				
20+73.91, 25' R	21+77.45, 107' R			152.8						298.0		20.0
SD37 Intersection to East US12												
22+45 L	29+37 L									1492.1		
22+43.84, 131' L	24+97.30, 36' L			318.9								20.0
24+97.30, 36' L	25+29.30, 36 'L					32.0		48.8				
25+29.30, 36' L	25+80.05, 35' L			50.7								
25+80.05, 35' L	26+20.03, 34' L					40.0		28.9				
26+20.03, 34' L	27+30.24, 30' L			110.3								
27+30.24, 30' L	27+70.22, 29' L					40.0		28.9				
27+70.22, 29' L	28+68.64, 26' L			98.5								
28+68.64, 26' L	29+08.61, 24' L					40.0		28.9				
29+08.61, 24' L	29+37, 24' L			28.2								
22+29 R	29+37 R									2354.5		20.0
22+29.25, 88' R	25+22.76, 25' R		61.6	346.7								
25+22.76, 25' R	25+54.76, 25' R					32.0		48.8				
25+54.76, 25' R	25+64, 25' R			9.0								
(05AV) Total:			61.6	2032.9		256.0		237.6		4445.5		80.0

Plot Scale - 1:200

Plotted From - trpr17192

File - U:\rdprj\brwn039K\TableCG.dgn

TYPICAL GRADING SECTION

STATE OF SOUTH DAKOTA	PROJECT	SHEET	TOTAL SHEETS
	P 0037(129)207 NH 0012(198)308	B18	B131

Plotting Date: 06/22/2016

19+10 to 19+30
Railroad Tracks
* 8 to 7' Transition 18+70 to 19+00
7' from 19+00 to 19+30

SD 37
11+35 to 19+10

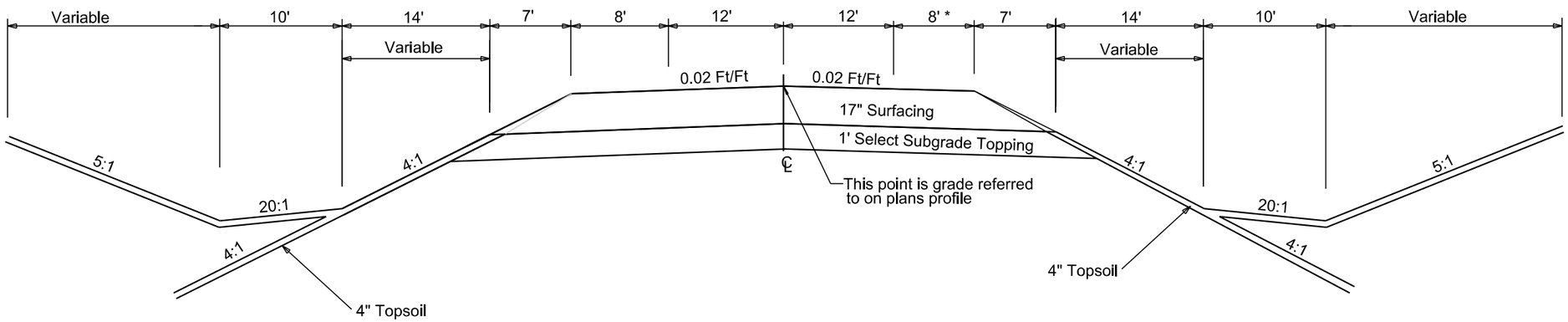

SD 37
19+30 to 44+10

*** 40+50 to 44+10
No Sidewalk

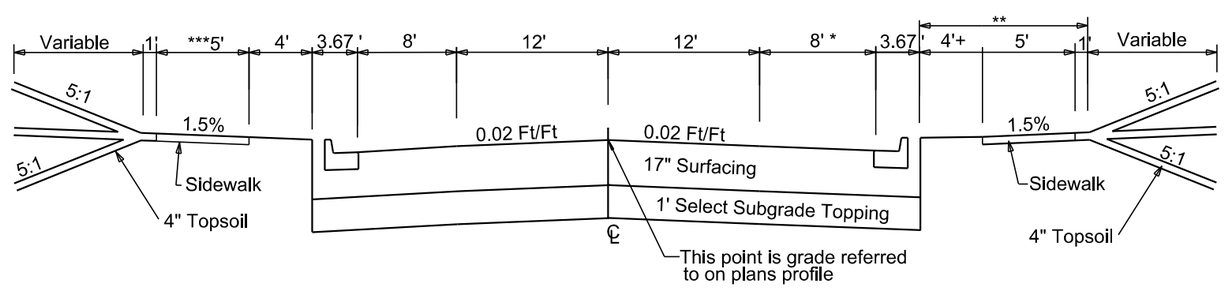

Sidewalk Begins at 21+95 L & R
* 7' to 8' Transition 19+30 to 19+60

** 1' from 19+30 to 21+12

+ Steepened Boulevard
from 23+45 to 23+70

Plot Scale - 1:200
Plotted From - tmpr17192
File - U:\rdep\brwn039k\typ.dgn

TYPICAL GRADING SECTION

STATE OF SOUTH DAKOTA	PROJECT	SHEET	TOTAL SHEETS
	P 0037(129)207 NH 0012(198)308	B19	B131

Plotting Date: 06/22/2016

SD 37
44+10 to 50+65

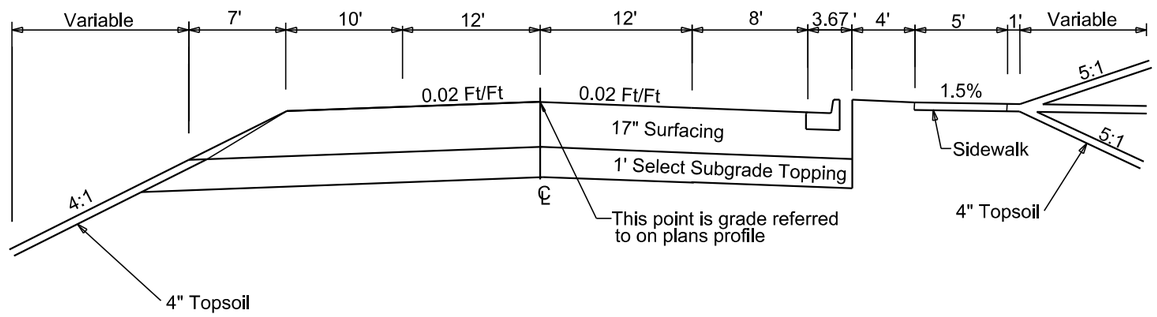

SD 37
50+65 to 60+85

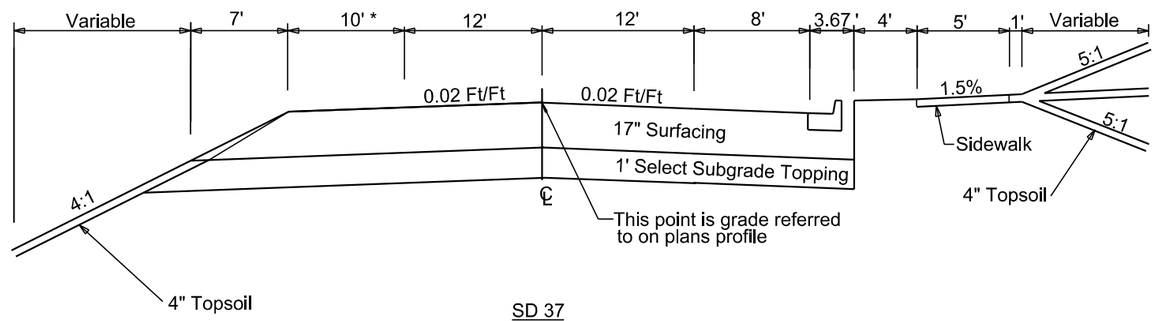

* 10' to 8' Transition from 55+86 to 56+33
* 8' from 56+33 to 60+85

SD 37
60+85 to 62+76.43

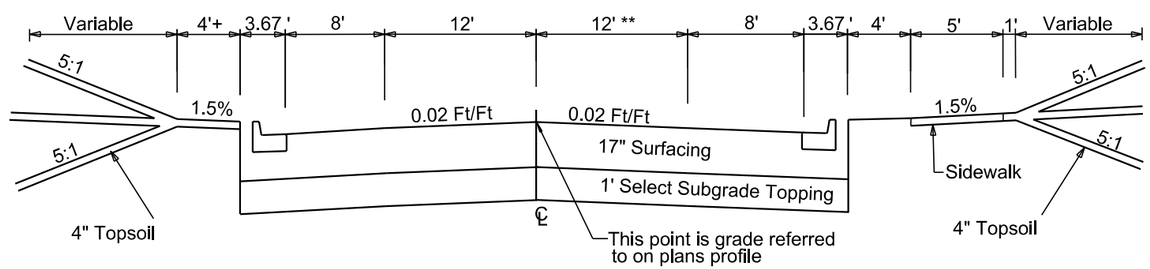

+0' from 60+85 to 61+07

** 12' to 24' Transition from 61+07 to 62+76.43

Plot Scale - 1:200

Plotted From - trpr17192

File - U:\rd\prj\brwn039K\typ.dgn

TYPICAL GRADING SECTION

STATE OF SOUTH DAKOTA	PROJECT	SHEET	TOTAL SHEETS
	P 0037(129)207 NH 0012(198)308	B20	B131

Plotting Date: 06/22/2016

SD 37
62+76.43 to 63+57.72

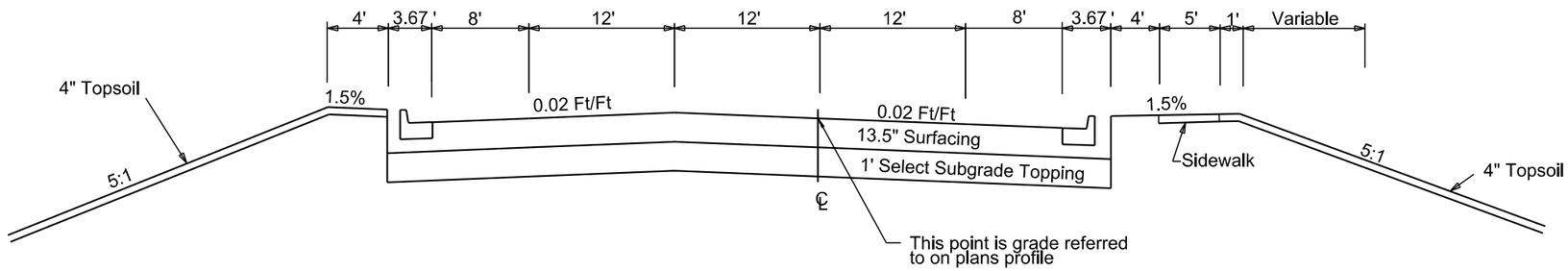

SD 37
64+19.02 to 65+13

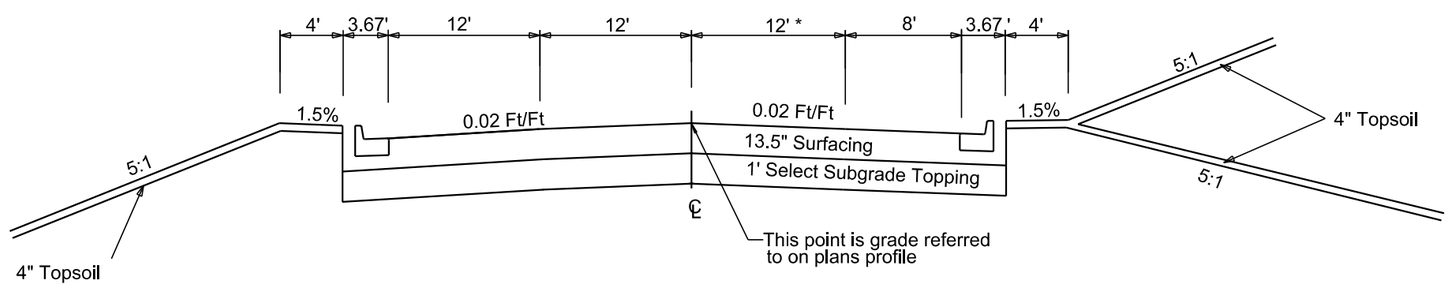

* 28' from 64+19.02 to 64+66
* 28' to 12' Transition from 64+66 to 66+18

Plot Scale - 1:200
Plotted From - tnpr17192
File - U:\rdlprj\brwn039K\typ.dgn

TYPICAL GRADING SECTION

STATE OF SOUTH DAKOTA	PROJECT	SHEET	TOTAL SHEETS
	P 0037(129)207 NH 0012(198)308	B21	B131

Plotting Date: 06/22/2016

* 12' to 8' Transition from 65+13 to 66+18

SD 37
65+13 to 66+50

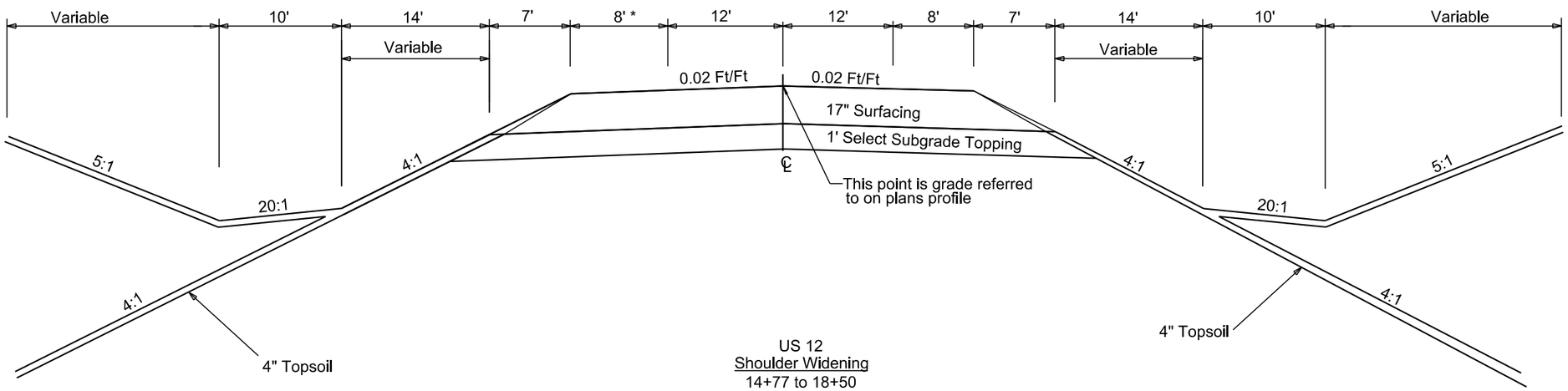

US 12
Shoulder Widening
14+77 to 18+50
25+64 to 29+37

* Transition from 0' to 14' : 14+77 to 18+50
Transition from 14' to 0' : 25+64 to 29+37

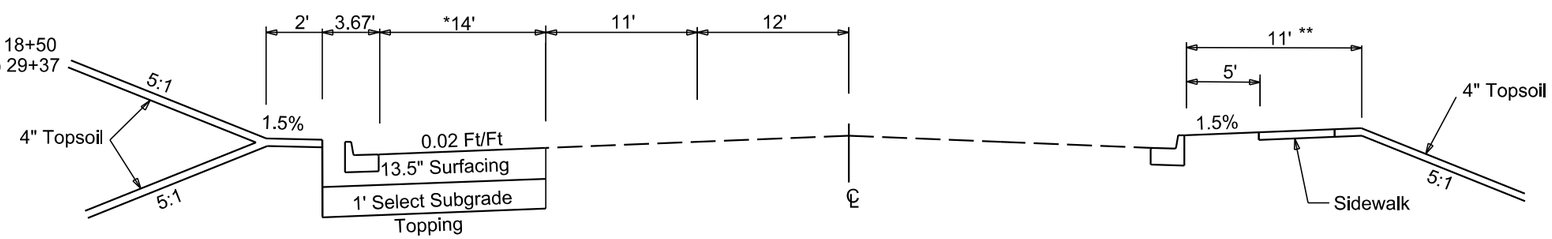

** Construct Boulevard & Sidewalk
From 25+58 to 26+50 R

US 12
18+50 to 22+10

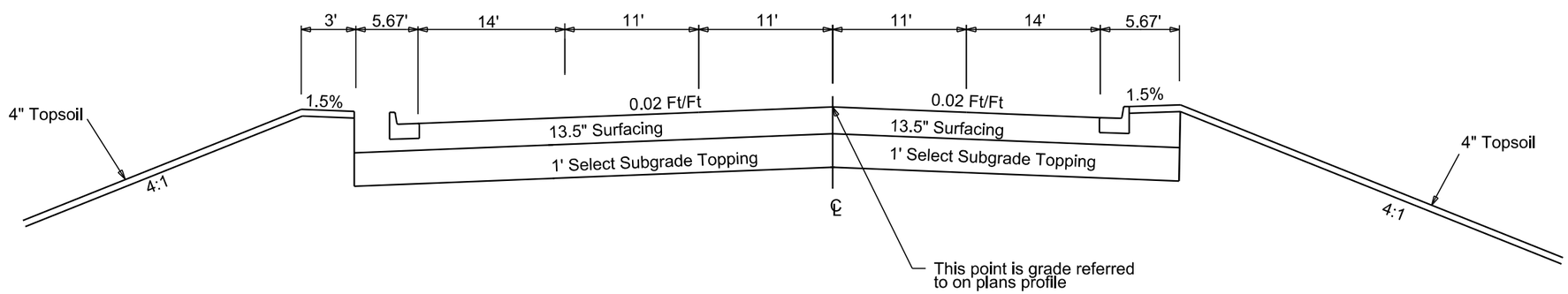

Plot Scale - 1:200
Plotted From - trpr17192
File - U:\rdprj\brwn039K\typ.dgn

TYPICAL GRADING SECTION

STATE OF SOUTH DAKOTA	PROJECT	SHEET	TOTAL SHEETS
	P 0037(129)207 NH 0012(198)308	B22	B131

Plotting Date: 06/22/2016

US 12
22+10 to 25+64

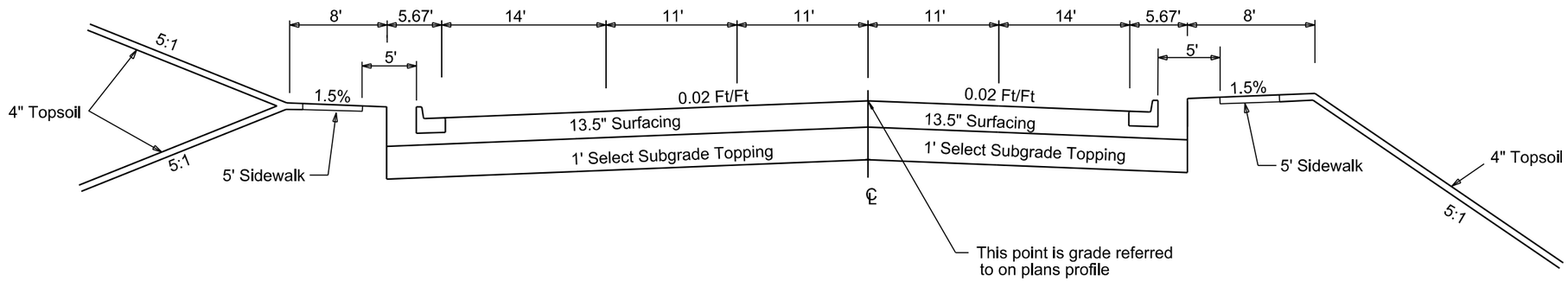

Plot Scale - 1:200

Plotted From - tmr17192

File - U:\rdprj\brwn039K\typ.dgn

HORIZONTAL ALIGNMENT DATA

STATE OF SOUTH DAKOTA	PROJECT	SHEET	TOTAL SHEETS
	P 0037(129)207 NH 0012(198)308	B23	B131

Plotting Date: 06/22/2016

SD37

Type	Station			Northing	Easting
POB	0+00.00			591529.003	2455298.422
		TL= 1007.93	N 0°29'44" W		
PC	10+07.93			592536.898	2455289.703
PI	10+88.67	R = 2729.99	Delta = 3°23'17" L	592617.637	2455289.005
PT	11+69.37			592698.193	2455283.536
		TL= 653.57	N 3°53'02" W		
PC	18+22.94			593350.263	2455239.267
PI	19+21.74	R = 5000.00	Delta = 2°15'50" R	593448.835	2455232.575
PT	20+20.51			593547.595	2455229.783
		TL= 545.21	N 1°37'11" W		
PI	25+65.72			594092.585	2455214.372
		TL= 1101.62	N 1°13'10" W		
PI	36+67.34			595193.956	2455190.925
		TL= 2123.92	N 1°08'30" W		
PI	57+91.26			597317.458	2455148.609
		TL= 273.63	N 0°34'33" W		
PC	60+64.90			597591.078	2455145.859
PI	61+20.85	R = 5000.00	Delta = 1°16'56" L	597647.028	2455145.297
PT	61+76.80			597702.951	2455143.482
		TL= 205.26	N 1°51'30" W		
PI	63+82.06			597908.107	2455136.826
		TL= 592.15	N 1°31'47" W		
POE	69+74.22			598500.049	2455121.018

US 12

Type	Station			Northing	Easting
POB	10+00.00			597884.816	2453929.196
		TL= 1207.84	N 88°51'13" E		
PI	22+07.84			597908.983	2455136.798
		TL= 1000.35	N 89°02'55" E		
POE	32+08.20			597925.591	2456137.014

The coordinates shown on this sheet are based on the South Dakota State Plane Coordinate System. North Zone (NAD 83/07; epoch 2002.00 Geoid 2009; SF = 0.9999047161

Plot Scale - 1:200
Plotted From - tnpr17192
File - ...\rdt\prj\brwn039K\Datahoriz.dgn

CONTROL DATA

STATE OF SOUTH DAKOTA	PROJECT	SHEET	TOTAL SHEETS
	P 0037(129)207 NH 0012(198)308	B24	B131

Plotting Date: 06/22/2016

HORIZONTAL AND VERTICAL CONTROL POINTS

POINT	STATION & OFFSET	DESCRIPTION	NORTHING	EASTING	ELEVATION
1011	65+58-2571'L	Reference Mark	598014.973	2452561.706	1304.690
7000	66+34-29965'L	Reference Mark	597360.183	2425176.246	1302.991
5012	64+39-71'L	Reference Mark	597962.739	2455064.316	1302.375
5013	69+53-54'L	Pk nail in south, middle of 4th approach to Ford dealer on Hwy 37	598477.010	2455067.112	1303.614
5014	57+70-13'R	Gin spike in cl of Hwy 37 & south edge of 11th Ave	597296.418	2455149.158	1305.450
5015	50+72-1'R	Gin spike in cl of Hwy 37 & cl of 9th Ave E	596598.316	2455163.864	1307.703
5016	40+49-1'R	Gin spike in cl of Hwy 37 & cl of 6th Ave	595575.328	2455183.923	1304.688
5017	33+13-42'R	Gin spike in cl of Hwy 37 & cl of 4th Ave	594839.587	2455198.890	1304.937
5018	21+58-1'L	Gin spike in cl of Hwy 37 & cl of Railroad Ave	593684.910	2455225.353	1306.434
5019	10+92-38'L	Gin spike in cl of Hwy 37 & cl of Aspen Ave	592620.453	2455287.321	1307.565
5020	-3+12-69'R	#8 rebar center punched in SE corner of 1st approach S of Aspen Ave on E side of Hwy 37	591216.753	2455370.535	1301.421

The coordinates shown on this sheet are based on the South Dakota State Plane Coordinate System.
North Zone (NAD 83/07) epoch 2002.00 Geoid 09 SF = 0.9999047161
The elevations shown on this sheet are based on NAVD 88.

Plot Scale - 1:200
Plotted From - tnpr17192
File - ...\prj\brwn039K\Datacontrol.dgn

SUBSURFACE UTILITY LOCATIONS

STATE OF SOUTH DAKOTA	PROJECT	SHEET	TOTAL SHEETS
	P 0037(129)207 NH 0012(198)308	B25	B131

Plotting Date: 06/22/2016

Subsurface utility explorations were done at the following locations. The information below states what was located in the specified areas. This table is provided to aid the Contractor during construction and does not substitute or replace the requirements of SD One Call. All information is approximate and the Contractor shall verify all utility locations before construction in those areas as mandated in SDCL 49-7A.

Test Hole	Station	Offset	Finding	Existing Ground Elev.	Utility Depth (Ft.)	Utility Elevation	Northing	Easting
3-1	11+19.60	59.58' R	Unsuccessful findings	1304.99			592651.466	2455345.956
6-5	11+24.23	44.70' R	2" PVC	1304.90	5.35	1299.55	592655.426	2455330.865
4-1	11+35.92	55.86' R	Fiber	1303.49	4.42	1299.07	592667.907	2455341.366
5-1	11+68.89	46.43' R	Fiber Optic (1" PVC)	1302.92	2.10	1300.82	592700.851	2455329.896
4-3	12+59.17	38.82' L	Fiber	1303.27	3.75	1299.52	592785.156	2455238.720
4-4	14+36.02	40.77' L	Fiber	1303.18	3.67	1299.51	592961.473	2455224.798
4-5	17+53.08	36.95' L	Fiber	1303.11	3.33	1299.78	593278.059	2455207.137
4-6	17+53.08	50.80' R	Fiber	1302.33	3.50	1298.83	593284.003	2455294.686
4-7	17+53.11	54.58' R	Fiber	1302.62	3.67	1298.95	593284.290	2455298.450
6-1	18+62.71	32.34' R	4" PVC - Unsuccessful	1305.03			593391.884	2455269.014
4-18	20+13.07	29.67' L	Fiber	1305.48	4.67	1300.81	593539.279	2455200.358
6-2	25+37.14	26.84' R	4" PVC	1303.94	3.75	1300.19	594064.775	2455242.099
5-3	25+44.10	31.79' R	Fiber Optic (1" PVC)	1303.64	4.40	1299.24	594071.874	2455246.856
3-2	26+00.11	33.75' R	6" PVC	1303.78	5.35	1298.43	594127.683	2455247.379
6-3	26+04.58	27.45' R	2" PVC	1303.47	4.45	1299.02	594132.024	2455240.984
5-5	26+88.82	29.55' R	Fiber Optic (½" Direct Bury Cable)	1303.79	3.35	1300.44	594216.290	2455241.292
2-1	26+89.24	30.60' L	Sanitary Sewer	1303.65	9.45	1294.20	594215.424	2455181.155
3-3	29+68.23	30.63' R	6" PVC	1304.06	5.85	1298.21	594495.653	2455236.435
3-4	29+88.00	24.85' L	6" PVC	1303.83	6.25	1297.58	594514.240	2455180.540
5-6	30+08.91	29.43' R	Fiber Optic (½" Direct Bury Cable)	1304.20	4.90	1299.30	594536.299	2455234.365
4-9	32+88.84	32.11' R	Fiber	1304.02	8.00	1296.02	594816.223	2455231.095
4-19	32+89.28	35.71' L	Fiber	1304.02	6.42	1297.60	594815.218	2455163.283
4-8	32+90.74	36.39' L	Fiber	1304.12	4.42	1299.70	594816.662	2455162.567
3-5	33+33.75	31.74' R	6" PVC	1304.01	6.05	1297.96	594861.115	2455229.766
5-7	33+69.49	28.17' R	Fiber Optic (½" Direct Bury Cable)	1304.23	4.80	1299.43	594896.773	2455225.440
2-2	34+87.85	26.30' L	8" PVC Sanitary Sewer	1304.15			595013.951	2455168.464
3-6	36+36.25	24.12' L	6" PVC	1303.89	6.33	1297.56	595162.358	2455167.487
5-8	36+38.34	29.92' R	Fiber Optic (½" Direct Bury Cable)	1304.08	5.30	1298.78	595165+.594	2455221.472

Test Hole Owner Identification Number Codes (First number denotes utility ownership)

1 = City of Groton (Electric), 2 = City of Groton (Sanitary Sewer), 3 = City of Groton (Water), 4 = James Valley Telephone. 5 = MidContinent Communications, 6 =NorthWestern Energy (Gas), 7 = Web Rural Water

The coordinates shown on this sheet are based on the South Dakota State Plane Coordinate System. North Zone (NAD 83/07); epoch 2002.00; Geoid 2009; SF = 0.9999047161
The elevations shown on this sheet are based on NAVD 88.

Plot Scale - 1:200
Plotted From - tmpr17192
File - ...\brwn039K\DataSubSurface.dgn

SUBSURFACE UTILITY LOCATIONS

STATE OF SOUTH DAKOTA	PROJECT	SHEET	TOTAL SHEETS
	P 0037(129)207 NH 0012(198)308	B26	B131

Plotting Date: 06/22/2016

Subsurface utility explorations were done at the following locations. The information below states what was located in the specified areas. This table is provided to aid the Contractor during construction and does not substitute or replace the requirements of SD One Call. All information is approximate and the Contractor shall verify all utility locations before construction in those areas as mandated in SDCL 49-7A.

Test Hole	Station	Offset	Finding	Existing Ground Elev.	Utility Depth (Ft.)	Utility Elevation	Northing	Easting
4-10	36+51.14	30.73' L	Fiber	1303.67	9.57	1294.10	595177.108	2455160.562
3-7	36+52.26	29.48' R	6" PVC	1303.95	5.75	1298.20	595179.504	2455220.733
5-9	40+12.42	27.93' R	Fiber Optic (1 ½" PVC)	1304.18	4.35	1299.83	595539.523	2455211.971
4-20	43+68.22	28.76' L	Fiber	1303.66	5.20	1298.46	595894.127	2455148.206
5-10	43+69.57	28.50' R	Fiber Optic (1 ½" PVC)	1303.82	4.30	1299.52	595896.613	2455205.427
5-11	44+67.41	34.76' R	Fiber Optic (½" Direct Bury Cable)	1302.66	3.30	1299.36	595994.562	2455209.738
4-21	44+67.67	36.17' L	Fiber	1301.31	5.50	1295.81	595993.409	2455138.813
5-23	50+41.55	42.66' R	Fiber Optic (½" Direct Bury Cable)	1306.11	5.20	1300.91	596568.741	2455206.196
4-13	50+47.46	43.32' L	Fiber	1304.75	3.83	1300.92	596572.942	2455120.119
4-12	50+47.61	30.31' L	Fiber	1305.90	2.00	1303.90	596573.349	2455133.119
5-22	51+00.04	43.1' R	Fiber Optic (½" Direct Bury Cable)	1304.19	3.00	1301.19	586627.232	2455205.485
3-13	52+44.32	25.63' R	6" PVC	1305.87	7.90	1297.97	596771.134	2455185.132
3-12	53+91.40	26.35' R	6" PVC	1305.30	7.55	1297.75	596918.202	2455182.918
5-21	53+96.13	43.34' R	Fiber Optic (Inconcl)	1302.71	6.00	1296.71	296923.267	2455199.809
5-12	54+47.25	42.55" R	Fiber	1304.09	3.10	1300.99	596974.364	2455198.001
4-15	54+49.44	29.41' L	Fiber	1304.16	2.33	1301.83	596975.115	2455126.014
4-14	54+50.72	35.94' L	Fiber	1303.30	4.00	1299.30	596976.265	2455119.459
3-8	54+57.91	26.18' R	6" PVC	1304.68	6.25	1298.43	596984.692	2455181.422
3-11	56+14.56	26.62' R	6" PVC	1303.77	8.05	1295.72	597141.320	2455178.743
6-4	56+40.62	25.61' R	2" PVC	1303.88	2.45	1301.43	597167.355	2455177.216
4-16	56+44.33	34.21' L	Fiber	1301.43	3.75	1297.68	597169.869	2455117.329
6-7	56+89.32	35.54' R	Natural Gas (2" PVC)	1302.70	2.10	1300.60	597216.246	2455186.176
5-13	57+50.93	42.62' R	Fiber Optic (½" Direct Bury Cable)	1302.46	2.00	1300.46	597277.978	2455192.022
6-8	57+52.61	45.63' R	Natural Gas (2" PVC)	1302.72	3.85	1298.87	597279.725	2455195.004
5-20	57+53.58	34.93' R	Fiber Optic (½" Direct Bury Cable)	1302.12	5.90	1296.22	597280.474	2455184.288
3-9	57+54.29	26.28' R	6" PVC	1303.96	6.40	1297.56	597281.015	2455175.623

Test Hole Owner Identification Number Codes (First number denotes utility ownership)

1 = City of Groton (Electric), 2 = City of Groton (Sanitary Sewer), 3 = City of Groton (Water), 4 = James Valley Telephone. 5 = MidContinent Communications, 6 =NorthWestern Energy (Gas), 7 = Web Rural Water

The coordinates shown on this sheet are based on the South Dakota State Plane Coordinate System. North Zone (NAD 83/07); epoch 2002.00; Geoid 2009; SF = 0.9999047161
The elevations shown on this sheet are based on NAVD 88.

Plot Scale - 1:200
Plotted From - tmpr17192
File - ...\brwn039K\DataSubSurface.dgn

SUBSURFACE UTILITY LOCATIONS

STATE OF SOUTH DAKOTA	PROJECT	SHEET	TOTAL SHEETS
	P 0037(129)207 NH 0012(198)308	B27	B131

Plotting Date: 06/22/2016

Subsurface utility explorations were done at the following locations. The information below states what was located in the specified areas. This table is provided to aid the Contractor during construction and does not substitute or replace the requirements of SD One Call. All information is approximate and the Contractor shall verify all utility locations before construction in those areas as mandated in SDCL 49-7A.

Test Hole	Station	Offset	Finding	Existing Ground Elev.	Utility Depth (Ft.)	Utility Elevation	Northing	Easting
5-14	58+09.36	44.48' R	Fiber Optic (½" Direct Bury Cable)	1303.15	3.80	1299.35	597336.010	2455192.951
5-19	58+09.91	39.76' R	2 – Fiber Optic (2' + 1 ½" PE)	1302.58	4.10	1298.48	597336.514	2455188.227
4-17	58+09.95	30.45' R	Fiber	1303.91	5.00	1298.91	597336.451	2455178.923
5-15	60+92.44	40.84' R	Fiber Optic	1301.13	3.90	1297.23	597619.256	2455186.349
5-18	60+98.36	28.78' R	Fiber Optic (PE),Probe	1300.10	5.60	1294.50	597625.020	2455174.192
3-10	63+20.62	33.75' R	6" PVC	1303.34	5.75	1297.59	597847.791	2455172.547
3-14	64+69.94	50.05' R	Valve, Nut	1299.80	4.90	1294.90	597997.658	2455188.823
6-9	66+01.08	44.58' L	2" PE	1301.90	3.45	1298.45	598125.377	2455089.631
6-10	23+41.80	51.70' L	2" PE	1301.51	2.10	1299.41	597962.895	2455269.881
6-11	24+68.41	38.64 ' L	2" PE	1303.83	1.70	1302.13	597951.925	2455396.684
5-17	25+56.61	37.88' L	Fiber Optic (½" Direct Bury Cable), Dry to 8.0	1304.84	3.10	1301.74	597952.623	2455484.889

Test Hole Owner Identification Number Codes (First number denotes utility ownership)

1 = City of Groton (Electric), 2 = City of Groton (Sanitary Sewer), 3 = City of Groton (Water), 4 = James Valley Telephone. 5 = MidContinent Communications, 6 =NorthWestern Energy (Gas), 7 = Web Rural Water

The coordinates shown on this sheet are based on the South Dakota State Plane Coordinate System. North Zone (NAD 83/07); epoch 2002.00; Geoid 2009; SF = 0.9999047161
The elevations shown on this sheet are based on NAVD 88.

Plot Scale - 1:200
Plotted From - tmpr17192
File - ...\brwn0399KUDataSubSurface.dgn

LEGEND

STATE OF SOUTH DAKOTA	PROJECT	SHEET	TOTAL SHEETS
	P 0037(129)207 NH 0012(198)308	B28	B131

Plotting Date: 06/22/2016

- Anchor
- Antenna
- Approach
- Assumed Corner
- Azimuth Marker
- BBQ Grill/ Fireplace
- Bearing Tree
- Bench Mark
- Box Culvert
- Bridge
- Brush
- Buildings
- Bulk Tank
- Cattle Guard
- Cemetery
- Centerline
- Cistern
- Clothes Line
- Commercial Sign Double Face
- Commercial Sign One Post
- Commercial Sign Overhead
- Commercial Sign Two Post
- Concrete Symbol
- Creek Edge
- Curb/Gutter
- Curb
- Dam Grade/Dike/Levee
- Deck Edge
- Ditch Block
- Doorway Threshold
- Drainage Profile
- Drop Inlet
- Edge Of Asphalt
- Edge Of Concrete
- Edge Of Gravel
- Edge Of Other
- Edge Of Shoulder
- Elec. Trans./Power Jct. Box
- Environmental Sensitive Site — ESS —
- Fence Barbwire
- Fence Chainlink
- Fence Electric
- Fence Misc.
- Fence Rock
- Fence Snow
- Fence Wood
- Fence Woven
- Fire Hydrant
- Flag Pole
- Flower Bed
- Gas Valve Or Meter
- Gas Pump Island
- Grain Bin
- Guardrail
- Guide Sign One Post
- Guide Sign Two Post
- Gutter
- Guy Pole
- Haystack

- Hedge
- Highway R.O.W. Marker
- Interstate Close Gate
- Iron Pin
- Irrigation Ditch
- Lake Edge
- Lawn Sprinkler
- Mailbox
- Manhole Electric
- Manhole Gas
- Manhole Misc
- Manhole Sanitary Sewer
- Manhole Storm Sewer
- Manhole Telephone
- Manhole Water
- Merry-Go-Round
- Microwave Radio Tower
- Misc. Line
- Misc. Property Corner
- Misc. Post
- Overhang Or Encroachment
- Overhead Utility Line — OH —
- Parking Meter
- Pipe With End Section
- Pipe With Headwall
- Pipe Without End Section
- Playground Slide
- Playground Swing
- Power And Light Pole
- Power And Telephone Pole
- Power Meter
- Power Pole
- Power Pole And Transformer
- Power Tower Structure
- Propane Tank
- Property Pipe
- Property Pipe With Cap
- Property Stone
- Public Telephone
- Railroad Crossing Signal
- Railroad Milepost Marker
- Railroad Profile
- Railroad R.O.W. Marker
- Railroad Signs
- Railroad Switch
- Railroad Track
- Railroad Trestle
- Rebar
- Rebar With Cap
- Reference Mark
- Regulatory Sign One Post
- Regulatory Sign Two Post
- Retaining Wall
- Riprap
- River Edge
- Rock And Wire Baskets
- Rockpiles
- Satellite Dish
- Septic Tank

- Shrub Tree
- Sidewalk
- Sign Face
- Sign Post
- Slough Or Marsh
- Spring
- Stream Gauge
- Street Marker
- Subsurface Utility Exploration Test Hole
- Telephone Fiber Optics — T/F —
- Telephone Junction Box
- Telephone Pole
- Television Cable Jct Box
- Television Tower
- Test Wells/Bore Holes
- Traffic Signal
- Trash Barrel
- Tree Belt
- Tree Coniferous
- Tree Deciduous
- Tree Stumps
- Triangulation Station
- Underground Electric Line — P —
- Underground Gas Line — G —
- Underground High Pressure Gas Line — HG —
- Underground Sanitary Sewer — S —
- Underground Storm Sewer — S —
- Underground Tank
- Underground Telephone Line — T —
- Underground Television Cable — TV —
- Underground Water Line — W —
- Warning Sign One Post
- Warning Sign Two Post
- Water Fountain
- Water Hydrant
- Water Meter
- Water Tower
- Water Valve
- Water Well
- Weir Rock
- Windmill
- Wingwall
- Witness Corner

- State and National Line
- County Line
- Section Line
- Quarter Line
- Sixteenth Line
- Property Line
- Construction Line
- R. O. W. Line
- New R. O. W. Line
- Cut and Fill Limits
- Control of Access
- New Control of Access
- Proposed ROW (After Property Disposal)

- Drainage Arrow

- Remove Concrete Pavement
- Remove Concrete Driveway Pavement
- Remove Asphalt Concrete Pavement
- Remove Concrete Sidewalk
- Remove Concrete Approach Pavement
- Remove Concrete Median Pavement

- Remove Concrete Curb
- Remove Concrete Curb and Gutter
- Remove Concrete Gutter

- Detectable Warning
- Pedestrian Push Button Pole and 30" x 48" Clear Space with 1.5% slope

Plot Scale - 1:200
Plotted From - tmpr17192
File - U:\drj\prj\brwn\039KLLegend.dgn

STATE OF SOUTH DAKOTA	PROJECT	SHEET	TOTAL SHEETS
	P 0037(129)207 NH 0012(198)308	B29	B131

Plotting Date: 06/22/2016

10+89 - 47' L
Retain 24" - 56' CMP
& End Sections

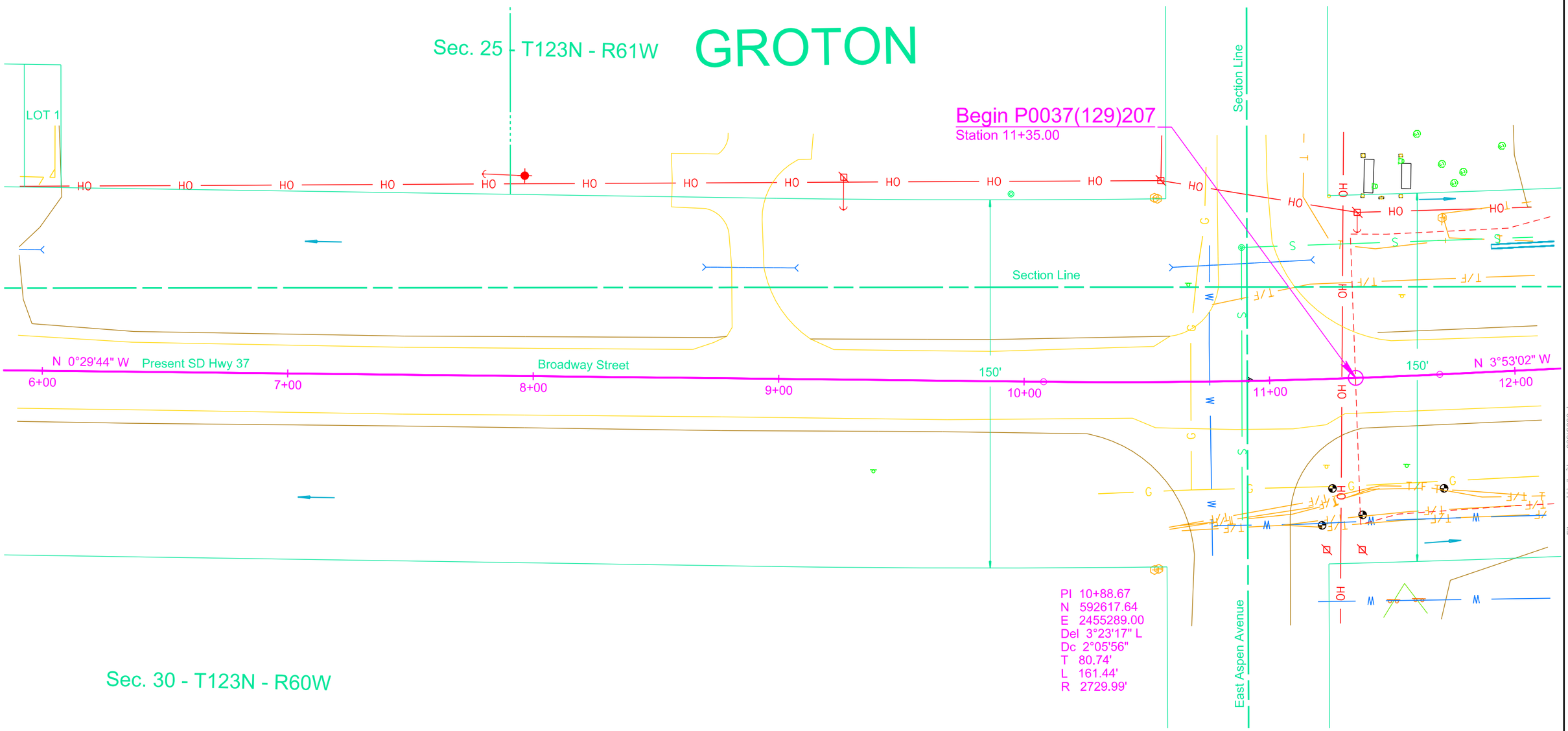

Plot Scale - 1:40

Plotted From - tmpr17192

File - U:\rdprj\brwn\039K\006.dgn

STATE OF SOUTH DAKOTA	PROJECT	SHEET	TOTAL SHEETS
	P 0037(129)207 NH 0012(198)308	B30	B131

Plotting Date: 06/22/2016

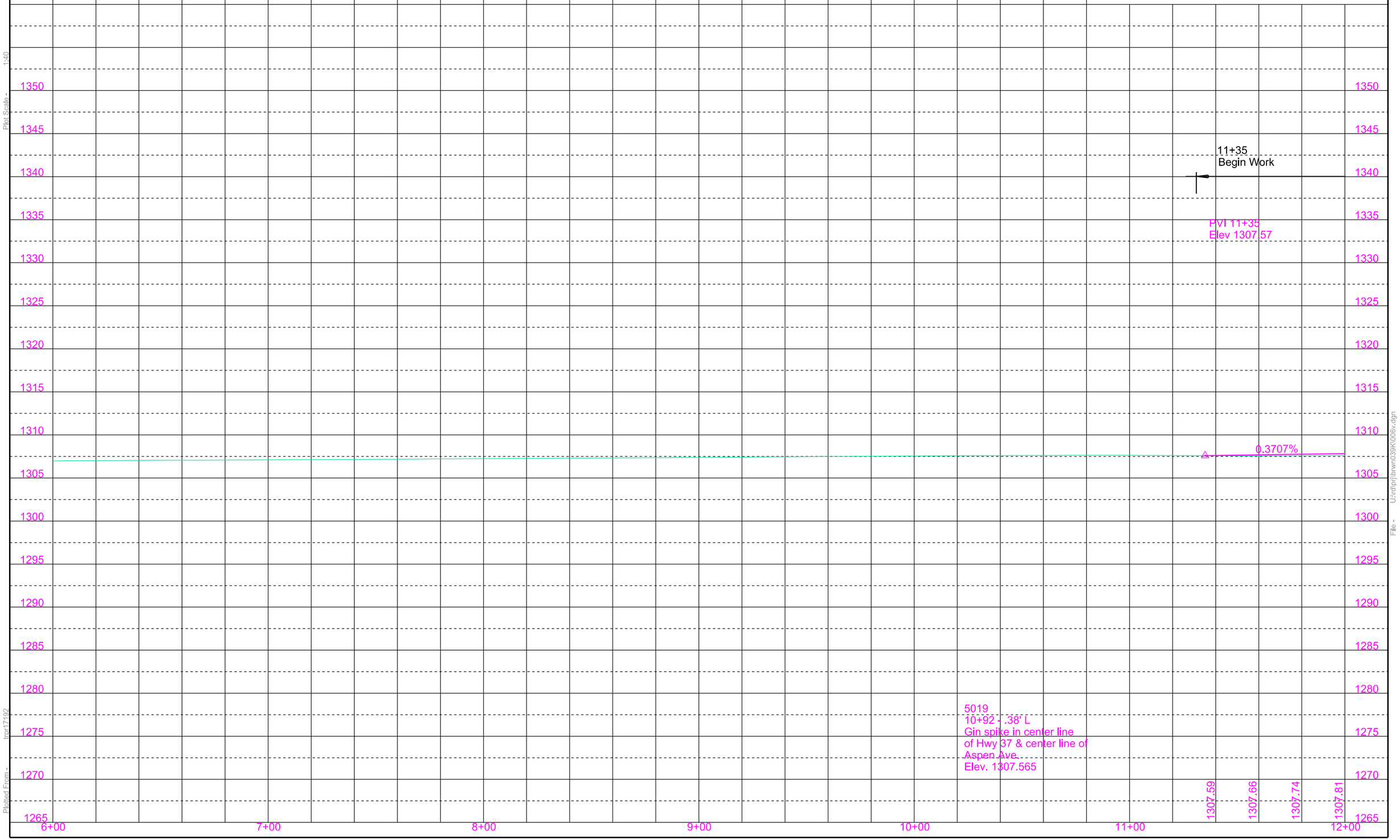

Plot Scale - 1:40

Plotted From - tpr17192

File - U:\rdep\brwn039\K006v.dgn

STATE OF SOUTH DAKOTA	PROJECT	SHEET	TOTAL SHEETS
	P 0037(129)207 NH 0012(198)308	B31	B131

Plotting Date: 06/22/2016 Revised 3-24-2016(BT)

12+34 - 43' L
Take Out 18" - 37' RCP
& End Sections
(Incidental Work,Grading)

12+34 - 51' L
Install 18" - 68' RCP
& 2 Safety Ends

14+59 - 45' L
Take Out 18" - 37' RCP
& End Sections
(Incidental Work,Grading)

14+57 - 51' L
Install 18" - 64' RCP
& 2 Safety Ends

18+14 - 50' L
Take Out 18" - 65' CMP
& End Sections
(Incidental Work,Grading)

18+14 - 51' L
Install 18" - 60' RCP
& 2 Safety Ends

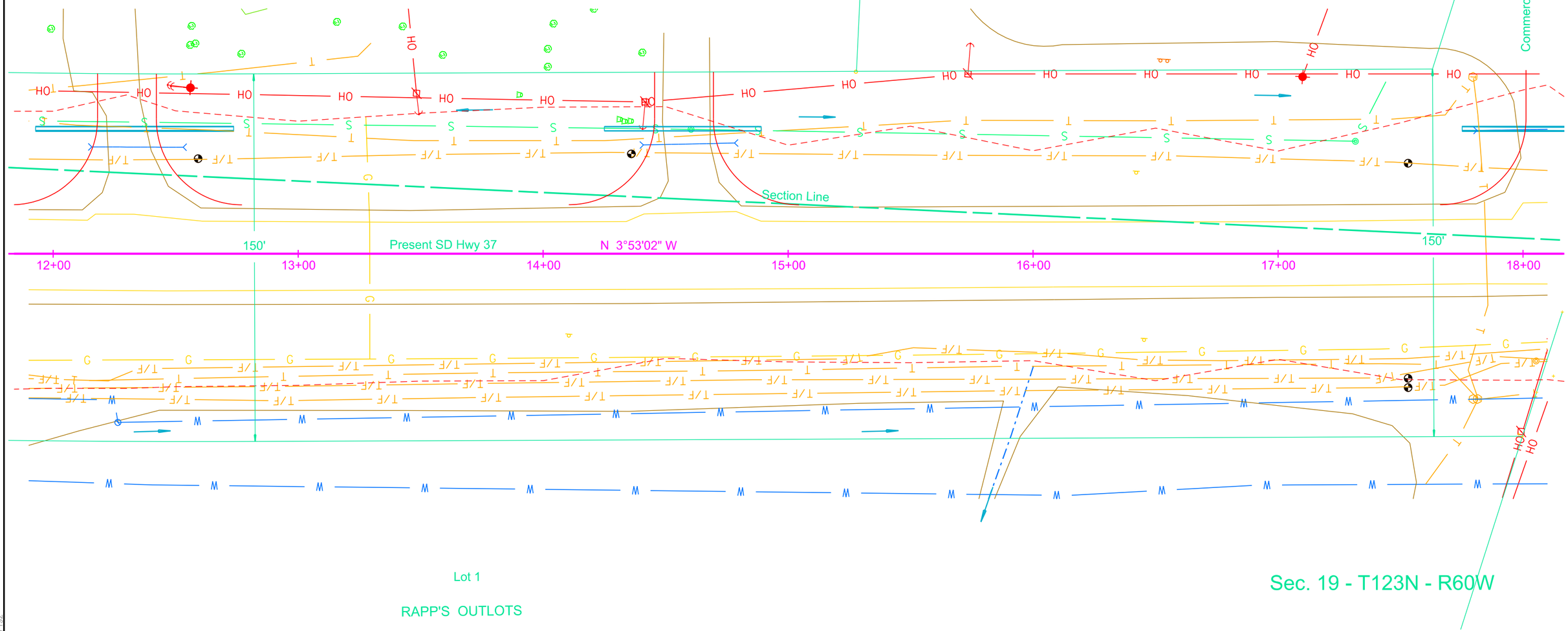

Plot Scale - 1:40
Plotted From - trpr17192
File - U:\rdprj\brwn039K\012.dgn

STATE OF SOUTH DAKOTA	PROJECT	SHEET	TOTAL SHEETS
	P 0037(129)207 NH 0012(198)308	B32	B131

Plotting Date: 06/22/2016 Revised 3-24-2016(BT)

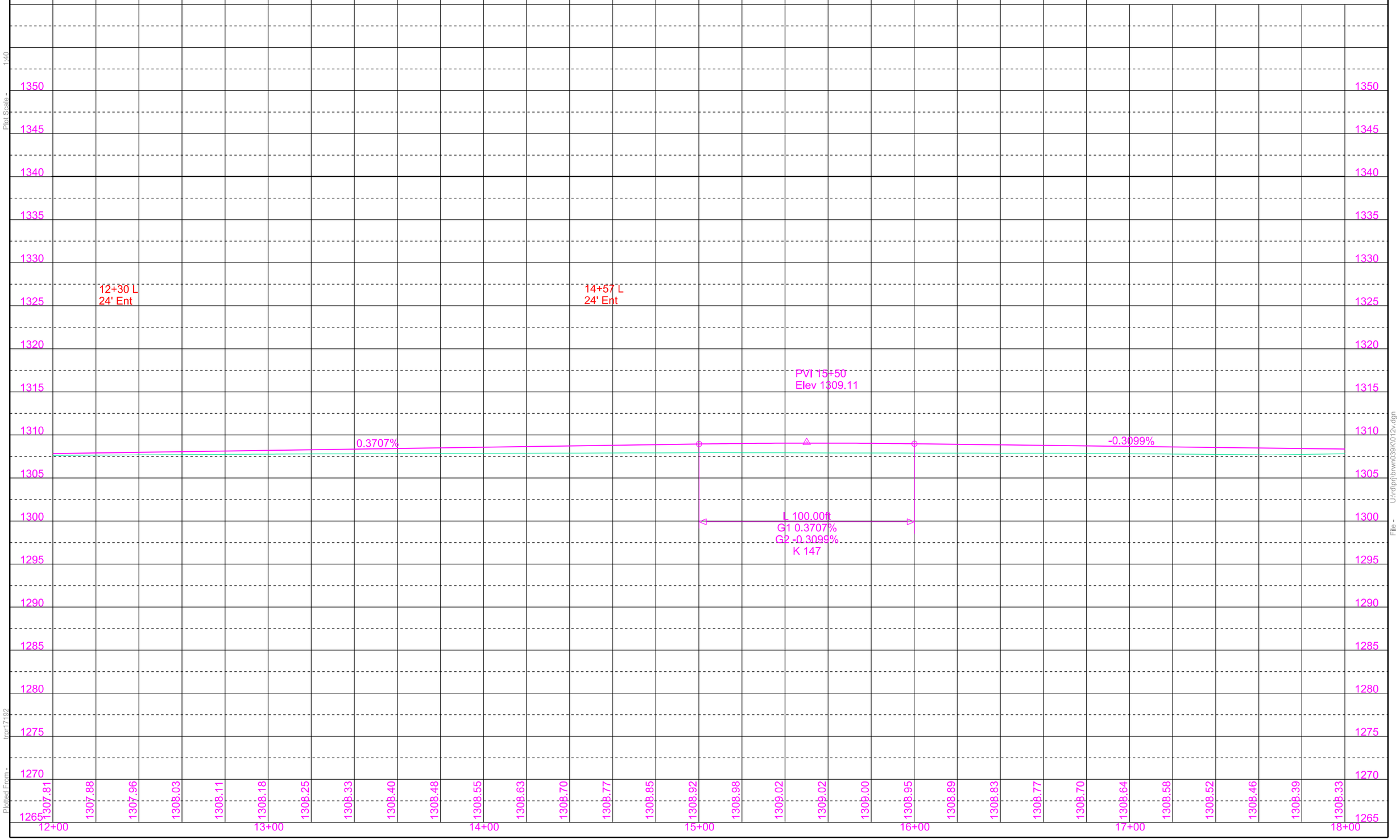

Plot Scale - 1:40

Plotted From - tpgr17192

File - U:\rdep\brwn039\K0012v.dgn

STATE OF SOUTH DAKOTA	PROJECT	SHEET	TOTAL SHEETS
	P 0037(129)207 NH 0012(198)308	B33	B131

Plotting Date: 06/22/2016 Revised 11-19 - 2015 (BT)

18+55
Take Out 18" - 66' RCP
& End Sections
(Incidental Work,Grading)

18+55 (Skew 14° LHF)
Install 24" - 68' RCP
& 2 Sloped Ends

19+58
Take Out 18" - 56' RCP
& End Sections
(Incidental Work,Grading)

19+58 (Skew 16° LHF)
Install 24" - 86' RCP
& 2 Sloped Ends

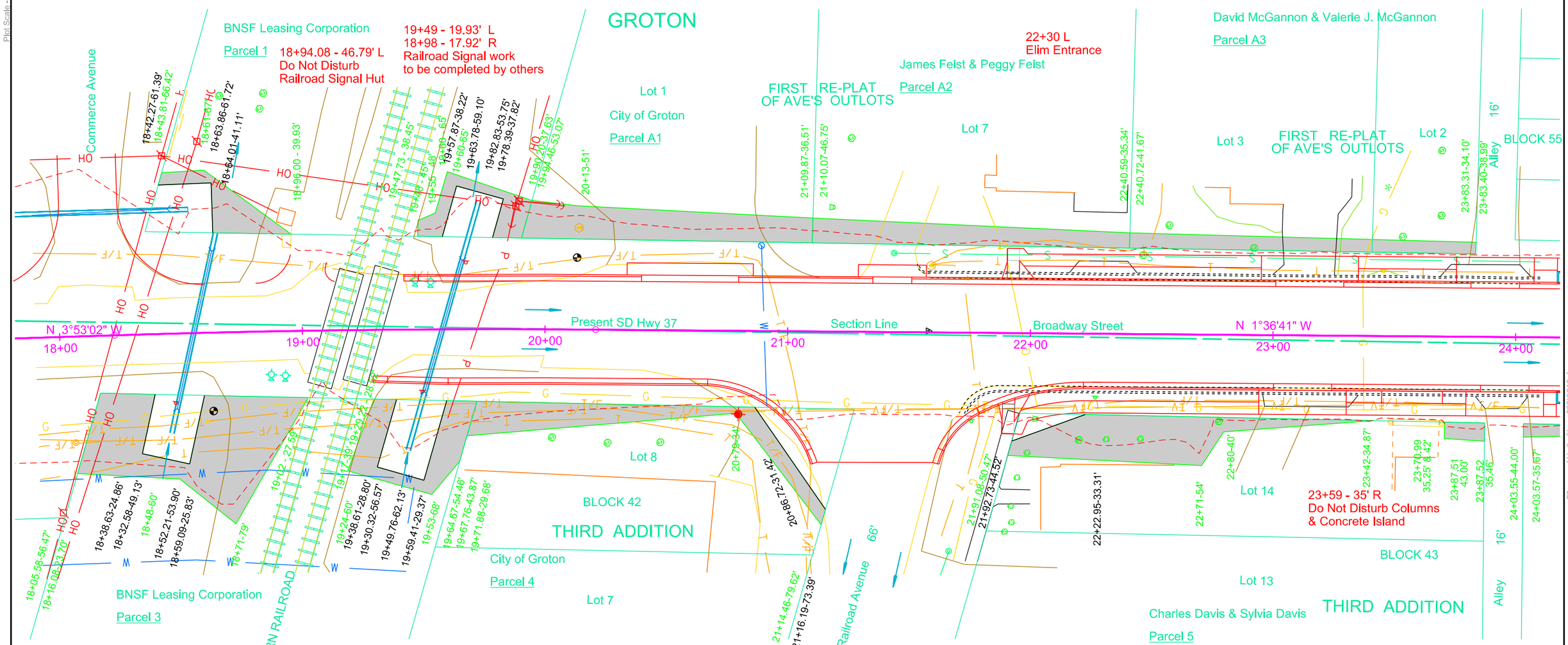

PI 19+21.74
N 593448.84
E 2455232.58
Del 2°16'21"R
Dc 1°08'45"
T 99.16'
L 198.30'
R 5000.00'

Parcel 1
18+42.27 to 19+94.46 L
Temporary Easement for
Grading containing
1132 sq ft, more or less

Parcel 1
19+55 to 19+94.46 L
Temporary Easement for
Grading, Curb & Gutter containing
471 sq ft more or less

Parcel 3
19+29.22 to 19+64.67 R
Temporary Easement for
Grading,Drainage containing
850.15 sq ft, more or less

Parcel 3
18+05.58 to 19+71.88 R
Temporary Easement for
Grading containing
3606 sq ft, more or less

Parcel A1
19+90.20 to 21+10.07 L
Temporary Easement for
Grading,Curb & Gutter containing
1465 sq ft, more or less

Parcel 4
19+67.76 to 21+16.19 R
Temporary Easement for
Grading, Curb & Gutter containing
1272 sq ft, more or less

Parcel A2
21+09.87 to 22+40.72 L
Temporary Easement for
Grading,Curb & Gutter containing
1082 sq ft more or less

Parcel A3
22+40.59 to 23+83.40 L
Temporary Easement for
Grading,Curb & Gutter containing
795 sq ft, more or less

Parcel 5
21+91.08 to 23+42.00 R
Temporary Easement for
Grading, Curb & Gutter containing
1606 sq ft,more or less

Parcel 5
23+70.99 to 23+87.52 R
Temporary Easement for
Grading, Curb & Gutter containing
118 sq ft, more or less

Plot Scale - 1:40
Plotted From - tpp17192
File - U:\drafp\brwn\039K\018.dgn

STATE OF SOUTH DAKOTA	PROJECT	SHEET	TOTAL SHEETS
	P 0037(129)207 NH 0012(198)308	B34	B131

Plotting Date: 06/22/2016

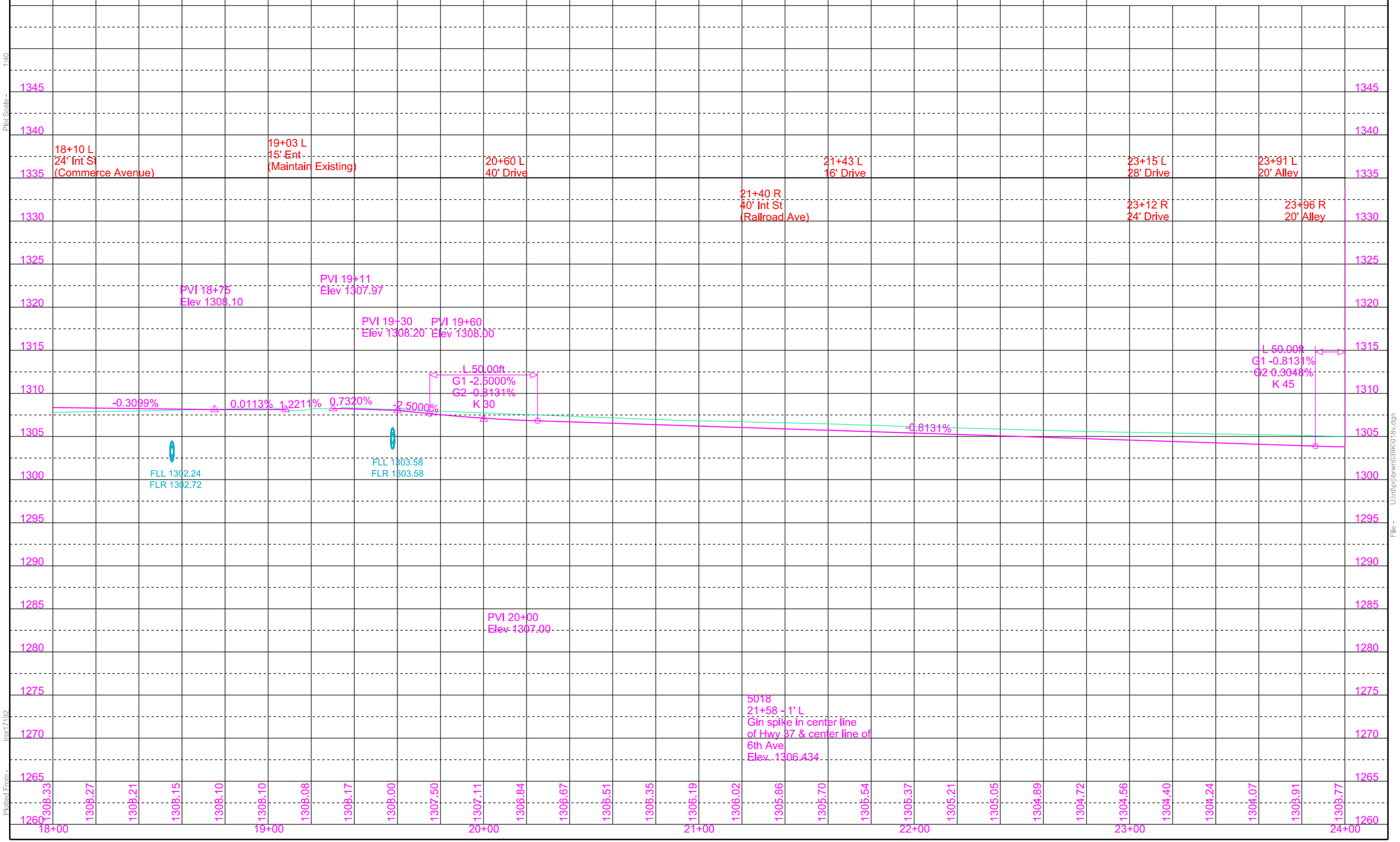

Plot Scale - 1:40

Plotted From - tpr17192

File - U:\radpj\brwn039\K016v.dgn

STATE OF SOUTH DAKOTA	PROJECT	SHEET	TOTAL SHEETS
	P 0037(129)207 NH 0012(198)308	B35	B131

Plotting Date: 06/22/2016

24+23-24.67' L to 24.67' R
Install 18"-46' RCP Arch
(Between Drop Inlets)

24+23-24.67' R to 25+34.93-21.67' R
Install 18"-106' RCP Arch
(Between Drop Inlets)

25+35.44-21.67' L to 25+34.93-21.67' R
Install 18"- 42' RCP
(Between Drop Inlets)

25+34.93-21.67' R to 25+60.96-46.87' R
Install 18"-34' RCP Arch
(Between Drop Inlets)

25+61-94' L
Retain Drop Inlet

25+43-22' R to 26+14-22' R
Take Out 15"- 72' RCP
(Incidental Work,Grading)

25+43-22' L to 25+43-22' R
Take Out 12" - 48' RCP
(Incidental Work,Grading)

25+35.44-21.67' L to 25+60.27-46.36' L
Install 12"- 34' RCP
(Between Drop Inlets)

25+61-94' L to 25+60.27-46.36' L
Install 12"-48' RCP
(Between Drop Inlets)

25+55-49' R to 25+43-22' L
Take Out 12"- 50' RCP
(Incidental Work,Grading)

25+34.93-21.67' R to 26+23.35-21.67' R
Install 24"-84' RCP Arch
(Between Drop Inlets)

25+60.27-46.36' L to 25+97.14-45.73' L
Install 12"- 38' RCP
(Between Drop Inlets)

25+98.01-47.89' R to 26+23.35-22' R
Install 18"-34' RCP Arch
(Between Drop Inlets)

26+14-22' R to 29+78-22' R
Take Out 15" - 366' RCP
(Incidental Work,Grading)

26+14-22' L to 26+14-22' R
Take Out 15" - 44' RCP
(Incidental Work,Grading)

26+23.35-21.67' R to 27+10-24.67' R
Install 24"-80' RCP Arch
(Between Drop Inlets)

27+10-24.13' L to 27+10-24.67' R
Install 18"-46' RCP Arch
(Between Drop Inlets)

27+10-24.67' R to 29+96-26.17' R
Install 30"-276' RCP Arch
(Between Drop Inlets)

28+19-31' R
Take Out Landscape Timber
(Incidental Work, Grading)

29+27.31-46.49' R to 29+64.59-46.67' R
Install 18"-36' RCP
(Between Drop Inlets)

29+64.59-46.67' R to 29+96-24.13' R
Install 18"-34' RCP
with 18" - 65° RCP Bend
at 29+96-31.1' R (4' Lay Length)
(Between Drop Inlets)

29+22.40-47.52' L to 29+60.46-46.63' L
Install 18"-36' RCP
(Between Drop Inlets)

29+78-22' R to 33+43-22' R
Take Out 18" - 366' RCP
(Incidental Work, Grading)

29+78-22' L to 22' R
Take Out 15" - 44' RCP
(Incidental Work, Grading)

29+89.52-24.13' L to 29+96-26.17' R
Install 18"-46' RCP Arch
(Between Drop Inlets)

Take out Drop Inlet
with Frame and Grate
at the following locations:
25+43 - 22' L
25+43 - 22' R
26+14 - 22' L
26+14 - 22' R
29+78 - 22' L
29+78 - 22' R

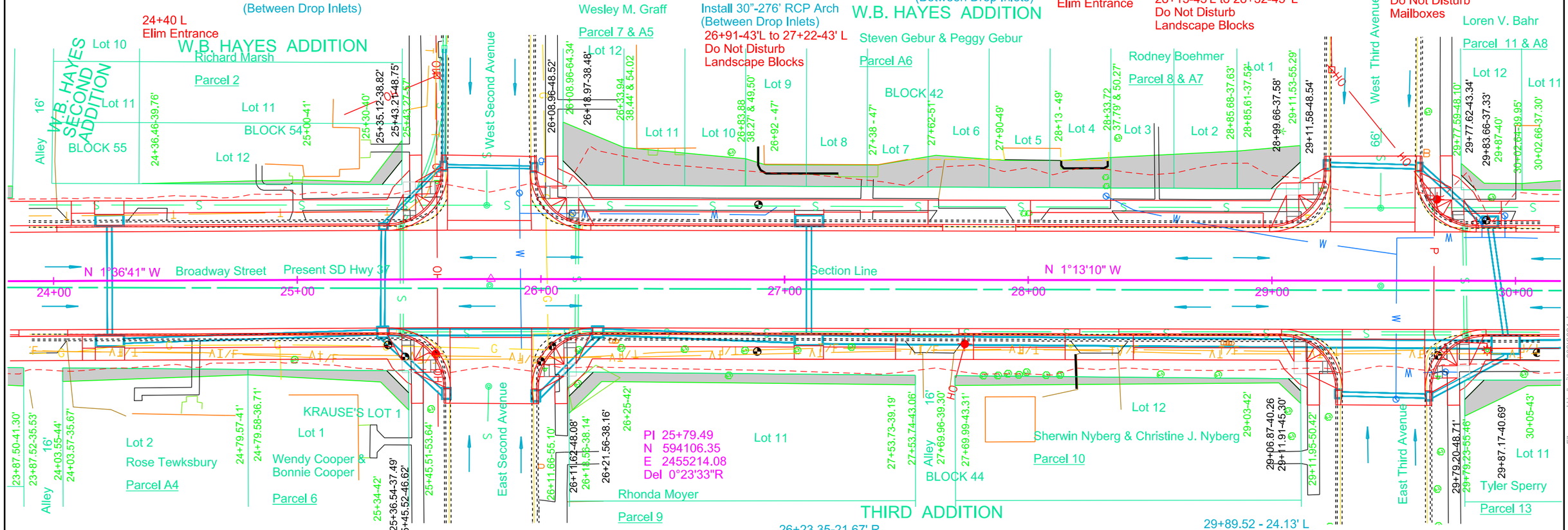

W & B COOPER'S
FIRST SUBDIVISION

Install 3'x4' Type B
Drop Inlet with 6" Concrete Collar
and Type B
Frame and Gate at the
following locations:
25+66.96-46.87' R
25+98.01-47.89' R

25+34.93-21.67' R
Install Special 4'x4' Type B
Drop Inlet with Type B
Frame and Gate

25+35.44 - 21.67' L
Install Special 2'x3' Type B
Drop Inlet with Type B
Frame and Grate

Install Special 4'x11' Type S
Drop Inlet with Type S
Frame and Lid at the
following locations:
24+23 - 24.67' L
24+23 - 24.67' R
27+10 - 24.67' R

26+23.35-21.67' R
Install 4'x4' Type B
Drop Inlet with 6" Concrete Collar
and Type B Frame and Gate

27+10-24.13' L
Install 4'x11' Type S
Drop Inlet Base with
Precast Concrete Type S
Drop Inlet Lid

29+60.46-46.63' L to 29+89.52-24.13' L
Install 18"-34' RCP
(Between Drop Inlets)

Install 2'x3' Type B
Drop Inlet with 6" Concrete Collar
and Type B Frame and Grate at the
following locations:
25+60.27 - 46.36' L
25+97.14 - 45.73' L
29+22.40 - 47.52' L
29+27.31 - 46.48' R
29+60.46 - 46.63' L
29+64.65 - 47.30' R

29+89.52 - 24.13' L
Install 4'x6' Type S
Drop Inlet Base with
Precast Concrete Type S
Drop Inlet Lid

29+96-26.17' R
Install Special 7'x11' Type S
Drop Inlet with Type S
Frame and Lid

Refurbish Mail Boxes
at the following locations:
26+30 R - Double (1)
28+82 R - Double (2)

Parcel 2
24+36.46 to 25+43.27 L
Temporary Easement for
Grading,Curb & Gutter containing
185 sq ft, more or less

Parcel A4
24+03.55 to 24+79.58 R
Temporary Easement for
Grading, Curb & Gutter containing
297 sq ft,more or less

Parcel 7
26+08.96 to 26+33.94 L
Temporary Easement for
Grading,Curb & Gutter containing
467 sq ft, more or less

Parcel 6
24+79.57 to 25+45.51 R
Temporary Easement for
Grading, Curb & Gutter containing
266 sq ft, more or less

Parcel A5
26+33.94 to 26+83.88 L
Temporary Easement for
Grading,Curb & Gutter containing
669 sq ft, more or less

Parcel A6
26+83.88 to 28+33.72 L
Temporary Easement for
Grading,Curb & Gutter containing
1586 sq ft, more or less

Parcel A7
28+33.72 to 28+85.68 L
Temporary Easement for
Curb & Gutter containing
723 sq ft, more or less

Parcel 9
26+11.62 to 27+53.74 R
Temporary Easement for
Grading, Curb & Gutter containing
584 sq ft, more or less

Parcel 8
28+85.66 to 29+11.58 L
Temporary Easement for
Curb & Gutter containing
364 sq ft, more or less

Parcel 10
27+69.96 to 29+11.95 R
Temporary Easement for
Grading, Curb & Gutter containing
424 sq ft, more or less

Parcel 11
29+77.59 to 30+02.66 L
Temporary Easement for
Grading,Curb & Gutter containing
86 sq ft, more or less

Parcel 13
29+79.20 to 30+53.18 R
Temporary Easement for
Grading, Curb & Gutter containing
287 sq ft, more or less

Plot Scale - 1:40
Plotted From - tnpr17192
File - U:\rdpn\brwn039\K1024.dgn

STATE OF SOUTH DAKOTA	PROJECT	SHEET	TOTAL SHEETS
	P 0037(129)207 NH 0012(198)308	B36	B131

Plotting Date: 06/22/2016

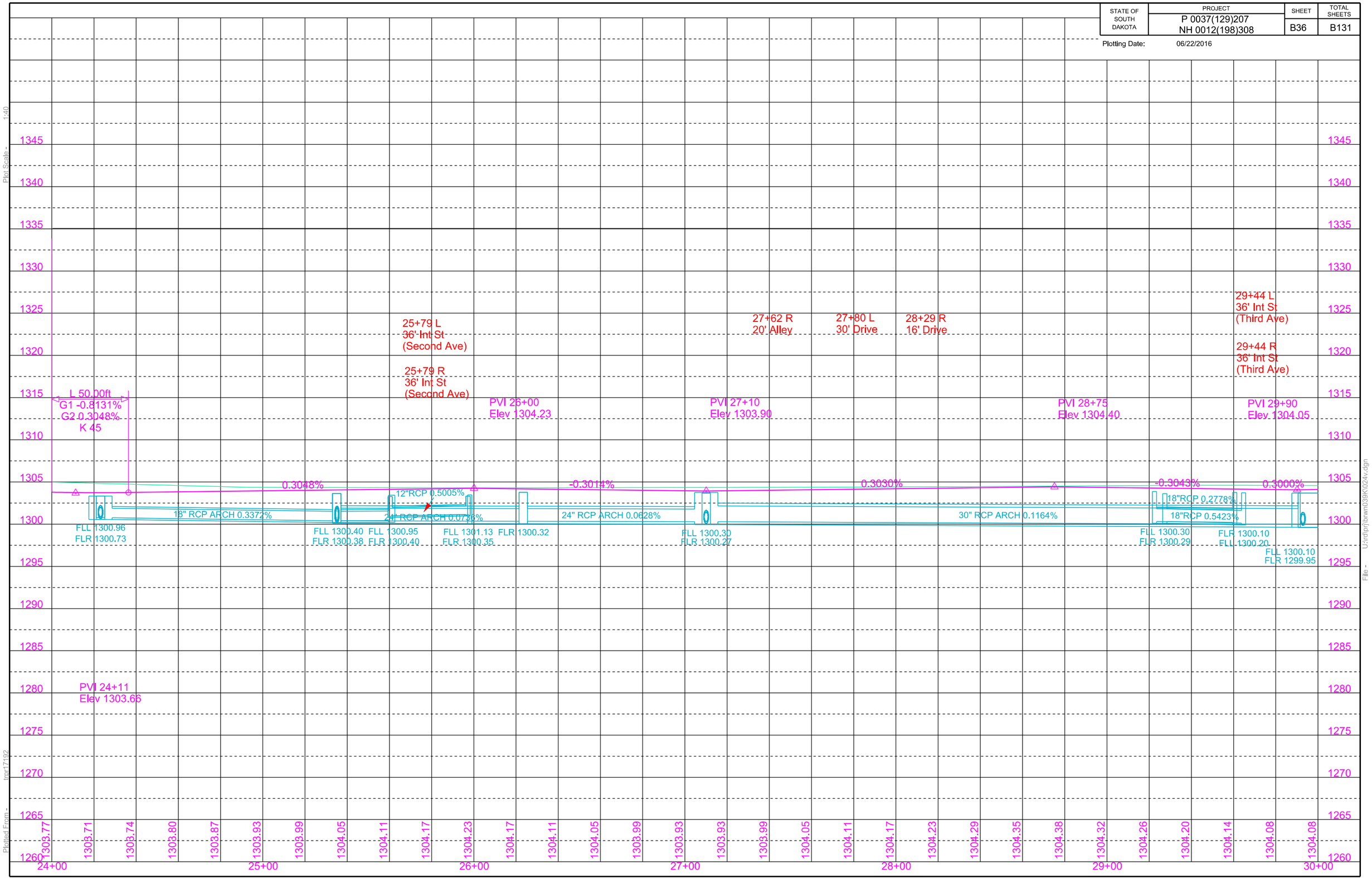

Plot Scale - 1:40

Plotted From - tpr17192

File - U:\rdip\brwn\039K\024v.dgn

STATE OF SOUTH DAKOTA	PROJECT	SHEET	TOTAL SHEETS
	P 0037(129)207 NH 0012(198)308	B37	B131

Plotting Date: 06/22/2016 Revised 4-5-2016 (BT)

29+96-26.17' R to 32+00-21.67' R
Install 36"-198' RCP Arch
(Between Drop Inlets)

Install 2'x3' Type B
Drop Inlet with 6" Concrete Collar
and Type B Frame and Grate
at the Following Locations:
32+88.10 - 46.45' L
33+27.44 - 46.57' L

32+00-21.67' R to 33+53-21.67' R
Install 36"-150' RCP Arch
(Between Drop Inlets)

32+00-21.67' R
Install 4'x4' Type B Drop
Inlet with 6" Concrete Collar
and Type B Frame & Grate

32+88.10-46.45' L to 33+27.44-46.57' L
Install 18"-38' RCP
(Between Drop Inlets)

33+43-22' R to 33+36 - 39' R
Take Out 18" - 16' RCP
(Incidental Work,Grading)

33+27.44-46.57' L to 33+53-21.67' R
Install 18"-68' RCP with 18"-25° RCP Bend
at 33+27.43-43.07' L (4' Lay Length)
(Between Drop Inlets)

33+32-50' R to 33+53-21.67' R
Install 18"-32' RCP &
20° RCP Bend at 33+32 - 50' R
(Between Existing Pipe & Drop Inlet)

32+75 L
Refurbish Double Mailbox

33+43-22' R to 36+40 - 22' R
Take Out 18" - 296' RCP
(Incidental Work,Grading)

33+53-21.67' R to 36+27 - 25.63' R
Install 42" - 268' RCP Arch
(Between Drop Inlets)

33+43-22' R
Take Out Drop Inlet
with Frame & Grate

33+53 - 21.67' R
Install 5.5'x3' Type B
Drop Inlet with 6" Concrete Collar
and Type B Frame and Grate

33+49 L
Do Not Disturb Tree

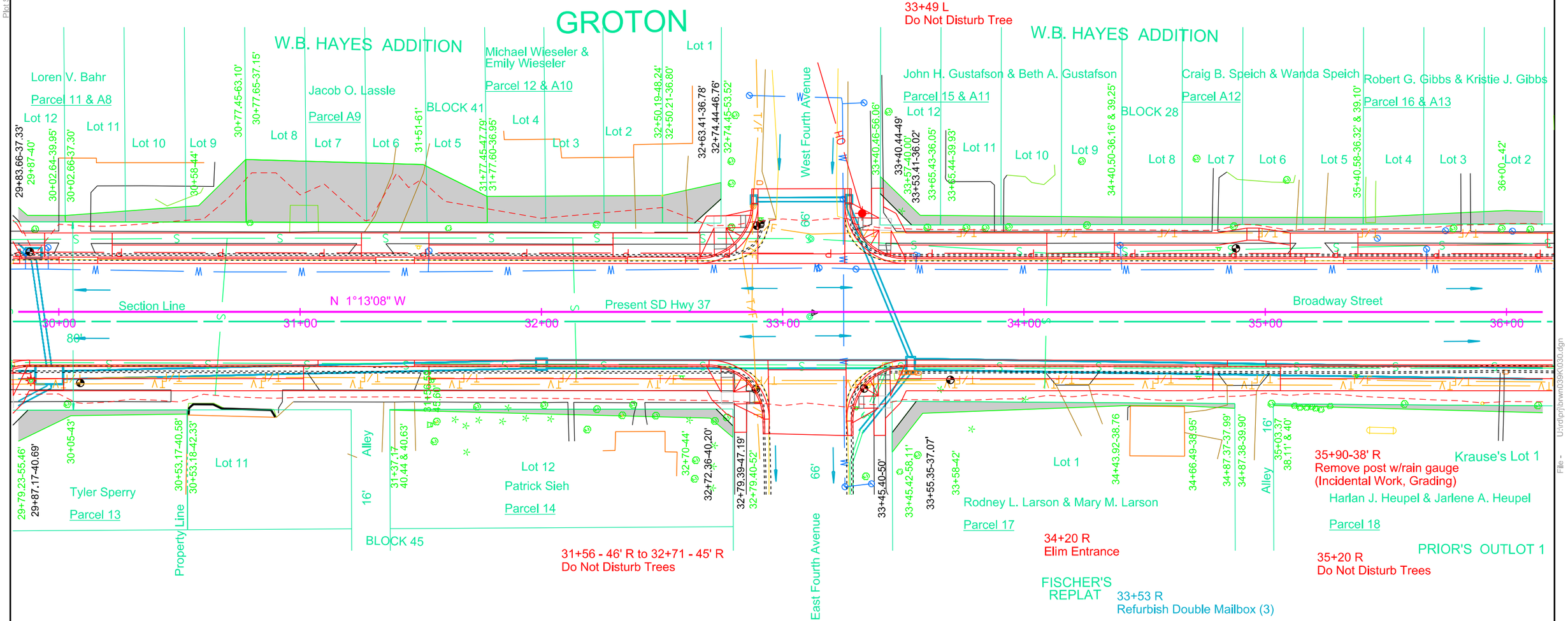

Parcel A9
30+77.45 to 31+77.60 L
Temporary Easement for
Grading,Curb & Gutter containing
2295 sq ft, more or less

Parcel A10
31+77.45 to 32+50.21 L
Temporary Easement for
Curb & Gutter containing
809 sq ft more or less

Parcel 15
33+40.46 to 33+65.44 L
Temporary Easement for
Grading,Curb & Gutter containing
148 sq ft, more or less

Parcel A12
34+40.50 to 35+40.58 L
Temporary Easement for
Grading,Curb & Gutter containing
294 sq ft, more or less

Parcel A8
30+02.64 to 30+77.65 L
Temporary Easement for
Grading,Curb & Gutter containing
583 sq ft more or less

Parcel 12
32+50.19 to 32+74.45 L
Temporary Easement for
Grading,Curb & Gutter containing
286 sq ft,more or less

Parcel 14
31+37.17 to 32+79.40 R
Temporary Easement for
Grading, Curb & Gutter containing
313 sq ft, more or less

Parcel A11
33+65.43 to 34+40.50 L
Temporary Easement for
Grading,Curb & Gutter containing
262 sq ft,more or less

Parcel 17
33+45.40 to 34+87.38 R
Temporary Easement for
Grading,Curb & Gutter containing
413 sq ft,more or less

Parcel 18
35+03.37 to 36+45.48 R
Temporary Easement for
Grading,Curb & Gutter containing
342 sq ft, more or less

Plot Scale - 1:40
Plotted From - trgt17192
File - U:\rdprj\brwn\039K\030.dgn

STATE OF SOUTH DAKOTA	PROJECT	SHEET	TOTAL SHEETS
	P 0037(129)207 NH 0012(198)308	B38	B131

Plotting Date: 06/22/2016 Revised 4-5-2016 (BT)

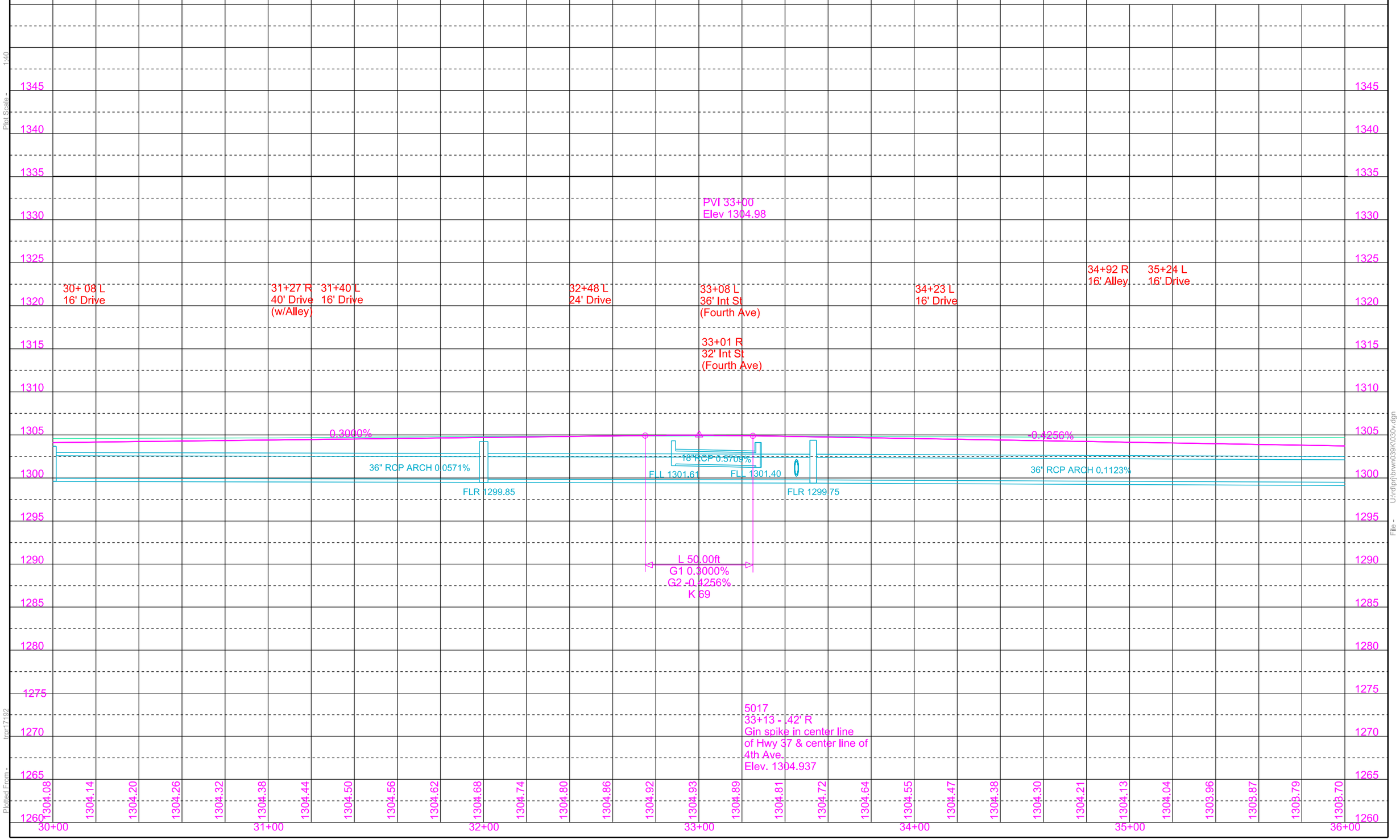

Plot Scale - 1:40

Plotted From - tpp17192

File - U:\rdep\brwn039\k030v.dgn

STATE OF SOUTH DAKOTA	PROJECT	SHEET	TOTAL SHEETS
	P 0037(129)207 NH 0012(198)308	B39	B131

Plotting Date: 06/22/2016

36+40-22' R to 40+06-22' R
Take Out 18" - 366' RCP
(Incidental Work,Grading)

36+23-24.13' L to 36+27-25.63' R
Install 18"-42' RCP Arch
(Between Drop Inlets)

36+27-25.63' R to 36+58.37-46.51' R
Install 24"-36' RCP
with 24" - 65° RCP Bend
at 36+27-31.63' R (5' Lay Length)
(Between Drop Inlets)

36+40-22' L to 36+47-38' L
Take Out 18" - 16' RCP
(Incidental Work,Grading)

36+23-24.13' L to 36+47-37' L
Install 6"-22' PVC with 6"-40° PVC
Bend at 36+47-37' L
(Between Drop Inlet & Existing PVC)

36+27-25.63' R to 38+50-28' R
Install 42"-218' RCP Arch
(Between Drop Inlet and Junction Box)

36+58.37-46.51' R to 50' R
Install 18"-2' RCP
(Between Drop Inlet & Existing RCP)

36+58-43' R to 36+94-50' R
Take Out 15" - 36' RCP
(Incidental Work,Grading)

36+23-24.13' L
Install 4'x11' Type S
Drop Inlet Base w/
Precast Concrete Type S
Drop Inlet Lid

36+27-26.17' R
Install Special 7'x11' Type S
Drop Inlet with Type S
Frame and Lid

36+40-22' L to 22' R
Take Out 18" - 44' RCP
(Incidental Work,Grading)

36+58.37-46.51' R
Install 2'x3' Type B
Drop Inlet with 6" Concrete Collar
and Type B Frame and Grate

38+50-28' R to 40+30-21.67' R
Install 42"-180' RCP Arch
(Between Junction Box and Drop Inlet)

36+40-22' R to 36+58-43' R
Take Out 18" - 24' RCP
(Incidental Work,Grading)

40+06-22' L to 40+30-44' L
Take Out 18" - 33' RCP
(Incidental Work,Grading)

40+06-22' R to 22' R
Take Out 18" - 44' RCP
(Incidental Work,Grading)

40+06-22' R to 43+71-22' R
Take Out 18" - 364' RCP
(Incidental Work,Grading)

Install Special 7'x7' Junction
Box and Type A7 Frame & Lid
at the following locations:
38+50-28' R
42+00-28' R

Take Out Drop Inlet
with Frame & Grate
at the following Locations:
36+40 - 22'L
36+40 - 22'R
36+58 - 43'R
40+06 - 22'R
40+06 - 22'L
40+30 - 44' L

40+30-21.67' R to 42+00-28' R
Install 42"-170' RCP Arch
(Between Drop Inlet and Junction Box)

40+33.34-46.04' L to 40+30-21.67' R
Install 18"-66' RCP
(Between Existing Manhole & Drop Inlet)

Install 5.5'x3' Type B
Drop Inlet with 6" Concrete Collar
and Type B Frame and Grate
at the following locations:
40+30-21.67' R
40+33.34-46.04' L

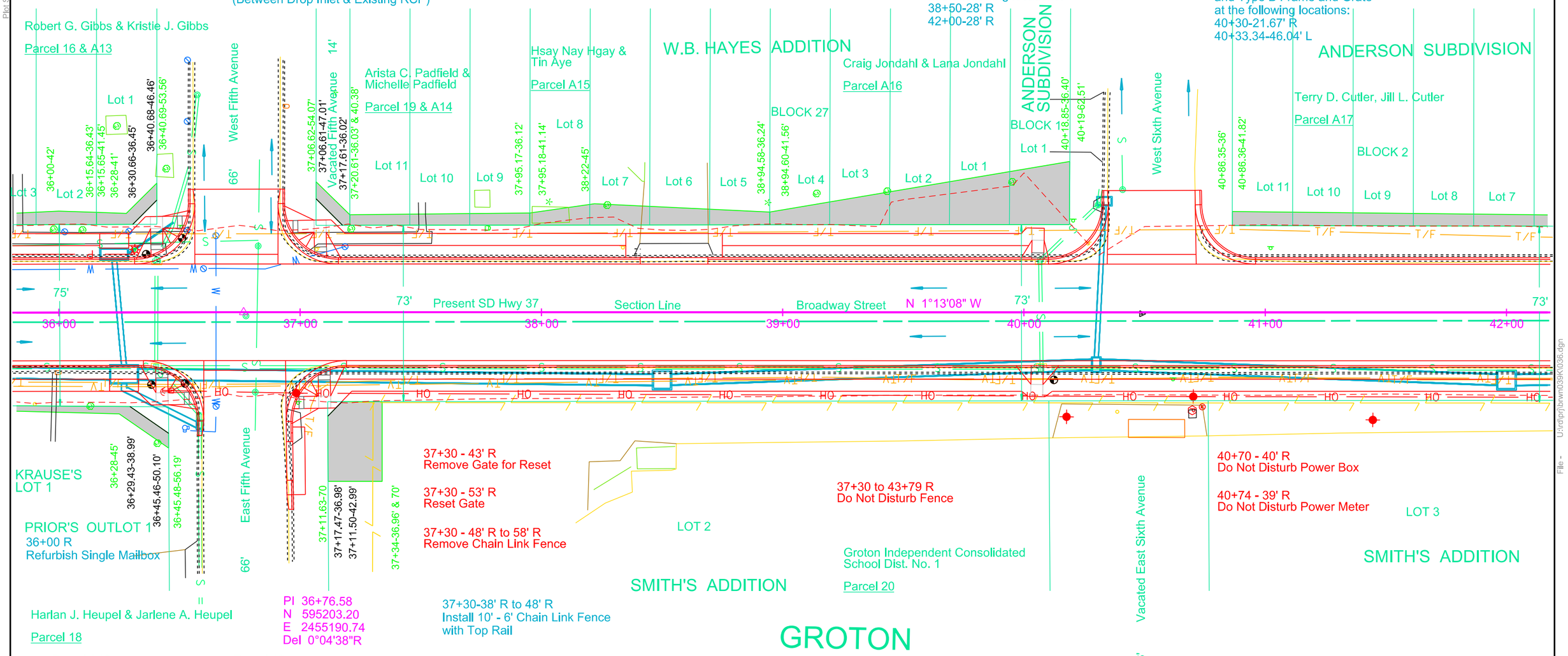

Parcel A13
35+40.58 to 36+15.65 L
Temporary Easement for
Curb & Gutter containing
332 sq ft more or less

Parcel 19
37+06.61 to 37+20.61 L
Temporary Easement for
Grading,Curb & Gutter containing
96 sq ft,more or less

Parcel 16
36+15.64 to 36+40.69 L
Temporary Easement for
Curb & Gutter containing
146 sq ft, more or less

Parcel A14
37+20.61 to 37+95.18 L
Temporary Easement for
Grading,Curb & Gutter containing
350 sq ft, more or less

Parcel 20
37+11.50 to 37+34.00 R
Temporary Easement for
Grading,Curb & Gutter containing
724 sq ft, more or less

Parcel A15
37+95.17 to 38+94.60 L
Temporary Easement for
Grading,Curb & Gutter containing
700 sq ft, more or less

Parcel A16
38+94.58 to 40+19.00 L
Temporary Easement for
Grading,Curb & Gutter containing
1953 sq ft, more or less

Plot Scale - 1:40
Plotted From - trpr17192
File - U:\rdprj\brwn039\K036.dgn

STATE OF SOUTH DAKOTA	PROJECT	SHEET	TOTAL SHEETS
	P 0037(129)207 NH 0012(198)308	B40	B131

Plotting Date: 06/22/2016

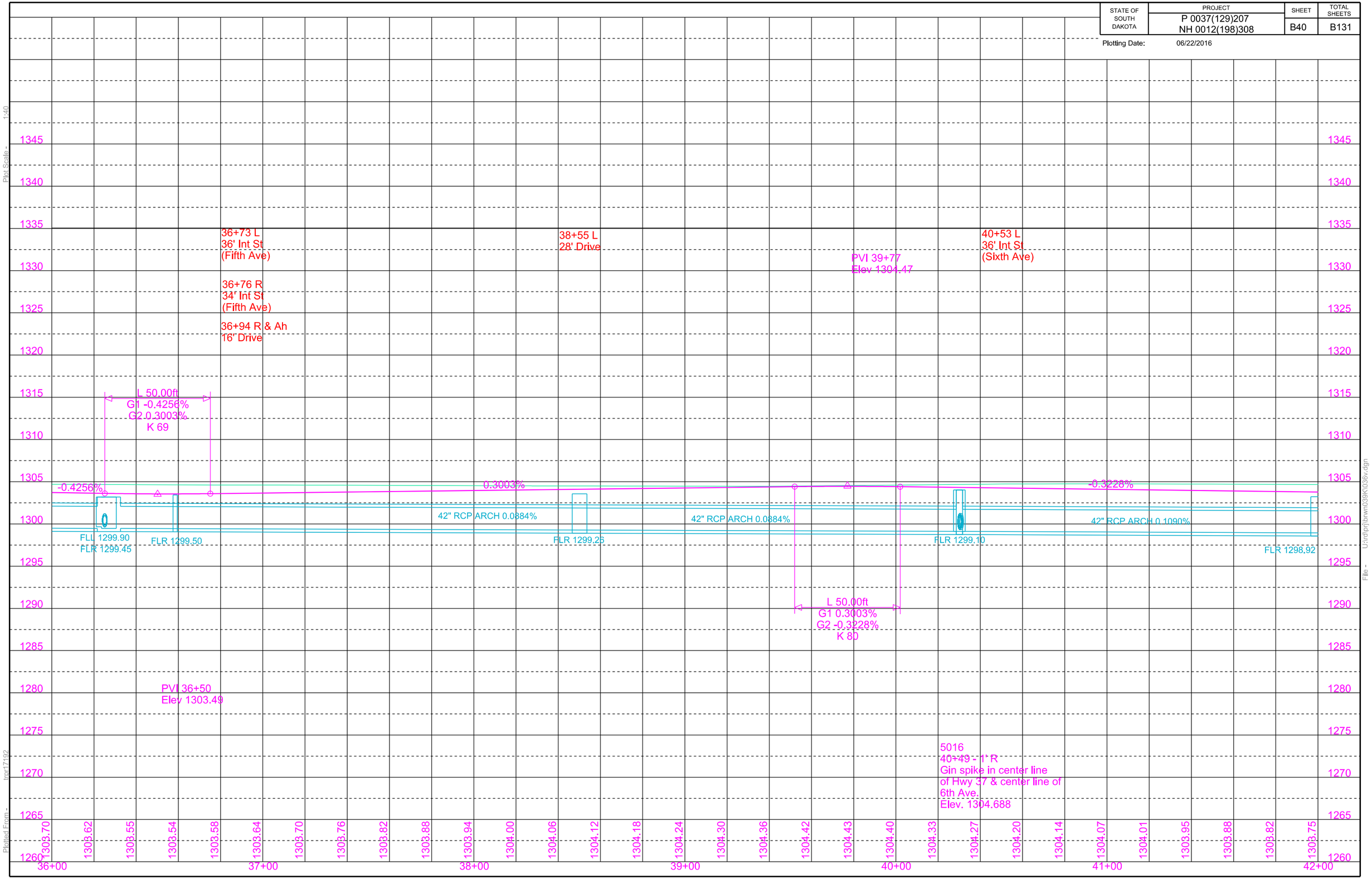

Plot Scale - 1:40

Plotted From - tpp17192

File - U:\rdp\hbrwn039\K0036v.dgn

STATE OF SOUTH DAKOTA	PROJECT	SHEET	TOTAL SHEETS
	P 0037(129)207 NH 0012(198)308	B41	B131

Plotting Date: 06/22/2016 Revised 11-19-2015 (BT)

43+71-22' R to 44+32-22' R
Take Out 24" - 60' RCP
(Incidental Work,Grading)

42+00-28' R to 43+58-25.63' R
Install 42"-158' RCP Arch
(Between Junction Box & Drop Inlet)

43+58 - 24.13' L to 25.63' R
Install 18" - 42' RCP Arch
(Between Drop Inlets)

43+58-25.63' R to 44+31-22.75' R
Install 42"-70' RCP Arch
(Between Drop Inlet & Junction Box)

43+58 - 26.17' R
Install Special 7'x11' Type S Drop
Inlet with Type S Frame and Lid

44+32-22' R to 44+65-56' L
Take Out 36" - 85' RCP
(Incidental Work,Grading)

43+58 - 24.13' L
Install 4'x11' Type S Drop Inlet Base
with Precast Type S Drop Inlet Lid

44+31-22.75' R to 44+30.06-46.53' R
Install 36"-20' RCP
(Between Junction Box & Drop Inlet)

44+30.06-46.53' R
Install 5.5'x3' Type B Drop Inlet
with 6" Concrete Collar and
Type B Frame and Grate

44+30.06-46.53' R to 55' R
Install 30"-8' RCP
(Between Drop Inlet & Existing RCP)

44+32-38' R-22' R
Take Out 30" - 15' RCP
(Incidental Work,Grading)

44+31-22.75' R to 44+63.67-57.14' L
Install 48"-84' RCP Arch
& Flared End Section
(Between Junction Box & Outlet)

44+31-22.75' R
Install Special 7'x7' Junction Box
and Type A7 Frame & Lid

44+69 - 21.67' R to 46+00 -30.17' R
Install 15" - 132' PVC & 5° Bend
(Between Drop Inlet & Tee)

44+69 - 21.67' R to 36' R
Install 15" - 14' PVC
& RCP Safety End w/Bars
(Between Drop Inlet & Inlet)

44+68
Take Out 18" - 57' RCP
& End Sections
(Incidental Work,Grading)

44+69-21.67' R
Install 3'x4' Type B Drop Inlet
with 6" Concrete Collar and
Type B Frame and Grate

44+69-21.67' R to 57.13' L
Install 24"- 80' RCP
& Sloped End Section L
(Between Drop Inlet & Outlet)

46+00 - 30.17' R to 38.85' R
Install 15" - 8' PVC
& RCP Safety End w/ Bars
(Between Tee & Inlet)

44+69
Take Out 18" - 26' RCP
& End Sections
(Incidental Work,Grading)

46+00 - 30.17' R to 47+25 - 30.17' R
Install 15" - 126' PVC
(Between Tees)

47+25 - 30.17' R to 48+50 - 30.17' R
Install 15" - 126' PVC
(Between Tees)

47+25-30.17' R to 39' R
Install 15" - 8' PVC
& RCP Safety End w/Bars
(Between Tee & Inlet)

Take Out Drop Inlet
with Frame & Grate
at the following Locations:
43+71 - 22'R
44+32 - 38'R

Install 15" PVC Tee
at the following locations:
46+00-30.17' R
47+25-30.17' R

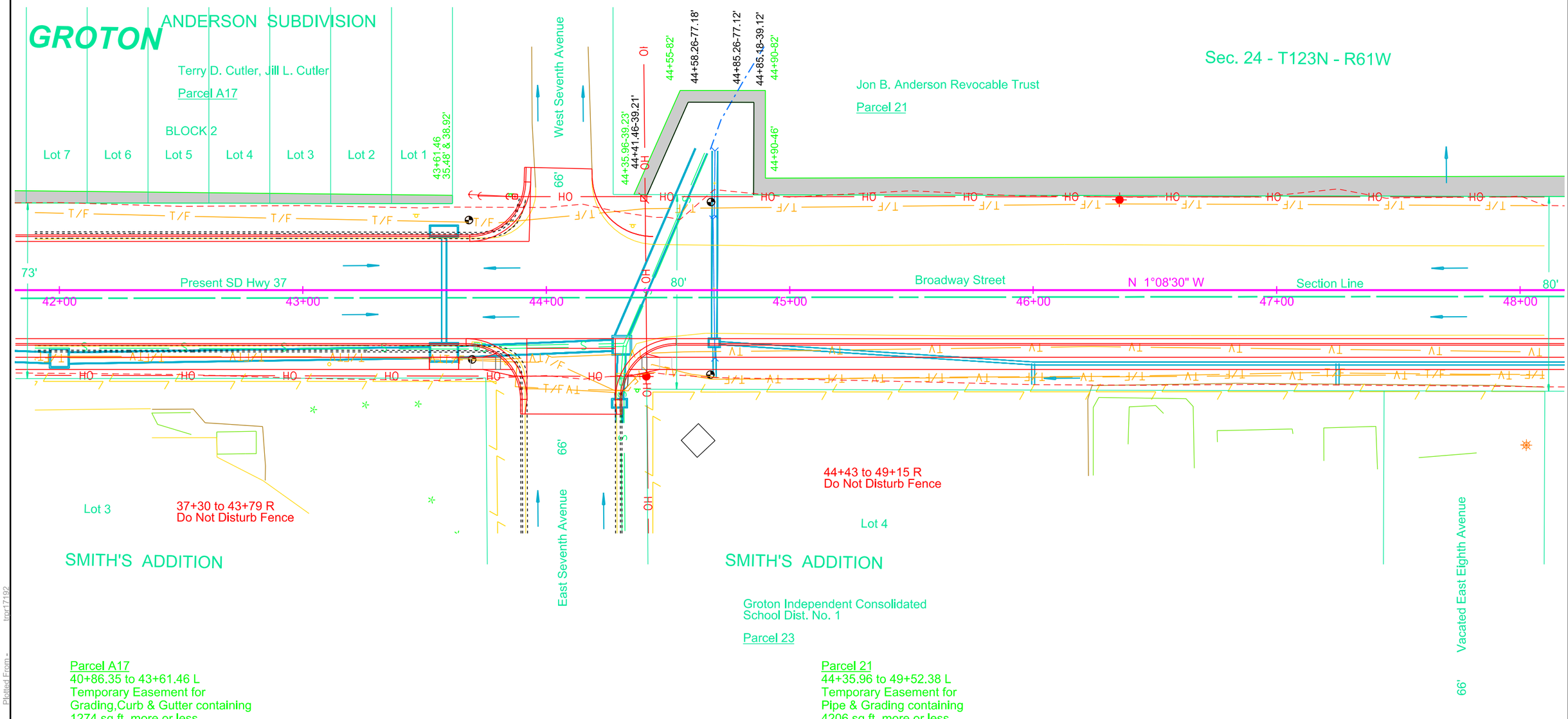

Parcel A17
40+86.35 to 43+61.46 L
Temporary Easement for
Grading,Curb & Gutter containing
1274 sq ft, more or less

Parcel 21
44+35.96 to 49+52.38 L
Temporary Easement for
Pipe & Grading containing
4206 sq ft, more or less

Plot Scale - 1:40
Plotted From - tpp17192
File - U:\rd\prj\brwn\039K\042.dgn

STATE OF SOUTH DAKOTA	PROJECT	SHEET	TOTAL SHEETS
	P 0037(129)207 NH 0012(198)308	B42	B131

Plotting Date: 06/22/2016

Exc	5724	Emb	3780
UNDERCUT SEL TOP	10086	+29%	1096
UND	2074	50% SEL TOP	5201
Muck	571	+29%	1508
	18455	Waste (Muck)	6709
		Waste (Exc)	571
			6299
			18455

Waste is excess material to be disposed of at a site approved by Engineer.
UNDERCUT SEL TOP shall be used as embankment material.
50% SEL TOP represents the portion of the SELECT SUBGRADE TOPPING that comes from the UNDERCUT SEL TOP.

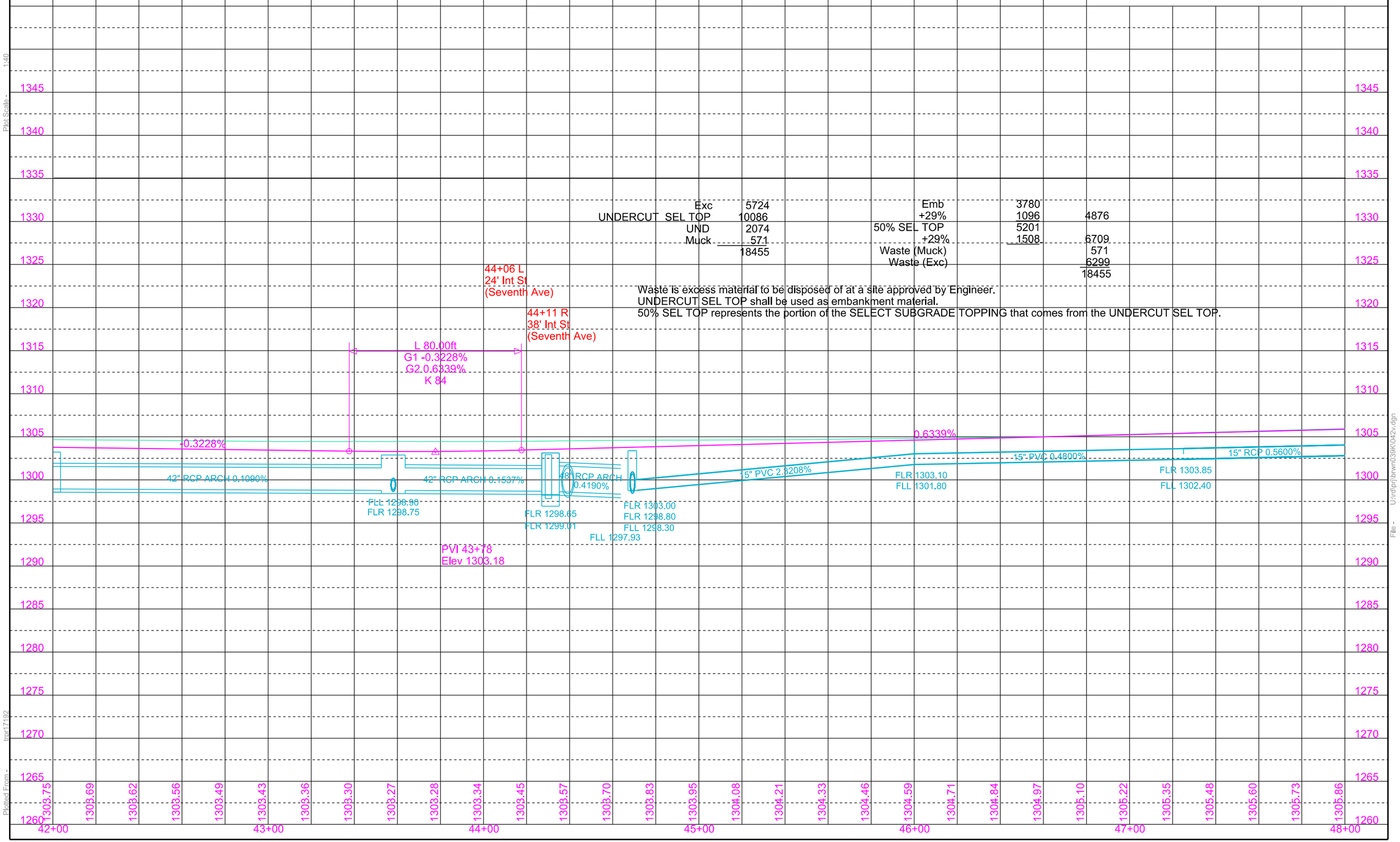

Plot Scale - 1:40
Plotted From - tpr17192
File - U:\rdp\hbrwn039\0042v.dgn

STATE OF SOUTH DAKOTA	PROJECT	SHEET	TOTAL SHEETS
	P 0037(129)207 NH 0012(198)308	B43	B131

Plotting Date: 06/22/2016 Revised 11-19 - 2015 (BT)

48+50-30.17' R to 39.91' R
Install 15"-10' PVC &
RCP Safety End w/ Bars
(Between Tee & Inlet)

48+50-30.17' R
Install 15" PVC Tee

48+50-30.17' R to 49+75-30.17' R
Install 15"-126' PVC
(Between Tee & Bend)

49+74-45' L
Install 18"-42' RCP
& 2 Safety End Sections

49+75-30.17' R to 45.31' R
Install 15"-14' PVC &
RCP Safety End w/Bars
(Between Bend & Inlet)

49+75-30.17' R
Install 15"- 90° PVC Bend

49+74-56' L
Reset Gate

49+64-56' L to 49+84-56' L
Remove Chain Link Fence

50+34-56' L
Remove Gate for Reset

50+24-56' L to 50+44-56' L
Install 20'-6' Chain Link Fence
with Barbed Wire Top

53+81.91-21.67' R to 54+45-21.67' R
Install 18"-64' RCP
(Between Drop Inlet & Junction Box)

53+81.91-49' R to 21.67' R
Install 18"-28' RCP
& 1 Safety End Section
(Between Inlet & Drop Inlet)

53+81.91-21.67' R
Install 2'x3' Type B Drop Inlet
with 6" Concrete Collar and
Type B Frame and Grate

Sec. 24 - T123 N - R61W

Jon B. Anderson Revocable Trust

Parcel 21

City of Groton

Parcel 22

GROTON'S
OUTLOT A

50+35 L
Elim Entrance

50+50 - 38' L
Do Not Disturb Power Pole

David P. Krueger,Roger A. Krueger
Daniel B. Krueger & Kevin S. Krueger

Parcel A18

KRUEGER'S
SECOND
ADDITION

Lot 3

GROTON

49+27-47' & 60'
49+32.00-38.17'
49+32.00-55.17'
49+52.35-60.15'
49+52.38-55.13'
50+08.30-55.01'
50+08.30-38.01'
50+52.37-56.50'
50+52.44-46.10'
50+52.50-37.91'
50+61.93-46.07'
50+61.98-37.89'
West Ninth Avenue
50+91.91-51.09'
50+91.98-37.96'
51+35.72 - 38.01'
53+98.78-38.37'
54+26.46-57.63'

80' Present SD Hwy 37 Section Line N 1°08'31" W Present SD Hwy 37 80'

48+00 49+00 50+00 51+00 52+00 53+00 54+00

49+16.82-41.80'
49+52-47.00'
50+00-50.00'
50+37.44' & 57.00'
50+42.48-42.07'
50+42.30-52.07'
50+51.24-57.06'
50+51.30-52.08'
East Ninth Avenue
40'
50+91.28-54'
50+91.44-42.05'

44+43 to 49+15 R
Do Not Disturb Fence

Lot 5

SMITH'S ADDITION

49+52 - 49.17' R to 49+91 R
Do Not Disturb Trees

Groton Independent Consolidated
School Dist. No. 1

Parcel 23

Lot 11

51+95 - 56' R to 53+44 - 55' R
Do Not Disturb Trees

Lot 10

16' Alley
52+34.81-55'
52+34.88-41.87'
52+50.81-54.58'
52+50.88-41.86'

Lot 12

Lot 13

53+66-54' & 65'
53+71.31-41.75'
53+71.37-59.71'
53+94.33-59.69'
53+94.38-64.69'

United Methodist Church

Parcel 24 & A20

BLOCK 22

RANDALL'S ADDITION

Parcel 23
49+16.82 to 50+51.30 R
Temporary Easement for
Grading,Curb & Gutter containing
715 sq ft, more or less

Parcel 22
49+52.35 to 50+52.50 L
Temporary Easement for
Grading & Entrance containing
1080 sq ft,more or less

Parcel 21
50+52.44 to 50+61.98 L
Temporary Easement for
Grading & Entrance containing
78 sq ft,more or less

Parcel A18
50+91.91 to 51+35.72 L
Temporary Easement for
Grading & Entrance containing
287 sq ft, more or less

Parcel A20
50+91.28 to 52+34.88 R
Temporary Easement for
Grading, Curb & Gutter containing
1799 sq ft, more or less

Parcel 24
52+50.81 to 53+94.38
Temporary Easement for
Grading, Curb & Gutter containing
1682 sq ft, more or less

Plot Scale - 1:40
Plotted From - trgt17192
File - U:\rdp\pj\bnwn039K\048.dgn

STATE OF SOUTH DAKOTA	PROJECT	SHEET	TOTAL SHEETS
	P 0037(129)207 NH 0012(198)308	B44	B131

Plotting Date: 06/22/2016

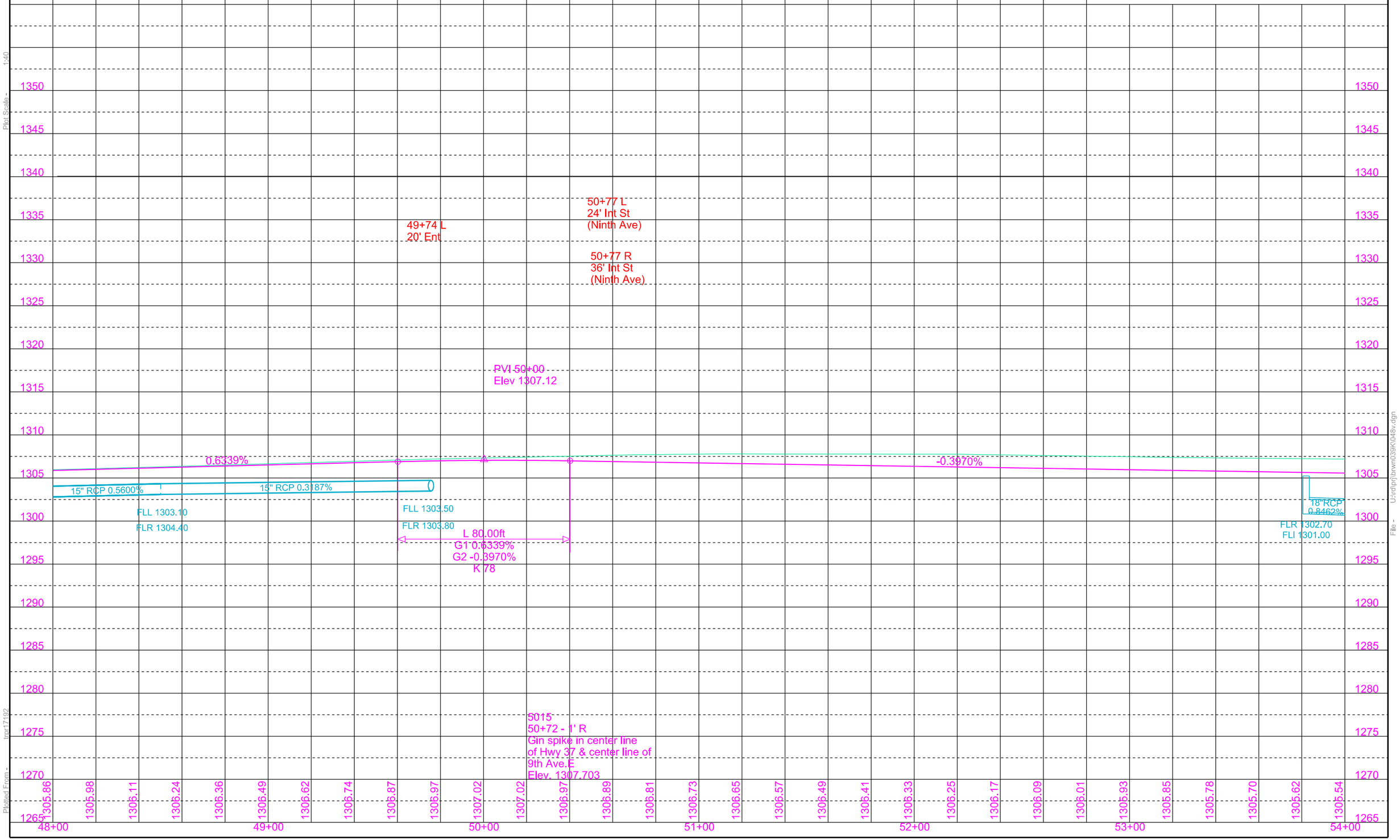

Plot Scale - 1:40

Plotted From - tpr17192

File - U:\rdep\brwn039\K048v.dgn

STATE OF SOUTH DAKOTA	PROJECT	SHEET	TOTAL SHEETS
	P 0037(129)207 NH 0012(198)308	B45	B131

Plotting Date: 06/22/2016

54+27 - 33' R
Take Out 18" - 48' RCP
(Incidental Work, Grading)

54+45-21.67' R to 54+45.18-46.37' R
Install 18"-24' RCP
(Between Junction Box & Drop Inlet)

54+45-21.67' R to 57+42.43-21.67' R
Install 18"-296' RCP
(Between Junction Box & Drop Inlet)

Install Special 5'x5' Junction Box
and Type A7 Frame & Lid
at the following locations:
54+45-21.67' R
58+07.74-21.67' R

55+80 L
Refurbish Single Mailbox

57+91 - 31' R
Take Out 18" - 49' RCP
(Incidental Work, Grading)

57+42.43-21.67' R to 58+07.74-21.67' R
Install 18"-64' RCP
(Between Drop Inlet & Junction Box)

57+42.43-21.67' R to 57+42.05-46.36' R
Install 18" - 22' RCP
(Between Drop Inlets)

57+42.05-46.36' R to 57+67.72-50.95' R
Install 18" - 24' RCP
(Between Drop Inlets)

57+42.43-21.67' R
Install 3'x4' Type B
Drop Inlet with 6"
Concrete Collar and
Type B Frame and Grate

57+42.05 - 46.36' R
Install 3'x4' Type C
Drop Inlet with Type C
Frame and Grate

58+07.74-21.67' R to 58+07.74-46.78'R
Install 18"-24' RCP
(Between Junction Box & Drop Inlet)

58+07.74-21.67' R to 60+93-21.67' R
Install 18"-286' RCP
(Between Junction Box & Drop Inlet)

Install 2'x3' Type B
Drop Inlet with 6"
Concrete Collar and
Type B Frame and Grate at the
following locations:
54+45.18-46.37' R
57+67.72-50.95' R
58+07.74-46.78' R

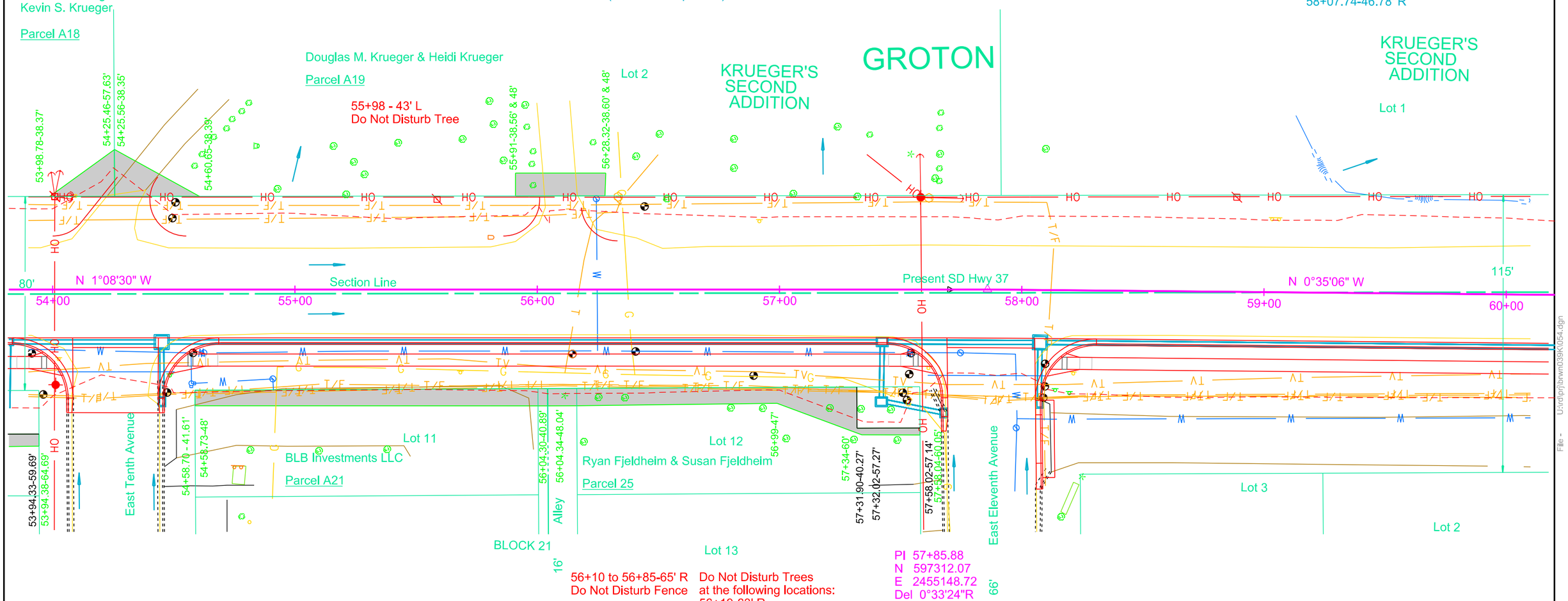

56+10 to 56+85-65' R
Do Not Disturb Fence

Do Not Disturb Trees
at the following locations:
56+19-63' R
57+03-62' R
57+31-62' R
57+50-62' R

Parcel A18
53+98.71 to 54+25.56 L
Temporary Easement for
Grading & Entrance containing
259 sq ft, more or less

Parcel A19
54+25.46 to 54+60.65 L
Temporary Easement for
Grading, Curb & Gutter containing
341 sq ft, more or less

Parcel A19
55+91.00 to 56+28.32 L
Temporary Easement for
Grading & Entrance containing
350 sq ft, more or less

Parcel A21
54+58.70 to 56+04.34 R
Temporary Easement for
Grading, Curb & Gutter containing
985 sq ft, more or less

Parcel 25
56+04.30 to 57+58.04 R
Temporary Easement for
Curb & Gutter containing
1146 sq ft, more or less

Plot Scale - 1:40
Plotted From - tpp17192
File - U:\rdp\pj\brwn039K\054.dgn

STATE OF SOUTH DAKOTA	PROJECT	SHEET	TOTAL SHEETS
	P 0037(129)207 NH 0012(198)308	B46	B131

Plotting Date: 06/22/2016

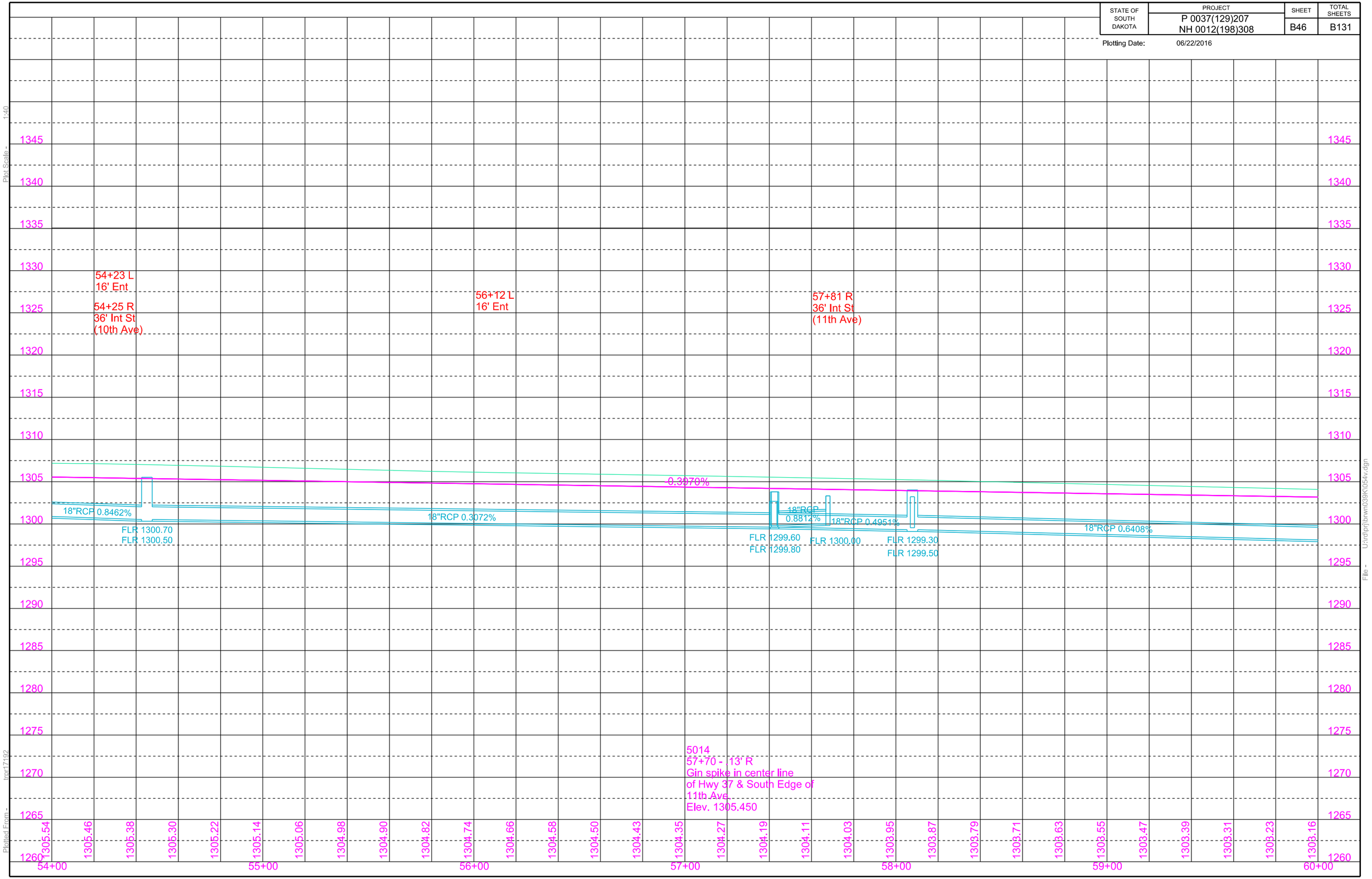

Plot Scale - 1:40

Plotted From - tpgr17192

File - U:\rdp\hbrwn039K\054v.dgn

STATE OF SOUTH DAKOTA	PROJECT	SHEET	TOTAL SHEETS
	P 0037(129)207 NH 0012(198)308	B47	B131

Plotting Date: 07/28/2016 Revised 7-28-2016 (BT)

60+93
Take Out 24" - 66' RCP
& End Sections
(Incidental Work,Grading)

60+93-21.67' R to 43' R
Install 24"-20' RCP & 1 Sloped End
(Between Drop Inlet & Inlet)

60+93-21.67' R to 38' L
Install 24"-60' RCP & 1 Sloped End
(Between Drop Inlet & Outlet)

60+93 - 21.67' R
Install 3' x 4' Type B Drop Inlet
with 6" Concrete Collar and
Type B Frame & Grate

62+32 - 33.05' L to 24.13' R
Install 18" - 54' RCP
(Between Drop Inlets)

62+32-24.13' R to 63+54.31-24.13' R
Install 18" - 116' RCP
(Between Drop Inlet & Junction Box)

65+54 - 43' R
Take Out 18" - 64' RCP
& 2 Sloped Ends
(Incidental Work,Grading)

65+54 - 46' R
Install 18" - 54' RCP
& 2 Safety Ends

65+84- 49' L
Take Out 18" - 64' CMP
& 2 Sloped End Section
(Incidental Work,Grading)

Install 4' x 11' Type S Drop Inlet Base
with Precast Type S Drop Inlet Lid
at the following locations:
62+32-33.05' L
62+32-24.13' R

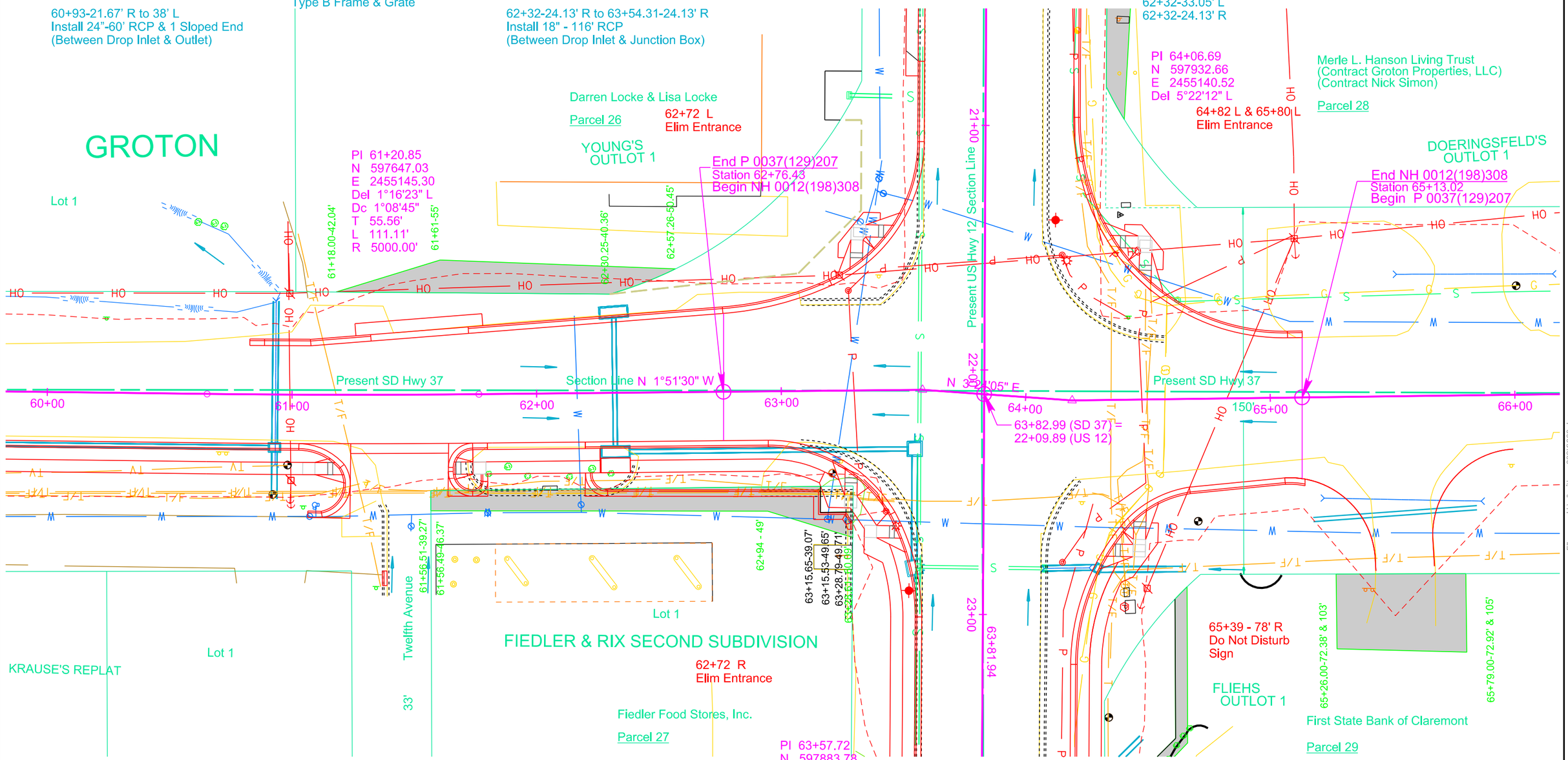

Parcel 26
61+18.00 to 62+57.26 L
Temporary Easement for
Curb & Gutter containing
1308 sq ft, more or less

Parcel 27
61+56.49 to 63+28.79 R
Temporary Easement for
Curb & Gutter containing
1646 sq ft, more or less

Parcel 29
65+26.00 to 65+79.00 R
Temporary Easement for
Entrance containing
1662 sq ft, more or less

Plot Scale - 1:40
Plotted From - tpr17192
File - U:\trdrp\jbrwnu039\K060.dgn

STATE OF SOUTH DAKOTA	PROJECT	SHEET	TOTAL SHEETS
	P 0037(129)207 NH 0012(198)308	B48	B131

Plotting Date: 07/28/2016 Revised 7-28-2016 (BT)

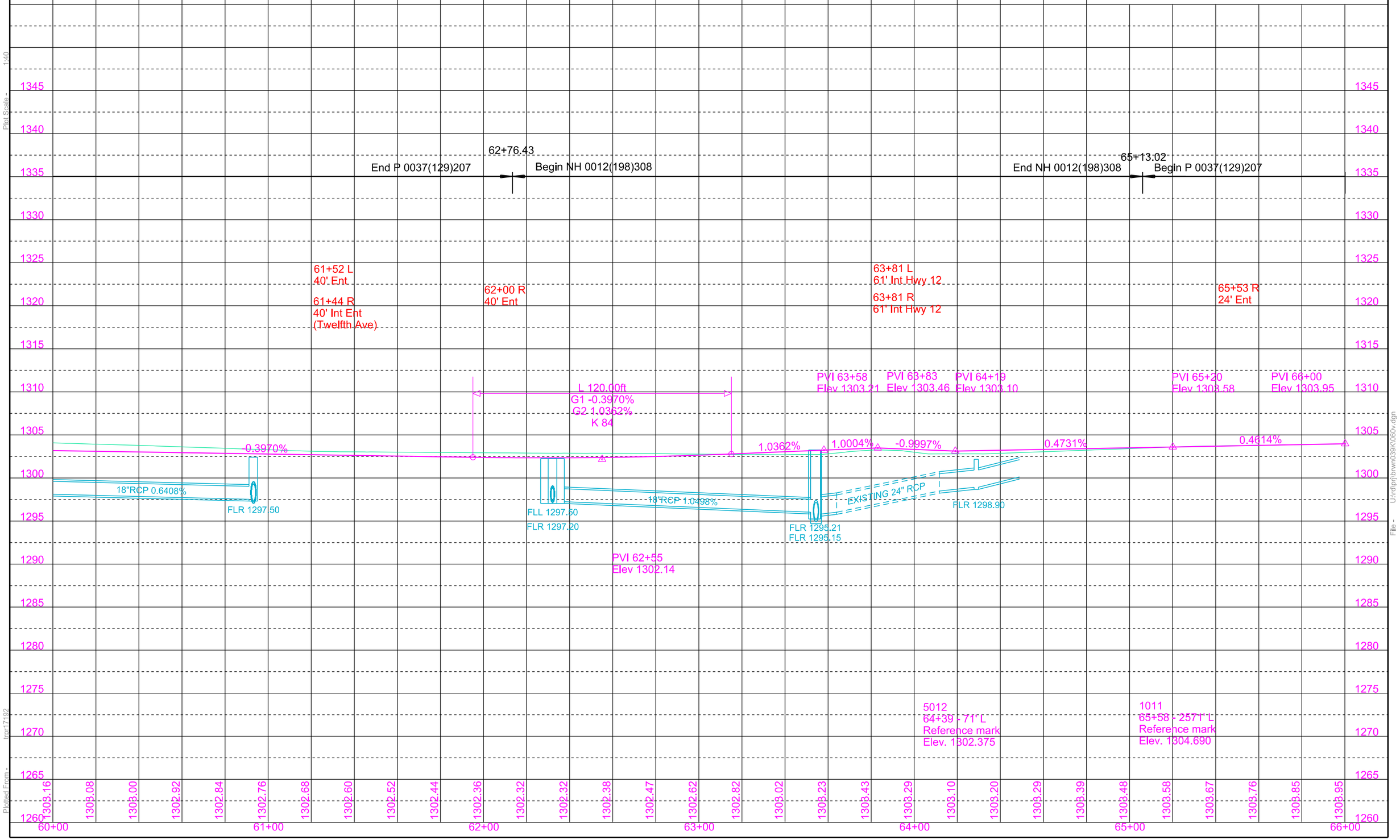

Plot Scale - 1:40

Plotted From - tpp17192

File - U:\rdproj\brwn039k\060v.dgn

STATE OF SOUTH DAKOTA	PROJECT	SHEET	TOTAL SHEETS
	P 0037(129)207 NH 0012(198)308	B49	B131

Plotting Date: 06/22/2016

66+34 L
Retain 30"-182' RCP

66+ 54 R
Retain 18"-64' RCP
& 2 Sloped Ends

66+31
Take Out 24" -68' RCP
(Incidental Work,Grading)

66+31
Install 24"-62' RCP
& 2 Sloped Ends

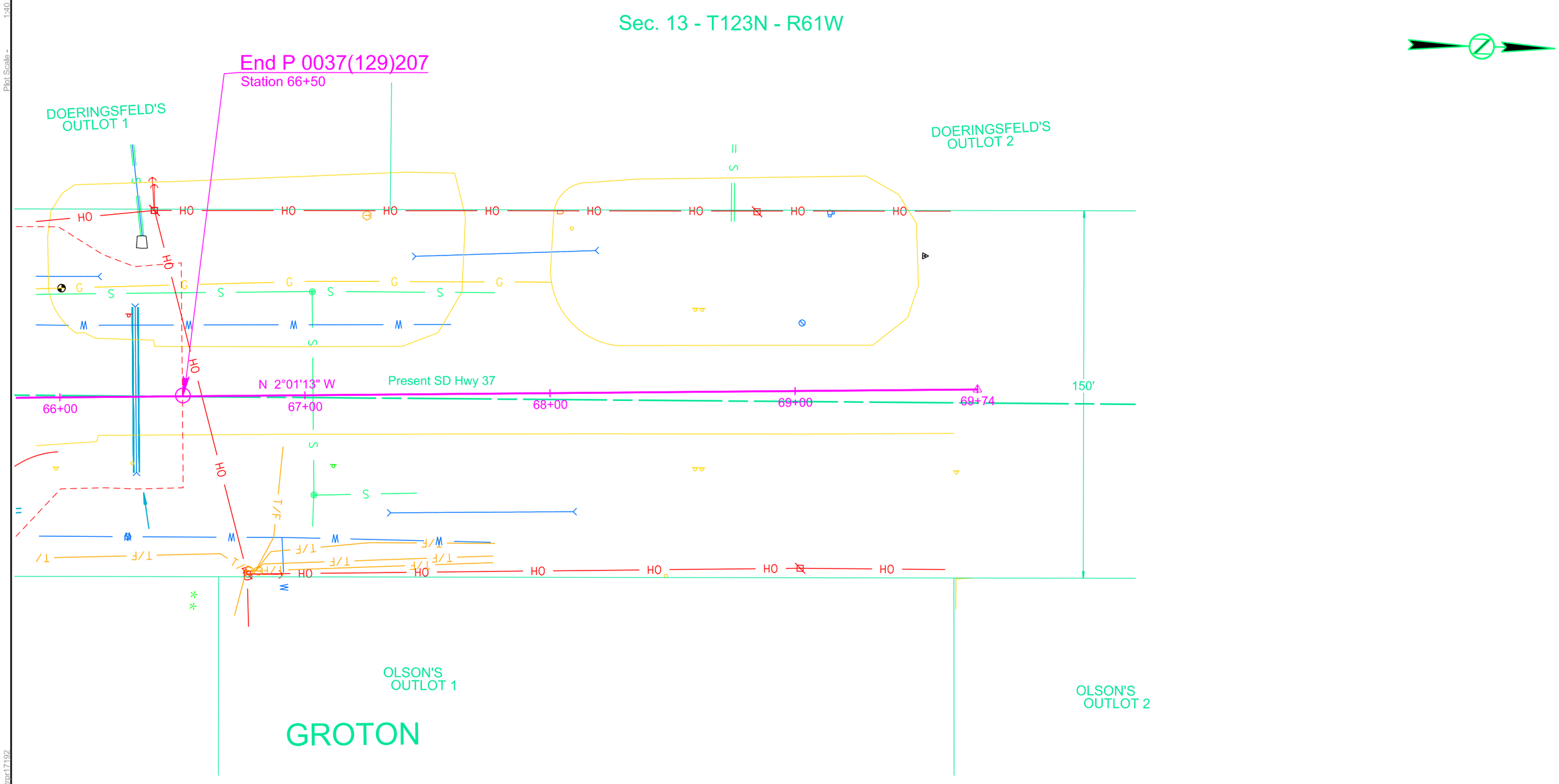

Plot Scale - 1:40

Plotted From - trgr17192

File - U:\rdprj\brwn039\K0066.dgn

STATE OF SOUTH DAKOTA	PROJECT	SHEET	TOTAL SHEETS
	P 0037(129)207 NH 0012(198)308	B50	B131

Plotting Date: 06/22/2016

Plot Scale - 1:40

Plotted From - tpp17192

File - U:\rdp\hbrwn039K\06ev.dgn

STATE OF SOUTH DAKOTA	PROJECT	SHEET	TOTAL SHEETS
	P 0037(129)207 NH 0012(198)308	B51	B131

Plotting Date: 06/22/2016

15+62-25' L to 15+62-25' R
Retain 18"- 50' RCP

15+62-25' R
Retain 2'x3' Type B
Drop Inlet

15+62-25' R to 18+62-25' R
Retain 18"- 300' RCP
(Between Drop Inlets)

15+62-25' L
Take Out Drop Inlet
with Frame and Gate

15+62.21-27.91' L
Install 2'x3' Type B
Drop Inlet with
6" Concrete Collar and
Type B Frame and Grate

15+62.21-25' L to 28' L
Install 18" - 4' RCP
(Between Drop Inlet and Existing Pipe)

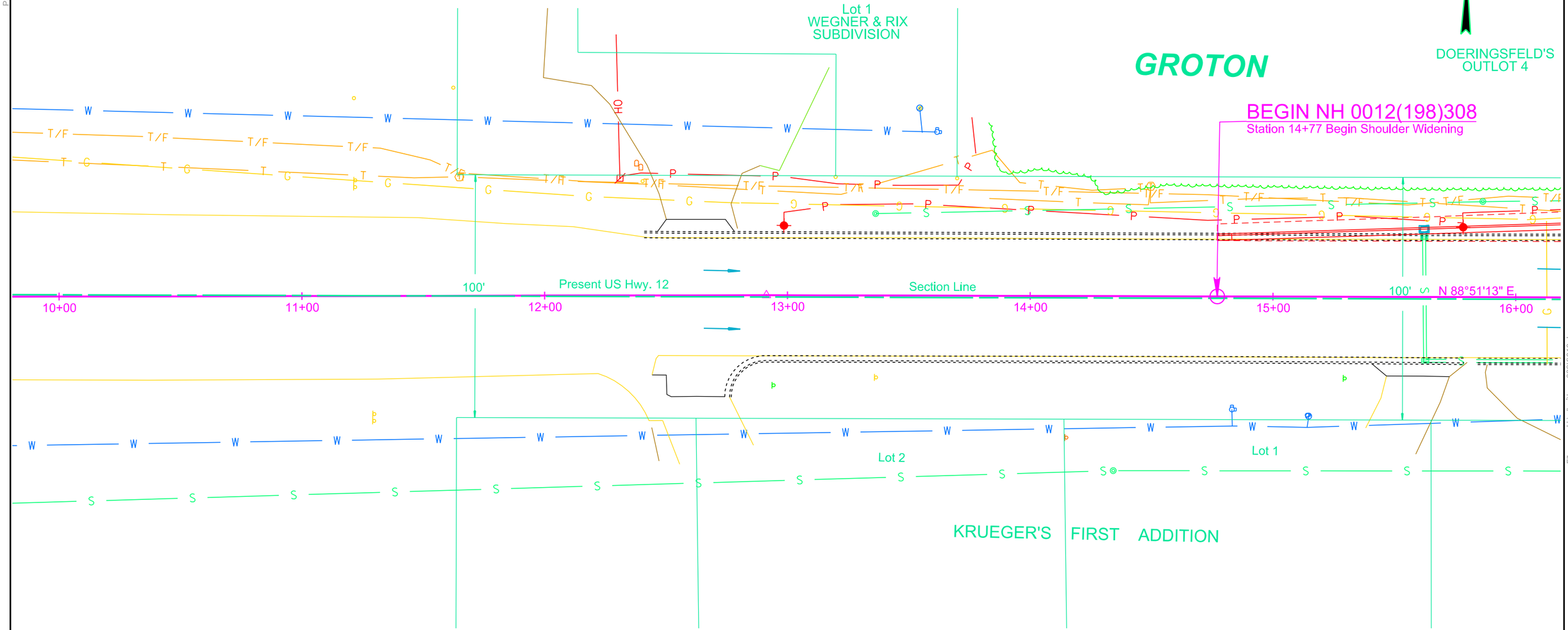

Plot Scale - 1:40

Plotted From - tnp17192

File - U:\ralph\brwn039\K010.dgn

STATE OF SOUTH DAKOTA	PROJECT	SHEET	TOTAL SHEETS
	P 0037(129)207 NH 0012(198)308	B52	B131

Plotting Date: 06/22/2016

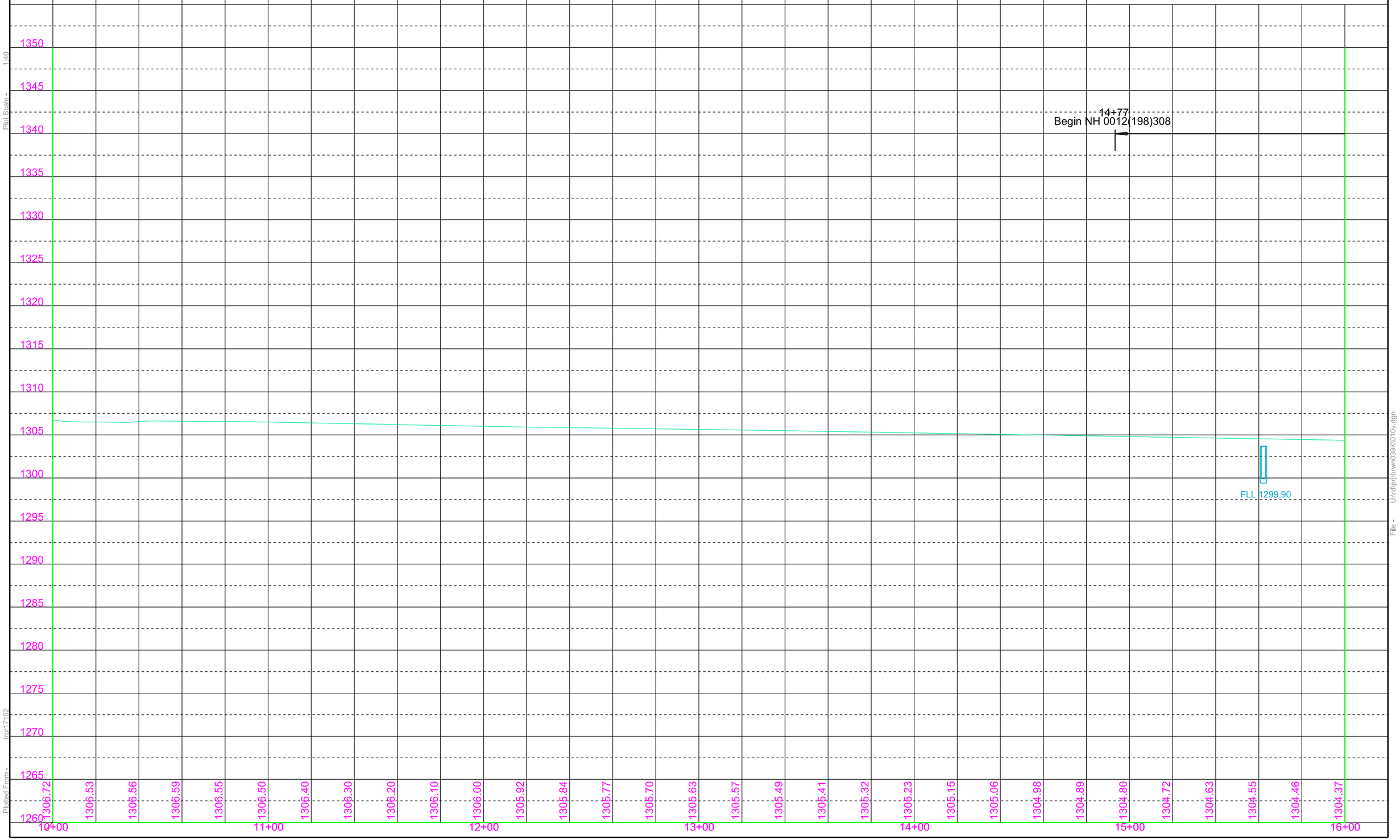

Plot Scale - 1:40

Plotted From - tpgr17192

File - U:\rdep\brwn039\K1010v.dgn

STATE OF SOUTH DAKOTA	PROJECT	SHEET	TOTAL SHEETS
	P 0037(129)207 NH 0012(198)308	B53	B131

Plotting Date: 06/22/2016

Take Out Drop Inlet
with Frame and Grate
at the following locations:
18+62 - 25' L
20+00 - 25' L

18+62-25' L to 18+62-25' R
Retain 18" - 50' RCP

19+50
Retain Twin 54" - 100' RCP Arch
& 2 Flared End Sections R

19+50 L
Take Out 2 End Sections
(Incidental Work, Grading)

18+62.57-37.66' L to 25' L
Install 18" - 14' RCP with 18"-5° Bend
at Station 18+62.57-25' L
(Between Drop Inlet & Existing Pipe)

Retain 2'x3' Type B
Drop Inlets at the
following locations:
18+62-25' R
20+00-25' R

Install 2'x3' Type B
Drop Inlets with
6" Concrete Collar and
Type B Frame and Grate
at the following locations:
18+62.57-37.66' L
20+00-37.66' L

20+88 - 55' R
Retain Type C Drop Inlet

20+88-25' R to 55' R
Retain 18" - 30' RCP

19+50 L
Install Twin 54" - 20' RCP Arch
& 2 Flared End Sections

20+00-25' L to 20+00-25' R
Retain 18" - 50' RCP

20+00-37.66' L to 25' L
Install 18" - 14' RCP
(Between Drop Inlet & Existing Pipe)

20+00-25' R to 22+35-26' R
Retain 24" - 235' RCP

20+00-25' R to 20+00-54' R
Retain 24" - 30' RCP
& End Section

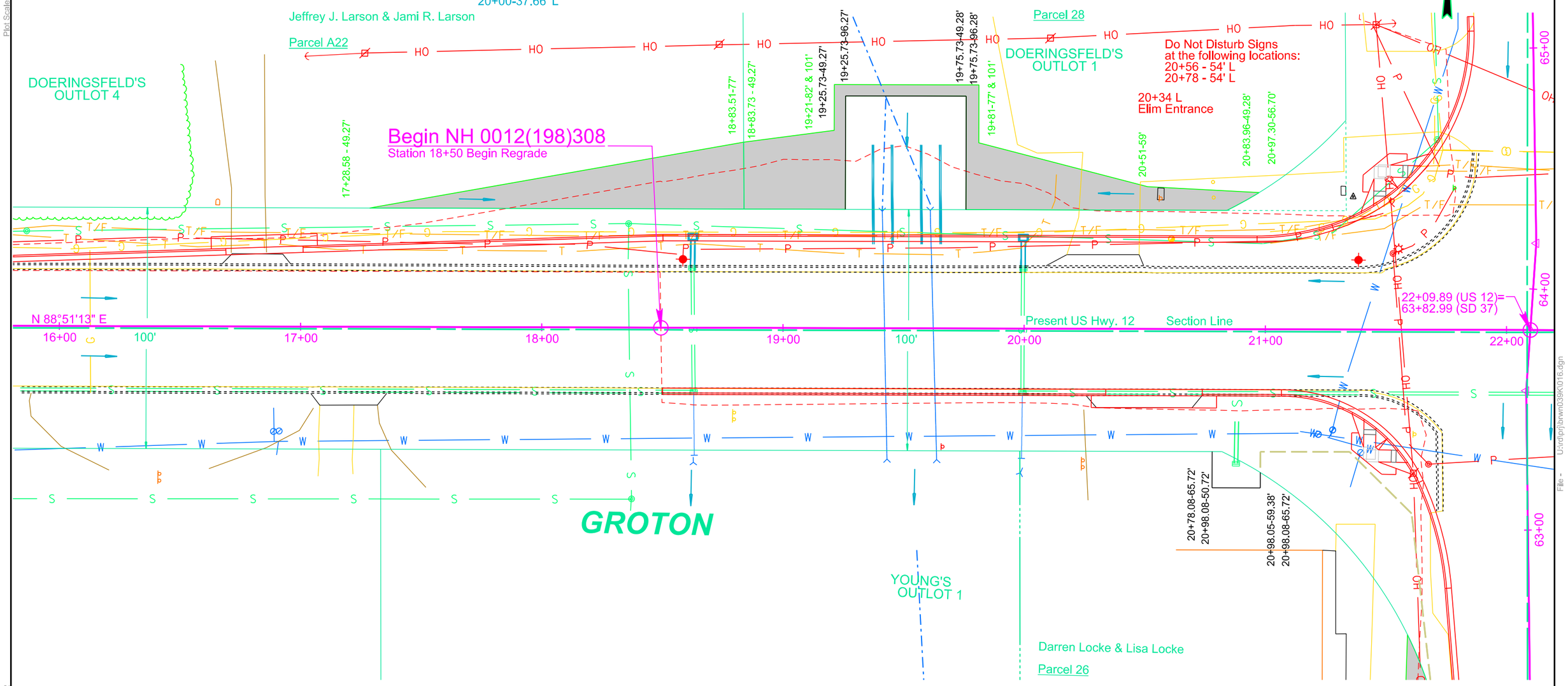

Parcel A22
17+28.58 to 18+83.73 L
Temporary Easement for
Entrance containing
2151 sq ft, more or less

Parcel 28
18+83.51 to 20+97.30 L
Temporary Easement for
Entrance containing
3543 sq ft, more or less

Plot Scale - 1:40
Plotted From - trpr17192
File - U:\ralph\brwn039\K1016.dgn

STATE OF SOUTH DAKOTA	PROJECT	SHEET	TOTAL SHEETS
	P 0037(129)207 NH 0012(198)308	B54	B131

Plotting Date: 06/22/2016

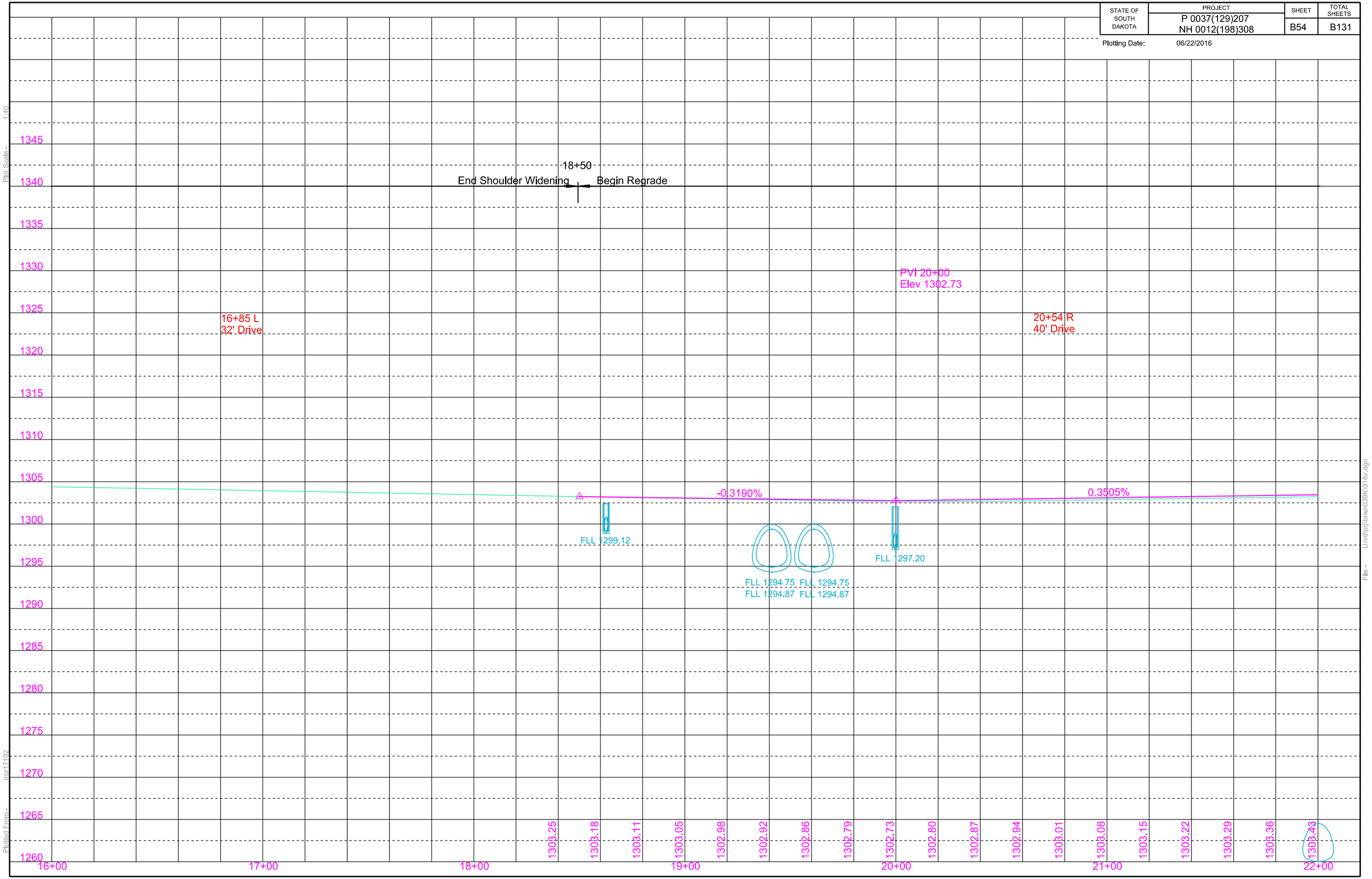

Plot Scale - 1:40

Plotted From - tpp17192

File - U:\rdep\brwn039\0016v.dgn

STATE OF SOUTH DAKOTA	PROJECT	SHEET	TOTAL SHEETS
	P 0037(129)207 NH 0012(198)308	B55	B131

Plotting Date: 06/28/2016 Revised 6-28-2016 (BT)

Take Out 2'x3' Type B
Drop Inlets with Frame and Grate
at the following locations
22+81 - 25' L
22+81 - 25' R
24+77 - 39' R
25+97 - 39' R
27+09 - 25' L

22+26-26.47' R to 22+87-26.5' R
Take Out 24"-61' RCP
(Incidental Work, Grading)

22+80.81-28.07' R
Install 5.5'x5.5' Type B Drop Inlet
with 6" Concrete Collar and
Type B Frame & Gate

22+81-43' L
Take Out 24"-18' RCP
& 1 Flared End Section
(Incidental Work, Grading)

22+26.46-26.47' R to 22+32.43-28.25' R
Install 24" - 4' RCP
(Between Existing Pipe & Junction Box)

22+32.43-28.25' R to 22+80.81-28.07' R
Install 24"-44' RCP
(Between Junction Box & Drop Inlet)

22+80.90-47' L to 80' L
Install 24"-26' RCP
& 1 Flared End Section
(Between Drop Inlet & Outlet)

22+81-25' L to 25' R
Retain 24"-50' RCP

22+87-27' R to 27+09-26' R
Retain 24"-422' RCP

22+80.90-47' L to 25' L
Install 24"-22' RCP with 24"-5° Bend
at 22+80.90-25' L
(Between Drop Inlet & Existing Pipe)

22+80.81-28.07' R to 22+87-26.5' R
Install 24"-4' RCP
(Between Drop Inlet & Existing Pipe)

22+80.81-23.7' R to 28.07' R
Install 24"-4' RCP
(Between Existing Pipe & Drop Inlet)

23+50-65' L to 25+58 - 64' L
Install 18"-214' RCP Arch (26',188')
with 18"-45° RCP Arch Bend at
23+69.17-46' L (4' Lay Length)
& 1 Flared End
(Between Outlet & Junction Box)

25+15-54' L
Take Out 24"-48' RCP
& 2 Flared End Sections
(Incidental Work, Grading)

25+94-54' L
Retain 24"-48' RCP
& 1 End Section (East)

25+57.63-46.16' L to 25+77-54' L
Install 24"-18' RCP with 24"-25° Bend
at 25+76-54' L (4' Lay Length)
(Between Junction Box & Existing Pipe)

25+57.63-46.16' L to 62.34' L
Install 18"-14' RCP Arch
& 1 Flared End
(Between Junction Box & Inlet)

25+63-54' L to 25+77-54' L
Take 24"-14' RCP
& 1 End Section (West)
(Incidental Work, Grading)

Retain 8"-12' PVC
at the following locations:
24+77 R
25+97 R

Install 2'x3' Type B Drop Inlets
with 6" Concrete Collar and
Type B Frame and Grate
at the following locations:
22+80.90-47' L
27+08.39-32.83' L

27+09-25' L to 25' R
Retain 18"-50' RCP

27+09-25' R to 46' R
Retain 18"-21' RCP
& 1 Flared End Section

27+50-58' L
Retain 18"-70' CMP
& 2 Flared End Sections

27+08.39 - 32.83' L to 24' L
Install 18" - 8' RCP
(Between Drop Inlet & Existing Pipe)

Install 3'x4' Type C Drop Inlet
with Type C Frame & Gate
at the following locations:
24+77 - 45.15' R
25+97.50 - 45.40' R

Install 8"- 8' PVC
(Between Existing PVC & Drop Inlet)
at the following locations:
24+77 - 38' R to 45.15' R
25+97.50 - 38' R to 45.40' R

22+32.43-28.25' R
Install 5' x 5' Junction Box
and Type A9 Frame & Lid

25+57.63-46.16' L
Install Special 5'x5' Junction Box
and Type A7 Frame & Lid

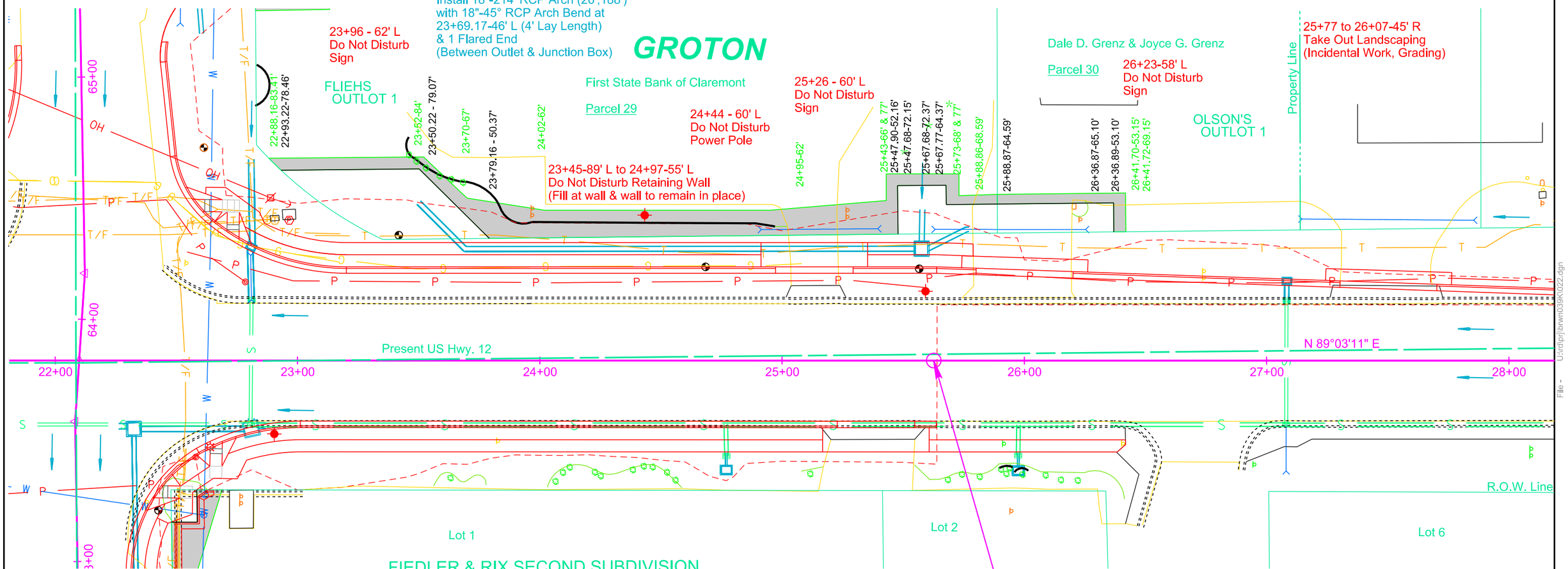

PI 22+09.89
N 597909.02
E 2455138.85
Del 0°02'32"R

Parcel 29
22+88.16 to 25+88.86 L
Temporary Easement for
Entrance containing
2779 sq ft, more or less

Parcel 30
25+88.86 to 26+41.89 L
Temporary Easement for
Entrance containing
270 sq ft, more or less

Plot Scale - 1:40
Plotted From - tmpr17192
File - U:\dlpj\brwn\039K\022.dgn

STATE OF SOUTH DAKOTA	PROJECT	SHEET	TOTAL SHEETS
	P 0037(129)207 NH 0012(198)308	B56	B131

Plotting Date: 06/22/2016

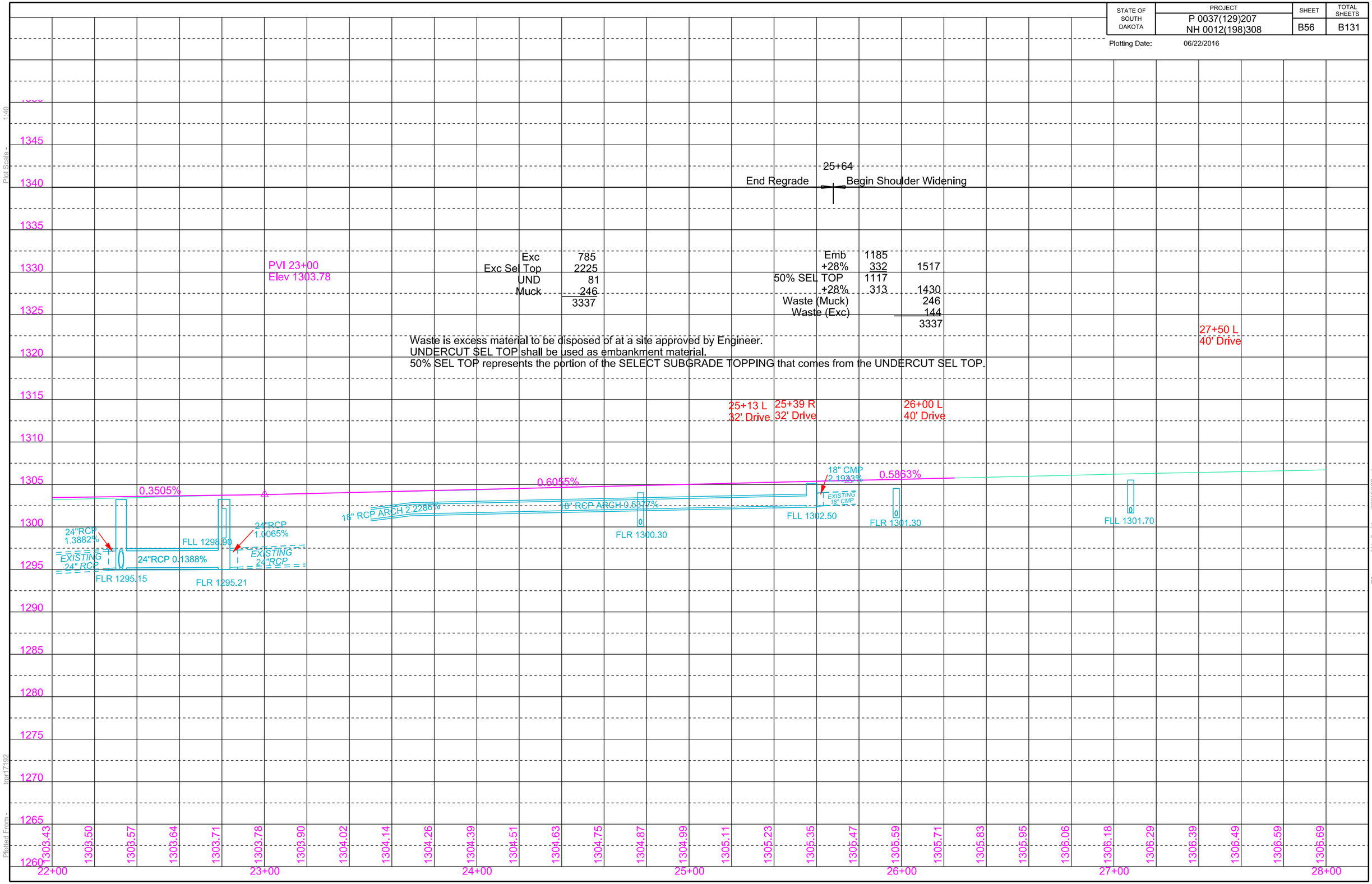

Plot Scale - 1:40

Plotted From - tpgr17192

File - U:\rdp\hbrwn039K\022v.dgn

STATE OF SOUTH DAKOTA	PROJECT	SHEET	TOTAL SHEETS
	P 0037(129)207 NH 0012(198)308	B57	B131

Plotting Date: 06/22/2016

28+90 L
Retain 18"-70' CMP
& 2 Flared End Section

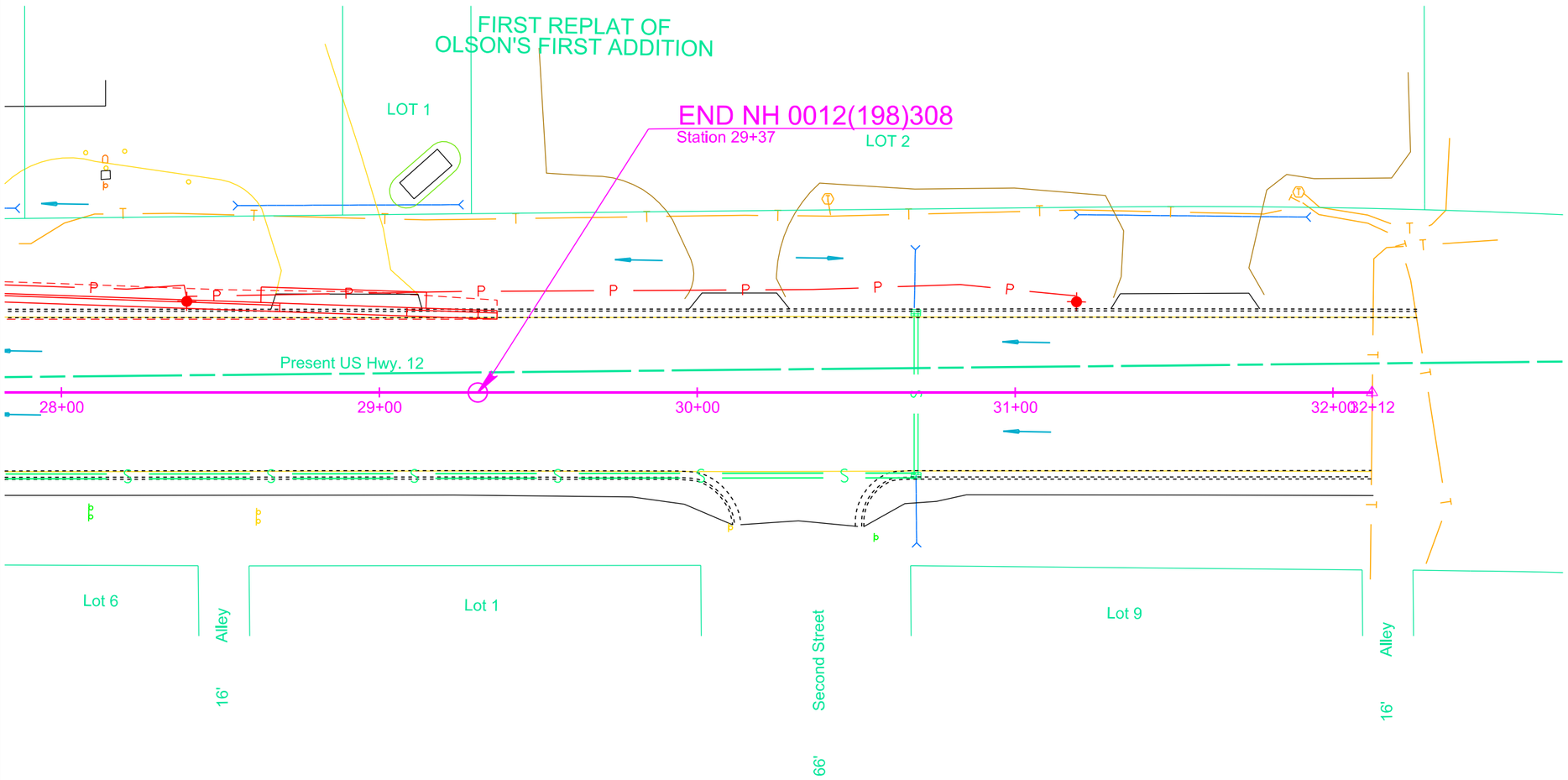

Plot Scale - 1:40

Plotted From - tmpr17192

File - U:\rdlprj\brwn\039K\028.dgn

STATE OF SOUTH DAKOTA	PROJECT	SHEET	TOTAL SHEETS
	P 0037(129)207 NH 0012(198)308	B58	B131

Plotting Date: 06/22/2016

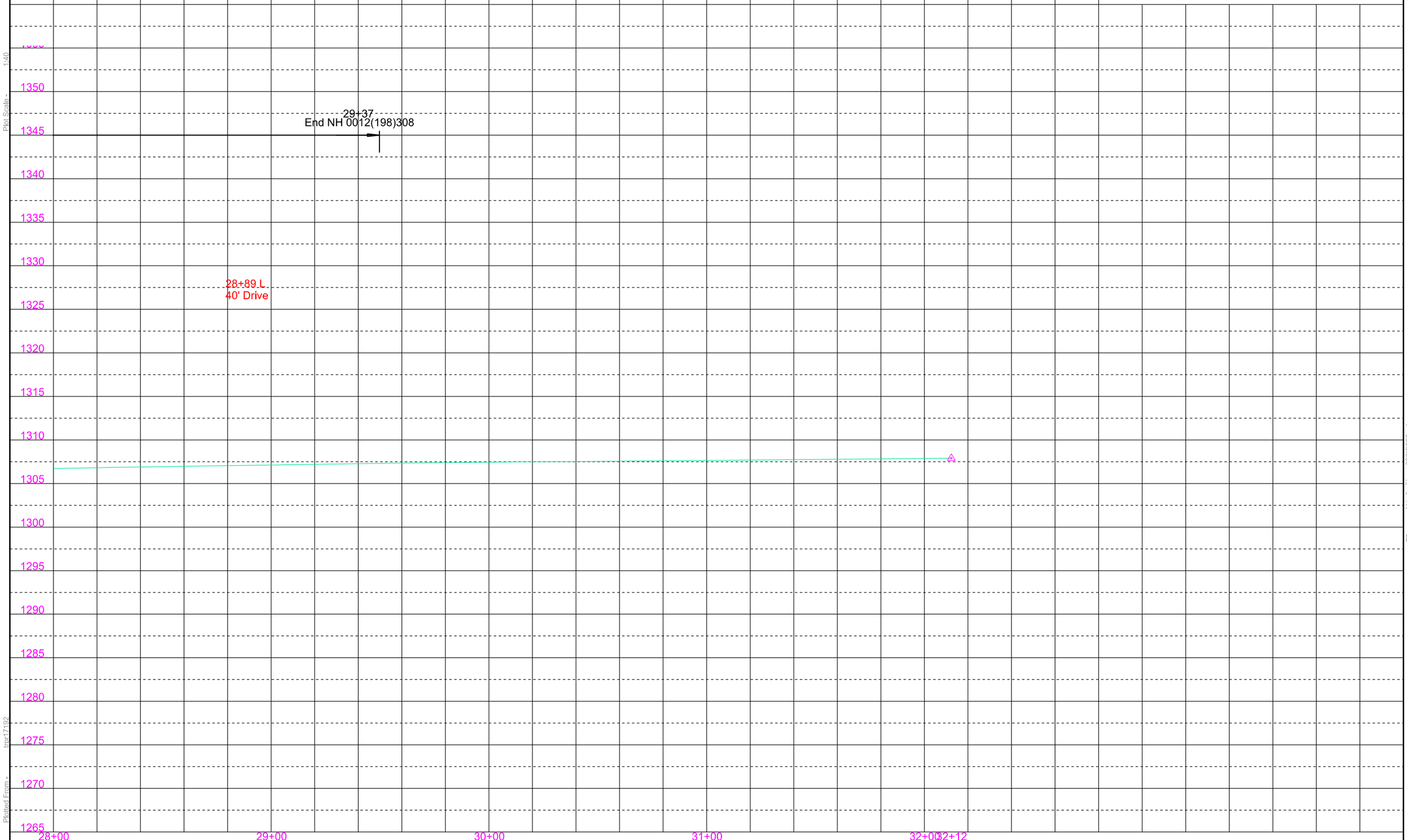

Plot Scale - 1:40

Plotted From - tpp17192

File - U:\rdlep\brwn039K\0028v.dgn

PAVEMENT REMOVAL LAYOUT

STATE OF SOUTH DAKOTA	PROJECT	SHEET	TOTAL SHEETS
	P 0037(129)207 NH 0012(198)308	B59	B131

Plotting Date: 06/22/2016

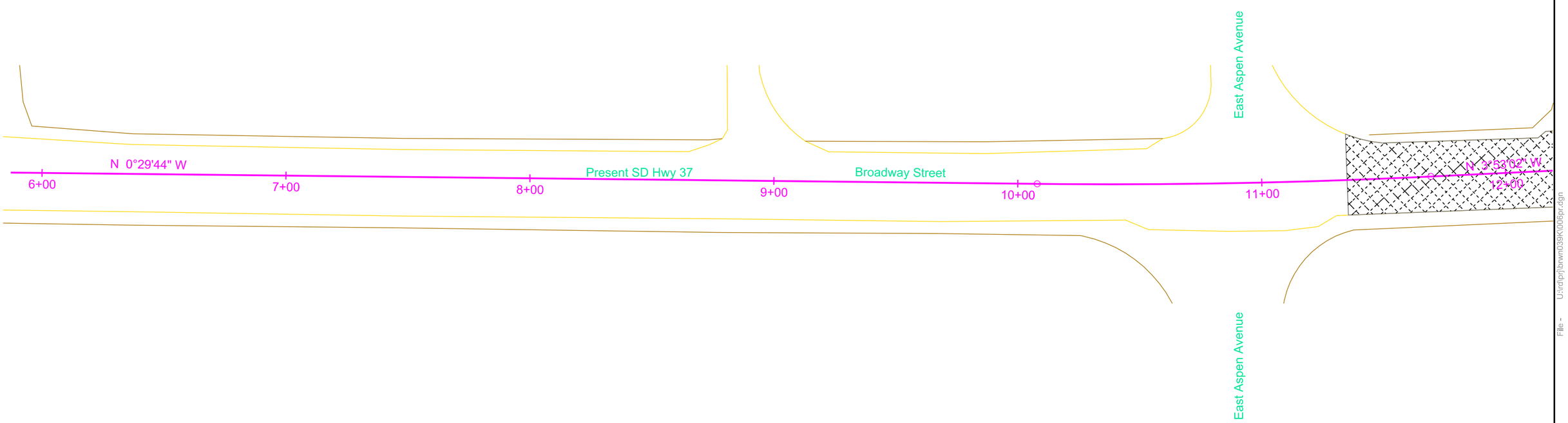

Plot Scale - 1:40
Plotted From - tpr17192
File - U:\rdprj\brwn\039K\006pr.dgn

PAVEMENT REMOVAL LAYOUT

STATE OF SOUTH DAKOTA	PROJECT	SHEET	TOTAL SHEETS
	P 0037(129)207 NH 0012(198)308	B60	B131

Plotting Date: 06/22/2016

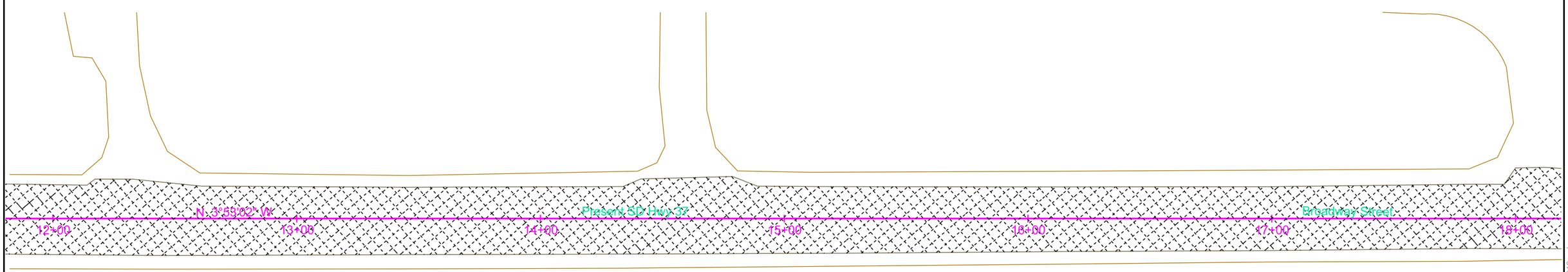

Plot Scale - 1:40

Plotted From - tqp17192

File - U:\rdlp\hbrwn039\0012pr.dgn

PAVEMENT REMOVAL LAYOUT

STATE OF SOUTH DAKOTA	PROJECT	SHEET	TOTAL SHEETS
	P 0037(129)207 NH 0012(198)308	B61	B131

Plotting Date: 06/22/2016

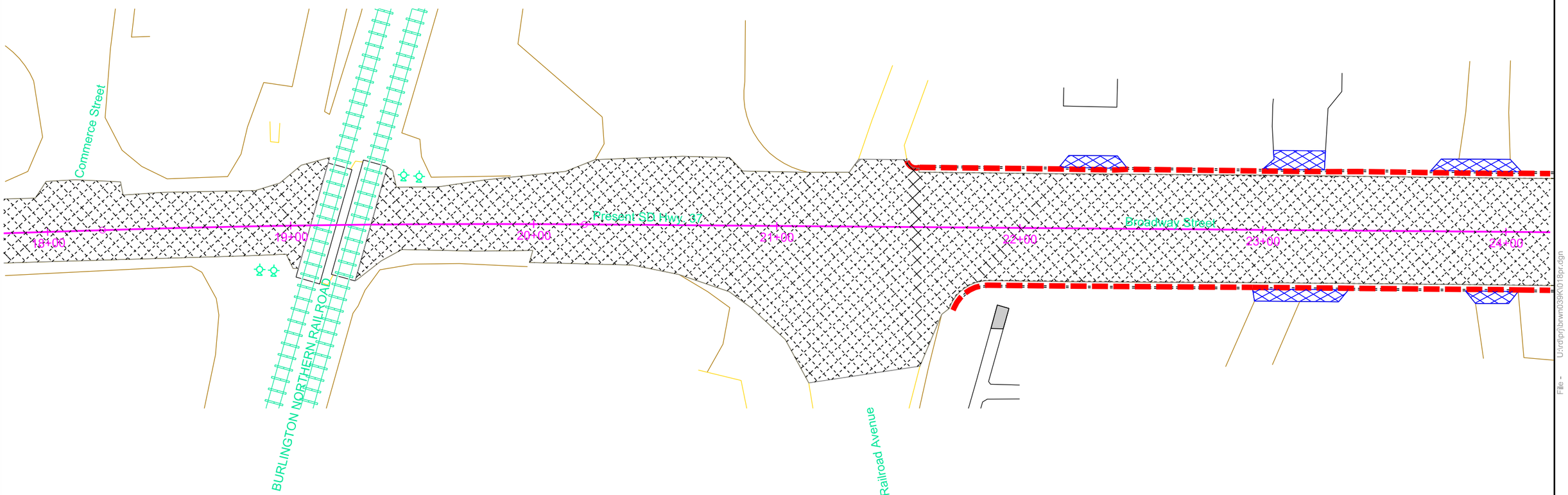

Plot Scale - 1:40

Plotted From - tpp17192

File - U:\ra\prj\brwn\039K\018pr.dgn

PAVEMENT REMOVAL LAYOUT

STATE OF SOUTH DAKOTA	PROJECT	SHEET	TOTAL SHEETS
	P 0037(129)207 NH 0012(198)308	B62	B131

Plotting Date: 06/22/2016

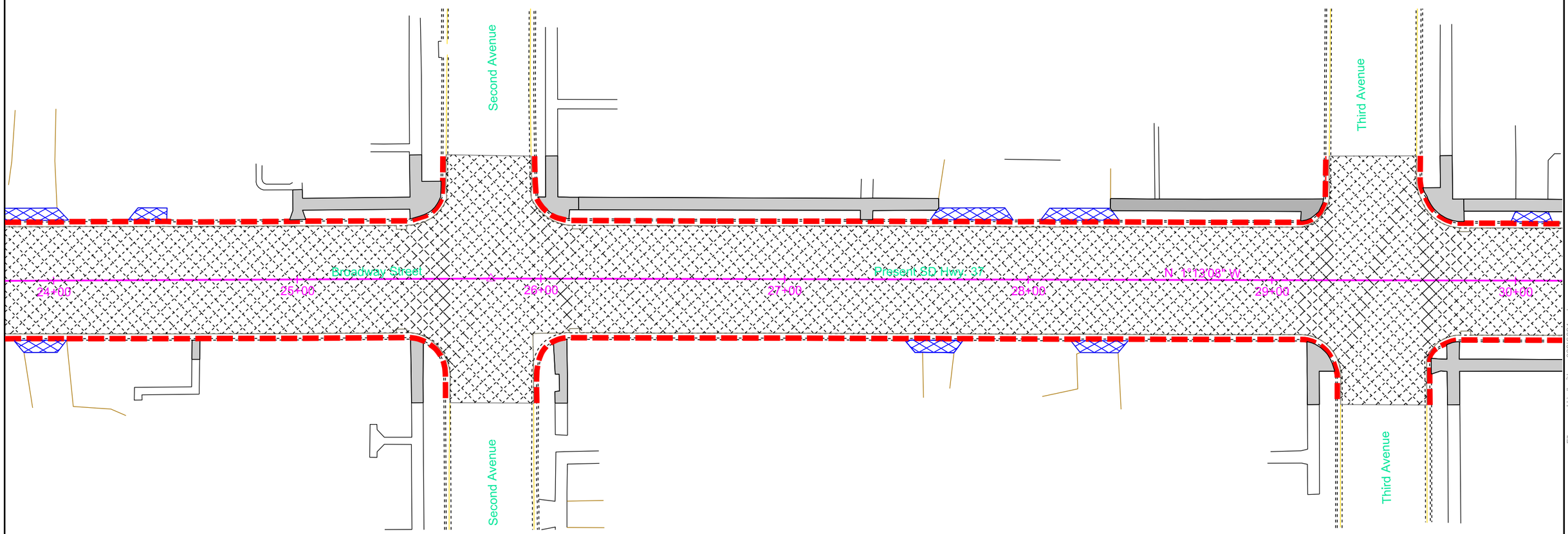

Plot Scale - 1:40
Plotted From - tpr17192
File - U:\rdprj\brwnu039k\024pr.dgn

PAVEMENT REMOVAL LAYOUT

STATE OF SOUTH DAKOTA	PROJECT	SHEET	TOTAL SHEETS
	P 0037(129)207 NH 0012(198)308	B63	B131

Plotting Date: 06/22/2016

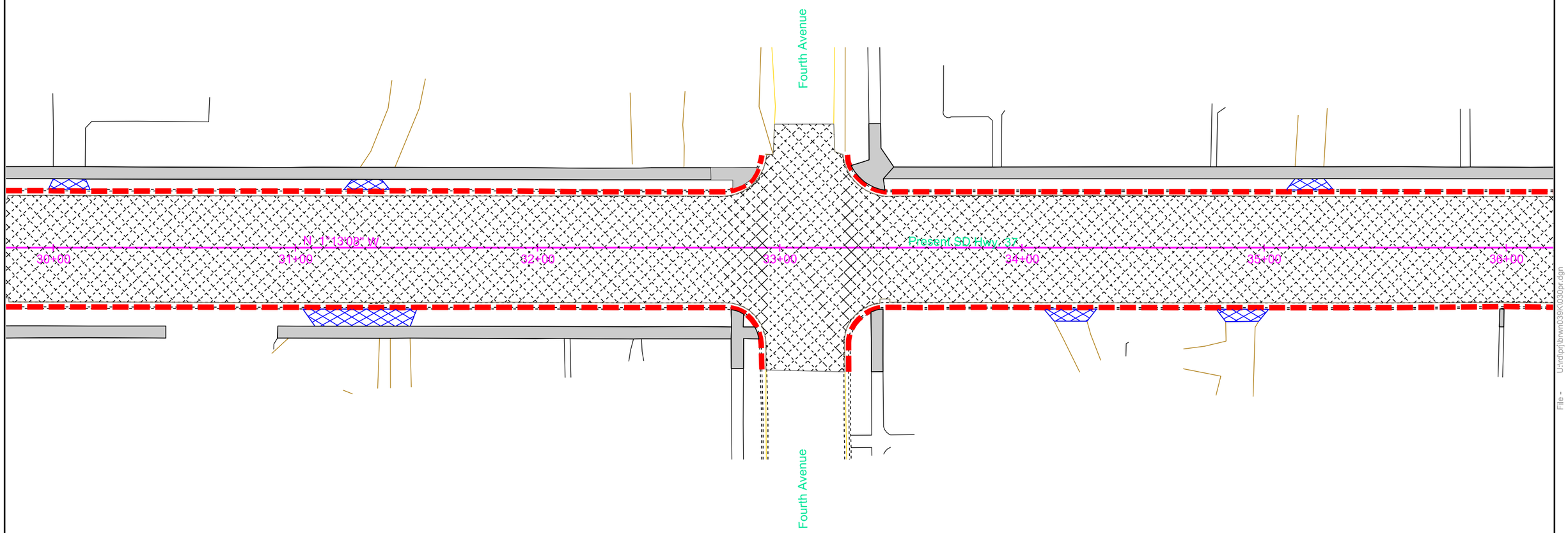

Plot Scale - 1:40
Plotted From - tpgr17192
File - U:\rdprj\brwn\039K\030pr.dgn

PAVEMENT REMOVAL LAYOUT

STATE OF SOUTH DAKOTA	PROJECT	SHEET	TOTAL SHEETS
	P 0037(129)207 NH 0012(198)308	B64	B131

Plotting Date: 06/22/2016

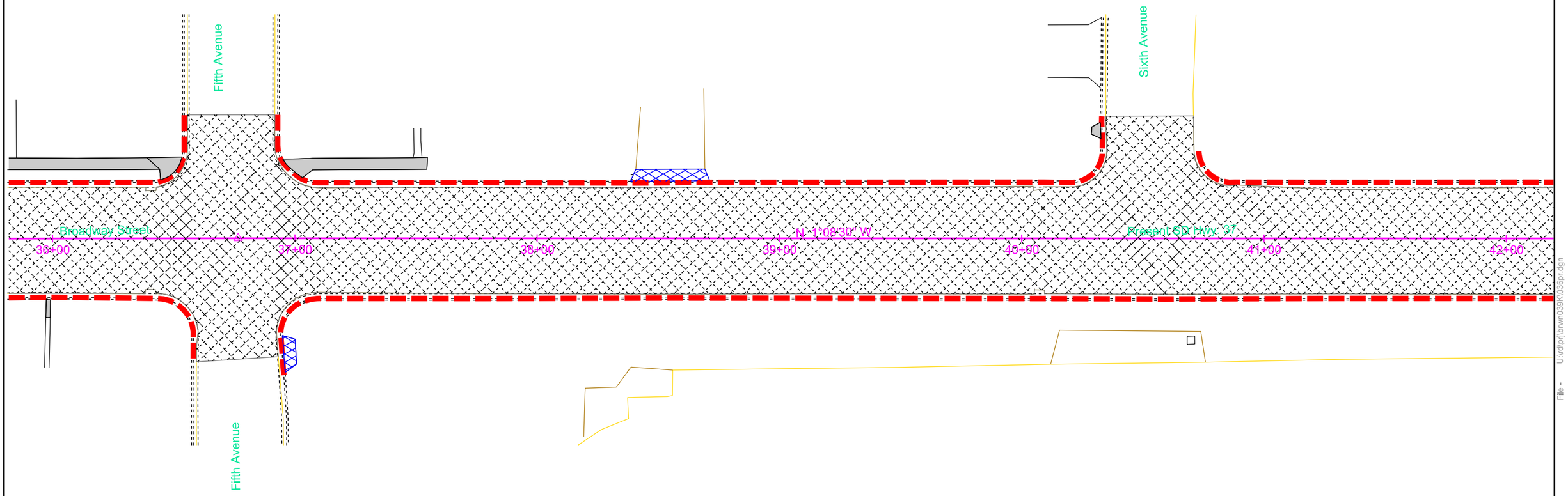

Plot Scale - 1:40

Plotted From - tqp17192

File - U:\rdp\hbrwn039\k036pr.dgn

PAVEMENT REMOVAL LAYOUT

STATE OF SOUTH DAKOTA	PROJECT	SHEET	TOTAL SHEETS
	P 0037(129)207 NH 0012(198)308	B65	B131

Plotting Date: 06/22/2016

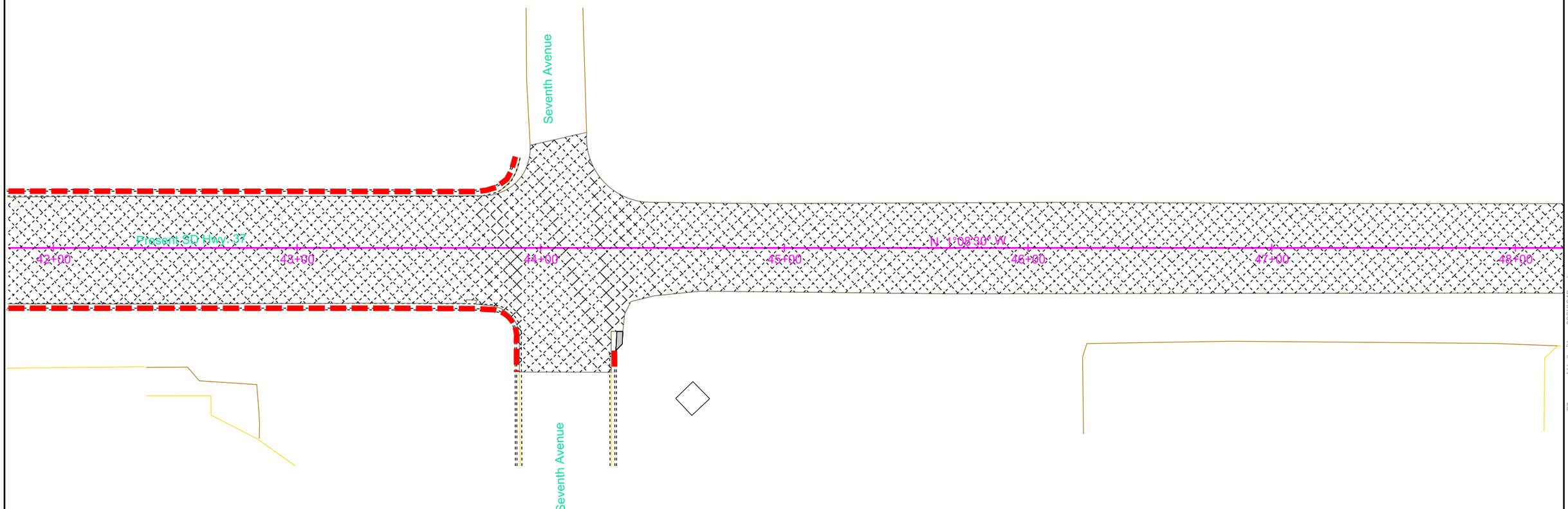

Plot Scale - 1:40

Plotted From - tpr17192

File - U:\rdi\prj\brwn\039K\042pr.dgn

PAVEMENT REMOVAL LAYOUT

STATE OF SOUTH DAKOTA	PROJECT	SHEET	TOTAL SHEETS
	P 0037(129)207 NH 0012(198)308	B66	B131

Plotting Date: 06/22/2016

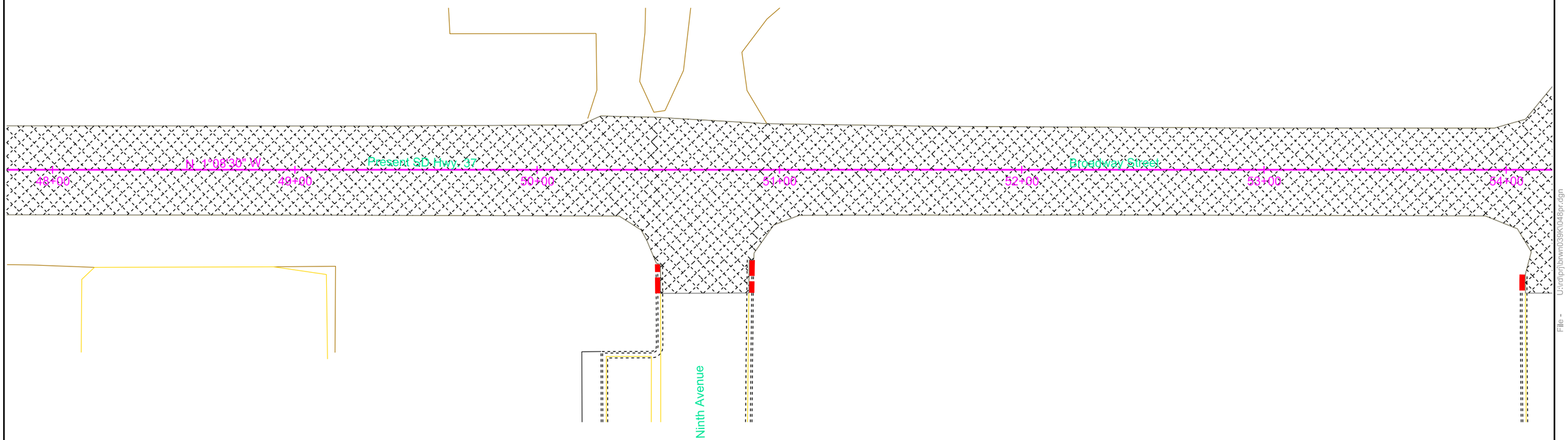

Plot Scale - 1:40

Plotted From - tpp17192

File - U:\rdpr\jbnwn\039K\048pr.dgn

PAVEMENT REMOVAL LAYOUT

STATE OF SOUTH DAKOTA	PROJECT	SHEET	TOTAL SHEETS
	P 0037(129)207 NH 0012(198)308	B67	B131

Plotting Date: 06/22/2016

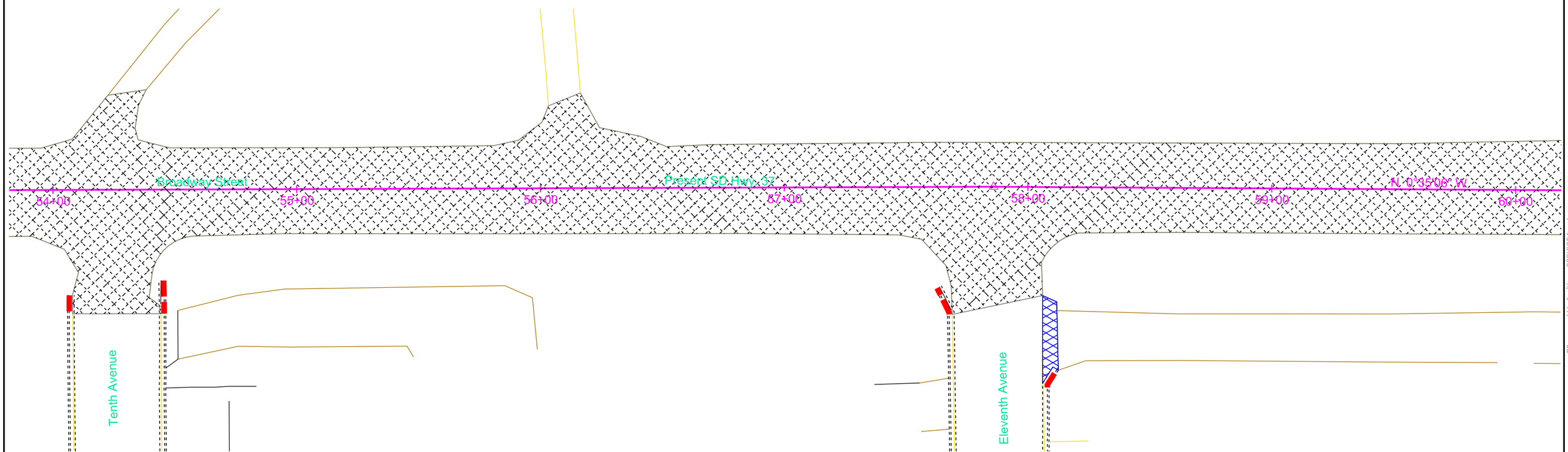

Plot Scale - 1:40

Plotted From - tmpr17192

File - U:\rdprj\brwn039K\0B4pr.dgn

PAVEMENT REMOVAL LAYOUT

STATE OF SOUTH DAKOTA	PROJECT	SHEET	TOTAL SHEETS
	P 0037(129)207 NH 0012(198)308	B68	B131

Plotting Date: 06/22/2016

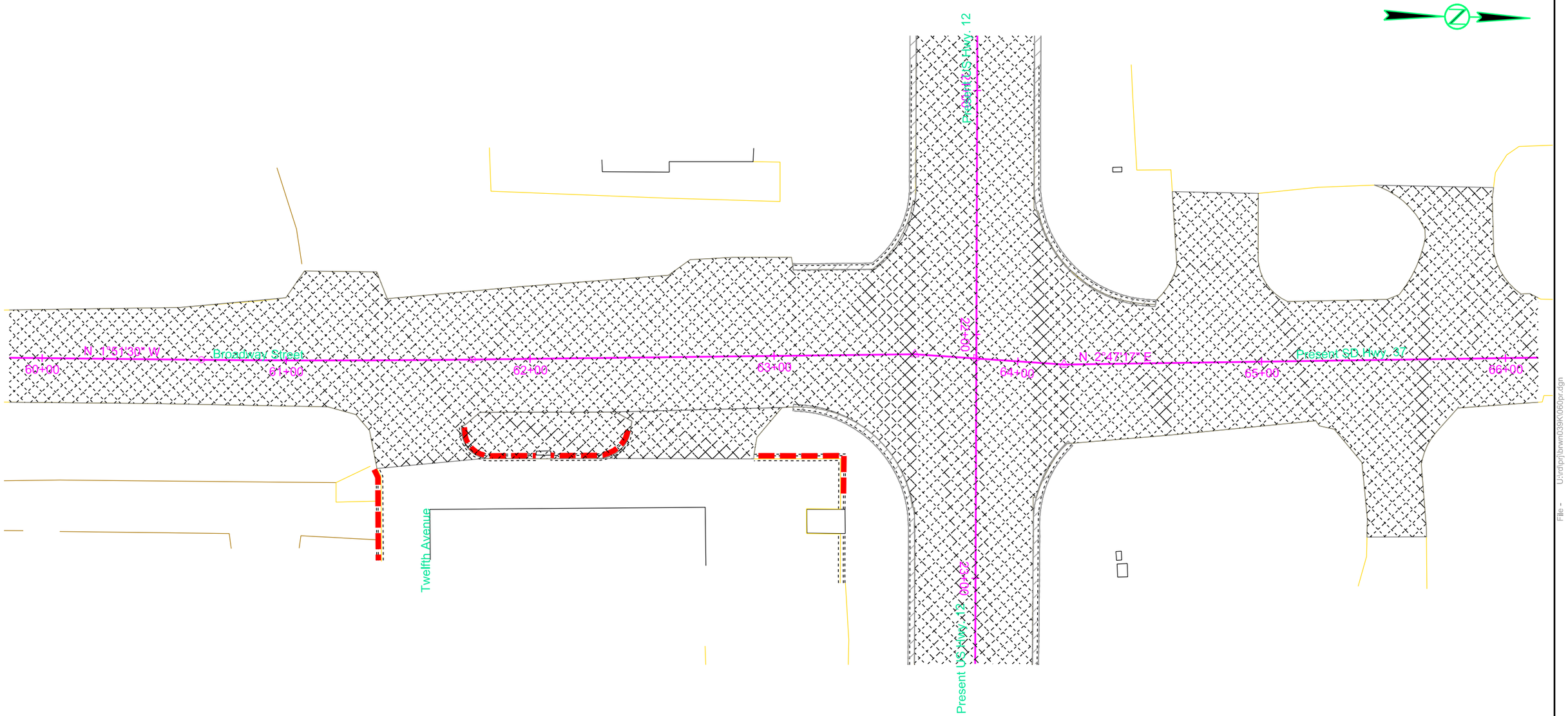

Plot Scale - 1:40

Plotted From - tmpr17192

File - U:\rdep\brwn039\K068pr.dgn

PAVEMENT REMOVAL LAYOUT

STATE OF SOUTH DAKOTA	PROJECT	SHEET	TOTAL SHEETS
	P 0037(129)207 NH 0012(198)308	B69	B131

Plotting Date: 06/22/2016

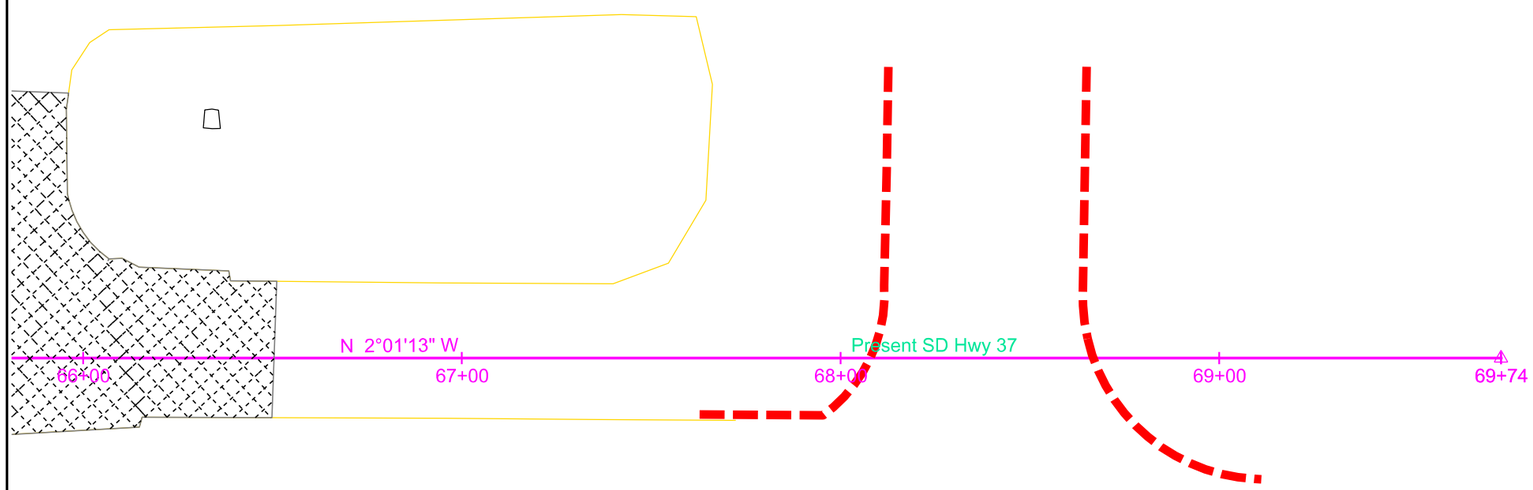

Plot Scale - 1:40
Plotted From - trpl17192
File - U:\rdprj\brwnb39k\066pr.dgn

PAVEMENT REMOVAL LAYOUT

STATE OF SOUTH DAKOTA	PROJECT	SHEET	TOTAL SHEETS
	P 0037(129)207 NH 0012(198)308	B70	B131

Plotting Date: 06/22/2016

See General Note and quantity for existing pavement section along US12.

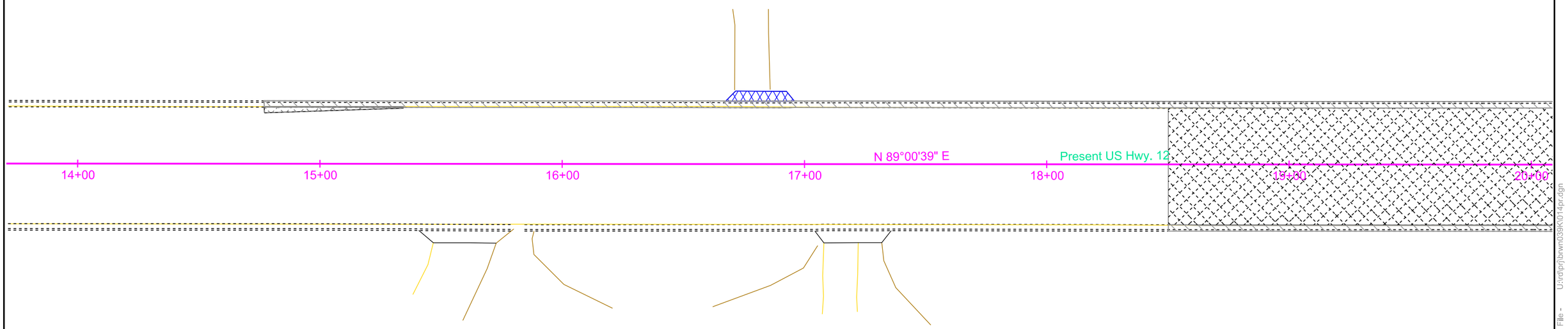

Plot Scale - 1:40
Plotted From - tnpr17192
File - U:\rdprj\brwn\039K\014pr.dgn

PAVEMENT REMOVAL LAYOUT

STATE OF SOUTH DAKOTA	PROJECT	SHEET	TOTAL SHEETS
	P 0037(129)207 NH 0012(198)308	B71	B131

Plotting Date: 06/22/2016

See General Note and quantity for existing pavement section along US12.

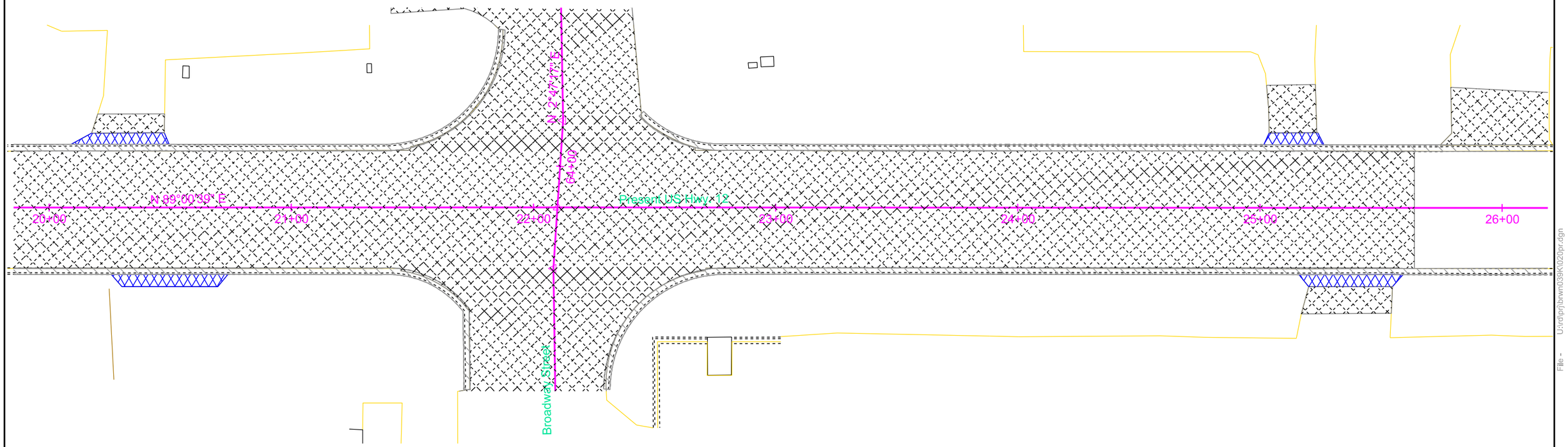

Plot Scale - 1:40
Plotted From - tpp17192
File - U:\rdprj\brwnu039k\020pr.dgn

PAVEMENT REMOVAL LAYOUT

STATE OF SOUTH DAKOTA	PROJECT	SHEET	TOTAL SHEETS
	P 0037(129)207 NH 0012(198)308	B72	B131

Plotting Date: 06/22/2016

See General Note and quantity for existing pavement section along US12.

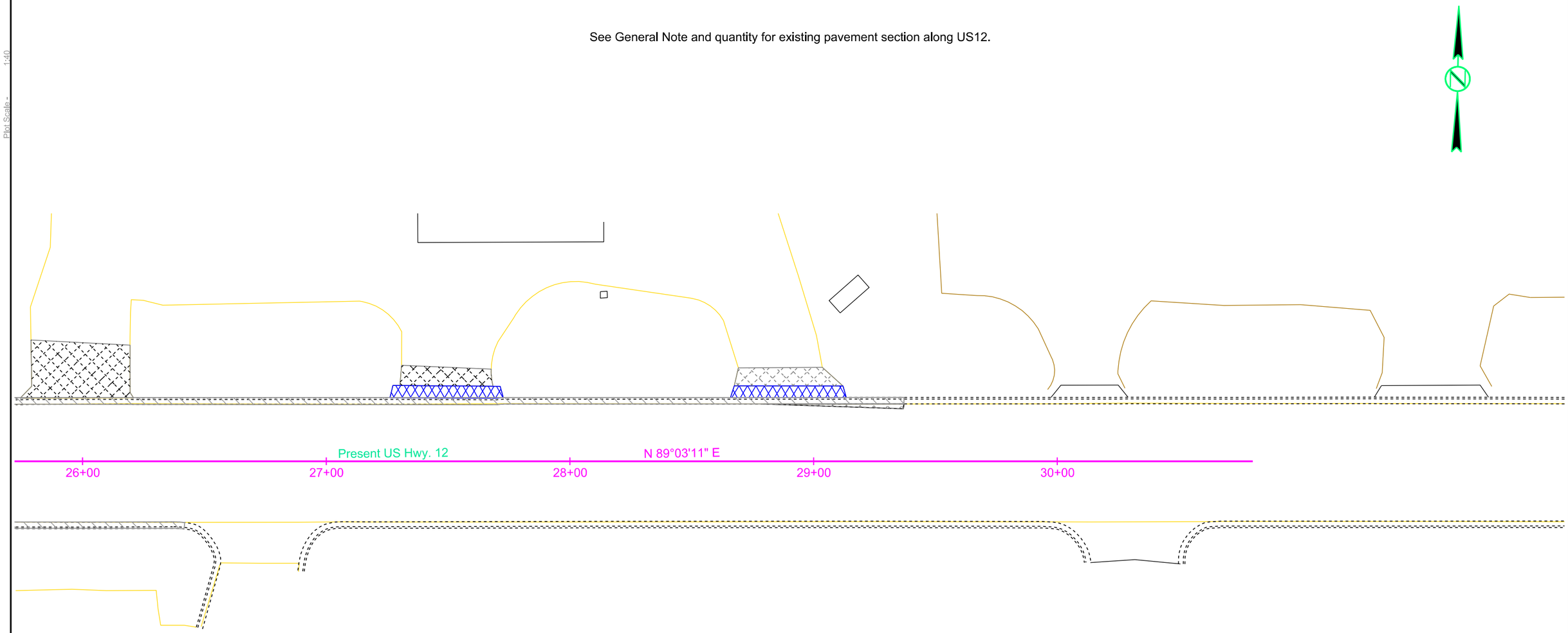

Plot Scale - 1:40
Plotted From - tmpr17192
File - U:\rdp\hbrwn039K\026pr.dgn

CURB AND GUTTER LAYOUT

STATE OF SOUTH DAKOTA	PROJECT	SHEET	TOTAL SHEETS
	P 0037(129)207 NH 0012(198)308	B73	B131

Plotting Date: 06/22/2016

Note: All curb and gutter shown on this sheet is Type B68 and all P Gutter is Type P8 except as noted.
All approach pavement is Type A and all boulevard sidewalk is 5' wide except as noted.

1 19+42.00 - 20.06' L
Begin Curb Taper
TC Elev 1308.51 (Theor.)

2 19+47.97 - 20.02' L
End Curb Taper
Begin Str C & G
TC Elev 1308.4

3 20+39.64 - 20.01' L
End Str C & G
Begin Type P Gutter
TC Elev 1306.68 (Theor.)

4 20+79.64 - 20.02' L
End Type P Gutter
Begin Str C & G
TC Elev 1306.35 (Theor.)

5 21+34.95 - 20.05' L
End Str C & G
Begin Type P Gutter
TC Elev 1305.90 (Theor.)

6 21+50.95 - 20.03' L
End Type P Gutter
Begin Str C & G
TC Elev 1305.77 (Theor.)

7 23+01.01 - 23.29.01' L
End Str C & G
Begin Type P Gutter
TC Elev 1304.55 (Theor.)

8 23+25.01 - 20.06' L
End Type P Gutter
Begin Str C & G
TC Elev 1304.36 (Theor.)

9 23+81.43 - 20.07' L
End Str C & G
Begin Type P Gutter
TC Elev 1303.90 (Theor.)

10 24+01.43 - 20.07' L
End Type P Gutter
Begin Str C & G
TC Elev 1303.76 (Theor.)

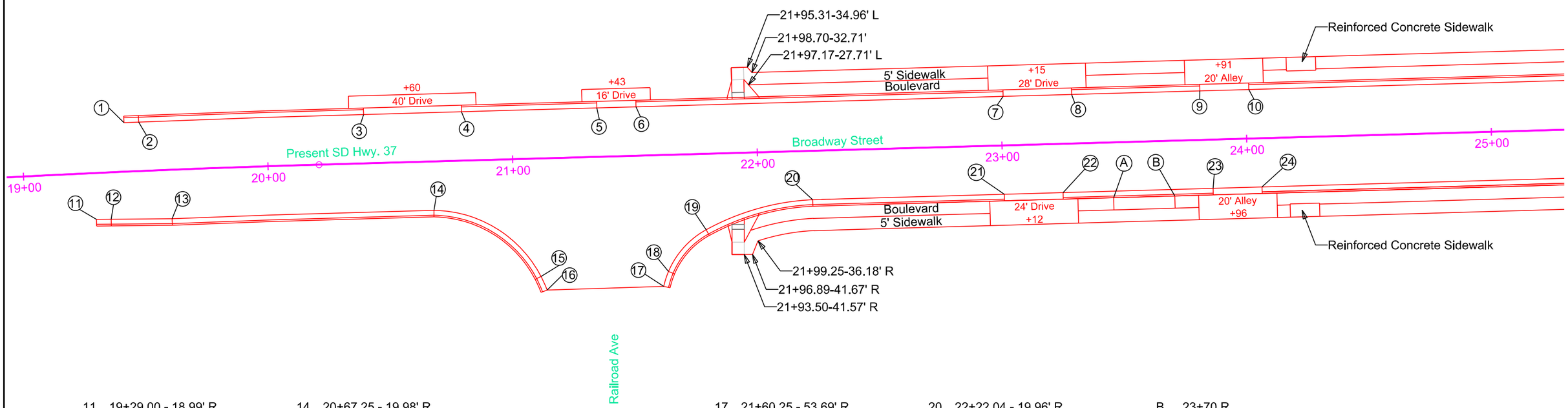

11 19+29.00 - 18.99' R
Begin Curb Taper
TC Elev 1308.56 (Theor.)

12 19+35.02 - 19.21' R
End Curb Taper
Begin Str C & G
TC Elev 1308.55

13 19+60.00 - 20.03' R
End Str C & G
Begin Str C & G
TC Elev 1308.14

14 20+67.25 - 19.98' R
End Str C & G
Begin 50' Rad C & G
TC Elev 1306.45

15 21+10.23 - 48.22' R
End 50' Rad C & G
Begin Curb Taper
TC Elev 1306.06

16 21+12.55 - 53.89' R
Begin Curb Taper
TC Elev 1306.05 (Theor.)

17 21+60.25 - 53.69' R
Begin Curb Taper
TC Elev 1306.20 (Theor.)

18 21+62.37 - 47.63' R
End Curb Taper
Begin 35' Rad C & G
TC Elev 1306.12

19 21+78.19 - 31.03' R
End 35' Rad C & G
Begin 100' Rad C & G
TC Elev 1305.82

20 22+22.04 - 19.96' R
End 100' Rad C & G
Begin Str C & G
TC Elev 1305.20

21 23+00.39 - 19.94' R
End Str C & G
Begin Type P Gutter
TC Elev 1304.56 (Theor.)

A 23+45 R
Begin Steepened Boulevard

B 23+70 R
End Steepened Boulevard

22 23+24.39 - 19.94' R
End Type P Gutter
Begin Str C & G
TC Elev 1304.36 (Theor.)

23 23+85.70 - 19.93' R
End Str C & G
Begin Type P Gutter
TC Elev 1303.87 (Theor.)

24 24+05.70 - 19.92' R
End Type P Gutter
Begin Str C & G
TC Elev 1303.75 (Theor.)

Plot Scale - 1:40
Plotted From - tmpr17192
File - U:\rdi\prj\brwn\039K\019cg.dgn

CURB AND GUTTER LAYOUT

STATE OF SOUTH DAKOTA	PROJECT	SHEET	TOTAL SHEETS
	P 0037(129)207 NH 0012(198)308	B74	B131

Plotting Date: 06/22/2016

Note: All curb and gutter shown on this sheet is Type B68 and all P Gutter is Type P8 except as noted.
All approach pavement is Type A and all boulevard sidewalk is 5' wide except as noted.

1 25+36.94 - 20.09' L
End Str C & G
Begin 25' Rad Fillet
TC Elev 1304.04

2 25+61.94 - 44.86' L
End 25' Rad Fillet
Begin Transition to
Existing C & G
TC Elev 1303.70

3 25+61.36- 50.87' L
End Transition
Existing C & G
TC Elev ±1303.80

4 25+95.92- 50.25' L
Begin Transition from
Existing C & G
TC Elev ±1303.80

5 25+95.47 - 44.23' L
End Transition C & G
Begin 25' Rad Fillet
TC Elev 1303.77

6 26+20.46 - 20.00'L
End 25' Rad Fillet
Begin Str C & G
TC Elev 1304.17

7 27+64.81 - 20.08' L
End Str C & G
Begin Type P Gutter
TC Elev 1304.06 (Theor.)

8 27+94.81 - 19.99' L
End Type P Gutter
Begin Str C & G
TC Elev 1304.16 (Theor.)

9 28+99.05 - 20.00' L
End Str C & G
Begin 25' Rad Fillet
TC Elev 1304.33

10 29+24.05 - 44.93' L
End 25' Rad Fillet
Begin Transition to
Existing C & G
TC Elev 1304.08

11 29+23.46 - 50.93' L
End Transition to
Existing C & G
TC Elev ±1304.04

12 29+59.30 - 51.13' L
Begin Transition from
Existing C & G
TC Elev ±1304.20

13 29+58.78 - 45.13' L
End Transition C & G
Begin 25' Rad Fillet
End Str C & G
TC Elev 1304.21

14 29+83.78 - 20.00' L
End 25' Rad Fillet
Begin Str C & G
TC Elev 1304.07

15 30+00.12 - 20.00' L
End Str C & G
Begin Type P Gutter
TC Elev 1304.08 (Theor.)

16 30+16.12 - 20.01' L
End Type P Gutter
Begin Str C & G
TC Elev 1304.12 (Theor.)

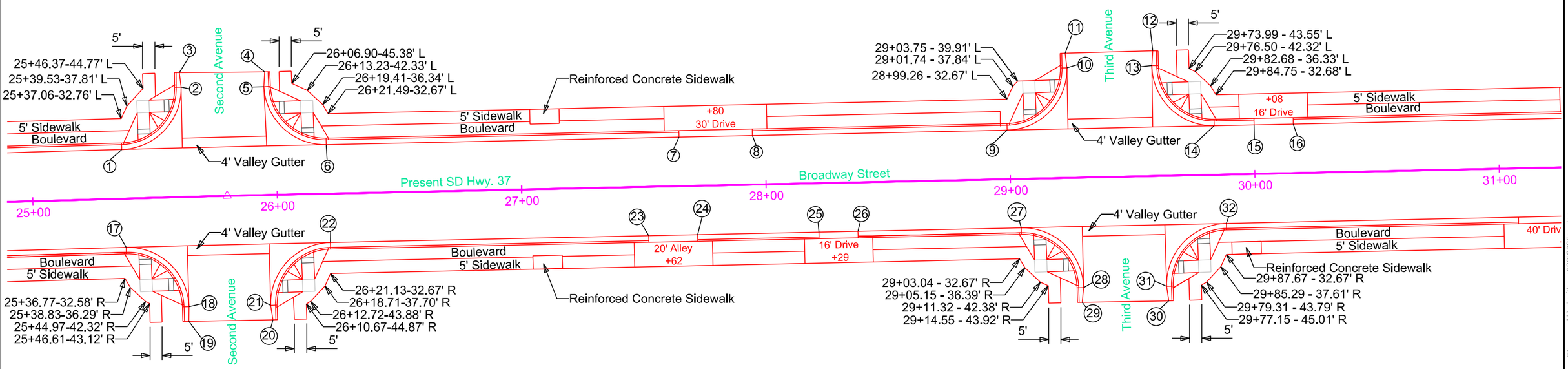

17 25+37.62 - 19.91' R
End Str C & G
Begin 25' Rad Fillet
TC Elev 1304.04

18 25+62.63 - 44.87' R
End 25' Rad Fillet
Begin Transition to
Existing C & G
TC Elev 1303.82

19 25+62.38 - 50.87' R
End Transition to
Existing C & G
TC Elev ±1303.83

20 25+97.14 - 51.11' R
Begin Transition from
Existing C & G
TC Elev ±1303.94

21 25+96.35 - 45.11' R
End Transition from
Existing C & G
Begin 25' Rad Fillet
TC Elev 1303.92

22 26+21.35 - 20.00' R
End 25' Rad Fillet
Begin Str C & G
TC Elev 1304.17

23 27+51.59 - 20.00' R
End Str C & G
Begin Type P Gutter
TC Elev 1304.03 (Theor.)

24 27+71.59 - 20.00' R
End Type P Gutter
Begin Str C & G
TC Elev 1304.09 (Theor.)

25 28+21.20 - 20.00' R
End Str C & G
Begin Type P Gutter
TC Elev 1304.24 (Theor.)

26 28+37.20 - 20.00' R
End Type P Gutter
Begin Str C & G
TC Elev 1304.29 (Theor.)

27 29+03.98 - 20.00' R
End Str C & G
Begin 25' Rad Fillet
TC Elev 1304.31

28 29+28.98 - 44.98' R
End 25' Rad Fillet
Begin Transition to
Existing C & G
TC Elev 1304.09

29 29+28.29 - 50.98' R
End Transition to
Existing C & G
TC Elev ±1304.06

30 29+63.70 - 51.14' R
Begin Transition from
Existing C & G
TC Elev ±1304.15

31 29+62.91 - 45.14' R
End Transition from
Existing C & G
Begin 25' Rad Fillet
TC Elev 1304.14

32 29+87.91 - 20.00' R
End 25' Rad Fillet
Begin Str C & G
TC Elev 1304.06

Plot Scale - 1:40
Plotted From - tmpr17192
File - U:\rdprj\brwn\039K\025cg.dgn

CURB AND GUTTER LAYOUT

STATE OF SOUTH DAKOTA	PROJECT	SHEET	TOTAL SHEETS
	P 0037(129)207 NH 0012(198)308	B75	B131

Plotting Date: 06/22/2016

Note: All curb and gutter shown on this sheet is Type B68 and all P Gutter is Type P8 except as noted.
All approach pavement is Type A and all boulevard sidewalk is 5' wide except as noted.

1 31+31.42 - 20.01' L
End Str C & G
Begin Type P Gutter
TC Elev 1304.47 (Theor.)

2 31+47.42 - 20.01' L
End Type P Gutter
Begin Str C & G
TC Elev 1304.52 (Theor.)

3 32+35.72 - 20.00' L
End Str C & G
Begin Type P Gutter
TC Elev 1304.79 (Theor.)

4 32+59.72 - 20.01' L
End Type P Gutter
Begin Str C & G
TC Elev 1304.86 (Theor.)

5 32+64.77 - 20.01' L
End Str C & G
Begin 25' Rad Fillet
TC Elev 1304.87

6 32+89.77 - 44.95' L
End 25' Rad Fillet
Begin Curb Taper
TC Elev 1304.70

7 32+89.79 - 50.95' L
End Curb Taper
TC Elev 1304.76 (Theor.)

8 33+25.79 - 51.07' L
Begin Curb Taper
TC Elev 1404.47 (Theor.)

9 33+25.77 - 45.07' L
End Curb Taper
Begin 25' Rad Fillet
TC Elev 1404.55

10 33+50.77 - 20.01' L
End 25' Rad Fillet
Begin Str C & G
TC Elev 1304.77

11 34+15.47 - 20.01' L
End Str C & G
Begin Type P Gutter
TC Elev 1304.49 (Theor.)

12 34+31.47+31.47 - 20.01'L
End Type P Gutter
Begin Str C & G
TC Elev 1304.42 (Theor.)

13 35+16.42 - 20.01' L
End Str C & G
Begin Type P Gutter
TC Elev 1304.06 (Theor.)

14 35+32.42 - 20.01'L
End Type P Gutter
Begin Str C & G
TC Elev 1303.99 (Theor.)

15 36+31.42 - 20.01' L
End Str C & G
Begin 25' Rad Fillet
TC Elev 1303.57

16 36+56.42 - 45.00' L
End 25' Rad Fillet
Begin Transition to
Existing C & G
TC Elev 1303.91

17 36+55.73 - 51.00' L
End Transition to
Existing C & G
TC Elev ±1304.01

18 36+91.70 - 51.03' L
Begin Transition from
Existing C & G
TC Elev ±1304.17

19 36+90.89 - 45.04' L
End Transition from
Existing C & G
Begin 25' Rad Fillet
TC Elev 1304.06

20 37+15.89 - 20.00' L
End 25' Rad Fillet
Begin Str C & G
TC Elev 1303.69

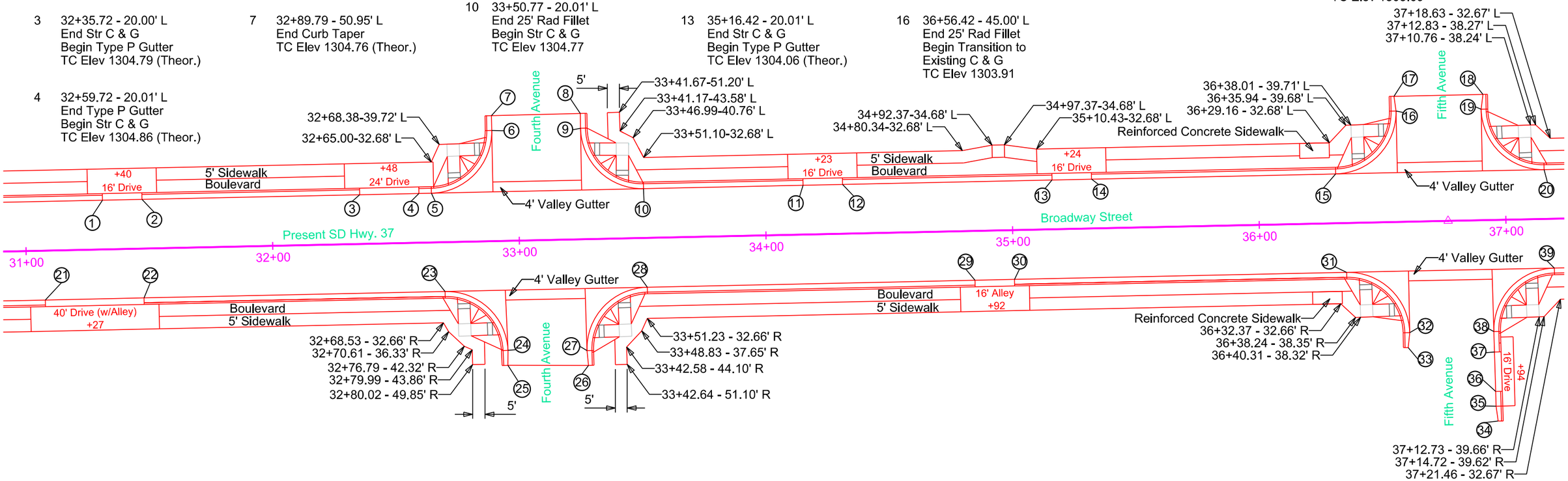

21 31+07.42 - 19.99' R
End Str C & G
Begin Type P Gutter
TC Elev 1304.40 (Theor)

22 31+47.42 - 19.99' R
End Type P Gutter
Begin Str C & G
TC Elev 1304.52 (Theor)

23 32+69.48 - 19.99' R
End Str C & G
Begin 25' Rad Fillet
TC Elev 1304.89

24 32+94.47 - 44.37' R
End 25' Rad Fillet
Begin Transition to
Existing C & G
TC Elev 1304.38

25 32+94.29 - 50.44' R
End Transition to
Existing C & G
TC Elev ±1304.25

26 33+26.97 - 51.19' R
Begin Transition to
Existing C & G
TC Elev ±1304.21

27 33+26.46 - 45.20' R
End Transition to
Existing C & G
Begin 25' Rad Fillet
TC Elev 1304.34

28 33+51.46 - 19.99' R
End 25' Rad Fillet
Begin Str C & G
TC Elev 1304.76

29 34+84.32 - 19.99' R
End Str C & G
Begin Type P Gutter
TC Elev 1304.20 (Theor)

30 35+00.32- 20.01' R
End Type P Gutter
Begin Str C & G
TC Elev 1304.13 (Theor)

31 36+35.04 - 19.99' R
End Str C & G
Begin 25' Rad Fillet
TC Elev 1303.56

32 36+60.04 - 45.01' R
End 25' Rad Fillet
Begin Transition to
Existing C & G
TC Elev 1303.80

33 36+59.31 - 51.01' R
End Transition to
Existing C & G
TC Elev ±1303.86

34 36+95.26 - 81.58' R
Begin Transition from
Existing C & G
TC Elev ±1304.42

35 36+94.49 - 69.56' R
End Transition from
Existing C & G
Begin Str C & G
TC Elev 1304.34

36 36+94.40 - 65.94' R
End Str C & G
Begin Type P Gutter
TC Elev 1304.26 (Theor)

37 36+94.35 - 53.56' R
End Type P Gutter
Begin Str C & G
TC Elev 1304.06 (Theor)

38 36+94.24 - 45.25' R
End Str C & G
Begin 25' Rad Fillet
TC Elev 1303.95

39 37+19.24 - 20.00' R
End 25' Rad Fillet
Begin Str C & G
TC Elev 1303.70

Plot Scale - 1:40
Plotted From - tpr17192
File - U:\rdp\pr\wn039K\0311cg.dgn

CURB AND GUTTER LAYOUT

STATE OF SOUTH DAKOTA	PROJECT	SHEET	TOTAL SHEETS
	P 0037(129)207 NH 0012(198)308	B76	B131

Plotting Date: 06/22/2016

Note: All curb and gutter shown on this sheet is Type B68 and all P Gutter is Type P8 except as noted.
All approach pavement is Type A and all boulevard sidewalk is 5' wide except as noted.

1 36+91.70 - 51.03' L
Begin Transition from
Existing C & G
TC Elev ±1304.17

2 36+90.89 - 45.04' L
End Transition from
Existing C & G
Begin 25' Rad Fillet
TC Elev 1304.06

3 37+15.89 - 20.00' L
End 25' Rad Fillet
Begin Str C & G
TC Elev 1303.69

4 38+40.97 - 20.00' L
End Str C & G
Begin Type P Gutter
TC Elev 1304.06 (Theor.)

5 38+68.97 - 20.00' L
End Type P Gutter
Begin Str C & G
TC Elev 1304.15 (Theor.)

6 40+10.15 - 20.00' L
End Str C & G
Begin 25' Rad Fillet
TC Elev 1304.36

7 40+34.96 - 44.43' L
End 25' Rad Fillet
Begin Transition to
Existing C & G
TC Elev 1304.10

8 40+34.67 - 50.44' L
End Transition to
Existing C & G
TC Elev ±1304.05

9 40+70.90 - 50.60' L
Begin Curb Taper
TC Elev 1303.62 (Theor.)

10 40+70.99 - 44.60' L
End Curb Taper
Begin 25' Rad Fillet
TC Elev 1303.73

11 40+95.99 - 20.00' L
End 25' Rad Fillet
Begin Str C & G
TC Elev 1304.09

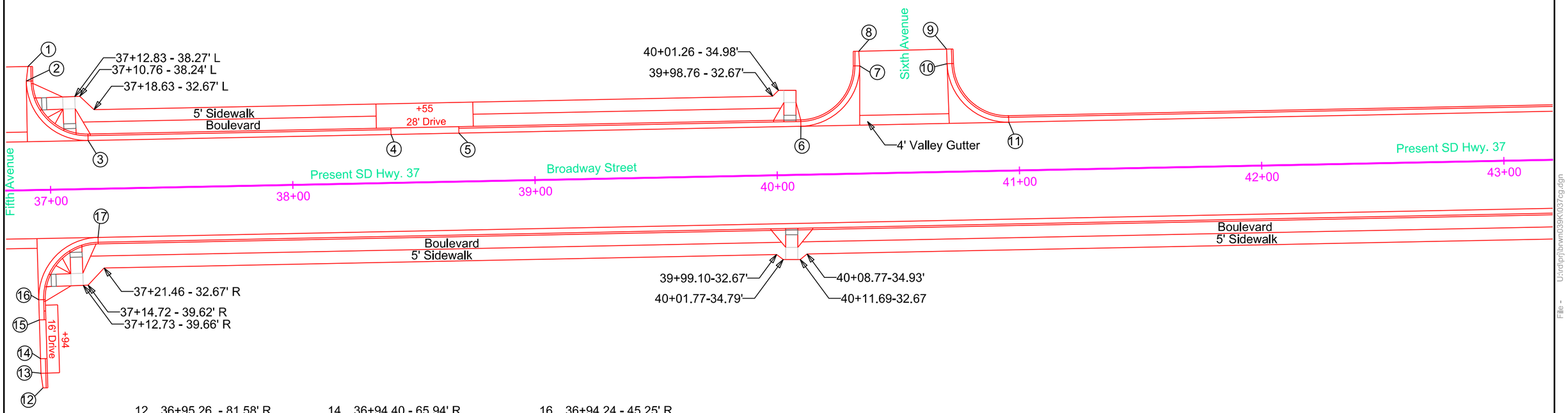

12 36+95.26 - 81.58' R
Begin Transition from
Existing C & G
TC Elev ±1304.42

13 36+94.49 - 69.56' R
End Transition from
Existing C & G
Begin Str C & G
TC Elev 1304.34

14 36+94.40 - 65.94' R
End Str C & G
Begin Type P Gutter
TC Elev 1304.26 (Theor.)

15 36+94.35 - 53.56' R
End Type P Gutter
Begin Str C & G
TC Elev 1304.06 (Theor.)

16 36+94.24 - 45.25' R
End Str C & G
Begin 25' Rad Fillet
TC Elev 1303.95

17 37+19.24 - 20.00' R
End Str C & G
Begin 25' Rad Fillet
TC Elev 1303.70

Plot Scale - 1:40
Plotted From - tnpr17192
File - U:\rdph\brwn039\K\037cg.dgn

CURB AND GUTTER LAYOUT

STATE OF SOUTH DAKOTA	PROJECT	SHEET	TOTAL SHEETS
	P 0037(129)207 NH 0012(198)308	B77	B131

Plotting Date: 06/22/2016

Note: All curb and gutter shown on this sheet is Type B68 and all P Gutter is Type P8 except as noted.
All approach pavement is Type A and all boulevard sidewalk is 5' wide except as noted.

1 43+68.59 - 20.00' L
End Str C & G
Begin 25' Rad Fillet
TC Elev 1303.28

2 43+93.59 - 44.39' L
End 25' Rad Fillet
Begin Curb Taper
TC Elev 1303.30

3 43+93.73 - 50.39' L
End Curb Taper
TC Elev 1303.29 (Theor.)

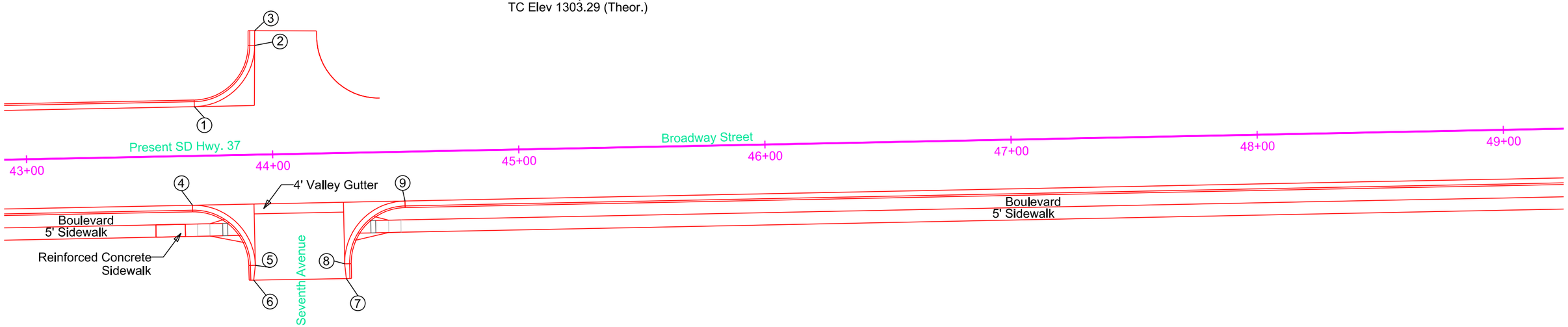

4 43+67.10 - 20.00' R
End Str C & G
Begin 25' Rad Fillet
TC Elev 1303.28

5 43+92.10 - 44.90' R
End 25' Rad Fillet
Begin Transition to
Existing C & G
TC Elev 1304.09

6 43+91.28 - 50.91' R
End Transition to
Existing C & G
TC Elev 1304.27

7 44+28.93 - 51.03' R
Begin Transition to
Existing C & G
TC Elev ±1303.36

8 44+28.39 - 45.03' R
End Transition from
Existing C & G
Begin 25' Rad Fillet
TC Elev 1303.33

9 44+53.39 - 20.00' R
End 25' Rad Fillet
Begin Str C & G
TC Elev 1303.66

Plot Scale - 1:40
Plotted From - tnpt17192
File - U:\rdprj\brwn039K\043cg.dgn

CURB AND GUTTER LAYOUT

STATE OF SOUTH DAKOTA	PROJECT	SHEET	TOTAL SHEETS
	P 0037(129)207 NH 0012(198)308	B78	B131

Plotting Date: 06/22/2016

Note: All curb and gutter shown on this sheet is Type B68 and all P Gutter is Type P8 except as noted.
All approach pavement is Type A and all boulevard sidewalk is 5' wide except as noted.

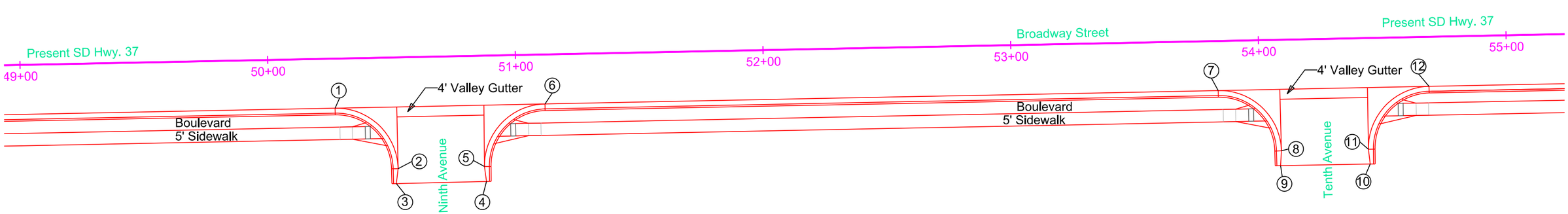

1	50+26.80 - 19.99' R End Str C & G Begin 25' Rad Fillet TC Elev 1306.98	4	50+87.36 - 50.76' R Begin Transition from Existing C & G TC Elev ±1306.15
2	50+51.80 - 44.92' R End 25' Rad Fillet Begin Transition to Existing C & G TC Elev 1306.31	5	50+86.61 - 44.72' R End Transition from Existing C & G Begin 25' Rad Fillet TC Elev 1306.27
3	50+50.93 - 50.92' R End Transition to Existing C & G TC Elev ±1306.16	6	51+11.61 - 19.99' R End 25' Rad Fillet Begin Str C & G TC Elev 1306.68
7	53+83.41 - 19.99' R End Str C & G Begin 25' Rad Fillet TC Elev 1305.60	10	54+44.15 - 50.87' R Begin Transition from Existing C & G TC Elev ±1304.59
8	54+08.41 - 44.81' R End 25' Rad Fillet Begin Transition to Existing C & G TC Elev 1305.15	11	54+43.51 - 44.87' R End Transition from Existing C & G Begin 25' Rad Fillet TC Elev 1304.74
9	54+07.94 - 50.82' R End Transition to Existing C & G TC Elev ±1305.07	12	54+68.51 - 19.99' R End 25' Rad Fillet Begin Str C & G TC Elev 1305.27

Plot Scale - 1:40
Plotted From - tmpr17192
File - U:\rdi\prj\brwn\039K\049cg.dgn

CURB AND GUTTER LAYOUT

STATE OF SOUTH DAKOTA	PROJECT	SHEET	TOTAL SHEETS
	P 0037(129)207 NH 0012(198)308	B79	B131

Plotting Date: 06/22/2016

Note: All curb and gutter shown on this sheet is Type B68 and all P Gutter is Type P8 except as noted.
All approach pavement is Type A and all boulevard sidewalk is 5' wide except as noted.

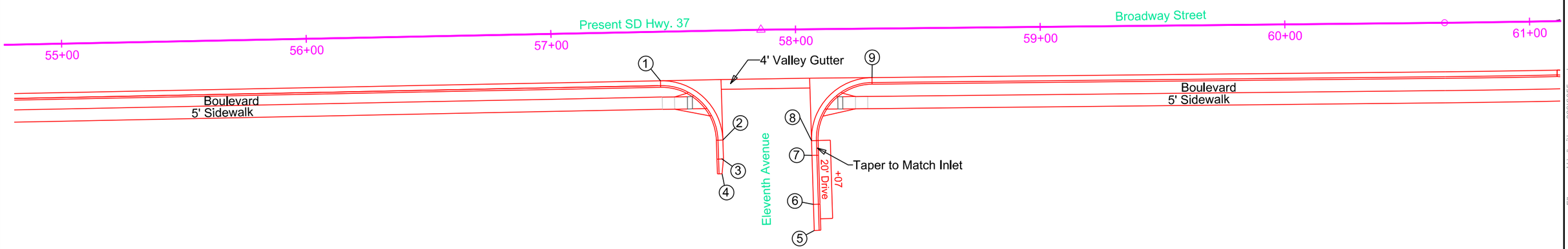

1	57+44.43 - 19.99' R End Str C & G Begin 25' Rad Fillet TC Elev 1304.17	4	57+68.82 - 58.44' R End Transition to Existing C & G TC Elev ±1303.80	7	58+06.19 - 51.17' R End Type P Gutter Begin Str C & G TC Elev 1303.68 (Theor.)
2	57+69.42 - 44.70' R End 25' Rad Fillet Begin Str C & G TC Elev 1303.90	5	58+06.83 - 82.16' R Begin Str C & G at Existing C & G TC Elev ±1303.81	8	58+06.07 - 45.52' R End Str C & G Begin 25' Rad Fillet TC Elev 1303.65
3	57+69.52 - 52.43' R End Str C & G Begin Transition to Existing C & G TC Elev 1303.75	6	58+06.20 - 51.52' R End Str C & G Begin Type P Gutter TC Elev 1303.76 (Theor.)	9	58+31.07 - 20.00' R End 25' Rad Fillet Begin Str C & G TC Elev 1303.83

Plot Scale - 1:40
Plotted From - tpr17192
File - U:\rdprj\brwn\039K\055cg.dgn

CURB AND GUTTER LAYOUT

STATE OF SOUTH DAKOTA	PROJECT	SHEET	TOTAL SHEETS
	P 0037(129)207 NH 0012(198)308	B80	B131

Plotting Date: 07/28/2016 Revised 7/28/16 NJF

Note: All curb and gutter shown on this sheet is Type B68 and all P Gutter is Type P8 except as noted.
All approach pavement is Type A and all boulevard sidewalk is 5' wide except as noted.

1 60+82.81 - 20.00' L
Begin Curb Taper
TC Elev 1302.83 (Theor.)

2 60+88.63 - 20.01' L
End Curb Taper
Begin Str C & G
TC Elev 1302.80

3 61+07.72 - 20.00' L
Begin Str C & G
TC Elev 1302.73

4 61+32.36 - 21.96' L
End Str C & G
Begin Type P Gutter
TC Elev 1302.66 (Theor.)

5 61+72.45 - 24.86' L
End Type P Gutter
Begin C & G
TC Elev 1302.56 (Theor)

6 21+77.45 -106.98' R (US12)
62+76.43 - 32.01' L (SD37)
End Str C & G
Begin 130' Rad C & G
TC Elev 1302.69

7 21+65.63 - 62.45' R (US12)
63+21.13 - 43.16' L (SD37)
End 130' Rad C & G
Begin 65' Rad C & G
TC Elev 1303.02

8 21+06.76 - 25.00' R
End 65' Rad C & G
Begin Str C & G
TC Elev 1302.91

9 20+96.49 - 35.99' L
End Str C & G
Begin 100' Rad C & G
TC Elev 1302.65

10 21+28.26 - 41.18' L
64+25.76 - 83.90' L (US12)
End 100' Rad C & G
Begin 85' Rad C & G
TC Elev 1302.70

11 21+86.19 - 123.88' L (US12)
65+07.40 - 24.49' L (SD37)
End 85' Rad C & G
Begin Str C & G
TC Elev 1303.40

12 21+86.05 -129.88' L (US12)
65+13.40 - 24.13' L (SD37)
End Curb Taper
TC Elev 1303.16 (Theor)

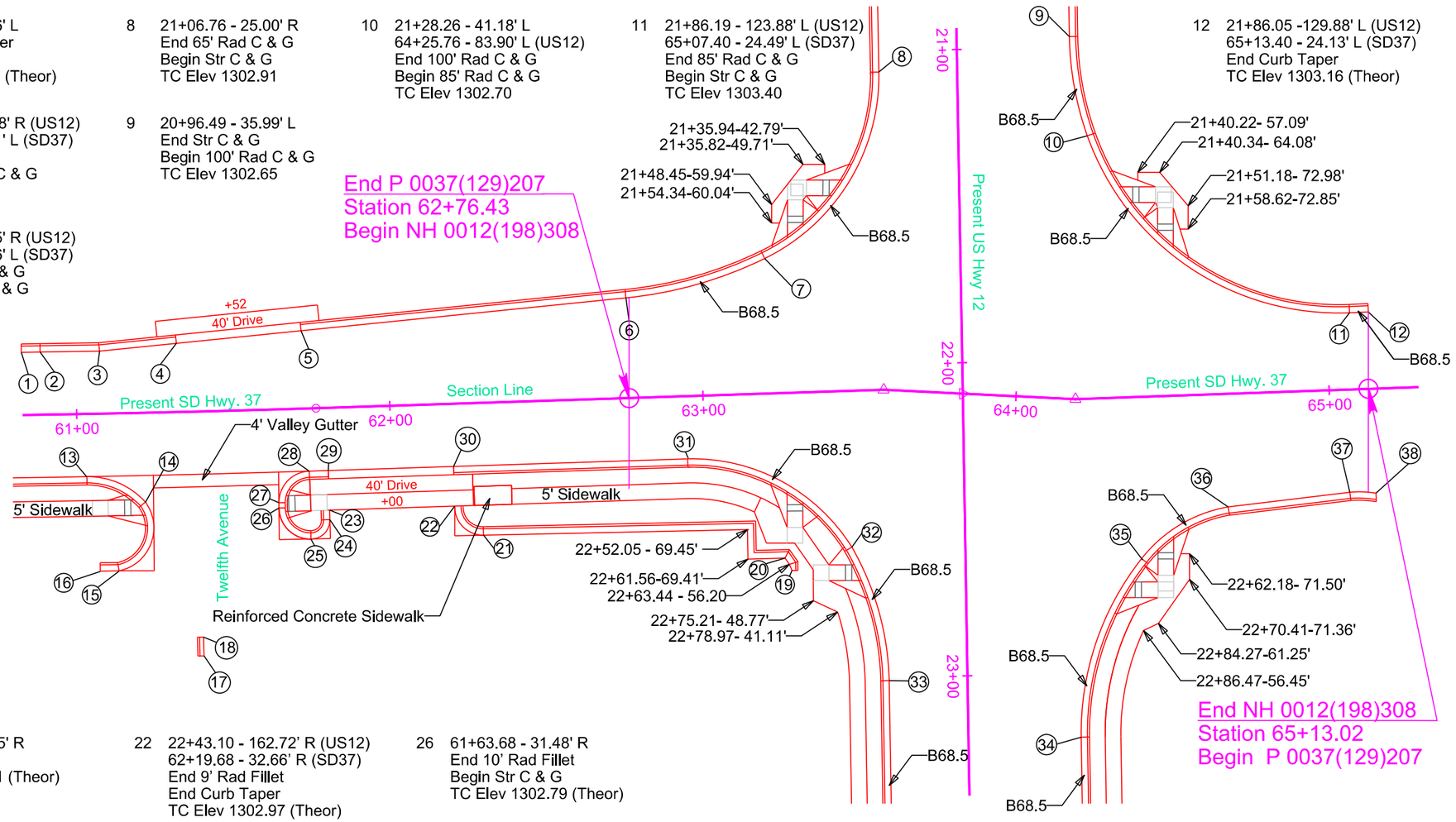

13 61+02.92 - 20.00' R
End Str C & G
Begin 25' Rad Fillet
TC Elev 1302.76

14 61+21.36 - 28.48' R
End 25' Rad Fillet
Begin 14' Rad Fillet
TC Elev 1302.71 (Theor)

15 61+12.56 - 50.26' R
End 14' Rad Fillet
Begin Curb Taper
TC Elev 1302.82

16 61+06.62 - 50.23' R
End Curb Taper
TC Elev 1302.75 (Theor)

17 61+39.43 - 79.15' R
Begin Curb Taper and
Transition from Existing C & G
TC Elev ± 1303.27

18 61+39.41 - 73.15' R
End Curb Taper
TC Elev 1303.21 (Theor)

19 22+65.45 - 55.42' R (US12)
63+26.61 - 56.71' R (SD37)
Begin Transition from
Existing C & G
TC Elev 1304.12

20 22+63.44 - 56.20' R (US12)
63+25.86 - 54.70' R (SD37)
End Transition from
Existing C & G
Begin Str C & G
TC Elev 1304.00

21 22+52.53 -153.69' R (US12)
62+28.56 - 42.22' R (SD37)
End Str C & G
Begin 9' Rad Fillet
Begin Curb Taper
TC Elev 1303.74

22 22+43.10 - 162.72' R (US12)
62+19.68 - 32.66' R (SD37)
End 9' Rad Fillet
End Curb Taper
TC Elev 1302.97 (Theor)

23 61+79.68 - 32.65' R
Begin Curb Taper
Begin Str C & G
TC Elev 1303.00 (Theor)

24 61+79.68 - 35.69' R
End Str C & G
Begin 6' Rad Fillet
TC Elev 1303.19 (Theor)

25 61+73.50 - 41.69' R
End 6' Rad Fillet
Begin 10' Rad Fillet
TC Elev 1303.35

26 61+63.68 - 31.48' R
End 10' Rad Fillet
Begin Str C & G
TC Elev 1302.79 (Theor)

27 61+63.71 - 29.81' R
End Str C & G
Begin 10' Rad Fillet
TC Elev 1302.73(Theor)

28 61+73.64 - 20.02' R
End 10' Rad Fillet
Begin Str C & G
TC Elev 1302.48

29 61+79.68 - 20.00' R
End Str C & G
Begin Type P Gutter
TC Elev 1302.45 (Theor)

30 22+30.44 - 162.92' R (US12)
62+19.68 - 20.00' R (SD37)
End Type P Gutter
Begin Str C & G
TC Elev 1302.32 (Theor.)

31 22+29.25 - 88.14' R (US12)
62+94.47 - 20.00' R (SD37)
End Str C & G
Begin 60' Rad C & G
TC Elev 1302.58

32 22+58.27 - 36.21' R (US12)
63+45.93 - 49.84' R (SD37)
End 60' Rad C & G
Begin 90' Rad C & G
TC Elev 1303.58 (Theor)

33 23+01.12 - 25.00' R (US12)
63+64.01 - 92.67' R (SD37)
End 90' Rad C & G
Begin Str C & G
TC Elev 1303.82

34 23+20.17 - 35.99' L
End Str C & G
Begin 90' Rad C & G
TC Elev 1303.73

35 22+63.47 - 56.19' L (US12)
64+38.30 - 51.60' R (SD37)
End 90' Rad C & G
Begin 45' Rad C & G
TC Elev 1303.30 (Theor)

36 22+47.43 - 84.08' L (US12)
64+66.48 - 36.09' R (SD37)
End 45' Rad C & G
Begin Str C & G
TC Elev 1302.98

37 22+43.39 - 123.04' L (US12)
65+05.51 - 32.78' R (SD37)
End Str C & G
Begin 35' Rad C & G Taper
TC Elev 1303.27

38 22+43.84 - 131.34' L (US12)
65+13.80 - 33.38' R (SD37)
End 35' Rad C & G Curb Taper
TC Elev 1303.32 (Theor)

Plot Scale - 1:40
Plotted From - trpr17192
File - U:\rdprj\brwnto39\K061cg.dgn

CURB AND GUTTER LAYOUT

STATE OF SOUTH DAKOTA	PROJECT	SHEET	TOTAL SHEETS
	P 0037(129)207 NH 0012(198)308	B81	B131

Plotting Date: 06/22/2016

Note: All curb and gutter shown on this sheet is Type B68 and all P Gutter is Type P8 except as noted.
All approach pavement is Type A and all boulevard sidewalk is 5' wide except as noted.

1 14+77.00 - 23.00' L
Begin Str C & G at
Existing C & G
TC Elev ±1304.72

2 16+69.02 - 29.68' L
End Str C & G
Begin Type P Gutter
TC Elev 1303.80 (Theor.)

3 17+01.00 - 30.80' L
End Type P Gutter
Begin Str C & G
TC Elev 1303.66 (Theor.)

4 20+96.49 - 35.99' L
End Str C & G
Begin 100' Rad C & G
TC Elev 1302.65

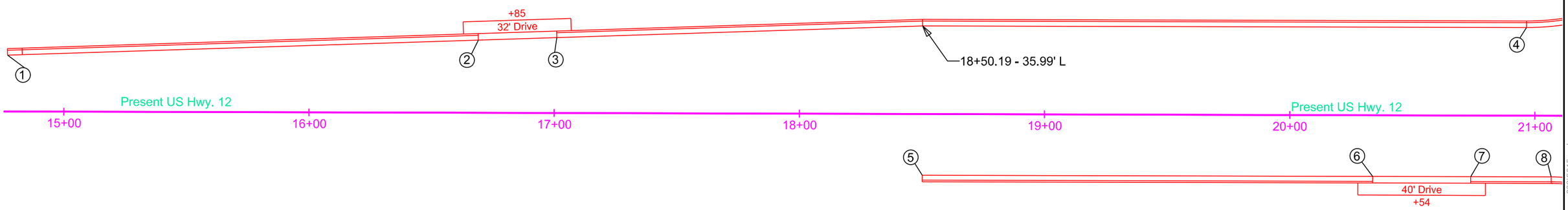

5 18+50.19 - 25.00' R
Begin Transition at
Existing C & G
TC Elev 1303.11

6 20+33.91 - 25.00' R
End Str C & G
Begin Type P Gutter
TC Elev 1302.63 (Theor.)

7 20+73.91 - 25.00' R
End Type P Gutter
Begin Str C & G
TC Elev 1302.78 (Theor.)

8 21+06.76 - 25.00' R
End Str C & G
Begin 65' Rad C & G
TC Elev 1302.92

Plot Scale - 1:40
Plotted From - tpp17192
File - U:\rdprj\brwn\039K\015cg.dgn

CURB AND GUTTER LAYOUT

STATE OF SOUTH DAKOTA	PROJECT	SHEET	TOTAL SHEETS
	P 0037(129)207 NH 0012(198)308	B82	B131

Plotting Date: 06/22/2016

Note: All curb and gutter shown on this sheet is Type B68 and all P Gutter is Type P8 except as noted.
All approach pavement is Type A and all boulevard sidewalk is 5' wide except as noted.

1 23+20.17 - 35.99' L
End 90' Rad C & G
Begin Str C & G
TC Elev 1303.73

2 24+97.30 - 35.99' L
End Str C & G
Begin Type P Gutter
TC Elev 1304.66 (Theor)

3 25+29.30 - 35.99' L
End Type P Gutter
Begin Str C & G
TC Elev 1304.85 (Theor)

4 25+80.05 - 35.44' L
End Str C & G
Begin Type P Gutter
TC Elev 1305.08 (Theor)

5 26+20.03 - 34.11' L
End Type P Gutter
Begin Str C & G
TC Elev 1305.34 (Theor)

6 27+30.24 - 30.43' L
End Str C & G
Begin Type P Gutter
TC Elev 1305.25 (Theor)

7 27+70.22 - 29.09' L
End Type P Gutter
Begin Str C & G
TC Elev 1306.25 (Theor)

8 28+68.64 - 25.80' L
End Str C & G
Begin Type P Gutter
TC Elev 1305.75 (Theor)

9 29+08.61 - 24.47' L
End Type P Gutter
Begin Str C & G
TC Elev 1306.95 (Theor)

10 29+30.75 - 23.73' L
End Str C & G
Begin Transition to
Existing C & G
TC Elev 1307.05

11 29+36.74 - 23.53' L
End Transition to
Existing C & G
TC Elev ±1307.08

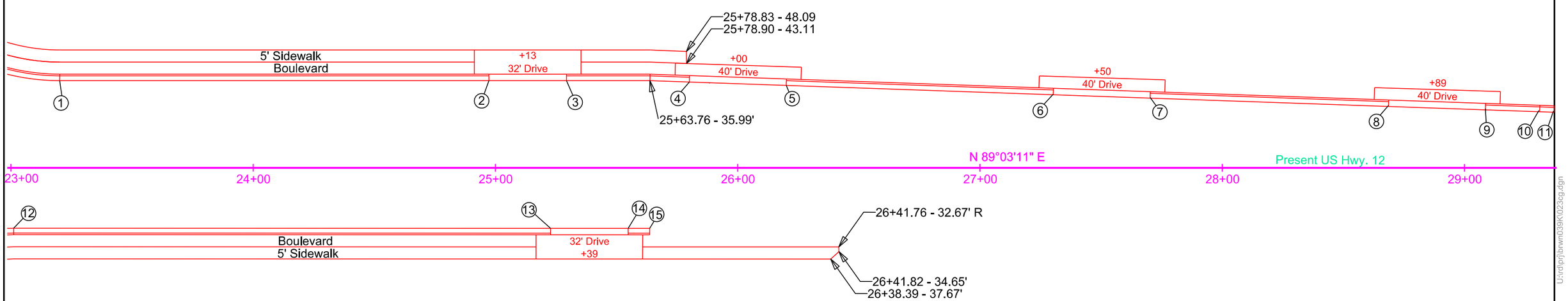

12 23+01.12 - 25.00' L
End 90' Rad C & G
Begin Str C & G
TC Elev 1303.03

13 25+22.76 - 25.00' R
End Str C & G
Begin Type P Gutter
TC Elev 1305.05

14 25+54.76 - 25.00' R
End Type P Gutter
Begin Str Transition to
Existing C & G
TC Elev 1305.23

15 25+64 - 25.00' R
End Str C & G Transition to
Existing C & G
TC Elev ±1305.16

Plot Scale - 1:40
Plotted From - tnpr17192
File - U:\rdphj\brwn039\K0230cg.dgn

STATE OF SOUTH DAKOTA	PROJECT	SHEET	TOTAL SHEETS
	P 0037(129)207 NH 0012(198)308	B83	B131

Plotting Date: 06/22/2016

CURB RAMP LAYOUT

* Turning Space with 1.5% slope
** Curb Ramp with 7.5% slope and 1.5% cross slope
Note: All curb and gutter shown on this sheet is Type B68 except as noted.
All sidewalk is 5' wide except as noted.

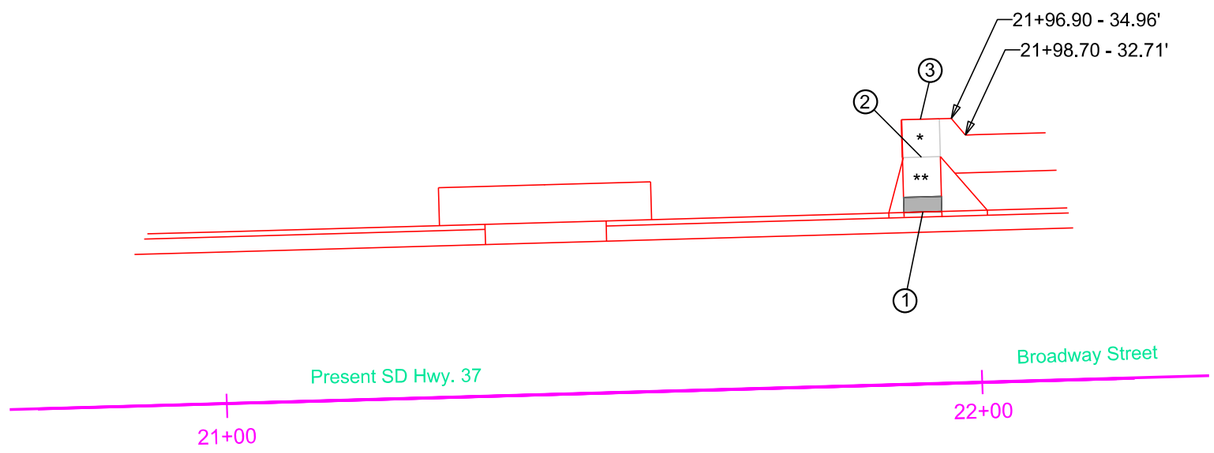

1 21+92.81 - 22.71' L
Center of Detectable Warning
& Type 1 Curb Ramp

2 21+92.81 - 29.96' L
End Ramp Slope

3 21+92.81- 34.96' L
Back of Turning Space

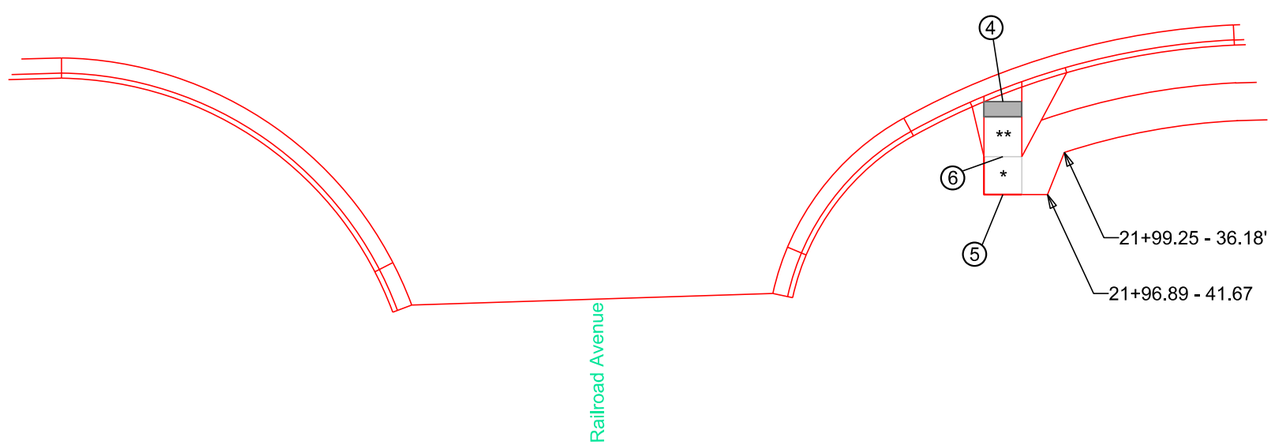

4 21+91.35 - 29.26' R
Center of Detectable Warning
& Type 2 Curb Ramp

5 21+91.14 - 36.50' R
End Ramp Slope

6 21+91.00 - 41.50' R
Back of Turning Space

Plot Scale - 1:20
Plotted From - tqpr17192
File - U:\rdep\brwn039K\021cr.dgn

CURB RAMP LAYOUT

STATE OF SOUTH DAKOTA	PROJECT	SHEET	TOTAL SHEETS
	P 0037(129)207 NH 0012(198)308	B84	B131

Plotting Date: 06/22/2016

* Turning Space with 1.5% slope
** Curb Ramp with 7.5% slope and 1.5% cross slope
Note: All curb and gutter shown on this sheet is Type B68 except as noted.
All sidewalk is 5' wide except as noted.

1 25+46.25 - 26.19' L
Center of Detectable Warning
& Type 2 Curb Ramp

2 25+56.78 - 37.50' L
Center of Detectable Warning
& Type 2 Curb Ramp

3 25+46.13- 39.91' L
Back of Turning Space

4 25+48.65 - 37.43' L
End Ramp Slope

5 25+43.65- 37.39' L
Back of Turning Space

6 25+46.18 - 34.82' L
End Ramp Slope

10 26+01.65 - 35.54' L
Center of Detectable Warning
& Type 2 Curb Ramp

11 26+13.04 - 25.08' L
Center of Detectable Warning
& Type 2 Curb Ramp

12 26+12.92 - 33.22' L
End Ramp Slope

13 26+15.38- 35.75' L
Back of Turning Space

14 26+12.84 - 36.25' L
Back of Turning Space

15 26+10.38 - 35.68' L
End Ramp Slope

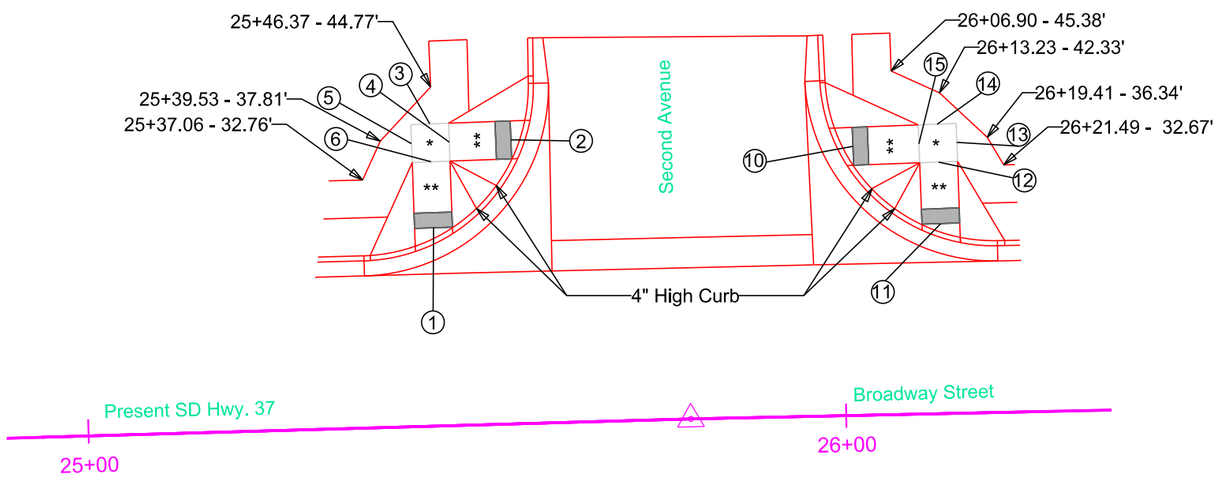

15 25+45.28 - 25.07' R
Center of Detectable Warning
& Type 2 Curb Ramp

16 25+56.60 - 35.60' R
Center of Detectable Warning
& Type 2 Curb Ramp

17 25+45.40 - 38.20' R
Back of Turning Space

18 25+47.87 - 35.68' R
End Ramp Slope

19 25+42.87 - 35.72' R
Back of Turning Space

20 25+45.35 - 33.20' R
End Ramp Slope

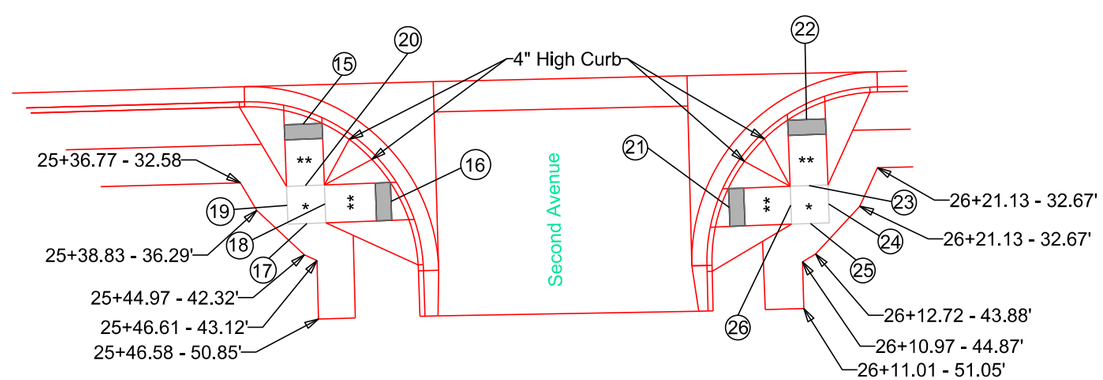

21 26+01.46 - 37.51' R
Center of Detectable Warning
& Type 2 Curb Ramp

22 26+11.92 - 26.12' R
Center of Detectable Warning
& Type 2 Curb Ramp

23 26+12.06 - 34.85' R
End Ramp Slope

24 26+14.59 - 37.31' R
Back of Turning Space

25 26+12.13 - 39.84' R
Back of Turning Space

26 26+09.59 - 37.38' R
End Ramp Slope

Plot Scale - 1:20
Plotted From - tmpr17192
File - U:\rdi\prj\brwn\039K\025cr.dgn

STATE OF SOUTH DAKOTA	PROJECT	SHEET	TOTAL SHEETS
	P 0037(129)207 NH 0012(198)308	B85	B131

Plotting Date: 06/22/2016

CURB RAMP LAYOUT

* Turning Space with 1.5% slope
** Curb Ramp with 7.5% slope and 1.5% cross slope
Note: All curb and gutter shown on this sheet is Type B68 except as noted.
All sidewalk is 5' wide except as noted.

1 29+08.53 - 26.27' L
Center of Detectable Warning
& Type 2 Curb Ramp

2 29+18.99 - 37.65' L
Center of Detectable Warning
& Type 2 Curb Ramp

3 29+01.86 - 37.52' L
End Ramp Slope

4 29+08.40 - 37.52' L
Back of Turning Space

5 29+05.86 - 32.65' L
Back of Turning Space

6 29+08.40 - 34.99' L
End Ramp Slope

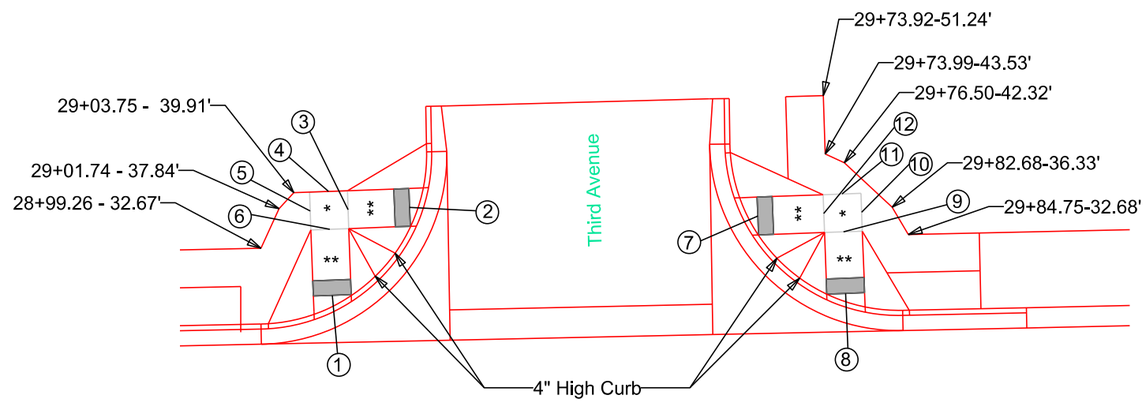

7 29+64.92 - 35.53' L
Center of Detectable Warning
& Type 2 Curb Ramp

8 29+76.31 - 25.07' L
Center of Detectable Warning
& Type 2 Curb Ramp

9 29+76.18 - 33.21' L
End Ramp Slope

10 29+78.64 - 35.74' L
Back of Turning Space

11 29+76.10 - 38.21' L
Back of Turning Space

12 29+73.64 - 35.67' L
End Ramp Slope

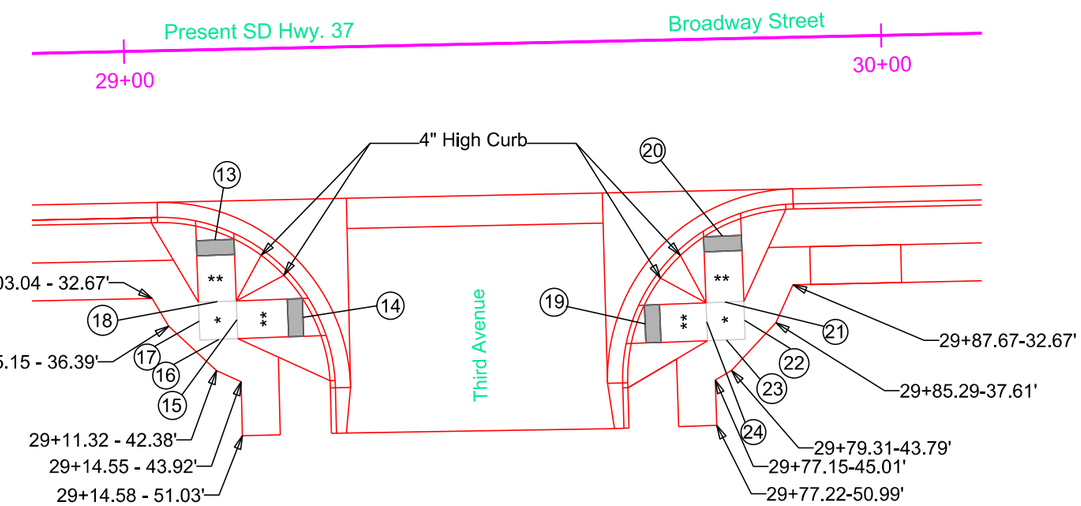

13 29+11.52 - 25.13' R
Center of Detectable Warning
& Type 2 Curb Ramp

14 29+22.90 - 35.58' R
Center of Detectable Warning
& Type 2 Curb Ramp

15 29+14.18 - 35.72' R
End Ramp Slope

16 29+11.72 - 38.26' R
Back of Turning Space

17 29+09.18 - 35.80' R
Back of Turning Space

18 29+11.64 - 33.26' R
End Ramp Slope

19 29+68.04 - 37.42' R
Center of Detectable Warning
& Type 2 Curb Ramp

20 29+78.50 - 26.03' R
Center of Detectable Warning
& Type 2 Curb Ramp

21 29+76.64 - 37.30' R
End Ramp Slope

22 29+81.18 - 37.22' R
Back of Turning Space

23 29+78.72 - 39.75' R
Back of Turning Space

24 29+76.18 - 37.29' R
End Ramp Slope

Plot Scale - 1:20
Plotted From - tpr17192
File - U:\rdi\prj\brwn\039K\029cr.dgn

CURB RAMP LAYOUT

STATE OF SOUTH DAKOTA	PROJECT	SHEET	TOTAL SHEETS
	P 0037(129)207 NH 0012(198)308	B86	B131

Plotting Date: 06/22/2016

* Turning Space with 1.5% slope
** Curb Ramp with 7.5% slope and 1.5% cross slope
Note: All curb and gutter shown on this sheet is Type B68 except as noted.
All sidewalk is 5' wide except as noted.

1 32+74.18 - 26.08' L
Center of Detectable Warning
& Type 2 Curb Ramp

2 32+84.64 - 37.46' L
Center of Detectable Warning
& Type 2 Curb Ramp

3 32+76.51 - 37.34' L
End Ramp Slope

4 32+73.97 - 39.80' L
Back of Turning Space

5 32+71.51 - 37.27' L
Back of Turning Space

6 32+74.05 - 34.81' L
End Ramp Slope

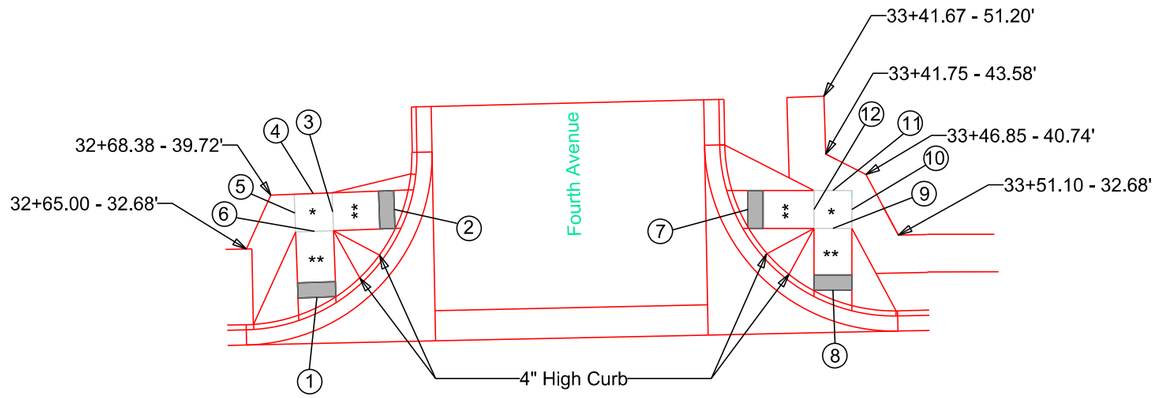

7 33+31.31 - 36.48' L
Center of Detectable Warning
& Type 2 Curb Ramp

8 33+42.34 - 25.61' L
Center of Detectable Warning
& Type 2 Curb Ramp

9 33+42.48 - 33.73' L
End Ramp Slope

10 33+45.03- 36.19' L
Back of Turning Space

11 33+42.59- 38.74' L
Back of Turning Space

12 33+40.03 - 36.30' L
End Ramp Slope

13 32+76.98 - 25.07' R
Center of Detectable Warning
& Type 2 Curb Ramp

14 32+88.37 - 35.53' R
Center of Detectable Warning
& Type 2 Curb Ramp

15 32+77.19 - 38.21' R
Back of Turning Space

16 32+79.65 - 35.67' R
End Ramp Slope

17 32+74.65 - 35.74' R
Back of Turning Space

18 32+77.11 - 33.21' R
End Ramp Slope

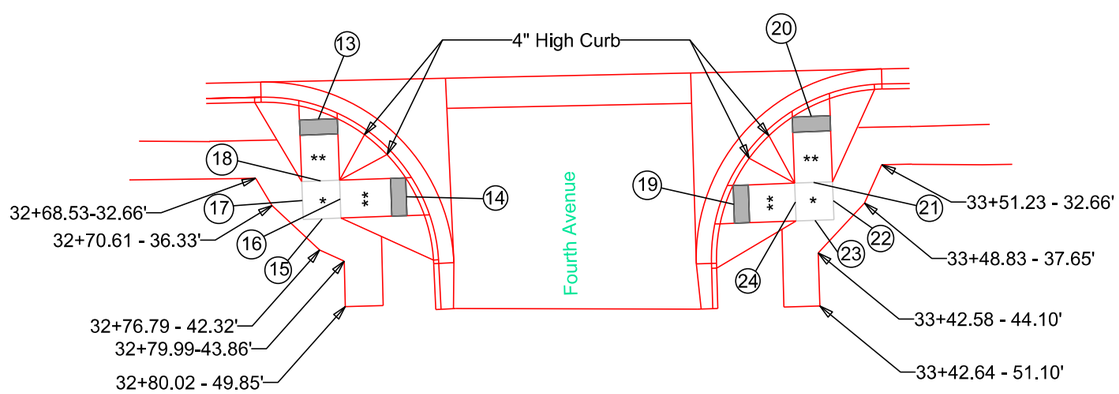

19 33+31.58 - 37.46' R
Center of Detectable Warning
& Type 2 Curb Ramp

20 33+42.04 - 26.08' R
Center of Detectable Warning
& Type 2 Curb Ramp

21 33+42.17 - 34.79' R
End Ramp Slope

22 33+44.71 - 37.25' R
Back of Turning Space

23 33+42.25 - 39.79' R
Back of Turning Space

24 33+39.71 - 37.33' R
End Ramp Slope

Plot Scale - 1:20
Plotted From - tnpl17192
File - U:\rdprj\brwn\039K\033cr.dgn

STATE OF SOUTH DAKOTA	PROJECT	SHEET	TOTAL SHEETS
	P 0037(129)207 NH 0012(198)308	B87	B131

Plotting Date: 06/22/2016

CURB RAMP LAYOUT

* Turning Space with 1.5% slope
** Curb Ramp with 7.5% slope and 1.5% cross slope
Note: All curb and gutter shown on this sheet is Type B68 except as noted.
All sidewalk is 5' wide except as noted.

1 36+40.72 - 26.03' L
Center of Detectable Warning
& Type 2 Curb Ramp

2 36+51.18 - 37.41' L
Center of Detectable Warning
& Type 2 Curb Ramp

3 36+43.05 - 37.29' L
End Ramp Slope

4 36+40.51 - 39.75' L
Back of Turning Space

5 36+38.05 - 37.21' L
Back of Turning Space

6 36+40.80 - 34.75' L
End Ramp Slope

7 36+97.08 - 35.51' L
Center of Detectable Warning
& Type 2 Curb Ramp

8 37+08.48 - 25.07' L
Center of Detectable Warning
& Type 2 Curb Ramp

9 37+08.34 - 33.20' L
End Ramp Slope

10 37+10.80 - 35.74' L
Back of Turning Space

11 37+08.26 - 38.20' L
Back of Turning Space

12 37+05.80 - 35.66' L
End Ramp Slope

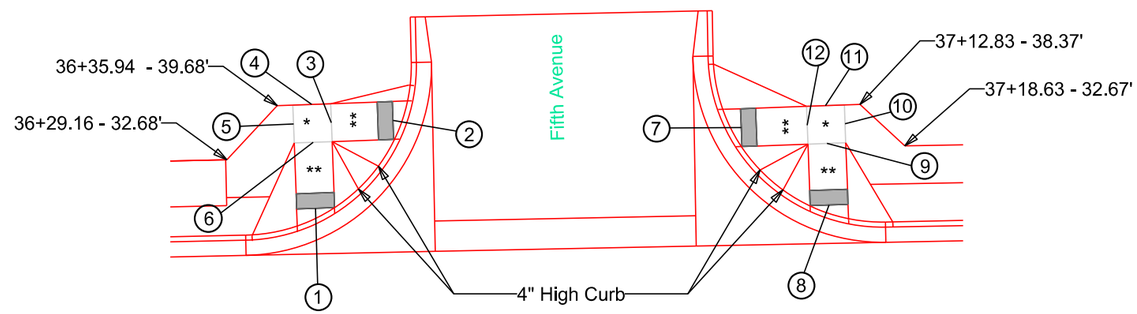

13 36+42.61 - 25.15' R
Center of Detectable Warning
& Type 2 Curb Ramp

14 36+54.00 - 35.61' R
Center of Detectable Warning
& Type 2 Curb Ramp

15 36+45.27 - 35.74' R
End Ramp Slope

16 36+42.81- 38.28' R
Back of Turning Space

17 36+40.27 - 35.82' R
Back of Turning Space

18 36+42.74- 33.28' R
End Ramp Slope

19 36+99.55 - 37.38' R
Center of Detectable Warning
& Type 2 Curb Ramp

20 37+09.99 - 25.98' R
Center of Detectable Warning
& Type 2 Curb Ramp

21 37+12.68 - 37.16' R
End Ramp Slope

22 37+12.68- 37.16' R
Back of Turning Space

23 37+10.23- 39.70' R
Back of Turning Space

24 37+07.69- 37.24' R
End Ramp Slope

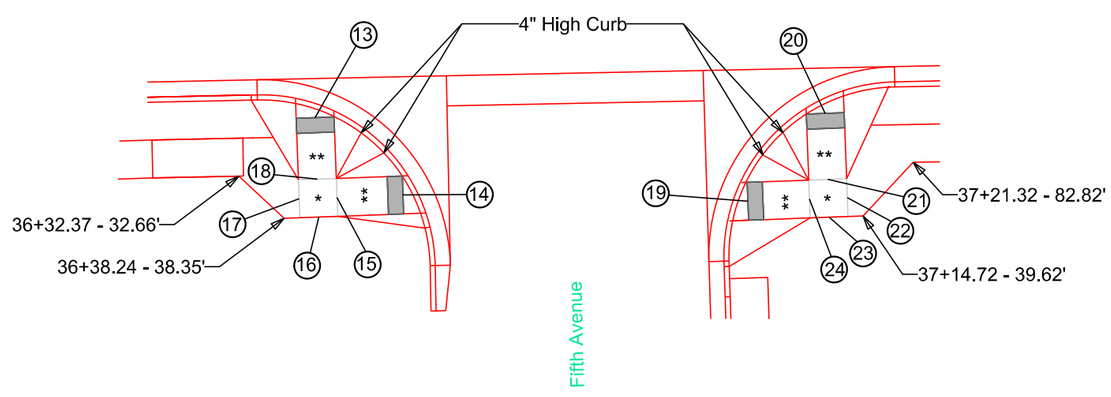

Plot Scale - 1:20
Plotted From - trgr17192
File - U:\rdprj\brwn039K\036cr.dgn

CURB RAMP LAYOUT

STATE OF SOUTH DAKOTA	PROJECT	SHEET	TOTAL SHEETS
	P 0037(129)207 NH 0012(198)308	B88	B131

Plotting Date: 06/22/2016

* Turning Space with 1.5% slope
** Curb Ramp with 7.5% slope and 1.5% cross slope
Note: All curb and gutter shown on this sheet is Type B68 except as noted.
All sidewalk is 5' wide except as noted.

1 40+05.51 - 22.64' L
Center of Detectable Warning
& Type 1 Curb Ramp

2 40+10.15 - 20.00' L
End Str C & G
Begin 25' Rad Fillet
TC Elev 1304.36

3 40+05.85 - 29.89' L
End Ramp Slope

4 40+05.95 - 34.89' L
Back of Turning Space

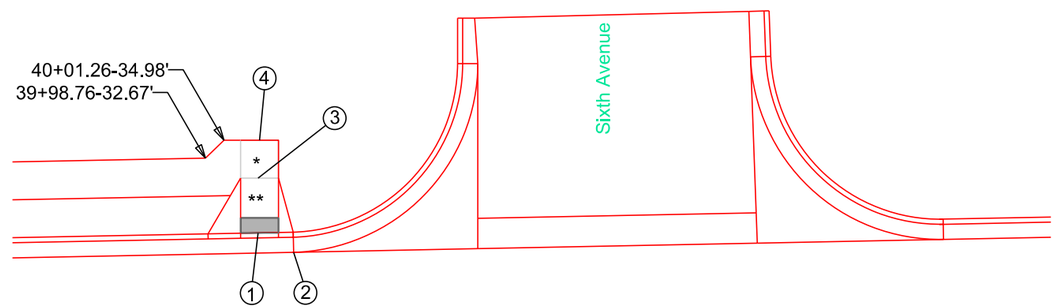

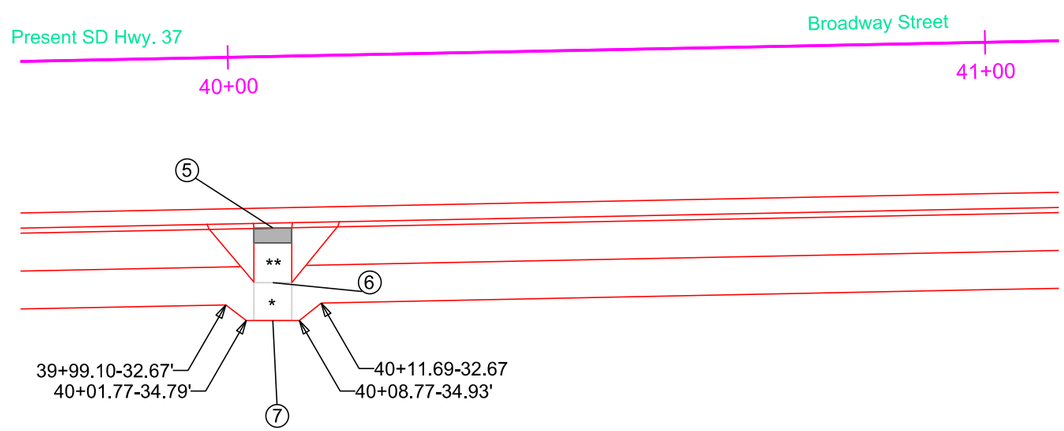

5 40+50.51 - 22.62' R
Center of Detectable Warning
& Type 1 Curb Ramp

6 40+05.37 - 29.86' R
End Ramp Slope

7 40+05.27 - 34.86' R
Back of Turning Space

Plot Scale - 1:20
Plotted From - tpr17192
File - U:\rdlpn\brwn039K\040cr.dgn

STATE OF SOUTH DAKOTA	PROJECT	SHEET	TOTAL SHEETS
	P 0037(129)207 NH 0012(198)308	B89	B131

Plotting Date: 06/22/2016

CURB RAMP LAYOUT

* Turning Space with 1.5% slope
** Curb Ramp with 7.5% slope and 1.5% cross slope
Note: All curb and gutter shown on this sheet is Type B68 except as noted.
All sidewalk is 5' wide except as noted.

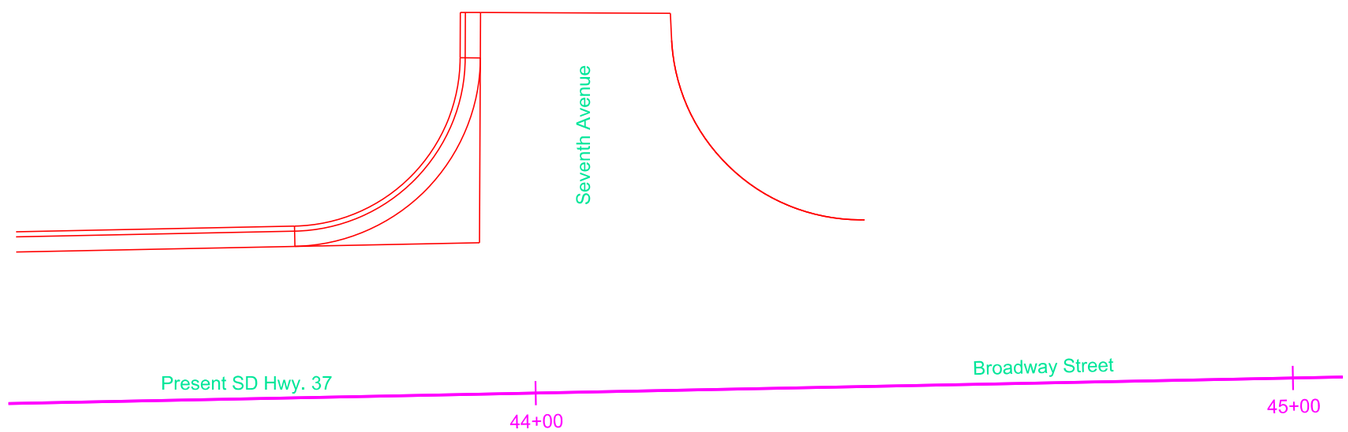

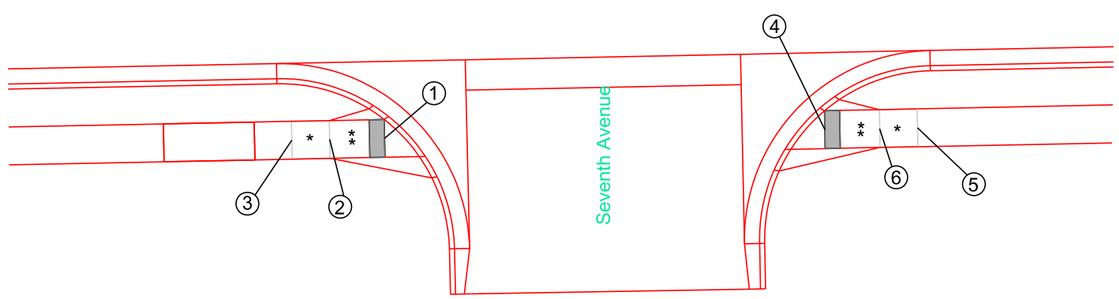

1 43+81.17 - 30.16' R
Center of Detectable Warning
& Type 2 Curb Ramp

2 43+73.92 - 30.16' R
End Ramp Slope

3 43+68.92 - 30.17' R
Back of Turning Space

4 44+39.30 - 30.17' R
Center of Detectable Warning
& Type 2 Curb Ramp

5 44+51.55 - 30.17' R
Back of Turning Space

6 44+46.55 - 30.17' R
End Ramp Slope

Plot Scale - 1:20
Plotted From - tmpr17192
File - U:\rdi\prj\brwn\039K\044cr.dgn

CURB RAMP LAYOUT

STATE OF SOUTH DAKOTA	PROJECT	SHEET	TOTAL SHEETS
	P 0037(129)207 NH 0012(198)308	B90	B131

Plotting Date: 06/22/2016

* Turning Space with 1.5% slope
** Curb Ramp with 7.5% slope and 1.5% cross slope
Note: All curb and gutter shown on this sheet is Type B68 except as noted.
All sidewalk is 5' wide except as noted.

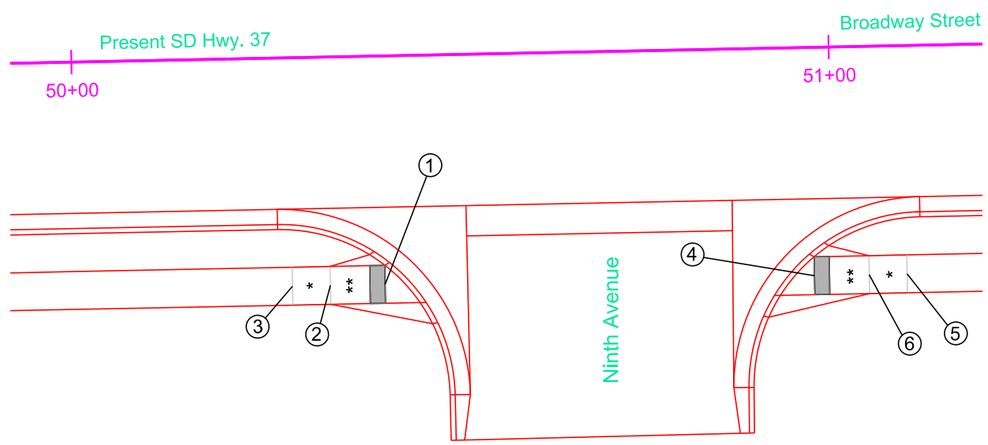

1 50+40.85 - 30.15' R
Center of Detectable Warning
& Type 2 Curb Ramp

2 50+33.61 - 30.16' R
End Ramp Slope

3 50+28.61 - 30.16' R
Back of Turning Space

4 50+97.53 - 30.16' R
Center of Detectable Warning
& Type 2 Curb Ramp

5 51+09.78 - 30.16' R
Back of Turning Space

6 51+04.78 - 30.16' R
End Ramp Slope

Plot Scale - 1:20
Plotted From - tpr17192
File - U:\rdi\prj\brwn039K\050cr.dgn

STATE OF SOUTH DAKOTA	PROJECT	SHEET	TOTAL SHEETS
	P 0037(129)207 NH 0012(198)308	B91	B131

Plotting Date: 06/22/2016

CURB RAMP LAYOUT

* Turning Space with 1.5% slope
** Curb Ramp with 7.5% slope and 1.5% cross slope
Note: All curb and gutter shown on this sheet is Type B68 except as noted.
All sidewalk is 5' wide except as noted.

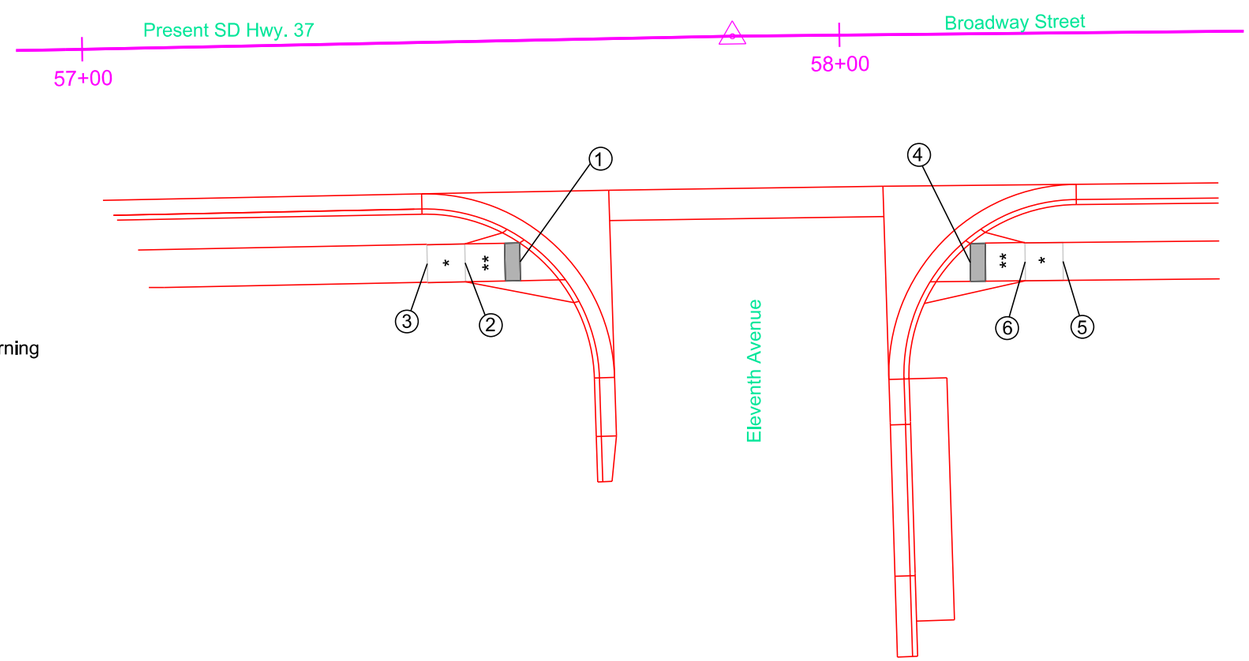

1 57+57.25 - 29.21' R
Center of Detectable Warning
& Type 2 Curb Ramp

2 57+50.01 - 29.22' R
End Ramp Slope

3 57+45.01 - 29.22' R
Back of Turning Space

4 58+16.99 - 30.17' R
Center of Detectable Warning
& Type 2 Curb Ramp

5 58+29.23 - 30.17' R
Back of Turning Space

6 58+24.23 - 30.17' R
End Ramp Slope

Plot Scale - 1:20
Plotted From - trgt17192
File - U:\rdprj\brown039K\058cr.dgn

STATE OF SOUTH DAKOTA	PROJECT	SHEET	TOTAL SHEETS
	P 0037(129)207 NH 0012(198)308	B92	B131

Plotting Date: 07/28/2016 Revised 7/28/16 NJF

CURB RAMP LAYOUT

* Turning Space with 1.5% slope
** Curb Ramp with 7.5% slope and 1.5% cross slope
Note: All curb and gutter shown on this sheet is Type B68 except as noted.
All sidewalk is 5' wide except as noted.

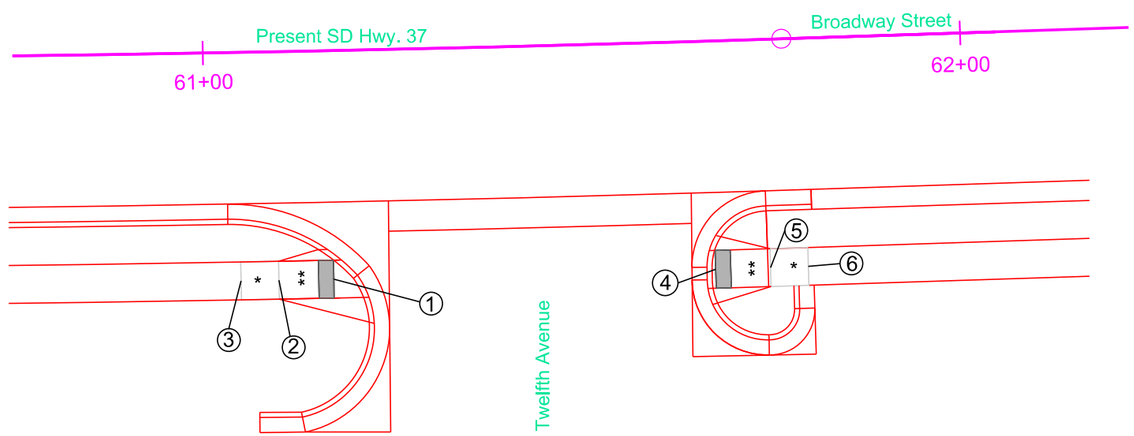

1 61+16.68 - 30.16' R
Center of Detectable Warning
& Type 2 Curb Ramp

2 61+09.48 - 30.16' R
End Ramp Slope

3 61+04.51 - 30.16' R
Back of Turning Space

4 61+66.81 - 30.15' R
Center of Detectable Warning
& Type 1 Curb Ramp

5 61+74.00 - 30.15' R
End Ramp Slope

6 61+79.00 - 30.16' R
Back of Turning Space

Plot Scale - 1:20
Plotted From - tmpr17192
File - U:\rdep\brwn039K\061cr.dgn

CURB RAMP LAYOUT

STATE OF SOUTH DAKOTA	PROJECT	SHEET	TOTAL SHEETS
	P 0037(129)207 NH 0012(198)308	B93	B131

Plotting Date: 06/22/2016

* Turning Space with 1.5% slope
** Curb Ramp with 7.5% slope and 1.5% cross slope
Note: All curb and gutter shown on this sheet is Type B68 except as noted.
All sidewalk is 5' wide except as noted.

1 63+31.28 - 54.29' L
Center of Detectable Warning
Type 2 Curb Ramp

2 63+42.42 - 65.00' L
Center of Detectable Warning
Type 2 Curb Ramp

3 63+35.18 - 65.25' L
End Ramp Slope

4 63+31.68 - 66.53' L
Back of Turning Space

5 63+30.19 - 65.41' L
Back of Turning Space

6 63+31.52 - 61.54' L
End Ramp Slope

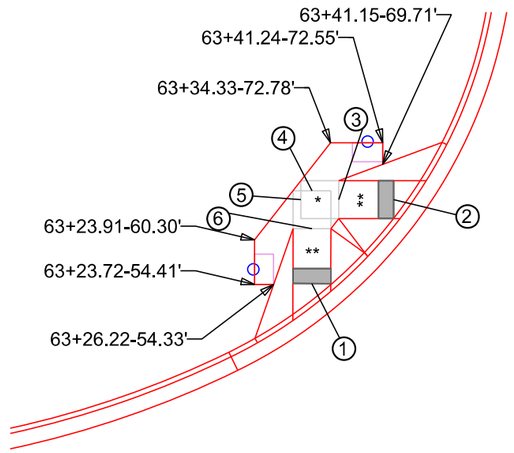

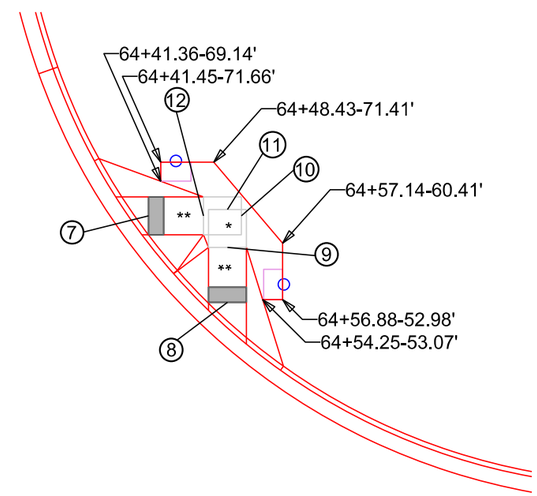

7 63+39.60 - 64.63' L
Center of Detectable Warning
Type 2 Curb Ramp

8 64+49.60 - 52.87' L
Center of Detectable Warning
Type 2 Curb Ramp

9 64+49.85 - 60.01' L
End Ramp Slope

10 64+51.84 - 64.19' L
Back of Turning Space

11 64+50.11 - 65.11' L
Back of Turning Space

12 64+46.84 - 64.37' L
End Ramp Slope

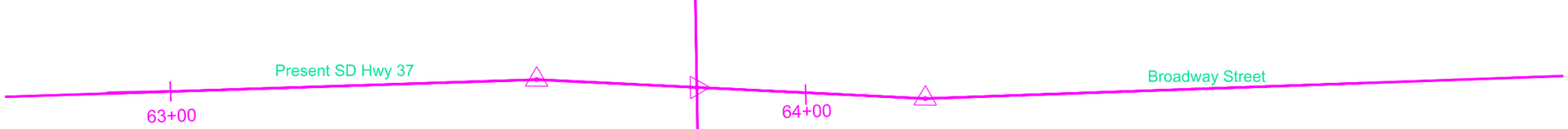

13 63+28.20 - 35.75' R
Center of Detectable Warning
Type 2 Curb Ramp

14 63+45.62 - 58.01' R
Center of Detectable Warning
Type 2 Curb Ramp

15 63+38.37 - 57.78' R
End Ramp Slope

16 63+33.38 - 57.62' R
Back of Turning Space

17 63+27.82 - 47.99' R
Back of Turning Space

18 63+27.98 - 43.00' R
End Ramp Slope

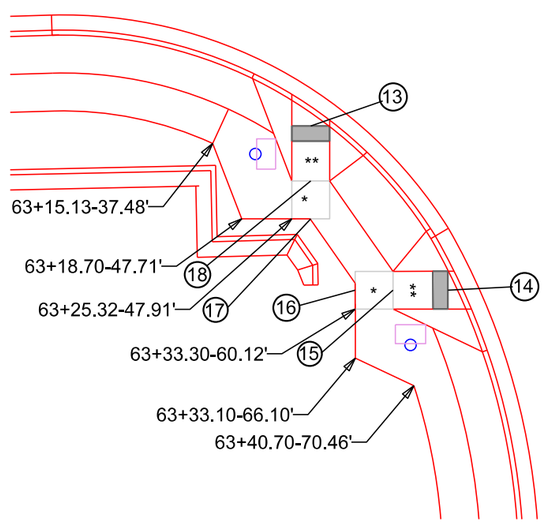

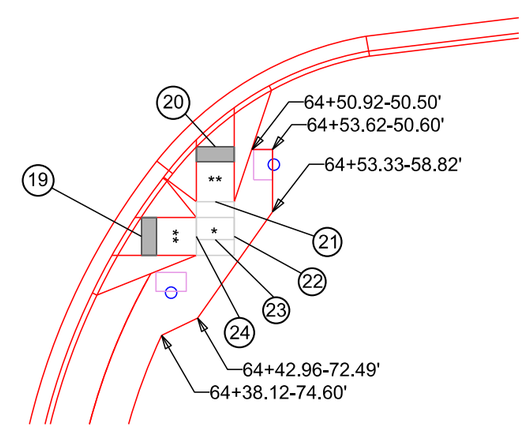

19 64+35.93 - 61.47' R
Center of Detectable Warning
& Type 2 Curb Ramp

20 64+46.08 - 49.99' R
Center of Detectable Warning
& Type 2 Curb Ramp

21 64+45.82 - 57.23' R
End Ramp Slope

22 64+48.16 - 61.91' R
Back of Turning Space

23 64+45.65 - 62.22' R
Back of Turning Space

24 64+43.17 - 61.73' R
End Ramp Slope

Plot Scale - 1:20
Plotted From - tmpr17192
File - U:\rdlprj\brwn039K\063cr.dgn

STATE OF	PROJECT	SHEET NO.	TOTAL SHEETS
S.D.	NH 0012(198)308	B94	B131

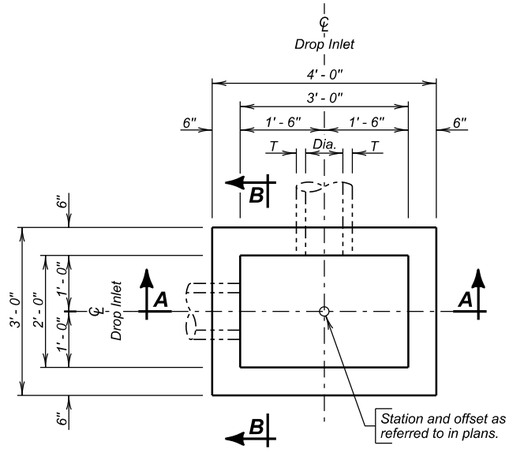

PLAN

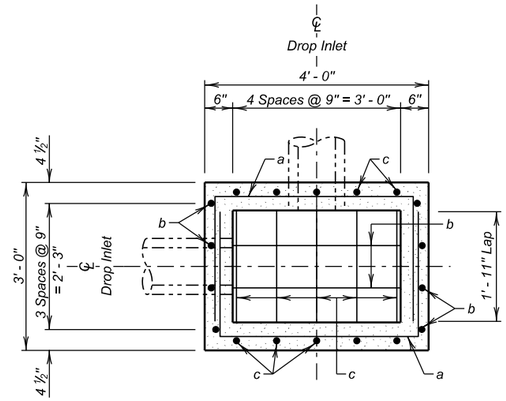

BOTTOM SECTION

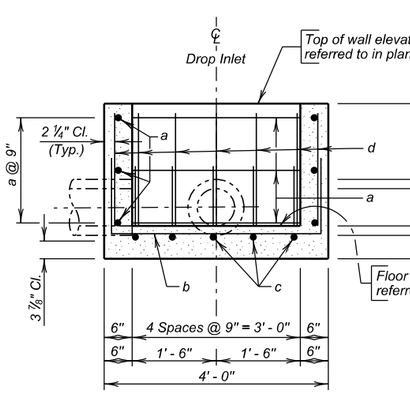

SEC. A - A

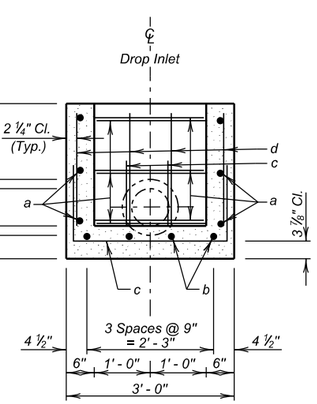

★ Maximum "H" is 2' - 6"

SEC. B - B

PIPE DISPLACEMENT REDUCTIONS

	Diameter (Inches)	Wall T (Inches)	Class M6 Concrete (Cu. Yd.)
R.C.P.	12	2	0.03
	15	2 ¼	0.04
	18	2 ½	0.05
	24	3	0.09
R.C. ARCH	18	2 ½	0.05
	24	3 ½	0.09

ESTIMATED QUANTITIES

ITEM	UNIT	CONSTANT QUANTITY	VARIABLE QUANTITY
✳ Class M6 Concrete	Cu. Yd.	0.26	0.22H
Reinforcing Steel	Lb.	36.68	28.97H
Frame and Grate Assembly	Each	1	———

REINFORCING SCHEDULE

Mk.	No.	Size	Length	Type	Bending Details
a	2.67H	4	8' - 0"	17	
b	4	4	6' - 3"	17	
c	5	4	5' - 3"	17	
d	22	4	H - 2"	Str.	

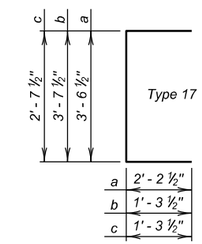

NOTE:
All dimensions are out to out of bars.

SPECIFICATIONS

1. Design Specifications: AASHTO LRFD Bridge Design Specifications, 2014 Edition with 2015 interims.
2. Construction Specifications: South Dakota Standard Specifications for Roads and Bridges, 2015 Edition and required Provisions, Supplemental Specifications, and Special Provisions as included in the Proposal.

GENERAL NOTES

1. Inlets shall be built in conformance with Section 670, Drop Inlets.
2. Design Live Load: HL-93. No construction loading in excess of legal load was considered.
3. Design Material Strengths: Concrete f'c = 4000 p.s.i.
   Reinforcing Steel fy = 60000 p.s.i.
3. All reinforcing steel shall conform to ASTM A615 Grade 60.
4. All concrete shall be Class M6.
✳ 5. Reduce total quantities of concrete by the amount of concrete displaced by the pipe(s). Total quantity of concrete shall be computed to the nearest hundredth of a cubic yard. The total quantity of reinforcing steel shall be computed to the nearest pound.
6. Drop inlet shown may be modified by the addition or omission of connecting pipes as noted elswhere in the plans. All pipes entering drop inlet must fit between the inside face of walls.
7. Maximum R.C.P. diameter shall not exceed 18 inches on the 2-foot wide side and shall not exceed 24 inches (24 inches for the R.C. arch) on the 3-foot wide side of the drpp inlet.
8. Use 1 inch clear cover on all reinforcing steel EXCEPT as shown.
9. Cut and bend reinforcing steel in field as necessary to fit pipe and manhole openings; such openings are not shown in these details. The number, size, and location of pipe entering the drop inlet are shown elsewhere in the plans.
10. The dimension of H is in feet.
11. Drop inlet may be precast. If precast, submit a checked design done by a SD registered P.E. and shop plans to the Office of Bridge Design for approval.

DETAILS
FOR
SPECIAL 2' X 3' TYPE B REINFORCED CONCRETE DROP INLET
S. D. DEPT. OF TRANSPORTATION
MARCH 2016

PLANS BY :
OFFICE OF BRIDGE DESIGN, SOUTH DAKOTA DEPARTMENT OF TRANSPORTATION

DESIGNED BY	CK. DES. BY	DRAFTED BY	
SK	CH	BT	Kevin N. Goeden BRIDGE ENGINEER

STATE OF	PROJECT	SHEET NO.	TOTAL SHEETS
S.D.	NH 0012(198)308	B95	B131

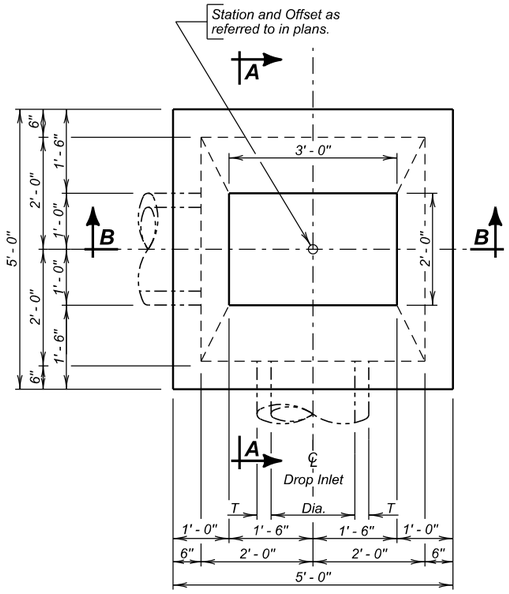

PLAN

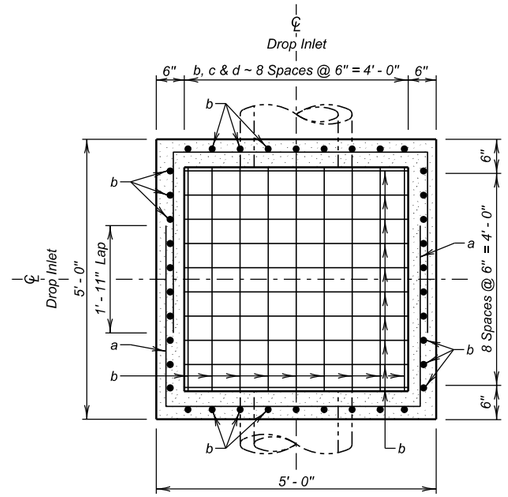

PLAN
(Bottom Reinforcing Steel)

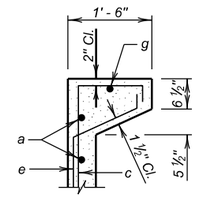

DETAIL "X"

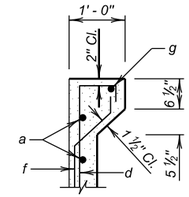

DETAIL "Y"

REINFORCING SCHEDULE

Mk.	No.	Size	Length	Type	Bending Details
a	2.67H	4	11' - 0"	17	
b	17	4	7' - 6"	17	
c	18	4	H + 15"	S17A	
d	18	4	H + 9"	S17A	
e	18	4	2' - 6"	S19	
f	18	4	2' - 3"	S19	
g	2	4	7' - 0"	17	

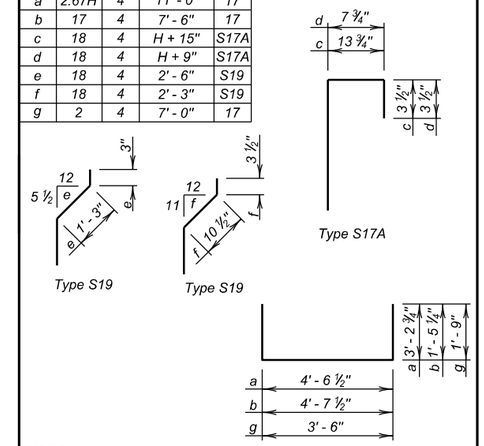

NOTE:
All dimensions are out to out of bars.

PIPE DISPLACEMENT REDUCTIONS

	Diameter (Inches)	Wall T (Inches)	Class M6 Concrete (Cu. Yd.)
R.C.P.	12	2	0.03
	15	2 ¼	0.04
	18	2 ½	0.05
	24	3	0.09
	30	3 ½	0.14
	36	4	0.20
R.C. ARCH	18	2 ½	0.05
	24	3 ½	0.09
	30	4	0.14

SPECIFICATIONS

1. Design Specifications: AASHTO LRFD Bridge Design Specifications, 2014 Edition with 2015 interims.
2. Construction Specifications: South Dakota Standard Specifications for Roads and Bridges, 2015 Edition and required Provisions, Supplemental Specifications, and Special Provisions as included in the Proposal.

GENERAL NOTES

1. Inlets shall be built in conformance with Section 670, Drop Inlets.
2. Design Live Load: HL-93. No construction loading in excess of legal load was considered.
3. Design Material Strengths: Concrete f'c = 4000 p.s.i.
   Reinforcing Steel fy = 60000 p.s.i.
3. All reinforcing steel shall conform to ASTM A615 Grade 60.
4. All concrete shall be Class M6.
5. ✳ Reduce total quantities of concrete by the amount of concrete displaced by the pipe(s). Total quantity of concrete shall be computed to the nearest hundredth of a cubic yard. The total quantity of reinforcing steel shall be computed to the nearest pound.
6. Drop inlet shown may be modified by the addition or omission of connecting pipes as noted elswhere in the plans. All pipes entering drop inlet must fit between the inside face of walls.
7. Maximum R.C.P. diameter shall not exceed 36 inches (30 inches for the R.C. arch) on the 3-foot wide side of the drop inlet.
8. Use 1 inch clear cover on all reinforcing steel EXCEPT as shown.
9. Cut and bend reinforcing steel in field as necessary to fit pipe and manhole openings; such openings are not shown in these details. The number, size, and location of pipe entering the drop inlet are shown elsewhere in the plans.
10. The dimension of H is in feet.
11. Drop inlet may be precast. If precast, submit a checked design done by a SD registered P.E. and shop plans to the Office of Bridge Design for approval.

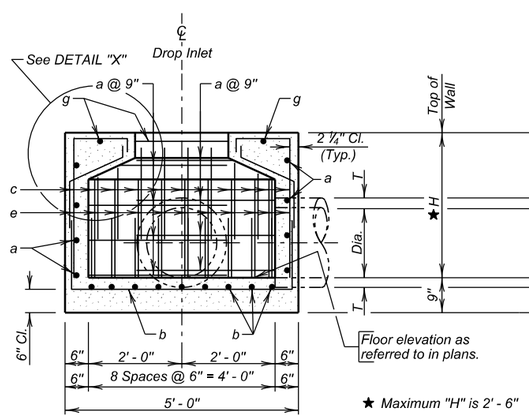

SEC. A - A

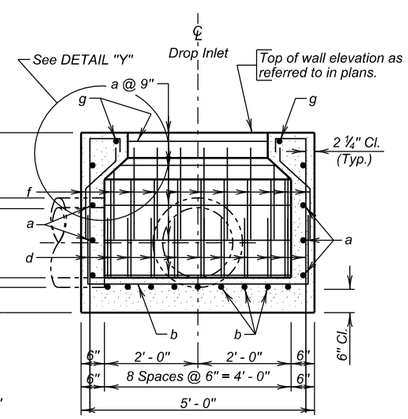

SEC. B - B

ESTIMATED QUANTITIES

ITEM	UNIT	CONSTANT QUANTITY	VARIABLE QUANTITY
✳ Class M6 Concrete	Cu. Yd.	0.98	0.33H
Reinforcing Steel	Lb.	180.69	43.67H
Frame and Grate Assembly	Each	1	——

DETAILS
FOR
SPECIAL 4' X 4' TYPE B REINFORCED CONCRETE DROP INLET
S. D. DEPT. OF TRANSPORTATION
MARCH 2016

PLANS BY :
OFFICE OF BRIDGE DESIGN, SOUTH DAKOTA DEPARTMENT OF TRANSPORTATION

DESIGNED BY	CK. DES. BY	DRAFTED BY	
SK	CH	BT	Kevin N. Goeden BRIDGE ENGINEER

STATE OF	PROJECT	SHEET NO.	TOTAL SHEETS
S.D.	NH 0012(198)308	B96	B131

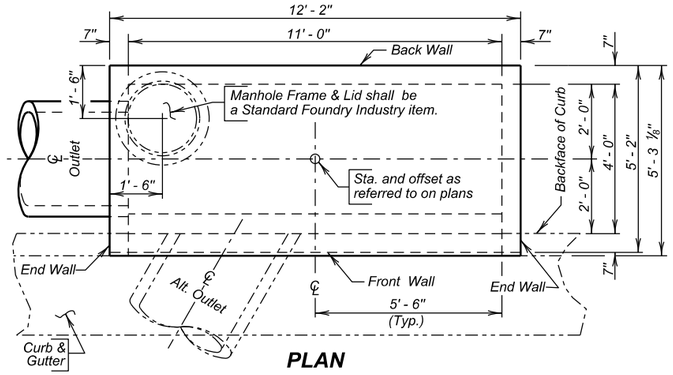

PLAN

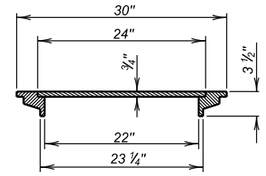

TYPICAL SECTION THRU TYPE S FRAME AND LID ASSEMBLY

(Weight 140 Lbs.)

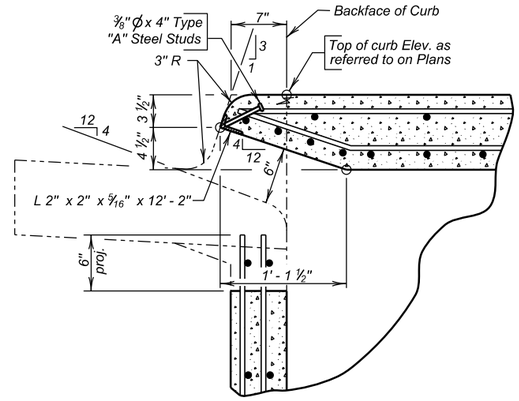

DETAIL "X"

PIPE DISPLACEMENT REDUCTIONS

(For pipes perpendicular to wall.)

PIPE SIZE		T (in.)	Class M6 Concrete Cu. Yd.
R.C. Pipe	18"	2 1/2	0.06
	21"	2 3/4	0.08
	24"	3	0.11
	27"	3 1/4	0.13
	30"	3 1/2	0.16
R.C. Arch Pipe	24"	3 1/2	0.10
Manhole			0.08

LEGEND FOR PLACING RE-STEEL

T.T.S. - Top of Top Slab
B.T.S. - Bottom of Top Slab
T.B.S. - Top of Bottom Slab
B.B.S. - Bottom of Bottom Slab
O.F.F.W. - Outside Face of Front Wall
I.F.F.W. - Inside Face of Front Wall
B.W. - Back Wall
E.W. - End Wall

REINFORCING SCHEDULE

Mk.	No.	Size	Length	Type	Bending Details
a	26 + 3H	5	11' - 8"	Str.	
b	12	4	4' - 11"	19A	
c	38	4	4' - 11"	Str.	
d	24	4	H + 3' - 3"	17A	
e	24	5	8' - 11"	17	
f	38	4	H + 6"	Str.	
g	5	5	15' - 11"	17	
h	18	5	H + 4' - 0"	17A	
k	2H	4	9' - 10"	17	

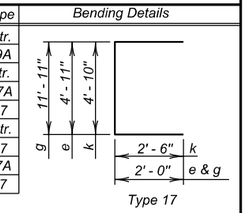

Type 17

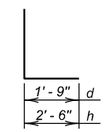

Type 17A

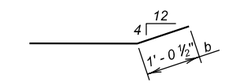

Type 19A

NOTE:
All dimensions are out to out of bars.

ESTIMATED QUANTITIES

ITEM	UNIT	CONSTANT QUANTITY	VARIABLE QUANTITY
* Class M6 Concrete	Cu. Yd.	3.48	0.70 H
Reinforcing Steel	Lb.	927	109.79 H
Manhole Frame & Lid Type S	Each	1	———

* Reduce total quantities of concrete by the volume displaced by the pipe. Total quantity of concrete to be computed to the hundredths of a Cubic Yard.

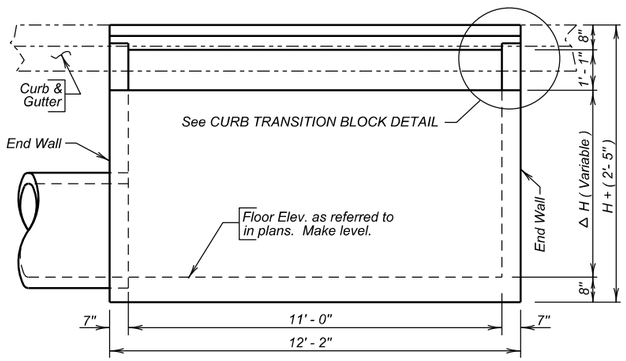

ELEVATION

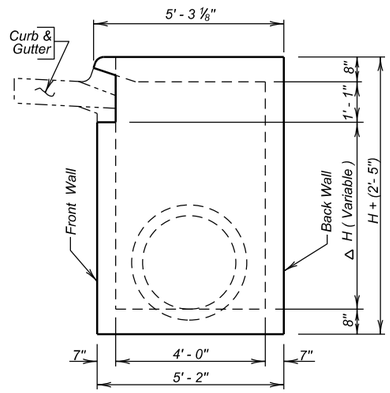

END ELEVATION

Δ (5' - 0" Maximum H)

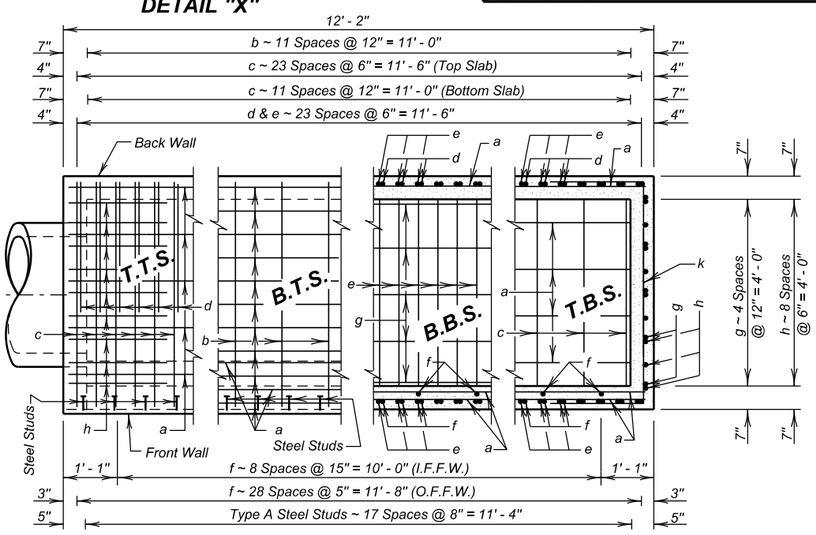

PLAN

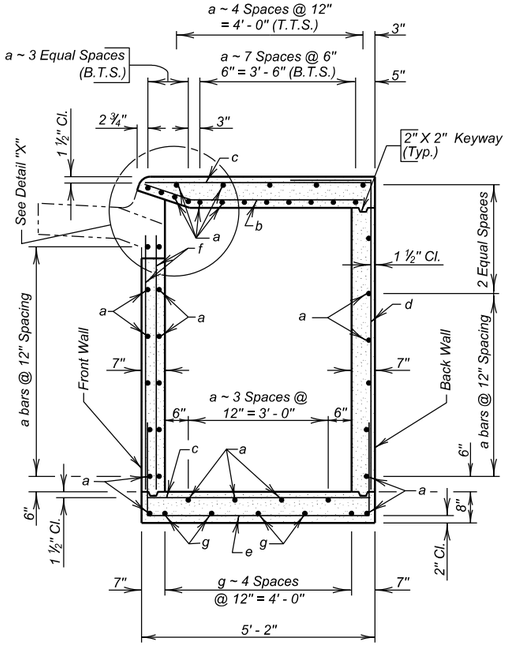

TYPICAL SECTION

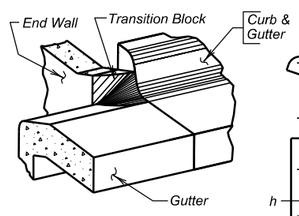

CURB TRANSITION BLOCK DETAIL

(Top Slab not shown)

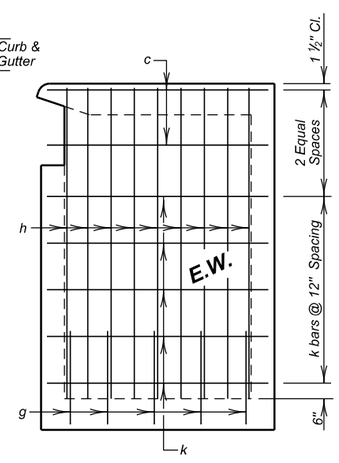

END ELEVATION

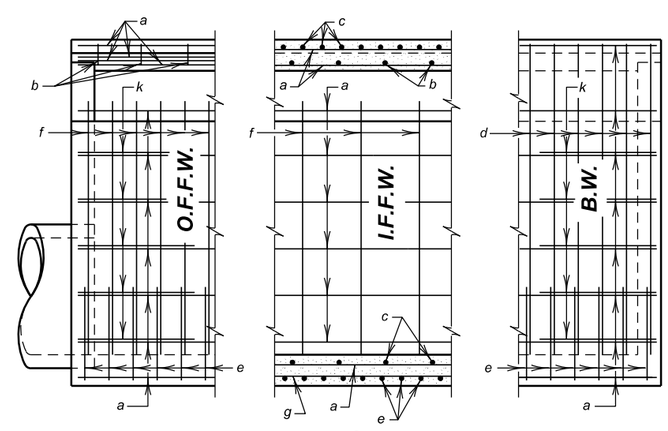

ELEVATION

SPECIFICATIONS

1. Design Specifications: AASHTO LRFD Bridge Design Specifications, 2014 Edition with 2015 interims.
2. Construction Specifications: South Dakota Standard Specifications for Roads and Bridges, 2015 Edition and required Provisions, Supplemental Specifications, and Special Provisions as included in the Proposal.

GENERAL NOTES

1. Inlets shall be built in conformance with Section 670, Drop Inlets.
2. Design Live Load: HL-93.
3. Design Material Strengths: Concrete f'c = 4000 p.s.i.
   Reinforcing Steel fy = 60000 p.s.i.
3. All reinforcing steel shall conform to ASTM A615 Grade 60.
4. Structural steel shall conform to ASTM A36.
5. All concrete shall be Class M6.
6. The 3/8" dia. Headed Type A Steel Studs shall conform to Section 7 of the latest edition of the ANSI/AWS D1.1 Structural Steel Welding Code.
7. After welding is complete, galvanize the angle and steel studs in accordance with AASHTO M111 (ASTM A123).
8. Use 1 inch clear cover on all reinforcing steel EXCEPT as shown.
9. Cut and bend reinforcing steel in field as necessary to fit pipe and manhole openings; such openings are not shown in these details. The number, size, and location of pipe entering the drop inlet are shown elsewhere in the plans.
10. Include the cost of the angle, headed studs, welding and galvanizing in the Unit Price Bid for Class M6 Concrete.
11. Cast iron frame and lid assembly shall conform to AASHTO M105, Class 30.
12. The dimension of H is in feet.

DETAILS

FOR

SPECIAL 4' X 11' TYPE S REINFORCED CONCRETE DROP INLET

S. D. DEPT. OF TRANSPORTATION

OCTOBER 2015

PLANS BY :
OFFICE OF BRIDGE DESIGN, SOUTH DAKOTA DEPARTMENT OF TRANSPORTATION

DESIGNED BY	CK. DES. BY	DRAFTED BY	
SK	BB	BT	Kevin N. Goeden BRIDGE ENGINEER

STATE OF	PROJECT	SHEET NO.	TOTAL SHEETS
S.D.	NH 0012(198)308	B97	B131

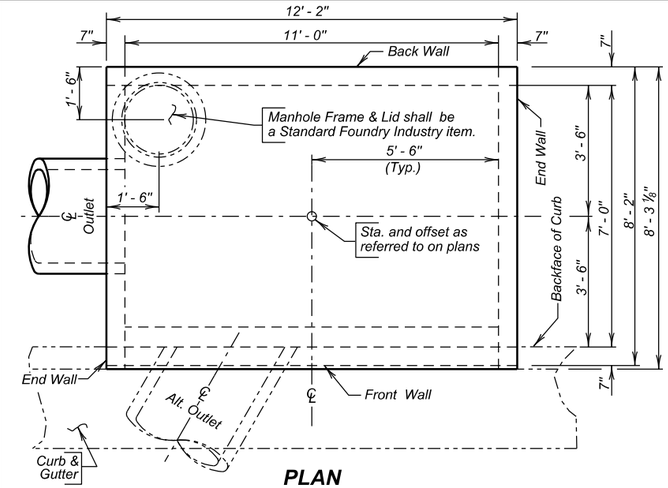

PLAN

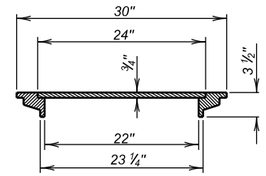

TYPICAL SECTION THRU TYPE S FRAME AND LID ASSEMBLY

(Weight 140 Lbs.)

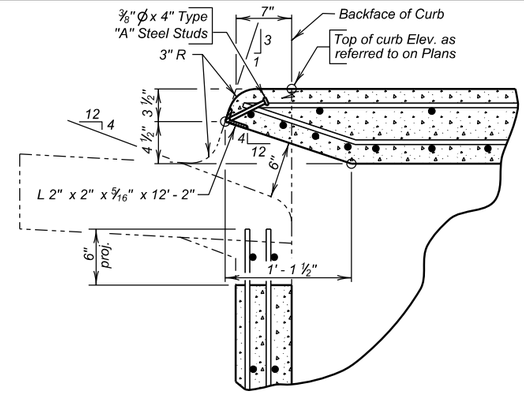

DETAIL "X"

PIPE DISPLACEMENT REDUCTIONS

(For pipes perpendicular to wall.)

PIPE SIZE		T (in.)	Class M6 Concrete Cu. Yd.
R.C. Pipe	18"	2 1/2	0.06
	21"	2 3/4	0.08
	24"	3	0.11
	27"	3 1/4	0.13
	30"	3 1/2	0.16
R.C. Arch Pipe	24"	3 1/2	0.10
Manhole			0.08

LEGEND FOR PLACING RE-STEEL

T.T.S. - Top of Top Slab
B.T.S. - Bottom of Top Slab
T.B.S. - Top of Bottom Slab
B.B.S. - Bottom of Bottom Slab
O.F.F.W. - Outside Face of Front Wall
I.F.F.W. - Inside Face of Front Wall
B.W. - Back Wall
E.W. - End Wall

REINFORCING SCHEDULE

Mk.	No.	Size	Length	Type	Bending Details
a	38 + 3H	5	11' - 8"	Str.	
b	12	4	7' - 11"	19A	
c	38	4	7' - 11"	Str.	
d	24	4	H + 3' - 3"	17A	
e	24	5	13' - 5"	17	
f	38	4	H + 6"	Str.	
g	8	5	17' - 5"	17	
h	30	5	H + 4' - 0"	17A	
k	2H	4	12' - 10"	17	

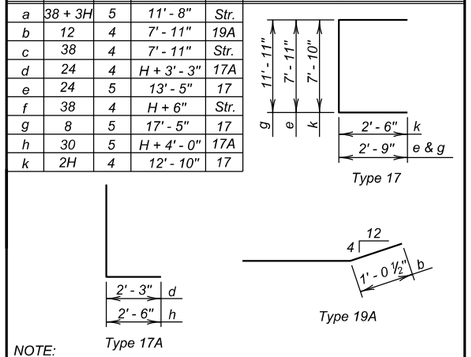

NOTE:
All dimensions are out to out of bars.

ESTIMATED QUANTITIES

ITEM	UNIT	CONSTANT QUANTITY	VARIABLE QUANTITY
✶ Class M6 Concrete	Cu. Yd.	5.44	0.83 H
Reinforcing Steel	Lb.	1398	126.36 H
Manhole Frame & Lid Type S	Each	1	—

✶ Reduce total quantities of concrete by the volume displaced by the pipe. Total quantity of concrete to be computed to the hundredths of a Cubic Yard.

SPECIFICATIONS

1. Design Specifications: AASHTO LRFD Bridge Design Specifications, 2014 Edition with 2015 interims.
2. Construction Specifications: South Dakota Standard Specifications for Roads and Bridges, 2015 Edition and required Provisions, Supplemental Specifications, and Special Provisions as included in the Proposal.

GENERAL NOTES

1. Inlets shall be built in conformance with Section 670, Drop Inlets.
2. Design Live Load: HL-93.
3. Design Material Strengths: Concrete f'c = 4000 p.s.i.
   Reinforcing Steel fy = 60000 p.s.i.
3. All reinforcing steel shall conform to ASTM A615 Grade 60.
4. Structural steel shall conform to ASTM A36.
5. All concrete shall be Class M6.
6. The 3/8" dia. Headed Type A Steel Studs shall conform to Section 7 of the latest edition of the ANSI/AWS D1.1 Structural Steel Welding Code.
7. After welding is complete, galvanize the angle and steel studs in accordance with AASHTO M111 (ASTM A123).
8. Use 1 inch clear cover on all reinforcing steel EXCEPT as shown.
9. Cut and bend reinforcing steel in field as necessary to fit pipe and manhole openings; such openings are not shown in these details. The number, size, and location of pipe entering the drop inlet are shown elsewhere in the plans.
10. Include the cost of the angle, headed studs, welding and galvanizing in the Unit Price Bid for Class M6 Concrete.
11. Cast iron frame and lid assembly shall conform to AASHTO M105, Class 30.
12. The dimension of H is in feet.

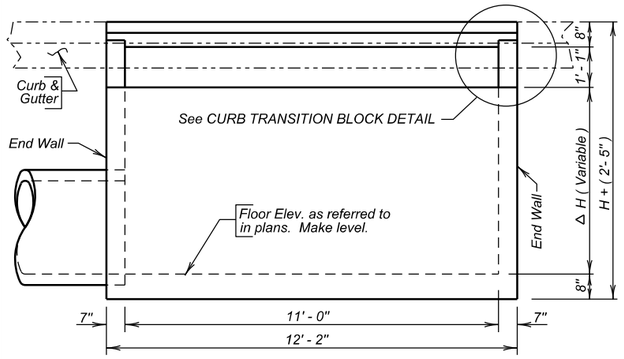

ELEVATION

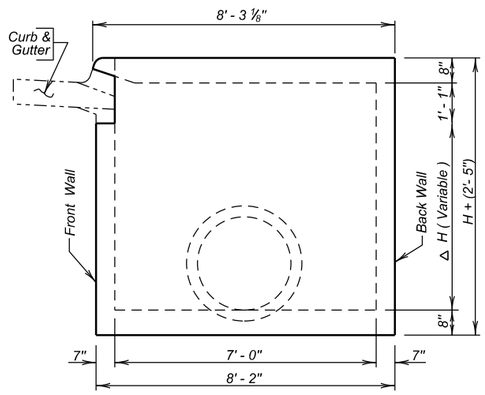

END ELEVATION

Δ (5' - 0" Maximum H)

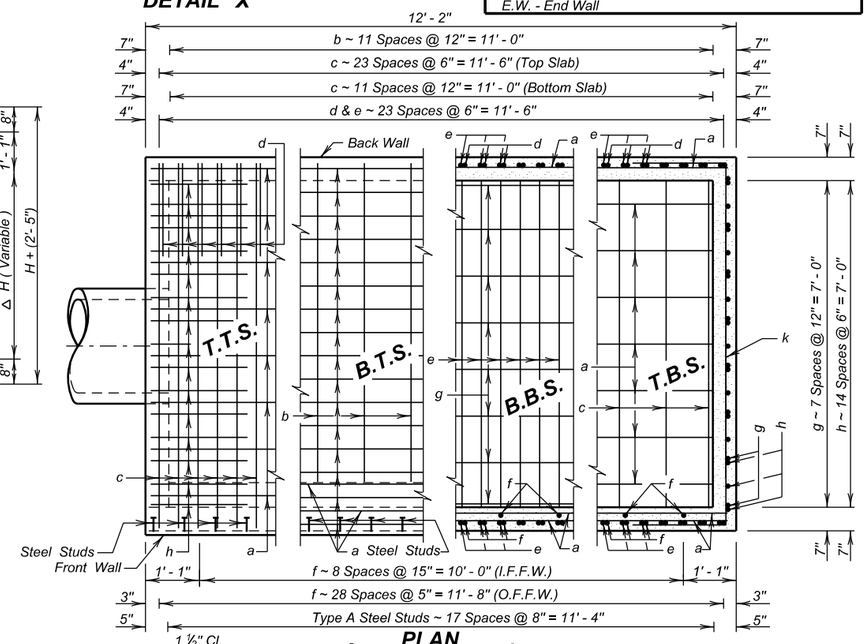

PLAN

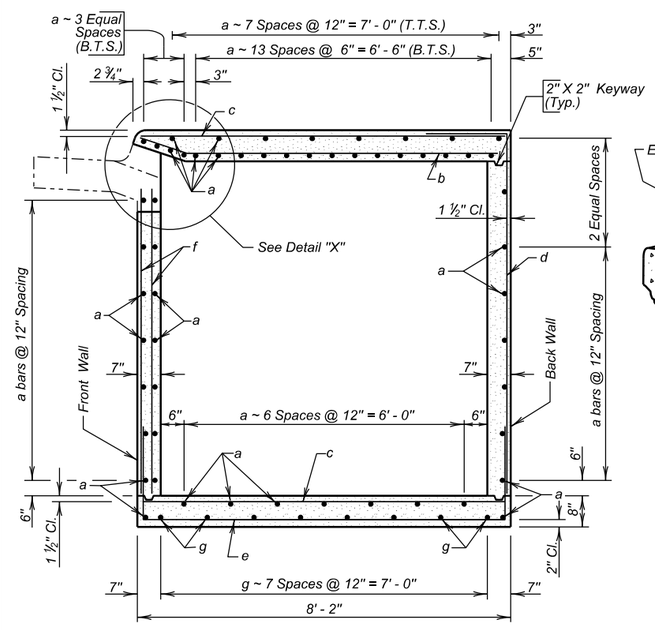

TYPICAL SECTION

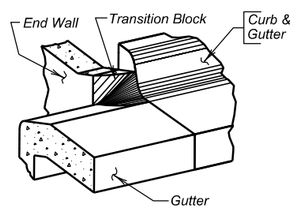

CURB TRANSITION BLOCK DETAIL

(Top Slab not shown)

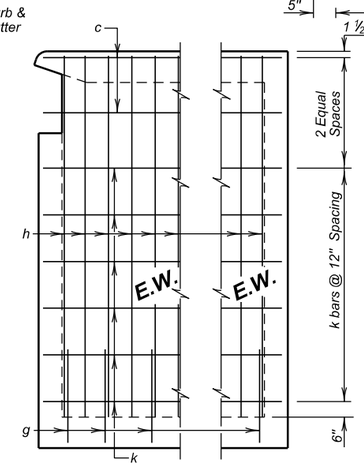

END ELEVATION

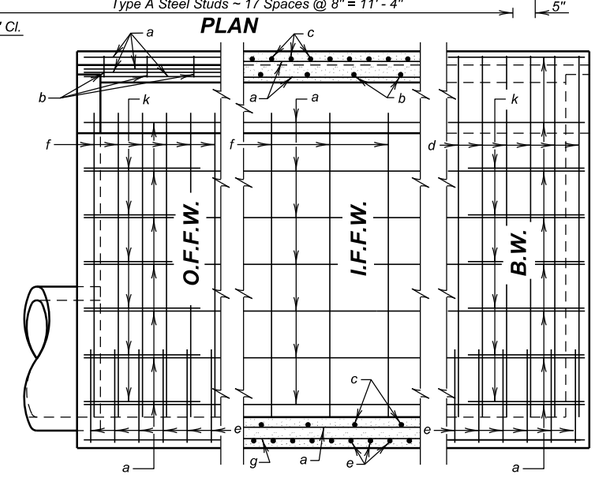

ELEVATION

PLANS BY :
OFFICE OF BRIDGE DESIGN, SOUTH DAKOTA DEPARTMENT OF TRANSPORTATION

DETAILS

FOR

SPECIAL 7' X 11' TYPE S REINFORCED CONCRETE DROP INLET

S. D. DEPT. OF TRANSPORTATION

OCTOBER 2015

DESIGNED BY	CK. DES. BY	DRAFTED BY	
SK	BB	BT	Kevin N. Goeden BRIDGE ENGINEER

STATE OF	PROJECT	SHEET NO.	TOTAL SHEETS
S.D.	PROJECT	B98	B131

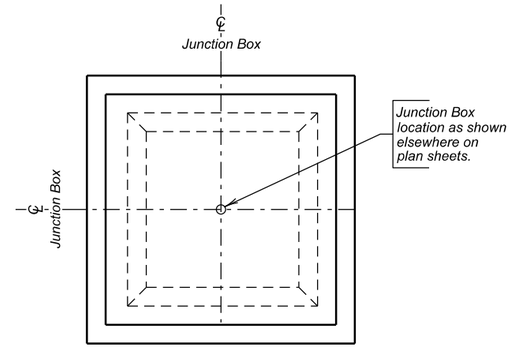

PLAN

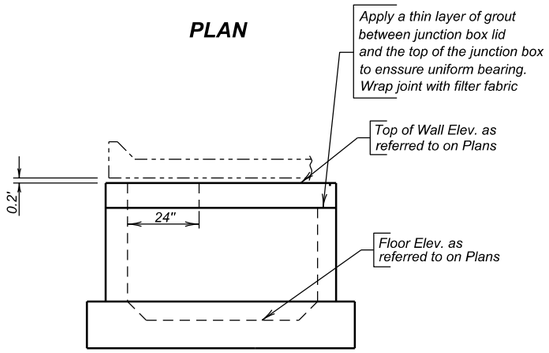

ELEVATION

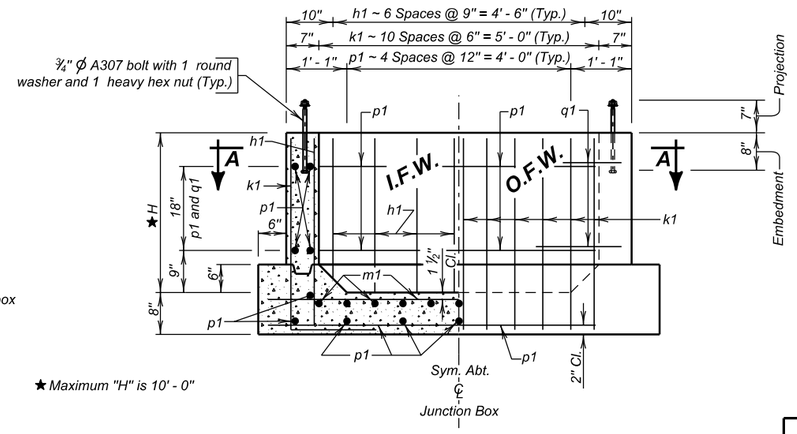

★ Maximum "H" is 10' - 0"

ELEVATION

LEGEND FOR PLACING RE-STEEL

T.T.S. - Top of Top Slab
B.T.S. - Bottom of Top Slab
T.B.S. - Top of Bottom Slab
B.B.S. - Bottom of Bottom Slab
O.F.W. - Outside Face of Wall
I.F.W. - Inside Face of Wall

REINFORCING SCHEDULE

Mk.	No.	Size	Length	Type	Bending Details
⌀a1	2	6	9' - 0"	T3	
h1	28	4	H + 1' - 2"	17A	
k1	48	4	H + 2' - 2"	17A	
m1	18	4	6' - 9"	Str.	
n1	42	5	6' - 0"	Str.	
p1	50	4	5' - 0"	Str.	
q1	8	4	3' - 6"	17A	

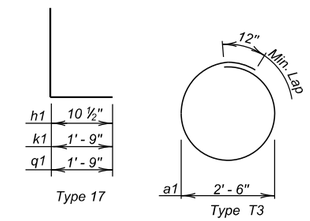

NOTE:
All dimensions are out to out of bars.
⌀ Attach an a1 bar to each mat of steel.

ESTIMATED QUANTITIES

ITEM	UNIT	CONSTANT QUANTITY	VARIABLE QUANTITY
✳ Class M6 Concrete	Cu. Yd.	2.6	0.48H
Reinforcing Steel	Lb.	667	50.77H

SPECIFICATIONS

1. Design Specifications: AASHTO LRFD Bridge Design Specifications, 2014 Edition with 2015 interims.
2. Construction Specifications: South Dakota Standard Specifications for Roads and Bridges, 2015 Edition and required Provisions, Supplemental Specifications, and Special Provisions as included in the Proposal.

GENERAL NOTES

1. Design Live Load: HL-93. No construction loading in excess of legal load was considered.
2. Reinforcing steel shall conform to ASTM A615 Grade 60. Cut and bend reinforcing steel as required to place pipe(s) thru junction box wall.
3. Design Material Strengths: Concrete f'c = 4000 p.s.i.
   Reinforcing Steel fy = 60000 p.s.i.
4. All reinforcing steel shall conform to ASTM A615 Grade 60.
5. All concrete shall be Class M6.
6. Junction Box may be precast. If precast, submit a checked design (done by a South Dakota registered P.E.) and shop plans to the Office of Bridge Design for approval.
7. Use 1 inch clear cover on all reinforcing steel unless otherwise noted.
8. All exposed edges shall be chamfered ¾ inch.
9. Junction Box shown may be modified by the addition or omission of connecting pipes as noted elsewhere in the plans. All pipes entering Junction Box must fit between the inside face of walls.
10. The cost of furnishing and installing the manhole steps shall be incidental to the contract unit price per Lb. for "Reinforcing Steel".
11. ✳ Reduce total quantities of concrete by the amount of concrete displaced by the pipes. The total quantity of concrete shall be computed to the nearest hundredth of a cubic yard. The total quantity of reinforcing steel shall be computed to the nearest pound.
12. All bolts and nuts shall conform to ASTM A307. Washers shall conform to ASTM F436 and all components shall be galvanized in accordance with ASTM A153 or ASTM F2329, as applicable. The bolts shall be hex head "structural" type with heavy hex nuts and round washers.

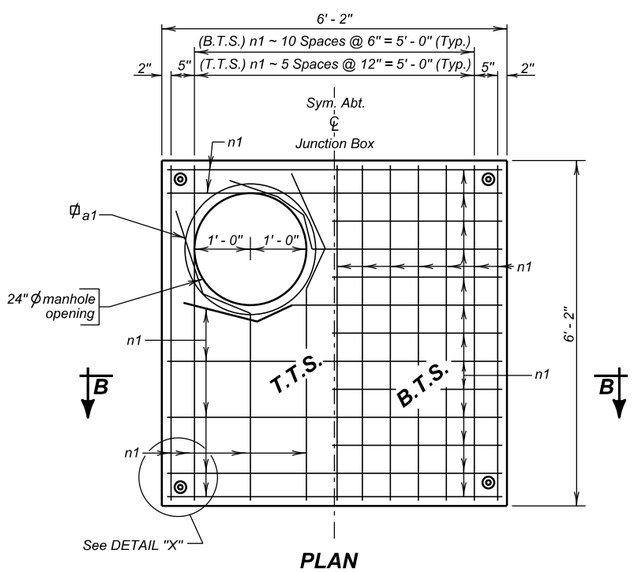

PLAN

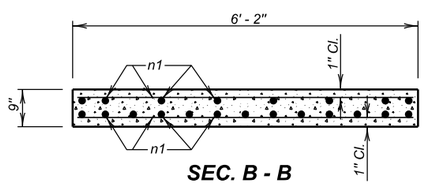

SEC. B - B

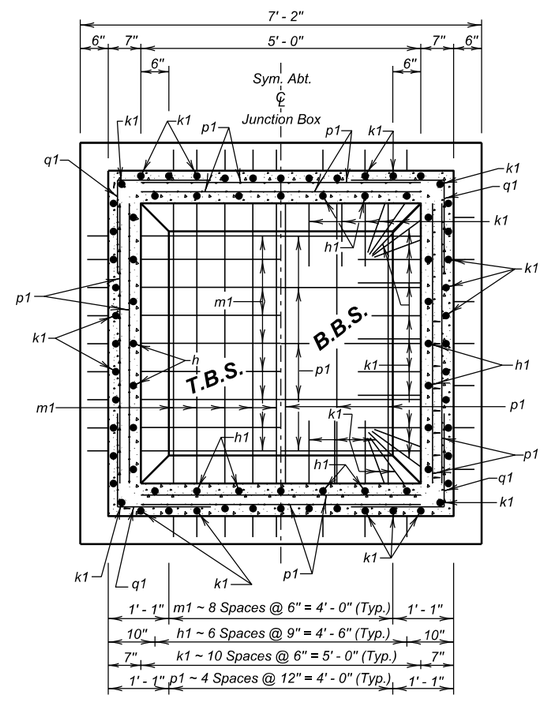

SEC. A - A

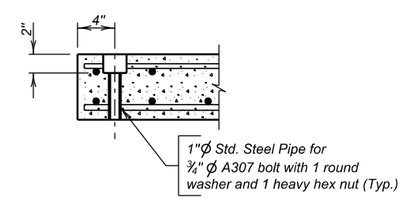

SEC. C - C

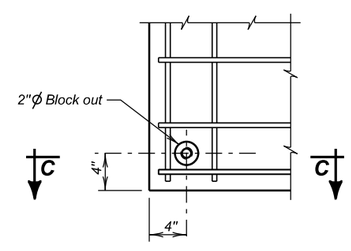

DETAIL "X"

PLANS BY :
OFFICE OF BRIDGE DESIGN, SOUTH DAKOTA DEPARTMENT OF TRANSPORTATION

DESIGNED BY	CK. DES. BY	DRAFTED BY	
SK	CH	BT	Kevin N. Goeden BRIDGE ENGINEER

DETAILS
FOR
SPECIAL 5' X 5' JUNCTION BOX
S. D. DEPT. OF TRANSPORTATION
MARCH 2016

STATE OF	PROJECT	SHEET NO.	TOTAL SHEETS
S.D.	PROJECT	B99	B131

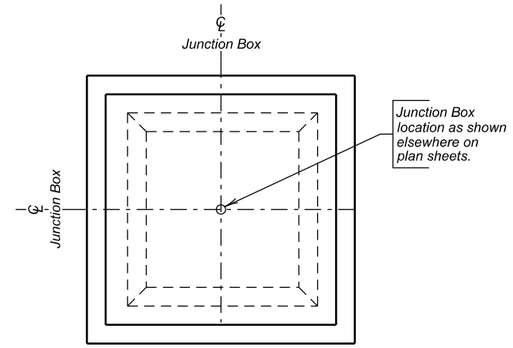

PLAN

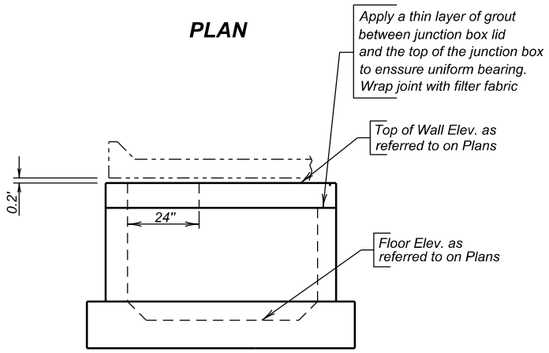

ELEVATION

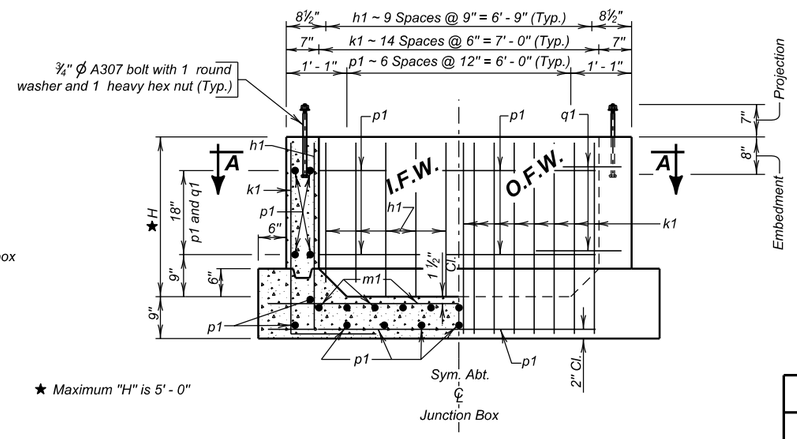

★ Maximum "H" is 5' - 0"

ELEVATION

LEGEND FOR PLACING RE-STEEL

T.T.S. - Top of Top Slab
B.T.S. - Bottom of Top Slab
T.B.S. - Top of Bottom Slab
B.B.S. - Bottom of Bottom Slab
O.F.W. - Outside Face of Wall
I.F.W. - Inside Face of Wall

ESTIMATED QUANTITIES

ITEM	UNIT	CONSTANT QUANTITY	VARIABLE QUANTITY
✳ Class M6 Concrete	Cu. Yd.	4.9	0.66H
Reinforcing Steel	Lb.	1171	69.47H

REINFORCING SCHEDULE

Mk.	No.	Size	Length	Type	Bending Details
⌀a1	2	6	9' - 0"	T3	
h1	40	4	H + 1' - 2"	17A	
k1	60	4	H + 2' - 5"	17A	
m1	24	5	8' - 9"	Str.	
n1	60	5	8' - 0"	Str.	
p1	54	4	7' - 0"	Str.	
q1	16	4	3' - 6"	17A	

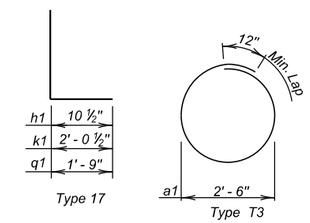

NOTE:
All dimensions are out to out of bars.
⌀ Attach an a1 bar to each mat of steel.

SPECIFICATIONS

1. Design Specifications: AASHTO LRFD Bridge Design Specifications, 2014 Edition with 2015 interims.
2. Construction Specifications: South Dakota Standard Specifications for Roads and Bridges, 2015 Edition and required Provisions, Supplemental Specifications, and Special Provisions as included in the Proposal.

GENERAL NOTES

1. Design Live Load: HL-93. No construction loading in excess of legal load was considered.
2. Reinforcing steel shall conform to ASTM A615 Grade 60. Cut and bend reinforcing steel as required to place pipe(s) thru junction box wall.
3. Design Material Strengths: Concrete f'c = 4000 p.s.i.
   Reinforcing Steel fy = 60000 p.s.i.
4. All reinforcing steel shall conform to ASTM A615 Grade 60.
5. All concrete shall be Class M6.
6. Junction Box may be precast. If precast, submit a checked design (done by a South Dakota registered P.E.) and shop plans to the Office of Bridge Design for approval.
7. Use 1 inch clear cover on all reinforcing steel unless otherwise noted.
8. All exposed edges shall be chamfered ¾ inch.
9. Junction Box shown may be modified by the addition or omission of connecting pipes as noted elsewhere in the plans. All pipes entering Junction Box must fit between the inside face of walls.
10. The cost of furnishing and installing the manhole steps shall be incidental to the contract unit price per Lb. for "Reinforcing Steel".
11. ✳ Reduce total quantities of concrete by the amount of concrete displaced by the pipes. The total quantity of concrete shall be computed to the nearest hundredth of a cubic yard. The total quantity of reinforcing steel shall be computed to the nearest pound.
12. All bolts and nuts shall conform to ASTM A307. Washers shall conform to ASTM F436 and all components shall be galvanized in accordance with ASTM A153 or ASTM F2329, as applicable. The bolts shall be hex head "structural" type with heavy hex nuts and round washers.

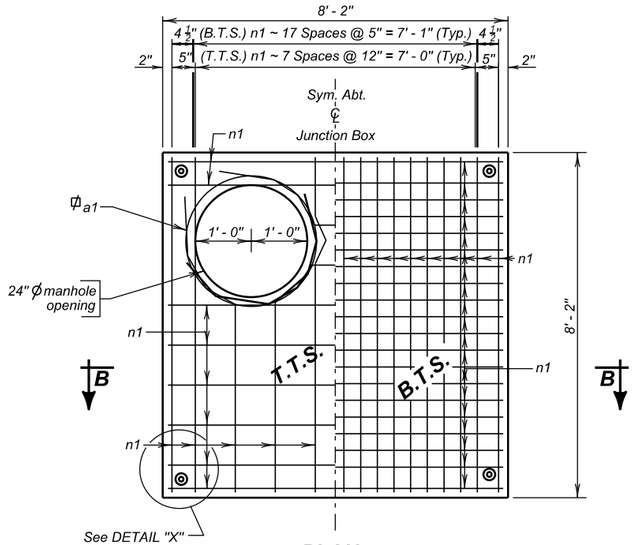

PLAN

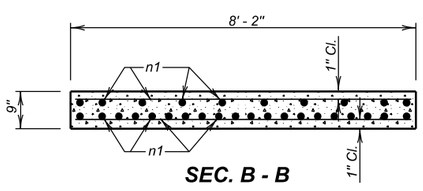

SEC. B - B

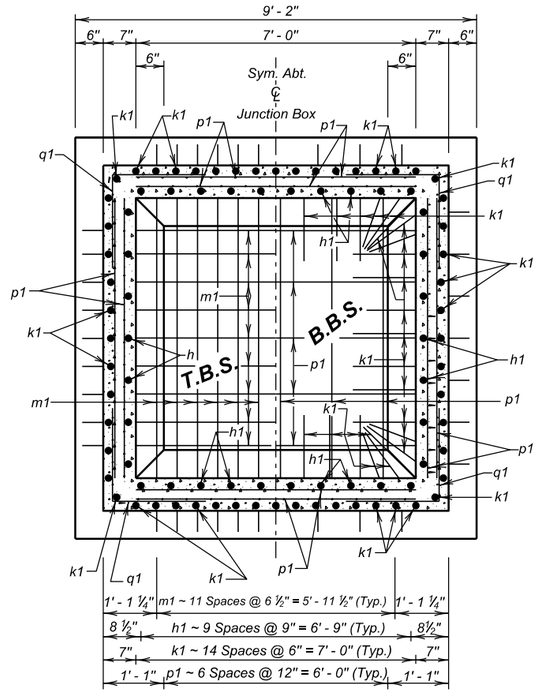

SEC. A - A

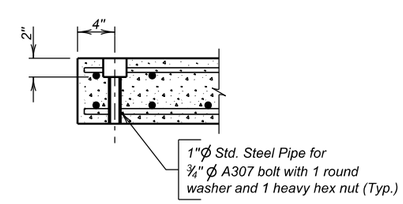

SEC. C - C

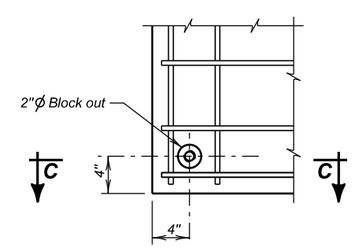

DETAIL "X"

DETAILS
FOR
SPECIAL 7' X 7' JUNCTION BOX
S. D. DEPT. OF TRANSPORTATION
MARCH 2016

PLANS BY :
OFFICE OF BRIDGE DESIGN, SOUTH DAKOTA DEPARTMENT OF TRANSPORTATION

DESIGNED BY	CK. DES. BY	DRAFTED BY	
SK	CH	BT	Kevin N. Goeden BRIDGE ENGINEER

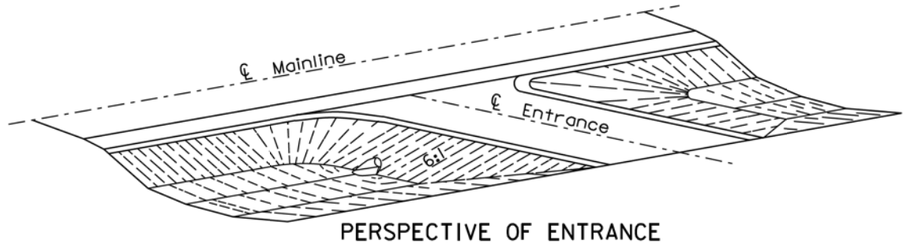

PERSPECTIVE OF ENTRANCE

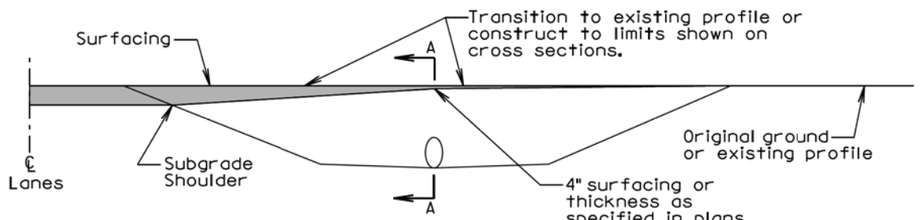

ELEVATION VIEW (ENTRANCE)

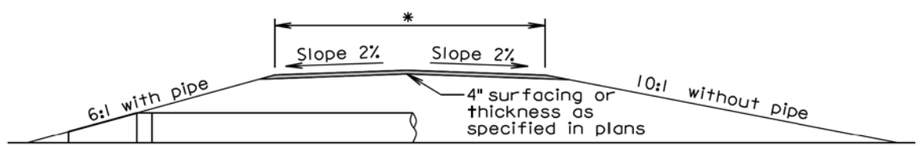

SECTION A-A (ENTRANCE)

*The finished surfacing width is stated elsewhere in the plans. The subgrade width is 4' wider than the finished surfacing width unless stated otherwise in the plans.

GENERAL NOTES:

The ditch section shown above in the perspective and elevation view is only for illustrative purposes.

A 6:1 inslope shall be constructed for an entrance when a pipe is required. A 10:1 inslope shall be constructed when a pipe is not required.

Pipe lengths shall be adjusted if necessary during construction to obtain the 6:1 slopes. For grading projects, the pipe lengths are estimated typically using a 4" thickness of surfacing directly over the subgrade above the pipe.

The transition area between the mainline inslope and the approach inslope for entrances shall be rounded to eliminate an abrupt transition.

The turning radii shall be 35' for intersecting roads and entrances unless stated otherwise in the plans.

September 6, 2013

Published Date: 2nd Qtr. 2016	SDDOT	INTERSECTING ROADS AND ENTRANCES	PLATE NUMBER 120.01
			Sheet 1 of 2

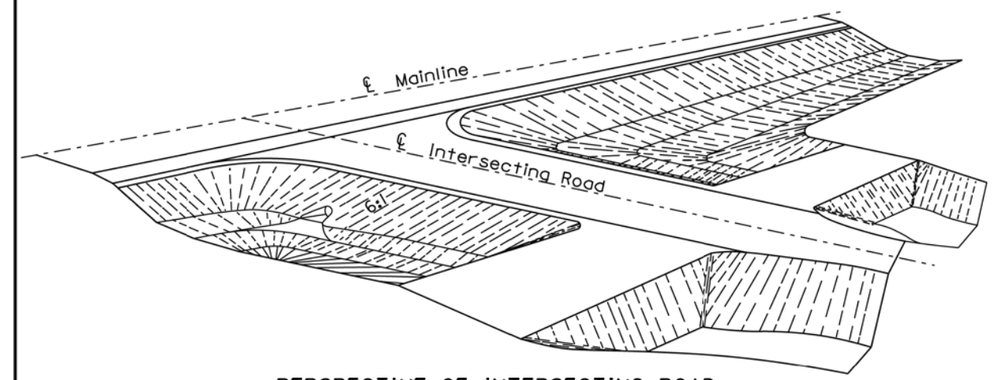

PERSPECTIVE OF INTERSECTING ROAD

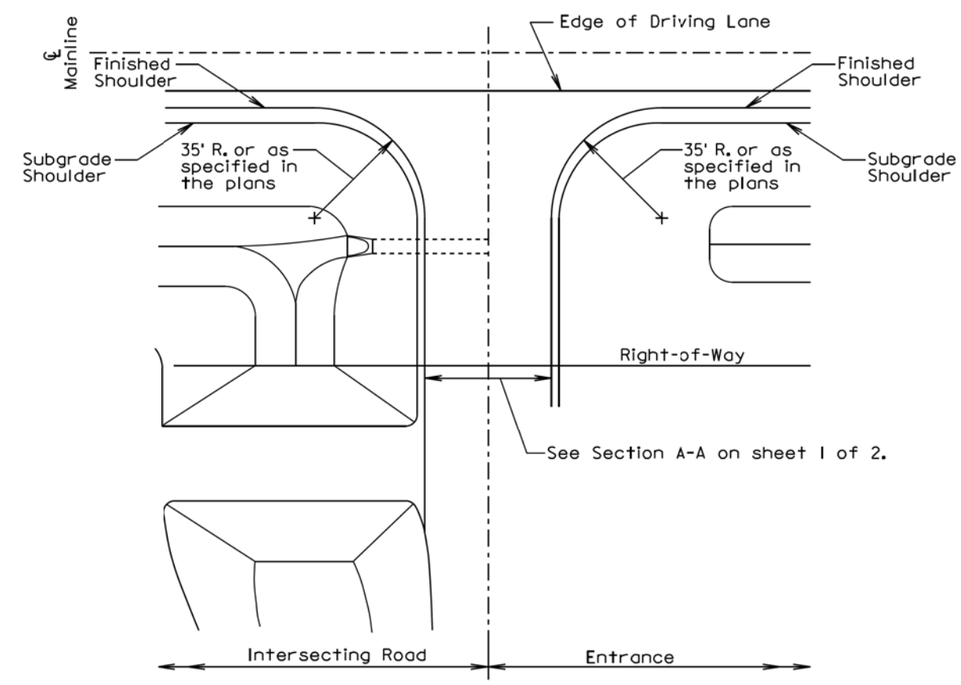

PLAN VIEW

September 6, 2013

Published Date: 2nd Qtr. 2016	SDDOT	INTERSECTING ROADS AND ENTRANCES	PLATE NUMBER 120.01
			Sheet 2 of 2

Plot Scale - 1:200
- Plotted From - tnpr17192
File - ...\brwn039K\s12001_1\s12001_2.dgn

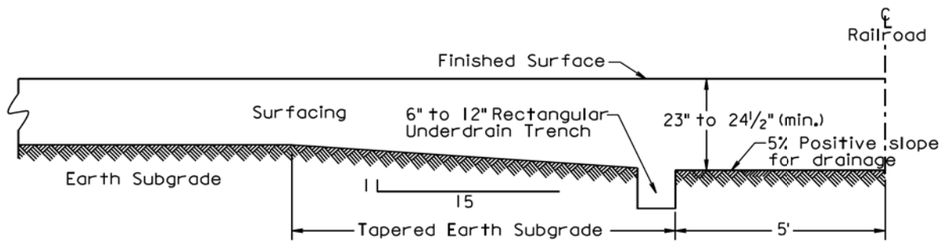

Excavation Profile Along Roadway

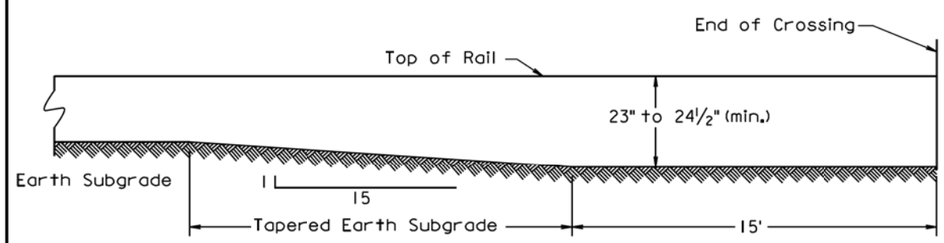

Excavation Profile Along Railroad

March 31, 2000

Published Date: 2nd Qtr. 2016	SDDOT	GRADING AT RAILROAD CROSSING	PLATE NUMBER 120.06
			Sheet 1 of 1

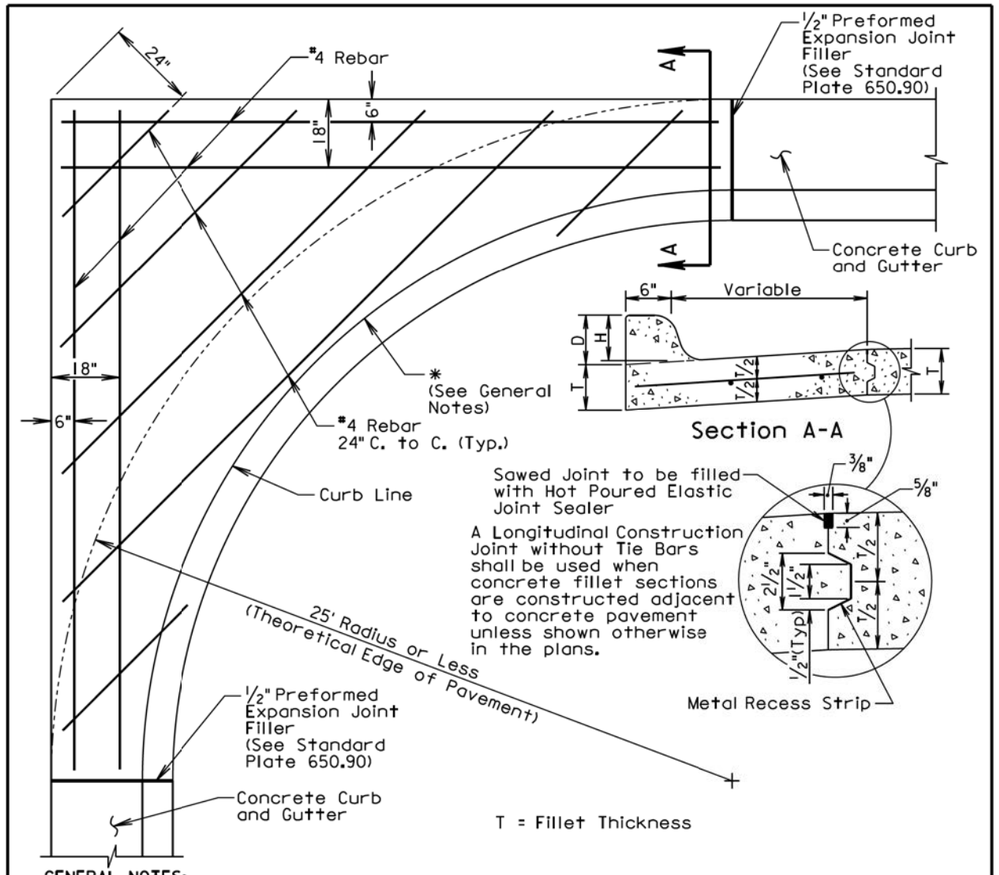

GENERAL NOTES:

* If a curb ramp is constructed adjacent to a PCC fillet section, the curb will need to be modified. Refer to the corresponding curb ramp standard plate or other special details in the plans for modification of the PCC fillet section.

Dimensions D, H, and T shall conform to those shown on the appropriate curb and gutter standard plate.

All rebar shall be in conformance with Sections 480 and 1010 of the Specifications. All rebar shall have a minimum of 3" clear cover.

Class M6 Concrete shall be used in construction of the fillets.

The concrete curb shall be monolithic with the concrete fillet. No separate payment for this curb will be made as the curb is considered a part of the fillet.

Joints shall be constructed at 10' intervals except when fillets are constructed adjacent to PCC Pavement. If there is adjacent PCC Pavement the joints shall be extended from edge of pavement through the fillet section as directed by the Engineer.

The cost for all materials, labor, and incidentals necessary to construct the PCC fillet section with curb and gutter shall be incidental to the contract unit price per square yard for the corresponding PCC fillet section bid item.

June 26, 2015

Published Date: 2nd Qtr. 2016	SDDOT	PCC FILLET SECTION WITH TYPE B CURB AND GUTTER	PLATE NUMBER 380.16
			Sheet 1 of 1

Plot Scale - 1:200
- Plotted From - tnpr17192
File - ...\pn\brwn039Kis12006s38016.dgn

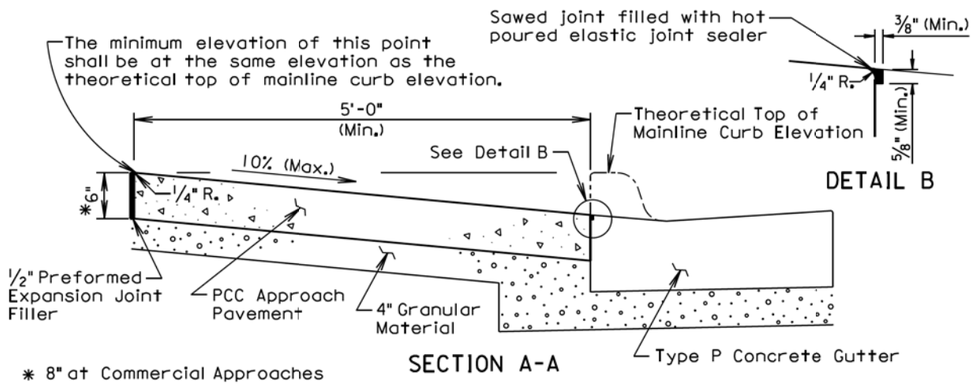

DETAIL B

SECTION A-A

* 8" at Commercial Approaches

** Width for 6" high curb is 6' (See Standard Plate 650.35)

*** Within these areas, the surface of the type A PCC approach pavement shall be sloped transitionally as approved by the Engineer.

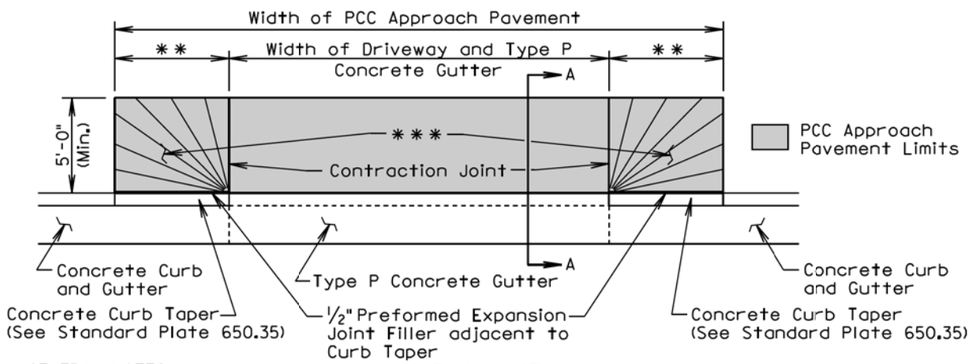

PLAN VIEW

GENERAL NOTES:

The concrete for the type A PCC approach pavement and adjacent driveway shall comply with the requirements of the Specifications for class M6 concrete unless otherwise stated in the plans.

Contraction joints in the type A PCC approach pavement shall be 1 1/2 inches deep if formed in the fresh concrete using a suitable grooving tool. If a saw is used to cut the contraction joints, then the depth of the joint shall be at least 1/4 the thickness of the approach pavement. Additional contraction joints not shown in the Plan View shall be spaced as follows:

One joint at the center of the approach for driveways 16' to 24' wide.
Two joints spaced at equal intervals for driveways greater than 24' to 40' wide.

All costs for furnishing and placing the type A PCC approach pavement and constructing the expansion and contraction joints including labor, equipment, and materials including the earthen backfill shall be incidental to the contract unit price per square yard for the corresponding PCC Approach Pavement bid item.

All costs for excavation required for placing the type A PCC approach pavement and granular material shall be incidental to the contract unit price per cubic yard for "Unclassified Excavation". All costs for furnishing and placing the granular material shall be incidental to the contract unit price per ton for the corresponding granular material bid item.

June 26, 2015

Published Date: 2nd Qtr. 2016	SDDOT	TYPE A PCC APPROACH PAVEMENT	PLATE NUMBER 380.40 Sheet 1 of 1

TOLERANCES IN DIMENSIONS

Diameter: ±1.5% for 24" Dia. or less and ±1% or 3/8" whichever is more for 27" Dia. or greater.
Diameters at joints: ± 3/16" for 30" Dia. or less and ± 1/4" for 36" or greater.
Length of joint (j): ± 1/4".
Wall thickness (T): not less than design T by more than 5% or 3/16", whichever is greater.
Laying length: shall not underrun by more than 1/2".

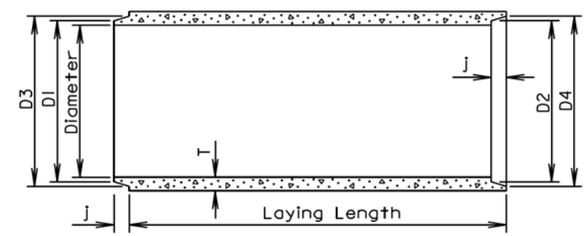

LONGITUDINAL SECTION

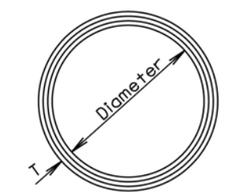

END VIEW

GENERAL NOTES:

Construction of R. C. P. shall conform to the requirements of Section 990 of the Specifications.

Not more than 2 four-foot sections shall be permitted near the ends of any culvert. Four-foot lengths shall be used only to secure the required length of culvert.

Diam. (in.)	Approx. Wt. /Ft. (lb.)	T (in.)	J (in.)	D1 (in.)	D2 (in.)	D3 (in.)	D4 (in.)
12	92	2	1 3/4	13 1/4	13 5/8	13 7/8	14 1/4
15	127	2 1/4	2	16 1/2	16 7/8	17 1/4	17 5/8
18	168	2 1/2	2 1/4	19 5/8	20	20 3/8	20 3/4
21	214	2 3/4	2 1/2	22 7/8	23 1/4	23 3/4	24 1/8
24	265	3	2 3/4	26	26 3/8	27	27 3/8
27	322	3 1/4	3	29 1/4	29 5/8	30 1/4	30 5/8
30	384	3 1/2	3 1/4	32 3/8	32 3/4	33 1/2	33 7/8
36	524	4	3 3/4	38 3/4	39 1/4	40	40 1/2
42	685	4 1/2	4	45 1/8	45 5/8	46 1/2	47
48	867	5	4 1/2	51 1/2	52	53	53 1/2
54	1070	5 1/2	4 1/2	57 7/8	58 3/8	59 3/8	59 7/8
60	1296	6	5	64 1/4	64 3/4	66	66 1/2
66	1542	6 1/2	5 1/2	70 5/8	71 1/8	72 1/2	73
72	1810	7	6	77	77 1/2	79	79 1/2
78	2098	7 1/2	6 1/2	83 3/8	83 7/8	85 5/8	86 1/8
84	2410	8	7	89 3/4	90 1/4	92 1/8	92 5/8
90	2740	8 1/2	7	95 3/4	96 1/4	98 1/8	98 5/8
96	2950	9	7	102 1/8	102 5/8	104 1/2	105
102	3075	9 1/2	7 1/2	109	109 1/2	111 1/2	112
108	3870	10	7 1/2	115 1/2	116	118	118 1/2

June 26, 2015

Published Date: 2nd Qtr. 2016	SDDOT	REINFORCED CONCRETE PIPE	PLATE NUMBER 450.01 Sheet 1 of 1

Plot Scale - 1:200
- Plotted From - trpr17192
File - ...\prj\brwn039K\s38040s45001.dgn

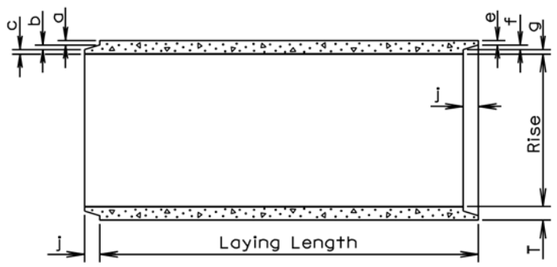

LONGITUDINAL SECTION

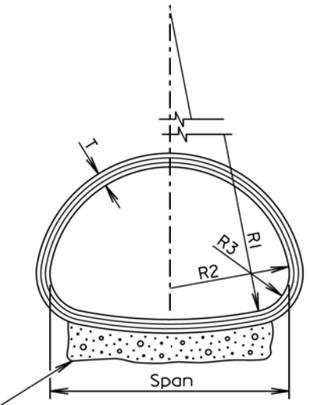

END VIEW

TOLERANCES IN DIMENSIONS

Radial dimensions at joints: ± 1/8" for 65" span or less and ± 1/4" for longer spans.
Rise and Span: ±2% of tabular values.
Length of Joint (J): ± 1/4".
Wall thickness (T): not less than design T by more than 5% or 3/16", whichever is greater.
Laying length: shall not underrun by more than 1/2".

Gravel Bedding Material shall be supplied for 102" to 169" spans. It shall be placed to a thickness of 6" (Min.) x 85% of the Span x Length of culvert and shall conform to the gradation requirements for gravel surfacing except material may be screened or may be plan provided material.

* Size (in.)	Approx. Wt./Ft. (lb.)	Rise (in.)	Span (in.)	T (in.)	a (in.)	b (in.)	c (in.)	j (in.)	e (in.)	f (in.)	g (in.)	R1 (in.)	R2 (in.)	R3 (in.)
18	170	13 1/2	22	2 1/2	1 3/8	3/8	3/4	2	1 1/8	3/8	1	27 1/2	13 3/4	5 1/4
24	320	18	28 1/2	3 1/2	1 5/8	1/2	1 3/8	3	1 3/8	1/2	1 5/8	40 11/16	14 3/4	4 5/8
30	450	22 1/2	36 1/4	4	1 13/16	5/8	1 9/16	3 1/2	1 9/16	5/8	1 13/16	51	18 3/4	6 1/8
36	600	26 5/8	43 3/4	4 1/2	2	3/4	1 3/4	4	1 3/4	3/4	2	62	22 1/2	6 1/2
42	740	31 5/16	51 1/8	4 1/2	2	3/4	1 3/4	4	1 3/4	3/4	2	73	26 1/4	7 3/4
48	890	36	58 1/2	5	2 1/4	3/4	2	5	2	3/4	2 1/4	84	30	8 7/8
54	1100	40	65	5 1/2	2 1/2	3/4	2 1/4	5	2 1/4	3/4	2 1/2	92 1/2	33 3/8	10
60	1400	45	73 1/2	6	3 5/16	3/4	1 15/16	5	2 3/4	3/4	2 1/2	105	37 1/2	11
72	1900	54	88	7	3 13/16	1	2 3/16	6	3 1/4	1	2 3/4	126	45	13 5/16
84	2500	62	102	8	4 1/8	1	2 7/8	6	3 1/2	1	3 1/2	162 1/2	52	14 1/2
96	3300	78	122 3/8	9	4 1/2	1	3 1/2	7	4	1	4	218	62	20
108	4200	88	138 1/2	10	5	1	4	7	4 1/2	1	4 1/2	269	70	22
120	5100	96 7/8	154	11	5 1/2	1	4 1/2	7	5	1	5	301 3/8	78	24
132	5100	106 1/2	168 3/4	10		1	4	7	4 1/2	1	4 1/2	329	85 5/8	26 7/8

* Equivalent Diameter of Circular R. C. P.

GENERAL NOTES:

Construction of R.C.P. Arch shall conform to the requirements of Section 990 of the Specifications. Not more than 2 four-foot sections shall be permitted near the ends of any culvert. Four-foot lengths shall be used only to secure the required length of culvert.

June 26, 2015

Published Date: 2nd Qtr. 2016	SDDOT	REINFORCED CONCRETE PIPE ARCH	PLATE NUMBER 450.02 Sheet 1 of 1

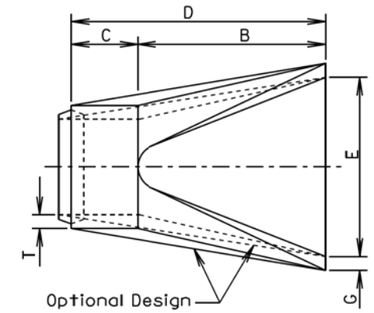

TOP VIEW

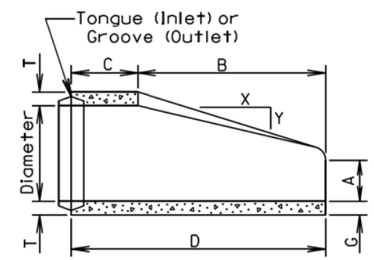

LONGITUDINAL SECTION

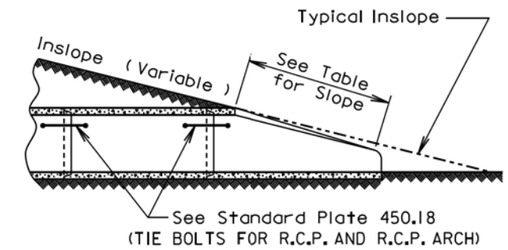

SLOPE DETAIL

GENERAL NOTES:

Lengths of concrete pipe shown on plan sheets are between flared ends only.

Construction of R.C.P. Flared End shall conform to the requirements of Section 990 of the Specifications.

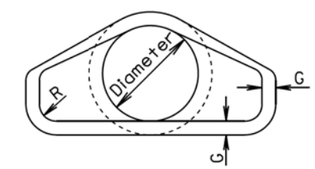

END VIEW

Dia. (in.)	Approx. Wt. of Section (lbs.)	Approx. Slope (X to Y)	T (in.)	A (in.)	B (in.)	C (in.)	D (in.)	E (in.)	G (in.)	R (in.)
12	530	2.4: 1	2	4	24	48 7/8	72 7/8	24	2	1 1/2
15	740	2.4: 1	2 1/4	6	27	46	73	30	2 1/4	1 1/2
18	990	2.3: 1	2 1/2	9	27	46	73	36	2 1/2	1 1/2
21	1280	2.4: 1	2 3/4	9	36	37 1/2	73 1/2	42	2 3/4	1 1/2
24	1520	2.5: 1	3	9 1/2	43 1/2	30	73 1/2	48	3	1 1/2
27	1930	2.5: 1	3 1/4	10 1/2	49 1/2	24	73 1/2	54	3 1/4	1 1/2
30	2190	2.5: 1	3 1/2	12	54	19 3/4	73 3/4	60	3 1/2	1 1/2
36	4100	2.5: 1	4	15	63	34 3/4	97 3/4	72	4	1 1/2
42	5380	2.5: 1	4 1/2	21	63	35	98	78	4 1/2	1 1/2
48	6550	2.5: 1	5	24	72	26	98	84	5	1 1/2
54	8240	2: 1	5 1/2	27	65	33 1/4	98 1/4	90	5 1/2	1 1/2
60	8730	1.9: 1	6	35	60	39	99	96	5	1 1/2
66	10710	1.7: 1	6 1/2	30	72	27	99	102	5 1/2	1 1/2
72	12520	1.8: 1	7	36	78	21	99	108	6	1 1/2
78	14770	1.8: 1	7 1/2	36	90	21	111	114	6 1/2	1 1/2
84	18160	1.6: 1	8	36	90 1/2	21	111 1/2	120	6 1/2	1 1/2
90	20900	1.5: 1	8 1/2	41	87 1/2	24	111 1/2	132	6 1/2	6

June 26, 2015

Published Date: 2nd Qtr. 2016	SDDOT	R. C. P. FLARED ENDS	PLATE NUMBER 450.10 Sheet 1 of 1

Plot Scale - 1:200
- Plotted From - trpr17192
File - ...\prj\brwn039K\s45002s45010.dgn

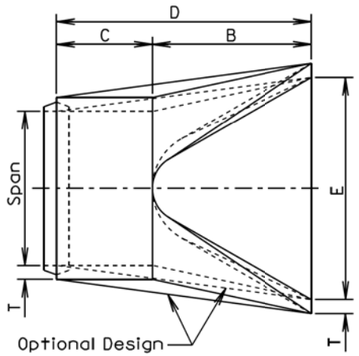

TOP VIEW

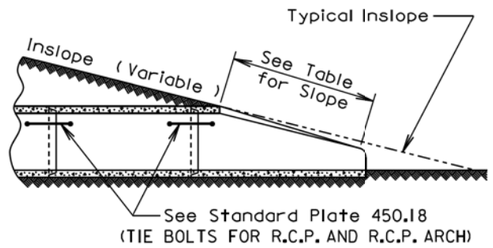

SLOPE DETAIL

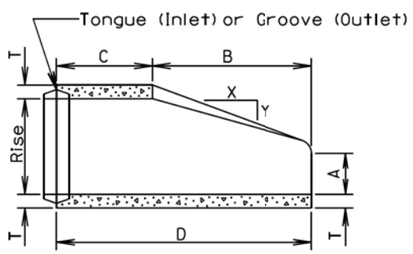

LONGITUDINAL SECTION

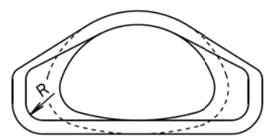

END VIEW

GENERAL NOTES:

Lengths of concrete pipe shown on plan sheets are between flared ends only.

Construction of R. C. P. Arch Flared End shall conform to the requirements of Section 990 of the Specifications.

* Size (in.)	Approximate Weight of Section (lbs.)	Rise (in.)	Span (in.)	Slope (X:Y)	T (in.)	A (in.)	B (in.)	C (in.)	D (in.)	E (in.)	R (in.)
18	1100	13 1/2	22	3:1	2 1/2	7	27	45	72	36	2
24	1750	18	28 1/2	3:1	3 1/2	8 1/2	39	33	72	48	3
30	3300	22 1/2	36 1/4	3:1	4	9 1/2	50	46	96	60	3
36	4350	26 5/8	43 3/4	3:1	4 1/2	11 1/8	60	36	96	72	6
42	5250	31 5/16	51 1/8	3:1	4 1/2	15 13/16	60	36	96	78	6
48	6400	36	58 1/2	3:1	5	21	60	36	96	84	6
54	7850	40	65	3:1	5 1/2	25 1/2	60	36	96	90	6
60	9500	45	73 1/2	3:1	6	31	60	36	96	96	6
72	13550	54	88	2:1	7	31	60	39	99	120	6
84	17950	62	102	2:1	8	28 1/2	83	19	102	144	6

*Equivalent Diameter of Circular R. C. P.

June 26, 2015

Published Date: 2nd Qtr. 2016

SDDOT

R. C. P. ARCH FLARED ENDS

PLATE NUMBER 450.11

Sheet 1 of 1

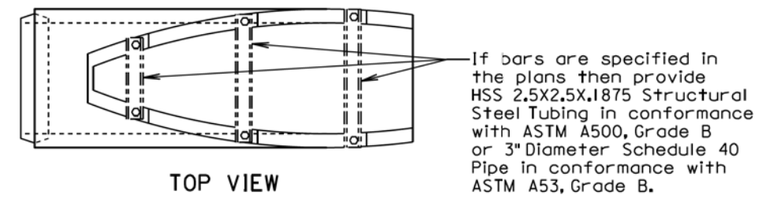

TOP VIEW

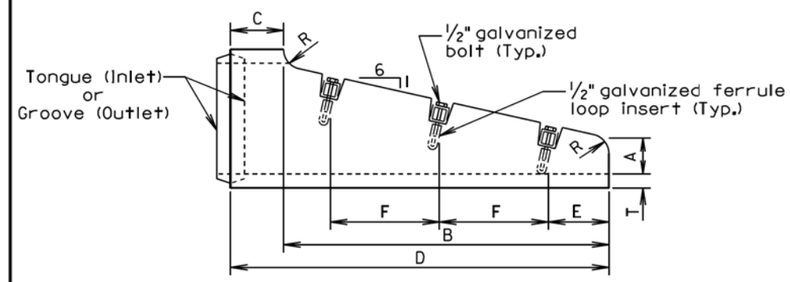

SIDE VIEW

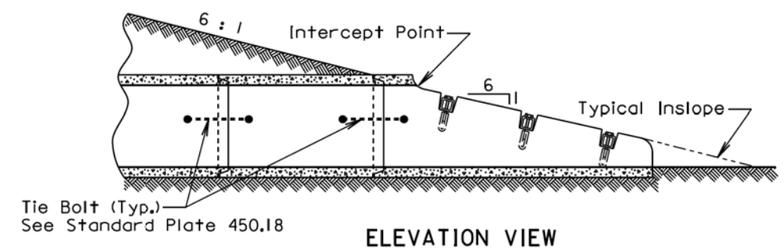

ELEVATION VIEW

Dia. (in.)	T (in.)	R (in.)	A (in.)	B (in.)	C (in.)	D (in.)	E (in.)	F (in.)	No. Sections	No. Bars
FOR CIRCULAR PIPE										
15	2 1/4	3	6	48	9	57	6	18	1	3
18	2 1/2	3	6	69	9	78	9	24	1	3
*24	3	3	6	111	9	120	6	24	1 or 2	5
FOR ARCH PIPE										
**18	2 1/2	1	6	39	33	72	6	24	1	2

*The use of 2 sections must be an approved design.
**Equivalent Diameter of Circular R. C. P.

GENERAL NOTES:

The length of concrete pipe shown on the plans is between safety ends.

Safety ends without bars are acceptable with or without the bar notches.

Bars shall be galvanized after fabrication in accordance with ASTM A123.

August 31, 2013

Published Date: 2nd Qtr. 2016

SDDOT

R. C. P. SAFETY ENDS WITH OR WITHOUT BARS

PLATE NUMBER 450.12

Sheet 1 of 1

Plot Scale - 1:200
- Plotted From - tnpr17192
File - ...\pn\brwn039K\s45011s45012.dgn

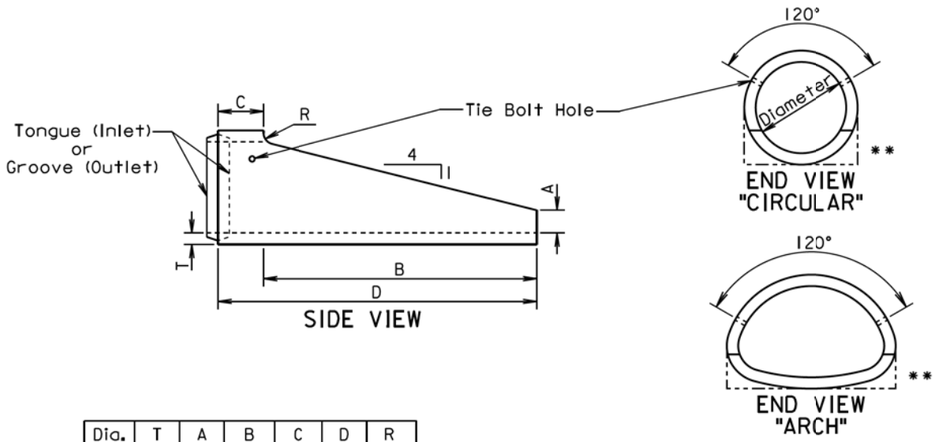

Dia. (in.)	T (in.)	A (in.)	B (in.)	C (in.)	D (in.)	R (in.)
FOR CIRCULAR PIPE						
24	3	6	72	12	84	3
30	3½	7½	90	12	102	3½
FOR ARCH PIPE						
* 24	3	6	48	12	60	3
* 30	3½	7½	60	12	72	3½
* 36	4½	8⅝	66	30	96	0
* 42	4½	10	77¼	18¾	96	0

ALTERNATE

Dia. (in.)	T (in.)	A (in.)	B (in.)	C (in.)	D (in.)	R (in.)
FOR CIRCULAR PIPE						
24	3	9	72	12	84	0
30	3½	11	90	12	102	0
FOR ARCH PIPE						
* 24	3	9	48	12	60	0
* 30	3½	11	60	12	72	0

* Equivalent Diameter of Circular R.C.P.

** Acceptable Flat Bottom Alternate.

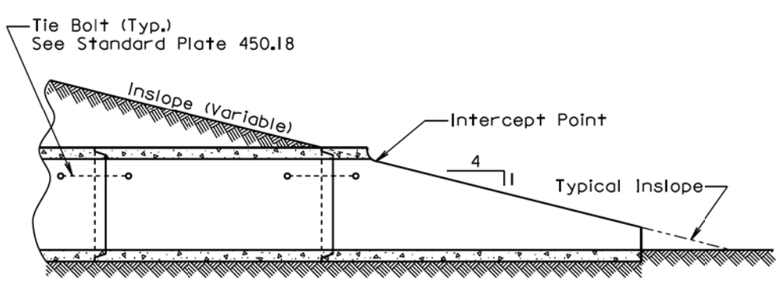

SECTION
(Along Centerline of Pipe)

GENERAL NOTE:

The length of concrete pipe shown in the construction plans is between sloped ends.

September 22, 2006

Published Date: 2nd Qtr. 2016	SDDOT	R. C. P. SLOPED ENDS	PLATE NUMBER 450.13 Sheet 1 of 1

Wall "t" (in.)	Rod Dia. (in.)	Pipe Sleeve Dia. (nominal)
≤ 3¼	⅝	¾
3½-6½	¾	1
≥ 7	1	1¼

GENERAL NOTES:

Tie bolts shall conform to ASTM F1554 Grade 36 or ASTM A36. Nuts shall be heavy hex conforming to ASTM A563. Washers shall conform to ASTM F436.

Pipe Sleeve shall conform to ASTM A500 or A53, Grade B.

Galvanize adjustible eye bolt tie assembly in accordance with ASTM A153.

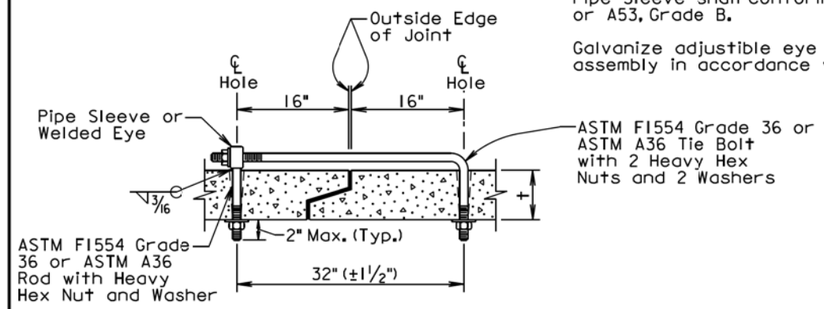

ADJUSTABLE EYE BOLT TIE

Pipe Dia. (in.)	"L" (in.)	Bolt Dia. (in.)
≤ 48	4	¾
> 48	6	1

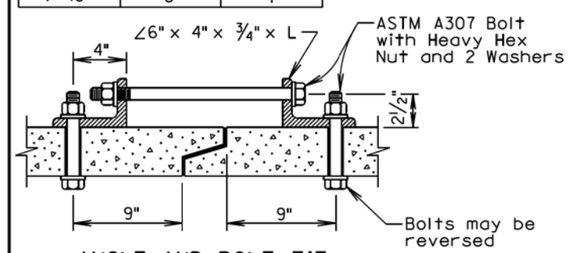

ANGLE AND BOLT TIE

GENERAL NOTES:

Angles shall conform to ASTM A36.

Bolts shall conform to ASTM A307. Nuts shall be heavy hex conforming to ASTM A563. Washers shall conform to ASTM F436.

Galvanize angles, bolts, nuts, and washers in accordance with ASTM A153.

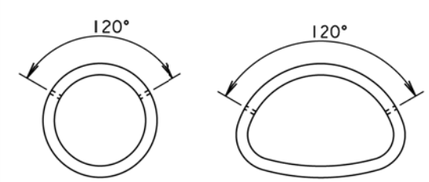

END VIEW
"CIRCULAR"

END VIEW
"ARCH"

GENERAL NOTES:

In lieu of the tie bolts detailed above other types of tie bolt connections may be installed as approved by the Office of Bridge Design.

All pipe sections of R.C.P. and R.C.P. Arch shall be tied with tie bolts except for pipe located between drop inlets, manholes, and junction boxes. All pipe sections of pipes that only enter or exit drop inlets, manhole, and junction boxes shall be tied with tie bolts.

There will be no separate measurement or payment for the tie bolts. The cost for furnishing and installing the tie bolts shall be incidental to the contract unit price per foot for the corresponding bid item for R.C.P. or R.C.P. Arch.

February 28, 2013

Published Date: 2nd Qtr. 2016	SDDOT	TIE BOLTS FOR R.C.P. AND R.C.P. ARCH	PLATE NUMBER 450.18 Sheet 1 of 1

Plot Scale - 1:200
- Plotted From - trpr17192
File - ...\prj\brwn039K\ss450130s450180.dgn

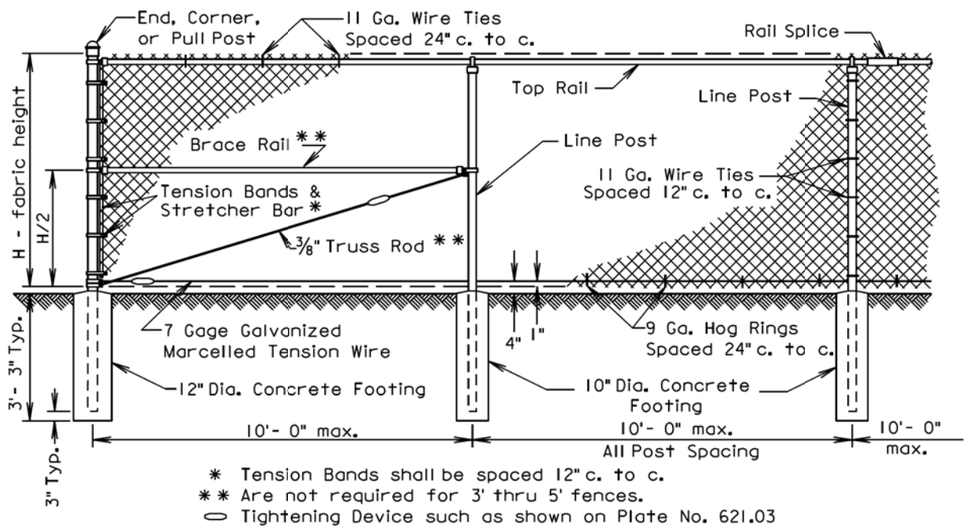

* Tension Bands shall be spaced 12" c. to c.
** Are not required for 3' thru 5' fences.
⬭ Tightening Device such as shown on Plate No. 621.03

Component	End, Corner & Pull Post		Line Post			Top & Brace Rail	
Type of Fabrication	Round Pipe Nominal	Roll Formed Steel	Round Pipe Nominal	"C" Section	H-Beam Steel	Round Pipe Nominal	Roll Formed Steel
Size	3.00" O. D.	3.5" x 3.5"	2.50" O. D.	1.875"x1.625"	2.25"x1.70"	1.625" O. D.	1.625"x1.25"
Weight (lb. / ft.)	5.79 or 4.64	5.14	3.65 or 3.12	2.34	3.43	2.27 or 1.84	1.35

GENERAL NOTES:

Specific details of manufacture of component parts of the complete fence construction shall be subject to the approval of the Engineer. Commercially available items produced specifically for the use intended shall be used wherever possible in the construction of the fence.

"H" (Height of Fabric) shall be as shown on the Plans. Fabric is available in the the following heights; 36", 42", 48", 60", 72", 84", 96", 108", 120", & 144". Fabric heights 60 inches and under shall be knuckled at both selvages. Fabric heights 72 inches and over shall be knuckled at one selvage and twisted at the other selvage.

Chain Link Fabric shall be 2" mesh, No. 9 gage galvanized wire securely fastened to Tension Wire, Line Post, Rails, Braces and Stretcher Bars spaced as shown hereon.

Fence may be constructed with either Round Pipe, "C" Section, "H" Beam, or roll Formed Steel components as shown in the table above. Line post may be Round Pipe, "C" Section, or "H" Beam. The Corner Post and Rails shall be either Round Pipe or Roll Formed Steel. The type of components used shall have prior approval by the Engineer before construction.

Where fence must cross small bodies of water (such as drainage areas or ponds) that could freeze during the winter, use 11 gage Hog Rings. Provide only two ties per Tension Wire and Top Rail between line posts.

A suitable method of rail splicing shall be used to allow for expansion and contraction while maintaining proper position of the Top Rail.

March 31, 2000

Published Date: 2nd Qtr. 2016	SDDOT	CHAIN LINK FENCE WITH TOP RAIL	PLATE NUMBER 621.01 Sheet 1 of 1

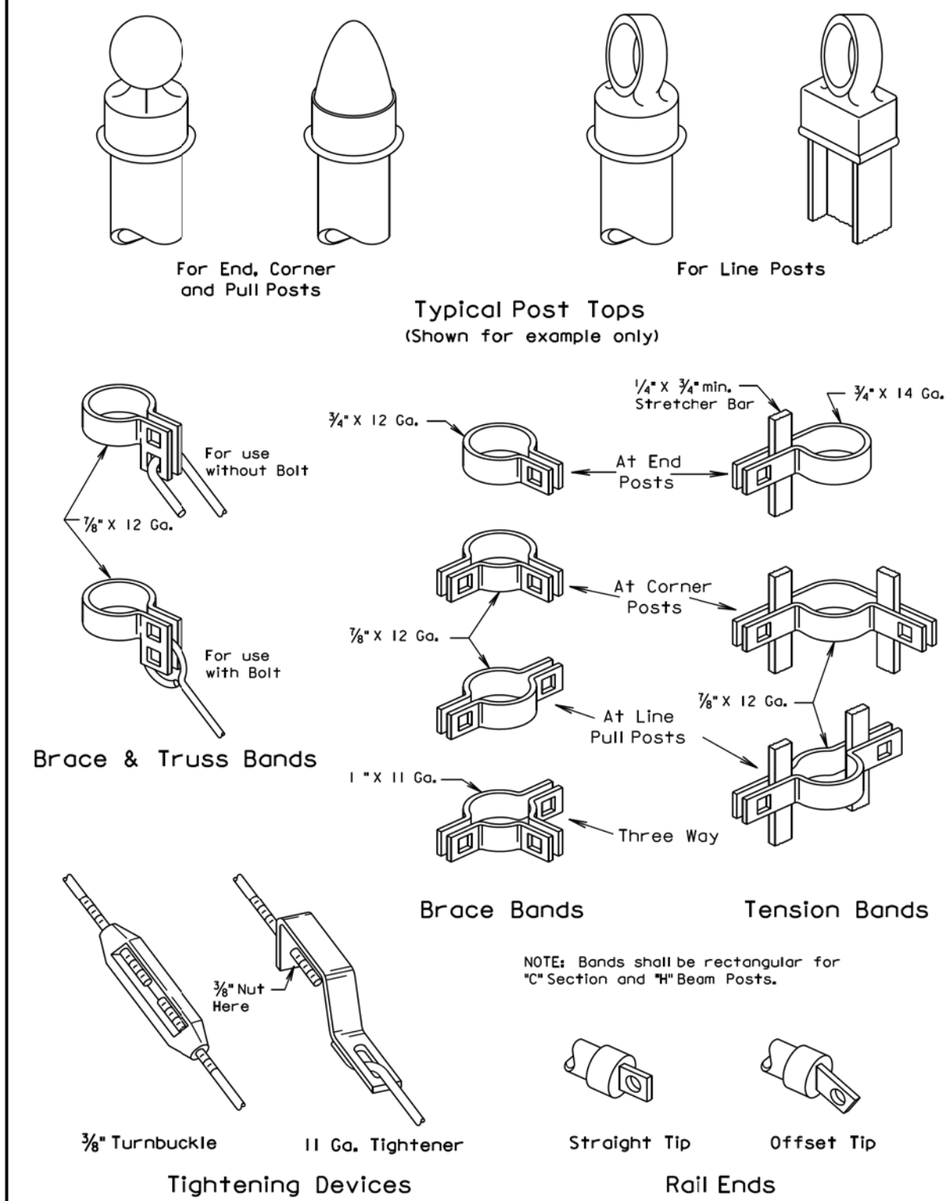

March 31, 2000

Published Date: 2nd Qtr. 2016	SDDOT	HARDWARE FOR CHAIN LINK FENCE	PLATE NUMBER 621.03 Sheet 1 of 1

Plot Scale - 1:200
- Plotted From - trpr17192
File - ...\prj\brwn039K\s62101s62103.dgn

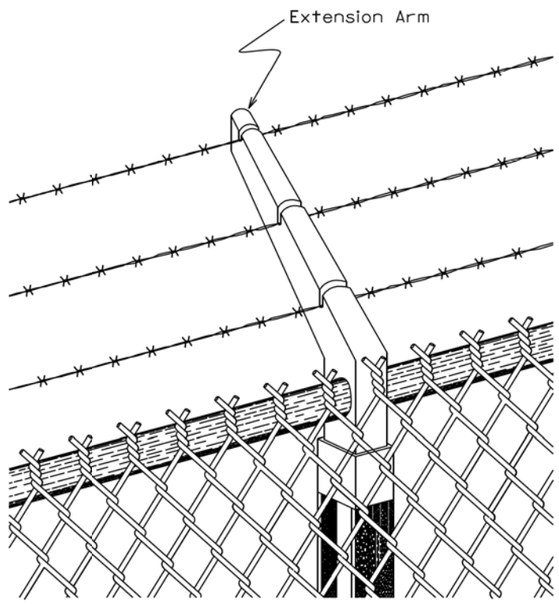

GENERAL NOTES:

Extension arms shall be hot dipped galvanized. End and corner arms shall be malleable iron. Intermediate arms may be pressed steel. Arms shall have sealed caps and three slots to accommodate the barbed wires. The top wire shall be 12 inches above the fabric and 12 inches out from the fence line at an angle of approximately 45°. Adjustable arms may be used. Barbed wire shall be two strand 12½ gauge wire with four point round barbs spaced on 5 inch centers.

Extra payment will not be made for extension arms with barbed wire. Extension arms with barbed wire shall be incidental to the respective "Chain Link Fence" bid item. When extension arms with barbed wire are attached to gates, the payment for the extension arms with barbed wire shall be incidental to the respective "Gate" bid item.

March 31, 2000

Published Date: 2nd Qtr. 2016 | SDDOT | **BARBED WIRE TOP FOR CHAIN LINK FENCE** | PLATE NUMBER 621.04 | Sheet 1 of 1

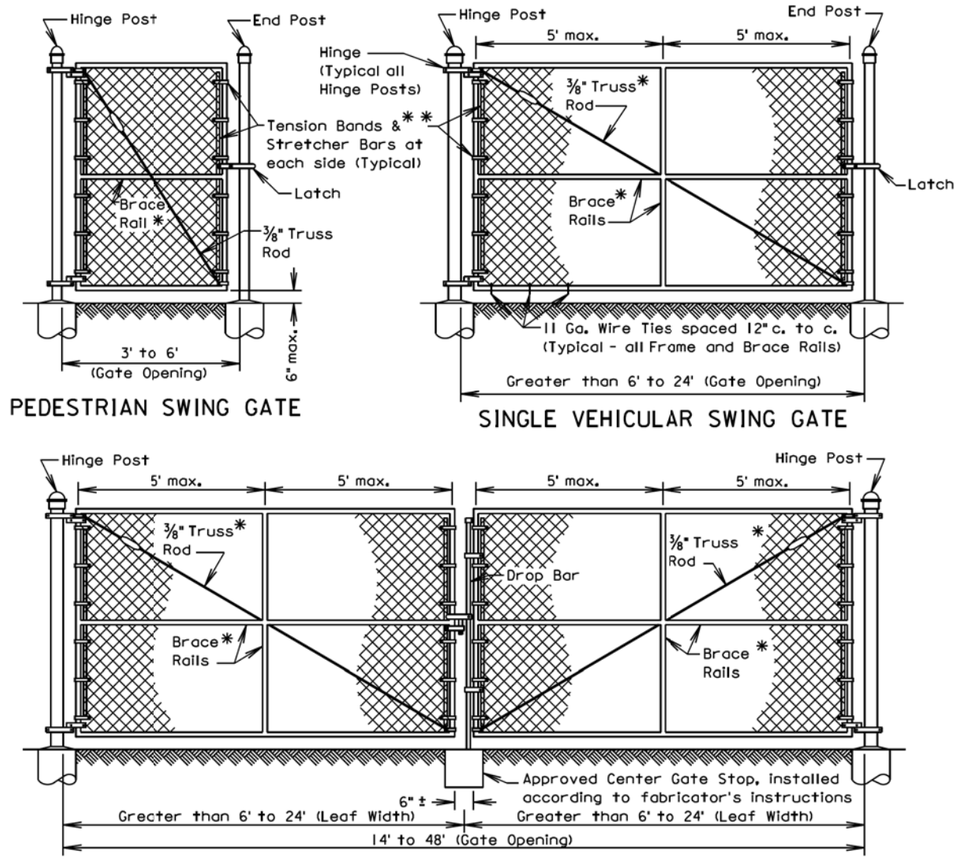

Gate Opening		Frame Pipe Nominal	Brace Rail - Pipe Nominal
Width [1]	Height [2]		
3' to 8'	3' to 6'	1.50"	1.50"
>8' to 23'	6'	1.90"	1.50"
>8' to 23'	> 6' to 12'	1.90"	1.90"

Gate Opening Width [1]	Hinge Post		Concrete Footing	
	Round Pipe Nominal	Roll Formed Steel	Depth	Diameter
3' to 6'	3.00"	3.50"X3.50"	36"	12"
> 6' to 13'	4.00"	—	42"	12"
> 13' to 18'	6.625"	—	48"	18"
> 18' to 23'	8.625"	—	48"	24"

NOTE: Gate frames may be constructed of bent or welded steel tubing installed according to fabricator's instructions and subject to the Engineer's approval.

* Are not required for gates 3' to 5' height or 5' or less in width.

** Tension Bands shall be spaced 12" c. to c.

⬭ Tightening Device such as shown on standard plate 621.03

1 Leaf width for Double Vehicular Swing Gate

2 Shall coincide with fence height

September 14, 2001

Published Date: 2nd Qtr. 2016 | SDDOT | **SWING GATES FOR CHAIN LINK FENCE** | PLATE NUMBER 621.10 | Sheet 1 of 1

Plot Scale - 1:200
- Plotted From - trpr17192
File - ...\prj\brwn039K\s62104s62110.dgn

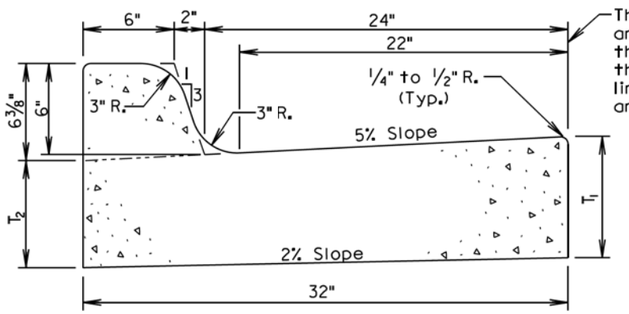

The stated radii on the plans and cross sections refer to this line and it shall also be the basis for horizontal linear foot measurement and payment.

Type	T_1 (Inches)	T_2 (Inches)	Cu. Yd. Per Lin. Ft.	Lin. Ft. Per Cu. Yd.
B66	6	5 1/16	0.057	17.7
B67	7	6 1/16	0.065	15.4
B68	8	7 1/16	0.073	13.7
B68.5	8.5	7 9/16	0.077	13.0
B69	9	8 1/16	0.081	12.3
B69.5	9.5	8 9/16	0.085	11.7
B610	10	9 1/16	0.090	11.2
B610.5	10.5	9 9/16	0.094	10.7
B611	11	10 1/16	0.098	10.2
B611.5	11.5	10 9/16	0.102	9.8
B612	12	11 1/16	0.106	9.4

GENERAL NOTES:

When concrete curb and gutter longitudinally adjoins new concrete pavement, the method of attachment shall be by one of the methods shown on Standard Plate 380.11.

See Standard Plate 650.90 for expansion and contraction joints in the curb and gutter.

September 6, 2008

Published Date: 2nd Qtr. 2016	SDDOT	TYPE B CONCRETE CURB AND GUTTER	PLATE NUMBER 650.01 Sheet 1 of 1

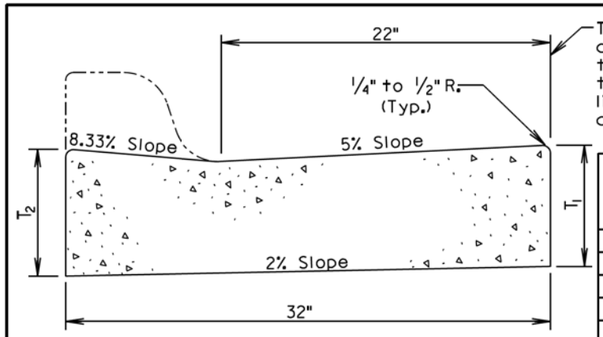

The stated radii on the plans and cross sections refer to this line and it shall also be the basis for horizontal linear foot measurement and payment.

TRANSVERSE SECTION

Type	T_1 (Inches)	T_2 (Inches)	Cu. Yd. Per Lin. Ft.	Lin. Ft. Per Cu. Yd.
P6	6	6 3/8	0.047	21.2
P7	7	7 3/8	0.055	18.1
P8	8	8 3/8	0.064	15.7
P8.5	8.5	8 7/8	0.068	14.8
P9	9	9 3/8	0.072	13.9
P9.5	9.5	9 7/8	0.076	13.2
P10	10	10 3/8	0.080	12.5
P10.5	10.5	10 7/8	0.084	11.9
P11	11	11 3/8	0.088	11.3
P11.5	11.5	11 7/8	0.092	10.8
P12	12	12 3/8	0.096	10.4

Type P Concrete Gutter Limits

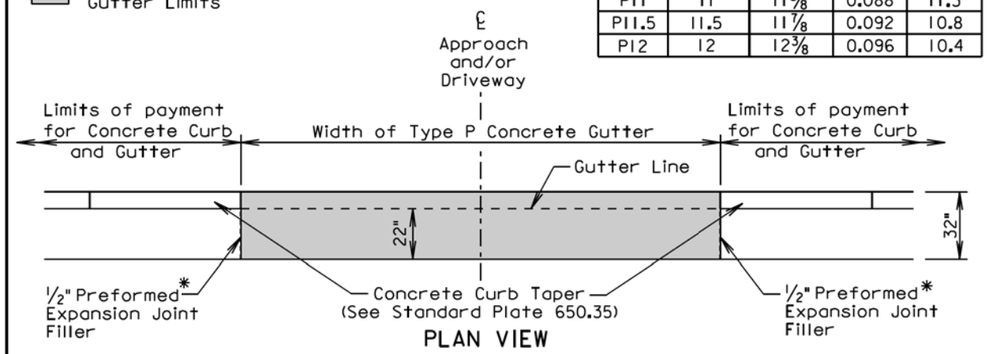

PLAN VIEW

* Joint will not be needed if concrete curb and gutter and type P concrete gutter is placed at the same time. If the 1/2" Preformed Expansion Joint Filler is provided, then the joint shall be sealed in accordance with Standard Plate 650.90.

GENERAL NOTES:

The concrete for the Type P Concrete Gutter shall comply with the requirements of the Specifications for Class M6 Concrete.

When concrete gutter longitudinally adjoins new concrete pavement, the method of attachment shall be by one of the methods shown on Standard Plate 380.11.

Transverse contraction joints shall be constructed at 10' intervals in the concrete gutter except when concrete gutter is constructed adjacent to mainline PCC pavement. When concrete gutter is constructed adjacent to mainline PCC pavement, a transverse contraction joint shall be constructed in the concrete gutter at each mainline PCC pavement transverse contraction joint location.

When concrete gutter is placed monolithically with mainline PCC pavement, the transverse contraction joints in the concrete gutter shall be sawed and sealed the same as the transverse contraction joints in the mainline PCC pavement.

When concrete gutter is not placed monolithically with the mainline PCC pavement and when the adjacent mainline surfacing is not PCC concrete, the transverse contraction joints in the concrete gutter shall be 1 1/2 inches deep if formed in the fresh concrete using a suitable grooving tool. If a saw is used to cut the contraction joints, then the depth of the joint shall be at least 1/4 the thickness of the concrete.

June 26, 2015

Published Date: 2nd Qtr. 2016	SDDOT	TYPE P CONCRETE GUTTER	PLATE NUMBER 650.30 Sheet 1 of 1

Plot Scale - 1:200
- Plotted From - trpr17192
File - ...\prj\brwn039K\s65001s65030.dgn

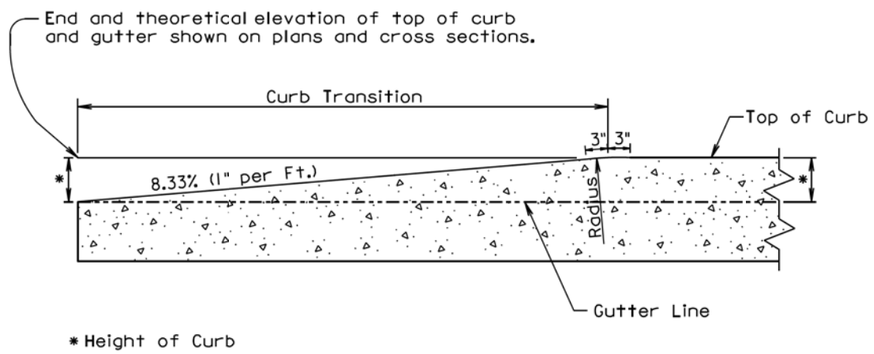

LONGITUDINAL SECTION OF CONCRETE CURB TAPER

September 14, 2005

Published Date: 2nd Qtr. 2016	SDDOT	CONCRETE CURB TAPER	PLATE NUMBER 650.35 Sheet 1 of 1

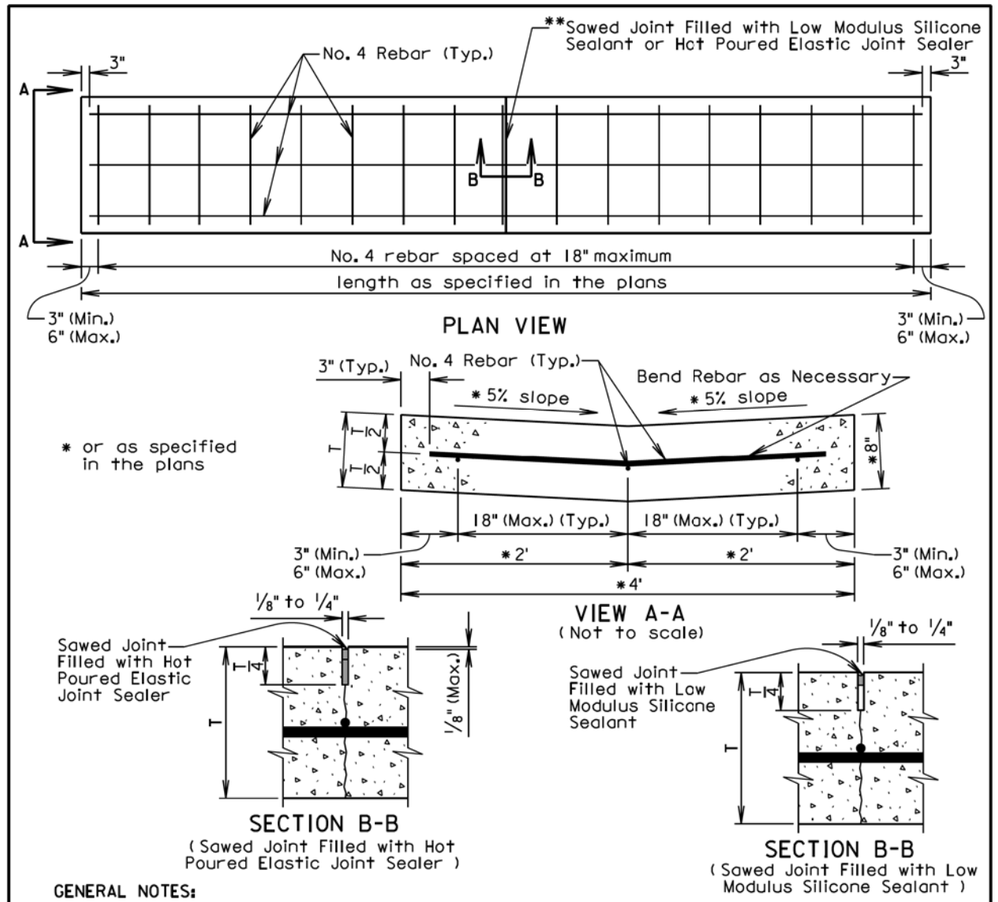

GENERAL NOTES:

The concrete shall comply with the Specifications for Class M6 concrete.

The reinforcing steel shall comply with the requirements of the Specification Sections 480 and 1010.

If a lap splice is provided the No. 4 rebar shall be lapped a minimum of 12".

** The sawed joints shall be spaced at 12'; however, when the length of the valley gutter is 12' to 24' there shall be a joint at the midpoint of the length. The saw cut to control cracking shall be a minimum of 1/4 the thickness of the pavement.

All hot poured elastic joint sealer material spilled on the surface of the concrete pavement shall be removed as soon as the material has cooled. The extent of removal of material shall be to the satisfaction of the Engineer. All costs for removal of the spilled joint sealer material shall be borne by the Contractor.

The silicone sealant shall be be bonded to the sides of a clean joint to completely seal the joint as approved by the Engineer.

All costs for furnishing and installing the valley gutter including materials, equipment, labor, and incidentals shall be included in the contract unit price per square yard for the corresponding Valley Gutter bid item.

February 10, 2014

Published Date: 2nd Qtr. 2016	SDDOT	VALLEY GUTTER	PLATE NUMBER 650.40 Sheet 1 of 1

Plot Scale - 1:200
- Plotted From - tnpr17192
File - ...\prj\brwn039K\s65035s65040.dgn

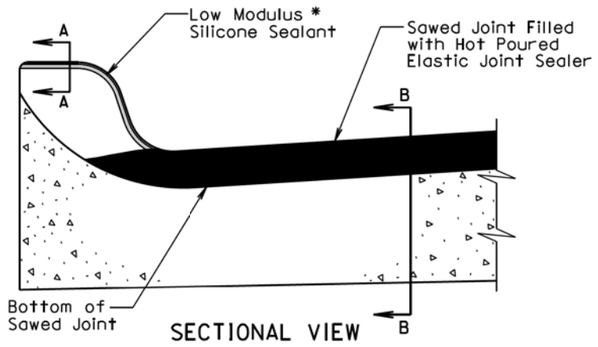

SECTIONAL VIEW
(Curb and Gutter Placed Monolithic with Adjacent Mainline PCC Pavement)

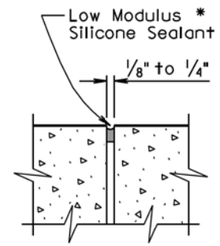

SECTION A-A

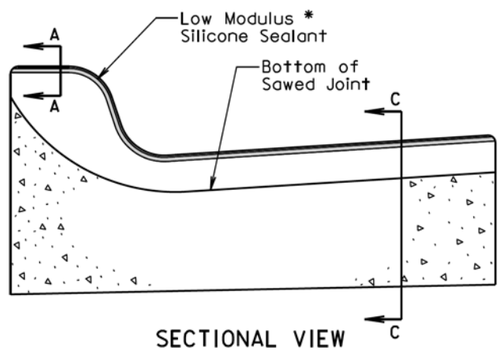

SECTIONAL VIEW
(Curb and Gutter not Placed Monolithic with Adjacent Mainline PCC Pavement or Mainline Surfacing is not PCC Pavement)

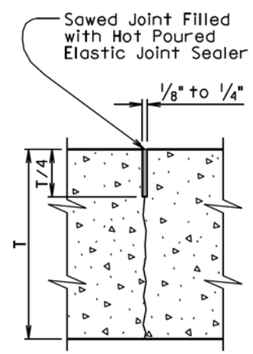

SECTION B-B

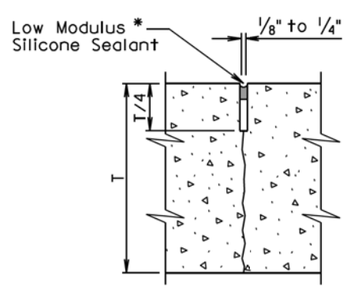

SECTION C-C

* The silicone sealant shall be placed such that it completely seals the joint and is bonded to the sides of the clean joint as approved by the Engineer.

September 6, 2013

Published Date: 2nd Qtr. 2016	SDDOT	JOINTS IN CONCRETE CURB AND GUTTER	PLATE NUMBER 650.90 Sheet 1 of 2

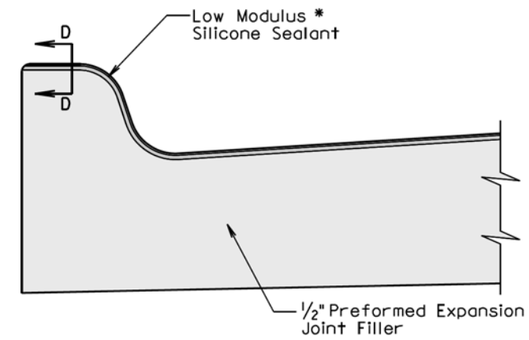

SECTIONAL VIEW
(Curb and Gutter at 1/2" Preformed Expansion Joint Filler Location)

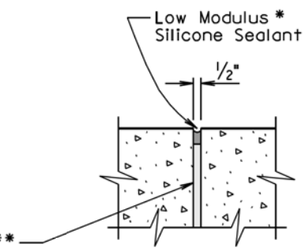

SECTION D-D

* The silicone sealant shall be placed such that it completely seals the joint and is bonded to the sides of the clean joint as approved by the Engineer.

GENERAL NOTES:

For illustrative reason, only the type B curb and gutter is shown.

** A 1/2" preformed expansion joint filler shall be placed transversely in the curb and gutter at the following locations:

1. At each junction between the radius return of curb and gutter and curb and gutter which is parallel to the project centerline.
2. At each junction between new curb and gutter and existing curb and gutter.

Transverse contraction joints shall be constructed at 10' intervals in the concrete curb and gutter except when the concrete curb and gutter is constructed adjacent to mainline PCC pavement. When concrete curb and gutter is constructed adjacent to mainline PCC pavement, a transverse contraction joint shall be constructed in the concrete curb and gutter at each mainline PCC pavement transverse contraction joint location.

When concrete curb and gutter is not placed monolithically with the mainline PCC pavement or when the adjacent mainline surfacing is not PCC concrete, the transverse contraction joints in the concrete curb and gutter shall be 1 1/2 inches deep if formed in the fresh concrete using a suitable grooving tool. If a saw is used to cut the contraction joints, then the depth of the joint shall be at least 1/4 the thickness of the concrete and the joint shall be sealed in accordance with the details shown above.

September 6, 2013

Published Date: 2nd Qtr. 2016	SDDOT	JOINTS IN CONCRETE CURB AND GUTTER	PLATE NUMBER 650.90 Sheet 2 of 2

Plot Scale - 1:200
- Plotted From - trpr17192
File - ...\bnwn039K\s65090_1s65090_2.dgn

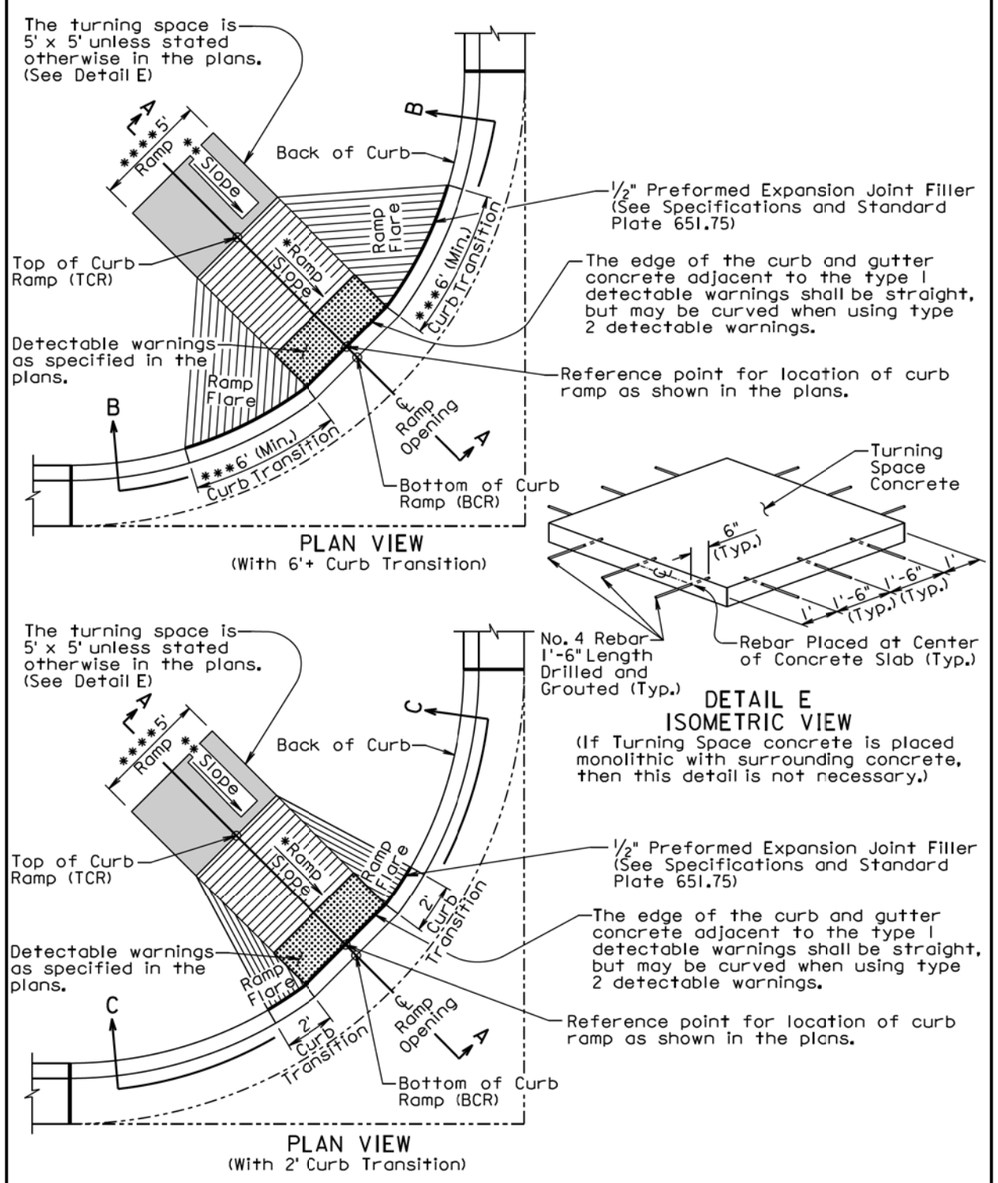

September 6, 2015

Published Date: 2nd Qtr. 2016	SDDOT	TYPE 1 CURB RAMP (PERPENDICULAR CURB RAMP)	PLATE NUMBER 651.01
			Sheet 1 of 3

Curb ramp slopes are designed at 7.5% unless stated otherwise in the plans. The curb ramp may have a maximum slope of 8.3% and shall not exceed 15' in length unless stated otherwise in the plans.

The curb ramp length may be computed based on the intersection of a continuous 1.5% theoretical slope from theoretical top of curb (TTOC) with the curb ramp using a continuous 7.5% curb ramp slope. The elevation of point TCR shall always be higher than the elevation of point TTOC unless specified otherwise in the plans. The curb ramp length dimension as shown in the plans shall be adjusted as necessary to meet all slope and length requirements based on field geometrics. *

The cross slope of the ramp shall not be steeper than 2%. Plans are designed using a 1.5% slope unless stated otherwise in the plans.

** The slope in the turning space shall not be steeper than 2% in any direction of pedestrian travel. Plans are designed using a 1.5% slope unless stated otherwise in the plans.

*** The curb transition shall be a minimum of 6' long, a maximum of 10' long, and the curb transition slope shall not be steeper than 10% unless stated otherwise in the plans. The curb transition length shall be adjusted as necessary to meet slope and length requirements based on field geometrics.

**** The ramp width is 5' unless stated otherwise in the plans.

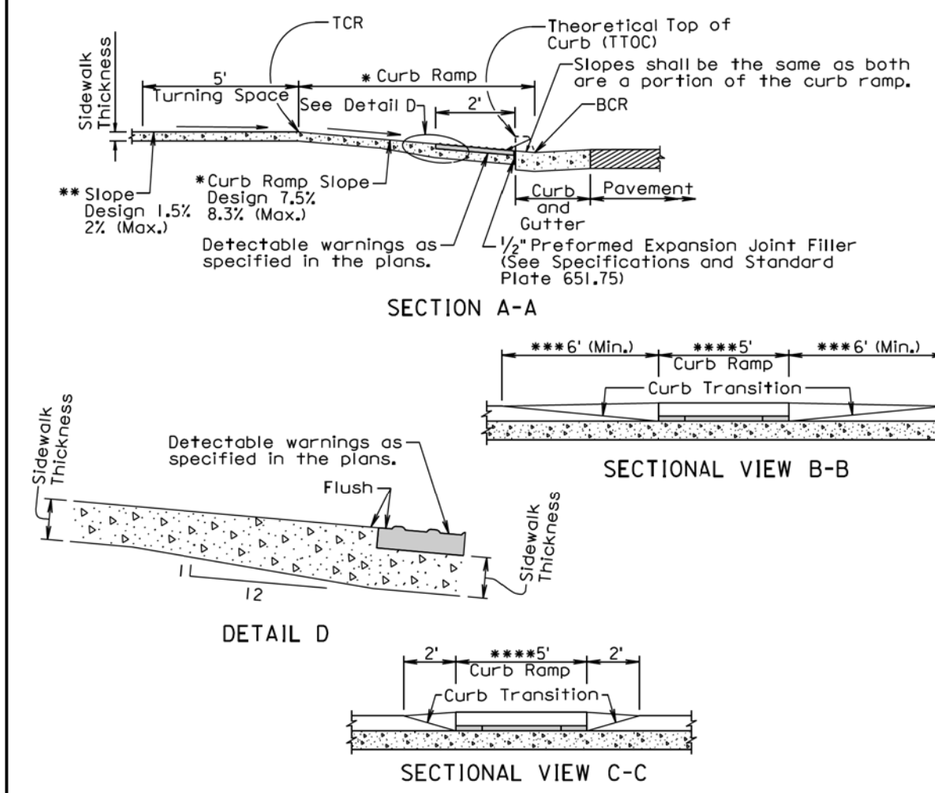

September 6, 2015

Published Date: 2nd Qtr. 2016	SDDOT	TYPE 1 CURB RAMP (PERPENDICULAR CURB RAMP)	PLATE NUMBER 651.01
			Sheet 2 of 3

Plot Scale - 1:200
- Plotted From - tnpt17192
File - ...\brwn039Kis65101_1s65101_2.dgn

GENERAL NOTES:

For illustrative purpose only, type I detectable warnings are shown in the drawings.

For illustrative purpose only, PCC fillet sections are shown in the drawings. The curb ramp depicted on this standard plate may be used with a PCC fillet section or curb and gutter.

For illustrative purpose only, the curb ramp location is shown at the center of a PCC fillet section. The curb ramp shall be placed at the location stated in the plans.

Sidewalk shall not be placed adjacent to the curb ramp flares when a 2' curb transition is used unless shown otherwise in the plans.

* Care shall be taken to ensure a uniform grade on the curb ramp, free of sags and short grade changes.

Surface texture of the curb ramp shall be obtained by coarse brooming transverse to the slope of the curb ramp.

The normal gutter line profile shall be maintained through the area of the ramp opening.

Joints shall be sawed or tooled into the concrete adjacent to the detectable warnings to alleviate possible corner cracking.

Care shall be taken to ensure that the surface of the detectable warnings are clean and maintains a uniform color.

The detectable warnings shall be cut as necessary to fit the plan specified limits of the detectable warnings. Cost for cutting the detectable warnings shall be incidental to the corresponding detectable warning bid item.

There will be no separate payment for curb ramps. The curb ramp shall be measured and paid for at the contract unit price per square foot for the corresponding concrete sidewalk bid item. The square foot area of the detectable warnings shall be included in the measured and paid for quantity of sidewalk.

If rebar is placed in the Turning Space as depicted in DETAIL E, the cost of the materials, labor, and equipment to furnish and install the rebar shall be incidental to the contract unit price per square foot for the corresponding concrete sidewalk bid item.

The curb transitions and ramp opening shall be measured and paid for at the contract unit price per foot for the corresponding curb and gutter bid item when curb and gutter is used. The curb transitions and ramp opening shall be measured and paid for at the contract unit price per square yard for the corresponding PCC fillet section bid item when a PCC fillet section is used.

The type I detectable warnings shall be measured to the nearest square foot. All costs for furnishing and installing the type I detectable warnings including labor, equipment, materials, and incidentals shall be paid for at the contract unit price per square foot for "Type I Detectable Warnings".

The type 2 detectable warnings shall be measured to the nearest square foot. All costs for furnishing and installing the type 2 detectable warnings including labor, equipment, and materials, including adhesive, necessary sealant or grout, and necessary grinding shall be paid for at the contract unit price per square foot for "Type 2 Detectable Warnings".

September 6, 2015

Published Date: 2nd Qtr. 2016	SDDOT	TYPE 1 CURB RAMP (PERPENDICULAR CURB RAMP)	PLATE NUMBER 651.01
			Sheet 3 of 3

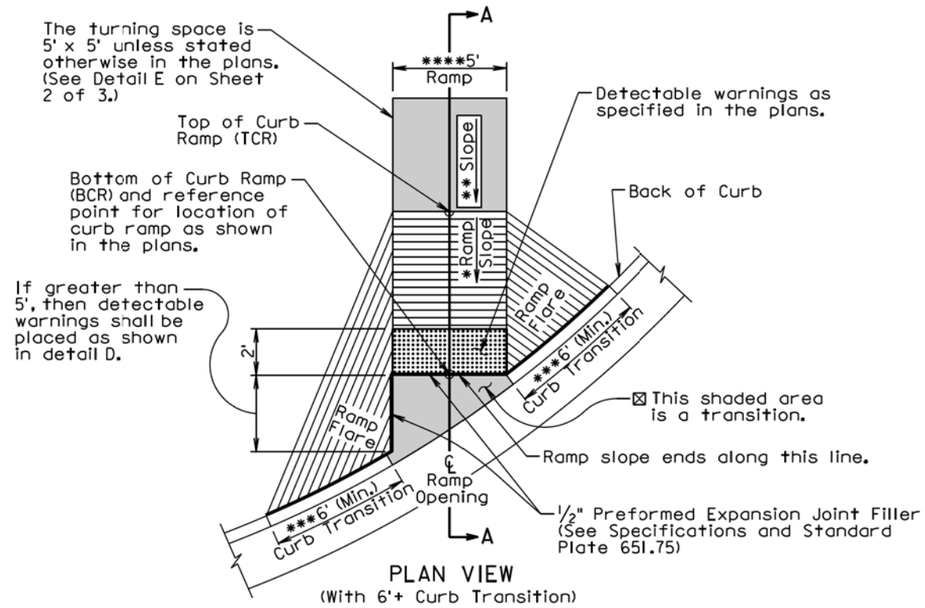

PLAN VIEW
(With 6'+ Curb Transition)

⊠ The slope within the transition area shall not be steeper than 5%. The concrete within the transition shall be placed monolithic with the curb and gutter or fillet section concrete. The concrete thickness within the transition shall be the same as the curb and gutter or fillet section concrete thickness.

*** The curb transition shall be a minimum of 6' long, a maximum of 10' long, and the curb transition slope shall not be steeper than 10% unless stated otherwise in the plans. The curb transition length shall be adjusted as necessary to meet slope and length requirements based on field geometrics.

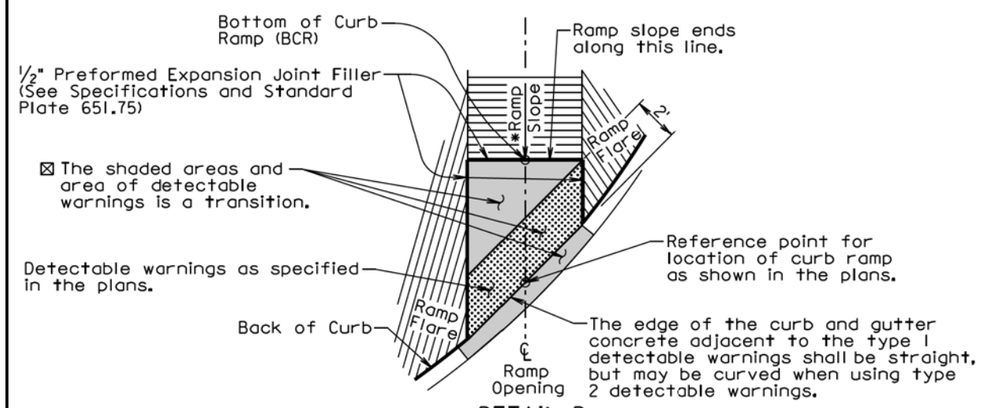

DETAIL D

September 6, 2015

Published Date: 2nd Qtr. 2016	SDDOT	TYPE 2 CURB RAMP (DIRECTIONAL CURB RAMP)	PLATE NUMBER 651.02
			Sheet 1 of 3

Plot Scale - 1:200
- Plotted From - tnpr17192
File - ...\brwn039K\s65101_3s65102_1.dgn

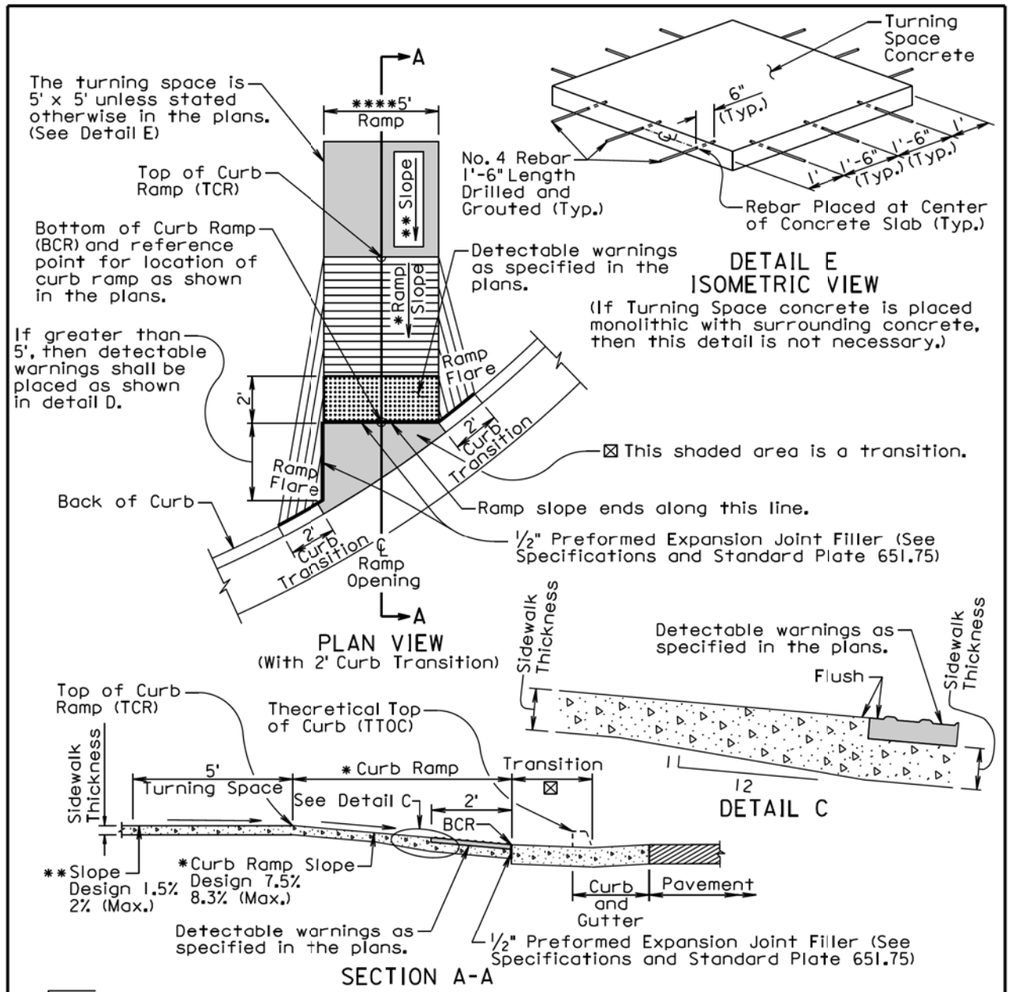

Curb ramp slopes are designed at 7.5% unless stated otherwise in the plans. The curb ramp may have a maximum slope of 8.3% and shall not exceed 15' in length unless stated otherwise in the plans.

* The elevation of point TCR shall always be higher than the elevation of point TTOC unless specified otherwise in the plans. The curb ramp length dimension as shown in the plans shall be adjusted as necessary to meet all slope and length requirements based on field geometrics.

The cross slope of the ramp shall not be steeper than 2%. Plans are designed using a 1.5% slope unless stated otherwise in the plans.

** The slope in the turning space shall not be steeper than 2% in any direction of pedestrian travel. Plans are designed using a 1.5% slope unless stated otherwise in the plans.

**** The ramp width is 5' unless stated otherwise in the plans.

September 6, 2015

Published Date: 2nd Qtr. 2016	SDDOT	TYPE 2 CURB RAMP (DIRECTIONAL CURB RAMP)	PLATE NUMBER 651.02
			Sheet 2 of 3

GENERAL NOTES:

For illustrative purpose only, type 1 detectable warnings are shown in the drawings.

The curb ramp depicted on this standard plate may be used with a PCC fillet section or curb and gutter. The curb ramp shall be placed at the location stated in the plans.

Sidewalk shall not be placed adjacent to the curb ramp flares when a 2' curb transition is used unless shown otherwise in the plans.

* Care shall be taken to ensure a uniform grade on the curb ramp, free of sags and short grade changes.

Surface texture of the curb ramp shall be obtained by coarse brooming transverse to the slope of the curb ramp.

The normal gutter line profile shall be maintained through the area of the ramp opening.

Joints shall be sawed or tooled into the concrete adjacent to the detectable warnings to alleviate possible corner cracking.

Care shall be taken to ensure that the surface of the detectable warnings are clean and maintains a uniform color.

The detectable warnings shall be cut as necessary to fit the plan specified limits of the detectable warnings. Cost for cutting the detectable warnings shall be incidental to the corresponding detectable warning bid item.

There will be no separate payment for curb ramps. The curb ramp shall be measured and paid for at the contract unit price per square foot for the corresponding concrete sidewalk bid item. The square foot area of the detectable warnings shall be included in the measured and paid for quantity of sidewalk.

If rebar is placed in the Turning Space as depicted in DETAIL E, the cost of the materials, labor, and equipment to furnish and install the rebar shall be incidental to the contract unit price per square foot for the corresponding concrete sidewalk bid item.

The curb transitions and ramp opening shall be measured and paid for at the contract unit price per foot for the corresponding curb and gutter bid item when curb and gutter is used. The curb transitions and ramp opening shall be measured and paid for at the contract unit price per square yard for the corresponding PCC fillet section bid item when a PCC fillet section is used.

All costs for furnishing and installing the transition area at the base of the curb ramp shall be incidental to the contract unit price per foot for the corresponding curb and gutter bid item when curb and gutter is used and shall be incidental to the contract unit price per square yard for the corresponding PCC fillet section bid item when a PCC fillet section is used.

The type 1 detectable warnings shall be measured to the nearest square foot. All costs for furnishing and installing the type 1 detectable warnings including labor, equipment, materials, and incidentals shall be paid for at the contract unit price per square foot for "Type 1 Detectable Warnings".

The type 2 detectable warnings shall be measured to the nearest square foot. All costs for furnishing and installing the type 2 detectable warnings including labor, equipment, and materials, including adhesive, necessary sealant or grout, and necessary grinding shall be paid for at the contract unit price per square foot for "Type 2 Detectable Warnings".

September 6, 2015

Published Date: 2nd Qtr. 2016	SDDOT	TYPE 2 CURB RAMP (DIRECTIONAL CURB RAMP)	PLATE NUMBER 651.02
			Sheet 3 of 3

Plot Scale - 1:200
- Plotted From - tnpr17192
File - ...\brwn039K\s65102_2s65102_3.dgn

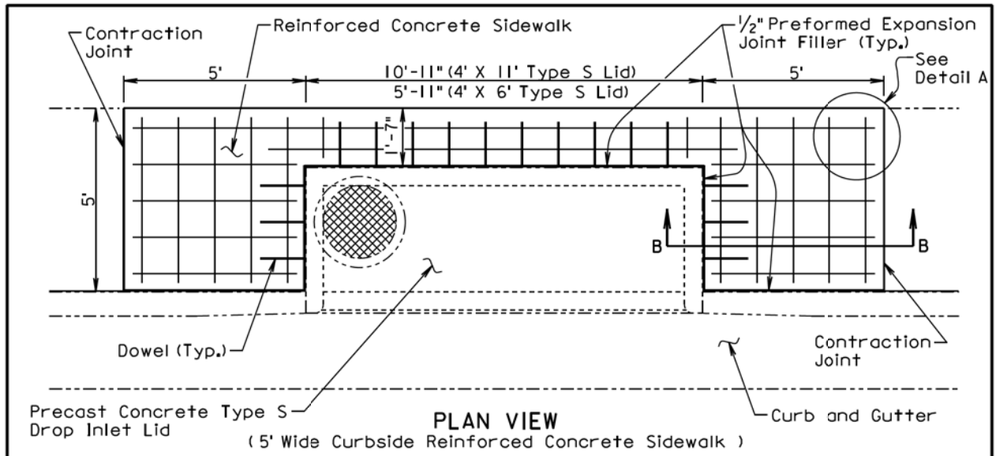

PLAN VIEW
(5' Wide Curbside Reinforced Concrete Sidewalk)

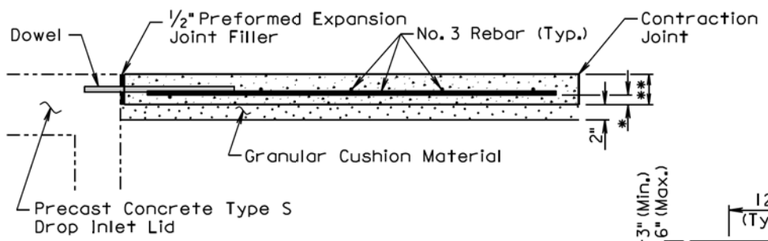

SECTION B-B

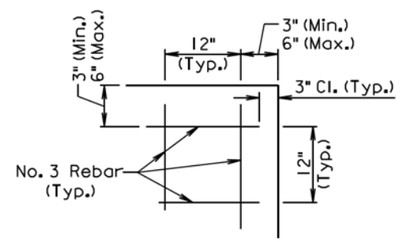

DETAIL A

** 4", 5", or 6" as specified elsewhere in the plans.

* 1 5/8" for 4" sidewalk, 2 1/8" for 5" sidewalk, and 2 5/8" for 6" sidewalk.

GENERAL NOTES:

The precast concrete Type S lids shown are 4' X 11' for illustrative purpose.

The cross slope of the sidewalk and precast concrete type S drop inlet lid shall be as specified elsewhere in the plans.

The reinforcing steel shall conform to Section 1010 of the Specifications. The Contractor shall be in conformance with the construction requirements of Section 480.3 of the Specifications.

When lapping of reinforcing steel is necessary, the No. 3 rebar shall be lapped 12".

The reinforced concrete sidewalk shall conform to the requirements of Section 651 of the Specifications.

All costs for constructing the reinforced concrete sidewalk including labor, equipment, tools, backfilling, furnishing and placing materials, including granular cushion, reinforcing steel, preformed expansion joint filler, and incidentals shall be included in the contract unit price per square foot for the corresponding reinforced concrete sidewalk bid item.

June 26, 2015

Published Date: 2nd Qtr. 2016	SDDOT	REINFORCED CONCRETE SIDEWALK ADJACENT TO PRECAST CONCRETE TYPE S DROP INLET LID	PLATE NUMBER 651.70
			Sheet 1 of 2

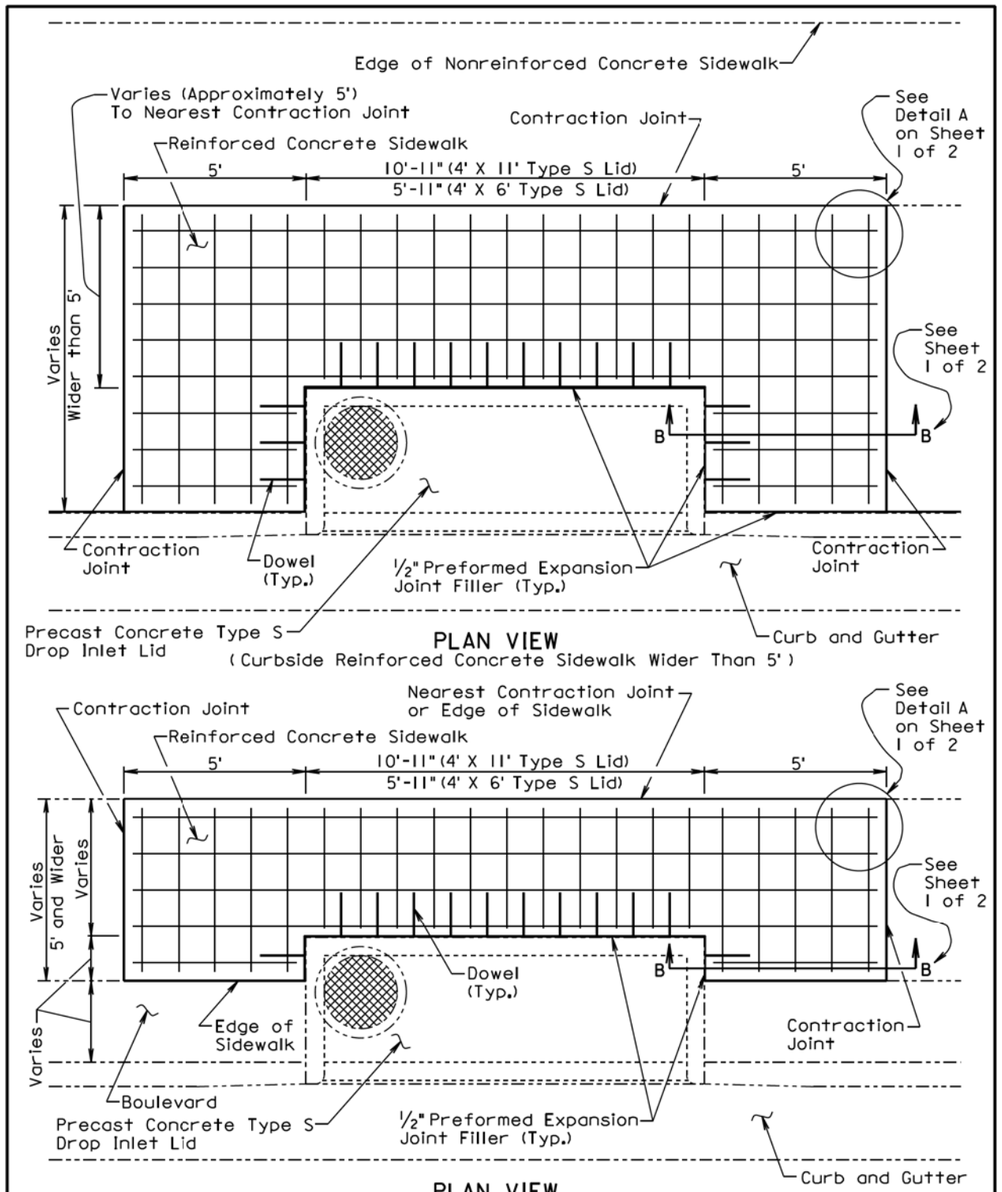

PLAN VIEW
(Curbside Reinforced Concrete Sidewalk Wider Than 5')

PLAN VIEW
(Reinforced Concrete Sidewalk With Boulevard)

June 26, 2015

Published Date: 2nd Qtr. 2016	SDDOT	REINFORCED CONCRETE SIDEWALK ADJACENT TO PRECAST CONCRETE TYPE S DROP INLET LID	PLATE NUMBER 651.70
			Sheet 2 of 2

Plot Scale - 1:200
- Plotted From- tnpr17192
File - ...\bnwn039K\s65170_1s65170_2.dgn

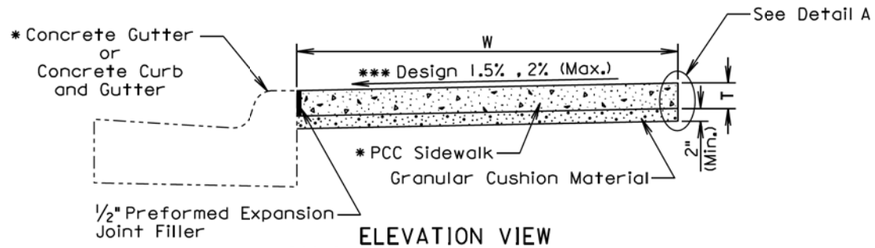

ELEVATION VIEW
(PCC Sidewalk without Boulevard)

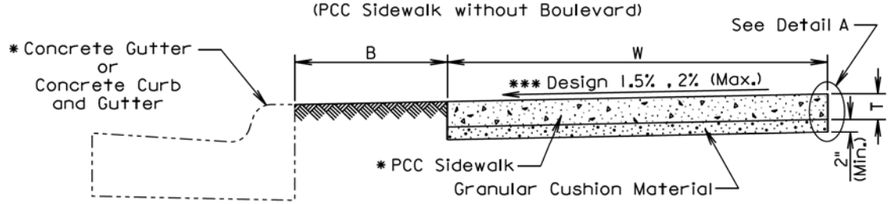

ELEVATION VIEW
(PCC Sidewalk with Boulevard)

B Width of boulevard as specified in the plans.
T Thickness of PCC sidewalk as specified in the plans.
W Width of PCC sidewalk as specified in the plans.
* Type as specified in the plans.

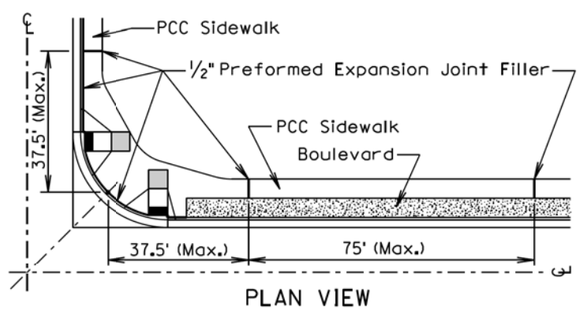

PLAN VIEW

GENERAL NOTES:

The PCC sidewalk shall be constructed in accordance with Section 651 of the Specifications.

*** The cross slope of the sidewalk is designed at 1.5% and the maximum slope allowed is 2% unless specified otherwise in the plans.

The maximum length between expansion joints in PCC sidewalk is 75 feet.

PCC sidewalk placed adjacent to intersection of roadways shall have an expansion joint placed transversely a maximum of 37.5 feet from the intersection. See PLAN VIEW.

An expansion joint in PCC sidewalk shall consist of a ½ inch thick preformed expansion joint filler material placed full depth and width of the PCC sidewalk.

** Large areas of PCC pavement adjacent to PCC sidewalk may require a different joint treatment than shown in the detail. If a different joint detail is necessary, plans will contain the joint detail and the Contractor shall construct the joint treatment in accordance with the plans.

September 6, 2015

Published Date: 2nd Qtr. 2016	SDDOT	PCC SIDEWALK	PLATE NUMBER 651.75
			Sheet 1 of 2

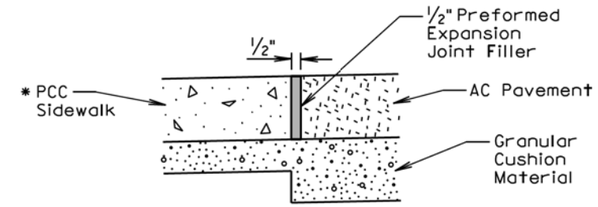

ELEVATION VIEW
(PCC sidewalk adjacent to asphalt concrete pavement)

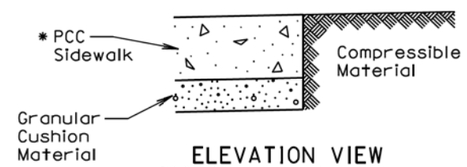

ELEVATION VIEW
(PCC sidewalk adjacent to earthen material, landscape rock, or other compressible materials)

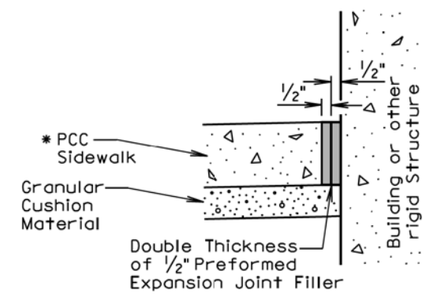

ELEVATION VIEW
(PCC sidewalk adjacent to building or other rigid structure)

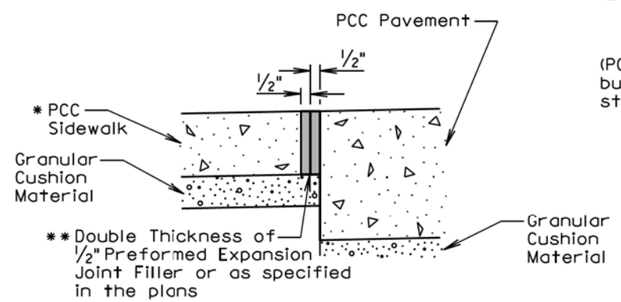

ELEVATION VIEW
(PCC sidewalk adjacent to PCC pavement)

Detail A
(Use Appropriate Detail(s))

September 6, 2015

Published Date: 2nd Qtr. 2016	SDDOT	PCC SIDEWALK	PLATE NUMBER 651.75
			Sheet 2 of 2

Plot Scale - 1:200
- Plotted From - tpri17192
File - ...\brwn039Kss65175_1ss65175_2.dgn

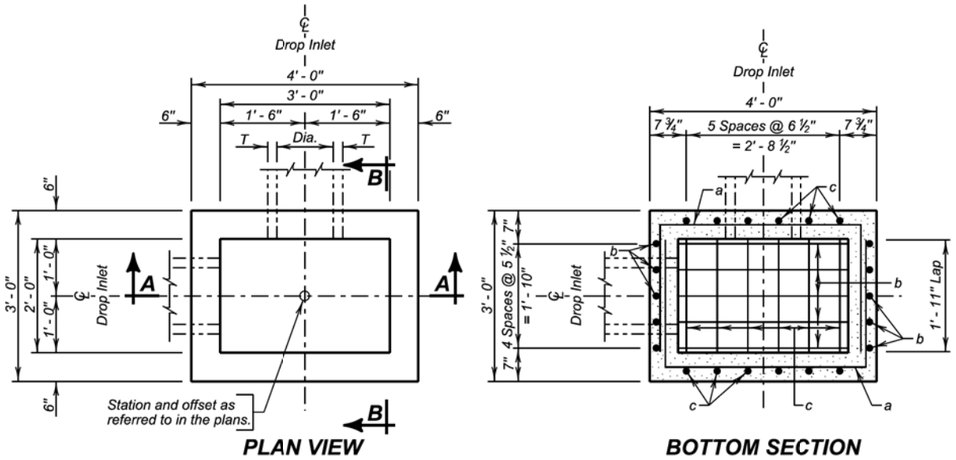

PLAN VIEW

BOTTOM SECTION

ESTIMATED QUANTITIES

ITEM	UNIT	CONSTANT QUANTITY	VARIABLE QUANTITY
✳ Class M6 Concrete	Cu. Yd.	0.26	0.22H
Reinforcing Steel	Lb.	83.03	28.97H
Frame and Grate Assembly	Each	1	———

DROP INLETS FOR 12" TO 24" DIAMETER PIPE

SPECIFICATIONS

Design Specifications: AASHTO LRFD Bridge Design Specifications, 2012 Edition.

Construction Specifications: South Dakota Standard Specifications for Roads and Bridges, Current Edition and required Provisions, Supplemental Specifications, and Special Provisions as included in the Proposal.

GENERAL NOTES:

Design Live Load: HL-93. No construction loading in excess of legal load was considered.

Reinforcing steel shall conform to ASTM A615 grade 60. The d bars shall be lapped 12 inches with the b and c bars. Cut and bend reinforcing steel as required to place pipe(s) through the drop inlet wall.

Drop inlet may be precast. If precast drop inlet details differ from this standard plate, submit a checked design done by a SD registered P.E. and shop plans to the Office of Bridge Design for approval.

✳ Reduce total quantities of concrete by the amount of concrete displaced by the pipe(s). The total quantity of concrete shall be computed to the nearest hundredth of a cubic yard. The total quantity of reinforcing steel shall be computed to the nearest pound.

Drop inlet shown may be modified by the addition or omission of connecting pipes as noted elsewhere in the plans. All pipes entering drop inlet must fit between the inside face of walls and shall not enter through the corners.

Maximum R.C.P. diameter shall not exceed 18 inches on the 2-foot wide side and shall not exceed 24 inches (24 inches for R.C. arch) on the 3-foot wide side of the drop inlet.

The dimension of H is in feet. Maximum H is 10 feet.

PIPE DISPLACEMENT REDUCTIONS

	Diameter (Inches)	Wall T (Inches)	Class M6 Concrete (Cu. Yd.)
R.C.P.	12	2	0.03
	15	2 ¼	0.04
	18	2 ½	0.05
	24	3	0.09
R.C. ARCH	18	2 ½	0.05
	24	3 ½	0.09

December 16, 2015

Published Date: 2nd Qtr. 2016

SDDOT

2' X 3' TYPE B
REINFORCED CONCRETE DROP INLET

PLATE NUMBER
670.01

Sheet 1 of 2

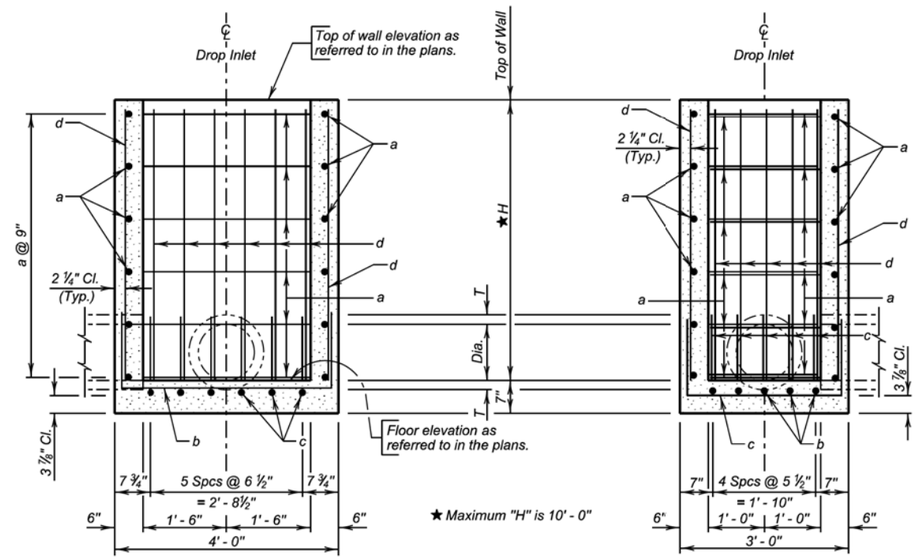

SEC. A - A

SEC. B - B

REINFORCING SCHEDULE

Mk.	No.	Size	Length	Type
a	2.67H	4	8' - 0"	17
b	5	5	6' - 3"	17
c	6	4	5' - 3"	17
d	22	4	H - 2"	Str.

Bending Details

NOTE:
All dimensions are out to out of bars.

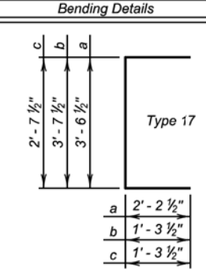

December 16, 2015

Published Date: 2nd Qtr. 2016

SDDOT

2' X 3' TYPE B
REINFORCED CONCRETE DROP INLET

PLATE NUMBER
670.01

Sheet 2 of 2

Plot Scale - 1:200
- Plotted From - tnpr17192
File - ...\bnwn039K\ss67001_1ss67001_2.dgn

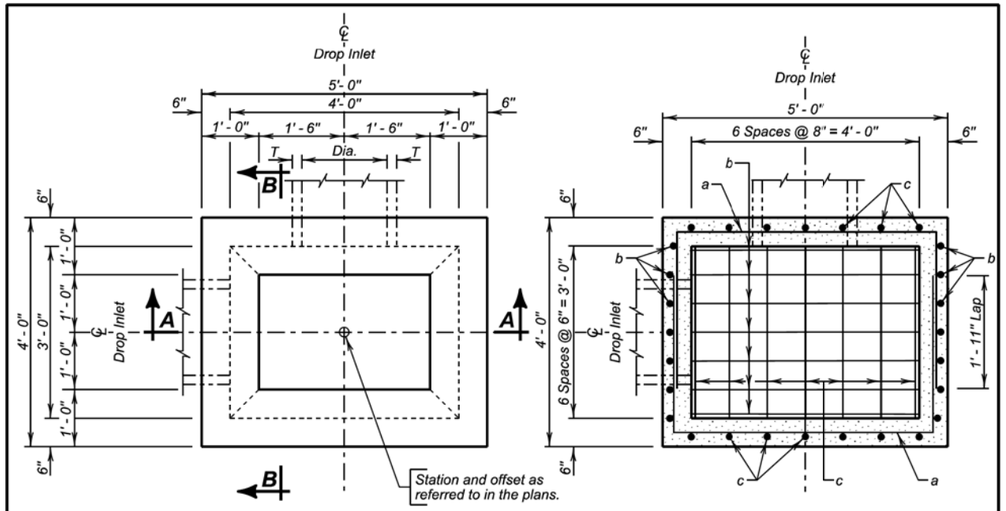

PLAN VIEW

BOTTOM SECTION

ESTIMATED QUANTITIES

ITEM	UNIT	CONSTANT QUANTITY	VARIABLE QUANTITY
✳ Class M6 Concrete	Cu. Yd.	0.72	0.30H
Reinforcing Steel	Lb.	130.93	36.54H
Freme and Grate Assembly	Each	1	———

DROP INLETS FOR 12" TO 36" DIAMETER PIPE

SPECIFICATIONS

Design Specifications: AASHTO LRFD Bridge Design Specifications, 2012 Edition.

Construction Specifications: South Dakota Standard Specifications for Roads and Bridges, Current Edition and required Provisions, Supplemental Specifications, and Special Provisions as included in the Proposal.

GENERAL NOTES:

Design Live Load: HL-93. No construction loading in excess of legal load was considered.

Reinforcing steel shall conform to ASTM A615 grade 60. The d bars shall be lapped 12 inches with the b and c bars. Cut and bend reinforcing steel as required to place pipe(s) through the drop inlet wall.

Drop inlet may be precast. If precast drop inlet details differ from this standard plate, submit a checked design done by a SD registered P.E. and shop plans to the Office of Bridge Design for approval.

✳ Reduce total quantities of concrete by the amount of concrete displaced by the pipe(s). The total quantity of concrete shall be computed to the nearest hundredth of a cubic yard. The total quantiy of reinforcing steel shall be computed to the nearest pound.

Drop inlet shown may be modified by the addition or omission of connecting pipes as noted elsewhere in the plans. All pipes entering drop inlet must fit between the inside face of walls and shall not enter through the corners.

Maximum R.C.P. diameter shall not exceed 24 inches (24 inches for R. C. arch) on the 3-foot wide side and shall not exceed 36 inches (30 inches for R.C. arch) on the 4-foot wide side of the drop inlet.

The dimension of H is in feet. Maximum H is 10 feet.

PIPE DISPLACEMENT REDUCTIONS

	Diameter (Inches)	Wall T (Inches)	Class M6 Concrete (Cu. Yd.)
R.C.P.	12	2	0.03
	15	2 ¼	0.04
	18	2 ½	0.05
	24	3	0.09
	30	3 ½	0.14
	36	4	0.20
R.C. ARCH	18	2 ½	0.05
	24	3 ½	0.09
	30	4	0.14

December 16, 2015

Published Date: 2nd Qtr. 2016

SDDOT

3' X 4' TYPE B
REINFORCED CONCRETE DROP INLET

PLATE NUMBER
670.02

Sheet 1 of 2

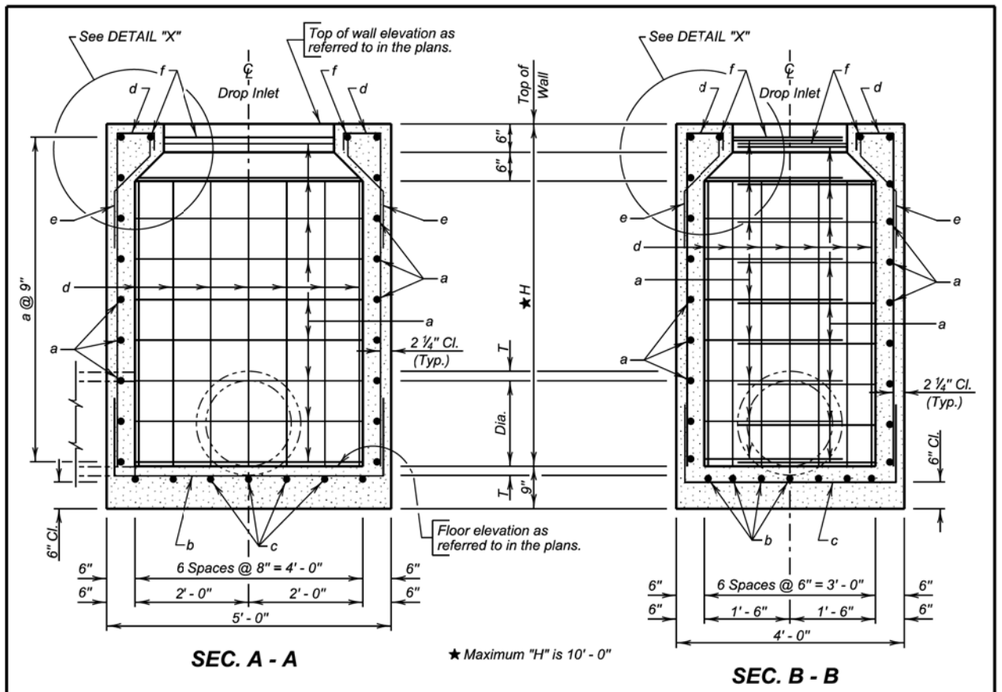

SEC. A - A

★ Maximum "H" is 10' - 0"

SEC. B - B

REINFORCING SCHEDULE

Mk.	No.	Size	Length	Type
a	2.67H	4	10' - 0"	17
b	7	4	7' - 6"	17
c	7	4	6' - 6"	17
d	28	4	H + 9"	S17
e	28	4	2' - 3"	S19
f	2	4	7' - 0"	17

Bending Details

NOTE:
All dimensions are out to out of bars.

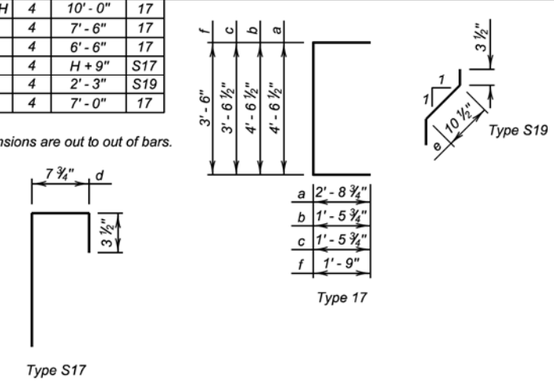

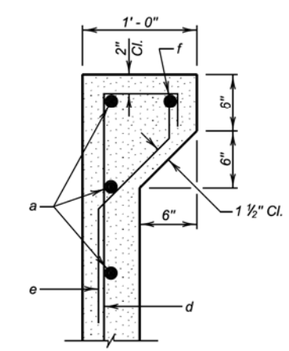

DETAIL "X"

December 16, 2015

Published Date: 2nd Qtr. 2016

SDDOT

3' X 4' TYPE B
REINFORCED CONCRETE DROP INLET

PLATE NUMBER
670.02

Sheet 2 of 2

Plot Scale - 1:200
- Plotted From - trpr17192
File - ...\brwn039K\s67002_1s67002_2.dgn

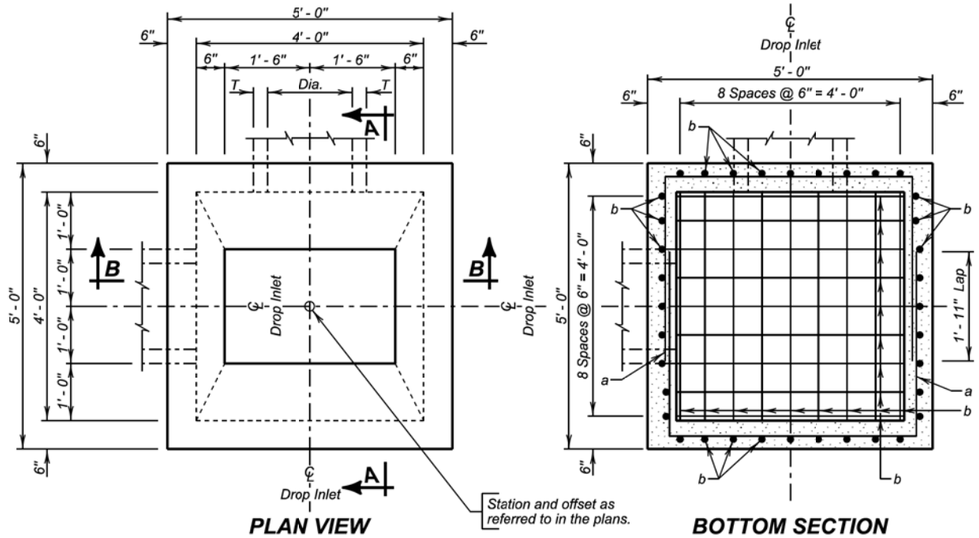

PLAN VIEW

BOTTOM SECTION

ESTIMATED QUANTITIES

ITEM	UNIT	CONSTANT QUANTITY	VARIABLE QUANTITY
✳ Class M6 Concrete	Cu. Yd.	0.98	0.33H
Reinforcing Steel	Lb.	180.69	43.67H
Frame and Grate Assembly	Each	1	——

DROP INLETS FOR 12" TO 36" DIAMETER PIPE

SPECIFICATIONS

Design Specifications: AASHTO LRFD Bridge Design Specifications, 2012 Edition.

Construction Specifications: South Dakota Standard Specifications for Roads and Bridges, Current Edition and required Provisions, Supplemental Specifications, and Special Provisions as included in the Proposal.

GENERAL NOTES:

Design Live Load: HL-93. No construction loading in excess of legal load was considered.

Reinforcing steel shall conform to ASTM A615 grade 60. The d bars shall be lapped 12 inches with the b and c bars. Cut and bend reinforcing steel as required to place pipe(s) through the drop inlet wall.

Drop inlet may be precast. If precast drop inlet details differ from this standard plate, submit a checked design done by a SD registered P.E. and shop plans to the Office of Bridge Design for approval.

✳ Reduce total quantities of concrete by the amount of concrete displaced by the pipe(s). The total quantity of concrete shall be computed to the nearest hundredth of a cubic yard. The total quantity of reinforcing steel shall be computed to the nearest pound.

Drop inlet shown may be modified by the addition or omission of connecting pipes as noted elsewhere in the plans. All pipes entering drop inlet must fit between the inside face of walls and shall not enter through the corners.

Maximum R.C.P. diameter shall not exceed 36 inches (30 inches for R. C. arch) on the 4-foot wide side of the drop inlet.

The dimension of H is in feet. Maximum H is 10 feet.

PIPE DISPLACEMENT REDUCTIONS

	Diameter (Inches)	Wall T (Inches)	Class M6 Concrete (Cu. Yd.)
R.C.P.	12	2	0.03
	15	2 ¼	0.04
	18	2 ½	0.05
	24	3	0.09
	30	3 ½	0.14
	36	4	0.20
R.C. ARCH	18	2 ½	0.05
	24	3 ½	0.09
	30	4	0.14

December 16, 2015

Published Date: 2nd Qtr. 2016

SDDOT

4' X 4' TYPE B REINFORCED CONCRETE DROP INLET

PLATE NUMBER 670.04

Sheet 1 of 2

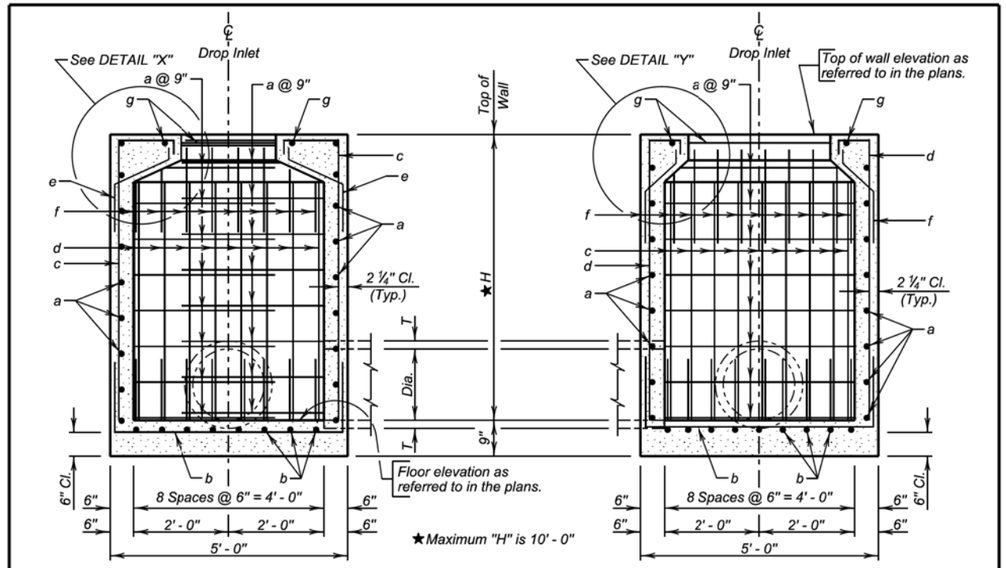

SEC. A - A

SEC. B - B

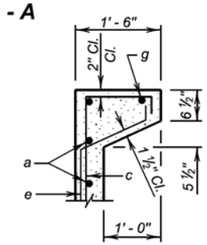

DETAIL "X"

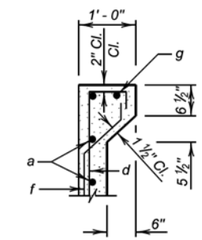

DETAIL "Y"

REINFORCING SCHEDULE

Mk.	No.	Size	Length	Type
a	2.67H	4	11' - 0"	17
b	18	4	7' - 6"	17
c	18	4	H + 15"	S17
d	18	4	H + 9"	S17
e	18	4	2' - 6"	S19
f	18	4	2' - 3"	S19
g	2	4	7' - 0"	17

Bending Details

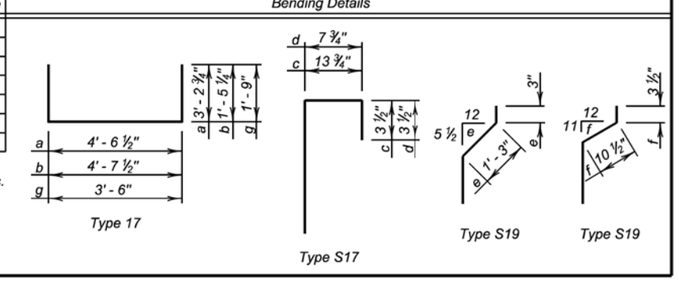

NOTE:
All dimensions are out to out of bars.

December 16, 2015

Published Date: 2nd Qtr. 2016

SDDOT

4' X 4' TYPE B REINFORCED CONCRETE DROP INLET

PLATE NUMBER 670.04

Sheet 2 of 2

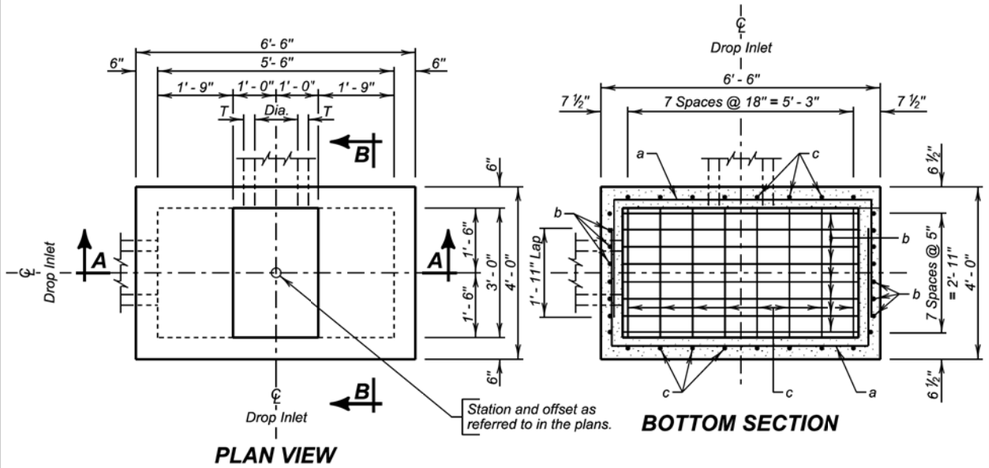

PLAN VIEW

BOTTOM SECTION

ESTIMATED QUANTITIES

ITEM	UNIT	CONSTANT QUANTITY	VARIABLE QUANTITY
✳ Class M6 Concrete	Cu. Yd.	1.03	0.35H
Reinforcing Steel	Lb.	161.19	47.89H
Grate Assembly	Each	1	———

DROP INLETS FOR 12" TO 54" DIAMETER PIPE

SPECIFICATIONS

Design Specifications: AASHTO LRFD Bridge Design Specifications, 2012 Edition.

Construction Specifications: South Dakota Standard Specifications for Roads and Bridges, Current Edition and required Provisions, Supplemental Specifications, and Special Provisions as included in the Proposal.

GENERAL NOTES:

Design Live Load: HL-93. No construction loading in excess of legal load was considered.

Reinforcing steel shall conform to ASTM A615 grade 60. The d bars shall be lapped 12 inches with the b and c bars. Cut and bend reinforcing steel as required to place pipe(s) through the drop inlet wall.

Drop inlet may be precast. If precast drop inlet details differ from this standard plate, submit a checked design done by a SD registered P.E. and shop plans to the Office of Bridge Design for approval.

✳ Reduce total quantities of concrete by the amount of concrete displaced by the pipe(s). The total quantity of concrete shall be computed to the nearest hundredth of a cubic yard. The total quantity of reinforcing steel shall be computed to the nearest pound.

Drop inlet shown may be modified by the addition or omission of connecting pipes as noted elsewhere in the plans. All pipes entering drop inlet must fit between the inside face of walls and shall not enter through the corners.

Maximum R.C.P. diameter shall not exceed 54 inches (42 inches for R. C. arch) on the 5.5-foot wide side and shall not exceed 24 inches (24 inches for R. C. arch) on the 3-foot wide side of the drop inlet.

The dimension of H is in feet. Maximum H is 10 feet.

PIPE DISPLACEMENT REDUCTIONS

	Diameter (Inches)	Wall T (Inches)	Class M6 Concrete (Cu. Yd.)
R.C.P.	12	2	0.03
	15	2 ¼	0.04
	18	2 ½	0.05
	24	3	0.09
	30	3 ½	0.14
	36	4	0.20
	42	4 ½	0.26
	48	5	0.34
	54	5 ½	0.43
R.C. ARCH	18	2 ½	0.05
	24	3 ½	0.09
	30	4	0.14
	36	4 ½	0.19
	42	4 ½	0.24

December 16, 2015

Published Date: 2nd Qtr. 2016

SDDOT

5.5' X 3' TYPE B
REINFORCED CONCRETE DROP INLET

PLATE NUMBER
670.05

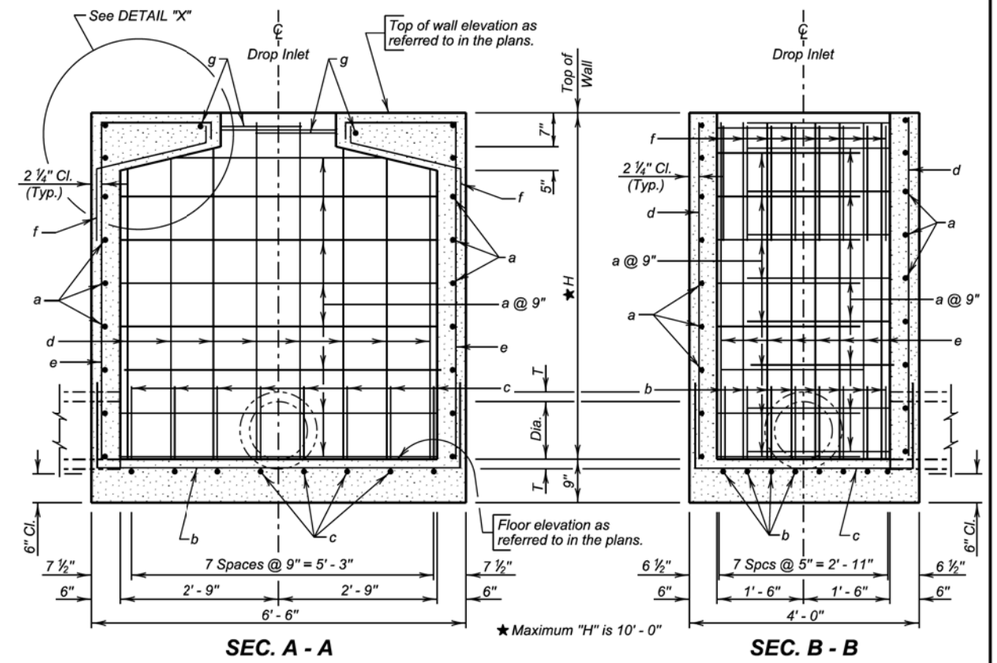

SEC. A - A

SEC. B - B

REINFORCING SCHEDULE

Mk.	No.	Size	Length	Type	Bending Details
a	2.67H	4	11' - 5"	17	
b	8	4	9' - 0"	17	
c	8	4	6' - 6"	17	
d	16	4	H - 2"	Str.	
e	16	5	H + 24"	S17	
f	16	4	3' - 6"	S19	
g	2	4	7' - 0"	17	

NOTE:
All dimensions are out to out of bars.

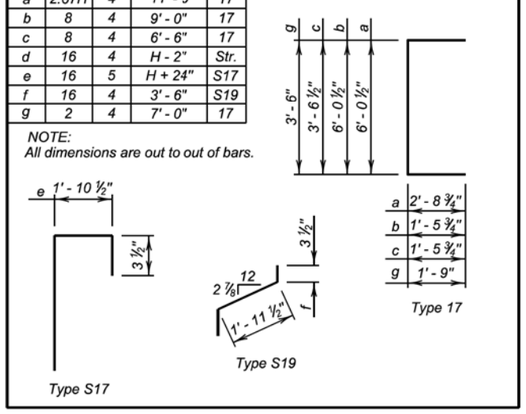

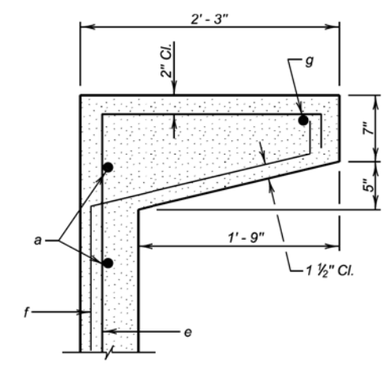

DETAIL "X"

December 16, 2015

Published Date: 2nd Qtr. 2016

SDDOT

5.5' X 3' TYPE B
REINFORCED CONCRETE DROP INLET

PLATE NUMBER
670.05

Plot Scale - 1:200
Plotted From - tnpr17192
File - ...\brwn039K\s67005_1\s67005_2.dgn

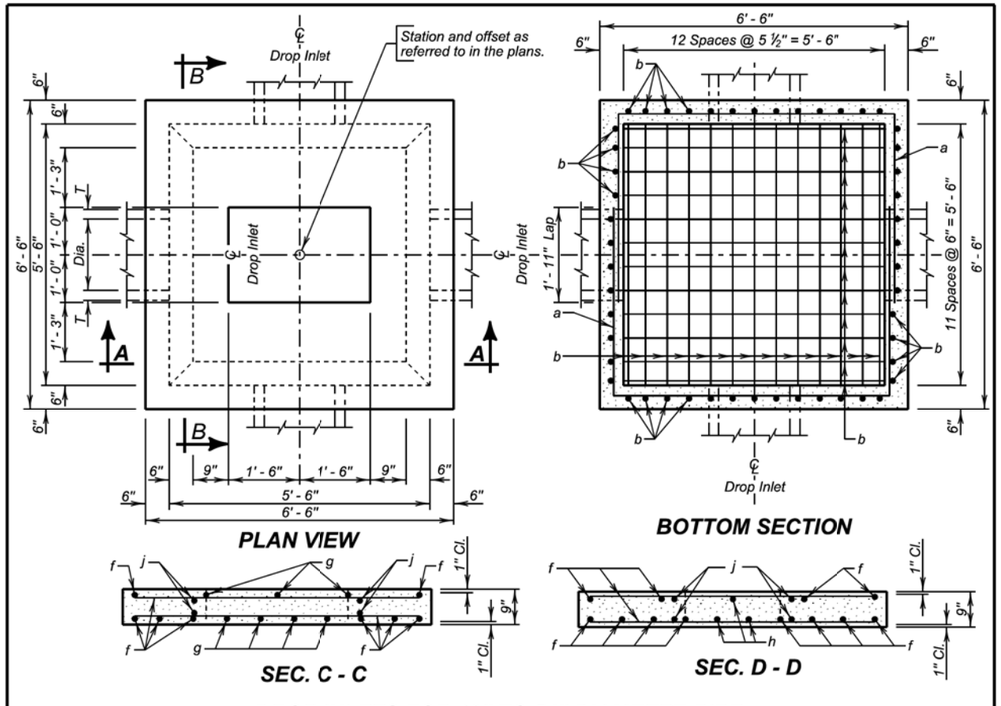

DROP INLETS FOR 12" TO 54" DIAMETER PIPE

SPECIFICATIONS

Design Specifications: AASHTO LRFD Bridge Design Specifications, 2012 Edition.

Construction Specifications: South Dakota Standard Specifications for Roads and Bridges, Current Edition and required Provisions, Supplemental Specifications, and Special Provisions as included in the Proposal.

GENERAL NOTES:

Design Live Load: HL-93. No construction loading in excess of legal load was considered.

Reinforcing steel shall conform to ASTM A615 grade 60. The c bars shall be lapped 12 inches with the b bars. Cut and bend reinforcing steel as required to place pipe(s) through the drop inlet wall.

Drop inlet may be precast. If precast drop inlet details differ from this standard plate, submit a checked design done by a SD registered P.E. and shop plans to the Office of Bridge Design for approval.

✳ Reduce total quantities of concrete by the amount of concrete displaced by the pipe(s). The total quantity of concrete shall be computed to the nearest hundredth of a cubic yard. The total quantity of reinforcing steel shall be computed to the nearest pound.

Apply a thin layer of grout between the drop inlet and cover to ensure uniform bearing. Grout shall conform to Section 460.2 K.

Drop inlet shown may be modified by the addition or omission of connecting pipes as noted elsewhere in the plans. All pipes entering drop inlet must fit between the inside face of walls and shall not enter through the corners.

Maximum R.C.P. diameter shall not exceed 54 inches (42 inches for R. C. arch) of the drop inlet.

The dimension of H is in feet. Maximum H is 10 feet.

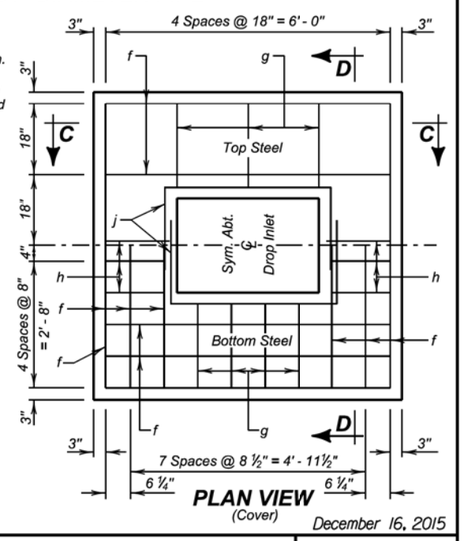

December 16, 2015

Published Date: 2nd Qtr. 2016

SDDOT

5.5' X 5.5' TYPE B
REINFORCED CONCRETE DROP INLET

PLATE NUMBER
670.06

Sheet 1 of 2

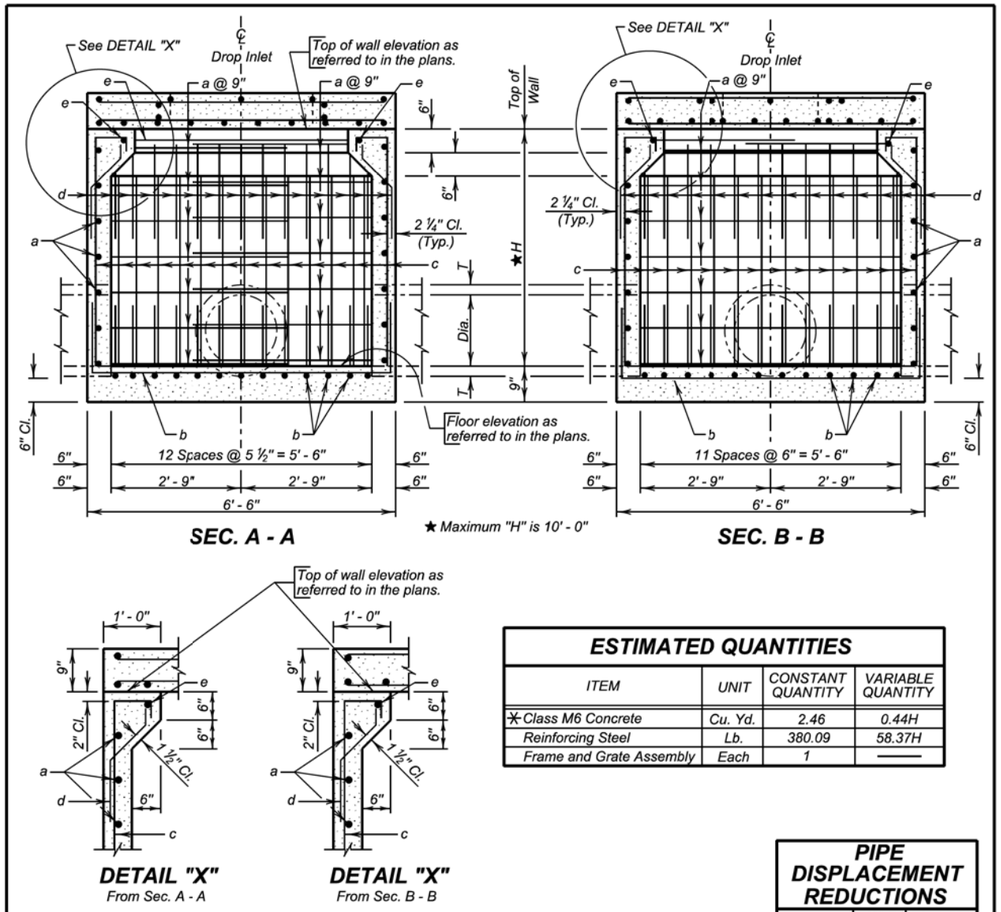

ESTIMATED QUANTITIES

ITEM	UNIT	CONSTANT QUANTITY	VARIABLE QUANTITY
✳ Class M6 Concrete	Cu. Yd.	2.46	0.44H
Reinforcing Steel	Lb.	380.09	58.37H
Frame and Grate Assembly	Each	1	———

REINFORCING SCHEDULE

Mk.	No.	Size	Length	Type
a	2.67H	4	14' - 0"	17
b	25	4	9' - 0"	17
c	50	4	H + 9"	S17
d	50	4	2' - 3"	S19
e	2	4	10' - 6"	17
f	18	4	6' - 0"	Str.
g	14	4	1' - 9"	Str.
h	10	4	1' - 3"	Str.
j	4	4	7' - 0"	17

Bending Details

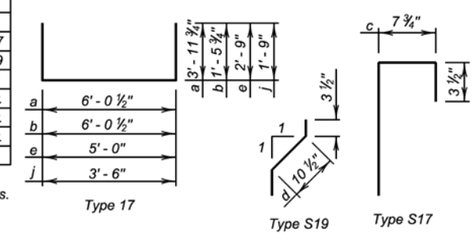

NOTE:
All dimensions are out to out of bars.

PIPE DISPLACEMENT REDUCTIONS

	Diameter (Inches)	Wall T (Inches)	Class M6 Concrete (Cu. Yd.)
R.C.P.	12	2	0.03
	15	2 ¼	0.04
	18	2 ½	0.05
	24	3	0.09
	30	3 ½	0.14
	36	4	0.20
	42	4 ½	0.26
	48	5	0.34
	54	5 ½	0.43
R.C. ARCH	18	2 ½	0.05
	24	3 ½	0.09
	30	4	0.14
	36	4 ½	0.19
	42	4 ½	0.24

December 16, 2015

Published Date: 2nd Qtr. 2016

SDDOT

5.5' X 5.5' TYPE B
REINFORCED CONCRETE DROP INLET

PLATE NUMBER
670.06

Sheet 2 of 2

Plot Scale - 1:200
- Plotted From - trpr17192
File - ...\brwn039\ks67006_1s67006_2.dgn

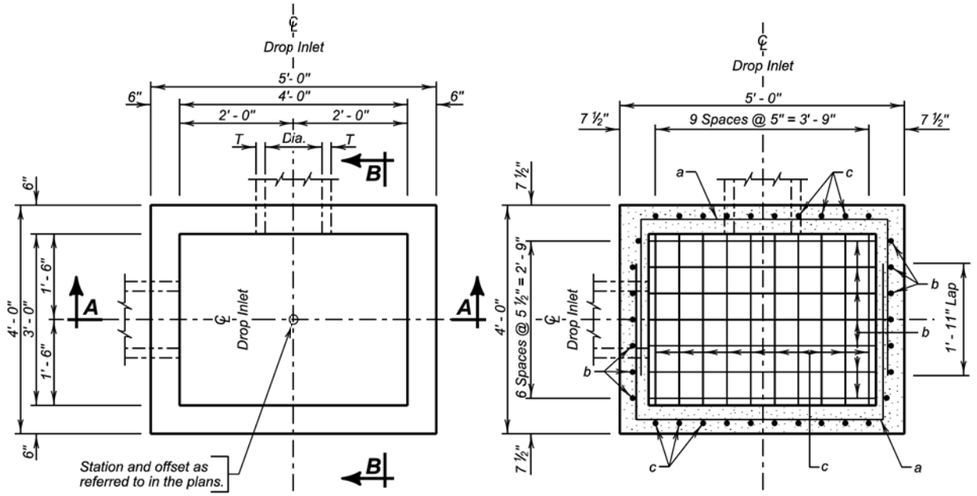

PLAN VIEW **BOTTOM SECTION**

ESTIMATED QUANTITIES

ITEM	UNIT	CONSTANT QUANTITY	VARIABLE QUANTITY
✳ Class M6 Concrete	Cu. Yd.	0.43	0.30H
Reinforcing Steel	Lb.	90.90	40.53H
Frame and Grate Assembly	Each	1	——

DROP INLETS FOR 12" TO 36" DIAMETER PIPE

SPECIFICATIONS

Design Specifications: AASHTO LRFD Bridge Design Specifications, 2012 Edition.

Construction Specifications: South Dakota Standard Specifications for Roads and Bridges, Current Edition and required Provisions, Supplemental Specifications, and Special Provisions as included in the Proposal.

GENERAL NOTES:

Design Live Load: HL-93. No construction loading in excess of legal load was considered.

Reinforcing steel shall conform to ASTM A615 grade 60. The d bars shall be lapped 12 inches with the b and c bars. Cut and bend reinforcing steel as required to place pipe(s) through the drop inlet wall.

Drop inlet may be precast. If precast drop inlet details differ from this standard plate, submit a checked design done by a SD registered P.E. and shop plans to the Office of Bridge Design for approval.

✳ Reduce total quantities of concrete by the amount of concrete displaced by the pipe(s). The total quantity of concrete shall be computed to the nearest hundredth of a cubic yard. The total quantity of reinforcing steel shall be computed to the nearest pound.

Drop inlet shown may be modified by the addition or omission of connecting pipes as noted elsewhere in the plans. All pipes entering drop inlet must fit between the inside face of walls and shall not enter through the corners.

Maximum R.C.P. diameter shall not exceed 24 inches (24 inches for R. C. arch) on the 3-foot wide side and shall not exceed 36 inches (30 inches for R. C. arch) on the 4-foot wide side of the drop inlet.

The dimension of H is in feet. Maximum H is 10 feet.

PIPE DISPLACEMENT REDUCTIONS

	Diameter (Inches)	Wall T (Inches)	Class M6 Concrete (Cu. Yd.)
R.C.P.	12	2	0.03
	15	2 ¼	0.04
	18	2 ½	0.05
	24	3	0.09
	30	3 ½	0.14
	36	4	0.20
R.C. ARCH	18	2 ½	0.05
	24	3 ½	0.09
	30	4	0.14

December 16, 2015

Published Date: 2nd Qtr. 2016

SDDOT

3' X 4' TYPE C REINFORCED CONCRETE DROP INLET

PLATE NUMBER 670.10

Sheet 1 of 2

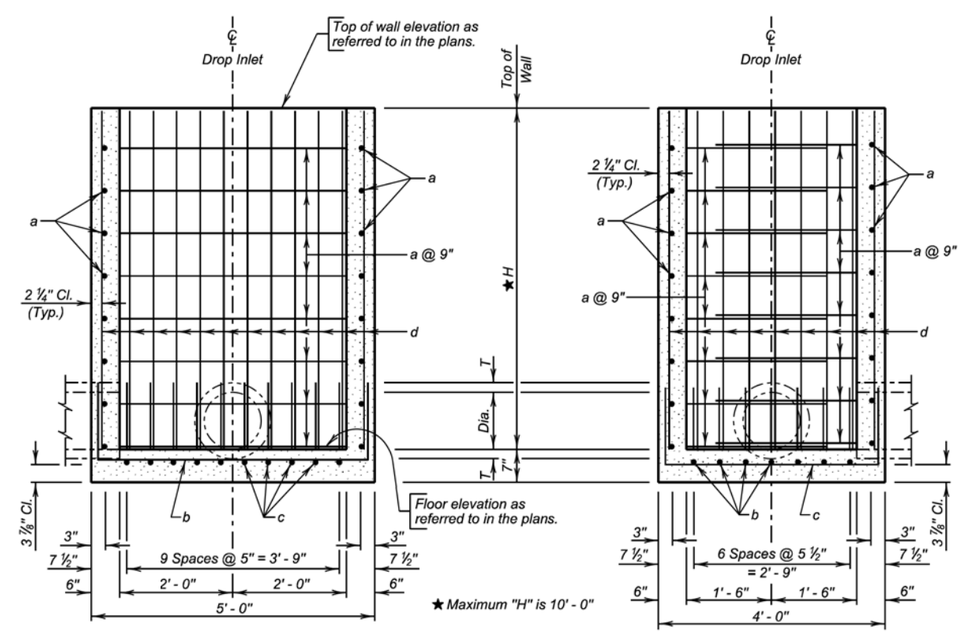

SEC. A - A **SEC. B - B**

REINFORCING SCHEDULE

Mk.	No.	Size	Length	Type
a	2.67H	4	10' - 0"	17
b	7	5	7' - 3"	17
c	10	4	6' - 3"	17
d	34	4	H - 2"	Str.

Bending Details

NOTE:
All dimensions are out to out of bars.

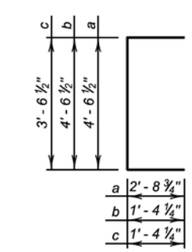

Type 17

December 16, 2015

Published Date: 2nd Qtr. 2016

SDDOT

3' X 4' TYPE C REINFORCED CONCRETE DROP INLET

PLATE NUMBER 670.10

Sheet 2 of 2

Plot Scale - 1:200
- Plotted From - trpr17192
File - ...\brwn039K\s67010_1\s67010_2.dgn

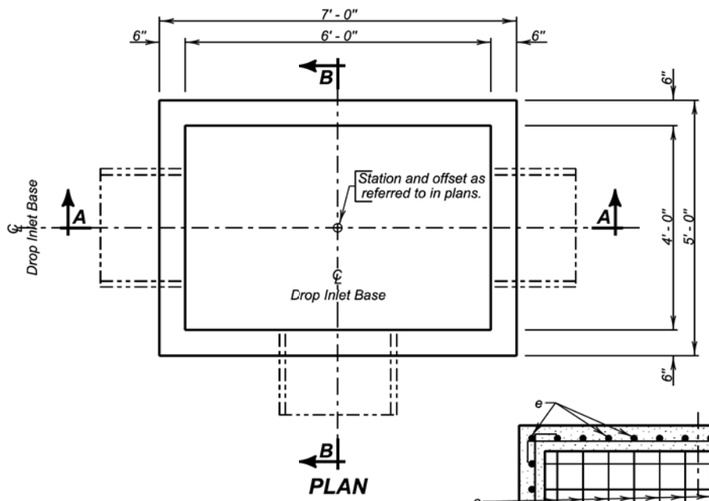

PLAN

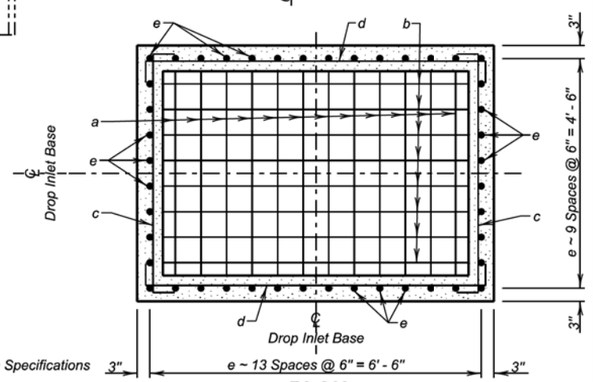

PLAN
(Bottom Steel)
(Pipe Not Shown)

SPECIFICATIONS:

1. Design Specifications: AASHTO LRFD Bridge Design Specifications 2012 Edition.
2. Construction Specifications: South Dakota Standard Specifications for Roads and Bridges, Current Edition and required Provisions, Supplemental Specifications, and Special Provisions as included in the Proposal.

GENERAL NOTES:

1. Design Live Load: HL-93 loading. No construction loading in excess of legal load was considered.
2. Base is intended for use with a Precast Concrete Type S Drop Inlet Lid, Standard Plate 670.38. Base may be precast. If precast base used, and details differ from that shown, the precast base must be on the current approved list. The current approved list is available through proper channels from the SDDOT Office of Bridge Design.
3. To qualify for addition to the approved list, submit a checked design, by South Dakota Registered Professional Engineers and shop plans to the Office of Bridge Design for approval. Design shall be in accordance with the current edition of the AASHTO LRFD Bridge Design Specifications.
4. ✳ Reduce total quantities of concrete by the amount of concrete displaced by the pipe. The total quantity of concrete shall be computed to the nearest hundredth of a cubic yard. The total quantity of reinforcing steel shall be computed to the nearest pound.
5. Inlets shown may be modified by the addition or omission of connecting pipes as shown on the layouts. Connecting pipes shall not enter the inlet through the corners.
6. Maximum R.C.P. diameter shall not exceed 36 inches (30 inches for R.C. Arch) on the 4-foot wide side and shall not exceed 54 inches (48 inches for R.C. Arch) on the 6-foot wide side of the Drop Inlet.
7. Reinforcing steel shall conform to ASTM A615 Grade 60. Cut and bend reinforcing steel as required to place pipe(s) through the inlet wall.
8. Use 1 inch clear cover on all reinforcing steel unless otherwise noted.
9. The dimension of H is in feet. Maximum H is 8 feet.

June 26, 2015

Published Date: 2nd Qtr. 2016	SDDOT	4' X 6' TYPE S DROP INLET BASE	PLATE NUMBER 670.30
			Sheet 1 of 2

PIPE DISPLACEMENT REDUCTIONS

	Diameter (Inches)	Wall T (Inches)	Class M6 Concrete (Cu. Yd.)
R.C.P.	12	2	0.03
	15	2 ¼	0.04
	18	2 ½	0.05
	24	3	0.09
	30	3 ½	0.14
	36	4	0.20
	42	4 ½	0.26
	48	5	0.34
	54	5 ½	0.43
R.C. ARCH	18	2 ½	0.05
	24	3 ½	0.09
	30	4	0.14
	36	4 ½	0.19
	42	4 ½	0.24
	48	5	0.32

REINFORCING SCHEDULE

Mk.	No.	Size	Length	Type	Bending Details
a	14	5	9' - 6"	17	
b	10	5	11' - 6"	17	
c	2H	4	5' - 6"	17	
d	2H	4	7' - 6"	17	
e	44	4	H - 2"	Str.	

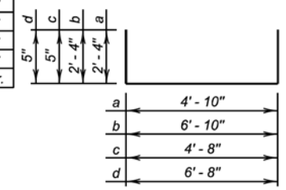

Type 17

NOTE:
All dimensions are out to out of bars

ESTIMATED QUANTITIES

ITEM	UNIT	CONSTANT QUANTITY	VARIABLE QUANTITY
✳ Class M6 Concrete	Cu.Yd.	0.97	0.41H
Reinforcing Steel	Lb.	253.77	46.76H

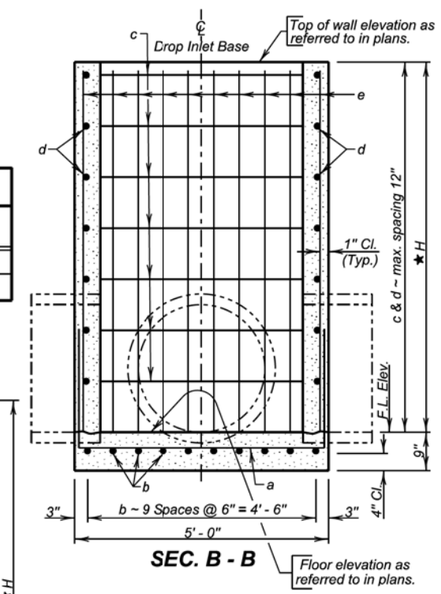

SEC. B - B

★ Maximum H is 8' - 0"

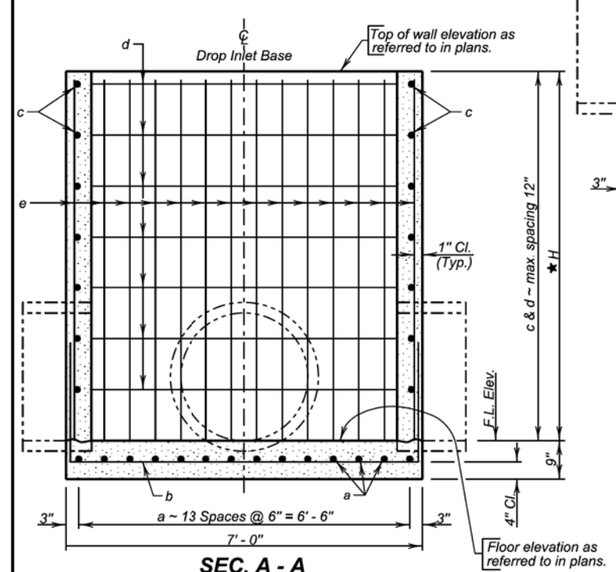

SEC. A - A

June 26, 2015

Published Date: 2nd Qtr. 2016	SDDOT	4' X 6' TYPE S DROP INLET BASE	PLATE NUMBER 670.30
			Sheet 2 of 2

Plot Scale - 1:200
- Plotted From - trpr17192
File - ...\brwn039K\s67030_1\s67030_2.dgn

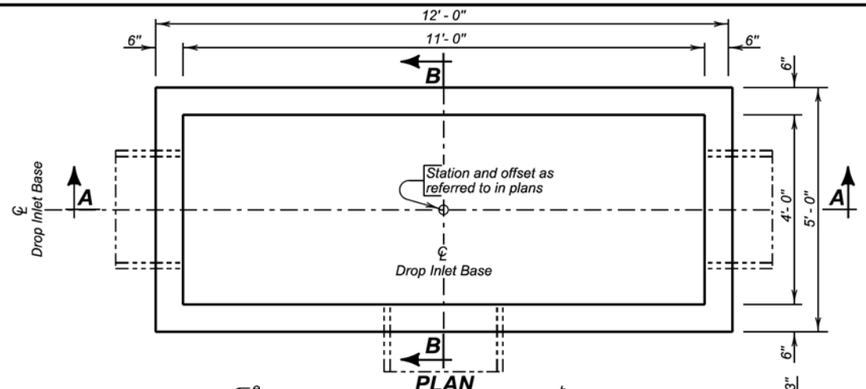

PLAN

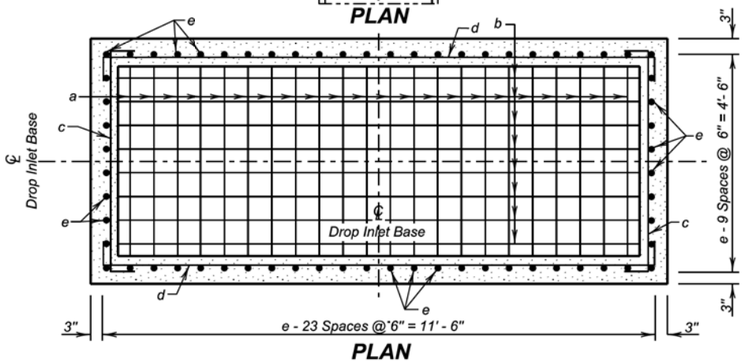

PLAN
(Bottom Steel)
(Pipe Not Shown)

SPECIFICATIONS:

1. Design Specifications: AASHTO LRFD Bridge Design Specifications 2012 Edition.
2. Construction Specifications: South Dakota Standard Specifications for Roads and Bridges, Current Edition and required Provisions, Supplemental Specifications, and Special Provisions as included in the Proposal.

GENERAL NOTES:

1. Design Live Load: HL-93 loading. No construction loading in excess of legal load was considered.
2. Base is intended for use with a Precast Concrete Type S Drop Inlet Lid, Standard Plate 670.40. Base may be precast. If precast base used, and details differ from that shown, the precast base must be on the current approved list. The current approved list is available through proper channels from the SDDOT Office of Bridge Design.
3. To qualify for addition to the approved list, submit a checked design, by South Dakota Registered Professional Engineers and shop plans to the Office of Bridge Design for approval. Design shall be in accordance with the current edition of the AASHTO LRFD Bridge Design Specifications.
4. ✳ Reduce total quantities of concrete by the amount of concrete displaced by the pipe. The total quantity of concrete shall be computed to the nearest hundredth of a cubic yard. The total quantity of reinforcing steel shall be computed to the nearest pound.
5. Inlets shown may be modified by the addition or omission of connecting pipes as shown on the layouts. Connecting pipes shall not enter the inlet through the corners.
6. Maximum R.C.P. diameter shall not exceed 36 inches (30 inches for R.C. Arch) on the 4-foot wide side of the Drop Inlet.
7. Reinforcing steel shall conform to ASTM A615 Grade 60. Cut and bend reinforcing steel as required to place pipe(s) through the inlet wall.
8. Use 1 inch clear cover on all reinforcing steel unless otherwise noted.
9. The dimension of H is in feet. Maximum H is 8 feet.

June 26, 2015

Published Date: 2nd Qtr. 2016	SDDOT	4' X 11' TYPE S DROP INLET BASE	PLATE NUMBER 670.32
			Sheet 1 of 2

PIPE DISPLACEMENT REDUCTIONS

	Diameter (Inches)	Wall T (Inches)	Class M6 Concrete (Cu. Yd.)
R.C.P.	12	2	0.03
	15	2 ¼	0.04
	18	2 ½	0.05
	24	3	0.09
	30	3 ½	0.14
	36	4	0.20
	42	4 ½	0.26
	48	5	0.34
	54	5 ½	0.43
	60	6	0.52
R.C. ARCH	18	2 ½	0.05
	24	3 ½	0.09
	30	4	0.14
	36	4 ½	0.19
	42	4 ½	0.24
	48	5	0.32
	54	5 ½	0.39
	60	6	0.49
	72	7	0.70
	84	8	0.93

REINFORCING SCHEDULE

Mk.	No.	Size	Length	Type	Bending Details
a	24	5	9' - 6"	17	
b	10	5	16' - 6"	17	
c	2H	4	5' - 6"	17	
d	2H	4	12' - 6"	17	
e	64	4	H - 2"	Str.	

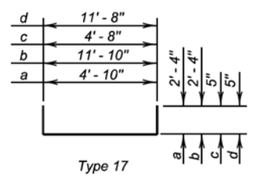

Type 17

NOTE:
All dimensions are out to out of bars.

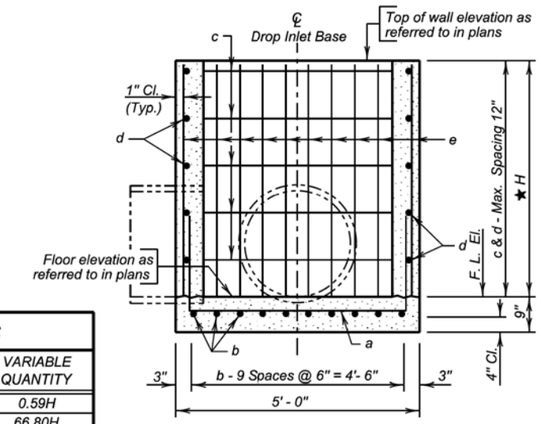

SEC. B - B

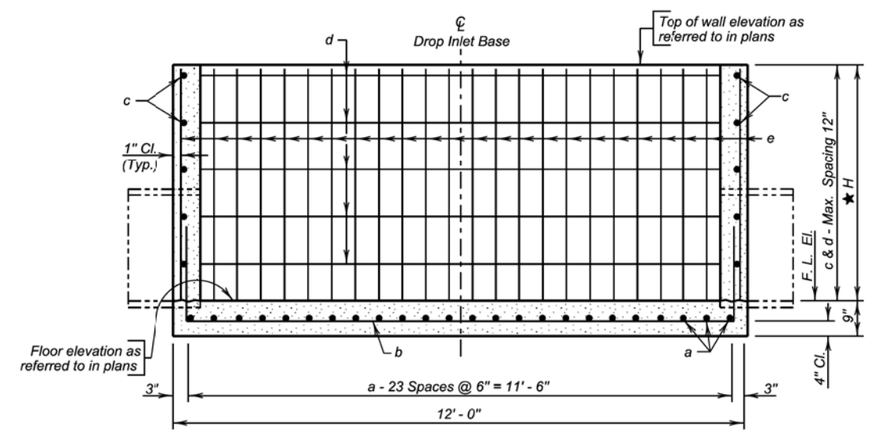

SEC. A - A

✱ Maximum H is 8' - 0"

June 26, 2015

ESTIMATED QUANTITIES

ITEM	UNIT	CONSTANT QUANTITY	VARIABLE QUANTITY
✳ Class M6 Concrete	Cu. Yd.	1.67	0.59H
Reinforcing Steel	Lb.	402.77	66.80H

Published Date: 2nd Qtr. 2016	SDDOT	4' X 11' TYPE S DROP INLET BASE	PLATE NUMBER 670.32
			Sheet 2 of 2

Plot Scale - 1:200
- Plotted From - tnpr17192
File - ...\brwn039k\s67032_1s67032_2.dgn

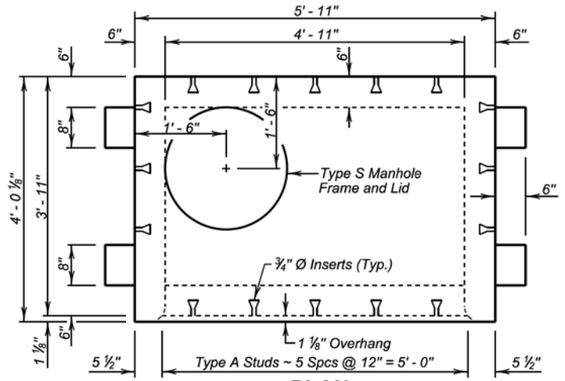

PLAN

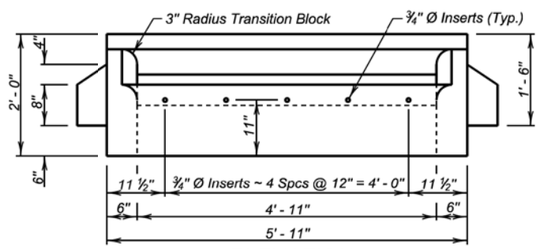

ELEVATION

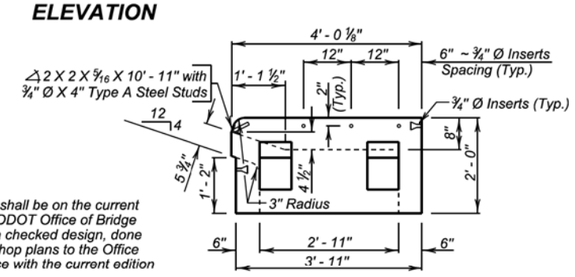

SIDE VIEW
(With Sidewalk Inserts)

GENERAL NOTES:

1. The Precast Concrete Type S Drop Inlet Lid and the shims shall be on the current approved list available through proper channels from the SDDOT Office of Bridge Design. To qualify for addition to the approved list, submit a checked design, done by South Dakota Registered Professional Engineers, and shop plans to the Office of Bridge Design for approval. Design shall be in accordance with the current edition of the AASHTO LRFD Bridge Design Specifications.
2. Design Live Load shall be HL - 93.
3. Concrete mix shall be as per fabricators design, however, minimum compressive strength shall not be less than 4500 psi. Type II Cement is required.
4. The Type S Manhole Frame and Lid shall conform to AASHTO M105, Class 30.
5. Structural Steel shall conform to ASTM A36. The ¾ inch diameter Headed Type A Steel Studs shall comform to Section 7 of the current edition of AWS Dl. I Structural Steel Welding Code.
6. The ¾ inch diameter Concrete Inserts shall be galvanized or made of a corrosion resistant material. Provide ¾ inch diameter x 1' - 6" long dowels conforming to ASTM A615, Gr. 60 threaded to fit Inserts with each lid.
7. All costs associated with furnishing and installing the Precast Concrete Type S Drop Inlet Lid including the type S manhole frame ana lid, shims, inserts, and dowels shall be included in the contract unit price per each for " 4' x 6' Precast Concrete Type S Drop Inlet Lid ".

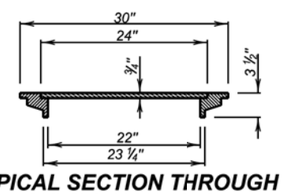

TYPICAL SECTION THROUGH TYPE S MANHOLE FRAME AND LID
(Weight 140 Lbs.)

December 23, 2012

Published Date: 2nd Qtr. 2016	SDDOT	4' X 6' PRECAST CONCRETE TYPE S DROP INLET LID	PLATE NUMBER 670.38 Sheet 1 of 1

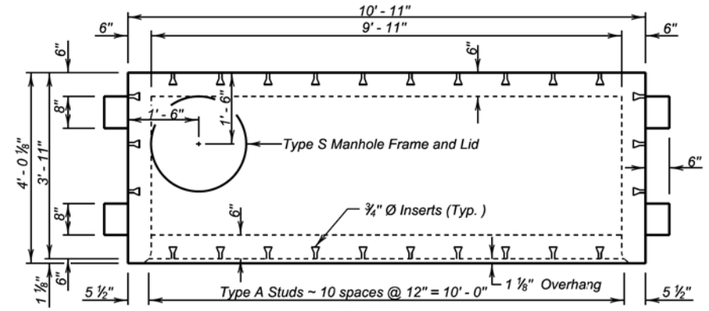

PLAN

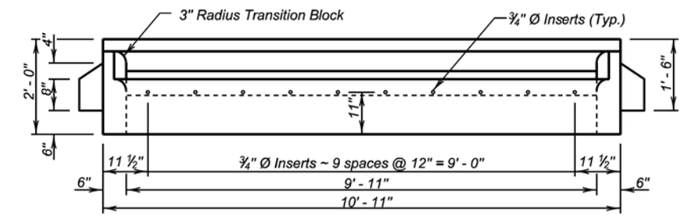

ELEVATION

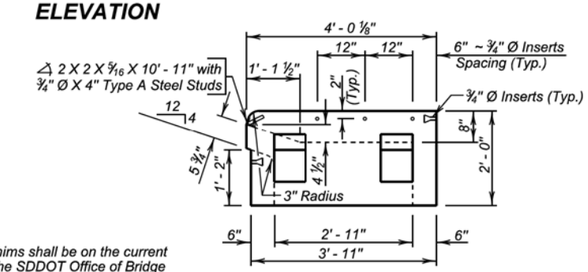

SIDE VIEW
(With Sidewalk Inserts)

GENERAL NOTES:

1. The Precast Concrete Type S Drop Inlet Lid and the shims shall be on the current approved list available through proper channels from the SDDOT Office of Bridge Design. To qualify for addition to the approved list, submit a checked design, done by South Dakota Registered Professional Engineers, and shop plans to the Office of Bridge Design for approval. Design shall be in accordance with the current edition of the AASHTO LRFD Bridge Design Specifications.
2. Design Live Load shall be HL - 93.
3. Concrete mix shall be as per fabricators design, however, minimum compressive strength shall not be less than 4500 psi. Type II Cement is required.
4. The Type S Manhole Frame and Lid shall conform to AASHTO M105, Class 30.
5. Structural Steel shall conform to ASTM A36. The ¾ inch diameter Headed Type A Steel Studs shall conform to Section 7 of the current edition of AWS D1. 1 Structural Steel Welding Code.
6. The ¾ inch diameter Concrete Inserts shall be galvanized or made of a corrosion resistant material. Provide ¾ inch diameter x 1' - 6" long dowels conforming to ASTM A615, Gr. 60 threaded to fit inserts with each lid.
7. All costs associated with furnishing and installing the Precast Concrete Type S Drop Inlet Lid including the type S manhole frame and lid, shims, inserts, and dowels shall be included in the contract unit price per each for " 4' x 11' Precast Concrete Type S Drop Inlet Lid ".

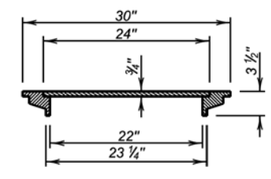

TYPICAL SECTION THROUGH TYPE S MANHOLE FRAME AND LID
(Weight 140 Lbs.)

December 23, 2012

Published Date: 2nd Qtr. 2016	SDDOT	4' X 11' PRECAST CONCRETE TYPE S DROP INLET LID	PLATE NUMBER 670.40 Sheet 1 of 1

Plot Scale - 1:200
- Plotted From - tnpr17192
File - ...\pn\brwn039K\s67039s67040.dgn

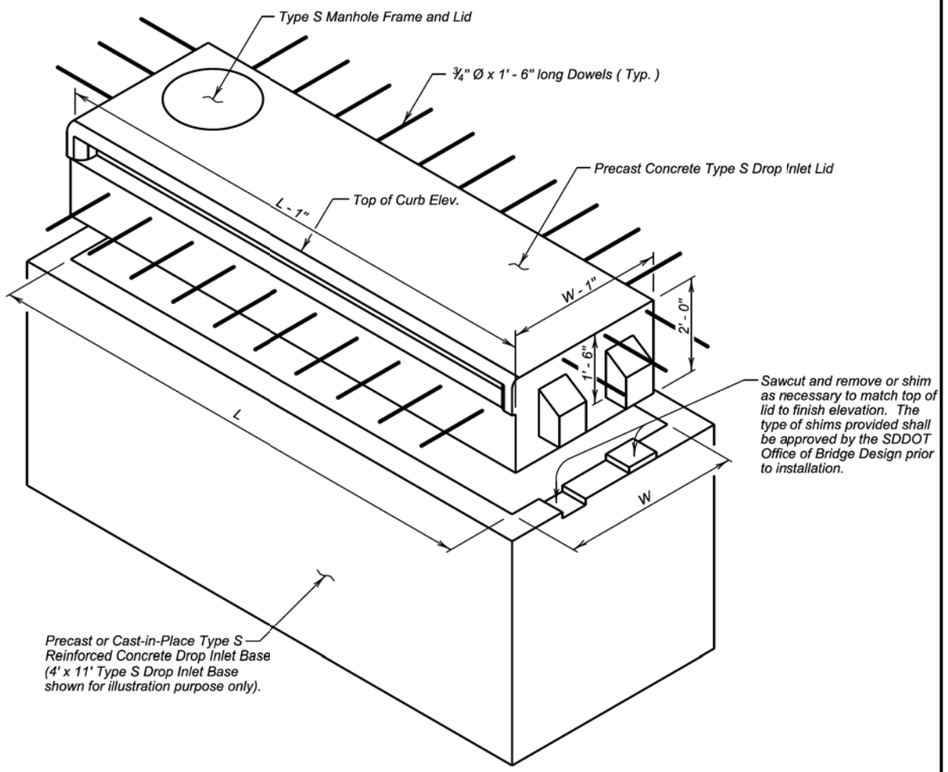

TYPE S DROP INLET

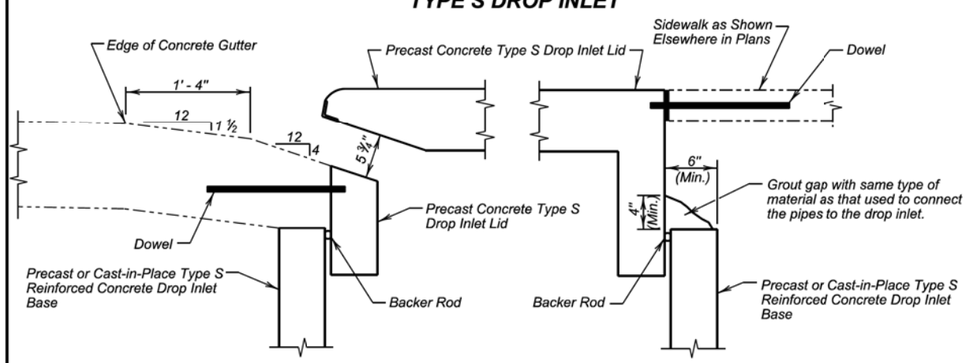

CONCRETE GUTTER DETAIL

GROUTING DETAIL
(Sides and Back, Adjacent to Sidewalk)

December 23, 2012

Published Date: 2nd Qtr. 2016	SDDOT	INSTALLATION DETAILS FOR PRECAST CONCRETE TYPE S DROP INLET LID	PLATE NUMBER 670.45
			Sheet 1 of 2

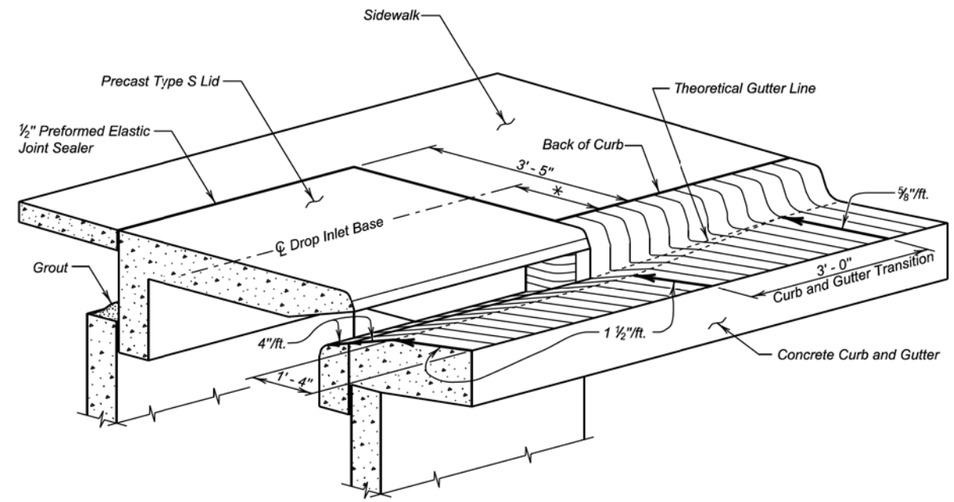

CURB AND GUTTER TRANSITION DETAILS

Drop Inlet Base Unit Size	* Distance
4' x 6'	1' - 5 ½"
4' x 11'	1' - 5 ½"
7' x 11'	2' - 11 ½"

GENERAL NOTES:

1. Dowels shall be used to anchor the precast concrete Type S drop inlet lid to the concrete gutter. See Standard Plate 670.38 or 670.40 as applicable. If there is sidewalk adjacent dowels shall be used to anchor the precast concrete Type S drop inlet lid to the sidewalk. If there is sidewalk adjacent to the drop inlet, the precast lid shall match the finish elevations and cross slopes of the sidewalk.
2. The sidewalk shall be steel reinforced when the sidewalk adjoins the precast lid. Refer to Standard Plate 651.70 for reinforced concrete sidewalk details.

December 23, 2012

Published Date: 2nd Qtr. 2016	SDDOT	INSTALLATION DETAILS FOR PRECAST CONCRETE TYPE S DROP INLET LID	PLATE NUMBER 670.45
			Sheet 2 of 2

Plot Scale - 1:200
- Plotted From - trpr17192
File - ...\brwn039K\s67045_1s67045_2.dgn

GENERAL NOTE:

Top of grate elevation shall be 0.04' below theoretical elevation of gutter.

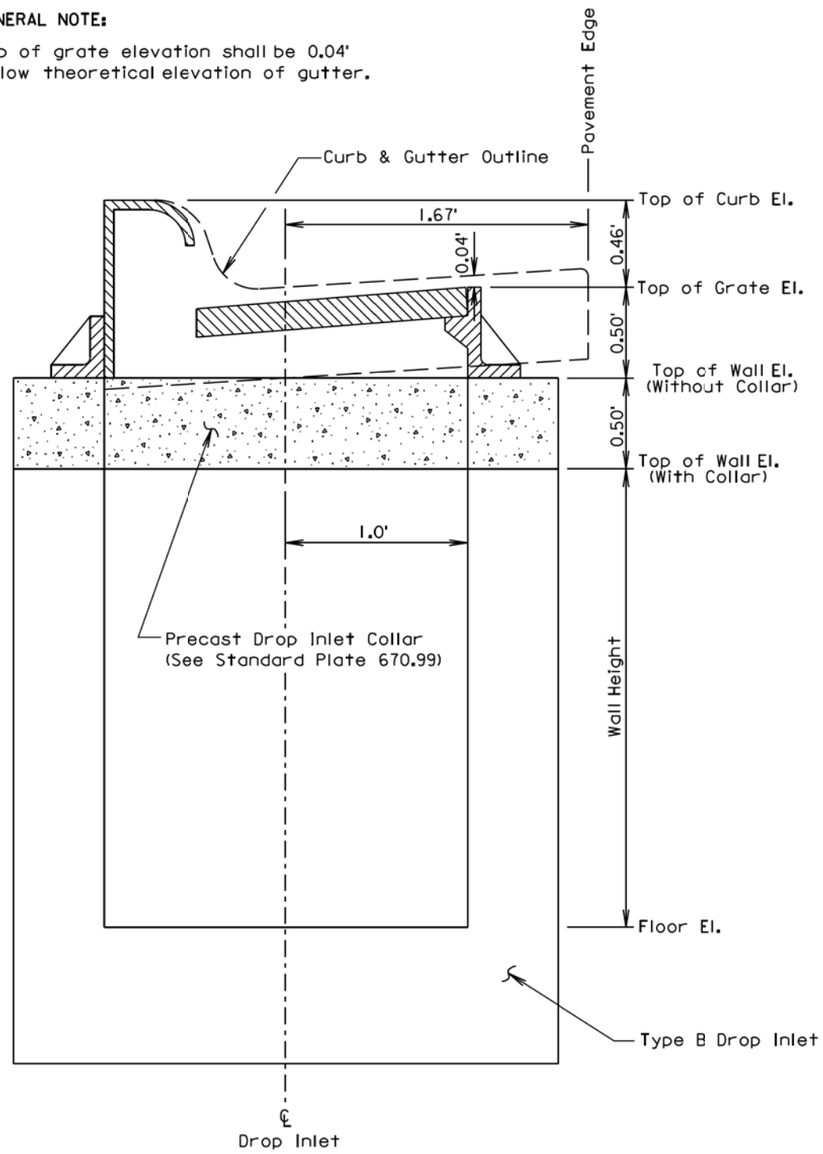

June 26, 2011

Published Date: 2nd Qtr. 2016	SDDOT	INSTALLATION OF TYPE B DROP INLET	PLATE NUMBER 670.75 Sheet 1 of 1

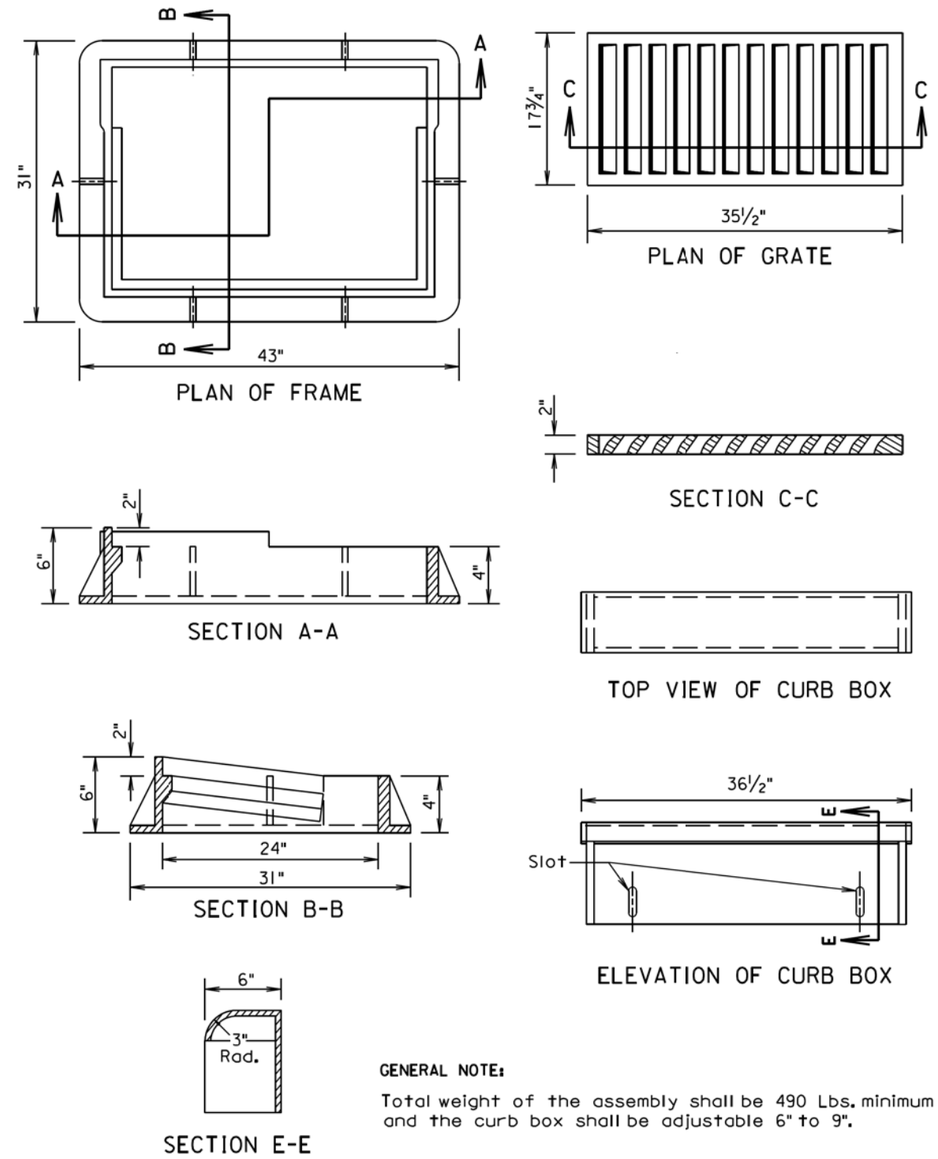

GENERAL NOTE:

Total weight of the assembly shall be 490 Lbs. minimum and the curb box shall be adjustable 6" to 9".

March 31, 2000

Published Date: 2nd Qtr. 2016	SDDOT	TYPE B FRAME AND GRATE ASSEMBLY	PLATE NUMBER 670.80 Sheet 1 of 1

Plot Scale - 1:200
- Plotted From - tnpr17192
File - ...\pnj\brwn039K\ss67075ss67080.dgn

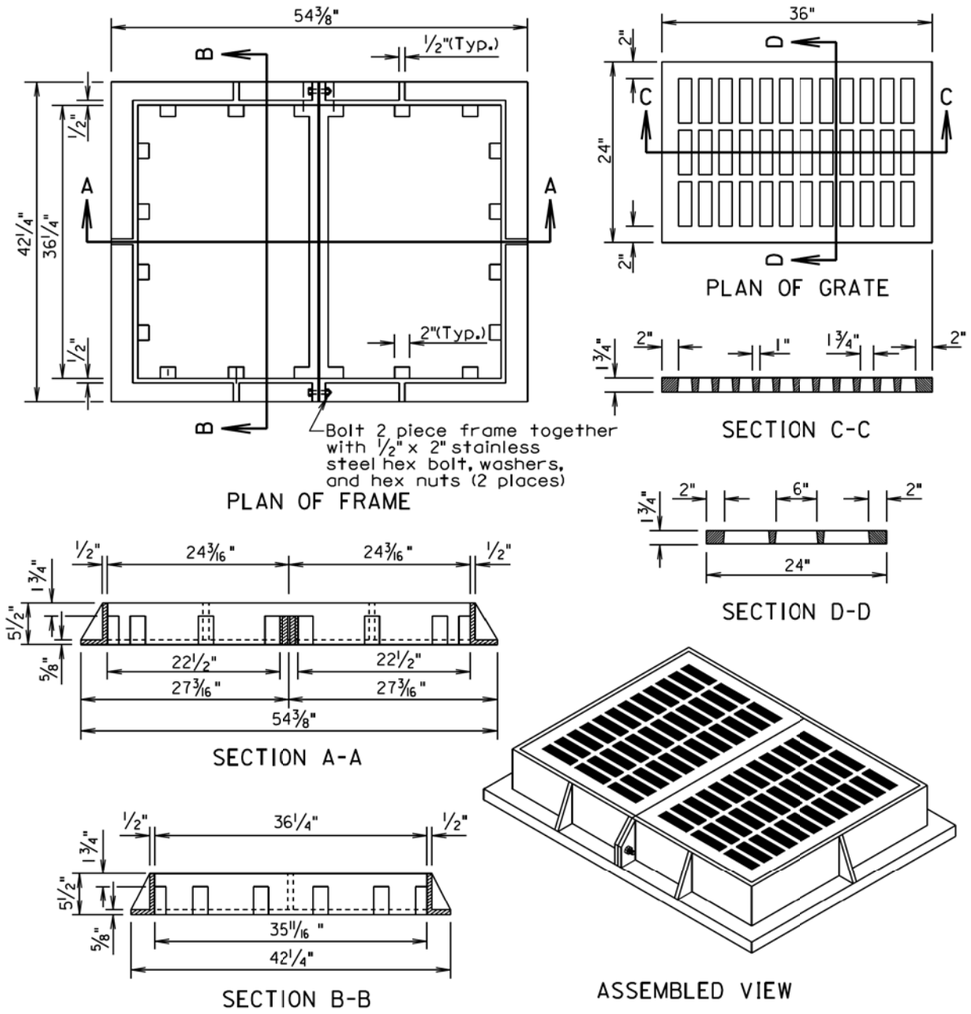

GENERAL NOTE:

The total weight of the frame and grate shall be 850 pounds minimum.

March 31, 2000

Published Date: 2nd Qtr. 2016	SDDOT	TYPE C FRAME AND GRATE	PLATE NUMBER 670.82
			Sheet 1 of 1

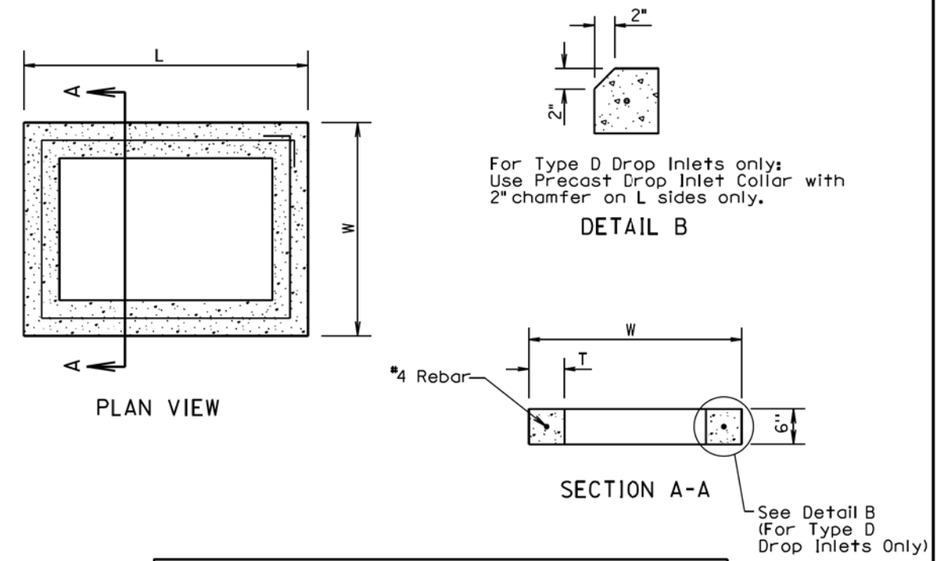

INFORMATIONAL QUANTITIES					
FRAME AND GRATE TYPE	L Ft-In	W Ft-In	T In	CLASS M6 CONCRETE CuYd	REINFORCING STEEL Lb
TYPE B	4'-0"	3'-0"	6	0.11	9
TYPE C	5'-0"	4'-0"	6	0.15	11
TYPE D	4'-0"	2'-6"	6	0.10	8

GENERAL NOTES:

All reinforcing steel shall conform to ASTM A615, Grade 60.

The 1/2" diameter bar shall lap 6" ± and shall be centered in the concrete.

The cost of furnishing and installing Precast Drop Inlet Collars, including labor, materials, and incidentals shall be incidental to the contract unit price per Each for "Precast Drop Inlet Collar".

March 31, 2000

Published Date: 2nd Qtr. 2016	SDDOT	PRECAST DROP INLET COLLAR	PLATE NUMBER 670.99
			Sheet 1 of 1

Plot Scale - 1:200
- Plotted From - trpr17192
File - ...\prj\brwn039K\67082s67099.dgn

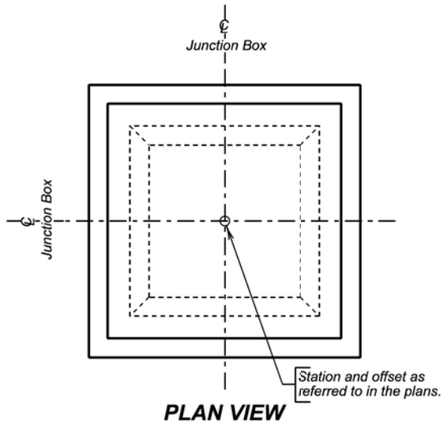

PLAN VIEW

SPECIFICATIONS

Design Specifications: AASHTO LRFD Bridge Design Specifications, 2012 Edition.

Construction Specifications: South Dakota Standard Specifications for Roads and Bridges, Current Edition and required Provisions, Supplemental Specifications, and Special Provisions as included in the Proposal.

GENERAL NOTES

Design Live Load: HL-93. No construction loading in excess of legal load was considered.

The design of the junction box is based on a maximum fill over the junction box of 5 feet and minimum fill over the junction box of 2 feet.

Reinforcing steel shall conform to ASTM A615 Grade 60. Cut and bend reinforcing steel as required to place pipe(s) through junction box wall.

Junction box may be precast. If precast junction box details differ from this standard plate, submit a checked design done by a SD registered P.E. and shop plans to the Office of Bridge Design for approval.

Use 1 inch clear cover on all reinforcing steel unless otherwise noted.

All exposed edges shall be chamfered ¾ inch.

Junction box shown may be modified by the addition or omission of connecting pipes as noted elsewhere in the plans. All pipes entering junction box must fit between the inside face of walls and shall not enter through the corners.

The cost of furnishing and installing the manhole steps shall be incidental to the contract unit price per pound for "Reinforcing Steel".

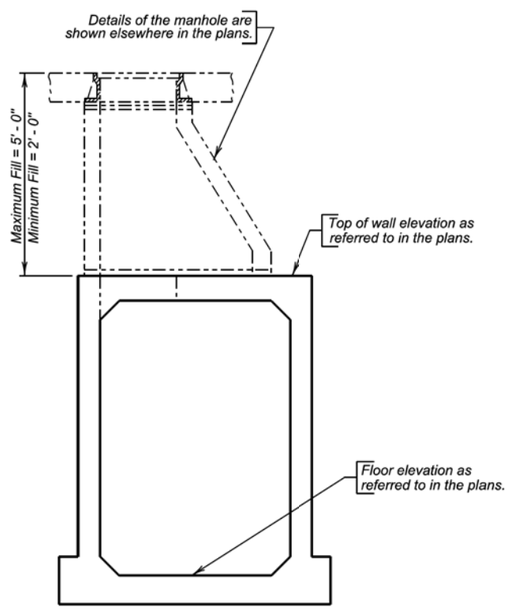

ELEVATION VIEW

PIPE DISPLACEMENT REDUCTIONS

	Diameter (Inches)	Wall T (Inches)	Class M6 Concrete (Cu. Yd.)
R.C.P.	12	2	0.03
	15	2 ¼	0.04
	18	2 ½	0.05
	24	3	0.09
	30	3 ½	0.14
	36	4	0.20
	42	4 ½	0.26
	48	5	0.34
	54	5 ½	0.43

ESTIMATED QUANTITIES

ITEM	✳ Class M6 Concrete	Reinforcing Steel
UNIT	Cu. Yd.	Lb.
H = 4' - 0"	4.37	821
H = 4' - 6"	4.61	846
H = 5' - 0"	4.85	908
H = 5' - 6"	5.10	933
H = 6' - 0"	5.34	958
H = 6' - 6"	5.58	1020
H = 7' - 0"	5.82	1045
H = 7' - 6"	6.06	1071
H = 8' - 0"	6.30	1132

✳ *Reduce total quantities of concrete by the amount of concrete displaced by the pipe(s). Quantity shown includes reduction for a 24-inch diameter manhole opening. The total quantity of concrete shall be computed to the nearest hundredth of a cubic yard.*

December 16, 2015

Published Date: 2nd Qtr. 2016	SDDOT	5'X 5' JUNCTION BOX	PLATE NUMBER 671.01
			Sheet 1 of 3

REINFORCING SCHEDULE

	Mk.	No.	Size	Length	Type
H = 4' - 0"	⌀ a1	1	6	9' - 0"	T3
	▼ a2	4	–	——	—
	h3	28	4	5' - 9"	17A
	k3	48	4	8' - 6"	17
	m1	18	5	6' - 9"	Str.
	n1	18	5	5' - 9"	Str.
	p1	52	4	5' - 0"	Str.
	q1	8	4	3' - 6"	17A
H = 4' - 6"	⌀ a1	1	6	9' - 0"	T3
	▼ a2	4	–	——	—
	h4	28	4	6' - 3"	17A
	k4	48	4	9' - 0"	17
	m1	18	5	6' - 9"	Str.
	n1	18	5	5' - 9"	Str.
	p1	52	4	5' - 0"	Str.
	q1	8	4	3' - 6"	17A
H = 5' - 0"	⌀ a1	1	6	9' - 0"	T3
	▼ a2	5	–	——	—
	h5	28	4	6' - 9"	17A
	k5	48	4	9' - 6"	17
	m1	18	5	6' - 9"	Str.
	n1	18	5	5' - 9"	Str.
	p1	52	4	5' - 0"	Str.
	q1	8	4	3' - 6"	17A
H = 5' - 6"	⌀ a1	1	6	9' - 0"	T3
	▼ a2	5	–	——	—
	h6	28	4	7' - 3"	17A
	k6	48	4	10' - 0"	17
	m1	18	5	6' - 9"	Str.
	n1	18	5	5' - 9"	Str.
	p1	60	4	5' - 0"	Str.
	q1	12	4	3' - 6"	17A
H = 6' - 0"	⌀ a1	1	6	9' - 0"	T3
	▼ a2	6	–	——	—
	h7	28	4	7' - 9"	17A
	k7	48	4	10' - 6"	17
	m1	18	5	6' - 9"	Str.
	n1	18	5	5' - 9"	Str.
	p1	60	4	5' - 0"	Str.
	q1	12	4	3' - 6"	17A
H = 6' - 6"	⌀ a1	1	6	9' - 0"	T3
	▼ a2	6	–	——	—
	h8	28	4	8' - 3"	17A
	k8	48	4	11' - 0"	17
	m1	18	5	6' - 9"	Str.
	n1	18	5	5' - 9"	Str.
	p1	68	4	5' - 0"	Str.
	q1	16	4	3' - 6"	17A
H = 7' - 0"	⌀ a1	1	6	9' - 0"	T3
	▼ a2	7	–	——	—
	h9	28	4	8' - 9"	17A
	k9	48	4	11' - 6"	17
	m1	18	5	6' - 9"	Str.
	n1	18	5	5' - 9"	Str.
	p1	68	4	5' - 0"	Str.
	q1	16	4	3' - 6"	17A

Bending Details

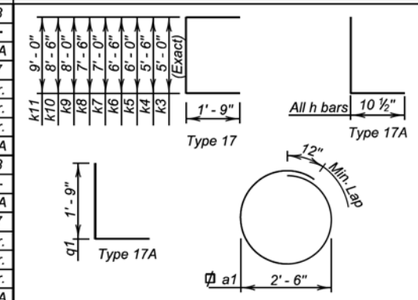

	Mk.	No.	Size	Length	Type
H = 7' - 6"	⌀ a1	1	6	9' - 0"	T3
	▼ a2	7	–	——	—
	h10	28	4	9' - 3"	17A
	k10	48	4	12' - 0"	17
	m1	18	5	6' - 9"	Str.
	n1	18	5	5' - 9"	Str.
	p1	68	4	5' - 0"	Str.
	q1	16	4	3' - 6"	17A
H = 8' - 0"	⌀ a1	1	6	9' - 0"	T3
	▼ a2	8	–	——	—
	h11	28	4	9' - 9"	17A
	k11	48	4	12' - 6"	17
	m1	18	5	6' - 9"	Str.
	n1	18	5	5' - 9"	Str.
	p1	76	4	5' - 0"	Str.
	q1	20	4	3' - 6"	17A

▼ *Cast iron Manhole Steps (R - 1980 - C) from Neenah Foundry or equivalant.*

⌀ *Locate in center of top slab with 3" clearance at manhole opening.*

All dimensions are out to out of bars.

LEGEND FOR PLACING RE-STEEL

T. B. S. - Top of Bottom Slab

B. B. S. - Bottom of Bottom Slab

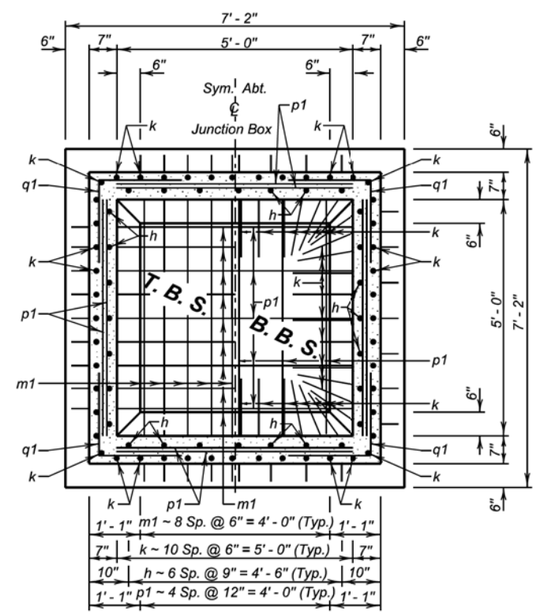

SEC. A - A

December 16, 2015

Published Date: 2nd Qtr. 2016	SDDOT	5'X 5' JUNCTION BOX	PLATE NUMBER 671.01
			Sheet 2 of 3

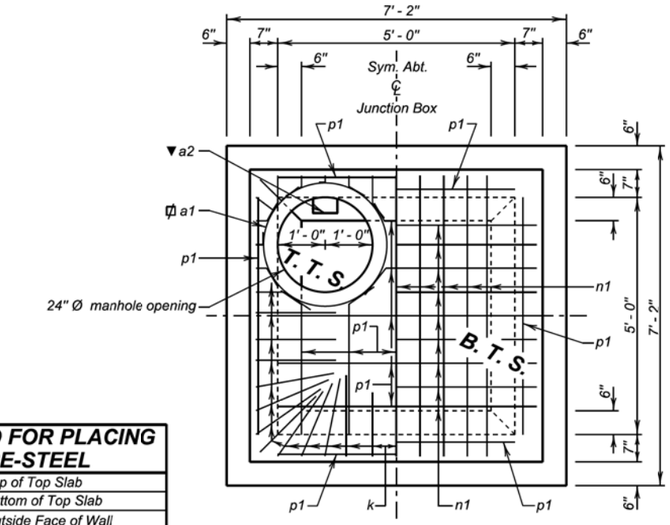

PLAN VIEW

LEGEND FOR PLACING RE-STEEL

T. T. S.	Top of Top Slab
B. T. S.	Bottom of Top Slab
O. F. W.	Outside Face of Wall
I. F. W.	Inside Face of Wall

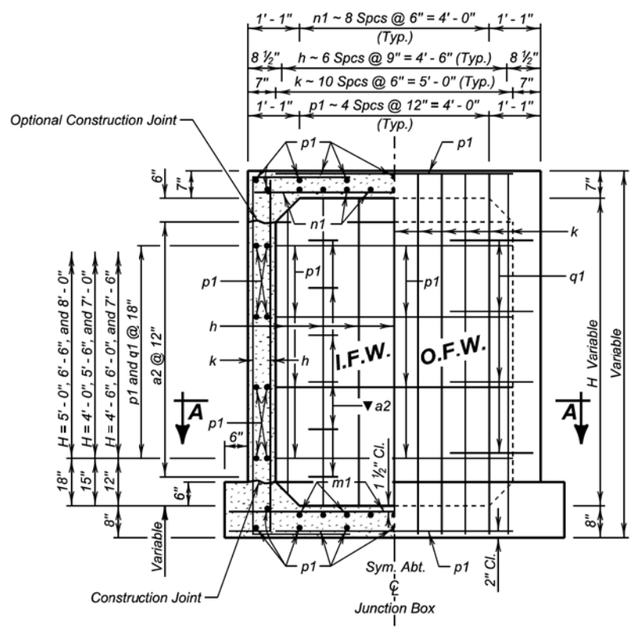

ELEVATION VIEW

December 16, 2015

Published Date: 2nd Qtr. 2016

SDDOT

5' X 5' JUNCTION BOX

PLATE NUMBER 671.01

Sheet 3 of 3

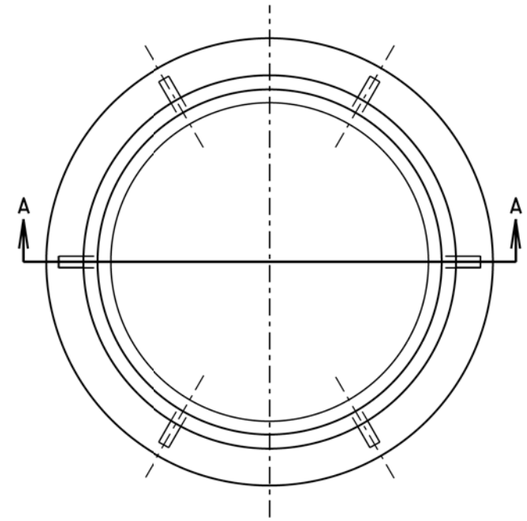

PLAN OF FRAME

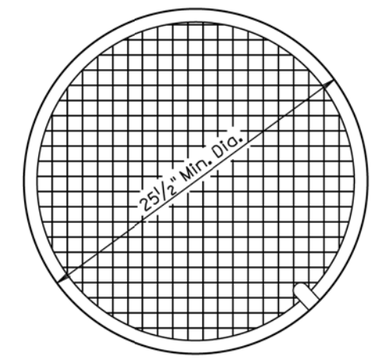

PLAN OF LID

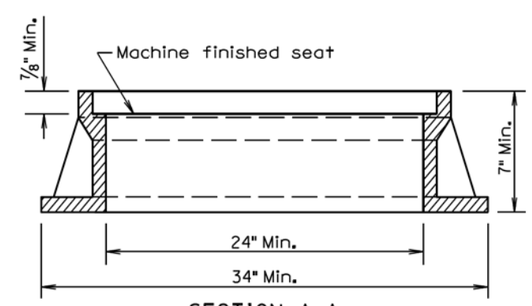

SECTION A-A

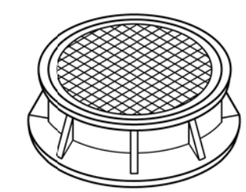

ASSEMBLED VIEW

TYPE	HEIGHT	MIN. WEIGHT
A7	7"	400Lbs.
A8	8"	440Lbs.
A9	9"	470Lbs.
A10	10"	480Lbs.

GENERAL NOTE:

Geometric pattern on top of lid other than that shown shall be approved by the Engineer.

March 31, 2000

Published Date: 2nd Qtr. 2016

SDDOT

TYPE A MANHOLE FRAME AND LID

PLATE NUMBER 671.10

Sheet 1 of 1

Plot Scale - 1:200

- Plotted From - tnpr17192

File - ...\brwn039k\s67101_3s67110.dgn

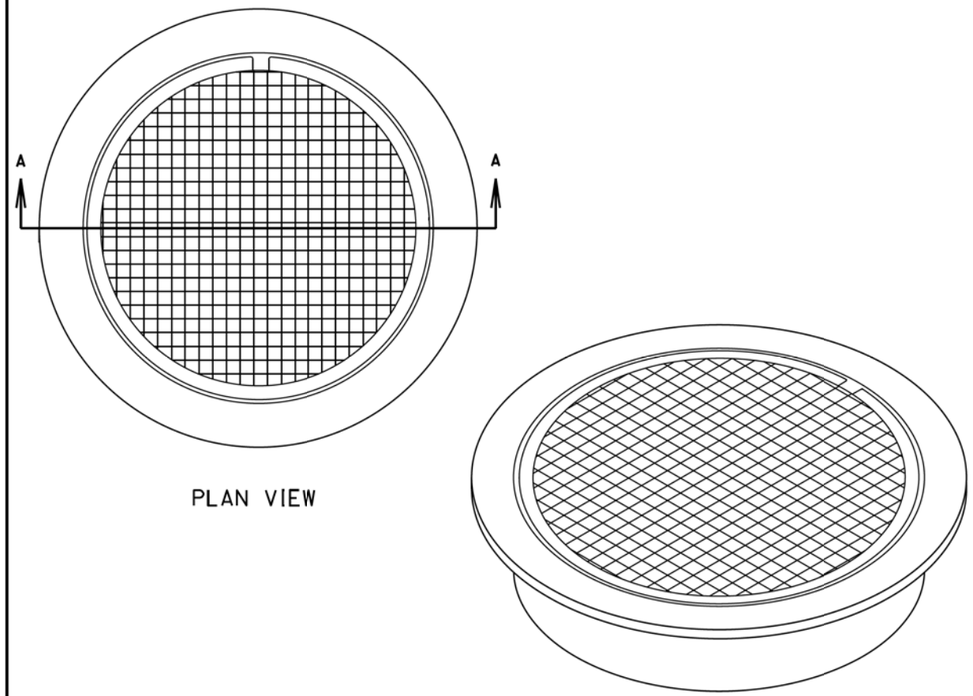

PLAN VIEW

ASSEMBLED VIEW

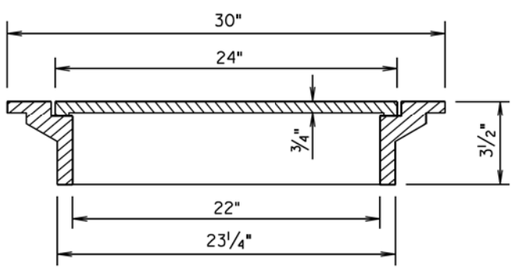

SECTION A-A

GENERAL NOTE:

Total weight of the frame and lid shall be 140 Lbs. minimum.

March 31, 2000

Published Date: 2nd Qtr. 2016	SDDOT	TYPE S MANHOLE FRAME AND LID	PLATE NUMBER 671.30
			Sheet 1 of 1

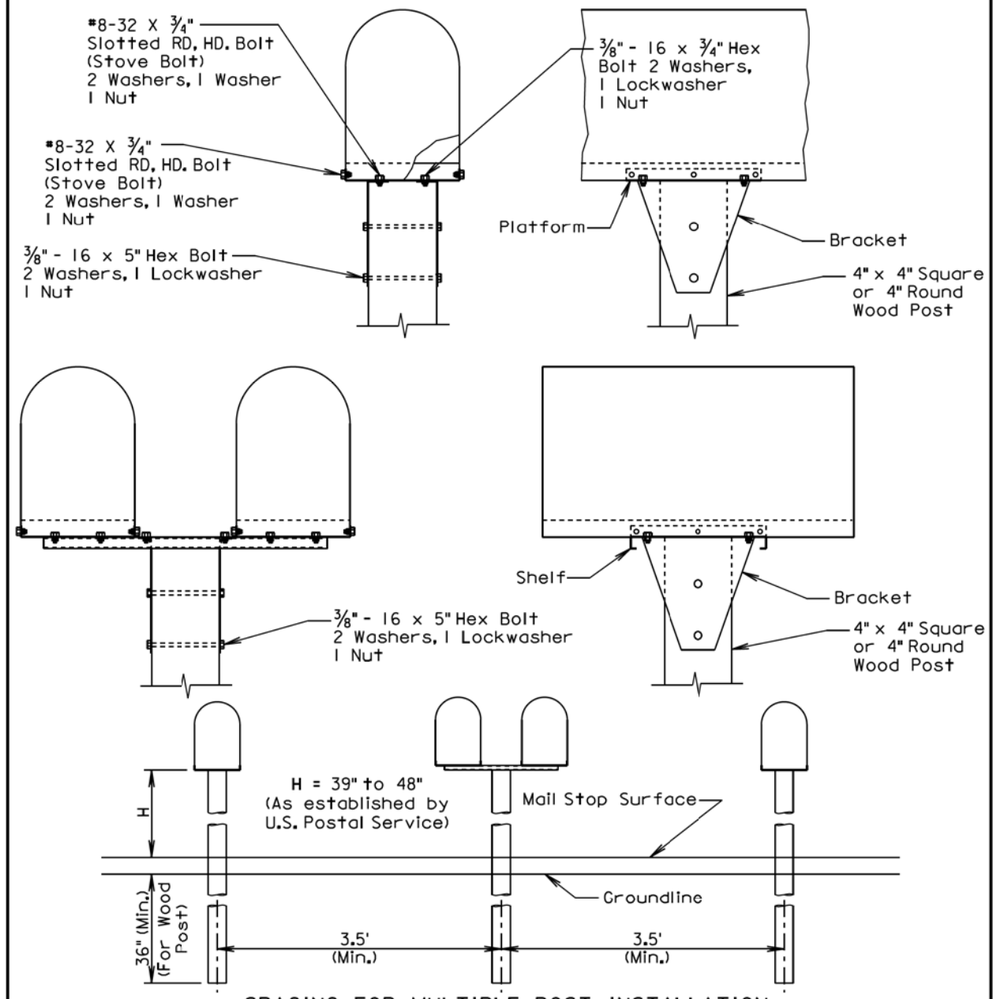

SPACING FOR MULTIPLE POST INSTALLATION

GENERAL NOTES:

The post support assemblies provided should be consistant throughout the project.

Single and double mailboxes may be in any sequence.

Post support assemblies shall be one from the approved products list, a 4"x4" or 4" round wood post, or an alternate post support assembly that meets the test level 3 crash testing requirements of NCHRP 350 or MASH.

Alternate mailbox support assemblies shall be approved by the Engineer prior to installation. The Contractor shall provide the Engineer written certification that the mailbox support assembly has met the crash testing requirements and will be installed in accordance with the manufacturer's installation instructions.

September 6, 2013

Published Date: 2nd Qtr. 2016	SDDOT	SINGLE AND DOUBLE MAILBOX ASSEMBLIES	PLATE NUMBER 900.02
			Sheet 1 of 1

Plot Scale - 1:200

- Plotted From - trpr17192

File - ...\prj\brwn039K\67101_3s90002.dgn

STATE OF SOUTH DAKOTA	PROJECT	SHEET	TOTAL SHEETS
	P 0037(129)207 NH 0012(198)308	B131	B131

Plotting Date: 06/22/2016

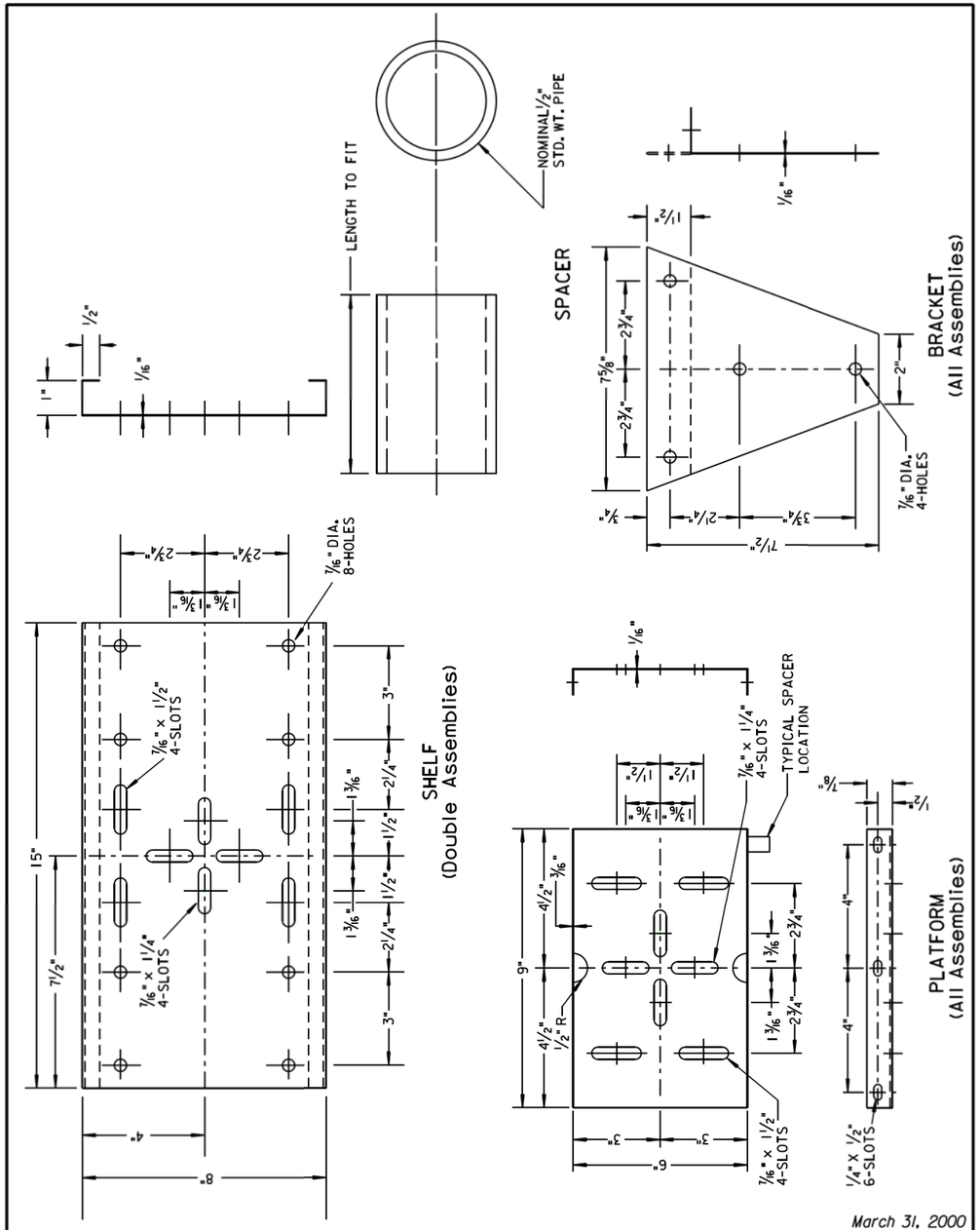

March 31, 2000

Published Date: 2nd Qtr. 2016	SDDOT	MAILBOX SUPPORT HARDWARE	PLATE NUMBER 900.03
			Sheet 1 of 1

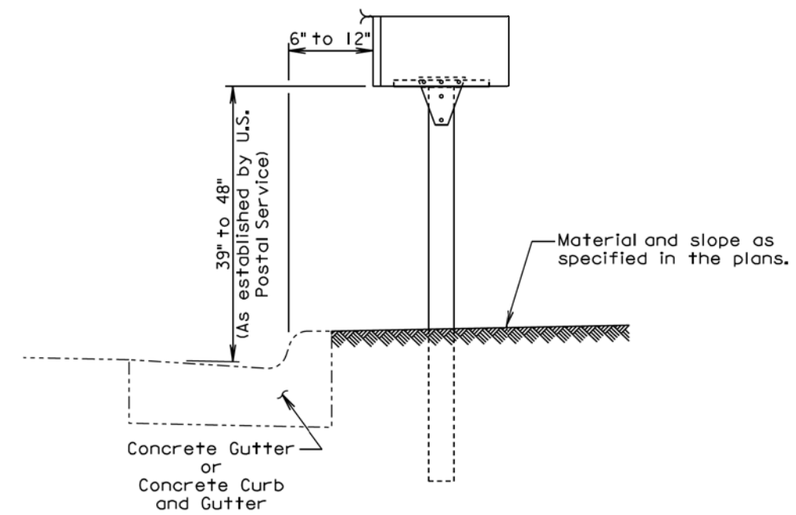

ELEVATION VIEW

GENERAL NOTES:

The post support assemblies provided should be consistant throughout the project.

Post support assemblies shall be one from the approved products list, a 4"x4" or 4" round wood post, or an alternate post support assembly that meets the test level 3 crash testing requirements of NCHRP 350 or MASH.

Alternate mailbox support assemblies shall be approved by the Engineer prior to installation. The Contractor shall provide the Engineer written certification that the mailbox support assembly has met the crash testing requirements and will be installed in accordance with the manufacturer's installation instructions.

February 10, 2014

Published Date: 2nd Qtr. 2016	SDDOT	MAILBOX ADJACENT TO CONCRETE GUTTER OR CONCRETE CURB AND GUTTER	PLATE NUMBER 900.05
			Sheet 1 of 1

Plot Scale - 1:200

- Plotted From - tnpr17192

File - ...\prj\brwn039K\s90003s90005.dgn