SECTION M: PAVEMENT MARKING PLANS

STATE OF SOUTH DAKOTA	PROJECT	SHEET	TOTAL SHEETS
	P 0037(129)207 NH 0012(198)308	M1	M11

Plotting Date: 09/24/2015

INDEX OF SHEETS

M1	General Layout With Index
M2	Estimate With General Notes & Tables
M3-M10	Pavement Marking Layouts
M11	Standard Plates

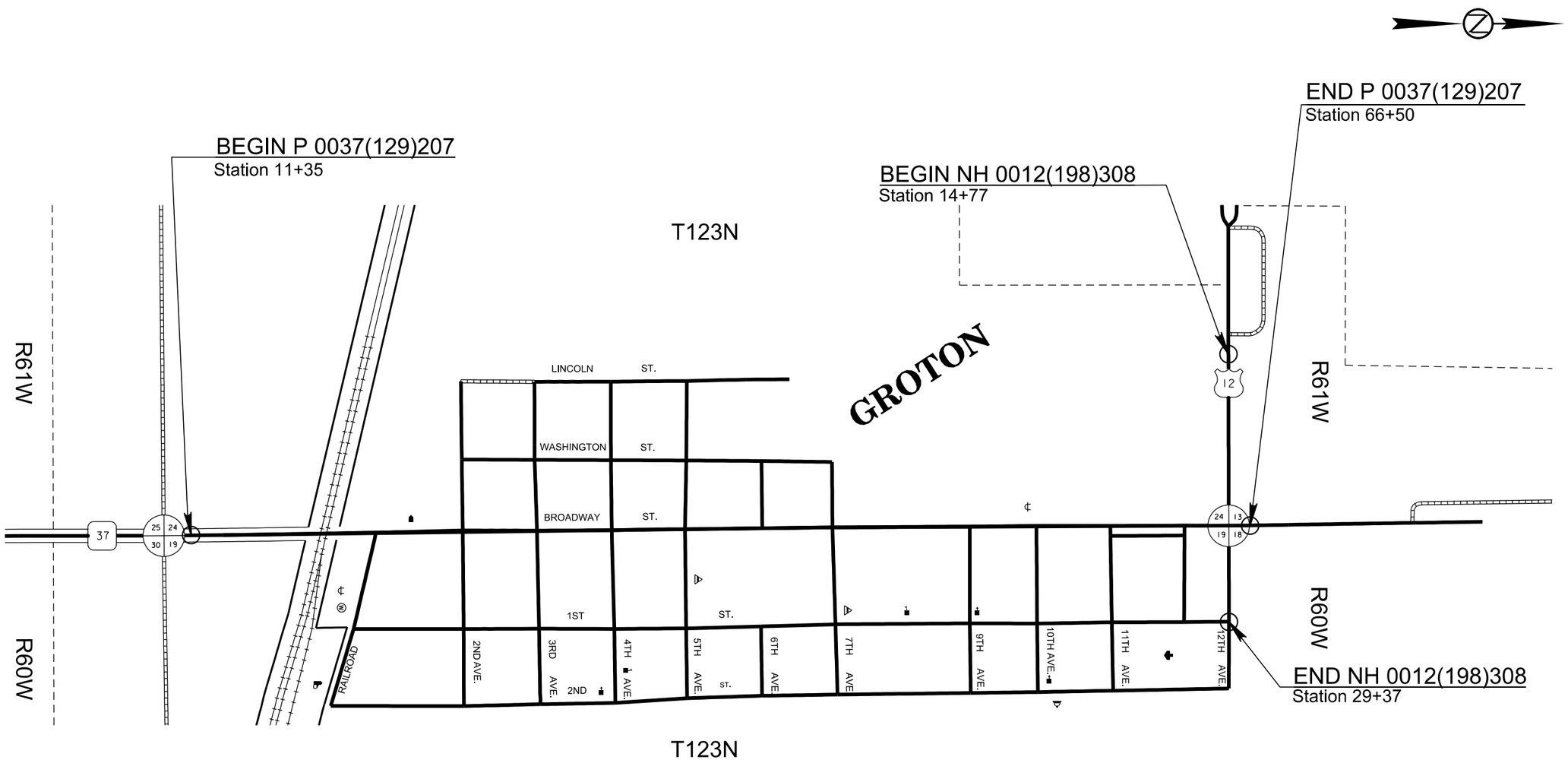

Plot Scale - 1:200

Plotted From - tnpr14341

File - U:\rdpn\brwn039K\titleM.dgn

SECTION M ESTIMATE OF QUANTITIES PCN 05AV

BID ITEM NUMBER	ITEM	QUANTITY	UNIT
633E0030	Cold Applied Plastic Pavement Marking, 24"	840	Ft
633E0040	Cold Applied Plastic Pavement Marking, Arrow	8	Each
633E1400	Pavement Marking Paint, 4" White	1,360	Ft
633E1405	Pavement Marking Paint, 4" Yellow	4,825	Ft
633E5015	Grooving for Cold Applied Plastic Pavement Marking, 24"	840	Ft
633E5025	Grooving for Cold Applied Plastic Pavement Marking, Arrow	8	Each

SECTION M ESTIMATE OF QUANTITIES PCN 039K

BID ITEM NUMBER	ITEM	QUANTITY	UNIT
633E0030	Cold Applied Plastic Pavement Marking, 24"	275	Ft
633E0055	Cold Applied Plastic Pavement Marking, Railroad Crossing	2	Each
633E1400	Pavement Marking Paint, 4" White	8,735	Ft
633E1405	Pavement Marking Paint, 4" Yellow	8,660	Ft
633E5015	Grooving for Cold Applied Plastic Pavement Marking, 24"	275	Ft
633E5040	Grooving for Cold Applied Plastic Pavement Marking, Railroad Crossing	2	Each

COLD APPLIED PLASTIC PAVEMENT MARKING

All materials shall be applied as per manufacturer's recommendations.

Cold Applied Plastic Pavement Markings shall be 3M Series 380 AW or approved equal.

GROOVING FOR COLD APPLIED PLASTIC PAVEMENT MARKING

The Contractor shall establish a positive means for the removal of the grinding and/or grooving residue. Residue from dry grooving shall be vacuumed. Solid residue shall be removed from the pavement surfaces before being blown by traffic action or wind. Residue from wet grooving shall not be permitted to flow across lanes being used by public traffic or into gutter or drainage facilities. Residue, whether in solid or slurry form, shall be disposed of in a manner that will prevent it from reaching any waterway in a concentrated state. All costs for removal of grinding and/or grooving residue shall be included in the contract unit price per foot for "Grooving for Cold Applied Plastic Pavement Marking".

PAVEMENT MARKING PAINT

All materials shall be applied as per manufacturer's recommendations.

The application of permanent pavement marking paint may not begin until 2 calendar days following completion of the flush seal and shall be completed within 14 calendar days following completion of the flush seal. If the flush seal is eliminated, the Contractor shall complete the application of permanent pavement marking paint no sooner than two calendar days, but within 14 calendar days following completion of final surfacing.

COLD WEATHER WATERBORNE PAINT

Waterborne paint applied after October 15 shall be formulated as cold-weather waterborne paint and shall be applied in accordance with the manufacturer's recommendations, including minimum temperature requirements.

Cold-weather waterborne paint shall conform to Section 980 of the Specifications except for the following:

980.1: Resin Binder shall be FASTRACK™ XSR™ manufactured by Dow, or an approved equal.

980.1 A. Quantitative Requirements:

Pigment, percent by weight: 60.0 to 63.0 for white and 58.5 to 61.5 for yellow.

Pigment, percent by weight; tested in accordance with ASTM D3723: 60.0 to 63.0 for white and 56.1 to 59.2 for yellow.

Non-volatile Vehicle, percent by weight; tested in accordance with NIST 141C (Method 4051.1): 41.5 minimum for white and 41.5 minimum for yellow.

Plot Scale - 1:200
Plotted From - tnpr14341
File - ...\prj\brwn039K\NotesSectionM.dgn

PAVEMENT MARKING LAYOUT
SD HWY 37/BROADWAY STREET

STATE OF SOUTH DAKOTA	PROJECT	SHEET	TOTAL SHEETS
	P 0037(129)207 NH 0012(198)308	M3	M11

Plotting Date: 05/10/2016

SCALE
1" = 40'

ESTIMATE OF QUANTITIES
(PCN 039K)

KEY	ITEM	EST QUANT	UNIT
4 W	PAVEMENT MARKING PAINT, 4" WHITE	8,735	FT
4 Y	PAVEMENT MARKING PAINT, 4" YELLOW	8,660	FT
24 W	COLD APPLIED PLASTIC PAVEMENT MARKING, 24" WHITE	245	FT
24 Y	COLD APPLIED PLASTIC PAVEMENT MARKING, 24" YELLOW	30	FT
R R	COLD APPLIED PLASTIC PAVEMENT MARKING, RAILROAD CROSSING	2	EACH
	GROOVING FOR COLD APPLIED PLASTIC PAVEMENT MARKING, 24"	275	FT
	GROOVING FOR COLD APPLIED PLASTIC PAVEMENT MARKING, RAILROAD CROSSING	2	EACH

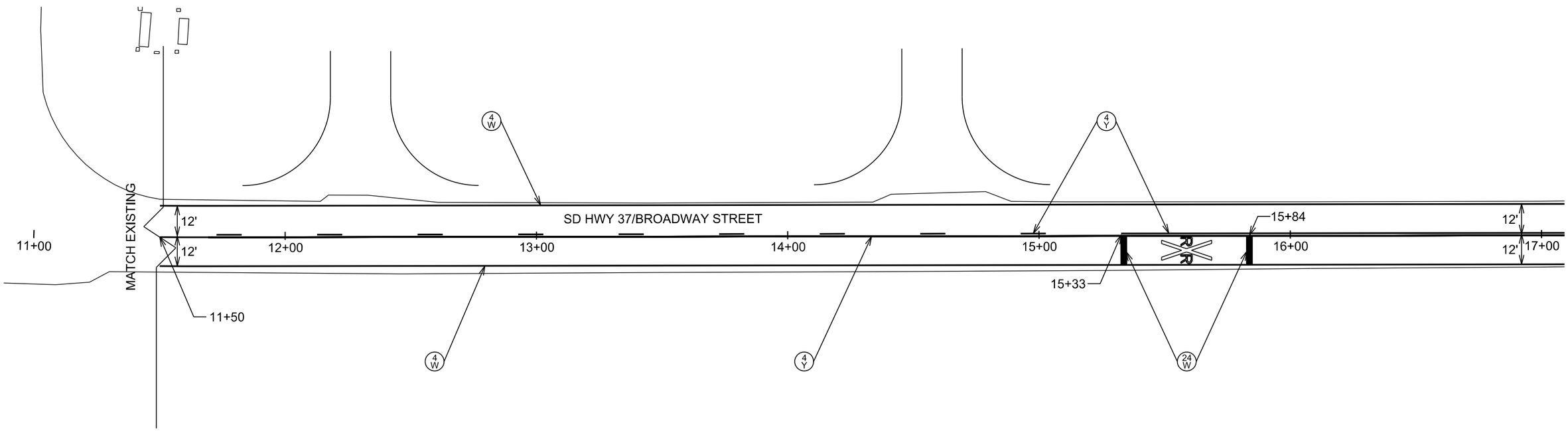

Plot Scale - 1:40

Plotted From - trpr14341

File - U:\rdprj\brwn039K\011pm.dgn

PAVEMENT MARKING LAYOUT
SD HWY 37/ N BROADWAY STREET

STATE OF SOUTH DAKOTA	PROJECT	SHEET	TOTAL SHEETS
	P 0037(129)207 NH 0012(198)308	M4	M11

Plotting Date: 05/10/2016

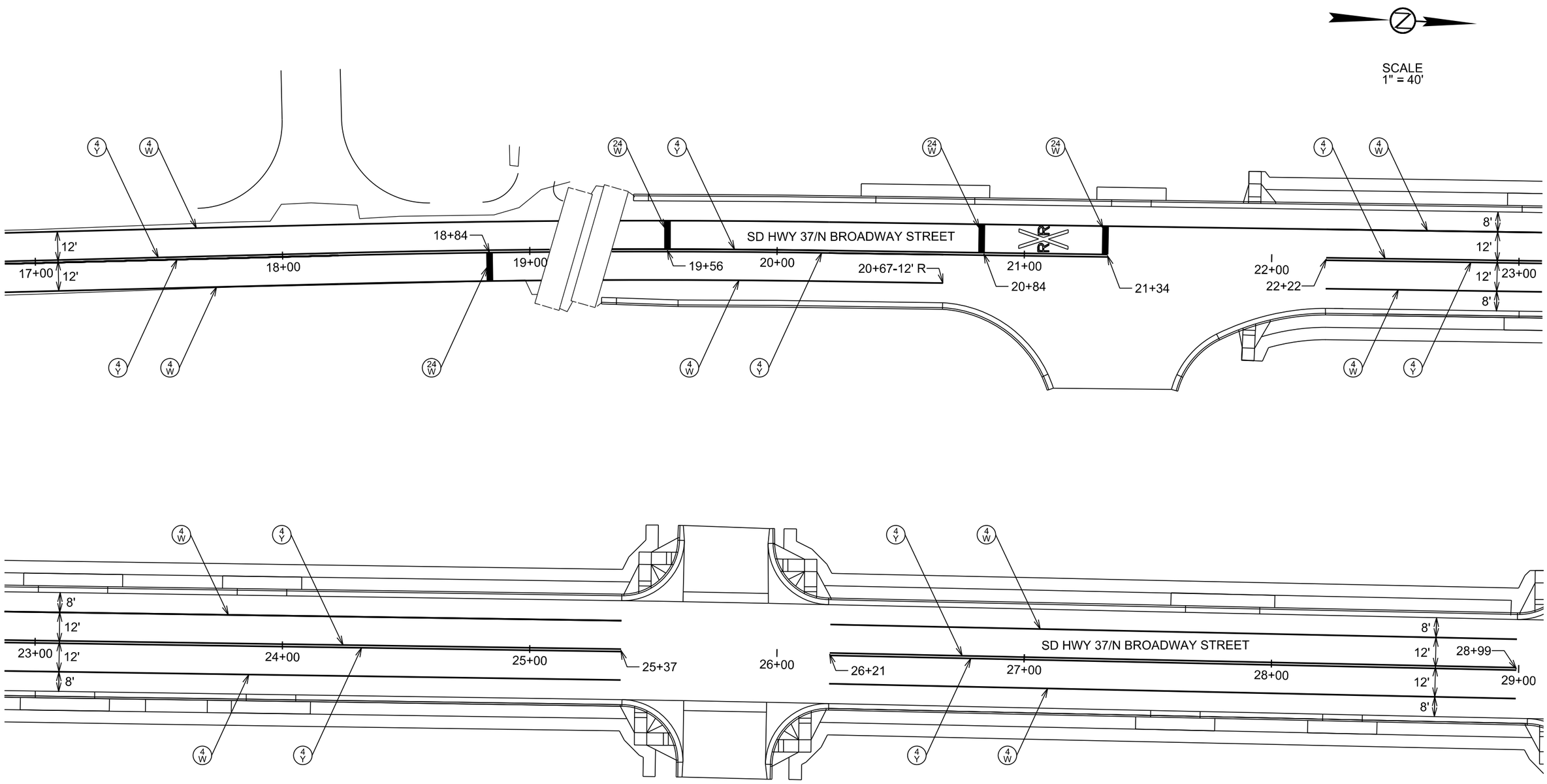

Plot Scale - 1:40

Plotted From - trpr14341

File - U:\rd\prj\brwn039K\017pm.dgn

PAVEMENT MARKING LAYOUT
SD HWY 37/ N BROADWAY STREET

STATE OF SOUTH DAKOTA	PROJECT	SHEET	TOTAL SHEETS
	P 0037(129)207 NH 0012(198)308	M5	M11

Plotting Date: 05/10/2016

SCALE
1" = 40'

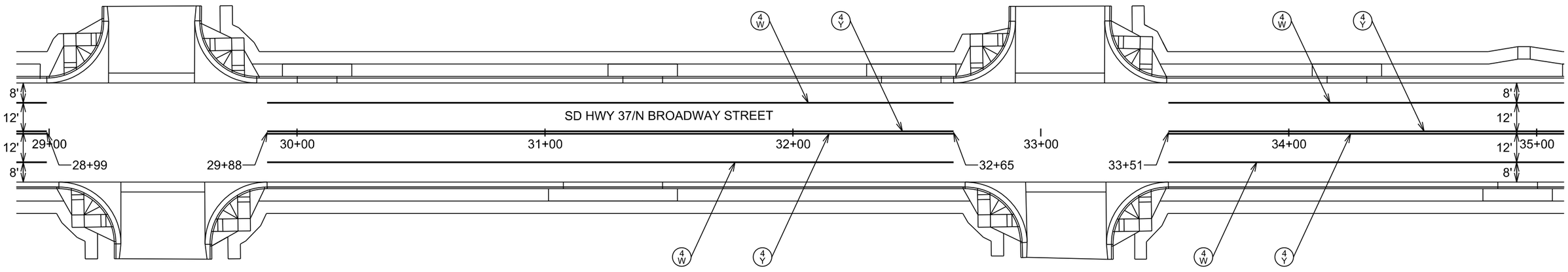

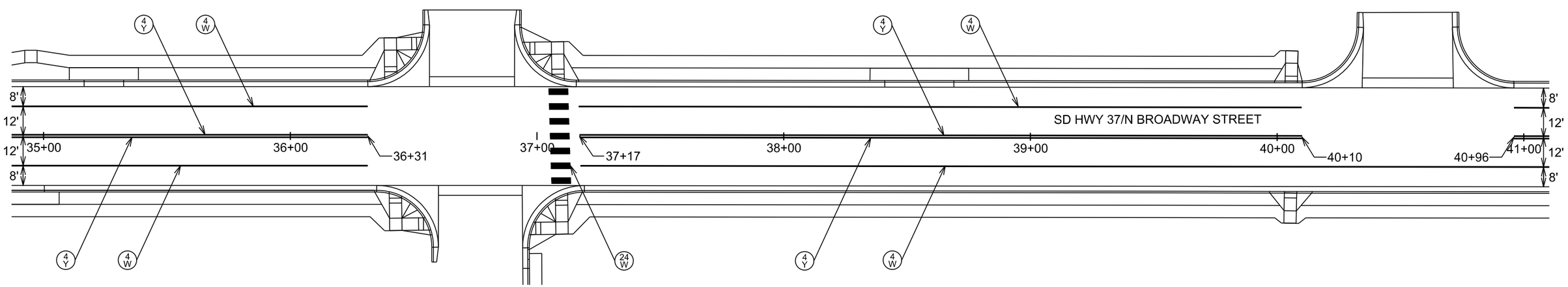

Plot Scale - 1:40

Plotted From - trpr14341

File - U:\rd\prj\brwn039K\029pm.dgn

PAVEMENT MARKING LAYOUT
SD HWY 37/ N BROADWAY STREET

STATE OF SOUTH DAKOTA	PROJECT	SHEET	TOTAL SHEETS
	P 0037(129)207 NH 0012(198)308	M6	M11

Plotting Date: 05/10/2016

SCALE
1" = 40'

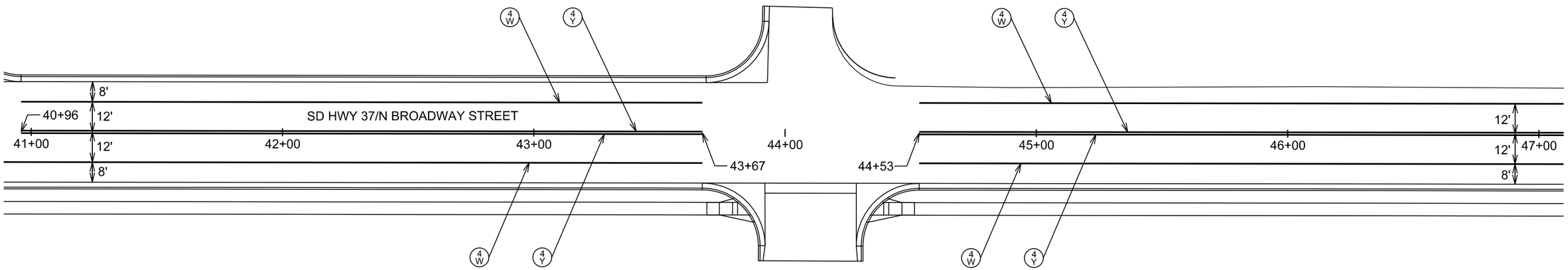

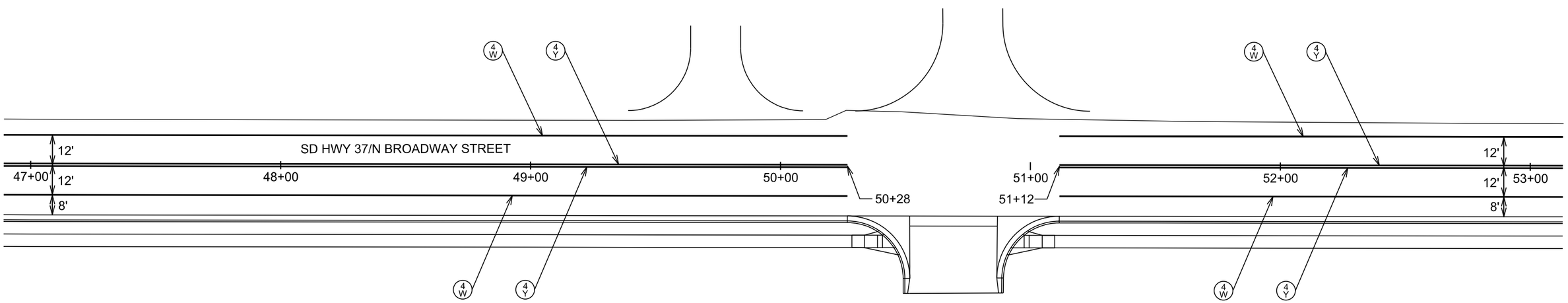

Plot Scale - 1:40

Plotted From - trpr14341

File - U:\rd\prj\brwn039K\041pm.dgn

PAVEMENT MARKING LAYOUT
SD HWY 37/ N BROADWAY STREET

STATE OF SOUTH DAKOTA	PROJECT	SHEET	TOTAL SHEETS
	P 0037(129)207 NH 0012(198)308	M7	M11

Plotting Date: 08/24/2016 Revised Date: 8/10/2016 NL

SCALE
1" = 40'

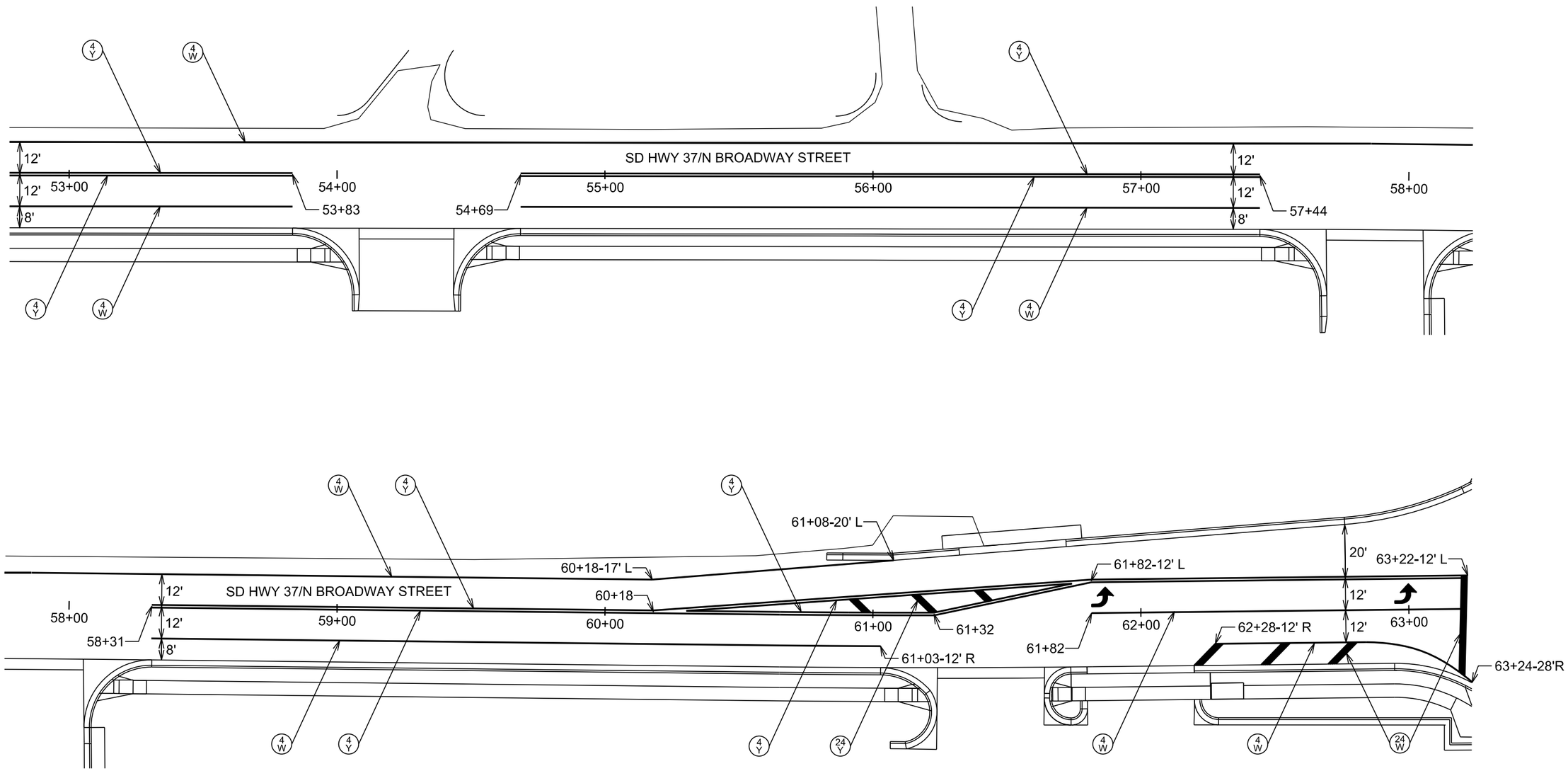

Plot Scale - 1:40

Plotted From - trpr14341

File - U:\rd\prj\brwn039K\053pm.dgn

STATE OF SOUTH DAKOTA	PROJECT	SHEET	TOTAL SHEETS
	P 0037(129)207 NH 0012(198)308	M8	M11

Plotting Date: 08/24/2016

PAVEMENT MARKING LAYOUT
US HWY 12

SCALE
1" = 40'

N

ESTIMATE OF QUANTITIES
(PCN 05AV)

KEY	ITEM	EST QUANT	UNIT
4 W	PAVEMENT MARKING PAINT, 4" WHITE	1,360	FT
4 Y	PAVEMENT MARKING PAINT, 4" YELLOW	4,825	FT
24 W	COLD APPLIED PLASTIC PAVEMENT MARKING, 24" WHITE	700	FT
24 Y	COLD APPLIED PLASTIC PAVEMENT MARKING, 24" YELLOW	140	FT
↰	COLD APPLIED PLASTIC PAVEMENT MARKING, ARROW	8	EACH
	GROOVING FOR COLD APPLIED PLASTIC PAVEMENT MARKING, 24"	840	FT
	GROOVING FOR COLD APPLIED PLASTIC PAVEMENT MARKING, ARROW	8	EACH

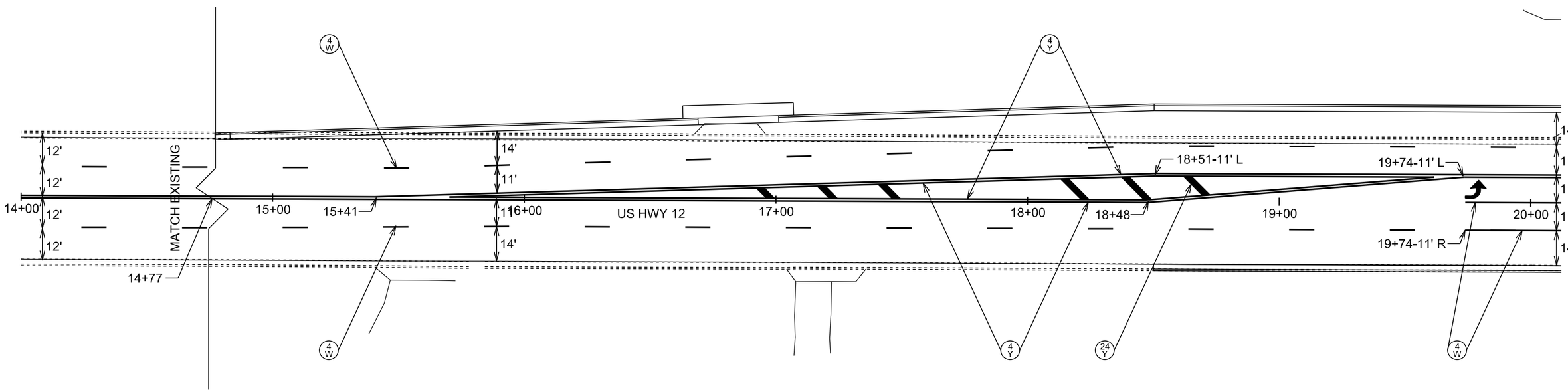

Plot Scale - 1:40

Plotted From - trpr14341

File - U:\rd\prj\brwn039K\014pm.dgn

PAVEMENT MARKING LAYOUT

SD HWY 37/ N BROADWAY STREET & US HWY 12

STATE OF SOUTH DAKOTA	PROJECT	SHEET	TOTAL SHEETS
	P 0037(129)207 NH 0012(198)308	M9	M11

Plotting Date: 08/24/2016

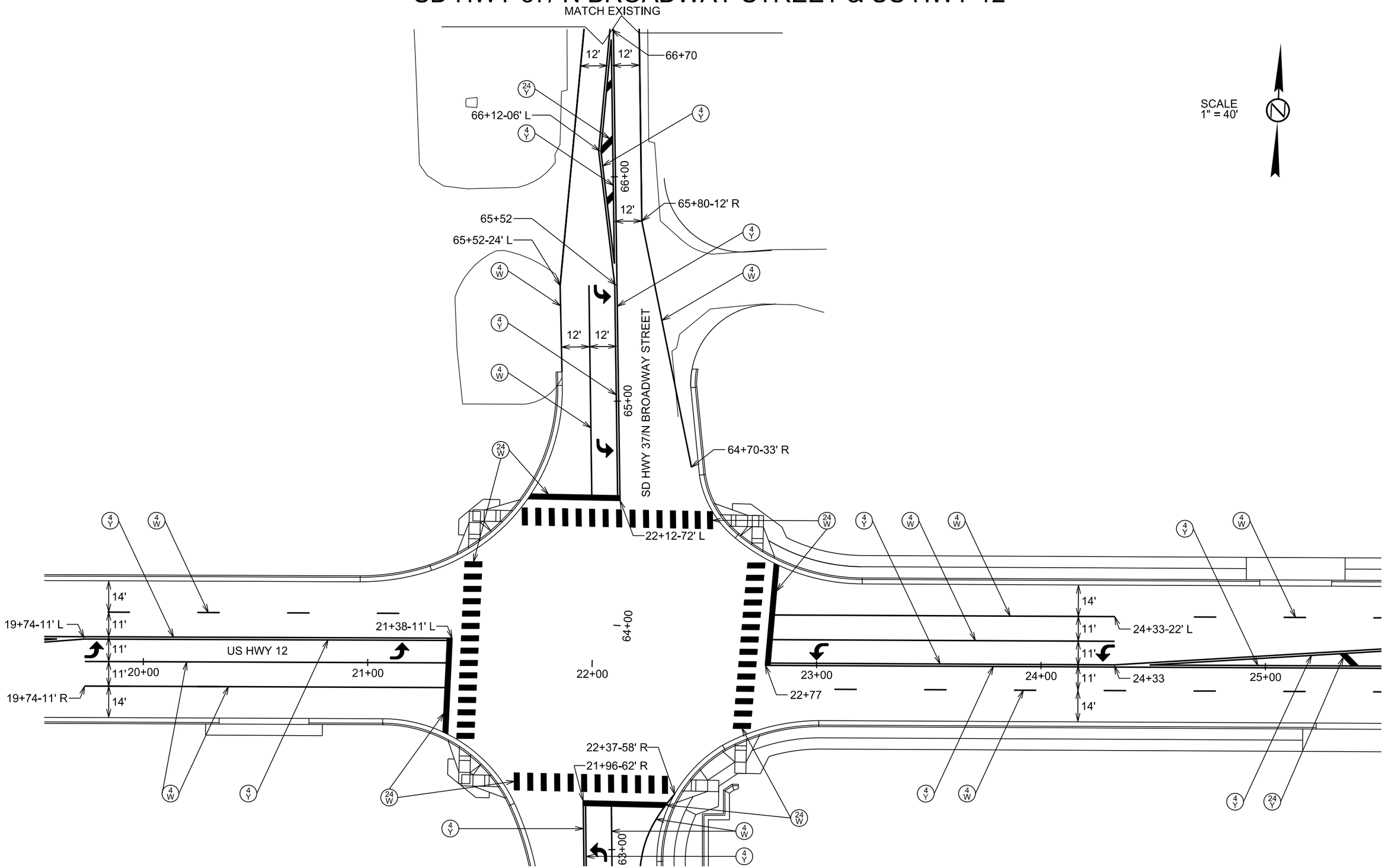

SCALE
1" = 40'

Plot Scale - 1:40

Plotted From - trpr14341

File - U:\rdproj\brwn039K\020pm.dgn

PAVEMENT MARKING LAYOUT
US HWY 12

STATE OF SOUTH DAKOTA	PROJECT	SHEET	TOTAL SHEETS
	P 0037(129)207 NH 0012(198)308	M10	M11

Plotting Date: 08/24/2016 Revised Date: 8/10/2016 NL

SCALE
1" = 40'

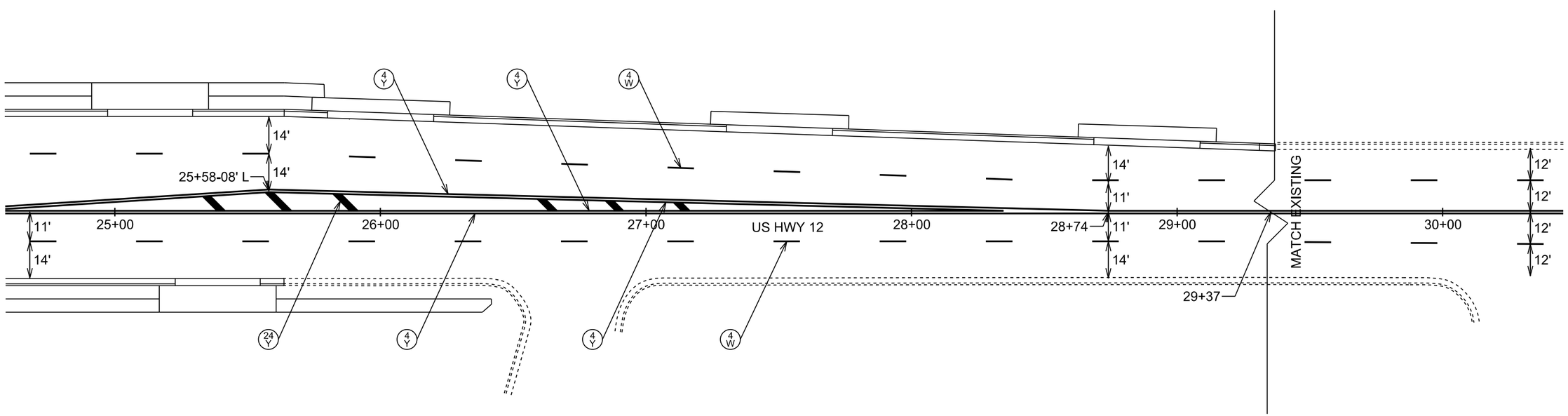

Plot Scale - 1:40

Plotted From - trpr14341

File - U:\rdprj\brwn039K\025pm.dgn

STATE OF SOUTH DAKOTA	PROJECT	SHEET	TOTAL SHEETS
	P 0037(129)207 NH 0012(198)308	M11	M11

Plotting Date: 05/10/2016

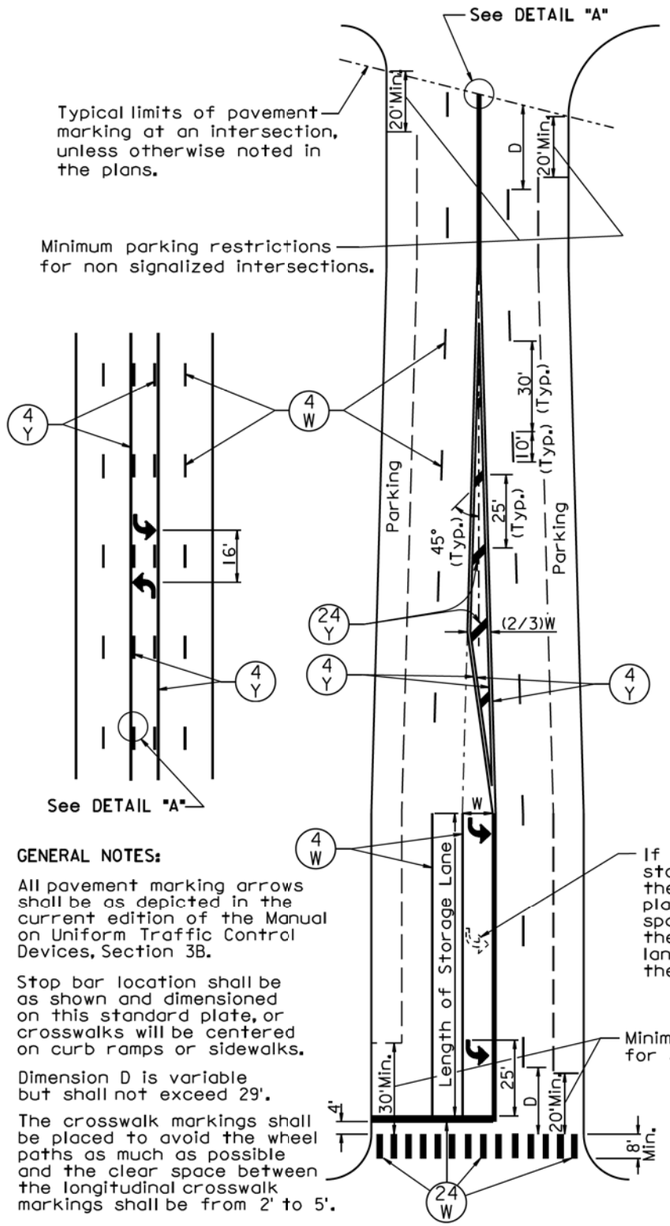

KEY	ITEM
4 W	4" White
4 Y	4" Yellow
12 W	12" White
24 W	24" White
24 Y	24" Yellow
↱	Arrow

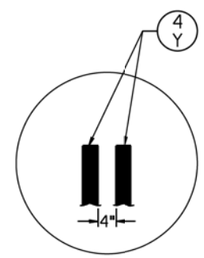

DETAIL "A"

GENERAL NOTES:

All pavement marking arrows shall be as depicted in the current edition of the Manual on Uniform Traffic Control Devices, Section 3B.

Stop bar location shall be as shown and dimensioned on this standard plate, or crosswalks will be centered on curb ramps or sidewalks.

Dimension D is variable but shall not exceed 29'.

The crosswalk markings shall be placed to avoid the wheel paths as much as possible and the clear space between the longitudinal crosswalk markings shall be from 2' to 5'.

If more than 2 arrows per storage lane are shown, then the additional arrows shall be placed at approximately equal spaces between the arrow at the beginning of the storage lane and the arrow nearest the stop bar.

Minimum parking restrictions for signalized intersections.

September 14, 2011

Published Date: 2nd Qtr. 2016	SDDOT	PAVEMENT MARKINGS FOR ADJACENT INTERSECTIONS AND CENTER TURN LANE	PLATE NUMBER 633.01 Sheet 1 of 1

KEY	ITEM
24 W	24" White
X	White

Posted Speed Limit (M.P.H.)	L (Ft.)
≤ 30	100
35	100
40	125
45	175
50	250
55	325
60	400
65	475
70	550

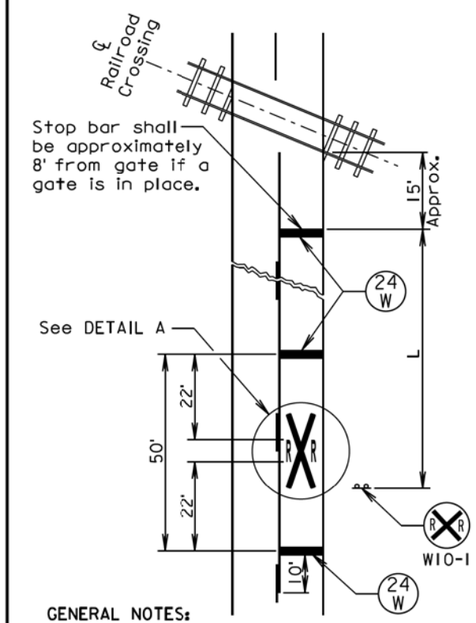

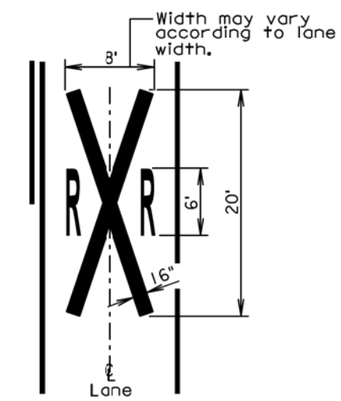

DETAIL A

GENERAL NOTES:

The railroad crossing pavement markings shall be placed symmetrically about the centerline of the railroad crossing.

When pavement markings are used, a portion of the RXR symbol shall be placed directly opposite of the advance warning sign W10-1.

On multi-lane roads the transverse bands shall extend across all approach lanes and individual RXR symbols shall be placed in each approach lane.

The railroad crossing pavement markings shall consist of all the transverse bands, stop bars, and RXR symbols.

When pavement marking paint is used for marking the railroad crossing, all costs for furnishing and painting the markings, materials, labor, and necessary equipment shall be incidental to the contract unit price per gallon for "Pavement Marking Paint, White".

When pavement marking tape is used for marking the railroad crossing, all costs for furnishing and placing the markings, materials, labor, and necessary equipment shall be incidental to the contract unit price per each for "Cold Applied Plastic Pavement Marking, Railroad Crossing".

June 26, 2013

Published Date: 2nd Qtr. 2016	SDDOT	PAVEMENT MARKINGS AT RAILROAD CROSSING	PLATE NUMBER 633.10 Sheet 1 of 1

Plot Scale - 1:200

- Plotted From - trpr14341

File - ...\prj\brwn039K\s63301s63310.dgn