STATE OF SOUTH DAKOTA	PROJECT	SHEET NO.	TOTAL SHEETS
	P 0037(129)207 NH 0012(198)308	S1	S34

Plotting Date: 09/28/2015

Section S: Permanent Signing

INDEX OF SHEETS

S1	Layout Map and Index
S2-S3	Estimate of Quantities W/Plan Notes
S4-S6	SD 37 Permanent Sign Table
S7	SD 37 Sign Summary
S8-S9	US 12 Permanent Sign Table
S10	US 12 Sign Summary
S11-S23	Plan Sheets
S24	Special Sign Design
S25-S33	Sign Installation Details
S34	Standard Plate

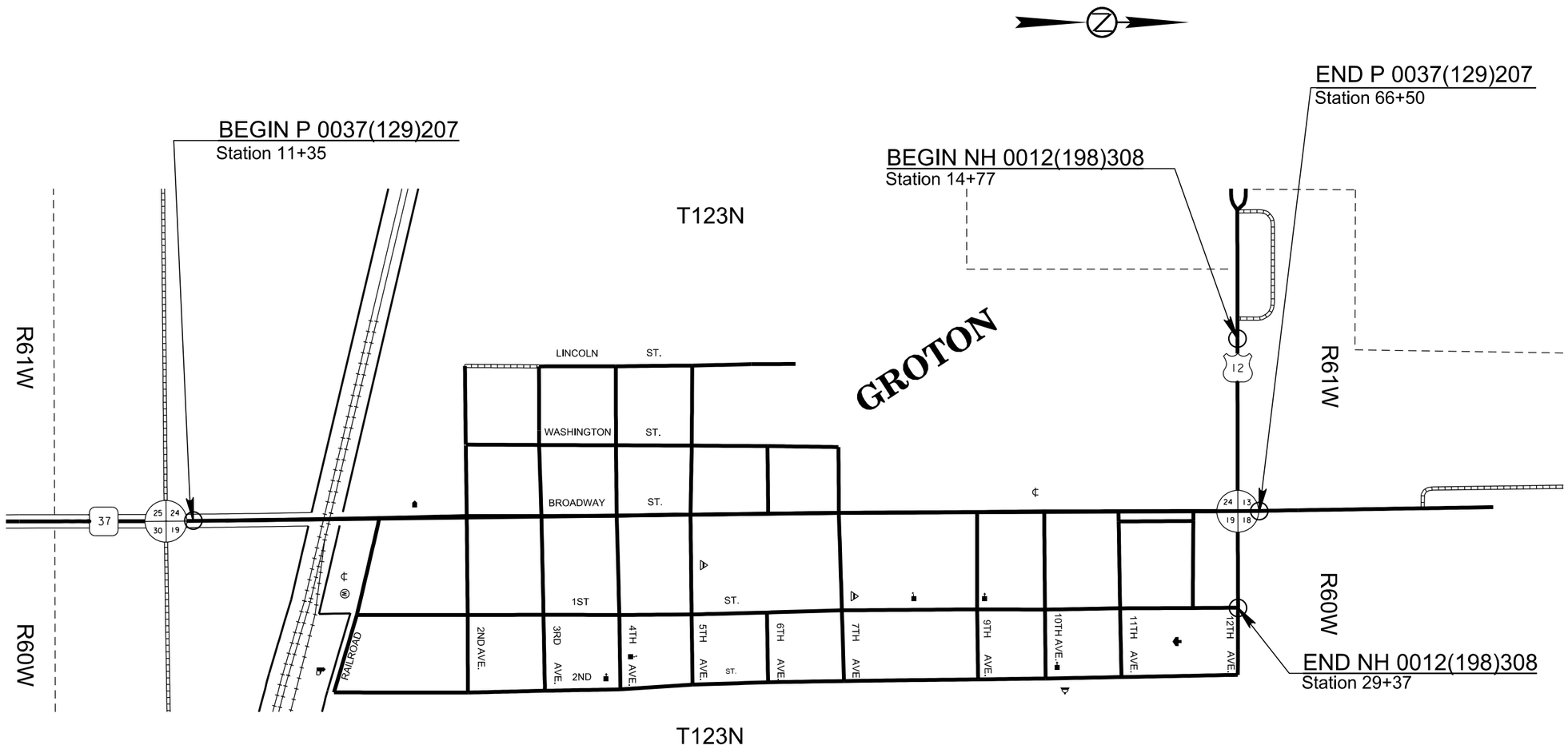

PLOT SCALE - 1:209.133

PLOT NAME - 1

FILE - ...\SECTION S TITLE SHEET.DGN

PLOTTED FROM - TRAB10100

SECTION S – ESTIMATE OF QUANTITIES – P 0037(129)207, PCN 039K

BID ITEM NUMBER	ITEM	QUANTITY	UNIT
110E0130	Remove Traffic Sign	34	Each
632E1320	2.0"x2.0" Perforated Tube Post	270.0	Ft
632E1340	2.5"x2.5" Perforated Tube Post	59.0	Ft
632E3203	Flat Aluminum Sign, Nonremovable Copy High Intensity	133.4	SqFt
632E3205	Flat Aluminum Sign, Nonremovable Copy Super/Very High Intensity	146.6	SqFt
632E3520	Remove, Salvage, Relocate, and Reset Traffic Sign	30	Each

SECTION S – ESTIMATE OF QUANTITIES – NH 0012(198)308, PCN 05AV

BID ITEM NUMBER	ITEM	QUANTITY	UNIT
110E0130	Remove Traffic Sign	11	Each
632E1320	2.0"x2.0" Perforated Tube Post	43.0	Ft
632E3203	Flat Aluminum Sign, Nonremovable Copy High Intensity	77.0	SqFt
632E3205	Flat Aluminum Sign, Nonremovable Copy Super/Very High Intensity	21.5	SqFt
632E3520	Remove, Salvage, Relocate, and Reset Traffic Sign	4	Each

GENERAL PERMANENT SIGNING NOTES

Signs that are to be installed shall be staked in the field by the Contractor and checked by the Engineer. The Contractor shall give the Engineer a minimum of one week to check staked locations prior to sign/post installation.

The Contractor shall be responsible for contacting South Dakota One Call to locate the utilities at the staked sign installation locations.

Prior to ordering sign posts, the Contractor shall verify post lengths. The height of the post shall not exceed the minimum height needed by more than 0.5 feet. Any portion that extends above the sign shall be cut off. No separate payment will be made for cutting the post or for that length cut off.

Prior to ordering signs, the Contractor shall verify dimensions, background, border, and legend of the signs.

The Contractor shall provide block-outs or shall core holes 6”-9” in diameter, or as specified by the Engineer, in concrete where sign posts are to be installed. The Contractor shall backfill each hole with cold mix asphalt concrete after the sign post has been installed, to the satisfaction of the Engineer.

The cost for concrete block-outs, coring, and cold mix shall be incidental to the various signing items.

REMOVE EXISTING SIGNS

Existing signs within the project limits are summarized in the Sign Table. This table provides the approximate Station or MRM location for each sign. Existing signs in the table are indicated to be removed and not reused.

All existing signs and hardware listed to be removed shall become the property of the Contractor.

Holes remaining from the removal of 4”x6” wood posts shall be backfilled and compacted with material placed in layers not to exceed 6 inches in depth.

All costs associated with the removal of existing signs, posts, hardware, and backfilled holes shall be incidental to the contract unit price per each for Remove Traffic Sign.

All existing sign posts and/or sign bases shall be removed in their entirety.

NEW PERMANENT SIGNING

New signs for installation are summarized in the Sign Table.

Sign Design

Signs shall be constructed as required per the Manual on Uniform Traffic Control Devices (MUTCD), the latest edition of "Standard Highway Signs", and as specified on the Special Sign Design sheets.

All upper/lower case letters and numerals shall be as required per the MUTCD, the latest edition of "Standard Highway Signs”, and as illustrated on the Special Sign Design sheets.

The Contractor shall furnish the Aberdeen Region Traffic Engineer (P.O. Box 1767; Aberdeen, SD 57402) with a detailed sign layout sheet for each sign shown. These detailed sign layouts shall be approved by the Region Traffic Engineer prior to ordering the signs.

Sign Sheeting

All signs shall be manufactured in accordance with the sheeting manufacturer’s recommendations utilizing a matched component system, including inks, electronic cuttable films, and protective overlay films. Digitally printed signs will not be accepted.

Sign Installation Hardware

Aluminum U-Channel stiffeners shall be used on all standard highway signs greater than 36 inches in width and shall conform to Alloy 6063-T6 or 6061-T6. The U-Channel shall be 2 inches in width and free of holes. The U-Channel stiffeners shall also be used to connect various signs together so that an entire sign assembly can be erected on a single installation.

Stiffeners may be fastened to signs by use of ¼ inch diameter drive rivets.

Refer to the Breakaway Sign Supports diagram for typical sign and stiffener details.

The Contractor shall use 3/8 inch diameter rust proof machine sign bolts, flat metal washers, neoprene washers (against the sign sheeting), lock washers, and nuts to fasten the sign to the channel aluminum and posts. A minimum of two bolts shall extend through each post.

All costs associated with furnishing and installing the new permanent signs, and with furnishing and installing stiffeners and hardware shall be incidental to the contract unit price per square foot for Flat Aluminum Sign, Nonremovable Copy High Intensity, or Flat Aluminum Sign, Nonremovable Copy Super/Very High Intensity.

SQUARE TUBE ANCHOR SLEEVE

The Contractor shall furnish and install new square tube anchor sleeve as follows:

2.5” x 18”, 12 Gauge square tube anchor sleeve, (or equivalent components as approved by the Engineer).

A 2.25” x 2.25” x 4’ perforated tube post (12 Gauge) shall be used as the anchor post for installation with the square tube anchor sleeve.

PLOTTED FROM - TRAB1010O

SQUARE TUBE POST SLEEVE

All 2.5” x 2.5” perforated tube post (10 Gauge) shall be sleeved with a 2 3/16” x 2 3/16”x4’ perforated tube post (10 Gauge).

WINGED SLIP BASE ANCHOR

The Contractor shall furnish and install new winged slip base anchor as required per the plans.

Winged slip base anchor shall be installed using direct drive method.

Winged slip base anchor shall consist of a slip base (upper), 48 inch long winged anchor (lower), and hardware kit.

OVERHEAD AND POLE MOUNTED SIGNS

The Contractor shall install the new overhead signs on the existing double beam type brackets with new connection hardware and mast arm mounting hardware.

Signs that are mounted on luminaire, utility, and signal poles, and on signal mast arms shall be attached with high strength stainless steel bands or galvanized pole clamps, and signs shall be attached as recommended by the manufacturer. All sign mounting hardware shall be stainless steel or galvanized steel. Pole mounted signs shall be mounted a minimum of 7 ft above the ground.

Mounting heights are measured to the bottom of the signs.

Costs for pole and mast arm sign mounting hardware shall be incidental to the contract unit price per square foot for Flat Aluminum Sign, Nonremovable Copy High Intensity, or Flat Aluminum Sign, Nonremovable Copy Super/Very High Intensity.

PLOTTED FROM - TRAB10100

P 0037(129)207, PCN 039K, SD37 Permanent Sign Installation Table

Station	Side of Road	Description	Sign Code	Width (Inches)	Height (Inches)	Flat Aluminum sign, Nonremovable Copy High Intensity (SQFT)	Flat Aluminum Sign, Nonremovable Copy Super/Very High Intensity (SQFT)	2.0"x2.0" Perforated Tube Post 12 ga. (FT)	2.5"x2.5" Perforated Tube Post 10 Ga. (FT)	(N.A.B.I.) Square Tube Anchor Sleeve (Each)	(N.A.B.I.) 48" Winged Slip Base Anchor (Each)	Remove Traffic Sign (Each)	Remove, Salvage, Relocate, and Reset Traffic Sign (Each)	Direction Sign Faces	Current Type of Post	Remarks
SD 37 MAINLINE SIGNING																
11+50	Lt.	No Passing Zone	W14-3	48X48X36			5.6						1	S	Telespar	Replace Existing Sign with New Sign on Existing Post
14+10	Rt.	Groton Pop. 1458	D1-1D	42	18	5.3		10		1		1		S	4" X 6" Wood	Replace Existing Sign with New Sign on New Post
15+41	Rt.	Railroad Crossing	W10-1	30	30		5.0	10		1		1		S	U-Channel	Replace Existing Sign at 11+54 with New Sign on New Post at 15+59
16+41	Lt.	Speed Limit 50	R2-1	24	30	5.0		10		1		1		N	4" X 6" Wood	Replace Existing Sign with New Sign on New Post
16+41	Rt.	Speed Limit 35	R2-1	24	30	5.0		10		1		1		S	4" X 6" Wood	Replace Existing Sign with New Sign on New Post
18+00	Rt.	City --->		24	12	2.0		10		1				S		Replace Existing Signs Located at 16+41 with New Signs on New Post at 18+00
		Truck Route	R14-1	24	18	3.0								S		
20+00		Downtown Business District --->		42	36	10.5		11		1				S		Replace Existing Sign Located at 16+41 with New Sign on New Post at 20+00
20+87	Lt.	Railroad Crossing	W10-1	30	30		5.0	10		1		1		N	4" X 6" Wood	Replace Existing Sign at 23+45 with New Sign on New Post at 20+87
21+76	Rt.	Stop	R1-1	36	36		7.5						1	E	Telespar	Replace Existing Sign with New Sign on Existing Post
22+50	Rt.	Speed Limit 35	R2-1	24	30	5.0							1	S	Telespar	Replace Existing Sign with New Sign on Existing Post
22+50	Lt.	Downtown Business District <---		42	36	10.5		11		1		See Remarks		N	4" X 6" Wood	Replace Existing Sign at 23+45 with New Sign at 22+50. Removal is Covered by the Railroad Crossing Sign as this Sign is Currently on the Same Assembly
23+50	Lt.	City <---		24	12	2.0		10		1				N		Replace Existing Signs with New Signs on New Post. Removal is Covered by the Railroad Crossing Sign as this Sign is Currently on the Same Assembly
		Truck Route	R14-1	24	18	3.0								N		
25+55	Lt.	Stop	R1-1	30	30		5.2						1	W	Telespar	Replace Existing Sign with New Sign on Existing Post
26+02	Rt.	Stop	R1-1	30	30		5.2						1	W	Telespar	Replace Existing Sign with New Sign on Existing Post
29+17	Lt.	Stop	R1-1	30	30		5.2						1	W	Telespar	Replace Existing Sign with New Sign on Existing Post
29+68	Rt.	Stop	R1-1	30	30		5.2						1	W	Telespar	Replace Existing Sign with New Sign on Existing Post
29+88	Rt.	Pedestrian Crossing/ flasher	W11-2									1		S		Remove Do Not Replace
31+58	Lt.	No Parking	R8-3	24	24	4.0		9		1		1		N	Telespar	Replace Existing Sign with New Sign on New Post
		Baseball complex/ other signs												N		Remove Do Not Replace
31+58	Rt.	No Parking	R8-3	24	24	4.0		9		1		1		S	U-Channel	Replace Existing Sign with New Sign on New Post
32+58	Rt.	School Crossing	S1-1	36	36		7.0		11		1	1		S	Telespar	Replace Existing Sign with New Sign on New Post
		School Plaque	S4-3P	24	8		1.3							S		New Sign Install

PLOTTED FROM - TRAB10100

P 0037(129)207, PCN 039K, SD37 Permanent Sign Installation Table

Station	Side of Road	Description	Sign Code	Width (Inches)	Height (Inches)	Flat Aluminum sign, Nonremovable Copy High Intensity (SQFT)	Flat Aluminum Sign, Nonremovable Copy Super/Very High Intensity (SQFT)	2.0"x2.0" Perforated Tube Post 12 ga. (FT)	2.5"x2.5" Perforated Tube Post 10 Ga. (FT)	(N.A.B.I.) Square Tube Anchor Sleeve (Each)	(N.A.B.I.) 48" Winged Slip Base Anchor (Each)	Remove Traffic Sign (Each)	Remove, Salvage, Relocate, and Reset Traffic Sign (Each)	Direction Sign Faces	Current Type of Post	Remarks
32+84	Lt.	Stop	R1-1	30	30		5.2	10		1		1		W	4" X 6" Wood	Replace Existing Sign with New Sign on New Post
33+32	Rt.	Stop	R1-1	30	30		5.2	10		1		1		E	4" X 6" Wood	Replace Existing Sign with New Sign on New Post
34+56	Rt.	School, Speed limit 15 when flashing	S5-1	24	48		8.0	24		2				S		Install Sign on New Post with Flasher Unit
34+72	Rt.	No Parking										1		S	U-Channel	Remove Do Not Replace
		Baseball Complex												S		Remove Do Not Replace
34+95	Lt.	No Parking	R8-3	24	24	4.0						1		N	Telespar	Replace Existing Sign at 34+80 with New Sign on Luminaire Pole at 34+95
		End School Zone												N		Remove Do Not Replace
		Speed Limit 35	R2-1	24	30	5.0										New Sign Install. Band to Luminaire Pole at 34+95
35+35	Rt.	15 MPH School Sign										1				Remove Do Not Replace
36+31	Lt.	School crossing/flasher										1		N	Telespar	Remove Do Not Replace
36+49	Lt.	Stop	R1-1	30	30		5.2	10		1		1		W	4" X 6" Wood	Replace Existing Sign with New Sign on New Post
36+99	Rt.	Stop	R1-1	30	30		5.2						1	E	Telespar	Replace Existing Sign with New Sign on Existing Post
37+14	Rt.	School Crossing	S1-1	36	36		7.0		11		1			S		New Sign Install
		Diagonal Arrow	W16-7P	24	12		2.0							S		New Sign Install
37+22	Lt.	School Crossing	S1-1	36	36		7.0							N		New Sign Install. Band to Luminaire Pole at 37+22
		Diagonal Arrow	W16-7P	24	12		2.0							N		New Sign Install. Band to Luminaire Pole at 37+22
38+23	Lt.	Baseball complex --->										1		N	U-Channel	Remove Do Not Replace
40+20	Lt.	Stop	R1-1	30	30		5.2	10		1		1		W	4" X 6" Wood	Replace Existing Sign with New Sign on New Post
40+61	Rt.	Speed Limit 35 MPH										1		S		Remove Do Not Replace
41+02	Lt.	Speed Limit 35 MPH										1		N		Remove Do Not Replace

PLOTTED FROM - TRAB10100

Revised 08/01/2016 CJP

P 0037(129)207, PCN 039K, SD37 Permanent Sign Installation Table

Station	Side of Road	Description	Sign Code	Width (Inches)	Height (Inches)	Flat Aluminum sign, Nonremovable Copy High Intensity (SQFT)	Flat Aluminum Sign, Nonremovable Copy Super/Very High Intensity (SQFT)	2.0"x2.0" Perforated Tube Post 12 ga. (FT)	2.5"x2.5" Perforated Tube Post 10 Ga. (FT)	(N.A.B.I.) Square Tube Anchor Sleeve (Each)	(N.A.B.I.) 48" Winged Slip Base Anchor (Each)	Remove Traffic Sign (Each)	Remove, Salvage, Relocate, and Reset Traffic Sign (Each)	Direction Sign Faces	Current Type of Post	Remarks
43+00	Lt.	South	M3-3	24	12	2.0							1	N	Telespar	Replace Existing Sign at 43+46 with New Sign on Existing Post at 43+00
		SD 37	M1-5	24	24	4.0								N		Replace Existing Sign at 43+46 with New Sign on Existing Post at 43+00
43+85	Lt.	Stop	R1-1	30	30		5.2	10		1		1		W	4" X 6" Wood	Replace Existing Sign with New Sign on New Post
44+37	Rt.	Stop	R1-1	30	30		5.2	10		1		1		E	4" X 6" Wood	Replace Existing Sign with New Sign on New Post
50+93	Rt.	Stop	R1-1	30	30		5.2						1	E	Telespar	Replace Existing Sign with New Sign on Existing Post
51+37	Lt.	School Speed Limit										1		N		Remove Do Not Replace
52+55	Rt.	Speed Limit 35	R2-1	24	30	5.0		10		1				S		New Sign Install
52+55	Lt.	School, Speed limit 15 when flashing	S5-1	24	48		8.0							N		Install Sign on Luminaire Pole with Flasher Unit
52+95	Rt.	End School Zone										1				Remove Do Not Replace
53+60	Lt.	School Crossing	S1-1	36	36		7.0		11		1	1		N	4" X 6" Wood	Replace Existing Sign at 53+82 with New Sign on New Post at 53+60
		School Plaque	S4-3P	24	8		1.3							N		New Sign Install
54+51	Rt.	Stop	R1-1	30	30		5.2	10		1		1		E	U-Channel	Replace Existing Sign with New Sign on New Post
55+68	Rt.	Stop Ahead	W3-4									1				Remove Do Not Replace
56+76	Lt.	South	M3-3	24	12	2.0						1			Telespar	Replace Existing Sign with New Sign on Luminaire Pole
		SD 37	M1-5	24	24	4.0										Replace Existing Sign with New Sign on Luminaire Pole
57+60	Rt.	No Trucks	R5-2	24	24	4.0		10		1		1		W	Telespar	Street Sign Shall be Reset on top of Stop Sign. No Trucks Sign Shall be Replaced on New Post
58+14	Rt.	Stop	R1-1	30	30		5.2						1	E	Telespar	Replace Existing Sign with New Sign on Existing Post
		No Trucks										1		W		Remove Do Not Replace
58+14	Rt.	No Trucks	R5-2	24	24	4.0		10		1		1		S		Replace Existing Sign with New Sign on New Post on East Side of Service Road
58+96	Rt.	Junction	M2-1	21	15	2.2						1		S	Telespar	Replace Existing Signs at 58+21 with New Signs on Luminaire Pole at 58+96
		US 12	M1-4	24	24	4.0								S		
59+04	Lt.	Ferny 8, Conde 21, Doland 39						26		2			1	N	4" X 6" Wood	Reset Existing Sign on New Post
60+24	Lt.	Speed Limit 35											1	N	Telespar	Reset Existing Sign and Existing Post
60+70	Rt.	To SD 10 / Aberdeen / Webster	D1-3	72	48	24.0			26		2	1			4" X 6" Wood	Replace Existing Sign with New Sign on New Post
61+14	Rt.	No Trucks	R5-2	24	24	4.0		10		1		1		N	U-Channel	Replace Existing Sign with New Sign on New Post
66+00	Rt.	North	M3-1	24	12	2.0							1	S	Telespar	Replace Existing Sign with New Sign on Existing Post
		SD 37	M1-5	24	24	4.0								S		Replace Existing Sign with New Sign on Existing Post
See Remarks		Street Signs											16			Reset Existing Street Signs on top of Stop Signs Throughout Project
					TOTAL	133.4	146.6	270.0	59.0	26	5	34	30			

PLOTTED FROM - TRAB10100

P 0037(129)207, PCN 039K, Sign Summary SD37

Sign Code	Description	Width (Inches)	Height (Inches)	Sq. Ft.	No.	Flat Aluminum Sign, Nonremovable Copy High Intensity (SQFT)	Flat Aluminum Sign, Nonremovable Copy Super or Very High Intensity (SQFT)	Text / Background
	City --->	24	12	2.0	1	2.0		Black on White
	<--- City	24	12	2.0	1	2.0		Black on White
	Downtown Business District -->	42	36	10.5	1	10.5		White on Green
	<-- Downtown Business District	42	36	10.5	1	10.5		White on Green
D1-D	Groton Pop. 1458	42	18	5.3	1	5.3		White on Green
D1-3	To SD 10 / Aberdeen / Webster	72	48	24.0	1	24.0		White on Green
M1-4	US 12	24	24	4.0	1	4.0		Black on White
M1-5	SD 37	24	24	4.0	3	12.0		See Standard Plate 632.20
M2-1	Junction Marker	21	15	2.2	1	2.2		Black on White
M3-1	North	24	12	2.0	1	2.0		Black on White / Green Border
M3-3	South	24	12	2.0	2	4.0		Black on White / Green Border
R1-1	Stop	36	36	7.5	1		7.5	White on Red
R1-1	Stop	30	30	5.2	14		72.8	White on Red
R2-1	Speed Limit 35 MPH	24	30	5.0	4	20.0		Black on White
R2-1	Speed Limit 50 MPH	24	30	5.0	1	5.0		Black on White
R5-2	No Trucks	24	24	4.0	3	12.0		Black on White
R8-3	No Parking Symbol	24	24	4.0	3	12.0		Black on White
R14-1	Truck Route	24	18	3.0	2	6.0		Black on White
S1-1	School Crossing	36	36	7.0	4		28.0	Black on Fluorescent Yellow-Green
S5-1	School. Speed Limit 15 when Flashing	24	48	8.0	2		16.0	Black on White
S4-3P	School Plaque	24	8	1.3	2		2.7	Black on Fluorescent Yellow-Green
W10-1	Railroad Crossing	30	30	5.0	2		10.0	Black on Fluorescent Yellow
W14-3	No Passing Zone	48X48X36		5.6	1		5.6	Black on Fluorescent Yellow
W16-7P	Diagonal Arrow	24	12	2.0	2		4.0	Black on Fluorescent Yellow-Green
					Totals	**133.4**	**146.6**	

PLOTTED FROM - TRAB10100

NH 0012(198)308, PCN 05AV, US 12 Permanent Sign Installation Table

Station	Side of Road	Description	Sign Code	Width (Inches)	Height (Inches)	Flat Aluminum sign, Nonremovable Copy High Intensity (SQFT)	Flat Aluminum Sign, Nonremovable Copy Super/Very High Intensity (SQFT)	2.0"x2.0" Perforated Tube Post 12 ga. (FT)	(N.A.B.I.) Square Tube Anchor Sleeve (Each)	Remove Traffic Sign (Each)	Remove, Salvage, Relocate, and Reset Traffic Sign (Each)	Direction Sign Faces	Current Type of Post	Remarks
US 12 Signing														
15+78	Lt.	Divided Highway Begins	W6-1	36	36		9.0			1		E	Luminaire Pole	Replace Existing Sign with New Sign on Luminaire Pole
16+79	Rt.	Signal Ahead	W3-3	30	30		6.3	11	1			W		New Sign Install
18+57	Lt.	Speed Limit 35 MPH	R2-1	30	36	7.5				1		E	Luminaire Pole	Replace Existing Sign with New Sign on Luminaire Pole
		No Parking	R8-3	24	24	4.0				1		E		Replace Existing Sign with New Sign on Luminaire Pole
18+79	Rt.	Webster / To SD 10 / Doland										W	Telespar	Do Not Disturb
19+90	Lt.	West	M3-4	24	12	2.0		11	1	1		E	Light Pole	Replace Existing Sign with New Sign on New Post
		US 12	M1-4	24	24	4.0						E		Replace Existing Sign with New Sign on New Post
21+36	Overhead	SD 37	M1-5	24	24	4.0				1		E	Mast Arm	Replace Existing Signs With New Signs on Mast Arm
		Horizontal Double Arrow	M6-4	21	15	2.2						E		
		US 12	M1-4	24	24	4.0						E		
		Vertical Arrow	M6-3	21	15	2.2						E		
21+75	Rt.	Stop								1		S		Remove Do Not Replace
21+84	Overhead	US 12	M1-4	24	24	4.0				1		N	Telespar	Replace Existing Signs With New Signs on Mast Arm
		Horizontal Double Arrow	M6-4	21	15	2.2						N		
		SD 37	M1-5	24	24	4.0						N		
		Vertical Arrow	M6-3	21	15	2.2						N		
22+25	Overhead	US 12	M1-4	24	24	4.0				1		S	Telespar	Replace Existing Signs with New Signs on Mast Arm
		Horizontal Double Arrow	M6-4	21	15	2.2						S		
		SD 37	M1-5	24	24	4.0						S		
		Vertical Arrow	M6-3	21	15	2.2						S		
22+40	Lt.	Stop								1		N	Telespar	Remove Do Not Replace

PLOTTED FROM - TRAB10100

NH 0012(198)308, PCN 05AV, US 12 Permanent Sign Installation Table

Station	Side of Road	Description	Sign Code	Width (Inches)	Height (Inches)	Flat Aluminum sign, Nonremovable Copy High Intensity (SQFT)	Flat Aluminum Sign, Nonremovable Copy Super/Very High Intensity (SQFT)	2.0"x2.0" Perforated Tube Post 12 ga. (FT)	(N.A.B.I.) Square Tube Anchor Sleeve (Each)	Remove Traffic Sign (Each)	Remove, Salvage, Relocate, and Reset Traffic Sign (Each)	Direction Sign Faces	Current Type of Post	Remarks
22+76	Overhead	SD 37	M1-5	24	24	4.0				1		W	Mast Arm	Replace Existing Signs With New Signs on Mast Arm
		Horizontal Double Arrow	M6-4	21	15	2.2						W		
		US 12	M1-4	24	24	4.0						W		
		Vertical Arrow	M6-3	21	15	2.2						W		
23+83	Rt.	East	M3-2	24	12	2.0					1	W	Telespar	Replace Existing Sign with New Sign on Existing Post
		US 12	M1-4	24	24	4.0						W		Replace Existing Sign with New Sign on Existing Post
		Yellowstone trail										W		Reset Existing Sign on Existing Post
25+65	Lt.	No Parking	R8-3	24	24	4.0		10	1	1		E	Light Pole	Replace Existing Sign with New Sign on New Post
25+91	Rt.	Speed Limit 35 MPH									1	W	Telespar	Reset Existing Sign on Existing Post
		No Parking										W		Reset Existing Sign on Existing Post
26+74	Lt.	Aberdeen / Doland / To SD 10									1	E	Telespar	Reset Existing Sign on Existing Post
26+95	Rt.	Stop										S	Telespar	Do Not Disturb
28+10	Lt.	Signal Ahead	W3-3	30	30		6.3	11	1			E		New Sign Install
28+10	Rt.	Pedestrian / Flasher										W		Do Not Disturb
29+10	Rt.	Andover / Webster / JCT 29									1	W	Telespar	Reset Existing Sign and Existing Post Currently Located at 28+61 at New Location, 29+10
					TOTAL	77.0	21.5	43.0	4	11	4			

PLOTTED FROM - TRAB10100

P 0012(198)308, PCN 05AV, Sign Summary US 12

Sign Code	Description	Width (Inches)	Height (Inches)	Sq. Ft.	No.	Flat Aluminum Sign, Nonremovable Copy High Intensity (SQFT)	Flat Aluminum Sign, Nonremovable Copy Super or Very High Intensity (SQFT)	Text / Background
M1-4	US 12	24	24	4.0	6	24.0		Black on White
M1-5	SD 37	24	24	4.0	4	16.0		See Standard Plate 632.20
M3-2	East	24	12	2.0	1	2.0		Black on White
M3-4	West	24	12	2.0	1	2.0		Black on White
M6-3	Vertical Arrow	21	15	2.2	2	4.4		Black on White
M6-3	Vertical Arrow	21	15	2.2	2	4.4		Black on White / Green Border
M6-4	Horizontal Double Arrow	21	15	2.2	2	4.4		Black on White
M6-4	Horizontal Double Arrow	21	15	2.2	2	4.4		Black on White / Green Border
R2-1	Speed Limit 35 MPH	30	36	7.5	1	7.5		Black on White
R8-3	No Parking Symbol	24	24	4.0	2	8.0		Black on White
W3-3	Signal Ahead Symbol	30	30	6.3	2		12.5	Black on Fluorescent Yellow
W6-1	Divided Highway Begins	36	36	9.0	1		9.0	
					Totals	**77.0**	**21.5**	

PLOTTED FROM - TRAB10100

STATE OF SOUTH DAKOTA	PROJECT	SHEET NO.	TOTAL SHEETS
	P 0037(129)207 NH 0012(198)308	S11	S34

Plotting Date: 05/18/2016

Permanent Signing SD 37

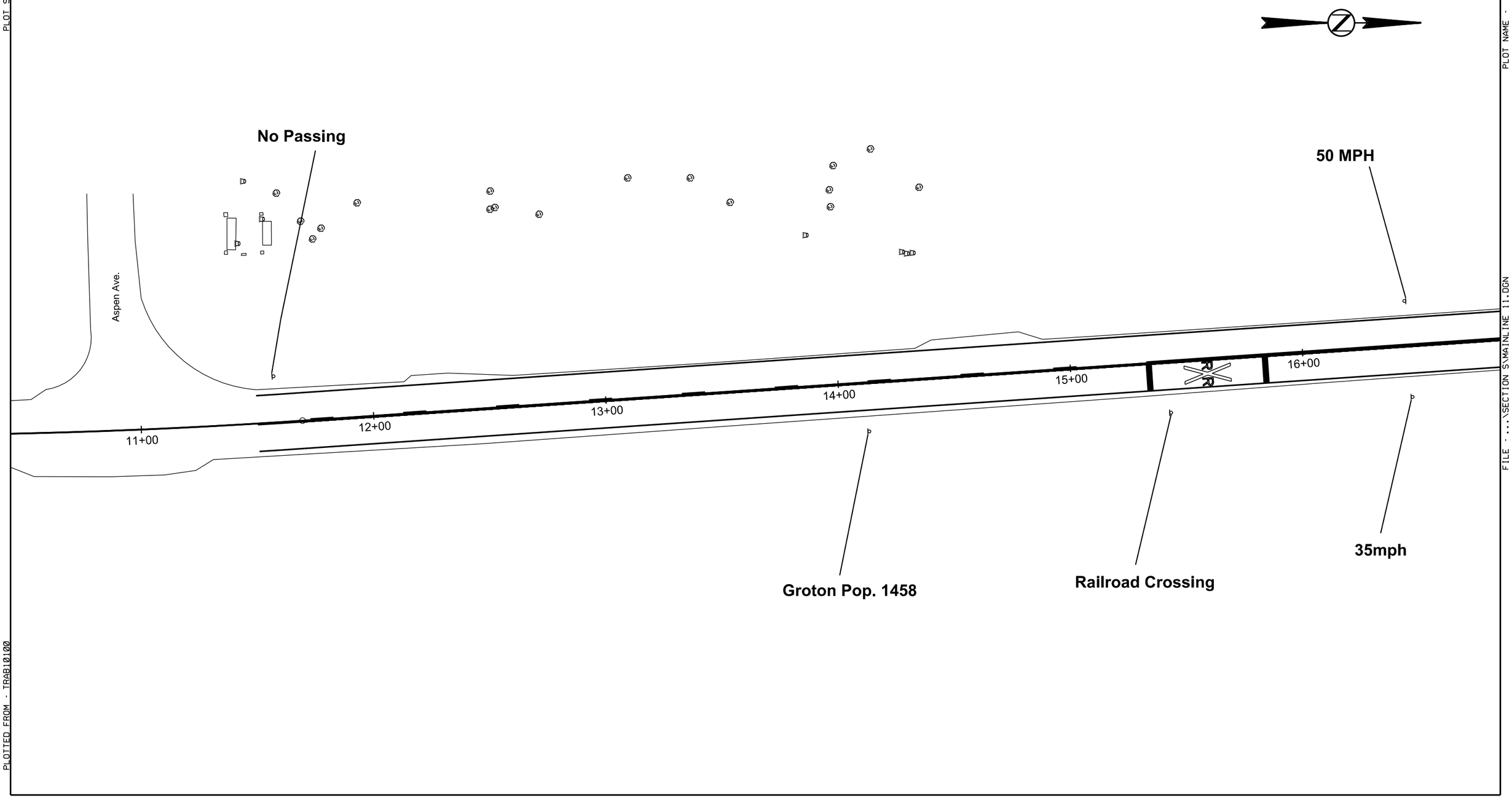

PLOT SCALE - 1:40

PLOT NAME - 1

FILE - ...\SECTION S\MAINLINE 11.DGN

PLOTTED FROM - TRAB10100

STATE OF SOUTH DAKOTA	PROJECT	SHEET NO.	TOTAL SHEETS
	P 0037(129)207 NH 0012(198)308	S12	S34

Plotting Date: 05/18/2016

Permanent Signing SD 37

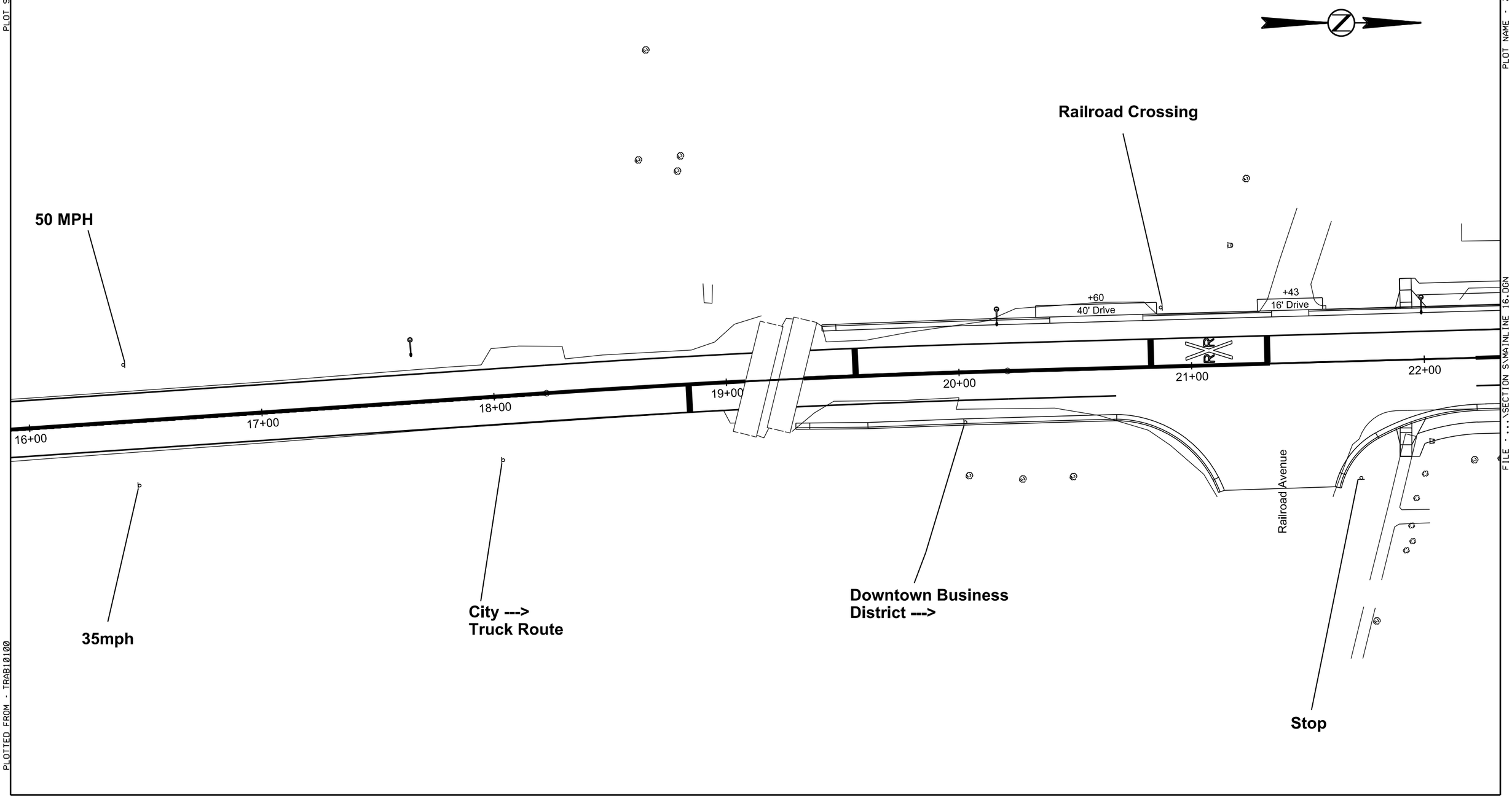

PLOT SCALE - 1:40

PLOTTED FROM - TRAB10100

PLOT NAME - 2

FILE - ...\SECTION S\MAINLINE 16.DGN

STATE OF SOUTH DAKOTA	PROJECT	SHEET NO.	TOTAL SHEETS
	P 0037(129)207 NH 0012(198)308	S13	S34

Plotting Date: 05/18/2016

Permanent Signing SD 37

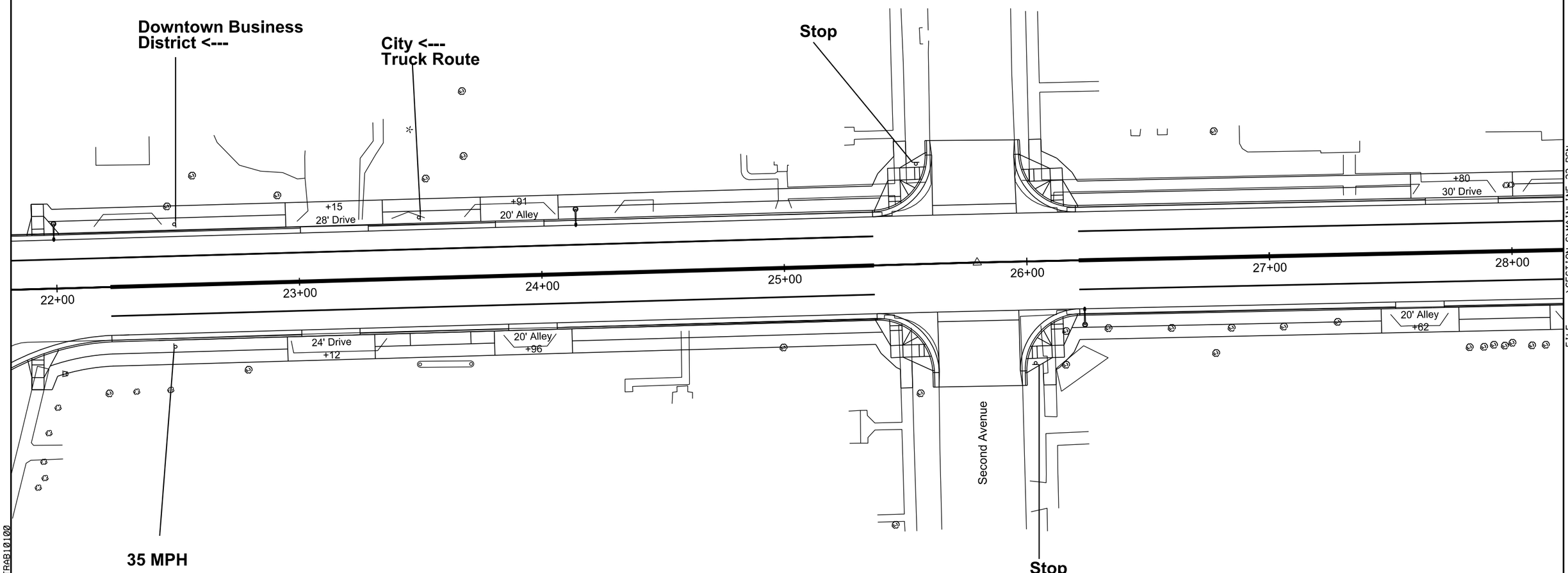

PLOT SCALE - 1:40

PLOT NAME - 3

FILE - ...\SECTION SVMAINLINE 22.DGN

PLOTTED FROM - TRAB10100

STATE OF SOUTH DAKOTA	PROJECT	SHEET NO.	TOTAL SHEETS
	P 0037(129)207 NH 0012(198)308	S14	S34

Plotting Date: 05/18/2016

Permanent Signing SD 37

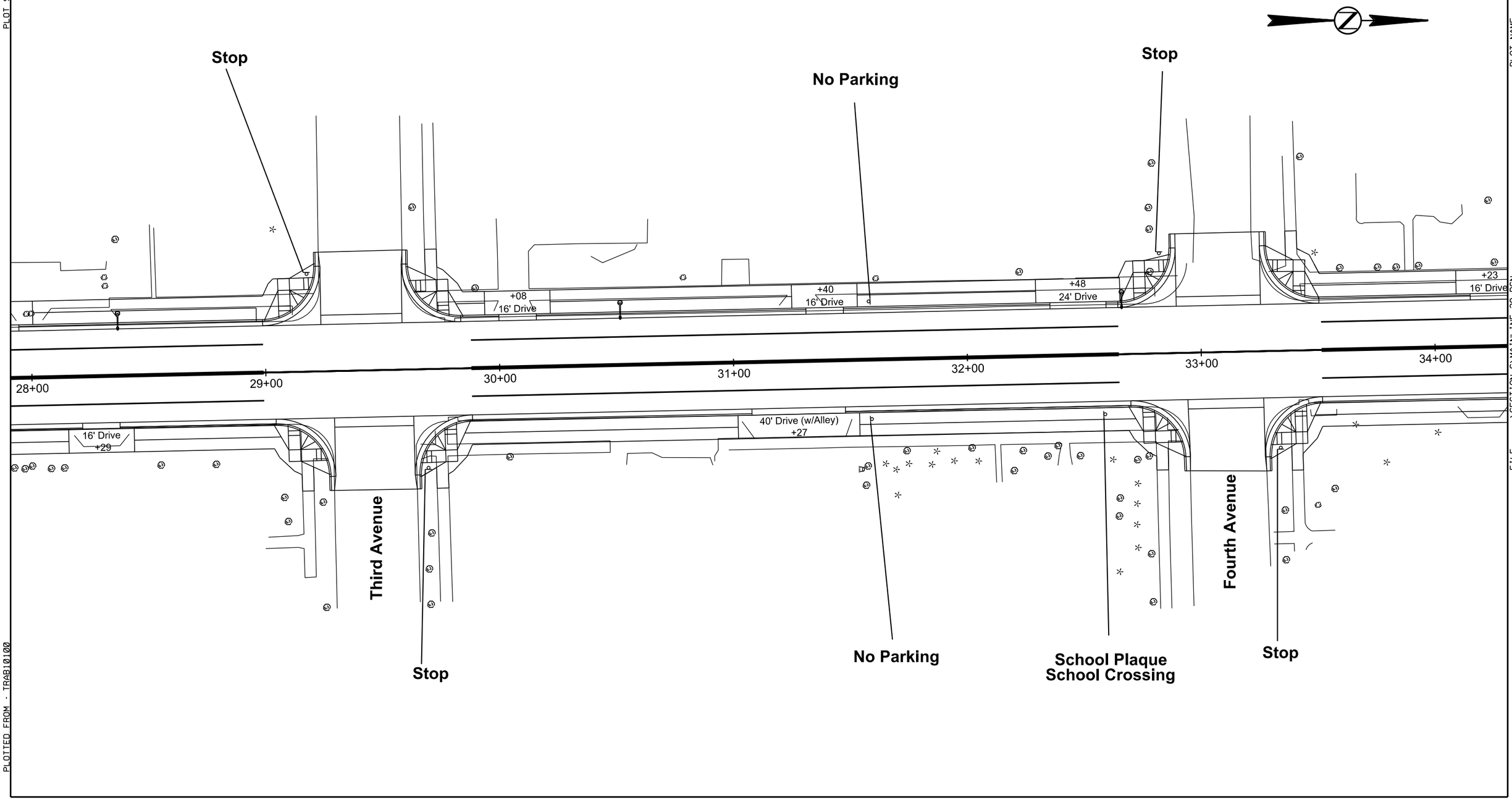

PLOT SCALE - 1:40

PLOT NAME - 4

FILE - ...\SECTION S\MAINLINE 28.DGN

PLOTTED FROM - TRAB10100

STATE OF SOUTH DAKOTA	PROJECT	SHEET NO.	TOTAL SHEETS
	P 0037(129)207 NH 0012(198)308	S15	S34

Plotting Date: 05/18/2016

Permanent Signing SD 37

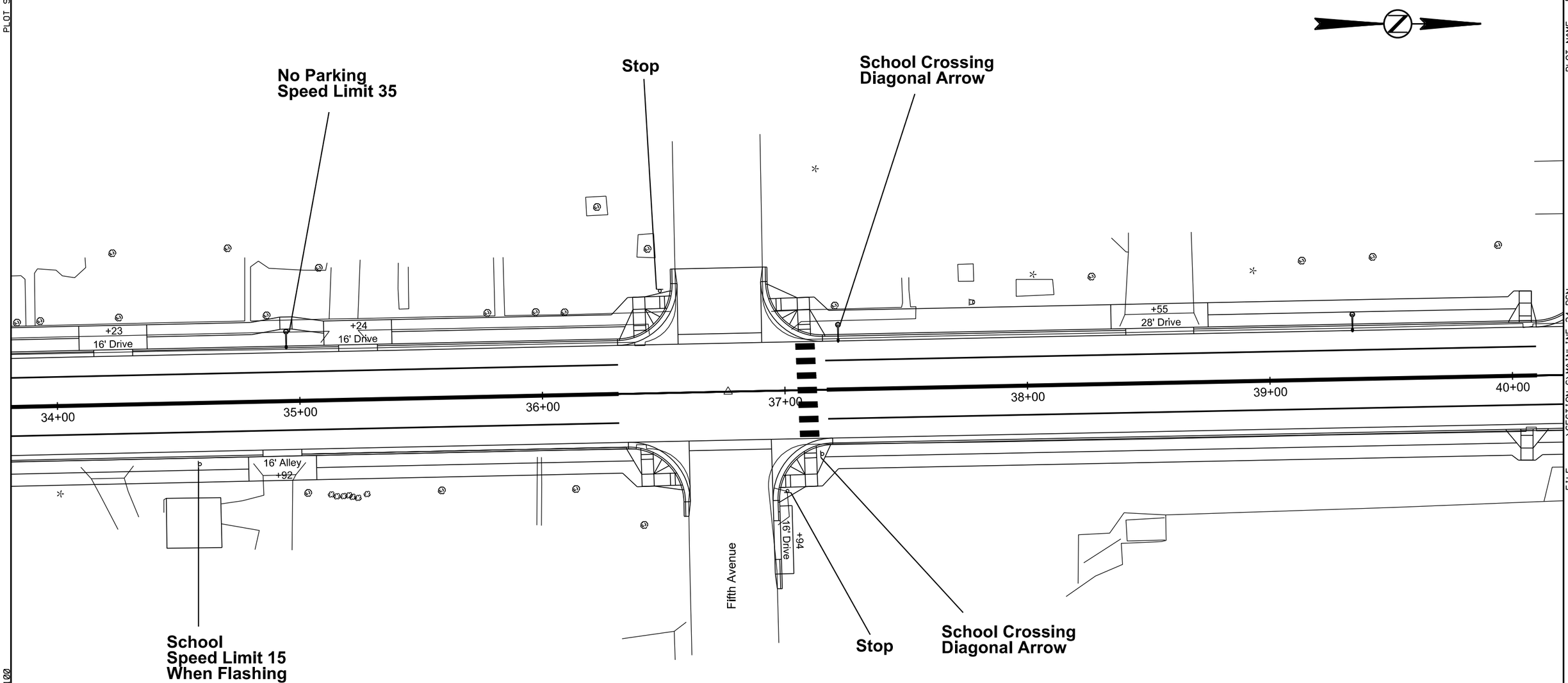

PLOT SCALE - 1:40

PLOT NAME - 5

FILE - ...\SECTION S\MAINLINE 34.DGN

PLOTTED FROM - TRAB10100

STATE OF SOUTH DAKOTA	PROJECT	SHEET NO.	TOTAL SHEETS
	P 0037(129)207 NH 0012(198)308	S16	S34

Plotting Date: 05/18/2016

Permanent Signing SD 37

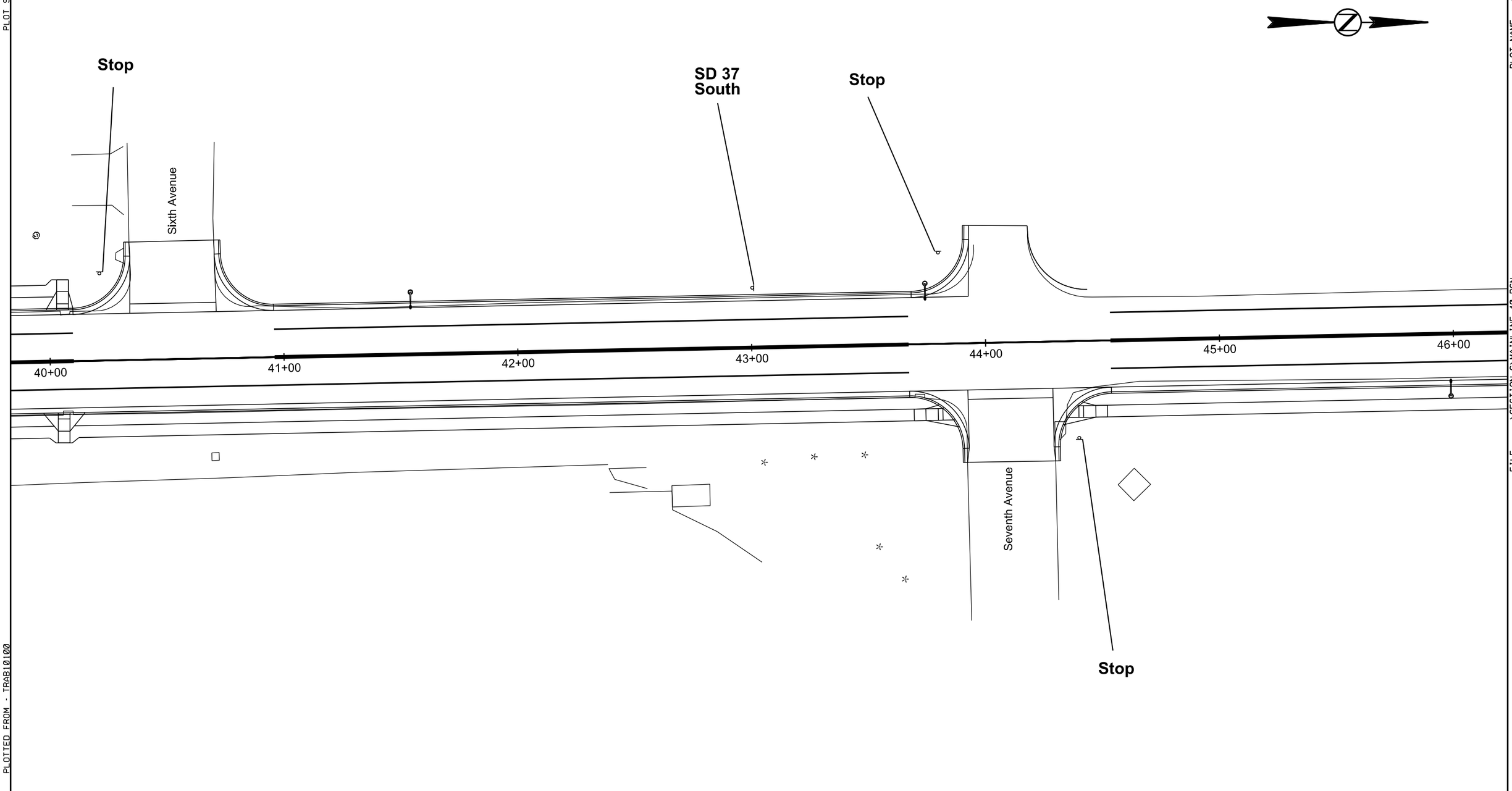

PLOT SCALE - 1:40

PLOTTED FROM - TRAB10100

PLOT NAME - 6

FILE - ...\SECTION S\MAINLINE 40.DGN

STATE OF SOUTH DAKOTA	PROJECT	SHEET NO.	TOTAL SHEETS
	P 0037(129)207 NH 0012(198)308	S17	S34

Plotting Date: 05/18/2016

Permanent Signing SD 37

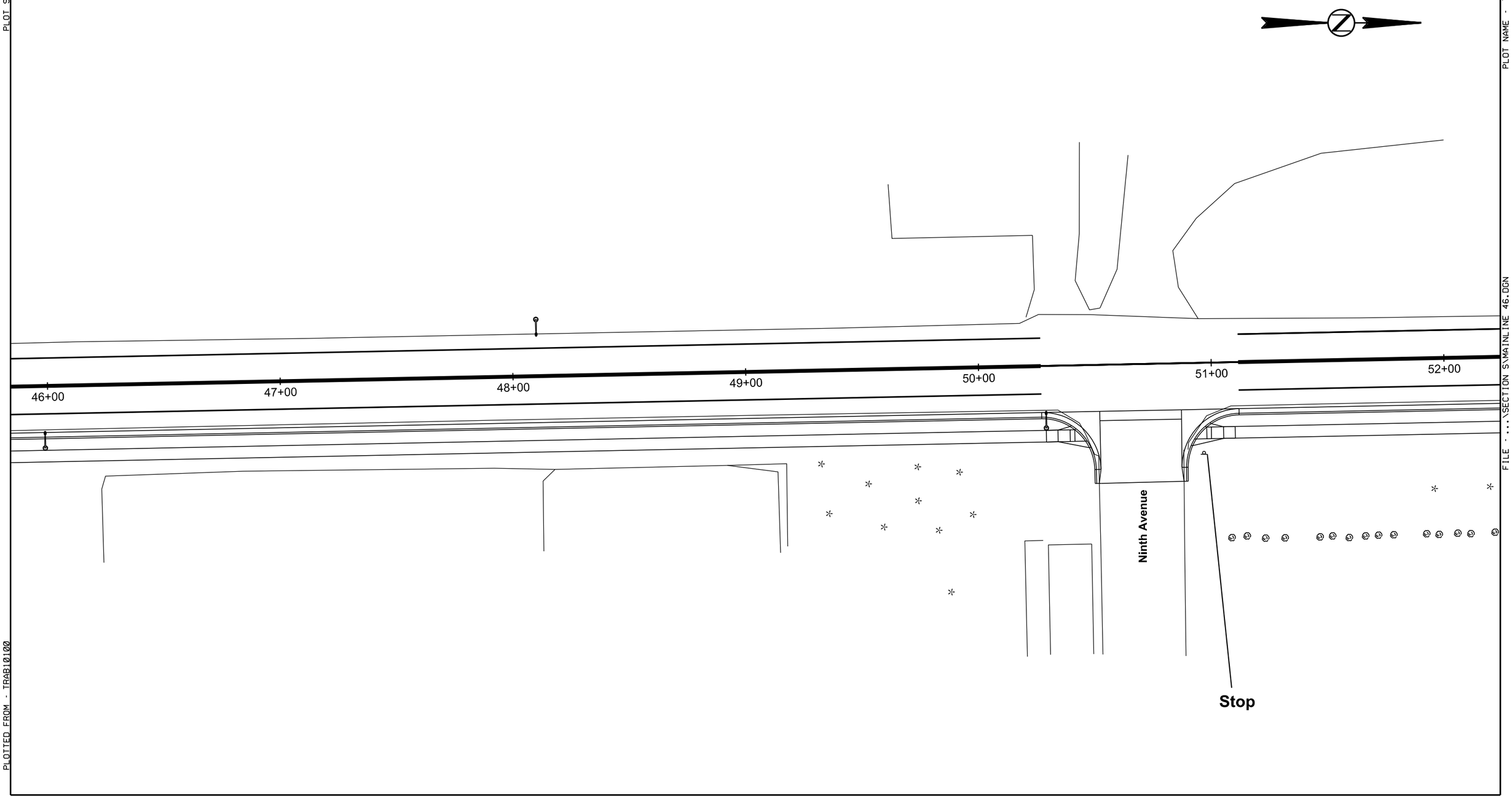

PLOT SCALE - 1:40

PLOTTED FROM - TRAB10100

PLOT NAME - 7

FILE - ...\SECTION S\MAINLINE 46.DGN

STATE OF SOUTH DAKOTA	PROJECT	SHEET NO.	TOTAL SHEETS
	P 0037(129)207 NH 0012(198)308	S18	S34
Plotting Date: 06/08/2016			

Revised 06/08/2016 CJP

Permanent Signing SD 37

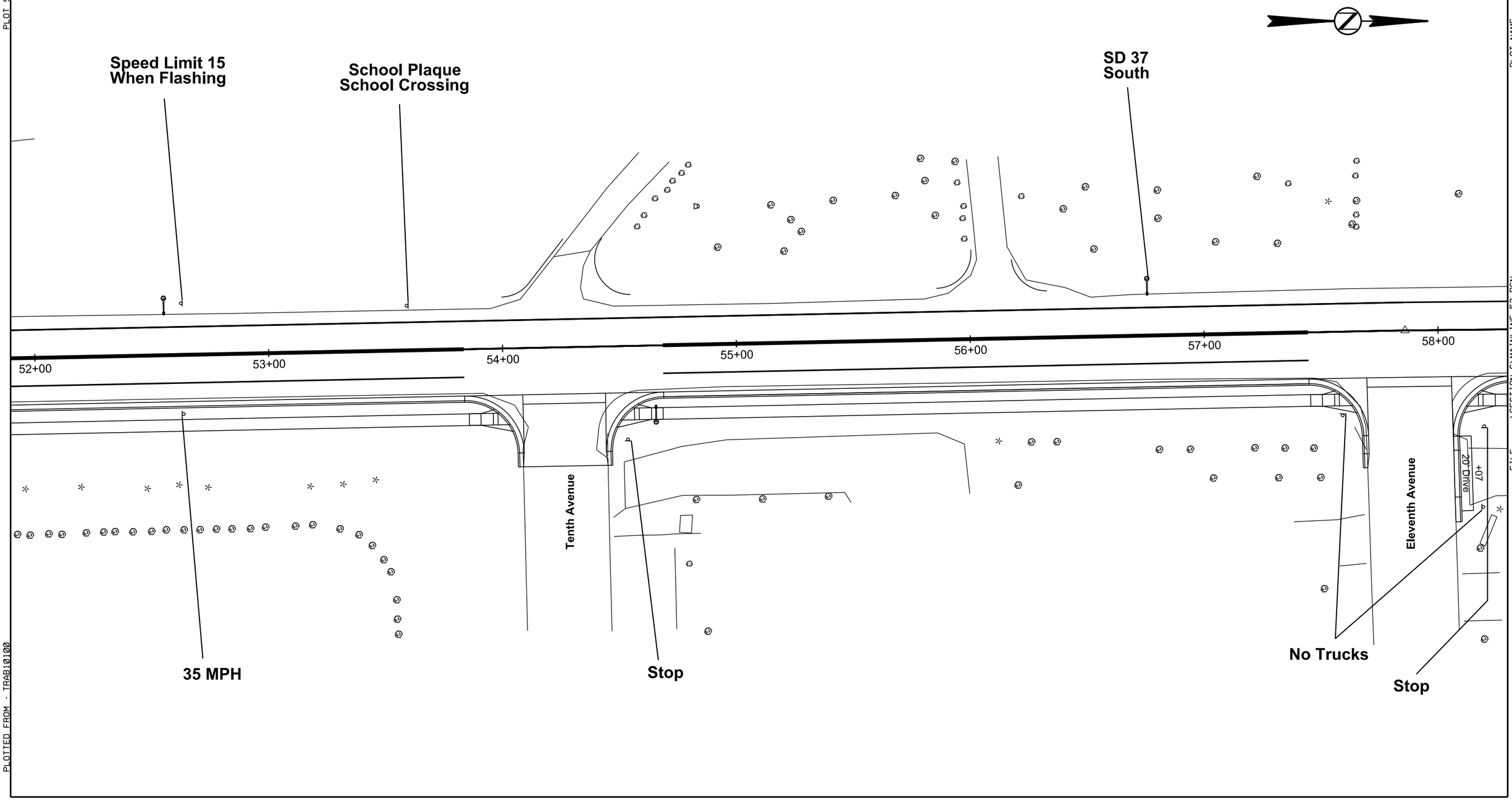

PLOT SCALE - 1:40

PLOTTED FROM - TRAB10100

PLOT NAME - 1

FILE - ...\SECTION S\MAINLINE 52.DGN

STATE OF SOUTH DAKOTA	PROJECT	SHEET NO.	TOTAL SHEETS
	P 0037(129)207 NH 0012(198)308	S19	S34

Plotting Date: 08/01/2016

Revised 08/01/2016 CJP

Permanent Signing SD 37

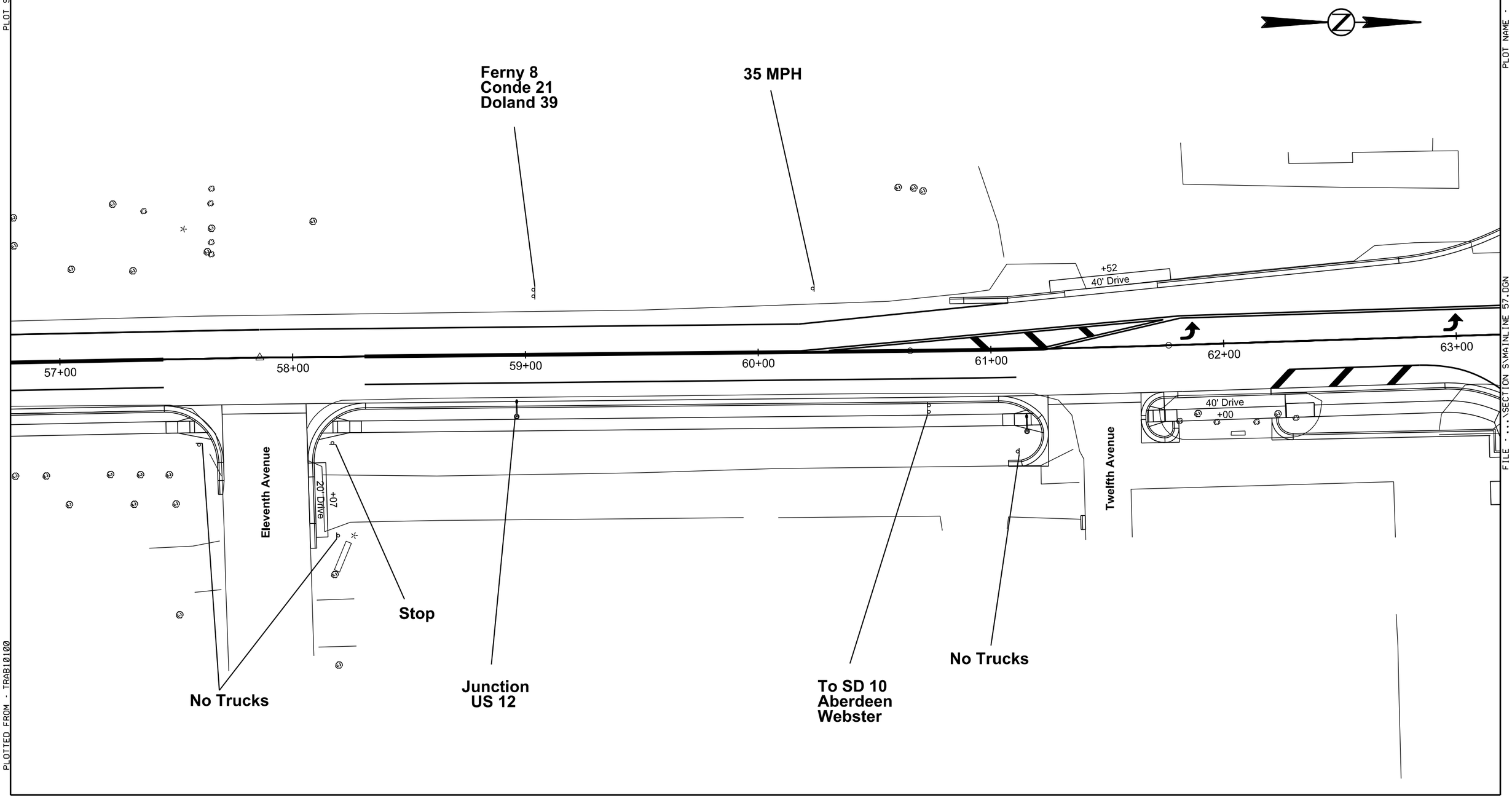

PLOT SCALE - 1:40

PLOT NAME - 1

FILE - ...\SECTION SVMAINLINE 57.DGN

PLOTTED FROM - TRAB10100

STATE OF SOUTH DAKOTA	PROJECT	SHEET NO.	TOTAL SHEETS
	P 0037(129)207 NH 0012(198)308	S20	S34

Plotting Date: 08/01/2016

Revised 08/01/2016 CJP

Permanent Signing SD 37

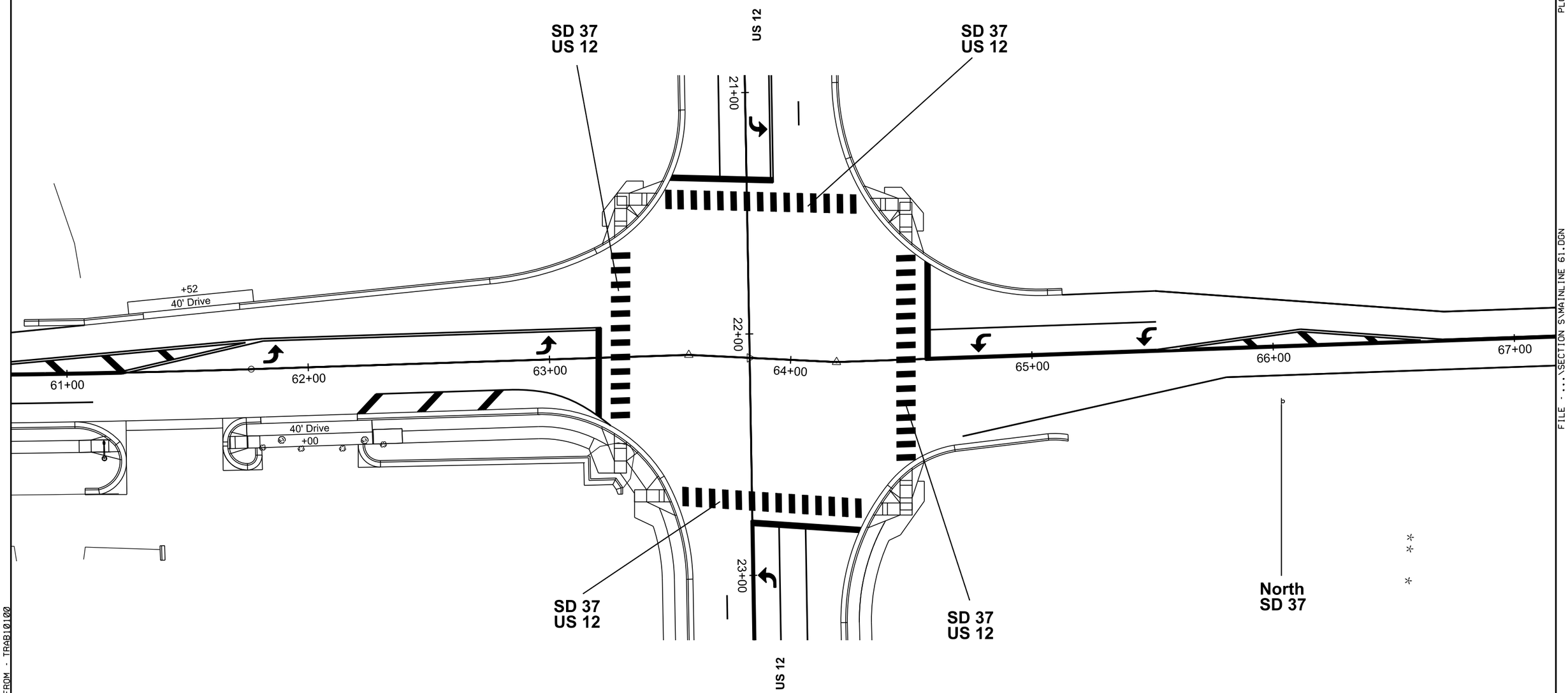

PLOT SCALE - 1:40

PLOTTED FROM - TRAB10100

PLOT NAME - 2

FILE - ...\SECTION S\MAINLINE 61.DGN

STATE OF SOUTH DAKOTA	PROJECT	SHEET NO.	TOTAL SHEETS
	P 0037(129)207 NH 0012(198)308	S21	S34

Plotting Date: 05/18/2016

Permanent Signing US 12

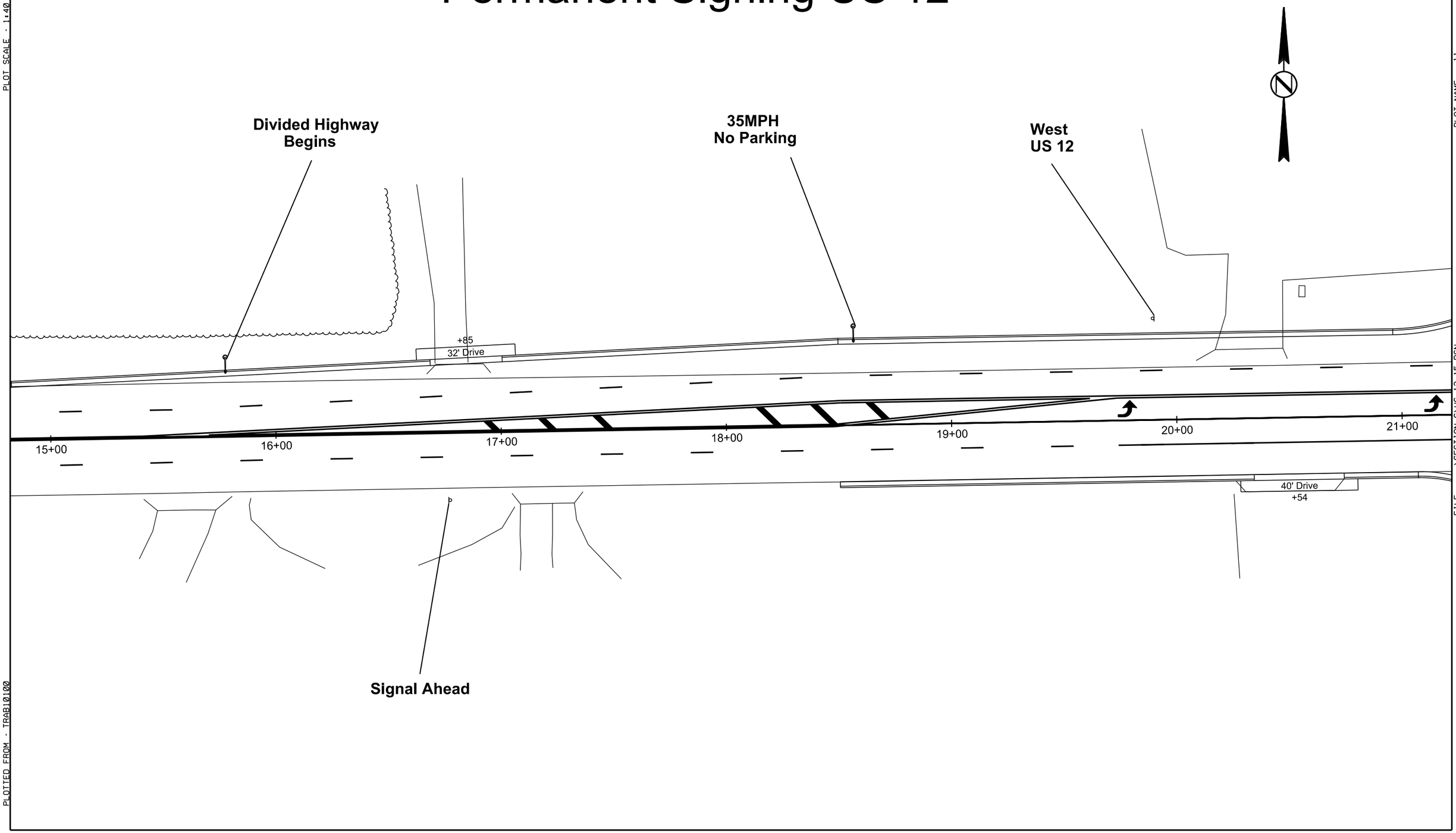

PLOT SCALE - 1:40

PLOT NAME - 11

FILE - ...\SECTION S\US 12 15.DGN

PLOTTED FROM - TRAB10100

STATE OF SOUTH DAKOTA	PROJECT	SHEET NO.	TOTAL SHEETS
	P 0037(129)207 NH 0012(198)308	S22	S34

Plotting Date: 05/18/2016

Permanent Signing US 12

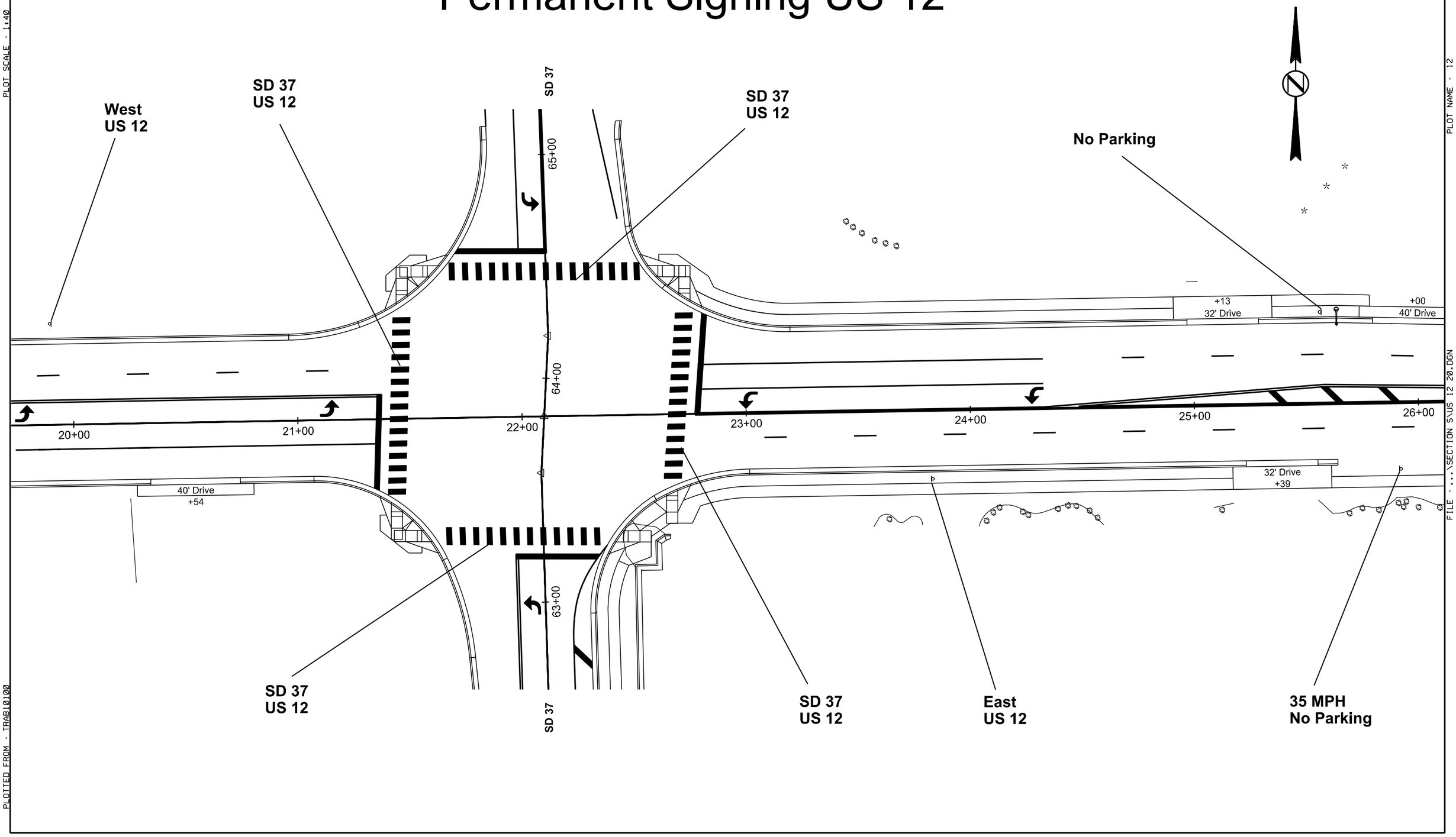

PLOT SCALE - 1:40

PLOTTED FROM - TRAB10100

PLOT NAME - 12

FILE - ...\SECTION S\US 12 20.DGN

STATE OF SOUTH DAKOTA	PROJECT	SHEET NO.	TOTAL SHEETS
	P 0037(129)207 NH 0012(198)308	S23	S34

Plotting Date: 05/18/2016

Permanent Signing US 12

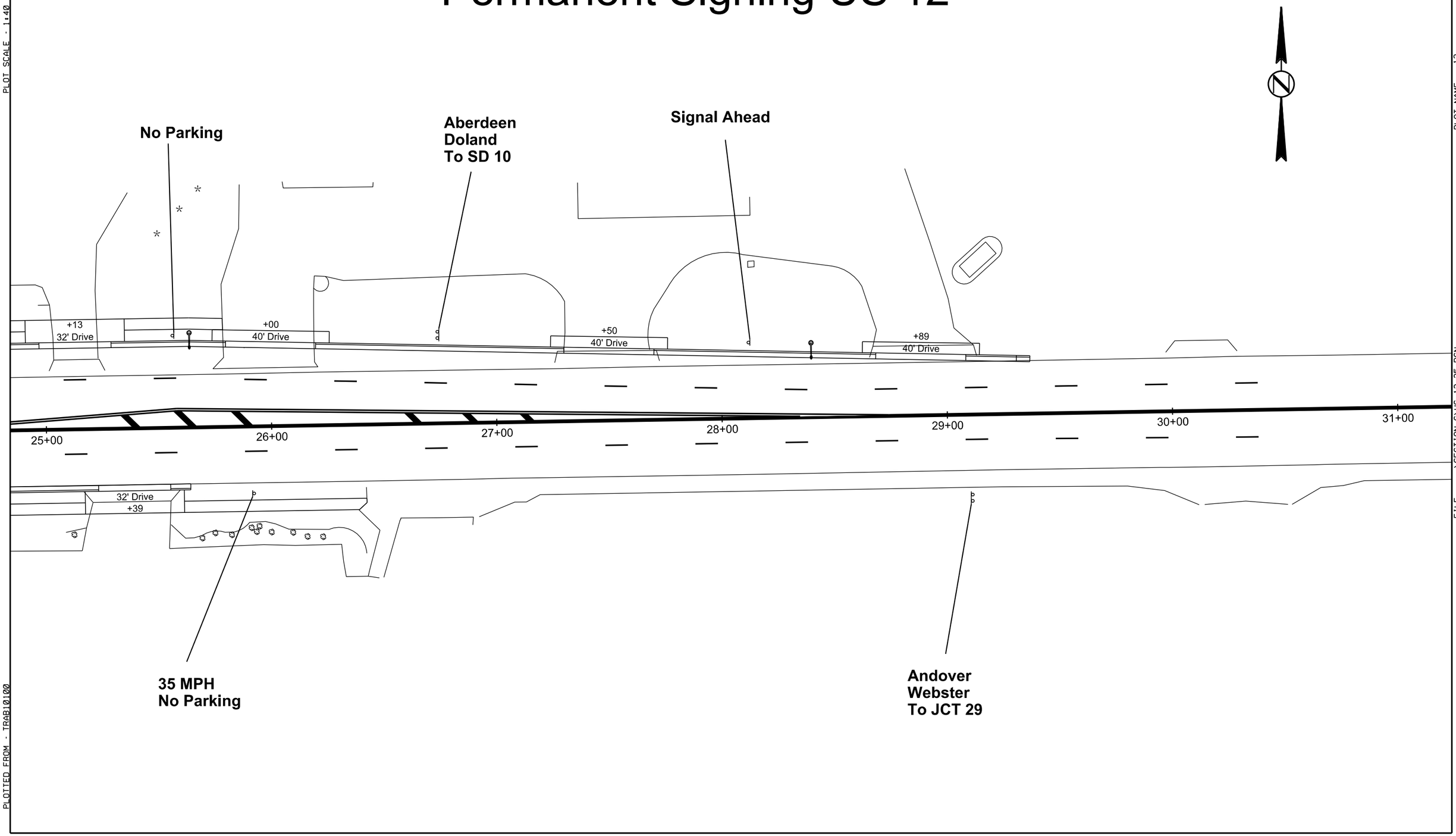

PLOT SCALE - 1:40

PLOT NAME - 13

FILE - ...\SECTION S\US 12 25.DGN

PLOTTED FROM - TRAB10100

STATE OF SOUTH DAKOTA	PROJECT	SHEET NO.	TOTAL SHEETS
	P 0037(129)207 NH 0012(198)308	S24	S34

Plotting Date: 05/17/2016

SPECIAL SIGN DESIGN

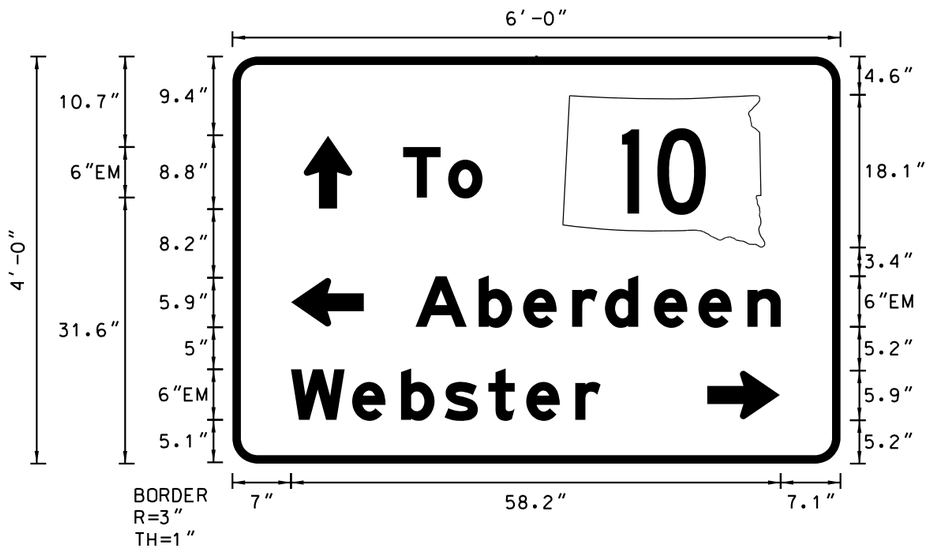

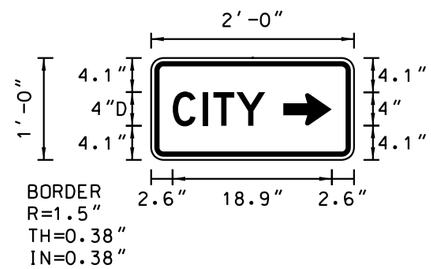

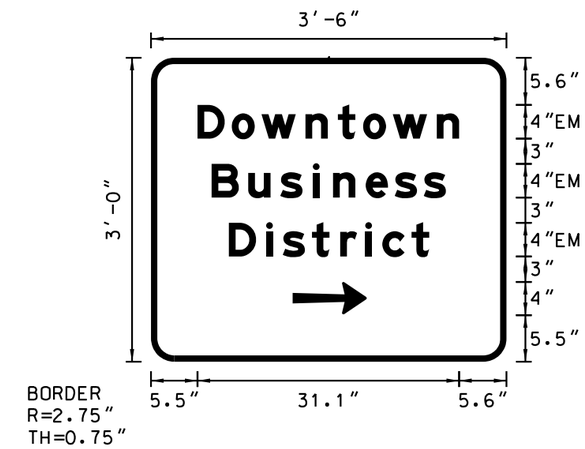

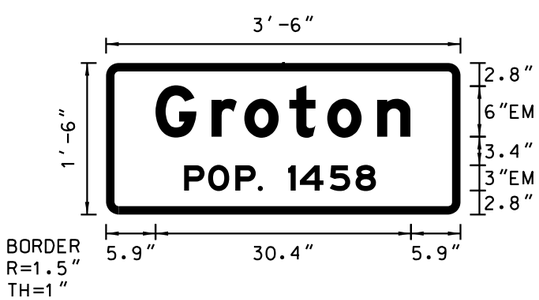

Above signs shall have
a green backround with
white legend and border

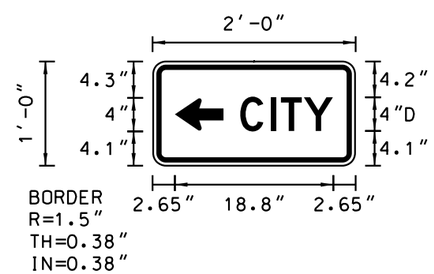

Above signs shall have
a white backround with
black legend and border

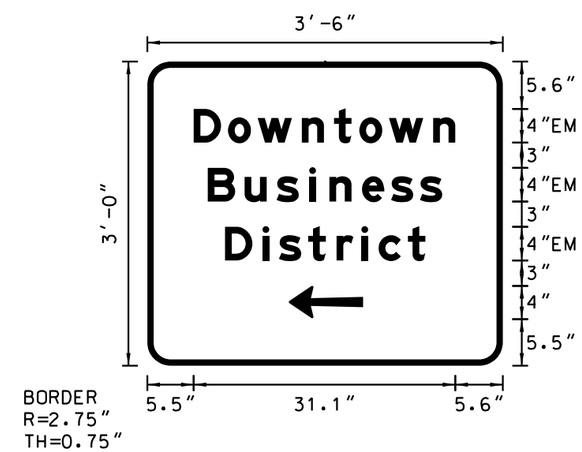

Above signs shall have
a green backround with
white legend and border

PLOT SCALE - 1:1.5

PLOTTED FROM - TRAB10100

PLOT NAME - 1

FILE - ...\SPECIAL SIGN DESIGN.DGN

SQUARE TUBE
4 BLADE ANCHOR DETAIL

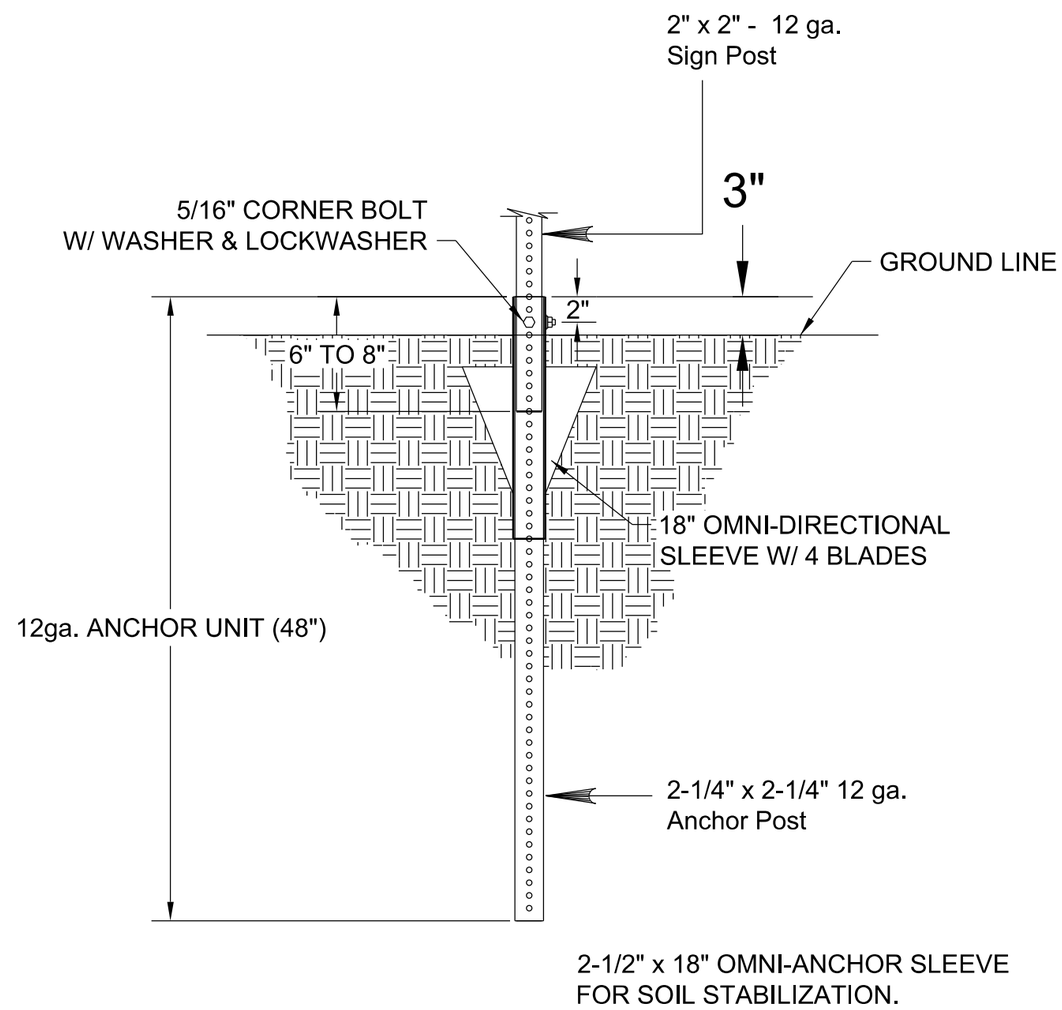

2-1/2" x 18" 12 ga. Omni-Sleeve

ANCHOR SLEEVE
TOP VIEW

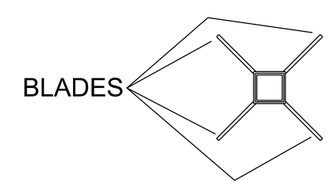

PLOT SCALE - 1:200
PLOTTED FROM - TRAB10100
PLOT NAME - 1
FILE - ...\SIGN POST INSTALL DETAILS.DGN

PLOT SCALE - 1:0.88

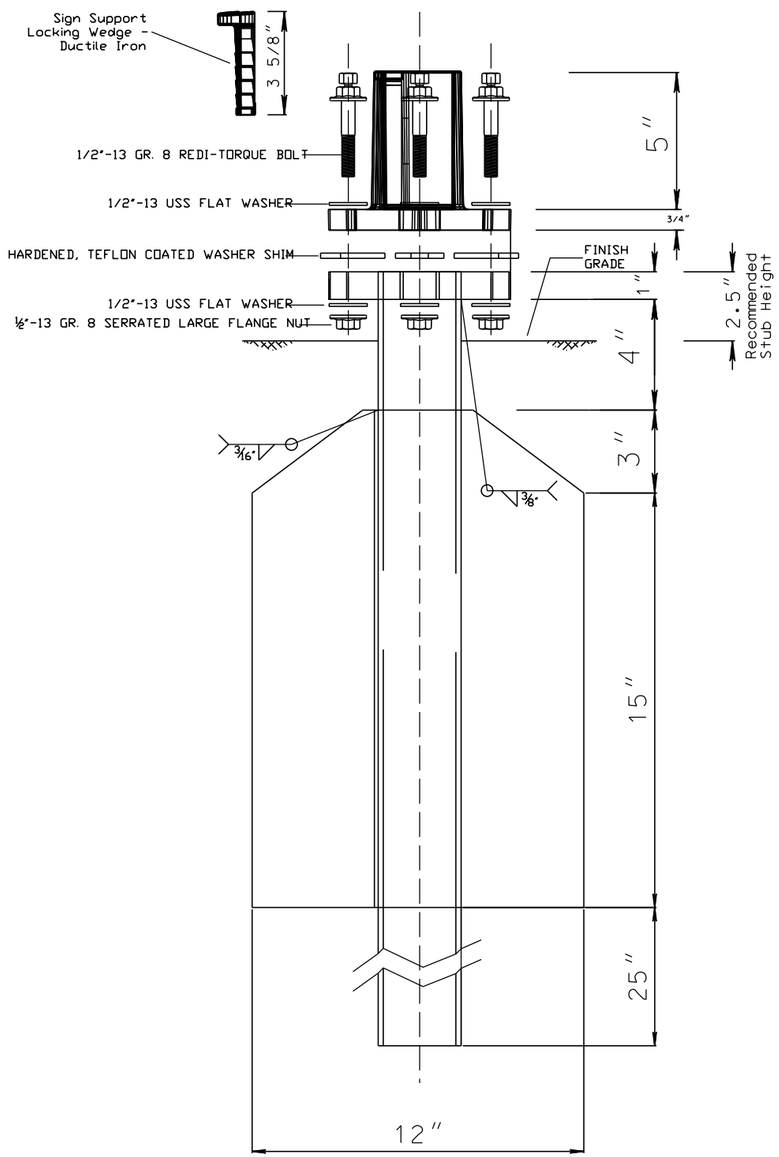

SLIP BASE

TOP POST RECEIVER for 2-½" SQUARE POST

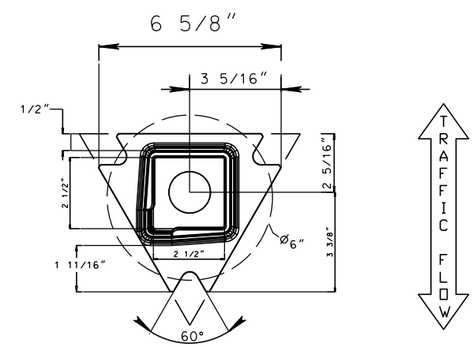

MATERIAL:
DUCTILE IRON CASTING, CLASS 65-45-12

BOTTOM UNIBASE SOIL STUB

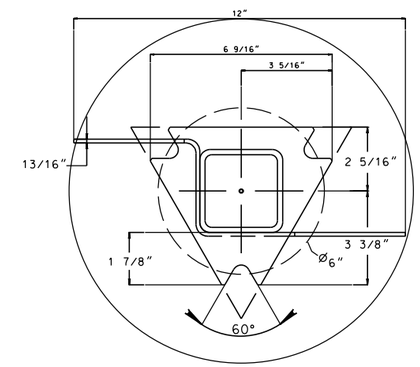

MATERIALS:
Tube - 3" x 3" x 7 ga. ASTM A500 Grade B tube
Stabilizing Wing - 7 ga. H.R.P.O. ASTM A 569
Plate - ASTM A572 grade 50

PLOTTED FROM - TRAB10100
PLOT NAME - 2
FILE ....\WINGED ANCHOR SLIP BASE 1-09.DGN

INSTALLATION DETAILS FOR MULTIPLE SIGN ASSEMBLIES

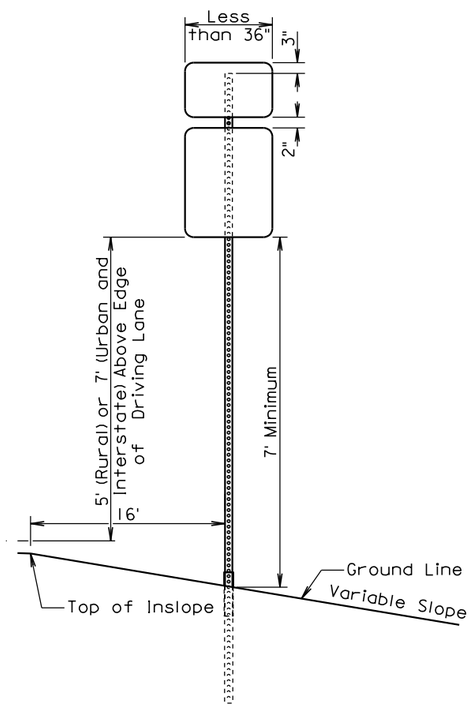

ELEVATION VIEW
(Single post assembly)

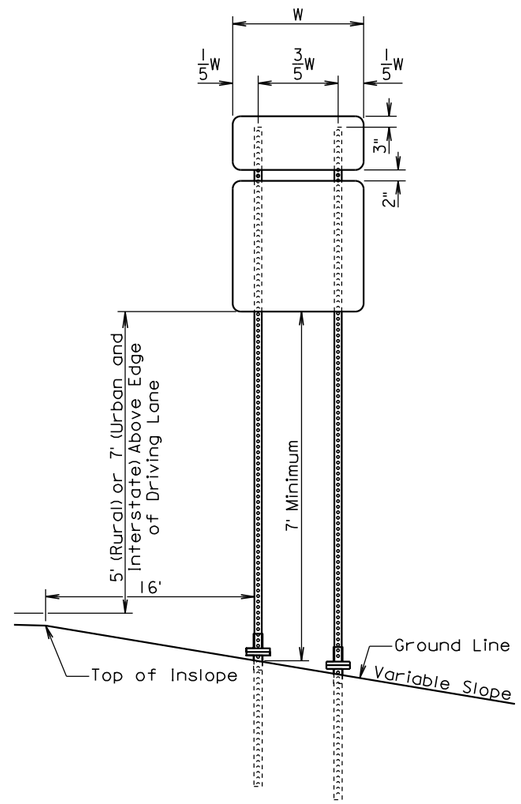

ELEVATION VIEW
(Double post assembly)

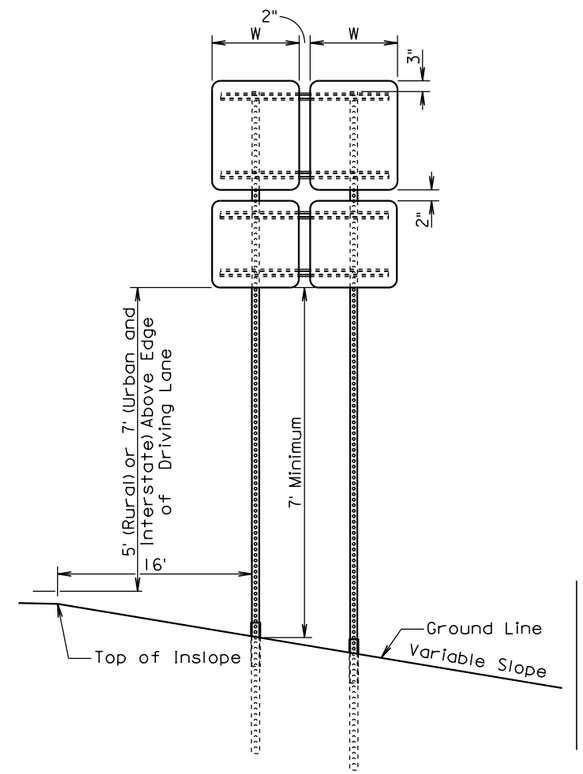

ELEVATION VIEW
(Double post assembly)

GENERAL NOTES:

The sign posts and bases shown are for illustrative purpose. The post type required shall be the type specified in the plans.

PLOT SCALE - 1:200
PLOTTED FROM - TRAB10100
PLOT NAME - 3
FILE - ...\SIGN POST INSTALL DETAILS.DGN

ONE POST BREAKAWAY SIGN SUPPORTS

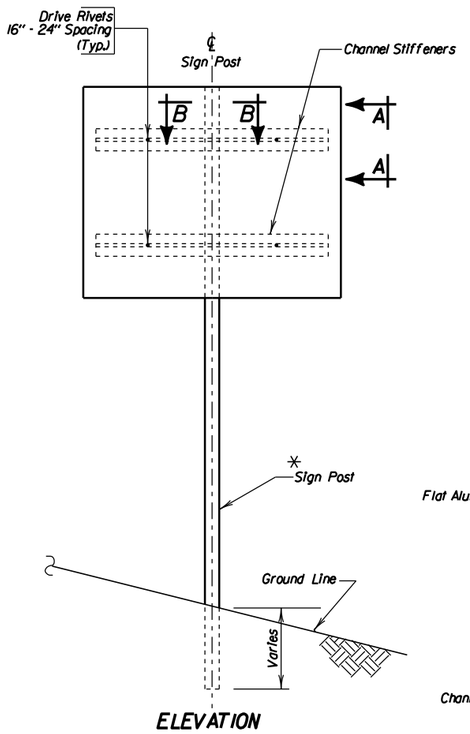

ELEVATION

Ø A plastic washer, as recommended by the sheeting manufacturer, shall be installed between the sign face and the metal washer shown.

Height and lateral distance as recommended by latest edition of MANUAL ON UNIFORM TRAFFIC CONTROL DEVICES.

* Single post installation shown. (See applicable Details or Standard Plates shown in these plans for multiple post spacing requirements.)

(Typical Sign and Stiffener Details)

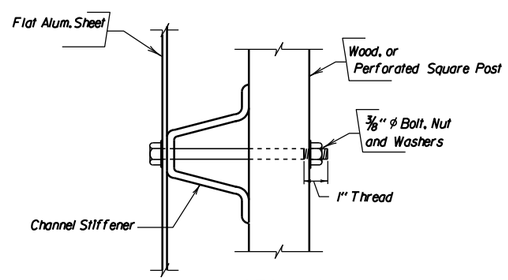

SEC. A-A

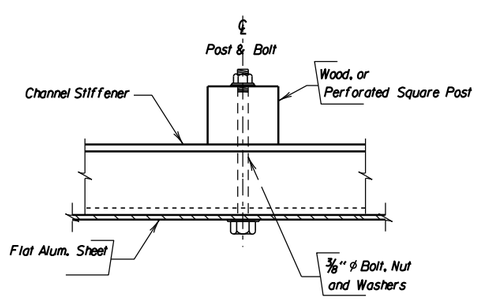

SEC. B - B

TWO POST BREAKAWAY SIGN SUPPORTS

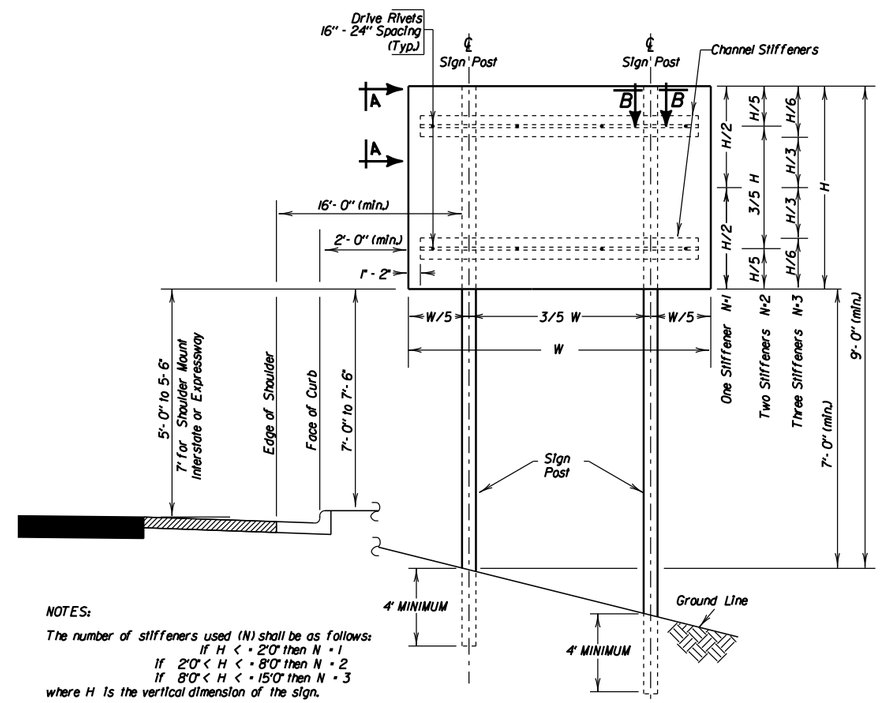

NOTES:

The number of stiffeners used (N) shall be as follows:

If $H < = 2'0"$ then $N = 1$
If $2'0" < H < = 8'0"$ then $N = 2$
If $8'0" < H < = 15'0"$ then $N = 3$

where H is the vertical dimension of the sign.

A minimum of two bolts shall be required to fasten the sign to each post.

SIGN SUPPORTS
(Lateral Off-Sets)

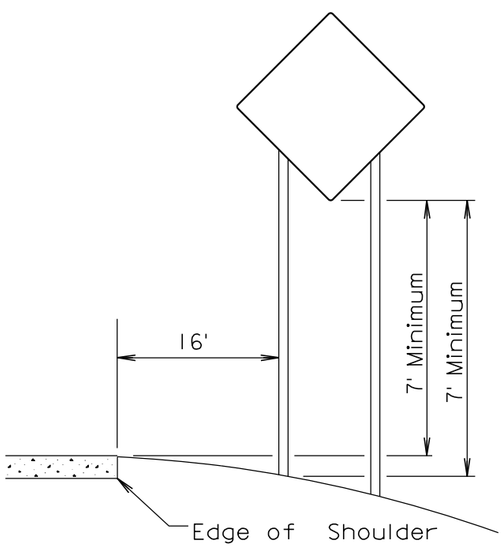

RURAL DISTRICT

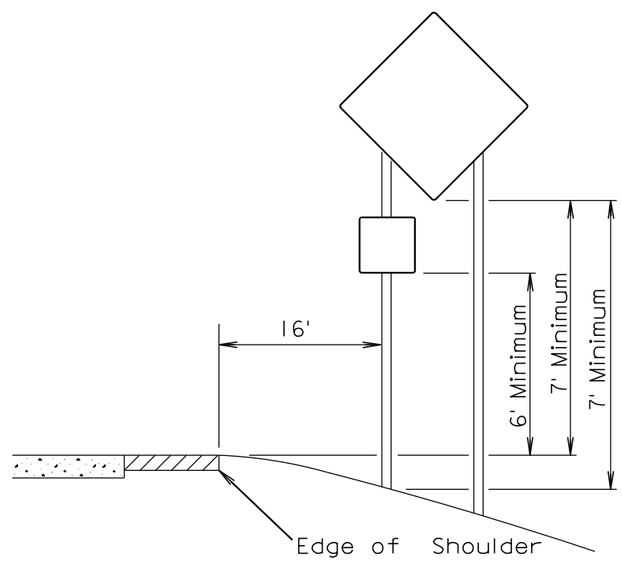

RURAL DISTRICT WITH SUPPLEMENTAL PLATE

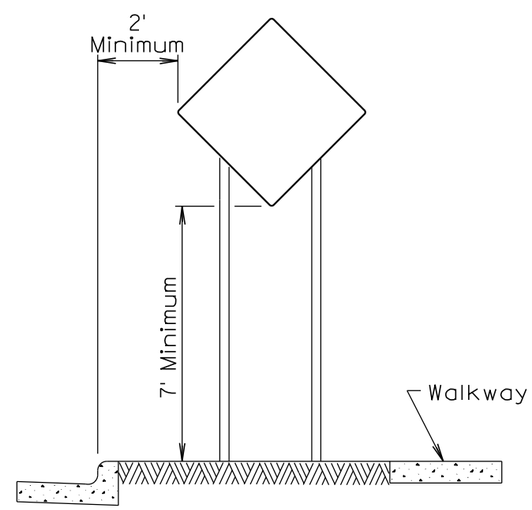

URBAN DISTRICT

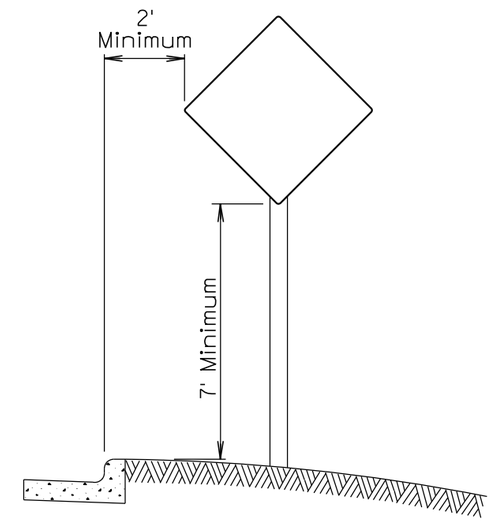

URBAN DISTRICT

INSTALLATION DETAILS FOR STOP SIGNS

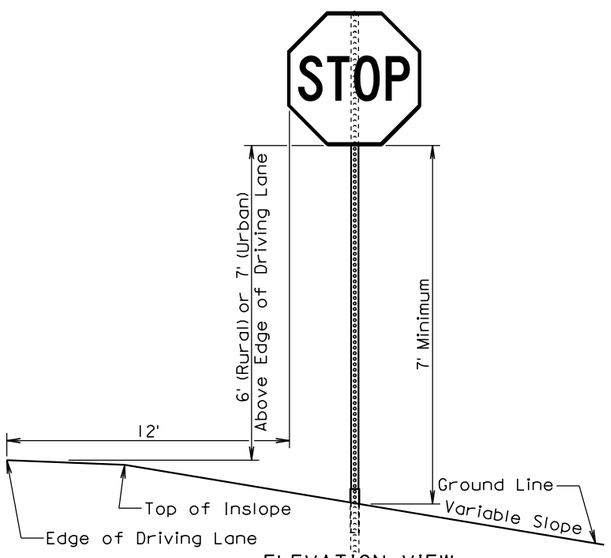

ELEVATION VIEW
(Single post assembly)

BREAKAWAY SUPPORT STUB CLEARANCE

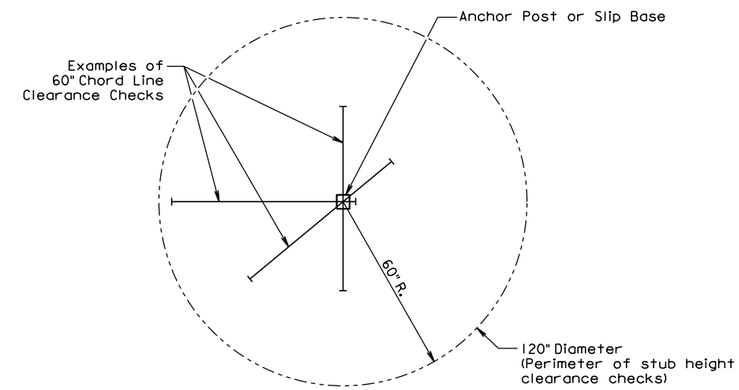

PLAN VIEW
(Examples of stub height clearance checks)

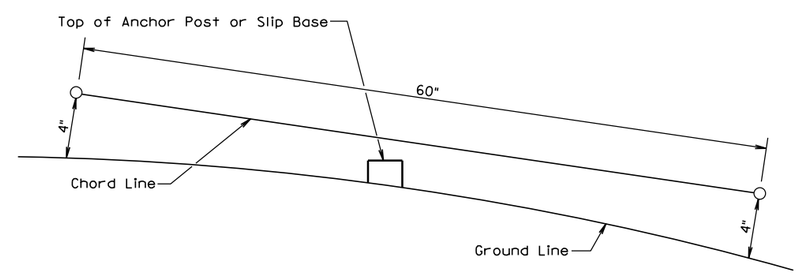

ELEVATION VIEW

GENERAL NOTES:

The top of anchor posts and slip bases SHALL NOT extend above a 60" chord line within a 120" diameter circle around the post with ends 4" above the ground.

At locations where there is curb and gutter adjacent to the breakaway sign support, the stub height shall be a maximum of 4" above the ground line at the localized area adjacent to the breakaway support stub.

PLOT SCALE - 1:200
PLOTTED FROM - TRAB10100
PLOT NAME - 6
FILE - ...\SIGN POST INSTALL DETAILS.DGN

SIGN BANDING TO LUMINAIRE/SIGNAL POLE

Top View

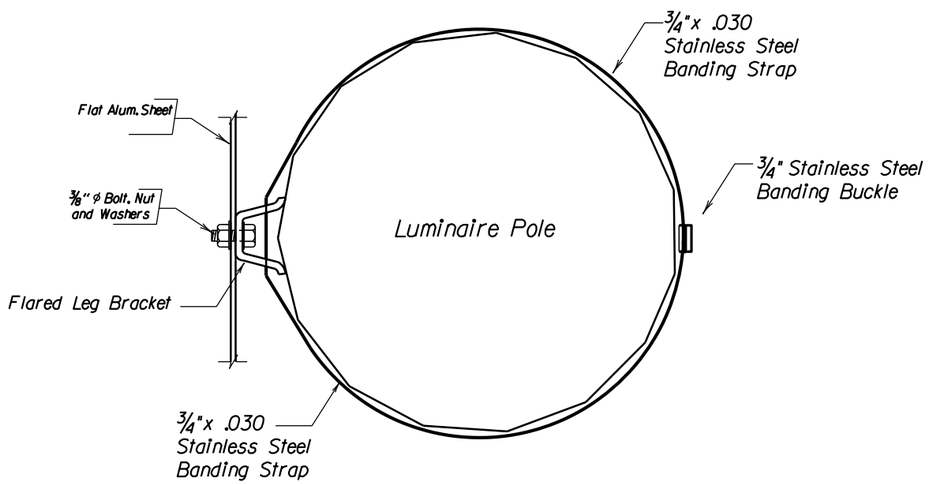

Back View

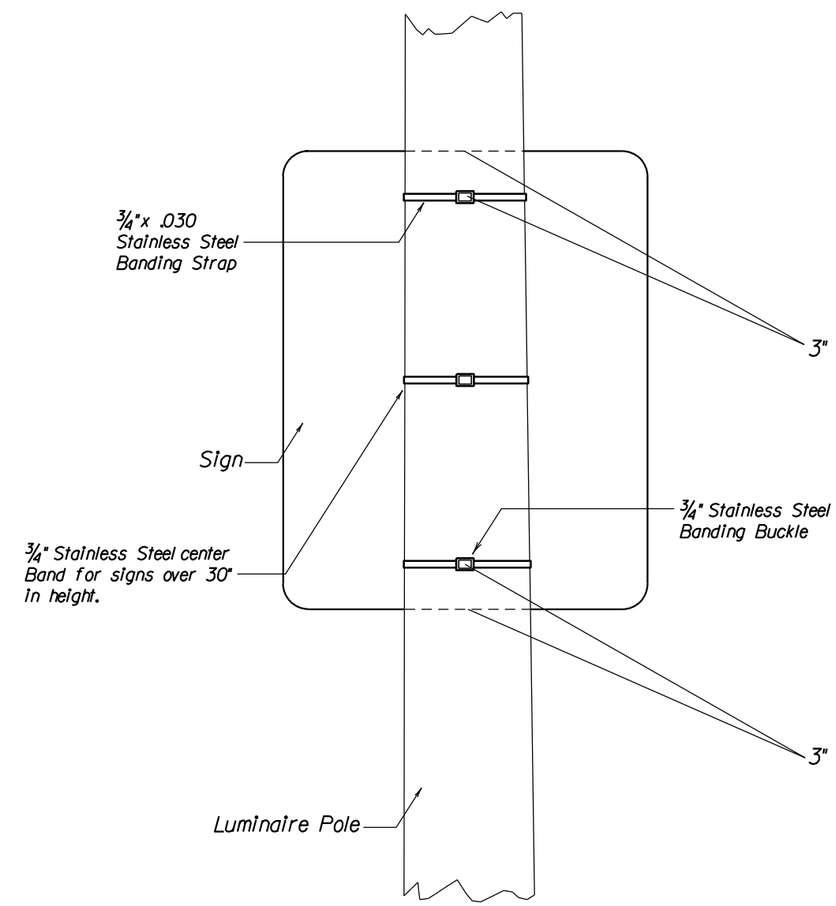

ø A plastic washer, as recommended by the sheeting manufacturer, shall be installed between the sign face and the metal washer shown.

STATE OF SOUTH DAKOTA	PROJECT	SHEET NO.	TOTAL SHEETS
	P 0037(129)207 NH 0012(198)308	S32	S34

Plotting Date: 09/23/2015

48" WINGED SLIP BASE

Post and Wind Load Information

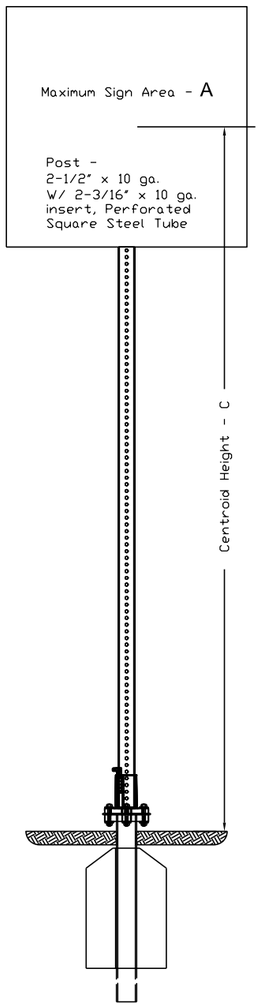

centroid - C	Maximum Sign Area - A
8 ft.	42 ft²
9 ft.	38 ft²
10 ft.	34 ft²
11 ft.	30 ft²
12 ft.	28 ft²
13 ft.	26 ft²
14 ft.	24 ft²
15 ft.	22 ft²
16 ft.	20 ft²

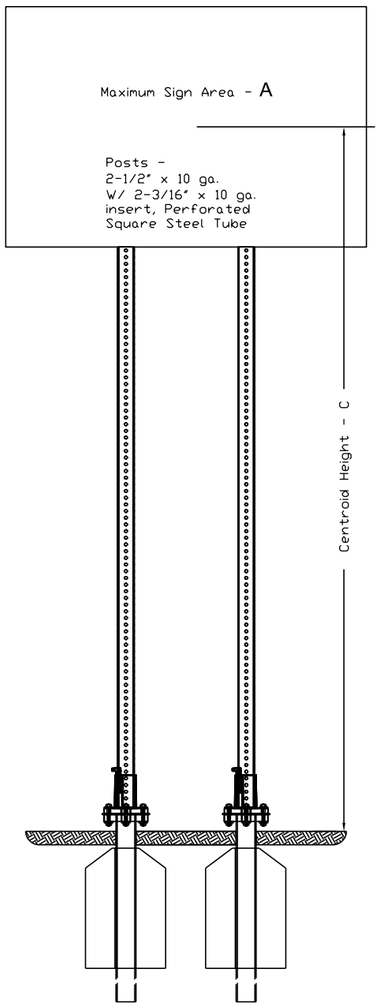

centroid - C	Maximum Sign Area - A
8 ft.	84 ft²
9 ft.	76 ft²
10 ft.	68 ft²
11 ft.	60 ft²
12 ft.	56 ft²
13 ft.	52 ft²
14 ft.	48 ft²
15 ft.	44 ft²
16 ft.	40 ft²

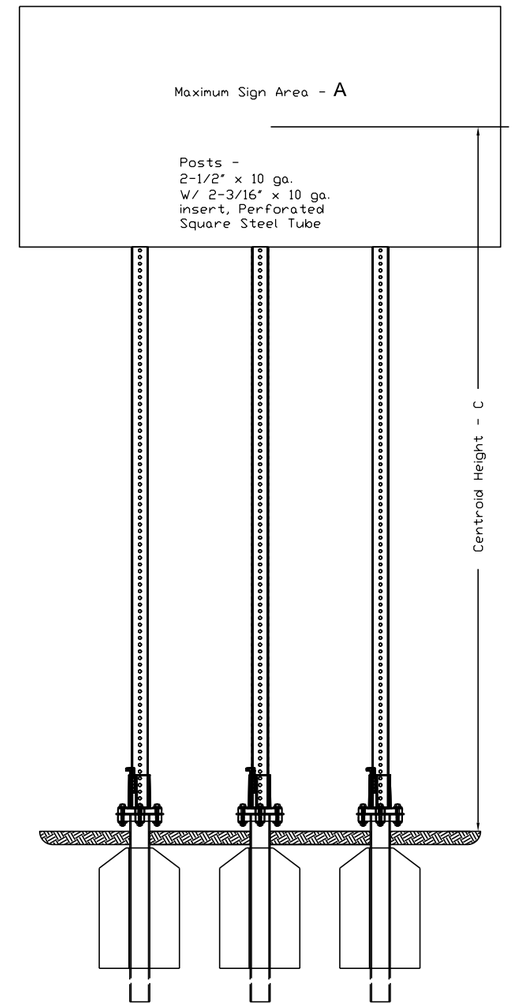

centroid - C	Maximum Sign Area - A
8 ft.	126 ft²
9 ft.	114 ft²
10 ft.	102 ft²
11 ft.	90 ft²
12 ft.	84 ft²
13 ft.	78 ft²
14 ft.	72 ft²
15 ft.	66 ft²
16 ft.	60 ft²

PLOT SCALE - 1:0.88
PLOTTED FROM - TRAB10100
PLOT NAME - 8
FILE -...\WINGED ANCHOR SLIP BASE 1-09.DGN

STATE OF SOUTH DAKOTA	PROJECT	SHEET NO.	TOTAL SHEETS
	P 0037(129)207 NH 0012(198)308	S33	S34

Plotting Date: 06/08/2016

Revised 06/08/2016 CJP

ERECTION DETAILS FOR ADVANCE TRAFFIC CONTROL SIGN & FLASHING BEACONS SPECIAL DETAIL

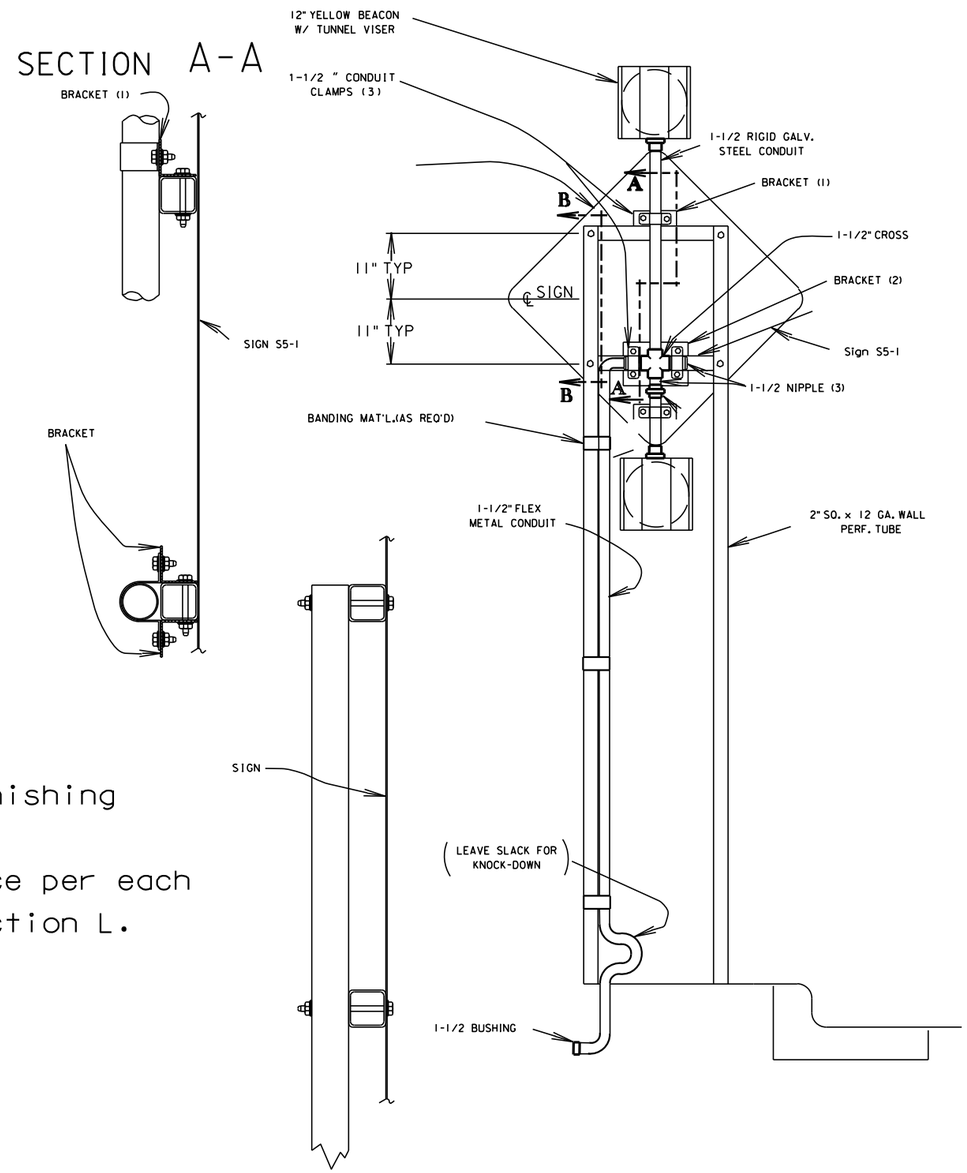

Note: All costs associated with furnishing and installing the conduit shall be incidental to the contract unit price per each for Signal Flasher Unit shown in Section L.

PLOT SCALE - 1:200

PLOTTED FROM - TRAB10100

PLOT NAME - 1

FILE - ...\BRWN039K\SECTION S\SADVSGN.DGN

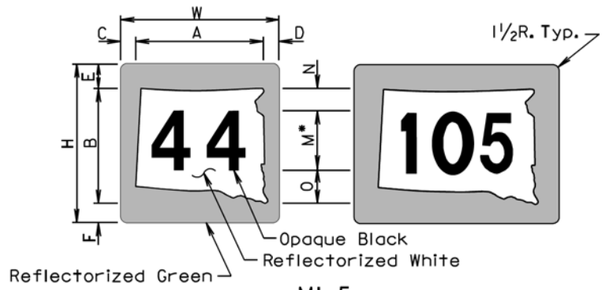

MI-5

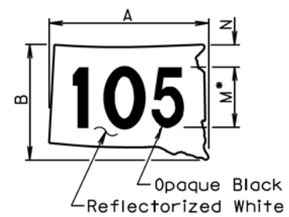

STG

SIGN CODE	WxH	A	B	C	D	E	F	M*	N	O
MI-5	24x24	20½	18	2	1½	3½	2½	12D	2	4
MI-5**	30x24	24	18	2¼	1¾	3½	2½	12D	2	4
MI-5	30x30	25⅝	22½	2½	1⅞	4⅜	3⅛	15D	2½	5
MI-5	36x36	30¾	27	3	2¼	5¼	3¾	18D	3	6

SIGN CODE	AxB	M*	N
STG-24	24x18	10D	4
STG-32	32x24	12D	4¾
STG-48	48x36	18D	7
STG-64	64x48	24D	9½

*In the few cases where there is not enough space for the numerals, the standard "D" series font may be replaced with "C" series font if approved by the Engineer.

**3 Digits

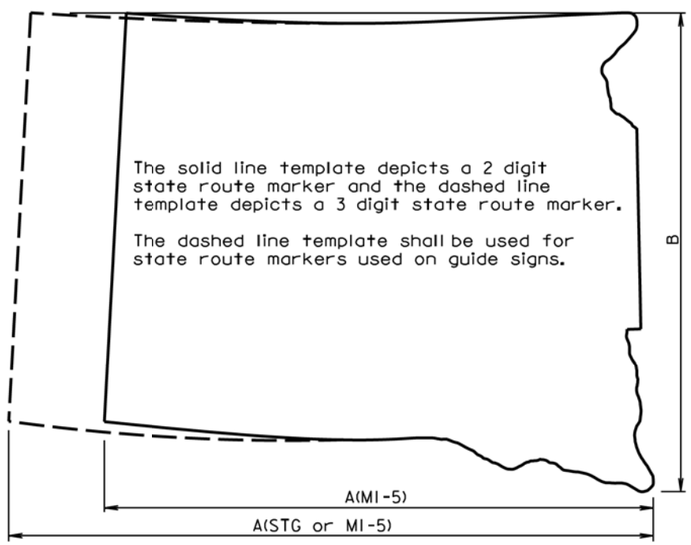

TEMPLATE FOR STATE ROUTE MARKER

GENERAL NOTES:

The unit for all dimensions shown is inches.

Numerals shall be "D" series font for all state route markers except as noted above.

December 23, 2003

Published Date: 3rd Qtr. 2015	SDDOT	***STATE ROUTE MARKERS***	***PLATE NUMBER*** 632.20 *Sheet 1 of 1*

PLOT SCALE - 1:200
PLOTTED FROM - TRAB10100
PLOT NAME - 1
FILE - ...\STANDARDPLATESDHWYROUTEMARKER.DGN