STATE OF SOUTH DAKOTA	PROJECT	SHEET	TOTAL SHEETS
	P 0037(129)207 NH 0012(198)308	X1	X50

Plotting Date: 07/07/2015

Section X: Cross Sections

INDEX OF SHEETS

X1 General Layout w/Index
X2-X40 Cross Sections for SD37
X41-X50 Cross Sections for US12

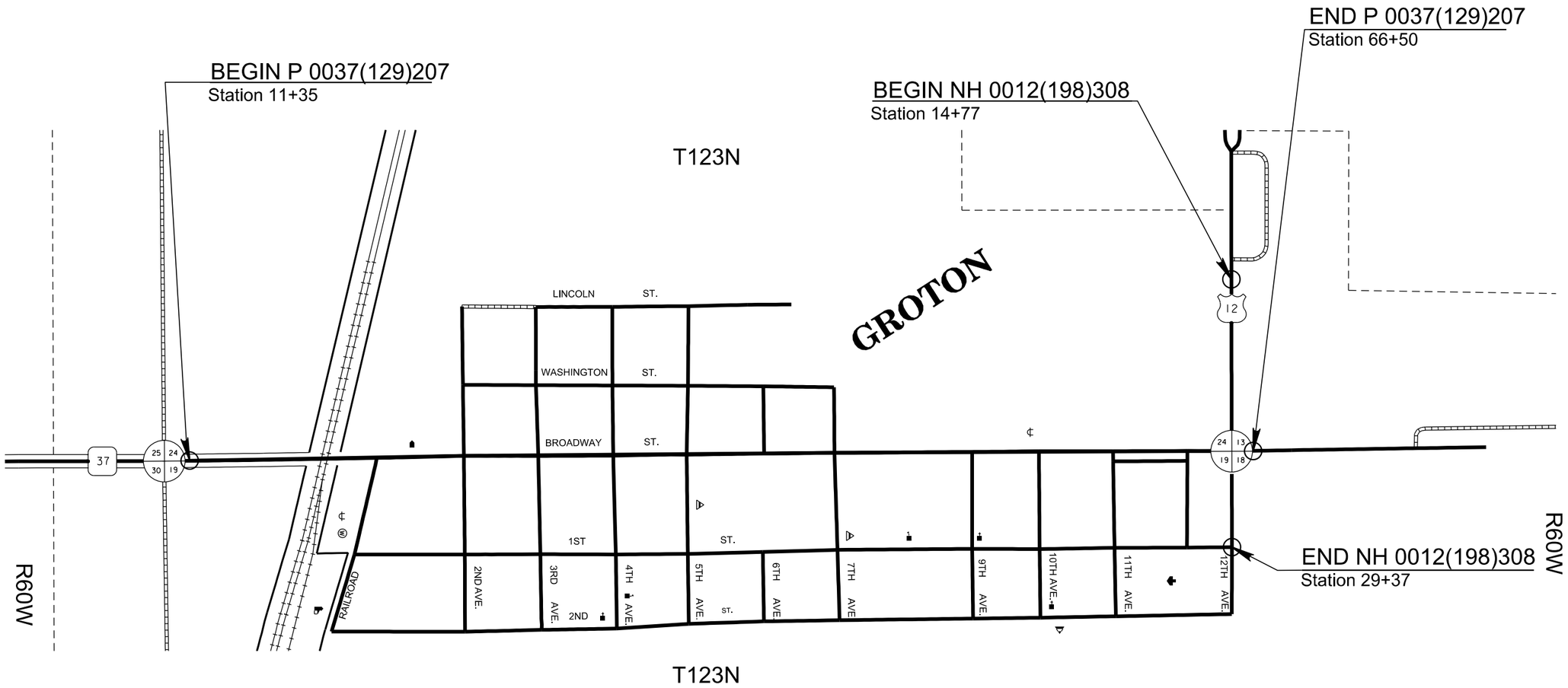

Plot Scale - 1:200

Plotted From - tnpr13287

File - U:\rdprj\brwn039K\titleX.dgn

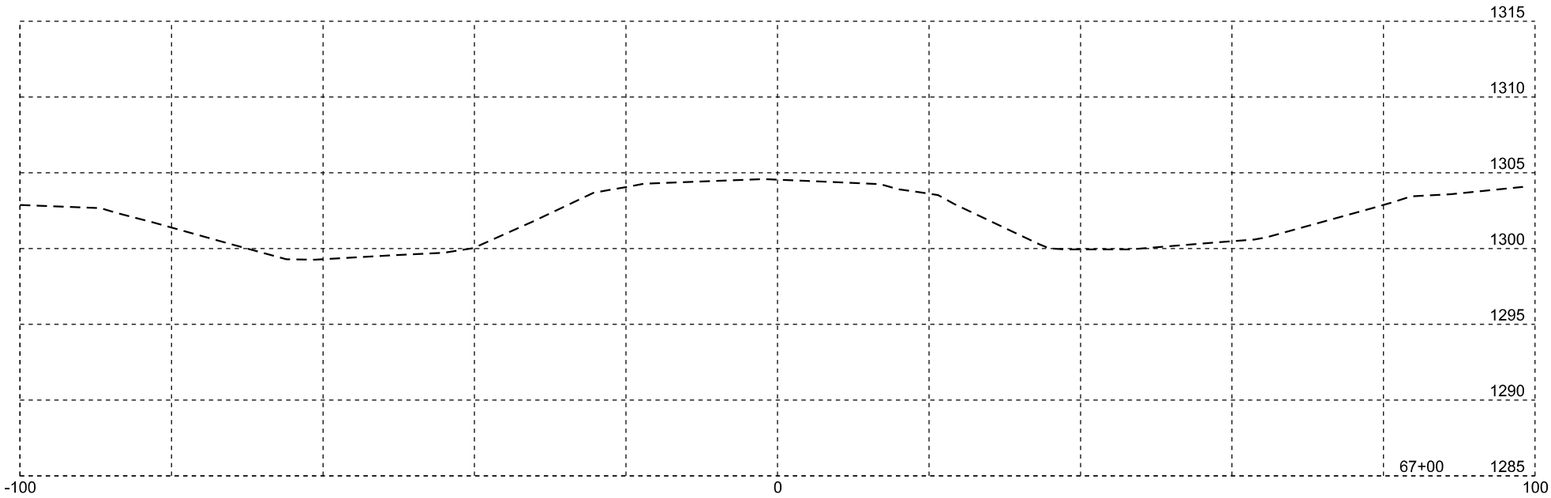

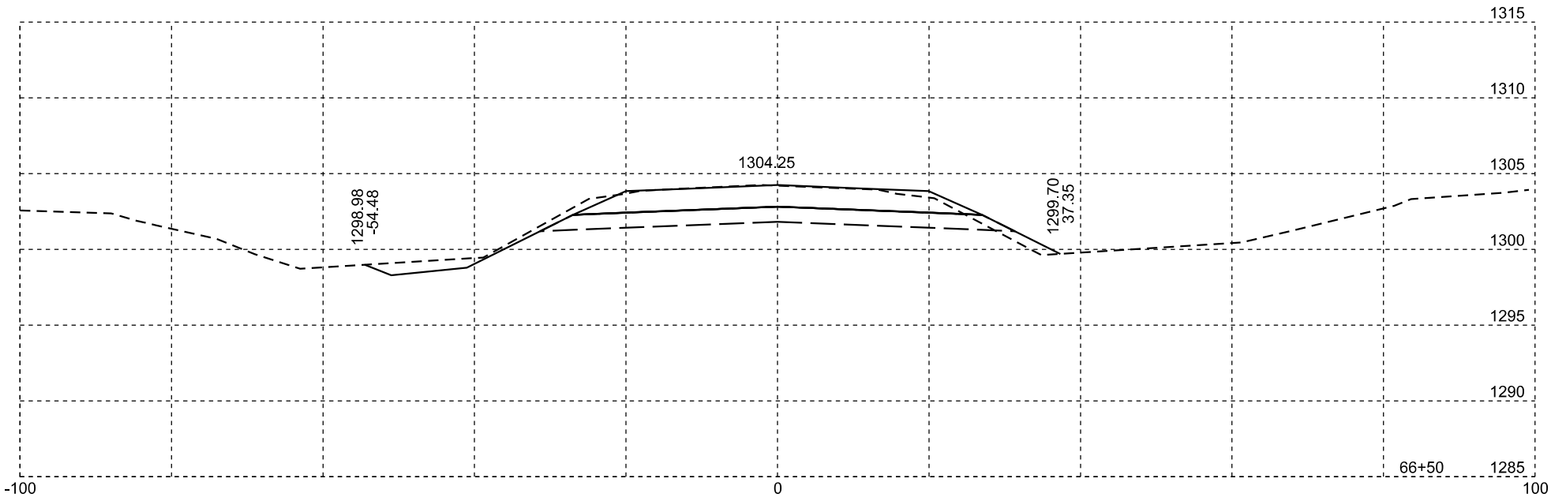

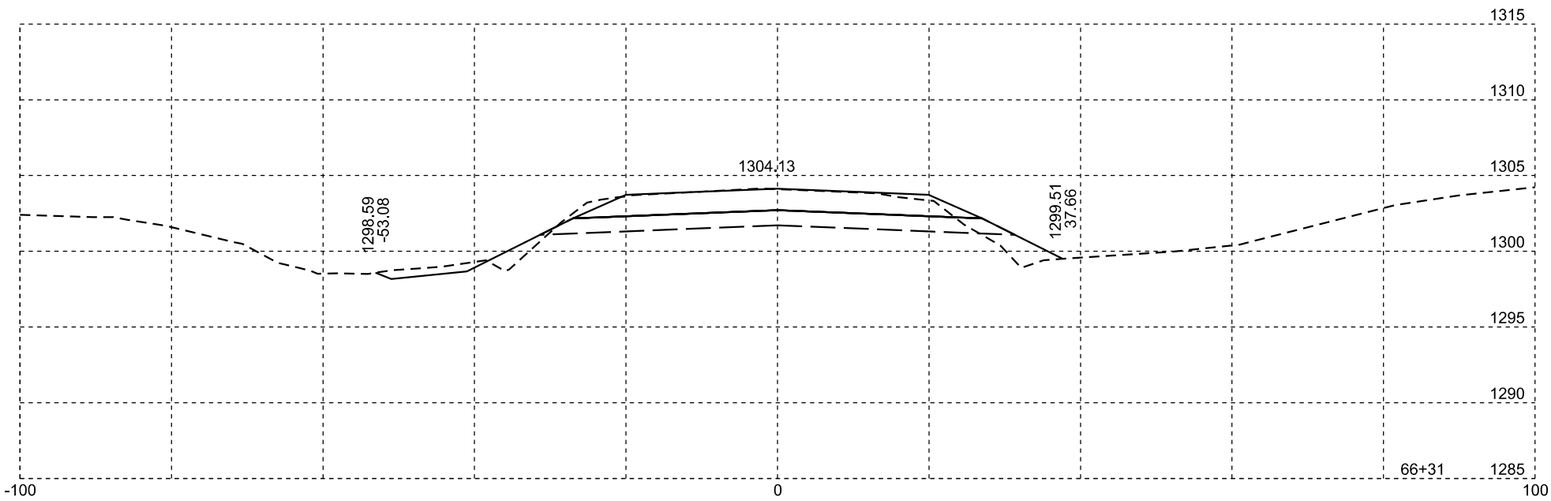

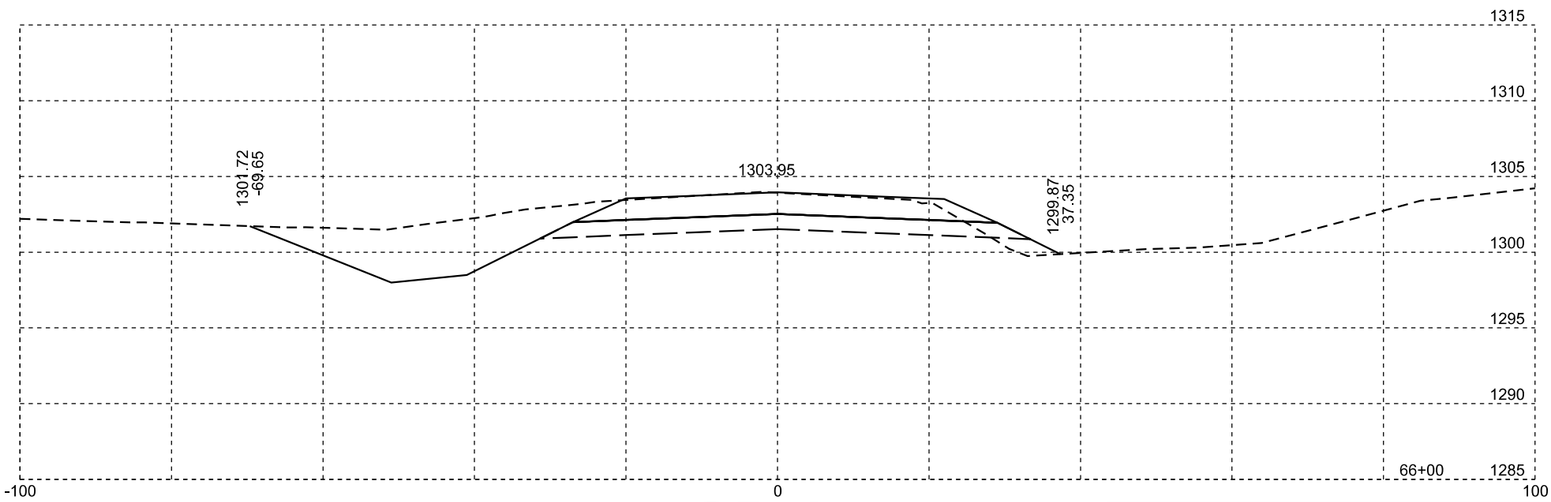

SD 37

Plotting Date: 04/12/2016

STATE OF SOUTH DAKOTA	PROJECT	SHEET NO.	TOTAL SHEETS
	P 0037(129)207 NH 0012(198)308	X2	X50

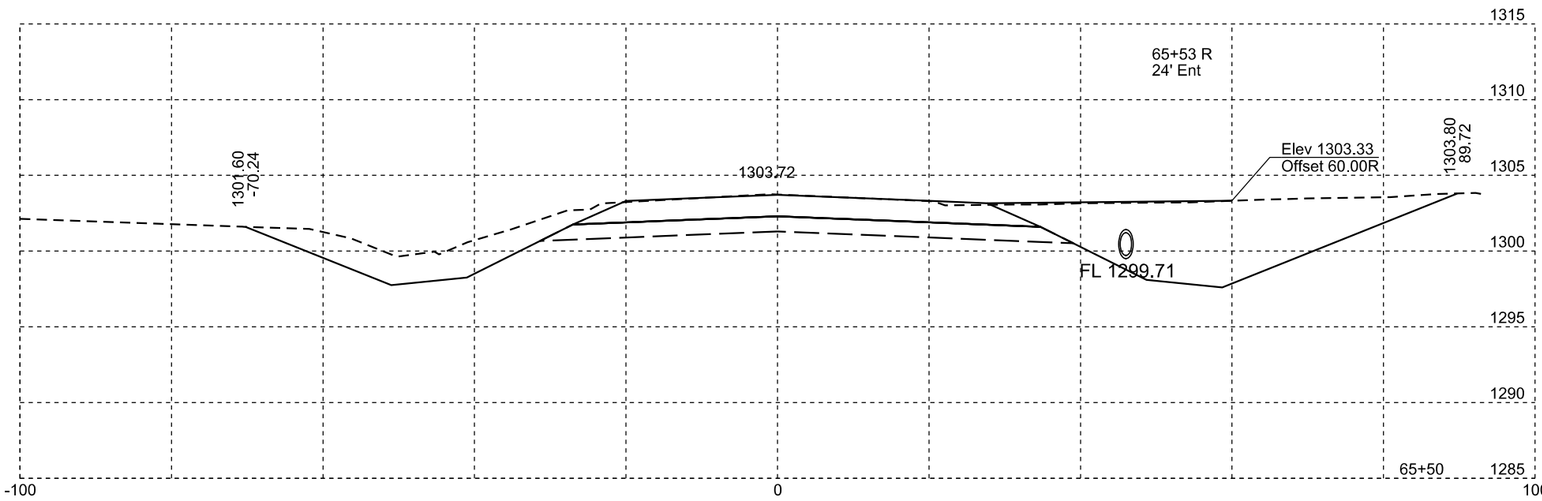

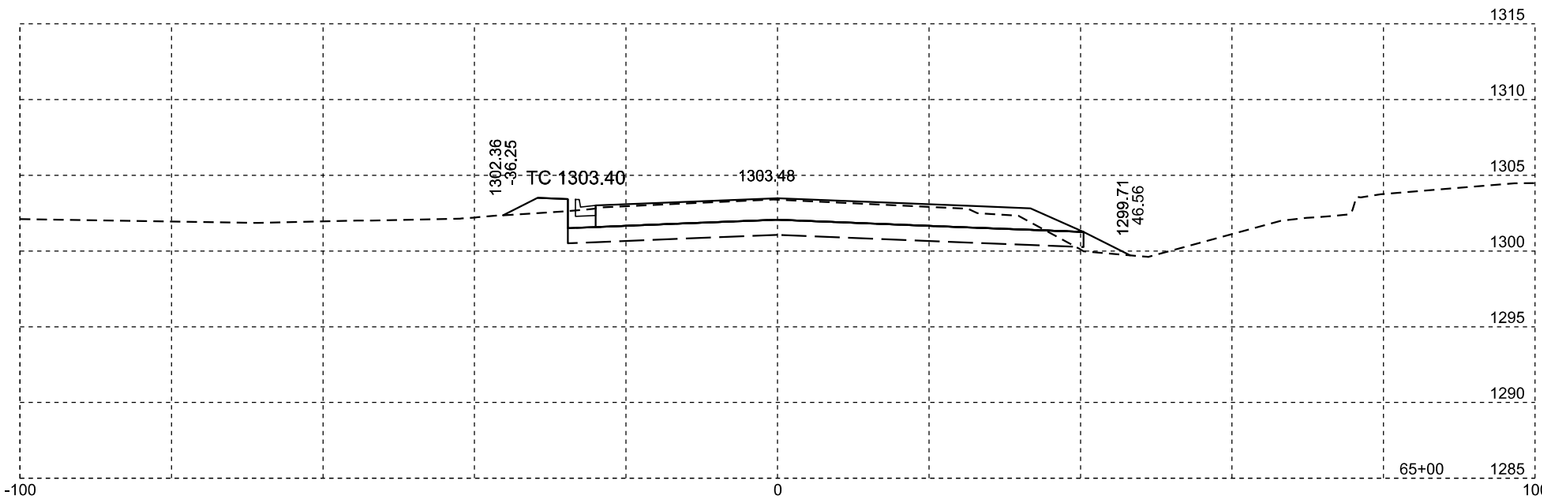

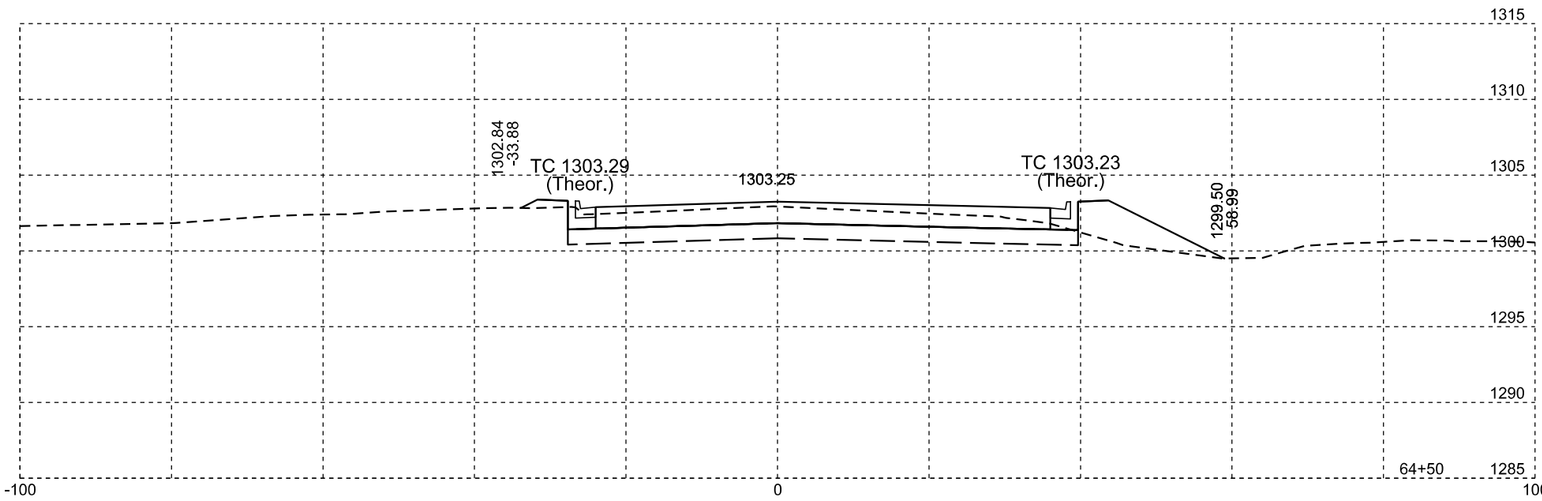

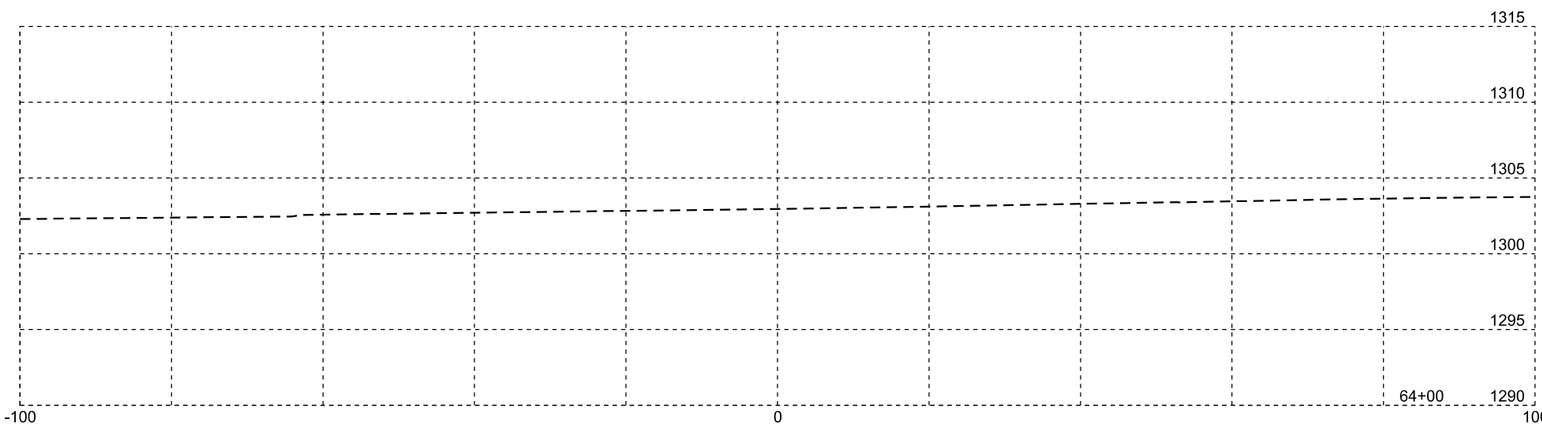

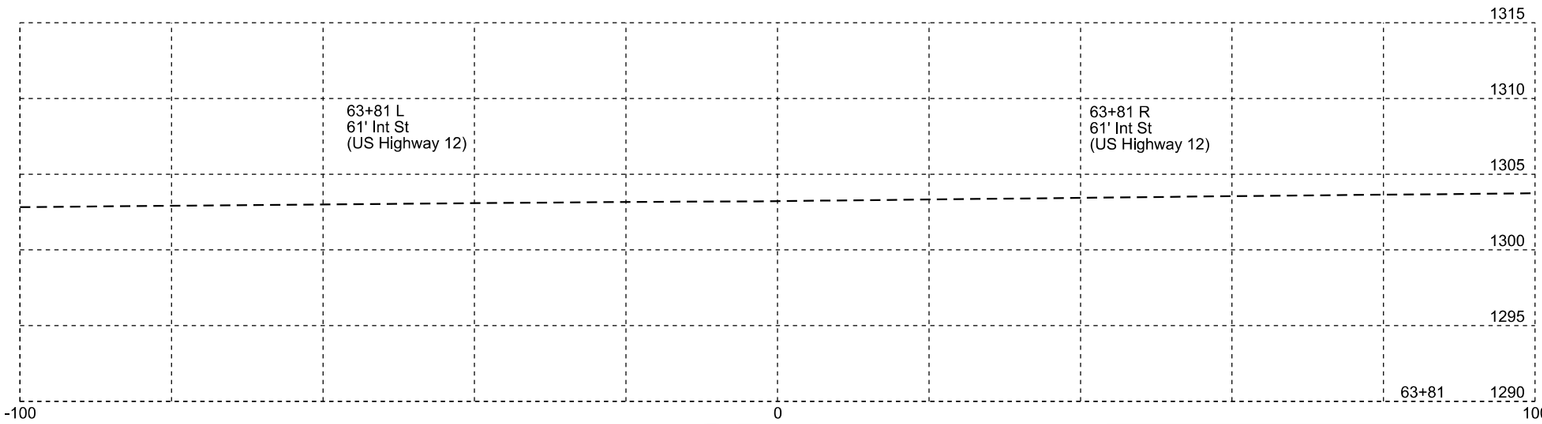

SD 37

Plotting Date: 04/12/2016

STATE OF SOUTH DAKOTA	PROJECT	SHEET NO.	TOTAL SHEETS
	P 0037(129)207 NH 0012(198)308	X3	X50

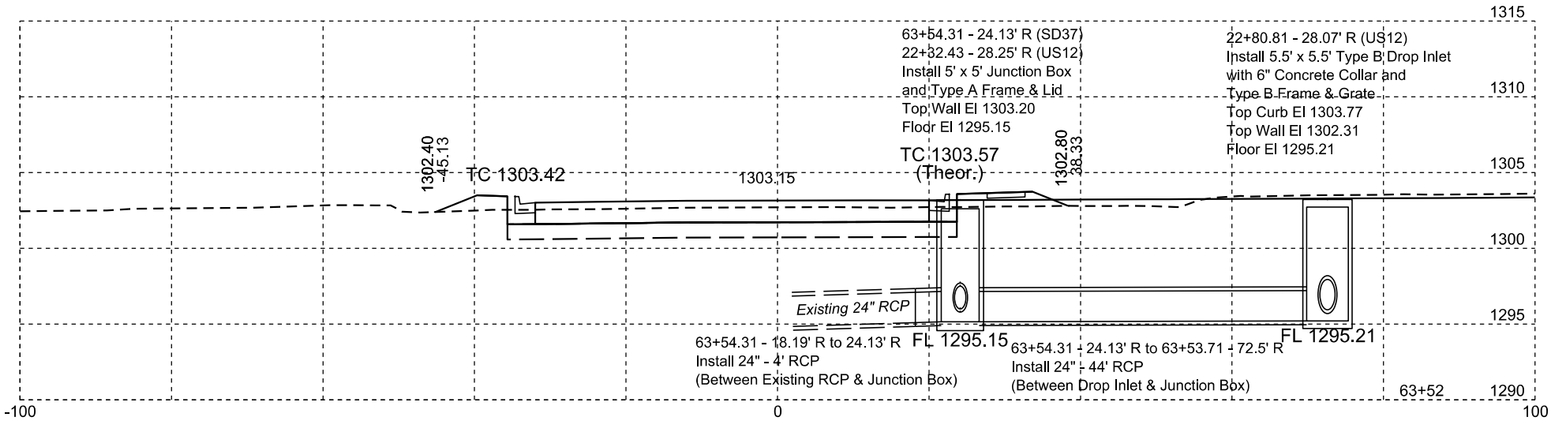

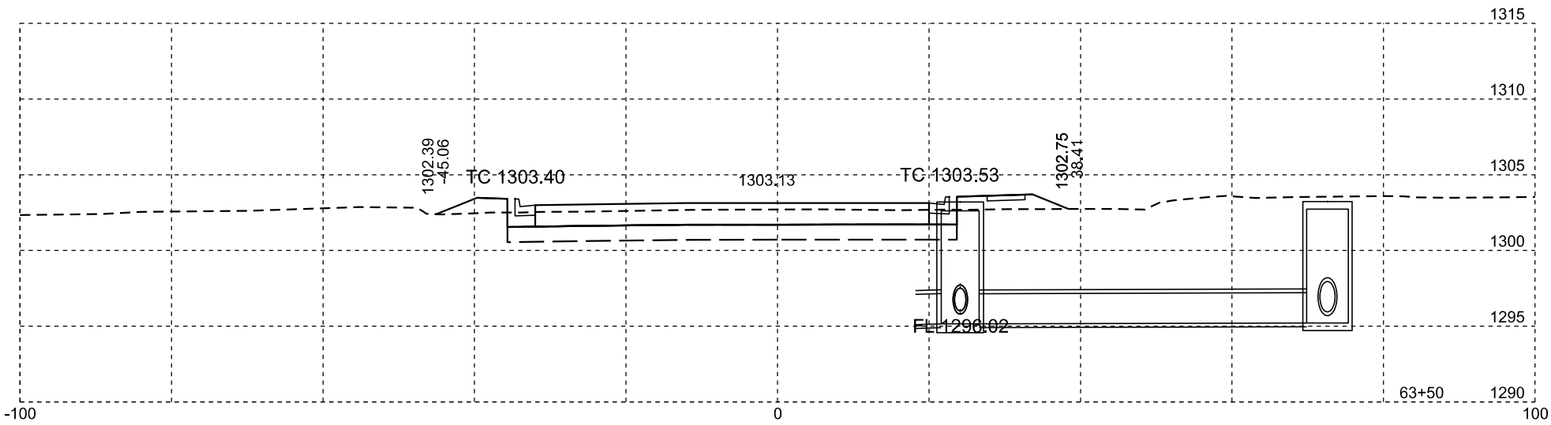

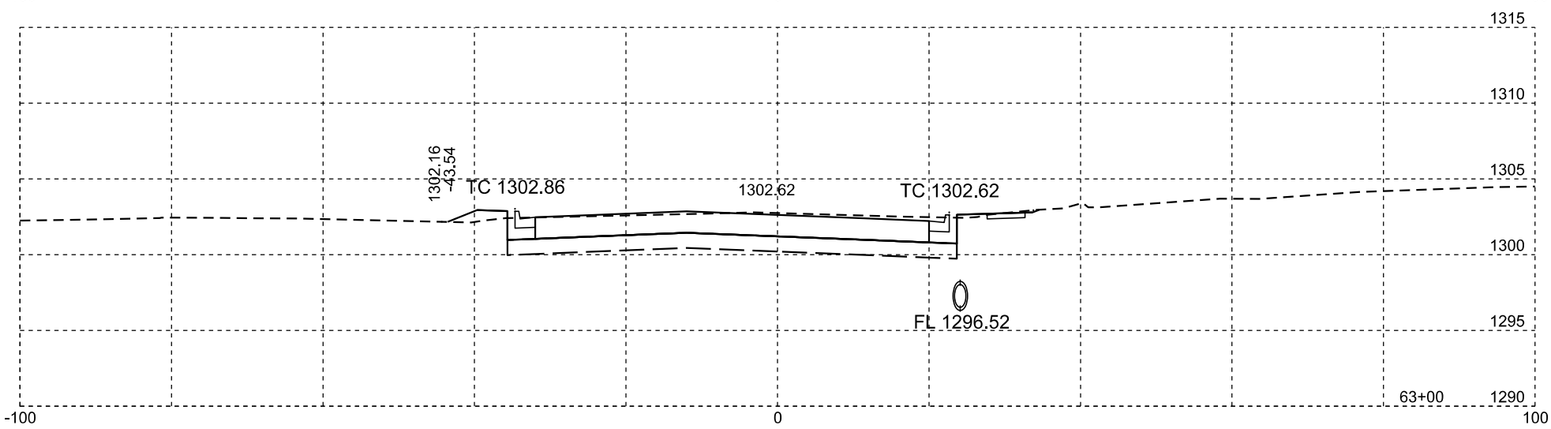

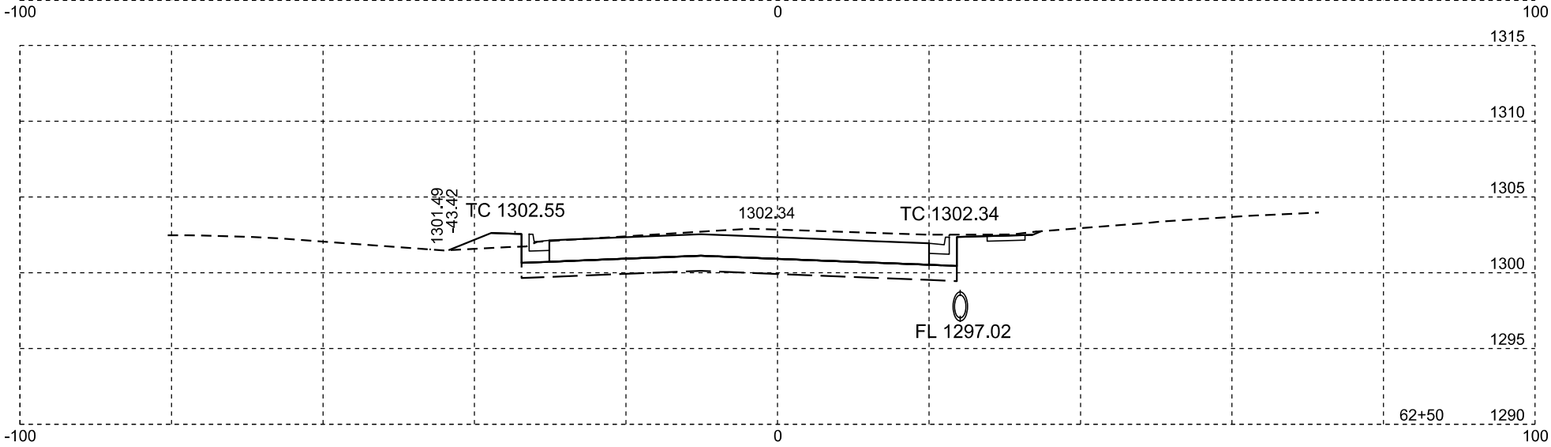

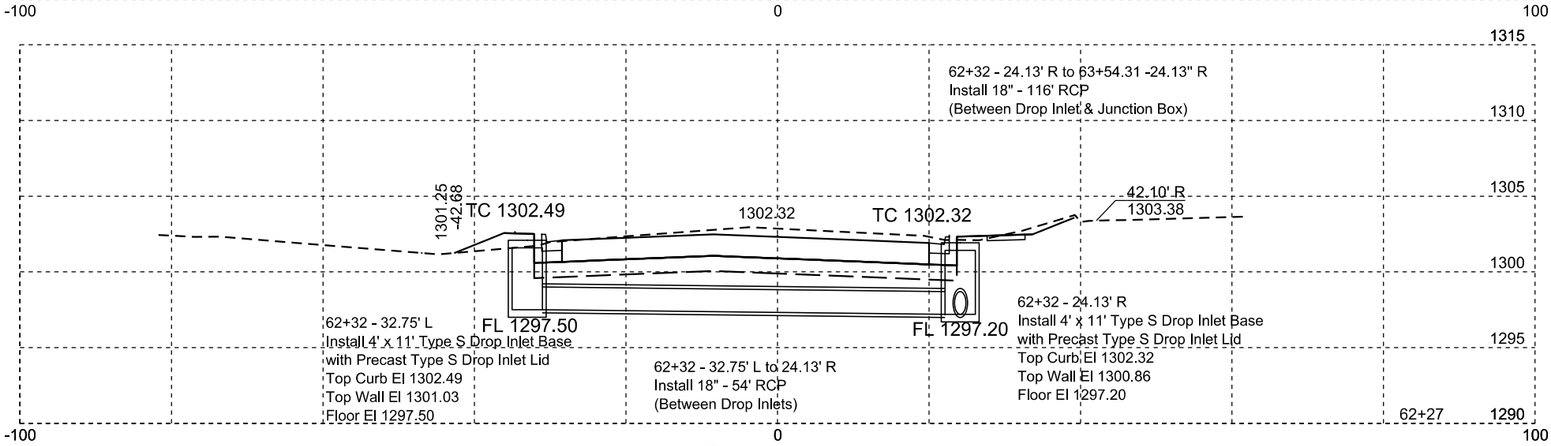

SD 37

Plotting Date: 04/12/2016

STATE OF SOUTH DAKOTA	PROJECT	SHEET NO.	TOTAL SHEETS
	P 0037(129)207 NH 0012(198)308	X4	X50

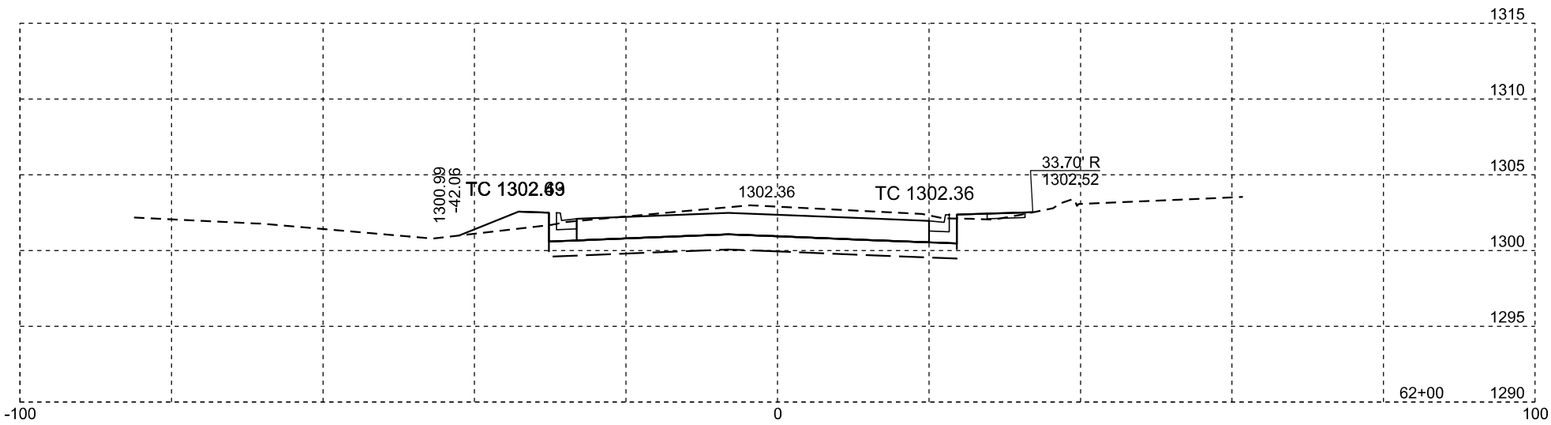

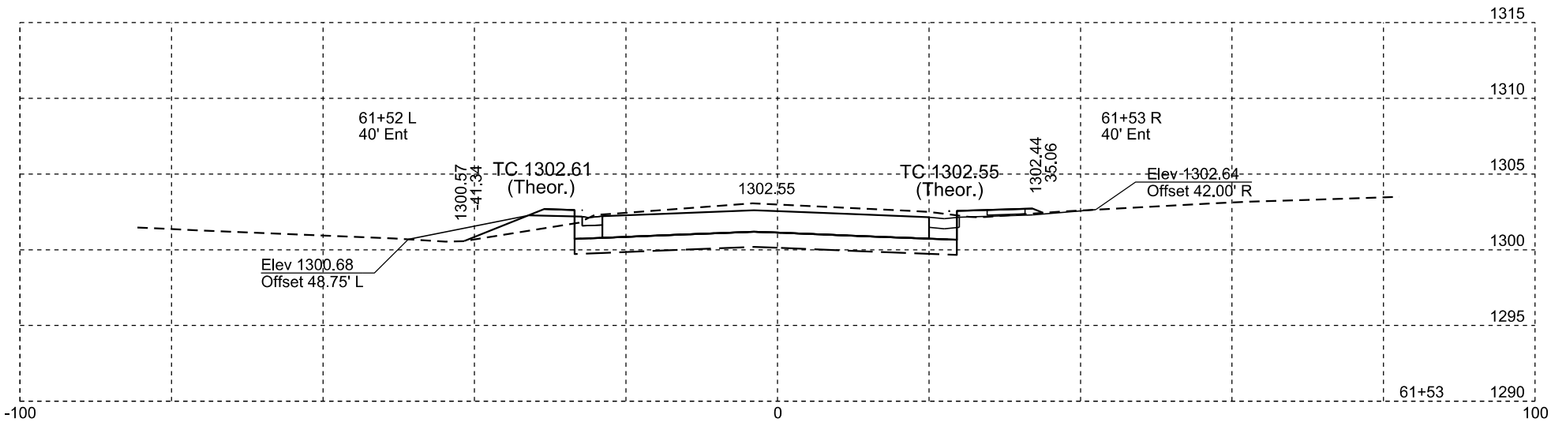

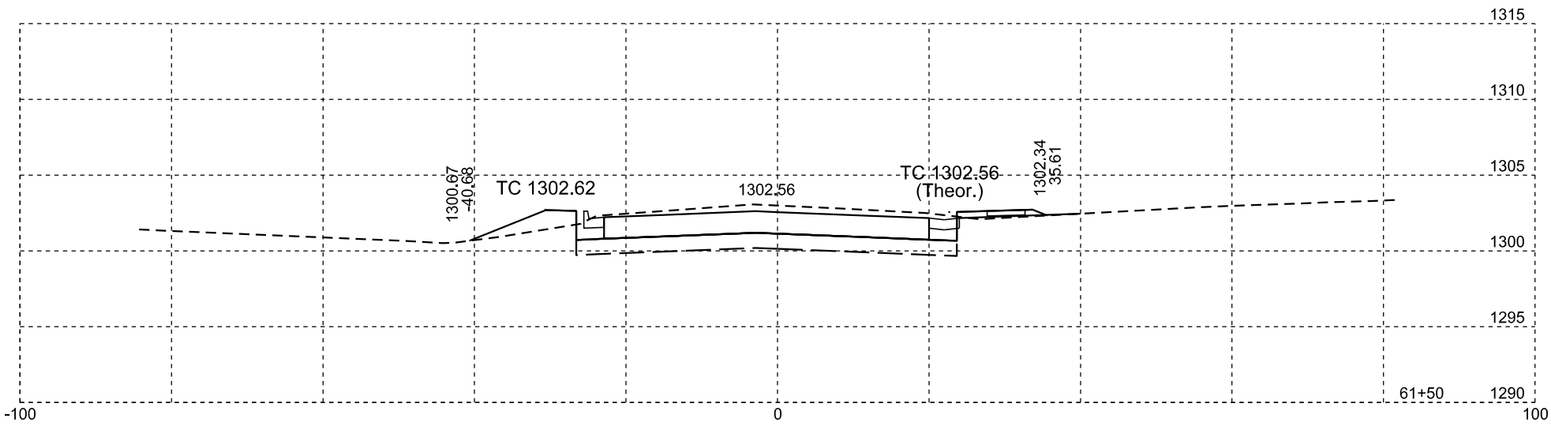

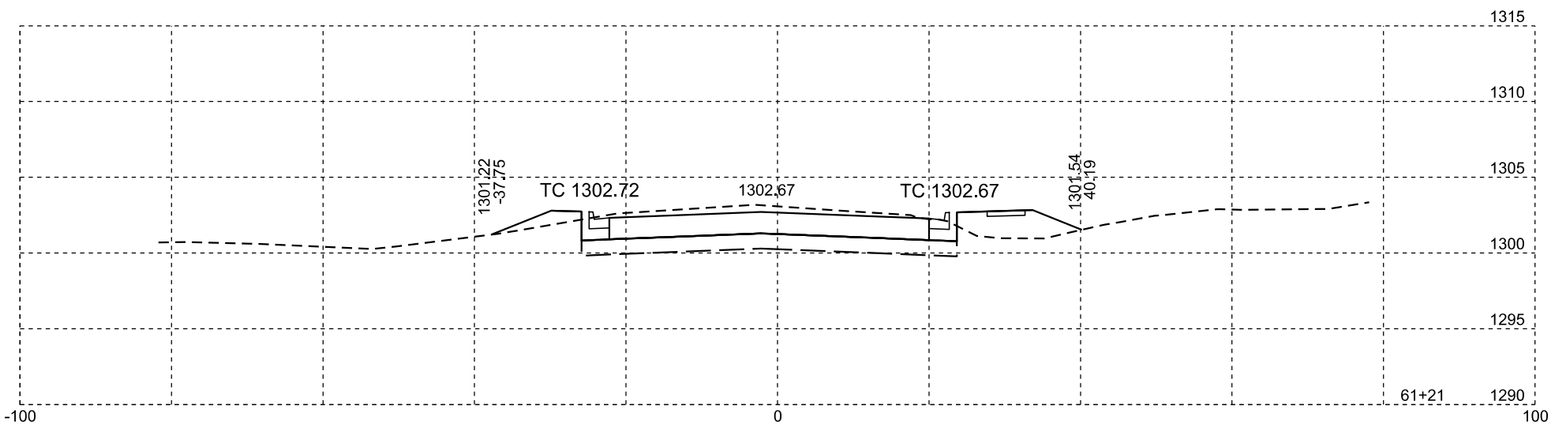

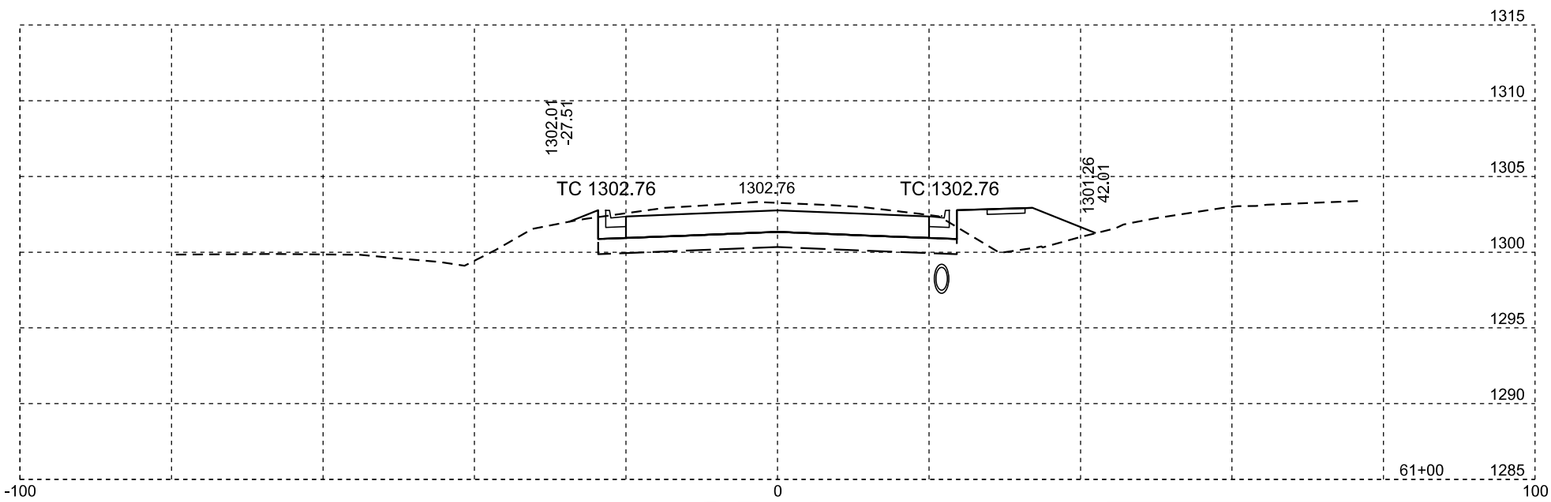

SD 37

Plotting Date: 04/12/2016

STATE OF SOUTH DAKOTA	PROJECT	SHEET NO.	TOTAL SHEETS
	P 0037(129)207 NH 0012(198)308	X5	X50

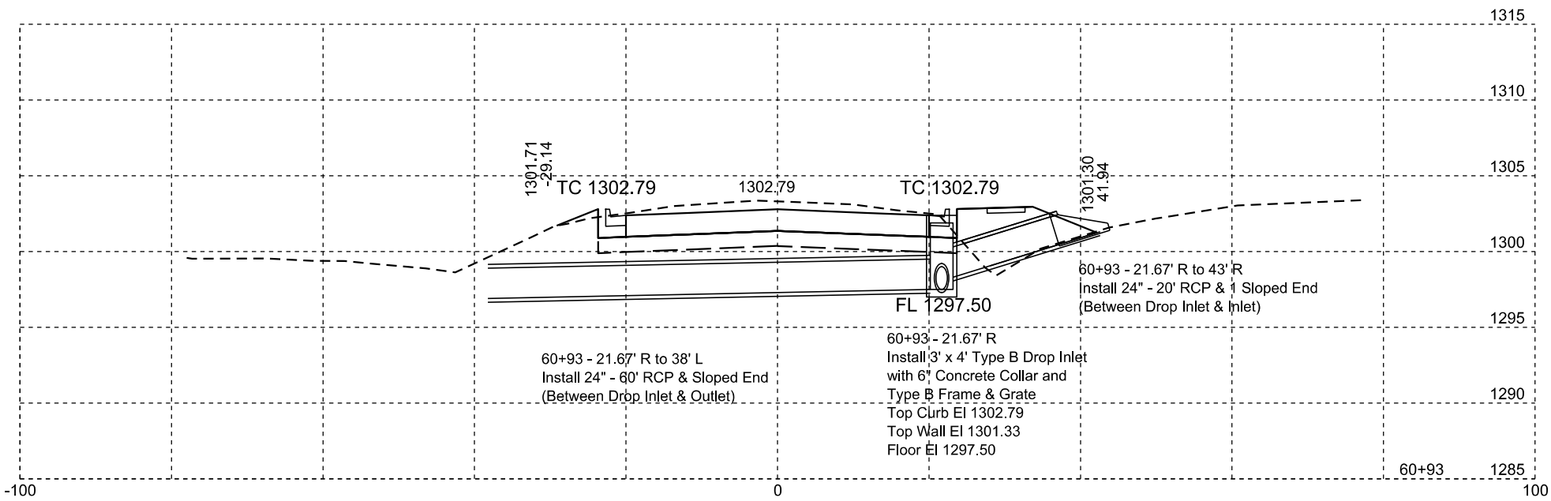

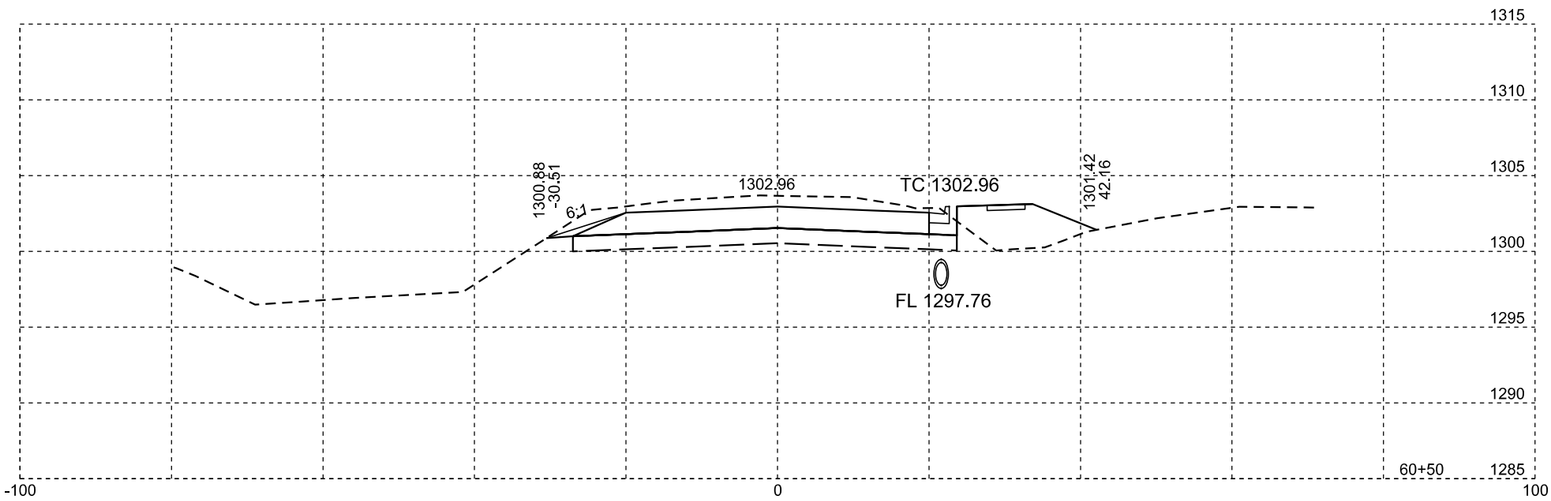

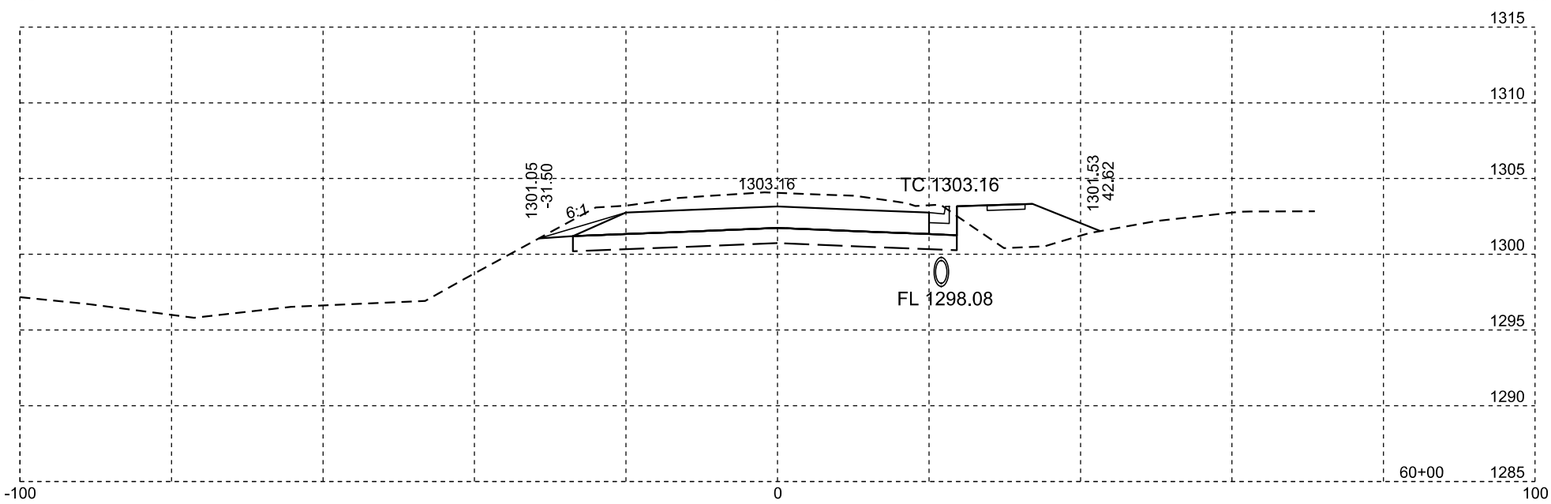

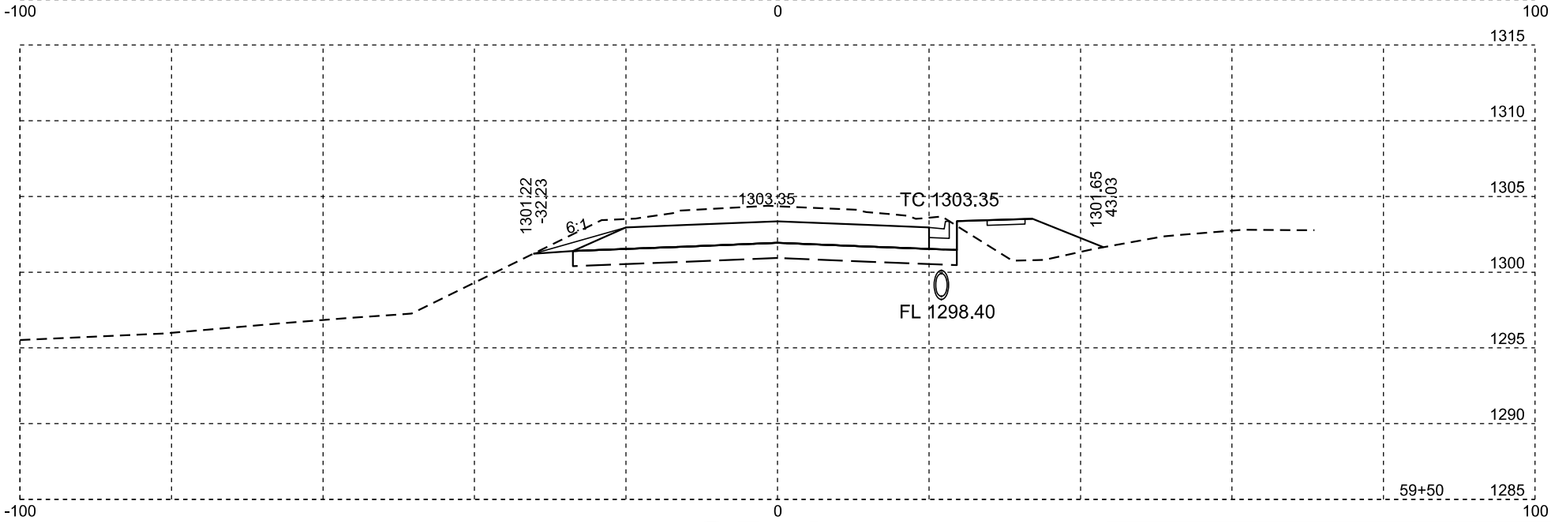

SD 37

Plotting Date: 04/12/2016

STATE OF SOUTH DAKOTA	PROJECT	SHEET NO.	TOTAL SHEETS
	P 0037(129)207 NH 0012(198)308	X6	X50

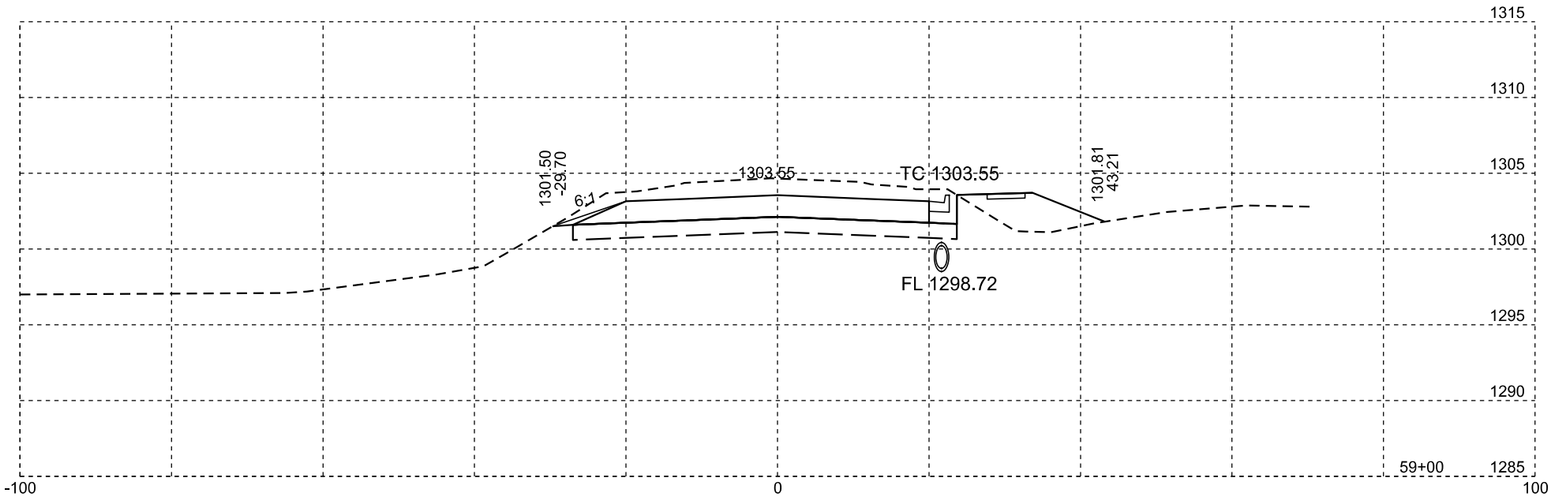

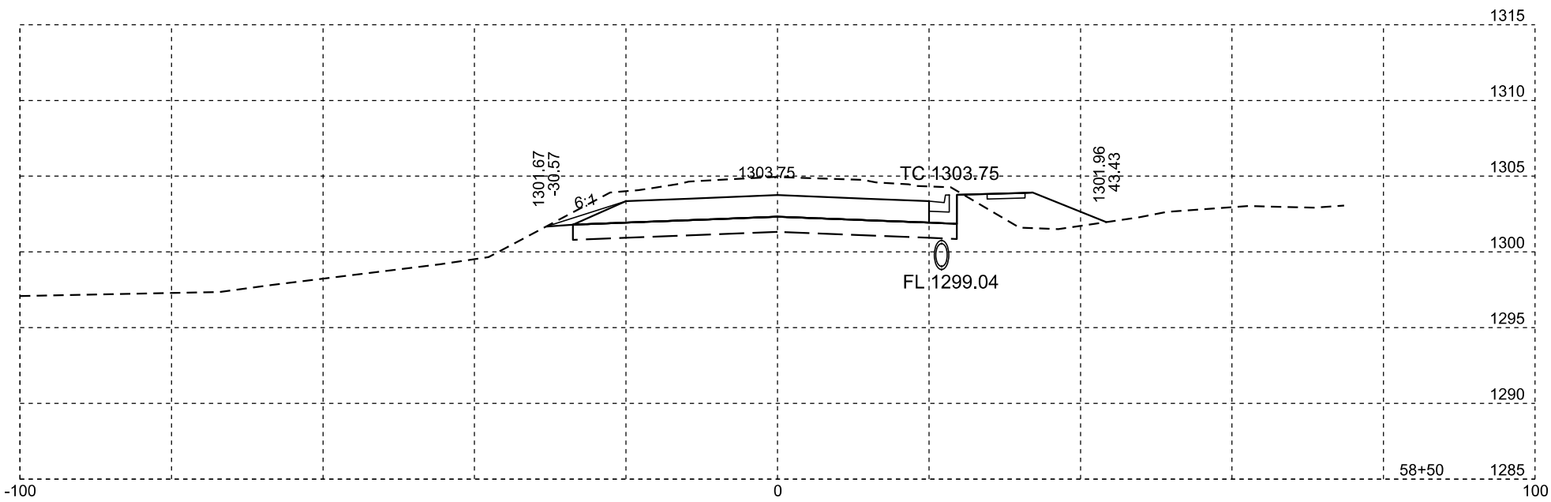

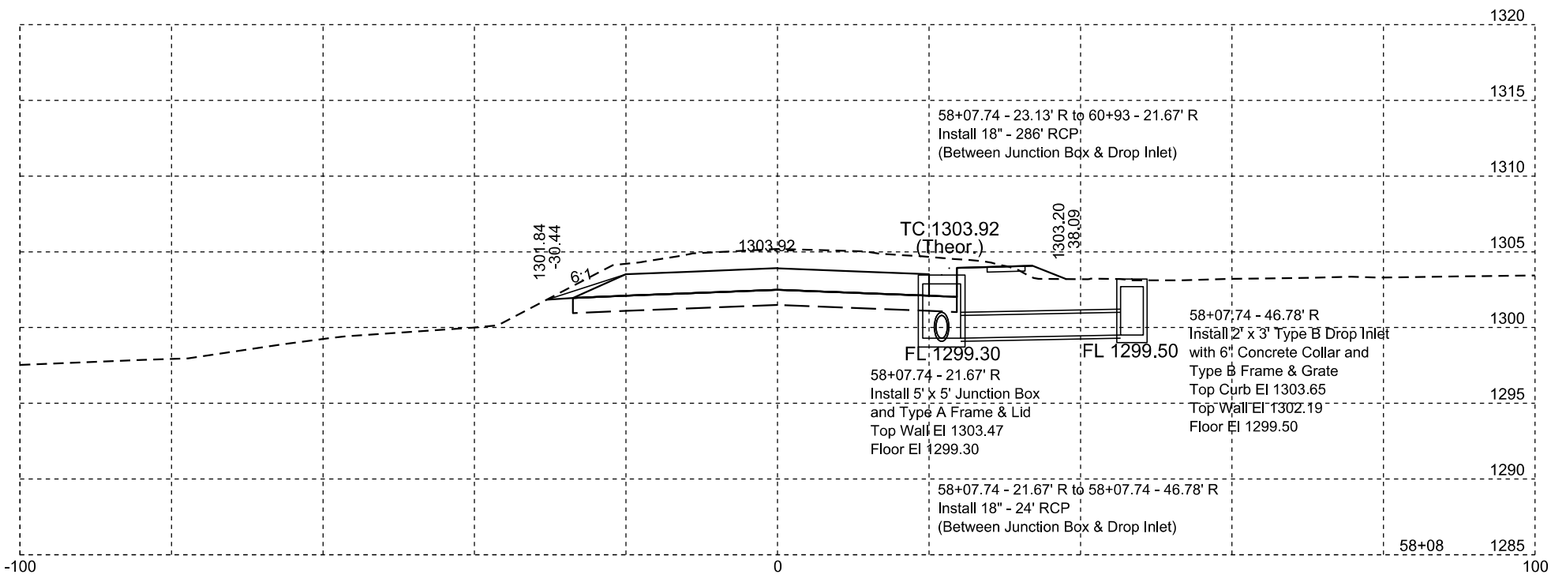

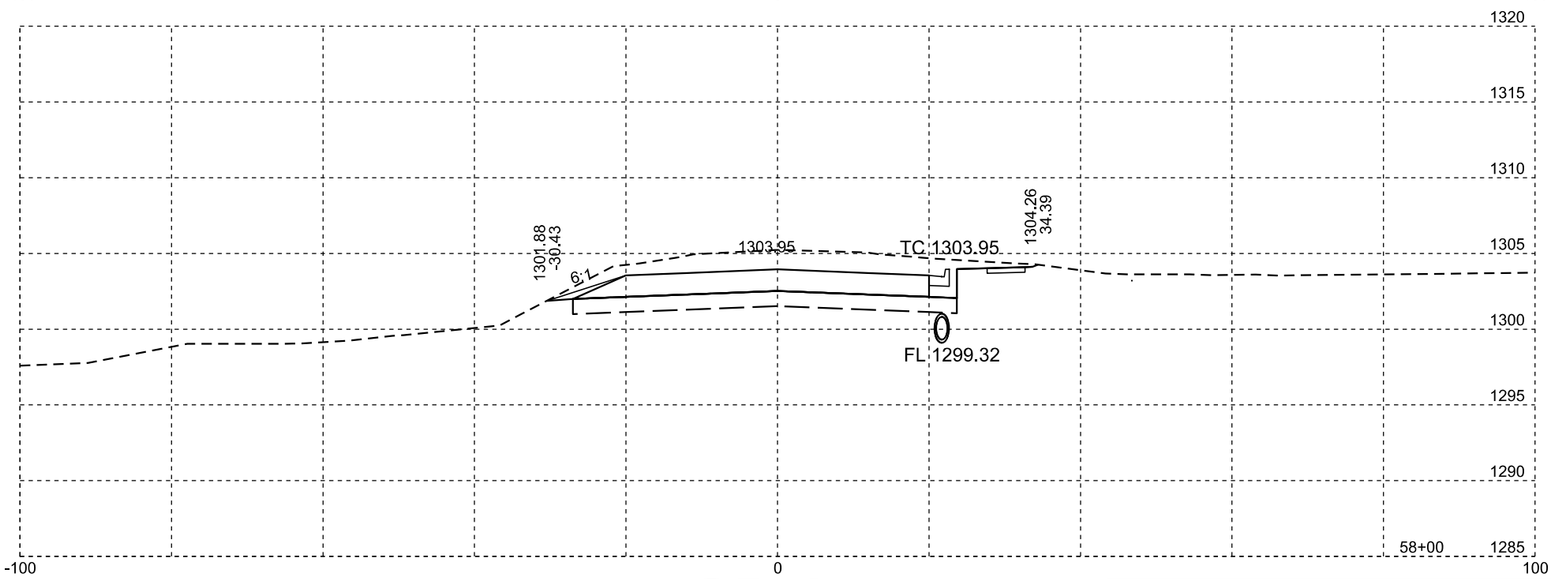

SD 37

Plotting Date: 04/12/2016

STATE OF SOUTH DAKOTA	PROJECT	SHEET NO.	TOTAL SHEETS
	P 0037(129)207 NH 0012(198)308	X7	X50

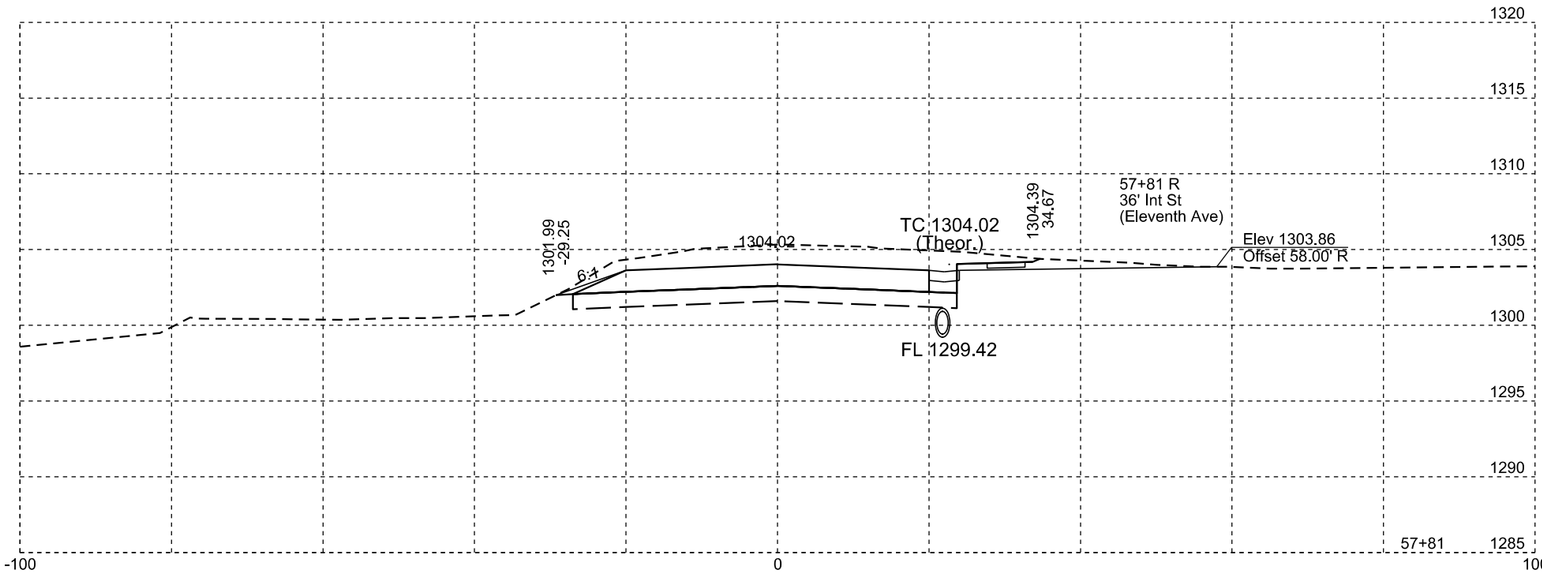

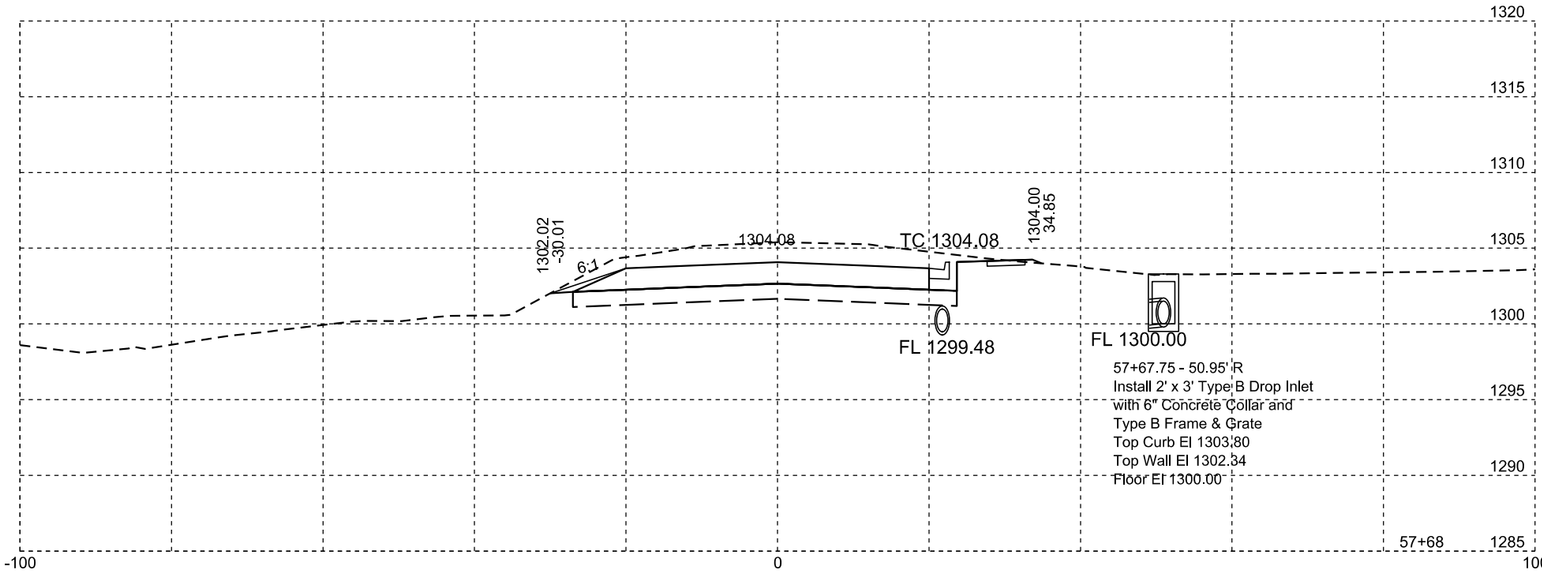

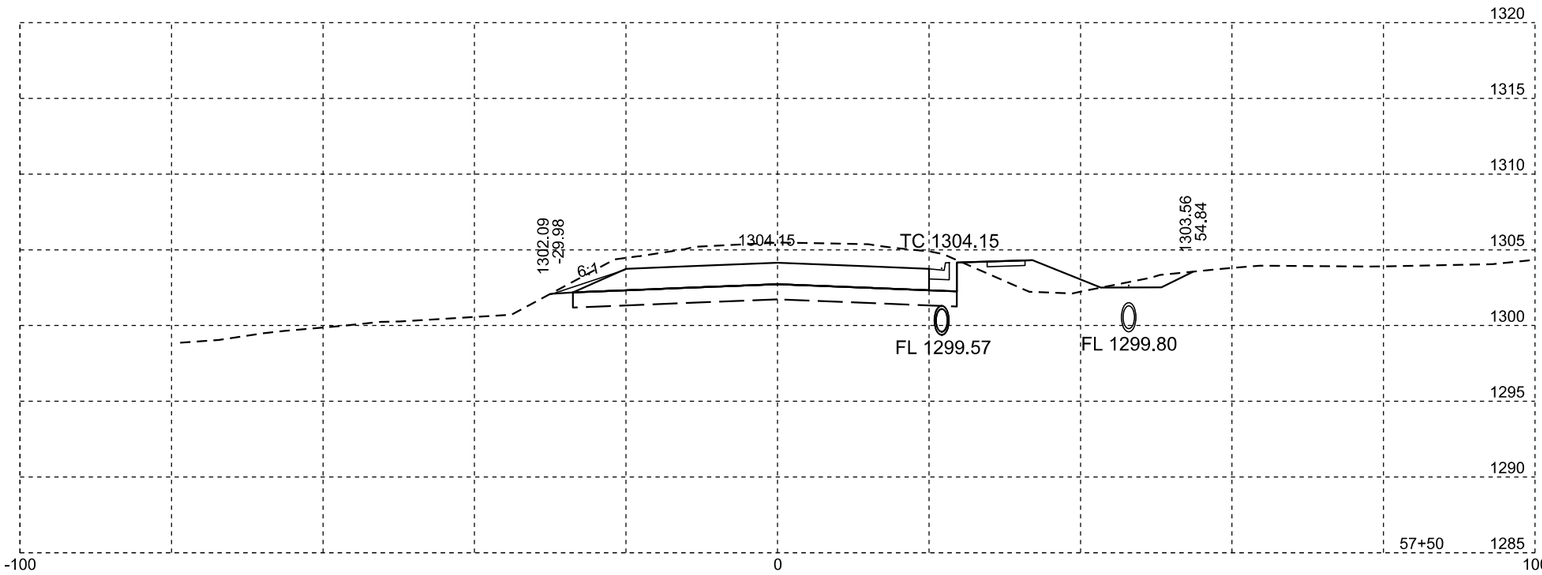

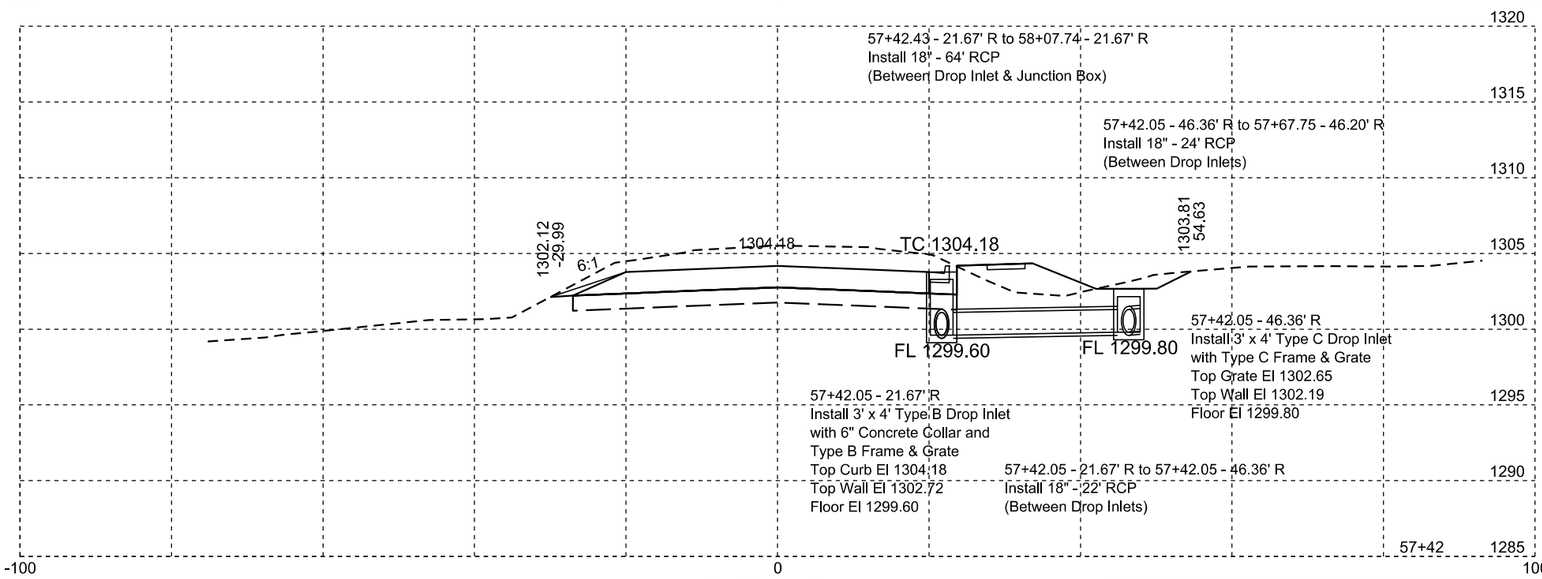

SD 37

Plotting Date: 04/12/2016

STATE OF SOUTH DAKOTA	PROJECT	SHEET NO.	TOTAL SHEETS
	P 0037(129)207 NH 0012(198)308	X8	X50

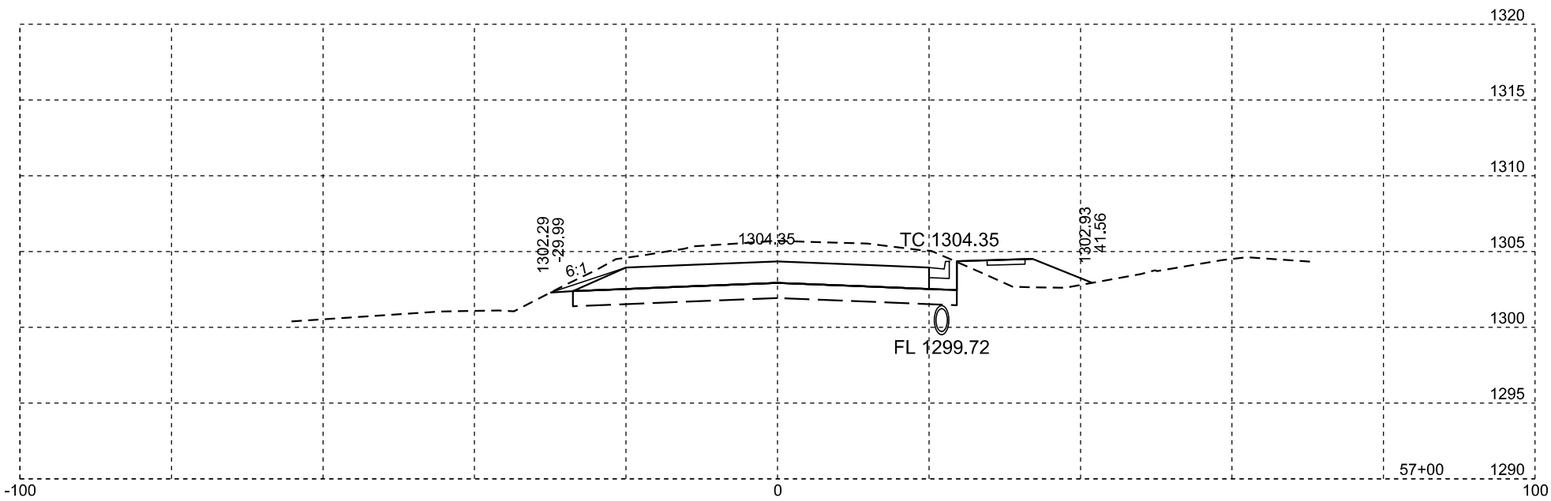

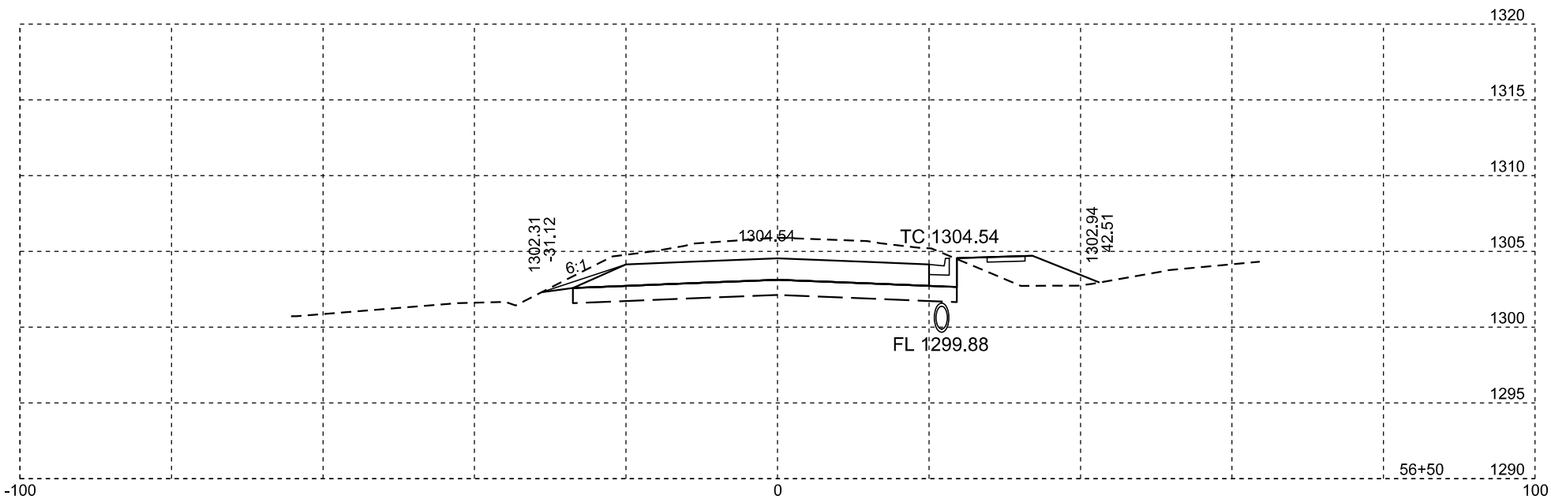

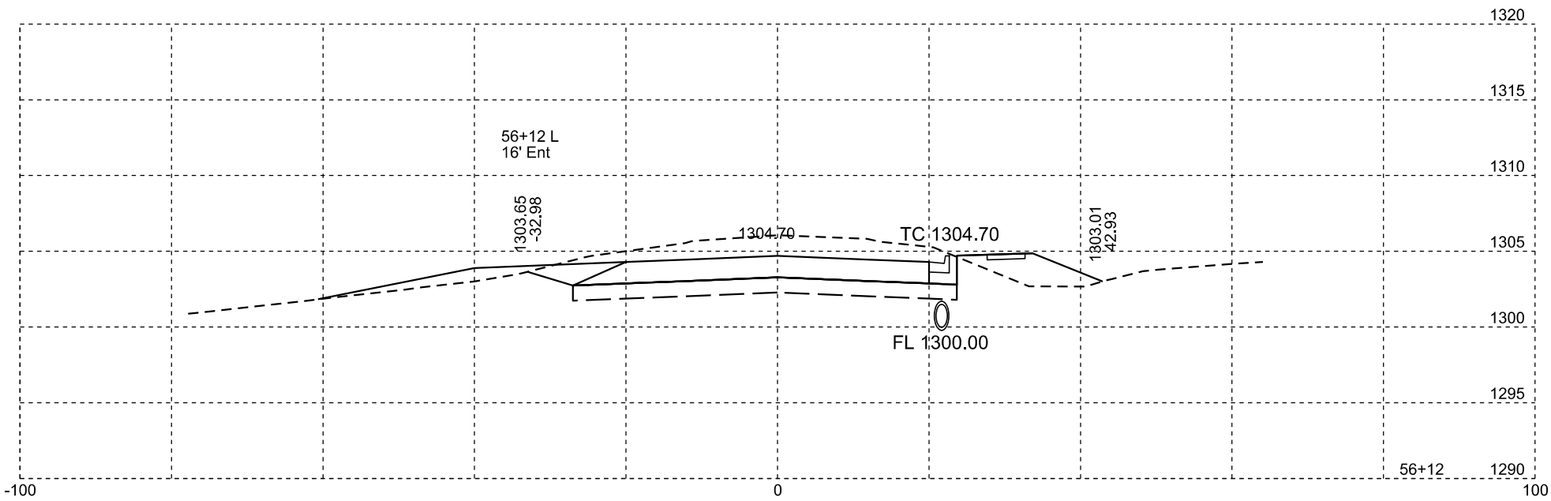

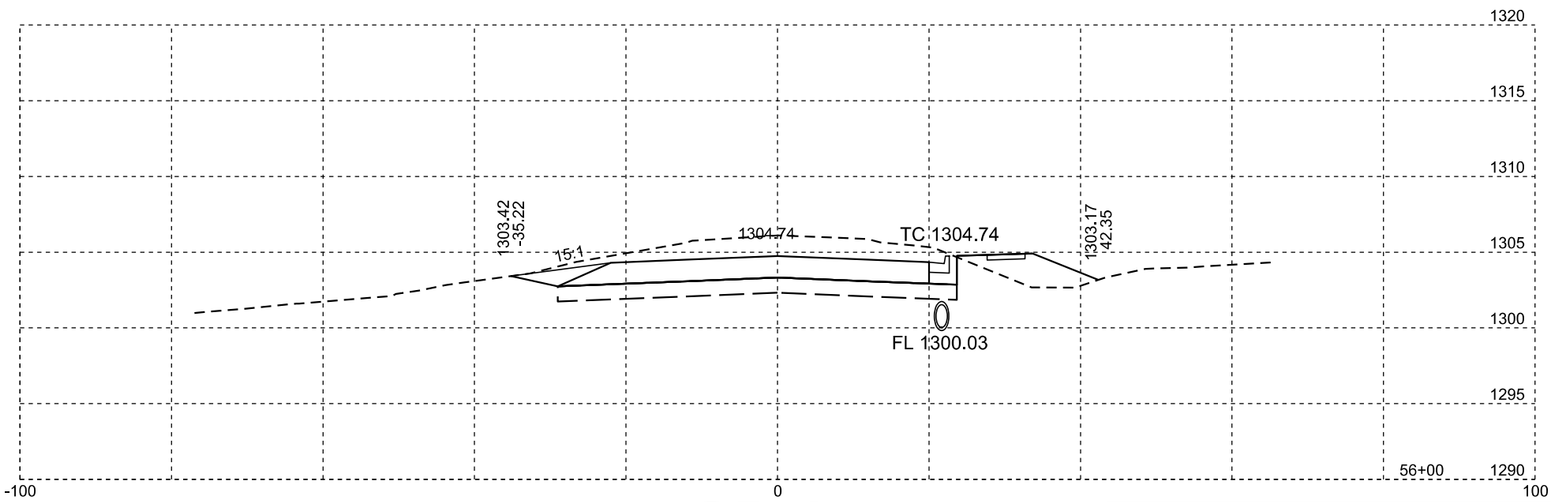

SD 37

Plotting Date: 04/12/2016

STATE OF SOUTH DAKOTA	PROJECT	SHEET NO.	TOTAL SHEETS
	P 0037(129)207 NH 0012(198)308	X9	X50

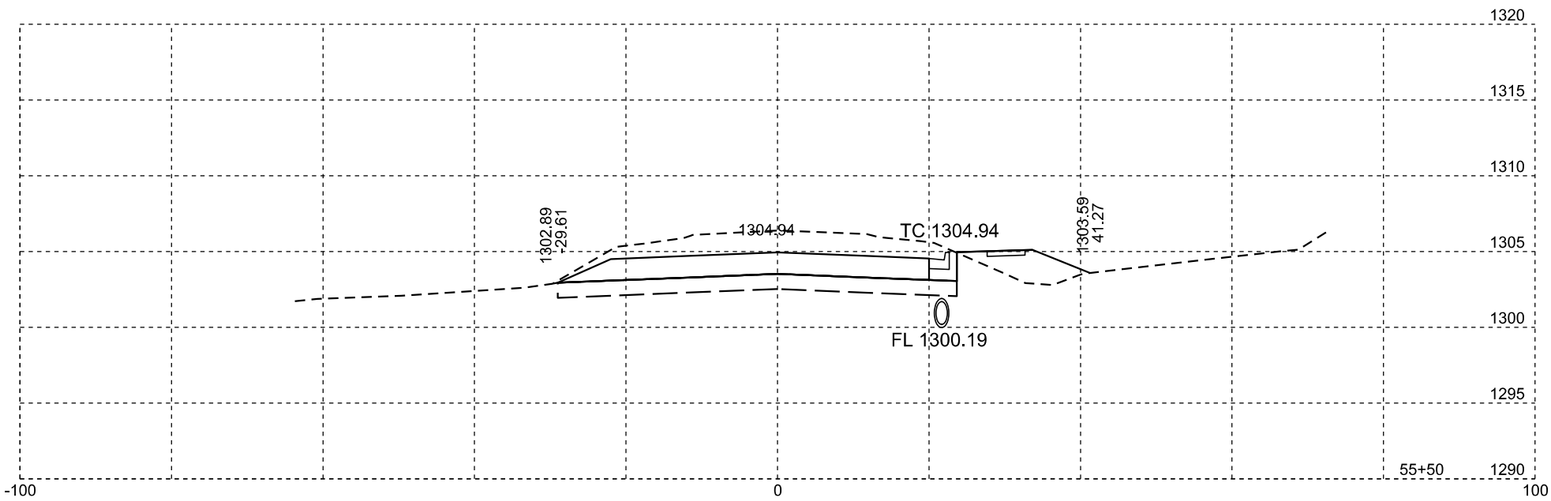

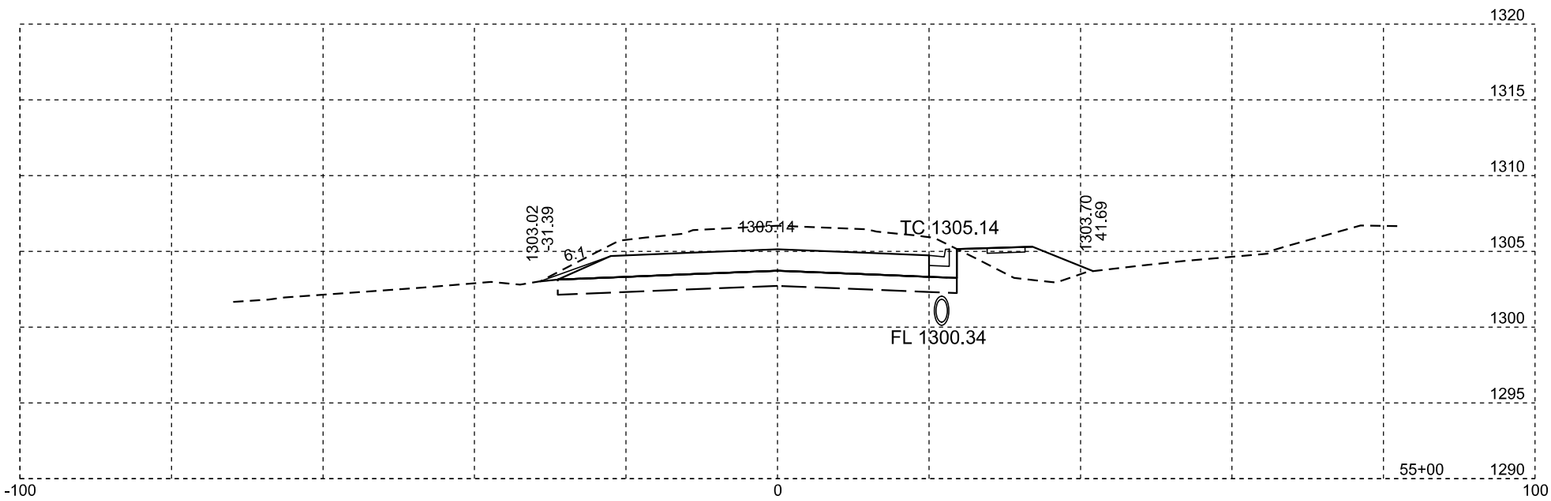

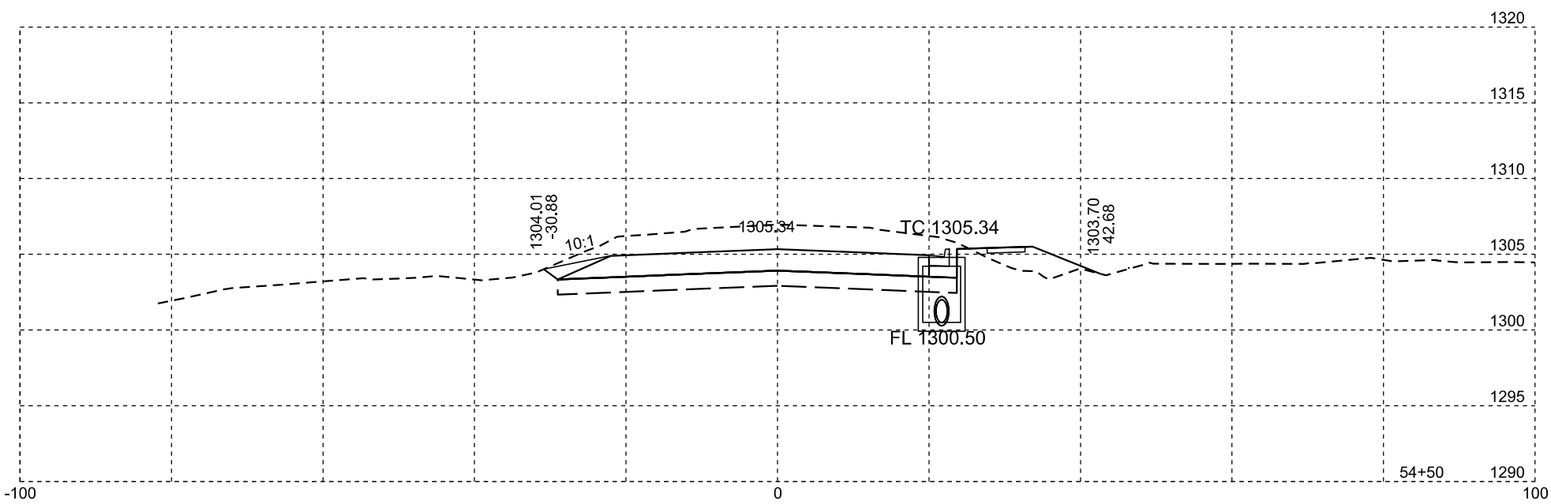

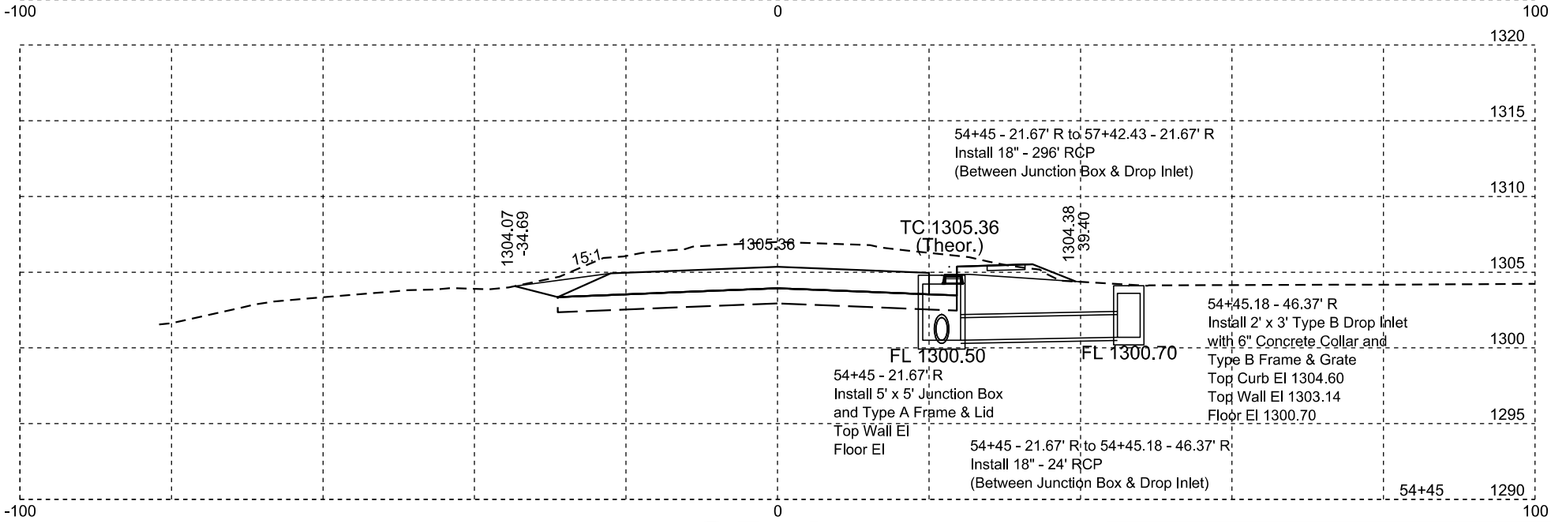

SD 37

Plotting Date: 04/12/2016

STATE OF SOUTH DAKOTA	PROJECT	SHEET NO.	TOTAL SHEETS
	P 0037(129)207 NH 0012(198)308	X10	X50

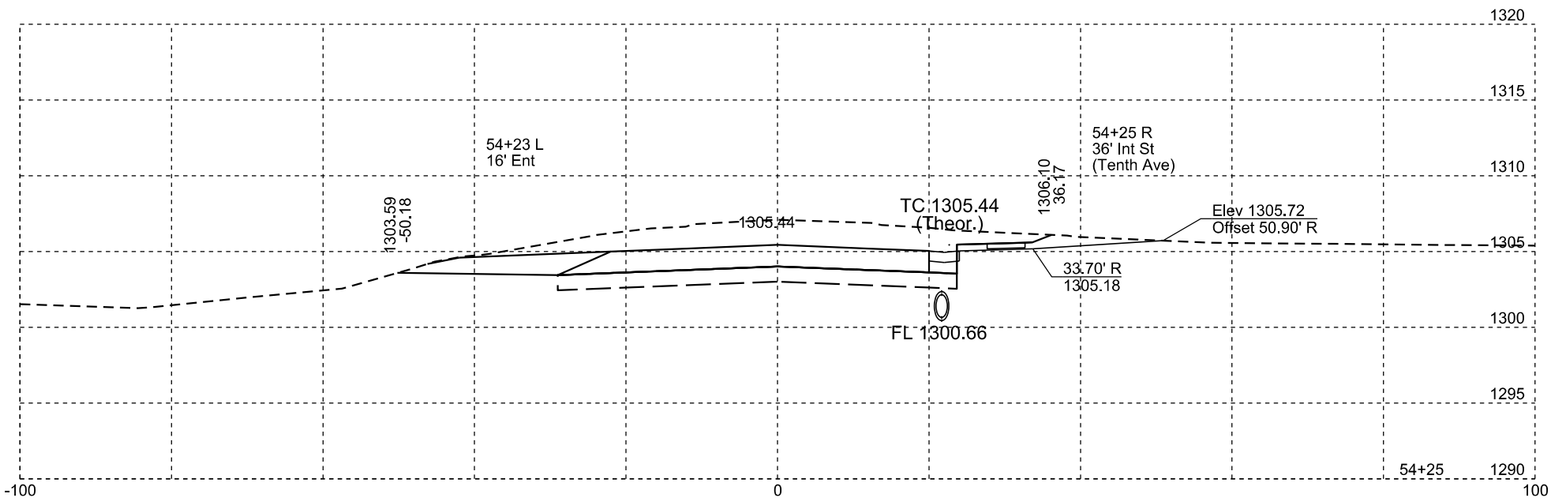

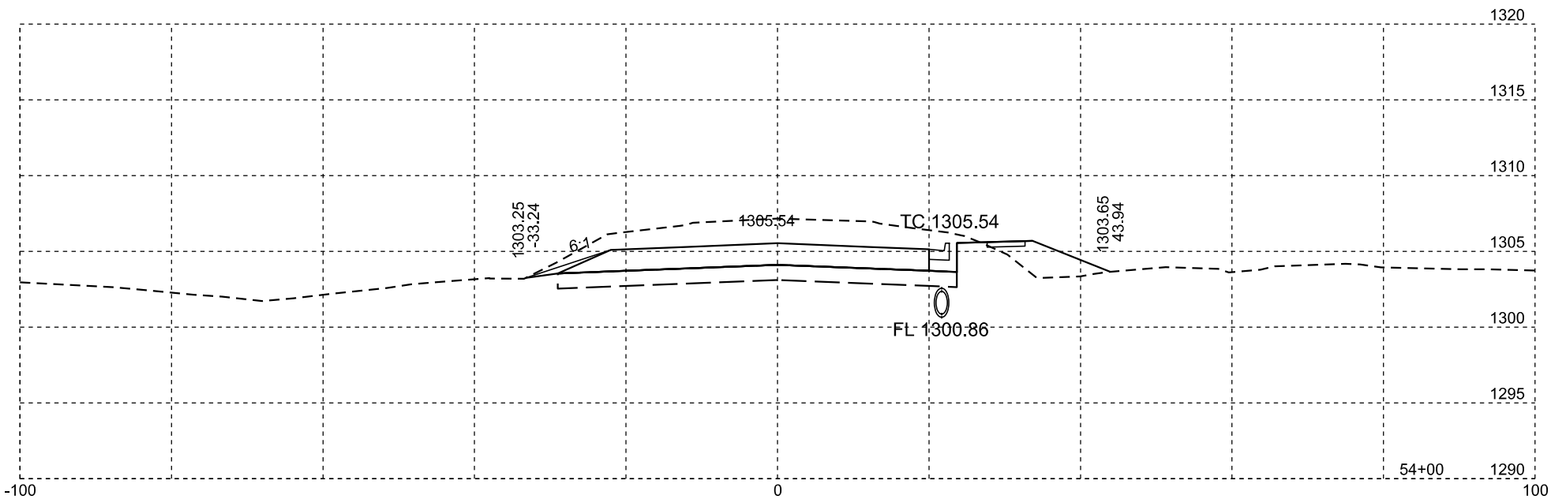

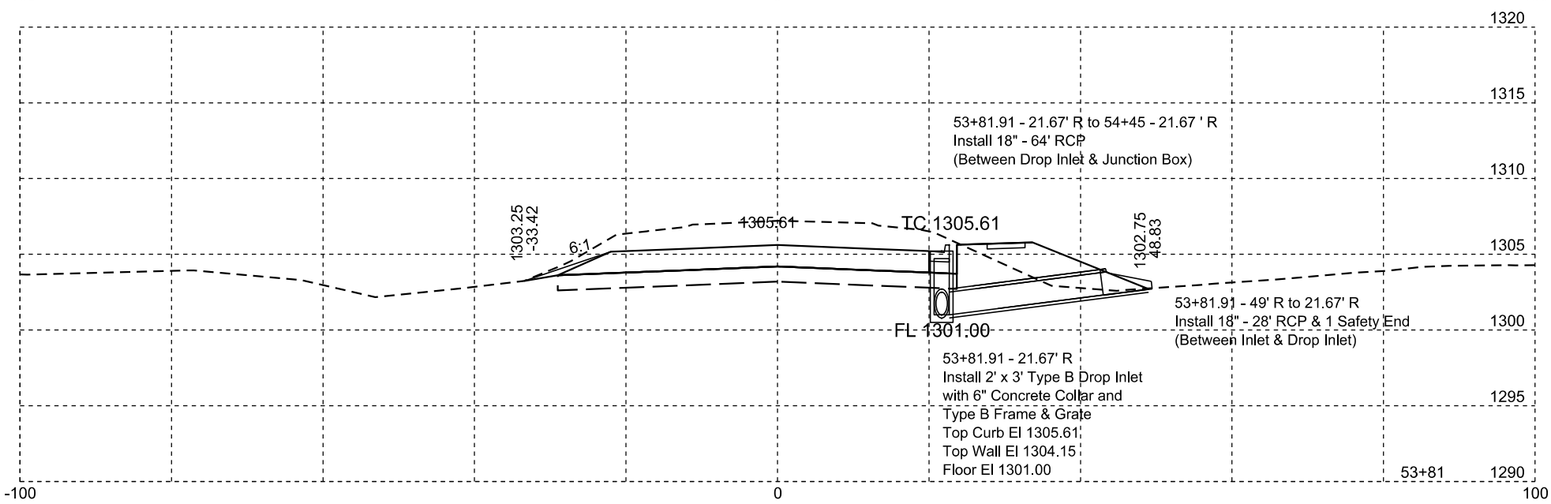

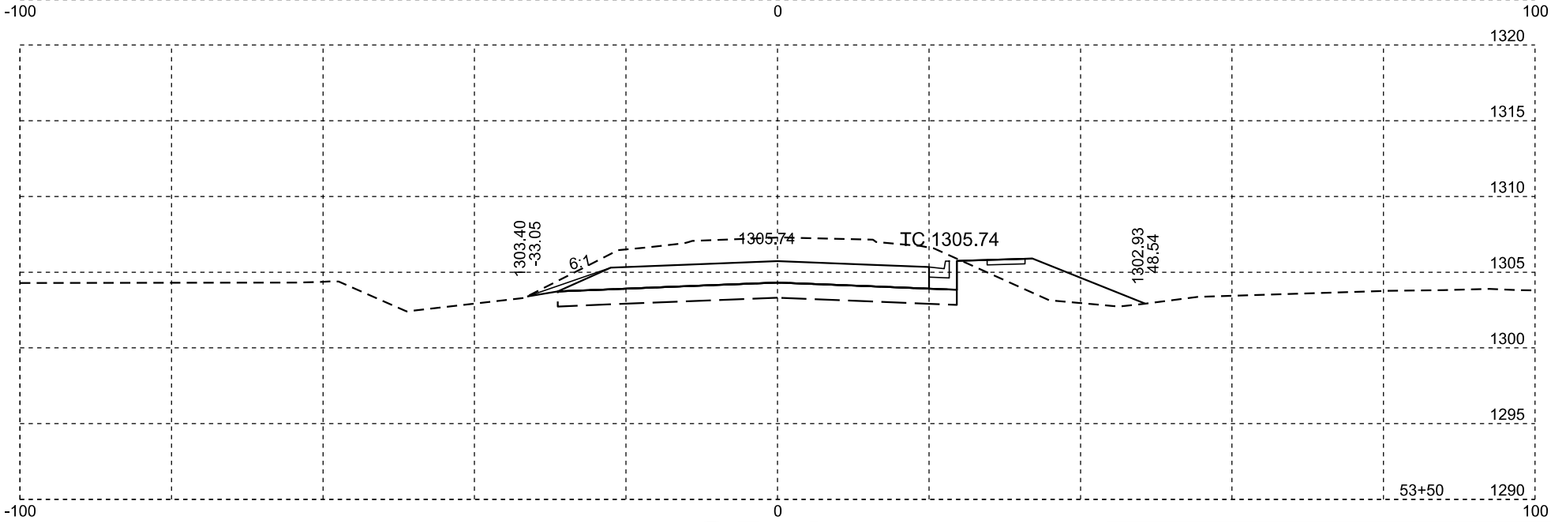

SD 37

Plotting Date: 04/12/2016

STATE OF SOUTH DAKOTA	PROJECT	SHEET NO.	TOTAL SHEETS
	P 0037(129)207 NH 0012(198)308	X11	X50

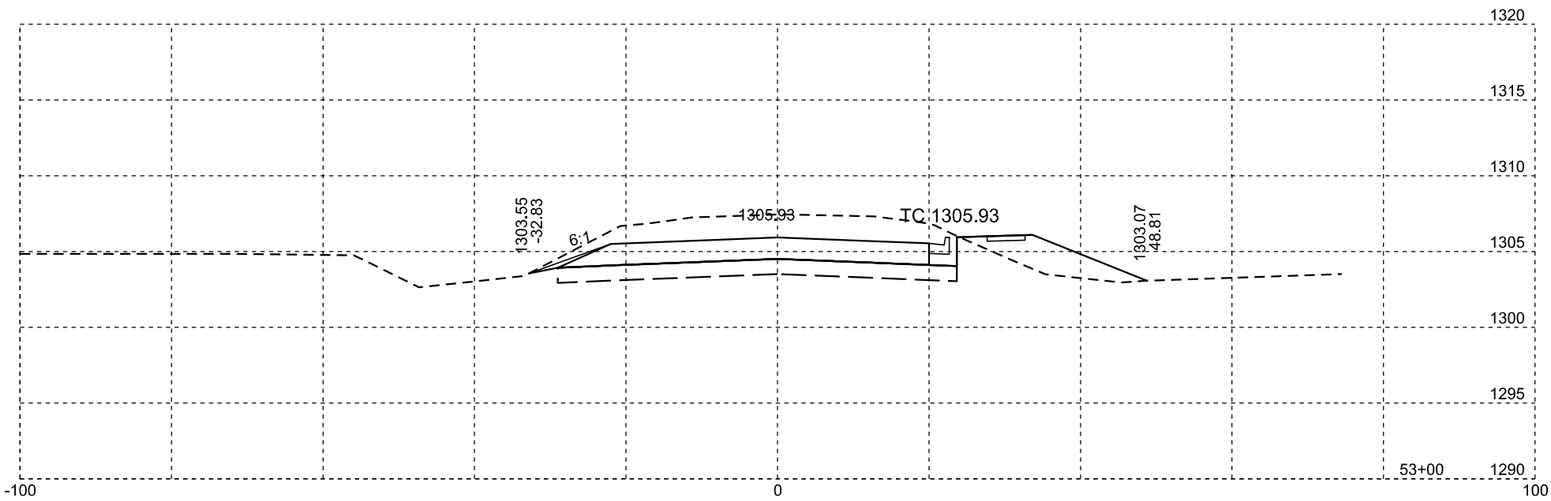

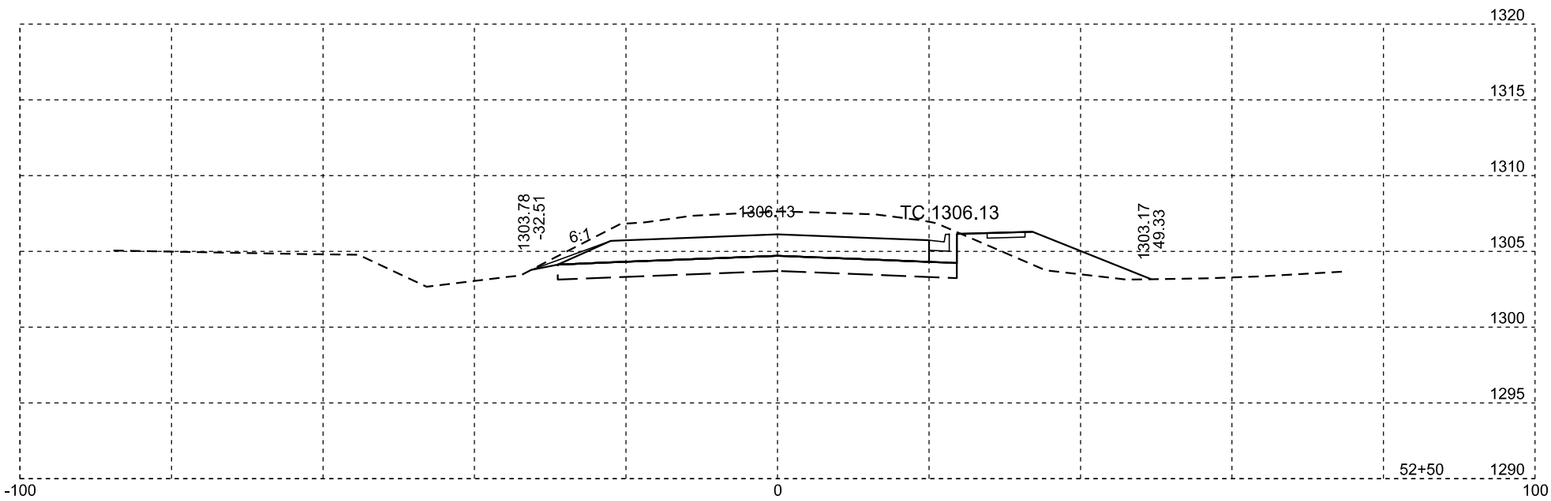

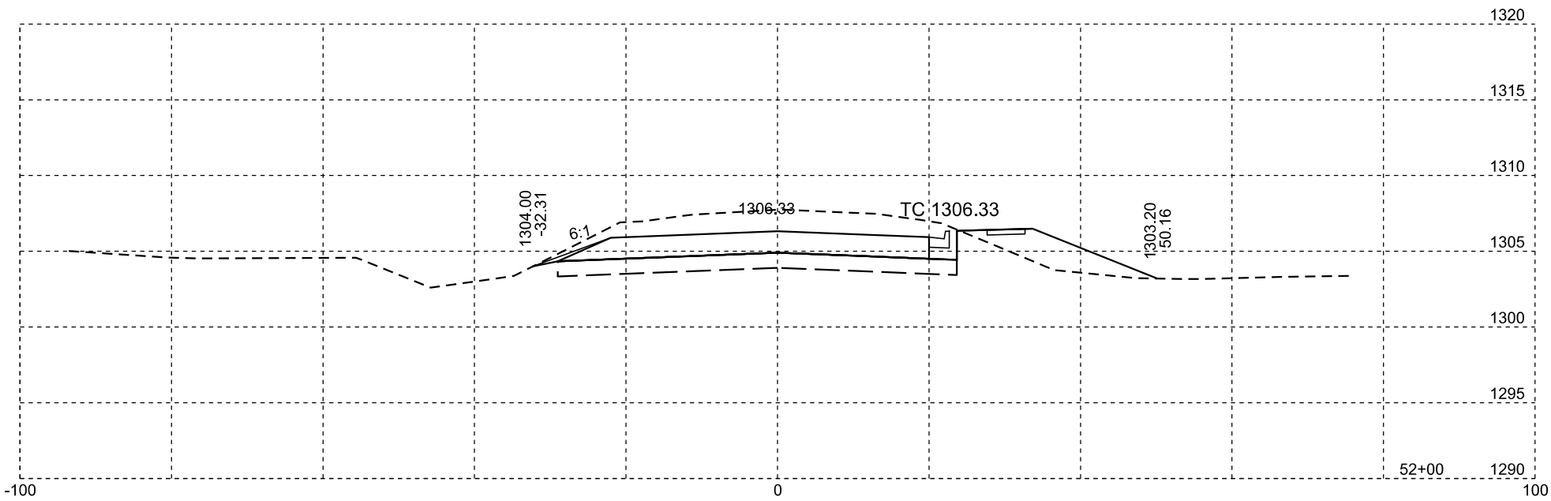

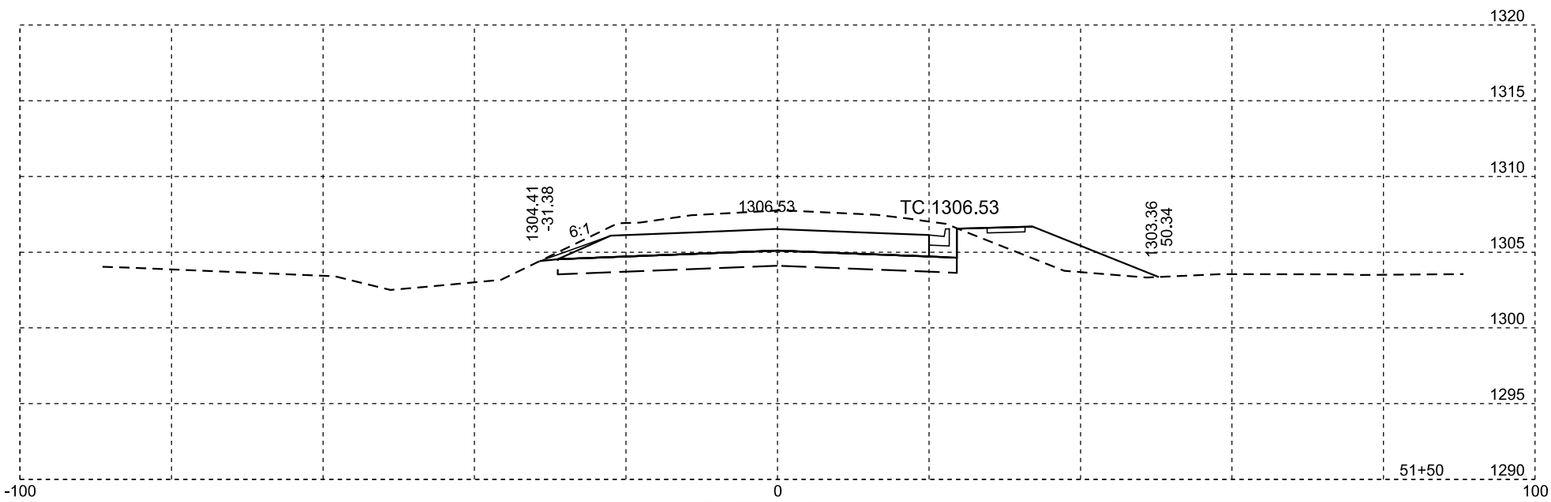

SD 37

Plotting Date: 04/12/2016

STATE OF SOUTH DAKOTA	PROJECT	SHEET NO.	TOTAL SHEETS
	P 0037(129)207 NH 0012(198)308	X12	X50

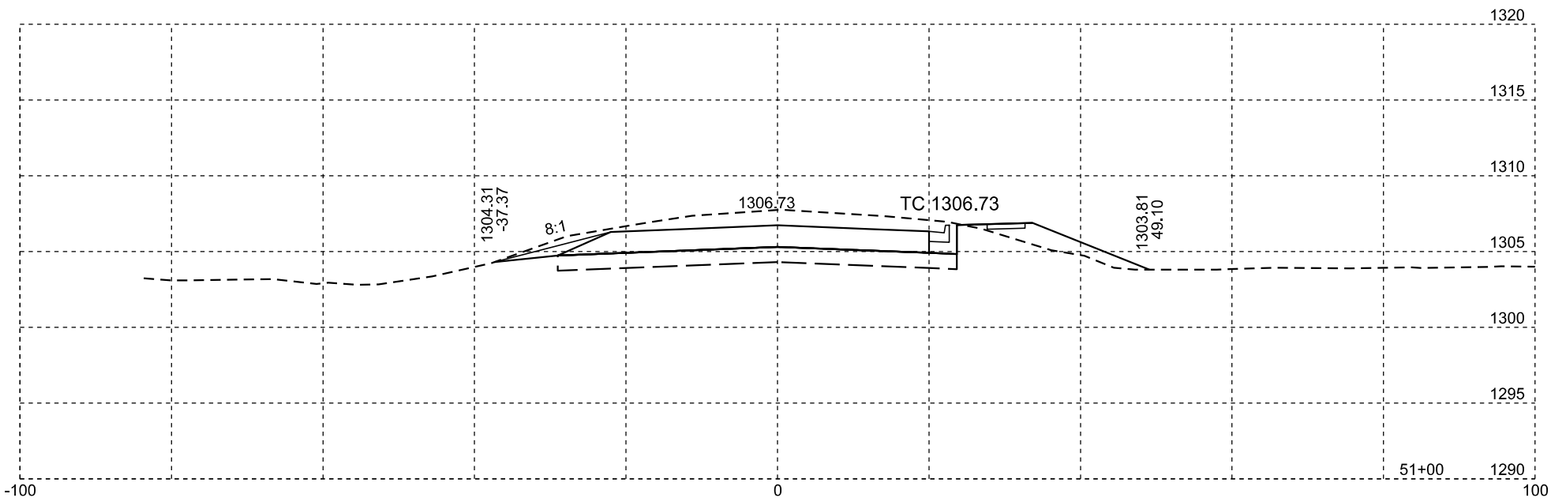

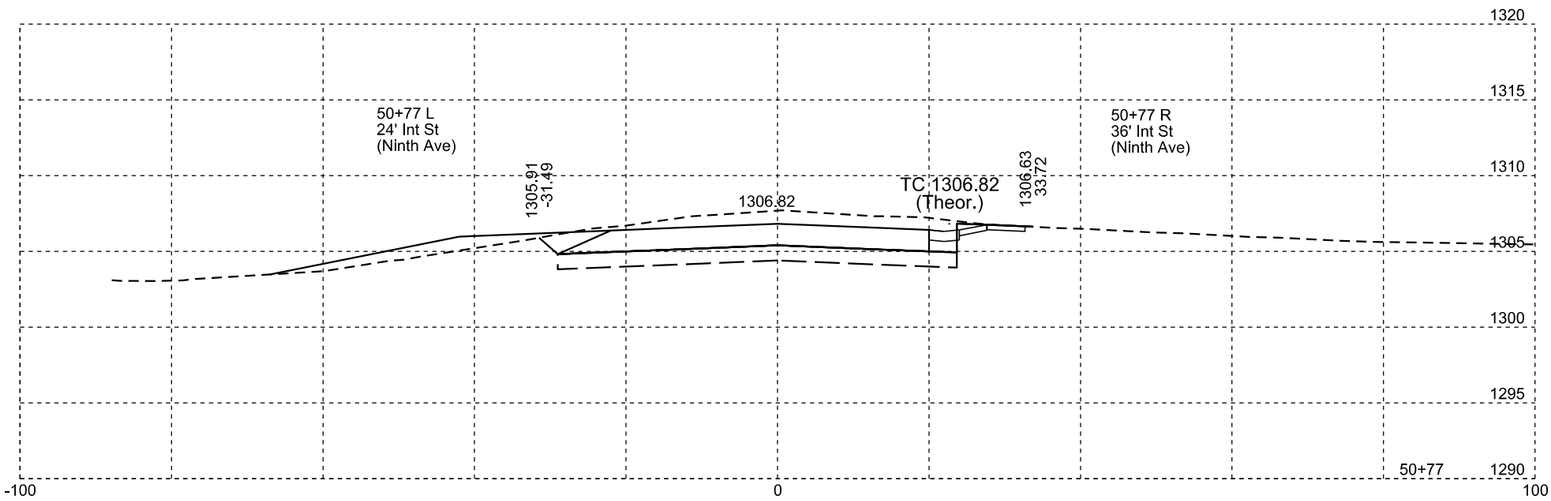

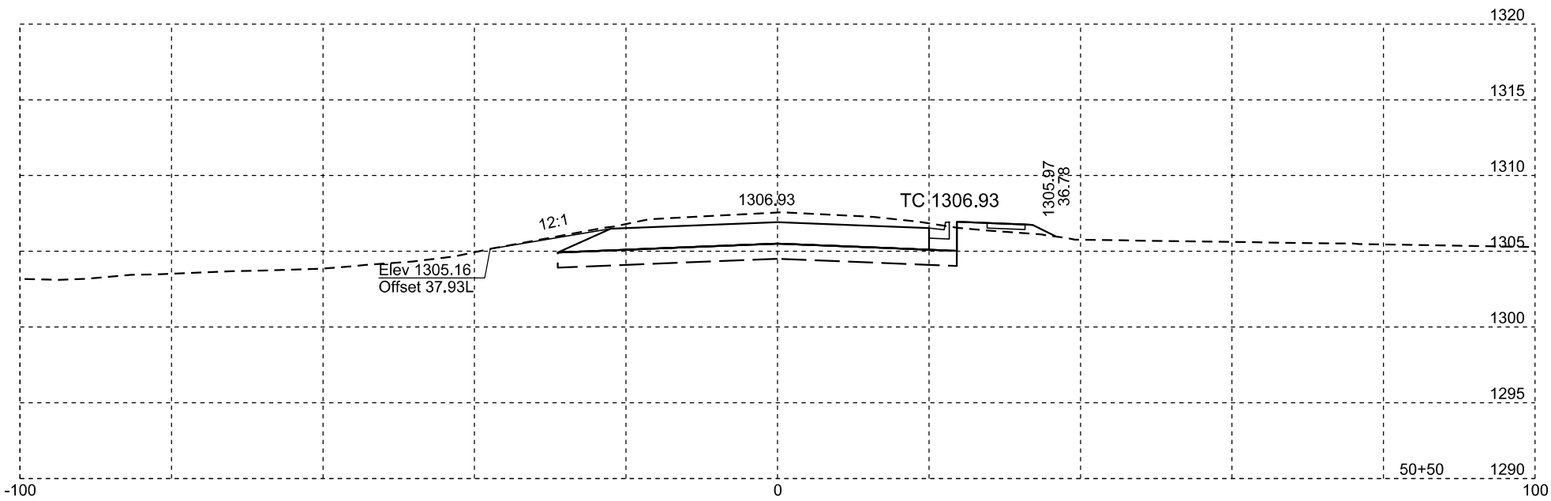

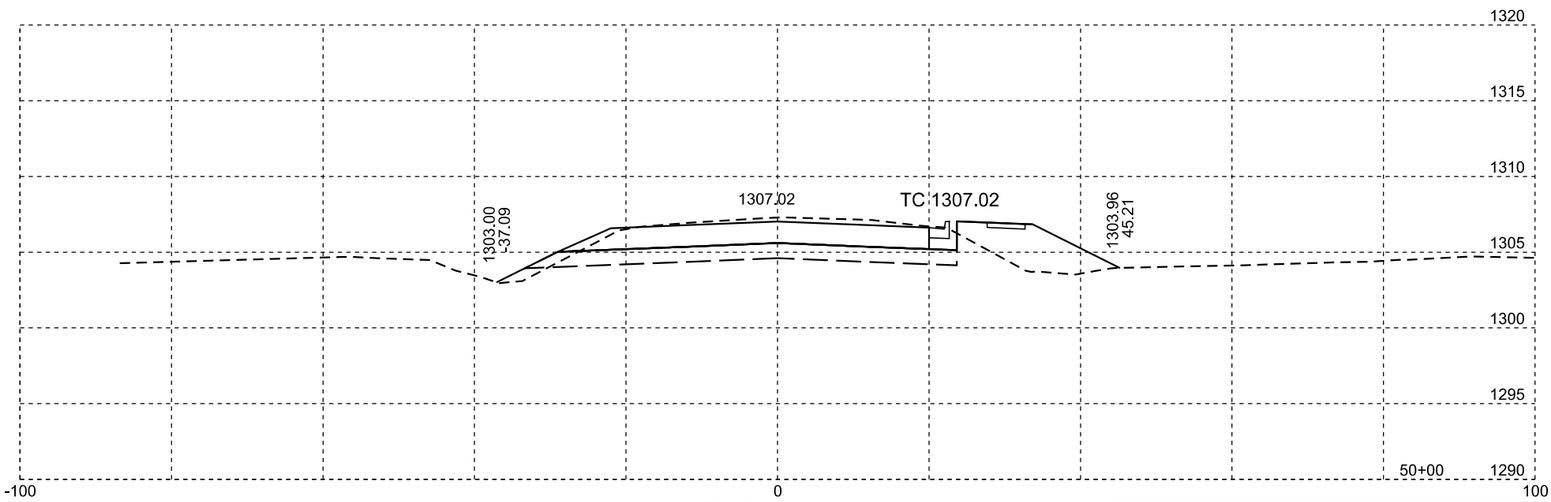

SD 37

Plotting Date: 04/12/2016

STATE OF SOUTH DAKOTA	PROJECT	SHEET NO.	TOTAL SHEETS
	P 0037(129)207 NH 0012(198)308	X13	X50

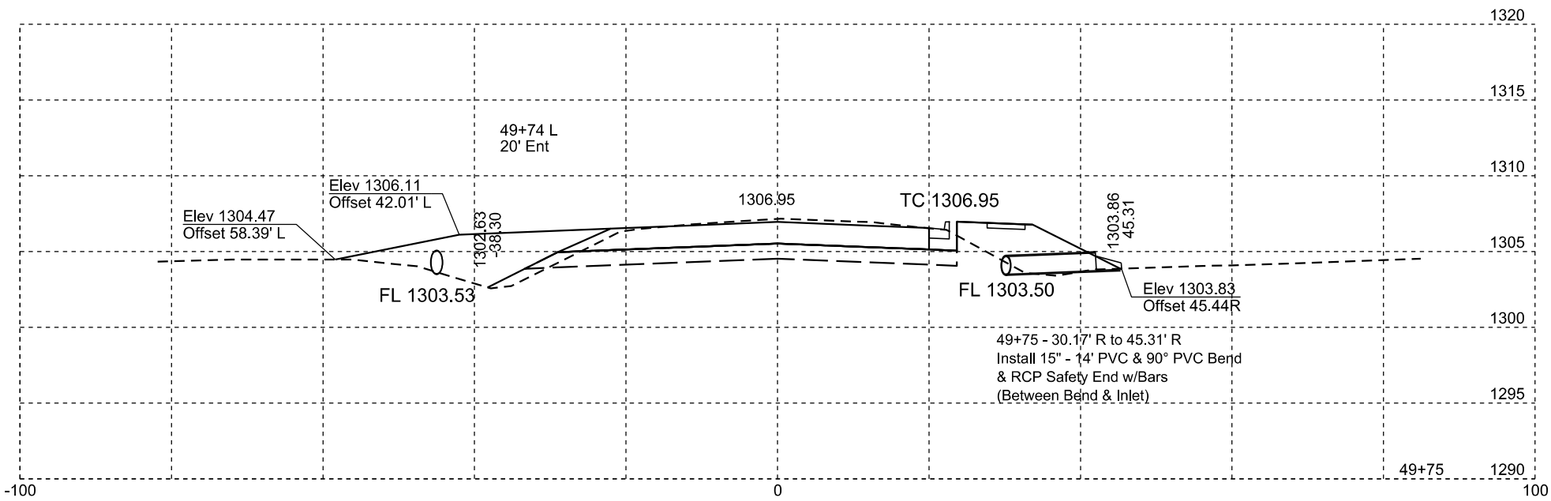

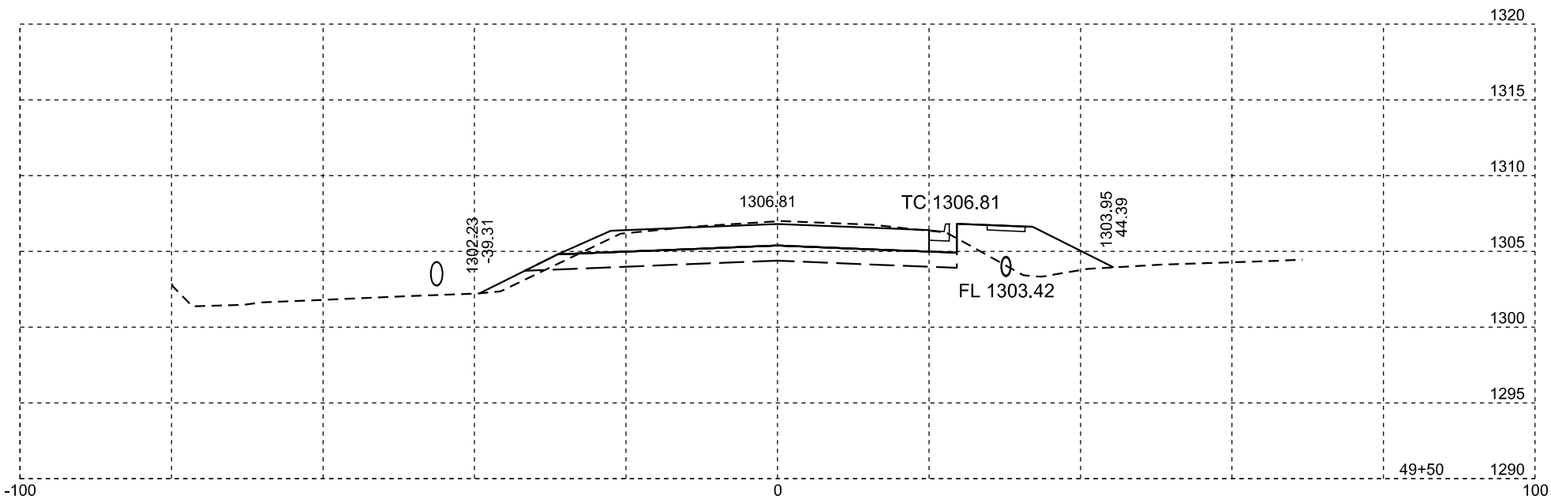

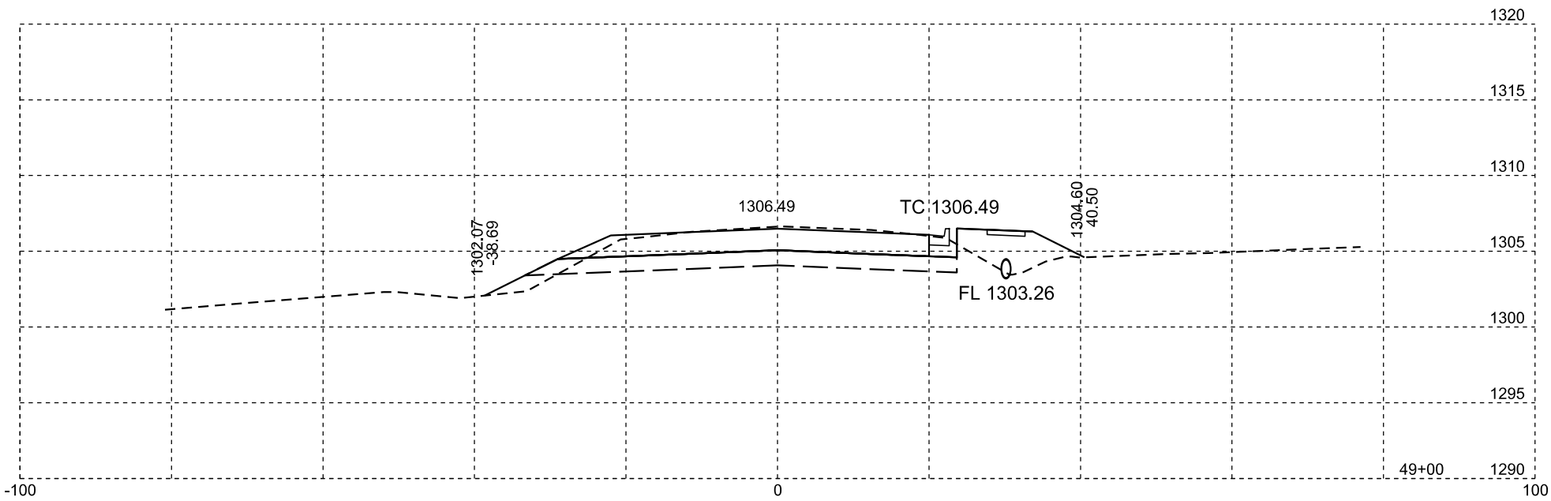

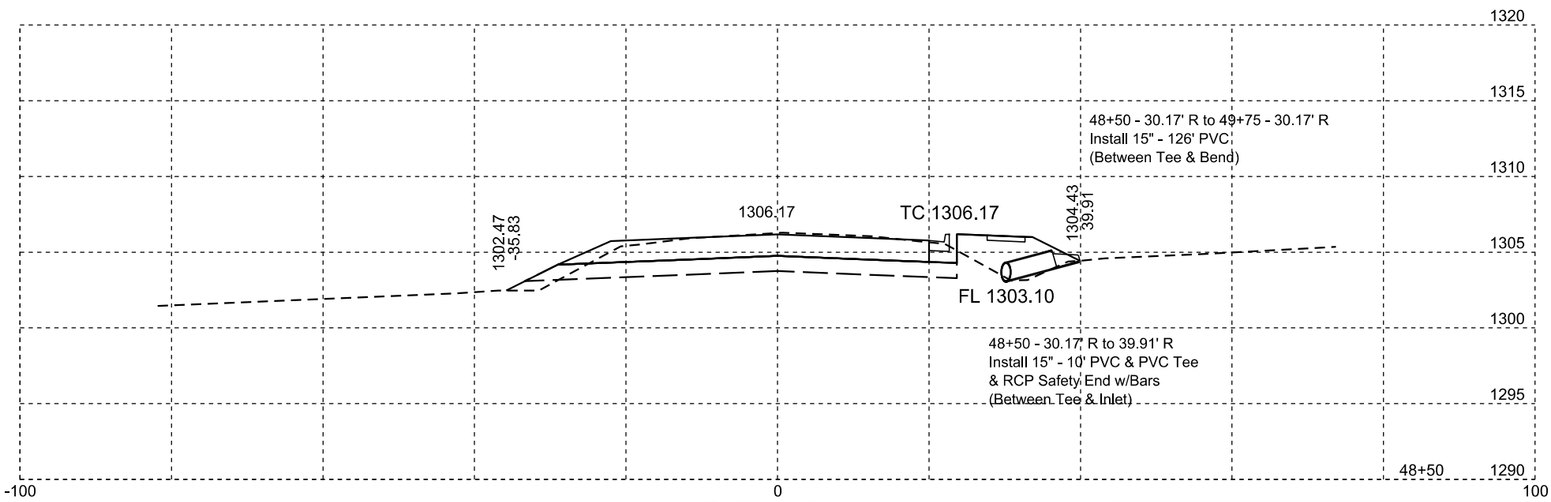

SD 37

Plotting Date: 04/12/2016

STATE OF SOUTH DAKOTA	PROJECT	SHEET NO.	TOTAL SHEETS
	P 0037(129)207 NH 0012(198)308	X14	X50

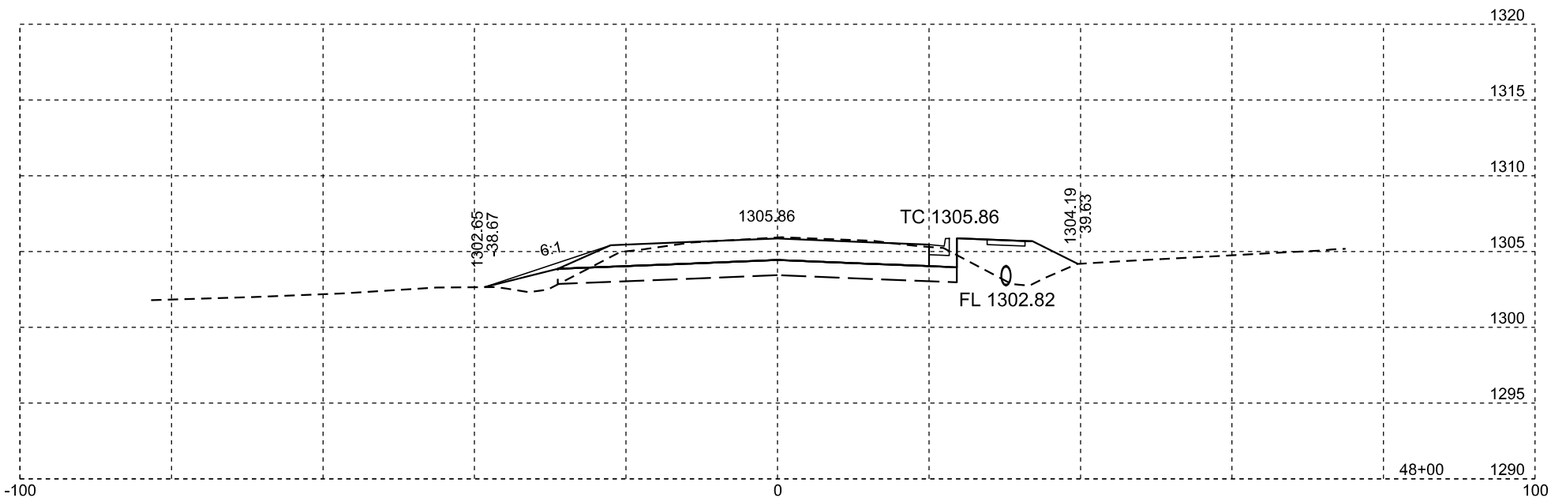

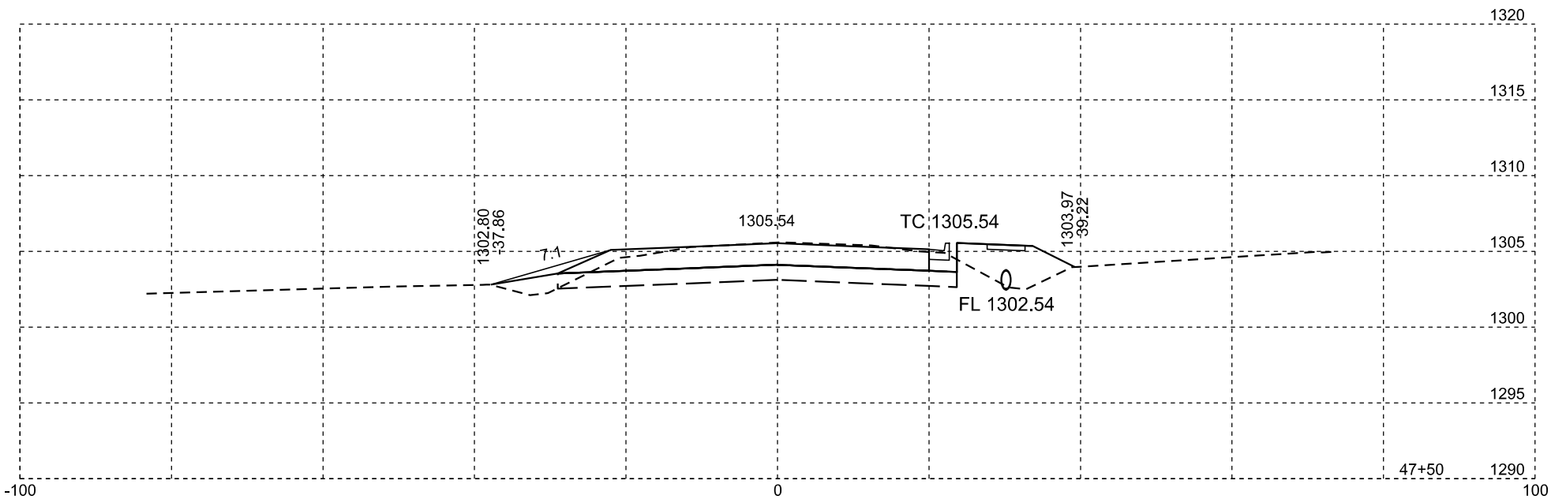

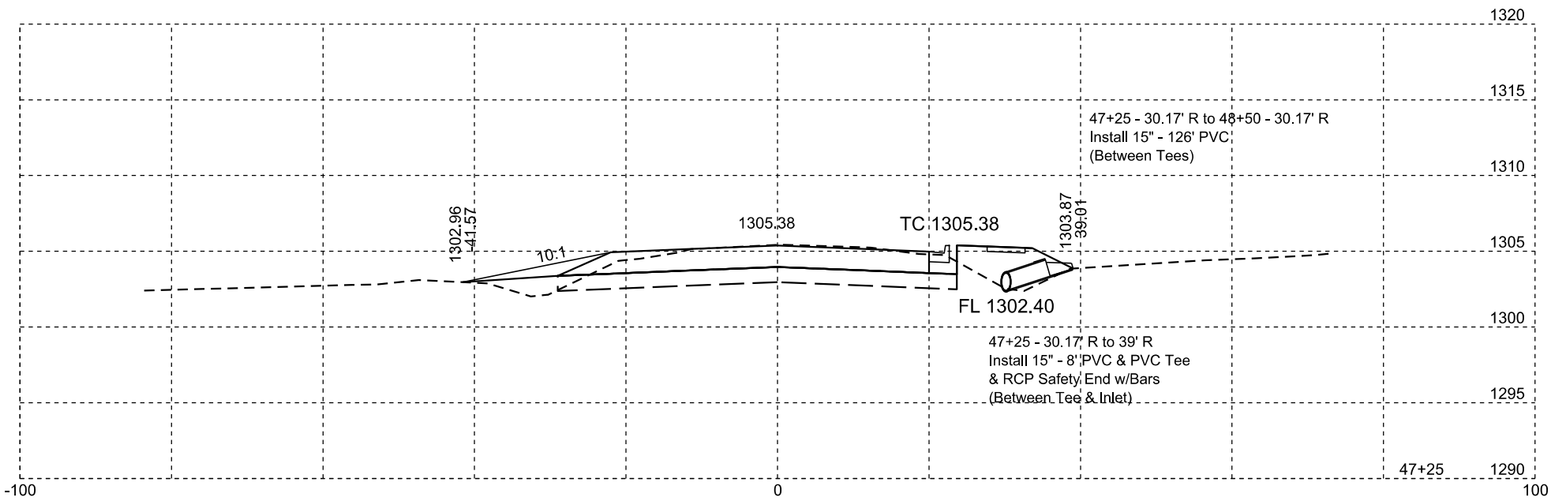

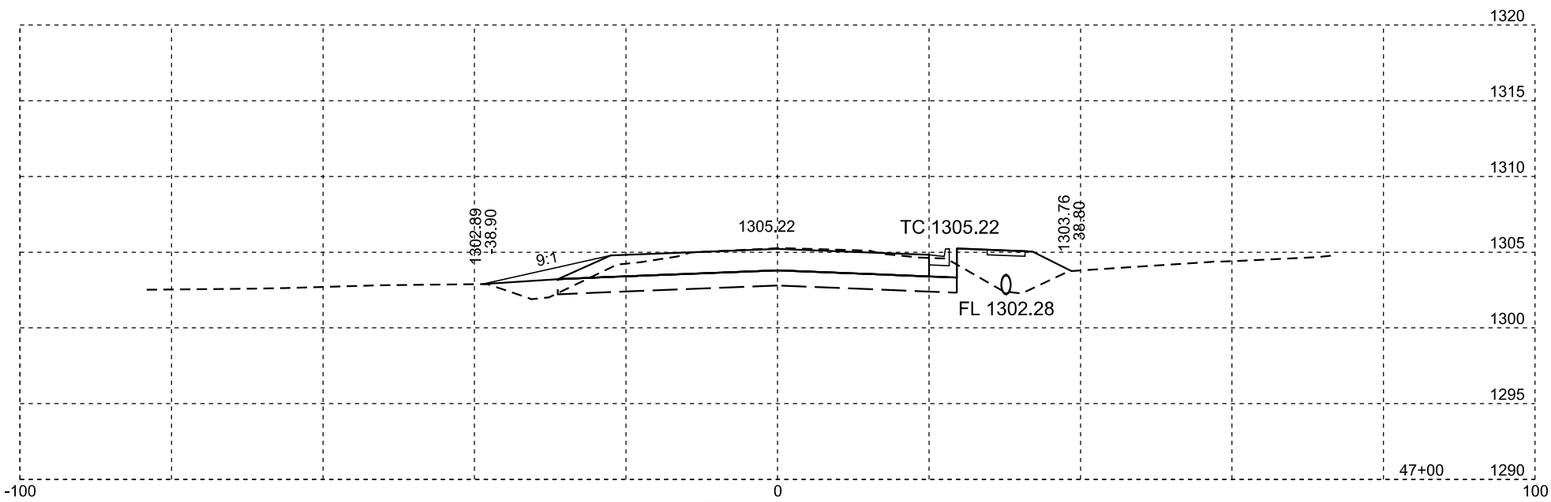

SD 37

Plotting Date: 04/12/2016

STATE OF SOUTH DAKOTA	PROJECT	SHEET NO.	TOTAL SHEETS
	P 0037(129)207 NH 0012(198)308	X15	X50

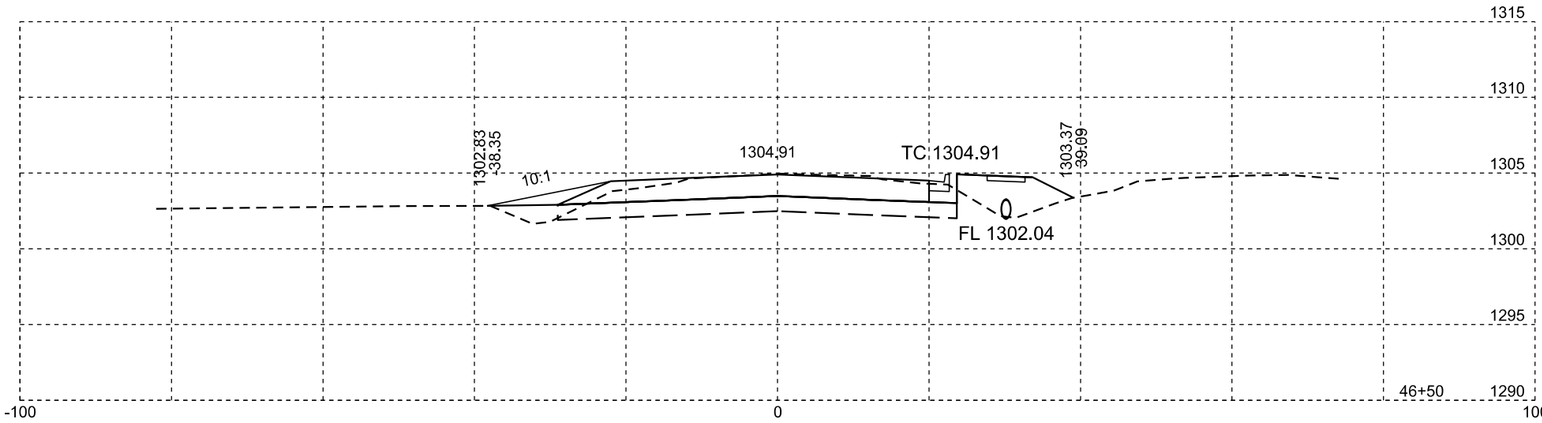

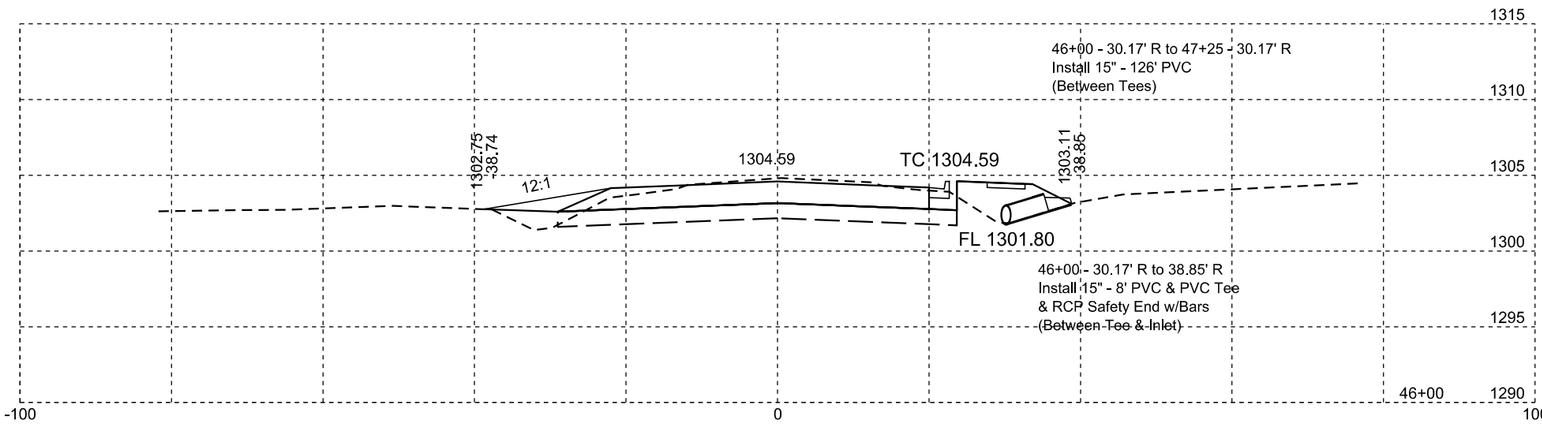

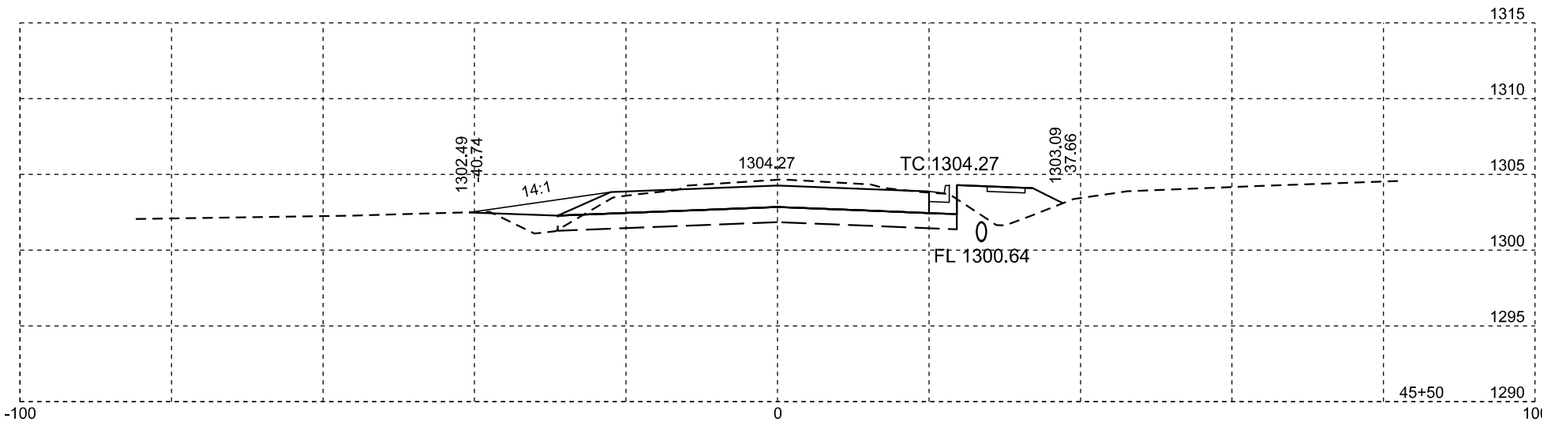

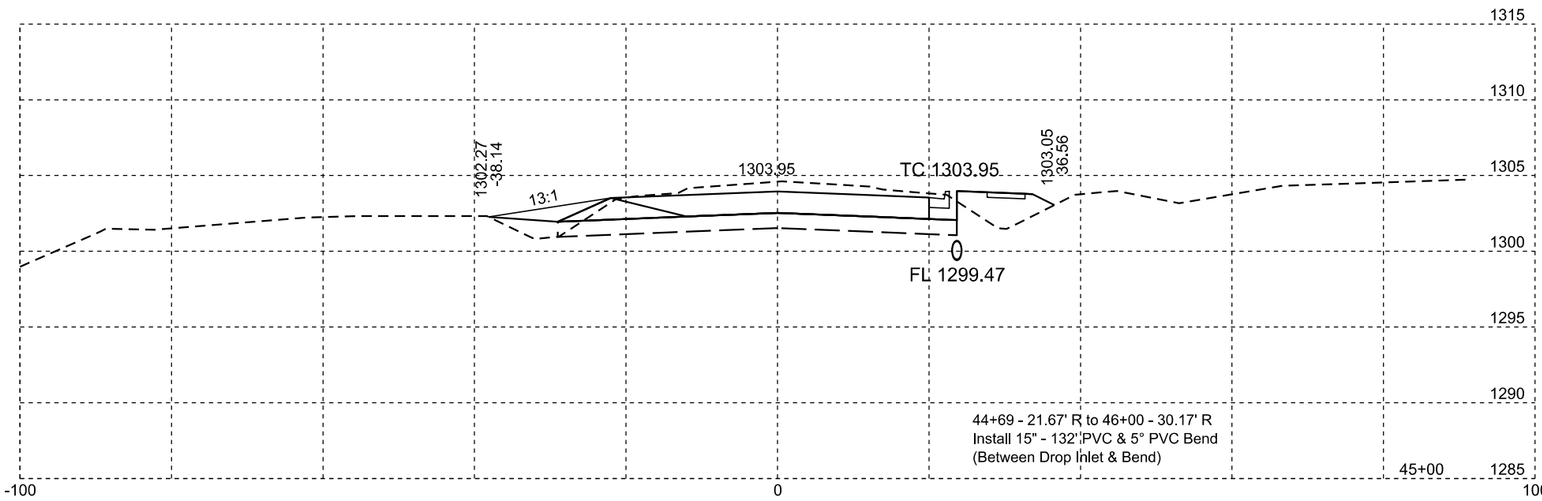

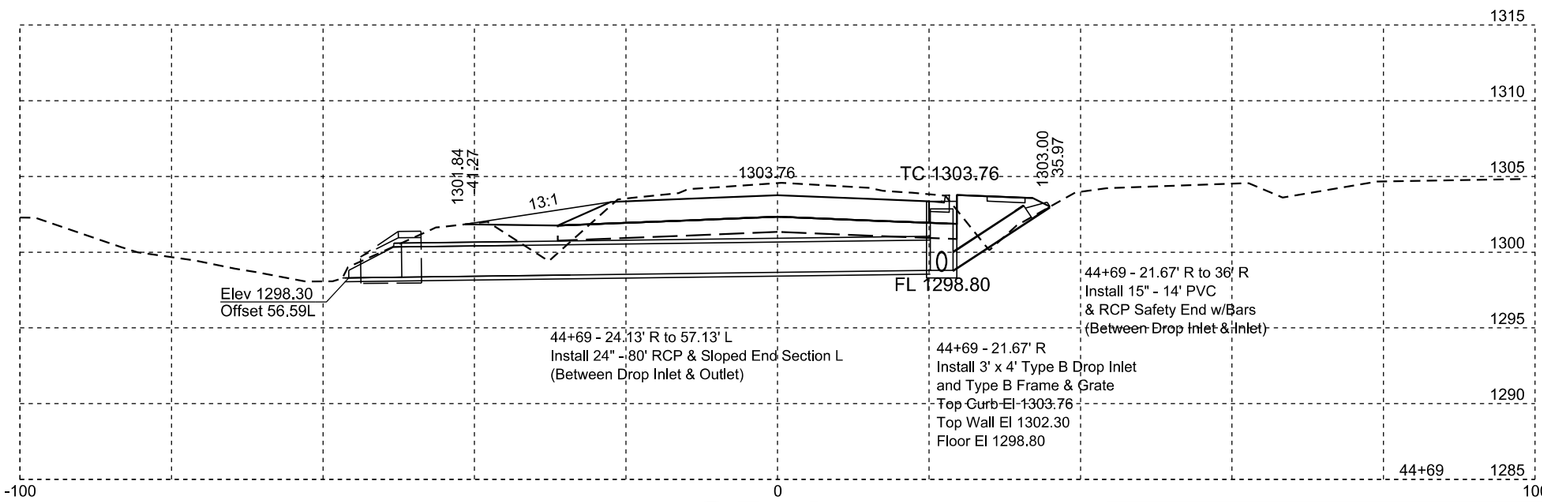

SD 37

Plotting Date: 04/12/2016

STATE OF SOUTH DAKOTA	PROJECT	SHEET NO.	TOTAL SHEETS
	P 0037(129)207 NH 0012(198)308	X16	X50

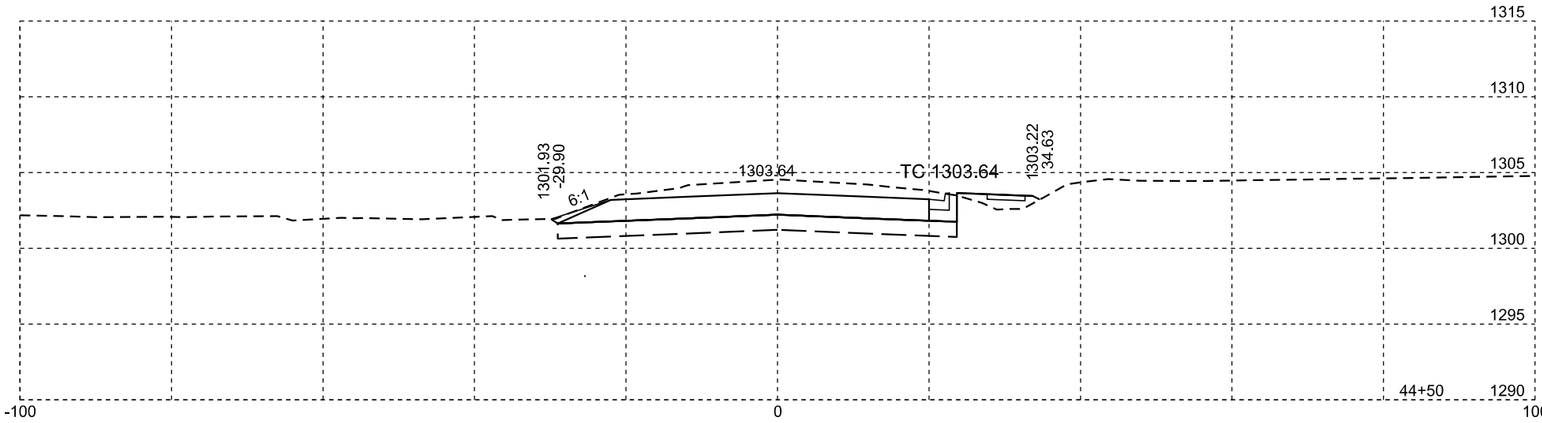

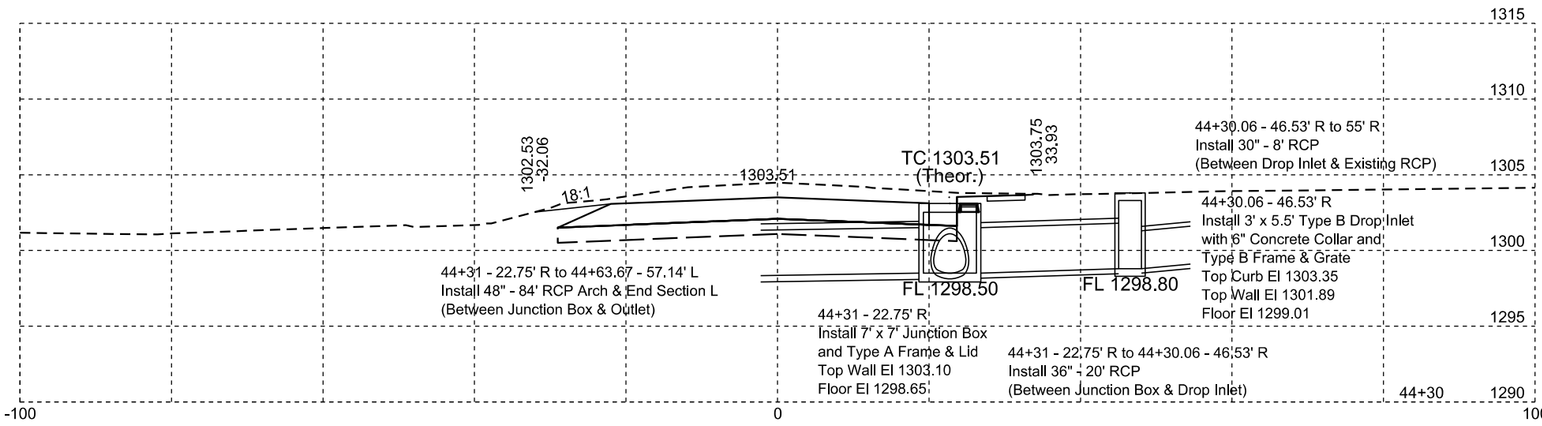

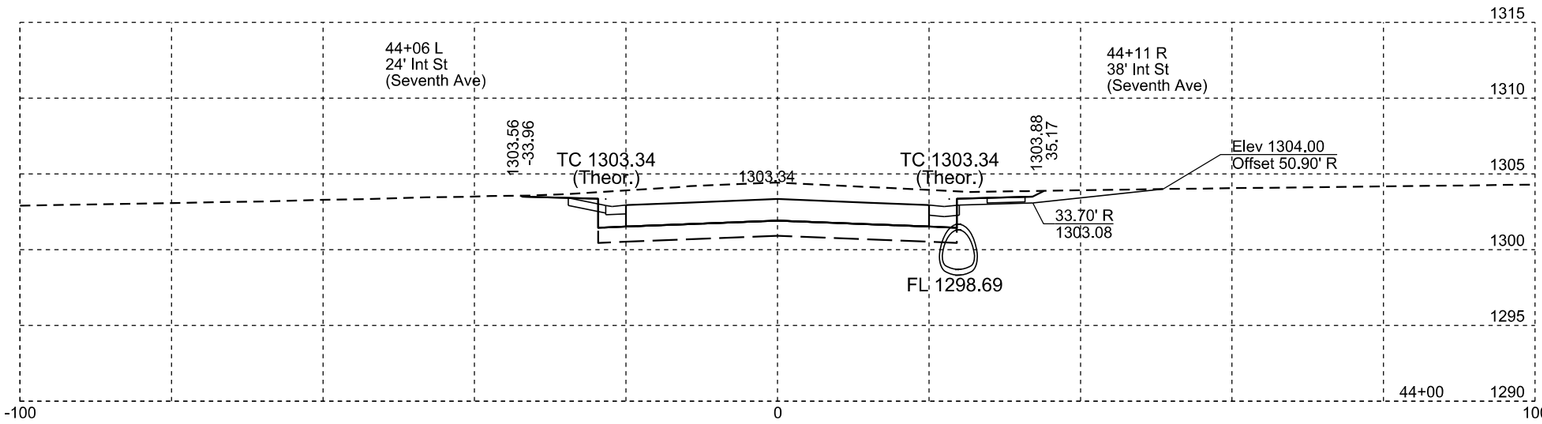

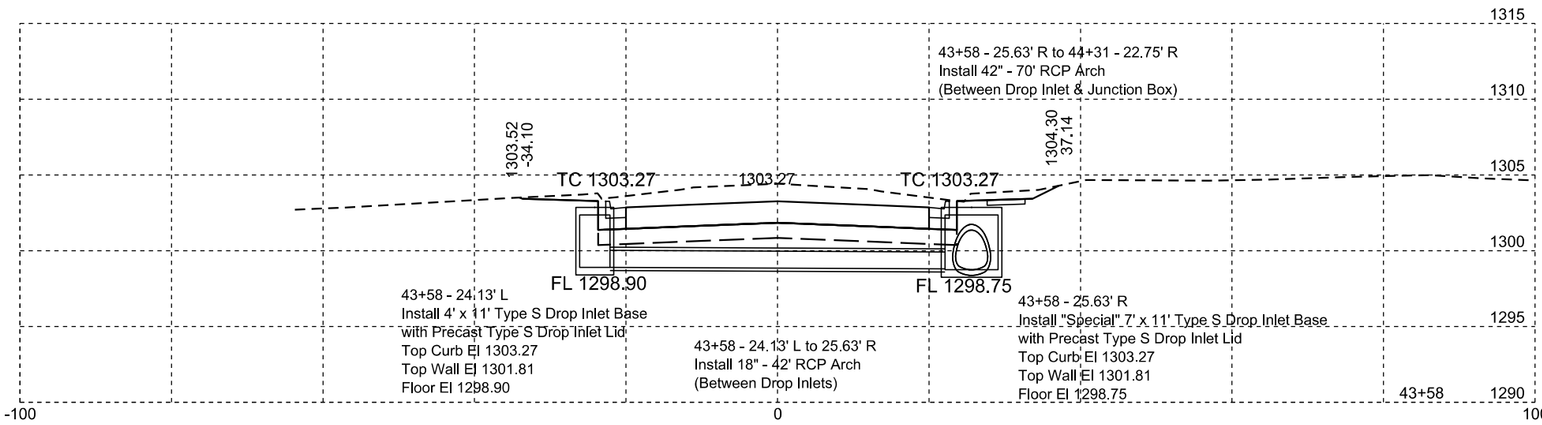

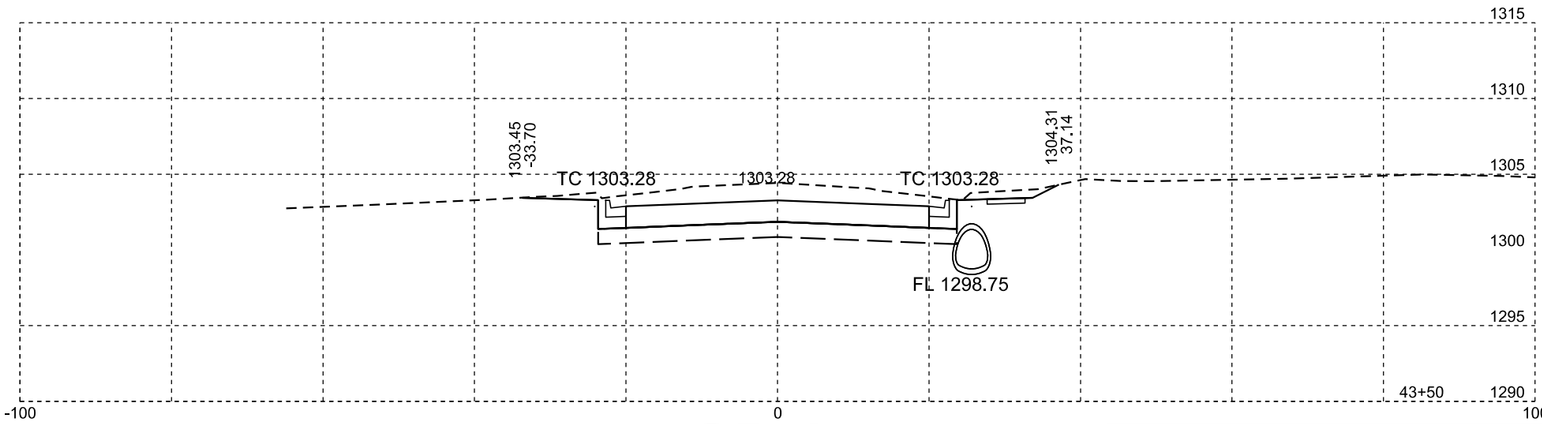

SD 37

Plotting Date: 04/12/2016

STATE OF SOUTH DAKOTA	PROJECT	SHEET NO.	TOTAL SHEETS
	P 0037(129)207 NH 0012(198)308	X17	X50

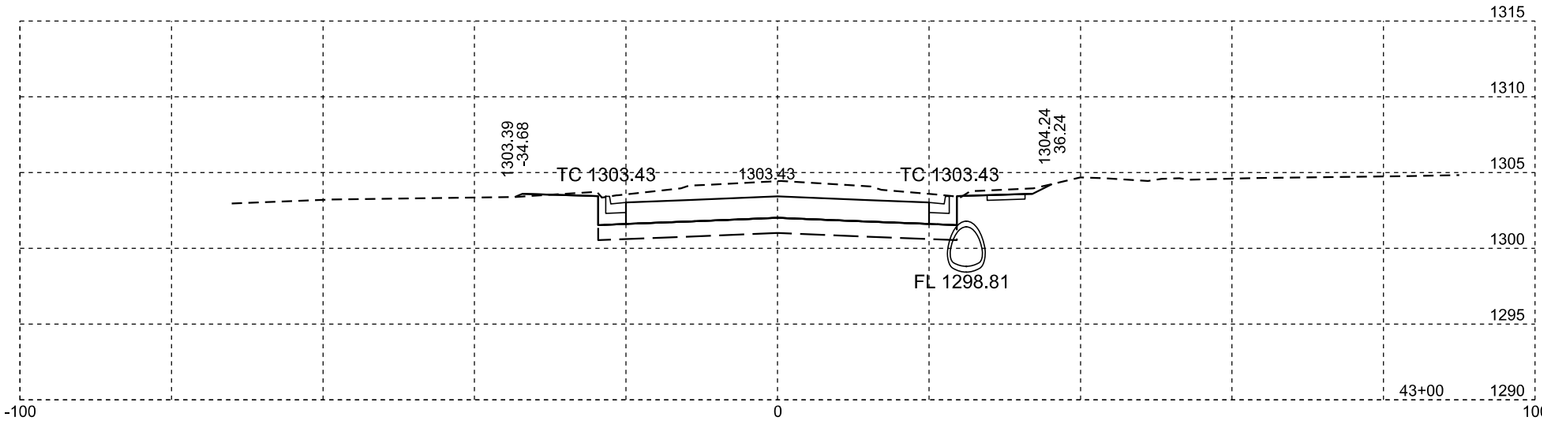

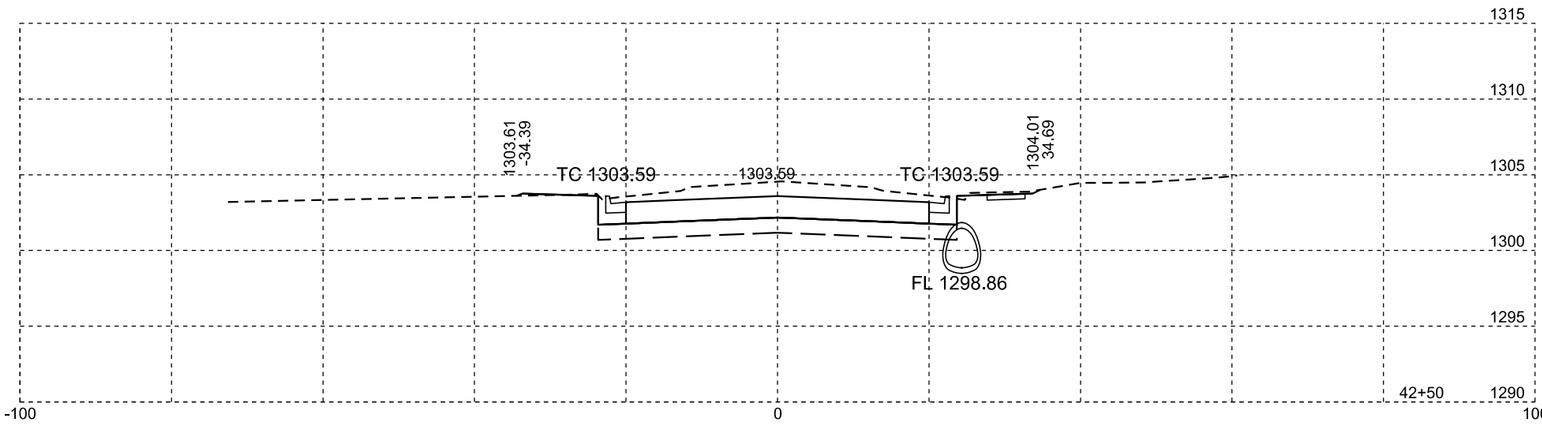

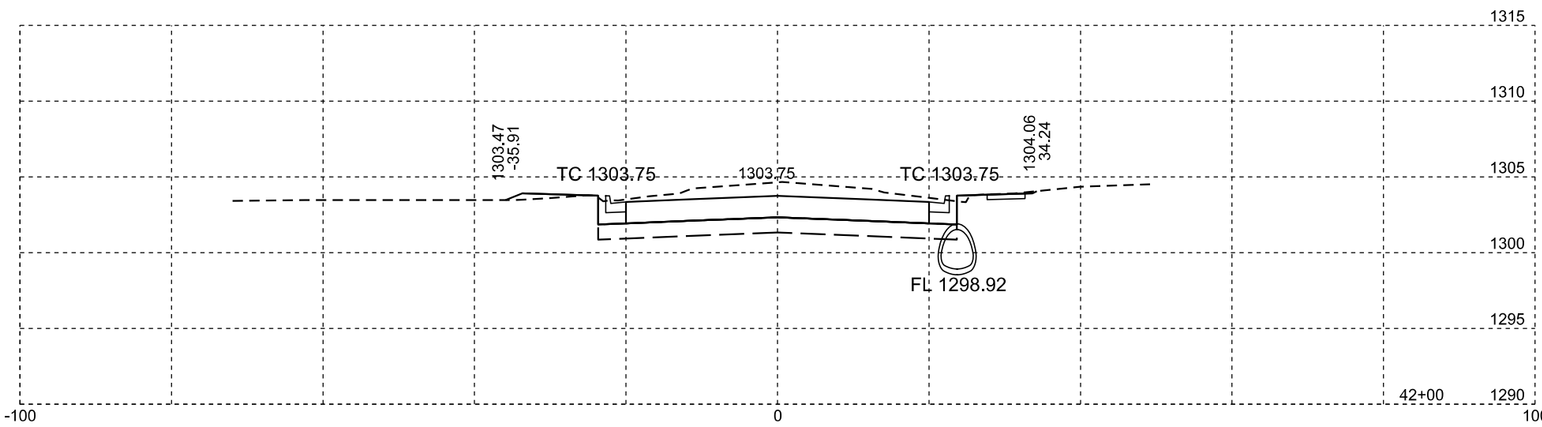

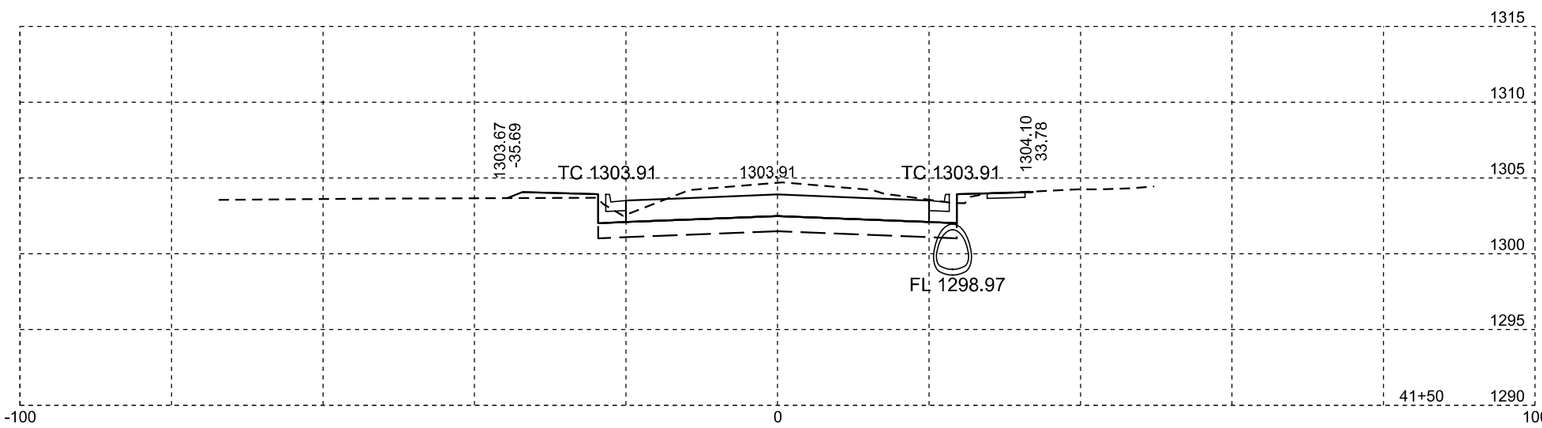

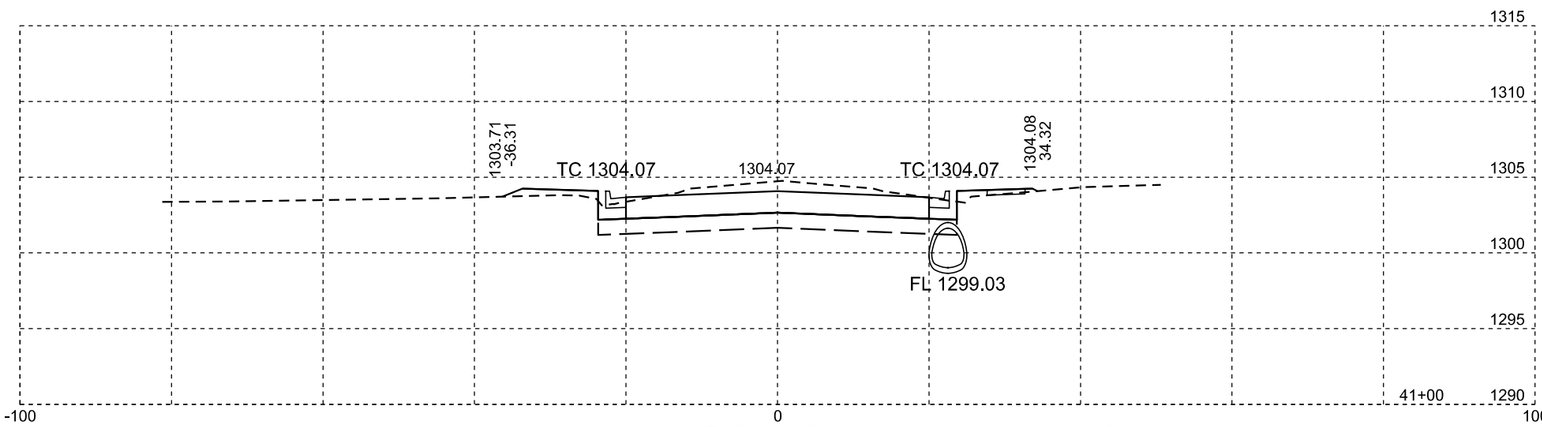

SD 37

Plotting Date: 04/12/2016

STATE OF SOUTH DAKOTA	PROJECT	SHEET NO.	TOTAL SHEETS
	P 0037(129)207 NH 0012(198)308	X18	X50

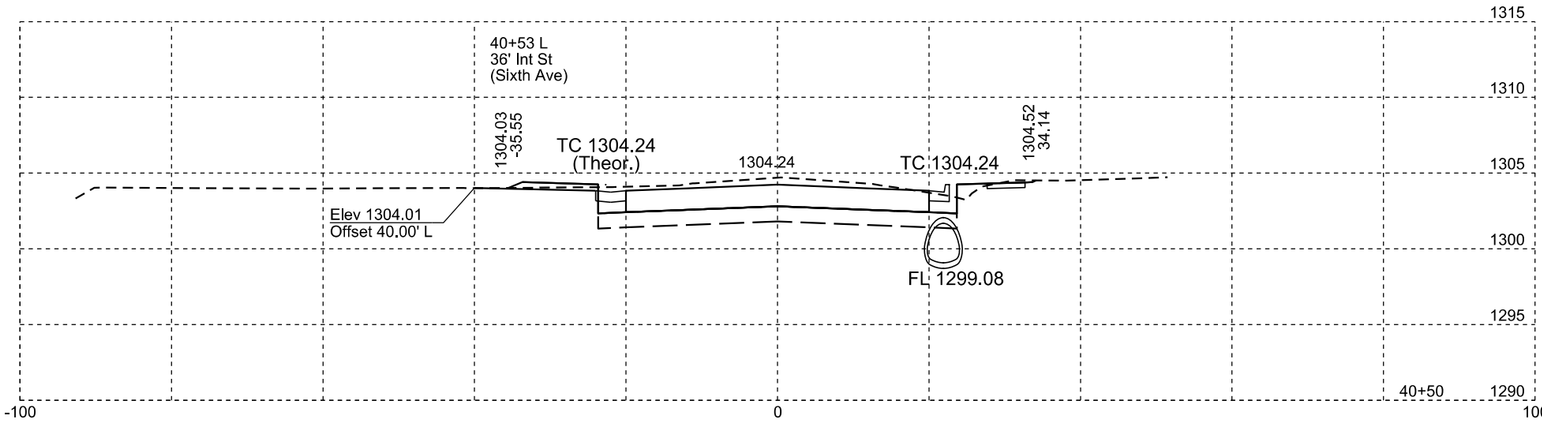

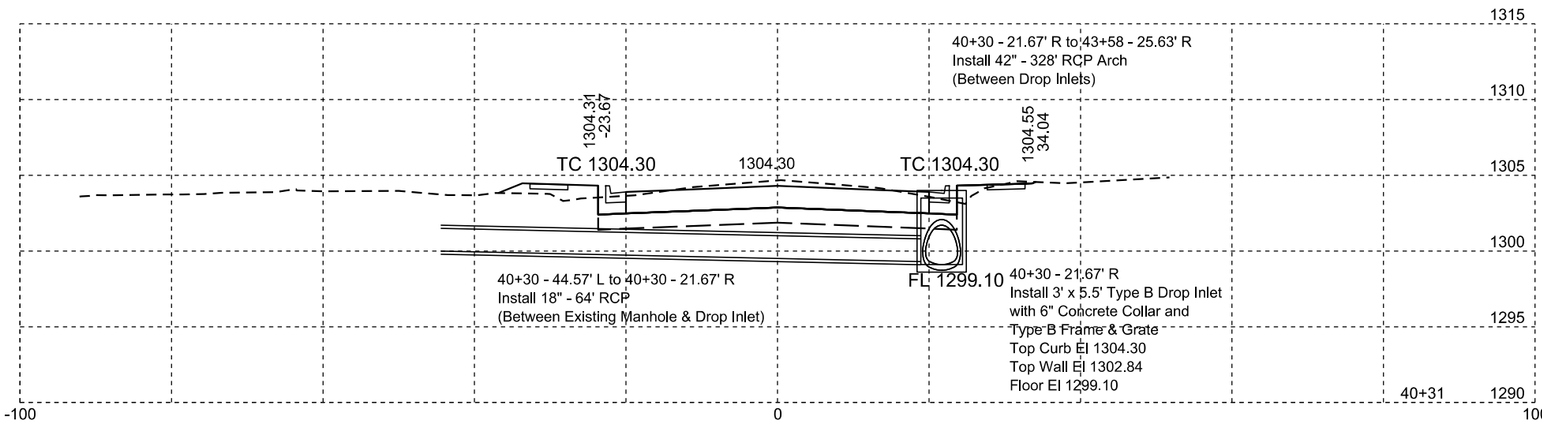

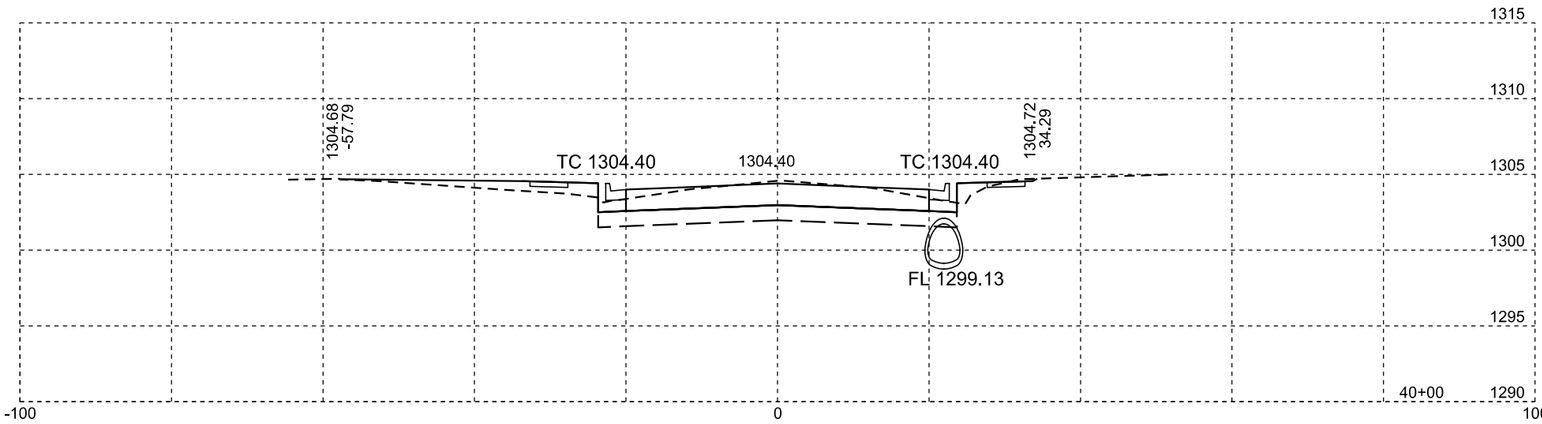

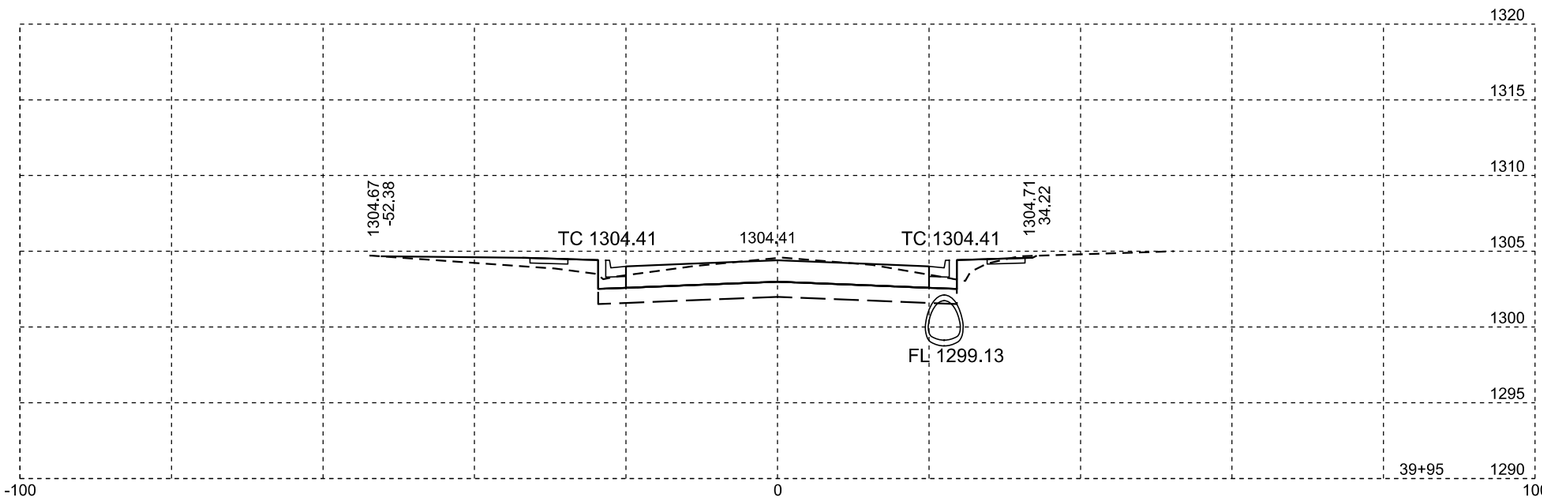

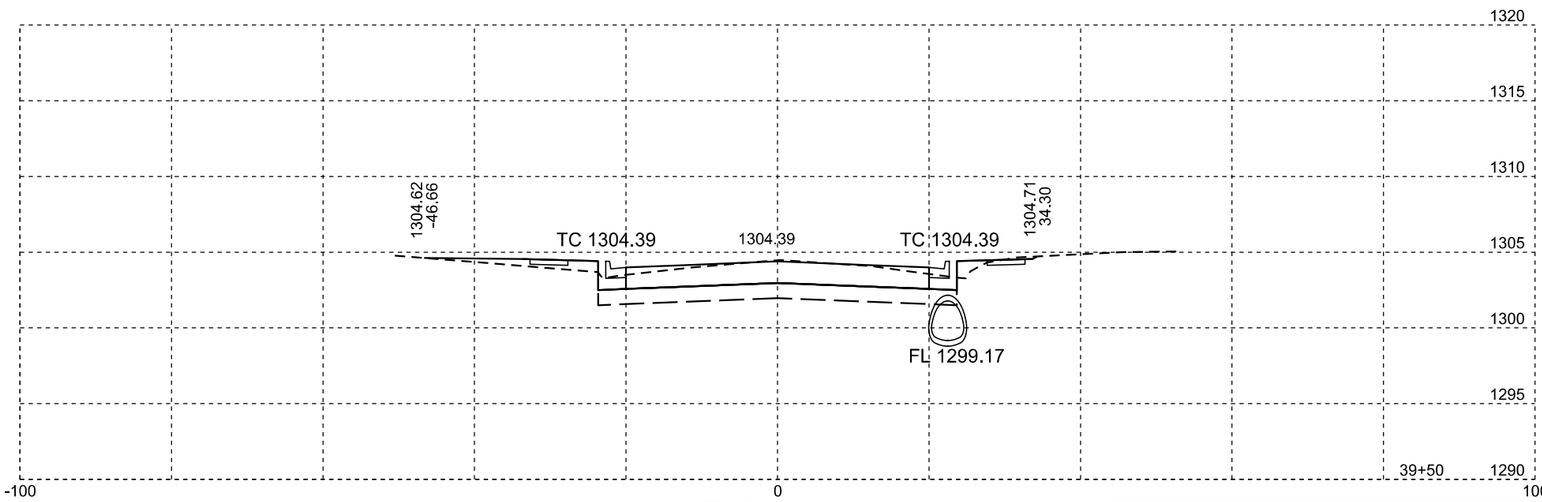

SD 37

Plotting Date: 04/12/2016

STATE OF SOUTH DAKOTA	PROJECT	SHEET NO.	TOTAL SHEETS
	P 0037(129)207 NH 0012(198)308	X19	X50

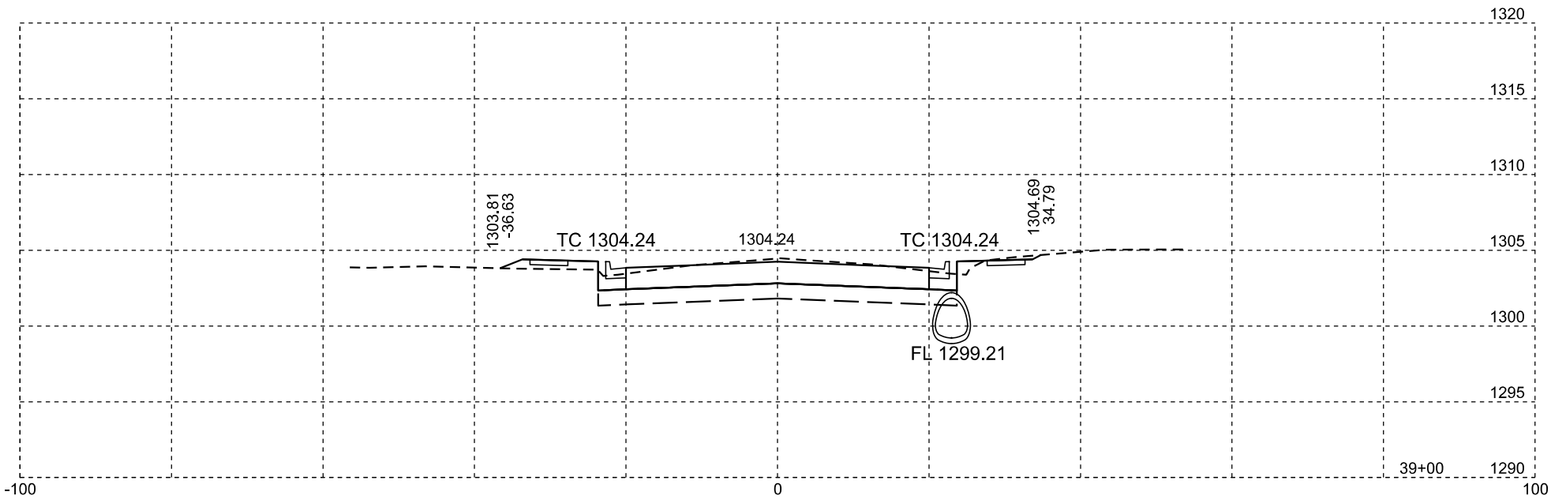

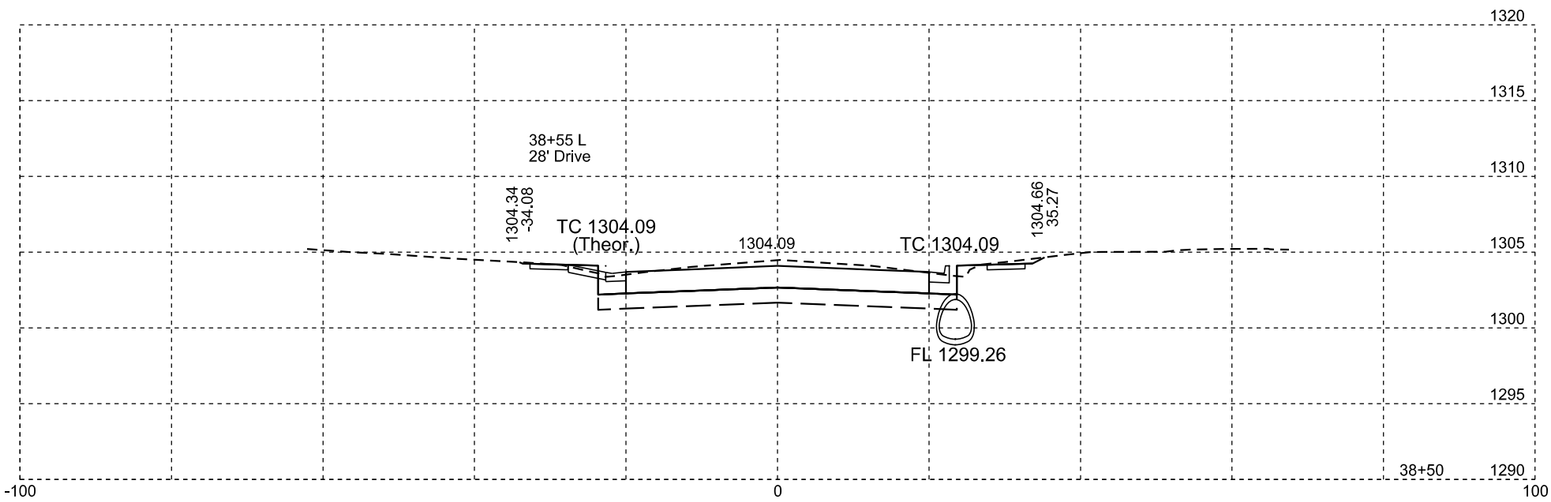

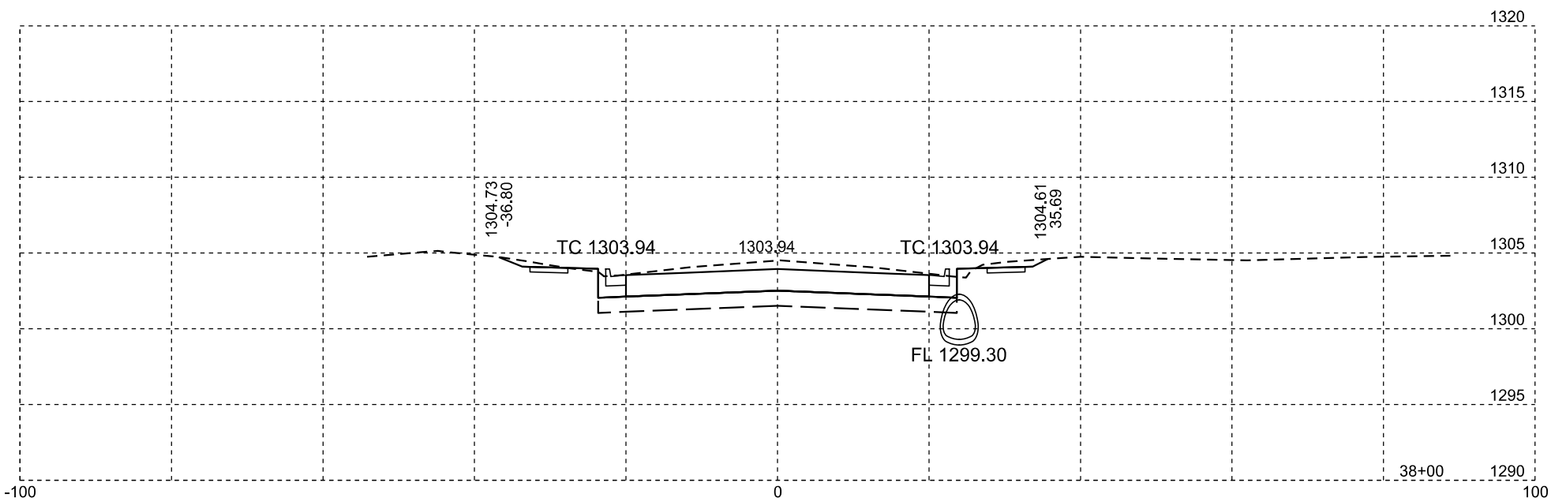

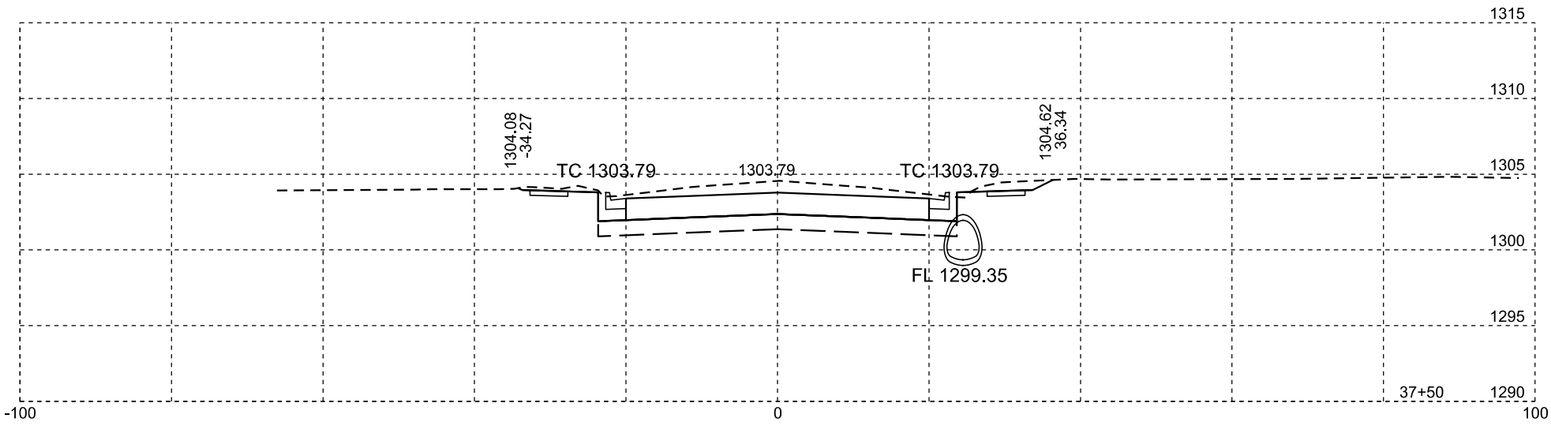

SD 37

Plotting Date: 04/12/2016

STATE OF SOUTH DAKOTA	PROJECT	SHEET NO.	TOTAL SHEETS
	P 0037(129)207 NH 0012(198)308	X20	X50

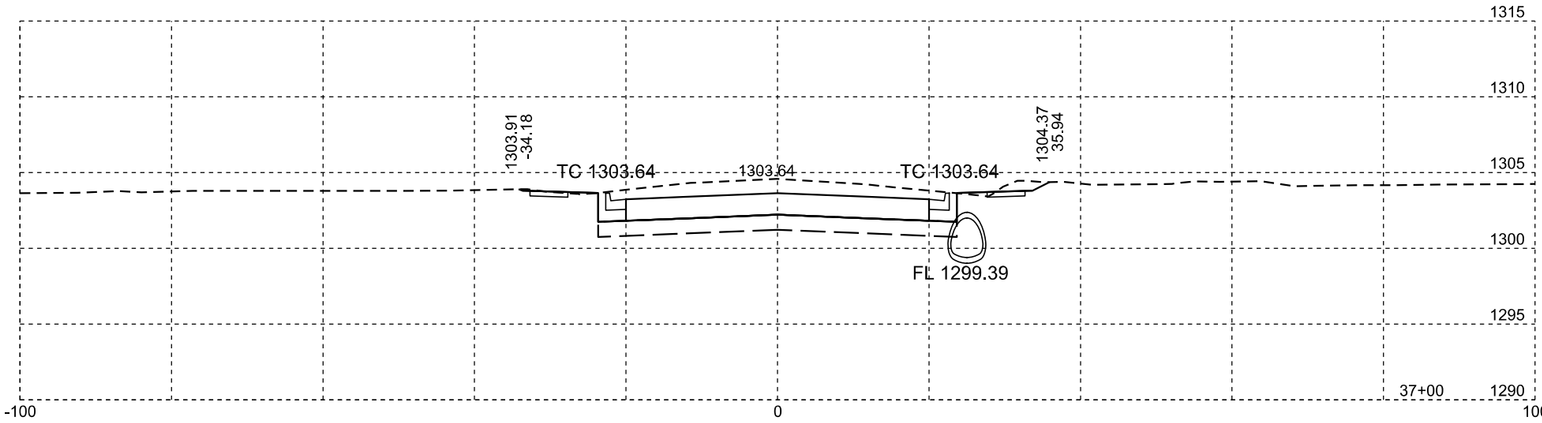

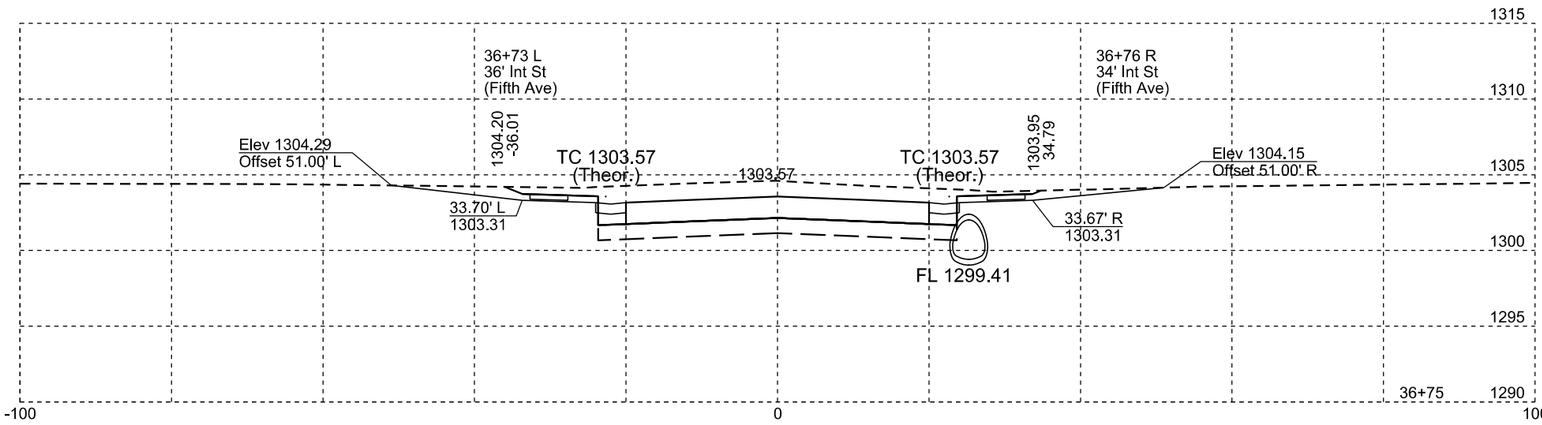

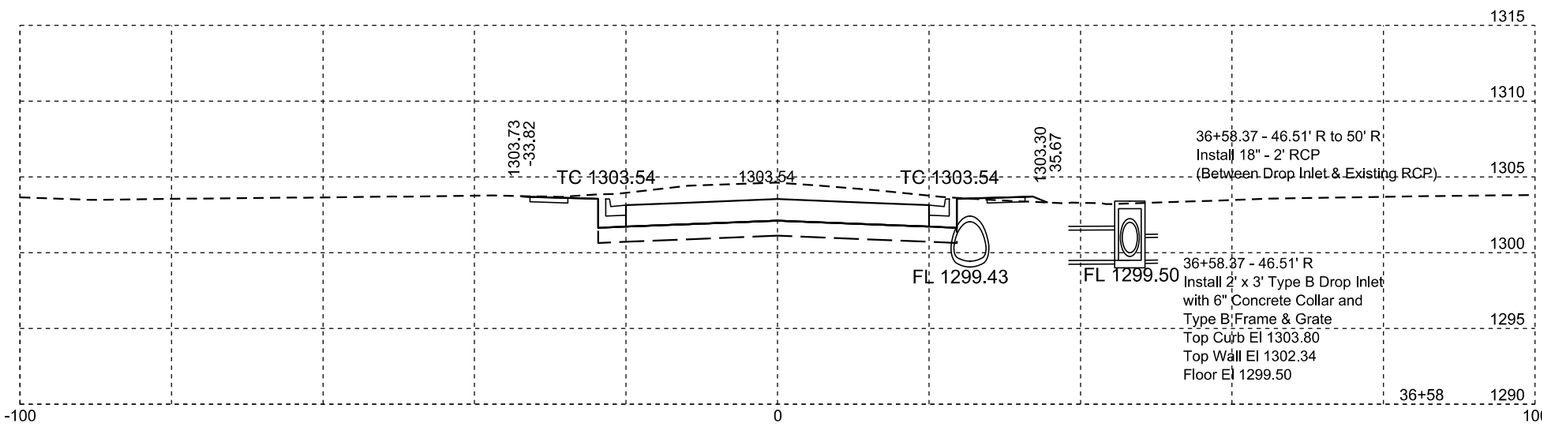

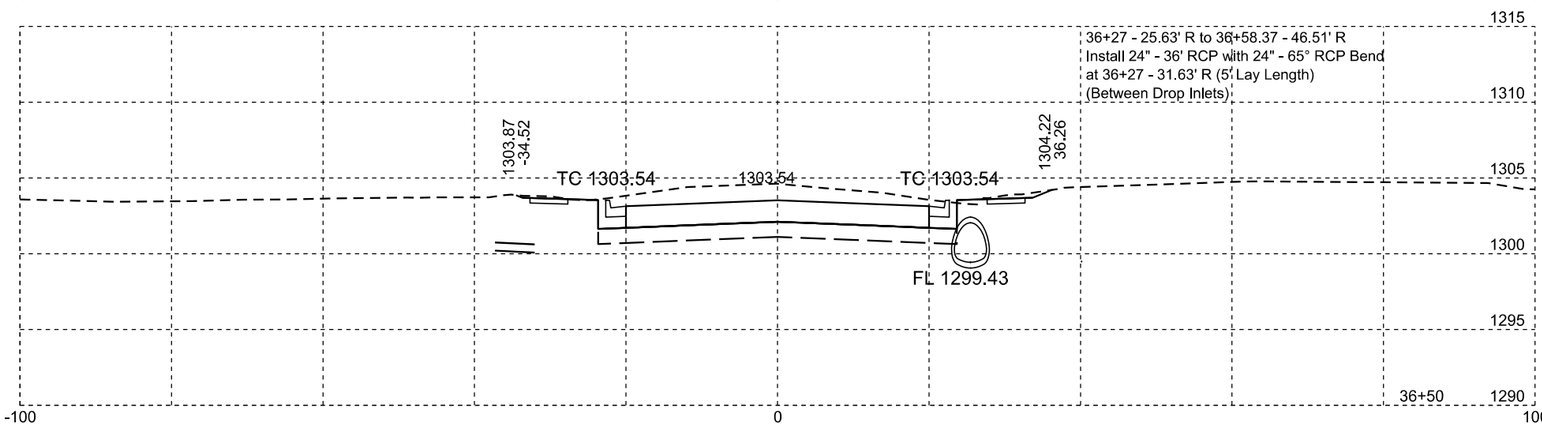

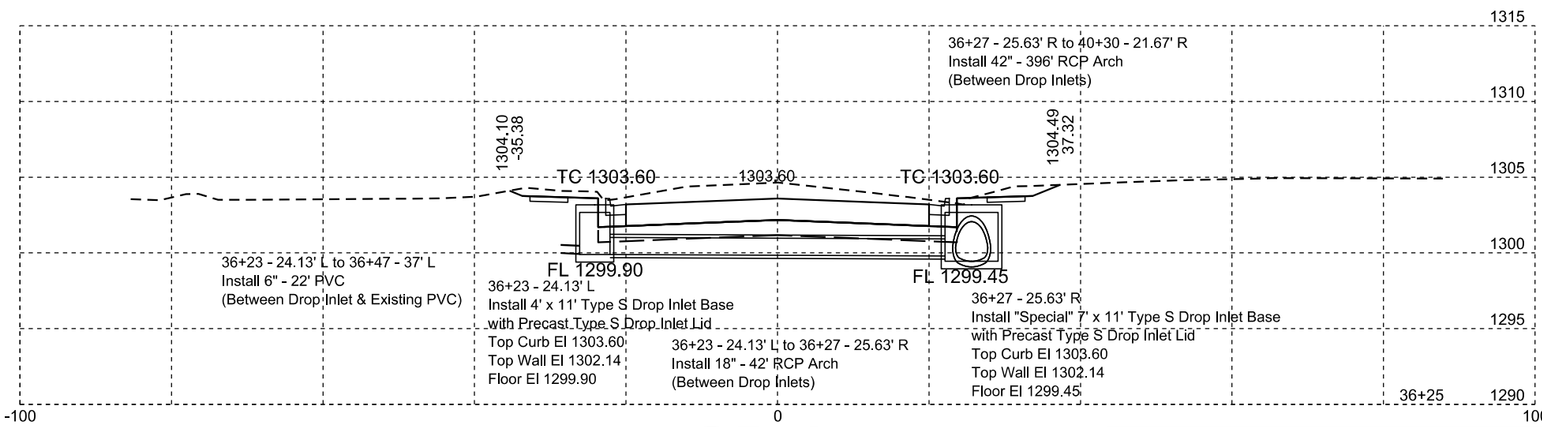

SD 37

Plotting Date: 04/12/2016

STATE OF SOUTH DAKOTA	PROJECT	SHEET NO.	TOTAL SHEETS
	P 0037(129)207 NH 0012(198)308	X21	X50

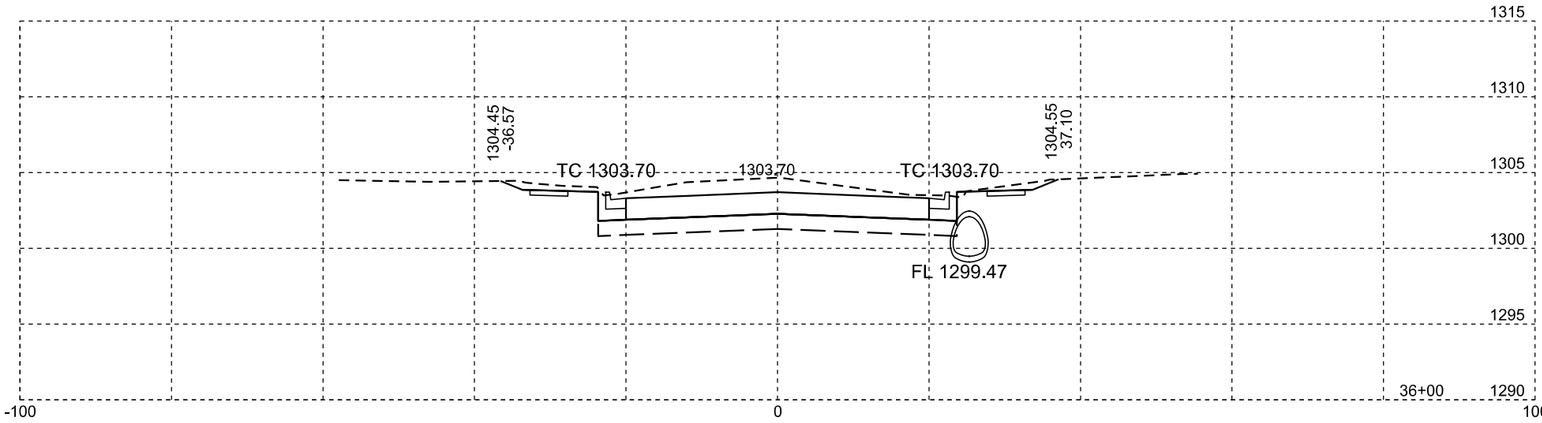

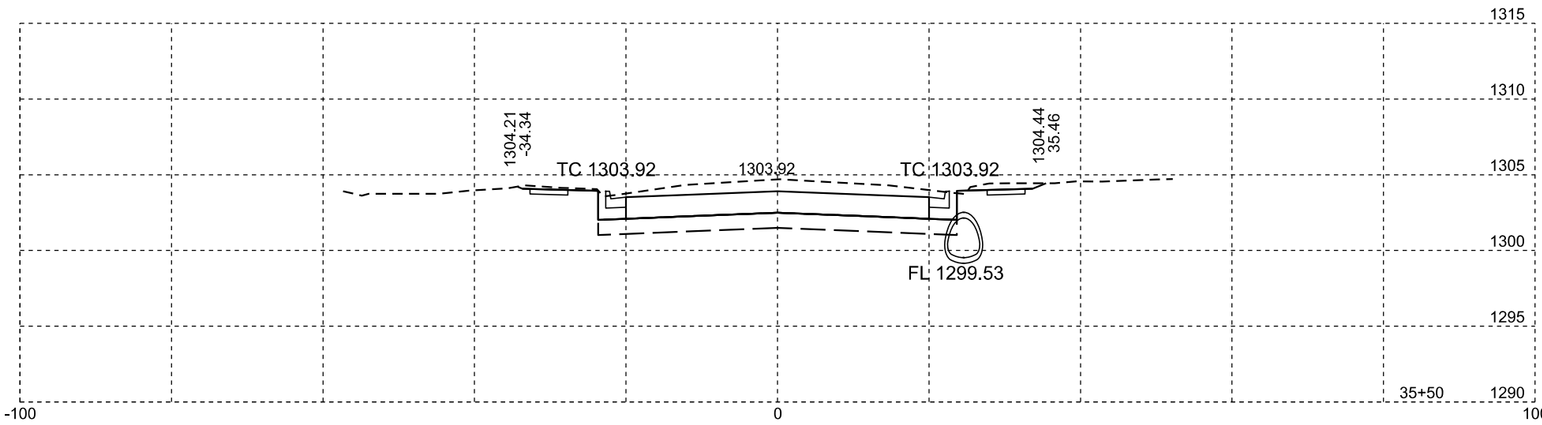

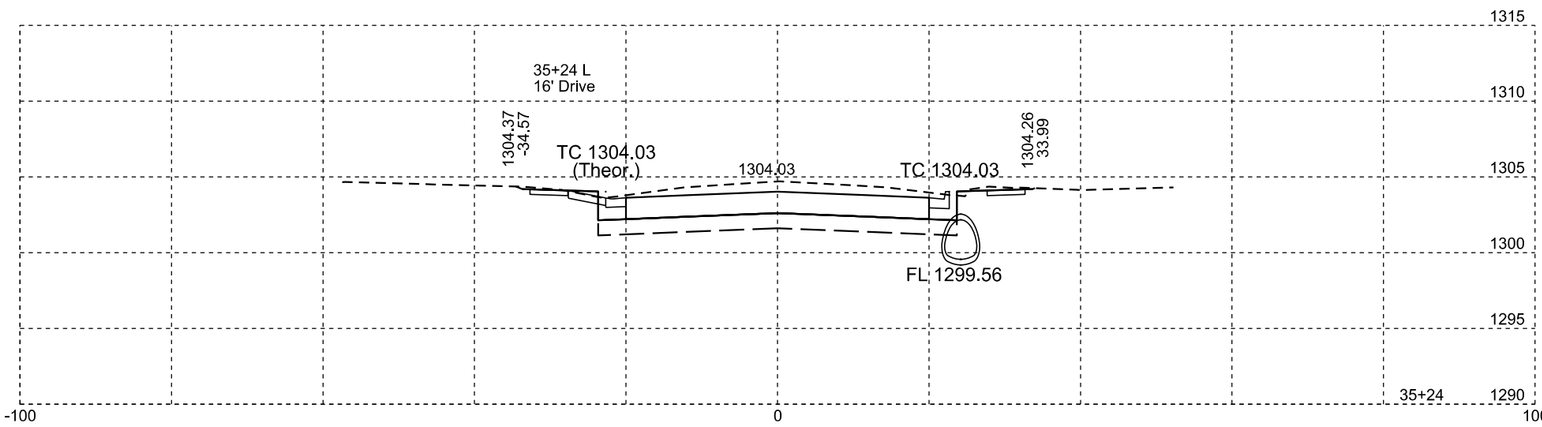

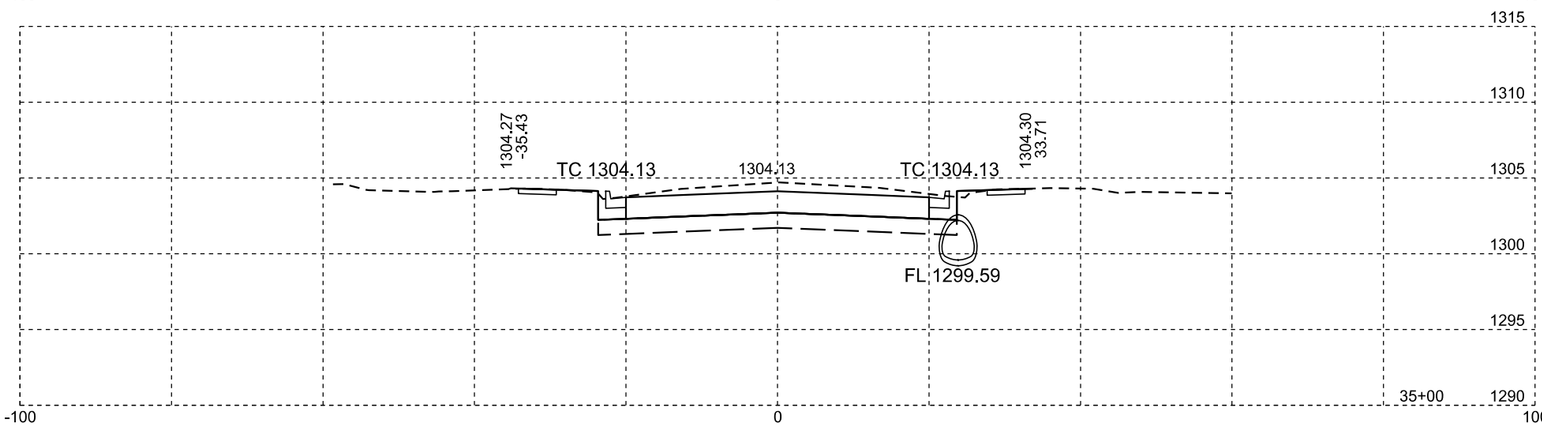

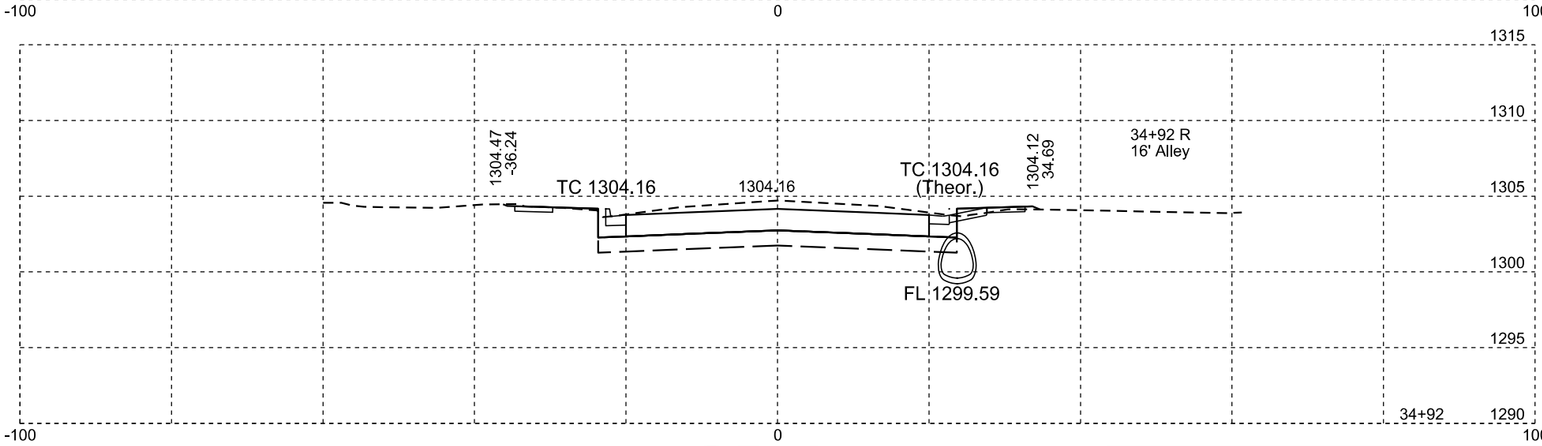

SD 37

Plotting Date: 04/12/2016

STATE OF SOUTH DAKOTA	PROJECT	SHEET NO.	TOTAL SHEETS
	P 0037(129)207 NH 0012(198)308	X22	X50

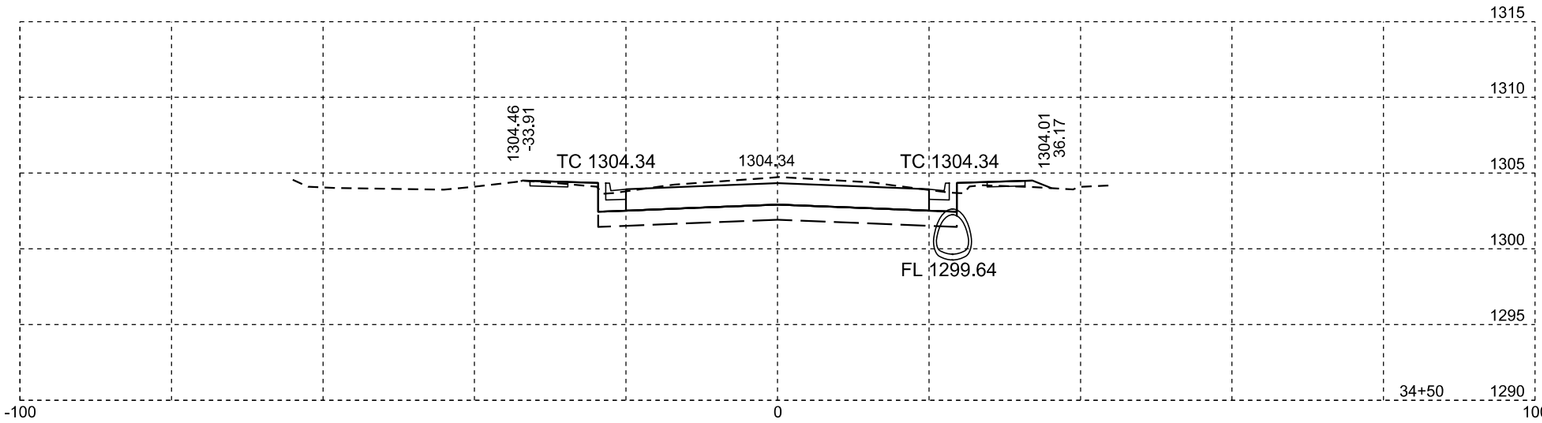

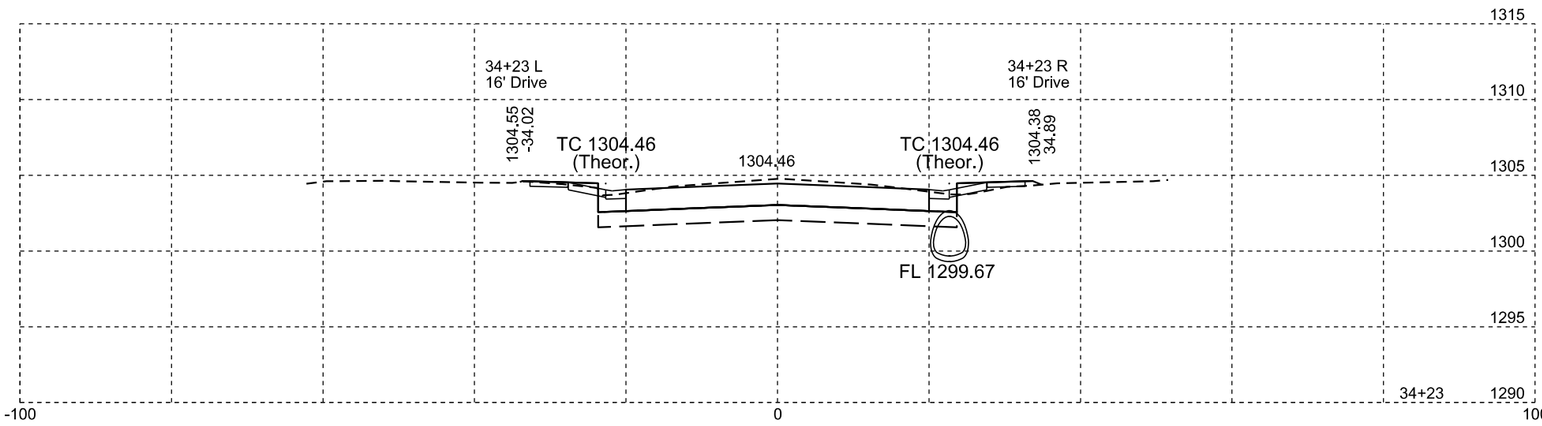

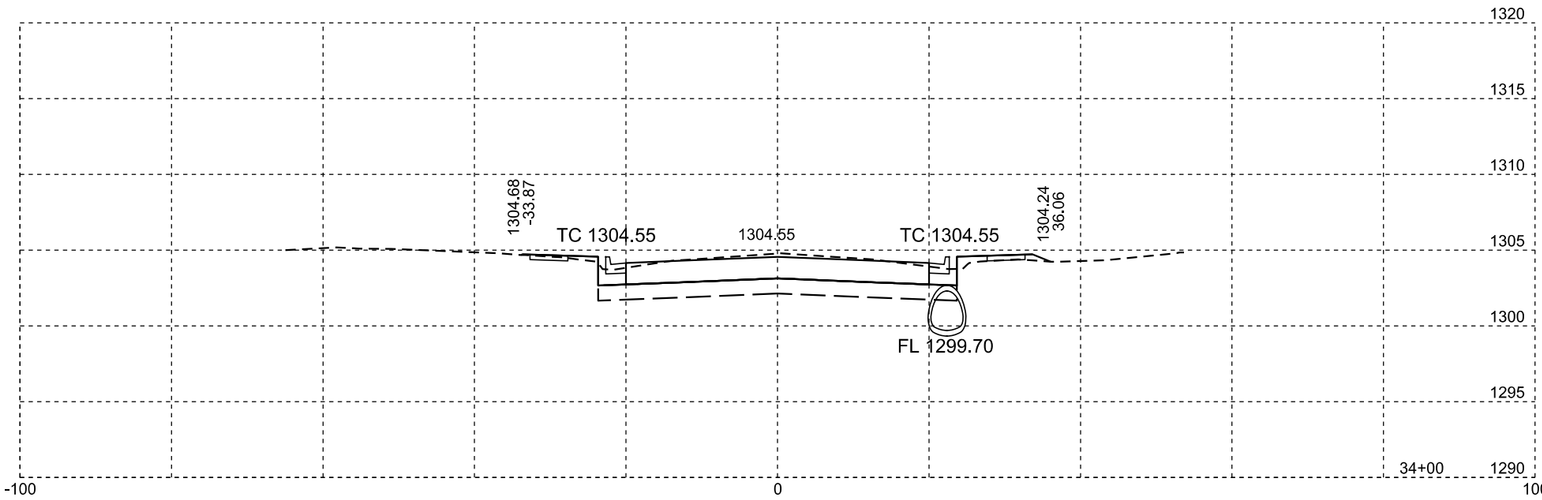

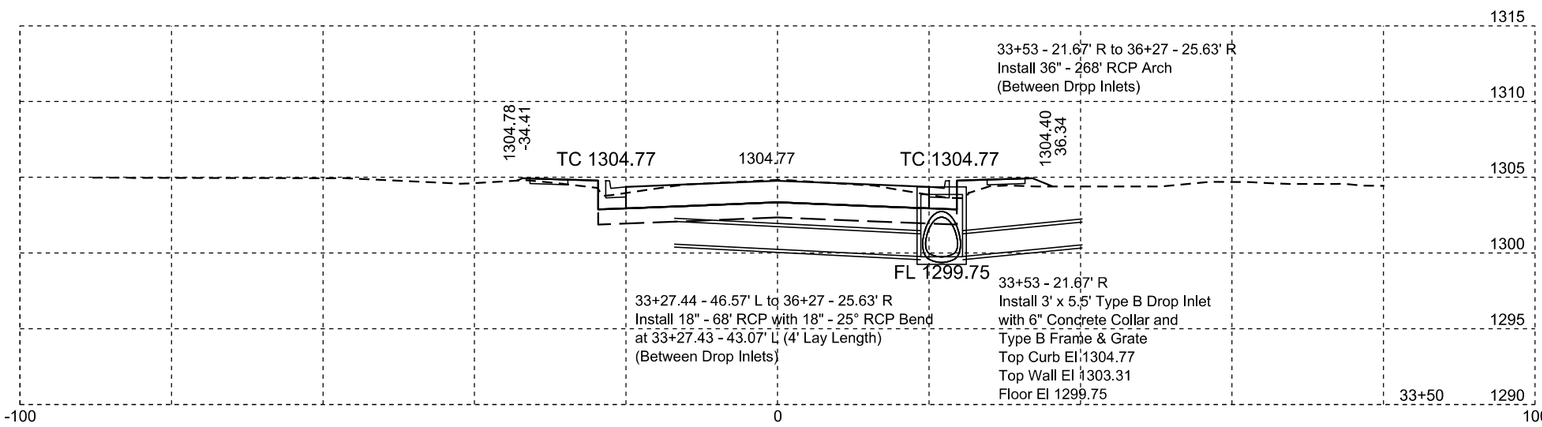

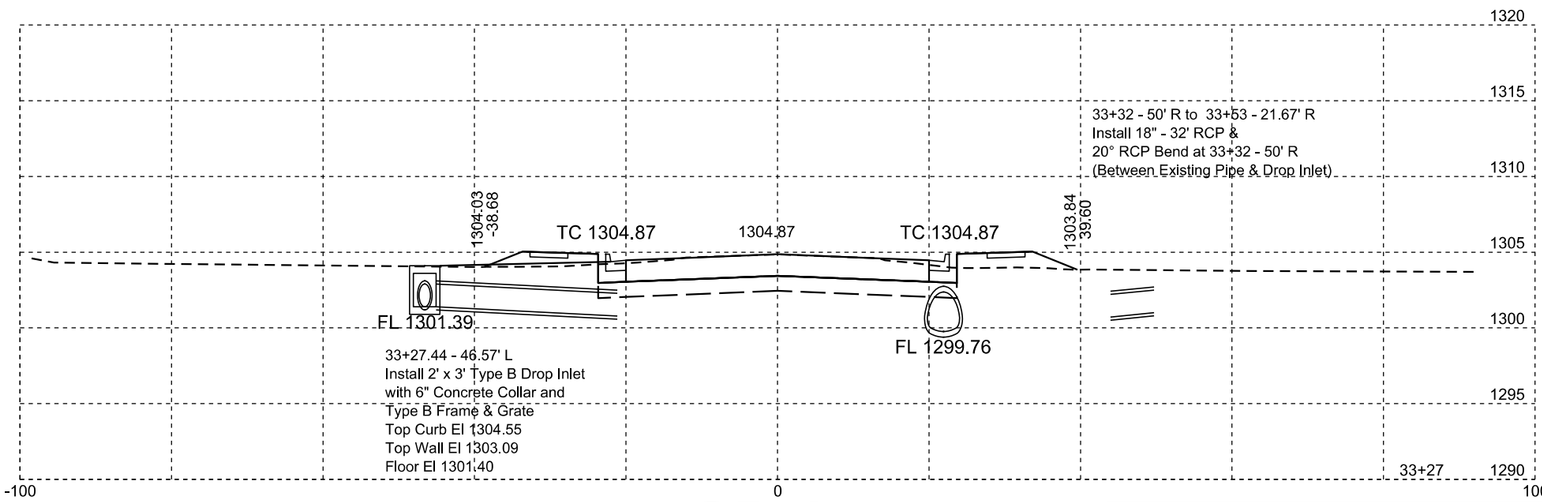

SD 37

Plotting Date: 04/12/2016

STATE OF SOUTH DAKOTA	PROJECT	SHEET NO.	TOTAL SHEETS
	P 0037(129)207 NH 0012(198)308	X23	X50

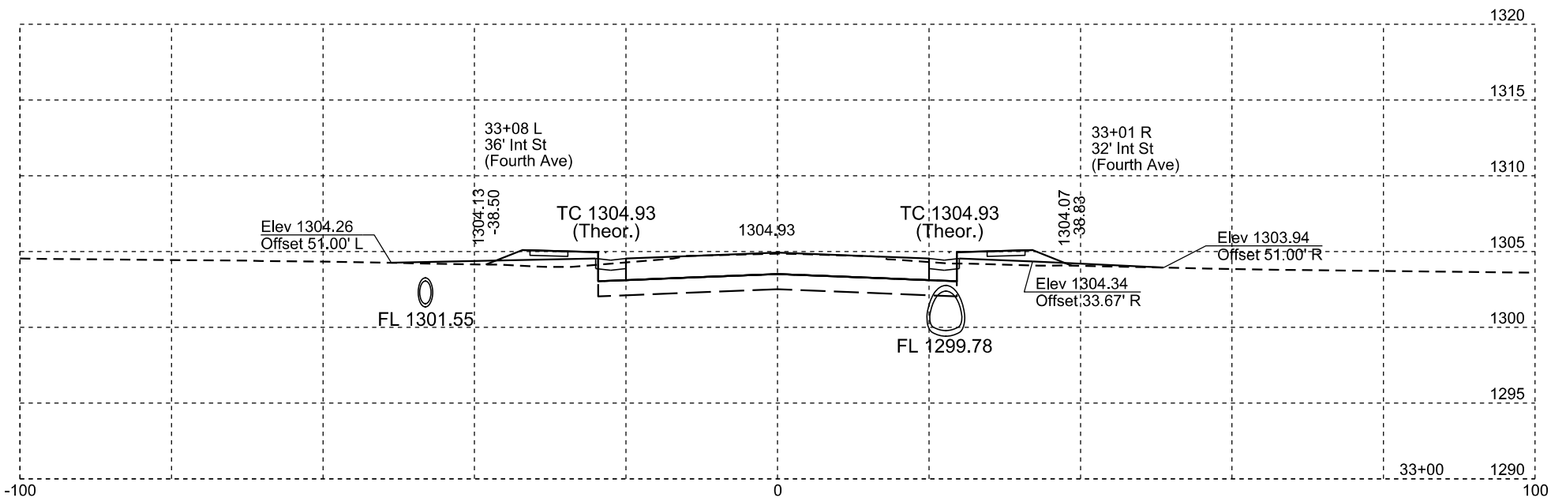

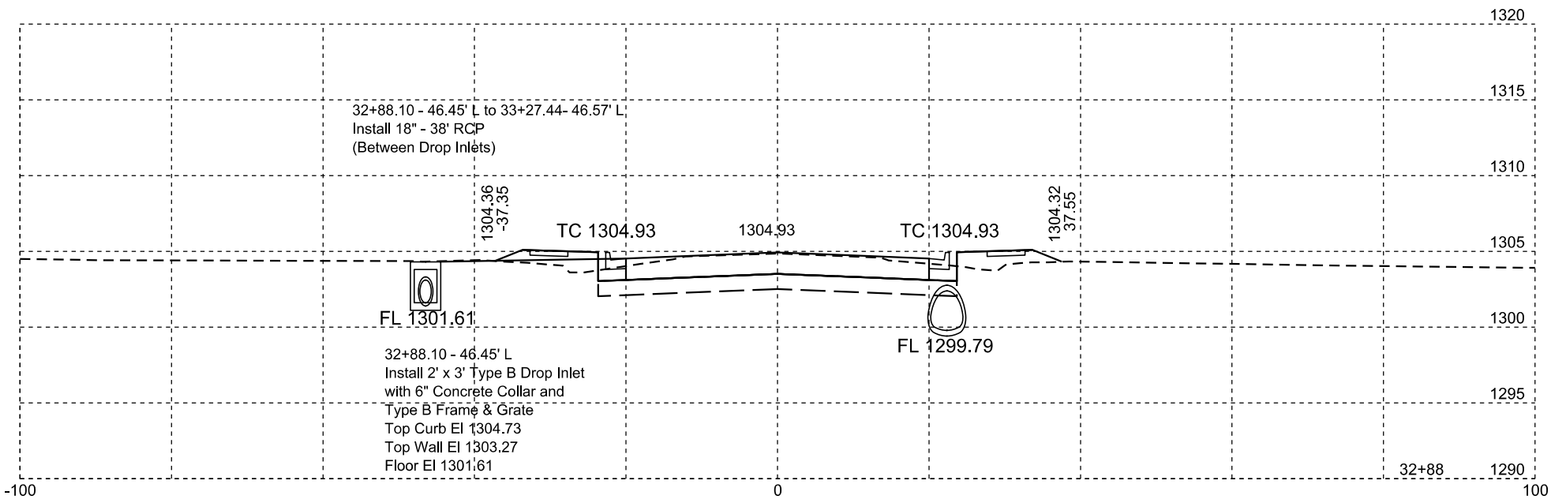

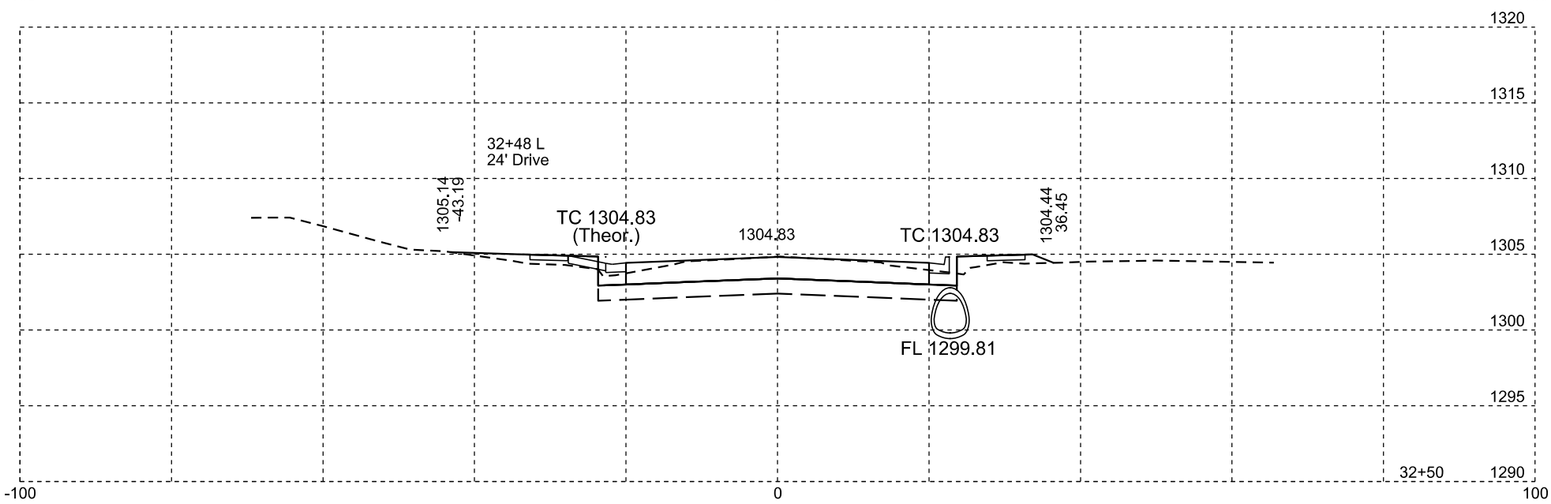

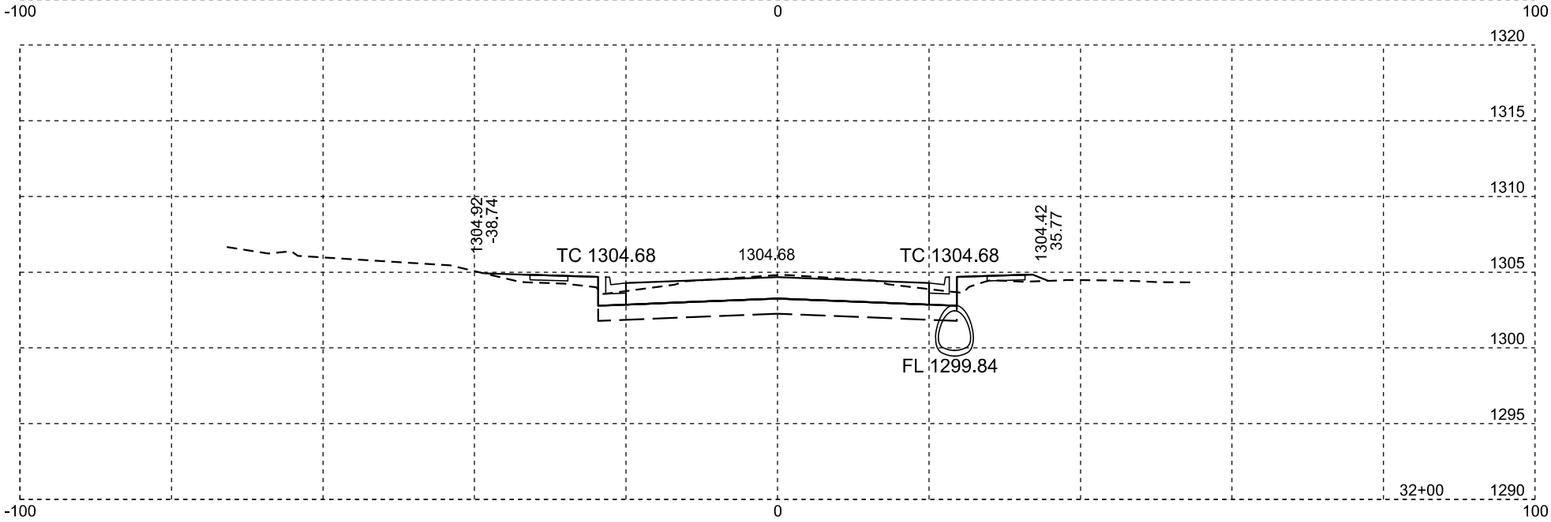

SD 37

Plotting Date: 04/12/2016

STATE OF SOUTH DAKOTA	PROJECT	SHEET NO.	TOTAL SHEETS
	P 0037(129)207 NH 0012(198)308	X24	X50

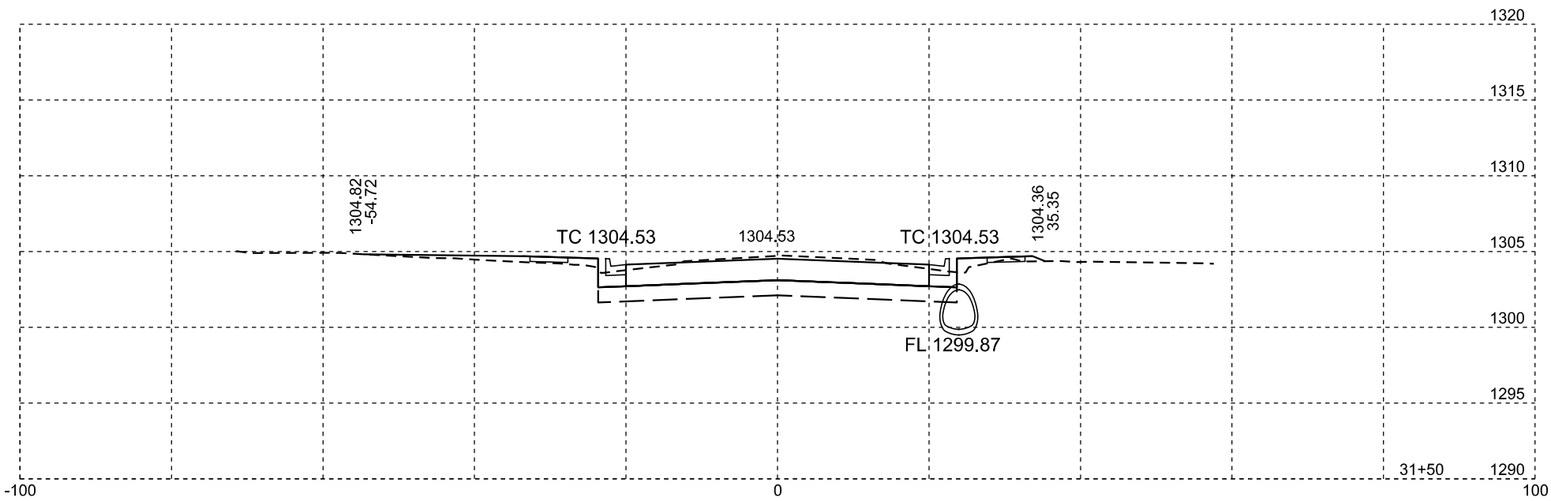

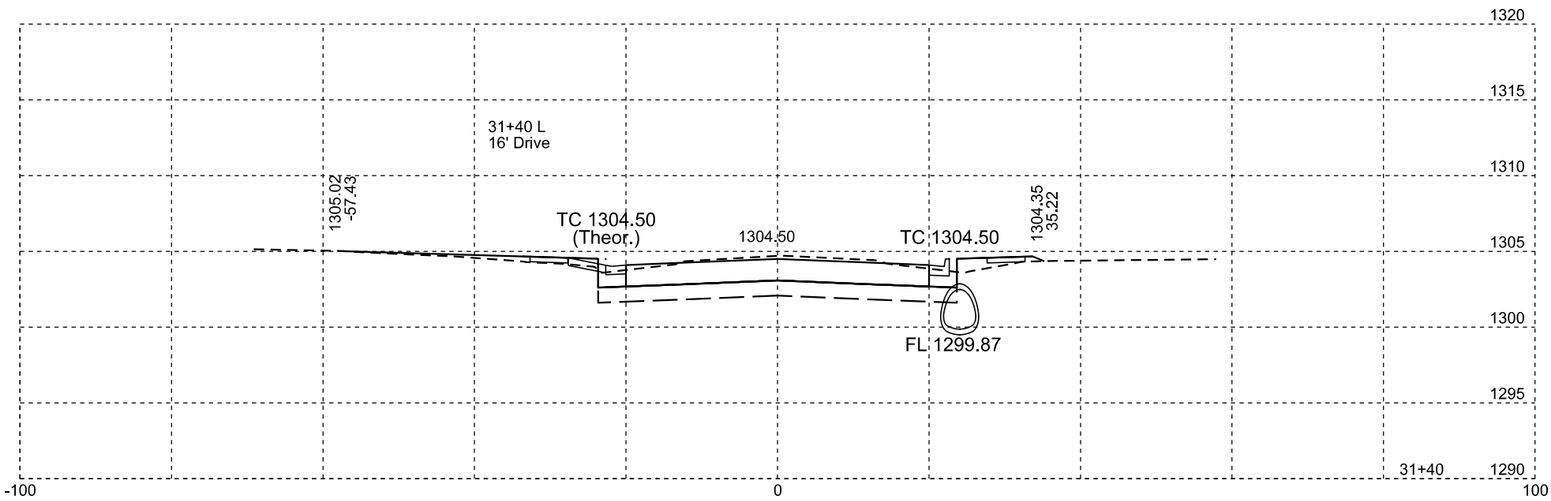

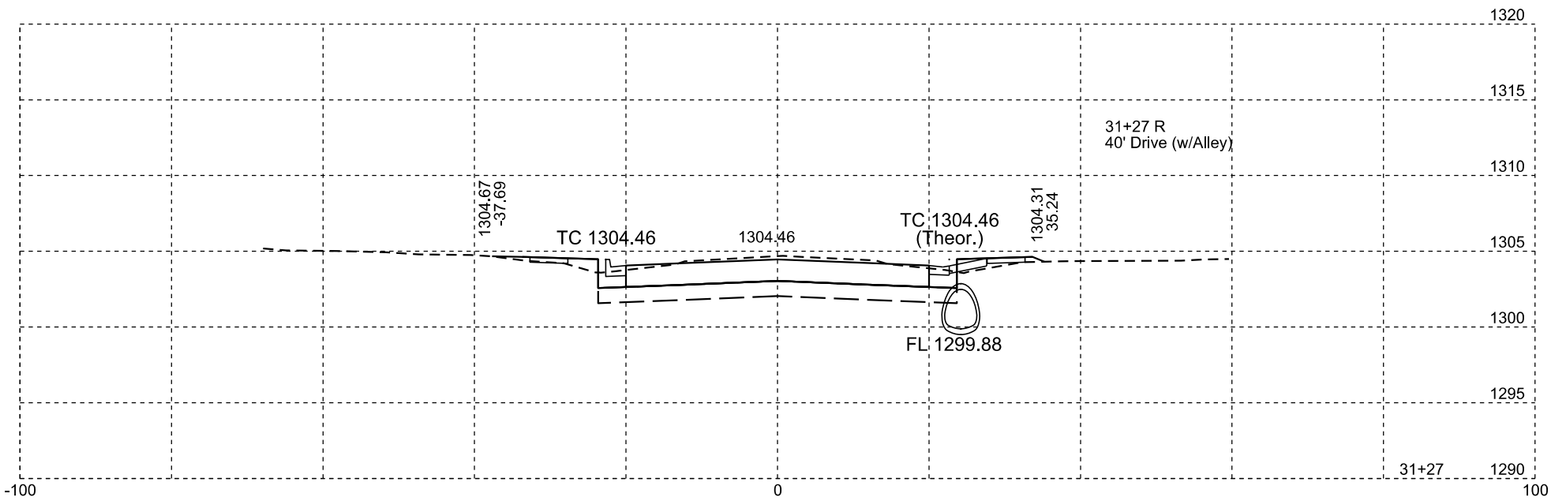

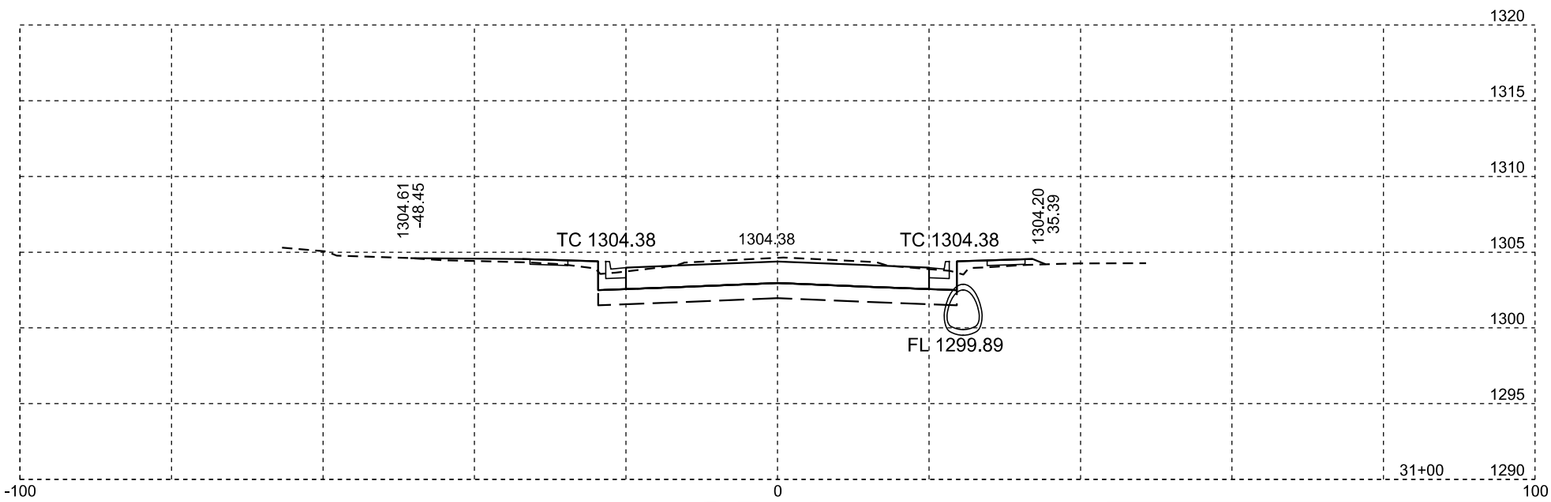

SD 37

Plotting Date: 04/12/2016

STATE OF SOUTH DAKOTA	PROJECT	SHEET NO.	TOTAL SHEETS
	P 0037(129)207 NH 0012(198)308	X25	X50

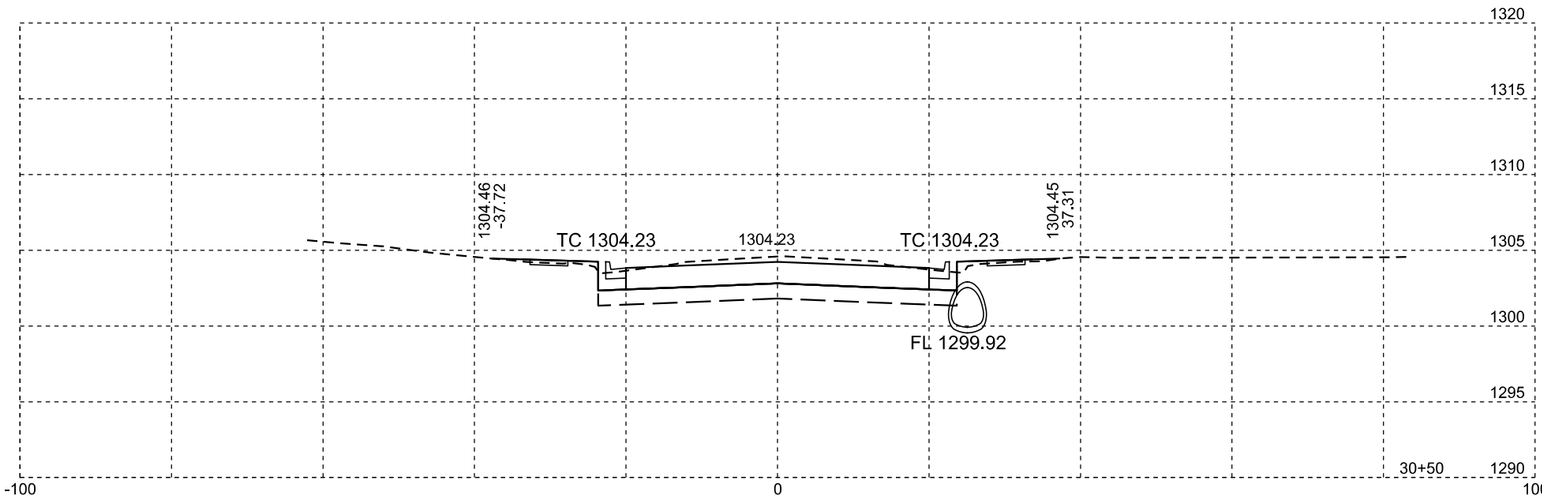

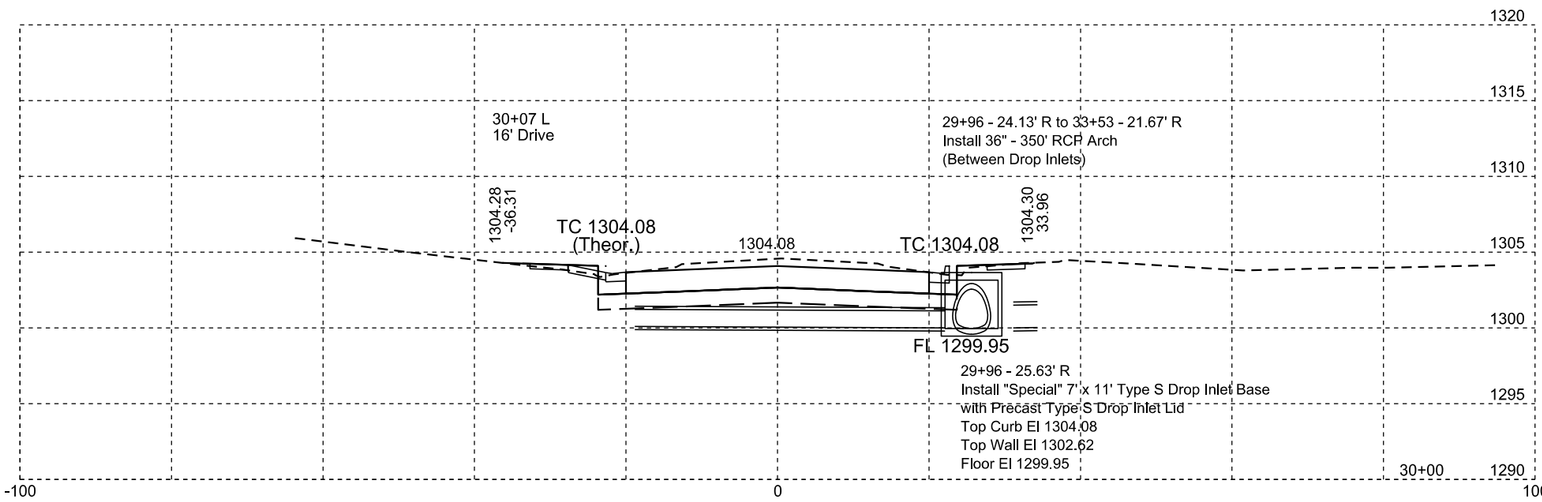

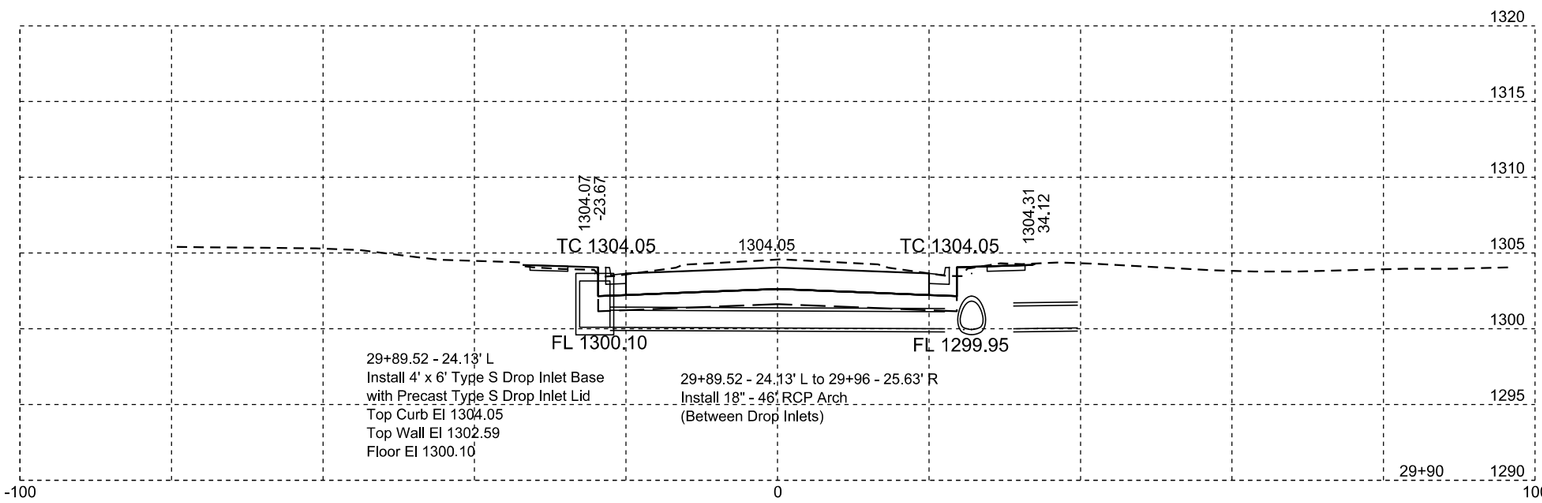

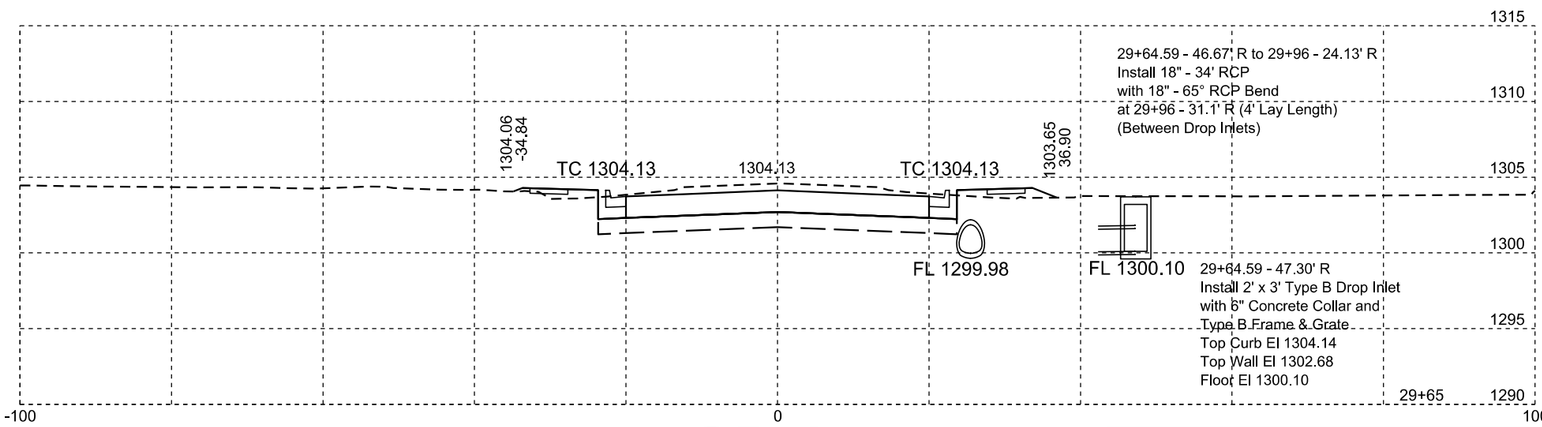

SD 37

Plotting Date: 04/12/2016

STATE OF SOUTH DAKOTA	PROJECT	SHEET NO.	TOTAL SHEETS
	P 0037(129)207 NH 0012(198)308	X26	X50

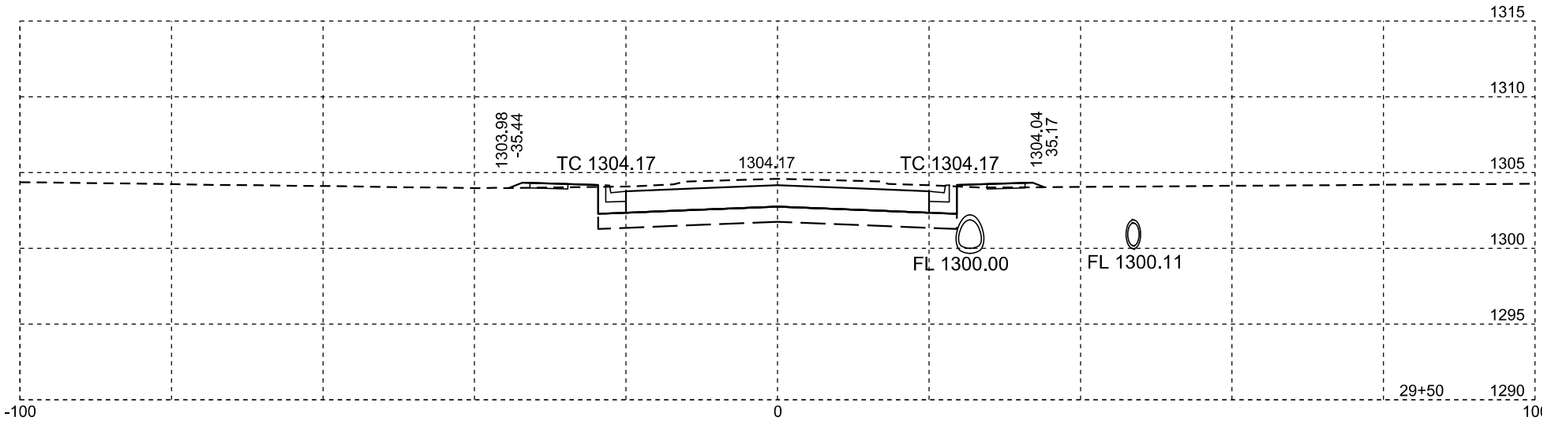

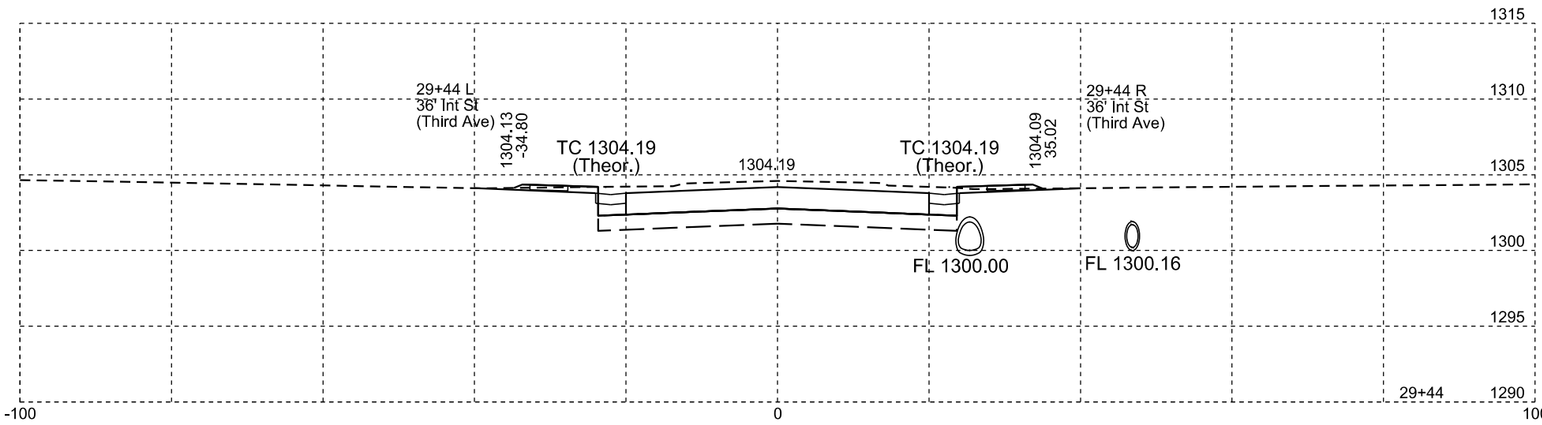

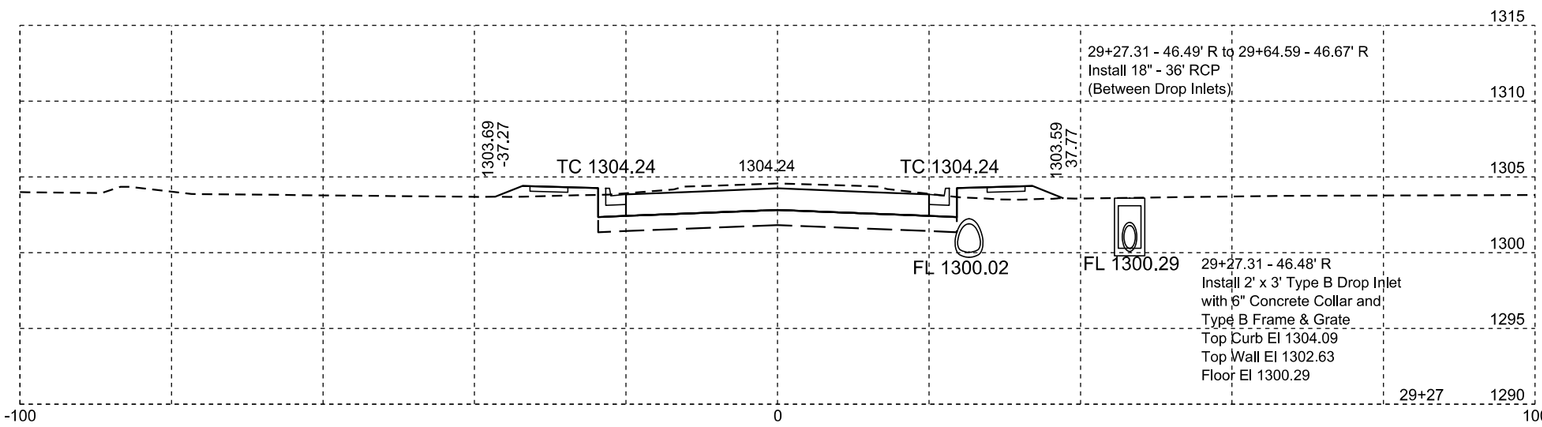

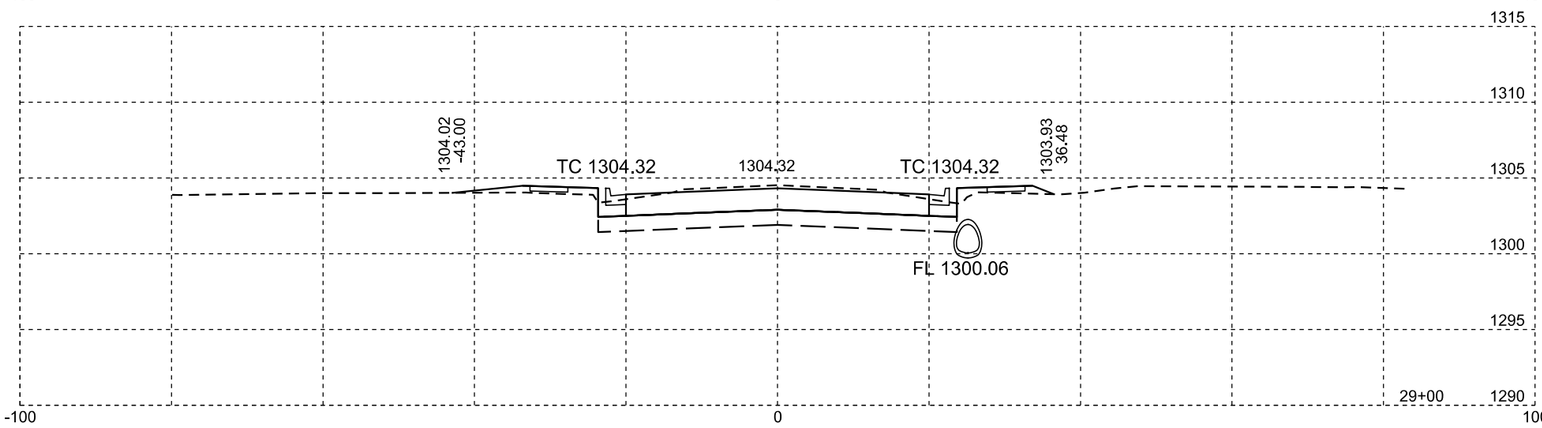

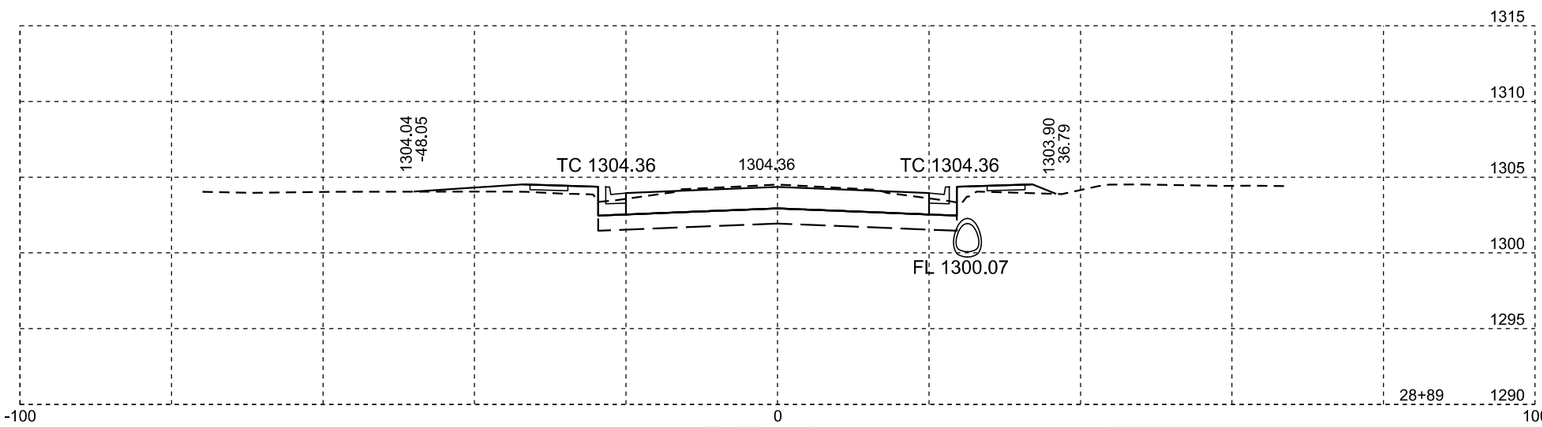

SD 37

Plotting Date: 04/12/2016

STATE OF SOUTH DAKOTA	PROJECT	SHEET NO.	TOTAL SHEETS
	P 0037(129)207 NH 0012(198)308	X27	X50

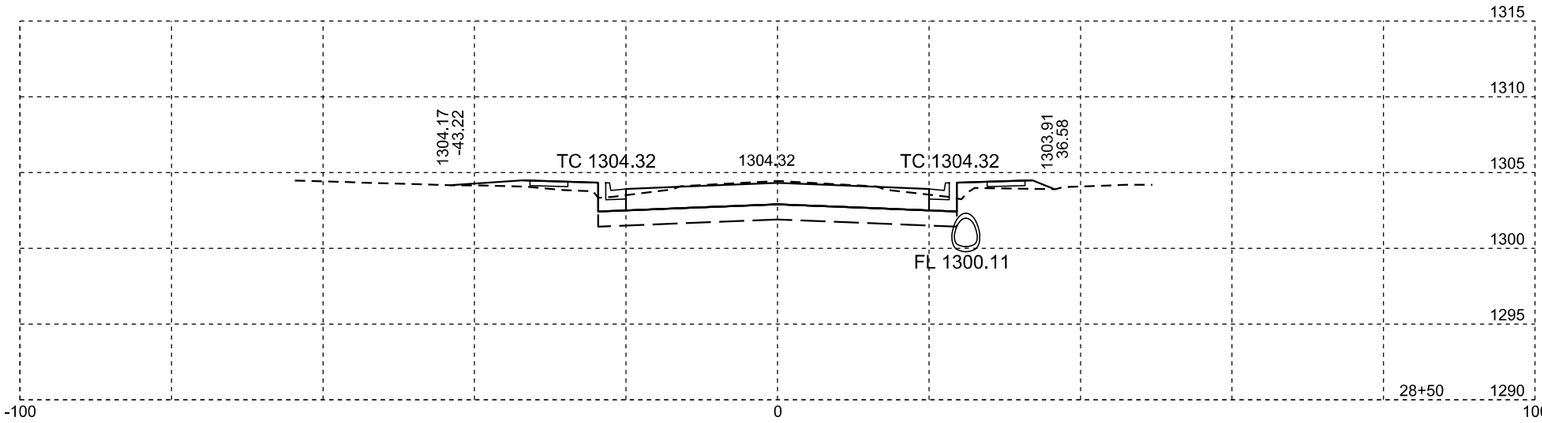

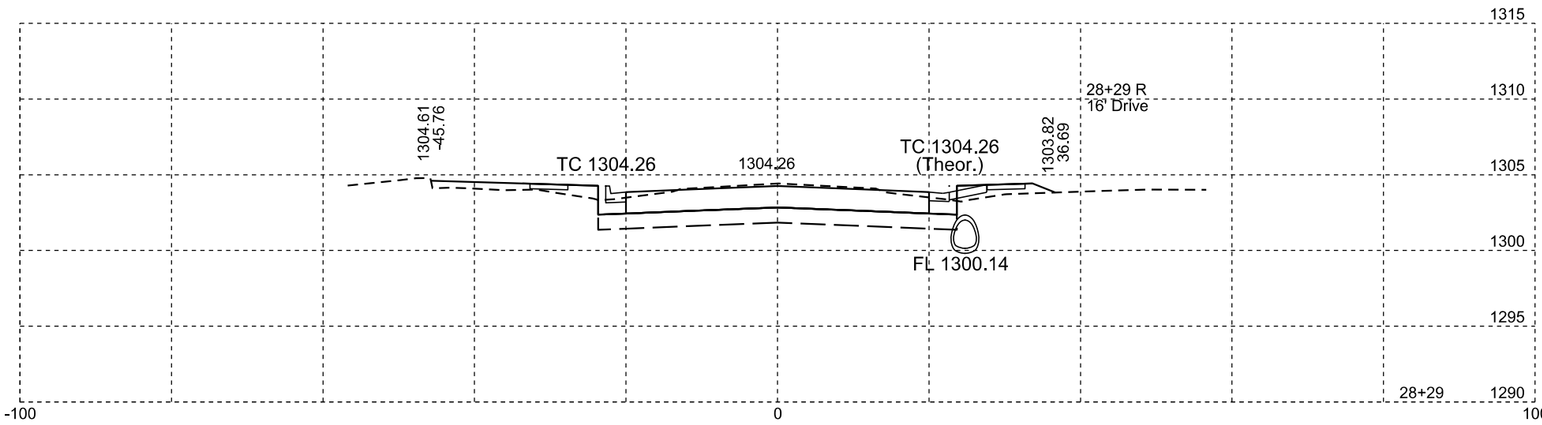

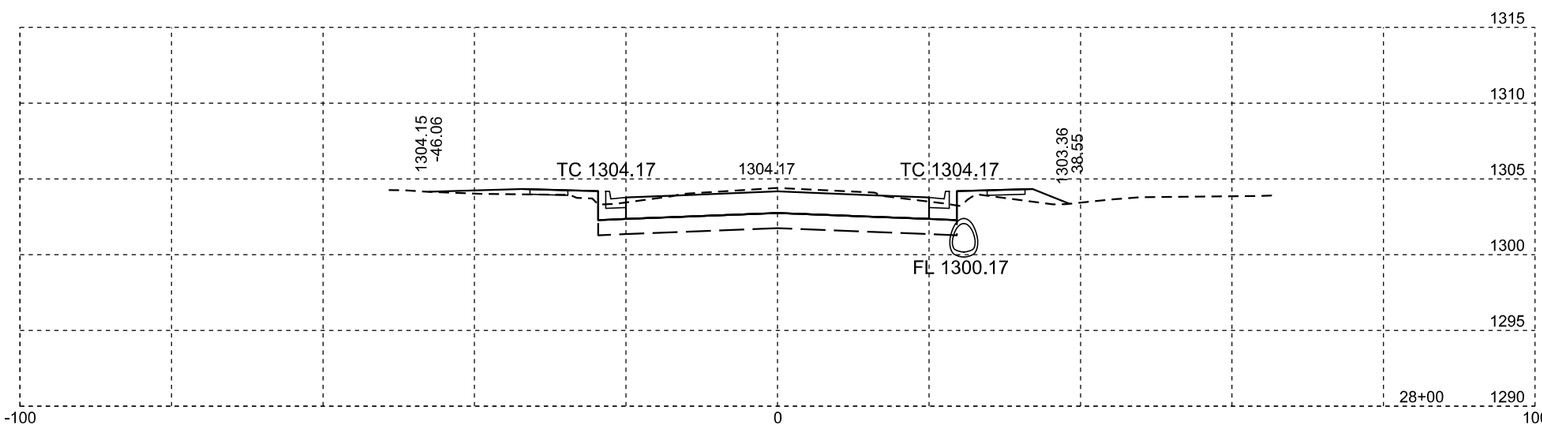

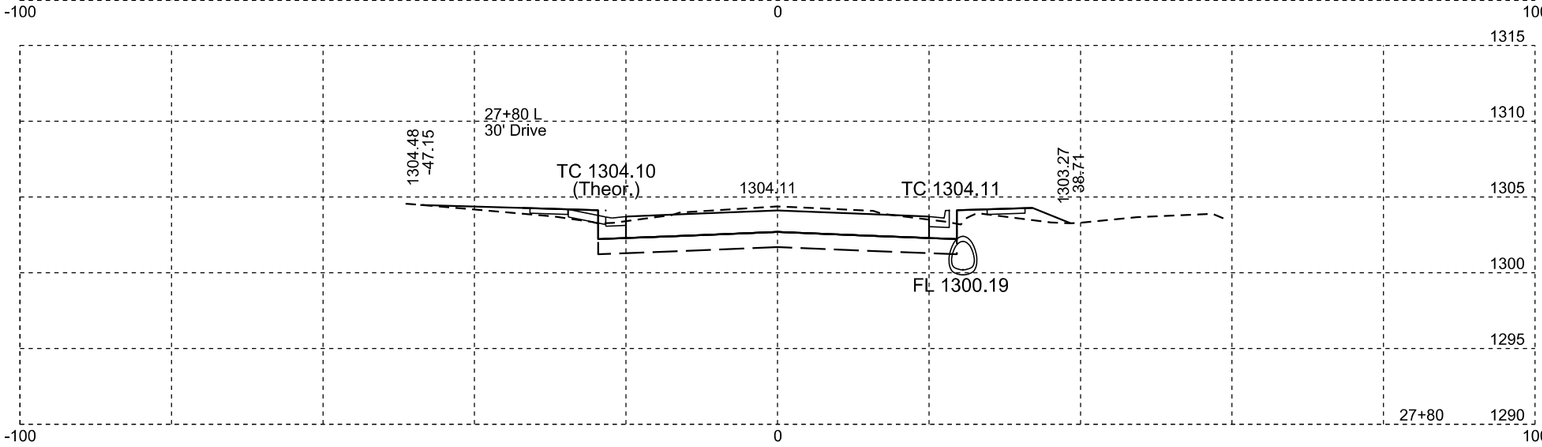

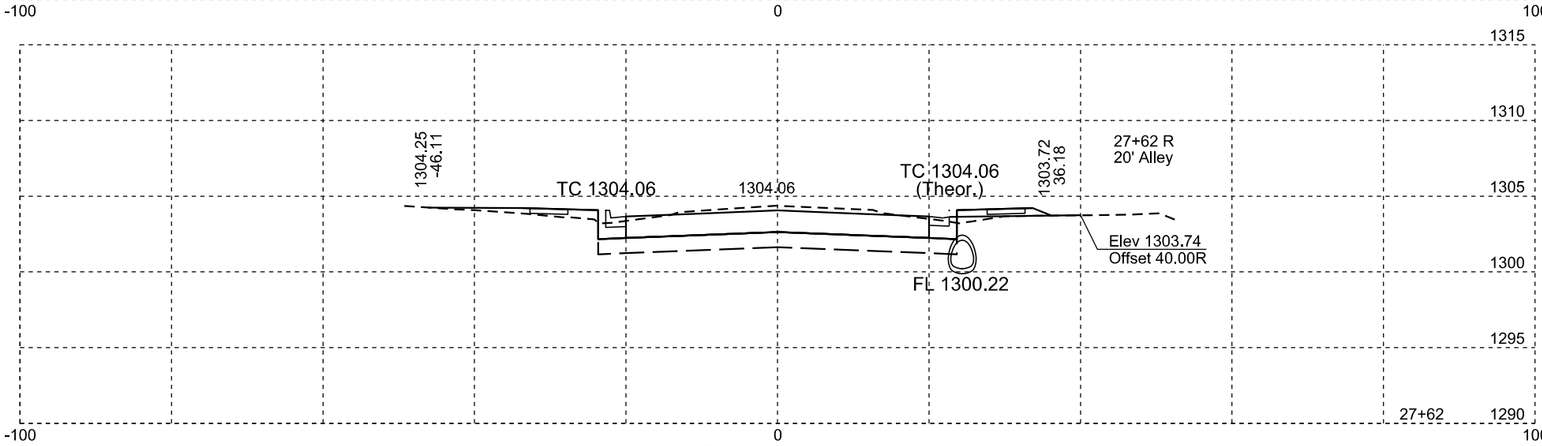

SD 37

Plotting Date: 04/12/2016

STATE OF SOUTH DAKOTA	PROJECT	SHEET NO.	TOTAL SHEETS
	P 0037(129)207 NH 0012(198)308	X28	X50

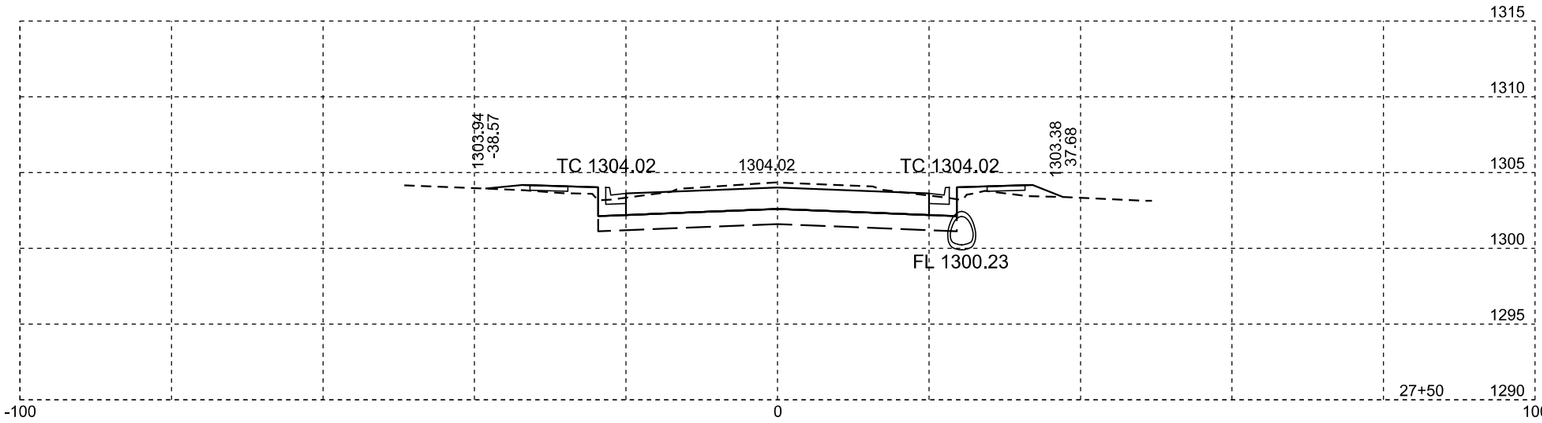

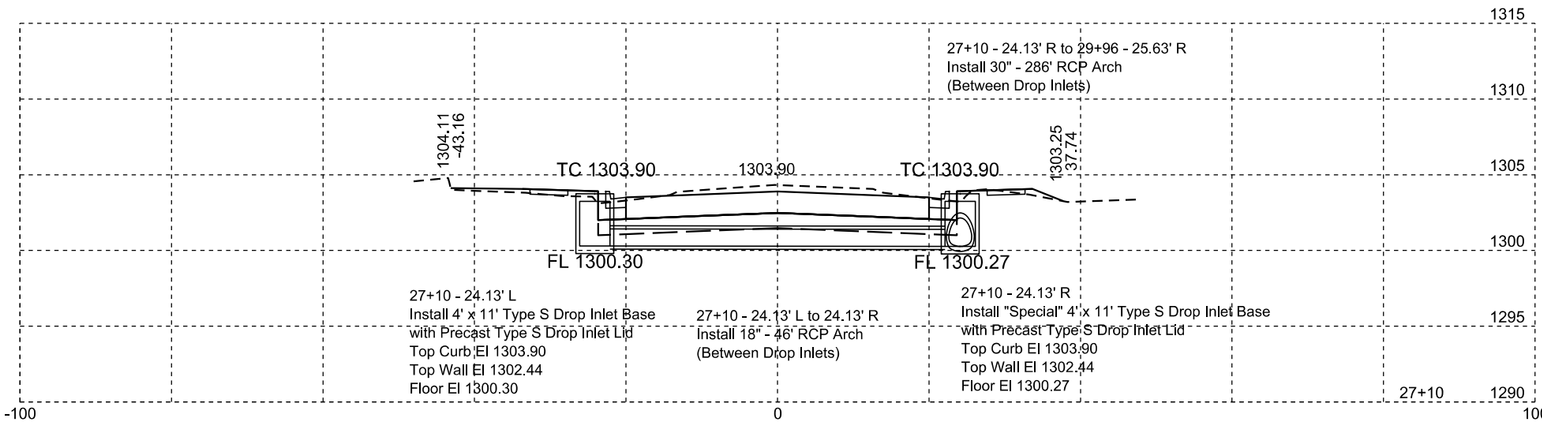

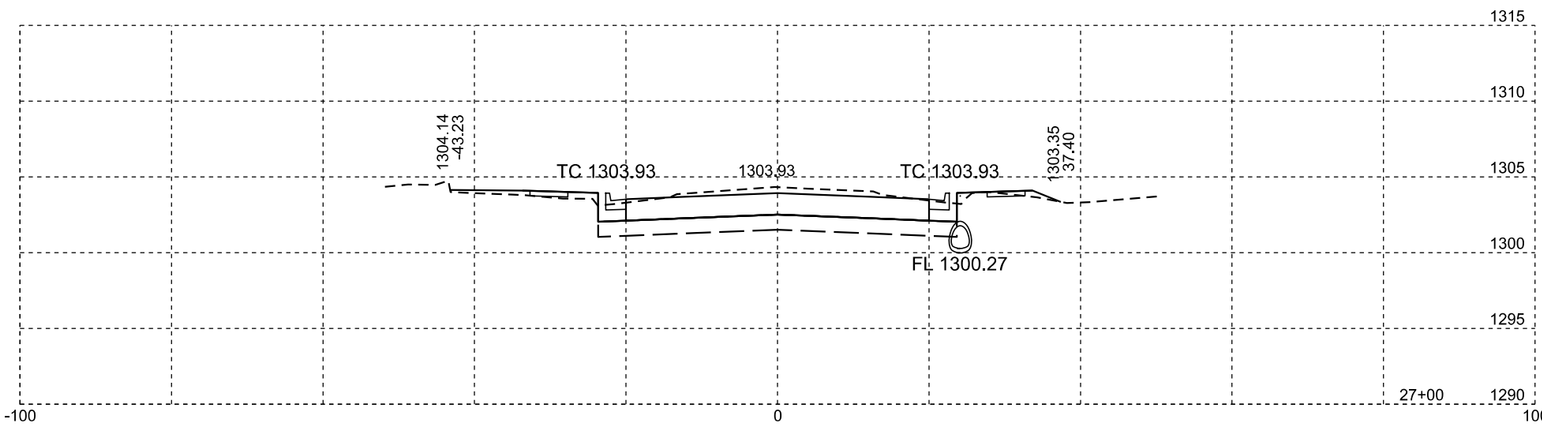

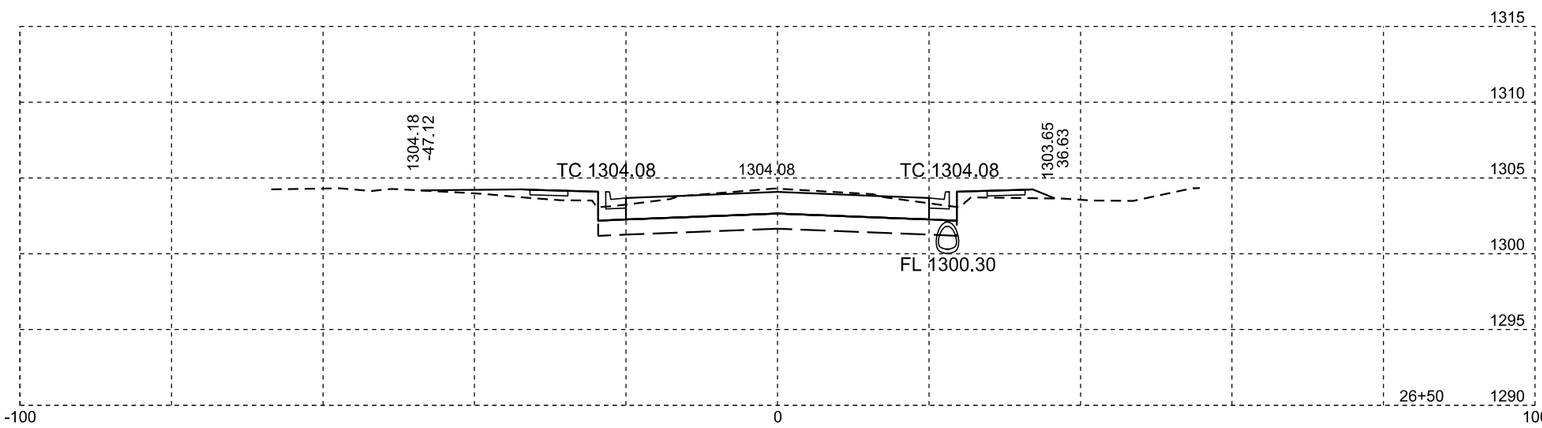

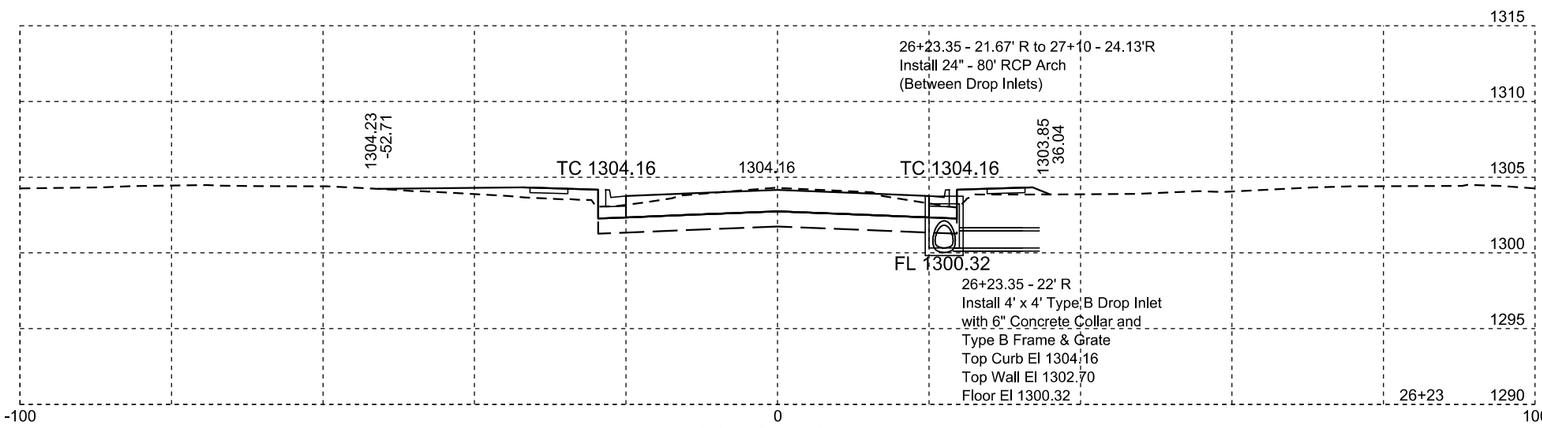

SD 37

Plotting Date: 04/12/2016

STATE OF SOUTH DAKOTA	PROJECT	SHEET NO.	TOTAL SHEETS
	P 0037(129)207 NH 0012(198)308	X29	X50

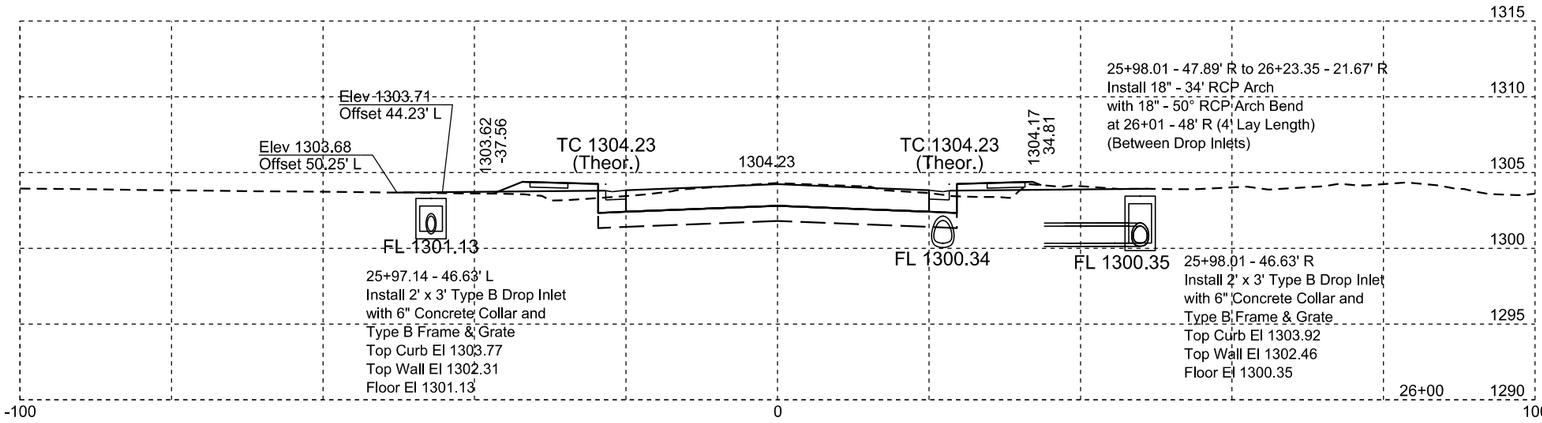

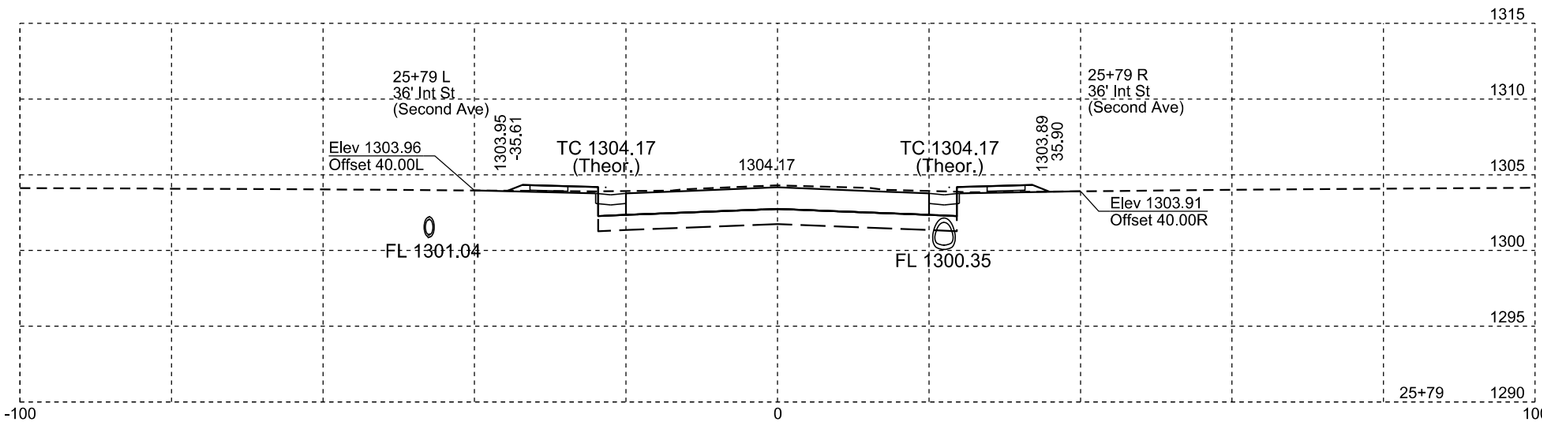

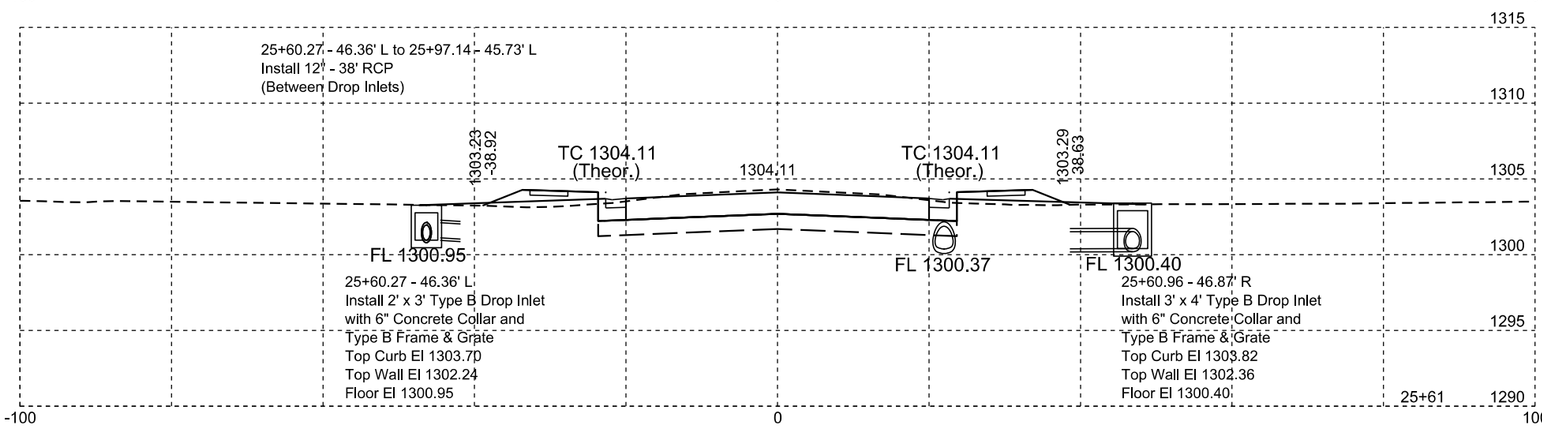

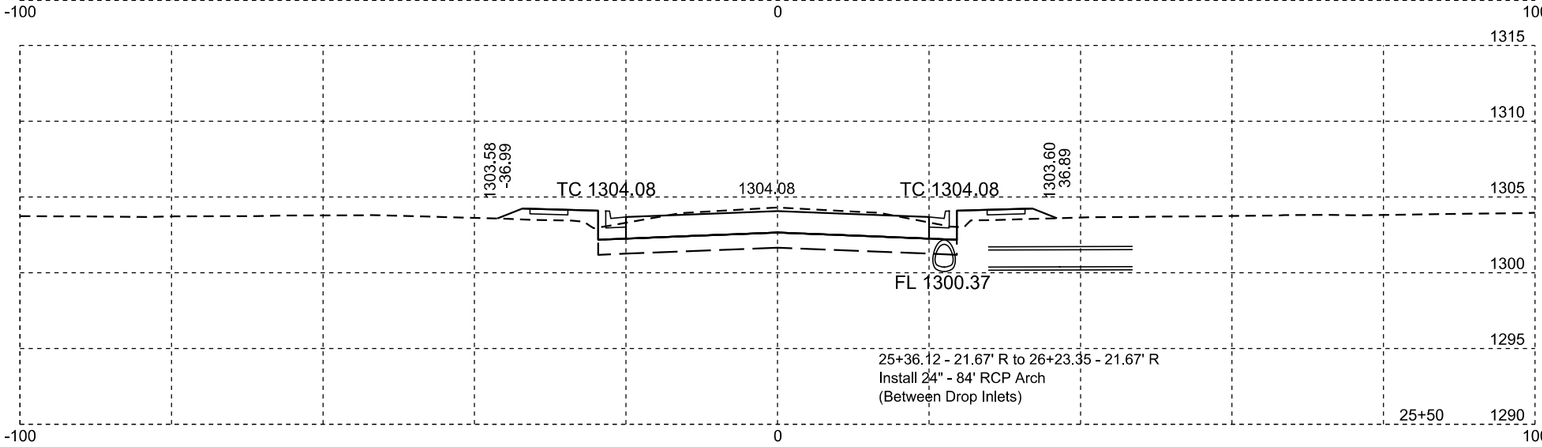

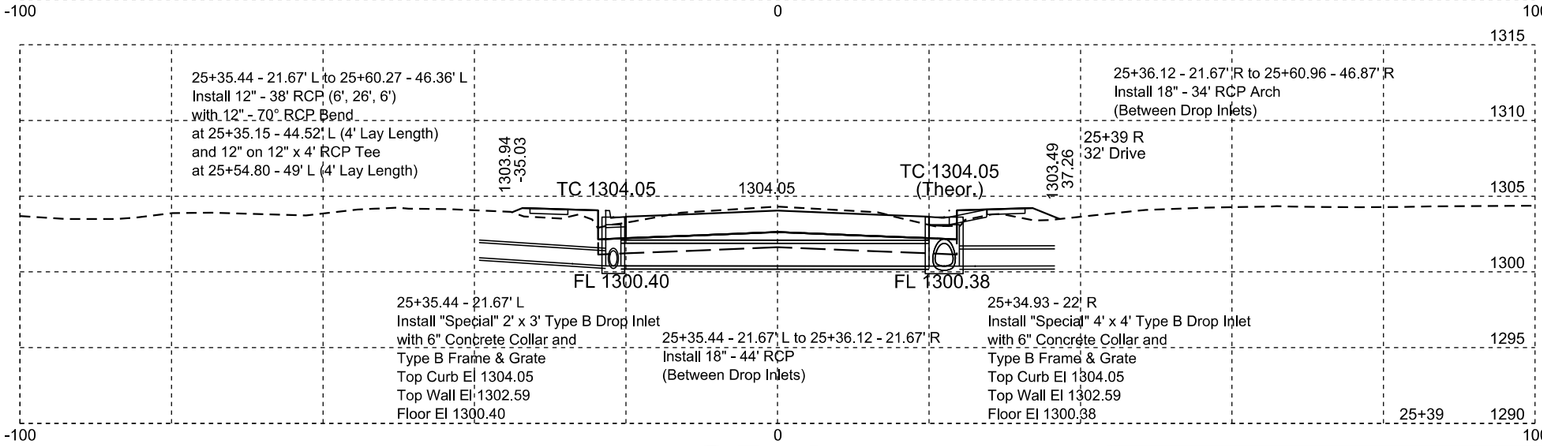

SD 37

Plotting Date: 04/12/2016

STATE OF SOUTH DAKOTA	PROJECT	SHEET NO.	TOTAL SHEETS
	P 0037(129)207 NH 0012(198)308	X30	X50

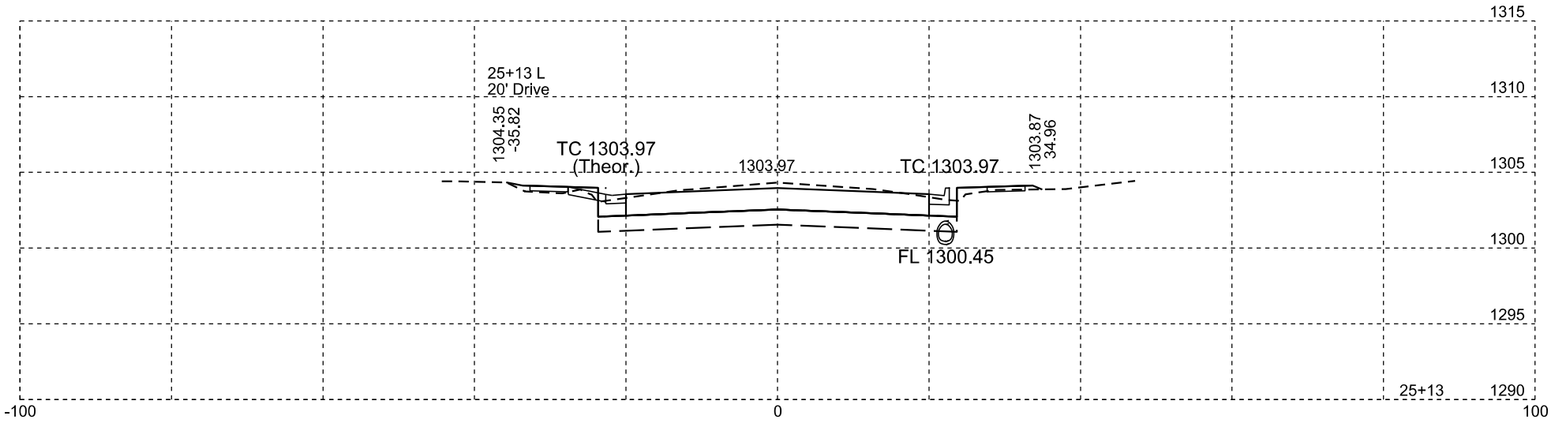

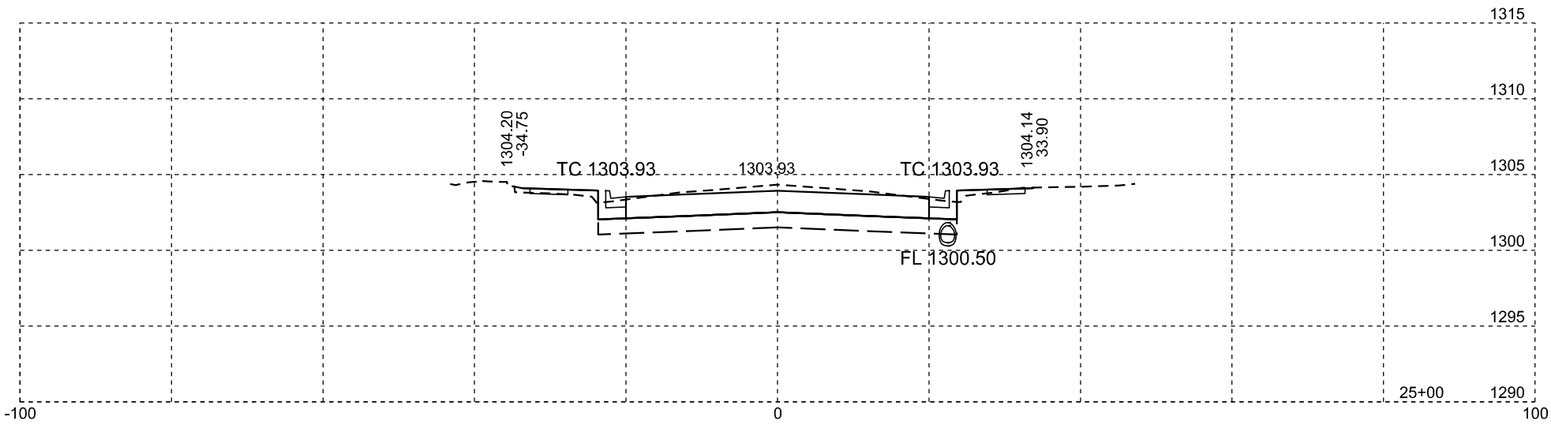

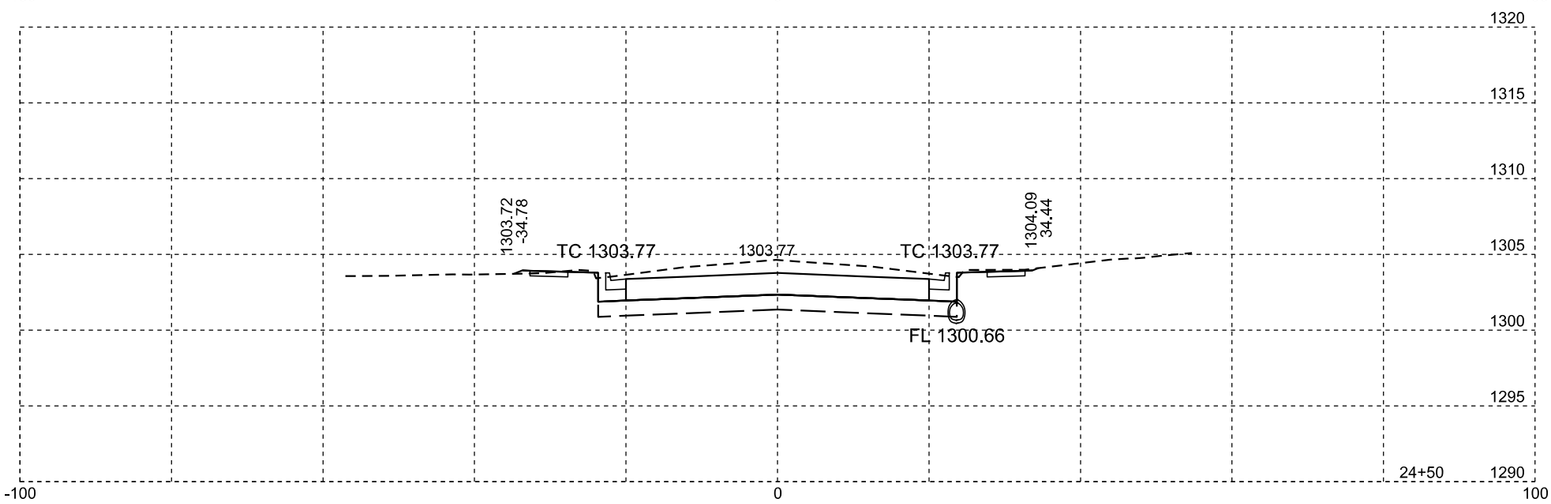

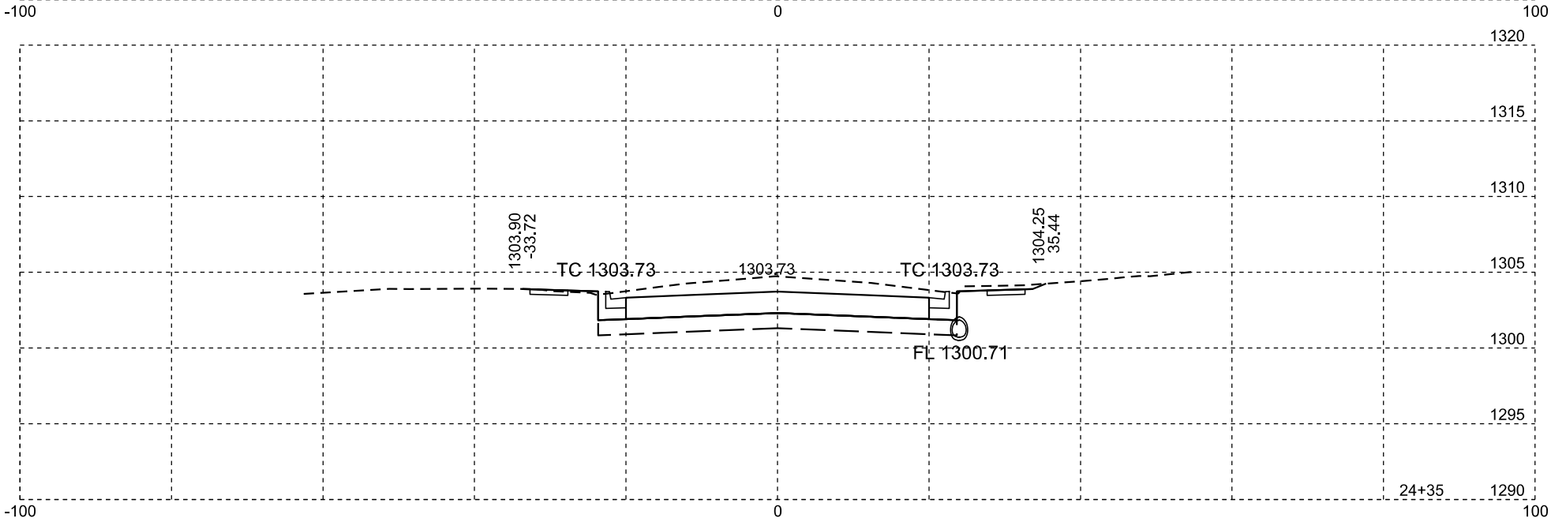

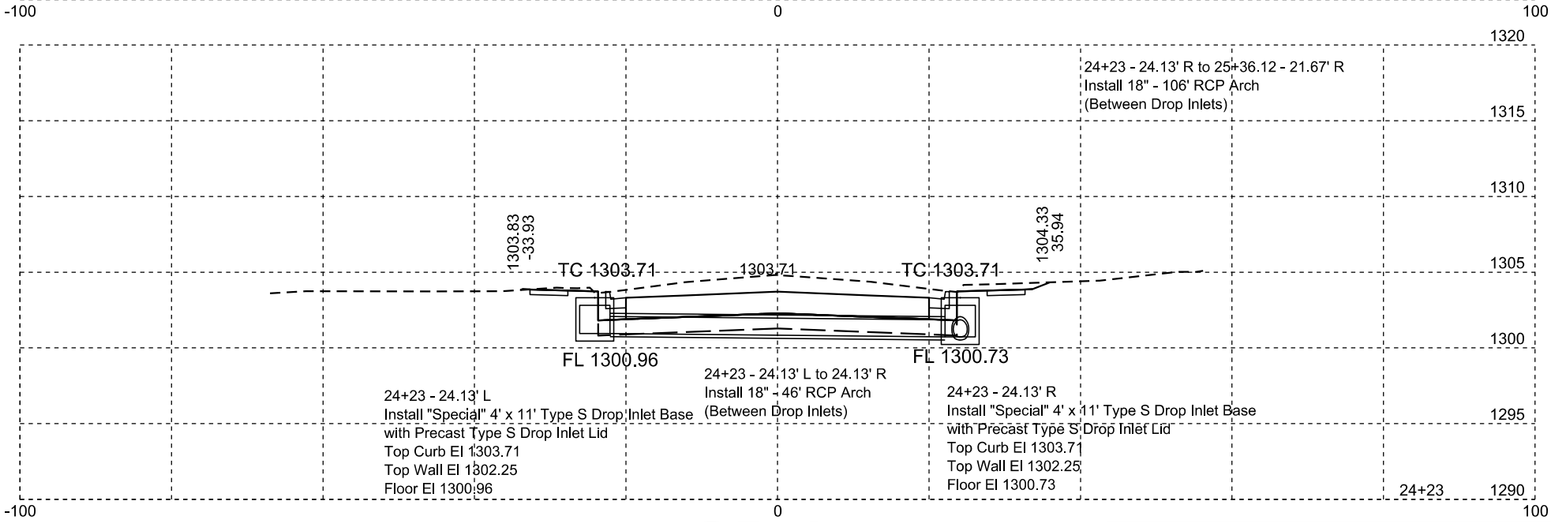

SD 37

Plotting Date: 04/12/2016

STATE OF SOUTH DAKOTA	PROJECT	SHEET NO.	TOTAL SHEETS
	P 0037(129)207 NH 0012(198)308	X31	X50

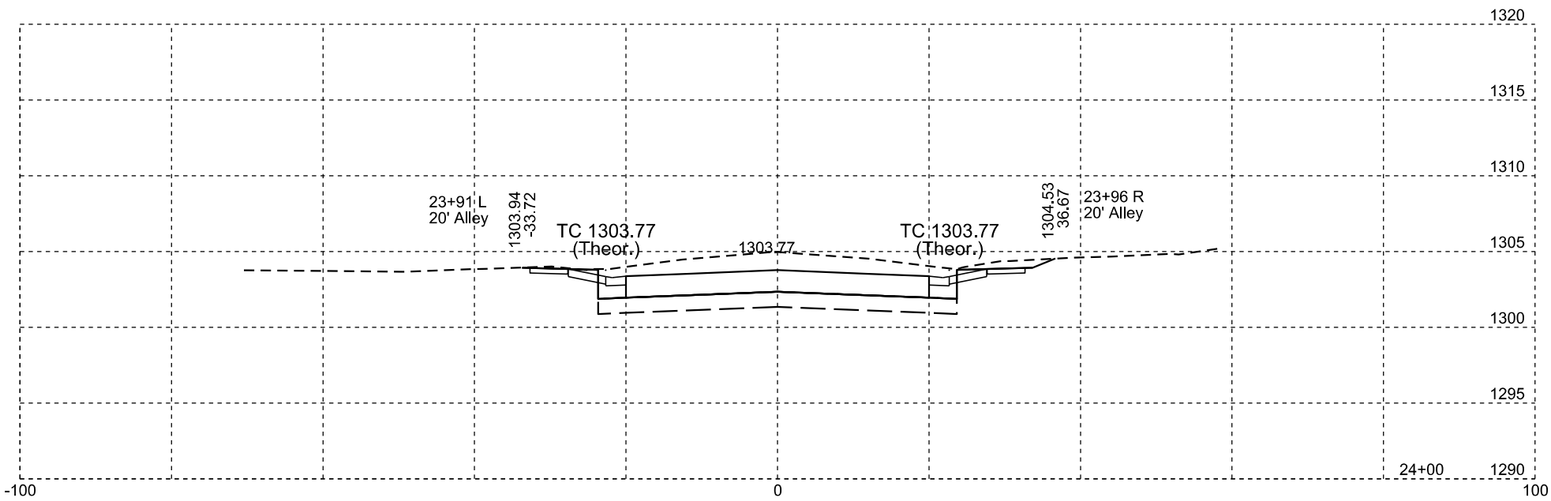

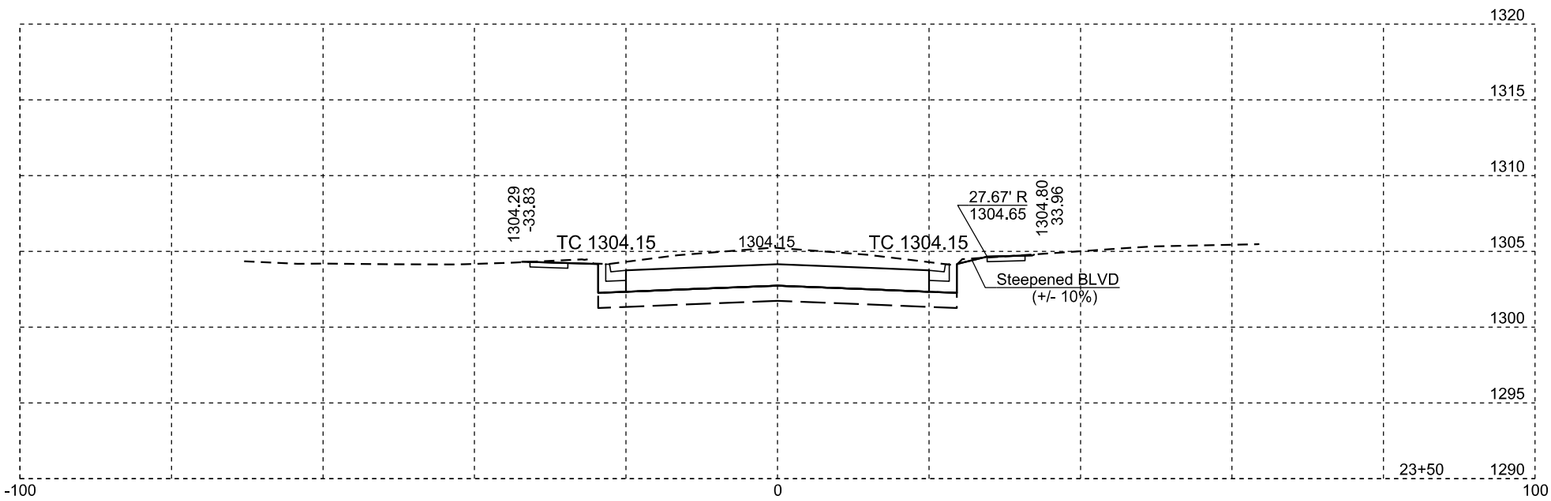

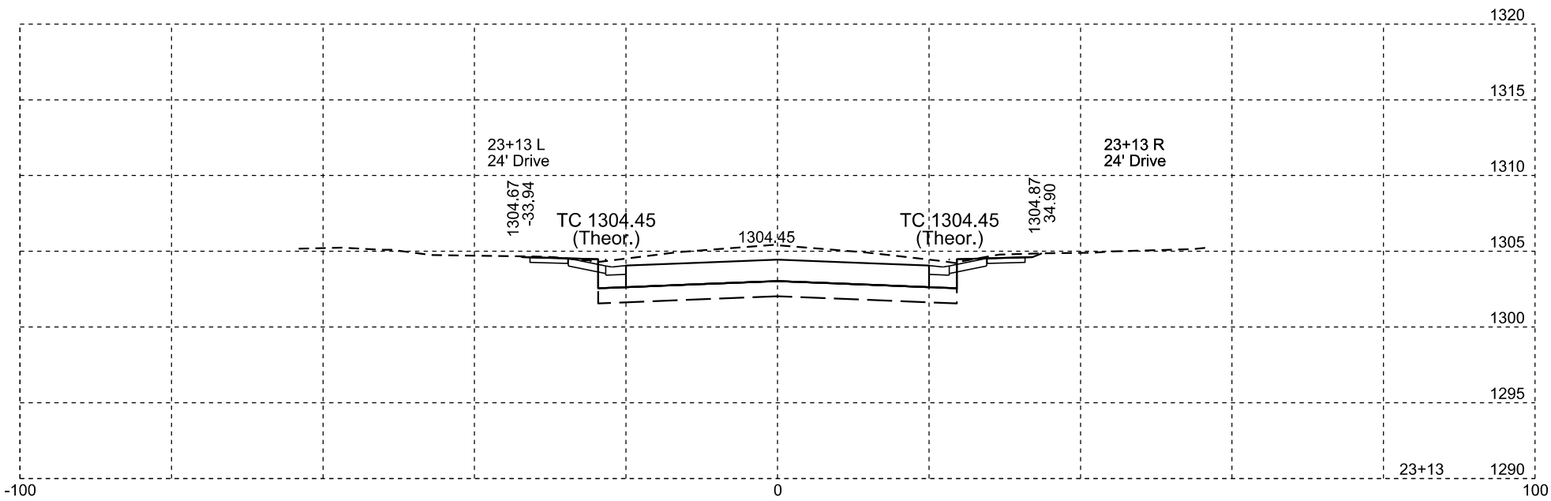

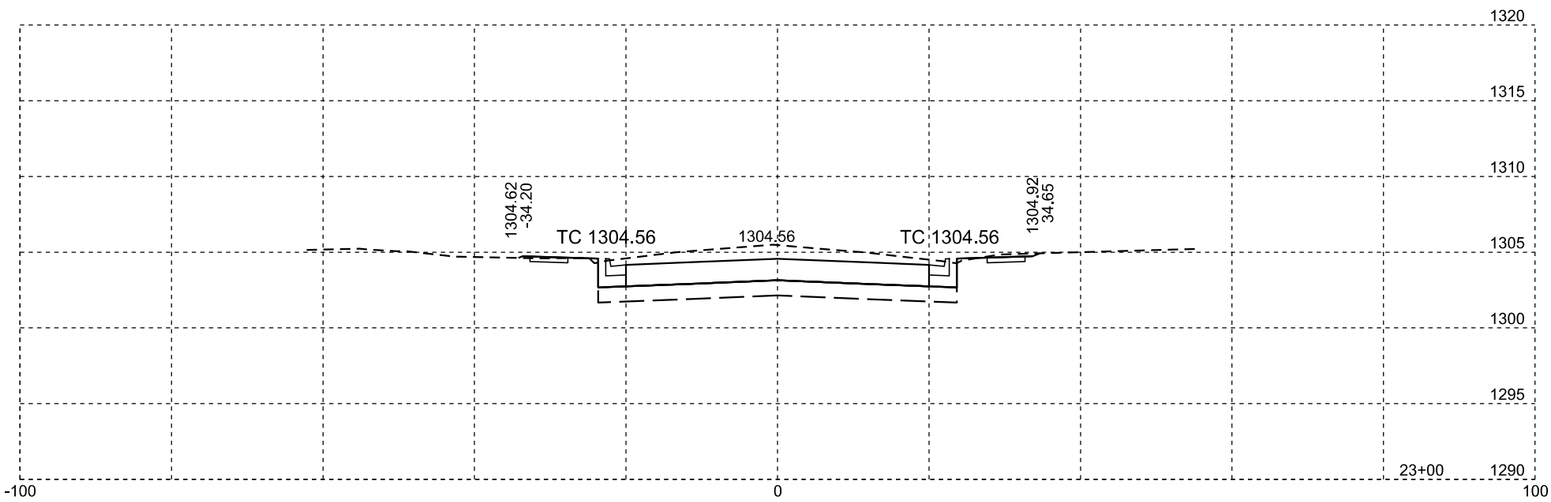

SD 37

Plotting Date: 04/12/2016

STATE OF SOUTH DAKOTA	PROJECT	SHEET NO.	TOTAL SHEETS
	P 0037(129)207 NH 0012(198)308	X32	X50

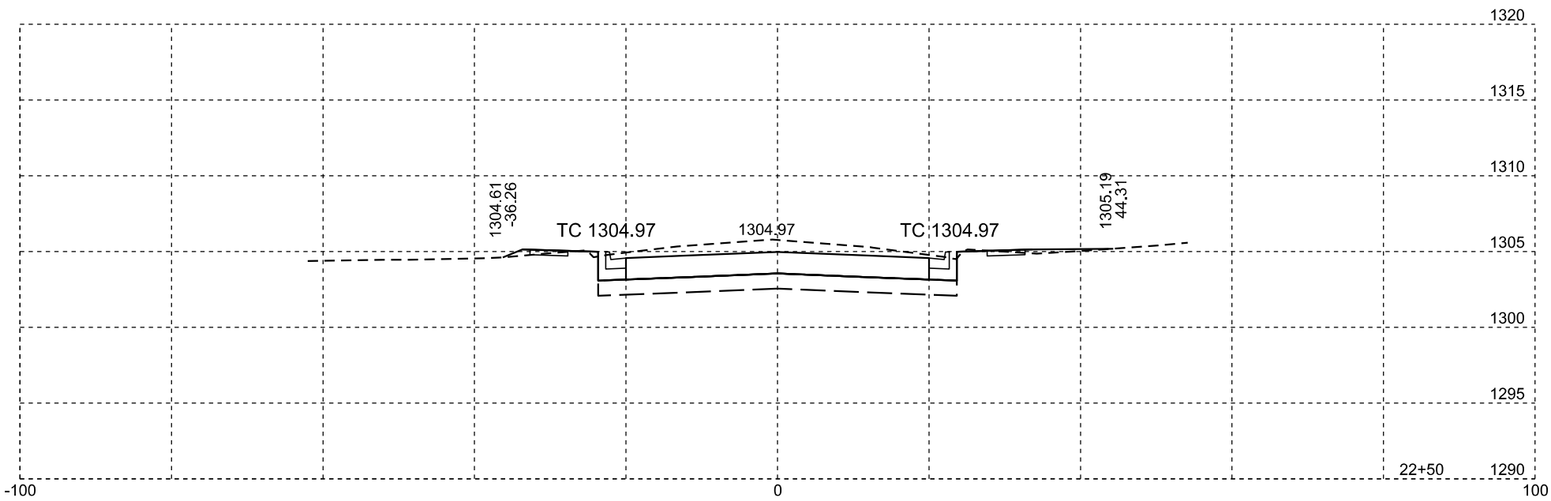

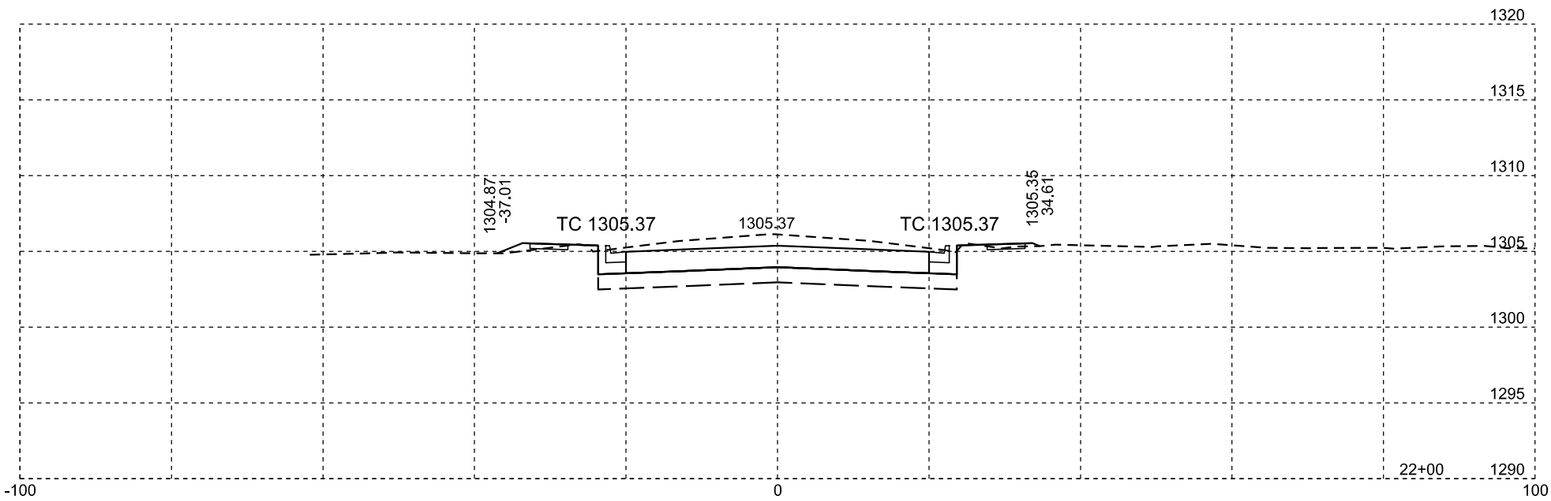

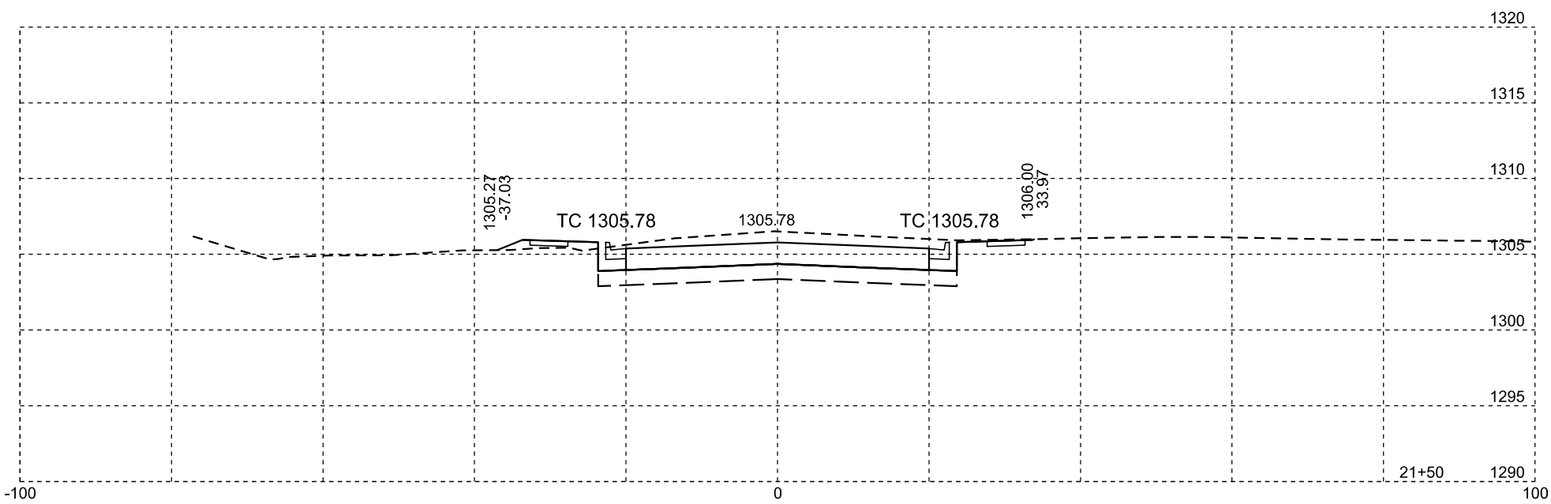

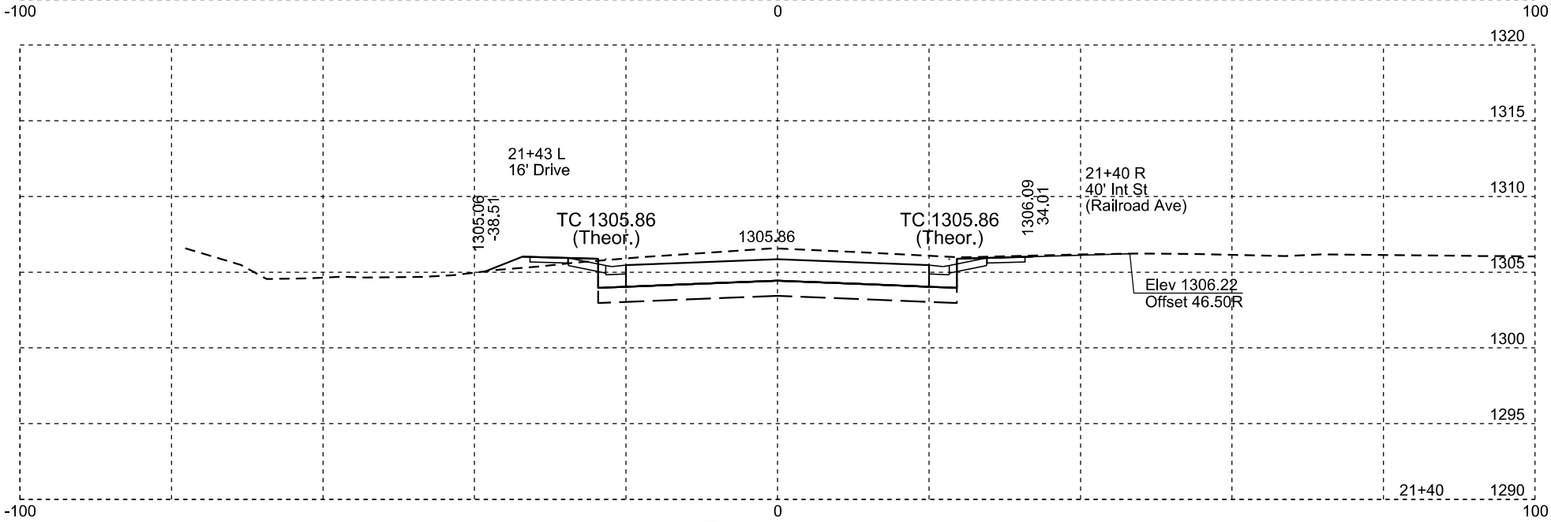

SD 37

Plotting Date: 04/12/2016

STATE OF SOUTH DAKOTA	PROJECT	SHEET NO.	TOTAL SHEETS
	P 0037(129)207 NH 0012(198)308	X33	X50

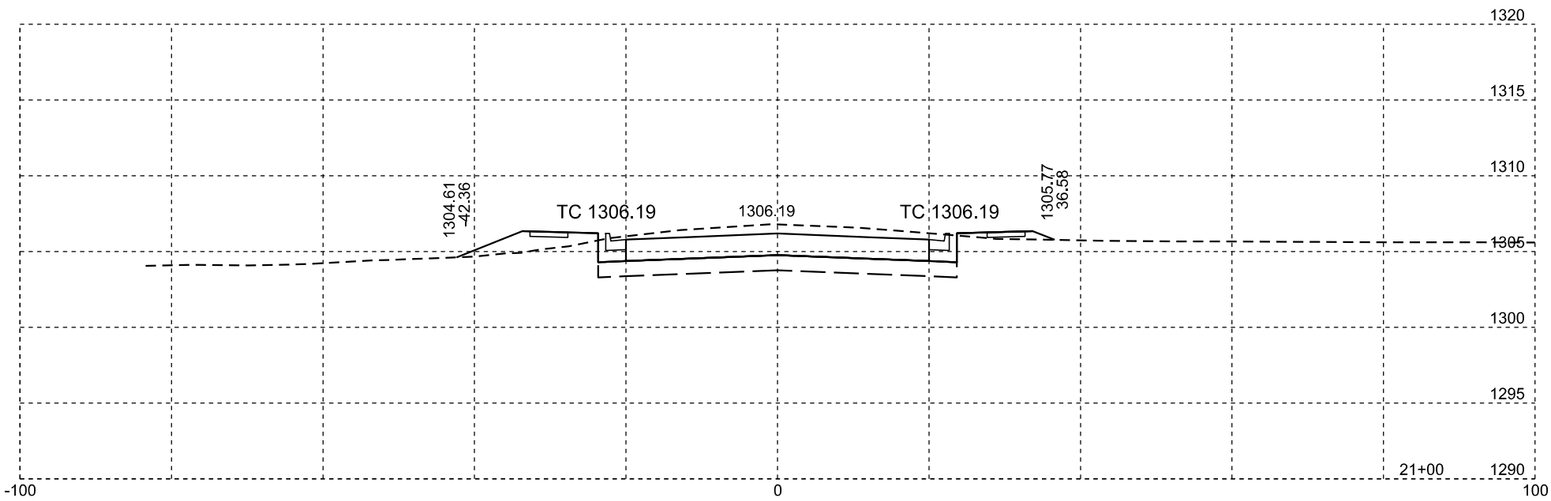

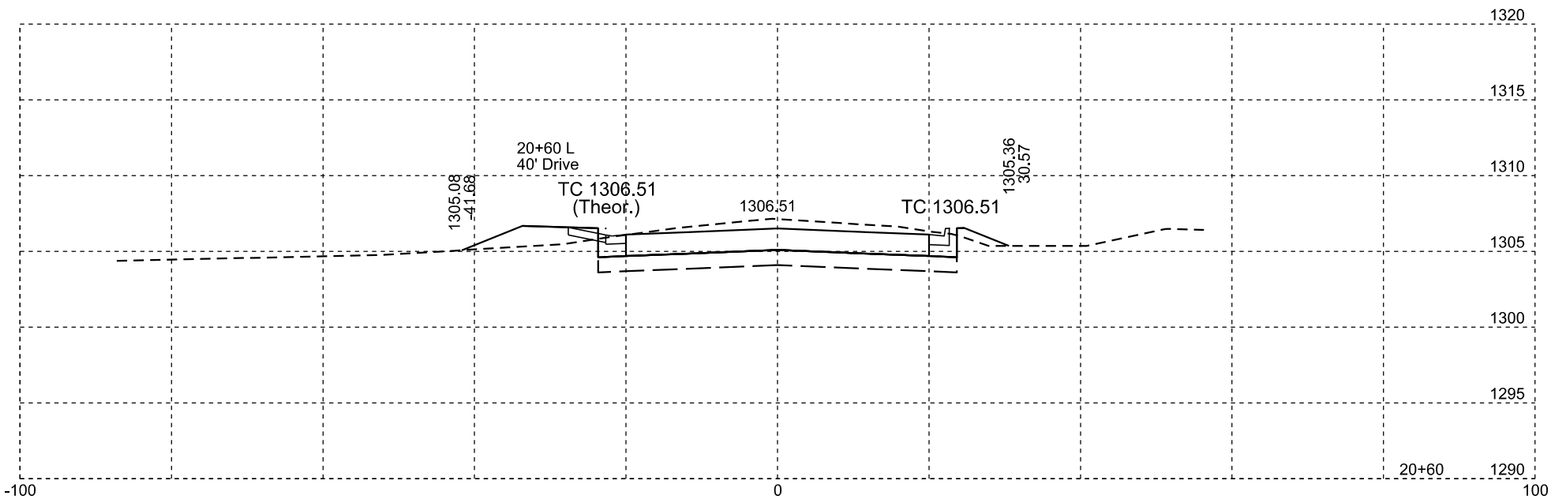

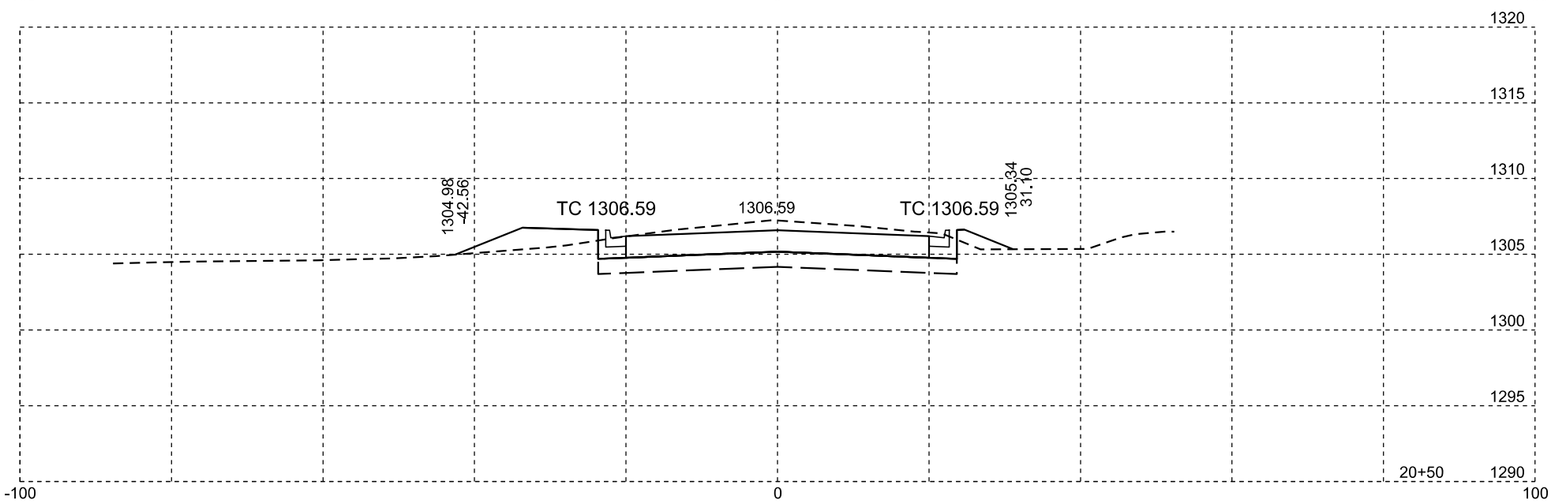

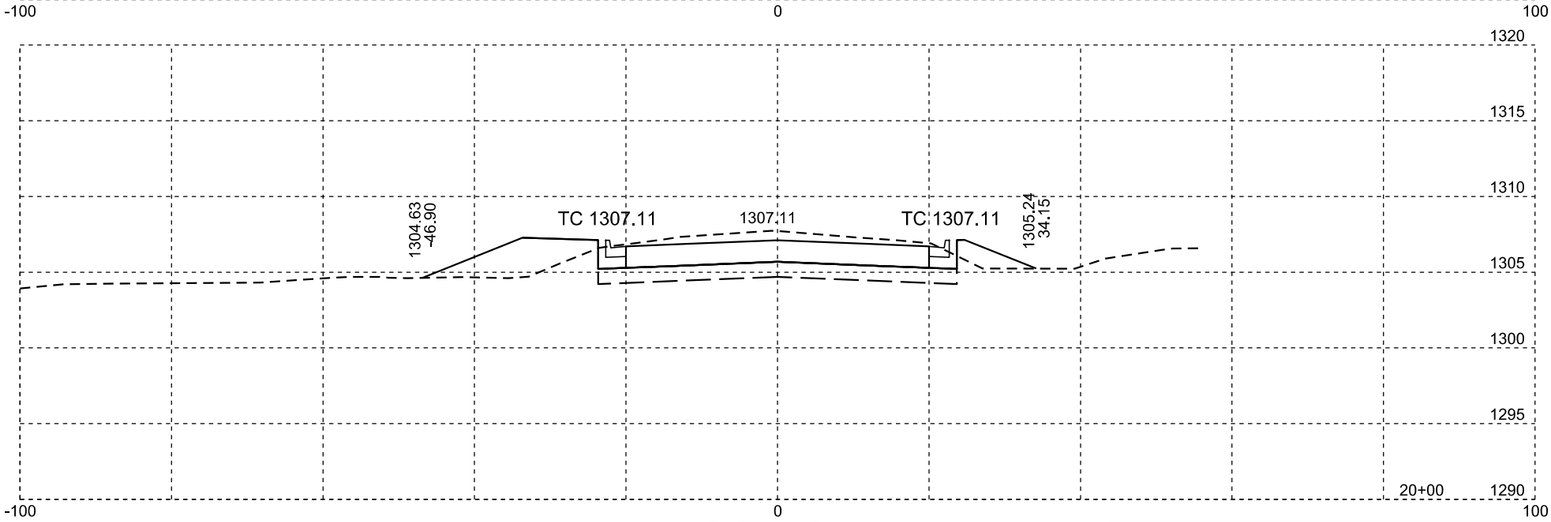

SD 37

Plotting Date: 04/12/2016

STATE OF SOUTH DAKOTA	PROJECT	SHEET NO.	TOTAL SHEETS
	P 0037(129)207 NH 0012(198)308	X34	X50

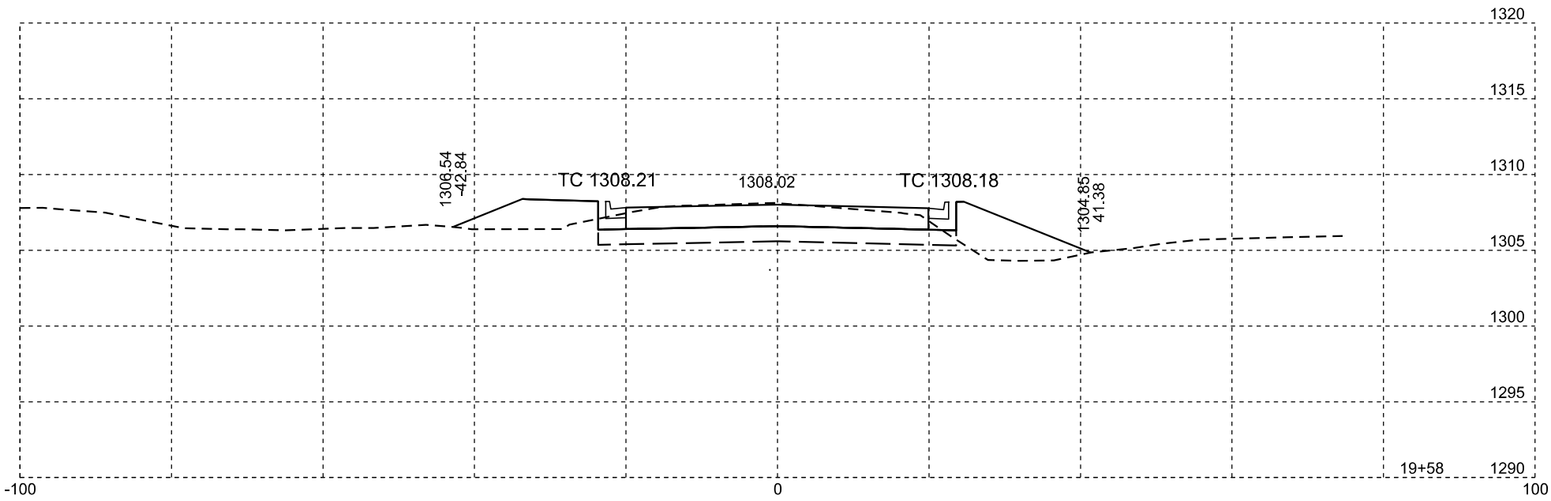

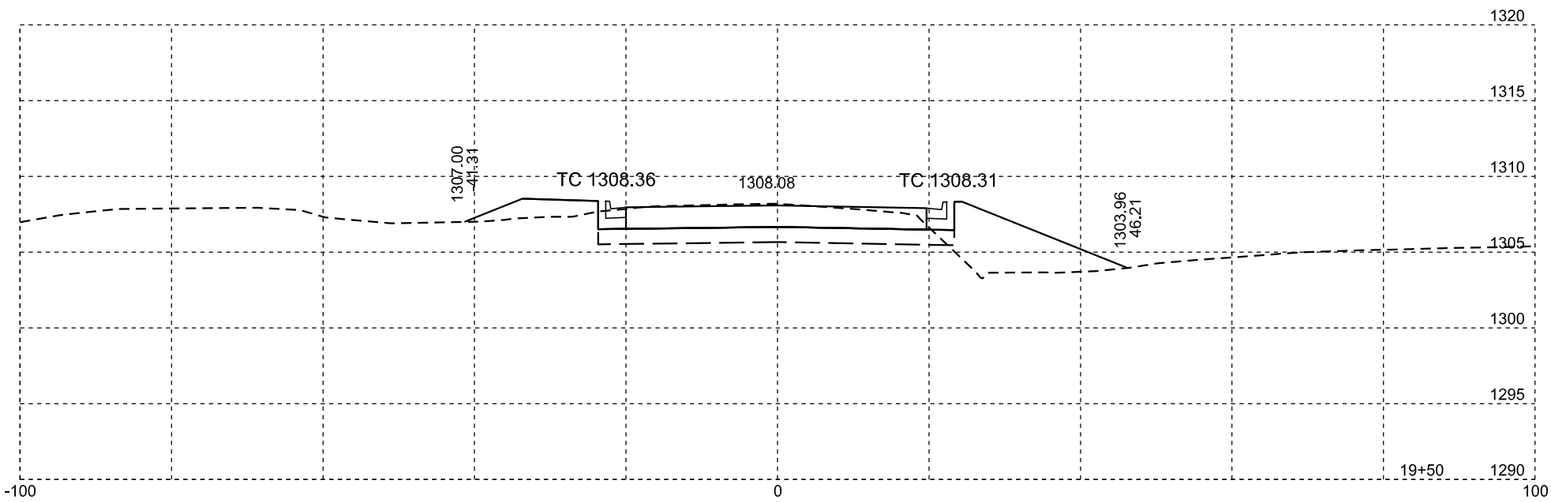

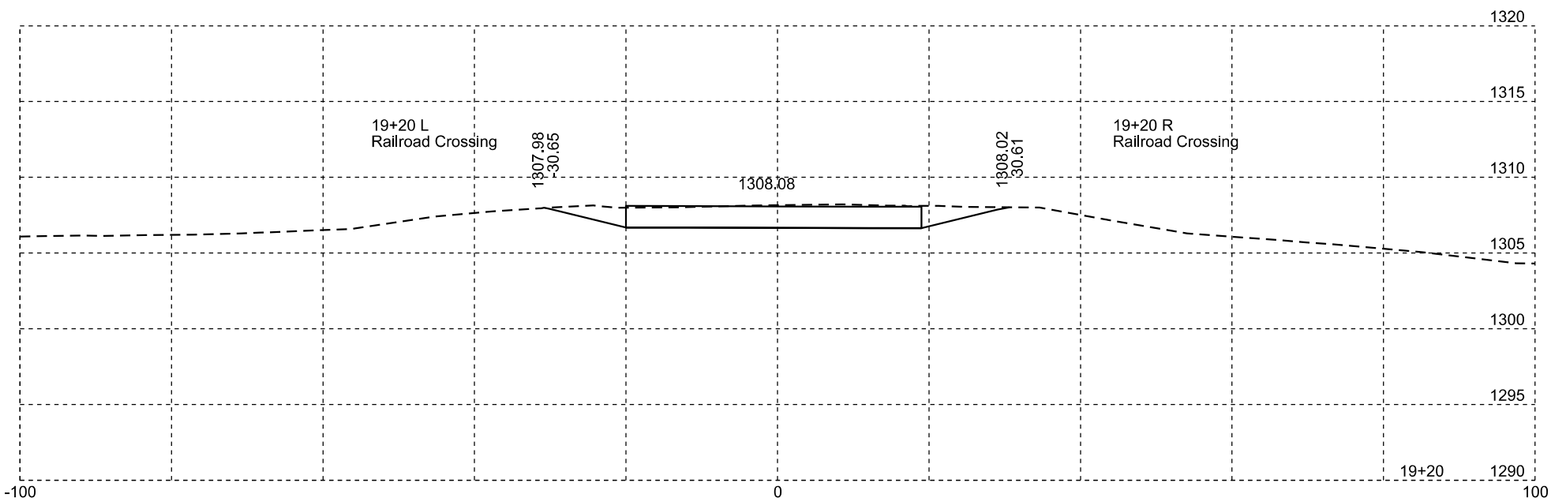

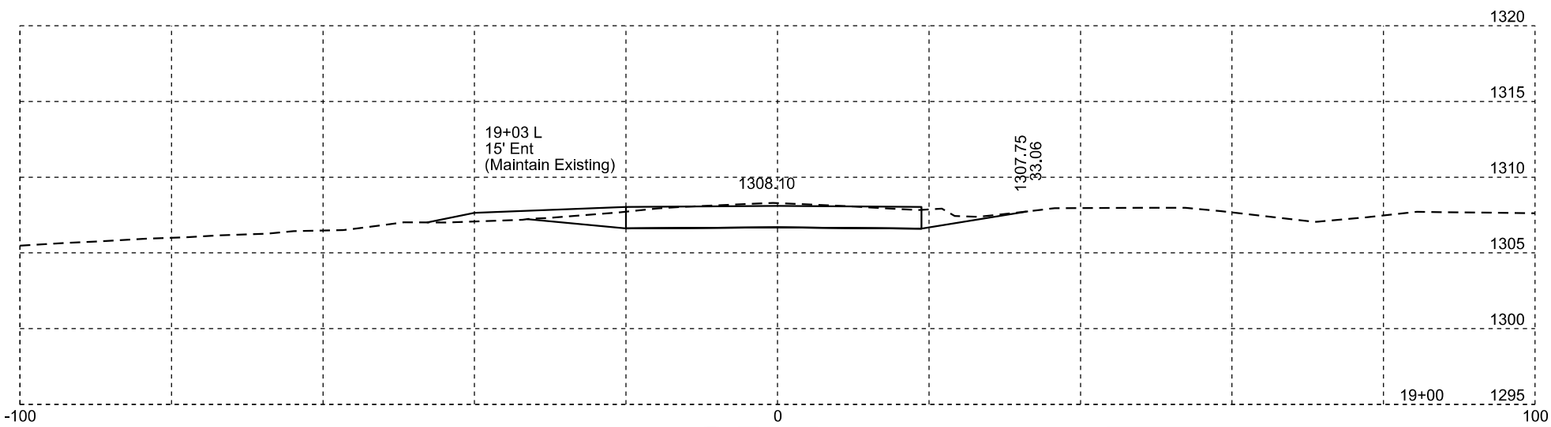

SD 37

Plotting Date: 04/12/2016

STATE OF SOUTH DAKOTA	PROJECT	SHEET NO.	TOTAL SHEETS
	P 0037(129)207 NH 0012(198)308	X35	X50

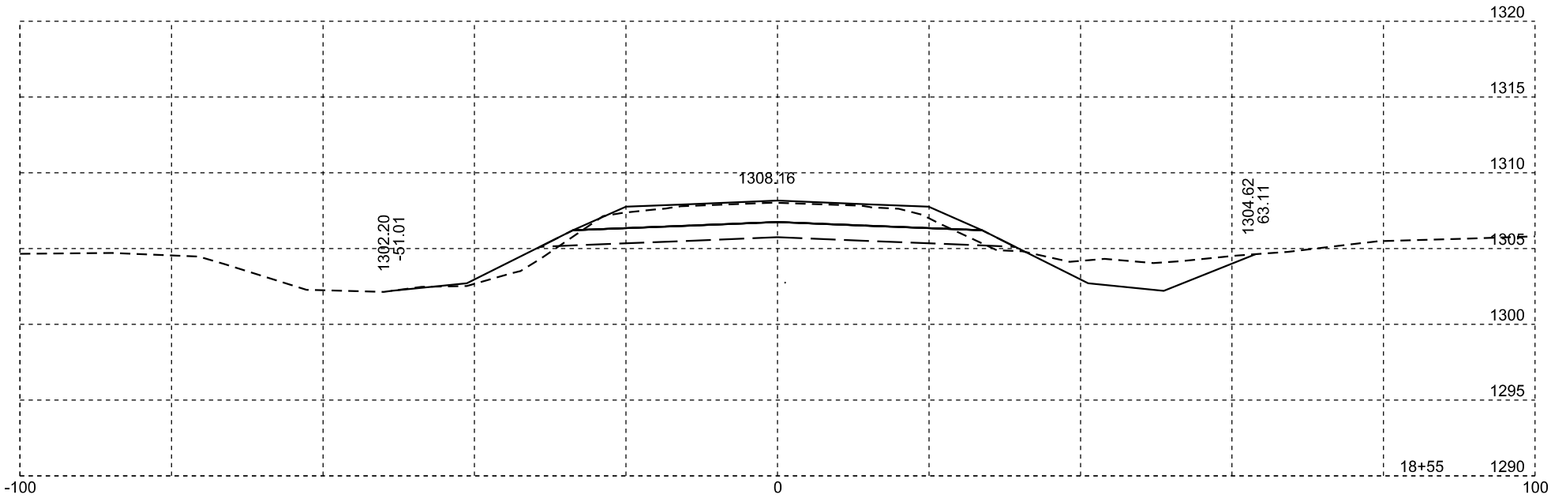

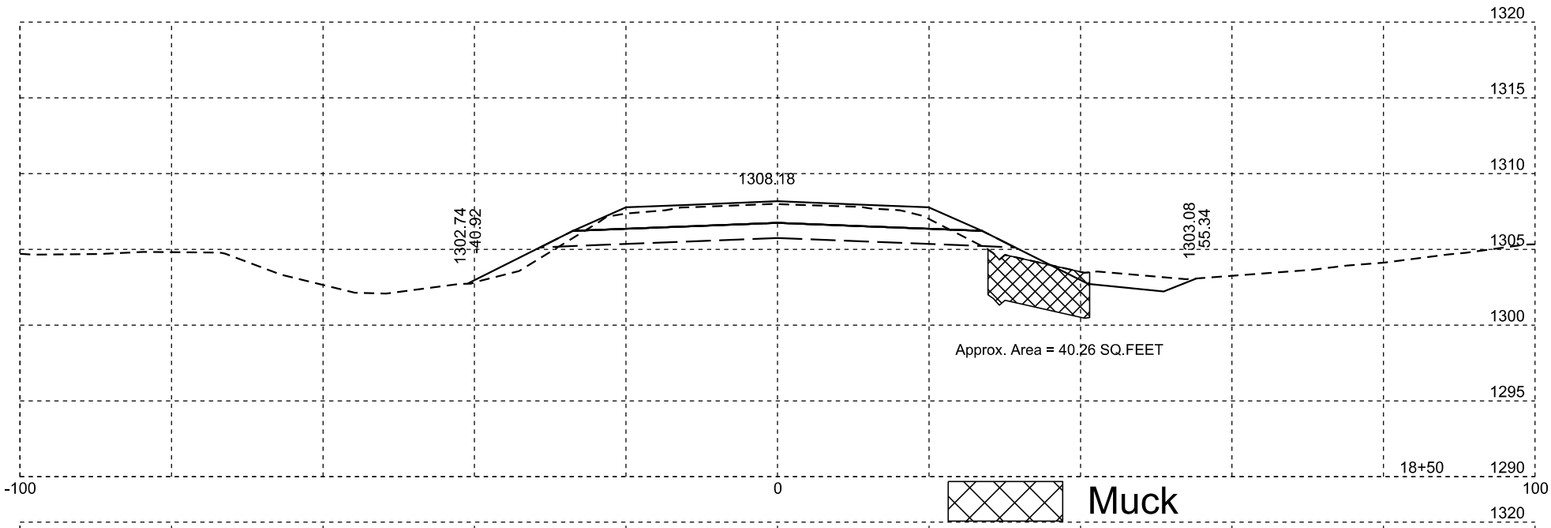

Muck

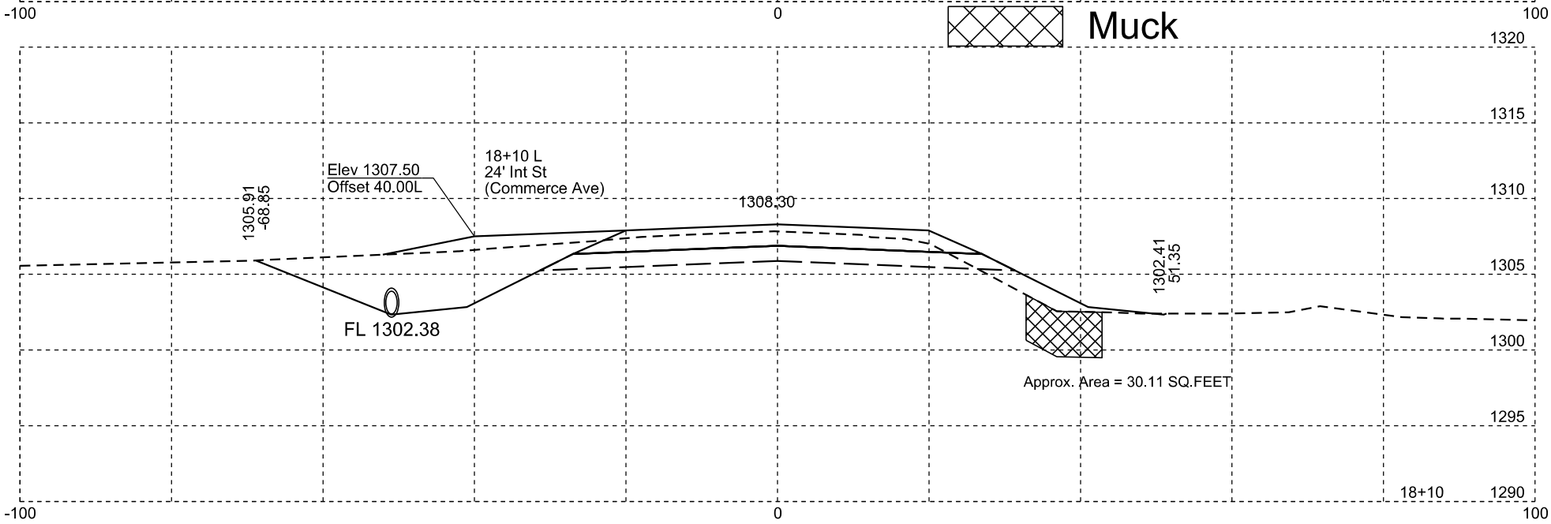

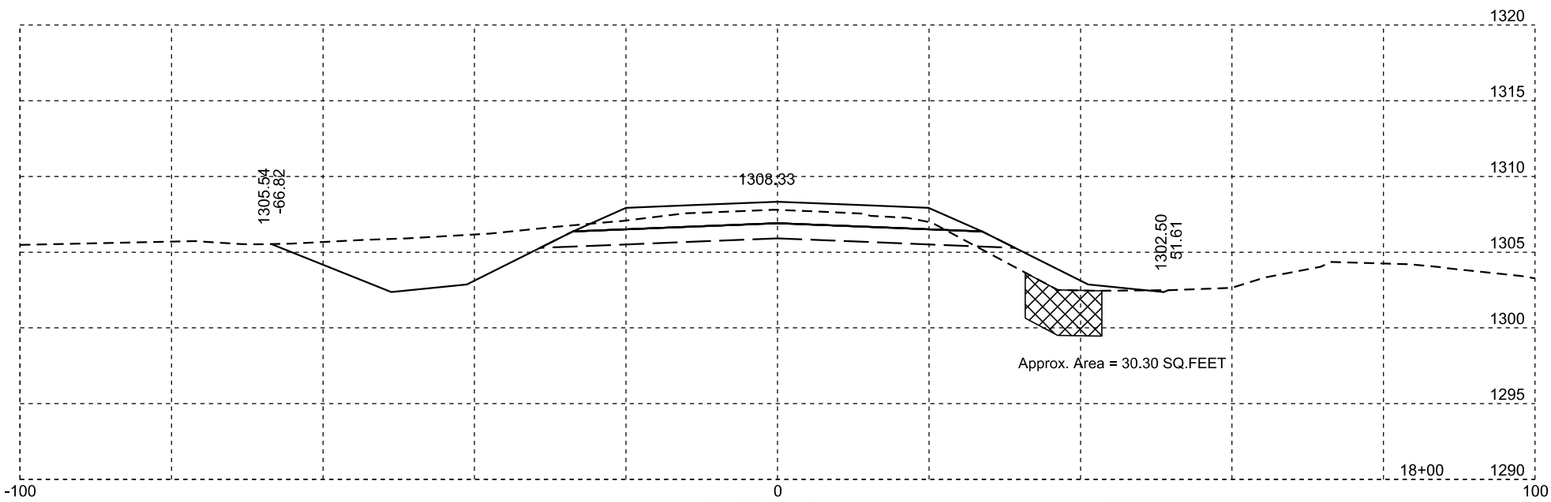

SD 37

Plotting Date: 04/12/2016

STATE OF SOUTH DAKOTA	PROJECT	SHEET NO.	TOTAL SHEETS
	P 0037(129)207 NH 0012(198)308	X36	X50

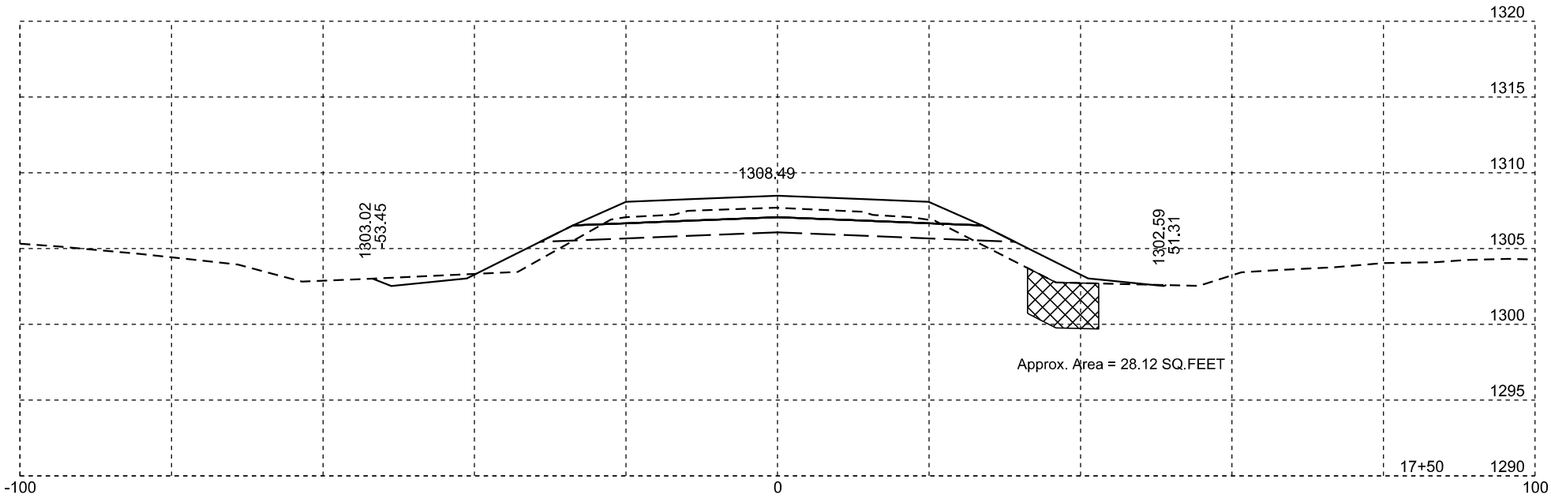

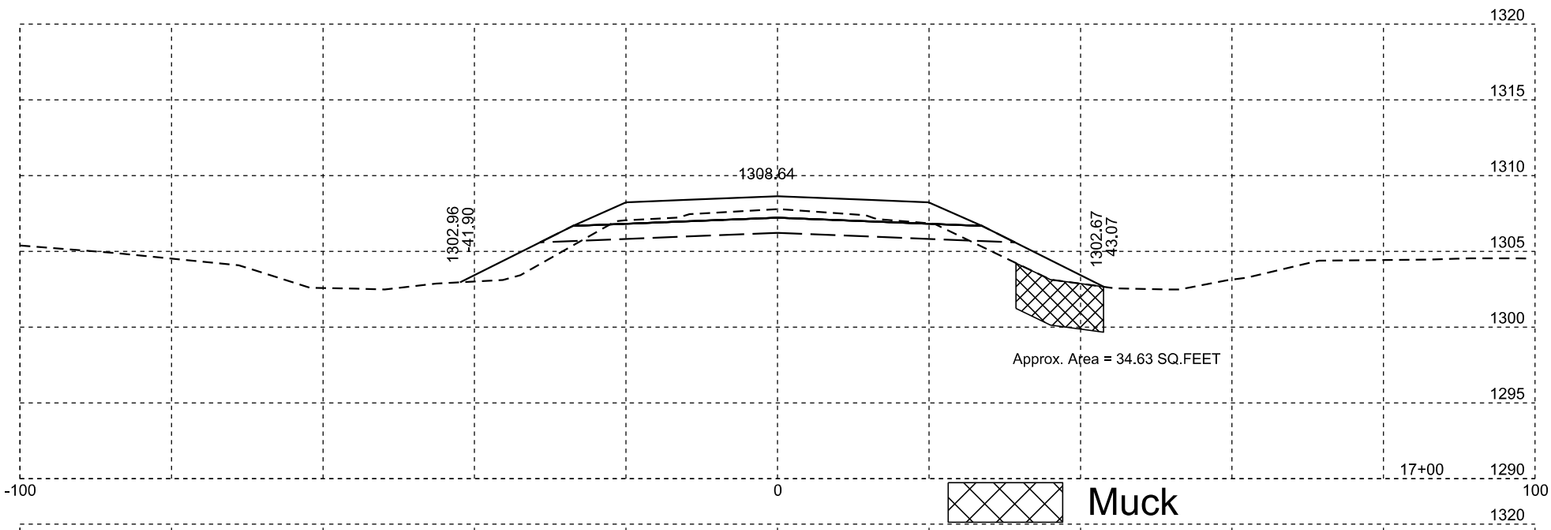

Muck

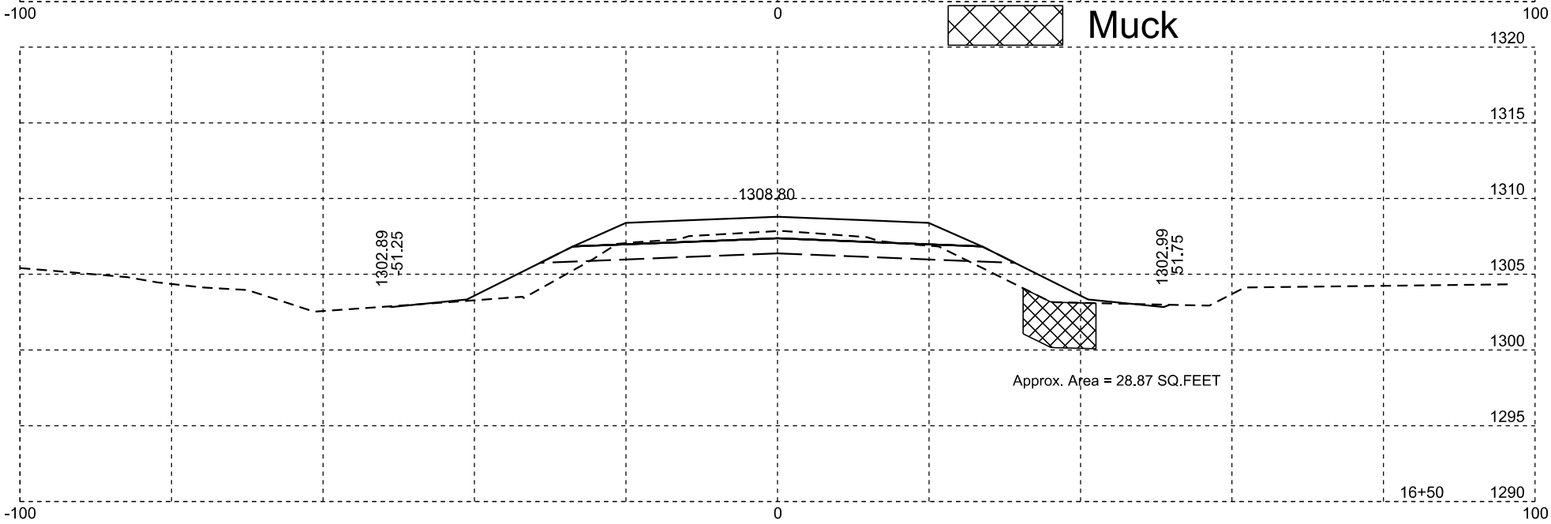

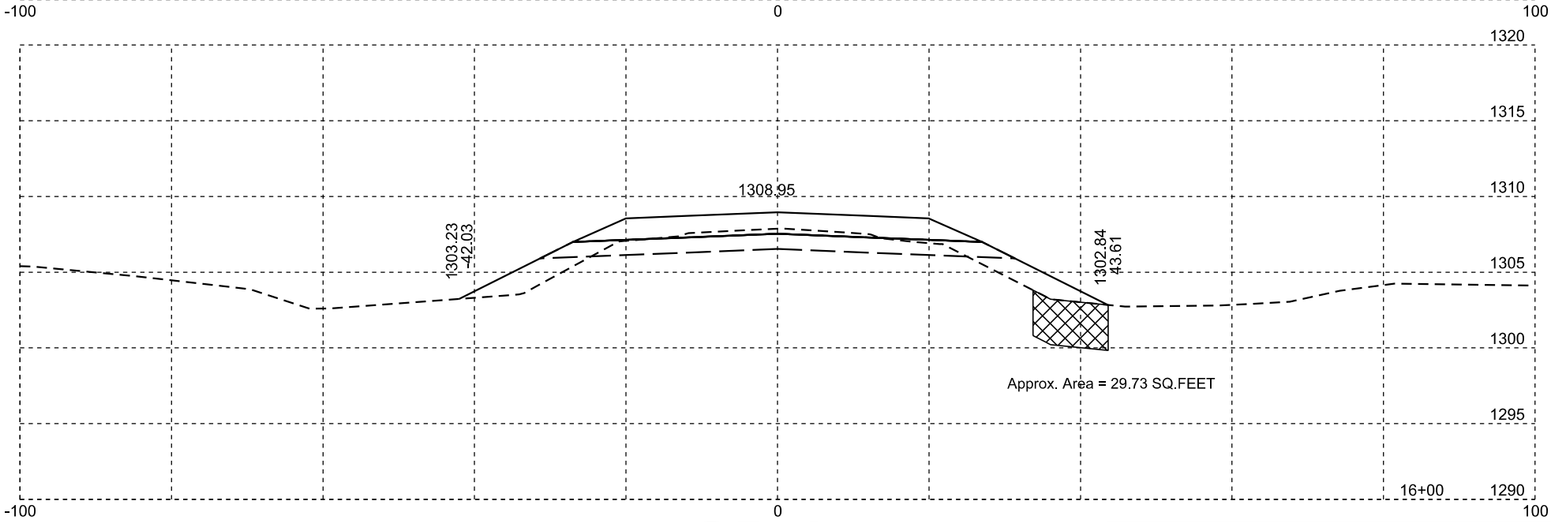

SD 37

Plotting Date: 04/12/2016

STATE OF SOUTH DAKOTA	PROJECT	SHEET NO.	TOTAL SHEETS
	P 0037(129)207 NH 0012(198)308	X37	X50

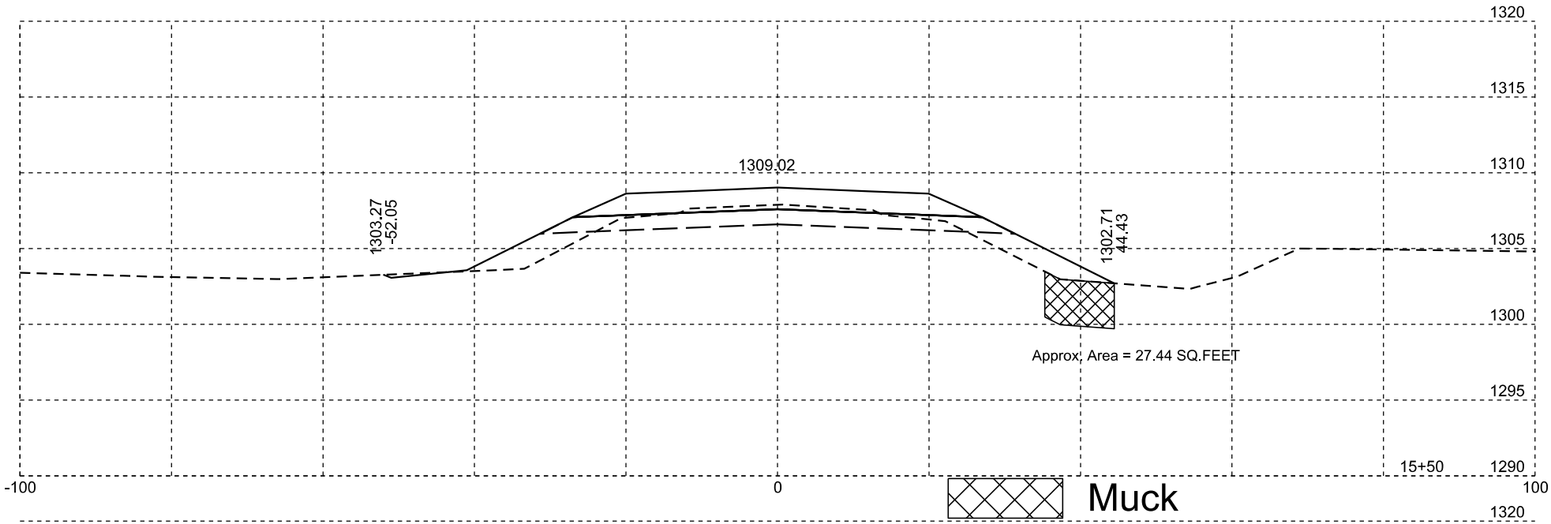

Muck

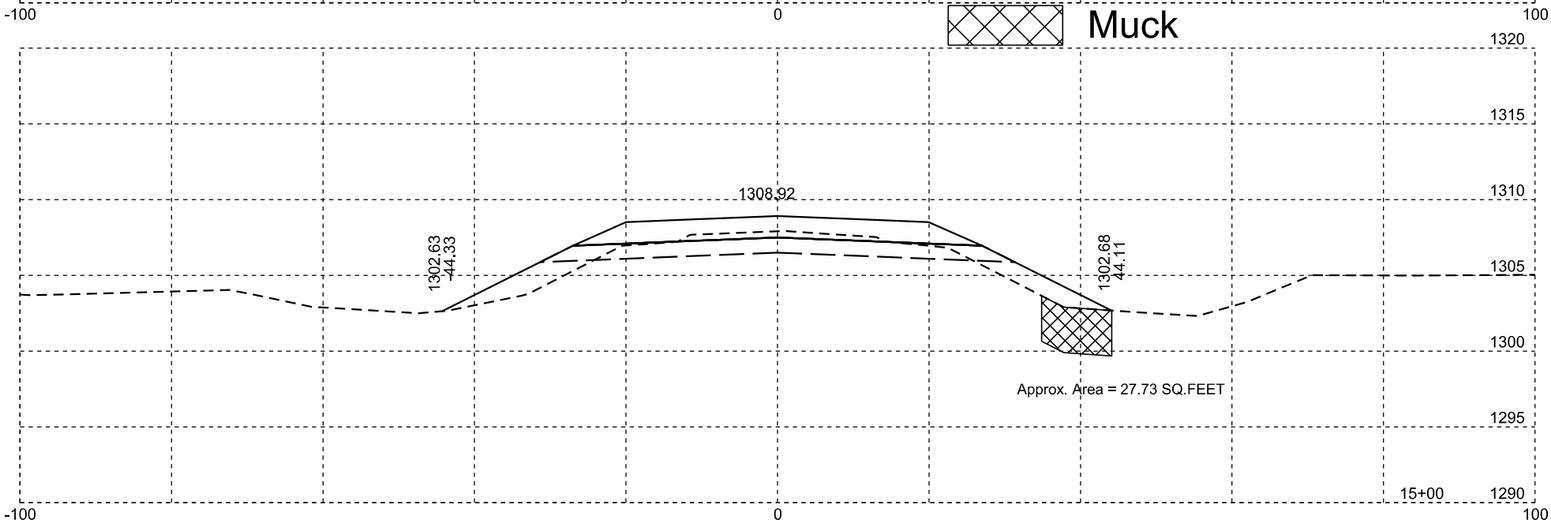

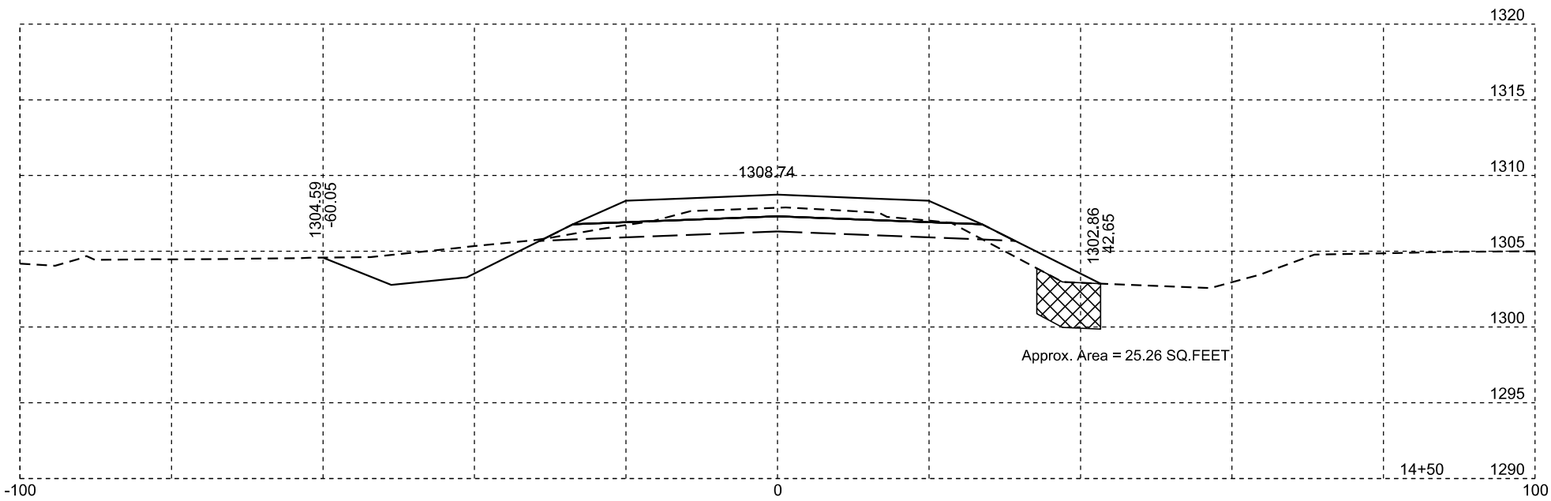

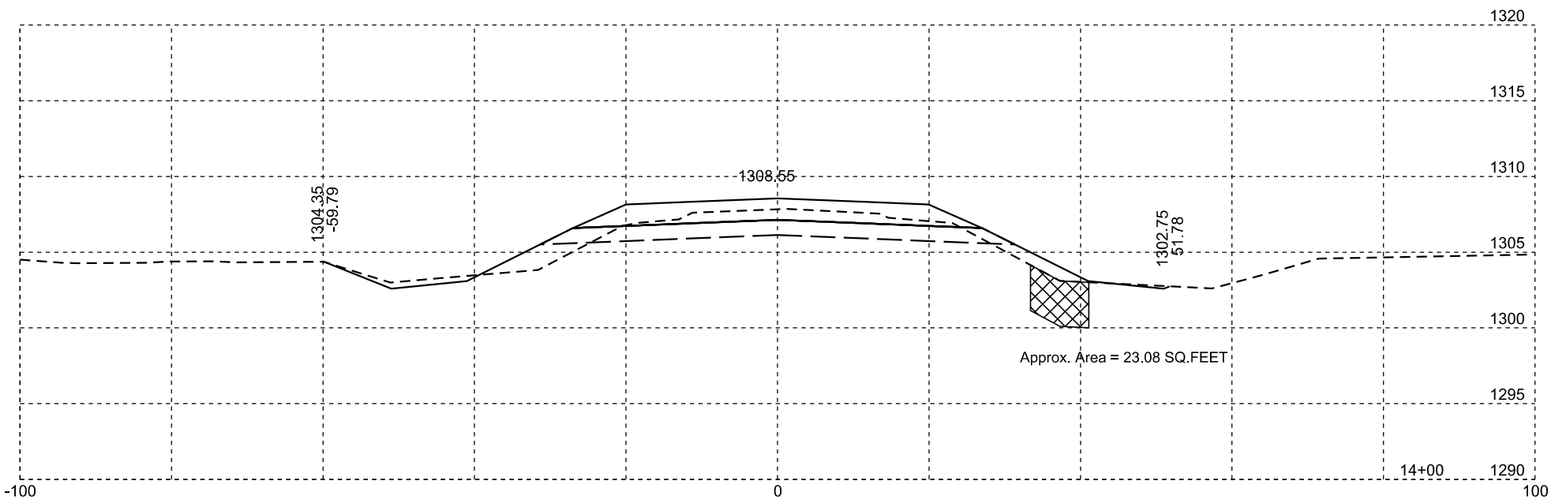

SD 37

Plotting Date: 04/12/2016

STATE OF SOUTH DAKOTA	PROJECT	SHEET NO.	TOTAL SHEETS
	P 0037(129)207 NH 0012(198)308	X38	X50

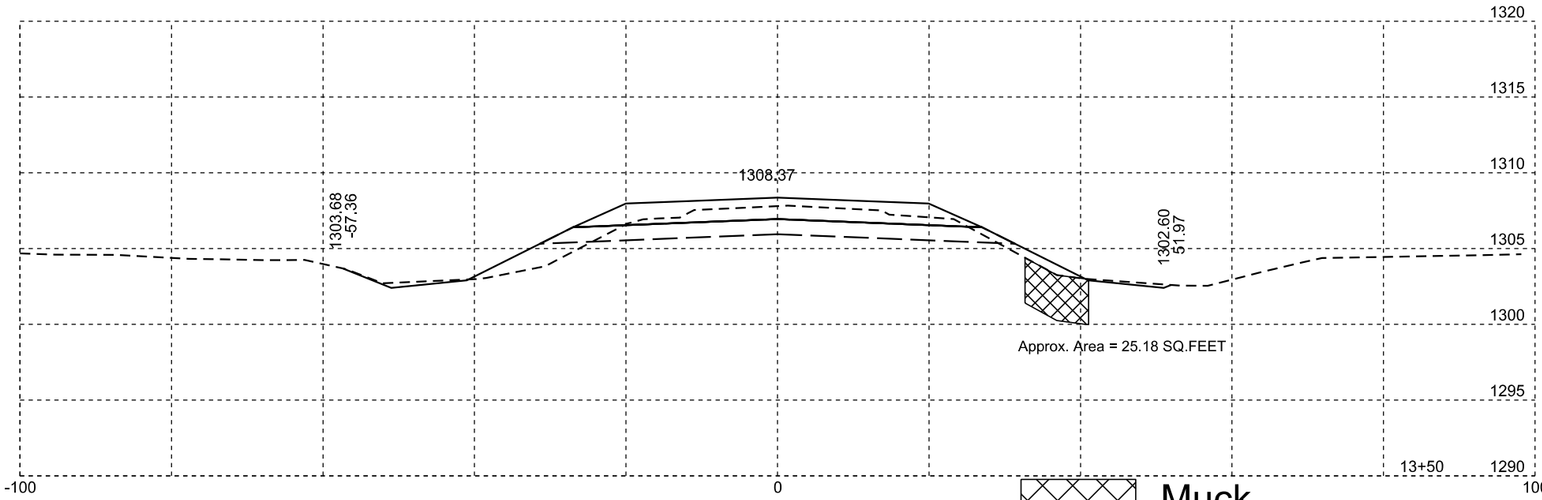

Muck

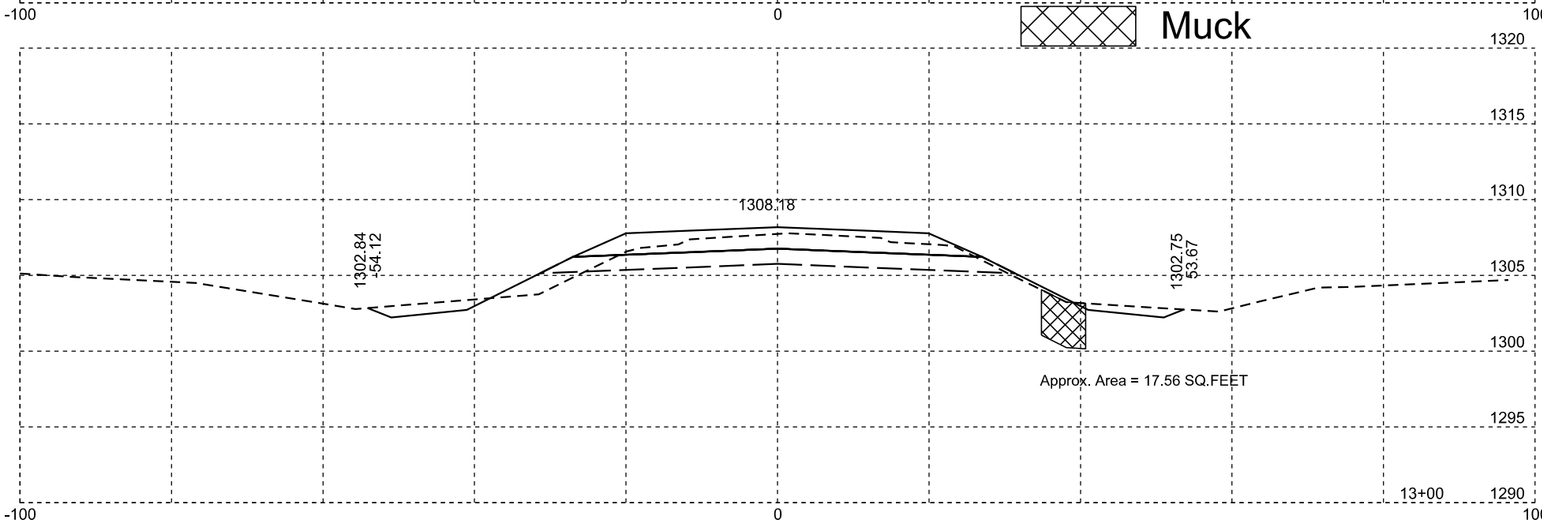

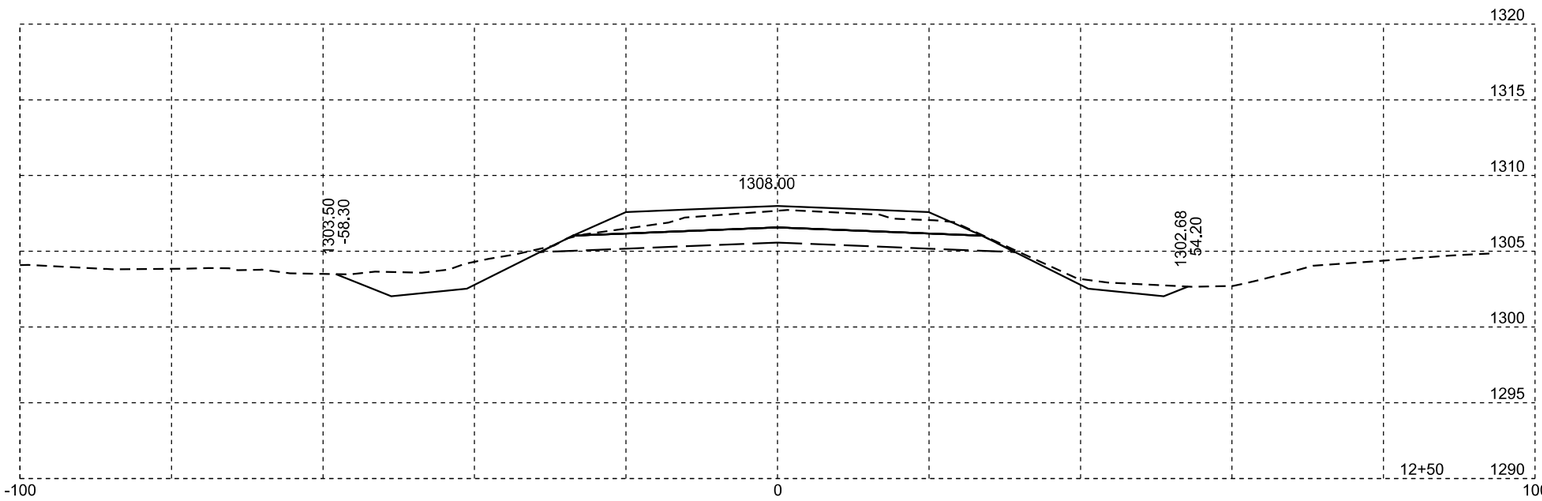

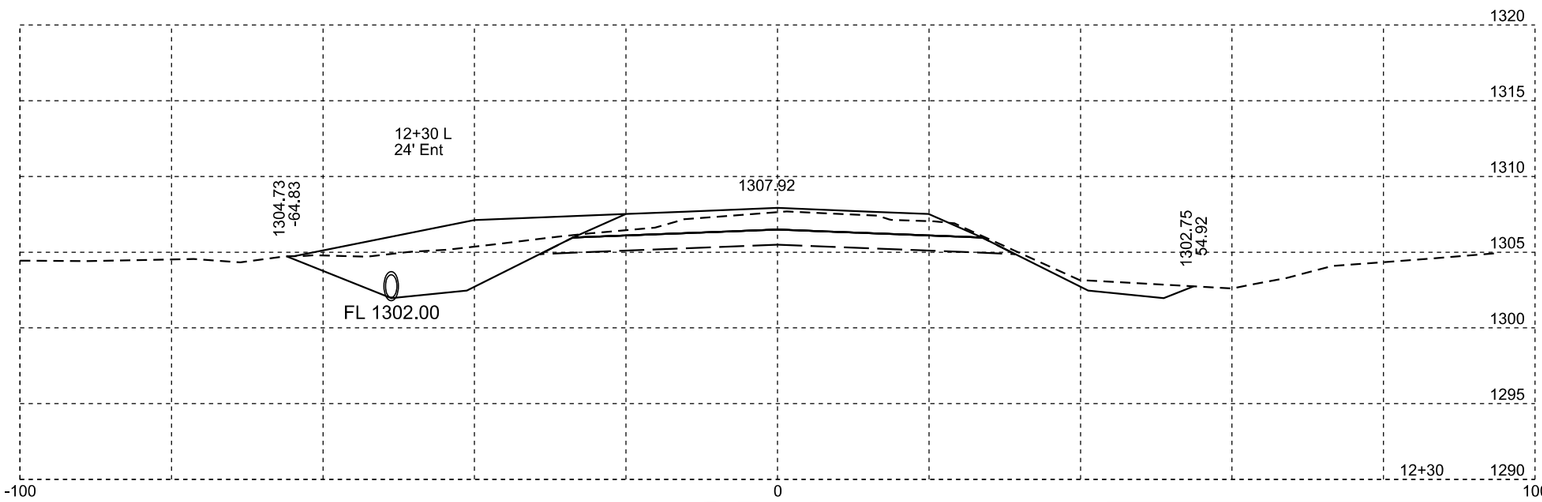

SD 37

Plotting Date: 04/12/2016

STATE OF SOUTH DAKOTA	PROJECT	SHEET NO.	TOTAL SHEETS
	P 0037(129)207 NH 0012(198)308	X39	X50

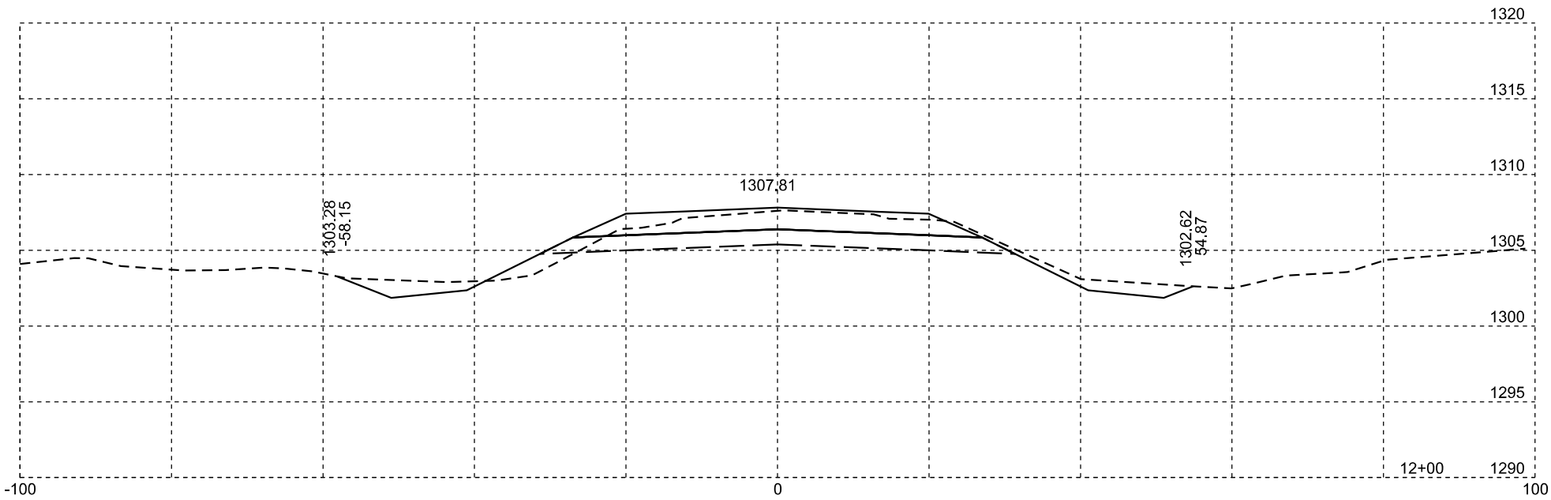

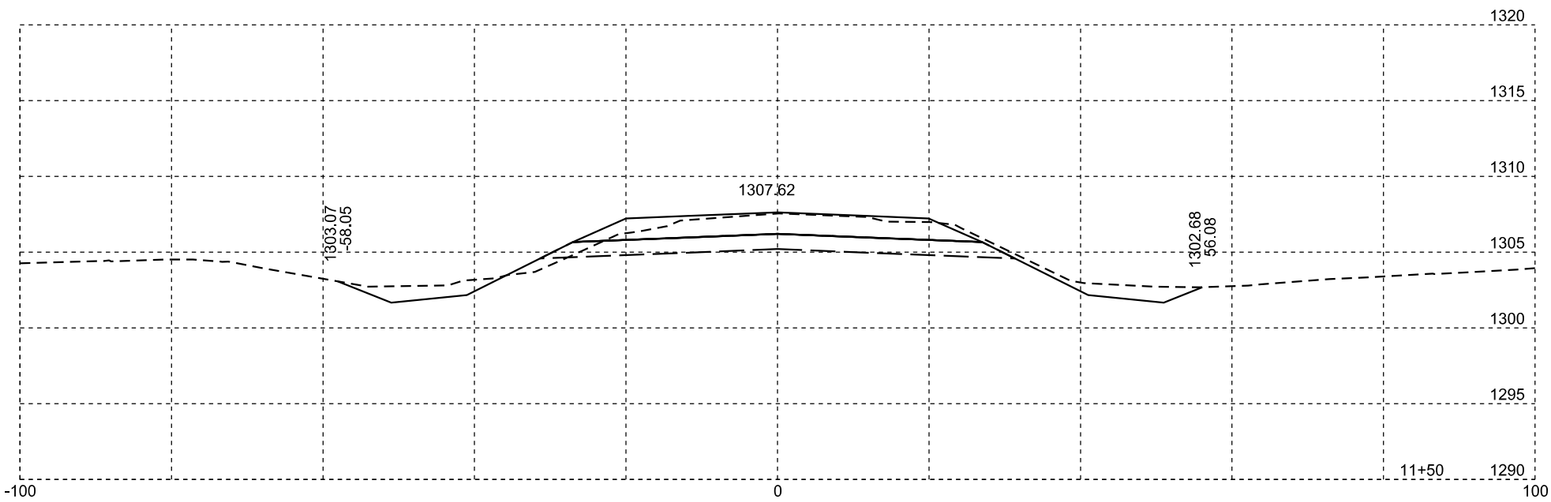

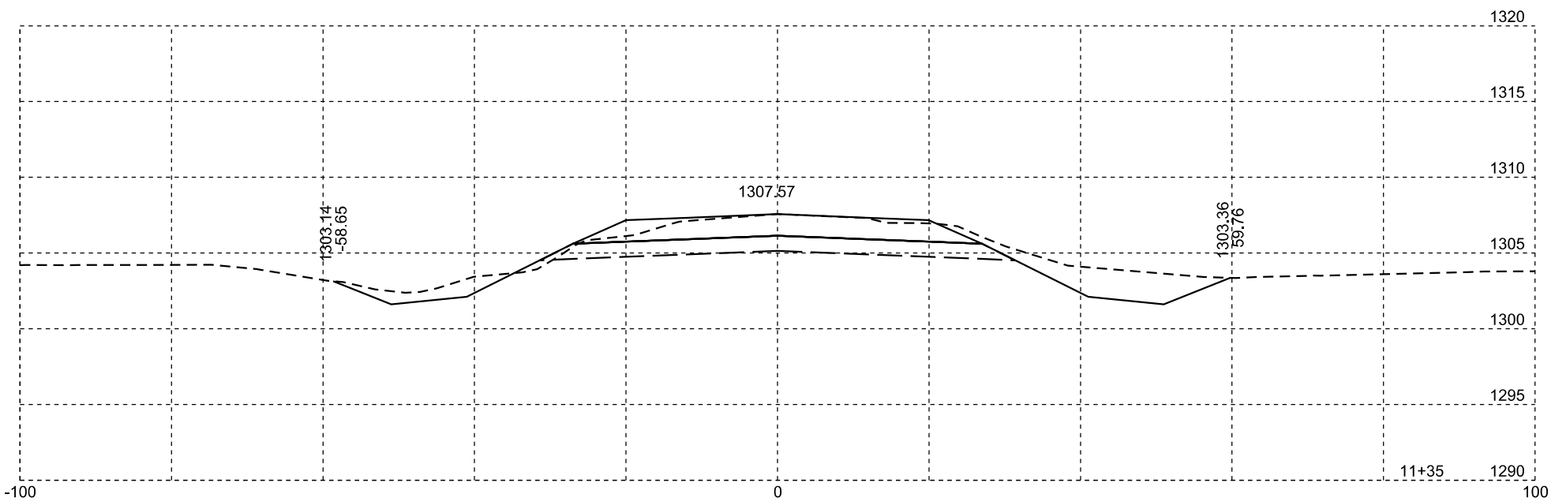

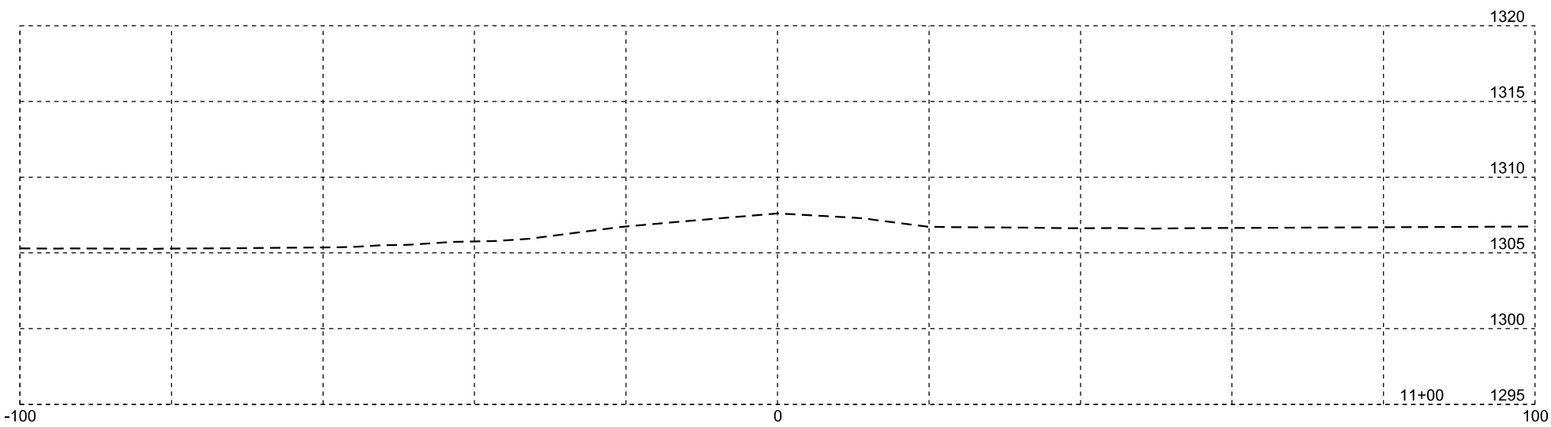

SD 37

Plotting Date: 04/12/2016

STATE OF SOUTH DAKOTA	PROJECT	SHEET NO.	TOTAL SHEETS
	P 0037(129)207 NH 0012(198)308	X40	X50

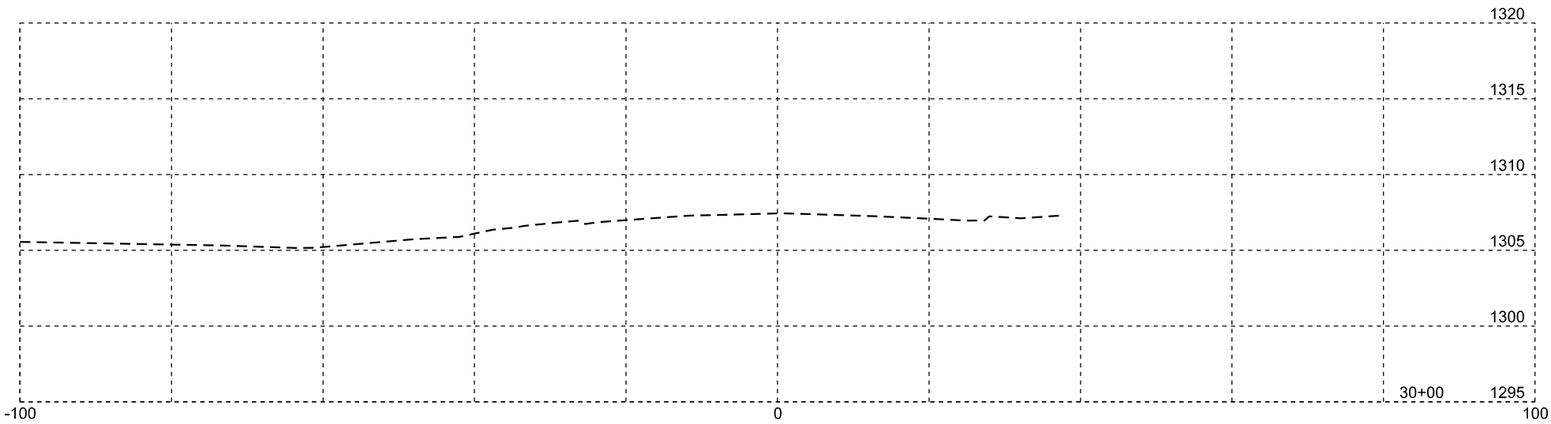

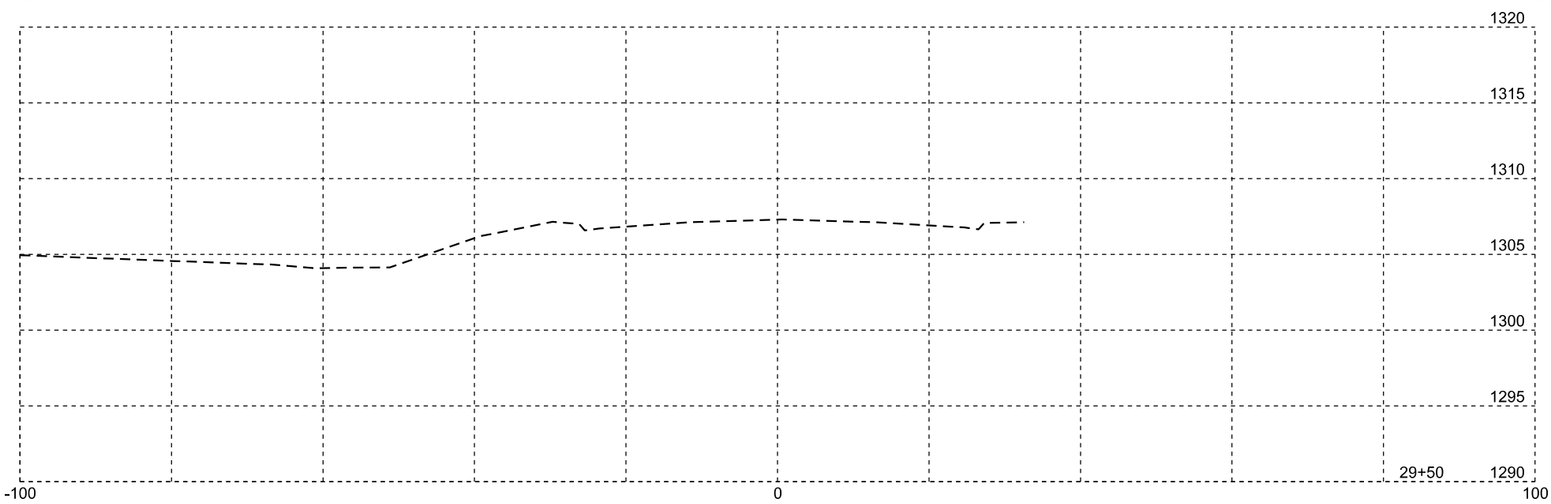

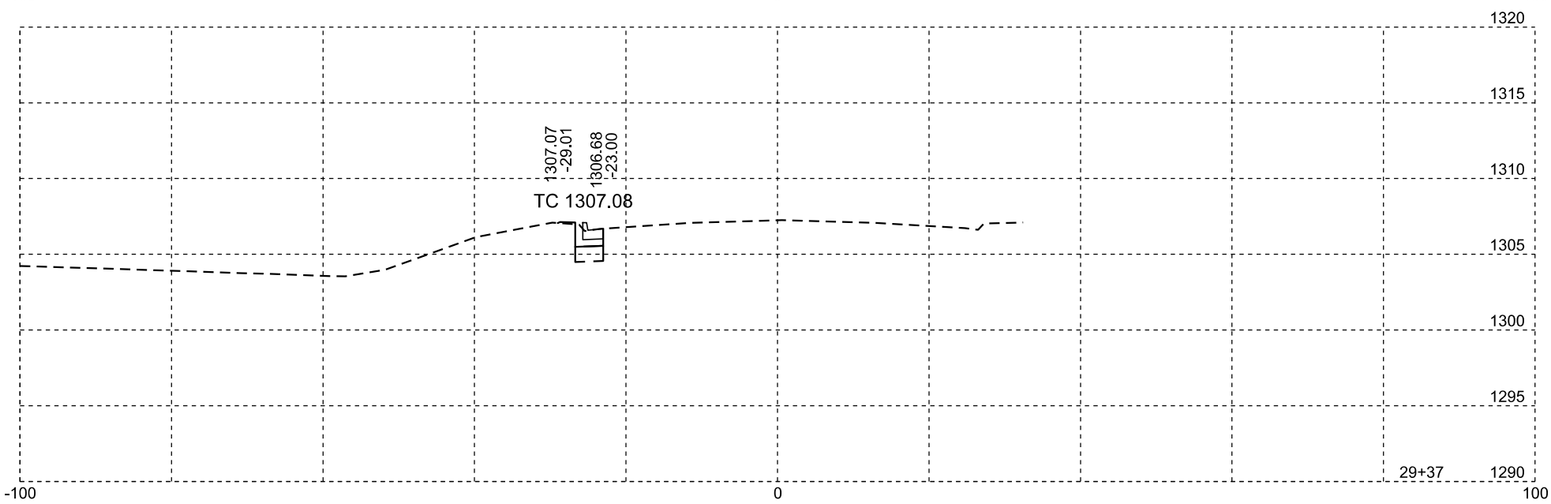

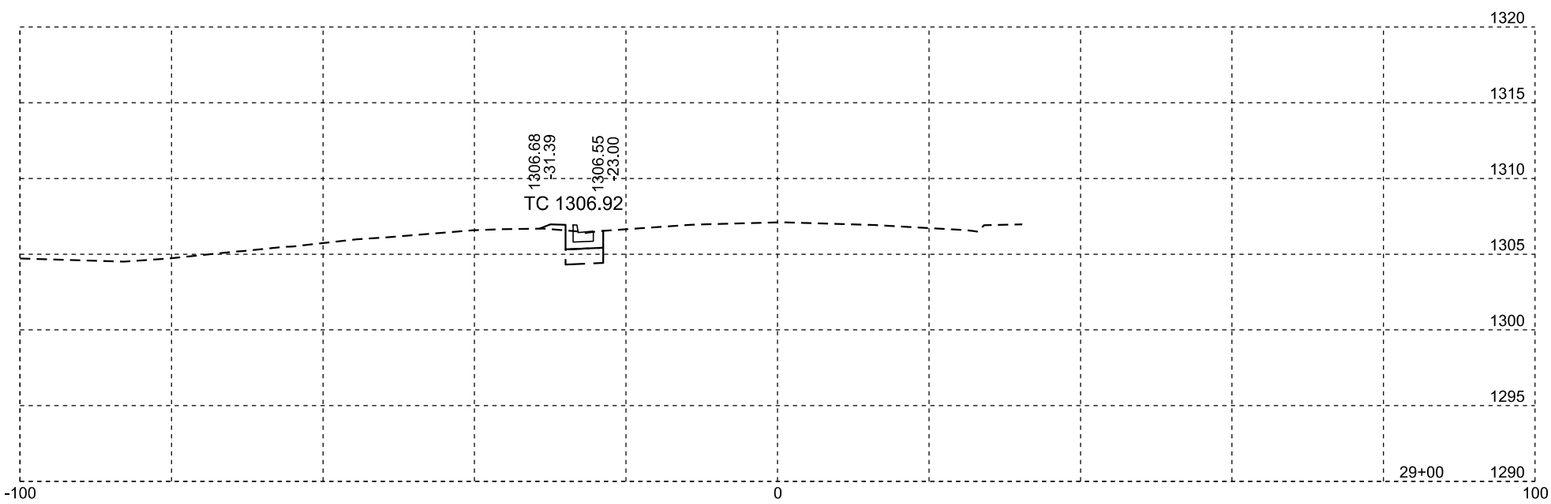

US 12

Plotting Date: 04/12/2016

STATE OF SOUTH DAKOTA	PROJECT	SHEET NO.	TOTAL SHEETS
	P 0037(129)207 NH 0012(198)308	X41	X50

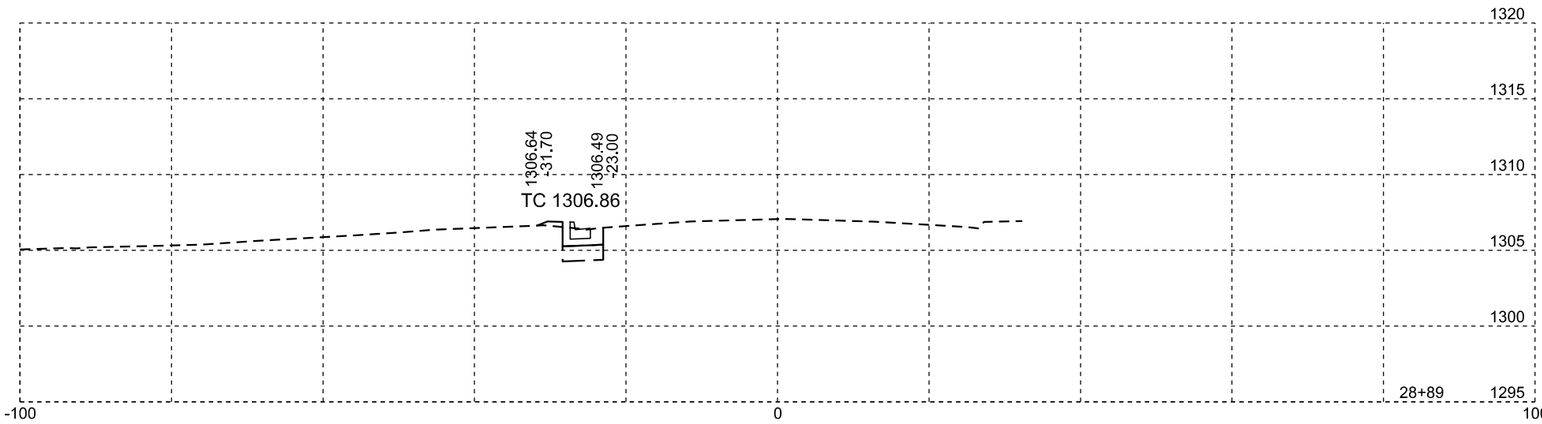

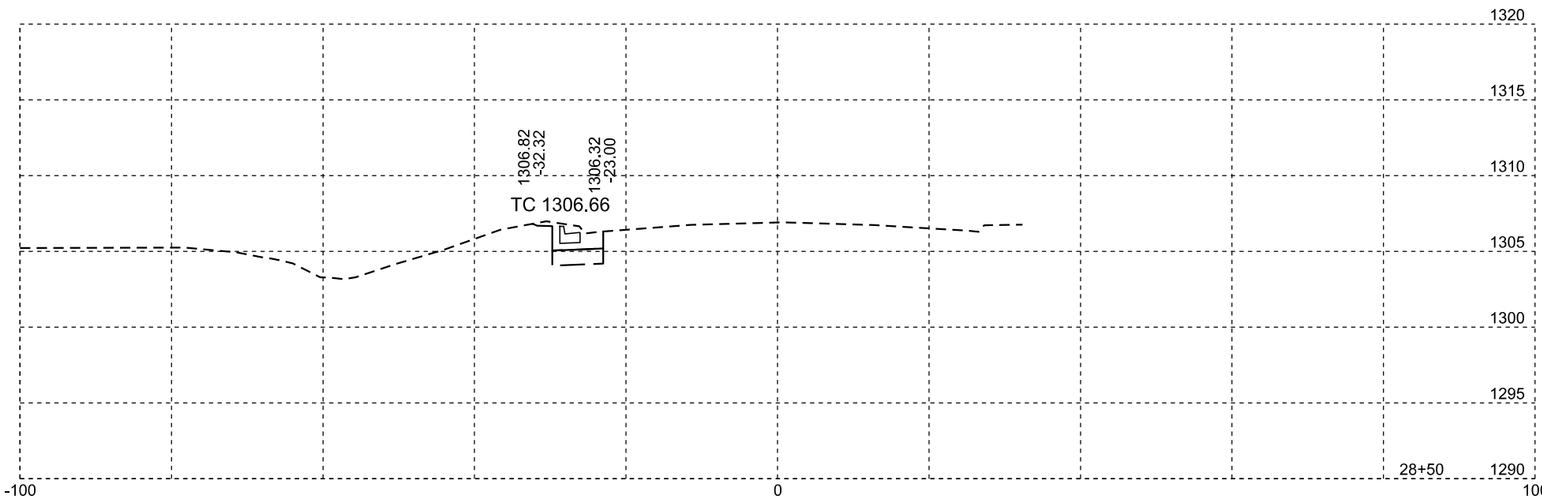

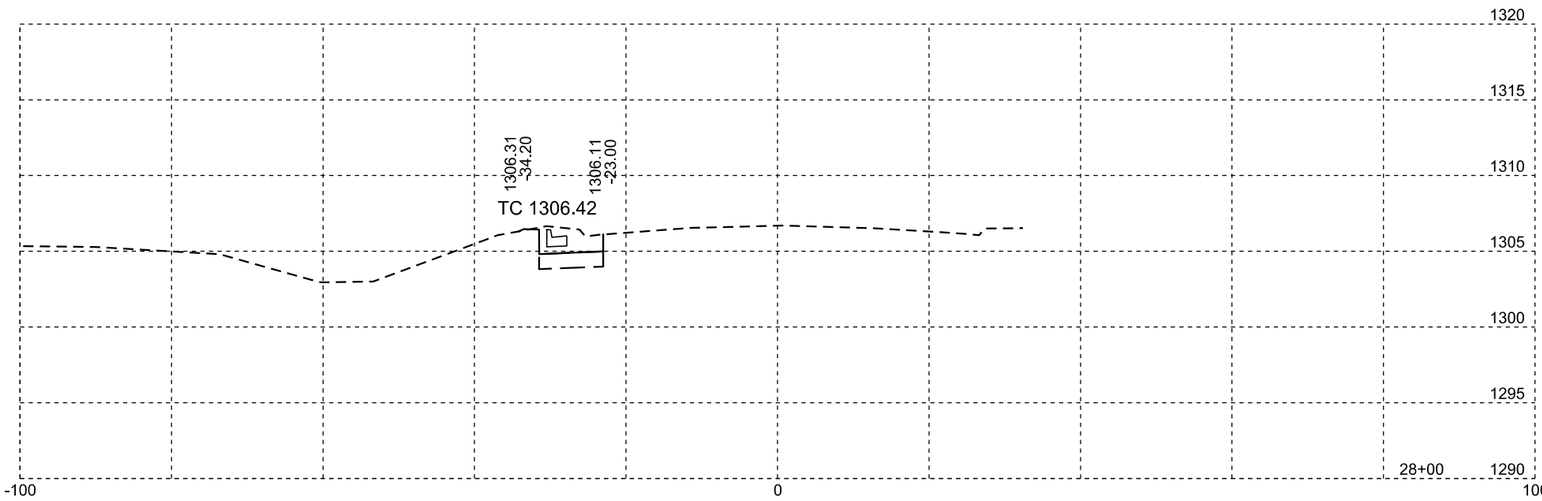

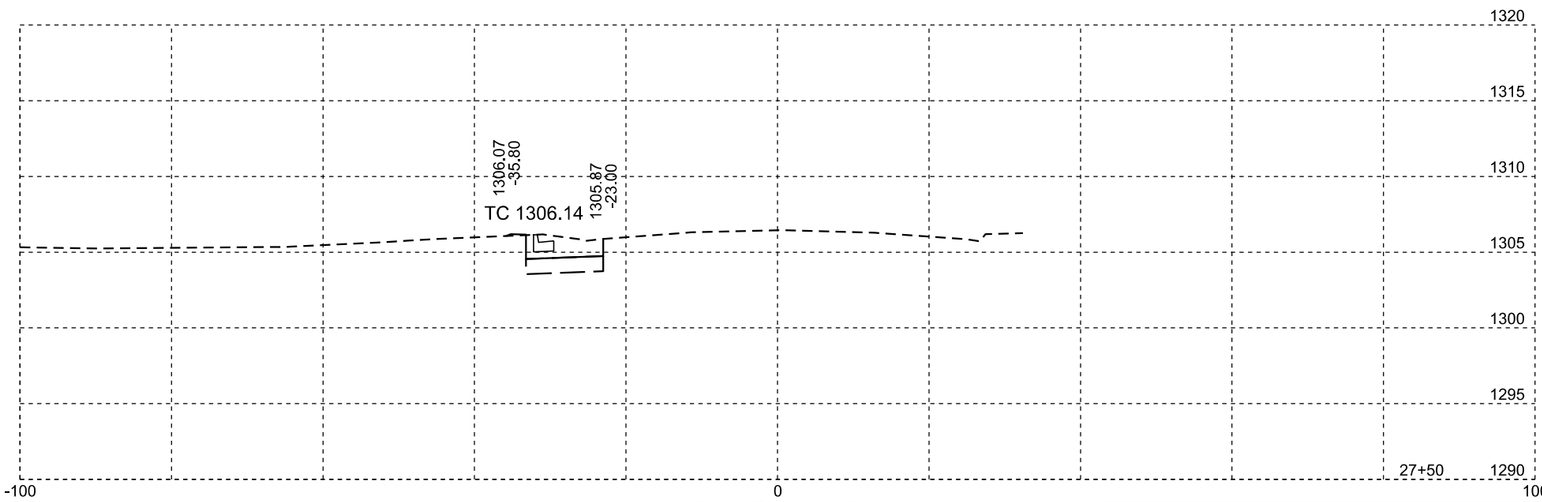

US 12

Plotting Date: 04/12/2016

STATE OF SOUTH DAKOTA	PROJECT	SHEET NO.	TOTAL SHEETS
	P 0037(129)207 NH 0012(198)308	X42	X50

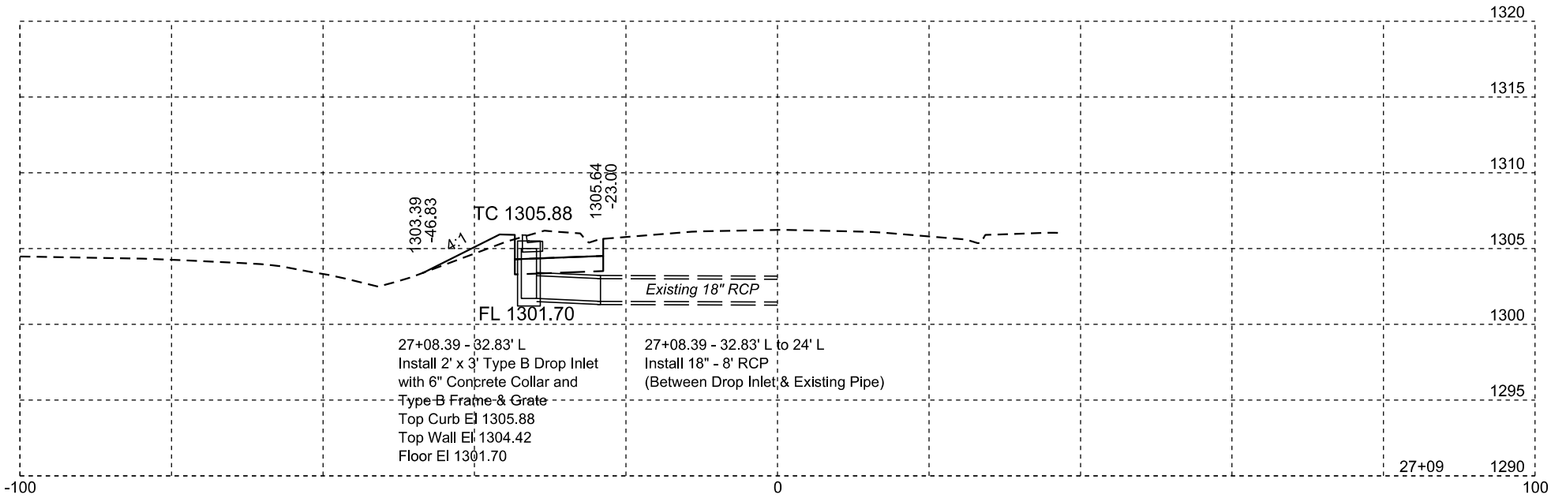

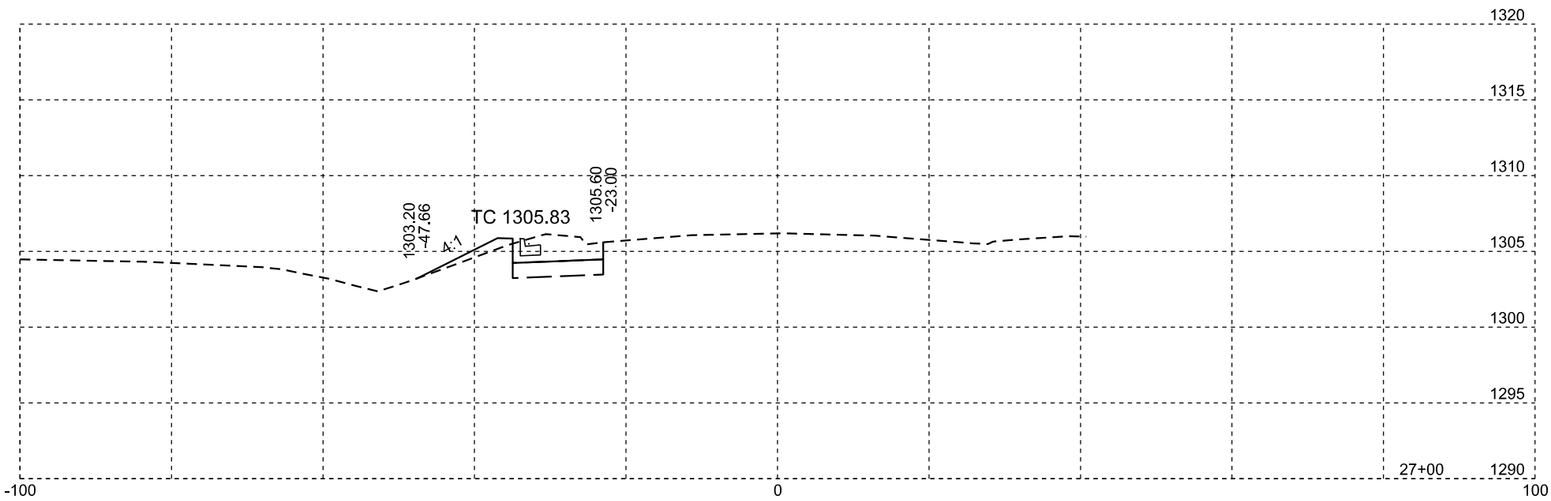

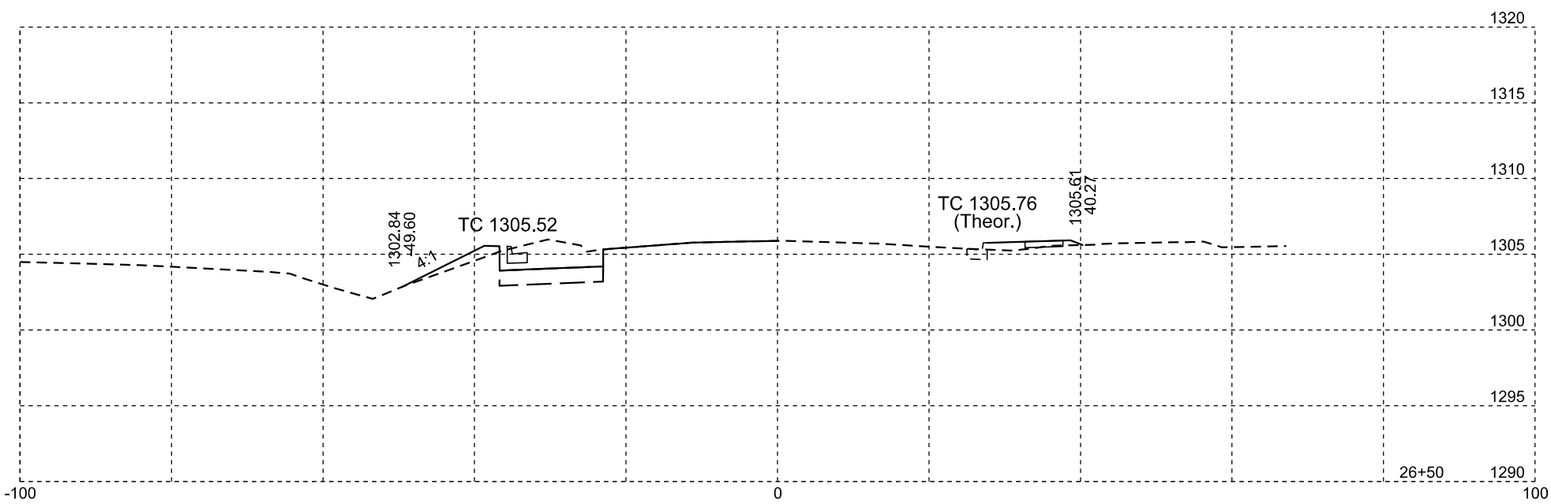

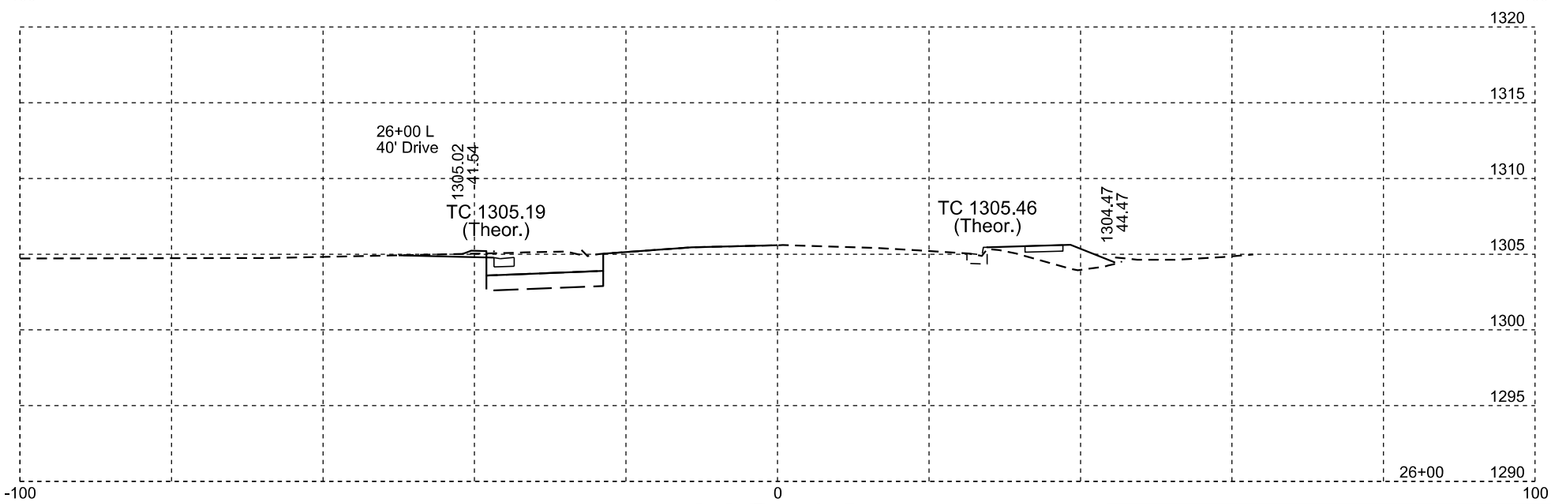

US 12

Plotting Date: 04/12/2016

STATE OF SOUTH DAKOTA	PROJECT	SHEET NO.	TOTAL SHEETS
	P 0037(129)207 NH 0012(198)308	X43	X50

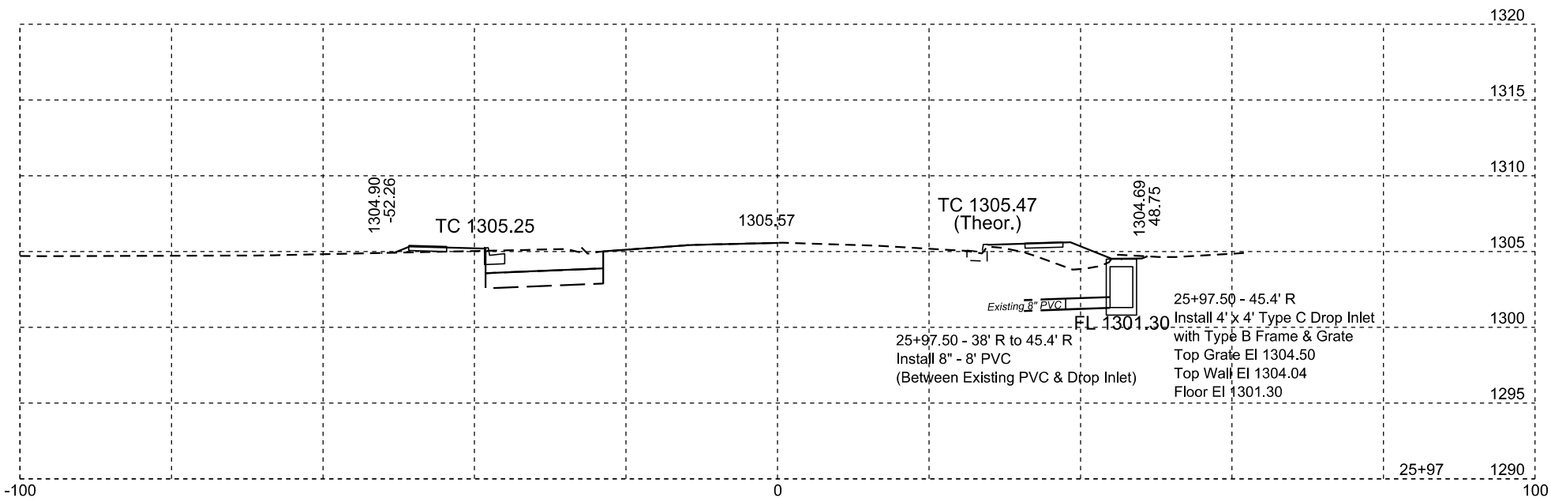

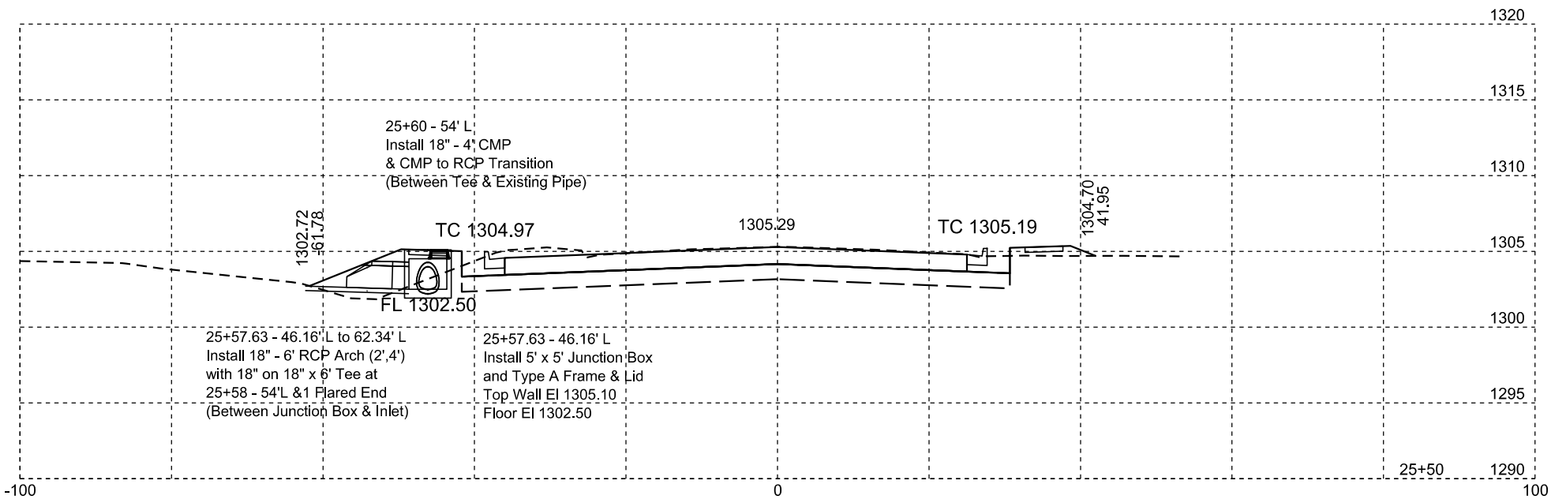

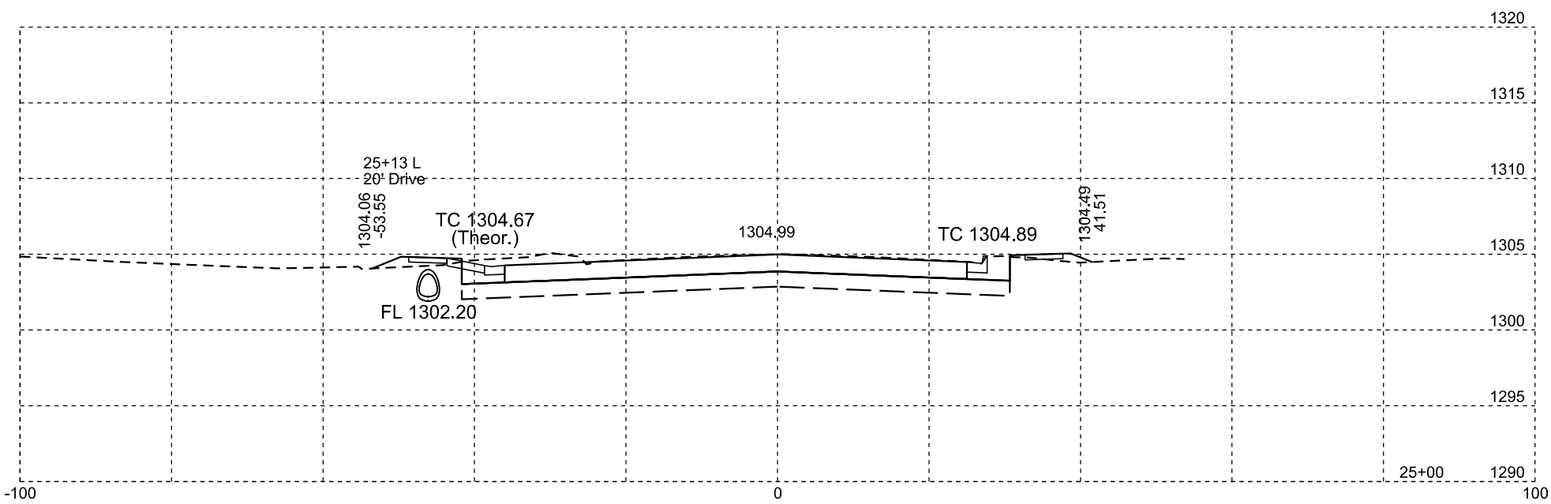

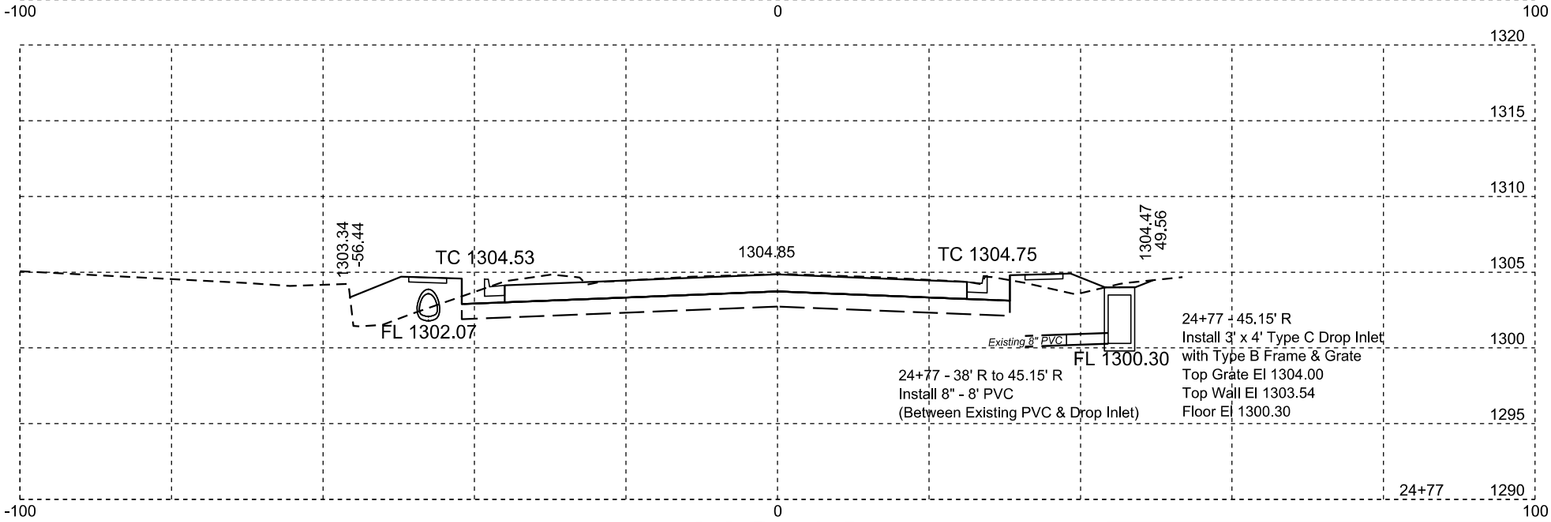

US 12

Plotting Date: 04/12/2016

STATE OF SOUTH DAKOTA	PROJECT	SHEET NO.	TOTAL SHEETS
	P 0037(129)207 NH 0012(198)308	X44	X50

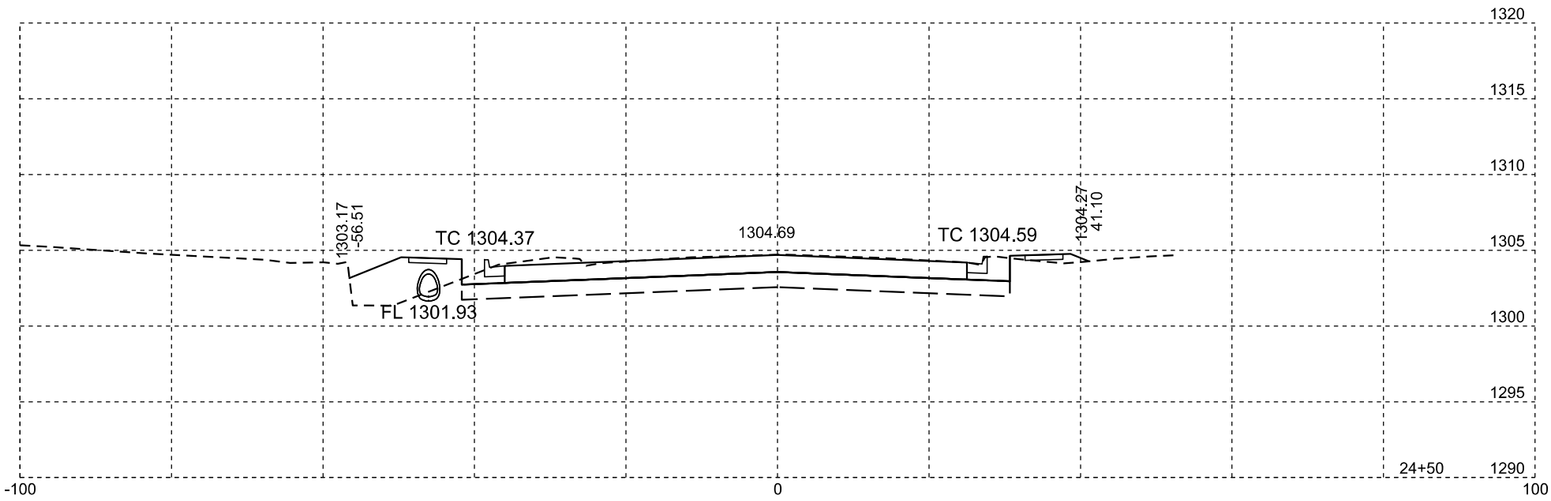

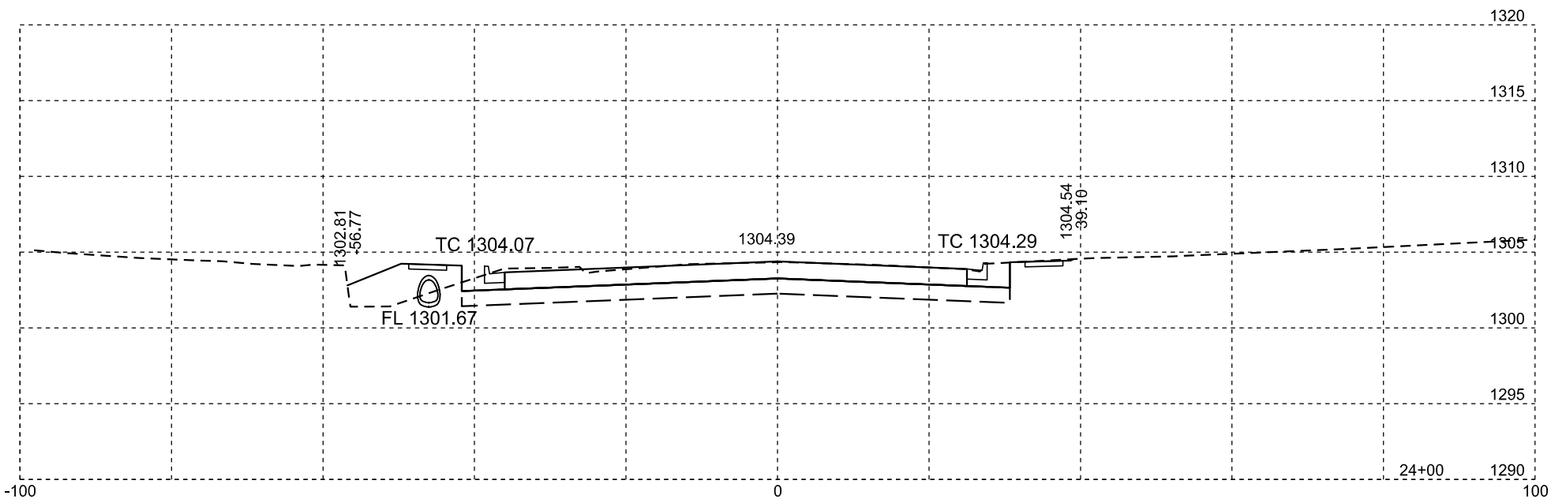

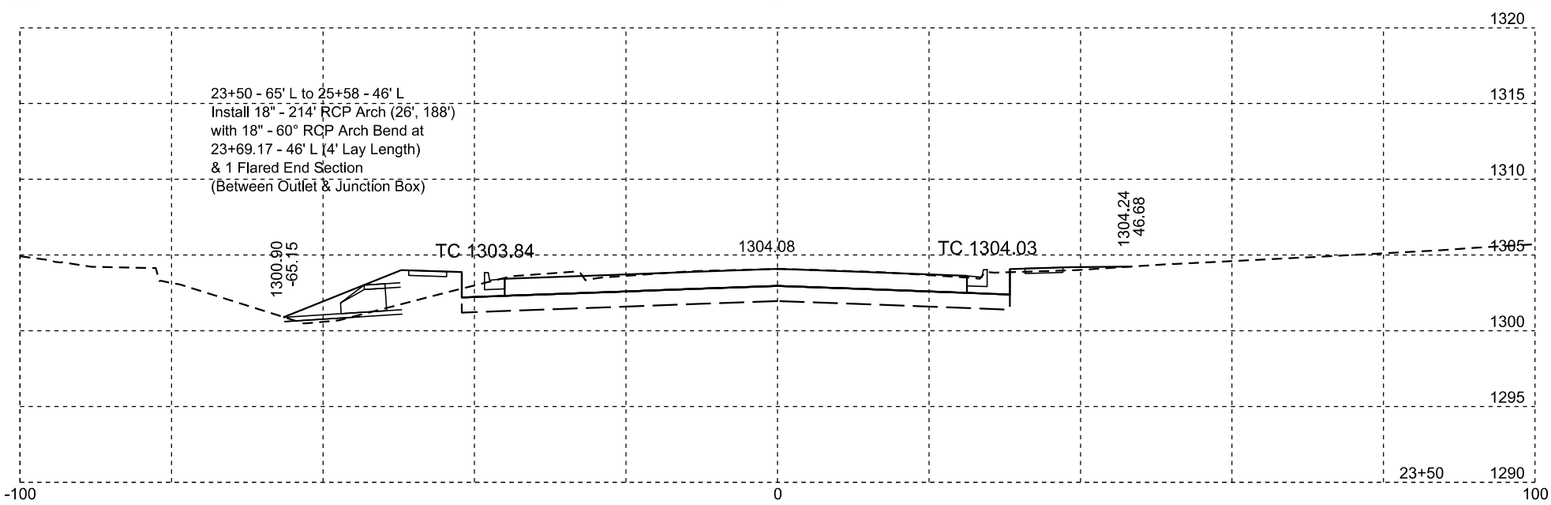

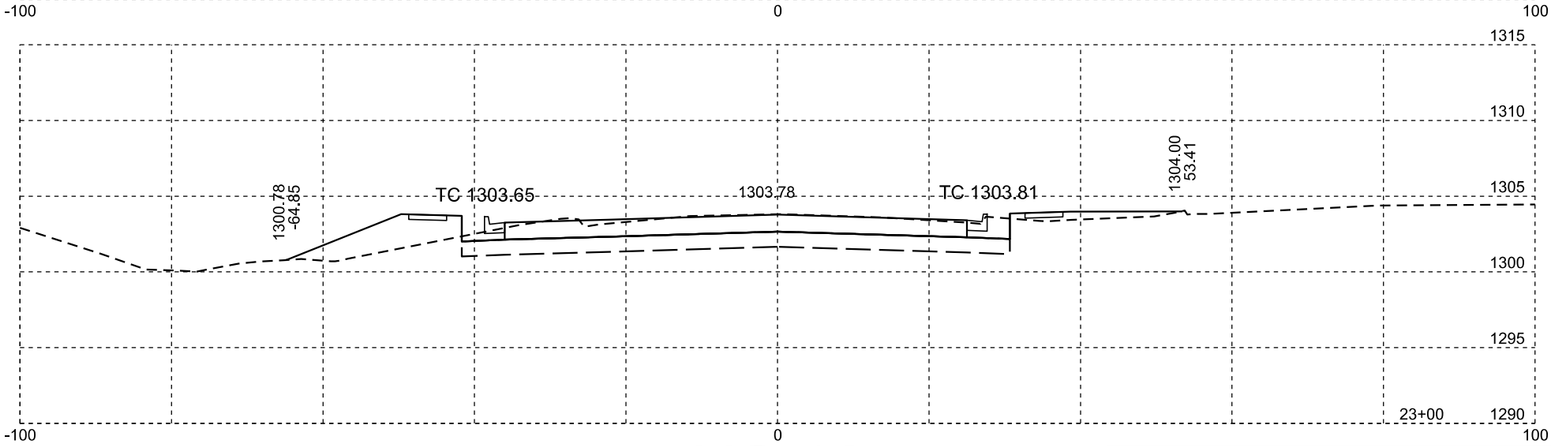

US 12 Plotting Date: 04/12/2016

STATE OF SOUTH DAKOTA	PROJECT	SHEET NO.	TOTAL SHEETS
	P 0037(129)207 NH 0012(198)308	X45	X50

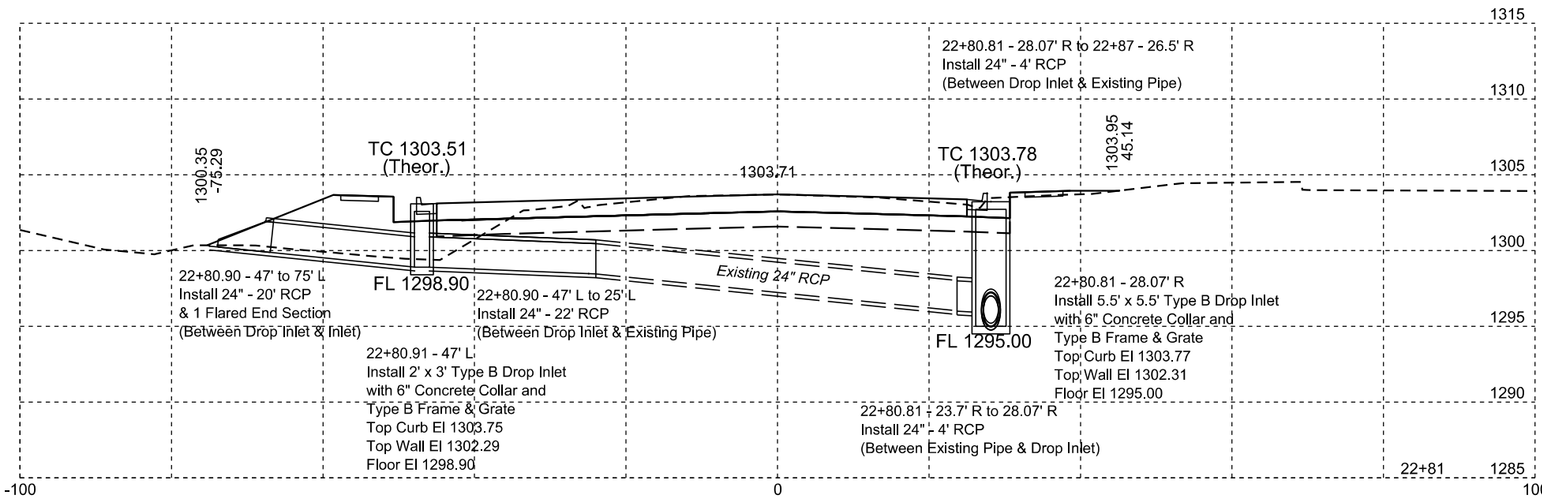

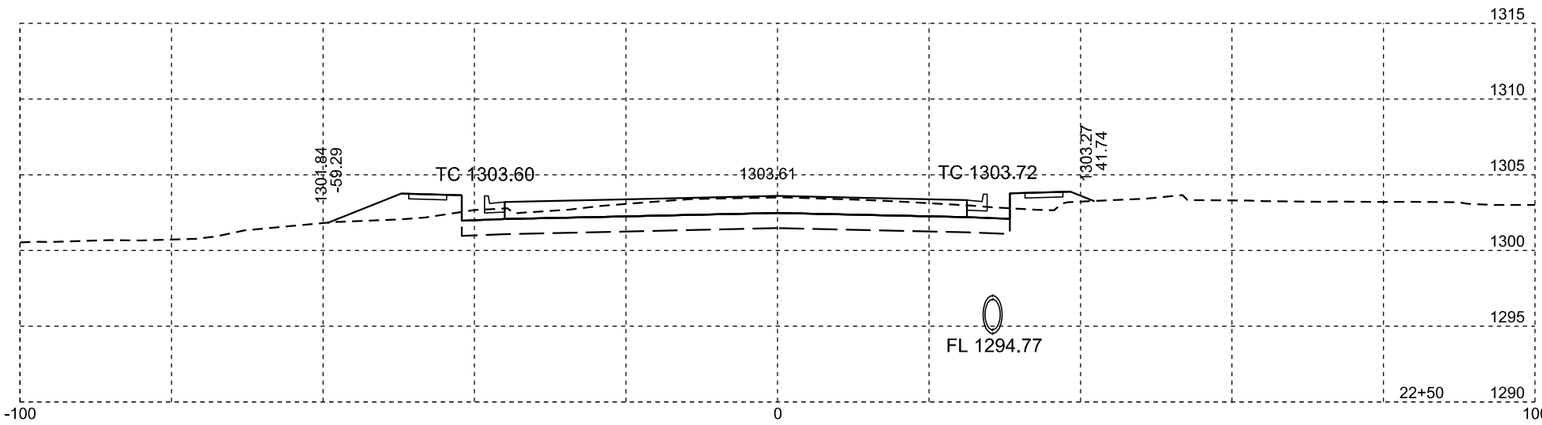

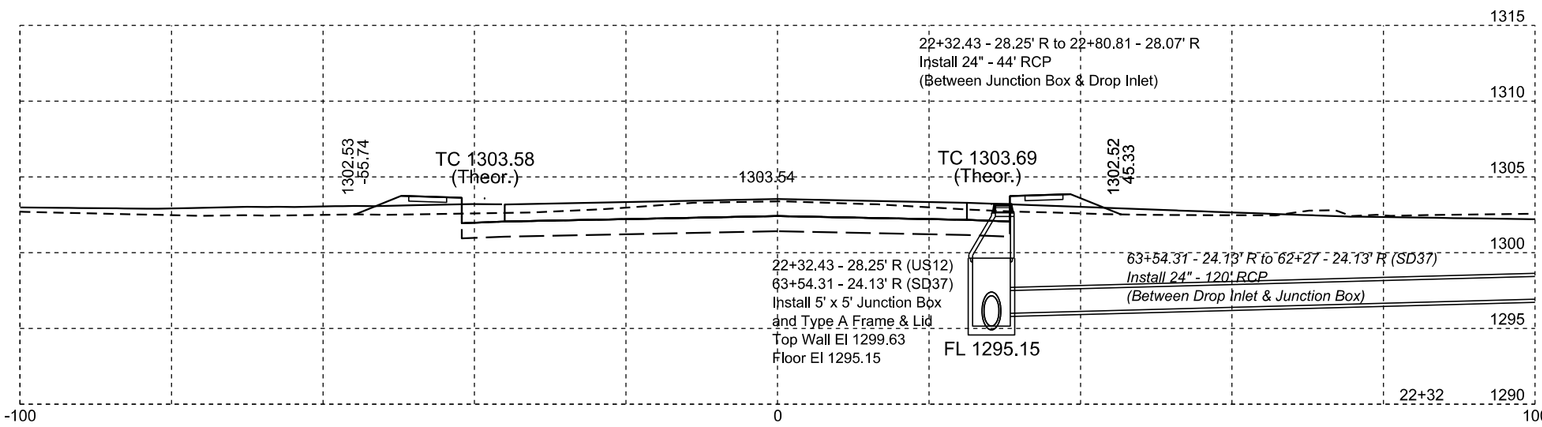

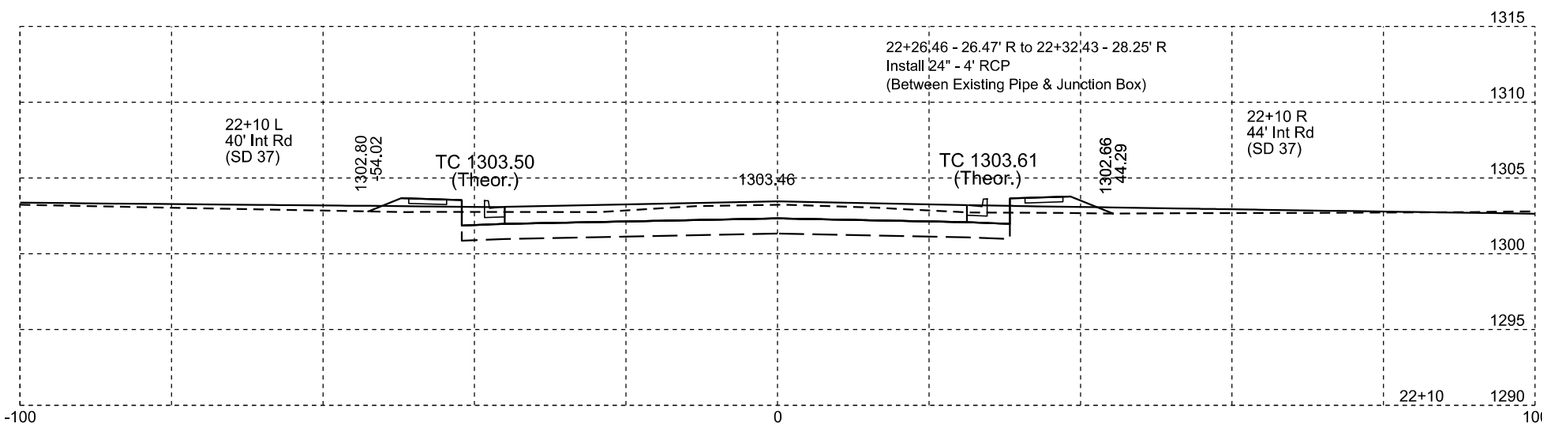

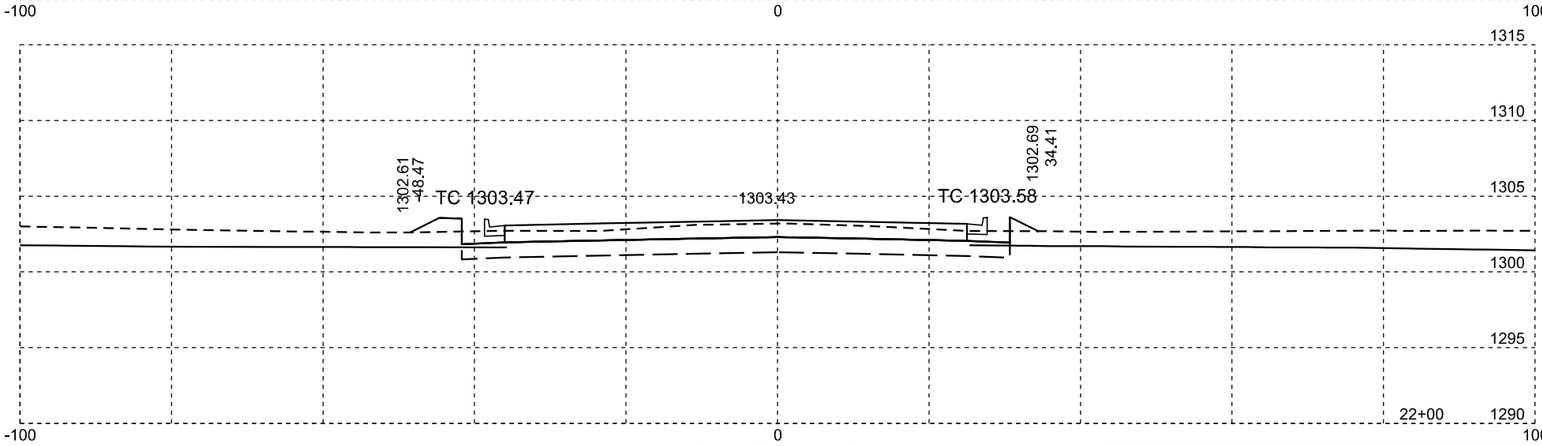

US 12

Plotting Date: 04/12/2016

STATE OF SOUTH DAKOTA	PROJECT	SHEET NO.	TOTAL SHEETS
	P 0037(129)207 NH 0012(198)308	X46	X50

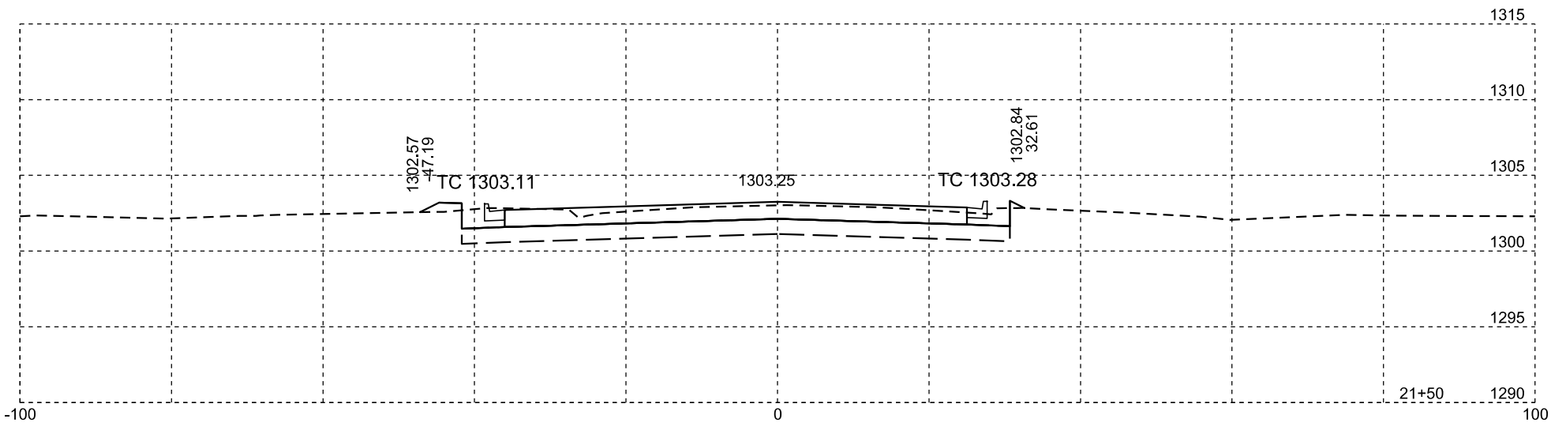

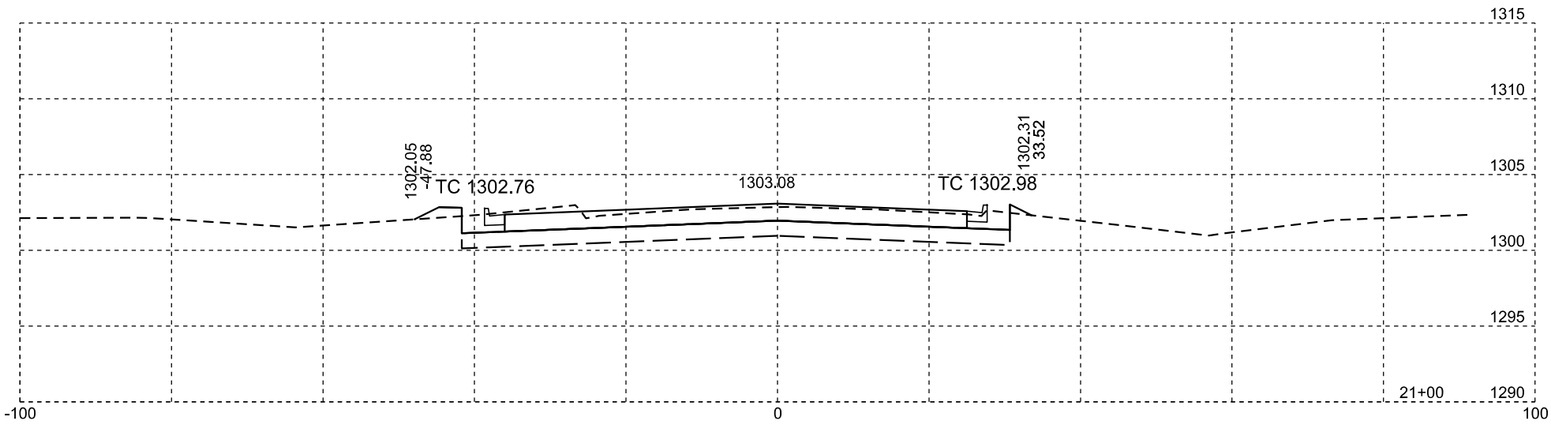

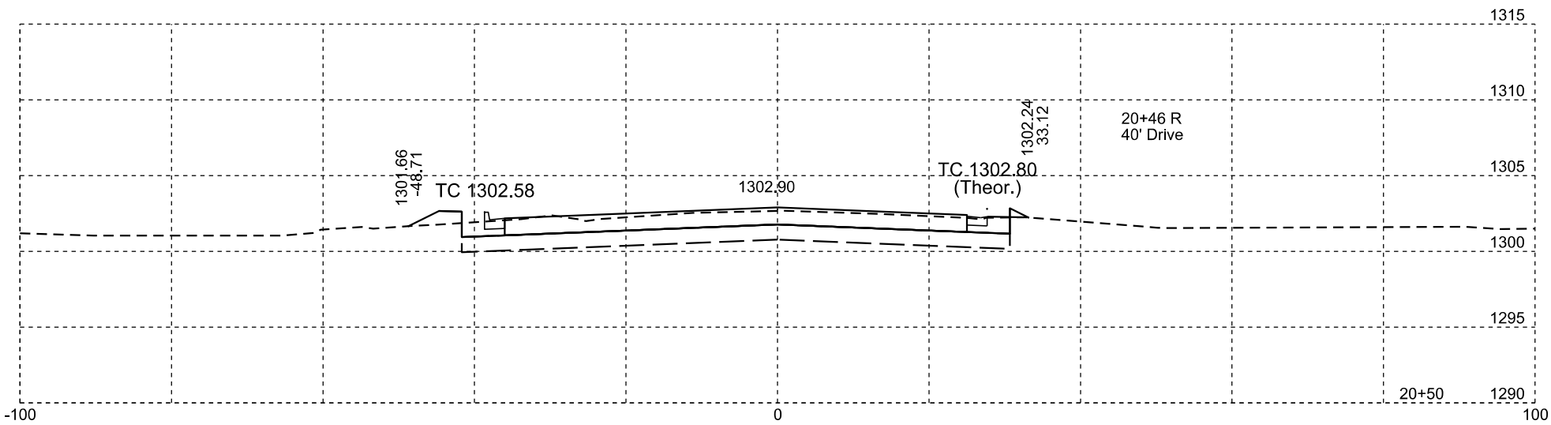

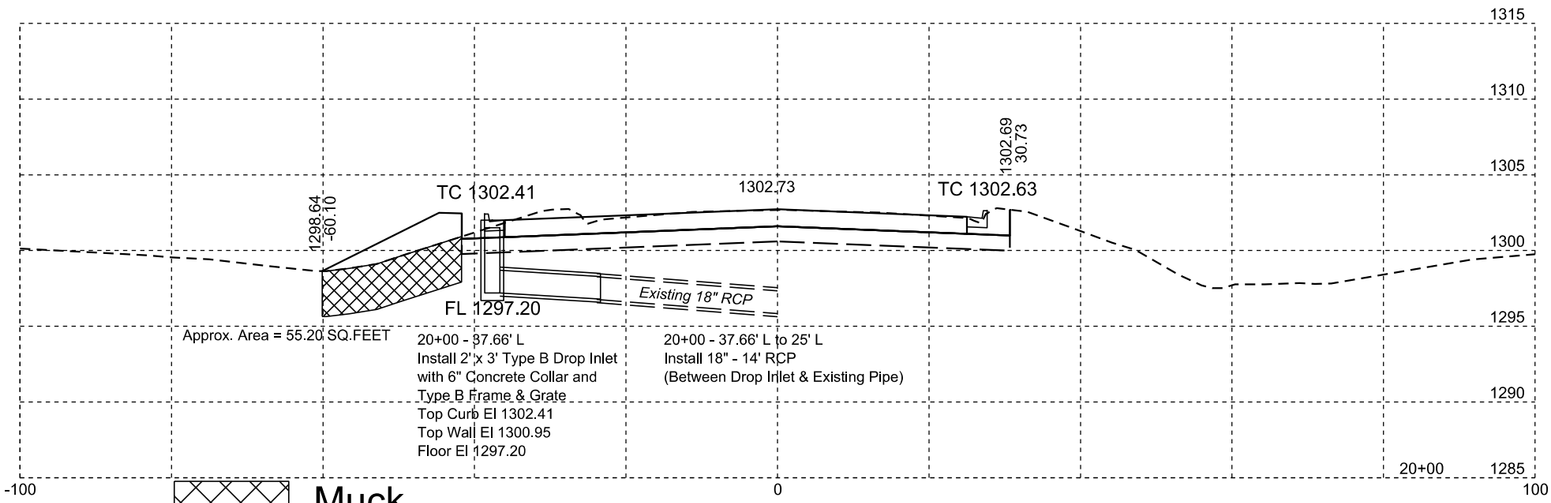

Muck

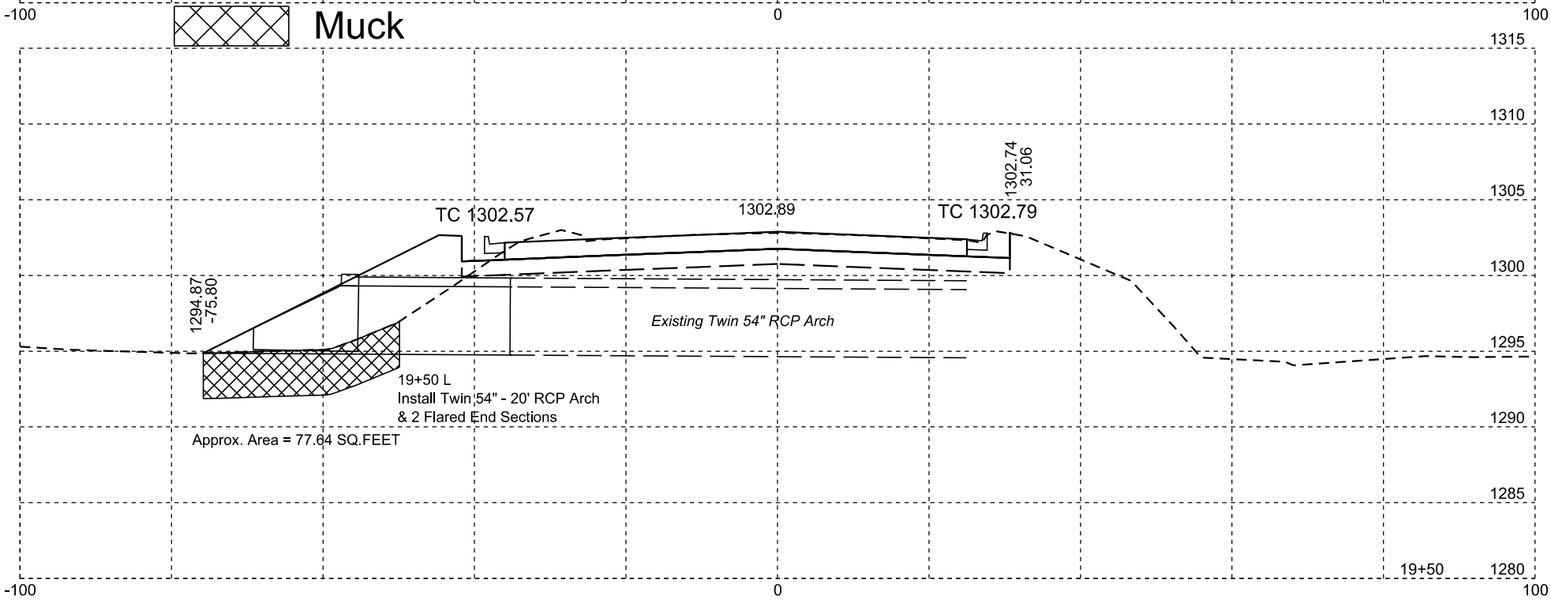

US 12

Plotting Date: 04/12/2016

STATE OF SOUTH DAKOTA	PROJECT	SHEET NO.	TOTAL SHEETS
	P 0037(129)207 NH 0012(198)308	X47	X50

Muck

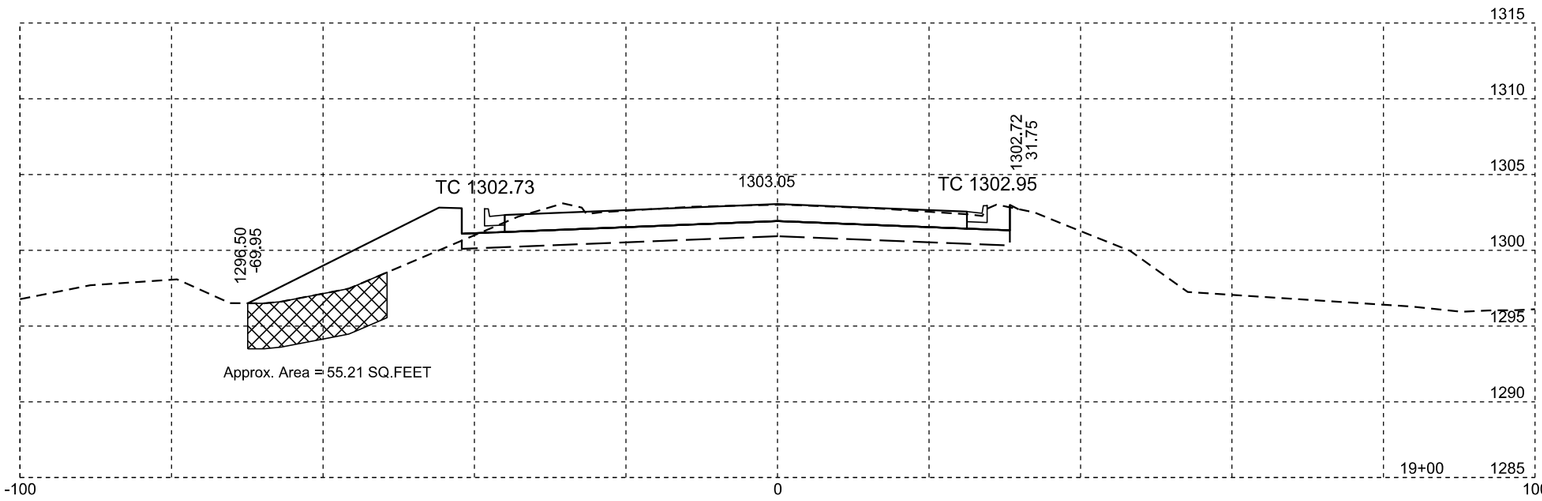

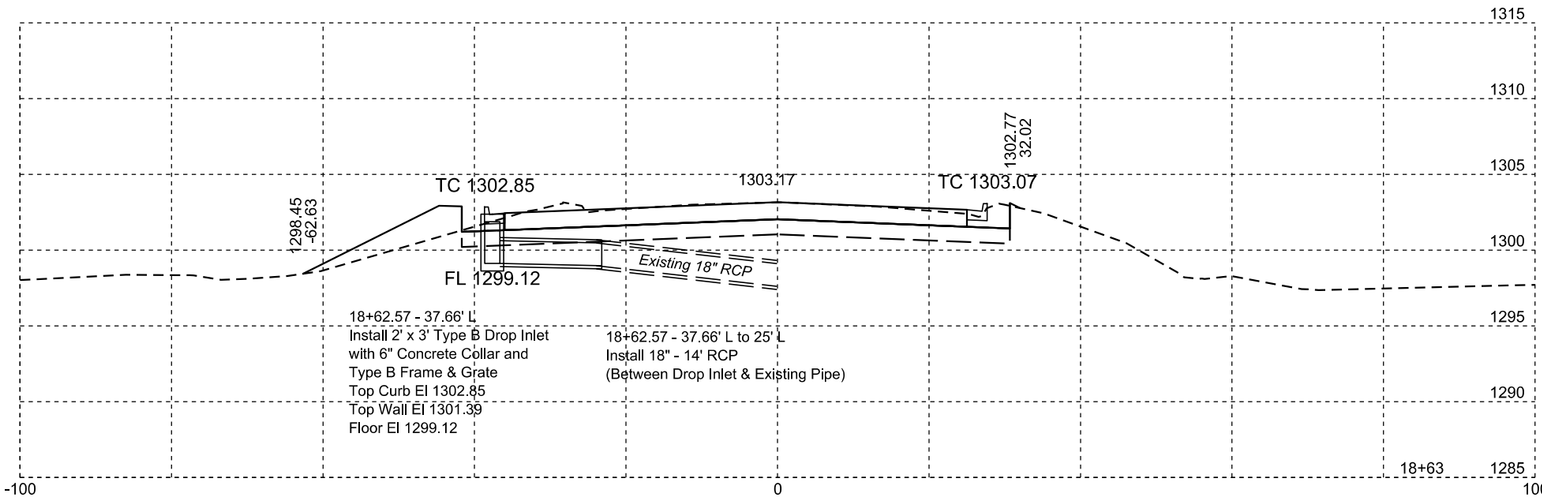

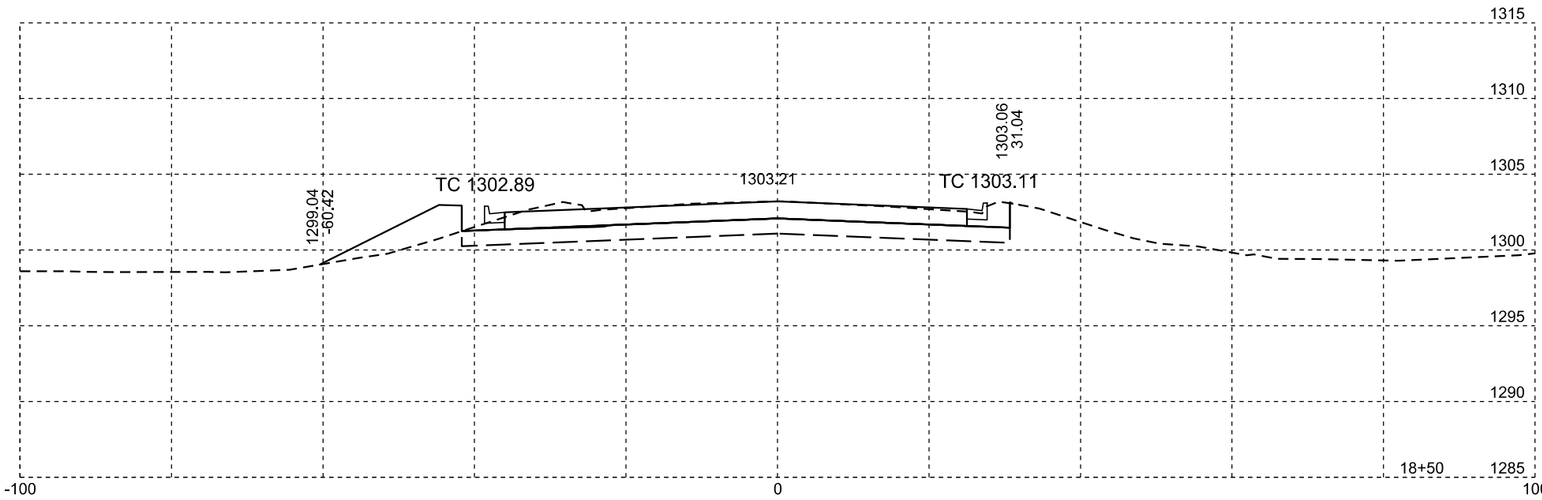

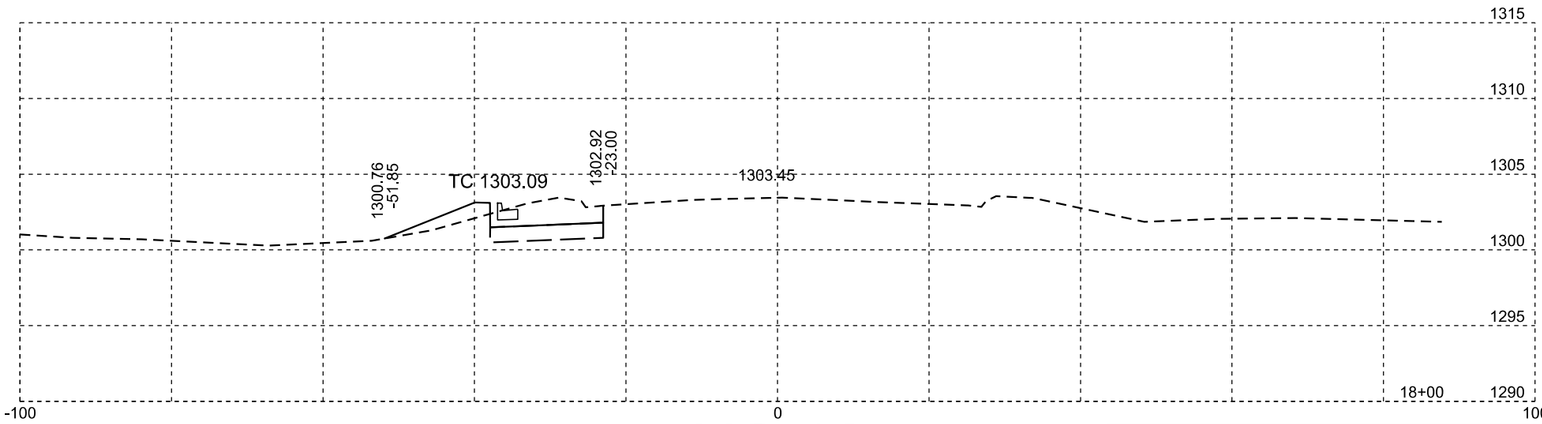

US 12

Plotting Date: 04/12/2016

STATE OF SOUTH DAKOTA	PROJECT	SHEET NO.	TOTAL SHEETS
	P 0037(129)207 NH 0012(198)308	X48	X50

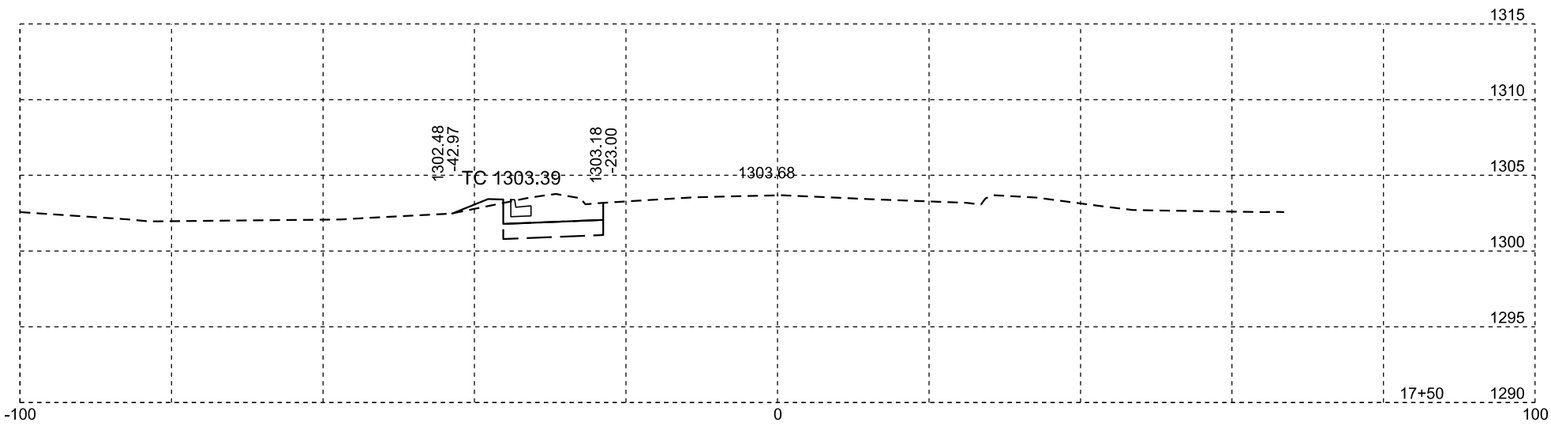

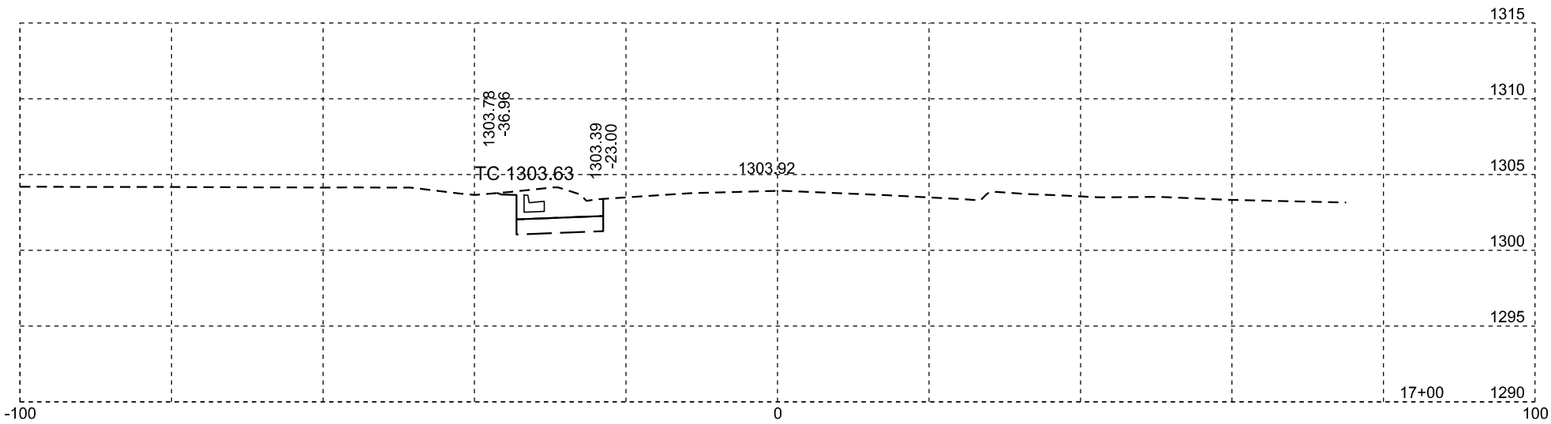

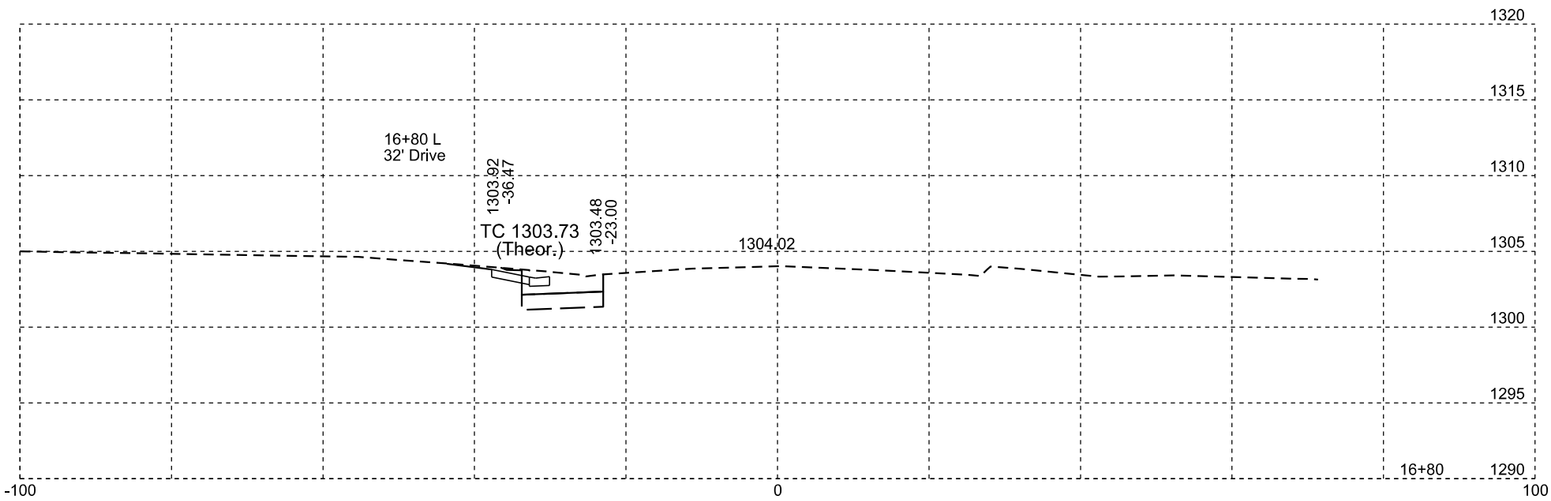

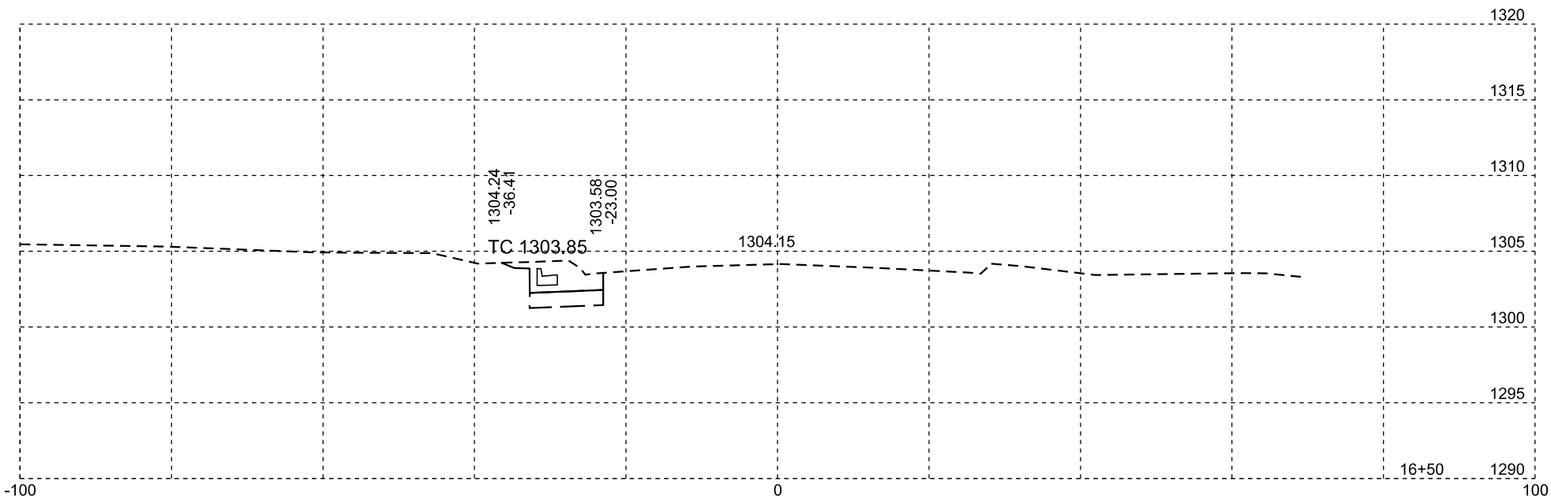

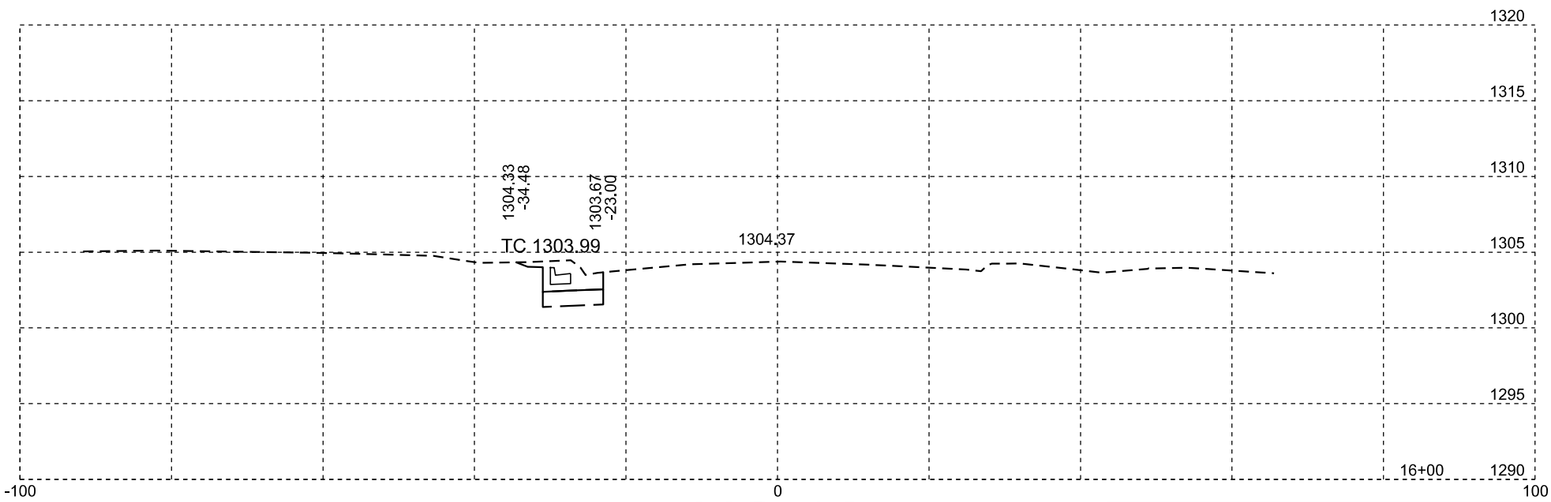

US 12

Plotting Date: 04/12/2016

STATE OF SOUTH DAKOTA	PROJECT	SHEET NO.	TOTAL SHEETS
	P 0037(129)207 NH 0012(198)308	X49	X50

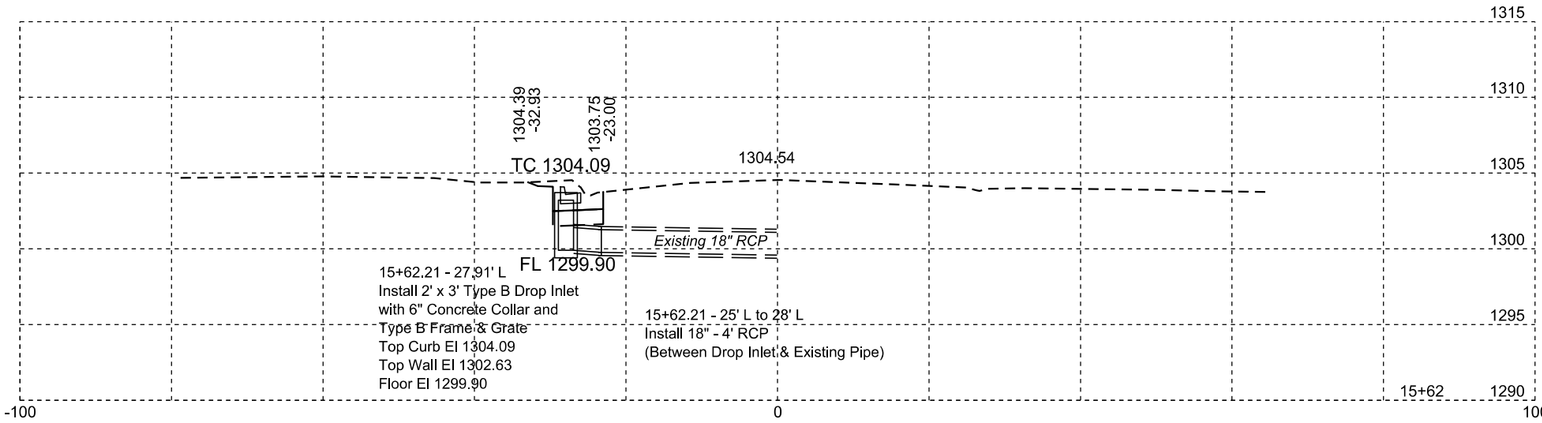

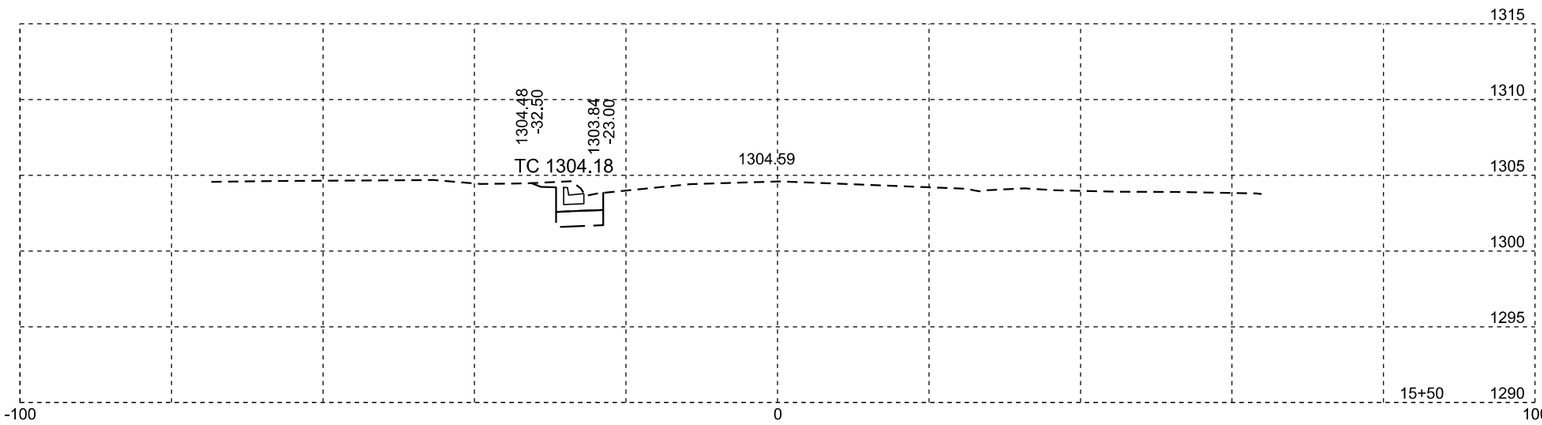

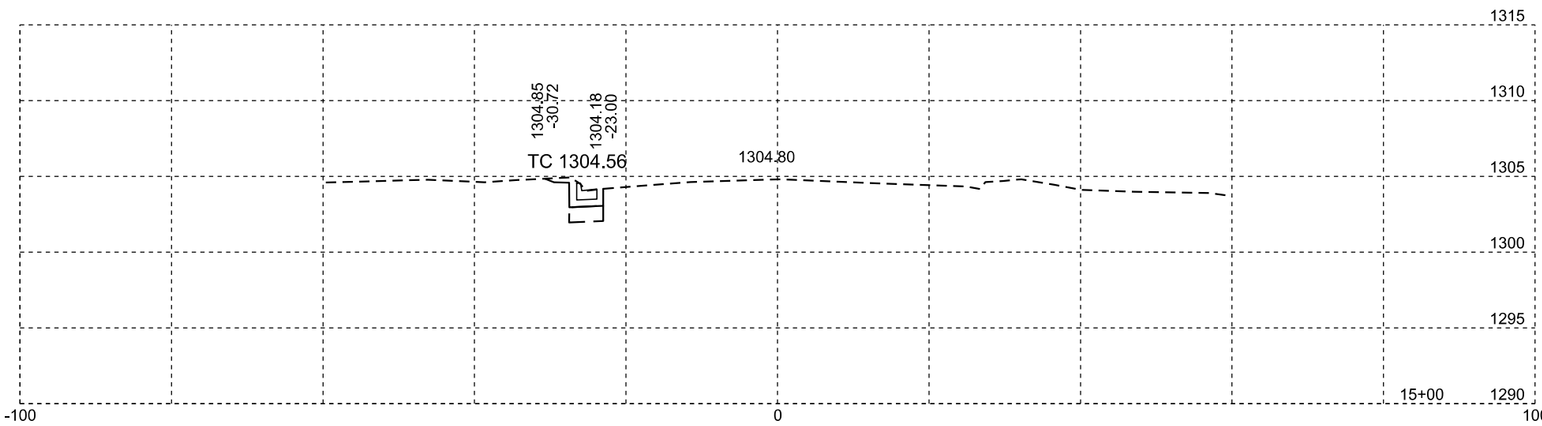

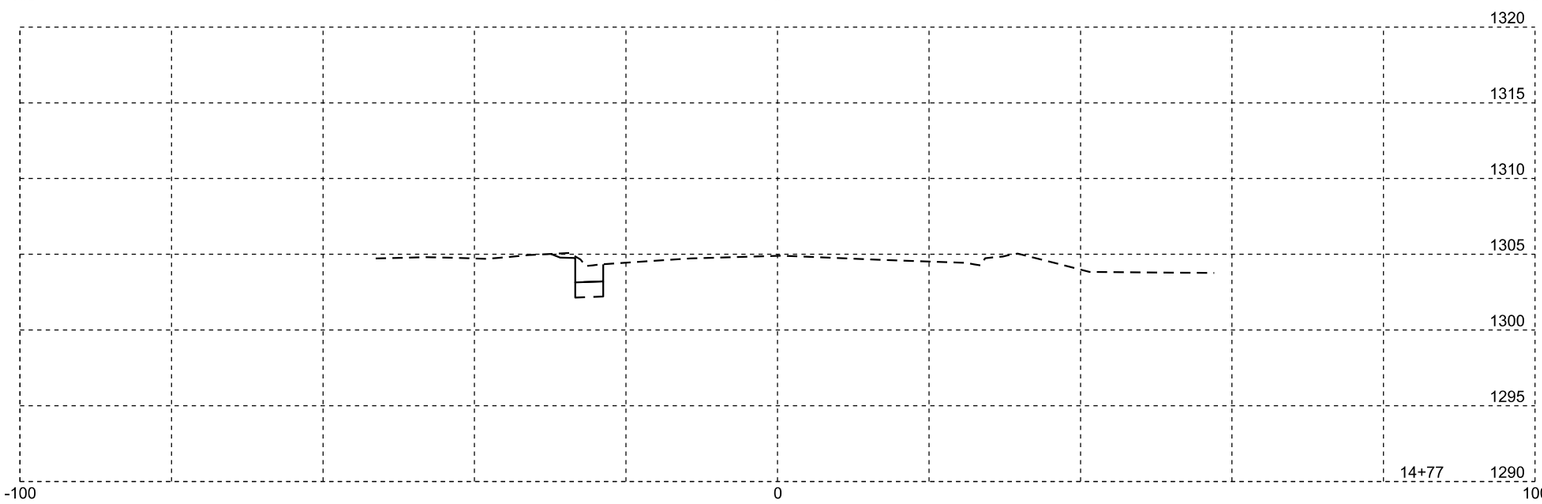

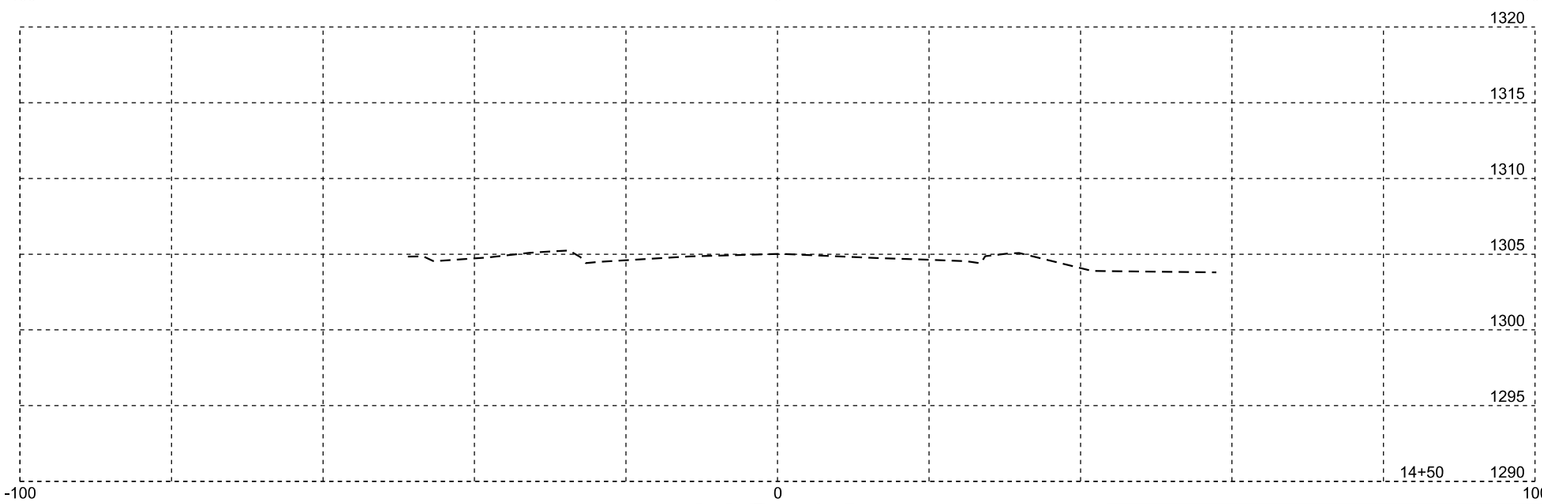

US 12

Plotting Date: 04/12/2016

STATE OF SOUTH DAKOTA	PROJECT	SHEET NO.	TOTAL SHEETS
	P 0037(129)207 NH 0012(198)308	X50	X50