STATE OF SOUTH DAKOTA	PROJECT	SHEET	TOTAL SHEETS
	P 0037(129)207 NH 0012(198)308	Z1	Z3

Plotting Date: 06/01/2016

Section Z: Pipe Sections

INDEX OF SHEETS

Z1 General Layout W/Index
Z2 Mainline Pipe Sections
Z3 Approach Pipe Sections

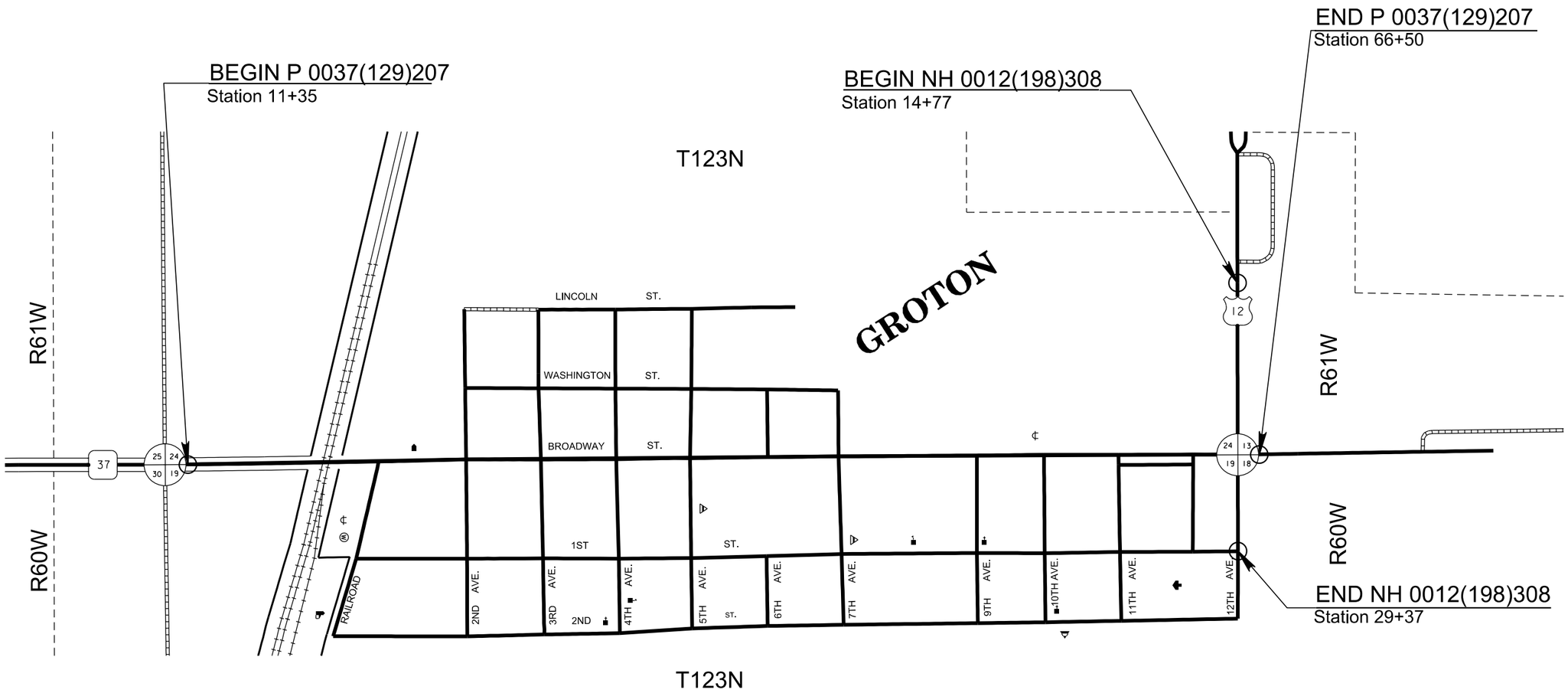

Plot Scale - 1:200

Plotted From - trpr13287

File - U:\rdprj\brwn039K\titleZ.dgn

Plotting Date: 06/01/2016

STATE OF SOUTH DAKOTA	PROJECT	SHEET NO.	TOTAL SHEETS
	P 0037(129)207 NH 0012(198)308	Z2	Z3

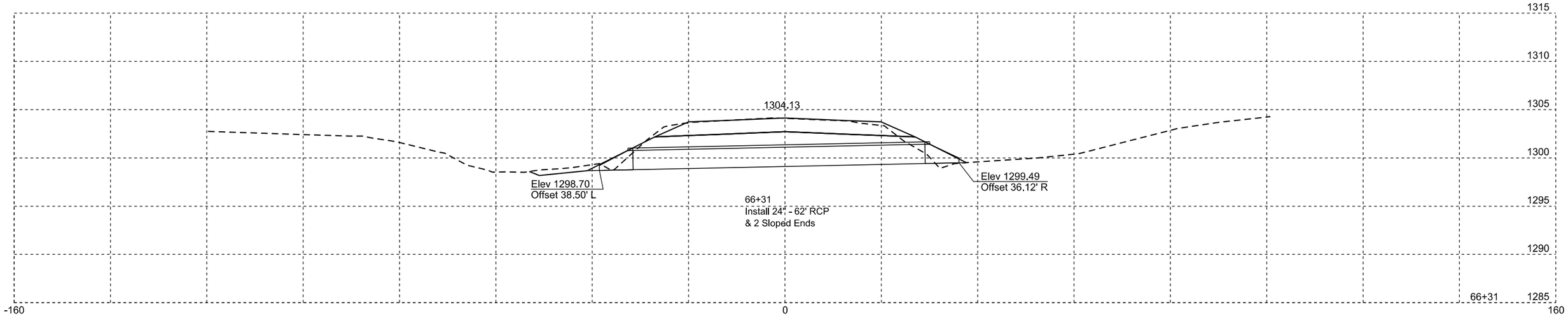

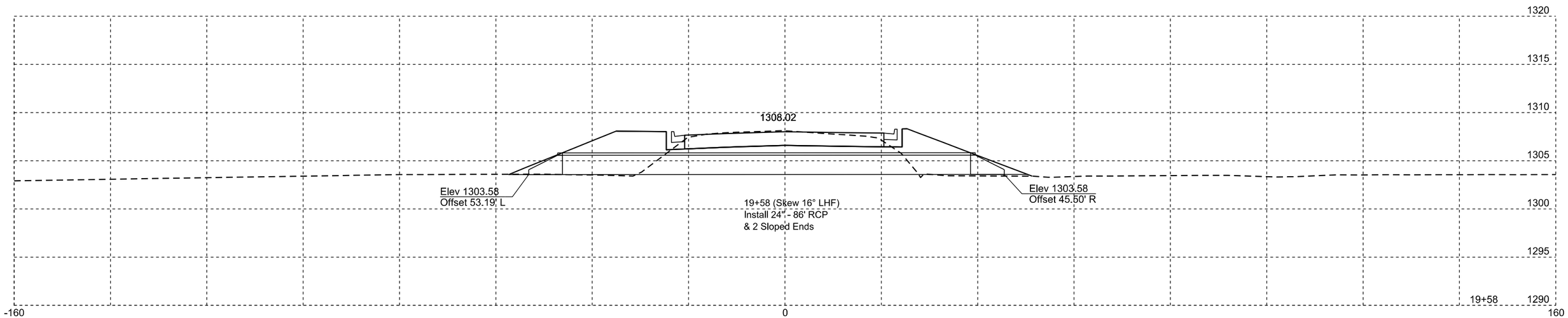

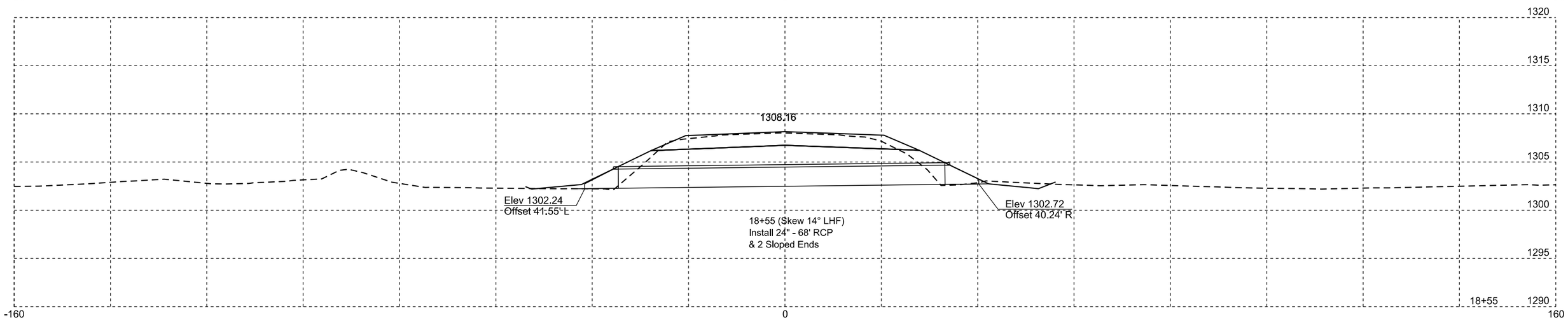

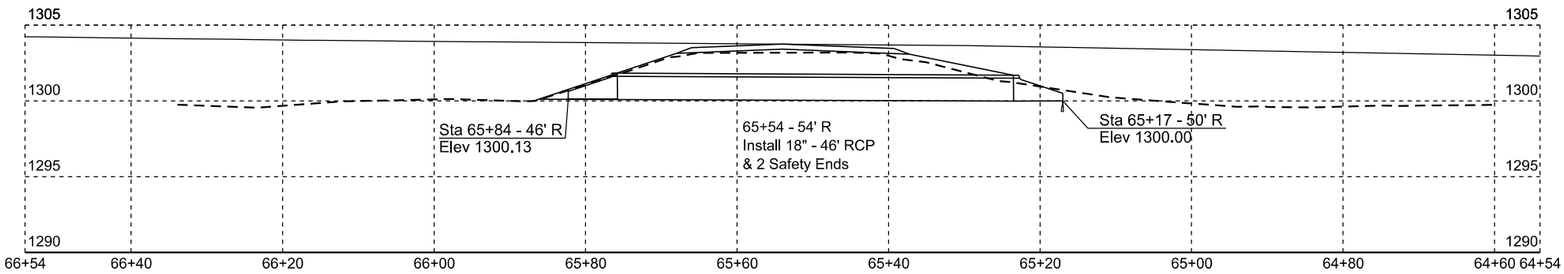

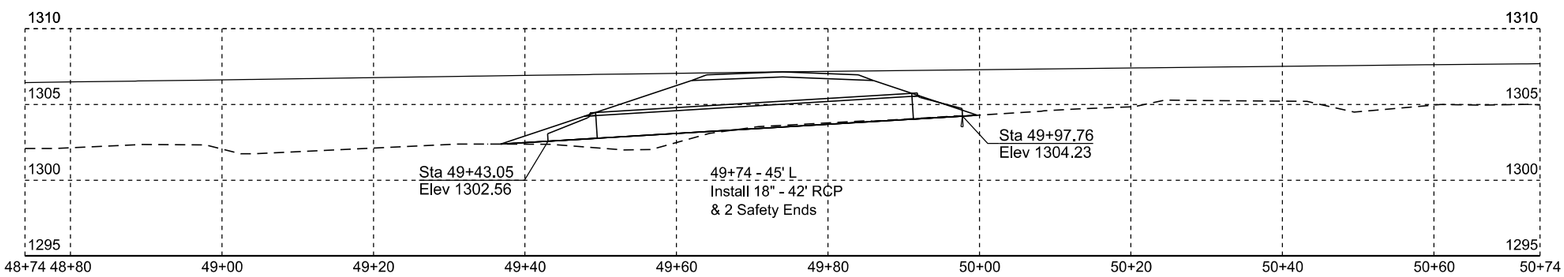

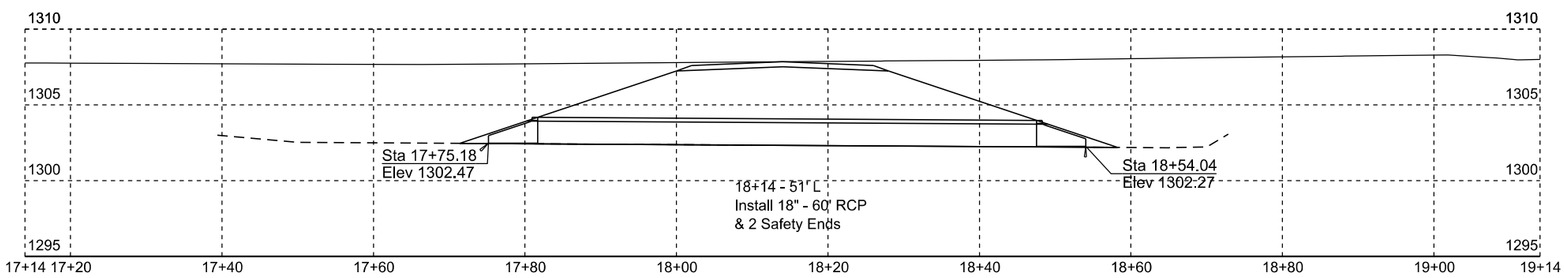

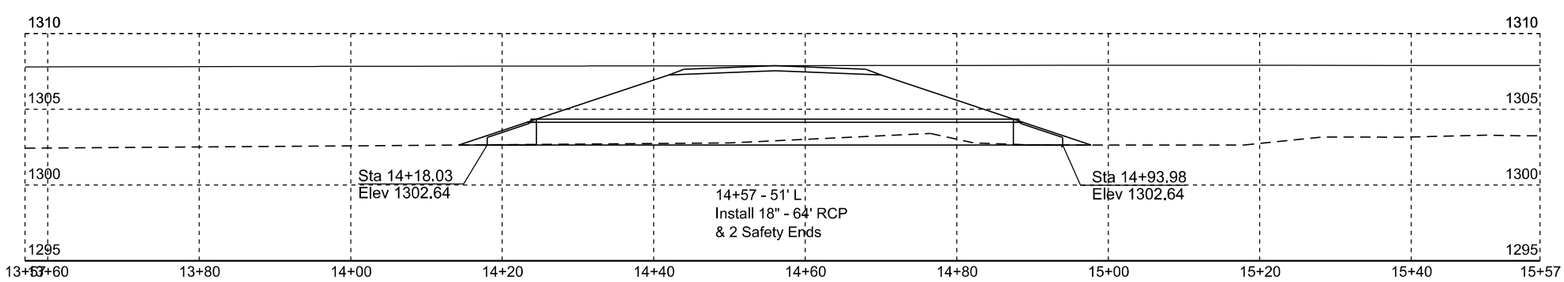

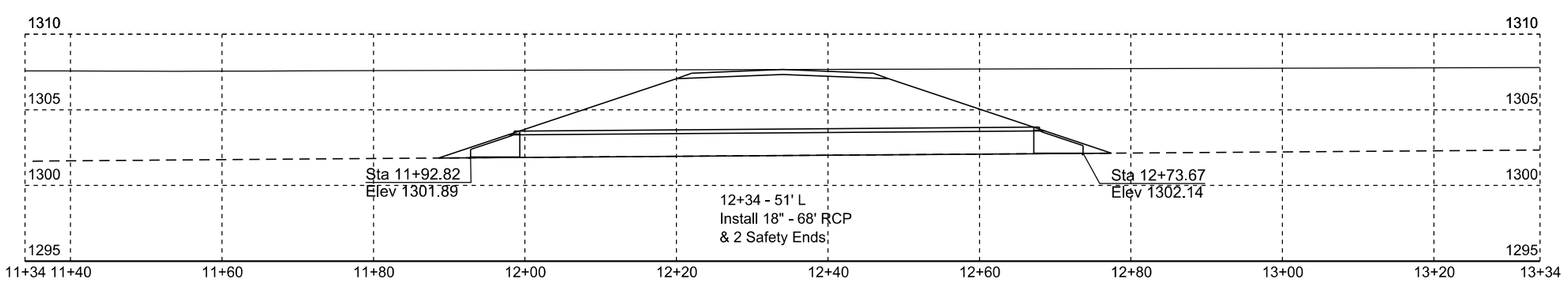

Plotting Date: 06/01/2016

STATE OF SOUTH DAKOTA	PROJECT	SHEET NO.	TOTAL SHEETS
	P 0037(129)207 NH 0012(198)308	Z3	Z3