Section E: Structure Plans

INDEX OF SHEETS -

Sheet E1	Layout Map and Index
Sheet E2	Estimate of Structure Quantities
Sheet E3 to E9	2 - 11' x 10' Box Culvert
Sheet E10 to E16	Site 1 Alt. A : 2 - 10' x 10' Box Culvert (C.I.P.)
Sheet E17 to E20	Site 1 Alt. B : 2 - 11' x 10' Box Culvert (Precast)

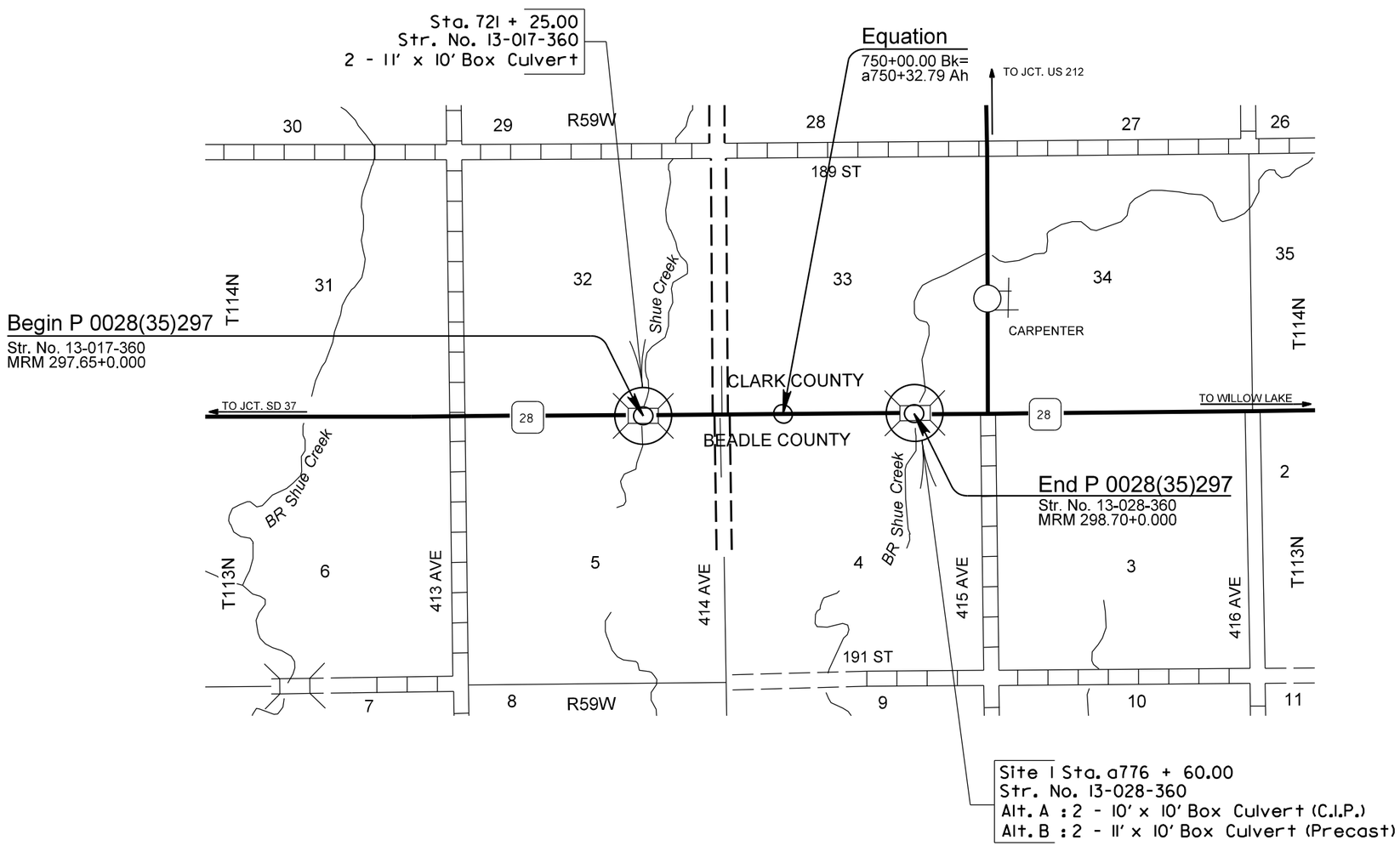

SECTION E - ESTIMATE OF QUANTITIES

BID ITEM NUMBER	ITEM	QUANTITY	UNIT
250E0030	Incidental Work, Structure	Lump Sum	LS

Str. No. 13-017-360
2 - 11' x 10' Box Culvert
Sta. 721 + 25.00

BID ITEM NUMBER	ITEM	QUANTITY	UNIT
420E0200	Structure Excavation, Box Culvert	95	CuYd
421E0200	Box Culvert Undercut	564	CuYd
460E0120	Class A45 Concrete, Box Culvert	251.4	CuYd
480E0100	Reinforcing Steel	33,637	Lb
700E0210	Class B Riprap	253.2	Ton
831E0110	Type B Drainage Fabric	263	SqYd
831E0300	Reinforcement Fabric (MSE)	526	SqYd

Site 1
Alternate A
Str. No. 13-028-360
2 - 10' x 10' Box Culvert (C.I.P.)
Sta. a776 + 60.00

BID ITEM NUMBER	ITEM	QUANTITY	UNIT
420E0200	Structure Excavation, Box Culvert	107	CuYd
421E0200	Box Culvert Undercut	613	CuYd
460E0120	Class A45 Concrete, Box Culvert	283.1	CuYd
480E0100	Reinforcing Steel	40,404	Lb
700E0210	Class B Riprap	177.2	Ton
831E0110	Type B Drainage Fabric	215	SqYd
831E0300	Reinforcement Fabric (MSE)	572	SqYd

Site 1
Alternate B
Str. No. 13-028-360
2 - 11' x 10' Box Culvert (Precast)
Sta. a776 + 60.00

BID ITEM NUMBER	ITEM	QUANTITY	UNIT
420E0200	Structure Excavation, Box Culvert	101	CuYd
421E0200	Box Culvert Undercut	614	CuYd
560E2148	2-11'x10' Precast Concrete Box Culvert, Furnish	104.0	Ft
560E2149	2-11'x10' Precast Concrete Box Culvert, Install	104.0	Ft
560E3148	2-11'x10' Precast Concrete Box Culvert End Section, Furnish	2	Each
560E3149	2-11'x10' Precast Concrete Box Culvert End Section, Install	2	Each
700E0210	Class B Riprap	59.6	Ton
831E0110	Type B Drainage Fabric	76	SqYd
831E0300	Reinforcement Fabric (MSE)	582	SqYd

INCIDENTAL WORK, STRUCTURE

1. *Str. No. 13-017-360. In place centerline Sta. 721 + 25 is a 2 - 10' x 9' cast in place reinforced concrete box culvert.*

   Str. No. 13-028-360. In place centerline Sta. d 776 + 70 is a 2 - 10' x 10' cast in place reinforced concrete box culvert.

2. *Break down and remove the existing structures 1 foot below finished ground or as required to construct the new structures in accordance with Section 110 of the Specifications All portions of the existing structures shall be removed and disposed of by the Contractor on a site obtained by the Contractor and approved by the Engineer in accordance with COMMITMENT H: WASTE DISPOSAL SITE found in SECTION A.*

3. *During demolition of structures, efforts shall be taken to prevent material from falling into the creek. Under no circumstances is asphalt allowed to fall into the creek.*

4. *The foregoing is a general description of the in-place structures and should not be construed to be complete in all details. Before preparing the bid it shall be the responsibility of the Contractor to make a visual inspection of the structures to verify the extent of the work and materials involved. If desired by the Contractor, a copy of the original construction plans may be obtained through the Office of Bridge Design.*

The elevations shown in these plans are based on the National Geodetic Survey (NGS) North American Vertical Datum of 1988 (NAVD88).

STATE OF	PROJECT	SHEET NO.	TOTAL SHEETS
S.D.	P 0028(35)297	E3	E20

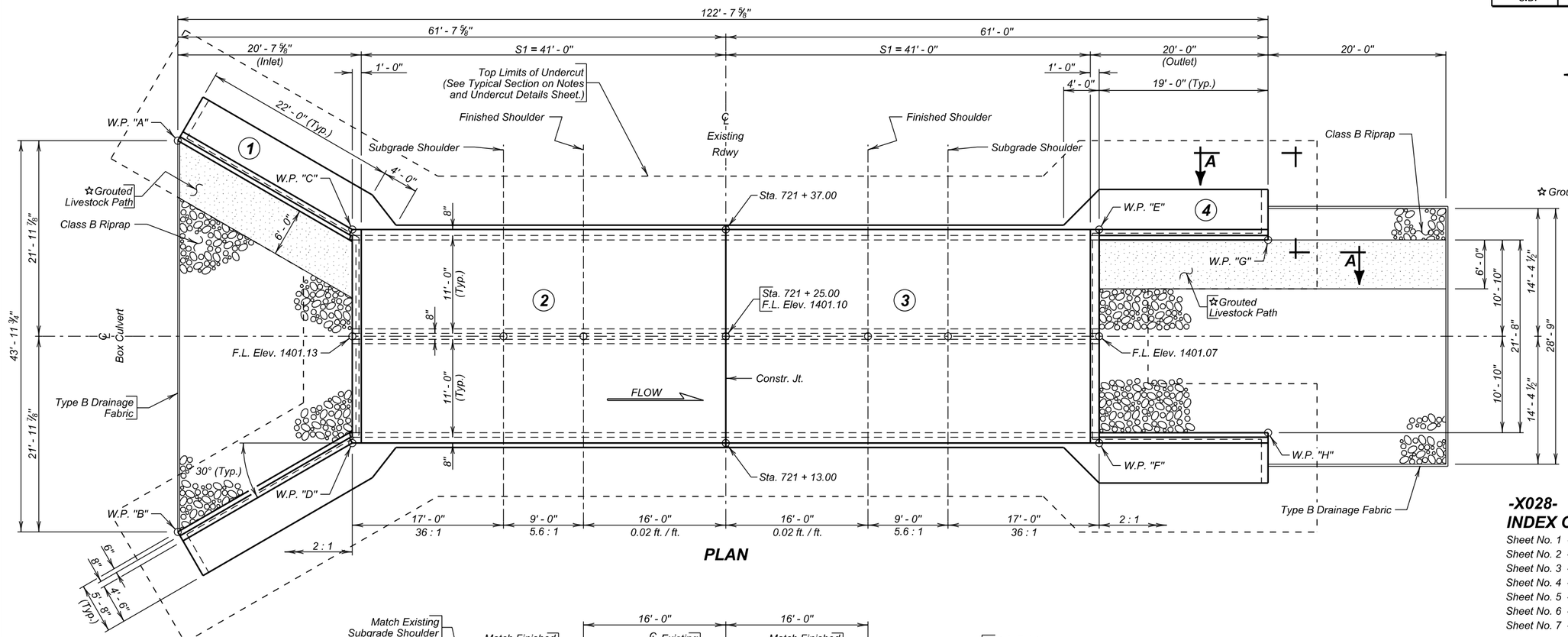

PLAN

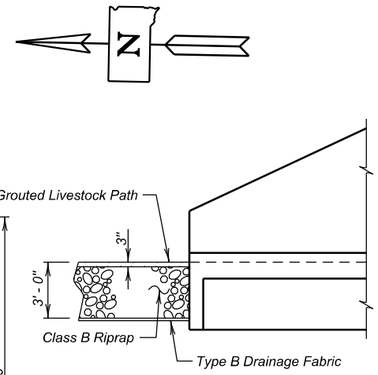

VIEW A - A

(Similar at Inlet)

-X028-
INDEX OF CULVERT SHEETS-

Sheet No. 1 - General Drawing and Quantities
Sheet No. 2 - Notes and Undercut Details
Sheet No. 3 - Standard S1 Inlet Details
Sheet No. 4 - Standard S1 Outlet Details
Sheet No. 5 - Standard S1 Barrel End Section Details
Sheet No. 6 - Standard Plates 460.02 and 460.10
Sheet No. 7 - Standard Plate 620.16

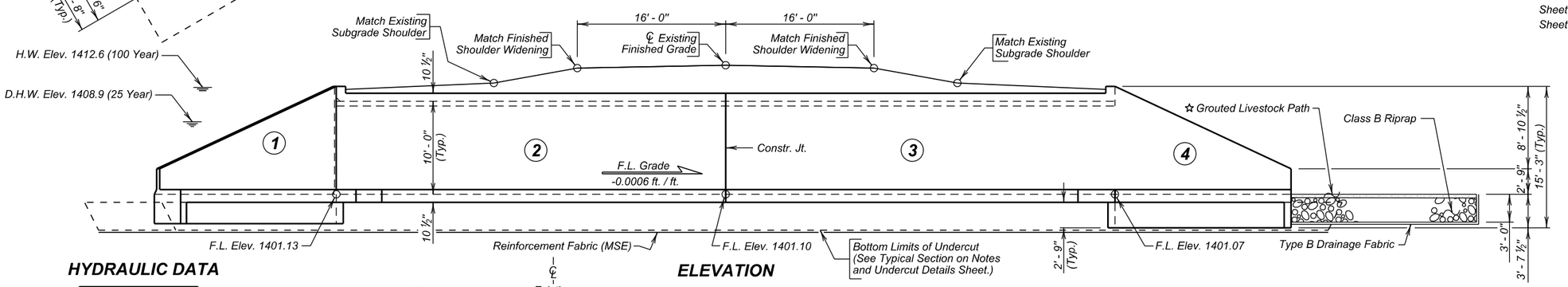

ELEVATION

NOTE:
Box Culvert flowline has been depressed 1' - 0" below channel flowline to accommodate aquatic organisms. The 1' - 0" depression will be allowed to fill in naturally over time.

✳ Topeka Shiner Stream

HYDRAULIC DATA

Q_d	999 cfs
A_d	104 sq ft
V_d	9.6 fps
Q_F	999 cfs
Q_{100}	2005 cfs
Q_{OT}	$>Q_{100}$ cfs
V_{max}	14.3 fps

Q_d = Design discharge for the proposed culvert based on 25 year frequency. El. 1408.9.

Q_{OT} = Overtopping discharge and frequency $>Q_{100}$ year recurrence interval. El. 1414.9. Location Sta. 722 + 21.00.

Q_F = Designated peak discharge for the basin approaching proposed project based on 25 year frequency.

Q_{100} = Computed discharge for the basin approaching proposed project based on 100 year frequency. El. 1412.6.

V_{max} = Maximum computed outlet velocity for the proposed culvert, based on 100 year frequency.

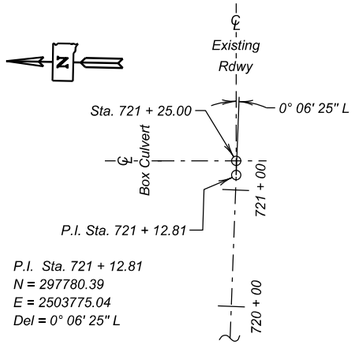

P.I. Sta. 721 + 12.81
N = 297780.39
E = 2503775.04
Del = 0° 06' 25" L

HORIZONTAL ALIGNMENT DATA

ESTIMATED QUANTITIES

	ITEM	UNIT	QUANTITY
	Class A45 Concrete, Box Culvert	Cu. Yd.	251.4
	Reinforcing Steel	Lb.	33637
	Structure Excavation, Box Culvert	Cu. Yd.	95.4
	Box Culvert Undercut	Cu. Yd.	564
☆ ≠	Class B Riprap	Ton	253.2
	Type B Drainage Fabric	Sq. Yd.	263
	Reinforcement Fabric (MSE)	Sq. Yd.	526

≠ For estimating purposes only, a factor of 1.4 tons/cu. yd. was used to convert Cu. Yd. to Tons.

☆ All costs involved with grouting over riprap shall be incidental to the contract unit price per ton for Class B Riprap.

TABLE OF WORKING POINTS

W. P.	STATION	OFFSET
"A"	721 + 46.99	61.64' Lt.
"B"	721 + 02.90	61.62' Lt.
"C"	721 + 37.00	42.00' Lt.
"D"	721 + 13.00	42.00' Lt.
"E"	721 + 37.00	42.00' Rt.
"F"	721 + 13.00	42.00' Rt.
"G"	721 + 35.83	61.00' Rt.
"H"	721 + 14.17	61.00' Rt.

PLANS BY :
OFFICE OF BRIDGE DESIGN, SOUTH DAKOTA DEPARTMENT OF TRANSPORTATION

GENERAL DRAWING AND QUANTITIES

FOR

2 - 11' X 10' BOX CULVERT

✳ OVER TRIB. TO SHUE CREEK — 0° SKEW
STA. 721 + 25.00 — SEC. 32/5-T114/113N-R59W
STR. NO. 13-017-360 — P 0028(35)297
PCN 03A2 — HL-93

BEADLE / CLARK COUNTY
S. D. DEPT. OF TRANSPORTATION
JULY 2015

1 OF 7

-X028-

DESIGNED BY	CK. DES. BY	DRAFTED BY	
PW	JMH	GW	Kevin N. Cooden
CLRK03A2	03A2GA01		BRIDGE ENGINEER

STATE OF	PROJECT	SHEET NO.	TOTAL SHEETS
S.D.	P 0028(35)297	E4	E20

SPECIFICATIONS

1. Design Specifications: AASHTO LRFD Bridge Design Specifications, 2014 Edition with 2015 interims.
2. Construction Specifications: South Dakota Standard Specifications for Roads and Bridges, 2015 Edition and required Provisions, Supplemental Specifications, and Special Provisions as included in the Proposal.

GENERAL NOTES

1. Design Live Load: HL-93 and construction load consisting of one 7' - 6" gage axle with gross weight = 95,850 lbs. The construction load shall not be applied until a minimum of 4 ft. of fill has been placed over the Box Culvert. Other construction loads in excess of legal load must be submitted thru proper channels to the Office of Bridge Design for analysis.
2. The design of the barrel section is based on a minimum fill height of 2 feet and includes all subsequent fill heights up to and including the maximum fill height of 5 ft. (S1).
3. Design Material Strengths: Concrete f'c = 4500 p.s.i.
   Reinforcing Steel fy = 60000 p.s.i.
4. High sulfate levels are likely to be encountered on this project. All concrete shall be Class A45 conforming to Section 460, with the following modifications: the type of cement shall be either a Type V or a Type II with 20% Class F Modified Fly Ash substituted for cement in accordance with Section 605.
5. All reinforcing steel shall conform to ASTM A615 Grade 60.
6. All exposed edges shall be chamfered ¾ inch.
7. Use 1 inch clear cover on all reinforcing steel EXCEPT as shown.
8. The Contractor shall imprint on the structure the date of construction as specified and detailed on Standard Plate No. 460.02.
9. Care shall be taken to establish Working Points (W.P.) as shown on the wings.
10. Circled numbers in PLAN and ELEVATION views on the General Drawing are section I.D. Numbers (see SDDOT Materials Manual).
11. Compaction of earth embankment and box culvert backfill material shall be governed by the Specified Density method.
12. Dimension "L" on the standard box culvert sheet(s) is the barrel section length shown in the PLAN view on the General Drawing (for each S1, S2 etc. barrel section, as applicable).
13. A layer of Reinforcement Fabric (MSE) shall be placed at the bottom of the undercut prior to backfilling with granular material.
14. The subsurface soils below the existing flow line consist of about 3.5 feet of brown sandy silt-clay overlying loose silt-sand to coarse sand and gravel to 9 feet below the existing flow line. Classification results of soil samples collected from below flow line during the subsurface investigation were sand-clay to gravel silt-sand.
15. It is anticipated that dewatering will be required to construct the box culvert. The Contractor will be responsible to verify groundwater location prior to construction and provide necessary means of dewatering the construction site and prevention of the inflow of additional water. The use of well points may be required in dewatering the site for construction.

GEOTEXTILE SPECIFICATION

1. The geotextile will conform to specification for Geotextiles and Impermeable Plastic Membrane, Reinforcement Fabric (MSE) (Section 831 of the Standard Specifications). The geotextile will be on the Approved Products List for this material or will be certified by the supplier to meet this specification prior to installation.
2. Geotextile will be paid for at the contract unit price per sq. yd. for Reinforcement Fabric (MSE). Payment will be full compensation for furnishing and installing the fabric only. Granular backfill materials will be incidental to the contract unit price per cubic yard for Box Culvert Undercut.

INSTALLATION PROCEDURE - GEOTEXTILE

1. Place the Reinforcement Fabric (MSE) on as level and smooth of surface as possible.
2. Any protrusions that might damage the geotextile will be removed prior to placing the geotextile.
3. The geotextile can be rolled out parallel to the centerline of the box culvert.
4. All seams in the geotextile will be stitched in accordance with the seaming procedure notes and as shown on the details labeled "Seam Types".
5. No equipment is to be allowed on the geotextile until the granular material is in place.
6. The geotextile should be kept as taut as possible prior to backfilling.
7. Granular material will be dumped at least 20' behind the leading edge of the fill and pushed into place with a loader or dozer.

SEAMING PROCEDURE

1. The sewn seams shall consist of two parallel rows of stitching ("prayer" seam, TypeSSa-2), or shall consist of a J-seam, (Type SSn-1), using a single row of stitching. The stitching shall be lock type stitch.
2. If the SSa-2 seam is used, the two rows of stitching shall be 1" apart with a tolerance of plus or minus ½" and shall not cross, except for restitching. The minimum seam allowance, i.e., the minimum distance from the geotextile edge to the stitch line nearest to that edge, shall be 1 ½".
3. If the J-seam, Type SSn-1, is used, the minimum seam allowance shall be 1".
4. The seam, stitch type, and the equipment used to perform the stitching shall be as recommended by the manufacturer of the geotextile and approved by the Engineer.
5. The seams shall be sewn in such a manner that the seam can be readily inspected by the Engineer.
6. Thread used shall be high strength polypropylene, polyester, or Kevlar thread. Nylon threads will not be allowed.

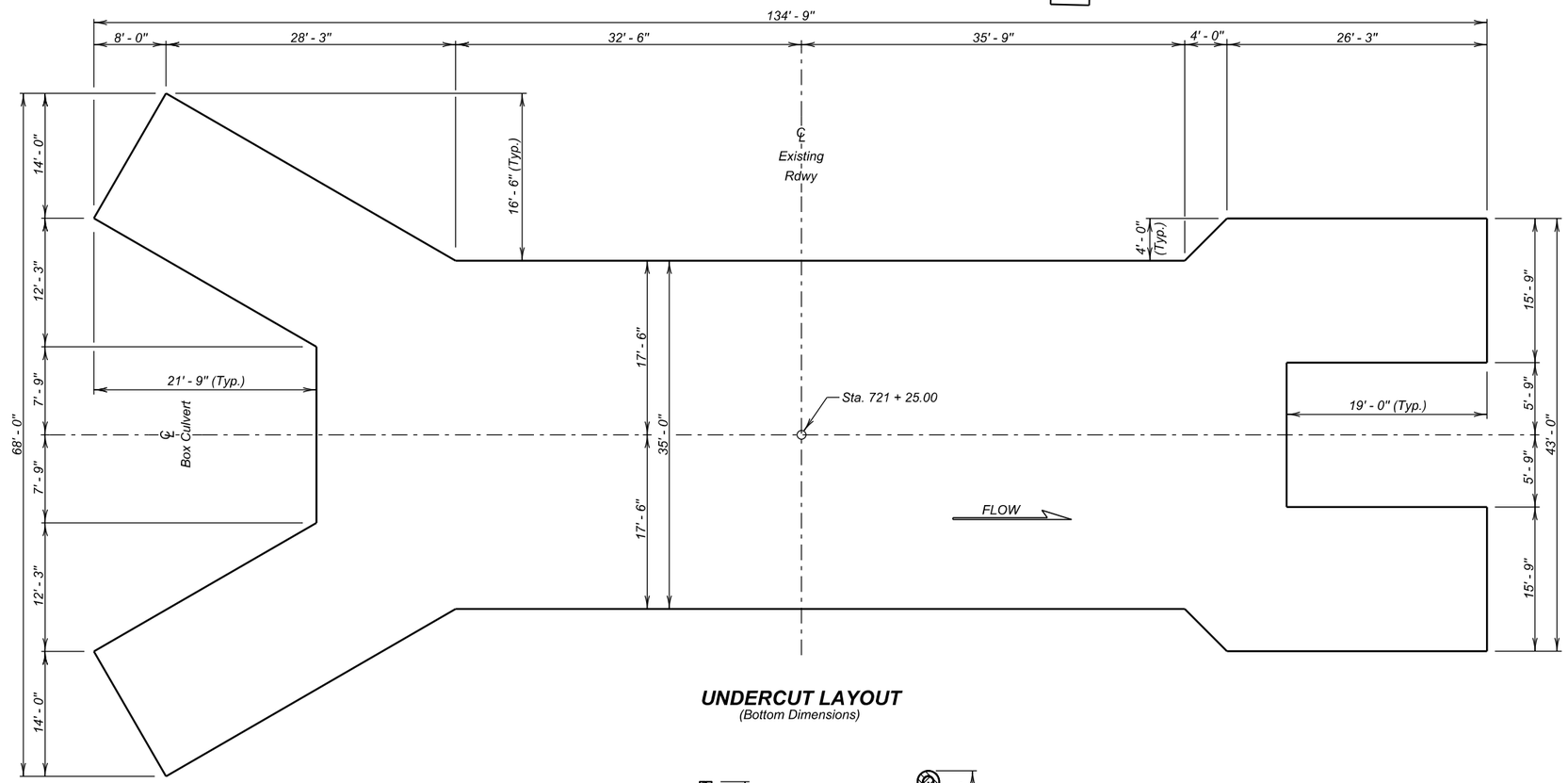

UNDERCUT LAYOUT
(Bottom Dimensions)

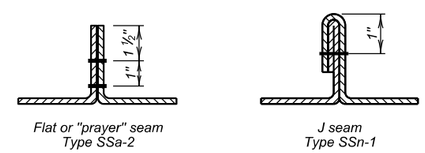

GEOTEXTILE SEAM TYPES

ESTIMATED QUANTITIES		
ITEM	UNIT	QUANTITY
① Box Culvert Undercut	Cu. Yd.	564
Reinforcement Fabric (MSE)	Sq. Yd.	526

① For payment, quantity is based on plan shown undercut dimensions and will not be measured unless the Engineer orders a change.

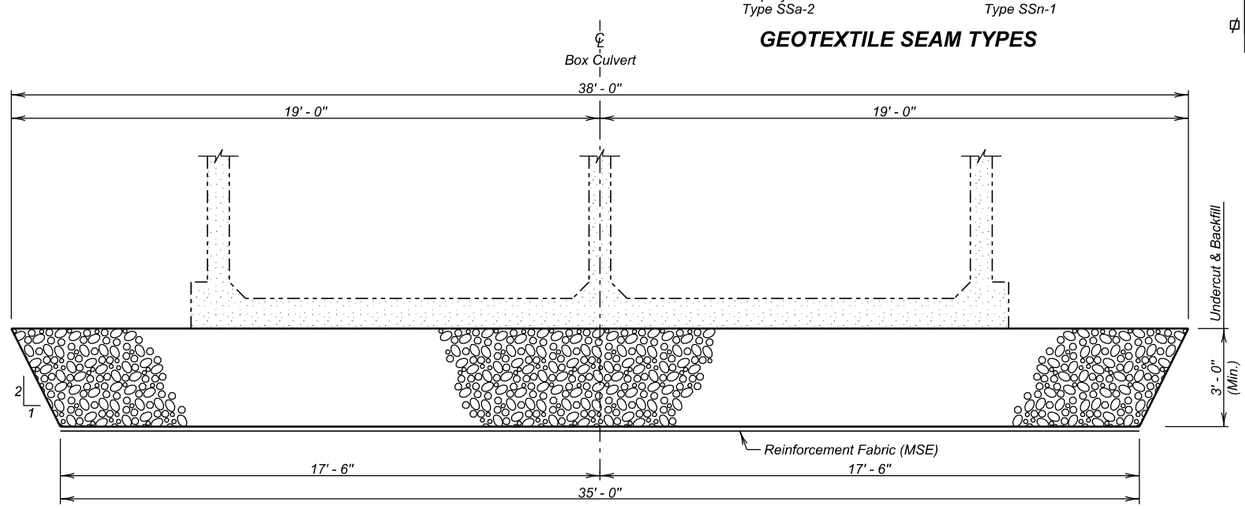

TYPICAL SECTION
(For Limits of Undercut)

NOTES AND UNDERCUT DETAILS

FOR

2 - 11' X 10' BOX CULVERT

OVER TRIB. TO SHUE CREEK — 0° SKEW
STA. 721 + 25.00 — SEC. 32/5-T114/113N-R59W
STR. NO. 13-017-360 — P 0028(35)297
HL-93

BEADLE / CLARK COUNTY

S. D. DEPT. OF TRANSPORTATION

JULY 2015

DESIGNED BY	CK. DES. BY	DRAFTED BY	
PW	JMH	GW	Kevin N. Boeden
CLRK03A2	03A2GA02		BRIDGE ENGINEER

STATE OF	PROJECT	SHEET NO.	TOTAL SHEETS
S.D.	P 0028(35)297	E5	E20

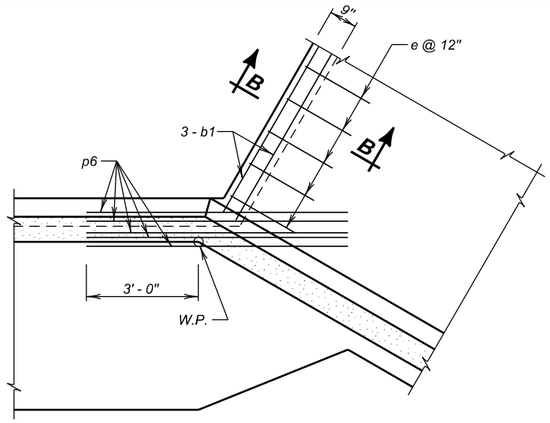

DETAIL "X"
(At Bottom Slab)

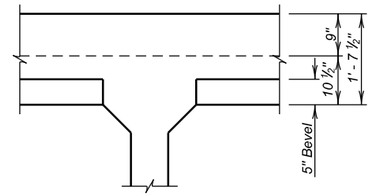

VIEW D - D
(At Interior Wall)

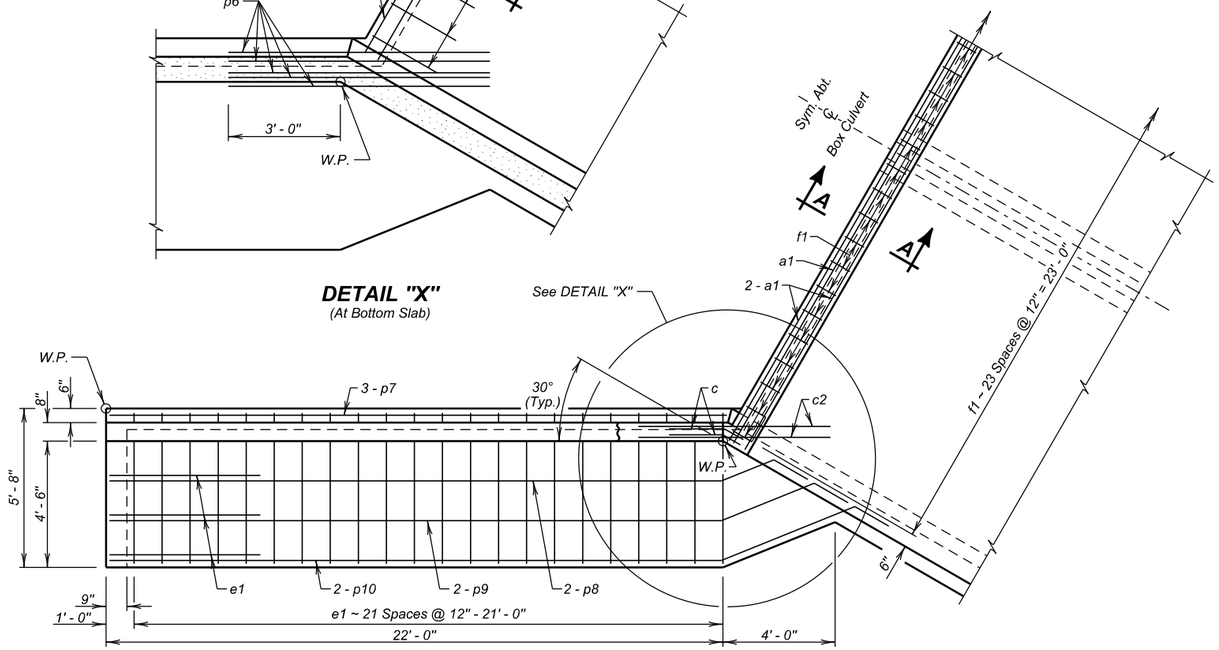

HALF PLAN

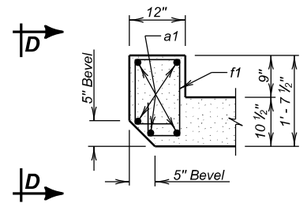

SEC. A - A
(At Top Slab)

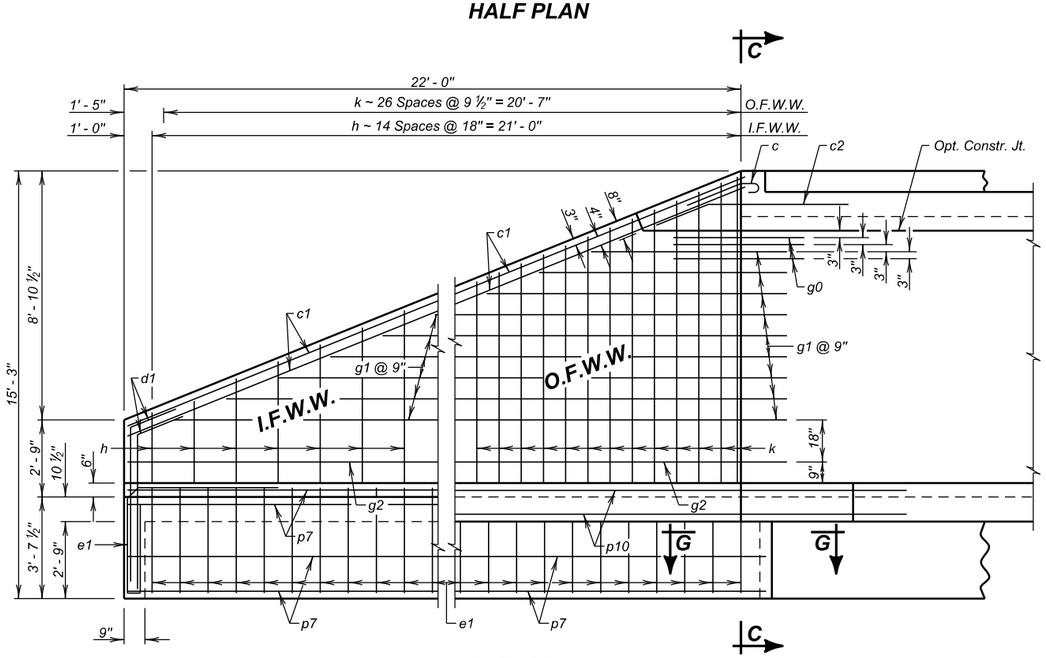

ELEVATION

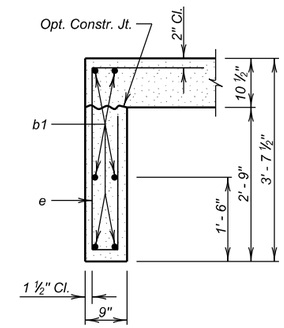

SEC. B - B

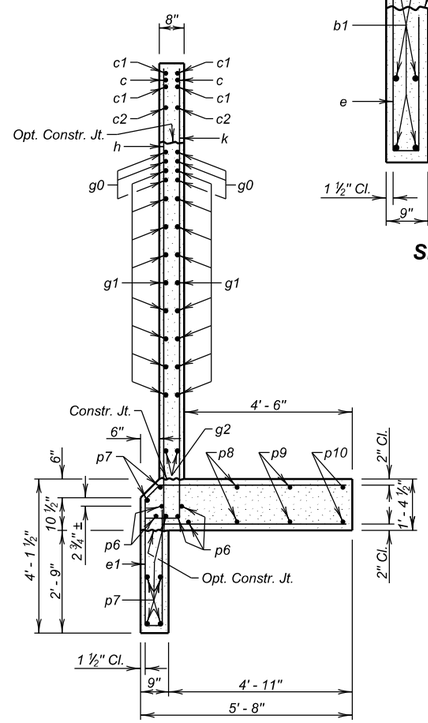

SEC. C - C

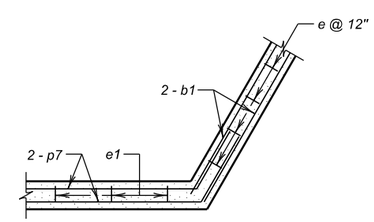

SEC. G - G

REINFORCING SCHEDULE

	Mk.	No.	Size	Length	Type
	a1	5	6	23' - 9"	Str.
	b1	6	6	22' - 0"	Str.
✳	c	4	5	4' - 6"	1A
	c1	8	5	23' - 9"	Str.
	c2	4	5	7' - 0"	19B
	d1	8	5	7' - 3"	19B
	e	22	4	8' - 9"	S12
	e1	50	4	12' - 9"	S12A
	f1	24	4	5' - 3"	S6A
	g0	12	5	5' - 0"	19B
⌀	g1	18	4	29' - 6"	19B
	g2	4	4	23' - 9"	19B
⌀	h	15	4	25' - 9"	17A
⌀	k	27	4	17' - 9"	17A
	p6	10	6	7' - 0"	Str.
✳	p7	14	4	24' - 6"	Str.
✳	p8	4	4	25' - 3"	Str.
✳	p9	4	4	27' - 0"	Str.
✳	p10	4	4	28' - 9"	Str.

Bending Details

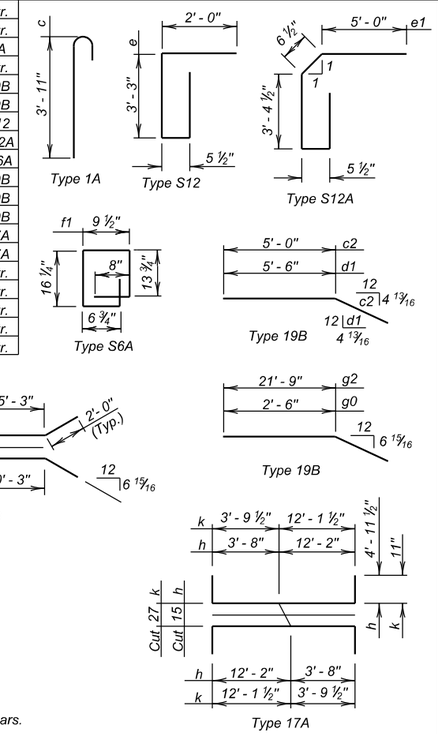

NOTES:
All dimensions are out to out of bars.
⌀ See cutting diagram.
✳ Bend in field as necessary to fit.

ESTIMATED QUANTITIES

ITEM	Class A45 Concrete, Box Culvert	Reinforcing Steel	Structure Excavation, Box Culvert
UNIT	Cu. Yd.	Lb.	Cu. Yd.
Inlet	29.6	2931	15.3

LEGEND FOR PLACING RE-STEEL

O. F. W. W. - Outside Face of Wing Wall
I. F. W. W. - Inside Face of Wing Wall

STANDARD S1 INLET DETAILS
FOR
2 - 11' X 10' BOX CULVERT

HL-93 0° SKEW

S. D. DEPT. OF TRANSPORTATION
JULY 2015

DESIGNED BY	CK. DES. BY	DRAFTED BY	
PW	JMH	GW	Kevin N. Boeden BRIDGE ENGINEER
CLRK03A2	03A2GA03		

STATE OF	PROJECT	SHEET NO.	TOTAL SHEETS
S.D.	P 0028(35)297	E6	E20

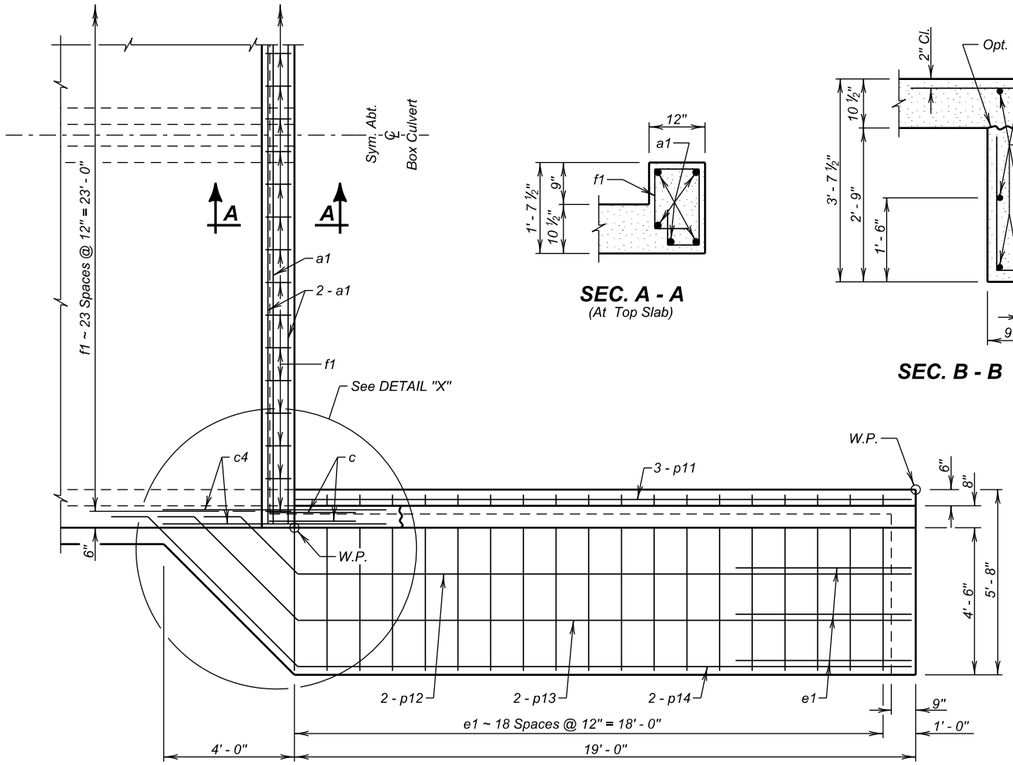

HALF PLAN

SEC. A - A
(At Top Slab)

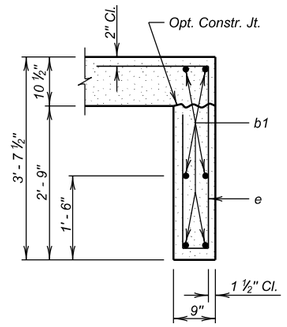

SEC. B - B

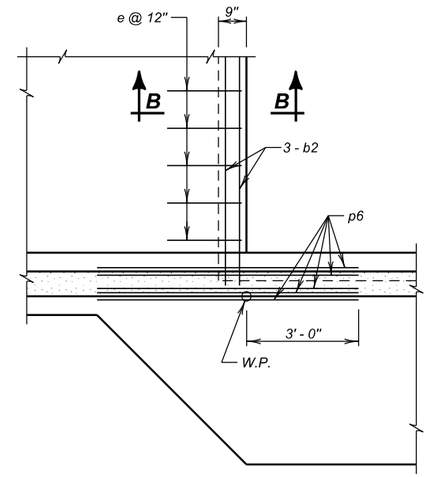

DETAIL "X"
(At Bottom Slab)

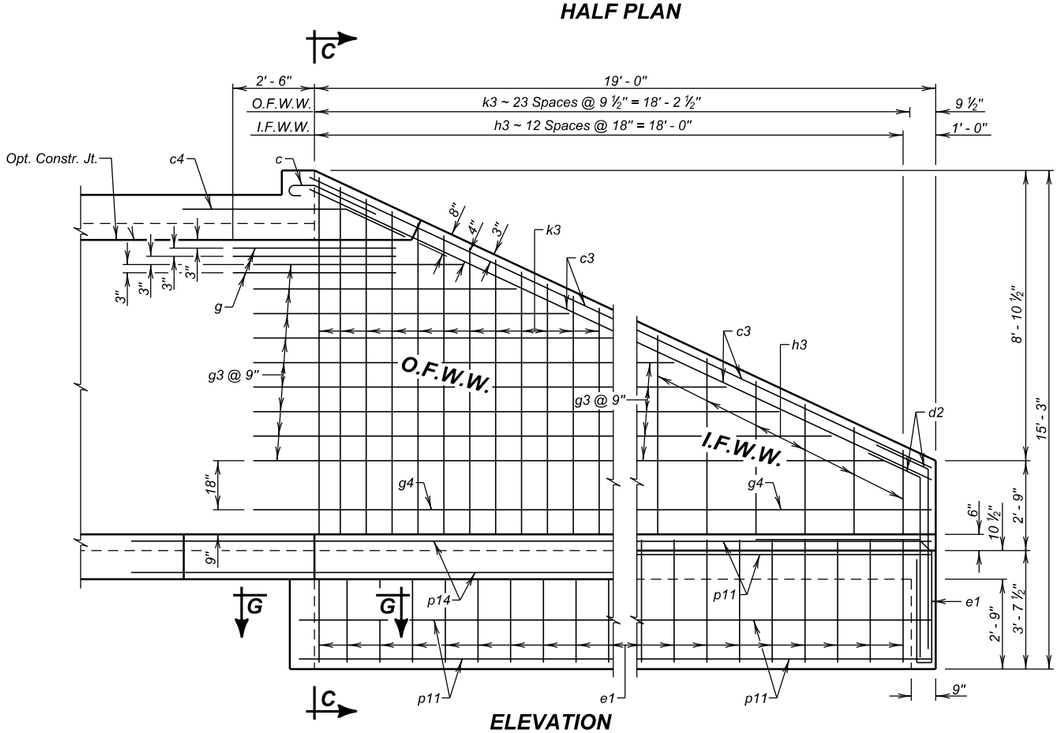

ELEVATION

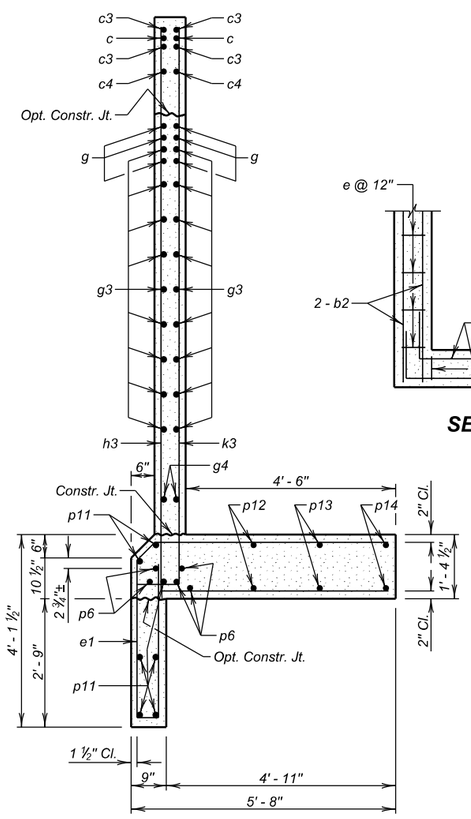

SEC. C - C

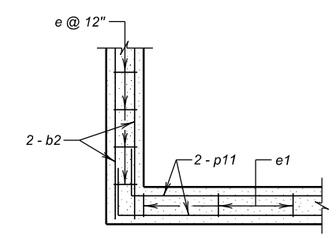

SEC. G - G

REINFORCING SCHEDULE

	Mk.	No.	Size	Length	Type	Bending Details
	a1	5	6	23' - 9"	Str.	
	b2	6	6	22' - 9"	Str.	
*	c	4	5	4' - 6"	1A	
	c3	8	5	21' - 0"	Str.	
	c4	4	5	7' - 0"	19B	
	d2	8	5	7' - 3"	19B	
	e	22	4	8' - 9"	S12	
	e1	44	4	12' - 9"	S12A	
	f1	24	4	5' - 3"	S6A	
	g	12	5	5' - 0"	Str.	
⌀	g3	18	4	26' - 0"	Str.	
	g4	4	4	20' - 9"	Str.	
⌀	h3	13	4	25' - 9"	17A	
⌀	k3	24	4	17' - 6"	17A	
	p6	10	6	7' - 0"	Str.	
*	p11	14	4	21' - 6"	Str.	
*	p12	4	4	22' - 6"	Str.	
*	p13	4	4	24' - 9"	Str.	
*	p14	4	4	26' - 9"	Str.	

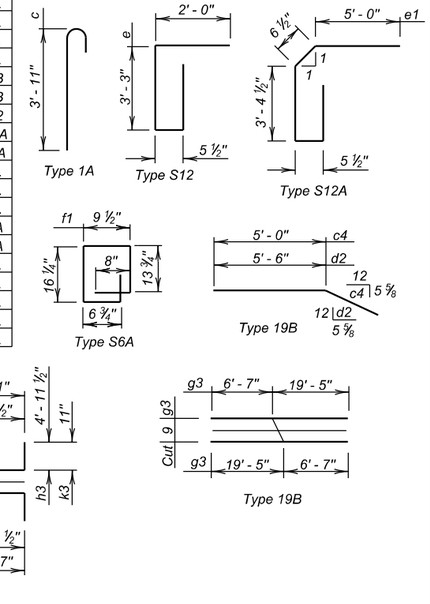

NOTES:
All dimensions are out to out of bars.
⌀ See cutting diagram.
* Bend in field as necessary to fit.

ESTIMATED QUANTITIES

ITEM	Class A45 Concrete, Box Culvert	Reinforcing Steel	Structure Excavation, Box Culvert
UNIT	Cu. Yd.	Lb.	Cu. Yd.
Outlet	26.3	2693	13.7

LEGEND FOR PLACING RE-STEEL

O. F. W. W. - Outside Face of Wing Wall
I. F. W. W. - Inside Face of Wing Wall

STANDARD S1 OUTLET DETAILS
FOR
2 - 11' X 10' BOX CULVERT

HL-93 0° SKEW

S. D. DEPT. OF TRANSPORTATION
JULY 2015

DESIGNED BY	CK. DES. BY	DRAFTED BY	
PW	JMH	GW	Kevin N. Goeden BRIDGE ENGINEER
CLRK03A2	03A2GA04		

STATE OF	PROJECT	SHEET NO.	TOTAL SHEETS
S.D.	P 0028(35)297	E7	E20

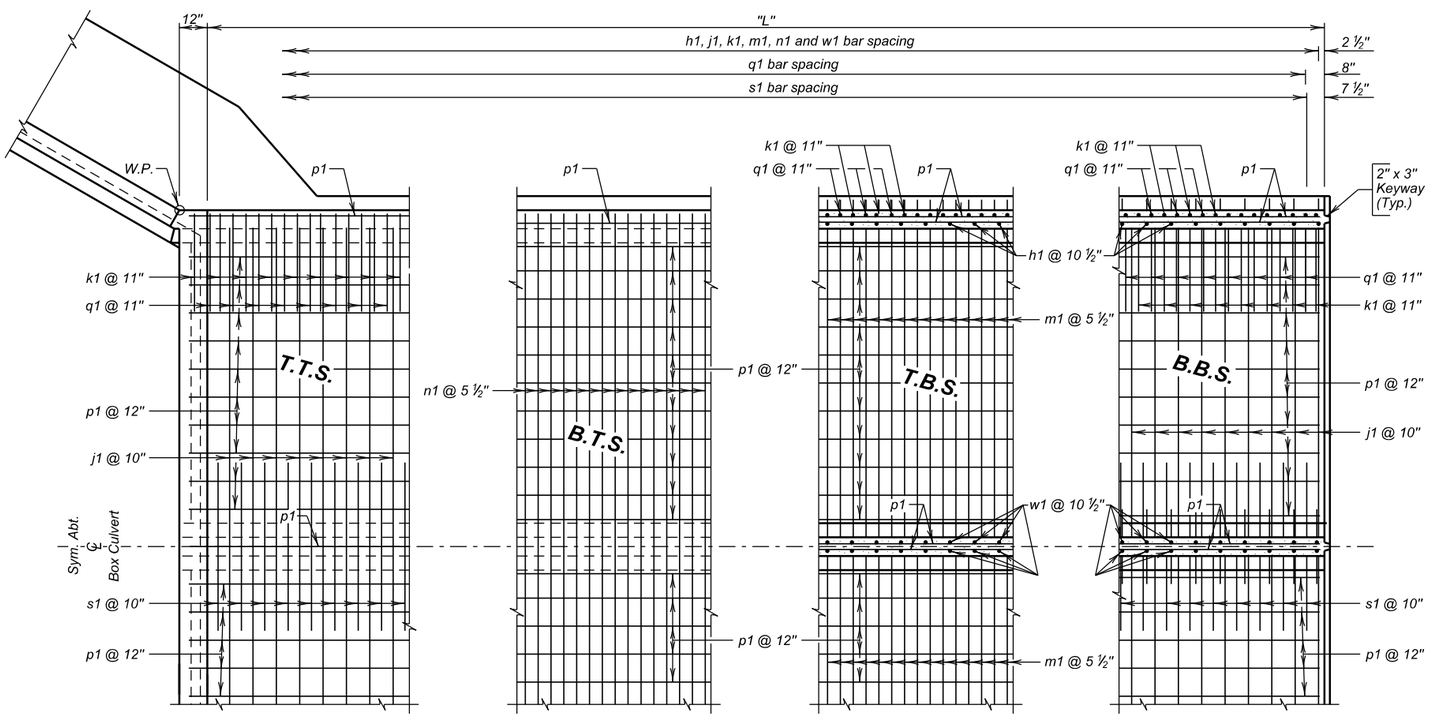

HALF PLAN

(Inlet shown, Outlet similar by rotation)

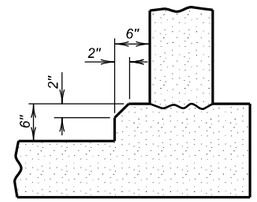

OPTIONAL FILLET DETAIL

(At Bottom Slab)

Note: Contractor may form the optional full fillet, with 2" Chamfer, as detailed. The cost of the additional concrete shall be borne by the Contractor.

OPTIONAL POUR - BOTTOM SLAB

The Bottom Slab may be poured continuously, at the option of the Contractor, with the use of a Preformed Metal keyway conforming to the keyway dimensions and location as shown on the plans. The keyway length shall be full width of the bottom slab. Care shall be taken to maintain proper alignment of the keyway during the pour sequence. All additional costs of this option shall be borne by the Contractor.

△ Place z1 bars thru construction joint between barrel sections as shown on Standard Plate No. 460.10.

REINFORCING SCHEDULE

(For One Standard S1 Barrel End Section)

Mk.	ϕ No.	Size	Length	Type
h1	2.29 (L+1)	4	12' - 3"	17A
j1	2.40 L	5	22' - 9"	Str.
k1	2.18 (L+1)	4	18' - 6"	17
m1	2.18 L	4	24' - 9"	Str.
n1	2.18 L	5	23' - 9"	Str.
p1	131	4	L + 6"	Str.
q1	4.36 (L+1)	4	7' - 0"	17A
s1	2.40 L	5	6' - 6"	Str.
w1	1.14 (L+1)	4	25' - 3"	S11A
△ z1	✳	6	3' - 6"	Str.

Bending Details

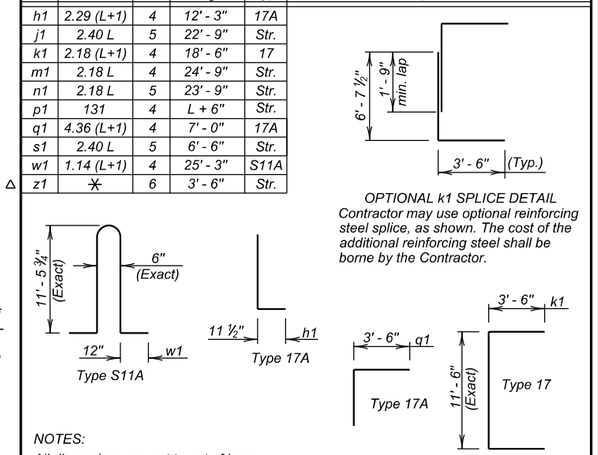

OPTIONAL k1 SPLICE DETAIL
Contractor may use optional reinforcing steel splice, as shown. The cost of the additional reinforcing steel shall be borne by the Contractor.

NOTES:

All dimensions are out to out of bars.

ϕ Round the number of bars up to the nearest whole number, except round h1, k1, j1, q1, and s1 up to the nearest even whole number.

Request for additional reinforcing steel splices at points other than those shown, must be submitted to the Engineer for prior approval. If additional splices are approved, no payment will be allowed for the added quantity of reinforcing steel.

✳ 62 z1 bars required at each construction joint.

ESTIMATED QUANTITIES

ITEM	Class A45 Concrete, Box Culvert	Reinforcing Steel	Structure Excavation, Box Culvert
UNIT	Cu.Yd.	Lb.	Cu.Yd.
1 - Standard S1 Barrel End Section	2.384 L	336.07L + 129.05	0.810 L
ϕ 1 - Construction Joint	——	325.93	——

ϕ See General Drawing for number of constructions joints required.

LEGEND FOR PLACING RE- STEEL

T.T.S.	- Top of Top Slab
B.T.S.	- Bottom of Top Slab
T.B.S.	- Top of Bottom Slab
B.B.S.	- Bottom of Bottom Slab
O.F.O.W.	- Outside Face of Outside Wall
I.F.O.W.	- Inside Face of Outside Wall
M.W.	- Middle Wall

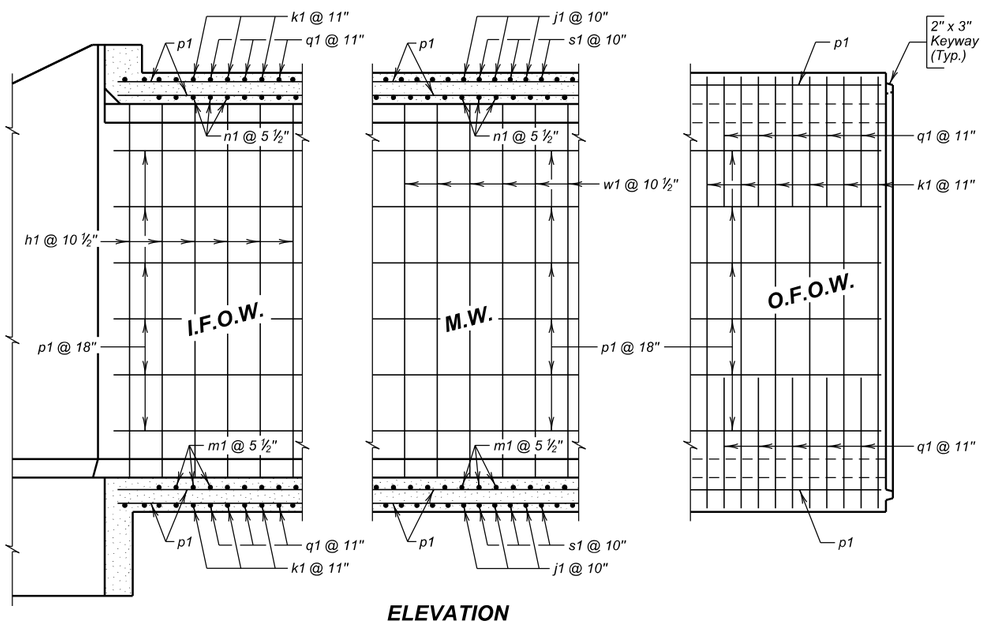

ELEVATION

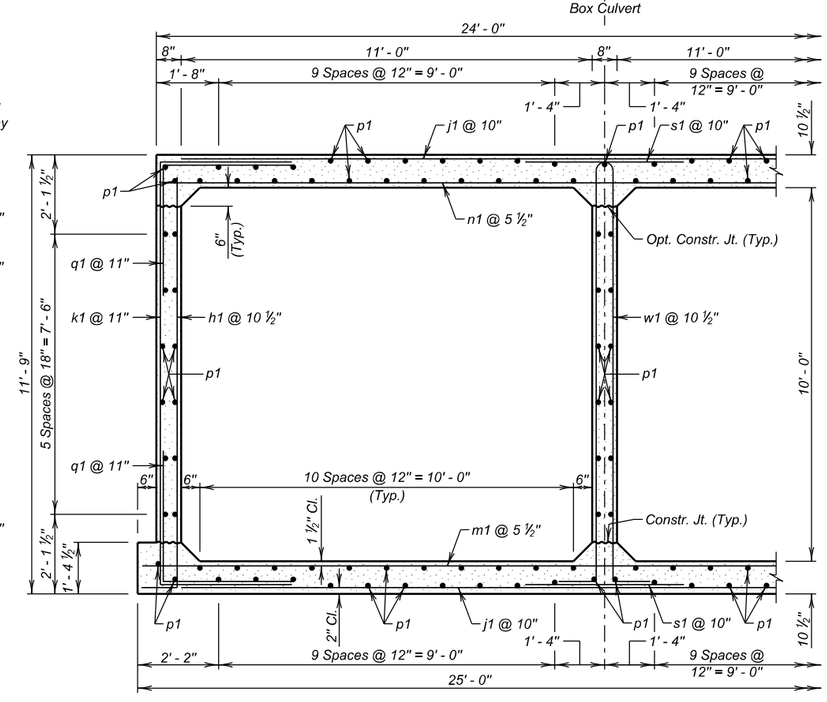

S1 BARREL HALF SECTION

(5' - 0" Maximum Fill)

STANDARD S1 BARREL END SECTION DETAILS

FOR

2 - 11' X 10' BOX CULVERT

HL-93 0° SKEW

S. D. DEPT. OF TRANSPORTATION

JULY 2015

DESIGNED BY	CK. DES. BY	DRAFTED BY	
PW	JMH	GW	Kevin N. Boeden BRIDGE ENGINEER
CLRK03A2	03A2WB05		

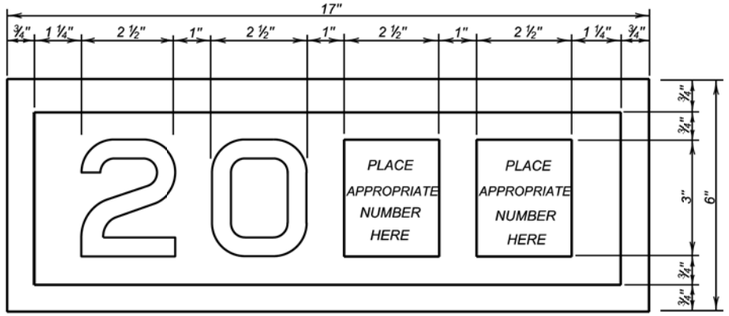

YEAR PLATE DETAILS

GENERAL NOTES:

1. Year plates of the general dimensions shown shall be constructed on all box culverts and bridges. The year plates shall be constructed in reverse and attached to the forms in such a manner that the finished imprint in the concrete does not exceed one-half (½) inch in depth.

2. Year plates shall be located on structure (s) as follows:

   a. On cast-in-place box culverts the year plates shall be four and one - half (4 ½) inches below the top of the upstream parapet wall and centered laterally on the upstream face. On precast box culverts the year plate shall be centered laterally on the upstream face of the top slab. Where an extended interior wall interferes with this location, the year plate shall be centered in an adjacent barrel.

   b. On bridges with six (6) inch curbs or "Jersey" shaped barriers with no endblocks, the year plate shall be centered vertically on the curb face approximately six (6) inches from the end of the bridge, or as designated by the Engineer. On bridges with "Jersey" shaped barrier endblocks, the year plate shall be centered on the upper sloped portion of the barrier approximately 5'- 6" from the end of the bridge, or as designated by the Engineer. There shall be one year plate at each end of the bridge on opposite sides.

   c. When the plans specify that both the original date of construction and the date of reconstruction are to be shown, one date shall be placed as listed above and the other located adjacent to it. Both year plates shall be shown at each end of the bridge on opposite sides.

3. There will be no separate measurement or payment made for year plates on box culverts and bridges. All costs for this work shall be incidental to other contract items.

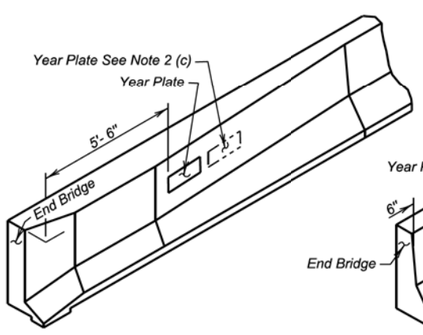

JERSEY BARRIER
(With Endblock)

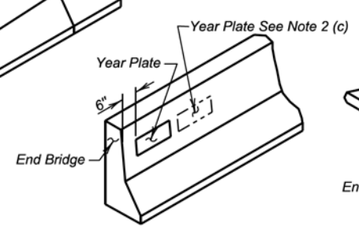

JERSEY BARRIER

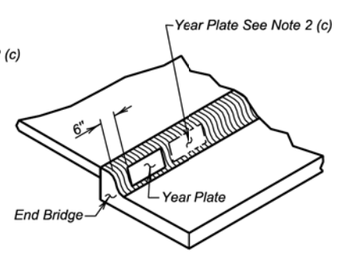

TYPE B CURB

June 26, 2012

Published Date: 4th Qtr. 2015	SDDOT	YEAR PLATE DETAILS	PLATE NUMBER 460.02
			Sheet 1 Of 1

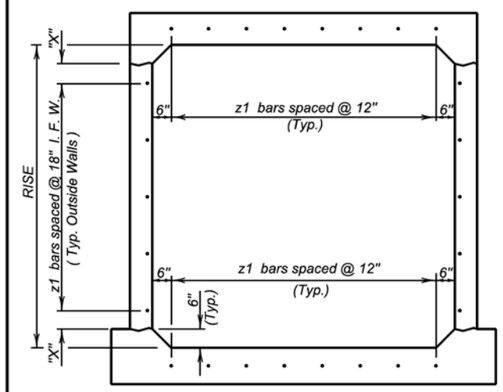

TYPICAL SINGLE BARREL VIEW A - A

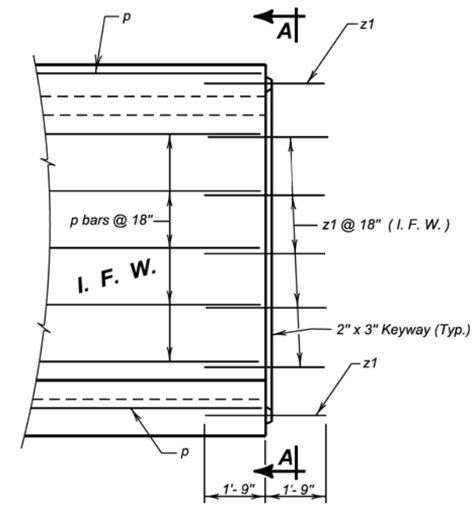

ELEVATION

LEGEND FOR PLACING RE-STEEL
I. F. W. - Inside Face Wall

RISE	"X"
3'- 0"	3"
4'- 0"	9"
5'- 0"	6"
6'- 0"	3"
7'- 0"	9"
8'- 0"	6"
9'- 0"	3"
10'- 0"	9"
11'- 0"	6"
12'- 0"	3"

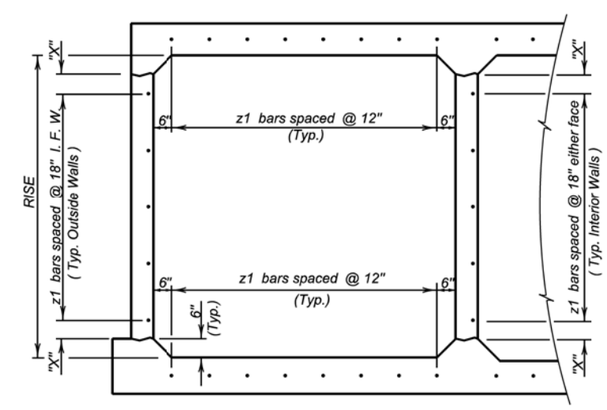

TYPICAL MULTIPLE BARREL VIEW A - A

GENERAL NOTES:

1. z1 bars shall be placed in the middle of the 2" X 3" keyway in the top and bottom slabs. z1 bars shall be lapped with the longitudinal p bars in the inside face of the wall for outside walls and in either face for interior walls. z1 bars are listed and included elsewhere in plans.

2. Drainage Fabric Protection shall be placed in accordance with Section 422, or Section 560, whichever is applicable.

June 26, 2012

Published Date: 4th Qtr. 2015	SDDOT	BOX CULVERT BARREL TIE REINFORCEMENT	PLATE NUMBER 460.10
			Sheet 1 of 1

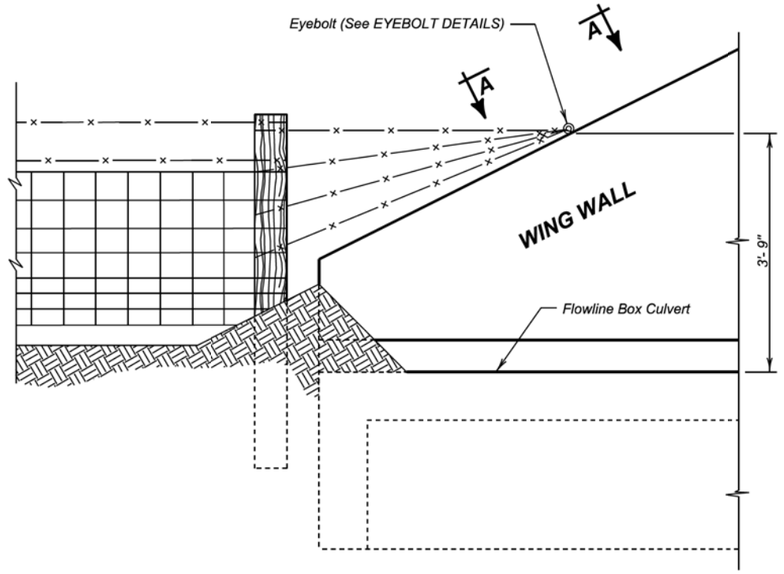

DETAIL FOR FENCE ANCHORS

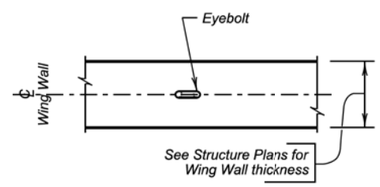

VIEW A - A

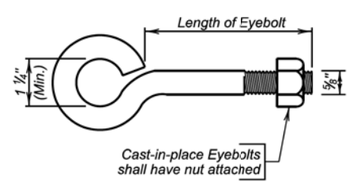

EYEBOLT DETAILS

GENERAL NOTES:

1. The fence and post details shown are for illustrative purpose only. The fence shall be as specified elsewhere in the plans.
2. Eyebolts shall be placed on all of the box culvert wing walls.
3. Eyebolts shall be ⅝ inch diameter and shall conform to ASTM A307.
4. Eyebolts, nuts, and concrete inserts shall be galvanized in accordance with AASHTO M232 (ASTM A153). Concrete inserts of corrosion resistant material need not be galvanized.
5. Cast-in-place eyebolts shall have a nut attached, be 4 ½ inches (Min.) in length and shall be embedded such that the eye of the bolt is flush with the concrete surface. (See Eyebolt Details) As an alternate, cast-in-place concrete inserts, capable of developing the full strength of the ⅝ inch diameter threaded eyebolt, may be used and shall be set in the concrete in accordance with the manufacturer's recommendations. The eyebolt shall be of sufficient length to develop its full strength. The eye of the eyebolt shall be flush with the concrete surface.
6. The cost for furnishing and installing eyebolts and/or concrete inserts shall be incidental to various contract items.

December 23, 2012

Published Date: 4th Qtr. 2015	SDDOT	FENCE ANCHORS FOR BOX CULVERT WING WALLS	PLATE NUMBER 620.16 Sheet 1 of 1

The elevations shown in these plans are based on the National Geodetic Survey (NGS) North American Vertical Datum of 1988 (NAVD88).

STATE OF	PROJECT	SHEET NO.	TOTAL SHEETS
S.D.	P 0028(35)297	E10	E20

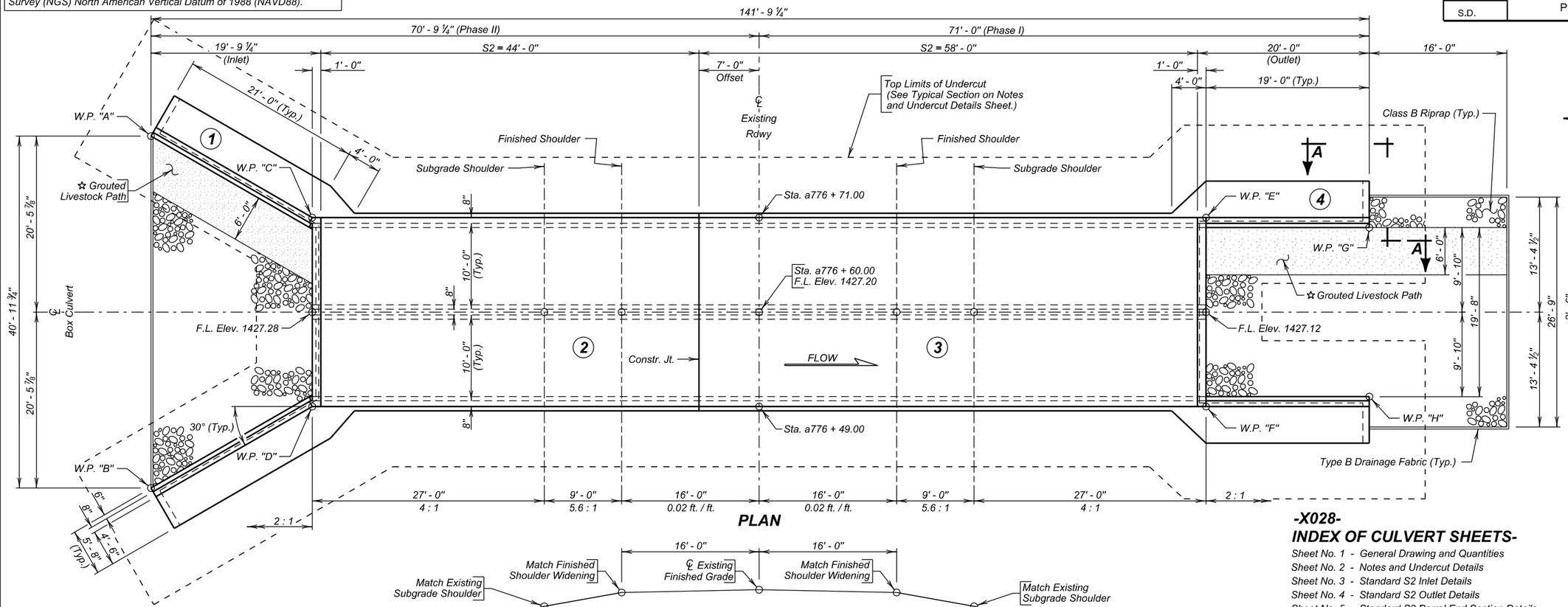

-X028-
INDEX OF CULVERT SHEETS-

Sheet No. 1 - General Drawing and Quantities
Sheet No. 2 - Notes and Undercut Details
Sheet No. 3 - Standard S2 Inlet Details
Sheet No. 4 - Standard S2 Outlet Details
Sheet No. 5 - Standard S2 Barrel End Section Details
Sheet No. 6 - Details of Standard Plate No.'s 460.02 and 460.10
Sheet No. 7 - Details of Standard Plate No. 620.16

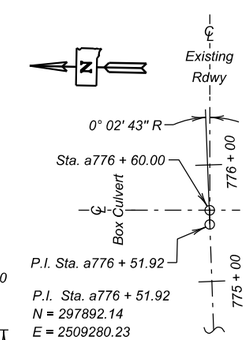

P.I. Sta. a776 + 51.92
N = 297892.14
E = 2509280.23
Del = 0° 02' 49" R

HORIZONTAL ALIGNMENT DATA

HYDRAULIC DATA

Q_d	584 cfs
A_d	60 sq ft
V_d	9.8 fps
Q_F	584 cfs
Q_{100}	1199 cfs
Q_{OT}	$>Q_{100}$ cfs
V_{max}	12.5 fps

Q_d = Design discharge for the proposed culvert based on 25 year frequency. El. 1433.3.

Q_{OT} = Overtopping discharge and frequency $>Q_{100}$ year recurrence interval. El. 1446.8. Location Sta. a777 + 00.00.

Q_F = Designated peak discharge for the basin approaching proposed project based on 25 year frequency.

Q_{100} = Computed discharge for the basin approaching proposed project based on 100 year frequency. El. 1436.2.

V_{max} = Maximum computed outlet velocity for the proposed culvert, based on 100 year frequency.

ESTIMATED QUANTITIES

ITEM	UNIT	QUANTITY
Class A45 Concrete, Box Culvert	Cu. Yd.	283.1
Reinforcing Steel	Lb.	40404
Structure Excavation, Box Culvert	Cu. Yd.	106.6
Box Culvert Undercut	Cu. Yd.	613
☆ ≠ Class B Riprap	Ton	177.2
Type B Drainage Fabric	Sq. Yd.	215.1
Reinforcement Fabric (MSE)	Sq. Yd.	572

≠ For estimating purposes only, a factor of 1.4 tons/cu. yd. was used to convert Cu. Yd. to Tons.

☆ All costs involved with grouting over riprap shall be incidental to the contract unit price per ton for Class B Riprap.

TABLE OF WORKING POINTS

W. P.	STATION	OFFSET
"A"	a776 + 80.49	70.77' Lt.
"B"	a776 + 39.51	70.77' Lt.
"C"	a776 + 71.00	52.00' Lt.
"D"	a776 + 49.00	52.00' Lt.
"E"	a776 + 71.00	52.00' Rt.
"F"	a776 + 49.00	52.00' Rt.
"G"	a776 + 69.83	71.00' Rt.
"H"	a776 + 50.11	71.00' Rt.

NOTE:
Box Culvert flowline has been depressed 1' - 0" below channel flowline to accommodate aquatic organisms. The 1' - 0" depression will be allowed to fill in naturally over time.

✳ Topeka Shiner Stream

SITE 1
ALTERNATE A

GENERAL DRAWING AND QUANTITIES

FOR

2 - 10' X 10' BOX CULVERT (C.I.P.)

✳ OVER TRIB. TO SHUE CREEK — 0° SKEW
STA. a776 + 60.00 — SEC. 33/4-T114/113N-R59W
STR. NO. 13-028-360 — P 0028(35)297
PCN 03A2 — HL-93

BEADLE / CLARK COUNTY
S. D. DEPT. OF TRANSPORTATION
JULY 2015

PLANS BY :
OFFICE OF BRIDGE DESIGN, SOUTH DAKOTA DEPARTMENT OF TRANSPORTATION

DESIGNED BY	CK. DES. BY	DRAFTED BY	
JMH	PW	GW	Kevin N. Cooden
CLRK03A2	03A2WB01		BRIDGE ENGINEER

STATE OF	PROJECT	SHEET NO.	TOTAL SHEETS
S.D.	P 0028(35)297	E11	E20

SPECIFICATIONS

1. Design Specifications: AASHTO LRFD Bridge Design Specifications, 2014 Edition with 2015 interims.
2. Construction Specifications: South Dakota Standard Specifications for Roads and Bridges, 2015 Edition and required Provisions, Supplemental Specifications, and Special Provisions as included in the Proposal.

GENERAL NOTES

1. Design Live Load: HL-93 and construction load consisting of one 7' - 6" gage axle with gross weight = 95,850 lbs. The construction load shall not be applied until a minimum of 4 ft. of fill has been placed over the Box Culvert. Other construction loads in excess of legal load must be submitted thru proper channels to the Office of Bridge Design for analysis.
2. The design of the barrel section is based on a minimum fill height of 2 feet and includes all subsequent fill heights up to and including the maximum fill height of 10 ft. (S2).
3. Design Material Strengths: Concrete f'c = 4500 p.s.i.
   Reinforcing Steel fy = 60000 p.s.i.
4. High sulfate levels are likely to be encountered on this project. All concrete shall be Class A45 conforming to Section 460, with the following modifications: the type of cement shall be either a Type V or a Type II with 20% Class F Modified Fly Ash substituted for cement in accordance with Section 605.
5. All reinforcing steel shall conform to ASTM A615 Grade 60.
6. All exposed edges shall be chamfered ¾ inch.
7. Use 1 inch clear cover on all reinforcing steel EXCEPT as shown.
8. The Contractor shall imprint on the structure the date of construction as specified and detailed on Standard Plate No. 460.02.
9. Care shall be taken to establish Working Points (W.P.) as shown on the wings.
10. Circled numbers in PLAN and ELEVATION views on the General Drawing are section I.D. Numbers (see SDDOT Materials Manual).
11. Compaction of earth embankment and box culvert backfill material shall be governed by the Specified Density method.
12. Dimension "L" on the standard box culvert sheet(s) is the barrel section length shown in the PLAN view on the General Drawing (for each S1, S2 etc. barrel section, as applicable).
13. A layer of Reinforcement Fabric (MSE) shall be placed at the bottom of the undercut prior to backfilling with granular material.
14. The subsurface soils below the existing flow line consist of about 2.5 feet to 3.5 feet of gray sandy silt-clay with some gravel overlying a brown to gray loose gravelly silt-sand to clay -sand to 7.5 feet below the existing flow line. Classification results of soils samples collected from below flow line during the subsurface were sand-clay to gravel silt-sand.
15. It is anticipated that dewatering will be required to construct the box culvert. The Contractor will be responsible to verify groundwater location prior to construction and provide necessary means of dewatering the construction site and prevention of the inflow of additional water. The use of well points may be required in dewatering the site for construction.

GEOTEXTILE SPECIFICATION

1. The geotextile will conform to specification for Geotextiles and Impermeable Plastic Membrane, Reinforcement Fabric (MSE) (Section 831 of the Standard Specifications). The geotextile will be on the Approved Products List for this material or will be certified by the supplier to meet this specification prior to installation.
2. Geotextile will be paid for at the contract unit price per sq. yd. for Reinforcement Fabric (MSE). Payment will be full compensation for furnishing and installing the fabric only. Granular backfill materials will be incidental to the contract unit price per cubic yard for Box Culvert Undercut.

INSTALLATION PROCEDURE - GEOTEXTILE

1. Place the Reinforcement Fabric (MSE) on as level and smooth of surface as possible.
2. Any protrusions that might damage the geotextile will be removed prior to placing the geotextile.
3. The geotextile can be rolled out parallel to the centerline of the box culvert.
4. All seams in the geotextile will be stitched in accordance with the seaming procedure notes and as shown on the details labeled "Seam Types".
5. No equipment is to be allowed on the geotextile until the granular material is in place.
6. The geotextile should be kept as taut as possible prior to backfilling.
7. Granular material will be dumped at least 20' behind the leading edge of the fill and pushed into place with a loader or dozer.

SEAMING PROCEDURE

1. The sewn seams shall consist of two parallel rows of stitching ("prayer" seam, TypeSSa-2), or shall consist of a J-seam, (Type SSn-1), using a single row of stitching. The stitching shall be lock type stitch.
2. If the SSa-2 seam is used, the two rows of stitching shall be 1" apart with a tolerance of plus or minus ½" and shall not cross, except for restitching. The minimum seam allowance, i.e., the minimum distance from the geotextile edge to the stitch line nearest to that edge, shall be 1 ½".
3. If the J-seam, Type SSn-1, is used, the minimum seam allowance shall be 1".
4. The seam, stitch type, and the equipment used to perform the stitching shall be as recommended by the manufacturer of the geotextile and approved by the Engineer.
5. The seams shall be sewn in such a manner that the seam can be readily inspected by the Engineer.
6. Thread used shall be high strength polypropylene, polyester, or Kevlar thread. Nylon threads will not be allowed.

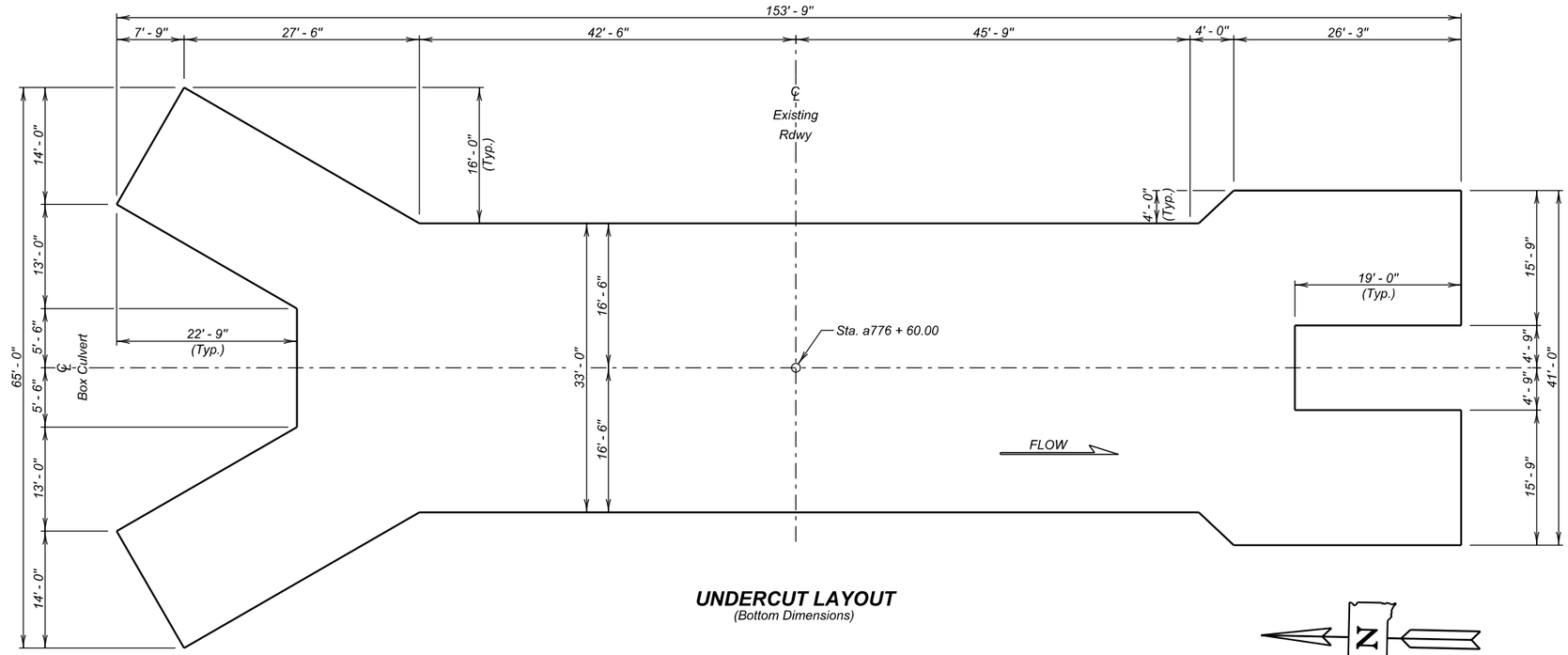

UNDERCUT LAYOUT
(Bottom Dimensions)

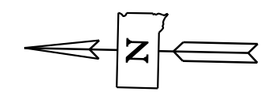

Flat or "prayer" seam
Type SSa-2

J seam
Type SSn-1

GEOTEXTILE SEAM TYPES

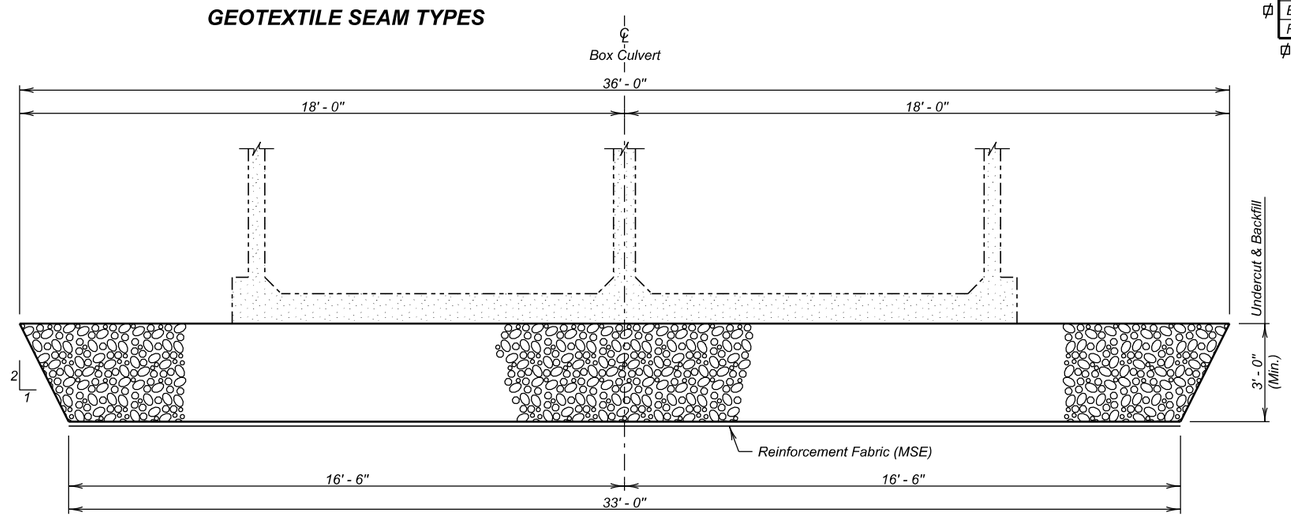

TYPICAL SECTION
(For Limits of Undercut)

ESTIMATED QUANTITIES

ITEM	UNIT	QUANTITY
¢ Box Culvert Undercut	Cu. Yd.	613
Reinforcement Fabric (MSE)	Sq. Yd.	572

¢ For payment, quantity is based on plan shown undercut dimensions and will not be measured unless the Engineer orders a change.

SITE 1
ALTERNATE A

NOTES AND UNDERCUT DETAILS

FOR

2 - 10' X 10' BOX CULVERT (C.I.P.)

OVER TRIB. TO SHUE CREEK — 0° SKEW
STA. a776 + 60.00 — SEC. 33/4-T114/113N-R59W
STR. NO. 13-028-360 — P 0028(35)297
HL-93

BEADLE / CLARK COUNTY
S. D. DEPT. OF TRANSPORTATION
JULY 2015

DESIGNED BY	CK. DES. BY	DRAFTED BY	
JMH	PW	GW	Kevin N. Goeden
CLRK03A2	03A2WB02		BRIDGE ENGINEER

STATE OF	PROJECT	SHEET NO.	TOTAL SHEETS
S.D.	P 028(35)297	E12	E20

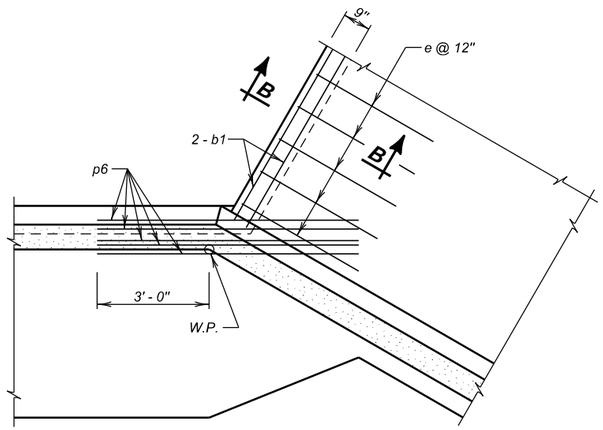

DETAIL "X"
(At Bottom Slab)

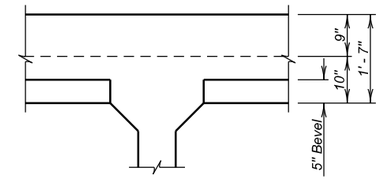

VIEW D - D
(At Interior Wall)

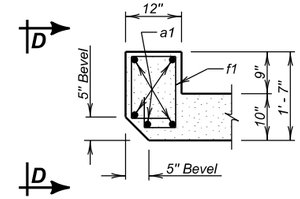

SEC. A - A
(At Top Slab)

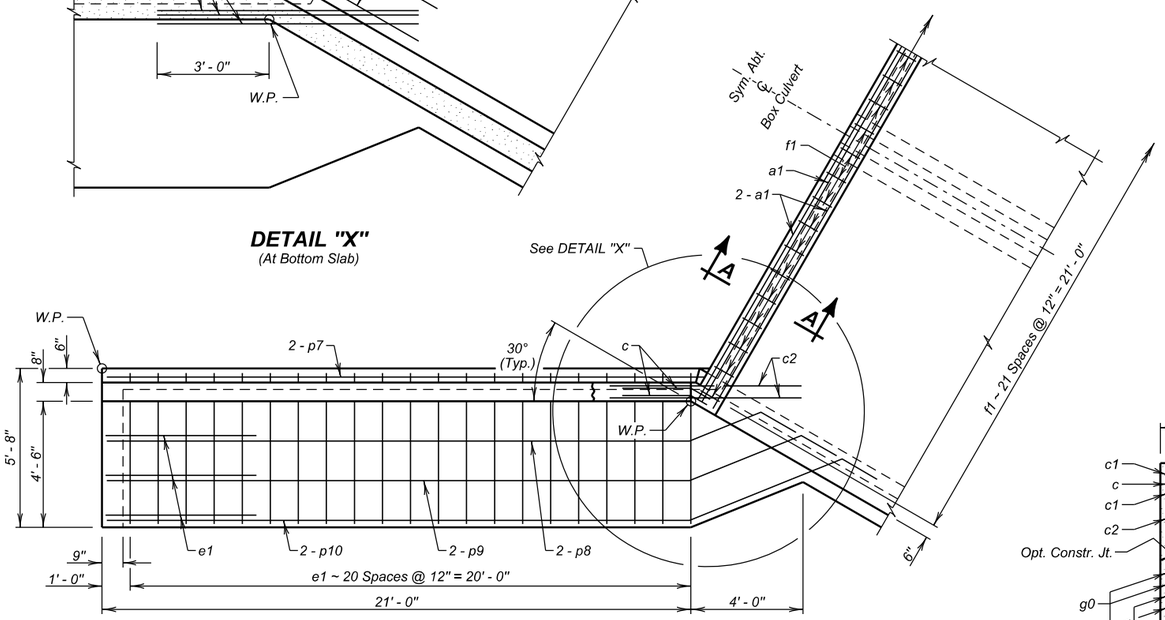

HALF PLAN

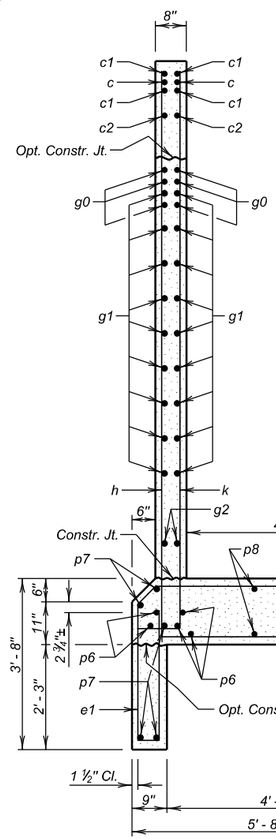

SEC. C - C

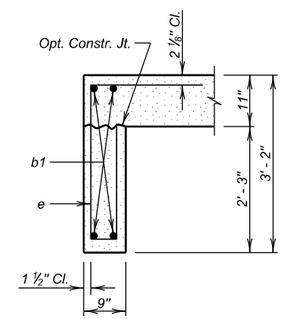

SEC. B - B

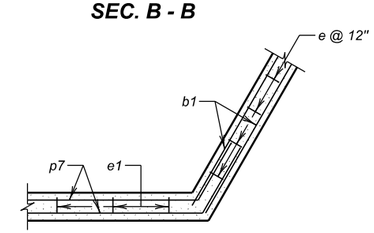

SEC. G - G

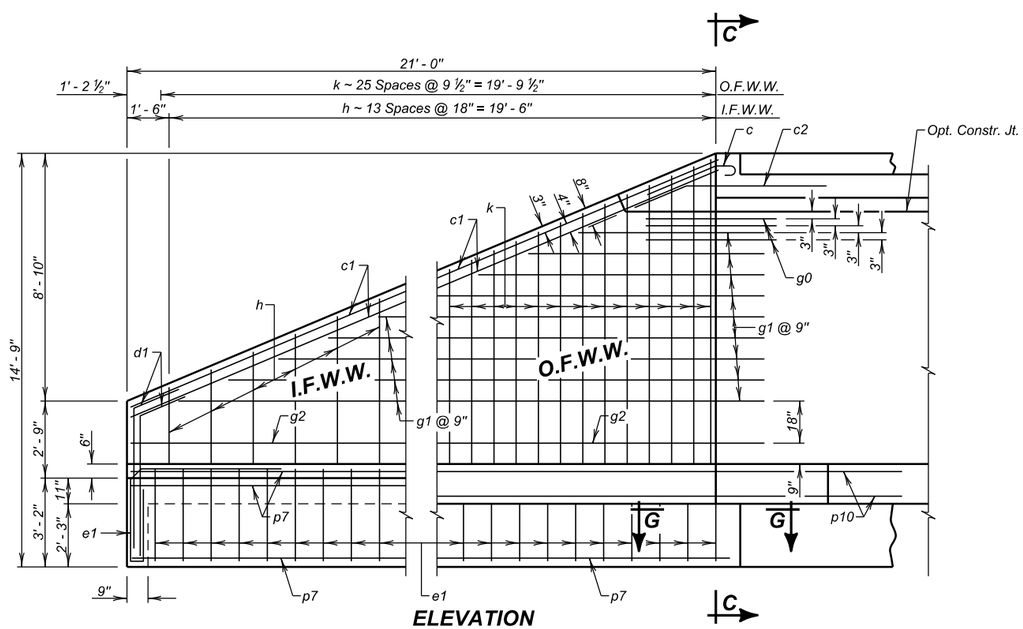

ELEVATION

REINFORCING SCHEDULE

	Mk.	No.	Size	Length	Type
	a1	5	6	21' - 9"	Str.
	b1	4	6	20' - 0"	Str.
✳	c	4	5	4' - 6"	1A
	c1	8	5	22' - 9"	Str.
	c2	4	5	7' - 0"	19B
	d1	8	5	6' - 9"	19B
	e	20	4	7' - 9"	S12
	e1	48	4	11 - 9"	S12A
	f1	22	4	5' - 3"	S6A
	g0	12	5	5' - 0"	19B
⌀	g1	18	4	28' - 6"	19B
	g2	4	4	22' - 9"	19B
⌀	h	14	4	25' - 9"	17A
⌀	k	26	4	17' - 9"	17A
	p6	10	6	7' - 0"	Str.
✳	p7	10	4	23' - 6"	Str.
✳	p8	4	4	24' - 0"	Str.
✳	p9	4	4	25' - 9"	Str.
✳	p10	4	4	27' - 6"	Str.

Bending Details

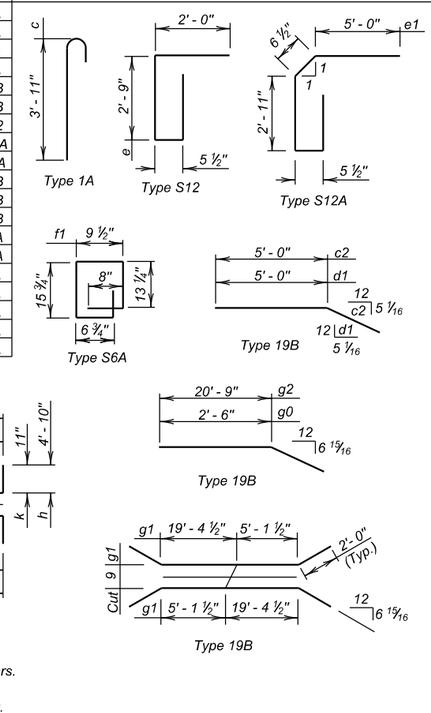

NOTES:
All dimensions are out to out of bars.
⌀ See cutting diagram.
✳ Bend in field as necessary to fit.

ESTIMATED QUANTITIES

ITEM	Class A45 Concrete, Box Culvert	Reinforcing Steel	Structure Excavation, Box Culvert
UNIT	Cu. Yd.	Lb.	Cu. Yd.
Inlet	27.6	2619	14.0

LEGEND FOR PLACING RE-STEEL

O. F. W. W. - Outside Face of Wing Wall
I. F. W. W. - Inside Face of Wing Wall

SITE 1
ALTERNATE A

STANDARD S2 INLET DETAILS

FOR

2 - 10' X 10' BOX CULVERT (C.I.P.)

HL-93 0° SKEW

S. D. DEPT. OF TRANSPORTATION

JULY 2015

3 OF 7

DESIGNED BY	CK. DES. BY	DRAFTED BY	
JMH	PW	GW	Kevin N. Goeden
CLRK03A2	03A2WB03		BRIDGE ENGINEER

STATE OF	PROJECT	SHEET NO.	TOTAL SHEETS
S.D.	P 0028(35)297	E13	E20

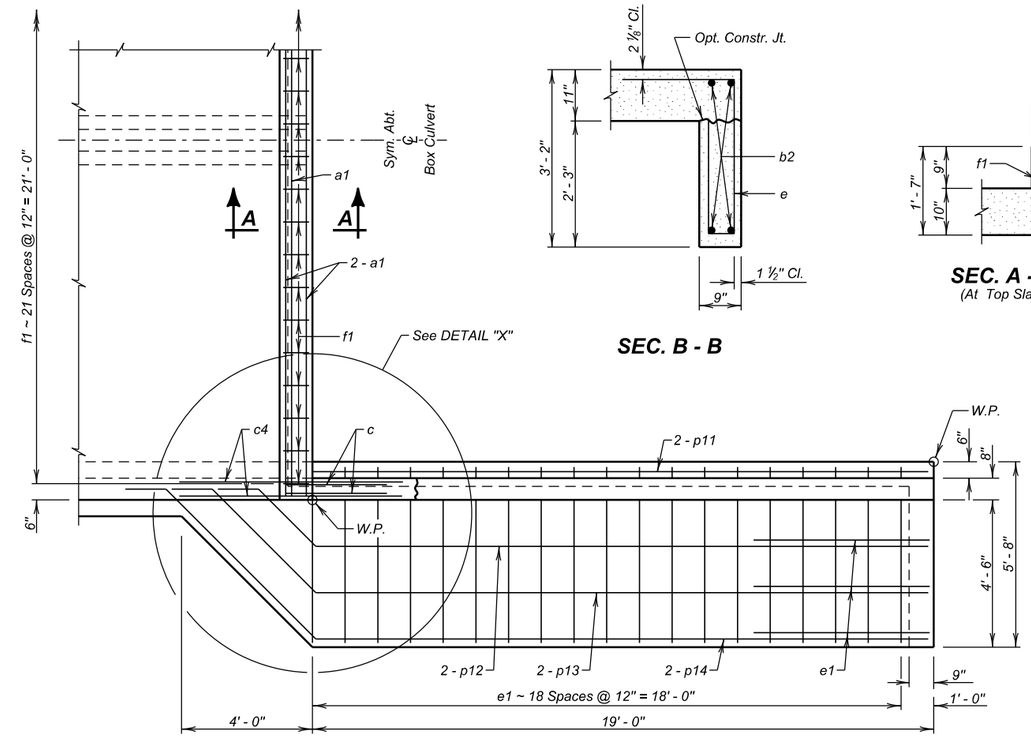

HALF PLAN

SEC. B - B

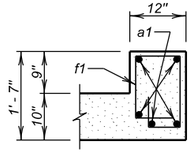

SEC. A - A
(At Top Slab)

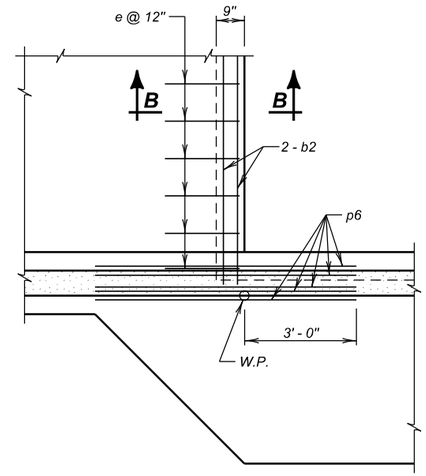

DETAIL "X"
(At Bottom Slab)

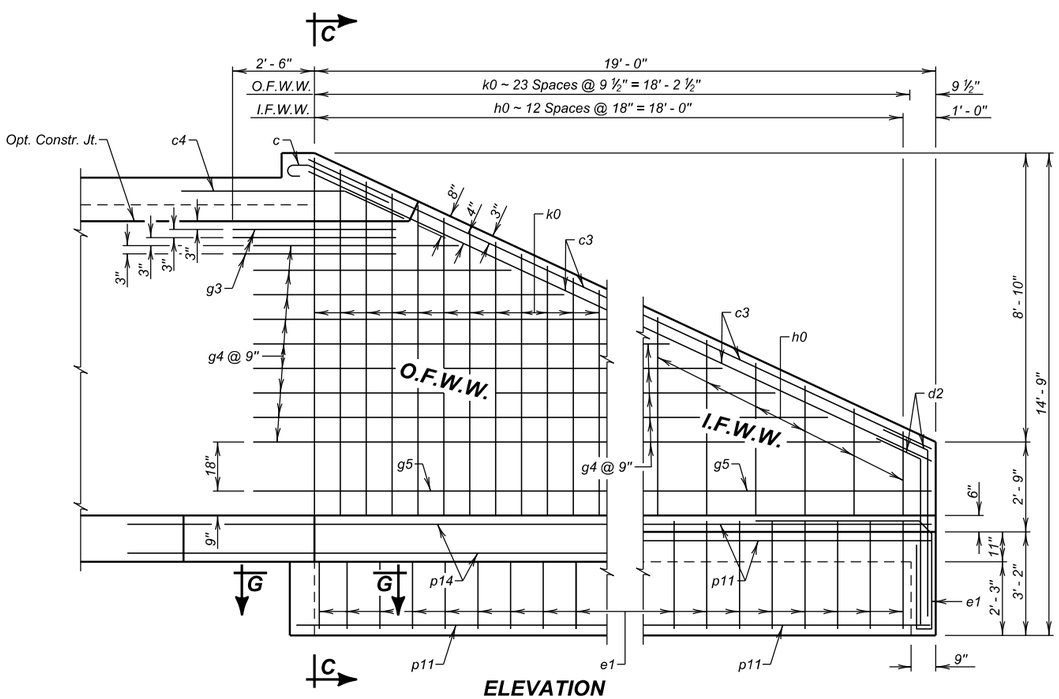

ELEVATION

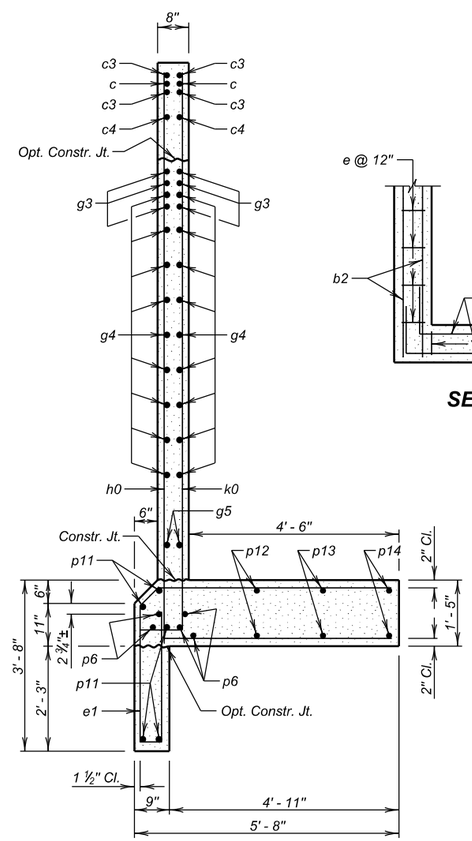

SEC. C - C

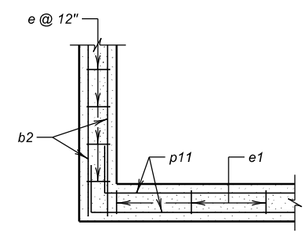

SEC. G - G

REINFORCING SCHEDULE

	Mk.	No.	Size	Length	Type
	a1	5	6	21' - 9"	Str.
	b2	4	6	20' - 9"	Str.
✳	c	4	5	4' - 6"	1A
	c3	8	5	21' - 0"	Str.
	c4	4	5	7' - 0"	19B
	d2	8	5	7' - 0"	19B
	e	21	4	7' - 9"	S12
	e1	44	4	11' - 9"	S12A
	f1	22	4	5' - 3"	S6A
	g3	12	5	5' - 0"	Str.
ϕ	g4	18	4	26' - 0"	Str.
	g5	4	4	20' - 9"	Str.
ϕ	h0	13	4	25' - 6"	17A
ϕ	k0	24	4	17' - 9"	17A
	p6	10	6	7' - 0"	Str.
✳	p11	10	4	21' - 6"	Str.
✳	p12	4	4	22' - 6"	Str.
✳	p13	4	4	24' - 9"	Str.
✳	p14	4	4	26' - 9"	Str.

Bending Details

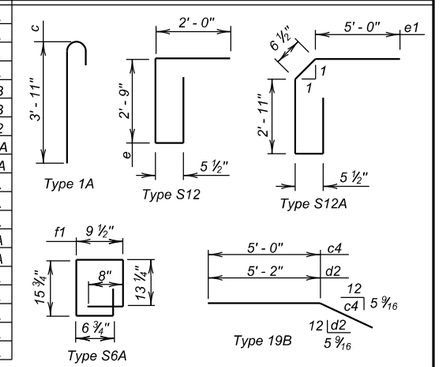

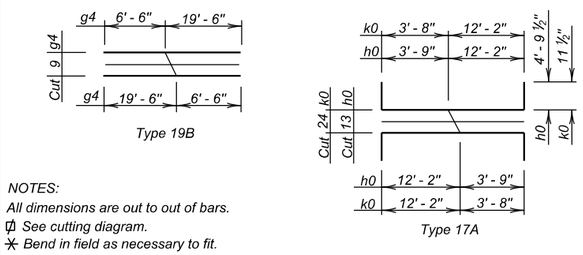

NOTES:
All dimensions are out to out of bars.
ϕ See cutting diagram.
✳ Bend in field as necessary to fit.

ESTIMATED QUANTITIES

ITEM	Class A45 Concrete, Box Culvert	Reinforcing Steel	Structure Excavation, Box Culvert
UNIT	Cu. Yd.	Lb.	Cu. Yd.
Outlet	25.4	2484	12.9

LEGEND FOR PLACING RE-STEEL

O. F. W. W. - Outside Face of Wing Wall
I. F. W. W. - Inside Face of Wing Wall

SITE 1
ALTERNATE A

STANDARD S2 OUTLET DETAILS

FOR

2 - 10' X 10' BOX CULVERT (C.I.P.)

HL-93 0° SKEW

S. D. DEPT. OF TRANSPORTATION

JULY 2015

DESIGNED BY	CK. DES. BY	DRAFTED BY	
JMH	PW	GW	Kevin N. Goeden
CLRK03A2	03A2WB04		BRIDGE ENGINEER

STATE OF	PROJECT	SHEET NO.	TOTAL SHEETS
S.D.	P 0028(35)297	E14	E20

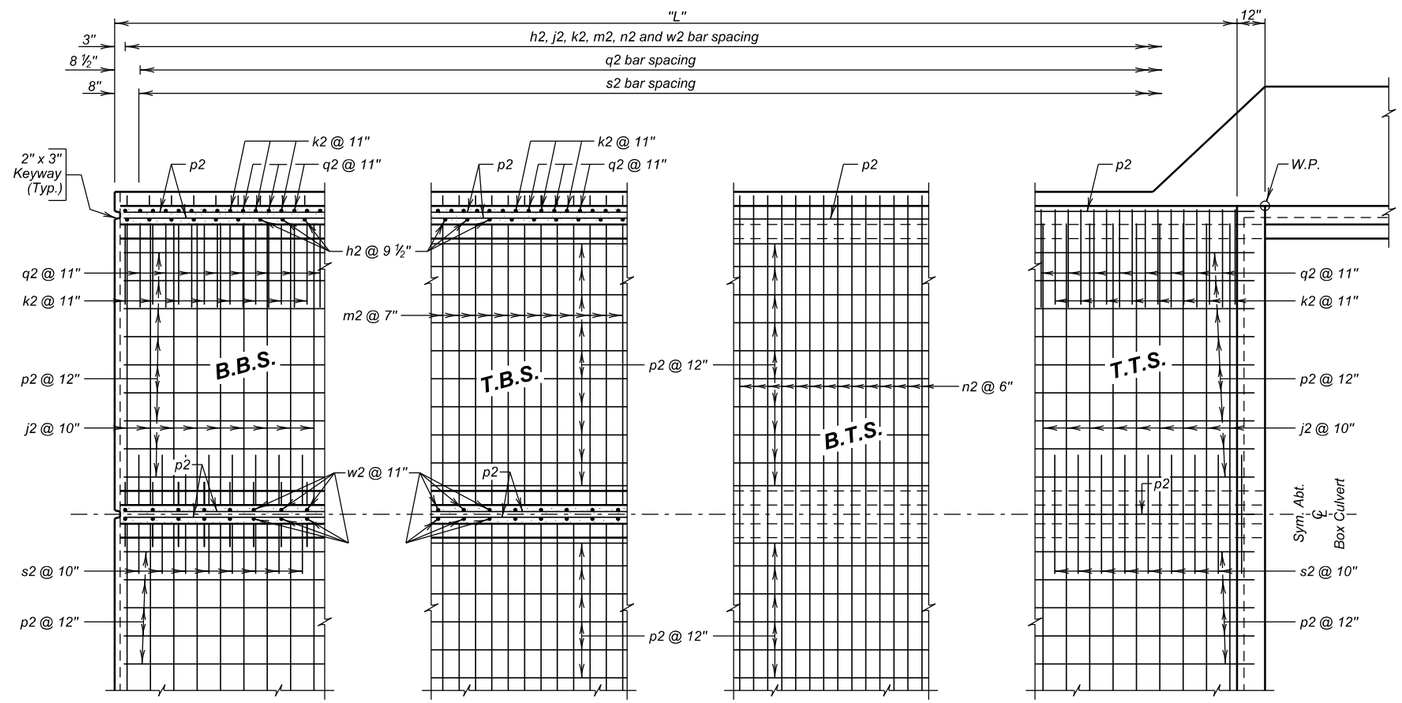

HALF PLAN

(Outlet shown, Inlet similar by rotation)

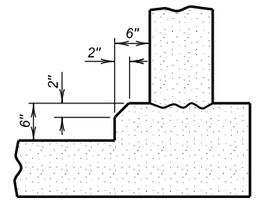

OPTIONAL FILLET DETAIL

(At Bottom Slab)

Note: Contractor may form the optional full fillet, with 2" Chamfer, as detailed. The cost of the additional concrete shall be borne by the Contractor.

△ Place z1 bars thru construction joint between barrel sections as shown on Standard Plate No. 460.10.

REINFORCING SCHEDULE

(For One Standard S2 Barrel End Section)

Mk.	ϕ No.	Size	Length	Type
h2	2.53 (L+1)	4	12' - 0"	17A
j2	2.40 L	5	20' - 9"	Str.
k2	2.18 (L+1)	5	18' - 3"	17
m2	1.71 L	5	22' - 9"	Str.
n2	2.00 L	5	21' - 9"	Str.
p2	123	4	L + 6"	Str.
q2	4.36 (L+1)	5	7' - 0"	17A
s2	2.40 L	5	4' - 3"	Str.
w2	1.09 (L+1)	4	25' - 0"	S11A
△ z1	✳	5	3' - 6"	Str.

Bending Details

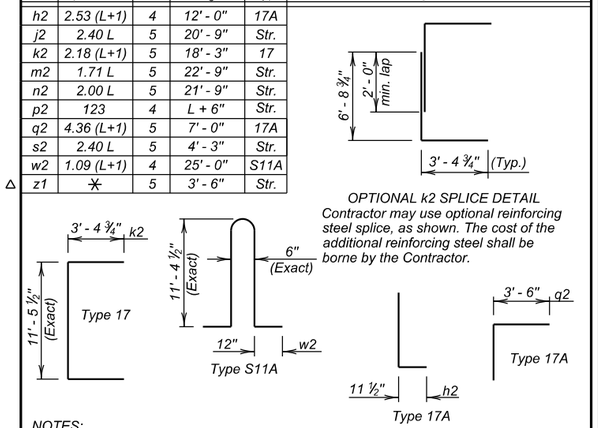

OPTIONAL k2 SPLICE DETAIL
Contractor may use optional reinforcing steel splice, as shown. The cost of the additional reinforcing steel shall be borne by the Contractor.

NOTES:

All dimensions are out to out of bars.

ϕ Round the number of bars up to the nearest whole number, except round h2, k2, j2, q2, and s2 up to the nearest even whole number.

Request for additional reinforcing steel splices at points other than those shown, must be submitted to the Engineer for prior approval. If additional splices are approved, no payment will be allowed for the added quantity of reinforcing steel.

✳ 58 z1 bars required at each construction joint.

ESTIMATED QUANTITIES

ITEM	Class A45 Concrete, Box Culvert	Reinforcing Steel	Structure Excavation, Box Culvert
UNIT	Cu.Yd.	Lb.	Cu.Yd.
1 - Standard S2 Barrel End Section	2.256 L	342.505L + 152.90	0.781 L
⌀ 1 - Construction Joint	——	211.73	——

⌀ See General Drawing for number of constructions joints required.

LEGEND FOR PLACING RE- STEEL

T.T.S. - Top of Top Slab
B.T.S. - Bottom of Top Slab
T.B.S. - Top of Bottom Slab
B.B.S. - Bottom of Bottom Slab
O.F.O.W. - Outside Face of Outside Wall
I.F.O.W. - Inside Face of Outside Wall
M.W. - Middle Wall

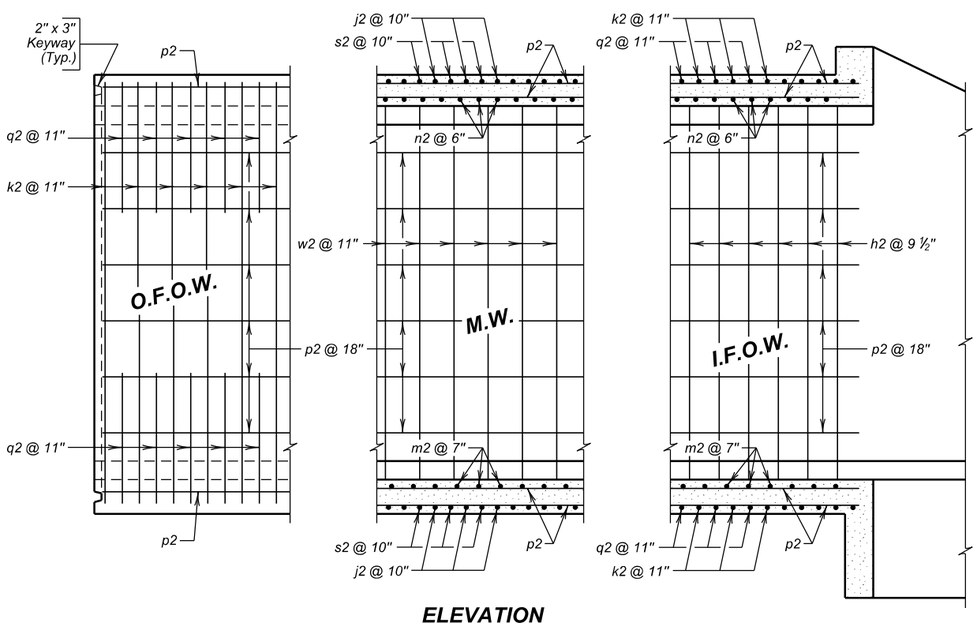

ELEVATION

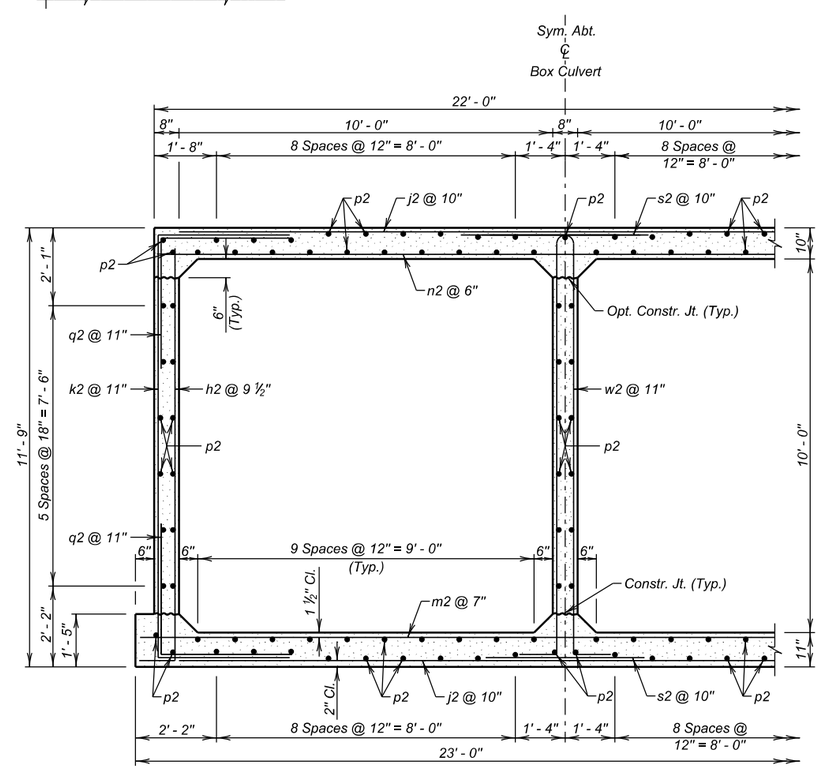

S2 BARREL HALF SECTION

(10' - 0" Maximum Fill)

SITE 1
ALTERNATE A

STANDARD S2 BARREL END SECTION DETAILS

FOR

2 - 10' X 10' BOX CULVERT

HL-93 0° SKEW

S. D. DEPT. OF TRANSPORTATION

JULY 2015

DESIGNED BY	CK. DES. BY	DRAFTED BY	
JMH	PW	GW	Kevin N. Boeden BRIDGE ENGINEER
CLRK03A2	03A2WB05		

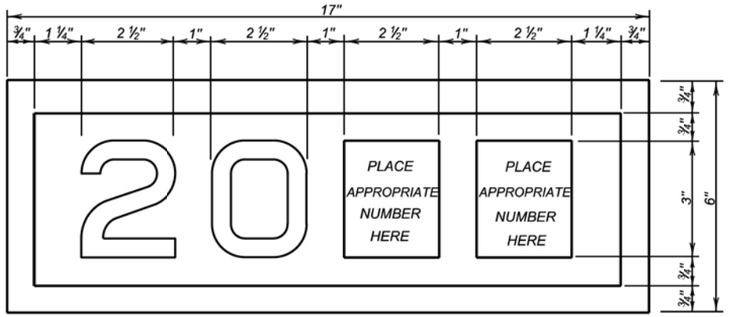

YEAR PLATE DETAILS

GENERAL NOTES:

1. Year plates of the general dimensions shown shall be constructed on all box culverts and bridges. The year plates shall be constructed in reverse and attached to the forms in such a manner that the finished imprint in the concrete does not exceed one-half (½) inch in depth.

2. Year plates shall be located on structure (s) as follows:

   a. On cast-in-place box culverts the year plates shall be four and one - half (4 ½) inches below the top of the upstream parapet wall and centered laterally on the upstream face. On precast box culverts the year plate shall be centered laterally on the upstream face of the top slab. Where an extended interior wall interferes with this location, the year plate shall be centered in an adjacent barrel.

   b. On bridges with six (6) inch curbs or "Jersey" shaped barriers with no endblocks, the year plate shall be centered vertically on the curb face approximately six (6) inches from the end of the bridge, or as designated by the Engineer. On bridges with "Jersey" shaped barrier endblocks, the year plate shall be centered on the upper sloped portion of the barrier approximately 5'- 6" from the end of the bridge, or as designated by the Engineer. There shall be one year plate at each end of the bridge on opposite sides.

   c. When the plans specify that both the original date of construction and the date of reconstruction are to be shown, one date shall be placed as listed above and the other located adjacent to it. Both year plates shall be shown at each end of the bridge on opposite sides.

3. There will be no separate measurement or payment made for year plates on box culverts and bridges. All costs for this work shall be incidental to other contract items.

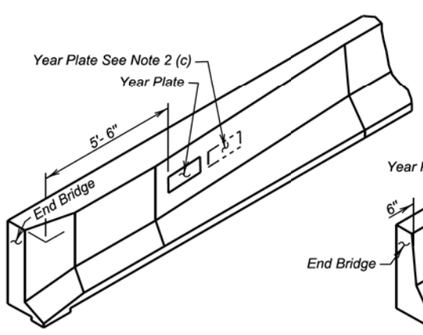

JERSEY BARRIER
(With Endblock)

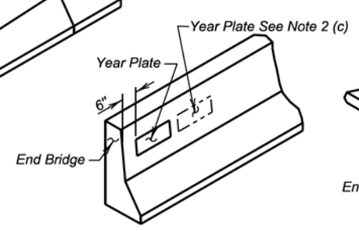

JERSEY BARRIER

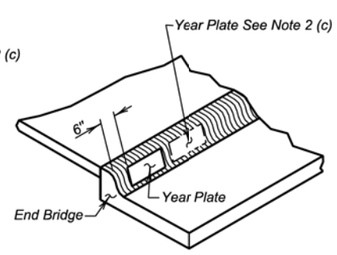

TYPE B CURB

June 26, 2012

Published Date: 4th Qtr. 2015	SDDOT	YEAR PLATE DETAILS	PLATE NUMBER 460.02
			Sheet 1 Of 1

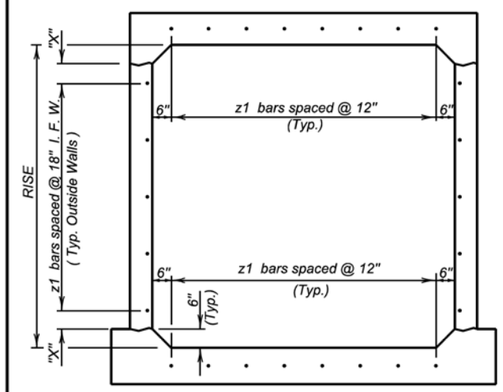

TYPICAL SINGLE BARREL VIEW A - A

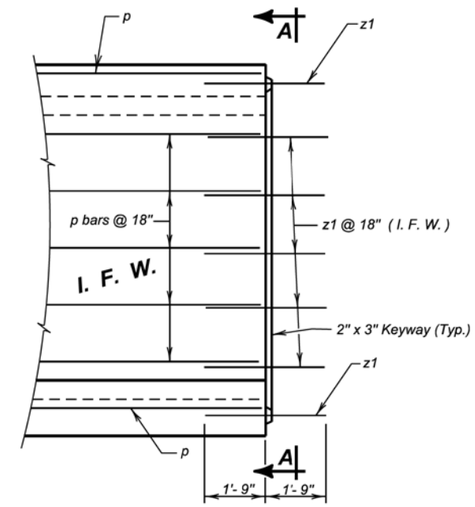

ELEVATION

LEGEND FOR PLACING RE-STEEL
I. F. W. - Inside Face Wall

RISE	"X"
3'- 0"	3"
4'- 0"	9"
5'- 0"	6"
6'- 0"	3"
7'- 0"	9"
8'- 0"	6"
9'- 0"	3"
10'- 0"	9"
11'- 0"	6"
12'- 0"	3"

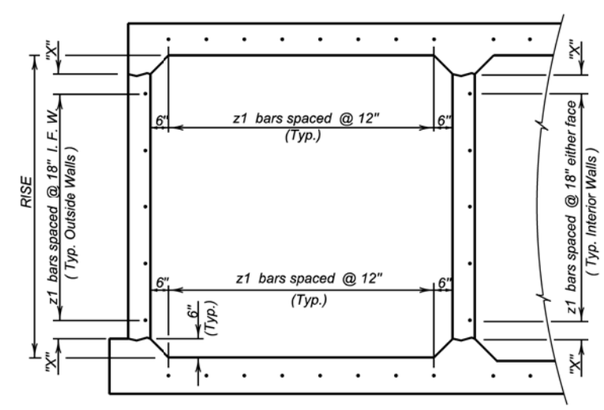

TYPICAL MULTIPLE BARREL VIEW A - A

GENERAL NOTES:

1. z1 bars shall be placed in the middle of the 2" X 3" keyway in the top and bottom slabs. z1 bars shall be lapped with the longitudinal p bars in the inside face of the wall for outside walls and in either face for interior walls. z1 bars are listed and included elsewhere in plans.

2. Drainage Fabric Protection shall be placed in accordance with Section 422, or Section 560, whichever is applicable.

June 26, 2012

Published Date: 4th Qtr. 2015	SDDOT	BOX CULVERT BARREL TIE REINFORCEMENT	PLATE NUMBER 460.10
			Sheet 1 of 1

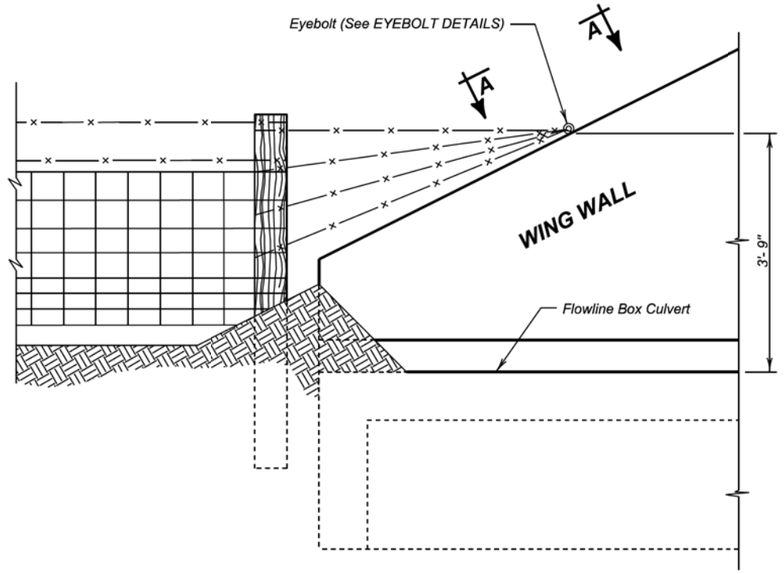

DETAIL FOR FENCE ANCHORS

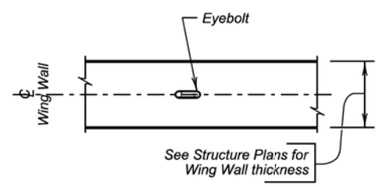

VIEW A - A

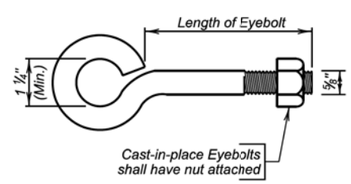

EYEBOLT DETAILS

GENERAL NOTES:

1. The fence and post details shown are for illustrative purpose only. The fence shall be as specified elsewhere in the plans.
2. Eyebolts shall be placed on all of the box culvert wing walls.
3. Eyebolts shall be ⅝ inch diameter and shall conform to ASTM A307.
4. Eyebolts, nuts, and concrete inserts shall be galvanized in accordance with AASHTO M232 (ASTM A153). Concrete inserts of corrosion resistant material need not be galvanized.
5. Cast-in-place eyebolts shall have a nut attached, be 4 ½ inches (Min.) in length and shall be embedded such that the eye of the bolt is flush with the concrete surface. (See Eyebolt Details) As an alternate, cast-in-place concrete inserts, capable of developing the full strength of the ⅝ inch diameter threaded eyebolt, may be used and shall be set in the concrete in accordance with the manufacturer's recommendations. The eyebolt shall be of sufficient length to develop its full strength. The eye of the eyebolt shall be flush with the concrete surface.
6. The cost for furnishing and installing eyebolts and/or concrete inserts shall be incidental to various contract items.

December 23, 2012

Published Date: 4th Qtr. 2015	SDDOT	FENCE ANCHORS FOR BOX CULVERT WING WALLS	PLATE NUMBER 620.16 Sheet 1 of 1

SITE 1
ALTERNATE A

2 - 10' X 10' BOX CULVERT (C.I.P.)
STR. NO. 13-028-360
JULY 2015

The elevations shown in these plans are based on the National Geodetic Survey (NGS) North American Vertical Datum of 1988 (NAVD88).

✳ Dimension may vary with fabricator and/or installation. See Shop Plans for actual installation length.
★ Minimum distance to satisfy fill slope.
△ Based on dimensions shown.
ϕ Based on 8" walls.

STATE OF	PROJECT	SHEET NO.	TOTAL SHEETS
S.D.	P 0028(35)297	E17	E20

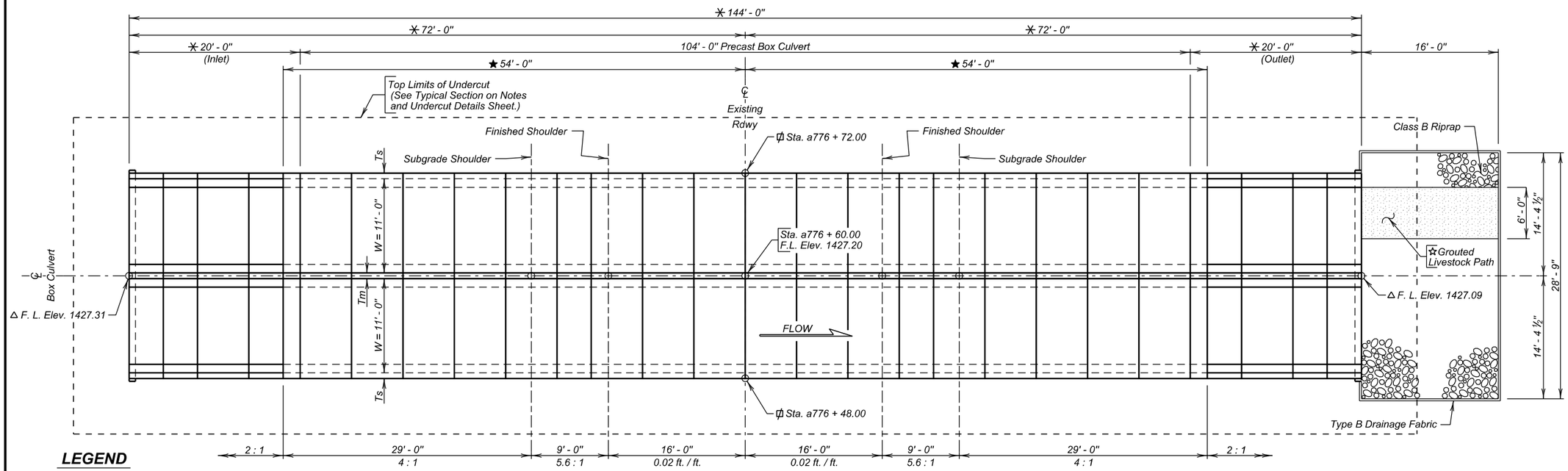

PLAN

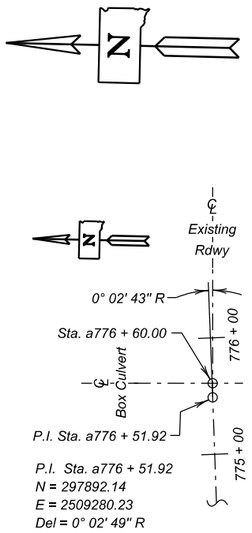

HORIZONTAL ALIGNMENT DATA

LEGEND

W = Width of Opening
H = Height of Opening
Tt = Thickness of Top Slab
Tb = Thickness of Bottom Slab
Ts = Thickness of Side Wall
Tm = Thickness of Middle Wall

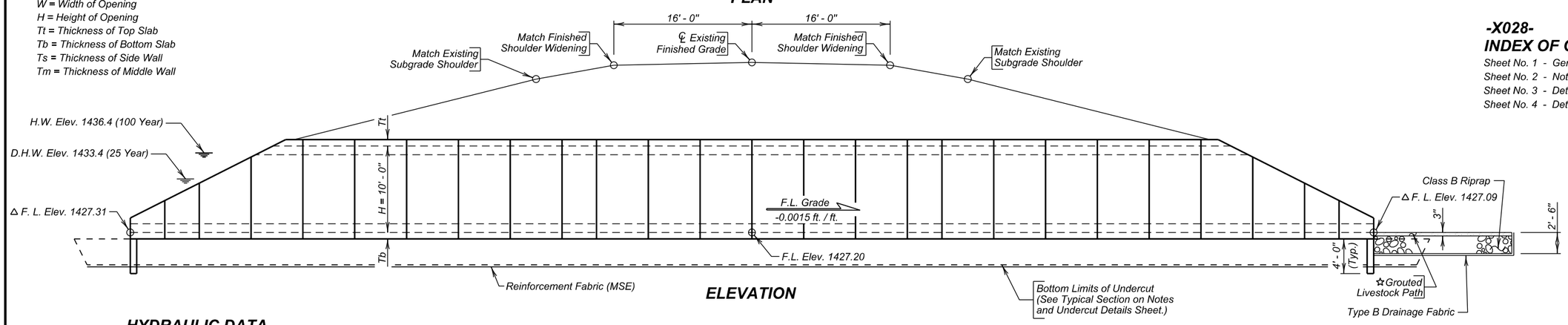

ELEVATION

-X028-
INDEX OF CULVERT SHEETS

Sheet No. 1 - General Drawing and Quantities
Sheet No. 2 - Notes and Undercut Details
Sheet No. 3 - Details of Standard Plate No's. 460.02 & 560.01
Sheet No. 4 - Details of Standard Plate No's. 560.21 & 620.16

HYDRAULIC DATA

Q_d	584 cfs
A_d	65 sq ft
V_d	9.0 fps
Q_F	584 cfs
Q_{100}	1199 cfs
Q_{OT}	$>Q_{100}$ cfs
V_{max}	12.1 fps

Q_d = Design discharge for the proposed culvert based on 25 year frequency. El. 1433.4.
Q_{OT} = Overtopping discharge and frequency $>Q_{100}$ year recurrence interval. El. 1446.8. Location Sta. a777 + 00.00.
Q_F = Designated peak discharge for the basin approaching proposed project based on 25 year frequency.
Q_{100} = Computed discharge for the basin approaching proposed project based on 100 year frequency. El. 1436.4.
V_{max} = Maximum computed outlet velocity for the proposed culvert, based on 100 year frequency.

ESTIMATED QUANTITIES

	ITEM	UNIT	QUANTITY
ϕ	Structure Excavation, Box Culvert	Cu. Yd.	101.0
	Box Culvert Undercut	Cu. Yd.	614
☆ ≠	Class B Riprap	Ton	59.6
	Type B Drainage Fabric	Sq. Yd.	76
	Reinforcement Fabric (MSE)	Sq. Yd.	582
	2 - 11' X 10' Precast Concrete Culvert, Furnish	Ft.	104
	2 - 11' X 10' Precast Concrete Culvert, Install	Ft.	104
	2 - 11' X 10' Precast Concrete Culvert End Section, Furnish	Each	2
	2 - 11' X 10' Precast Concrete Culvert End Section, Install	Each	2

ϕ Quantity is based on 9" bottom slab, 9" top slab and 8" walls.
≠ For estimating purposes only, a factor of 1.4 tons/cu. yd. was used to convert Cu. Yd. to Tons.
☆ All costs involved with grouting over riprap shall be incidental to the contract unit price per ton for Class B Riprap.

NOTE:
Box Culvert flowline has been depressed 1' - 0" below channel flowline to accommodate aquatic organisms. The 1' - 0" depression will be allowed to fill in naturally over time.

✳ Topeka Shiner Stream

SITE 1
ALTERNATE B

GENERAL DRAWING AND QUANTITIES

FOR

2 - 11' X 10' BOX CULVERT (PRECAST)

✳ OVER TRIB. TO SHUE CREEK — 0° SKEW
STA. a776 + 60.00 — SEC. 33/4-T114/113N-R59W
STR. NO. 13-028-360 — P 0028(35)297
PCN 03A2 — HL-93

BEADLE / CLARK COUNTY
S. D. DEPT. OF TRANSPORTATION
JULY 2015

-X028-

DESIGNED BY	CK. DES. BY	DRAFTED BY	
JMH	PW	GW	Kevin N. Boeden
CLRK03A2	03A2WB08		BRIDGE ENGINEER

STATE OF	PROJECT	SHEET NO.	TOTAL SHEETS
S.D.	P0028(35)297	E18	E20

SPECIFICATIONS

Use South Dakota Standard Specifications for Roads and Bridges, 2015 Edition and Required Provisions, Supplemental Specifications and Special Provisions as included in the Proposal.

GENERAL NOTES

Design shall be in accordance with Section 560 of the Specifications with the following criteria:

1. Box culvert and box culvert end section design shall conform to the AASHTO LRFD Bridge Design Specifications, 2014 Edition with 2015 interims.
2. Design Live Load: HL-93 and construction loading consisting of one 7' - 6" gage axle with gross weight = 95,850 lbs. The construction load shall not be applied until a minimum of 4 ft. of fill has been placed over the Box Culvert. If construction loads in excess of legal load are anticipated by the Contractor, the Contractor shall submit a design analysis for the anticipated construction loading, through the proper channels, to the Office of Bridge Design for approval.
3. The box culvert shall be load rated in accordance with the AASHTO Manual for Bridge Evaluation, 2010 Edition with latest Interim Revisions using the LRFR method. The rating shall include evaluation at the Design Load rating for the HL-93 truck at both Inventory and Operating levels and at the Legal Load rating for the three SD legal trucks (Type 3, 3S2 and 3-2) as well as the notional rating load and four specialized hauling vehicles noted in the AASHTO Manual for Bridge Evaluation. All sections of the box culvert shall rate at HL-93 or better (Inventory Level). The three SD Legal Loads, the notional rating load and the four specialized hauling vehicles shall rate greater than 1.0 at legal load rating level. Submit Load Rating calculations with the Design and Check Design calculations or shop plans, as appropriate.
4. The design of the barrel sections shall be based on a minimum fill height of 2 feet and include all subsequent fill heights up to and including the maximum fill height of 10 ft. over the box culvert.
5. Minimum inside corner fillet shall be 6 in.
6. Minimum precast barrel section length shall be 4 ft.
7. Lift holes shall be plugged with an approved nonshrinkable grout.
8. The Fabricator shall imprint on the structure the date of construction as specified and detailed on Standard Plate No. 460.02.
9. Alternate end section details will be allowed, subject to the approval of the Bridge Construction Engineer. No additional payment will be made for any change in the barrel/end section configuration.
10. Installation of the precast sections shall be in accordance with the final approved shop plans.
11. Compaction of earth embankment and box culvert backfill shall be governed by the Specified Density method.
12. A layer of Reinforcement Fabric (MSE) shall be placed at the bottom of the undercut prior to backfilling with granular material.
13. The subsurface soils below the existing flow line consist of about 2.5 feet to 3.5 feet of gray sandy silt-clay with some gravel overlying a brown to gray loose gravelly silt-sand to clay -sand to 7.5 feet below the existing flow line. Classification results of soils samples collected from below flow line during the subsurface were sand-clay to gravel silt-sand.
14. It is anticipated that dewatering will be required to construct the box culvert. The Contractor will be responsible to verify groundwater location prior to construction and provide necessary means of dewatering the construction site and prevention of the inflow of additional water. The use of well points may be required in dewatering the site for construction.

DESIGN MIX OF CONCRETE

1. Mix shall be as per fabricator's design, however minimum compressive strength shall not be less than 4500 p.s.i. at 28 days.
2. High sulfate levels are likely to be encountered on this project. The type of cement shall be either a Type V or a Type II with 20% Class F Modified Fly Ash substituted for cement in accordance with Section 605. The Water/Cementituous material ratio shall not exceed 0.45 as defined in Section 460.3 C.

SHOP PLANS

The fabricator shall submit shop plans in accordance with the specifications. Include design and check design, and load rating if applicable, with initial submittal.

GEOTEXTILE SPECIFICATION

1. The geotextile will conform to specification for Geotextiles and Impermeable Plastic Membrane, Reinforcement Fabric (MSE) (Section 831 of the Standard Specifications). The geotextile will be on the Approved Products List for this material or will be certified by the supplier to meet this specification prior to installation.
2. Geotextile will be paid for at the contract unit price per sq. yd. for Reinforcement Fabric (MSE). Payment will be full compensation for furnishing and installing the fabric only. Granular backfill materials will be incidental to the contract unit price per cubic yard for Box Culvert Undercut.

INSTALLATION PROCEDURE - GEOTEXTILE

1. Place the Reinforcement Fabric (MSE) on as level and smooth of surface as possible.
2. Any protrusions that might damage the geotextile will be removed prior to placing the geotextile.
3. The geotextile can be rolled out parallel to the centerline of the box culvert.
4. All seams in the geotextile will be stitched in accordance with the seaming procedure notes and as shown on the details labeled "Seam Types".
5. No equipment is to be allowed on the geotextile until the granular material is in place.
6. The geotextile should be kept as taut as possible prior to backfilling.
7. Granular material will be dumped at least 20' behind the leading edge of the fill and pushed into place with a loader or dozer.

SEAMING PROCEDURE

1. The sewn seams shall consist of two parallel rows of stitching ("prayer" seam, TypeSSa-2), or shall consist of a J-seam, (Type SSn-1), using a single row of stitching. The stitching shall be lock type stitch.
2. If the SSa-2 seam is used, the two rows of stitching shall be 1" apart with a tolerance of plus or minus ½" and shall not cross, except for restitching. The minimum seam allowance, i.e., the minimum distance from the geotextile edge to the stitch line nearest to that edge, shall be 1 ½".
3. If the J-seam, Type SSn-1, is used, the minimum seam allowance shall be 1".
4. The seam, stitch type, and the equipment used to perform the stitching shall be as recommended by the manufacturer of the geotextile and approved by the Engineer.
5. The seams shall be sewn in such a manner that the seam can be readily inspected by the Engineer.
6. Thread used shall be high strength polypropylene, polyester, or Kevlar thread. Nylon threads will not be allowed.

ESTIMATED QUANTITIES

	ITEM	UNIT	QUANTITY
⌀	Box Culvert Undercut	Cu. Yd.	614
	Reinforcement Fabric (MSE)	Sq. Yd.	582

⌀ For payment, quantity is based on plan shown undercut dimensions and will not be measured unless the Engineer orders a change.

Flat or "prayer" seam
Type SSa-2

J seam
Type SSn-1

GEOTEXTILE SEAM TYPES

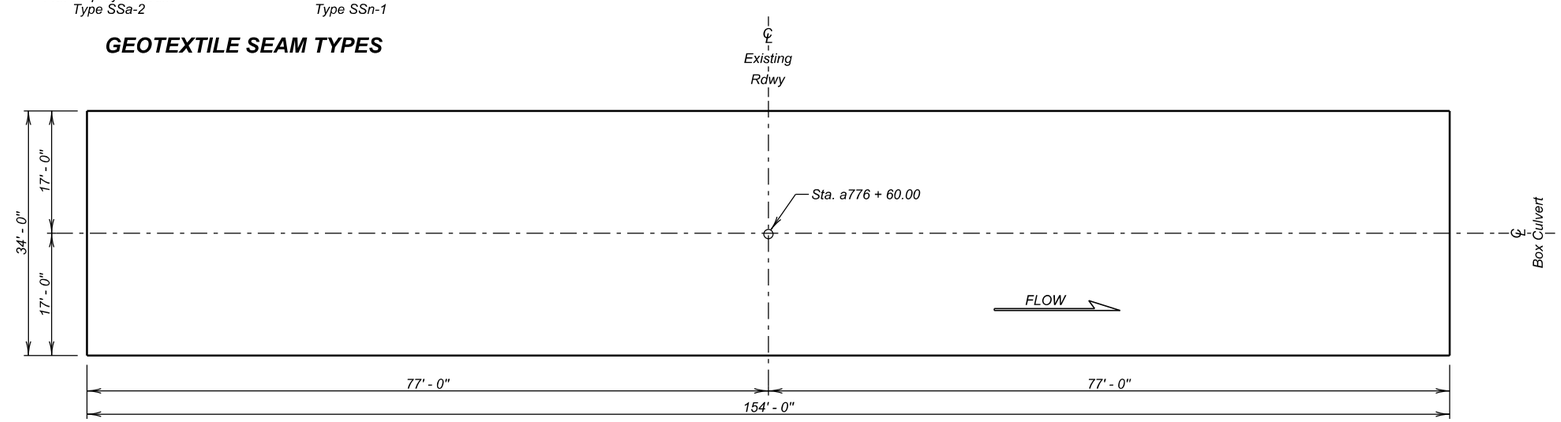

UNDERCUT LAYOUT
(Bottom Dimensions)

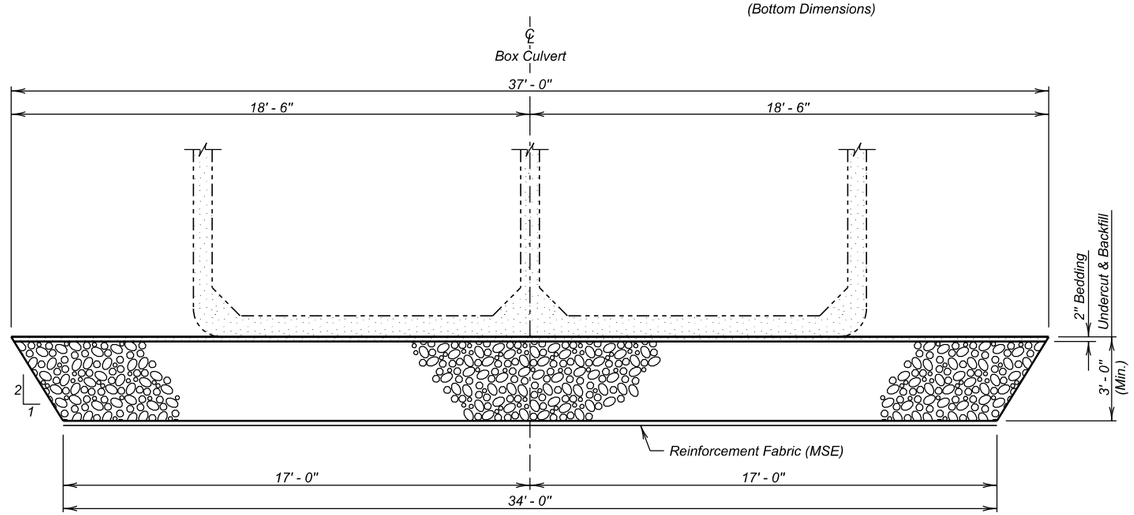

TYPICAL SECTION
(For Limits of Undercut)

SITE 1
ALTERNATE B

NOTES AND UNDERCUT DETAILS

FOR

2 - 11' X 10' BOX CULVERT (PRECAST)

OVER TRIB. TO SHUE CREEK — 0° SKEW
STA. a776 + 60.00 — SEC. 33/4-T114/113N-R59W
STR. NO. 13-028-360 — P 0028(35)297
HL-93

BEADLE / CLARK COUNTY
S. D. DEPT. OF TRANSPORTATION
JULY 2015

DESIGNED BY	CK. DES. BY	DRAFTED BY	
JMH	PW	GW	Kevin N. Goeden
CLRK03A2	03A2WB09		BRIDGE ENGINEER

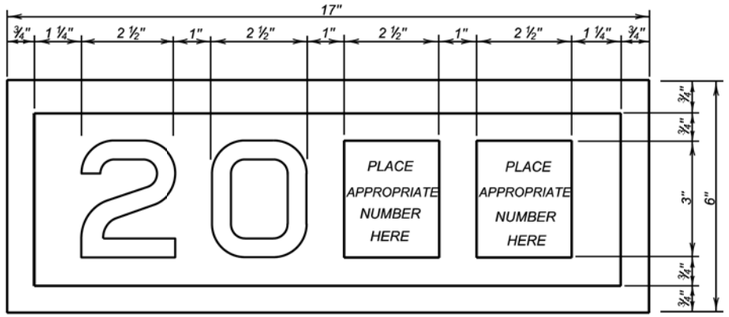

YEAR PLATE DETAILS

GENERAL NOTES:

1. Year plates of the general dimensions shown shall be constructed on all box culverts and bridges. The year plates shall be constructed in reverse and attached to the forms in such a manner that the finished imprint in the concrete does not exceed one-half (½) inch in depth.

2. Year plates shall be located on structure (s) as follows:

   a. On cast-in-place box culverts the year plates shall be four and one - half (4 ½) inches below the top of the upstream parapet wall and centered laterally on the upstream face. On precast box culverts the year plate shall be centered laterally on the upstream face of the top slab. Where an extended interior wall interferes with this location, the year plate shall be centered in an adjacent barrel.

   b. On bridges with six (6) inch curbs or "Jersey" shaped barriers with no endblocks, the year plate shall be centered vertically on the curb face approximately six (6) inches from the end of the bridge, or as designated by the Engineer. On bridges with "Jersey" shaped barrier endblocks, the year plate shall be centered on the upper sloped portion of the barrier approximately 5'- 6" from the end of the bridge, or as designated by the Engineer. There shall be one year plate at each end of the bridge on opposite sides.

   c. When the plans specify that both the original date of construction and the date of reconstruction are to be shown, one date shall be placed as listed above and the other located adjacent to it. Both year plates shall be shown at each end of the bridge on opposite sides.

3. There will be no separate measurement or payment made for year plates on box culverts and bridges. All costs for this work shall be incidental to other coniract items.

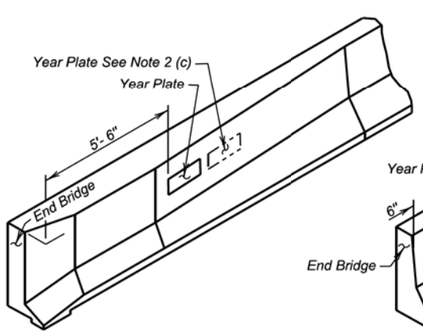

JERSEY BARRIER
(With Endblock)

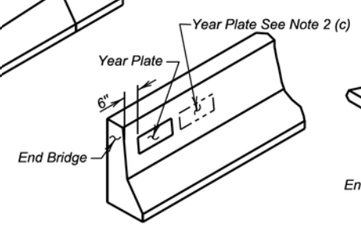

JERSEY BARRIER

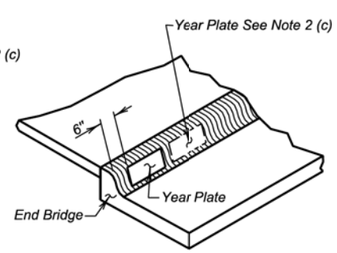

TYPE B CURB

June 26, 2012

Published Date: 4th Qtr. 2015	SDDOT	YEAR PLATE DETAILS	PLATE NUMBER 460.02
			Sheet 1 Of 1

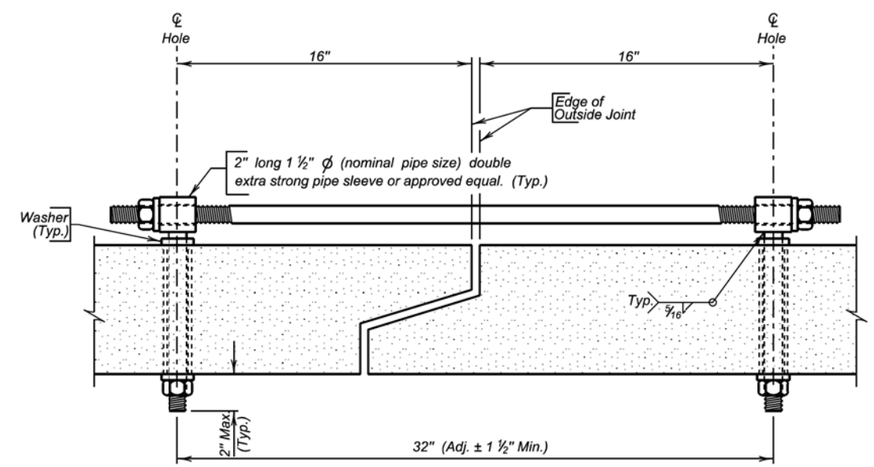

TIE BOLT ASSEMBLY

GENERAL NOTES:

1. All holes for tie bolts shall be cast-in-place,16 inches from outside edge of joint. Cast in inserts or sleeves, if used, shall be made of a corrosion resistant material.

2. Ties shall be 1 inch ϕ and conform to the requirements of ASTM A36. Nuts shall be heavy hex in conformance with ASTM A563. Washers shall conform to ASTM F436, Type 1. The welded pipe sleeve shall conform to ASTM A53, Grade B.

3. Welding and weld inspection shall be in conformance with AWS/ANSI D1.1 - (Current Year) Structural Welding Code - Steel.

4. Tie Bolt Assembly shall be galvanized in accordance with ASTM A153.

5. Tie Bolt Assembly details may vary from that shown, but alternate tie bolt assemblies are subject to testing to demonstrate equal strength. Submit details, through proper channels, to the Office of Bridge Design for approval.

6. All costs for furnishing and installing the precast box culvert tie bolt assembly shall be incidental to the contract unit price per Foot for "Precast Concrete Box Culvert, Furnish".

December 23, 2012

Published Date: 4th Qtr. 2015	SDDOT	PRECAST BOX CULVERT TIE BOLT ASSEMBLY DETAILS	PLATE NUMBER 560.01
			Sheet 1 of 1

SITE 1
ALTERNATE B

2 - 11' X 10' BOX CULVERT (PRECAST)
STR. NO. 13-028-360
JULY 2015

STATE OF	PROJECT	SHEET NO.	TOTAL SHEETS
S.D.	P 0028(35)297	E20	E20

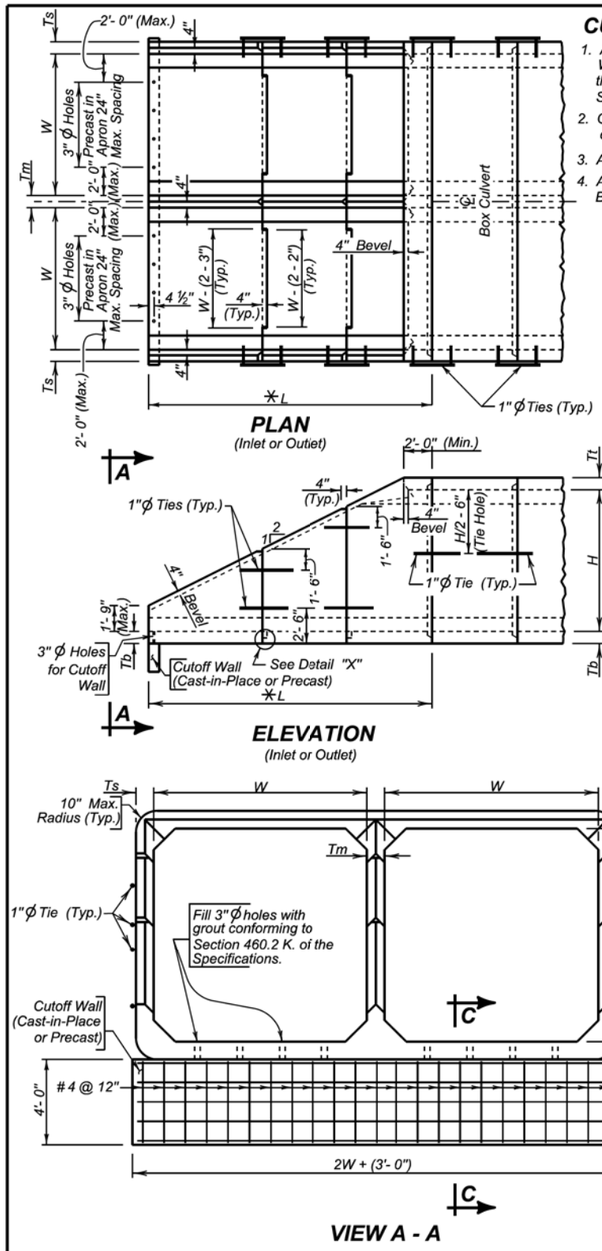

CUTOFF WALL

1. All costs associated with furnishing and installing the Cutoff Wall, whether precast or cast-in-place, shall be incidental to the contract unit price per each for "Precast Box Culvert End Section, Furnish".
2. Concrete for cast-in-place cutoff wall shall be Class M6 concrete in accordance with Section 462 of the Specifications.
3. All reinforcing steel shall conform to ASTM A615 Grade 60.
4. Alternate details will be allowed, subject to the approval of the Bridge Construction Engineer.

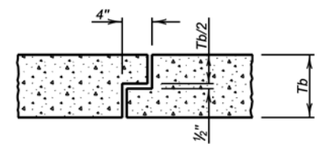

DETAIL " X "

NOTE: Joint details may vary from that shown, according to the manufacturer's design. Submit details with shop plans for approval.

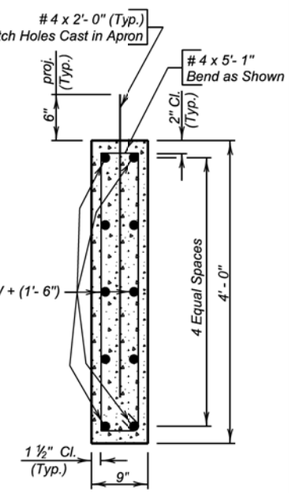

SEC. C - C

LEGEND

W = Width of Opening
H = Height of Opening
Tt = Thickness of Top Slab
Tb = Thickness of Bottom Slab
Ts = Thickness of Side Wall
Tm = Thickness of Middle Wall
L = Length of End Section

NOTES:
See GENERAL DRAWING for W and H dimensions.
Tt, Tb, Tm, L, and Ts dimensions shall be furnished by the Contractor.
✳ Length and number of units may vary from that shown.

June 26, 2015

Published Date: 4th Qtr. 2015 | SDDOT | PRECAST DOUBLE BOX CULVERT SLOPED END SECTION DETAILS WITH 4'-0" CUTOFF WALL | PLATE NUMBER 560.21 | Sheet 1 of 1

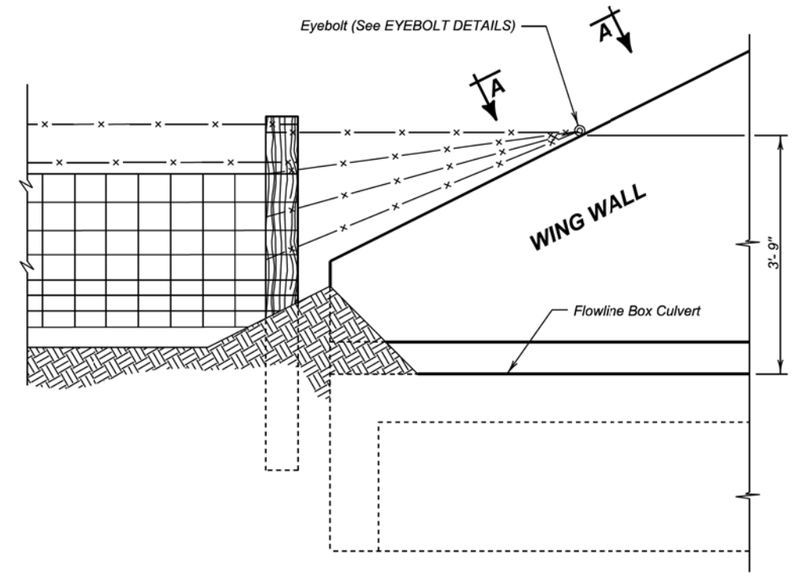

DETAIL FOR FENCE ANCHORS

GENERAL NOTES:

1. The fence and post details shown are for illustrative purpose only. The fence shall be as specified elsewhere in the plans.
2. Eyebolts shall be placed on all of the box culvert wing walls.
3. Eyebolts shall be ⅝ inch diameter and shall conform to ASTM A307.
4. Eyebolts, nuts, and concrete inserts shall be galvanized in accordance with AASHTO M232 (ASTM A153). Concrete inserts of corrosion resistant material need not be galvanized.
5. Cast-in-place eyebolts shall have a nut attached, be 4 ½ inches (Min.) in length and shall be embedded such that the eye of the bolt is flush with the concrete surface. (See Eyebolt Details) As an alternate, cast-in-place concrete inserts, capable of developing the full strength of the ⅝ inch diameter threaded eyebolt, may be used and shall be set in the concrete in accordance with the manufacturer's recommendations. The eyebolt shall be of sufficient length to develop its full strength. The eye of the eyebolt shall be flush with the concrete surface.
6. The cost for furnishing and installing eyebolts and/or concrete inserts shall be incidental to various contract items.

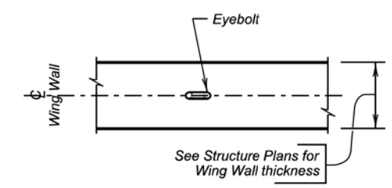

VIEW A - A

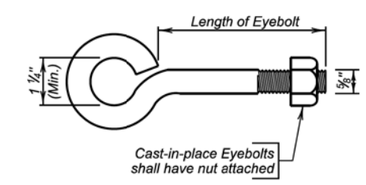

EYEBOLT DETAILS

December 23, 2012

Published Date: 4th Qtr. 2015 | SDDOT | FENCE ANCHORS FOR BOX CULVERT WING WALLS | PLATE NUMBER 620.16 | Sheet 1 of 1

SITE 1
ALTERNATE B

2 - 11' X 10' BOX CULVERT (PRECAST)
STR. NO. 13-028-360
JULY 2015