STATE OF SOUTH DAKOTA	PROJECT	SHEET	TOTAL SHEETS
	P 0028(35)297	F1	F5

Plotting Date: 10/16/2015

Section F: Surfacing Plans

INDEX OF SHEETS

F1 General Layout W/Index
F2 Estimate With General Notes & Tables
F3 - F5 Typical Surfacing Sections

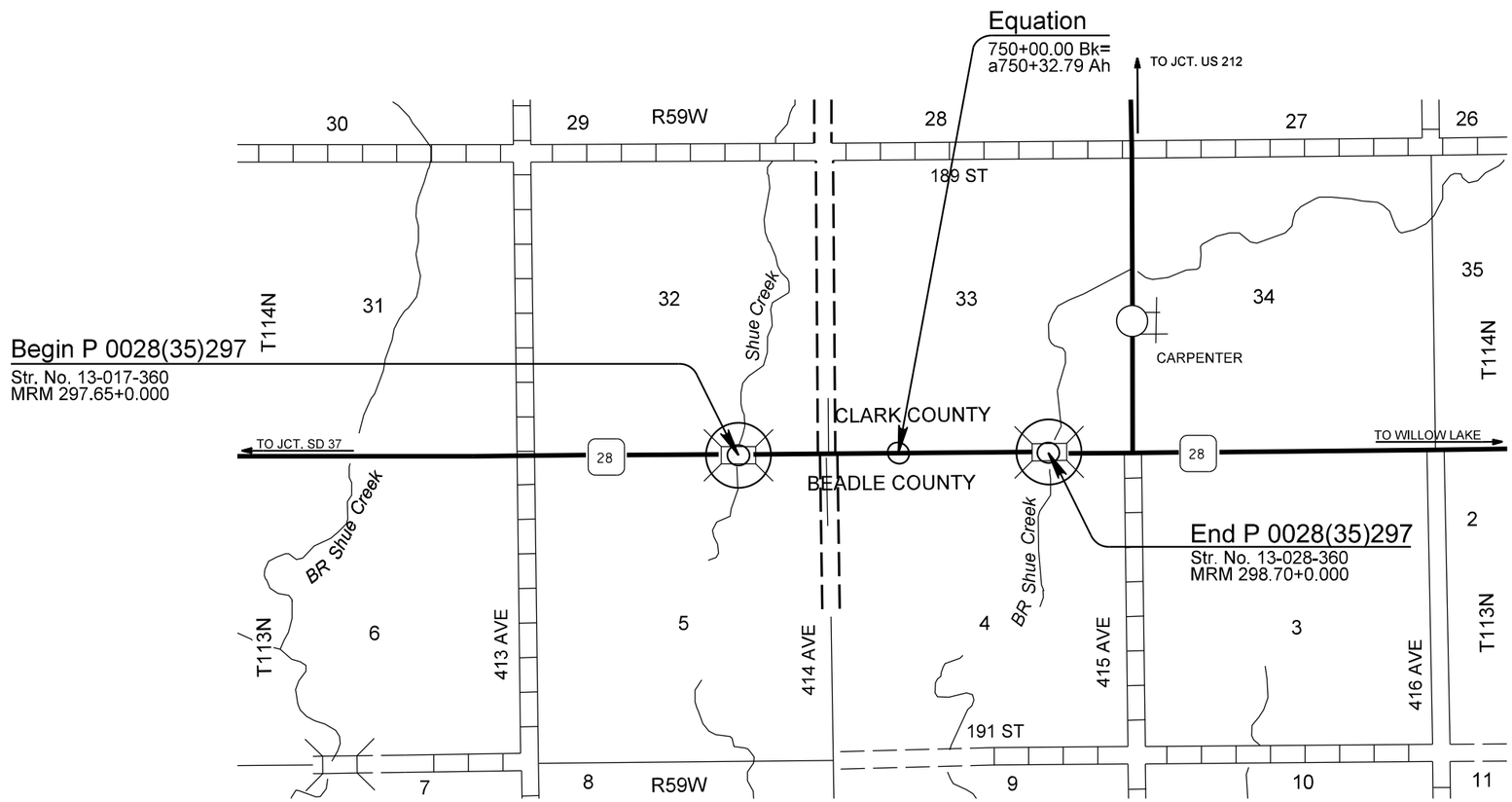

PLOT SCALE - 1:200

PLOTTED FROM - TRPR18388

PLOT NAME - 1

FILE - U:\MS\PRJ\CLRK03A2\TITLEF.DGN

ESTIMATE OF QUANTITIES

BID ITEM NUMBER	ITEM	QUANTITY	UNIT
260E1010	Base Course	1,003.4	Ton
260E1030	Base Course, Salvaged	2,429.4	Ton
320E1200	Asphalt Concrete Composite	780.8	Ton

SURFACING THICKNESS DIMENSIONS

Plans quantity will be applied even though the thickness may vary from that shown on the plans.

At those locations where material must be placed to achieve a required elevation, plans quantity may be varied to achieve the required elevation.

WATER FOR COMPACTION

The cost of water for compaction of the granular material shall be incidental to the various other contract items. Six percent plus or minus moisture will be required at the time of compaction unless otherwise directed by the Engineer.

BASE COURSE, SALVAGED

The Base Course, Salvaged shall be obtained from the stockpile site(s) provided by the Contractor and may be used without further testing.

All other requirements of the Specifications for Base Course, Salvaged shall apply.

SALVAGED MATERIAL

The quantity of salvaged asphalt mix and granular base material may vary from the plans. The Contractor will be required to use all of the salvaged material on this project, by decreasing for increasing the quantity of Base Course as necessary, or as directed by the Engineer.

No adjustment in the contract unit prices will be allowed as a result of a variation in quantities of Base Course, Salvaged or Base Course.

TABLE OF SURFACING QUANTITIES

Location	Base Course Ton	Base Course, Salvaged and Base Course Ton	Asphalt Concrete Composite Ton
Traffic Diversions			
DIV718			
Sta. 1+96.83 to Sta. 8+91.05	437.5	---	---
DIVa776 – Phase 1			
Sta. a773+55.49 to Sta. a773+85.49 - Transition	---	23.1	---
Sta. a773+85.49 to Sta. a776+09.79	---	141.4	---
Sta. a776+09.79 to Sta. a776+59.79 - Transition	---	25.7	---
Sta. a776+59.79 to Sta. a776+80.73	---	8.3	---
Sta. a776+80.73 to Sta. a777+30.73 - Transition	---	25.7	---
Sta. a777+30.73 to Sta. a779+38.24	---	130.8	---
Sta. a779+38.24 to Sta. a779+68.24 - Transition	---	22.5	---
DIVa776 – Phase 2			
Sta. a773+55.49 to Sta. a773+85.49 - Transition	---	23.1	---
Sta. a773+85.49 to Sta. a779+38.24	---	348.3	---
Sta. a779+38.24 to Sta. a779+68.24 - Transition	---	22.5	---
Mainline			
Sta. 720+65 to Sta. 720+95 - Transition	---	89.2	32
Sta. 720+95 to Sta. 721+55.32	---	183.7	64.2
Sta. 721+55.32 to Sta. 721+85.32 - Transition	---	89.2	32
Sta. a773+55.49 to Sta. a773+85.49 - Transition	---	89.2	32
Sta. a773+85.49 to Sta. a779+38.24	---	1,683.4	588.6
Sta. a779+38.24 to Sta. a779+68.24 - Transition	---	89.2	32
Totals:	437.5	2,995.3	780.8

TYPICAL SURFACING SECTIONS

STATE OF SOUTH DAKOTA	PROJECT	SHEET	TOTAL SHEETS
	P 0028(35)297	F3	F5

Plotting Date: 10/16/2015

Unclassified Excavation - Salvage and Stockpile Asphalt Mix and Granular Base Material (See Section B).

Unclassified Excavation - Waste Material (See Section B).

MAINLINE

Sta. 720+65 to Sta. 721+85.32
Sta. a773+55.49 to Sta. a779+68.24

In Place Section Showing Material to be Removed

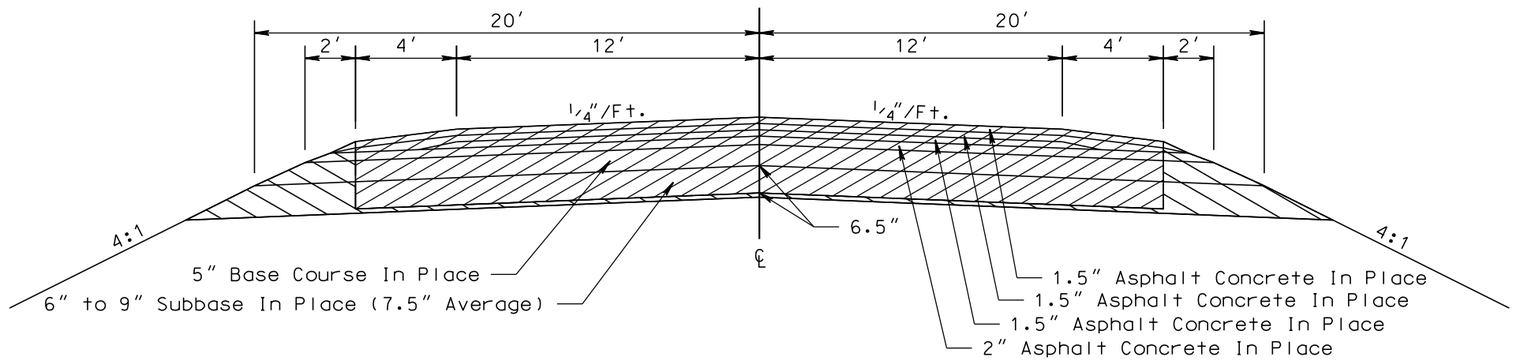

MAINLINE

Sta. 720+65 to Sta. 721+85.32
Sta. a773+55.49 to Sta. a779+68.24

Surfacing Section

Transitions:
* Sta. 720+65 to Sta. 720+95 - 23′ to 25′
* Sta. 721+55.32 to Sta. 721+85.32 - 25′ to 23′

* Sta. a773+55.49 to Sta. a773+85.49 - 23′ to 25′
* Sta. a779+38.24 to Sta. a779+68.24 - 25′ to 23′

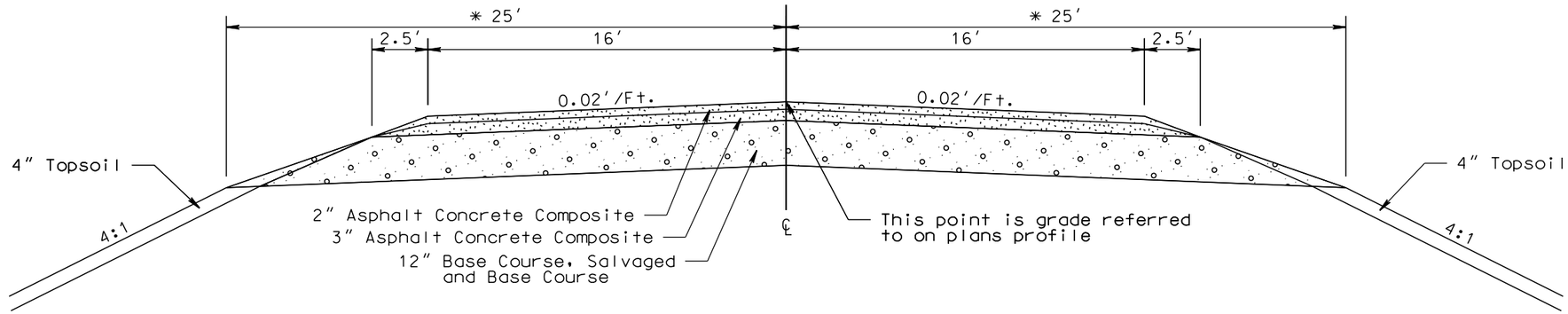

TRAFFIC DIVERSION (DIV718)

Sta. 1+96.83 to Sta. 8+91.05

Surfacing Section

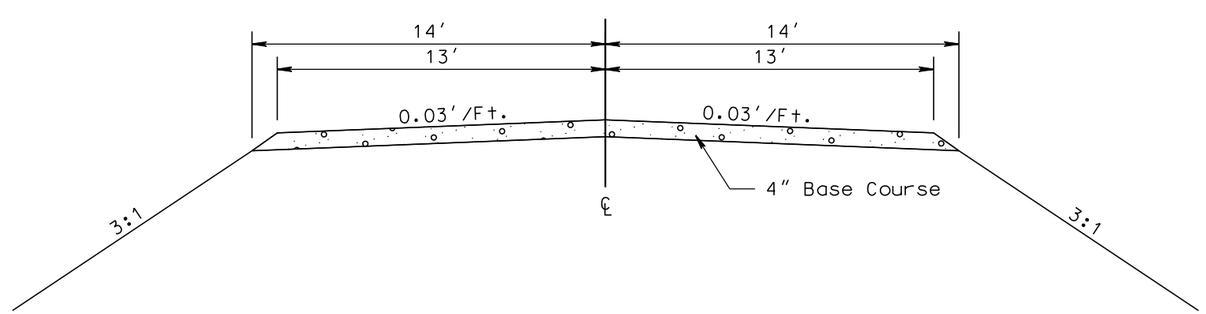

PLOT SCALE - 1:6.00001

PLOTTED FROM - TRPR19388

PLOT NAME - 2

FILE - ...\PRJ\CLRK03A2\03A2 TYPICALS.DGN

TYPICAL SURFACING SECTIONS

STATE OF SOUTH DAKOTA	PROJECT	SHEET	TOTAL SHEETS
	P 0028(35)297	F4	F5

Plotting Date: 10/16/2015

Widths for Traffic Diversion (a776) Phase 1:

Sta. a773+55.49 to Sta. a773+85.49
19.7′ to 13′ L.
18.2′ to 13′ R.

Sta. a773+85.49 to Sta. a776+09.79
Sta. a777+30.73 to Sta. a779+38.24
13′ L.
13′ R.

Sta. a776+09.79 to Sta. a776+59.79
13′ to 8′ L.
13′ to 8′ R.

Sta. a776+59.79 to Sta. a776+80.73
8′ L.
8′ R.

Sta. a776+80.73 to Sta. a777+30.73
8′ to 13′ L.
8′ to 13′ R.

Sta. a779+38.24 to Sta. a779+68.24
13′ to 19.6′ L.
13′ to 16.9′ R.

TRAFFIC DIVERSION (DIVa776)
PHASE 1

Sta. a773+55.49 to Sta. a779+68.24

Surfacing Section

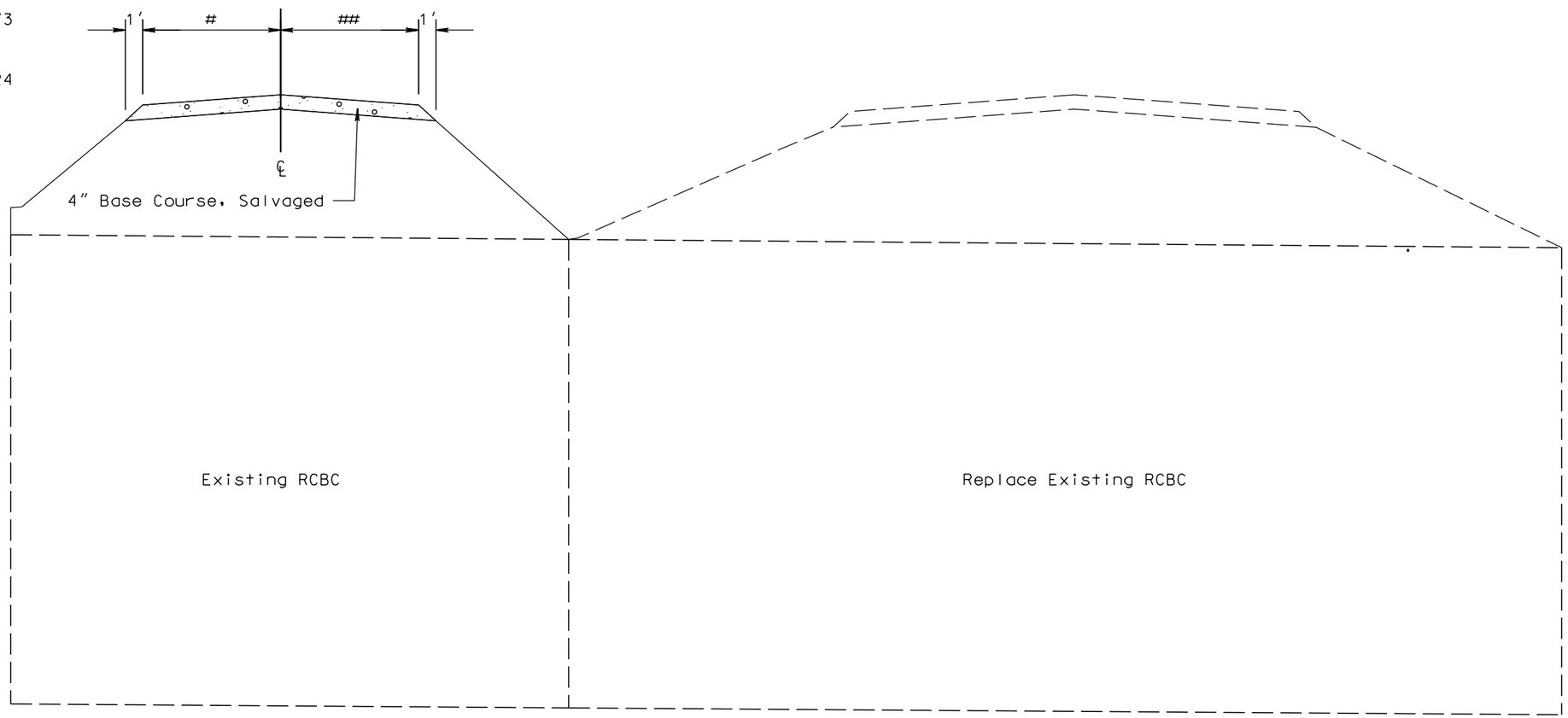

TRAFFIC DIVERSION (DIVa776)
FUTURE PHASE 2

Sta. a773+55.49 to Sta. a779+68.24

PLOT SCALE - 1:6.00001

PLOTTED FROM - TRPR18388

PLOT NAME - 3

FILE - ...\PRJ\CLRK03A2\03A2 TYPICALS.DGN

TYPICAL SURFACING SECTIONS

STATE OF SOUTH DAKOTA	PROJECT	SHEET	TOTAL SHEETS
	P 0028(35)297	F5	F5

Plotting Date: 10/16/2015

Widths for Traffic Diversion (a776) Phase 2:

Sta. a773+55.49 to Sta. a773+85.49
19.7′ to 13′ L.
18.2′ to 13′ R.

Sta. a773+85.49 to Sta. a779+38.24
13′ L.
13′ R.

Sta. a779+38.24 to Sta. a779+68.24
13′ to 19.6′ L.
13′ R. to 16.9′ R.

* The 4″ Base Course, Salvaged from Phase 1 shall be removed by Unclassified Excavation (Waste Material) after construction of the Phase 2 Traffic Diversion (See Section B).

** The 4″ Base Course, Salvaged from Phase 2 shall be removed by Unclassified Excavation (Waste Material) prior to construction of the mainline surfacing (See Section B).

IN PLACE TRAFFIC DIVERSION (DIVa776)
PHASE 1

Sta. a773+55.49 to Sta. a779+68.24

TRAFFIC DIVERSION (DIVa776)
PHASE 2

Sta. a773+55.49 to Sta. a779+68.24

Surfacing Section

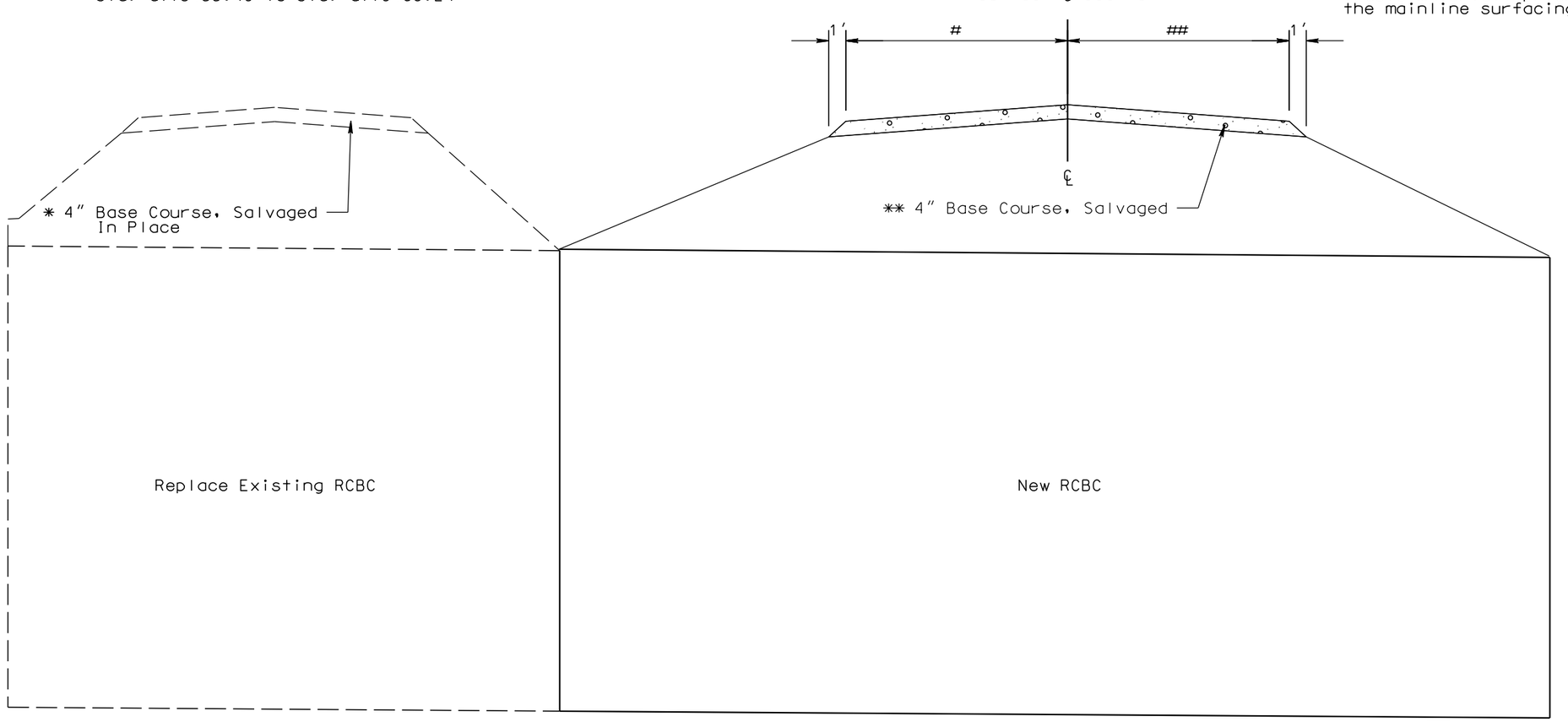

PLOT SCALE - 1:6.00001

PLOTTED FROM - TRPR18388

PLOT NAME - 4

FILE - ...\PRJ\CLRK03A2\03A2 TYPICALS.DGN